CHAPTER 22: INSTALLATION PROCEDURE

Contents

1. RP Machine 22-2
2. Inkless Print Drum 22-4
3. RP Stand Type S 22-5
4. RP Stand Type D 22-7
5. Multi Tray Paper Feeder 22-8
6. Auto-Control Stacking Tray 22-14
7. ADFUnit VI 22-16
8. Digitizer V (ADF) 22-24
9. Digitizer V 22-31
10. Net-B 22-36
11. DMC-32 22-39
12. Key/Card Counter IV 22-40
13. Job Separator IV 22-44
14. SC Video Harness II 22-47
15. TM2500 22-49
16. TM5000 Main Tower 22-56
17. TM5000 Side Tower 22-66
18. TM5000 NonSort Precision Stacking Tray Kit 22-73

1. RP Machine

RISO RP Series Installation Procedure

The following procedures are required before turning on the printer.

Caution: Be sure not to turn the power ON without removing the Scanner unit securing screw. Otherwise, it may cause damage to the printer.

Nobody but Riso-authorized service representatives is allowed to install this printer.

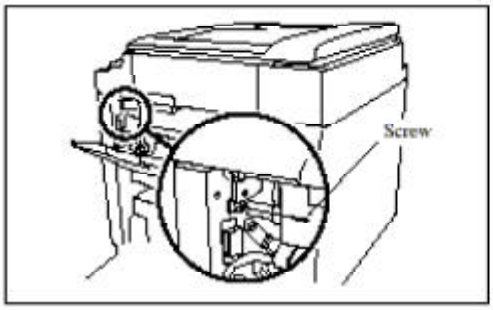

1. Open the Master roll cover and remove the screw which locks the Scanner table.

RISO RP3100

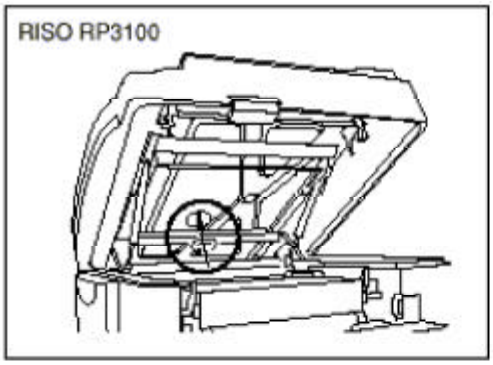

2. For RISO RP3100 ;
Open the Scanner table and loosen the Scanner unit securing screw.

All RISO RP series models except for RP3100

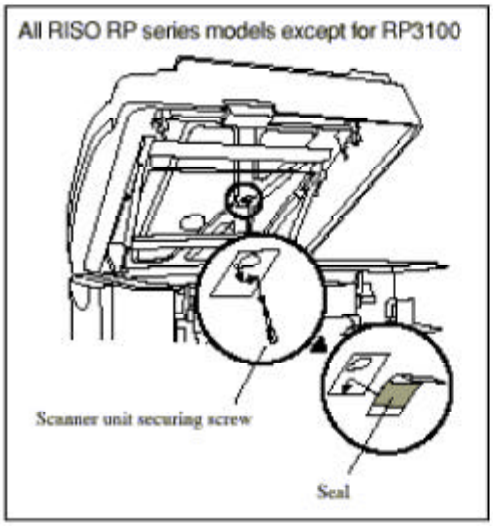

For all RISO RP series models except for RP3100 ;

1) Open the Scanner table and loosen the Scanner unit securing screw. Then remove the screw from the unit sliding it to the right-hand.
2) Cover the hole, from which the Scanner unit securing screw was removed, with the seal. (To affix the seal easily, it is recommended to make a tab beforehand by folding its edge.)

This document is printed on recycled paper.

030-06005-402 1

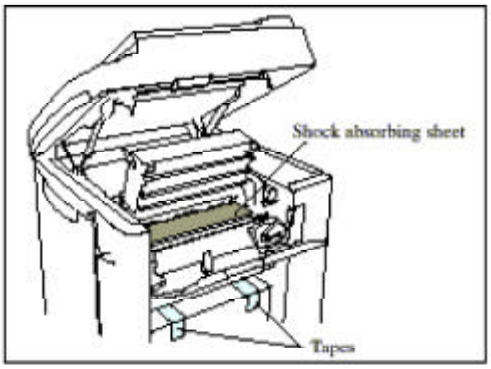

3. Open the Master loading unit and remove the Shock absorbing sheet.

4. Remove the tapes from the Jump wings.

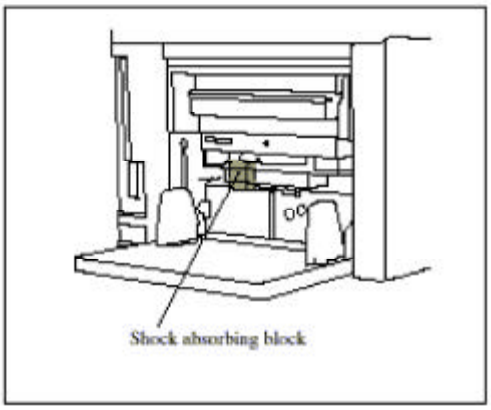

5. Remove the Shock absorbing block from the upper paper feed area.

6. Start up the test mode of the printer and activate the "Scanner release action" (No.155).

7. Quit the test mode and set the date and time in the normal operation mode.
   1) Display the [Clock/Calendar] window by touching the following buttons orderly.
      Sub-stage > [Catalog] button (tab)
      > [Properties] button > [Clock/Calendar] button
      Then specify the date and time on the window and touch the [OK] button.
   2) Confirm the entered date and time are correctly displayed on the lower right corner of the window, then touch the [Exit] button on the upper right corner.

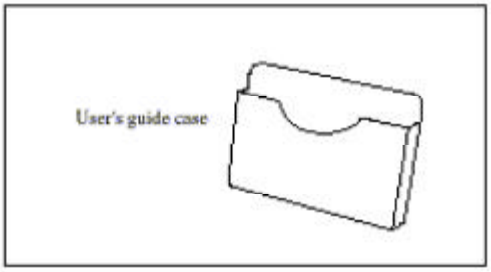

8. Remove the adhesive cover sheet from the User's guide case and affix the case on the printer.
   Be sure to consult your customer for the attachment position.

2

2. Inkless Print Drum

Installation Procedure for the RP (W) series Inkless Print Cylinder (Drum)

Important !

- Be sure to follow the given instructions, or the warranty on this Print cylinder (drum) may be invalidated.
- Black ink cartridges are not usable for this Print cylinder (drum).

1. Print Cylinder (Drum) Preparation

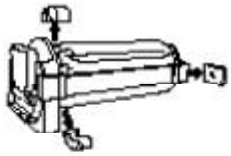

1) Remove three Shock absorbing blocks from the Print cylinder (drum).
2) Insert an ink cartridge into the Print cylinder (drum).
   Be sure to lead ink to the nozzle of the cartridge in advance.

Important !

Be sure that the Print cylinder (drum) temperature is above 59 °F (10 °C).

3) Put the Print cylinder (drum) in the printer and start the test mode.

Important !

Do not turn off the main power switch until the initial inking operation is completed.

4) Input the test item code "**No. 587**" and press the Start key to open the Print cylinder (drum) code entry window. Then input the corresponding Color category code, referring to the chart below, and press the Start key.

Code	Color	Code	Color	Code	Color	Code	Color
33	Black	41	Red 4	49	Purple	57	Gold
34	Blue	42	Green	50	Purple 2	58	Gold 2
35	Blue 2	43	Green 2	51	Gray	59	Silver
36	Blue 3	44	Green 3	52	Gray 2	60	Silver 2
37	Blue 4	45	Yellow	53	Lightgray	61	Pink
38	Red	46	Yellow 2	54	Lightgray	62	Pink 2
39	Red 2	47	Brown	55	Orange	63	Custom
40	Red 3	48	Brown 2	56	Orange 2		

5) Input the test item code "**No. 557**" and press the Start key. The message "In Action" appears on the Main display, starting ink supply action in the Print cylinder (drum). When the message "End" appears, press the Stop key to clear the message. If the initial inking operation is suspended before the message "End" appears, restart the test mode "**No. 557**".
6) Hold down the Reset key for more than 2 seconds or restart the printer to quit the test mode.
7) Confirm the correct color category name is shown on the lower left side of the Main display.

2. Operation Check

1) Make a master with Riso Test Chart No.8 and print 200 copies at speed **3**.
2) Check density balance and if necessary, re-adjust the gap between Squeegee roller and Print cylinder (drum) body.

3. Labeling

Put the corresponding ink color indication label on the Print cylinder (drum).

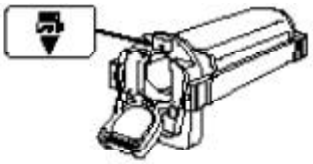

This document is printed on recycled paper.

030-06013-200

3. RP Stand Type S

RP-S 架台設置手順書
RISO RP Sand Type S Installation Procedure

内容物リスト

1.	天板	Top board ..... 1 pc.	8.	固定金具	Joint plate ..... 1 pc.
2.	側板L	Side panel L ..... 1 pc.	9.	取付ネジ	Screws ..... 1 set
3.	側板R	Side panel R ..... 1 pc.			
4.	背板	Rear panel ..... 1 pc.			
5.	底板	Bottom board ..... 1 pc.			
6.	補助足	Stand support ..... 4 pcs.			
7.	ガイドピン	Guide pin ..... 2 pcs.			

本機の設置は、必ず専門の技術者が行ってください。
Nobody but Riso-authorized representatives is allowed to install this unit.

● 天板上面に傷や汚れをつけないように、下敷きをして組み立ててください。
Lay a soft sheet under the Top board to protect it against scratches and smudges while assembling.

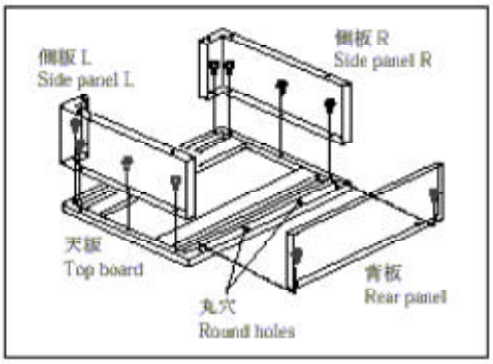

1. 天板裏面を上にして置き、側板と背板を同梱の短いネジで取り付けます。（左図のように、縁に丸穴がある方に背板を取り付けてください。）
Place the Top board with the bottom side facing up. Then put the Rear and Side panels on the Top board and secure them with short bolts.

NOTE : Be sure to secure the Rear panel to the Top board on the side with two round holes.

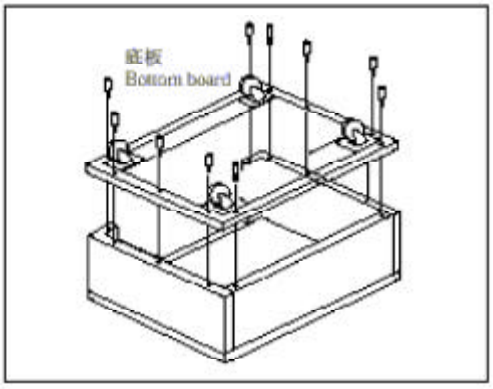

2. 底板を、同梱の長いネジで取り付けます。
Place the Bottom board on the panel frames and secure it with long bolts.

3. 架台を起こします。
Turn over the assembled stand.

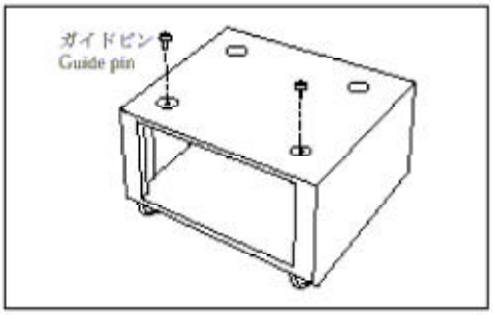

4. 天板の正面側のくぼみに、同梱のガイドピンを取り付けます。
Insert the guide pins into the holes in the front side dents of the Stand top board.

5. 印刷機を架台に載せます。（印刷機のゴム足を、架台天面のくぼみにあわせます。）
Place the printer on the stand fitting its rubber feet in the dents on the Stand top board.

この書類は再生紙を使用しています。This document is printed on recycled paper. 030-06002-004 1

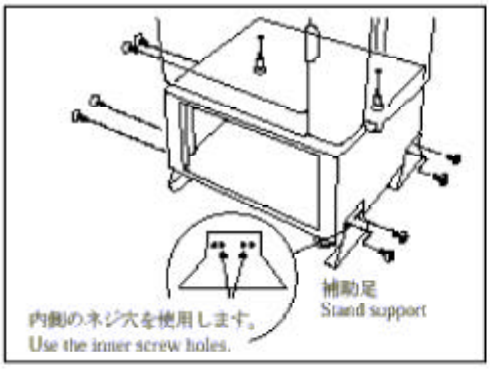

6. 補助足を、Wセムス（M4×10）各2本で架台に取り付けます。（4ケ所）
Secure the Stand supports to each base corner of the stand with double-washered screws (M4x10).

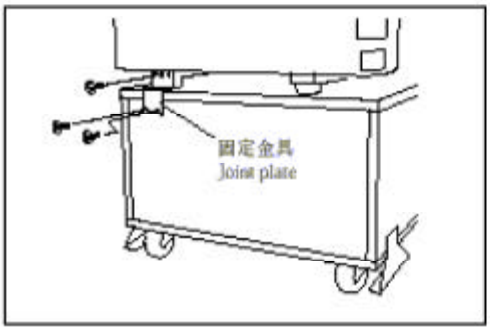

7. 背面に固定金具をWセムス（M4×10）3本で取り付けて、印刷機と架台を接続します。
Attach the Joint plate to the printer's foot base and the rear plate of the stand with double-washered screws (M4x10) to secure the printer to the stand.

2

4. RP Stand Type D

RP-D/RX-D 架台設置手順書
RISO RP Stand Type D Installation Procedure

内容物リスト Packing List

1.	架台	Stand	1 pc.
2.	補助足	Stand support	4 pcs.
3.	固定金具	Joint plate	1 pc.
4.	取付ネジ	Screws	1 set

本機の設置は、必ず専門の技術者が行ってください。
Nobody but Riso-authorized representatives is allowed to install this unit.

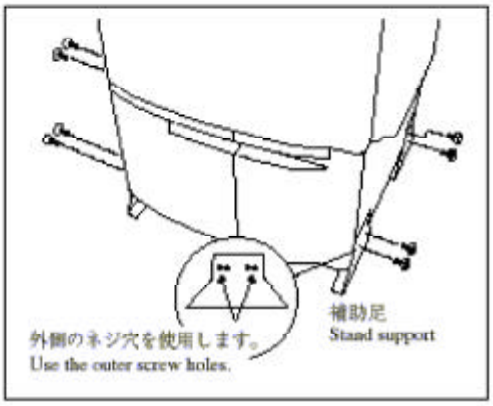

1. 印刷機を架台に載せます。(印刷機のゴム足を、架台天面のくぼみにあわせます。)
Place the printer on the stand fitting its rubber feet in the dents on the Stand top board.

2. 補助足を、Wセムス(M4×10)各2本で架台に取り付けます。(4ケ所)
Secure the Stand supports to each base corner of the stand with double-washered screws (M4x10).

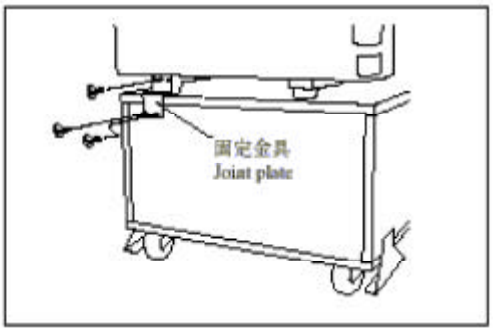

3. 背面に固定金具をWセムス(M4×10)3本で取り付けて、印刷機と架台を接続します。
Attach the Joint plate to the printer's foot base and the rear plate of the stand with double-washered screws (M4x10) to secure the printer to the stand.

この書類は再生紙を使用しています。This document is printed on recycled paper. 030-06003-205

5. Multi Tray Paper Feeder

Multi Tray Paper Feeder Installation Procedure

Types of Applicable Printers

The following printer models are the intended basic units for installing the Multi Tray Paper Feeder.

RISO KAGAKU CORPORATION Models

RISO RP3590 / RP3790 Series

Nobody but Riso-authorized service representatives is allowed to install this unit.

Packing List

This package contains the following items.

1. Multi Tray Paper Feeder (main body) ..... 1 unit
2. MTPF wire duct ..... 2 pcs.
3. MTPF securing plate ..... 1 pc.
4. MTPF knurl screw ..... 1 pc.
5. Securing screws ..... 1 set
6. Instruction labels ..... 1 set
7. Installation guide (This manual) ..... 1 copy
8. Declaration of Conformity (for EU only) .... 1 copy

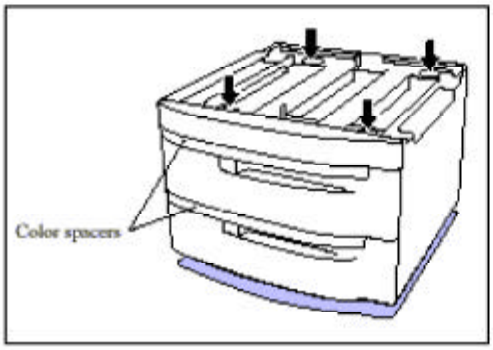

1. Attach the color spacers, which are included in the printer's package, to the paper trays.

2. Mount the printer on the Multi tray paper feeder, placing its feet in the reception holes on the top board.

Important !
If there is any unexpected object on the top board, remove it in advance.

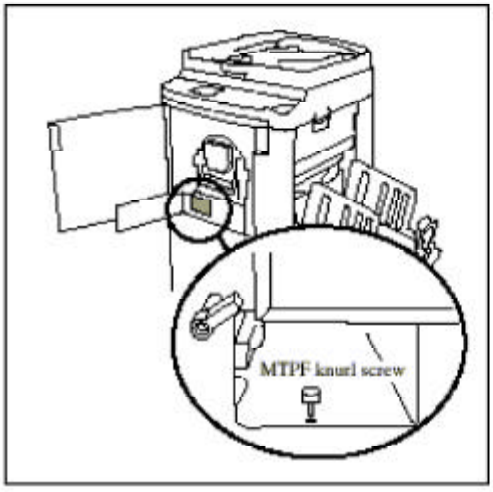

3. Open the Front cover of the printer and then the Feed joint passage cover inside. Then secure the front side of the printer to the Multi tray paper feeder by tightening the MTPF knurl screw on the printer bottom plate inside the Feed joint passage.

This document is printed on recycled paper.

030-06008-401 1

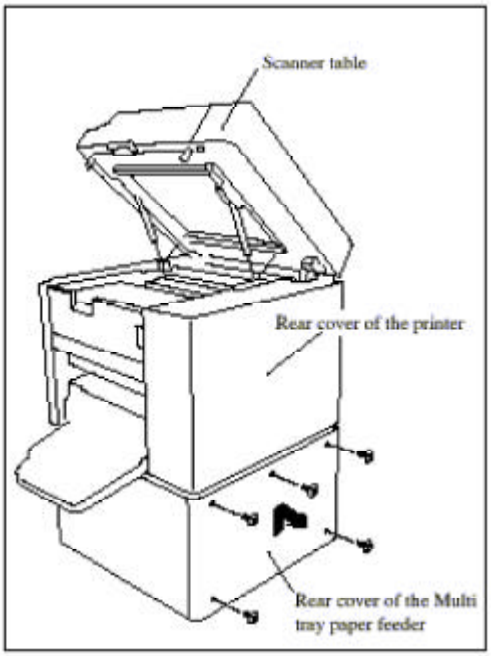

4. Open the Scanner table and remove the Rear cover from the printer.
5. Remove the securing screws on the rear panel of the Multi tray paper feeder and slide off the Rear panel upward.

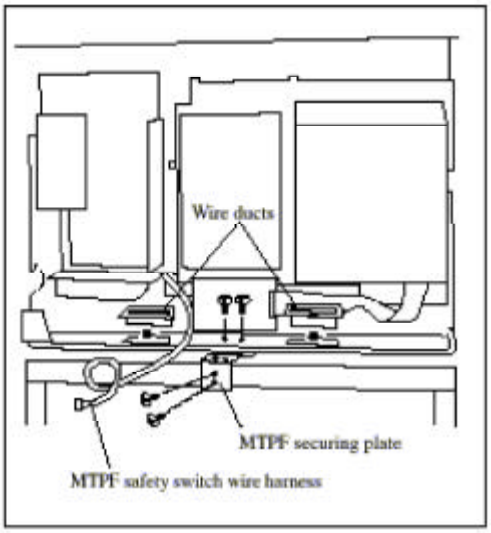

6. Unbind the MTPF safety switch wire harness, which is tucked on the rear side bottom plate of the printer.
7. Insert the MTPF securing plate under the rear side bottom plate of the printer and secure it to both the printer's bottom plate and the rear frame of the Multi tray paper feeder, as illustrated in the figure. (Double-washered screw M4x8, 4pcs)
8. Fit the Wire ducts into the two openings on the rear side bottom plate of the printer.

2

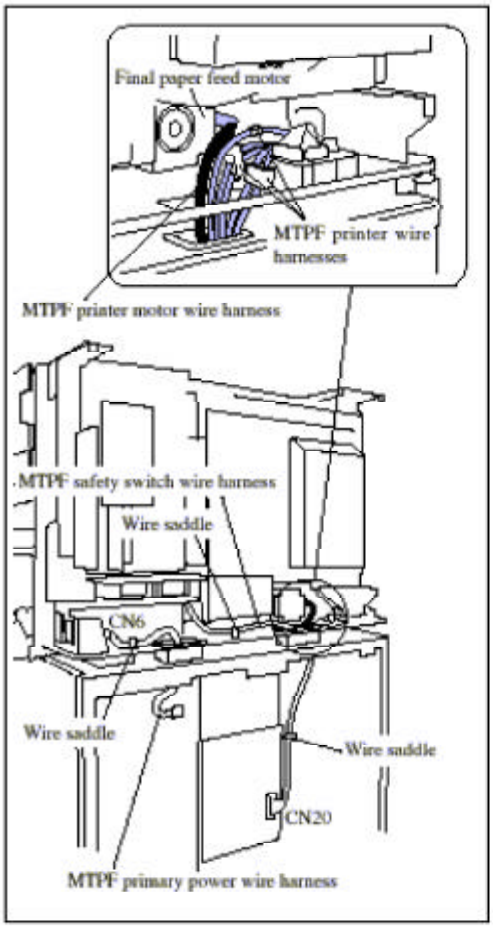

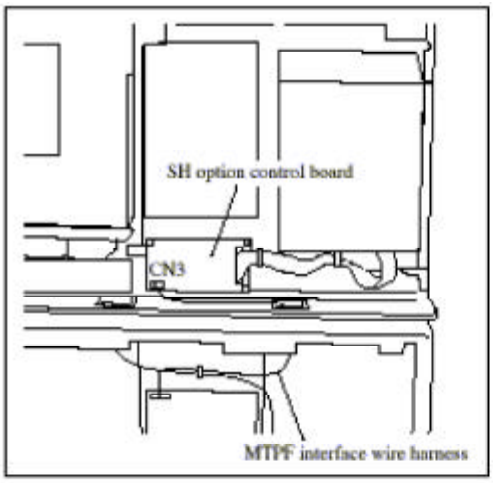

9. Lead the MTPF printer motor wire harness, which is the thick cable tucked in the Multi tray paper feeder, through the right-hand Wire duct and connect it to the Final paper feed motor of the printer.
10. Lead the MTPF printer wire harnesses of the Multi tray paper feeder (sensor, clutch and solenoid) through the right-hand Wire duct and connect them to the open connectors in the Paper feed clutch section of the printer.
11. Lead the MTPF safety switch wire harness unbound in step 6 through the right-hand Wire duct and connect it to the CN20 on the MTPF control board of the Multi tray paper feeder. Then secure the wire harness to the bottom plate of the printer with a wire saddle.
12. Secure the MTPF safety switch wire harness in the Multi tray paper feeder, leading it through the wire saddle on the right side of the MTPF control board together with other wire harnesses.
13. Lead the MTPF primary power wire harness of the Multi tray paper feeder through the left-hand Wire duct and connect it to the CN6 on the Power filter PCB. Then secure the wire harness to the bottom plate of the printer with a wire saddle.

Warning!
Be sure that the power cord is unplugged before this step. Otherwise, you might get an electric shock.

14. Lead the MTPF interface wire harness of the Multi tray paper feeder through the right-hand Wire duct and connect it to the CN3 on the SH option control board.
15. Replace the Rear panel on the Multi tray paper feeder and the Rear cover on the printer.
16. Pull off the Maintenance support and lower the Scanner table to the normal opening position. Then secure the Scanner table support joint and close the Scanner table.
17. Remove the securing materials, such as adhering tapes, for the paper trays of the Multi tray paper feeder.

3

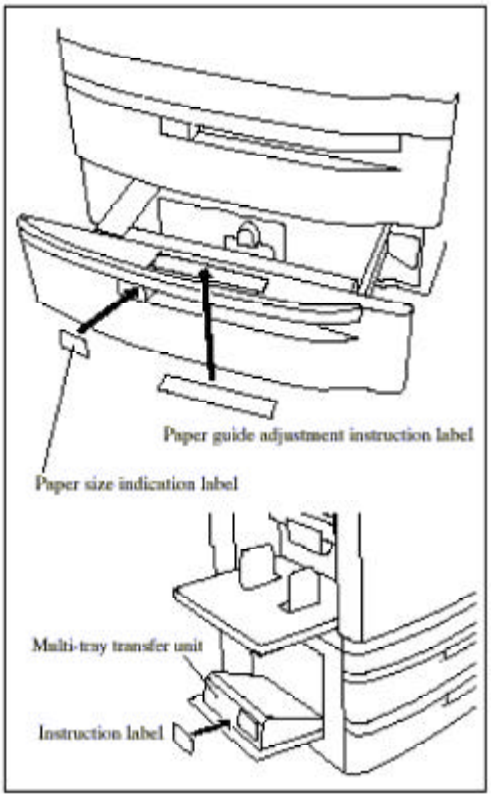

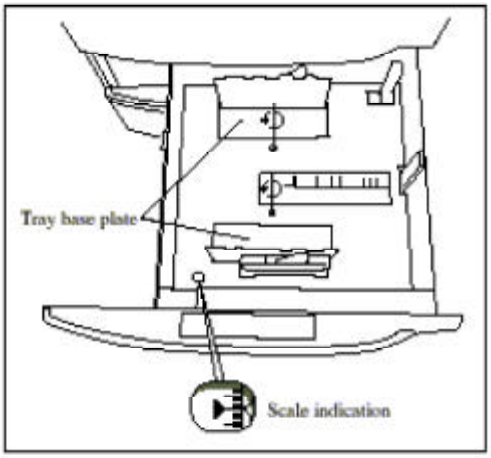

4

18. Stick the corresponding paper size indication labels and the paper guide adjustment instruction labels on the released paper trays as illustrated.
19. Open the Multi-tray transfer unit and affix the instruction label (on removing jammed paper) to it.
20. Plug the power cord of the printer and start up the test mode on the printer.
21. Place B5-size paper in the upper paper tray and adjust the paper guides to the paper size. Then activate the test mode No. 857 (Joint Tray 1 Size VR Adj.(182mm)).
22. Place B5-size paper in the lower paper tray and adjust the paper guides to the paper size. Then activate the test mode No. 859 (Joint Tray 2 Size VR Adj.(182mm)).
23. Place A3-size paper in the lower paper tray and adjust the paper guides to the paper size. Then activate the test mode No. 860 (Joint Tray 2 Size VR Adj.(297mm)).
24. Place A3-size paper in the upper paper tray and adjust the paper guides to the paper size. Then activate the test mode No. 858 (Joint Tray 1 Size VR Adj.(297mm)).
25. With A3-size paper in the upper paper tray, activate the test mode No. 872 (Joint Tray1 Paper Width Data(mm)) and confirm that the displayed value should be between 2960 – 2980.
26. Place A3-size paper in the lower paper tray again and activate the test mode No. 873 (Joint Tray2 Paper Width Data(mm)) and confirm that the displayed value should be between 2960 – 2980.
27. Confirm that the Multi tray paper feeder functions correctly in normal operation of the printer.
28. If the horizontal print position is not the same as when feeding sheets from the Standard paper feed tray, adjust the base position of the paper trays as follows.
    1) Loosen two securing screws on the base plate of the paper tray.
    2) Hold the Side paper guides and shift the tray base plate as much as required, checking the scale indication given in the hole located at the front left corner of the base plate.
    3) Tighten the securing screws on the base plate.

    NOTE : Always check the horizontal print position for both paper trays.

29. If the vertical print position is not the same as when feeding sheets from the Standard paper feed tray, adjust the paper feed timing of the tray concerned, selecting an appropriate procedure depending on the accuracy required, "Rough adjustment" or "Fine adjustment". (You cannot select both of them at the same time.) Be sure to use the paper of the type/size which is actually to be loaded in the tray concerned when making adjustment.

If paper jam (error code No. 409) frequently occurs in the Multi-tray paper feeder, adjust the feed range for the respective paper types.

Test code 0890	Multi-Feed Tray Feed Range/Card
Test code 0891	Multi-Feed Tray Feed Range/Stdrd (Standard)
Test code 0892	Multi-Feed Tray Feed Range/Light
Test code 0893	Multi-Feed Tray Feed Range/Custm (Custom)

Excessive feed range may cause the wrinkles on the leading edge of printed copies.

Rough Adjustment

1) Without changing master on the Print cylinder, make sample prints by feeding printing paper from the Standard paper feed tray, Paper feed tray 1 and tray 2 respectively.

   Important ! : Always keep the print speed constant.

2) Measure the distance from the leading edge of paper to your determined point on each sample print and check the difference among them.
3) Activate the test mode No. 1400 and input [0] (Rough adjustment mode). Then press the Start key.
4) Activate the test mode No. 1401 and input the distance to be adjusted for Paper feed tray 1. Then press the Start key. (The adjustable range is between -1.0mm and +1.0mm by increments of 0.5mm.)

   Example :

   - To shift print images toward the paper top by 1.0mm (+1.0mm), input [10].
   - To shift print images toward the paper end by 0.5mm (-0.5mm), input [5✱]. (The display shows [-5].)

5) Activate the test mode No. 1402 and input the distance to be adjusted for Paper feed tray 2 in the same manner as in the previous step. Then press the Start key.
6) Make sample prints from the respective trays again and check if the vertical print position is identical among them.

Fine Adjustment

Proceed adjustment while filling in the table shown below.

	Sample Print	PrintPosition (A)		Sample Print	PrintPosition (B)	Difference (A-B)	Test Code
Feed Tray 1	First Print	mm	Standard Feed Tray	First Print	mm	mm	1403
	Print Speed Level 1	mm		Print Speed Level 1	mm	mm	1404
	Print Speed Level 2	mm		Print Speed Level 2	mm	mm	1405
	Print Speed Level 3	mm		Print Speed Level 3	mm	mm	1406
	Print Speed Level 4	mm		Print Speed Level 4	mm	mm	1407
	Print Speed Level 5	mm		Print Speed Level 5	mm	mm	1408
Feed Tray 2	First Print	mm		First Print	mm	mm	1409
	Print Speed Level 1	mm		Print Speed Level 1	mm	mm	1410
	Print Speed Level 2	mm		Print Speed Level 2	mm	mm	1411
	Print Speed Level 3	mm		Print Speed Level 3	mm	mm	1412
	Print Speed Level 4	mm		Print Speed Level 4	mm	mm	1413
	Print Speed Level 5	mm		Print Speed Level 5	mm	mm	1414

1) Make a master while feeding printing paper from the Standard paper feed tray, and collect the first print.
2) Without changing master on the Print cylinder, make sample prints at every print speed (level 1 to 5) by feeding printing paper from the Standard paper feed tray.

   Important ! : Be sure to take print samples after the print speed becomes stable.
3) Leaving the original on the Stage glass, make a new master while feeding printing paper from the Paper feed tray 1 and collect the first print. Then make sample prints of the Paper feed tray 1 at every print speed (level 1 to 5).
4) In the same manner as in the previous step, make the first print and sample prints at every print speed by feeding printing paper from the Paper feed tray 2.
5) Measure the distance from the leading edge of paper to your determined point on each sample print made in the previous four steps and write down the values in the table above.
6) Calculate the difference of the print position (A-B) and write down the result in the corresponding spaces in the table.
7) Activate the test mode No. 1400 and input [1] (Fine Adjustment). Then press the Start key.
8) Rectify the calculated distance difference by activating the relevant test modes individually assigned to each print speed. (The adjustable range is between -6.0mm and +2.0mm by increments of 0.5mm.)

   Example :

   - To shift print images toward the paper top by 1.0mm (+1.0mm), input [10].
   - To shift print images toward the paper end by 0.5mm (-0.5mm), input [5✱]. (The display shows [-5].)

6

6. Auto-Control Stacking Tray

Auto-Control Stacking Tray Installation Procedure

Types of Applicable Printers

The following printer models are the intended basic units for installing the Auto-Control Stacking Tray.

RISO KAGAKU CORPORATION Models

RISO RP Series

Important !

The MC option control board is required to be installed in the printer before this installation procedure.

Nobody but Riso-authorized service representatives is allowed to install this unit.

Packing List

This package contains the following items.

1. Auto-control stacking tray ..... 1 unit
2. Auto stacking control cable ..... 1 pc.
3. Cable protection cap ..... 1 set
4. Auto stacking tray support F ..... 1 pc.
5. Auto stacking tray support R (with a damper) .. 1 pc.
6. Auto stacking tray storage catch ..... 1 pc.
7. Auto stacking tray arm lock ; F ..... 1 pc.
8. Auto stacking tray arm lock ; R ..... 1 pc.
9. Screws ..... 1 set
10. Instruction labels ..... 1 set
11. Installation guide (This manual) ..... 1 copy
12. Declaration of Conformity (for EU only) ..... 1 copy

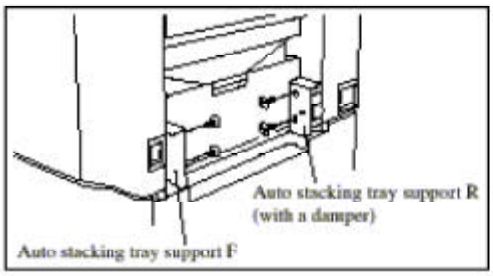

1. Turn off the power switch of the printer and unplug the power cord.
2. Remove both the standard paper stacking tray and the standard stacking tray supports.

   NOTE : If they are not installed on your printer, skip this step.
3. Fix the Auto stacking tray supports F and R (with a damper) on the respective side frames with screws (Double-washered screw M4x8, 2 pcs.).

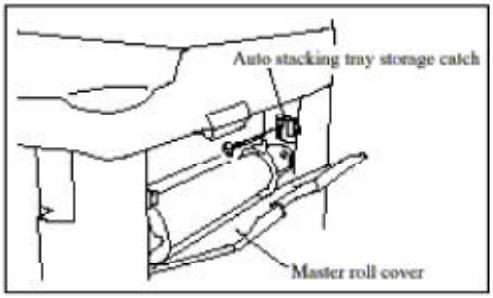

4. Open the Master roll cover and remove the standard stacking tray storage catch. Then fix the Auto stacking tray storage catch in place. (Double-washered screw M4x8, 1 pc.)

   NOTE : The standard stacking tray storage catch may not be fixed on certain models.

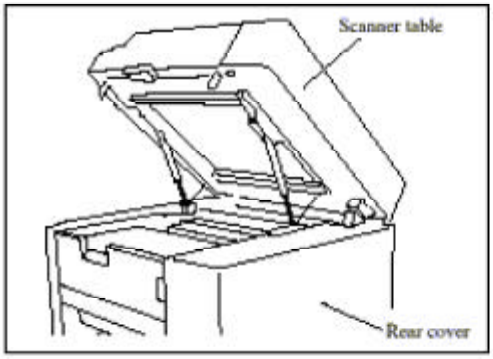

5. Open the Scanner table and remove the Rear cover.

This document is printed on recycled paper.

030-06011-208 1

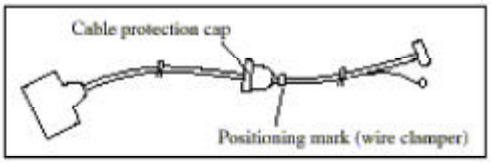

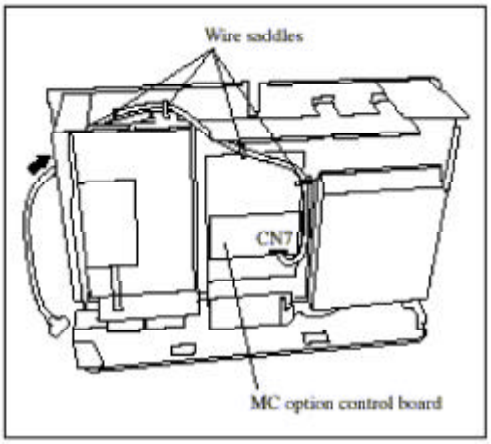

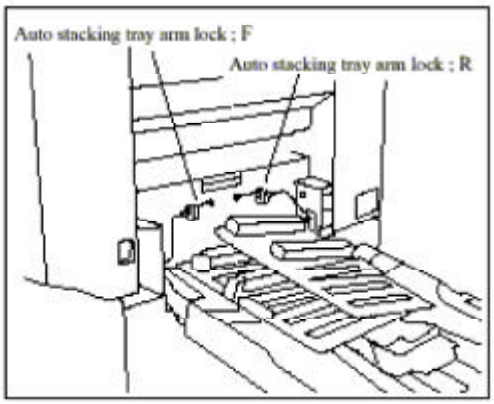

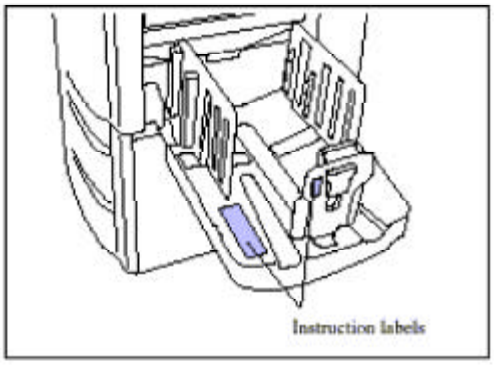

6. Put the cable protection cap on the Auto stacking control cable as illustrated.

   NOTE : Take care not to put it in the opposite direction.

7. Lead the smaller connector of the Auto stacking control cable through the hole on the rear side frame on the paper ejection side and extend the cable to the MC option control board over the parts behind the hole. Then fit the Cable protection cap in the hole on the side frame.

8. Connect the Auto stacking control cable to the CN7 of the MC option control board and secure the cable with the existing wire saddles at 4 points as indicated in the figure.

9. Attach the terminal of ground wire coming out of the Auto stacking control cable to the lower right corner of the MC option control board with the existing screw.

10. Replace the Rear cover on the printer and close the Scanner table.

11. Hang the arms of the Auto-control stacking tray on the tray supports. Then insert the Auto stacking tray arm locks on the respective tray arms and secure them with screws (Binding screw M4x6, 2pcs).

    Important!

    - Attach the Auto stacking tray arm lock marked with "F" to the front side and the one with "R" to the rear side.
    - Be sure not to drop the Auto-control stacking tray until the Auto stacking tray arm locks are secured with screws.

12. Connect the connector of the Auto stacking control cable to the Auto-control stacking tray and secure it by tightening the locking screws.

13. Stick the instruction labels on the parts indicated in the figure.

2

7. ADF Unit VI

ADF Unit VI Installation Procedure

Types of Applicable Printers

The following printer models are the intended basic units for installing the ADF Unit VI.

RISO KAGAKU CORPORATION Models

RISO RN Series
RISO RP Series

Nobody but Riso-authorized service representatives is allowed to install this unit.

Packing List

This package contains the following items.

1. ADF unit ..... 1 unit
2. ADF control wire harness ..... 1 pc.
3. ADF connector mount ..... 1 pc.
4. ADF original stopper ..... 1 pc.
5. Stage pad ..... 1 pc.
6. Wire clamper ..... 2 pcs.
7. Screws ..... 1 set
8. Installation guide (This manual) ..... 1 copy
9. Declaration of Conformity (for EU only) ..... 1 copy

Installation Procedure = For RISO RP series models =

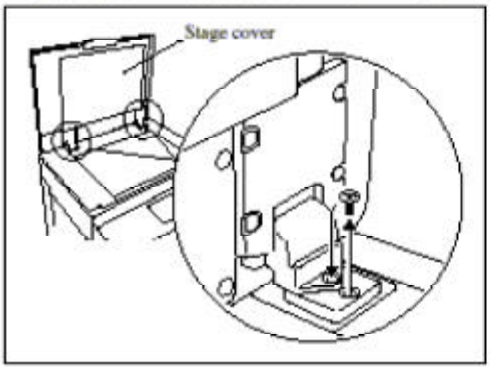

1. Turn off the main power switch of the printer and unplug the power cord.
2. Open the Stage cover and remove the securing screws on the hinges. The removed screws should be kept by turning them into the adjoining holes on the hinges.
3. Remove the Ground wire located on the rear side of the Stage cover and dismount the Stage cover.

NOTE : The Stage cover is not reused.

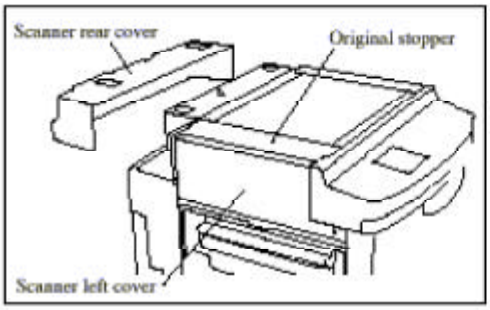

4. Remove the Scanner rear cover.
5. Remove the Scanner left cover.
6. Remove the securing screws on the Original stopper and slide it off to the left.

NOTE : The Original stopper is not reused.

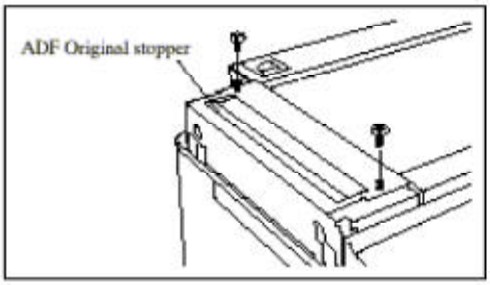

7. Secure the ADF original stopper with the screws which were removed in the step 6.

Important !

Before securing the ADF original stopper, be sure to clean the shading sheet (a white sheet) on the back side. If it is stained or dusty, unwanted images may appear on prints.

8. Replace the Scanner left cover.

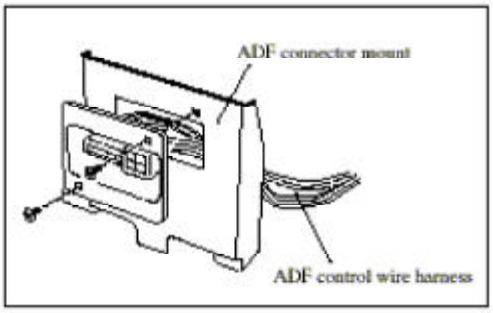

9. Lead the ADF control wire harness through the opening of the ADF connector mount and secure the ADF connector at the end of the wire harness to the ADF connector mount with screws (Binding screw M3x8, 2pcs).

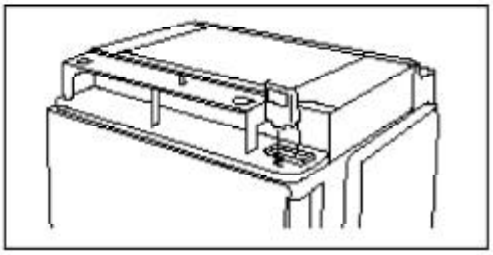

10. Insert the tab of the ADF connector mount into the slit in the rear corner of the Scanner table and secure the ADF connector mount to the Scanner table with screws (Double-washered screw M4x8, 2pcs).

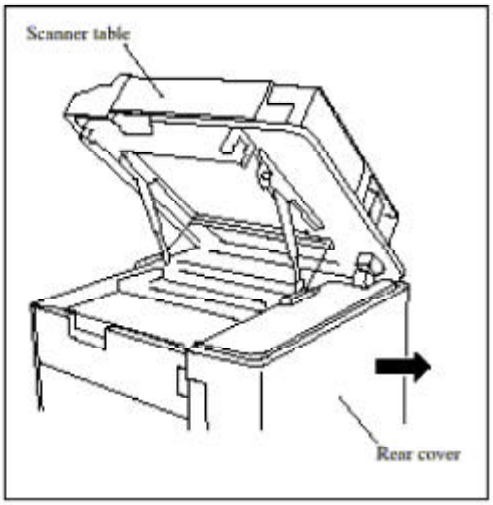

11. Open the Scanner table and remove the Rear cover.

5

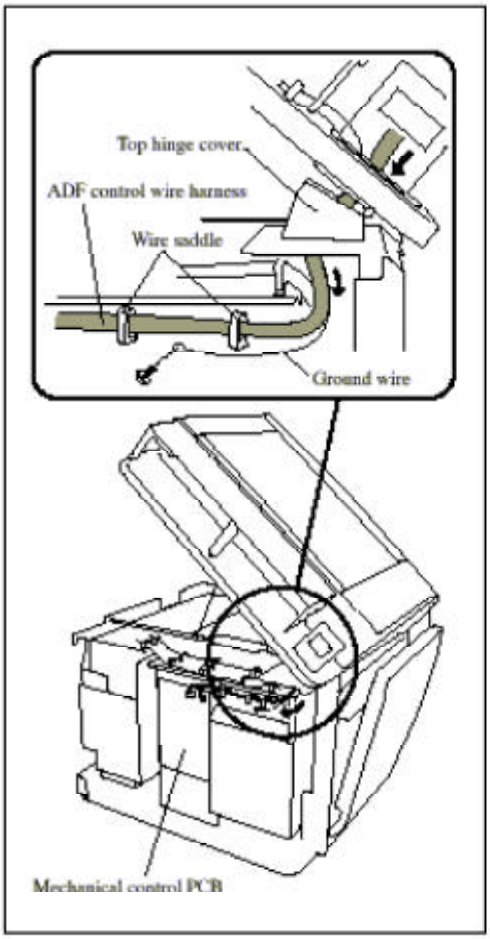

12. Lead the ADF control wire harness through the opening in the rear corner of the Scanner table and then through the Top hinge cover.
13. Connect the connectors at the other end of the ADF control wire harness to the CN13 and CN14 on the Mechanical control PCB.
14. Lead the ADF control wire harness through the wire saddles together with existing wire harnesses as illustrated.
15. Secure the terminal of the Ground wire coming out of the wire harness as illustrated. (Star washer, 1pce and Collar screw M3x6, 1pce)

    NOTE: The screw hole may be behind the wire harnesses.
16. Replace the Rear cover on the printer and close the Scanner table.

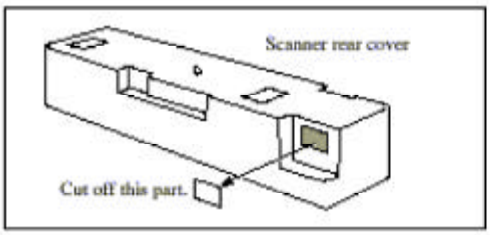

17. Cut off the illustrated part from the Scanner rear cover.
18. Replace the Scanner rear cover on the printer.

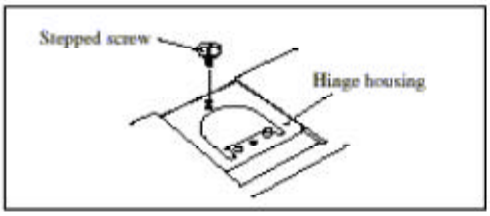

19. Secure the stepped screws (provided in the package) on the Hinge housings.

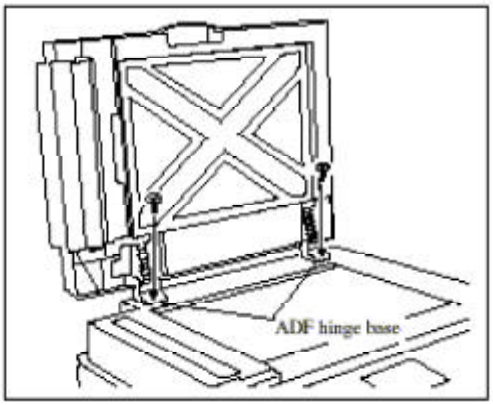

20. Mount the ADF unit on the printer while sliding the stepped screws (added in the previous step) into the slits of the ADF hinge bases, and secure it with two additional screws (Binding screw M4x10, 2pcs).

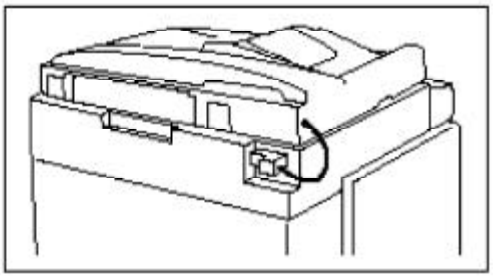

21. Connect the ADF unit cable to the ADF connector on the printer.

Proceed to the section "ADF Unit Balance Adjustment" on page 8.

7

ADF Unit Balance Adjustment

Important !

Be sure to carry out the following adjustment steps to avoid causing original feed troubles and undesirable print results.

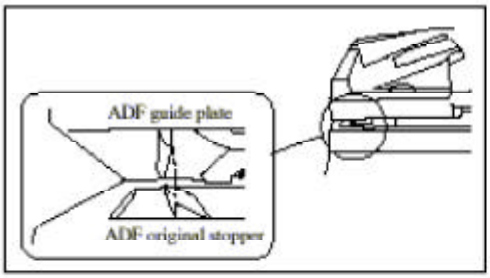

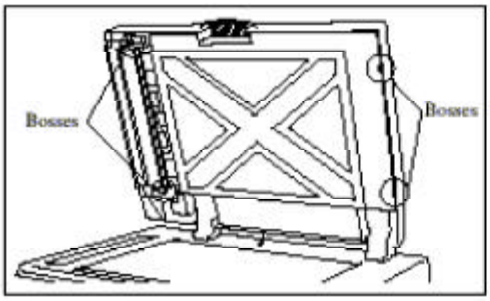

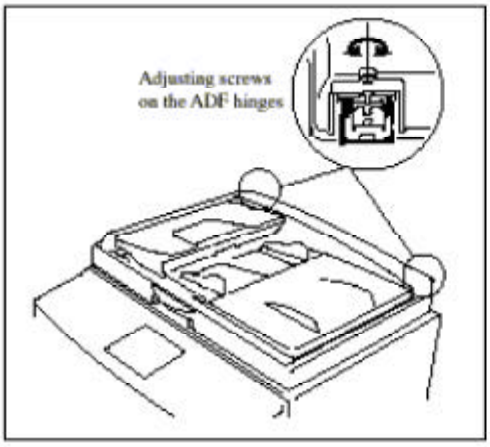

1. Check if the ADF original stopper and the ADF guide plate do not touch each other by looking into the opening between the ADF unit and the Scanner table from the front side. If they touch each other, adjust the position of the ADF unit by following the procedures described in the section "Compensation for slanted printed images" on page 9.
2. Start up the test mode of the printer and input the test code "130" using print quantity keys to turn on the CCD light of the Scanner Unit.
3. Close the ADF unit and check if all its feet and bosses evenly touch the Scanner table by looking into the opening between the ADF unit and the Scanner table.
4. When the ADF unit is unevenly seated on the printer, make the level even as follows.

   If the ADF unit is raised on the front side, rotate the adjusting screws counterclockwise.

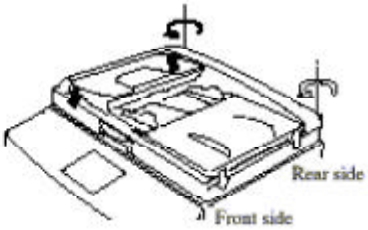

   If the ADF unit is raised on the rear side, rotate the adjusting screws clockwise.

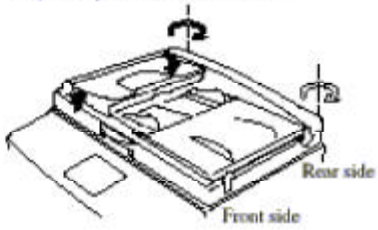

4. After the above adjustment, quit the test mode to turn off the CCD light.
5. Check that the ADF unit appropriately works and adjust it with the Riso test chart, following the procedures on the following page.

8

Adjustment of Scanning Parameters

If printed images are of a different size and/or by far offset when originals are scanned in the ADF unit, compared with when scanned on the Stage glass, adjust the scanning parameters as follows.

1. Compensation for slanted printed images

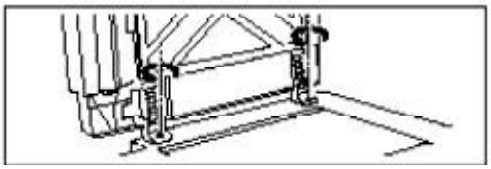

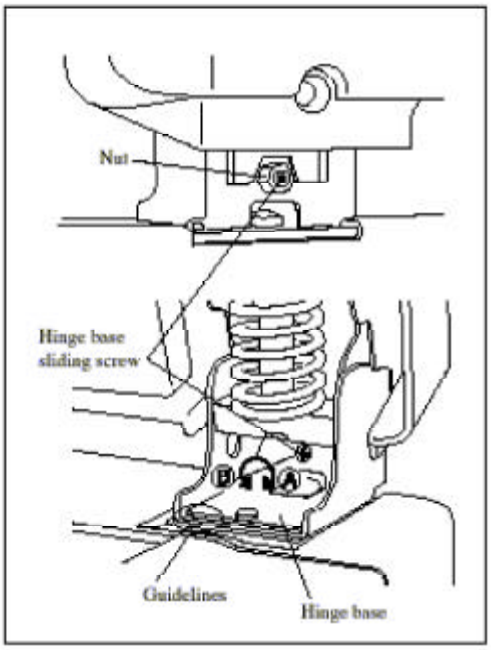

1) Loosen the binding screws (M4x10) on the ADF hinge bases.

2) Loosen the nut on the Hinge base sliding screw which is located on the rear side of the hinge on the paper receiving side.

3) Turn the Hinge base sliding screw and adjust the position of the ADF Hinge base, referring to the guidelines on it.

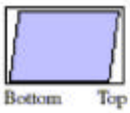

Turn the screw **clockwise** (Ⓐ) when printed images are slanted as illustrated in the left-hand figure.



Turn the screw **counterclockwise** (Ⓑ) when printed images are slanted as illustrated in the left-hand figure.

4) Secure the nut on the Hinge base sliding screw and then the binding screws on the ADF hinge bases.

5) Check if printed images are squared in the same way as when the original is scanned on the Stage glass.

Repeat the procedure in the above steps 1) to 5) until obtaining squared printed images.

2. Adjustment of scanning start position (Compensation for printing position in vertical direction)

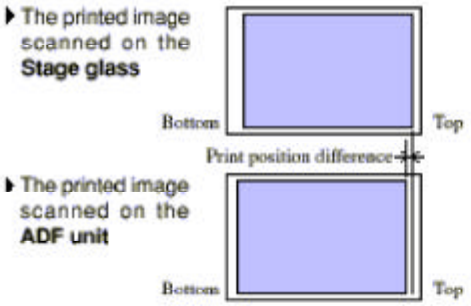

1) Start up the **test mode** of the printer and input the test code **"783"** using print quantity keys.
2) Press the **Start key** twice to make the message **"In Action"** appear on the display.
3) Input a required value with print quantity keys to compensate the vertical scanning start position. The position is shifted 0.1mm per one step.
(ex. To shift the scanning start position by 1mm **upward**, input "10". To shift the position by 1mm **downward**, on the other hand, input ✱ before inputting "10".)
4) Press the **Start key** to confirm the input value, and press the **Reset key** more than one second to quit the test mode.
5) Check if the vertical print position is the same as when the original is scanned on the Stage glass.

Repeat the procedure in the above steps 1) to 5) until obtaining an identical vertical print position.

3. Adjustment of scanning position (Compensation for printing position in horizontal direction)

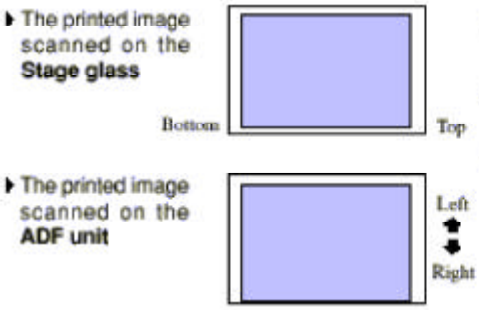

1) Start up the **test mode** of the printer and input the test code **"782"** using print quantity keys.
2) Press the **Start key** twice to make the message **"In Action"** appear on the display.
3) Input a required value with print quantity keys to compensate the horizontal scanning position.
The horizontal scanning position can be changed by 0.5 mm.
(ex. To shift the scanning position to the **left** by 1mm, input "10". To shift the position to the **right** by 1mm, on the other hand, input ✱ before inputting "10".)

NOTE : Be sure to input a multiple of "5 (five)".

4) Press the **Start key** to confirm the input value, and press the **Reset key** more than one second to quit the test mode.
5) Check if the horizontal printing position is the same as when the original is scanned on the Stage glass.

Repeat the procedure in the above steps 1) to 5) until obtaining an identical horizontal print position.

10

4. Adjustment of scanning speed (Compensation for printed image size in vertical direction)

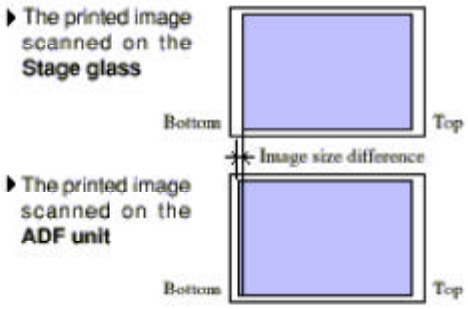

1) Start up the **test mode** of the printer and input the test code **"784"** using print quantity keys.
2) Press the **Start key** twice to make the message **"In Action"** appear on the display.
3) Input a required value with print quantity keys to compensate the scanning speed for vertical image size. The vertical image size is changed 0.1% per one step.
(ex. **To shorten** 300mm-long images by 3mm (1%), input "10". **To extend** them by 3mm, on the other hand, input * before inputting "10".)
4) Press the **Start key** to confirm the input value, and press the **Reset key** more than one second to quit the test mode.
5) Check if the vertical image size is the same as when the original is scanned on the Stage glass.

Repeat the procedure in the above steps 1) to 5) until obtaining an identical vertical image size.

Installation procedures after adjustment

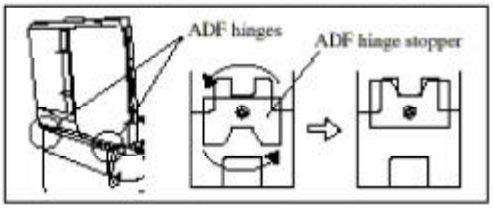

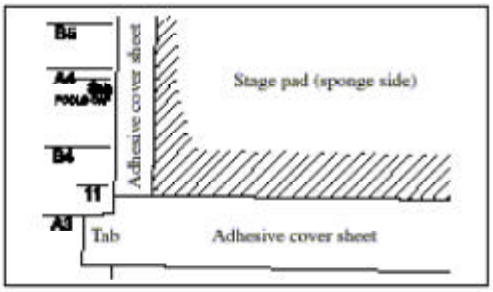

After adjusting scanning parameters, proceed to the following steps.

1. Remove the screws which secure the ADF hinge stopper on the rear side of the ADF hinges.
2. Rotate the ADF hinge stoppers by 180 degrees and secure them with the screws again.
3. Place the Stage pad on the Stage glass, facing the sponge side upwards.
4. Remove the adhesive cover sheets from the Stage pad aligning the inner edge of the longer tab to the A3 guideline on the Original stopper.
5. Close the ADF unit gently.
6. Open the ADF unit and affix the Stage pad to it firmly by pressing the adhesive parts.

8. Digitizer V (ADF)

Digitizer V (ADF) Installation Procedure

Types of Applicable Printers

The following printer models are the intended basic units for installing the Digitizer V (ADF).

RISO KAGAKU CORPORATION Models

RISO RN25 Series
RISO RP Series (except RP3100 Series)

Important !

- When installing this unit on a RISO RN series model, you are also required to order another Digitizer image wire harness as spare part.
- If you want to know the adjustment procedures of the ADF unit VI, refer to the installation guide of the ADF unit VI.

Nobody but Riso-authorized service representatives is allowed to install this unit.

Packing List

This package contains the following items.

1. Digitizer V (ADF) unit ..... 1 unit
2. Digitizer control wire harness ..... 1 pc.
3. Digitizer image wire harness ..... 1 pc.
4. Digitizer port PCB bracket ..... 1 pc.
5. Digitizer port PCB ..... 1 pc.
6. Digitizer control PCB ..... 1 pc.
7. Control panel key label (Japanese / English) ... 1 pc.
8. Stage pad ..... 1 pc.
9. ADF Digitizer latch ..... 1 pc.
10. Wire clamper ..... 4 pcs.
11. Wire saddle ..... 1 pc.
12. Screws ..... 1 set
13. Adjustment chart ..... 1 sheet
14. Installation guide (This manual) ..... 1 copy
15. User's Guide ..... 1 copy
16. Declaration of Conformity ..... 1 copy

Required parts

Check the parts required to install in the corresponding printer.

Printer model / Required parts	RN25		RP
	European	Non-European	
Digitizer V (ADF) unit	○	○	○
Digitizer control wire harness	×	×	○
Digitizer image wire harness	×	×	○
Digitizer port PCB bracket	○	○	○
Digitizer port PCB	○	○	○
Digitizer control PCB	○	○	○
Control panel key label	○	○	○
Stage pad	○	○	○
ADF Digitizer latch	○	○	○
Wire clamper	○	○	○
Wire saddle	○	○	○
Screws	○	○	○
Following parts are additionally required.			
Digitizer control wire harness 2	○	○	×
Digitizer image wire harness 2	○	○	×
Shield tape	○	×	×
Shield plate (2 pcs.)	○	×	×
Metallic sponge (2 pcs.)	○	×	×

This document is printed on recycled paper.

030-06010-406 1

Installation Procedure = For RISO RP series models =

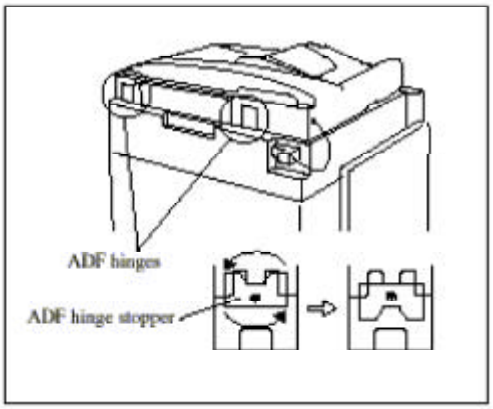

< In case the ADF unit is already installed >

1. Turn off the main power switch of the printer and unplug the power cord.
2. Remove the ADF hinge stoppers on the rear side of the ADF hinges and replace them upside down on the ADF hinges.
3. Disconnect the ADF unit cable from the ADF connector on the printer and open the ADF unit.
4. Remove the securing screws on the ADF hinge bases and dismount the ADF unit from the printer while sliding the ADF hinge bases off the stepped screws.
5. Remove the Scanner rear cover and then proceed to the step 11 on the next page.

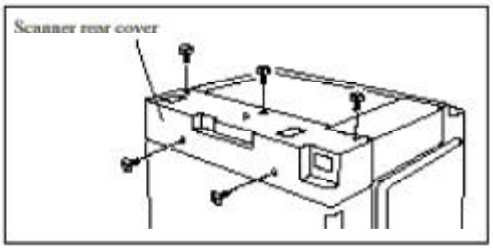

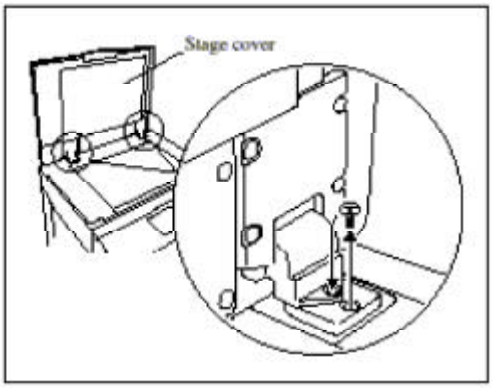

< In case the ADF unit is not installed yet >

1. Turn off the main power switch of the printer and unplug the power cord.
2. Open the Stage cover and remove the securing screws on the hinges. The removed screws should be kept by turning them into the adjoining holes on the hinges.
3. Remove the Ground wire located on the rear side of the Stage cover and dismount the Stage cover.

   NOTE : The Stage cover is not reused.

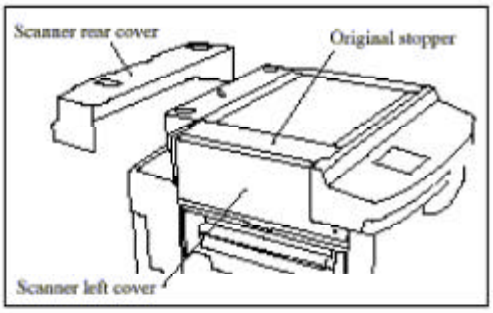

4. Remove the Scanner rear cover.
5. Remove the Scanner left cover.
6. Remove the securing screws on the Original stopper and slide it off to the left.

   NOTE : The Original stopper is not reused.

7

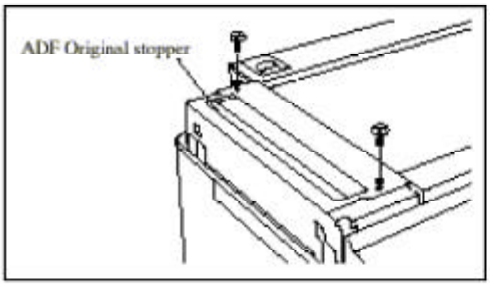

7. Secure the ADF original stopper with the screws which were removed in the previous step.

Important !

Before securing the ADF original stopper, be sure to clean the shading sheet (a white sheet) on the back side. If it is stained or dusty, unwanted images may appear on prints.

8. Replace the Scanner left cover.

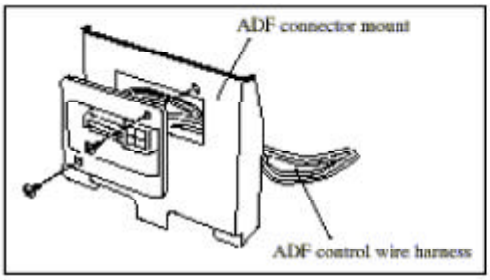

9. Lead the ADF control wire harness through the opening of the ADF connector mount and secure the ADF connector at the end of the wire harness to the ADF connector mount with screws (Binding screw M3x8, 2pcs).

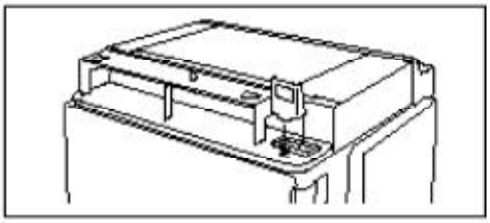

10. Insert the tab of the ADF connector mount into the slit in the rear corner of the Scanner table and secure the ADF connector mount to the Scanner table with screws (Double-washered screw M4x8, 2pcs).

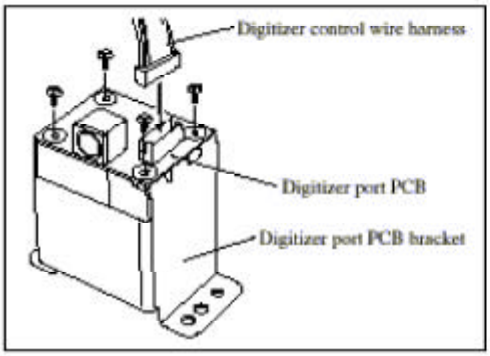

11. Fix the Digitizer port PCB on the PCB bracket with screws (Double-washered screw M3x6, 4 pcs.), as illustrated in the figure.
12. Connect the Digitizer control wire harness to the Digitizer port PCB.

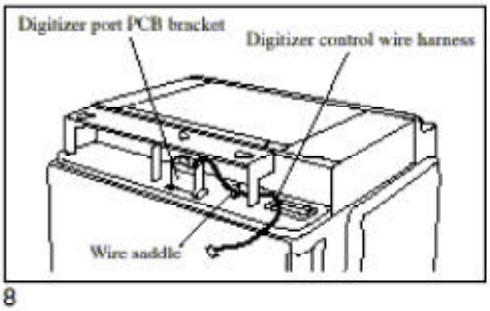

13. Secure the Digitizer port PCB bracket on the Rear base plate of the Scanner table with screws (Double-washered screw M4x8, 2 pcs.), matching the alignment bosses with the corresponding alignment holes.
14. Lead the Digitizer control wire harness through the existing wire saddle on the Rear base plate.

8

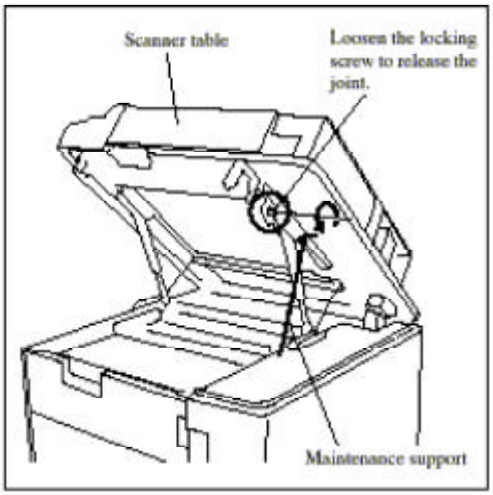

15. Open the Scanner table and release the Scanner table support joint by loosening the locking screw. Then set up the Maintenance support, pushing up the Scanner table further, to open the table wider.
16. Remove the Rear cover.

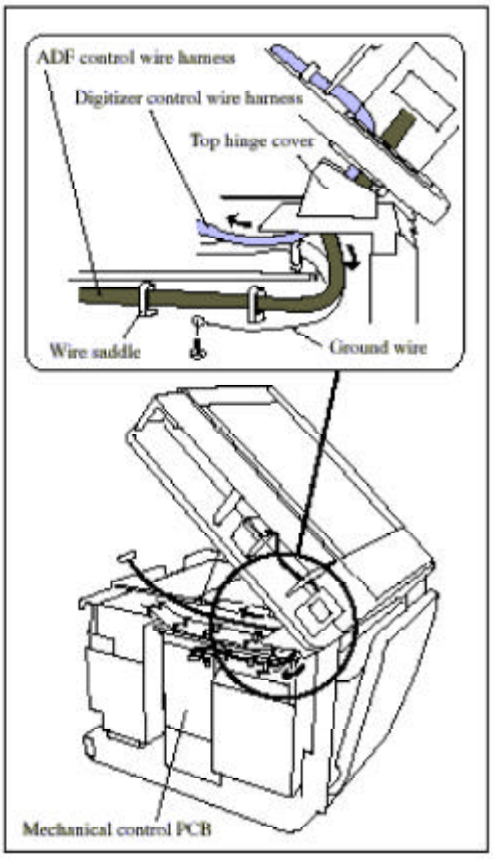

17. Lead both the Digitizer control wire harness and the ADF control wire harness through the opening in the rear corner of the Scanner table and then through the Top hinge cover.

    NOTE : If the ADF control wire harness is already wired up to the Mechanical control PCB, lead the Digitizer control wire harness only and skip the following 3 steps to proceed to the step 21.

18. Connect the connectors at the other end of the ADF control wire harness to the CN13 and CN14 on the Mechanical control PCB.
19. Lead the ADF control wire harness through the wire saddles together with existing wire harnesses as illustrated.
20. Secure the terminal of the Ground wire coming out of the wire harness as illustrated. (Star washer, 1 pce and Collar screw M3x6, 1pce)
21. Remove the ROSE control PCB cover.
22. Remove the securing screws (3pcs) of the Power supply PCB base plate and open the PCB base plate.

    NOTE : If it is difficult to open the PCB base plate, disconnect the wire harnesses coming into the Power supply PCB.

9

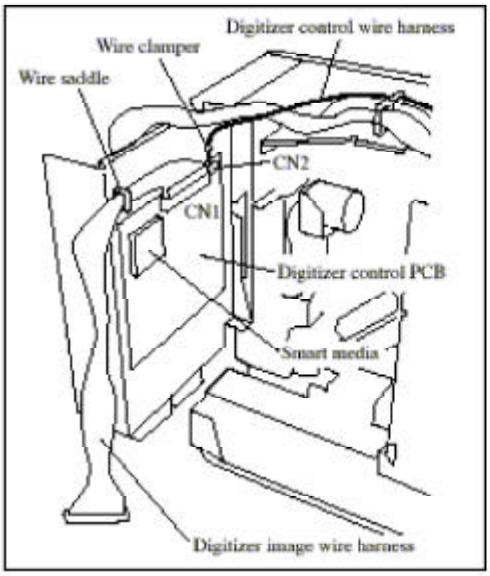

23. Secure the Digitizer control PCB on the rear side of the PCB base plate with screws (Double-washered screw M3x6, 4pcs).

    NOTE : Be sure that the CN1 connector should be positioned on the upper side.

    Important !

    Remove and return the Smart media several times to make sure it is securely seated in the socket on the Ditigizer control PCB.

24. Connect the Digitizer control wire harness to the CN2 of the Digitizer control PCB and secure it with a wire clamper at the point indicated in the figure.

25. Connect the Digitizer image wire harness to the CN1 of the Digitizer control PCB and hold it with a wire saddle at the point indicated in the figure.

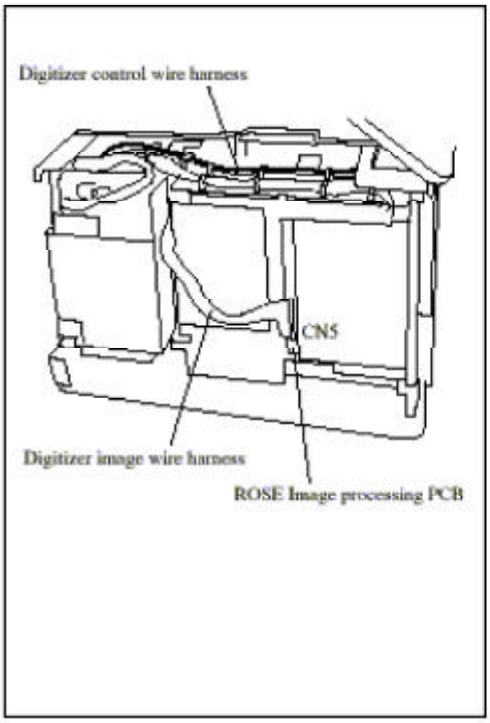

26. Close the PCB base plate, leading the Digitizer image wire harness out from behind the PCB base plate, and connect another connector of the wire harness to the CN5 of the ROSE Image processing PCB.

27. Place the Digitizer control wire harness in the existing wire saddles together with the other wire harness (purple one) running in the farther lane along the top edge of the ROSE control PCB base plate.

28. Secure the Power supply PCB base plate again with screws and replace the ROSE control PCB cover, taking care not to catch the wire harnesses between plates.

    NOTE : If the wire harnesses are removed from the Power supply PCB, connect them again in this step.

29. Replace the Rear cover on the printer.

30. Pull off the Maintenance support and lower the Scanner table to the normal opening position. Then secure the Scanner table support joint and close the Scanner table.

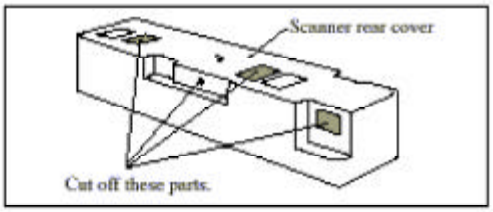

31. Cut off the illustrated parts from the Scanner rear cover and replace the cover on the printer.

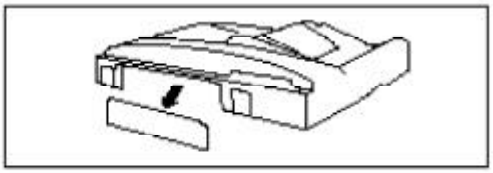

32. Cut off the illustrated part from the rear side cover of the ADF unit and smoothen the open edges with a cutter knife or paper file for fine finish.

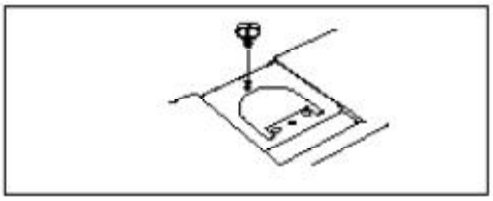

33. Secure 4 stepped screws (provided in the package) on the respective Hinge housings.

    NOTE : If the ADF unit is dismounted from the printer in the initial steps, 2 of 4 stepped screws are already secured on the corresponding Hinge housings.

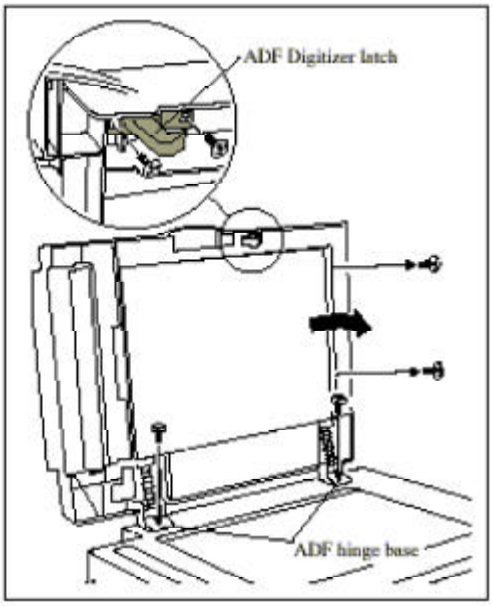

34. Mount the ADF unit on the printer while sliding the stepped screws (added in the previous step) into the slits of the ADF hinge bases, and secure it with two additional screws (Binding screw M4x10, 2pcs).
35. Remove two securing screws on the Stage pad base of the ADF unit and slide it off to the right.
36. Attach the ADF Digitizer latch to the indicated position on the bottom of the ADF unit with two screws (Binding screw M4x10, 2 pcs), as illustrated in the figure.
37. Make required adjustments for the ADF unit, referring to the installation guide of the ADF unit VI.

    Important !

    Always make adjustments for the ADF unit before installing the Digitizer unit on the printer. Otherwise, the Digitizer unit may not be perfectly locked in the ADF unit.

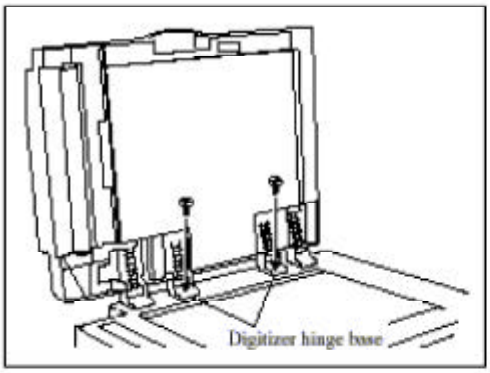

38. Mount the Digitizer unit on the printer while sliding the stepped screws (added in the step 33) into the slits of the Digitizer hinge bases, and secure it with two additional screws (Binding screw M4x10, 2pcs).

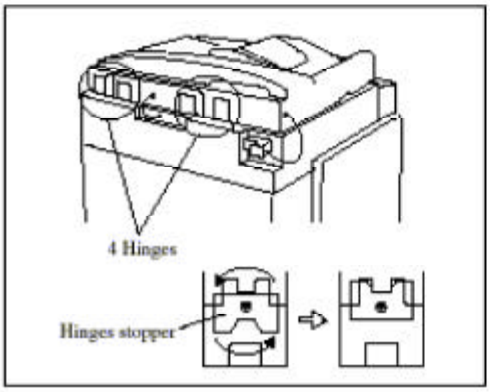

39. Connect the ADF unit cable to the ADF connector on the printer and then the connector of the Digitizer unit to the counterpart on the rear side of the Scanner table.
40. Remove the ADF and Digitizer hinge stoppers (4 pcs.) on the rear side of the ADF and Digitizer hinges and replace them upside down on the ADF and Digitizer hinges.

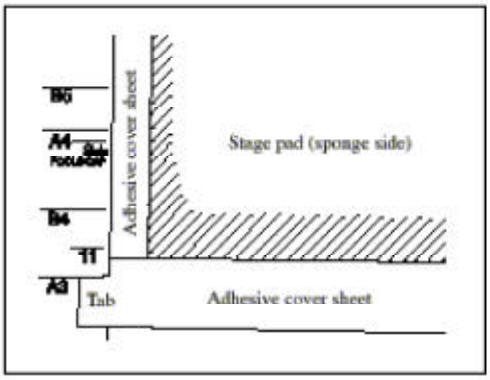

41. Place the Stage pad on the Stage glass, facing the sponge side upwards.
42. Remove the adhesive cover sheets from the Stage pad aligning the inner edge of the longer tab to the A3 guideline on the Original stopper.
43. Close the Digitizer unit gently.
44. Open the Digitizer unit and affix the Stage pad to it firmly by pressing the adhesive parts.

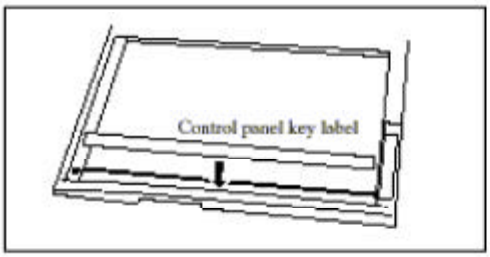

45. Remove the protection sheet from the top face of the Digitizer unit.
46. Stick the Control panel key label to the corresponding part on the control panel of the Digitizer unit.
47. Turn on the main power of the printer and make required adjustments for image alignment on the Digitizer unit, using the dedicated adjustment chart.

12

9. Digitizer V

Digitizer V Installation Procedure

Types of Applicable Printers

The following printer models are the intended basic units for installing the Digitizer V.

RISO KAGAKU CORPORATION Models

RISO RN25 Series
RISO RP Series (except RP3100)

Nobody but Riso-authorized service representatives is allowed to install this unit.

Packing List

This package contains the following items.

1. Digitizer V unit ..... 1 unit
2. Digitizer control wire harness ..... 1 pc.
3. Digitizer image wire harness ..... 1 pc.
4. Digitizer port PCB bracket ..... 1 pc.
5. Digitizer port PCB ..... 1 pc.
6. Digitizer control PCB ..... 1 pc.
7. Control panel key label (Japanese / English) ... 1 pc.
8. Wire clamper ..... 4 pcs.
9. Wire saddle ..... 1 pc.
10. Screws ..... 1 set
11. Adjustment chart ..... 1 sheet
12. Installation guide (This manual) ..... 1 copy
13. User's Guide ..... 1 copy
14. Declaration of Conformity ..... 1 copy

Required parts

Check the parts required to install in the corresponding printer.

Printer model / Required parts	RN25		RP
	European	Non-European	
Digitizer V unit	○	○	○
Digitizer control wire harness	×	×	○
Digitizer image wire harness	×	×	○
Digitizer port PCB bracket	○	○	○
Digitizer port PCB	○	○	○
Digitizer control PCB	○	○	○
Control panel key label	○	○	○
Wire clamper	○	○	○
Wire saddle	○	○	○
Screws	○	○	○
Following parts are additionally required.			
Digitizer control wire harness 2	○	○	×
Digitizer image wire harness 2	○	○	×
Shield tape	○	×	×
Shield plate (2 pcs.)	○	×	×
Metallic sponge (2 pcs.)	○	×	×

This document is printed on recycled paper.

030-06009-408 1

Installation Procedure = For RISO RP series models =

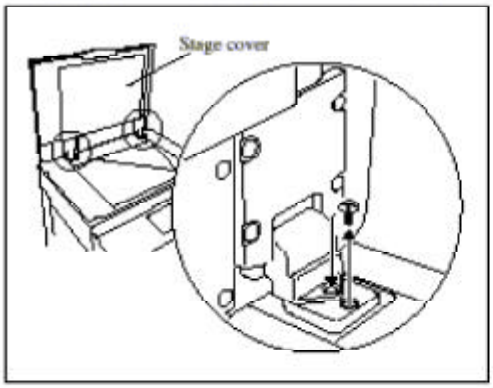

1. Turn off the power switch of the printer and unplug the power cord.
2. Open the Stage cover and remove the securing screws on the hinges. The removed screws should be kept by turning them into the adjoining holes on the hinges.
3. Remove the Ground wire located on the rear side of the Stage cover and dismount the Stage cover.

   NOTE : The Stage cover is not reused.

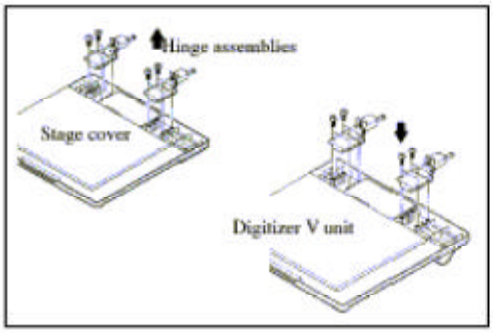

4. Remove the Hinge assemblies from the Stage cover and install them on the Digitizer V unit.

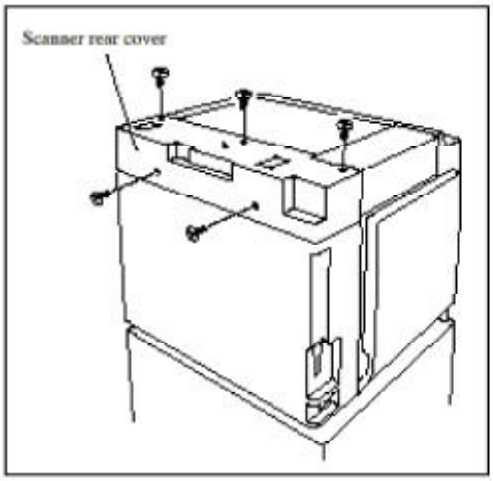

5. Remove the Scanner rear cover.

7

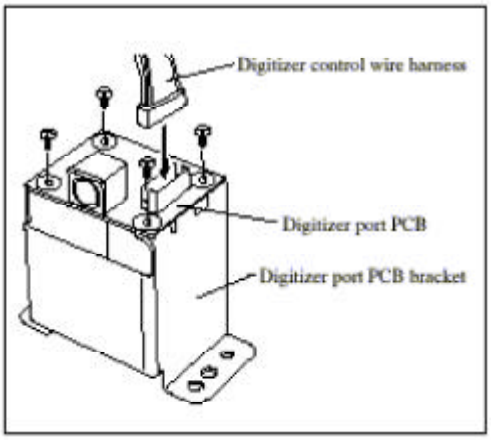

6. Fix the Digitizer port PCB on the PCB bracket with screws (Double-washered screw M3x6, 4 pcs.), as illustrated in the figure.
7. Connect the Digitizer control wire harness to the Digitizer port PCB.

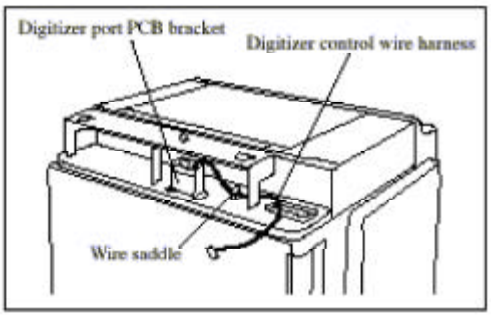

8. Secure the Digitizer port PCB bracket on the Rear base plate of the Scanner table with screws (Double-washered screw M4x8, 2 pcs.), matching the alignment bosses with the corresponding alignment holes.
9. Lead the Digitizer control wire harness through the existing wire saddle on the Rear base plate.

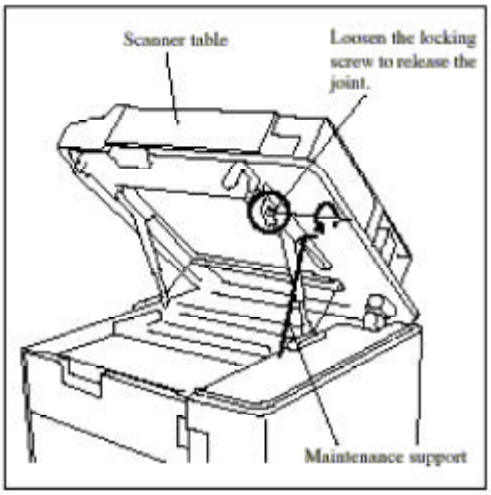

10. Open the Scanner table and release the Scanner table support joint by loosening the locking screw. Then set up the Maintenance support, pushing up the Scanner table further, to open the table wider.
11. Remove the Rear cover.

8

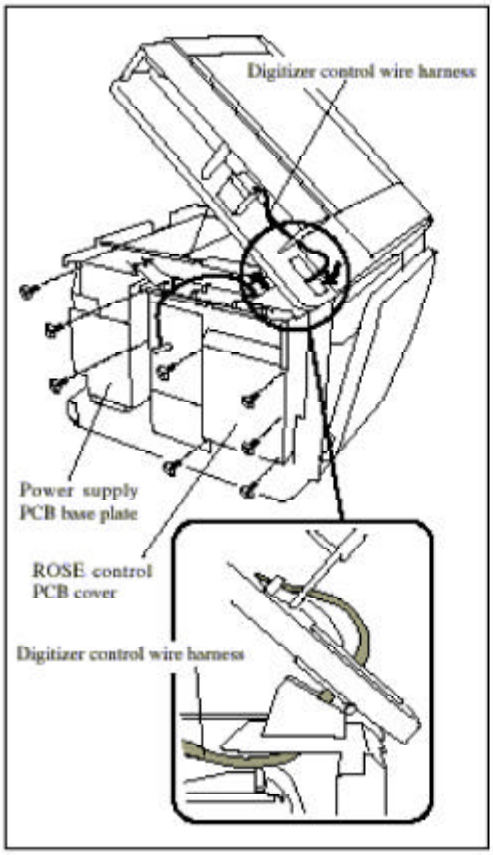

12. Lead the Digitizer control wire harness through the opening in the rear corner of the Scanner table and then through the Top hinge cover.
13. Remove the ROSE control PCB cover.
14. Remove the securing screws (3pcs) of the Power supply PCB base plate and open the PCB base plate.

    NOTE : If it is difficult to open the PCB base plate, disconnect the wire harnesses coming into the Power supply PCB.

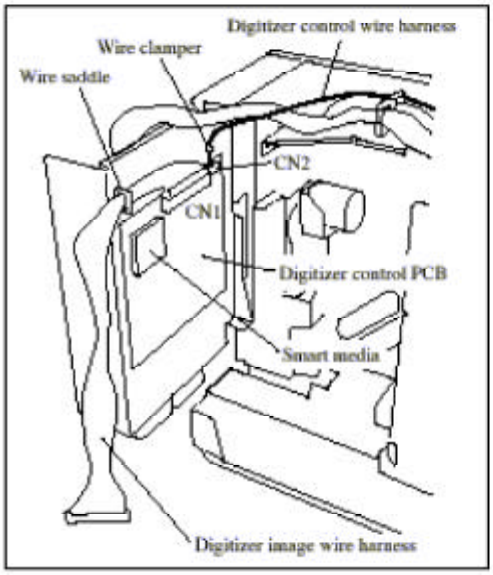

15. Secure the Digitizer control PCB on the rear side of the PCB base plate with screws (Double-washered screw M3x6, 4pcs).

    NOTE : Be sure that the CN1 connector should be positioned on the upper side.

Important !

Remove and return the Smart media several times to make sure it is securely seated in the socket on the Ditigizer control PCB.

16. Connect the Digitizer control wire harness to the CN2 of the Digitizer control PCB and secure it with a wire clamper at the point indicated in the figure.
17. Connect the Digitizer image wire harness to the CN1 of the Digitizer control PCB and hold it with a wire saddle at the point indicated in the figure.

9

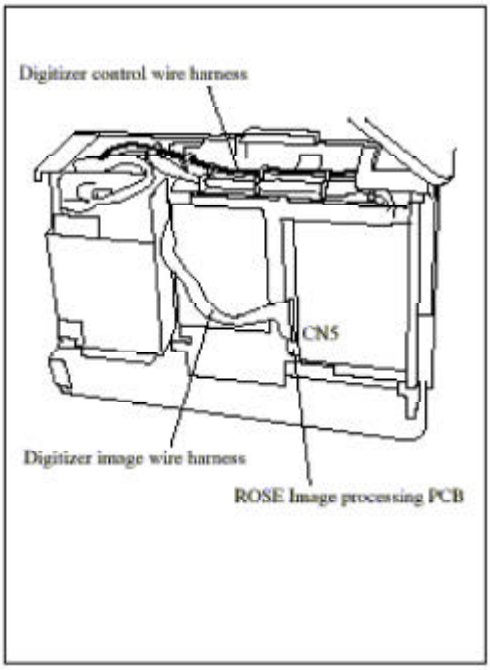

18. Close the PCB base plate, leading the Digitizer image wire harness out from behind the PCB base plate, and connect another connector of the wire harness to the CN5 of the ROSE Image processing PCB.
19. Place the Digitizer control wire harness in the existing wire saddles together with the other wire harness (purple one) running in the farther lane along the top edge of the ROSE control PCB base plate.
20. Secure the Power supply PCB base plate again with screws and replace the ROSE control PCB cover, taking care not to catch the wire harnesses between plates.

    NOTE : If the wire harnesses are removed from the Power supply PCB, connect them again in this step.
21. Replace the Rear cover on the printer.
22. Pull off the Maintenance support and lower the Scanner table to the normal opening position. Then secure the Scanner table support joint and close the Scanner table.

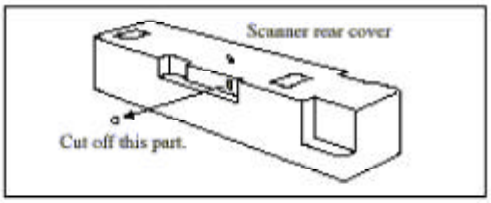

23. Cut off the illustrated circle part from the Scanner rear cover and replace the cover on the printer.

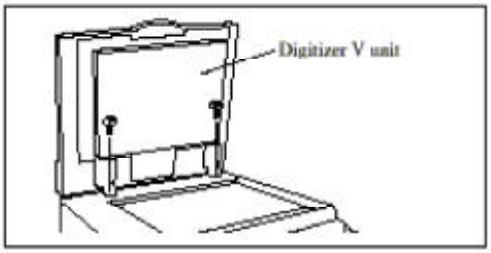

24. Mount the Digitizer V unit on the printer and secure it with the screws removed in step 2.
25. Connect the connector of the Digitizer V unit to the counterpart on the rear side of the Scanner table.

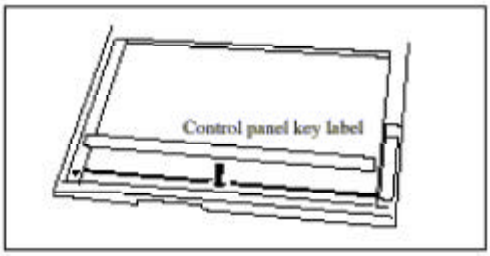

26. Remove the protection sheet from the top face of the Digitizer V unit.
27. Stick the Control panel key label to the corresponding part on the control panel of the Digitizer V unit.
28. Turn on the main power of the printer and make required adjustments for image alignment on the Digitizer V unit, using the dedicated adjustment chart.

10. RISORINC-NET-B

RISO Printer Network Interface Card
RISORINC-NET-B Installation Procedure

Type of Applicable Printers

The following printer models are the intended basic units for installing the RISO Printer Network Interface Card RISORINC-NET-B.

RISO KAGAKU CORPORATION Models

RISOGRAPH RN Series
RISO RN25 Series
RISO RP Series

Important !

When installing in the European models of RN25 series, the Network joint wire harness 4, a wire clip and the shield plate are additionally required.

Nobody but Riso-authorized service representatives is allowed to install this unit.

Packing List

This package contains the following items.

1. RISORINC-NET-B board ..... 1 unit
2. NET-B board bracket ..... 1 pc.
3. Network joint wire harness 1 (multicolored one) ..... 1 pc.
4. Network joint wire harness 2 (long purple one) ..... 1 pc.
5. Network joint wire harness 3 (short purple one) ..... 1 pc.
6. Binding screw M3x6 ..... 10 pcs.
7. Wire clamper ..... 1 pc.
8. Installation guide (This manual) ..... 1 copy
9. Instruction sheet ("Opening RISORINC-NET-B On-line Manual") ..... 1 copy
10. CD-ROM ..... 1 pc.

= RISO RP series models =

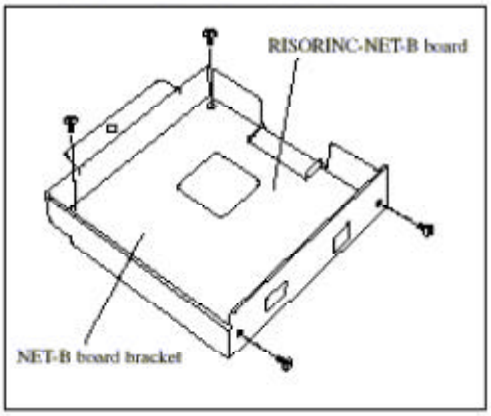

1. Attach the ROSORINC-NET-B board to the NET-B board bracket. (Binding screw M3x6, 4pcs).

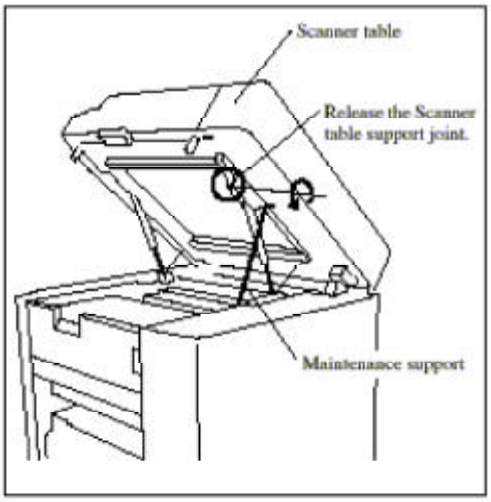

2. Turn off the printer and unplug the power cord.
3. Open the Scanner table and release the Scanner table support joint by loosening the locking screw. Then push up the Scanner table further and set up the Maintenance support to open the table wider.
4. Remove the Rear cover from the printer.

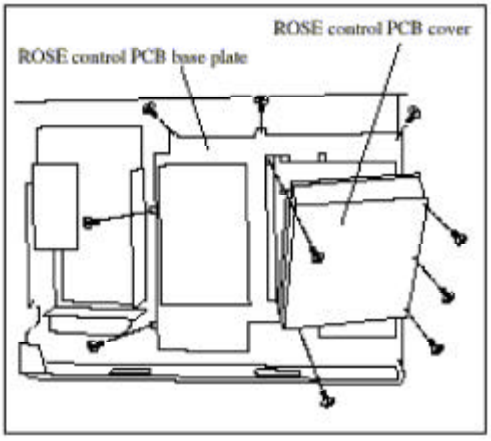

5. Remove the ROSE control PCB cover.
6. Remove the securing screws (5pcs) of the ROSE control PCB base plate.
7. Disconnect the wire harnesses coming into the ROSE control PCB and open the PCB base plate.

6

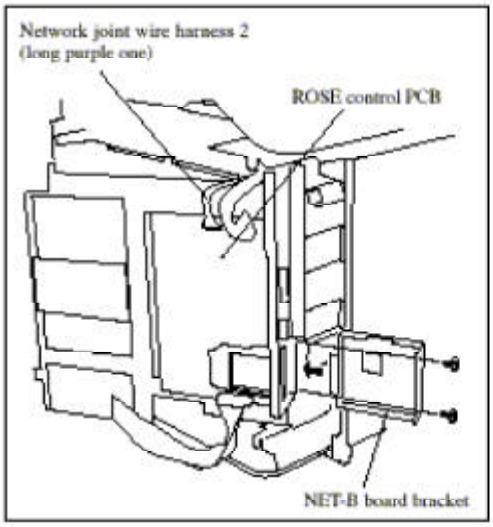

8. Connect the white connector of the Network joint wire harness 2 (long purple one) to the CN3 on the ROSE control PCB.
9. Insert the NET-B board bracket behind the ROSE control PCB base plate from under the Connector mount and secure it on the Connector mount. (Binding screw M3x6, 2pcs)

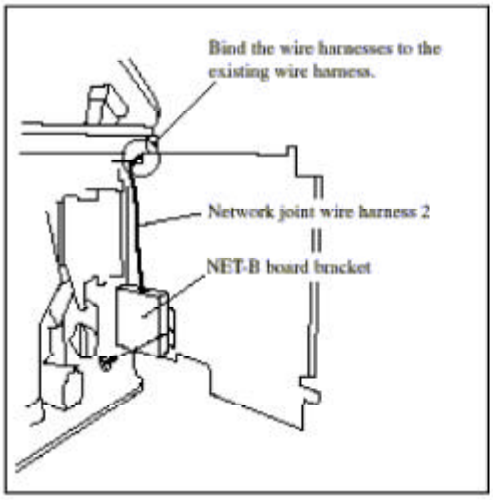

10. Secure the NET-B board bracket to the back side of the ROSE control PCB base plate. (Binding screw M3x6, 1pce)
11. Lead the Network joint wire harness 2 over PCB base plate and connect the black connector to the ROSORINC-NET-B board.
12. Bind the Network joint wire harness 2 to the existing wire harness with a wire clamper to avoid pinching it when closing the ROSE control PCB base plate.
13. Close the ROSE control PCB base plate and secure it with screws.
14. Connect the wire harnesses disconnected in the step 7 to the ROSE control PCB again, and replace the ROSE control PCB cover.

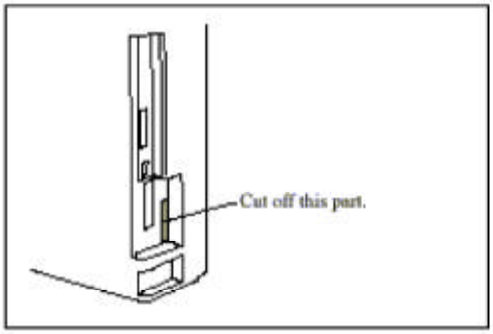

15. Cut off the illustrated part from the Rear cover of the printer.
16. Replace the Rear cover on the printer.
17. Pull off the Maintenance support and lower the Scanner table to the normal opening position. Then secure the Scanner table support joint and close the Scanner table.
18. Plug the power cord and turn on the printer. Check if the RISORINC-NET-B functions correctly.

7

11. DMC-32

Document Memory Card DMC-32
Installation Procedure

Types of Applicable Printers

The following printer models are the intended basic units for installing the Document Memory Card DMC-32.

RISO KAGAKU CORPORATION Models

RISO RN Series
RISO RP Series

Packing List

This package contains the following items.

1. Document Memory Card DMC-32 ..... 1 pc.
2. Installation guide (This manual) ..... 1 copy

Nobody but Riso-authorized service representatives is allowed to install this unit.

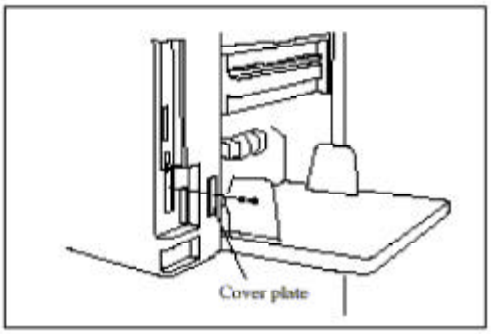

1. Turn off the power switch of the printer and unplug the power cord.
2. Remove the cover plate on the Interface port terminal, which is located on the paper feed side.

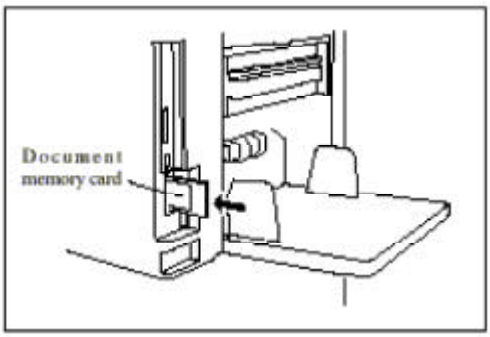

3. Insert the Document memory card into one of the slots until it stops.

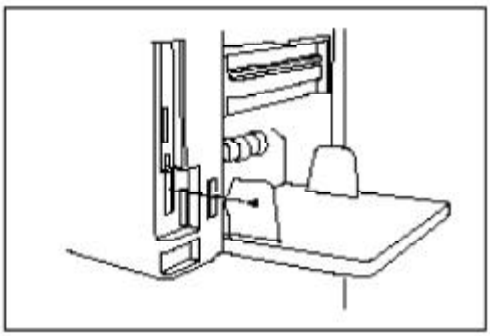

4. Replace the cover plate.

This document is printed on recycled paper.

102-06016-405

12. Key-Card Counter IV

Key/Card Counter IV Attachment Kit A Installation Procedure

Types of Applicable Printers

The following printer models are the intended basic units for installing the Key/Card Counter IV Attachment Kit A.

RISO KAGAKU CORPORATION Models

RISO RP3 Series

Nobody but Riso-authorized service representatives is allowed to install this unit.

Packing List

This package contains the following items.

1. Counter bracket RP (upper) ..... 1 unit
2. Counter bracket RP (lower) ..... 1 pc.
3. Connector protection bar ..... 1 set
4. Counter socket adapter ..... 1 pc.
5. Grounding plate ..... 1 pc.
6. Screws ..... 1 set
7. Installation guide (This manual) ..... 1 copy
8. Supplemental instruction leaf ..... 1 copy

In addition to the above items, the contents in the Key/Card Counter IV package are to be used.

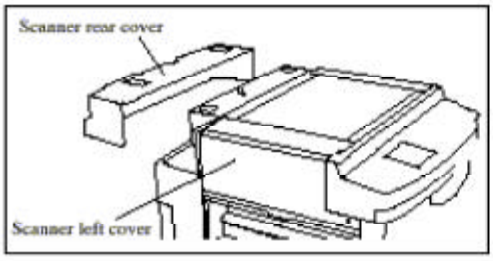

1. Turn off the main power switch of the printer and unplug the power cord.
2. Dismount the Stage cover (or the optional ADF unit). If the Digitizer is installed, dismount it as well.
3. Remove the Scanner rear cover and the Scanner left cover.

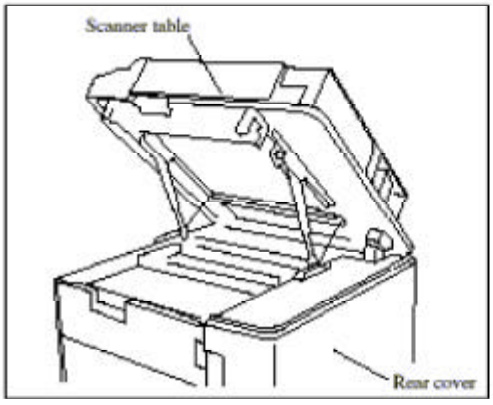

4. Open the Scanner table and remove the Rear cover from the printer.

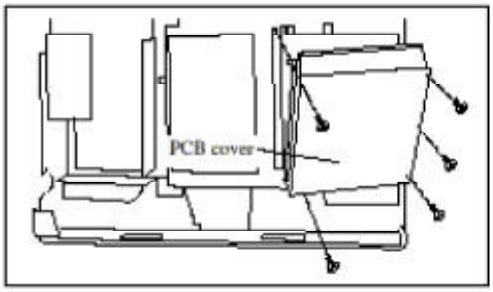

5. Remove the PCB cover.

This document is printed on recycled paper.

112-06005-108 1

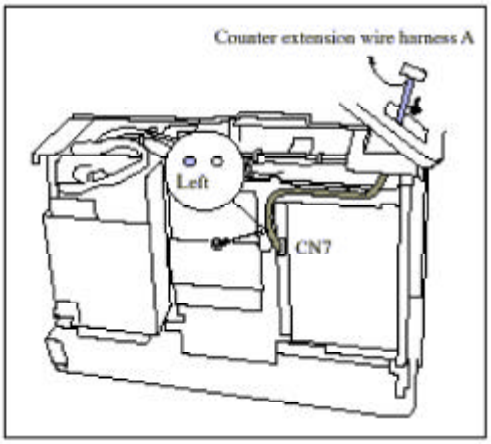

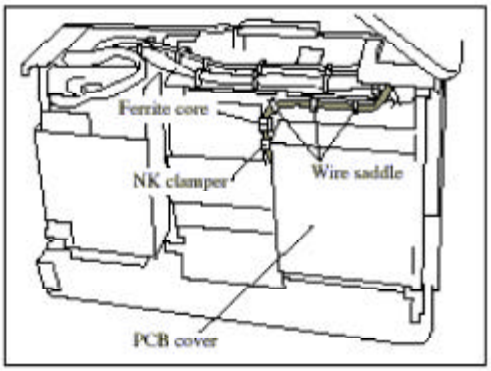

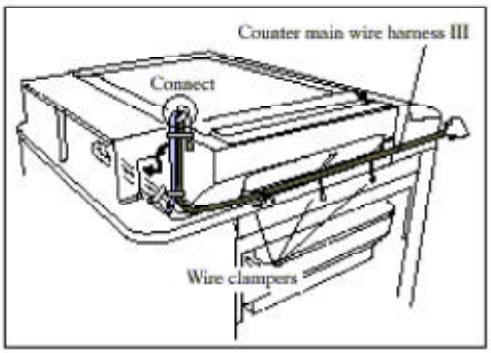

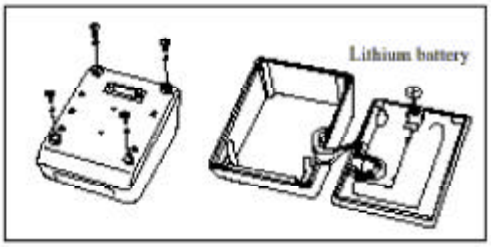

2

6. Connect the connector (with a ground wire) of the Counter extension wire harness A (longer one) to the CN7 on the ROSE Image processing PCB and lead the other end of the wire harness through the opening on the rear corner of the Scanner table and then through the Top hinge cover.
7. Secure the terminal of the ground wire coming out of the Counter extension wire harness A to the left-hand scr1ew hole beside the PCB. (Star-washered screw M3x6)

   Important!
   Do not secure the ground wire terminal to the right-hand screw hole. Otherwise, it may cause noises.
8. Replace the PCB cover.
9. Attach a Ferrite core to the Counter extension wire harness A.
10. Attach an NK clamper on the left side of the PCB cover and secure the Counter extension wire harness A.
11. Secure the Counter extension wire harness A with the existing wire saddles as illustrated.
12. Connect the connectors of the Counter main wire harness III to those of the Counter extension wire harness A respectively. Then fold the wire harnesses at the connected part and bind them at two points with wire clampers as illustrated.
13. Lead the Counter main wire harness III closely along the left side of the Scanner table and secure it to the Scanner table base frame with wire clampers at three positions.

    NOTE : Fit the heads of wire clampers in the groove to avoid pinching them when replacing the Scanner left cover.
14. Place the folded part of the wire harnesses in the rear side of the Scanner table base frame as illustrated.
15. Replace the rear cover of the printer and close the Scanner table.
16. Remove the case cover from the Key/Card counter unit and put a Lithium battery into the battery holder with the + side facing upward.

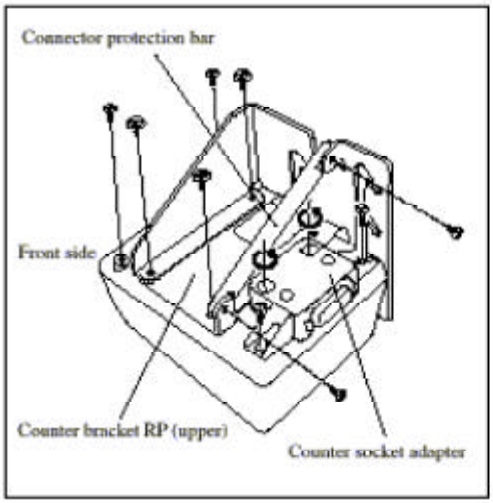

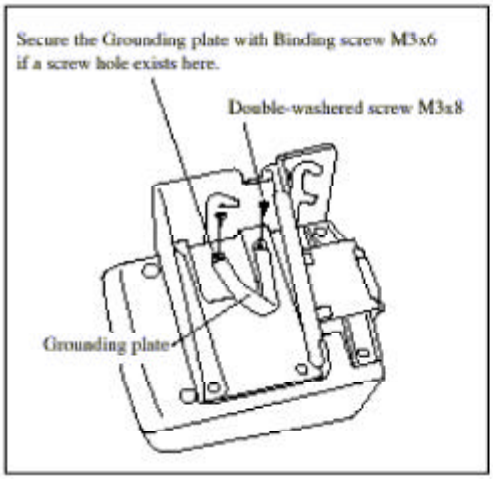

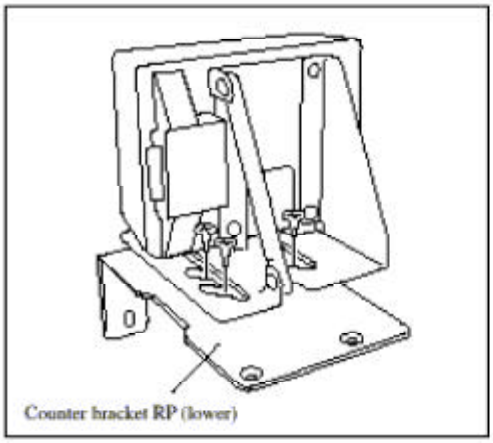

17. Replace the case cover on the Key/card counter unit and secure it on the front side only with the screws removed in Step 16.
18. Secure the Counter socket adapter to the Counter connector with P-tight screws (M3x14, 2pcs) and tighten the screws located on the adapter.
19. Attach the Connector protection bar to the Counter bracket RP (upper) with screws (Binding screw M4x8, 2pcs).

    NOTE : The end with the shorter flat face should be attached to the lower part of the bracket when viewed as shown in the illustration.
20. Secure the Key/card counter unit to the Counter bracket RP (upper). (Double-washered screw M3x8, 3pcs)
21. Secure a screw or screws on the bottom side of the unit.

= If a screw hole (M3x6) exists =

Fold the Grounding plate and secure each end of it to the bottom side of the unit with a Binding screw (M3x6) and a Double-washered screw (M3x8) respectively as illustrated.

= If a screw hole (M3x6) does not exist =

Secure a Double-washered screw (M3x8) to the bottom side of the unit at the position illustrated.

22. Combine the Counter bracket RP (lower) to the Counter bracket RP (upper) using 3 flat stepped screws.

3

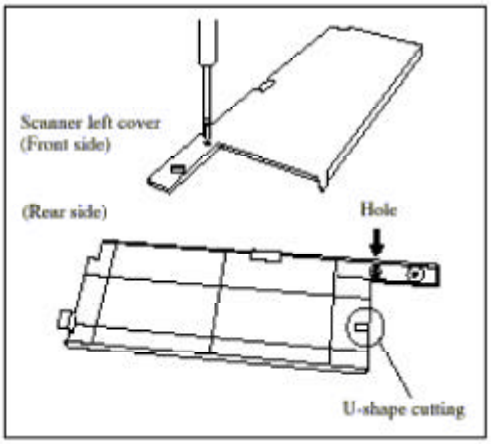

23. Make a hole at the indicated point on the Scanner left cover by thrusting a screwdriver from the front side. Then shave off burrs with a cutter knife.
24. Make a U-shape cutting on the Scanner left cover by twisting off the part to be removed with a pliers and smoothen the edge of the opening with a cutter knife for a fine finish.

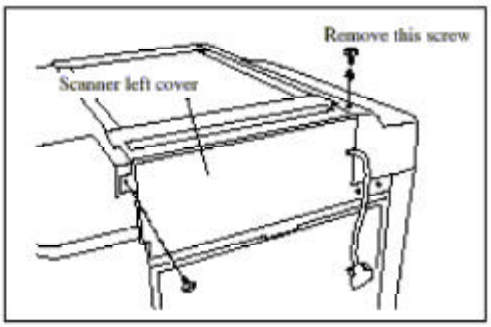

25. Replace the Scanner left cover on the printer and secure it partly with one of the screws removed in Step 3 at a point as indicated in the illustration, while leading the Counter main wire harness III through the U-shape cutting.
26. Remove the securing screw which is placed at the indicated point on the Panel cover.

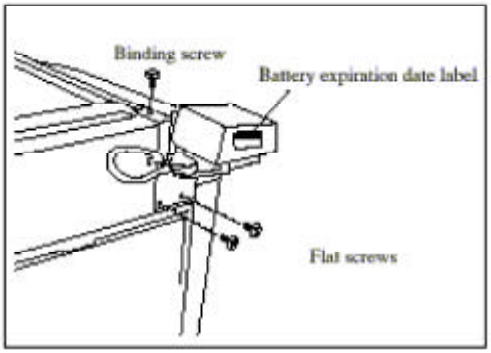

27. Secure the Counter bracket RP (lower) to the left side panel of the Scanner table with three screws. (Binding screw M4x12, 1pc / Flat screw M4x12, 2pcs)

    NOTE : You can slide the Key/card counter up and down on the bracket. Slide it up when tightening screws at the lower points to secure space for operation.
28. Write the date of two years later on the Battery expiration date label and stick the label on the side of the Key/card counter unit.
29. Replace the Scanner rear cover on the printer.
30. Mount the Stage cover (or the optional ADF unit). If the Digitizer is dismounted, replace it as well.
31. Connect the Counter main wire harness III to the Key/card counter.
32. Referring to the Installation guide included in the Key/card counter IV package, check the operation and select the language shown on the display.

4

13. Job Separator IV

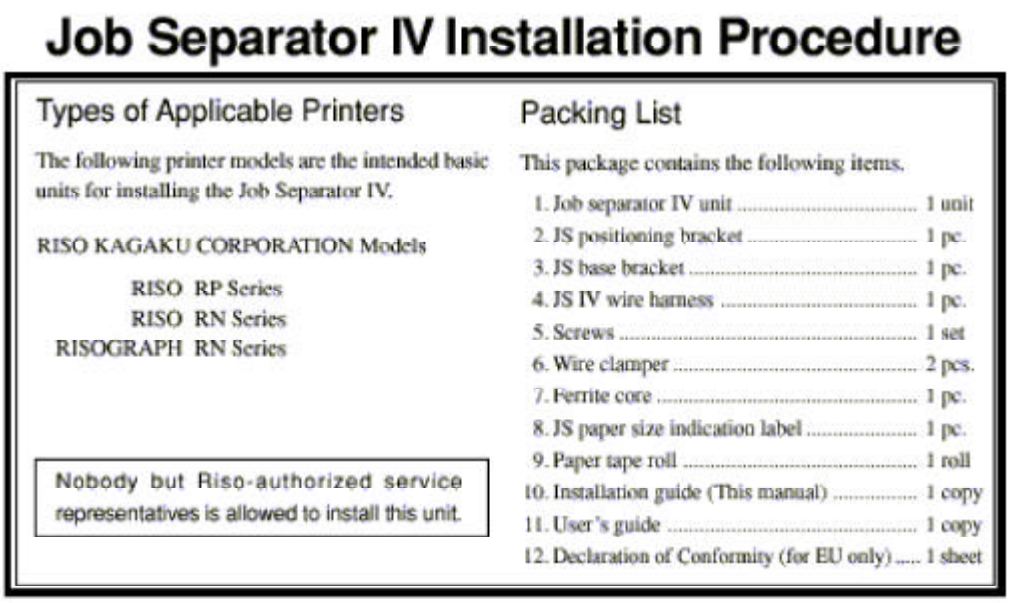

Job Separator IV Installation Procedure

Types of Applicable Printers

The following printer models are the intended basic units for installing the Job Separator IV.

RISO KAGAKU CORPORATION Models

RISO RP Series
RISO RN Series
RISOGRAPH RN Series

Nobody but Riso-authorized service representatives is allowed to install this unit.

Packing List

This package contains the following items.

1. Job separator IV unit ..... 1 unit
2. JS positioning bracket ..... 1 pc.
3. JS base bracket ..... 1 pc.
4. JS IV wire harness ..... 1 pc.
5. Screws ..... 1 set
6. Wire clamper ..... 2 pcs.
7. Ferrite core ..... 1 pc.
8. JS paper size indication label ..... 1 pc.
9. Paper tape roll ..... 1 roll
10. Installation guide (This manual) ..... 1 copy
11. User's guide ..... 1 copy
12. Declaration of Conformity (for EU only) ..... 1 sheet

Installation Procedure = For RISO RP series models =

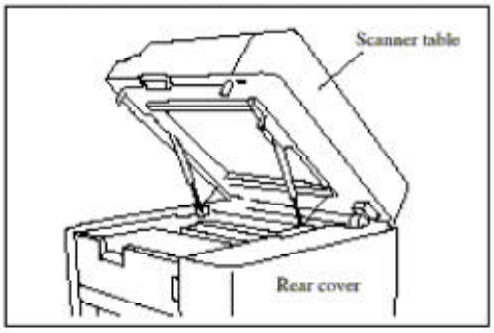

1. Turn off the main power switch of the printer and unplug the power cord.
2. Open the Scanner table and remove the Rear cover from the printer.

   NOTE: Retain the removed screws as they will be reused.

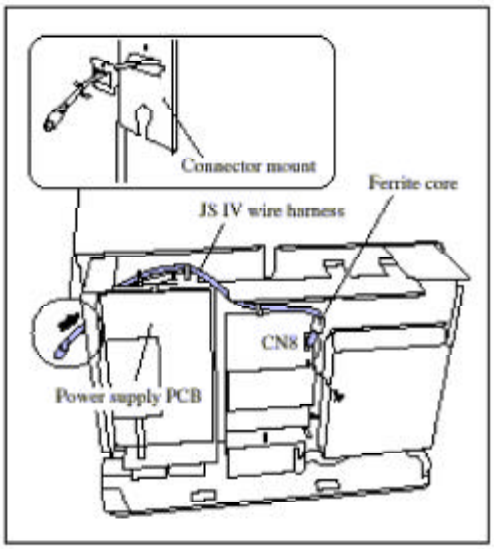

3. Remove the blind plate from the connector mount by removing the securing screw and lead the white connector of the JS IV wire harness through the opening just uncovered.
4. Insert one of the two tabs of the metal busing on the wire harness into the opening and secure the metal bushing there with the securing screw (Binding screw, M3x6) removed in the previous step.
5. Lead the JS IV wire harness behind the Power supply PCB and further to the Mechanical control PCB as instructed in the illustration and connect the white connector of the wire harness to the CN8 (STS) on the Mechanical control PCB.
6. Secure the JS IV wire harness to the Mechanical control PCB and other points with the existing wire saddles.
7. Remove one of the mounting screws of the Mechanical control PCB near the CN8 (STS) and secure the ground wire coming from the JS IV wire harness to the Mechanical control PCB with the removed screw.
8. Put the Ferrite core on the JS IV wire harness as illustrated.
9. Lead the round connector of the JS IV wire harness through the hole on the lower left side of the Rear cover and replace the Rear cover on the printer.

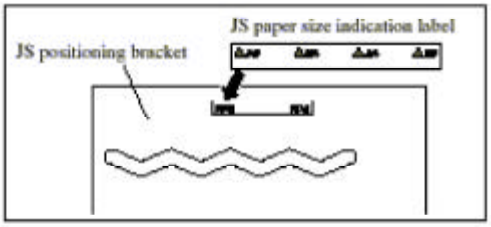

10. Stick the JS paper size indication label on the JS positioning bracket in the way the lower right corner of the label fits in the corresponding corner of the [RP3] mark on the bracket.

Proceed to the page 5.

4

Installation Procedure = For All models =

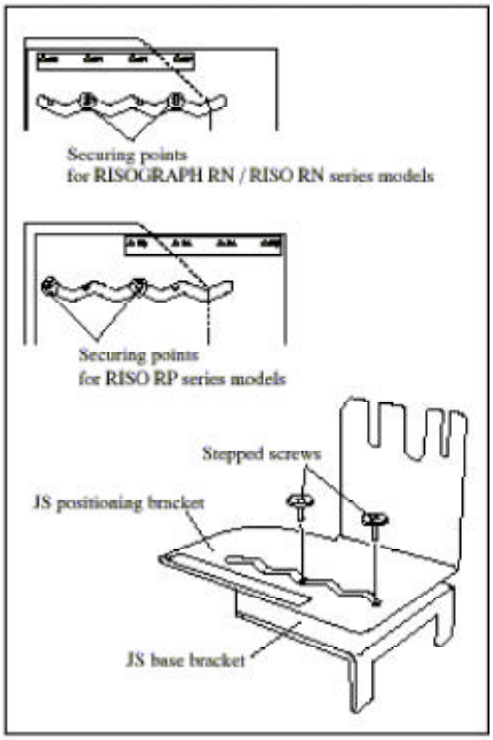

1. Place the JS positioning bracket on the JS base bracket and secure the stepped screws on the JS base bracket, holding the JS positioning bracket between.

   NOTE: Make sure that the stepped screws are correctly secured at the points indicated in the illustration.

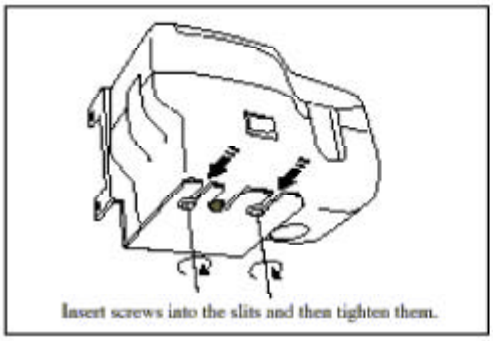

Insert screws into the slits and then tighten them.

2. Loosen two mounting screws on the bottom of the Job separator IV.

   Important!
   Do not loosen the center screw on the bottom of the Job separator IV.

3. Slide the mounting screws on the bottom of the Job separator IV into the slits of the base plate of the JS positioning bracket as far as they will go. Then tighten the mounting screws.

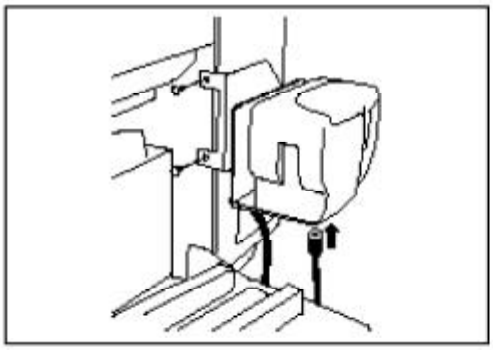

4. Attach the JS base bracket onto the inside of the rear side frame of the printer. (Binding screw M4x6, 2 pcs.)
5. Connect the round connector of the JS IV wire harness to the Job separator IV.
6. Plug the power cord to the printer and turn on the main power.
7. Put the Paper tape roll into the Job separator IV and check the Job separator IV functions correctly.

5

14. SC Video Wire Harness II

SC Video Wire Harness II Installation Procedure; RP

Types of Applicable Printers

This installation guide provides the necessary procedures for installing the external computer interface controller to the following printer models.

RISO KAGAKU CORPORATION Models

RISO RP Series

Item to be Used

Use the following item in this package.

SC video wire harness II ..... 1 pc.

Nobody but Riso-authorized service representatives is allowed to install this unit.

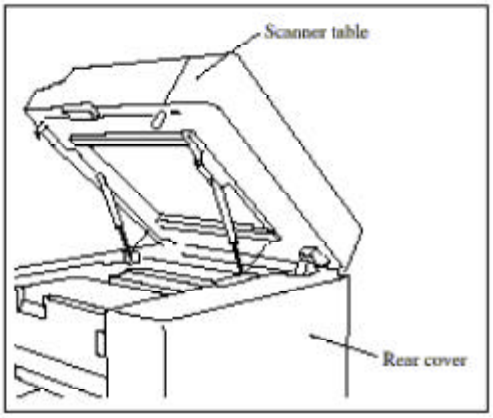

1. Turn off the power switch of the printer and unplug the power cord.
2. Open the Scanner table and remove the Rear cover from the printer.

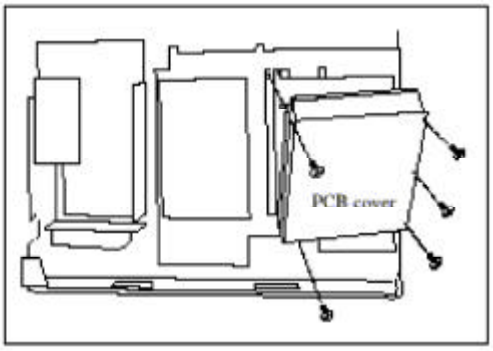

3. Remove the PCB cover from the printer.

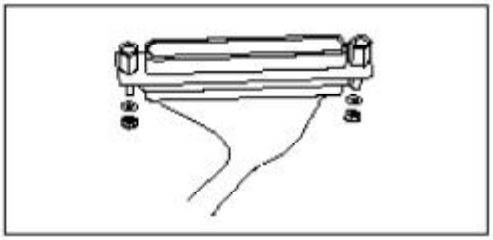

4. Remove the Metric type screws on the metallic connector of the SC video wire harness II.

This document is printed on recycled paper. 101-06001-001 1

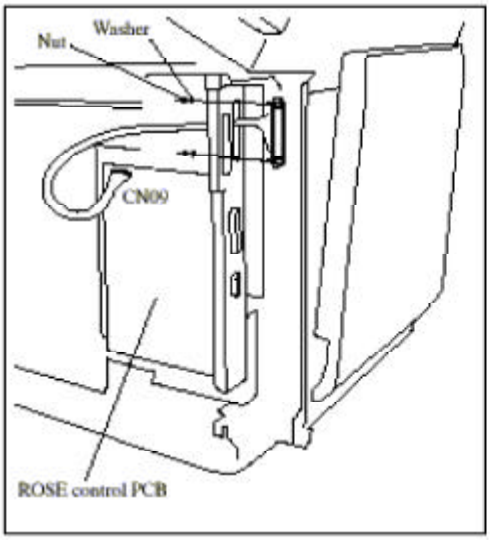

5. Remove the connector blind plate from the Connector mount and lead the SC video wire harness II through the opening from outside the Connector mount.
6. Secure the metallic connector to the connector mount with the Metric type screws and nuts, placing washers between them.
7. Connect the plastic connector of the SC video wire harness II to CN09 on the ROSE control PCB.

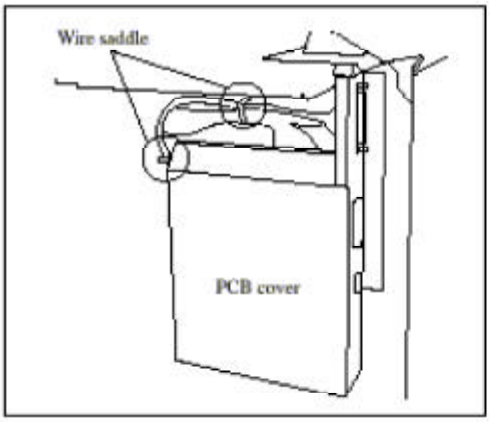

8. Replace the PCB cover to the printer.

   NOTE : Be careful not to pinch the harnesses.
9. Bind the SC video wire harness II with the existing wire saddles at two points as illustrated.
10. Replace the Rear cover on the Printer.

2

15. TM2500

Sorter TM2500 Installation Procedure <RN/RP Series>

Types of Connectable Printers

The following printer models are the intended basic units for connection to the Sorter TM2500.

RISO KAGAKU CORPORATION Models

RISO RN25 Series
RISO RP Series

Nobody but Riso-authorized service representatives is allowed to install this unit.

Package List

The following packages are required for installing the Sorter TM2500. As for the items contained in these packages, refer to the packing list in the respective packages.

- Sorter TM2500 / Main Unit
- Sorter TM2500 / Attachment (RN/RP)

In the following procedure, it is assumed that the SH option control board has already been installed in the printer.

Preparing the Printer and the Sorter - RP series models

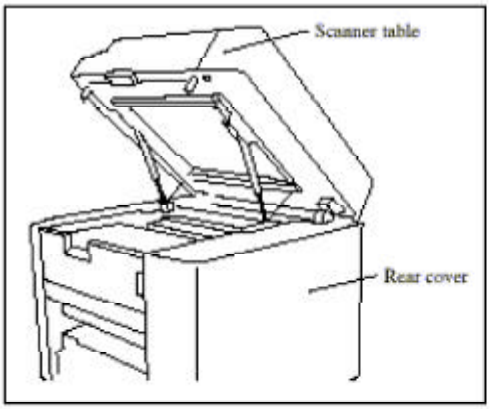

1. Turn off the main power switch of the printer and unplug the power cord.
2. Open the Scanner table and remove the Rear cover.
3. Remove the Paper receiving tray and the Receiving tray holders from the printer.

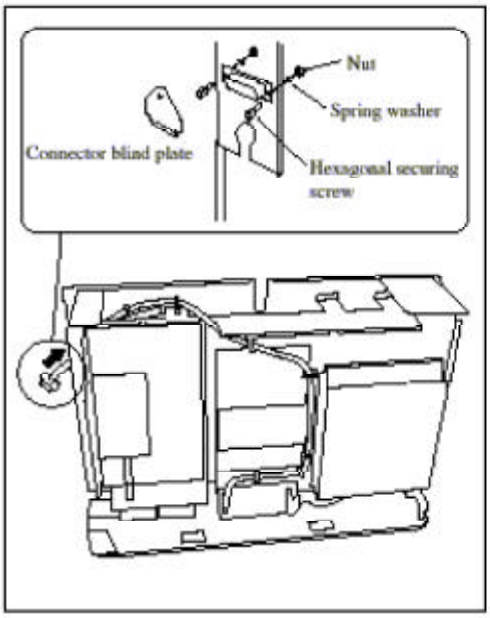

4. Remove the connector blind plate secured on the Connector mount, which is located beside the Master roll cover, and pass the plastic connector of the Sorter inner COM wire harness through the uncovered opening from outside the Connector mount.
5. Mount the metal connector at the other end of the Sorter inner COM wire harness on the Connector mount with hexagonal securing screws and nuts, inserting spring washers between.
6. Lead the Sorter inner COM wire harness to the SH option control board as illustrated in the figure to the left and then connect the plastic connector of the wire harness to CN2 on the SH option control board.
7. Hold the running Sorter inner COM wire harness with the existing wire saddles at the indicated points.
8. Replace the Rear cover on the printer.

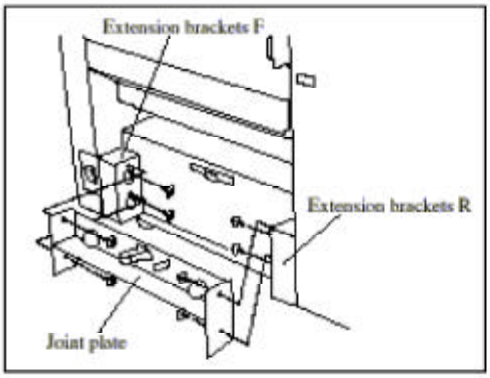

9. Attach the Extension brackets F and R on both side frames of the printer with screws (Double-washered M4x8, 2 pcs.).
10. Fix the Joint plate on the Extension brackets F and R with the screws which were removed in Step 3.
11. If the printer is equipped with the Multi-tray paper feeder, proceed to the section "Connecting the TM2500 to the Printer Loaded on the Multi-Tray Paper Feeder" on page 6. If not, proceed to the next page.

Connecting the TM2500 to the Printer Loaded on Normal Stands

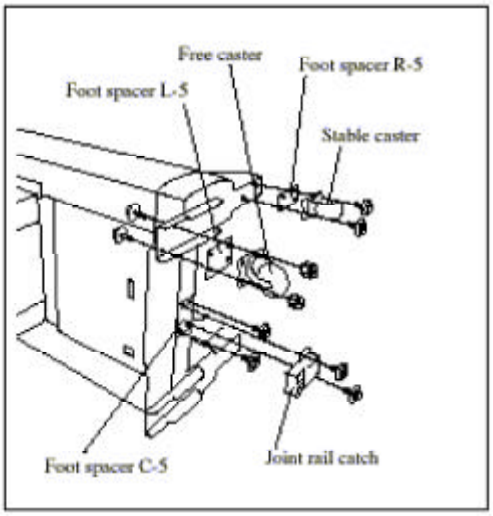

1. Lay down the TM2500 and remove all 4 casters and the Joint rail catch at the bottom.
2. Replace the right-hand stable casters on the bottom of the TM2500, inserting the Foot spacer R-5 between and securing them with the screws provided in the package (Double-washered M5x12, 2 pcs.).
3. Replace the left-hand free casters on the bottom of the TM2500, inserting the Foot spacer L-5 between and securing them with the screws provided in the package (Black binding M6x16, 2 pcs.).
4. Fix the Foot spacer C-5 on the bottom of the TM2500 and replace the Joint rail catch on it, with the screws provided in the package (Double-washered M4x12, 4 pcs.).

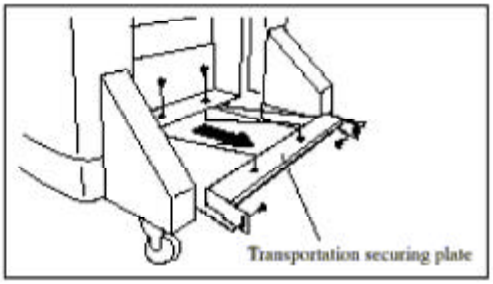

5. Stand the TM2500 and remove the transportation securing plate from the bottom of the TM2500.

   NOTE : Retain three screws of the removed ones as they will be reused to attach the Bin paper stopper to the TM2500.

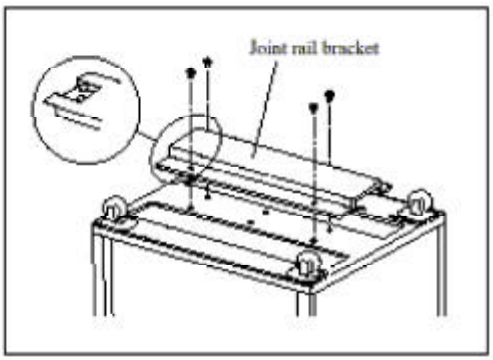

6. Unload the printer from the stand if it is loaded there. Turn over the stand and attach the Joint rail bracket on the bottom with four binding screws (M4x8), matching the mounting holes of the bracket with either of the counterparts on the bottom of the stand which are marked "A" or "B", depending on the type of printer to be connected.
   - When an A3 or Ledger-size printer model is to be connected; Match with the holes marked "A".
   - When another printer model is to be connected; Match with the holes marked "B".

5

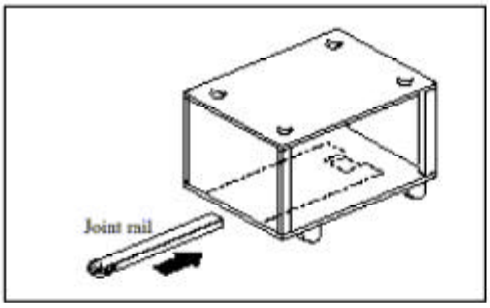

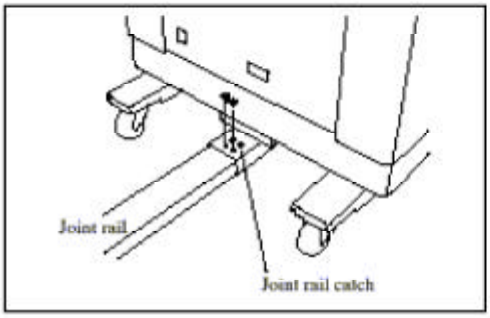

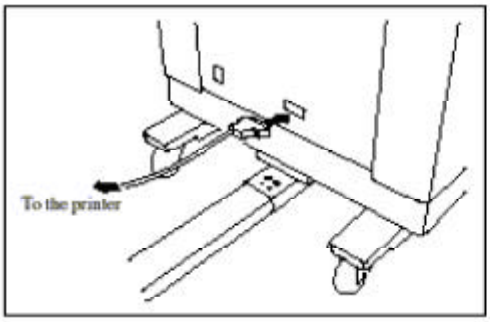

7. Reset the stand on its feet and load the printer on it so that all four feet of the printer may be placed right in the dents on the stand.
8. Insert the Joint rail into the Joint rail bracket, which is attached on the bottom of the stand, from the paper feed tray side and slide it further enough for its other end to come out of the bottom of the stand on the other side.
9. Place the TM2500 close to the paper receiving side of the printer.
10. Pull out the Joint rail further enough for the end to reach the TM2500 and secure the end of the rail to the Joint rail catch at the bottom of the TM2500 with two binding screws (M4x8).
11. Insert the connector at an end of the TM-PR interface cable into the connector socket at the lower part of the TM2500 and secure it by tightening the attached screws.
12. Move the TM2500 toward the printer until the front end of the Paper transfer unit is locked against the Joint plate, which is attached to the printer, with a click.

    Then proceed to the section "Attaching the Stapler" on page 8.

Connecting the TM2500 to the Printer Loaded on the Multi-Tray Paper Feeder

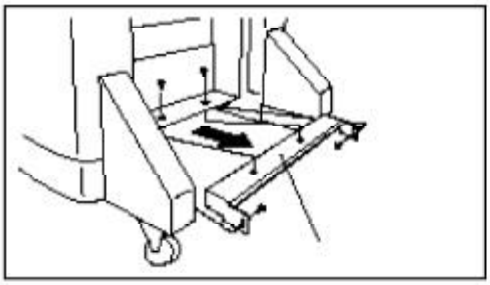

1. Remove the transportation securing plate from the bottom of the TM2500.

   NOTE : Retain three screws of the removed ones as they will be reused to attach the Bin paper stopper to the TM2500.

6

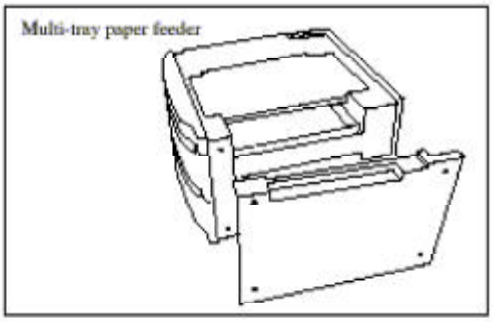

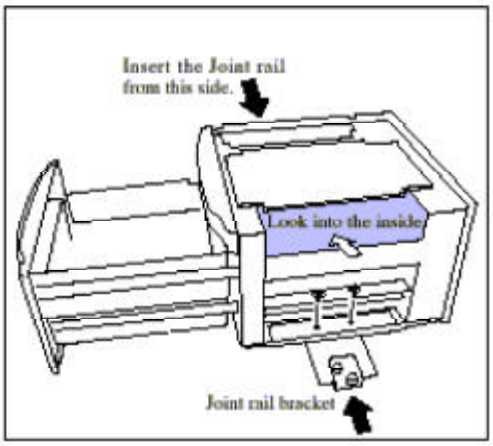

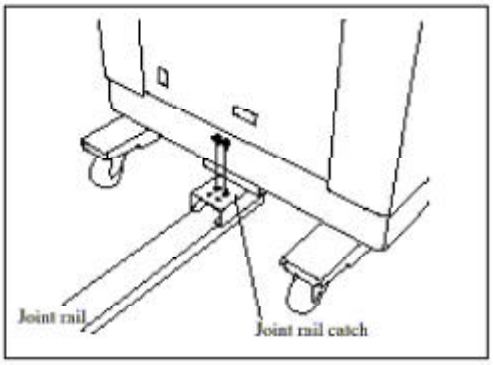

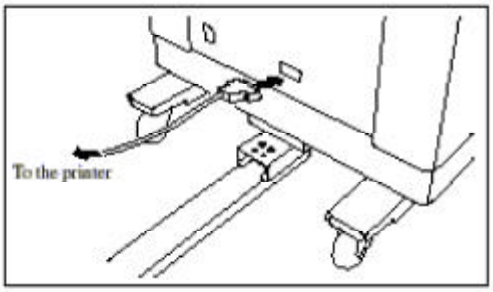

2. Unload the printer from the Multi-tray paper feeder if it is loaded there. Then remove the Right side cover from the Multi-tray paper feeder.

3. Pull out the Feed trays to open the view under the bottom plate of the Multi-tray paper feeder. Then insert the Joint rail bracket under the bottom plate from the paper receiving side of the printer and place the end of the bracket into the rack provided under the bottom plate, looking into the inside from above.

   NOTE : You can see through the bottom plate because it is covered with small air holes.

4. Secure the Joint rail bracket under the bottom plate with screws (Double-washered M4x8, 2 pcs.) and push back the Feed trays into the Multi-tray paper feeder.

5. Replace the Right side cover on the Multi-tray paper feeder.

6. Load the printer on the Multi-tray paper feeder and insert the Joint rail into the Joint rail bracket from the Multipurpose feed tray side. Then slide the Joint rail further enough for its other end to come out of the bottom on the other side.

   NOTE : Refer to the installation guide of the Multi-tray paper feeder when loading the printer on it.

7. Place the TM2500 close to the paper receiving side of the printer.

8. Pull out the Joint rail further enough for the end to reach the TM2500 and secure the end of the rail to the Joint rail catch at the bottom of the TM2500 with two binding screws (M4x8).

9. Insert the connector at an end of the TM-PR interface cable into the connector socket at the lower part of the TM2500 and secure it by tightening the attached screws.

10. Move the TM2500 toward the printer until the front end of the Paper transfer unit is locked against the Joint plate, which is attached to the printer, with a click. Then proceed to the next page.

7

Attaching the Stapler

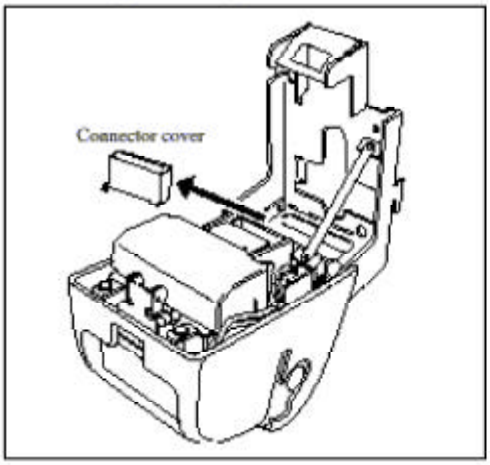

1. Press the green button ("PUSH OPEN") on the Stapler unit and open the Stage base.
2. Remove the securing screw of the connector cover attached to the Stapler body and remove the connector cover to uncover the Stapler body connector.

   NOTE : Retain the removed screw as it will be reused.

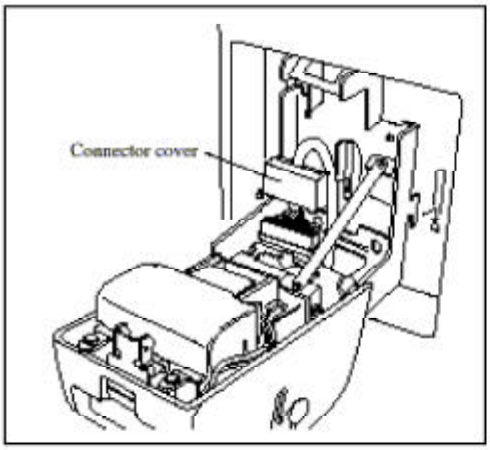

3. Hitch the hooks of the Stapler base to the slits on the Stapler installation mount in the TM2500 Main body and attach the Stapler base on the Stapler installation mount.

   NOTE : Pull out the Stapler wire harness, whose connector is just out of the hole at the bottom of the Stapler installation mount, and lead it through the bottom rectangular hole of the Stapler base from below beforehand.
4. Put the removed connector cover on the Stapler wire harness and connect the connector of the wire harness to the Stapler body connector.

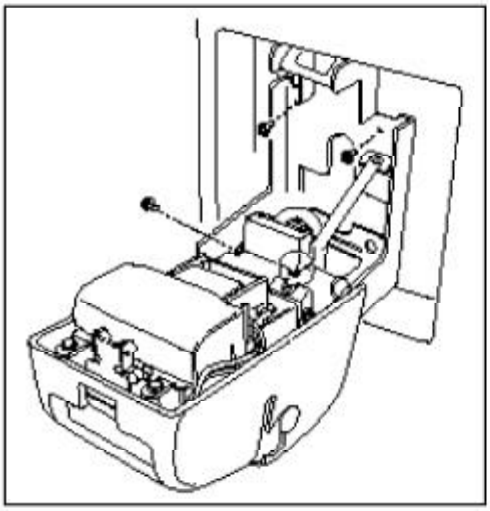

5. Insert the hook of the connector cover into the slit in front of the Stapler body connector, and secure the connector cover to the Stapler body with the screw removed in Step 2.
6. Secure the Stapler base on the Stapler installation mount with two double-washered screws (M3x6).
7. Push up the Stapler body to close the unit.

8

Attaching the NonSort Precision Stacking Tray

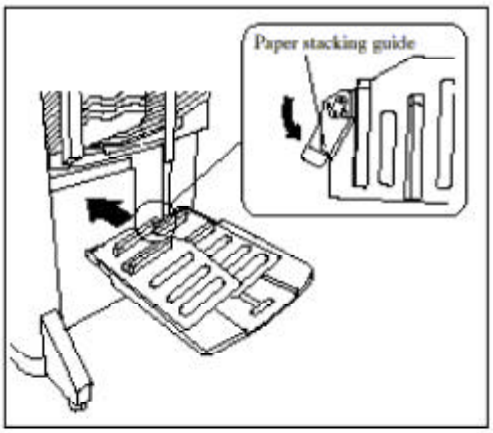

1. Rest the bosses at the front end of the NonSort precision stacking tray on the Tray holders attached on the side frames of the TM2500 Main body, below the Sort bins.

Important !
Never forget to lower the Paper ejection guide arms and turn down the Paper stacking guides before attaching the NonSort precision stacking tray. If the Paper ejection guide arms are left raised, they can be damaged.

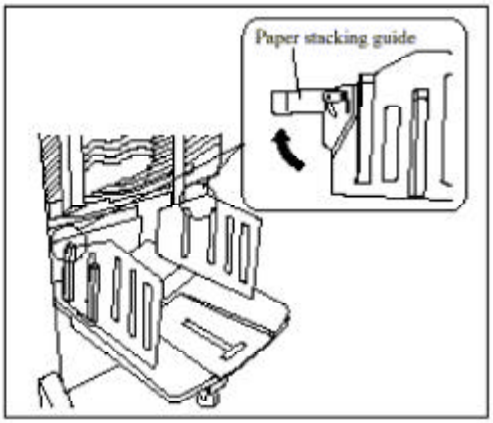

2. Turn up the Paper stacking guides and let the Paper ejection guide arms flip up by pressing their base.

Important !
Lower the Paper ejection guide arms first when turning down the Paper stakcing guides.

Checking Function / Attaching the Bin Paper Stopper

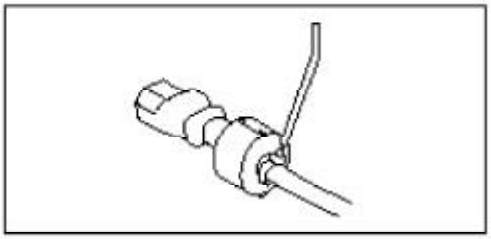

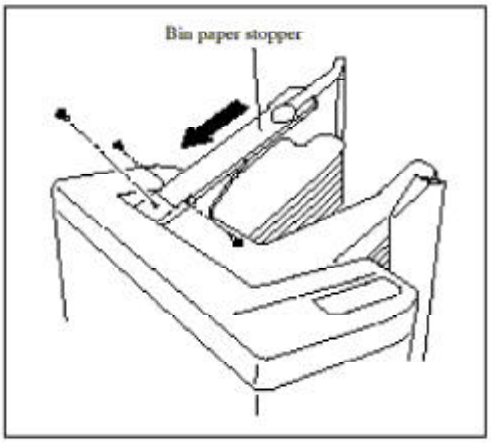

1. Connect the power cord to the power cord socket at the lower part of the TM2500 and connect the plug to the electrical outlet.
2. Connect the power cord plug of the printer to the electrical outlet and turn on the power switch on the printer. (The TM2500 is automatically powered.)
3. Verify that the TM2500 functions normally.
4. Raise the Sort bins up to the highest position if they are not. Insert the Bin paper stopper into the bracket provided at the top of the Sort bins and secure it to the bracket with three binding screws which were removed when removing the transportation securing plate from the bottom of the TM2500.

16. TM5000 Main Tower

TM5000 Main Tower Installation Procedure

Type of Connectable Printer

The following printer models are the intended basic units for connection to the Sorter TM5000.

RISO KAGAKU CORPORATION Models

RISOGRAPH GR Series
RISOGRAPH FR Series
RISO RN Series
RISO RP series

Nobody but Riso-authorized service representatives is allowed to install this unit.

Packing List

The following packages are required for installing the TM5000 Main Tower. As for the items contained in these packages, refer to the packing list in the respective packages.

TM5000 / Main Unit
TM5000 / Joint Unit Covers
TM5000 / Joint Unit & Control Panel
TM5000 / Attachment (Main)

NOTE: When installing the Interface Board and the NonSort Precision Stacking Tray on the printer, refer to the installation procedure guides provided in the corresponding packages.

Wiring of Sorter Inner COM Wire Harness - For RP Series Models -

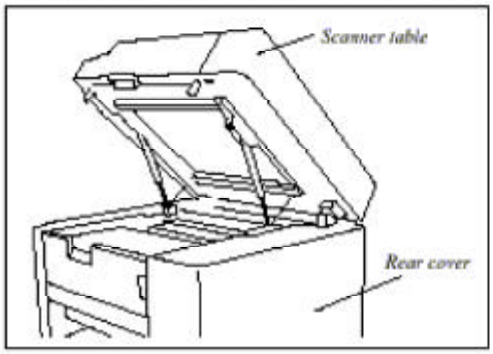

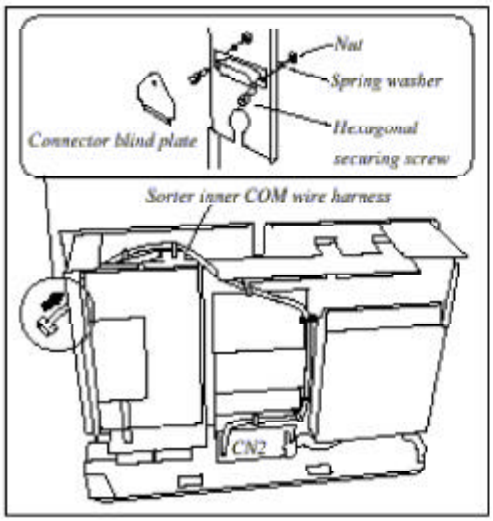

1. Turn off the main power switch of the printer and unplug the power cord.
2. Open the Scanner table and remove the Rear cover.
3. Remove the connector blind plate secured on the Connector mount, which is located beside the Master roll cover, and pass the plastic connector of the Sorter inner COM wire harness through the uncovered opening from outside the Connector mount.
4. Mount the metal connector at the other end of the Sorter inner COM wire harness on the Connector mount with hexagonal securing screws and nuts, inserting spring washers between.
5. Lead the Sorter inner COM wire harness to the SH option control board as illustrated in the figure to the left and then connect the plastic connector of the wire harness to CN2 on the SH option control board.
6. Hold the running Sorter inner COM wire harness with the existing wire saddles at the indicated points.
7. Replace the Rear cover on the printer.

2

Preparing the Main Tower

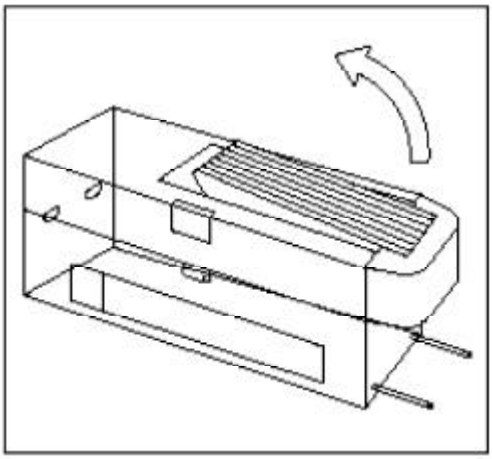

8. Take out the **TM5000 Main Unit** from the package, and stand it on the floor with the casters at the bottom.

The TM5000 weighs about 475 lbs. (215 kg). Take extra care, therefore, when installing it. If you drop it or turn it down, you may injure yourself or another person.

9. Remove the tapes securing the doors and belts.

Be sure to remove the tape securing the belt to which the Auto Stapler Unit is attached inside as well.

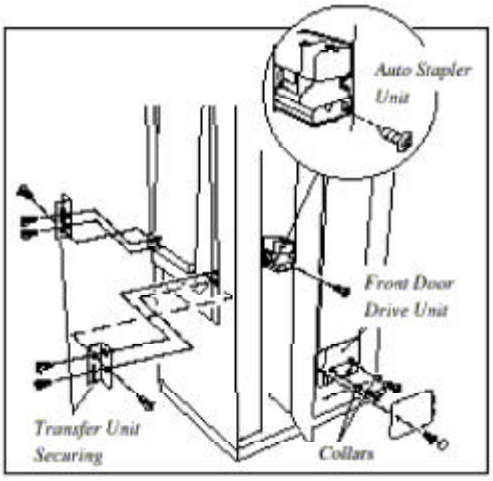

10. Remove the securing screw on the **Auto Stapler Unit** and the **Transfer Unit Securing Plates F** and **R**.

11. Remove the **Front Door Drive Unit Cover**.

Note: Retain the removed screw and cap as they will be reused.

12. Remove the securing screws from the **Front Door Drive Unit**.

When removing the securing screws, be sure to remove the collars as well.

13. Replace the **Front Door Drive Unit Cover**.

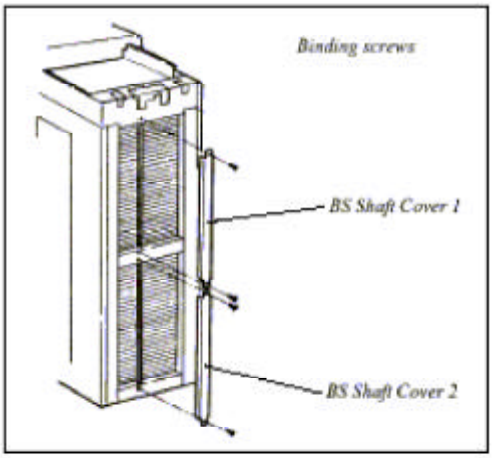

14. Attach the **BS Shaft Covers 1** and **2** on the **TM5000 Main Unit** with four binding screws (M4x8), which are contained in the package.

5

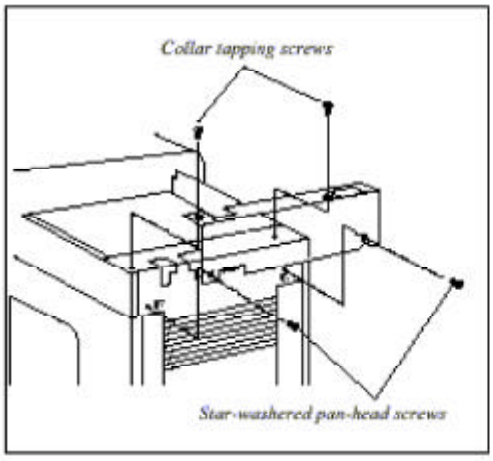

15. Attach the **Top Right Cover** on the **TM5000 Main Unit** with Two star-washered pan-head screws and two collar tapping screws, wich are contained in the package.

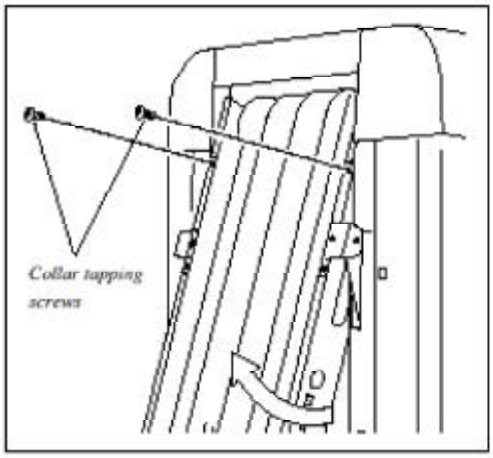

16. Incline the **Transfer Unit** upward a little further, and secure the Transfer Side Frame Rails to the Transfer Swing Pivot Plates with two collar tapping screws.

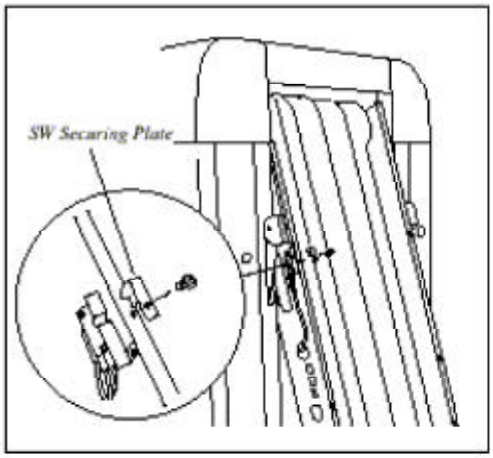

17. Remove the **SW Securing Plate** from the rear-side Transfer Side Frame Rail.

6

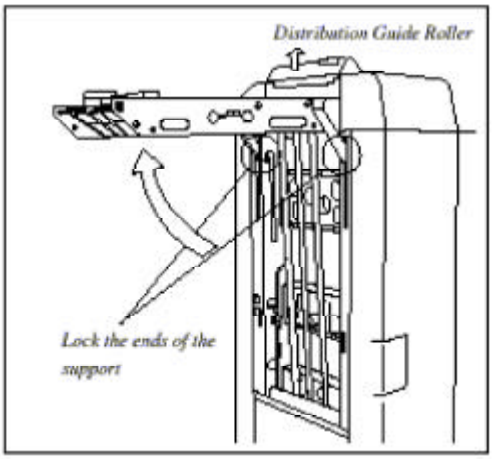

18. Open the **Distribution Cover**, then push up the **Transfer Unit** until it is locked level.

Securely lock the ends of the supports for the Transfer Unit.

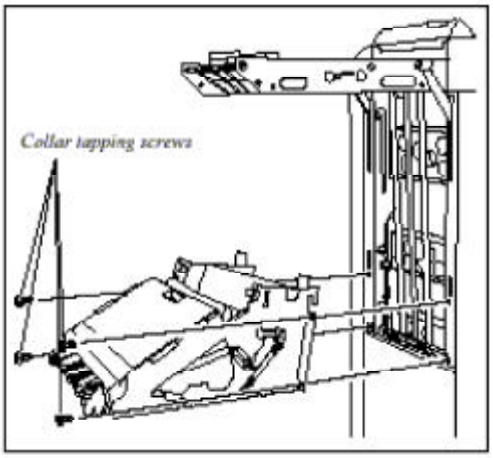

19. Insert the hooks at the end of the **Joint Unit** into the slits on the **Main Unit frame** and secure the **Joint Unit** to the **Main Unit frame** with four collar tapping screws (M4x8)

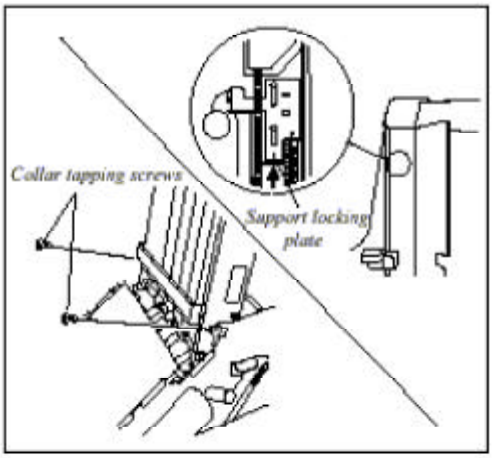

20. Open the **Front Side Door**, and push up the **Support locking plate** inside to release the lock.
Then slowly lower the **Transfer Unit**, holding it from below.

21. Set the lower end of the **Transfer Unit** in the **Joint Unit** and secure the **Transfer Unit** to the **Joint Unit frame** with two collar tapping screws.

7

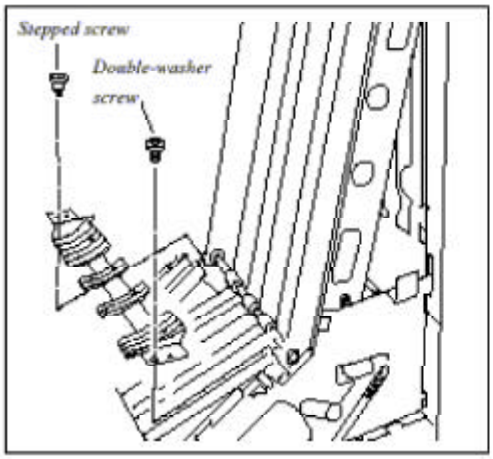

22. Attach the **Joint-Transfer Guide Bridge** to the **Joint Unit frame** and secure it with a double-washer screw on the front side and a stepped screw on the rear side.

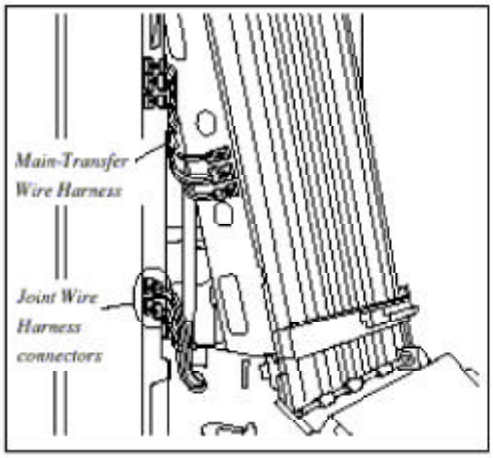

23. Connect the connectors of the wire harness coming out from the **Joint Unit** to the counter parts on the **Main Unit frame**.

24. Connect the connectors of the **Main-Transfer Wire Harness** to the counter parts on the **Transfer Unit frame** and the **Main Unit frame**.

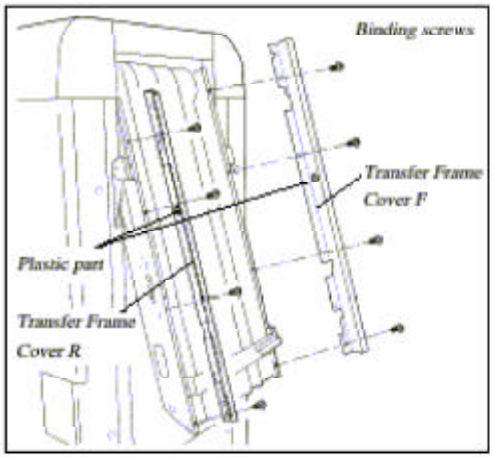

25. Attach the **Transfer Frame Covers F** and **R** to the **Trasnfer Side Frame Rails** with binding screws.

*Note: When installing **Transfer Frame Covers**, be sure that the side with the black plastic part is at the rear.*

8

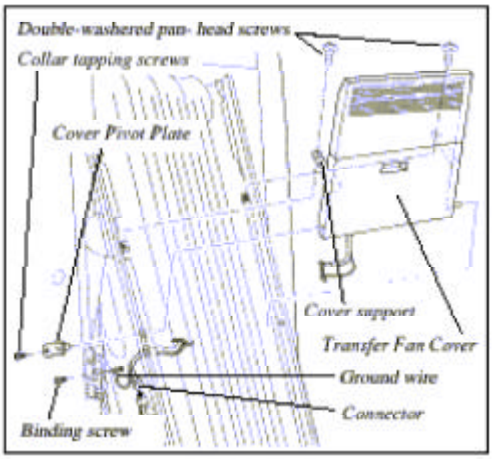

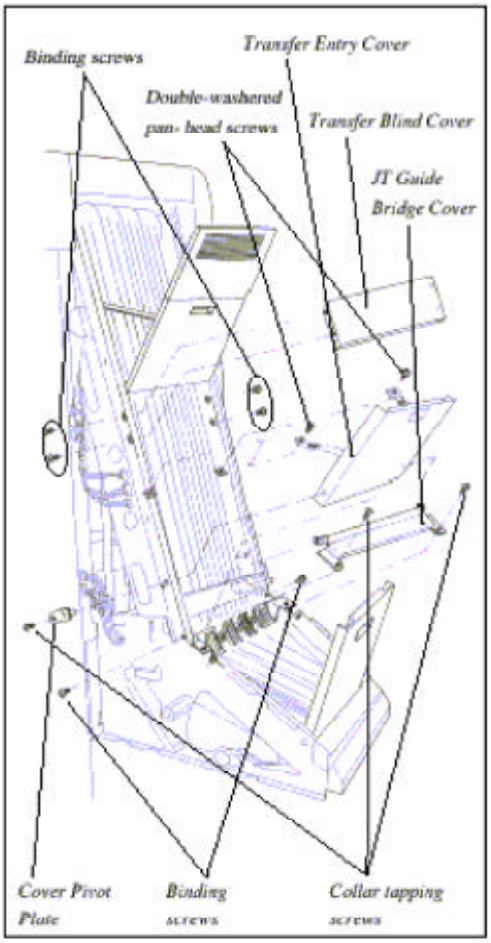

26. Pass the connector and ground wire coming out of the **Transfer Fan Cover** through the hole on the **Transfer Frame Cover R**.

27. Insert the cover pivot of the **Transfer Fan Cover** into the pivot hole on the **Transfer Frame Cover F** and the pivot of the **Cover Pivot Plate** into the pivot hole of the **Transfer Fan Cover** through the hole on the **Transfer Frame Cover R**.
Secure the **Cover Pivot Plate** with a collar tapping screw.

28. Secure the end of the **Cover supports** of the **Transfer Fan Cover** to the **Transfer Frame Covers**.

29. Connect the connector of the wires coming out of the **Transfer Fan Cover** to the counter part of the wires coming from the **Main Unit** and secure the ground wire's terminal to the **Transfer Unit Frame**.

30. Attach the **Transfer Entry Cover** to the **Transfer Frame Covers** in the same way as described in STEP 28.

31. Secure the end of the cover supports of the **Transfer Entry Cover** to the **Transfer Frame Covers** with Double-washered pan-head screws.

32. Attach the **Transfer Blind Cover** to the **Transfer Frame Covers** so that the uncovered side can point upward.

33. Attach the **JT Guide Bridge Cover** over the **Joint-Transfer Guide Bridge** with two binding screws and two collar tapping screws.

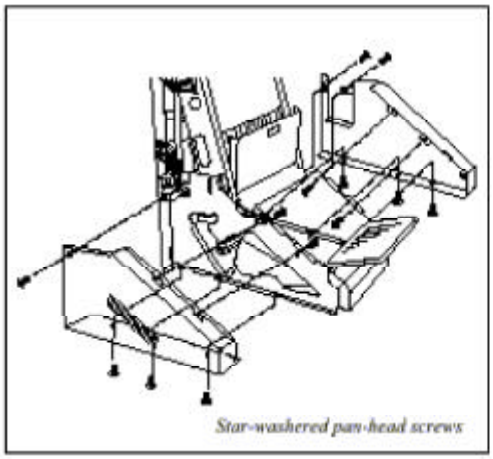

34. Attach the **Joint Front Cover** and **Joint Rear Cover** to the **Joint Unit** with 13 Star-washered pan-head screws.

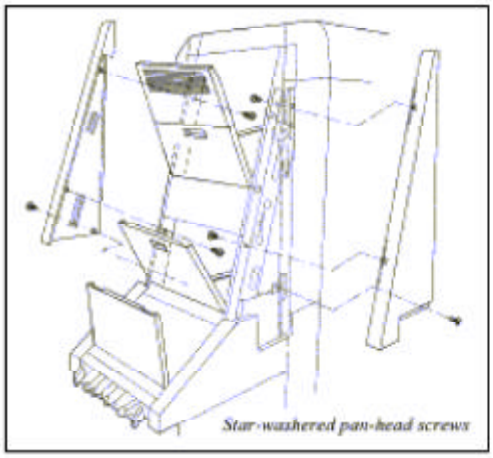

35. Attach the **Transfer Front Cover** and **Transfer Rear Cover** to the **Transfer Unit** with 6 star-washered pan-head screws.

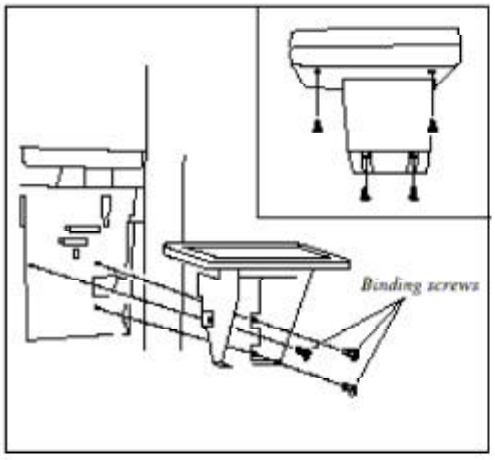

36. Remove the **Control Panel Cover** from the Control Panel.

Note: Retain the removed screws as they will be reused.

37. Attach the **Control Panel** to the **Joint Unit Frame** with 3 binding screws.

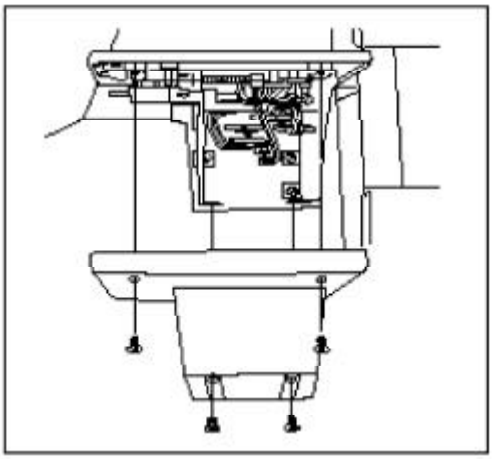

38. Connect the connectors of the **Control Panel Wires** to the counterparts on the **Joint Unit Frame**.

39. Replace the **Control Panel Cover**.

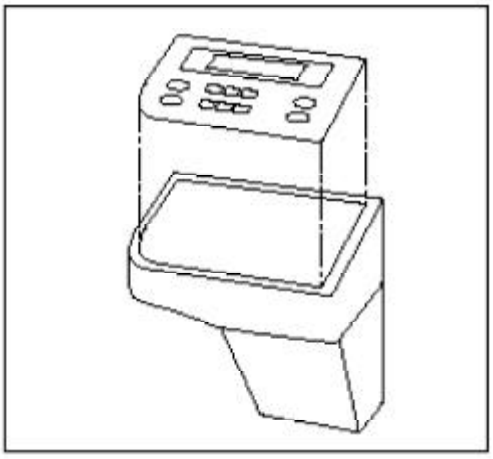

40. Label the **Control Panel Sheet** on the **Control Panel Face**.

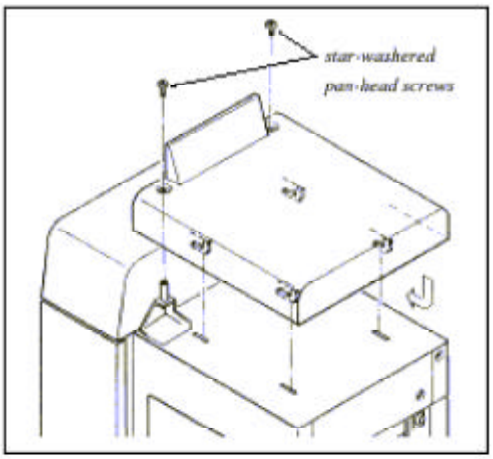

41. Insert four hooks provided inside the **Main Top Cover** into the slits on the top frame of the **Main Unit** and secure the **Main Top Cover** with two star-washered pan-head screws.

Connecting the TM5000 Main Tower to the printer

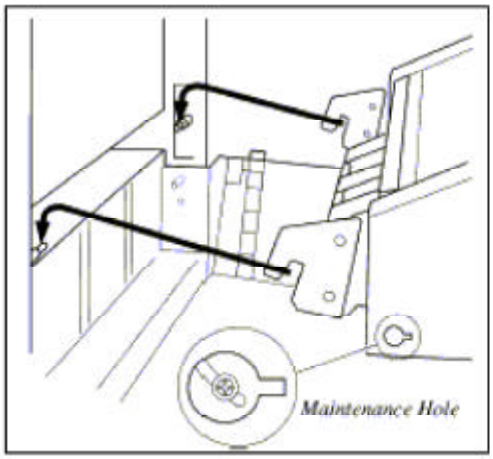

42. Latch the hooks at the end of the **Joint Unit** on the joint shafts provided on the **Joint Branckets**.
Adjust the position of the printer to align the printer with the TM5000 Main Tower.

43. Tighten the securing screw, which can be reached through the **Maintenance Hole** on the **Joint Front Cover**, to secure the position of the latched hooks.

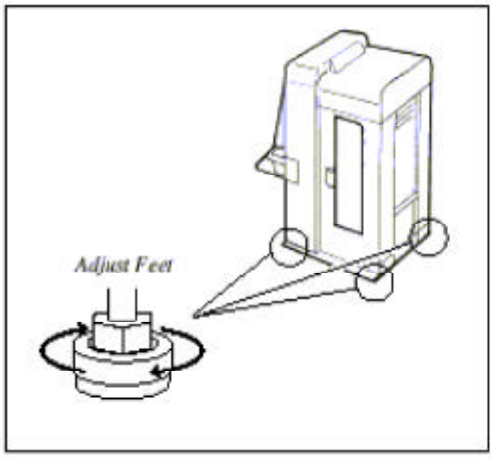

44. Rotate the **Adjustment Feet** at the bottom of the TM5000 Main Tower until they all touch the floor to secure the TM5000 Main Tower.

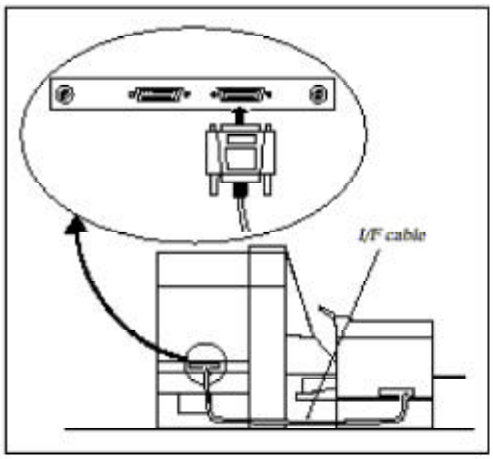

45. Connect the TM Interface Cable between the TM5000 Main Tower and the printer.
Be sure to use the connector which is closer to the printer on the TM5000 Main Tower.

12

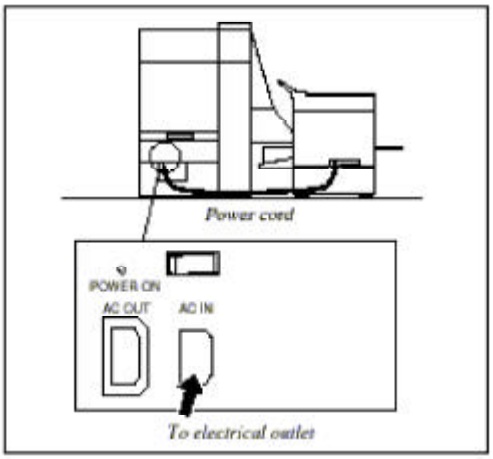

46. Connect the power cord to the "**AC IN**" inlet on the rear side of the TM5000 Main Tower, then connect the plug to the electrical outlet.

47. Connect the plug of the printer to the electrical outlet, and turn on the power switch on the printer.
(The TM5000 Main Tower is automatically powered.)

48. Press the ▲, ▼, ◀, ▶, [All Reset] and [OK] keys on the Control Panel in that sequence to start the test mode.

49. Initialize the memory in the TM5000 system.
Select [11. MEMORY SW INITIAL], and press [OK] key.

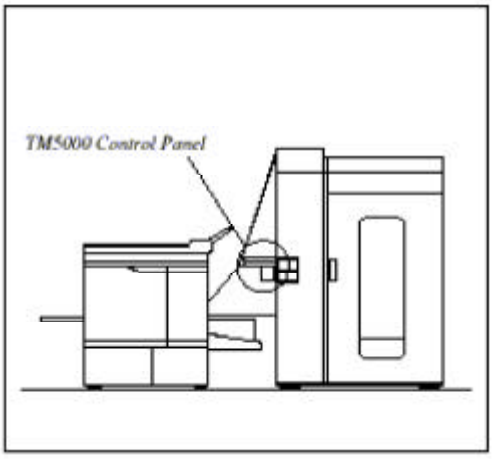

50. Select a desired language in which the panel messages are displayed.
Select [2. DISPLAY LANGUAGE] and press[OK] key.

51. Select a desired length unit to be used in registering custom paper sizes.
Select [3. LENGTH UNIT SELECTION] and press [OK] key.

52. Select [15. END] and press [OK] key to get out of the test mode.

53. Verify that the TM5000 operates normally.

17. TM5000 Side Tower

TM5000 Side Tower Installation Procedure

Type of Connectable Model

The following models are the intended basic units for connection to the Sorter TM5000 Side Tower.

RISO KAGAKU CORPORATION Models

Sorter TM5000 Main Tower
Sorter TM5000 Side Tower

The TM5000 Main Tower is required to be installed beforehand.

Nobody but Riso-authorized service representatives is allowed to install this unit.

Package List

The following packages are required for installing the TM5000 Side Tower.
As for the items contained in these packages, refer to the packing list in the respective packages.

TM5000 / Main Unit
TM5000 / Attachment (Side)

NOTE : As for the installation procedures of the TM5000 Main Tower, Interface Board and NonSort Precision Stacking Tray, refer to the installation procedure guides contained in the respective packages.

Preparing the Side Tower

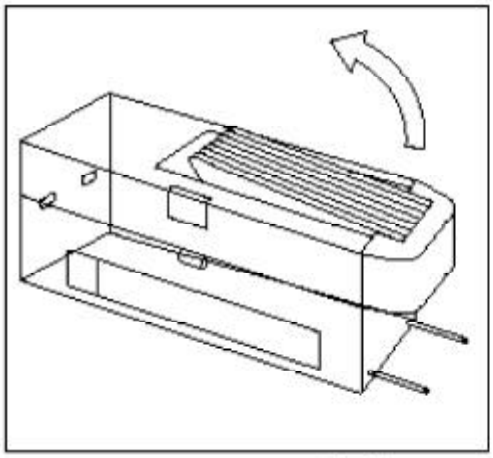

-In this guide, the initial TM5000 unit which is connected to the printer is called "Main Tower" and the following one "Side Tower".
-If you use this guide to install another Side Tower, regard the already-installed Side Tower as "Main Tower" and the one to be added as "Side Tower".

1. Take out the **TM5000 Main Unit** from the package and stand it on the floor with the casters at the bottom.

The TM5000 Main Unit weighs about 475 lbs. (215 kg.). Take extra care, therefore, when installing it. If you drop it or turn it down, you may injure yourself or another person.

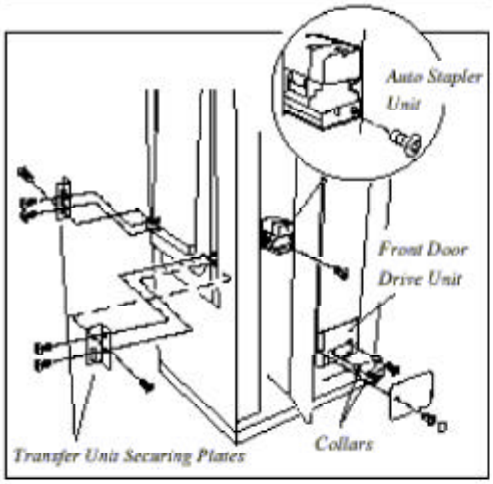

2. Remove the tapes securing the doors and belts.

Note *Be sure to remove the tape securing the belt to which the Auto Stapler Unit is attached inside as well.*

3. Remove the securing screw on the **Auto Stapler Unit** and the **Transfer Unit Securing Plates F** and **R**.

4. Remove the **Front Door Drive Unit Cover**.

Note *Retain the removed screw and cap as they will be reused.*

5. Remove the securing screws from the **Front Door Drive Unit**.

Note *When removing the securing screws, be sure to remove the collars as well.*

This document is printed on recycled paper.

552-10262-503

1

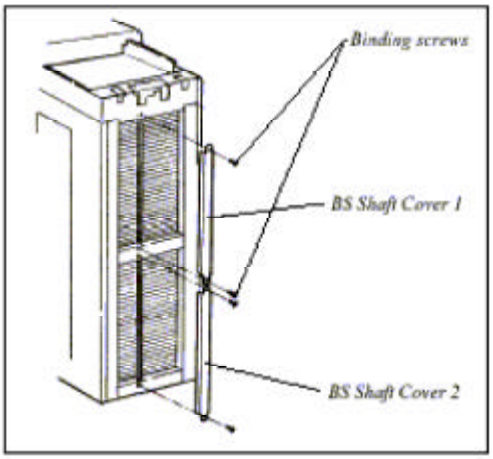

6. Replace the **Front Door Drive Unit Cover**.

7. Attach the **BS Shaft Covers 1** and **2** on the **TM5000 Main Unit** with four binding screws (M4x8), which are contained in the package.

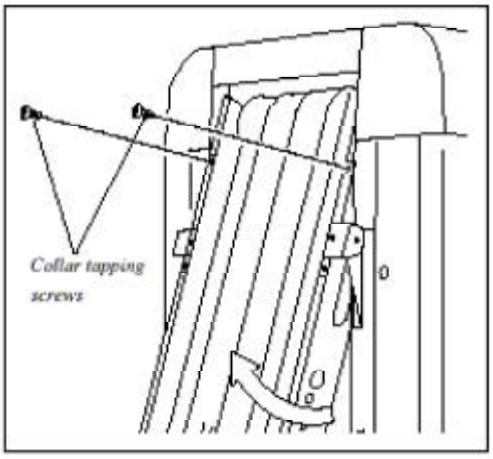

8. Incline the **Transfer Unit** upward a little further and secure the **Transfer Side Frame Rails** to the **Transfer Swing Pivot Plates** with two collar tapping screws.

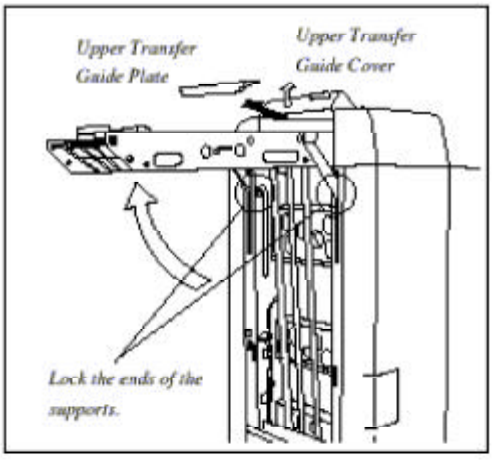

9. Open the **Upper Transfer Guide Cover** and remove the **Upper Transfer Guide Plate**.

10. Push up the **Transfer Unit** until it is locked level.

Securely lock the ends of the supports for the Transfer Unit.

2

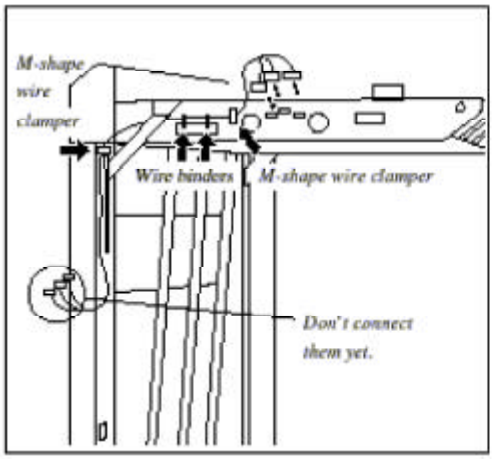

11. Pass the **Main-Transfer Wire Harness (Side)** under the rear-side support of the **Transfer Unit** and connect the connectors to the counterparts on the **Transfer Unit frame**. Then secure the wire harness with **M**-shape wire clampers at 2 points and Wire binders at other 2 points on the **Transfer Unit frame**.

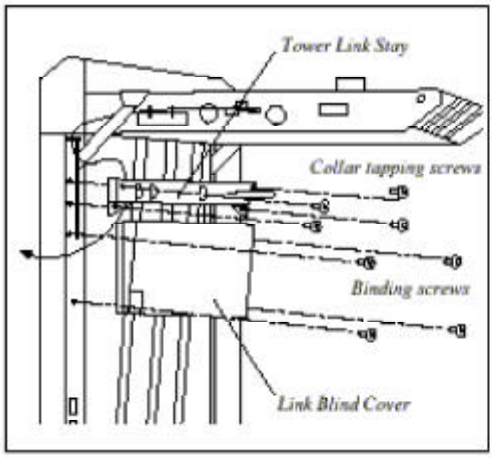

12. Pass the **Main-Transfer Wire Harness (Side)** through the slit on the rear side of the **Tower Link Stay** and attach the **Tower Link Stay** to the **Main Unit Frame** with four collar tapping screws.

13. Attach the **Link Blind Cover** to the **Main Unit Frame** with four binding screws.

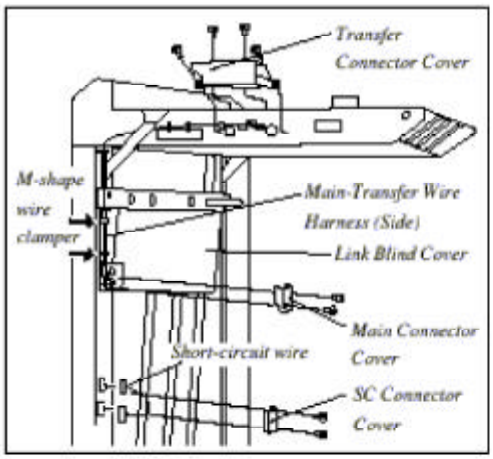

14. Connect the free connectors of the **Main-Transfer Wire Harness (Side)** to the counterparts on the **Main Unit Frame** and secure the wire harness with M-shape wire clampers at 2 points on the **Link Blind Cover**.

15. Connect the short-circuit wire to the open connectors on the **Main Unit Frame** and attach the **SC Connector Cover** over it with two collar tapping screws.
Then attach the **Transfer Connector Cover** and **Main Connector Cover** over the connectors of the **Main-Transfer Wire Harness (Side)** on the **Transfer Unit** and the **Link Blind Plate** with 6 collar tapping screws.

3

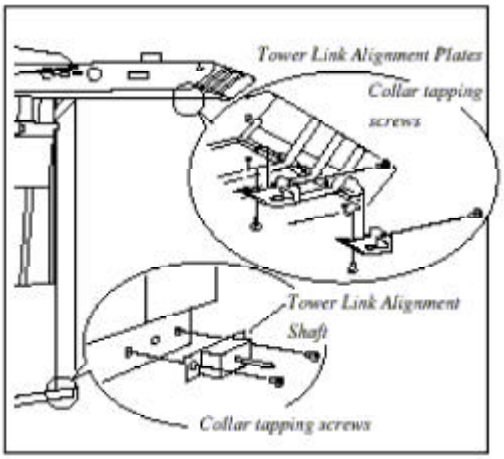

16. Attach the **Tower Link Alignment Plates** (2 pcs.) to the linking end of the **Transfer Unit** with two collar tapping screws.

17. Attach the **Tower Link Alignment Shaft** to the bottom end of the **Main Unit** with two collar tapping screws.

4

Preparing the Main Tower

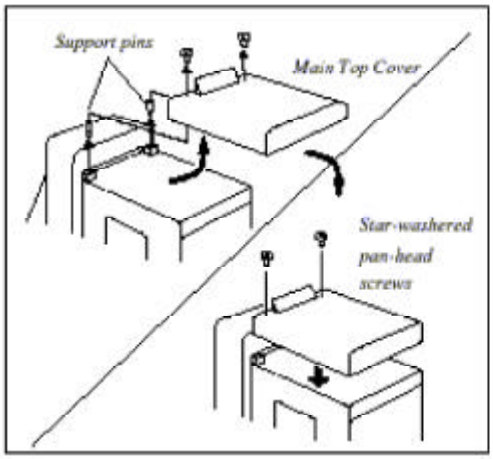

18. Remove the **Main Top Cover** and the **support pins** from the **Main Tower**.

Note *Retain the removed screws as they will be reused.*

19. Attach the **Main Top Cover**, which is removed in the previous step, to the top frame of the **Side Tower** with the screws removed in the previous step.

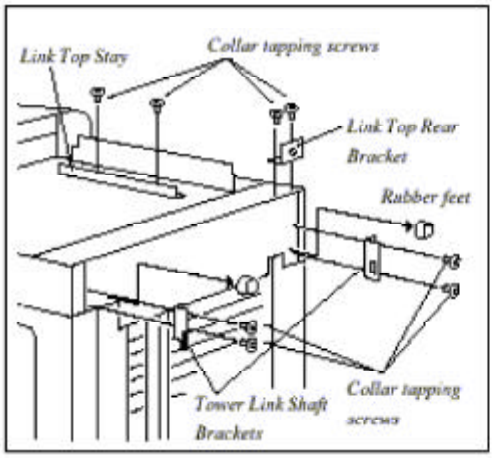

20. Remove the **rubber feet** (2 pcs.) attached on the upper side of the **Main Tower**.

21. Attach the **Tower Link Shaft Brackets** to the upper side of the **Main Tower** on the front and rear sides with two collar tapping screws.

22. Attach the **Link Top Stay** and the **Link Top Rear Bracket** on the top of the **Main Tower** with four collar tapping screws.

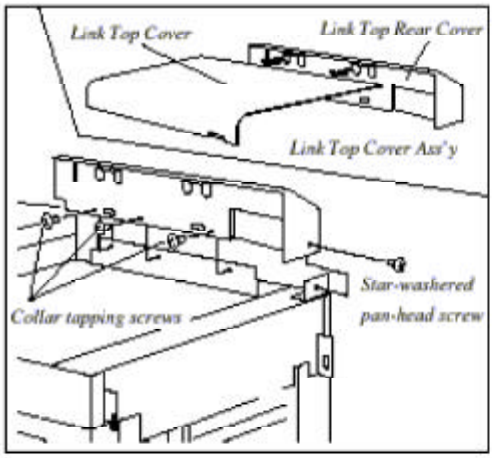

23. Divide the **Link Top Cover Ass'y** into the **Link Top Cover** and the **Link Top Rear Cover**.

24. Attach the **Link Top Rear Cover** to the top rear side of the **Main Tower** with three collar tapping screws and one star-washered pan-head screw.

5

Linkage of Main and Side Towers

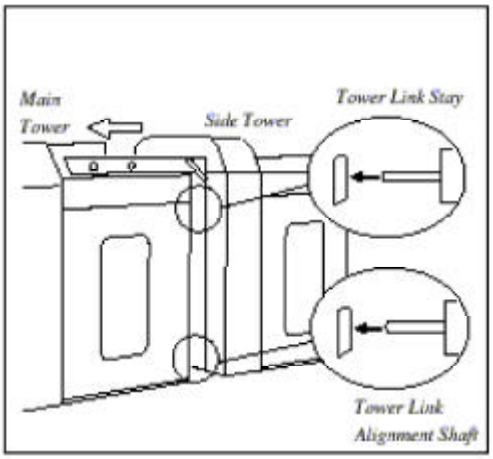

25. Move the **Side Tower** toward the **Main Tower** slowly, sliding the **Transfer Unit** extending from the **Side Tower** along the top platform of the **Main Tower**.

Align the Side Tower with the Main Tower so that the shafts of the Tower Link Stay and Tower Link Alignment Shaft can be inserted completely into the alignment holes of the Main Tower.

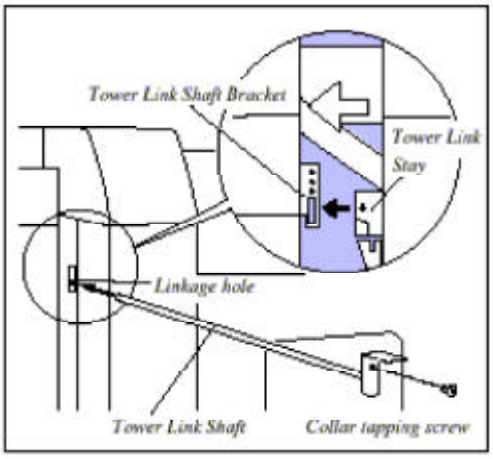

26. Overlap the **Tower Link Shaft Brackets** on the **Main Tower** with the side ends of the **Tower Link Stay** on the **Side Tower** and pass the **Tower Link Shaft** from the **Linkage hole** on the front side of the **Tower Link Stay** through to the counterpart on the rear side.
Secure the **Tower Link Shaft** by securing the plate at the end of the shaft to the **Tower Link Shaft Bracket** with a collar tapping screw.

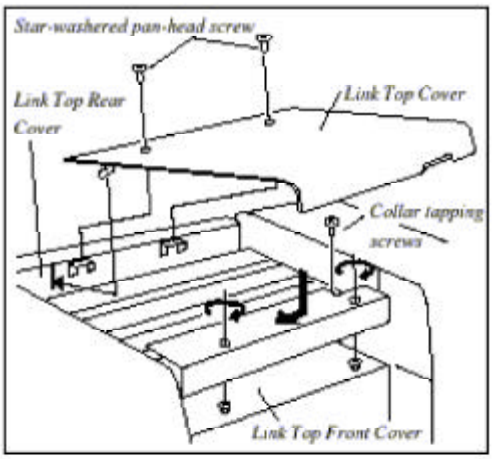

27. Loosen two collar tapping screws on the front side of the top platform of the **Main Tower**.

28. Place the **Link Top Front Cover** on the top front side of the **Main Tower** and secure it with a collar tapping screw. Then tighten the screws loosened in the previous step on the **Link Top Front Cover**.

29. Insert the hook provided inside the **Link Top Cover** into the slit on the side of the **Link Top Rear Cover** and secure the **Link Top Cover** with two star-washered pan-head screws.

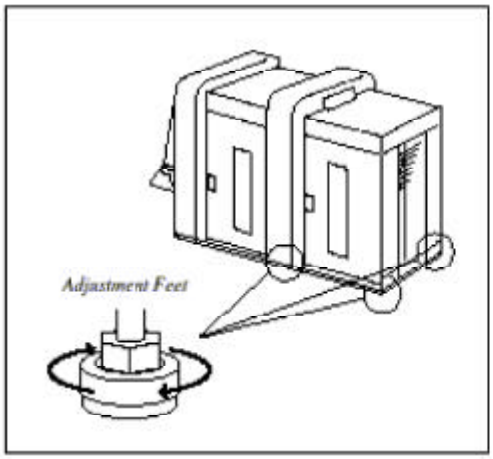

30. Rotate the Adjustment Feet at the bottom of the **Side Tower** until they all touch the floor to secure the **Side Tower**.

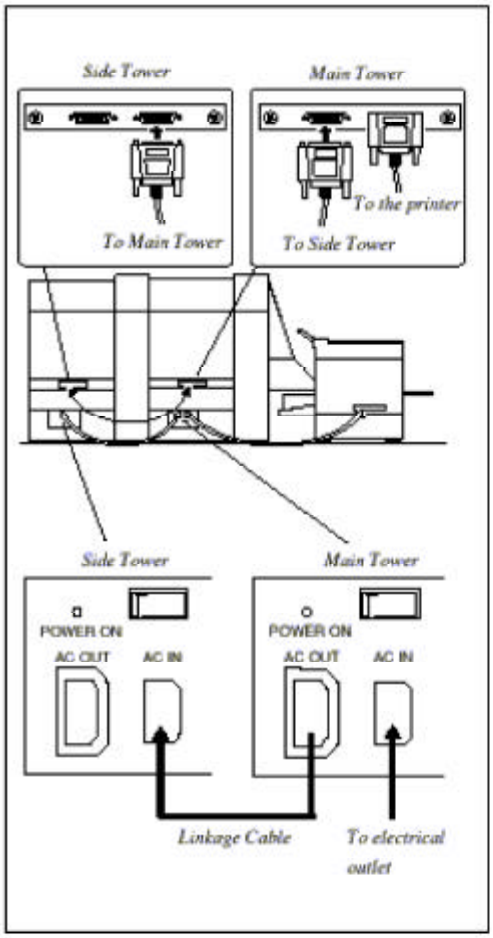

31. Connect the **TM Interface Cable** between the **Main Tower** and the **Side Tower**.

32. Connect the **Linkage Cable** between the "**AC OUT**" outlet on the rear side of the **Main Tower** and the "**AC IN**" inlet on the rear side of the **Side Tower**.

33. Connect the power cord to the "**AC IN**" inlet on the rear side of the **Main Tower** and connect the **plug** to the electrical outlet.

34. Connect the **power cord plug** of the printer to the electrical outlet and turn on the power switch on the printer. (The TM5000 is automatically powered.)

35. Initialize the memory in the TM5000 system.
Press the ▲, ▼, ◀, ▶, "**All Reset**" and "**OK**" keys on the Control Panel of the TM5000 in this order and start the test mode.
Select **[11. MEMORY SW INITIAL]** and press the "OK" key.

36. Select **[15. END]** and press the "OK" key to get out of the test mode.

37. Verify that the TM5000 operates normally.

7

18. TM5000 NonSort Precision Stacking Tray Kit

TM5000 NonSort Precision Stacking Tray Kit (RN/RP) Installation Procedure

Types of Connectable Printers

The following printer models are the intended basic units for installing the TM5000NonSort Precision Stacking Tray Kit (RN/RP).

RISO KAGAKU CORPORATION Models

RISO RN Series
RISO RP Series

Nobody but Riso-authorized service representatives is allowed to install this unit.

Packing List

This package contains the following items.

1. NonSort precision stacking tray base ..... 1 pc.
2. Paper guide ass'y F ..... 1 pc.
3. Paper guide ass'y R ..... 1 pc.
4. Joint bracket F ..... 1 pc.
5. Joint bracket R ..... 1 pc.
6. TM Ejection guide roller ..... 2 pcs.
7. Joint spacer W-F ..... 1 pc.
8. Joint spacer W-R ..... 1 pc.
9. Screws ..... 1 set
10. Installation guide (This manual) ..... 1 copy

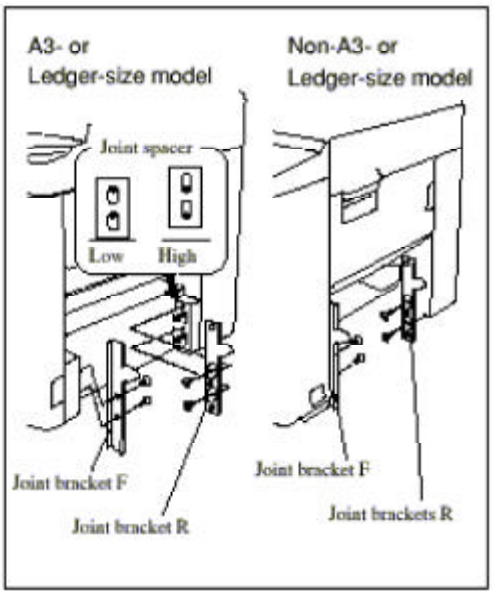

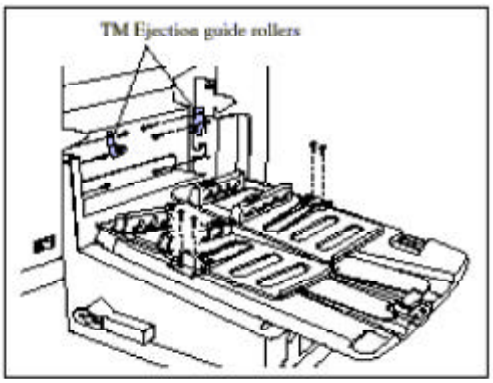

1. Remove the Precision stacking tray and the P.-Rev.-T. set plates from the printer.

   NOTE : Retain the removed screws as they will be reused.

2. Attach the Joint brackets onto the printer with screws (Binding M4x8, 2 pcs each).

   • If the printer is an A3- or Ledger-size model;

   Add the Joint spacers W-F and W-R on both side frames by securing them with screws (Double-washered M4x8, 2 pcs each) and fix the Joint brackets R and F on them.

   NOTE : The Joint spacers should be positioned high when the printer is equipped with the Multi-tray paper feeder. In other cases, however, they should be positioned low.

   • If the printer is a non-A3- or Ledger-size model;

   Fix the Joint brackets F and R on both side frames.

3. Attach the Paper guide ass'y F and R to the NonSort precision stacking tray base with screws (Binding M3x8, 2 pcs each).

4. Latch the hooks of the arm plates on both sides of the NonSort precision stacking tray base on the securing studs of the Joint brackets and secure the arm plates with screws.

5. Attach the TM Ejection guide rollers on both of the Joint brackets with screws (Double-washered M4x8, 2 pcs each).

This document is printed on recycled paper.

025-06001-008