RN SERIES TECHNICAL BULLETIN

Data Category	☐ Field Modification	■ Trouble-Shooting	☐ General Information	☐ Safety Advice

DISTRIBUTED TO : All Distributors

DATE : 22 March, 2001

MODEL : All "RN" models

ISSUE NO. : RNT-002

Our Ref.: AC1-1940

Proceeding Grade
- ☐ Action ASAP
- ☐ Action as given below
- ■ Action if required
- ☐ Refer in need

Parts Compatibility
- ☐ Compatible
- ☐ Conditionally Compatible
- ☐ Not Compatible
- ■ Old Obsolete

Handling of Modified Parts
- ☐ Free of Charge
- ☐ Conditionally Chargeable
- ■ Chargeable

SUBJECT: 021-19112-101 Spring; Lock Hook

Brief:

The spring has been made 50% stronger, and the part number is changed from 021-19112-004 to 021-19112-101.

Reason:

The former spring may become too weak to snap back the Lever Handle of the master disposal box when the box is inserted back in the machine after disposing the used master accumulated in the box.
The premature snap back of the Lever Handle causes the master disposal safety switch not to activate.

Newly-registered Part

021-19112-101 Spring; Lock Hook

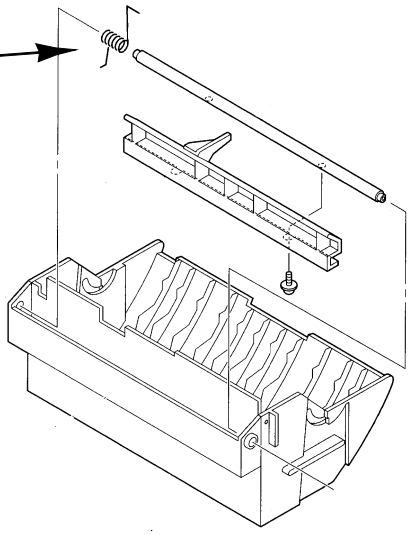

Note:

021-19112-004 Spring; Lock Hook was "Black" in color, while the new 021-19112-101 Spring; Lock Hook is "Reddish Gold" in color, with the exception that first productioin lot of 1,700 pieces are "Black" in color.

Please refrain from ordering this part yet, as the part has not come into our stock yet. We will inform you when ready.

Application Serial No.

To be informed later

RN2130UI	RN2100EP	RN2050AW
RN2030UI	RN2000EP	RN2130AS
RN2000UI	RN2150EP	RN2030AS
RN2150UP	RN2050EP	RN2180C
RN2050UP	RN2150AN	RN2080C
RN2150EN	RN2050AN	
RN2050EN	RN2150AW	

Attached :