RN SERIES TECHNICAL BULLETIN

Data Category	☐ Field Modification	■ Trouble-Shooting	☐ General Information	☐ Safety Advice

DISTRIBUTED TO : All Distributors

DATE : 13 April, 2001

MODEL : All "RN" models

ISSUE NO. : RNT-013

Our Ref.: C1-1218

Proceeding Grade
- ☐ Action ASAP
- ☐ Action as given below
- ■ Action if required
- ☐ Refer in need

Parts Compatibility
- ☐ Compatible
- ☐ Conditionally Compatible
- ☐ Not Compatible
- ■ Old Obsolete

Handling of Modified Parts
- ☐ Free of Charge
- ☐ Conditionally Chargeable
- ■ Chargeable

SUBJECT: 021-16075-205 Ink Cartridge Guide (Bottom)

Brief:
One of the plastic boss with screw hole is made 1 millimeter longer.

Reason:
The modification is to prevent the ink dripping from the nozzle of the Ink Bottle.

Looking through the tunnel made by the Ink Cartridge Guide (Top) and Ink Cartridge Guide (Bottom), when joined together, the inner bottom surface of the tunnel should be either flat (level) between the Ink Cartridge Guides (Top) and (Bottom), or Ink Cartridge Guide (Bottom) higher than the (Top). This allows smooth insertion of the Ink Bottle though the tunnel.
If the Ink Cartridge Guide (Bottom) is lower than the Ink Cartridge Guide (Top) at the bottom inner surface of the tunnel, the Ink Bottle will hit the ridge and will not allow smooth Ink Bottle insertion.

If the front edge of the Ink Bottle, during the insertion, knocks against the ridge made at the junction point of the Ink Cartridge Guide (Top) and (Bottom), the ink tends to spill out from the nozzle of the Ink Bottle. Though the spill (drip) of the ink may be little, the amount of the ink spill may add up if it is repeated.

To add to the knocking action, if there is a high ridge, the machine operator will insert the ink bottle with more force or speed necessary to insert the Ink Bottle in place. This too much force or speed will cause the nozzle of the Ink Bottle to hit hard against the ink intake nozzle of the Drum. This impact of the two nozzles will also cause the ink to drip down from the nozzles.

The Ink Bottle must be inserted slowly and gently through the Ink Cartridge Guides to prevent the ink spillage.

Modification:
The plastic boss on the Ink Cartridge Guide (Bottom), with the screw thread inside, is made **1 millimeter** longer to ensure that when the Ink Cartridge Guides (Top) and (Bottom) are joined, both are either flat against each other or the Ink Cartridge Guide (Bottom) is higher.

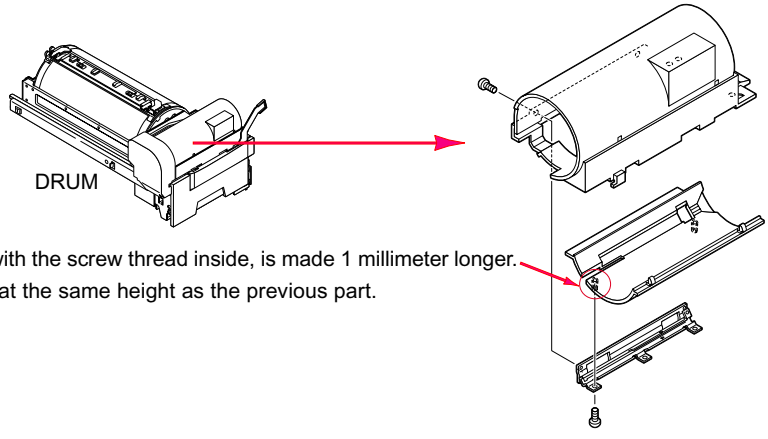

021-16074-004
Ink Cartridge Guide (Top)

021-16075-205
Ink Cartridge Guide (Bottom)

This plastic boss with the screw thread inside, is made 1 millimeter longer.
The other boss is at the same height as the previous part.

RN SERIES TECHNICAL BULLETIN

ISSUE NO.: RNT-013

Field modification:

If the Ink Cartridge Guide (Bottom) on the machine in the field is an **old type**, and if it is lower than the Ink Cartridge Guide (Top) within the tunnel, it is recommended that the part be replaced, or following field modification be made.

Add a small diameter washer of the thickness of about **1 millimeter** on the plastic boss of the Ink Cartridge Guide (Bottom), as shown on the illustration and photograph below.
Adding 1 millimeter washer in that particular one boss will have the same effect as replacing whole Ink Cartridge Guide (Bottom) to the new modified part.

Insert one washer
(thickness = 1 millimeter)

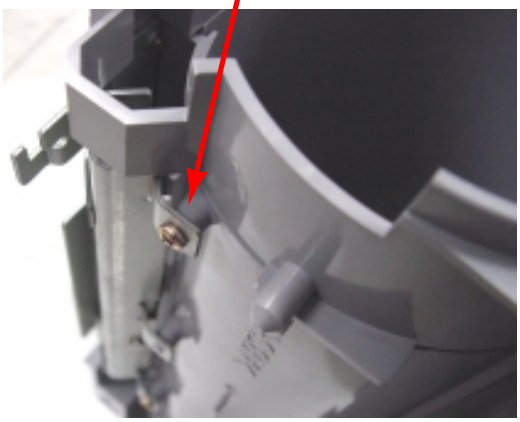

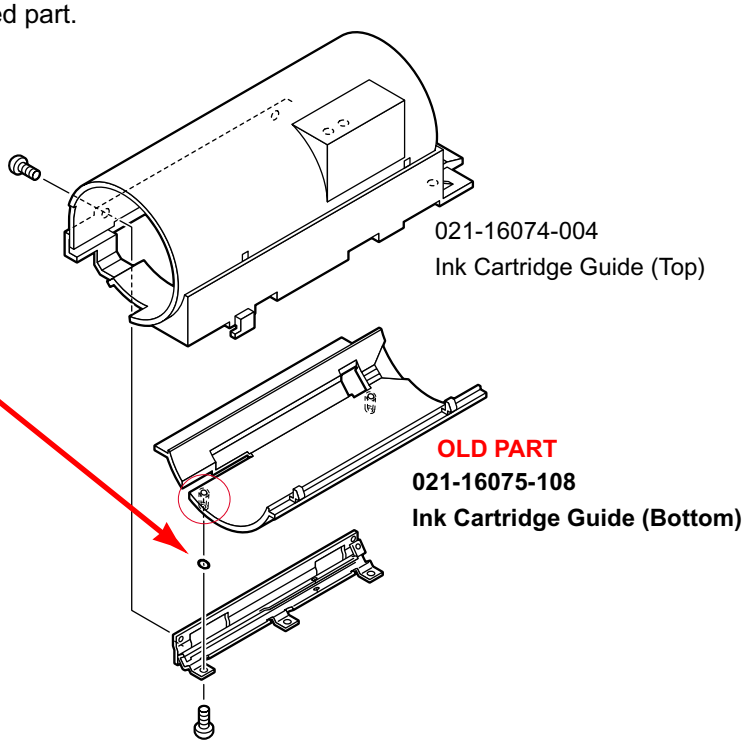

Application Serial No.

RN2130UI 85130553
RN2030UI 85221168
RN2000UI 85430001
RN2150UP 85070001
RN2050UP 85280001
RN2150EN 85090001
RN2050EN 85260001
RN2100EP 85150241
RN2000EP 85200097
RN2150EP 85080048
RN2050EP 85270051
RN2150AN 85110011
RN2050AN 85240044
RN2150AW 85100035
RN2050AW 85250103
RN2130AS 85140033
RN2030AS 85210063
RN2180C 85420031
RN2080C 85410077