# TECHNICAL INFORMATION

RISOEUROPETECHNICALOPERATIONSDIVISION

DATE: MARCH 2000

ISSUE NO. FR008 Rev 2

OUR REF: FRT-006

MODEL: FR3910

| INFORMATION CATEGORY | | ACTION REQUIRED | |
|---|---|---|---|
| FACTORY MODIFICATION | ☐ | IMMEDIATE ACTION | ☐ |
| FIELD MODIFICATION | ☐ | NEXT SERVICE CALL | ☐ |
| SAFETY INFORMATION | ☐ | AS NECESSARY | ☐ |
| GENERAL INFORMATION | ☒ | AT INSTALLATION | ☐ |

## SUBJECT: FR3910 Technical Manual Version December 1999

**This information includes only the items different from the FR3950.**

**1. SPECIFICATION COMPARISON TABLE;**

| FEATURES | FR3910 | FR3950 |
|---|---|---|
| Scanning Resolution dpi | 300 x 400 dpi | 400 x 400 |
| Dot - Screening | 2 patterns | 4 patterns |
| Book Document Processing | No | Yes |
| OPTIONAL ACCESSORIES | | |
| Digitizer III (S) | No | Yes |

**ADJUSTMENT**

**The following two adjustments are different from FR3950**

**TPH Voltage Setting Table - The setting table is different from FR3950. Adjustment procedures of TPH voltage for FR3910 are the same as for the other FR models and GR models.**

**Image Elongation/Shrinkage Correction (write pulse motor adjustment). Checking method for image elongation/shrinkage is different from 400dpi machines, and it can not be checked by folding the output test page by 45 degrees as shown in the FR revised technical manual version 1.1 page 16A-3**

## 1. Thermal Power of Thermal Print Head (FR3910)

1. Trun off the power and remove Front right cover.
2. Connect a voltmeter between pins TP1(+) and TP2(GND) on the Power supply PCB.
3. Turning ON Test mode No.77 (TPH/CTL signal), confirm that the voltage displayed on the voltmeter conforms to the setting table according to the thermal print head resistance value.
4. If not, adjust VR100/VR101 for Power supply PCBH and VR401/VR402 for Power supply PCBN. (VR101 or VR402: Fine adjustment, VR100 or VR401: Rough adjustment.)
5. On completion of adjustment, turn off the power and detach the voltmeter.

| Resistance | Voltage |
|---|---|
| 1403 to 1413 | 15.9 |
| 1414 to 1431 | 16.0 |
| 1432 to 1449 | 16.1 |
| 1450 to 1467 | 16.2 |
| 1468 to 1485 | 16.3 |
| 1486 to 1503 | 16.4 |
| 1504 to 1522 | 16.5 |
| 1523 to 1540 | 16.6 |
| 1541 to 1559 | 16.7 |
| 1560 to 1577 | 16.8 |
| 1578 to 1596 | 16.9 |
| 1597 to 1615 | 17.0 |
| 1616 to 1634 | 17.1 |
| 1635 to 1653 | 17.2 |
| 1654 to 1672 | 17.3 |
| 1673 to 1692 | 17.4 |
| 1693 to 1711 | 17.5 |
| 1712 to 1731 | 17.6 |
| 1732 to 1750 | 17.7 |
| 1751 to 1770 | 17.8 |
| 1771 to 1790 | 17.9 |
| 1791 to 1810 | 18.0 |
| 1811 to 1830 | 18.1 |
| 1831 to 1850 | 18.2 |
| 1851 to 1871 | 18.3 |
| 1872 to 1891 | 18.4 |
| 1892 to 1898 | 18.5 |

## 2. Image Elongation / Shrinkage Correction (Write Plus Moter Speed Adjustment)

-Checking and method

1. Put the A3 size on the paper feed tray and run test print Test mode No.119.
2. Measure the length of 33 spans of sross strips vertically. Check total width of 33 spans between 264 to 272 mm.
3. If not, adjust Write plus motor speed by Test mode (Memory switch) No.221. And press PRINT POSSITION button to select a Memory switch setting referring to FR Technical manual.

# 2. Image Elongation/Shrinkage Correction (Write Pulse Motor Speed Adjustment)

**- Checking and Method**

1. Put the same size of the paper as the effective printing area on the Paper feed tray and run test print (Test Mode No. 119). (128 dots between line and line)
2. Fold the output test print diagonally as shown below, and make sure that the main scan block and sub-scan block overlap properly.
   *FR 300 dpi machine
   Test Print “119” block image is rectangle on this machine. Each vertical and horizontal line does not cross with each other.
   Make sure to set 33 blocks in 270mm vertical length.
3. If not overlapping, adjust a write pulse motor speed in Test Mode (Memory Switch) No. 221. Press the PRINT POSITION button to select a Memory switch setting referring to the chart below.
4. Adjust image elongation/shrinkage so that it will be finally within ±1.4 %.
   (25 cm x 1.4 % = 3.5 mm, 30 cm x 1.4 % = 4.2 mm)

**No. 221 Write Pulse Motor Speed Control**

| SW setting | 9 | A | B | C | D | E | F | O |
|---|---|---|---|---|---|---|---|---|
| Amount (mm) | -7 | -6 | -5 | -4 | -3 | -2 | -1 | 0 |
| SW setting | 1 | 2 | 3 | 4 | 5 | 6 | 7 | 8 |
| Amount (mm) | +1 | +2 | +3 | +4 | +5 | +6 | +7 | +8 |

Decrease ⟷ Increase

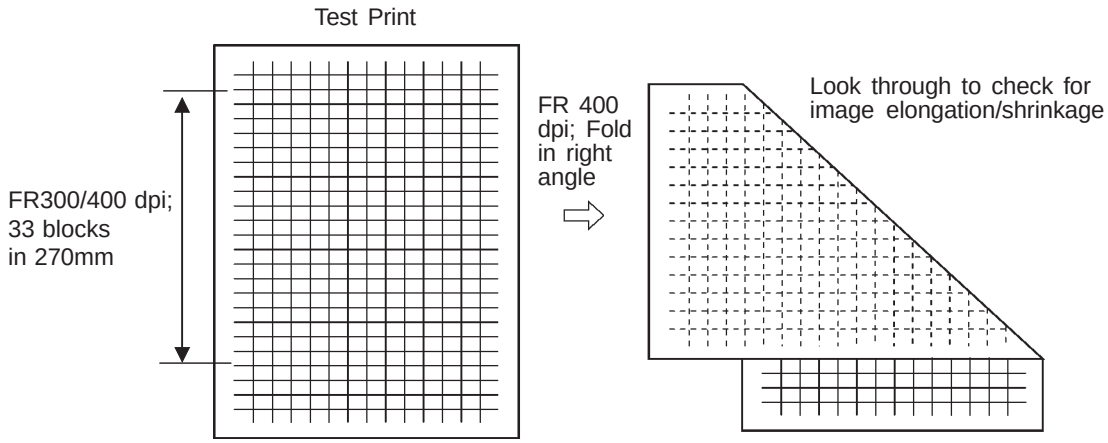

# 1. Machine Model Setting :Europe

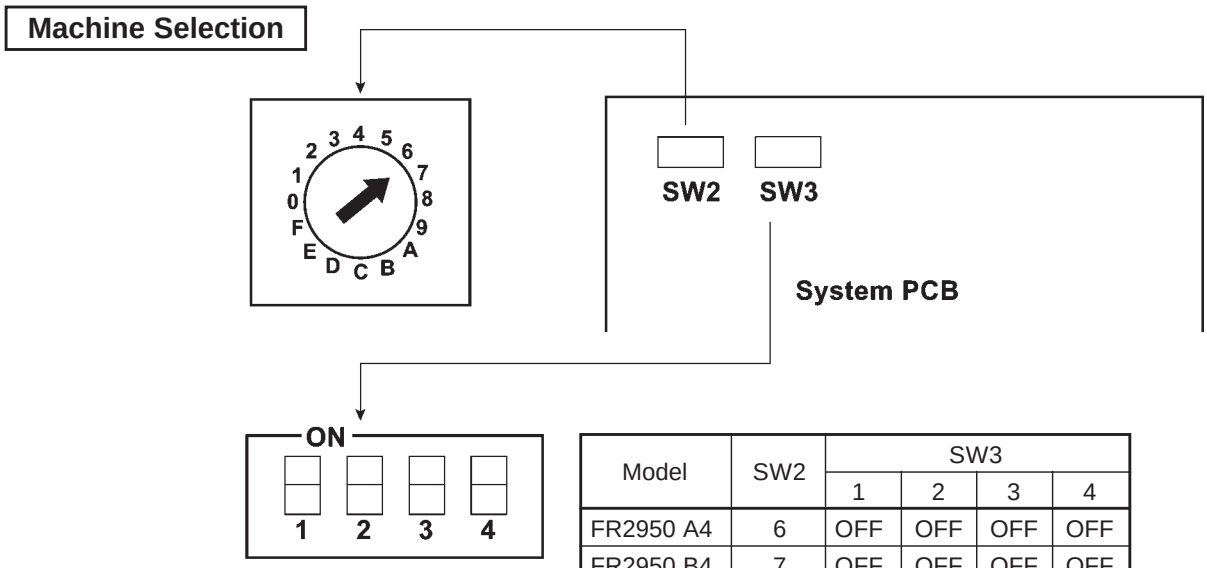


| Model | SW2 | SW3 | | | |
|---|---|---|---|---|---|
| | | 1 | 2 | 3 | 4 |
| FR2950 A4 | 6 | OFF | OFF | OFF | OFF |
| FR2950 B4 | 7 | OFF | OFF | OFF | OFF |
| FR3950 | E | OFF | OFF | OFF | OFF |
| FR3910 | 4 | OFF | OFF | OFF | OFF |

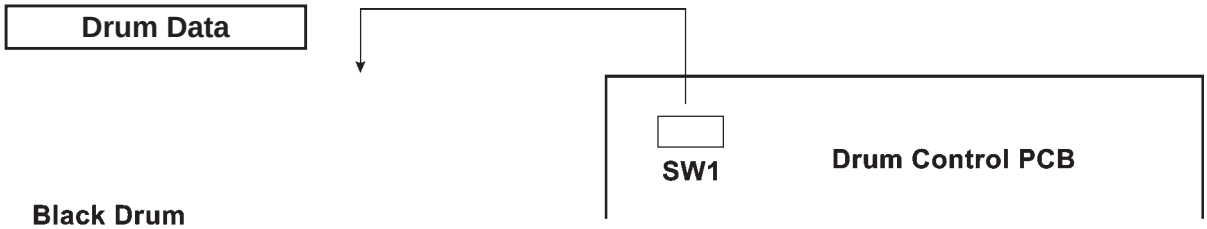


**Black Drum**

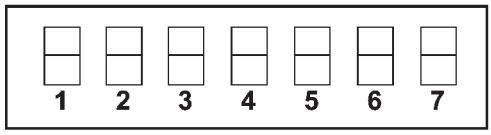


| | 1 | 2 | 3 | 4 | 5 | 6 | 7 |
|---|---|---|---|---|---|---|---|
| A4 | OFF | OFF | ON | ON | OFF | ON | OFF |
| B4 | OFF | OFF | ON | OFF | OFF | ON | OFF |
| A3 | OFF | OFF | OFF | OFF | OFF | ON | OFF |
| A4W | OFF | OFF | OFF | ON | OFF | ON | OFF |

**Color Drum**

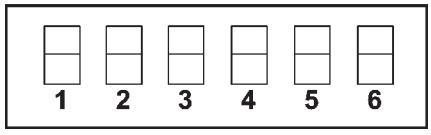


| | 1 | 2 | 3 | 4 | 5 | 6 |
|---|---|---|---|---|---|---|
| A4 | OFF | OFF | ON | ON | ON | OFF |
| B4 | OFF | OFF | ON | OFF | ON | OFF |
| A3 | OFF | OFF | OFF | OFF | ON | OFF |
| A4W | OFF | OFF | OFF | ON | ON | OFF |

# FR3910 PARTS LIST (VERSION DECEMBER,1999)

## This information includes only the items different from the FR3950.

**Parts Comparison Table:**

| FR3910 | | FR3950 | |
|---|---|---|---|
| 019-95038-052 | TPH Ass'y; T300A3 | 019-95030-051 | TPH Ass'y; K400A3 |
| 018-51023-107 | Image Processing PCB; FIPDF | 018-51022-402 | Image Processing PCB; IPDF |
| None | | 018-51000-107 | Trimming PCB II |
| 018-60023-209 | Image Scanner 301-CE | 019-60018-202 | Image Scanner 401-CE |
| 019-80043-xxx | System ROM FRL | 019-80038-xxx | System ROM FRW |
| 019-97328-058 | Unit/Operation Panel;3910 US | 019-97310-051 | Unit/Operation Panel;3950 US |
| 019-97331-008 | * Sub-Panel Ass'y; 3910 US | 019-97318-001 | * Sub-Panel Ass'y; 3950 US |
| 019-97329-054 | Unit/Operation Panel;3910 Pic. | 019-97311-058 | Unit/Operation Panel;3950 Pic. |
| 019-97332-004 | * Sub-Panel Ass'y; 3910 Pic. | 019-97319-008 | * Sub-Panel Ass'y; 3950 Pic. |
| 019-97327-051 | Unit/Operation Panel;3910 | 019-97309-053 | Unit/Operation Panel;3950 |
| 019-97330-001 | * Sub-Panel Ass'y; 3910 | 019-97317-005 | * Sub-Panel Ass'y; 3950 |
| 019-47125-008 | Mole; 3910 UI | 019-47105-007 | Mole; 3950 UI |
| 019-47126-004 | Mole; 3910 UP | 019-47106-003 | Mole; 3950 UP |
| 019-47127-000 | Mole; 3910 EP | 019-47107-000 | Mole; 3950 EP |
| 019-47128-007 | Mole; 3910 EN | 019-47108-006 | Mole; 3950 EN |
| 019-47129-003 | Mole; 3910 AW | 019-47109-002 | Mole; 3950 AW |
| 019-47130-001 | Mole; 3910 AN | 019-47110-000 | Mole; 3950 AN |
| 019-47131-008 | Mole; 3910 C | 019-47111-007 | Mole; 3950 C |