CHAPTER 1. GENERAL DESCRIPTION

[1] Caution

1. Laser caution

This laser facsimile is a class 1 laser product that complies with 21CFR 1040.10 and 1040.11 of the CDRH or IEC60825-1 standard. This means that this machine dose not produce a hazardous laser radiation. The use of controls, adjustments or performance of procedures other than those specified herein may result in hazardous radiation exposure.

This laser radiation isn't a danger to the skin, but when an exact focusing of the laser beam is achieved on the eyes retina, there is danger of spot damage to the retina.

The following cautions must be observed to avoid exposure of the laser beam to your eyes at the time of servicing.

1) When a problem in the laser optical unit has occurred, the whole optical unit must be exchanged as a unit, not an individual part.
2) Do not look into the machine with the main switch turned on after removing the toner/developer unit and drum cartridge.
3) Do not look into the laser beam exposure slit of the laser optical unit with the connector connected when removing and installing the optical system.
4) The cover of Laser Printer Unit contains the safety interlock switch.

   Do not defeat the safety interlock by inserting wedges or other items into the switch slot.

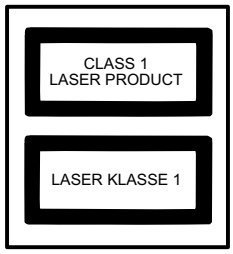



Laser Wave Length : 770 nm -795 nm
Laser Pulse Times : 72.58 ns
Laser Output Power : max. 4.0 mW

2. Life of consumable

Section	Part	Estimated Life	Replaced by
Toner cartridge	Replacement cartridge (AM-30DC)	3,000 prints (at Letter/5% chart)	User
Drum cartridge	Replacement cartridge (AM-90DR)	20,000 prints (at Letter/5% chart)	User
Paper feed	Transfer roller (Refer to the P/G No. 3-19) (NROLR2525XHZZ)	50,000 prints	Service Engineer
Fuser	Fusing unit (Refer to the P/G No. 5-901) (CFRM-2265XH02)	50,000 prints	Service Engineer
Paper transport	Feed roller (Refer to the P/G No. 3-29) (NROLR2333XHZZ)	Cleaning as needed	----------
Unit	AM-300	5 years or 50,000 prints of early either	----------

3. Precautions for using Lead-Free Solder

1. Employing lead-free solder

This model employs lead-free solder.

This is indicated by the "LF" symbol printed on the PWB and in the service manual.

The suffix letter indicates the alloy type of the solder.

Example:



Indicates lead-free solder of tin, silver and copper.

2. Using lead-free solder

When repairing a PWB with the "LF" symbol, only lead-free solder should be used. (Using normal tin/lead alloy solder may result in cold soldered joints and damage to printed patterns.)

As the melting point of lead-free solder is approximately 40°C higher than tin/lead alloy solder, it is recommended that a dedicated bit is used, and that the iron temperature is adjusted accordingly.

3. Soldering

As the melting point of lead-free solder (Sn-Ag-Cu) is higher and has poorer melting point (flow), to prevent damage to the land of the PWB, extreme care should be taken not to leave the bit in contact with the PWB for an extended period of time. Remove the bit as soon as a good flow is achieved.

The high content of tin in lead free solder will cause premature corrosion of the bit.

To reduce wear on the bit, reduce the temperature or turn off the iron when it is not required.

Leaving different types of solder on the bit will cause contamination of the different alloys, which will alter their characteristics, making good soldering more difficult.

It will be necessary to clean and replace bits more often when using lead-free solder. To reduce bit wear, care should be taken to clean the bit thoroughly after each use.

[2] Specifications

1. Print specifications

Printer type:	Laser
Toner cartridge yield*: (continuous printing, 5% page coverage, A4 paper)	**Initial starter cartridge** (included with machine): Approx. 1500 pages **Replacement cartridge AM-30DC:** Approx. 3000 pages
Drum cartridge yield*: (continuous printing, 5% page coverage, A4 paper)	**Initial starter cartridge** (included with machine): 20,000 pages (average) **Replacement cartridge AM-90DR:** 20,000 pages (average)
PC print speed:	12 ppm (pages per minute)
Resolution:	600 x 600 dpi (dots per inch)
* The yields may vary depending on coverage and operating conditions.	

2. Copy specifications

Copy speed:	12 cpm (copies per minute)
Copy quality settings:	Text, Photo
Copy resolution settings:	300 dpi, 600dpi
Enlargement/Reduction:	25% to 400%
Contrast settings:	5 levels
Halftone:	256 levels
Multiple copies:	Max. 99 copies per original
Maximum copy size:	Document glass: A4 Auto document feeder: A4

3. Scanning specifications

Scanner type:	CIS (Contact Image Sensor)
Resolution:	300/600 x 300 dpi, 300/600 x 600 dpi
Scan speed: (TWAIN scanning using the auto document feeder; reading time only)	Black and white: 300/600 x 300 dpi: 6 sec/page 300/600 x 600 dpi: 6 sec/page Color and grayscale: 300/600 x 300 dpi: 22 sec/page 300/600 x 600 dpi: 22 sec/page
Compatibility:	TWAIN, WIA
Grayscale:	256 levels
Color:	24-bit color

4. General specifications

Auto document feeder:	A4 size: 20 sheets max. (80 g/cm^2)
Computer connection:	USB 2.0 or 1.1 port (USB 2.0 or 1.1 cable must be purchased separately)
Effective scanning width:	208 mm max.
Effective printing width:	202 mm max.
Display:	16-digit LCD display
Paper tray capacity: (A4-size plain paper)	250 sheets (80 g/cm^2) (At room temperature and normal humidity)
Power requirements:	220 - 230 V AC, 50 Hz (U.K., Eire: 230 V AC, 50 Hz)
Operating temperature:	10 - 30°C
Humidity:	20 - 85% RH
Noise emission:	German Products and Equipment Safety Law, Part 3: Noise emission: The max. Acoustic Noise is 70 dB(A) or less according to EN ISO7779.
Power consumption:	Idle: 8.5 W Maximum: 870 W
Dimensions:	Width: 475 mm Depth: 420 mm Height: 370 mm
Weight:	Approx. 12.7 kg (including trays and toner and drum cartridges)

As a part of our policy of continuous improvement, SHARP reserves the right to make design and specification changes for product improvement without prior notice. The performance specifications figures indicated are nominal values of production units. There may be some deviations from these values in individual units.

Trademark information
• Microsoft, Windows and Internet Explorer are trademarks of Microsoft Corporation in the U.S.A. and other countries.

[3] Operation panel

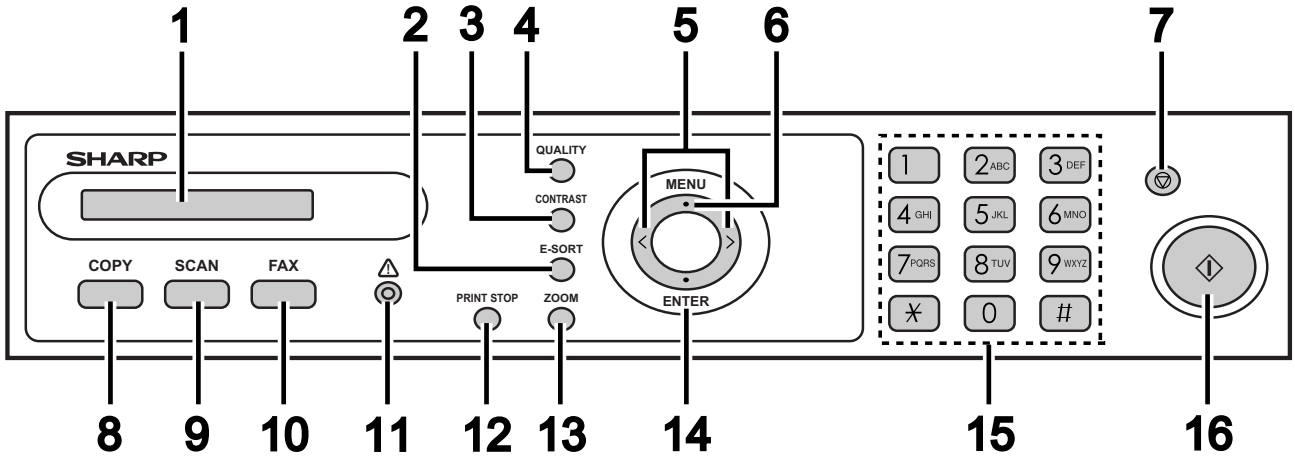

1. Display
This displays messages and prompts to help you operate the machine.

2. E-SORT key
Press this key when making multiple copies to have the copies collated (sorted into sets with the pages ordered 1, 2, 3..., 1, 2, 3..., etc.).

3. CONTRAST key
Press this key when making a copy to select a contrast setting.

4. QUALITY key
When making a copy, press this key to select the type of original you are copying (TEXT, PHOTO).

5. Right/left arrow keys
When making a copy, press either of these keys after selecting an enlargement/reduction setting with the **ZOOM** key to increase or decrease the setting by 1%.

6. MENU key
Press this key, followed by the left or right arrow key, to access special functions and settings.

7. Stop key
Press this key to cancel operations before they are completed.

8. COPY key
Press this key to select copy mode.

9. SCAN key
Press this key to select scan mode.

10. HELP key
Press this key to print the HELP list, a brief guide to the operation of the machine.

11. Alarm indicator
This blinks when the toner cartridge nears empty or the drum cartridge is near or at the end of its life. This lights steadily when the toner cartridge is empty, the machine is out of paper, the print compartment cover is open, or when a paper jam has occurred (a message will appear to indicate the problem).

12. PRINT STOP key
Press this key to cancel a print job sent to the machine from a computer.

13. ZOOM key
Press this key to select an enlargement or reduction setting when making a copy.

14. ENTER key
Press this key to enter or select a setting.

15. Number keys
Use these keys to enter the number of copies.

16. Start key
Press this key when you are ready to begin copying or scanning.

[4] Transmittable documents

1. Document Sizes

Normal size	Width	148 - 210 mm
	Length	148 - 297 mm

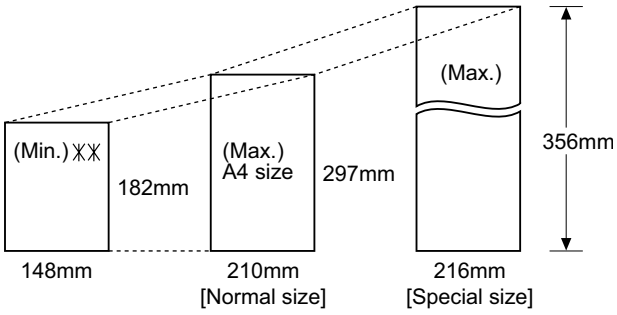

※※ Use document carrier sheet for smaller documents.

- With special sizes, only one sheet can be fed into the machine at a time. Insert next page into feeder as current page is being scanned.

2. Paper Thickness & Weight

	20 sheets	1 sheet(Manual)
Paper weight	21.5 lbs. (80 g/m$^{2)}$	14 lbs. ~ 42 lbs. (52 g/m^2 ~ 157g/m$^{2)}$
Paper thickness (ref.)	0.1 mm	0.1 mm ~ 0.18mm
Paper size	LGL (216 mm x 355.6 mm) A4 (210 mm x 297 mm) LTR (216 mm x 279 mm)	
Feeder capacity	A4/LTR: 10 sheets max. LGL : 1 sheet max.	

3. Document Types

- Normal paper

  Documents handwritten in pencil (No. 2 lead or softer), fountain pen, ball-point pen, or felt-tipped pen can be transmitted.

  Documents of normal contrast duplicated by a copying machine can also be transmitted.

- Diazo copy (blue print)
- Diazo copy documents of a normal contrast may be transmitted.
- Carbon copy

  A carbon copy may be transmitted if its contrast is normal.

4. Cautions on Transmitting Documents

- Documents written in yellow, greenish yellow, or light blue ink cannot be transmitted.
- Ink, glue, and correcting fluid on documents must be dry before the documents can be transmitted.
- All clips, staples and pins must be removed from documents before transmission.
- Patched (taped) documents should be copied first on a copier and then the copies used for transmission.
- All documents should be fanned before insertion into the feeder to prevent possible double feeds.

5. Automatic Document Feeder Capacity

Number of pages that can be placed into the feeder at anytime is as follows:

Normal size: max. ADF 20 pages

Special size: single sheet only (manual feed)

NOTE: • When you need to send or copy more pages than the feeder limit, place additional pages in feeder when last page in feeder is being scanned.

• Place additional pages carefully and gently in feeder. If force is used, double-feeding or a document jam may result.

6. Readable Width & Length

The readable width and length of a document are slightly smaller than the actual document size.

Note that characters or graphics outside the effective document scanning range will not be read.

- **Readable width**

  208mm, max

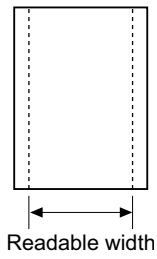

- **Readable length**

  This is the length of the document sent minus 4mm from the top and bottom edges.

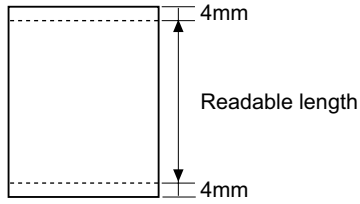

[5] Installation

1. Site selection

Take the following points into consideration when selecting a site for this model.

ENVIRONMENT

- The machine must be installed on a level surface.
- Keep the machine away from air conditioners, heaters, direct sunlight, and dust.
- Provide easy access to the front, back, and sides of the machine. In particular, keep the area in front of the machine clear, or the original document may jam as it comes out after scanning.
- The temperature should be between 10 - 30°C.
- The humidity should be between 20% and 85% (without condensation).

ELECTRICITY: AC 220 - 230 V, 50 Hz, earthed AC outlet (U.K., Eire:230 V, 50 Hz, earthed (3-prong) outlet).

Caution!

- Connection to a power source other than that specified will cause damage to the equipment and is not covered under the warranty.
- If your area experiences a high incidence of lightning or power surges, we recommend that you install a surge protector for the power. Surge protectors can be purchased from your dealer.

If the machine is moved from a cold to a warm place...

Condensation may form on the reading glass if machine is moved from a cold to a warm place, this will prevent proper scanning of documents for transmission. Turn on the power and wait approximately 2 hours before using machine.

2. Attaching the trays

1) Attach the document feeder tray.

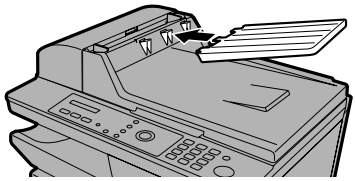

Slide the output tray into the machine as shown. When it stops, lift the end slightly and push in so that the tray locks in place.

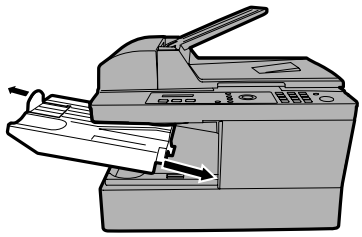

Important: The output tray must be attached correctly or the machine will not operate.

2) Releasing the scanner.

Before plugging in the power cord, pull the scanner release toward you to release the scanner lock.

• **Caution:** Plugging in the power cord without releasing the scanner lock may damage the machine.

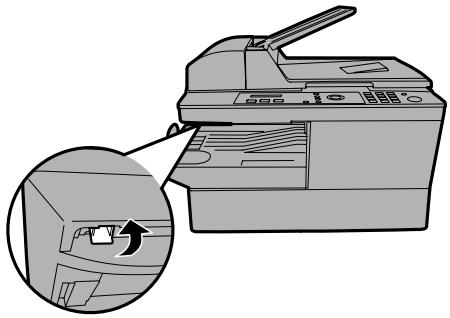

If you need to move the machine:

• After you have unplugged the power cord, push the scanner release back in to lock the scanner.

• After moving, release the scanner lock first and then plug in the power cord.

3) Connecting the power cord.

Plug the power cord into a 220 - 230 V, 50 Hz, earthed AC outlet (U.K., Eire:230 V, 50 Hz, earthed (3-prong) outlet).

• **Caution:** Make sure the scanner has been released as explained on the previous page before plugging in the power cord.

• The power outlet must be installed near the equipment and must be easily accessible.

Note: The shape of the power plug varies by country.

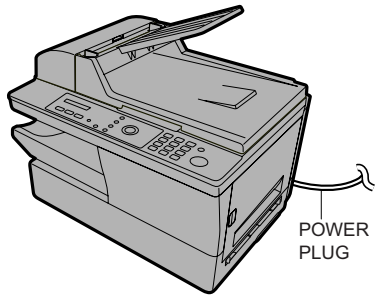

Comments:

• The machine does not have a power on/off switch. The power is turned on and off by simply plugging in or unplugging the power cord.

• Whenever you unplug the power cord, wait at least 5 seconds before plugging it back in.

• If you area experiences a high incidence of lightning or power surges, it is recommended that you install surge protectors for the power. Surge protectors can be purchased from your dealer.

3. Installing the toner cartridge and drum cartridge

The laser printer in the machine uses a toner cartridge and drum cartridge.

- The starter toner cartridge included with the machine can print approximately 1,500 A4-size pages at 5% page coverage.
- When replacing the toner cartridge, use a **SHARP AM-30DC** toner cartridge. One cartridge can print about 3,000 A4-size pages at 5% coverage.
- The drum cartridge can print approximately 20,000 A4-size pages. When replacing the drum cartridge, use a **SHARP AM-90DR** drum cartridge.

Follow the steps below to install the toner cartridge and the drum cartridge.

Note: The quality of the toner cartridge is guaranteed for 18 months after the date of manufacture indicated on the package. The quality of the drum cartridge is guaranteed for 24 months after the date of manufacture indicated on the package.

1) Press the side cover release ❶ , open the side cover ❷ , and then open the front cover ❸ .

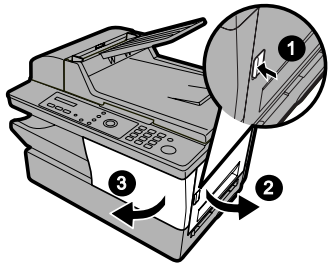

• **Caution!** The fusing unit inside the print compartment becomes very hot during operation. Do not touch the inside of the print compartment after the machine has been in operation.

2) Remove the new drum cartridge from its packaging.

3) Insert the drum cartridge into the print compartment, sliding it along the guides.

• Do not touch or allow other objects to contact the drum (the green cylinder). This may damage the drum. If fingerprints, dust, or other contaminants get on the drum, wipe it gently with a clean cloth.

• Exposure to light for more than several minutes will damage the drum. Be sure to insert the drum cartridge promptly into the machine.

• If you find it necessary to leave the cartridge out of the machine for move than several minutes, wrap the cartridge in black paper.

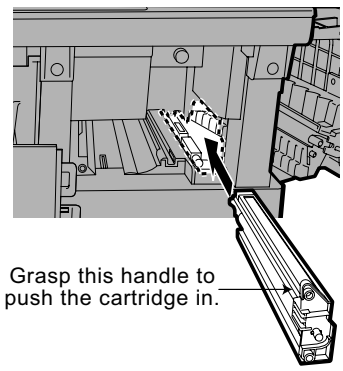

4) Remove the new toner cartridge from its packaging. Shake the cartridge side to side four or five times to distribute the toner evenly within the cartridge.

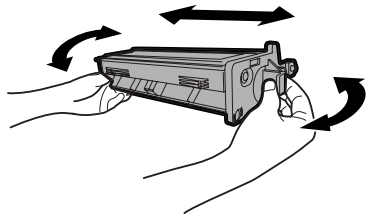

5) Grasp the cartridge handle and insert the toner cartridge into the print compartment, sliding it along the guides.

• After inserting the cartridge, press on the arrow mark to mark sure it “clicks” into place.

• Do not touch the roller in the toner cartridge.

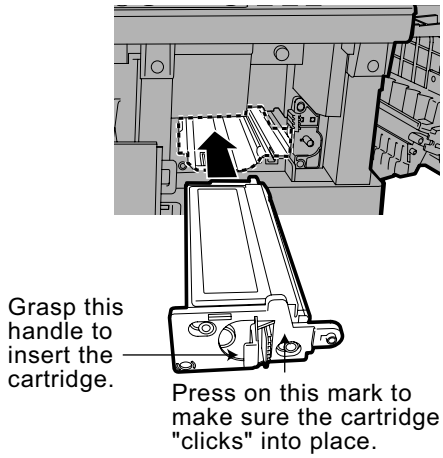

6) Close the front cover ❶ and then the side cover ❷ .

• Make sure the side cover is completely closed. Otherwise, light may enter the print compartment and damage the drum.

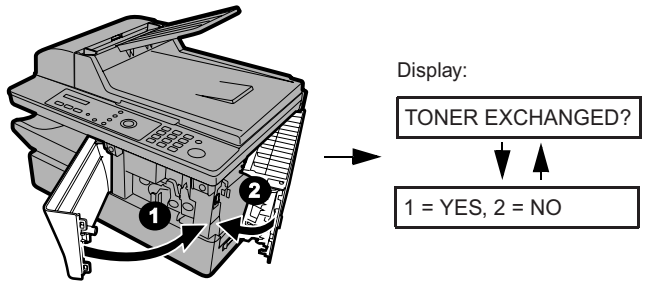

7) If you installed a new toner cartridge, press [1] to select YES (this will reset the toner counter to zero).

NEW TONER?
↓ ↑
OK: PRESS START

• If you temporarily removed and then replaced an old toner cartridge for maintenance or other reason, press [2ABC] to continue using the previous toner count. (Note: Be sure to press [2ABC], or the machine will not alert you when the toner cartridge is out of toner.)

8) Press [◇] .

9) If you installed a new drum cartridge, reset the drum counter as explained below.

4. Resetting the drum counter

Each time you install a new drum cartridge, follow the steps below to reset the drum counter to zero.

1	Press MENU and then Z or A repeatedly until the display at right appears.	Display: LIFE
2	Press [3DEF].	CLEAR: START KEY ↓ ↑ DRUM COUNTER
3	Press [◇].	1: LIFE COUNTER
4	Press [▽] repeatedly to exit.	

5. Manually resetting the toner counter

When a new toner cartridge is installed, the toner counter is reset in Step 7 on the previous page. The procedure below is normally not necessary; however, it can be used in the event that you need to reset the toner manually.

1	Press MENU and then Z or A repeatedly until the display at right appears.	Display: LIFE
2	Press [2ABC].	CLEAR: START KEY ↓ ↑ TONER COUNTER
3	Press [◇].	3: CLR DRUM COUNT
4	Press [▽] repeatedly to exit.	

6. Loading paper

You can load approximately 250 sheets of A4 paper (80 g/cm^2) in the paper tray.

Caution! Do not use the blank side of paper that has already been printed on.

1) Remove the output tray.

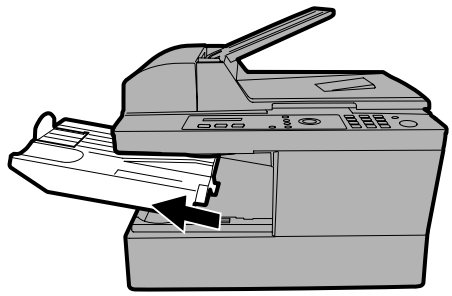

2) Insert a stack of paper into the tray, print side up.

• **Important!** The stack of paper must not be higher than the paper height line on the paper tray.

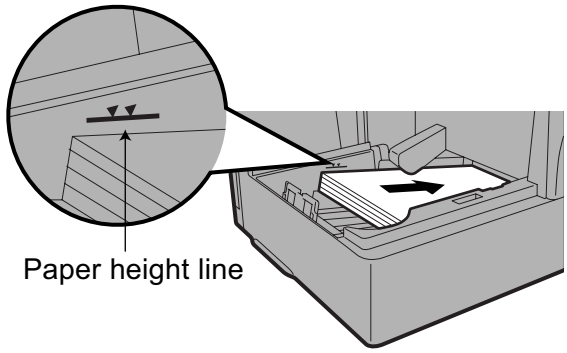

3) Squeeze the sides of the paper guide as shown and slide it to the slot for the length of the paper you are loading (A4).

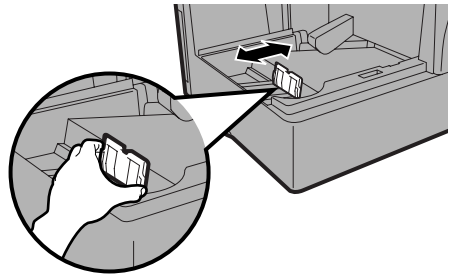

4) Replace the output tray.

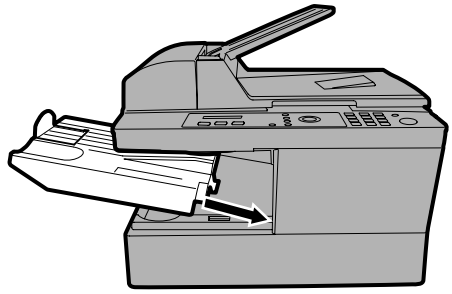

7. Installing the software

To use the machine as a printer and scanner for your computer, you must install the software and connect a USB cable. The CD-ROM that comes with the machine contains the following software:

- **MFP Drivers:** These consist of the printer driver that allows the machine to be used as a printer, and the scanner driver that allows you scan using TWAIN and WIA compliant applications.
- **Sharpdesk:** This is an integrated software environment that makes it easy to manage image files and launch applications. (Note that Internet Explorer® 5.5 or higher is required to install Sharpdesk; if this is not installed, you will be prompted during the installation procedure to install Internet Explorer® 6.0SP1 from the CD-ROM.)
- **Button Manager:** This allows you to initiate scanning from the operation panel of the machine by selecting one of six preset scan menus.

Minimum system requirements	
Operating system:	Windows® Me / 2000 Professional/ XP
Port:	USB 2.0 or 1.1 port
Display:	800 x 600 (SVGA) with 256 colors or more
Free hard-disk space:	150 MB or more
Other requirements:	An environment in which the operating system can freely operate.

Comments:

- USB 2.0 Hi-Speed is only possible if your computer has a USB 2.0 port and you are using a USB 2.0 cable. In addition, the Microsoft USB 2.0 driver must be preinstalled in your computer, or the USB 2.0 driver for Windows® 2000/XP provided through Windows Update must be installed. Note that USB 2.0 Hi-Speed is not possible in Windows® Me.
- To scan the maximum document length (356 mm) using the auto document feeder at 1200 dpi in full colour, at least 1GB of memory is required. In addition, at least 600MB or more of free hard disk space is required on the drive where your operating system is installed. In Windows® Me, it is not possible to scan an A4 size document at 1200 dpi in full color or grayscale (a lower resolution or a smaller scanning area must be selected).
- **Note for Windows® Me**: In the **Power Management** settings in the **Control Panel**, **System stand-by** must be set to **Never**. In addition, do not use the stand-by feature that appears when you shut down Windows.

Installing the software

- A USB cable is required to connect the machine to your computer. Please purchase a USB 2.0 or USB 1.1 cable. The USB cable will be connected during the software installation procedure. (If you wish to use USB 2.0 Hi-Speed mode and your system meets the requirements for Hi-Speed mode, purchase a USB 2.0 cable. A USB 2.0 certified cable is recommended.)
- To install the software on Windows® 2000/XP using the installer, you must log in with administrator's rights.
- The windows shown in the following procedure appear in Windows® XP. The windows that appear in other versions of Windows may be slightly different.

  Note: In the following instructions, "Windows 2000" indicates Windows 2000 Professional (the software cannot be installed on Windows 2000 Server).

1) **Make sure that the USB cable is not connected to your computer.** (The cable will be connected in Step 11.)

   • If the USB cable is connected, a Plug and Play window will appear. Click the Cancel button to close the window and disconnect the cable.

2) Insert the Sharp CD-ROM into your computer's CD-ROM drive.

3) In Windows® XP, click the **start** button, click **My Computer**, and then double-click the CD-ROM icon.

   In Windows® Me/2000, double-click **My Computer** on the desktop and then double-click the CD-ROM icon.

4) Double-click the **setup** icon () in the CD-ROM window.

5) The **Language Selection** window will appear. Select the language that you wish to use and click **Next**. (The language selections vary depending on your country or region.)

6) Follow the instructions in the windows that appear.

   • When the **Setup Type Selection** window appears, select **Standard** to install all of the software components (this should normally be selected). If you only wish to install certain components, select **Custom** and then select the components that you wish to install.
   Note: If you wish to select the folder where Sharpdesk and/or Button Manager are installed, select **Custom**.

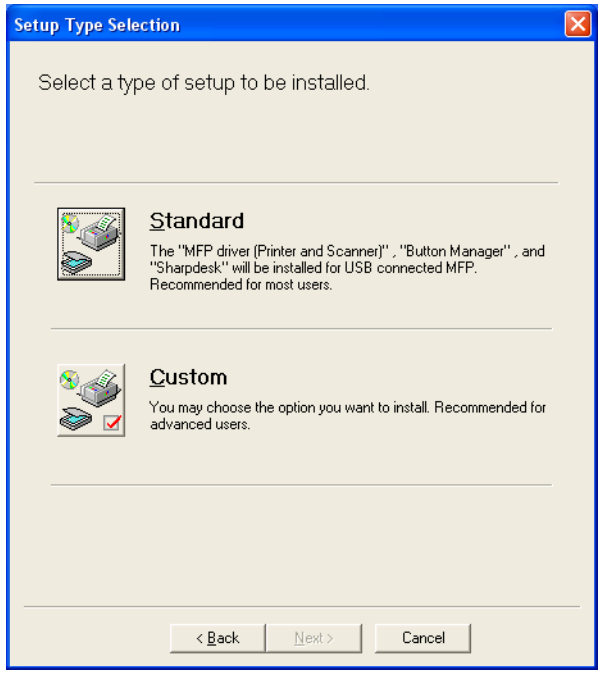

   • In Windows® 2000/XP, if a warning message appears at any time regarding the Windows logo test or digital signature, be sure to click **Continue Anyway** or **Yes**.

7) When the **Finish** window appears to indicate that the selected packages have been installed, click **Close**.

8) If the installation was a **Standard** installation, the following window will appear. Click **OK**.

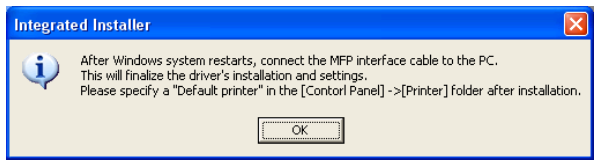

   • If you installed the MFP drivers using a **Custom** installation and **did not** install Sharpdesk, the following window will appear. Click **OK** and go to Step 11.

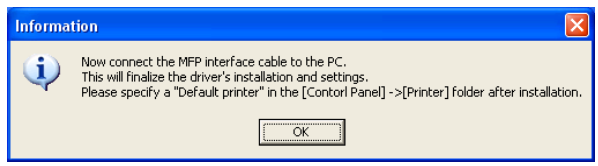

9) The following window will appear. Click **Yes** to restart your computer.

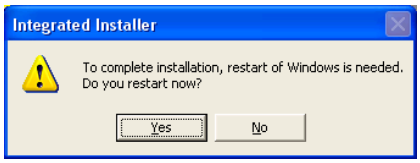

10)The **Search Setup Wizard** will appear. Follow the on-screen instructions to create an index database for Sharpdesk.

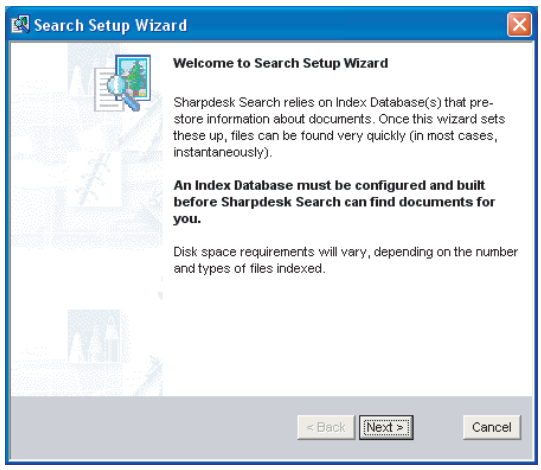

11)Make sure that the power cord of the machine is **not** plugged in (the machine is powered off), and then connect the USB cable.

• Insert one end of the USB cable into the USB port on the machine and the other end into your computer's USB port.

Comments:

• Do not connect the AM-300 to a hub to which another AM-300 is connected. If this is done, the AM-300 will not operate correctly.

• If you find that your computer does not recognize the machine or operation is unstable, try connecting the USB cable to a different USB port on your computer, or try a different USB cable (use the shortest possible cable).

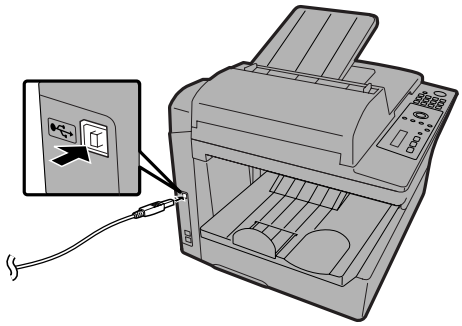

12)Plug in the power cord of the machine.

• **Windows® XP:** Go to the procedure for completing installation of the software on Windows XP below.

• **Windows® 2000:** This completes the installation of the software.

Note: If a warning message regarding the Windows logo test appears (the warning may appear twice), click **Yes** each time the window appears. This will complete the installation of the software.

• **Windows® Me:** This completes the installation of the software.

Completing installation of the software on Windows® XP

13)In Windows® XP, the **Found New Hardware Wizard** will appear. Make sure that **Install the software automatically (Recommended)** is selected and click **Next** (this will install software for using the machine as a scanner).

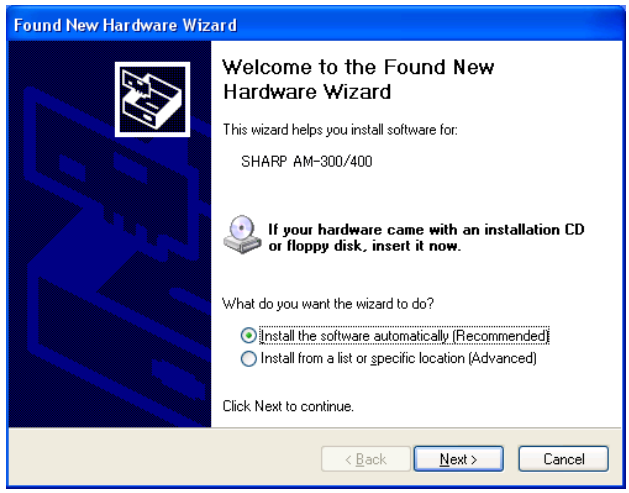

• **Note for Windows® XP SP2:** The following window will appear first. Select **No, not this time** and click **Next**. Continue from the previous window.

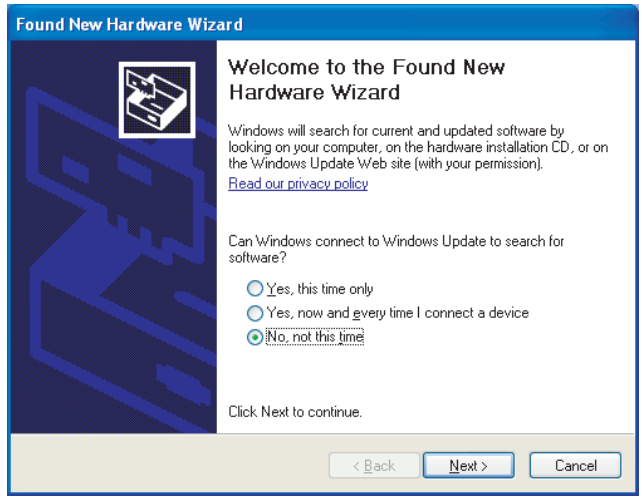

• If the following warning message appears regarding the Windows logo test, click **Continue Anyway.**

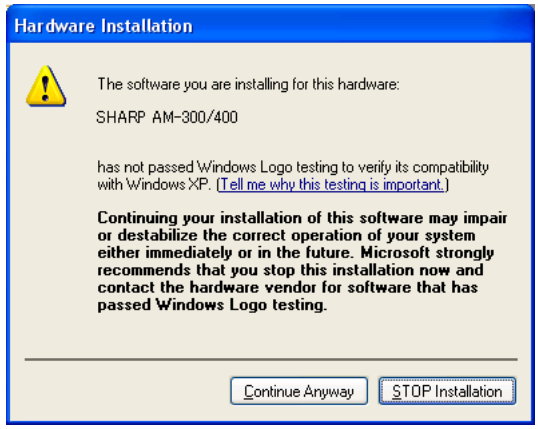

14)When the wizard finishes installing the scanner software, click **Finish** to close the wizard.

15)After a brief interval, the **Found New Hardware Wizard** will appear again to install software for using the machine as a printer. Make sure that **Install the software automatically (Recommended)** is selected and click **Next**.

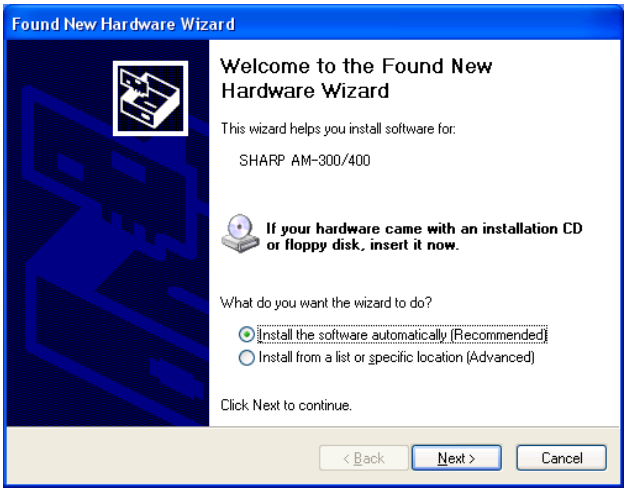

• If the following warning appears regarding the Windows logo test, click **Continue Anyway**.

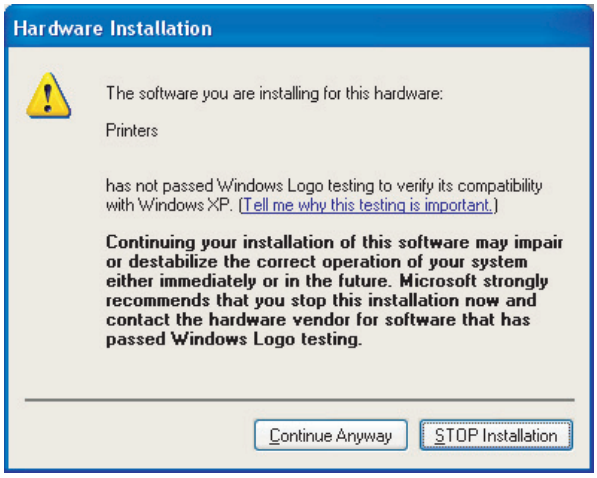

16)When the wizard finishes installing the printer software, click **Finish** to close the Wizard. This completes the installation of the software on Windows® XP.

Sharpdesk online guide

For information on using Sharpdesk, view the Sharpdesk online guide on the CD-ROM. To view the online guide, open the **Manual** folder and then the **EnglishA** folder on the CD-ROM, and double-click **SDUG_Enu.pdf**.

Removing the software

In the event that you need to remove the software from your computer, follow the steps below.

1) Disconnect the USB cable from your computer and the machine.

2) Open the **Control Panel** and select **Add or Remove Programs** (or **Add/Remove Programs**).

3) Select **SHARP AM-300 Series MFP Driver** (or **Sharpdesk**) from the list, and click the **Change/Remove** button (or the **Add/Remove** button).

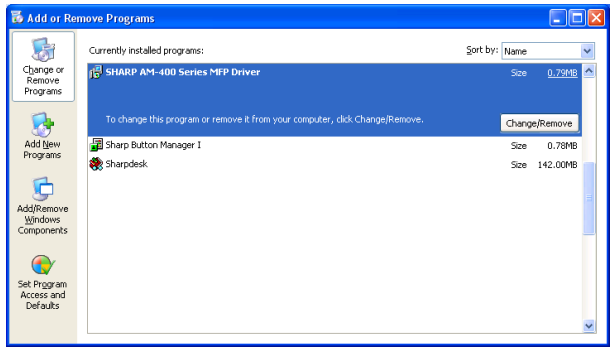

4) Click **OK** to confirm the removal.

8. Clearing a jammed document

If the original document doesn't feed properly during transmission or copying, or DOCUMENT JAMMED appears in the display, first try pressing ◇ . If the document doesn't feed out, open the auto document feeder cover and remove it.

Important:

Do not try to remove a document without opening the auto document feeder cover. This may damage the feeder mechanism.

1) Squeeze the cover release ❶ and open the auto document feeder cover. Open the document glass cover.

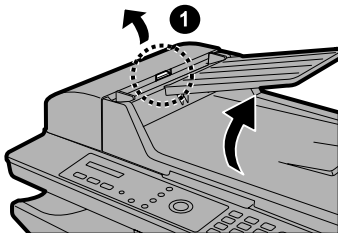

2) Remove the document.
   - The document can be removed from either the top or the bottom slot, whichever is easiest.

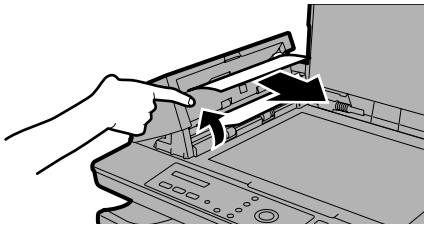

3) Close the auto document feeder cover, pressing down on both sides to make sure it clicks into place.

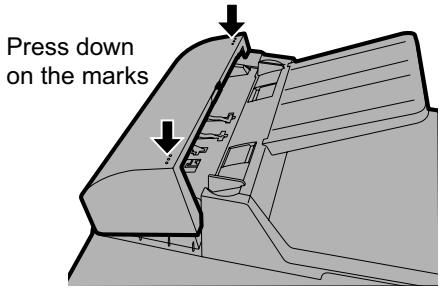

9. Clearing jammed printing paper

1) Press the side cover release ❶ and then open the side cover ❷ .

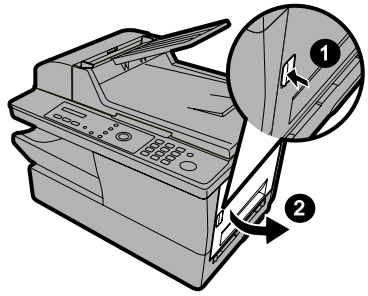

2) Push the two heater roller release levers down to release the heater roller.
   - **Caution!** The fusing unit (indicated in white at right) becomes very hot during operation. Do not touch the fusing unit.

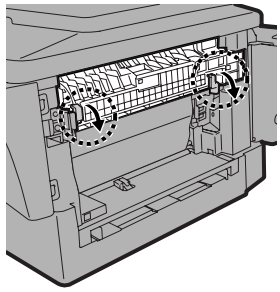

3) If the jammed page is protruding from the side of the machine, gently pull it out. Take care not to tear the paper or leave any torn pieces of paper in the print compartment.
   - If this clears the jam, go to Step 5.
   - If you are unable to clear the jam in this way, go to Step 4.
   - Take care not to touch or allow other objects to contact the drum (the green cylinder). This damage the drum.

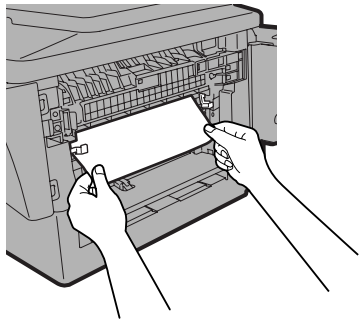

4) If the jammed page cannot be pulled out directly, open the front cover ❶ and rotate the white knob ❷ in the direction shown to feed the jammed page out into the output tray.

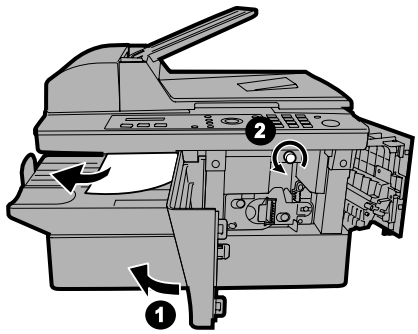

5) After the jammed page has been removed, push the two heater roller release levers back up.

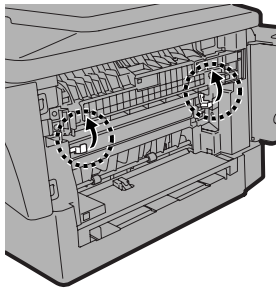

6) Close the front cover ❶ (if you opened it) and then the side cover ❷ .

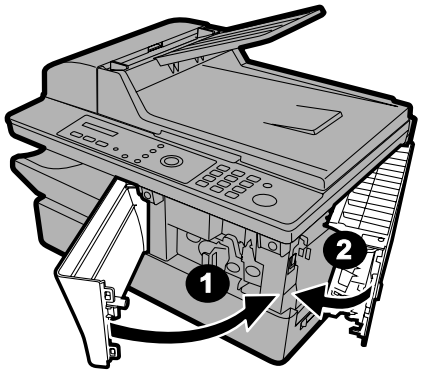

Note: If you find that another paper jam occurs immediately after clearing a paper jam, open the side cover and then the front cover and remove the jammed paper as explained above. With the front cover and side cover still open, remove the output tray and remove the printing paper from the paper tray. Replace the output tray and close the front cover and then the side cover. Remove the output tray once again, fan printing paper, replace it in the paper tray, and then replace the output tray.

10. Troubleshooting

1. Display

ADD PAPER	Check the printing paper. If the tray is empty, add paper. If there is paper in the tray, make sure it is inserted correctly (take out the stack, align the edges evenly, and then reinsert it in the tray). Printing will resume automatically when the output tray is replaced.
BYPASS MISFEED	The paper is not inserted correctly in the bypass tray. Remove the paper and insert it again.
BYPASS PAPER! / IF COPY, PRESS ► (alternating messages)	Paper has been inserted in the bypass tray. If the paper has been inserted for a copy job, press  to set the paper size. If the paper is for a print job, the message can be disregarded.
CHK SCANNER LOCK/ PLS RETURN POWER (asternating messages)	Make sure that the scanner lock has been released and then unplug the power cord, wait at least 5 seconds, and plug it back in.
COVER OPEN	One or both of the print compartment covers are open. Make sure both covers are closed.
DOCUMENT JAMMED	The original document is jammed. See the following section, Clearing Paper Jams. Document jams will occur if you load more than 20 pages at once or load documents that are too thick. The document may also jam if the receiving machine doesn't respond properly when you attempt to send a fax.
DOCUMENT READY	A document has been inserted in the auto document feeder and the machine is waiting for you to begin faxing or copying.
DRUM LIFE OVER	This appears when the drum cartridge needs replacement.
MEMORY IS FULL	If faxes have been received to memory because printing is not possible (an additional message will indicate the problem), resolve the problem so that printing can continue (see Substitute Reception to Memory) If you are attempting to send a fax, see If the memory becomes full. If you are copying, see If MEMORY IS FULL appears.
OUTPUT TRAY OFF	The output tray is not attached correctly. Attach it as explained. The machine will not operate if the output tray is not attached correctly.
PAPER JAMMED	The printing paper is jammed.
PAPER MISMATCHED	This appears after printing if the size of the printed image did not match the paper size on some pages of the job. Check the printed pages and reprint as needed.
SYSTEM ERROR [XX] (a number appears in "XX") **(Refer to Printer error code/ Scanner message)**	If this message appears, unplug the power cord, wait about 10 seconds, and then plug it back in. If the message still appears, unplug the power cord and call for service.
SET BYPASS PAPER / SIZE: XXXX (alternating messages; a paper size appears in "XXXX")	Paper must be inserted in the bypass tray for a print job or copy job that requires use of the bypass tray. Insert the indicated size of paper in the tray.
TONER EMPTY	The toner cartridge must be replaced. Printing will be possible (although the output will be increasingly faint) until a fax is received. Once a fax is received, it will be held in memory and printing will not be possible until the toner cartridge is replaced.
TONER NEAR EMPTY	The toner cartridge is almost out of toner (approximately 200 pages can be printed).

2. Printer error code (Troubleshooting Refer to page 5-23 to 5-25)

PAPER JAM	The roller sensor could not detect its home position after driving the pick up motor for the specified period.
	The roller sensor could not become NOT-Active after passing the specified period from picking up paper.
SYSTEM ERROR [P2]	The printer controller detected the optical unit (LSU) error.
	The external interrupt signal for optical unit (LSU) or High-voltage control did not become active after passing the specified period.
SYSTEM ERROR [P3]	Thermistor error was detected.
SYSTEM ERROR [P4]	ROM or RAM error was detected on the printer control unit.
SYSTEM ERROR [P5]	High temperature error was detected.
SYSTEM ERROR [P6]	Low temperature error was detected.
SYSTEM ERROR [P7]	Communication error between the main controller and the printer controller was detected.

3. Scanner message (Troubleshooting Refer to page 5-25)

CHK SCANNER LOCK	The scanner unit could not detect change point of home postion. (ON -> OFF or OFF -> ON)

11. Quick setup guide

For detailed instructions
on setting up and using the AM-300/400, see the online guide on the CD-ROM.
To open the guide, double-click the **Manual** folder on the CD-ROM, double-click **English**, and then double-click **Online Manual.pdf.**
(Note: Acrobat Reader 5.05 or higher is required to view the manual.To install Version 5.05, double-click **Acrobat Reader, English**, and then **ar505enu.exe** on the CD-ROM.)
All company names and product names appearing in this setup guide are the trademarks of their respective owners.

1

Make sure you have the following items. If any are missing, contact your dealer or retailer.
Note: The shape of the line cord plug varies by country. An adapter (not shown) is provided in some countries.

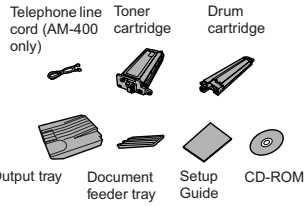

2

Attach the trays.

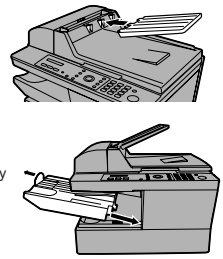

When the tray stops, lift the end slightly and push in.

3

Important:
Pull the scanner release toward you to release the scanner lock.
Caution: Be sure to release the scanner lock before plugging in the power cord.

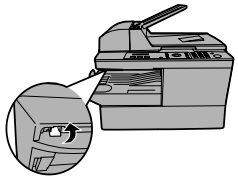

4

Plug the power cord into a standard, earthed power outlet.
Note: The power outlet must be installed near the equipment and must be easily accessible.

Note: The shape of the power plug varies by country

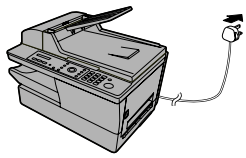

5

Install the toner cartridge and drum cartridge.

1. Press ❶. Open the side cover ❷ and then the front cover ❸.

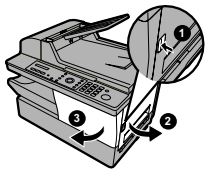

Caution!
Do not touch the fusing unit under the side cover after the machine has been in operation, as it may become very hot.

2. Remove the drum cartridge from its packaging.

3. Insert the drum cartridge, sliding it along the guides.

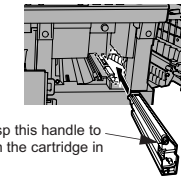

Grasp this handle to push the cartridge in

4. Remove the toner cartridge from its packaging. Shake the cartridge side to side four or five times to distribute the toner evenly within the cartridge.

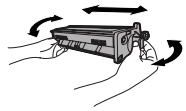

5. Insert the toner cartridge, sliding it along the guides **until it clicks into place.**

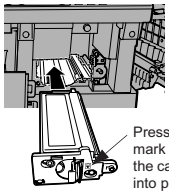

Press on the arrow mark to make sure the cartridge clicks into place

6. Close the front cover ❶ and then the side cover ❷.

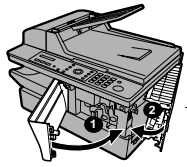

Display:

TONER EXCHANGED?
1:YES, 2:NO

7. Press [1] to select "YES" and then press ◇. (This resets the toner cartridge counter.)

8. Reset the drum cartridge counter:
a.Press MENU once and then Z or A until "LIFE" appears in the display.
b. Press [3 DEF] and then ◇.
c. Press ⊘ repeatedly to exit.

6

Load paper.

1. Remove the output tray.

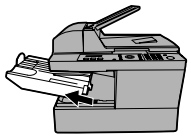

2. Insert a stack of paper into the tray, print side up.

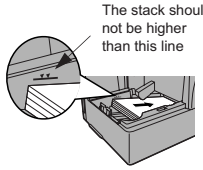

3. Squeeze the sides of the paper guide and slide it to the slot for the length of paper loaded.

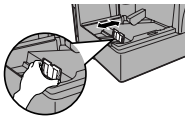

4. Replace the output tray.

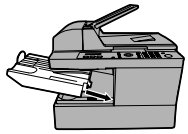

7 Install the software on your computer. (The software allows the machine to be used as a printer and scanner.)

Note: A USB 2.0 or 1.1 cable is required to connect the machine to your computer. Please purchase this separately.

1. **Make sure that a USB cable is not connected to the machine and your computer.** (The cable will be connected in Step 11.)
   - If a cable is connected and a Plug and Play window appears, close the window and disconnect the cable.
2. Insert the Sharp CD-ROM into your computer's CD-ROM drive.
3. Windows®XP: Click the **start** button, click **My Computer**, and double-click the CD-ROM icon.

   Windows®Me/2000: Double click **My Computer** on the desktop and double-click the CD-ROM icon.
4. Double-click the **setup** icon (Setup.exe) in the CD-ROM window.
5. If the **Language Selection** window appears, select the language that you wish to use and click **Next** (the language selections will vary depending on your country or region).
6. Follow the on-screen instructions.
   - When the **Setup Type Selection** window appears, select **Standard** to install all of the software components (this should normally be selected). If you only wish to install certain components, select **Custom** and then select the components that you wish to install.



   - In Windows®2000/XP, if a warning message appears at any time regarding the Windows logo test or digital signature, be sure to click **Continue Anyway** or **Yes**.
7. When the **Finish** window appears to indicate that the selected packages have been installed, click **Close**.
8. If the installation was a **Standard** installation, the following window will appear. Click **OK**.



   - If you installed the MFP drivers using a **Custom** installation and did not install Sharpdesk, the following window will appear. Click **OK** and go to Step 11.



9. The following window will appear. Click **Yes** to restart your computer.



10. The Search Setup Wizard will appear. Follow the on-screen instructions to create an index database for Sharpdesk.



11. Make sure that the machine's power cord **is not** plugged in, and then connect the USB cable to the USB port on the machine and on your computer.

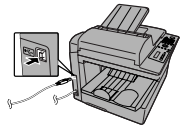

12. Plug in the machine's power cord.
    - **Windows®XP**: Follow Steps 13 through 16 to complete the installation of the software.
    - **Windows®2000**: This completes the installation of the software.
      Note: If a warning message regarding the Windows logo test appears (the warning may appear twice), click **Yes** each time the window appears. This will complete the installation of the software.
    - **Windows®Me**: This completes the installation of the software.
      Note: In the power management settings in the **Control Panel, System stand by** must be set to **Never**.

Completing the installation on Windows®XP

13. In Windows®XP, the **Found New Hardware Wizard** will appear. Make sure that **Install the software automatically (Recommended)** is selected and click **Next**.
    Note for Windows®XP SP2: The first window of the wizard will ask you if the wizard can connect to Windows Update. Select **No, not this time** and click **Next**.



    - If a warning message appears regarding the Windows logo test, click **Continue Anyway**.
14. When the wizard finishes installing the software, click **Finish** to close the wizard.
15. After a brief interval, the **Found New Hardware Wizard** will appear again. Make sure that **Install the software automatically (Recommended)** is selected and click **Next**.



    - If a warning message appears regarding the Windows logo test, click **Continue Anyway**.
16. When the wizard finishes installing the software, click **Finish** to close the wizard. This completes the installation of the software on Windows®XP.

8 Configure Button Manager (one of the programs installed in the above step) as the program on your computer that handles scanner events from the machine.

Windows®XP/Me

1. Click the **start** button, click **Control Panel**, and double-click **Scanners and Cameras**.
   - If **Scanners and Cameras** does not appear in Windows Me, **click view all Control Panel options**.
2. Right-click the **SHARP AM-300/400** icon and select **Properties**.

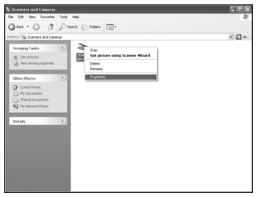

3. The **SHARP AM-300/400 Properties** appear. Click on the **Events** tab.
4. Select **SC1** from the **Select an event** list.
5. In the Actions field, select **Start this program** and then select **Sharp Button Manager I** from the list of programs. Click **Apply**.



6. Repeat Steps 4 and 5 for each of events SC2 through SC6. When finished, click the **OK** button.

Windows®2000

1. Click the **Start** button, point to **Settings**, and select **Control Panel**.
2. In the **Control Panel**, double-click **Scanners and Cameras**.
3. Select **SHARP AM-300/400** and click **Properties**.
4. Click the Events tab in the **SHARP AM-300/400 Properties**.
5. Select **SC1** from the **Scanner events** list.
6. In **Send to this application**, select **Sharp Button Manager I**.
   - If other applications appear in the list, make sure that none are selected.
7. Click the **Apply** button.
8. Repeat Steps 5 through 7 for each of events SC2 through SC6. When finished, click the **OK** button.

CHAPTER 2. ADJUSTMENTS

[1] Adjustments

1. General

Since the following adjustments and settings are provided for this model, make adjustments and/or setup as necessary.

2. Adjustments of output voltage (FACTORY ONLY)

1. Install the power supply unit in the machine.
2. Set the recording paper and document.
3. When the document is loaded, power is supplied to the output lines. Confirm that outputs are within the limits below.

2.1. Output voltage settings

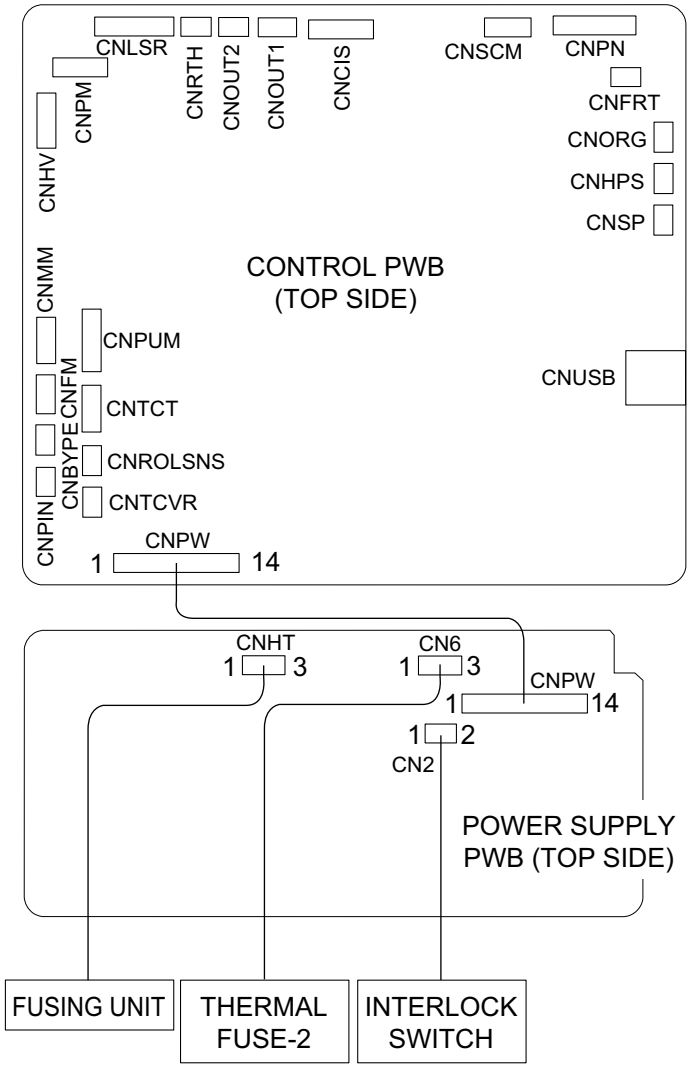

Output	Voltage limits
+24VSUB	23.04V~24.96V
+24VMAIN	23.04V~24.96V
+5VMAIN	4.75V~5.25V
+3.3VMAIN	3.201V~3.399V

Connector / Pin No.	CNPW / CNPW
1	MG
2	+24VSUB
3	MG
4	MG
5	+24VMAIN
6	+24VMAIN
7	DG
8	+5VMAIN
9	DG
10	+3.3VMAIN
11	DG
12	/HEATER ON
13	/PWRLY
14	/ZC

Connector / Pin No.	CN6
1	+24VMAIN
2	N.C.
3	+24VS

Connector / Pin No.	CNHT
1	N
2	N.C.
3	L

Connector / Pin No.	CN2
1	1
2	2

3. High voltage power check

3.1. General

Note: Since the parts of this PWB cannot be supplied, change it as a unit.

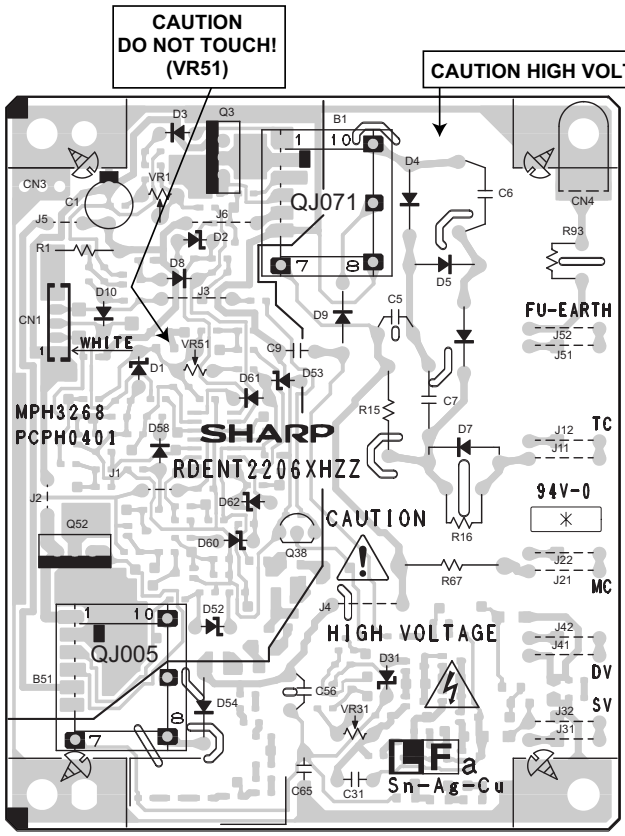

CAUTION - HIGH VOLTAGE
The unit's back cover should never be opened by anyone other than a qualified serviceperson.
There are many high voltage parts inside the unit, and touching them is dangerous.

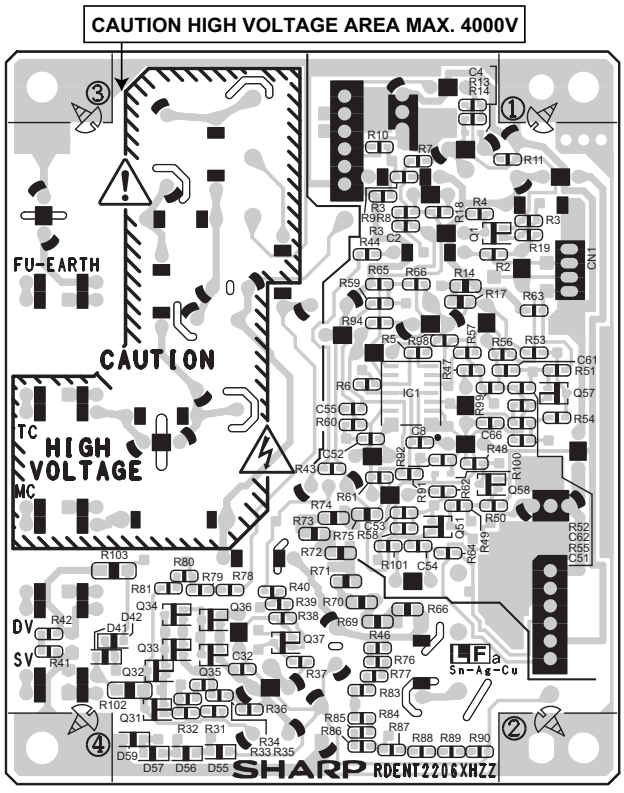

CAUTION - HIGH VOLTAGE
The unit's back cover should never be opened by anyone other than a qualified serviceperson.
There are many high voltage parts inside the unit, and touching them is dangerous.

3.2. MC Voltage Check Point

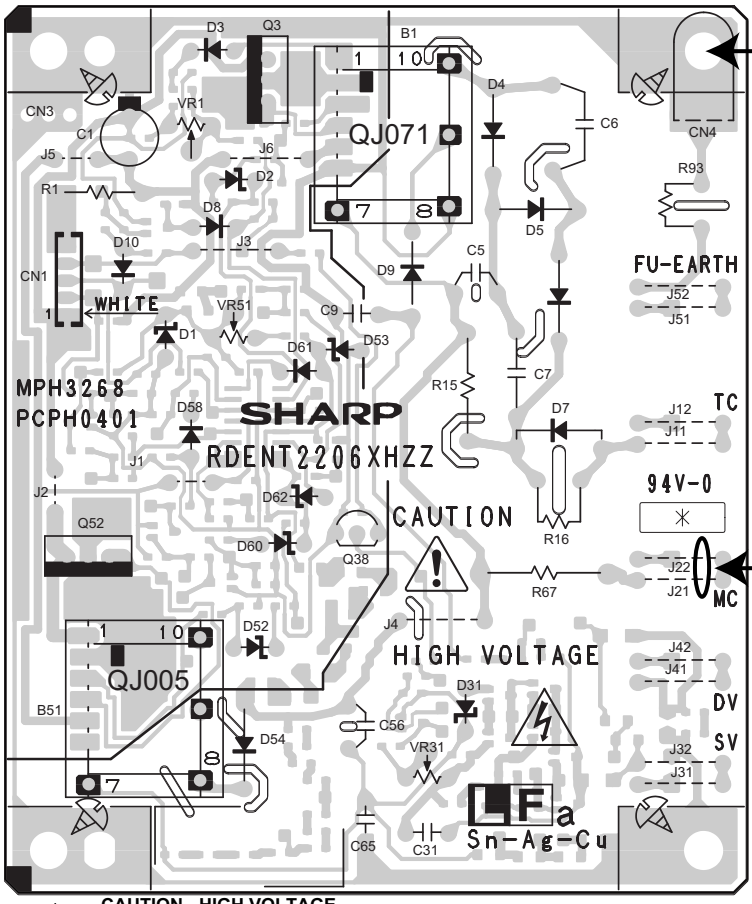

1) MC Voltage

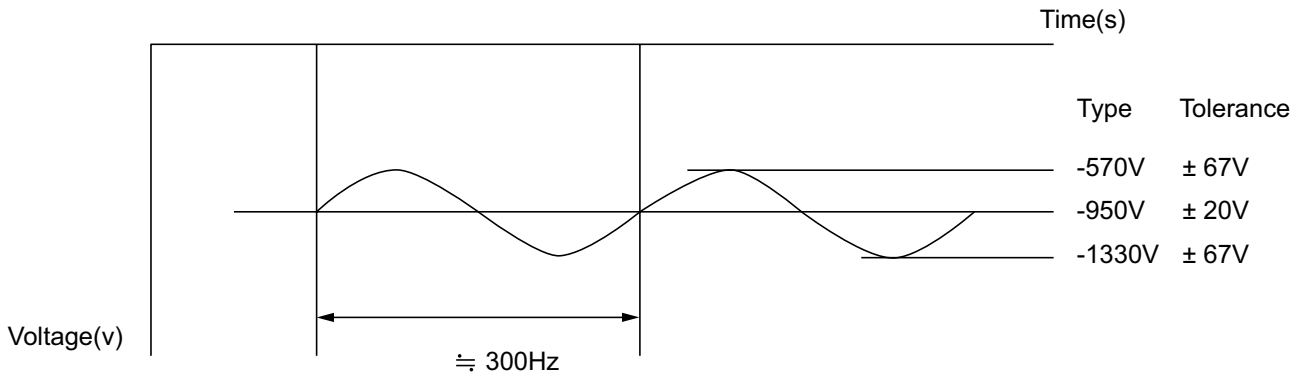

3.3. TC Voltage Check Point

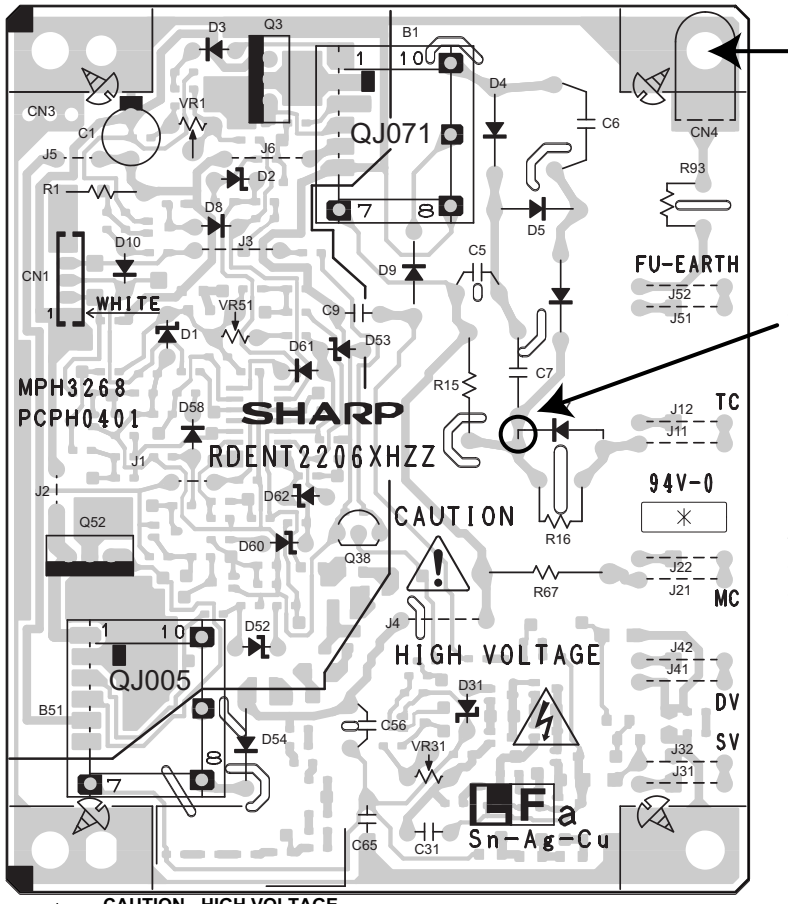

CAUTION - HIGH VOLTAGE
The unit's back cover should never be opened by anyone other than a qualified serviceperson. There are many high voltage parts inside the unit, and touching them is dangerous.

1) TC Voltage

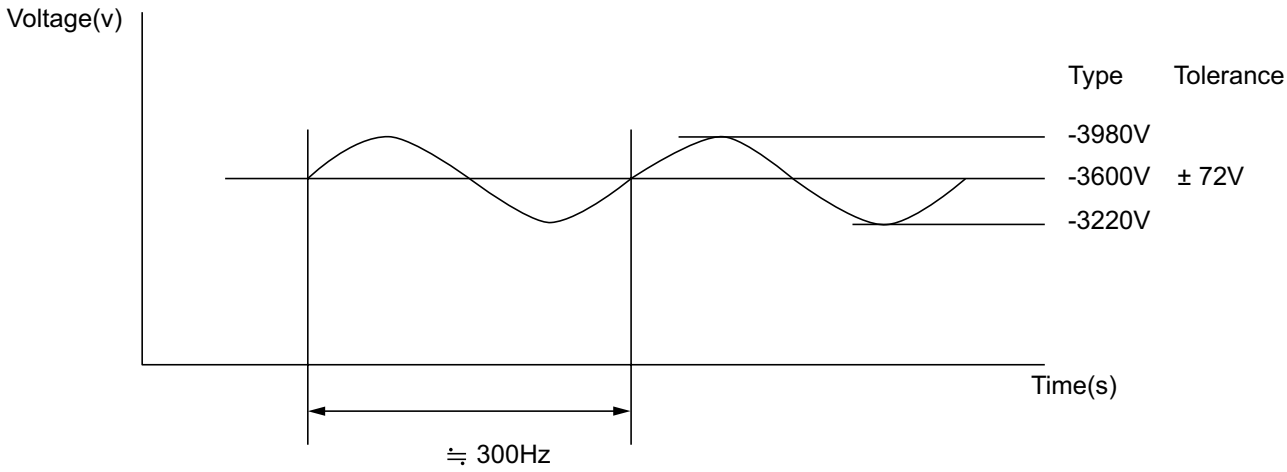

3.4. SV/DV Voltage Check Point and SV (-) Voltage Adjustment Volume

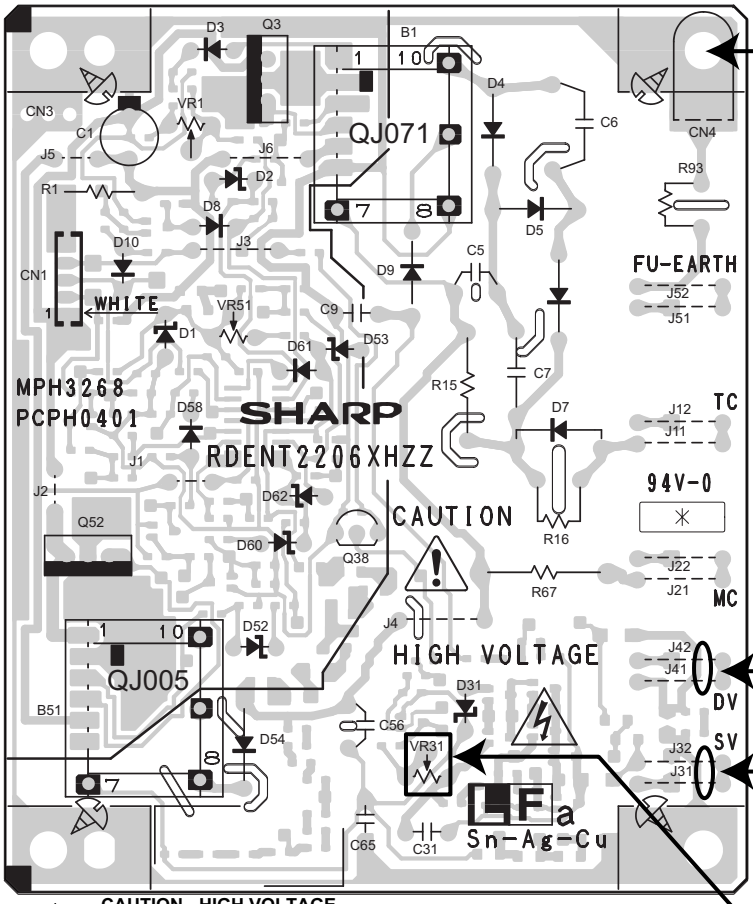

4. IC protectors replacement

ICPs (IC Protectors) are installed to protect the CIS unit, Scanner motor drive circuit, Pickup motor drive circuit, Main motor drive circuit and IC22 circuit. ICPs protect various ICs and electronic circuits from an overcurrent condition.

The location of ICPs are shown below:

1) F8 (KAB5002 201) is installed in order to protect IC's from an overcurrent generated in the CIS unit. If F8 is open, replace it with a new one.
2) F3 (KAB3202 202) is installed in order to protect IC's from an overcurrent generated in the scanner motor drive circuit. If F3 is open, replace it with a new one.
3) F5 (KAB5002 251) is installed in order to protect IC's from an overcurrent generated in the IC22 circuit. If F5 is open, replace it with a new one.
4) F6 (KAB3202 102) is installed in order to protect IC's from an overcurrent generated in the pickup motor drive circuit. If F6 is open, replace it with a new one.
5) F7 (KAB2402 402) is installed in order to protect IC's from an overcurrent generated in the main motor drive circuit. If F7 is open, replace it with a new one.
   In addition to the replacement of F3, F5, F6, F7 and F8, the factor causing F3, F5, F6, F7 and F8 to open must also be repaired. If not, F3, F5, F6, F7 and F8 will open again.
   Replacement parts

   KAB3202 202 (Sharp code: QFS-L1027YCZZ)

   KAB5002 251 (Sharp code: QFS-L2021XHZZ)

   KAB3202 102 (Sharp code: QFS-L0004QCZZ)

   KAB2402 402 (Sharp code: QFS-L2025XHZZ)

   KAB5002 201 (Sharp code: QFS-L2016XHZZ)

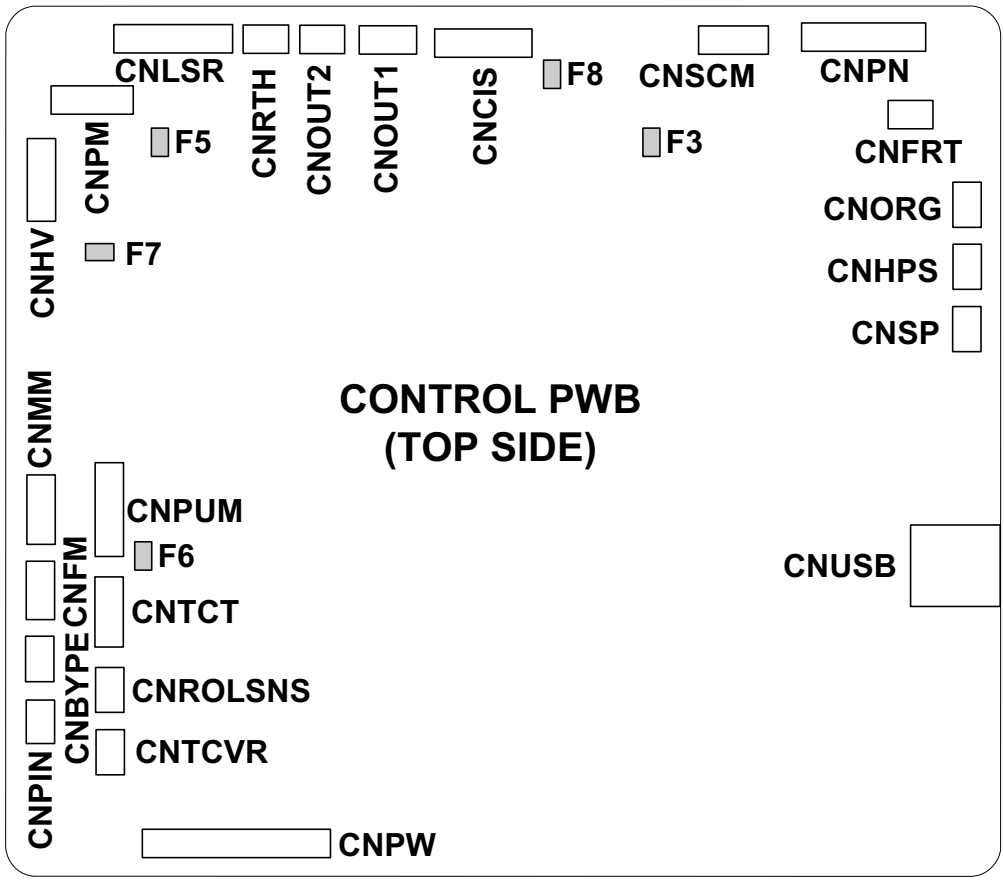

F6/F8:Top side **F3/F5/F7:Bottom side**

[2] Diagnostics and service soft switches

1. Entering the diagnostic mode

1.1. Diagnosis

This diagnosis is concerned with the main body of fax which is used for production and service support.

Entering the diagnostic mode

Press [MENU] → [9] → [✳] → [8] → [#] → [7], and the following display will appear.

[TE18 ✳/ x x x x (AM-300DE)] or [TE25 ✳/ x x x x (AM-300IT)] or [TE23 ✳/ x x x x (AM-300H)]

✳: FAX ROM version
x x x x : Check sum

Then press the [START] key. Select the desired item with the [>] key and the [<] key or select with the rapid key.

Enter the mode with the [ENTER] key.

(Diag・specifications)

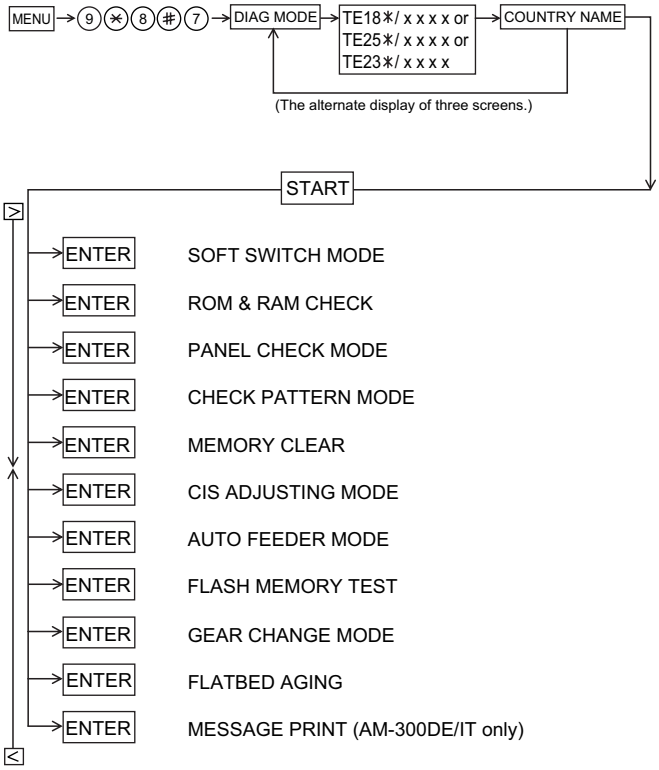

1.2. Print diagnosis

This diagnosis is concerned with the print which is used for production and service support.

Entering the diagnostic mode

Press [MENU] → [9] → [✳] → [8] → [#] → [6], and the following display will appear.

[M/C Ver:TE53 ✳] ✳: PRINTER ROM version

Then press the [START] key. Select the desired item with [>] the key and the [<] key or select with the rapid key.

Enter the mode with the [ENTER] key.

(Diag・specifications)

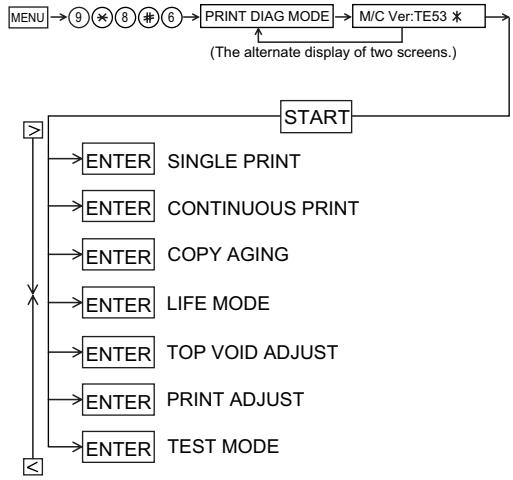

Memory clear when power is turned on

Pressing the START and STOP keys, turn on the main power, and the following message will be indicated.

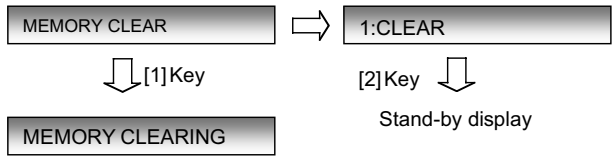

When 1 is selected, the memory will be cleared to be ready to operation.

If 2 is selected, memory will not be cleared and the machine enters standby mode.

2. Diagnostic items description

2.1. Diagnosis

2.1.1 Soft switch mode

In this mode, the soft switches are set and the soft switch list is printed.

1. Operation

   Soft switch mode screen

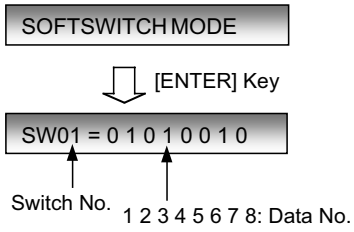

2. Switch number selection and data setting

   1) Enter two digits of a soft switch number to set the switch number. Of a switch number of non-existing soft switch is entered, key error buzzer sounds to reject the input.

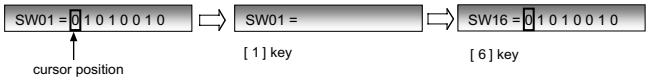

   2) Press [ENTER] key for setting of the next soft switch.

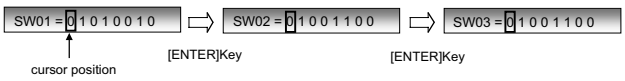

   3) Data number selection

      (a) Pressing [>] key moves the cursor to the right.

      If the cursor is on data number 8, pressing [>] key shifts the cursor to data number 1 of the next switch number. If the switch number is the final, pressing [>] key will exit the soft switch mode.

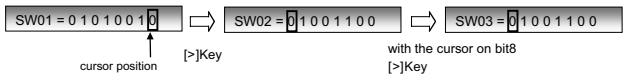

      (b) Pressing [<] key moves the cursor to the left.

      If the cursor is on data number 1, pressing [<] key shifts the cursor to data number 1 of the former switch number. If the switch number is 1, pressing [<] key do not move the cursor.

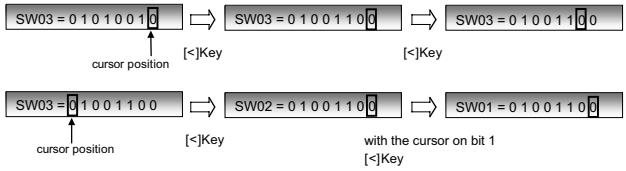

3. Data setting

   Press the [MENU] key, and the data to the position of the cursor will be reversed to 1 when it is 0, or to 0 when it is 1.

4. Outputting method of soft switch list

   In the soft switch mode, press [QUALITY] key, and the soft switch list will be printed. If the recording paper runs out or is clogged, the key error buzzer will sound with the process not received.

5. Storage of data

   In the following cases, the data if the soft switches set will be stored.

   - It is shifted to set the next soft switch by pressing [ENTER] key.
   - It is shifted to set the next soft switch with the [>] key.
   - It is shifted to the last soft switch with the [<] key.
   - It is shifted to set another soft switch by inputting two digits as the switch number.
   - Output of the soft switch list starts.

6. Protocol monitor

   If the SW No. 8 Data No. 5 is set to 1, the protocol monitor result is printed after fax communication.

2.1.2 ROM & RAM check

To check the sum value of Firmware or RAM.

No.	Device		Alarm Buzzer	Remarks
1	Main	ROM (PROGRAM FLASH)	1 time <Short sound>	
2		D-RAM1(*1)	2 times <Short sounds>	

*1 WORK MEMORY (SDRAM 16M).

1. Display

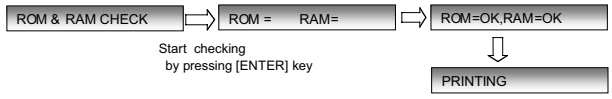

2. Result printing

   After checking, the results print starts.

2.1.3 Panel key test

This is used to check whether each key is normally operated or not. When the test is started, a LED will blink (1000ms cycle) for the LED test. During the test. After the test, the test result will be printed.

* When any numeric key is pressed during the panel test, the DTMF signal correspond to the key number is sent to the line. If another key is pressed the DTMF signal will stop. This function becomes valid by changing the value of soft switch. (Default: Disable)

1) Flow

   Press any key except [STOP] key. At this time, the name of each key will be displayed every push of the key.

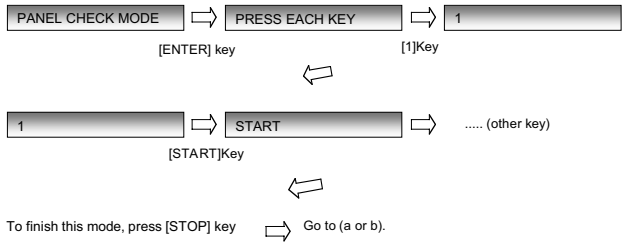

   a) When all keys can be inputted, the following message will be displayed.



   Then the screen will be all displayed in blank (Refer to (2)) and the test result will be printed.

b) If any key skipped, the following message will be displayed.



A key name that is not pressed yet is displayed so that this test can be continued.

At that time, pressing the [STOP] key will exit this mode. And the result will be printed.

2) Black screen



2.1.4 Check pattern mode

The effective printing area frame is printed in the specified sheet size of the standard tray (Letter/Legal/A4).

1. Printing the pattern

   Printing size depends on Paper Size setting in Common Setting.



2.1.5 Memory clear

Clear the backup memory including the soft switches, registration data. After executing this mode, the memory clear report is printed.

Note: The following data is not cleared. Values for Printer life including the adjusted value of printing void.

2.1.6 CIS adjusting mode

When the "color scan" or "monochrome scan" is selected in this mode, the scanner motor moves from its home position to the specified value. Then, the document reading lamp is turned on.

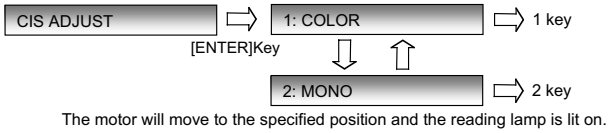

1. Press the [STOP] key to exit the mode.

2.1.7 Auto feeder mode

Inserting and discharging the document can check the auto feeder.

The information of document sensor (A4 sensor) and ORG sensor is displayed when the documents are inserted to the Auto Feeder.

1. Operation

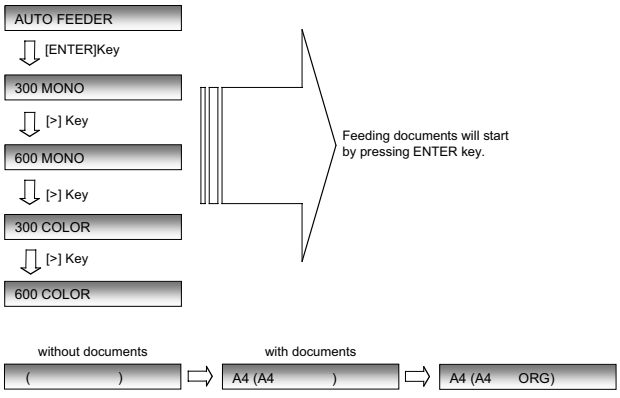

2. Press [STOP] key to exit the mode.

2.1.8 Flash memory test

The Flash memory is checked.

No.	Flash memory	Alarm Buzzer	Remarks
1	NOR-Flash	1 time <Long sound>	

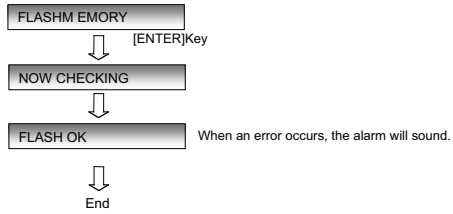

Note: If this is excessively repeated, it will shorten the life of the Flash memory.

2.1.9 Gear change mode

The gear to drive ADF and flatbed mechanism will be aging continuously and the number of switching will appear on the LCD.

1. Operation

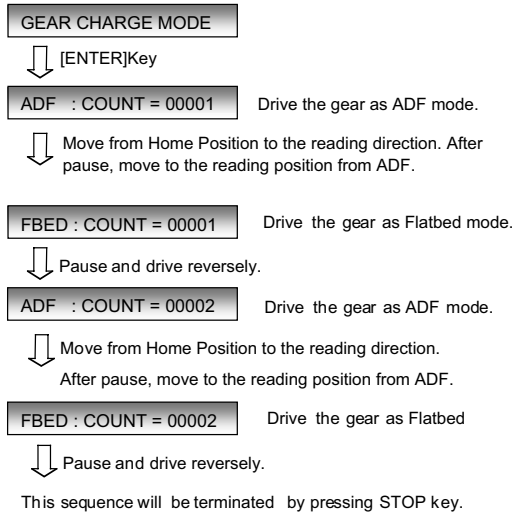

2. Note

   ADF and FLATBED counter will be 0 over 65535.

   Press [STOP] key to exit the mode.

2.1.10 Flatbed aging

Scanner motor will be driven based on the motor speed for each resolution. By pressing the [>] key or the [<] key, you can select the motor speed preliminary.

1. Operation

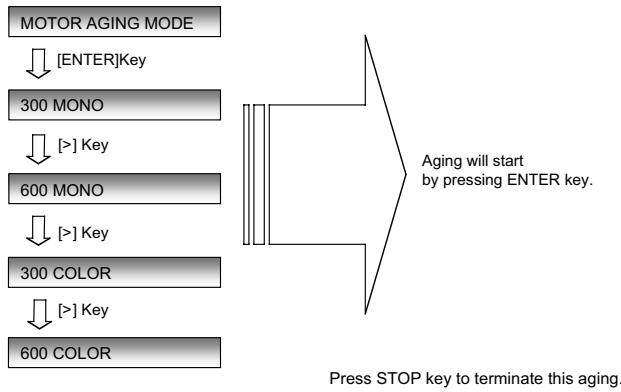

2. Press [STOP] key to exit the mode.

2.1.11 Message print (AM-300DE/IT only)

In this mode, all the message data, which are used for displaying indication and list print are printed as a contrast table of the selected language and English.

3. Print diagnosis

3.1. Single print

In this mode, a sheet with selected pattern is printed.

Printing size depends on Paper Size setting in Common Setting.

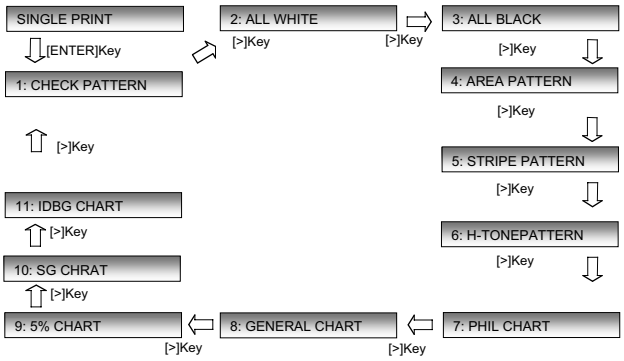

Select the desired pattern with the [>] key and [<] key and press the [ENTER] key.

1: Check Pattern	: same as Figure 1
2: All White pattern	: Not printed
3: All Black pattern	: Printed with black within print area
4: Area pattern	: Frame line is printed within print area
5: Stripe pattern	: Lateral stripe (Black 2 lines and White 2 lines)
6: Halftone pattern	: same as Figure 3
7: Phil chart	: PHIL CHART pattern
8: General chart	
9: 5 % chart	
10: SG chart	
11: IDBG chart	

(a) Area pattern

It prints 30 mm long per a pattern.

1: Full Black pattern	
2: Halftone 2 pattern	(The Figure 2 is repeated.)
3: Halftone 1 pattern	(The Figure 3 is repeated.)
4: Mesh point pattern	(The Figure 4 is repeated.)
5: Longitudinal stripe 2 pattern	(Black 2 dots and White 2 dots are repeated in the line.)
6: Lateral stripe 2 pattern	(Black 2 lines and White 2 lines are repeated.)
7: Lateral stripe 1 pattern	(Black 1 line and White 1 line are repeated.)
8: Full White pattern	
9: Full Black pattern	

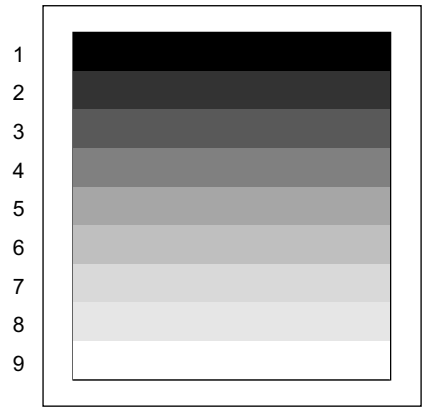

Figure 1 Check Pattern

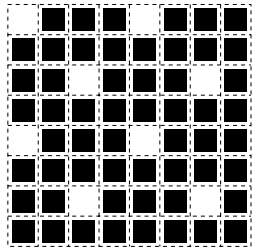

Figure 2 Halftone 2 Pattern

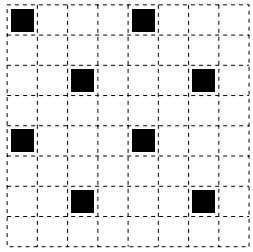

Figure 3 Halftone 1 Pattern

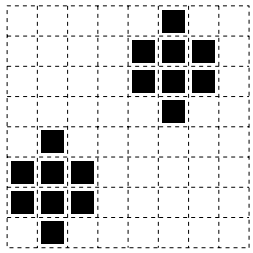

Figure 4 Mesh point Pattern

3.2. Continuous print

This mode is used for print aging.

Select the desired pattern and input cycle, counter, pages for aging.

Printing size depends on Paper Size setting in Common Setting.

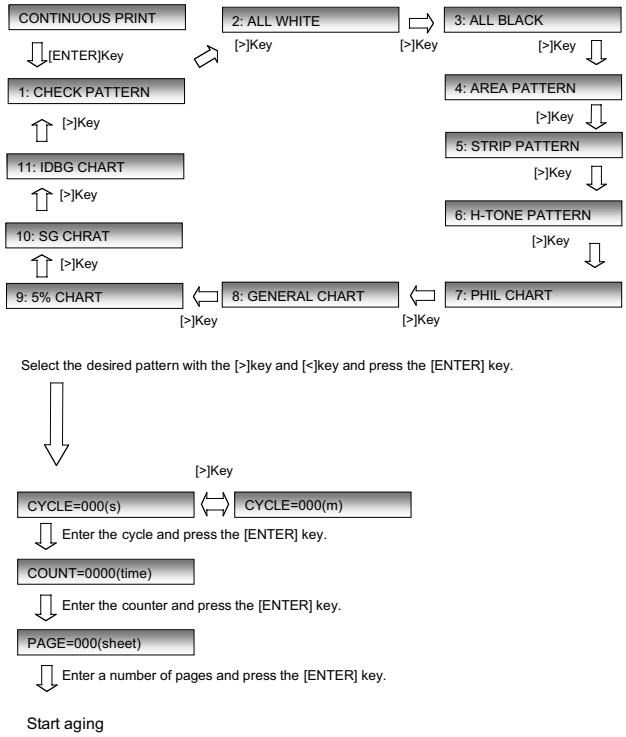

1. Printing pattern

1: Check Pattern	: same as Figure 1
2: All White pattern	: Not printed
3: All Black pattern	: Printed with black within print area
4: Area pattern	: Frame line is printed within print area
5: Stripe pattern	: Lateral stripe (Black 2 lines and White 2 lines)
6: Halftone pattern	: same as Figure 3
7: Phil chart	: PHIL CHART pattern
8: General pattern	
9: 5 % chart	
10: SG chart	
11: IDBG chart	

2. Printing interval [CYCLE]: The time from printing end to next printing start.

   Input Range: 001 to 999 seconds or 001 to 999 minutes.

3. Repeat printing [COUNT]: The number of printing cycle.

   Input Range: 0001 to 9999 times.

4. Printing pages [PAGE]: The printing pages in one cycle of printing.

   Input Range: 001 to 999 pages.

3.3. Copy aging

This mode is used for COPY Aging. The document on the flatbed or ADF will be scanned at the beginning of each cycle and printed it. The meaning of “CYCLE”, “COUNT” and “PAGE” are same as the case “CONTINUOUS PRINT”.

Printing size depends on Paper Size setting in Common Setting.

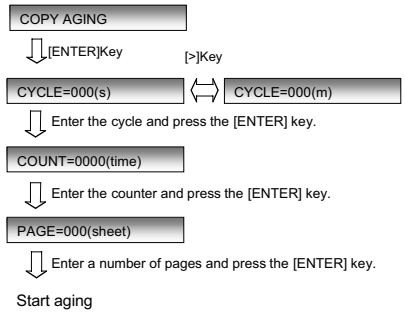

3.4. Life mode

This mode is used to set the life counter of the printer and the counter of the scanner at desired values and to clear them.

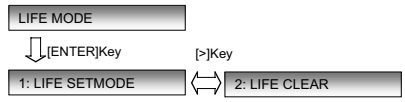

3.4.1 Life set mode

The values of life counter can be set in this mode.

1. Enter life set mode.

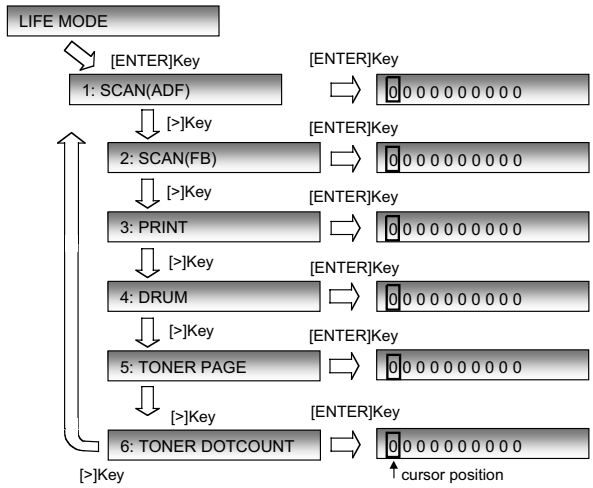

2. The cursor blinks at the top data. Four counters can be selected. Select the desired counter and input the counter value of 10 digits using the numeric keys. Pressing the [ENTER] key changed the counter value.

   Note: Toner page counter cannot be changed.

   Caution: These counters are not cleared after memory clear mode is executed. If it is necessary to execute the memory clear mode on repairing the PWB, these life counters should be set again at the same time.

3.4.2 Life clear mode

This mode is used for clearing life counters.

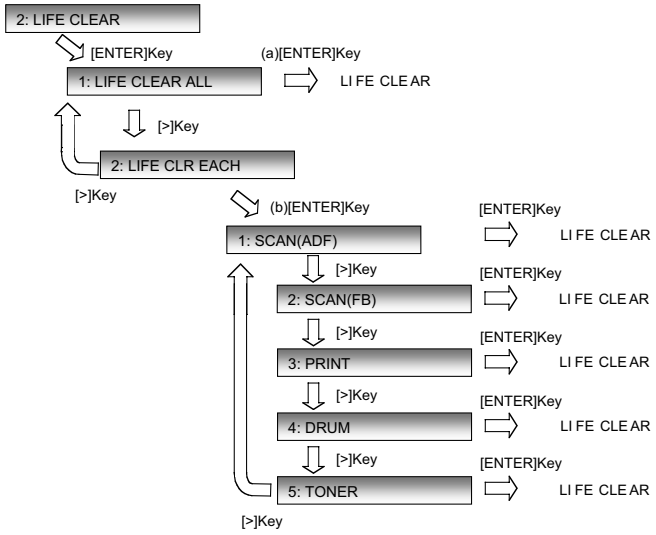

(a) Life all clear

Press the [ENTER] key, and the life counters of the printer and the life counter of the scanner are set to 0.

Note: The value for Top void is not cleared.

(b) Life each clear

This mode is used to respectively clear the life counter of the printer and the counter of the scanner. Select the desired counter and press [ENTER] key.

Note: If “5: TONER” is executed, both “TONER PAGE” and “TONER DOTCOUNT” are cleared.

3.5. Top void adjust

This mode is used for adjusting the top margin for printing.

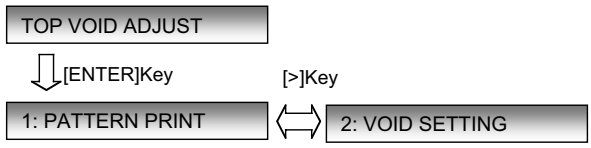

3.5.1 Pattern print

For the print pattern, a graduation scale is printed on the leading edge of the paper with figures. Enter the smallest figure as a top void value.

3.5.2 Void setting

Enter a top void value.

Input range: [0 - 40]

3.6. Print adjust

This mode is used to set some values about the printer.

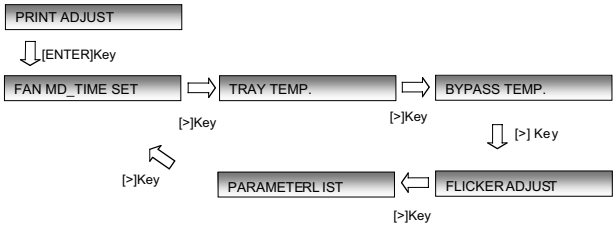

3.6.1 Fan MD time set

This mode is used to set the driving time of the fan motor after stopping the main motor.

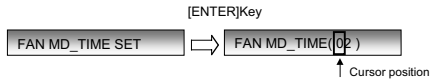

- Default value: 02
- Input Range: MIN: 00, MAX: 63
- Unit: Minute

After entering the value, the Printer Adjust mode ends and the next mode is displayed.

3.6.2 Tray temp.

This mode is used to set the temperature of fixing when printing from the standard tray.

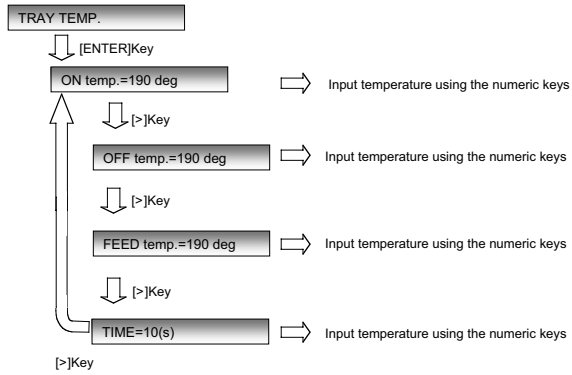

1. ON TEMP.

   The temperature to start turning on the heater.

   - Default value: 190
   - Range: MIN: 170, MAX: 233
   - Unit: Centigrade

2. OFF TEMP.

   The temperature to start turning off the heater.

   - Default value: 190
   - Range: MIN: 170, MAX: 233
   - Unit: Centigrade

3. FEED TEMP.

   The temperature to start feeding the paper.

   - Default value: 190
   - Range: MIN: 170, MAX: 233
   - Unit: Centigrade

4. TIME

   Warming up time after reaching the temperature that the printing can be done.

   - Default value: 10
   - Range: MIN: 10, MAX: 63
   - Unit: Second

3.6.3 Bypass temp.

This mode is used to set the temperature of fixing when printing from the bypass tray.

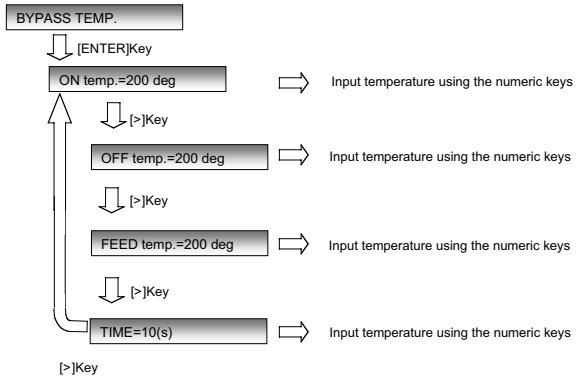

1. ON TEMP.

   The temperature to start turning on the heater.

   - Default value: 200
   - Range: MIN: 170, MAX: 233
   - Unit: Centigrade

2. OFF TEMP.

   The temperature to start turning off the heater.

   - Default value: 200
   - Range: MIN: 170, MAX: 233
   - Unit: Centigrade

3. FEED TEMP.

   The temperature to start feeding the paper.

   - Default value: 200
   - Range: MIN: 170, MAX: 233
   - Unit: Centigrade

4. TIME

   Warming up time after reaching the temperature that the printing can be done.

   - Default value: 10
   - Range: MIN: 10, MAX: 63
   - Unit: Second

3.6.4 Flicker adjust

This mode is specified the number of table for the countermeasures of “FLICKER”.

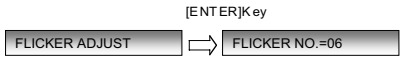

- Default value: 06
- Input Range: MIN: 00, MAX: 63
- Unit: -

3.6.5 Parameter list

Printing the parameter for fixing.



3.7. Test mode

This mode is used for printer aging on the two modes.

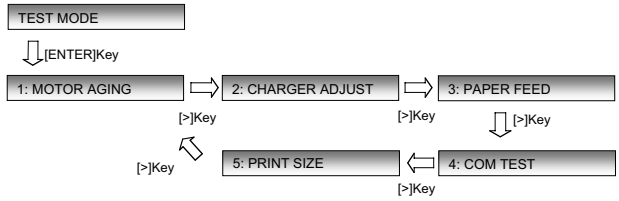

3.7.1 Motor aging

1. The motor aging starts with heater on or with heater off.

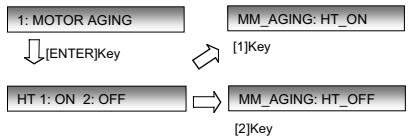

2. To exit the aging, press [STOP] key.

3.7.2 Charger adjust

This mode is used to check the high-pressure control.

1. Operation

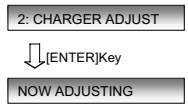

   1. Press the [ENTER] key to operate the mode.
   2. Press the [STOP] key to exit this mode.

3.7.3 Paper feed

This mode is used to check Mechanical Controller in the High speed mode.

Note: This mode is not used actual printing.

1. Operation

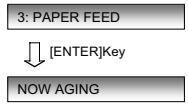

   1. Press the [ENTER] key to operate the mode.
   2. Press the [STOP] key to exit this mode.

3.7.4 COM test mode

You can check the communication between the main CPU and the printer controller on this mode. Concretely, input the command number from the main CPU and can read the response from the printer controller.

1. Operation

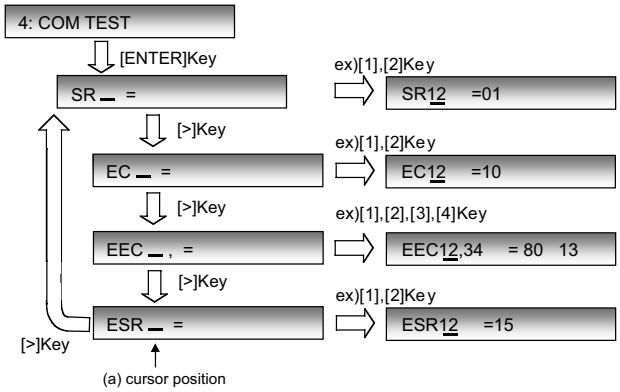

1. Press the [ENTER] key to enter the mode.
2. Select the mode “SR”, “EC”, “EEC”, or “ESR” using the “<“ or the “>” key. The “>” key can be used to select the mode only when a cursor is in the position of (a).
3. Enter the value using the numeric keys.

   “SR”, “EC”, “ESR”

   • Range MIN: 00, MAX: 31

   “EEC”

   • Range MIN: 00, MAX: 63
4. Press the [STOP] key to exit this mode.

3.7.5 Print size

This function is prepared for the function in the future. Now there is no meaning.

1. Operation

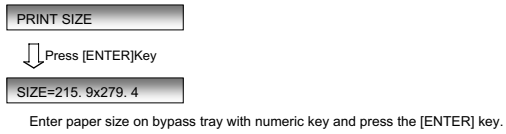

4. How to make soft switch setting

To enter the soft switch mode, press the following key entries in sequence.

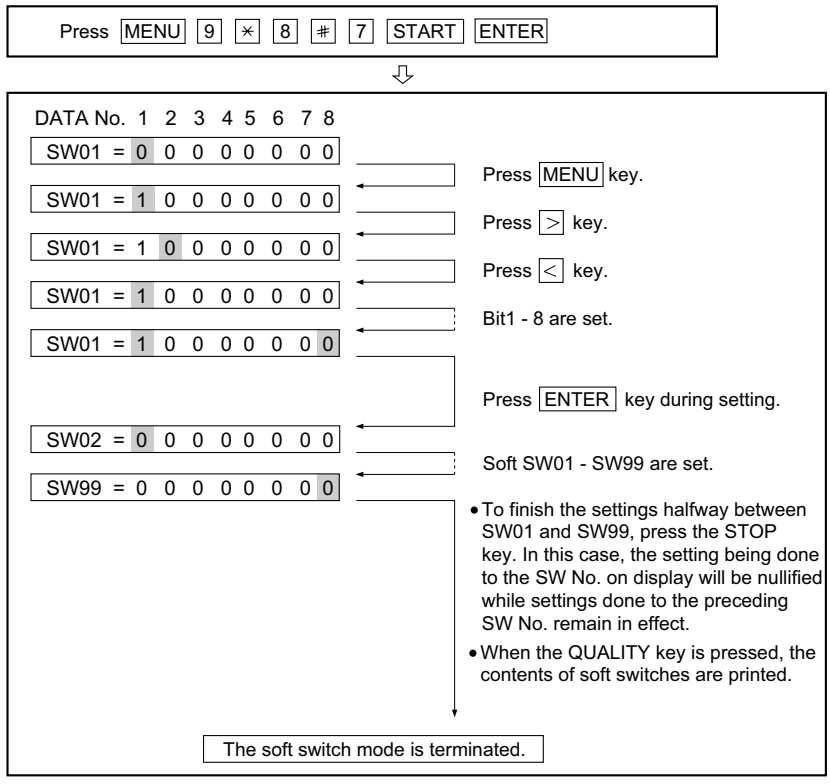

5. Soft switch description

5.1. Soft switch

SW NO.	DATA NO.	ITEM	Switch setting and function						Initial setting			Remarks
			1			0			DE	IT	H	
SW1	1	Reserved							0	0	0	
	2	Reserved							1	1	1	
	3	Reserved							0	0	0	
	4	Reserved							1	1	1	
	5	Reserved							0	0	0	
	6	Reserved							0	0	0	
	7	Reserved							1	1	1	
	8	Reserved							0	0	0	
SW2	1	Reserved							0	0	0	
	2	Reserved							0	0	0	
	3	Reserved							0	0	0	
	4	Reserved							1	1	1	
	5	Reserved							0	0	0	
	6	Reserved							0	0	0	
	7	Reserved							1	1	1	
	8	Reserved							0	0	0	
SW3	1	Reserved							0	0	0	
	2	Reserved							0	0	0	
	3	Reserved							0	0	0	
	4	Reserved							1	1	1	
		COPY/SCAN mode		COPY	N/A	SCAN	SCAN					
	5		No. 5	0	0	1	1		0	0	0	
	6		No. 6	0	1	0	1		0	0	0	
	7	Reserved							1	1	1	
	8	Reserved							0	0	0	
SW4	1	Reserved							0	0	0	
	2	Reserved							0	0	0	
	3	Reserved							0	0	0	
	4	Reserved							0	0	0	
	5	Reserved							1	1	1	
	6	Reserved							0	0	0	
	7	Reserved							0	0	1	
	8	Reserved							0	0	0	
SW5	1	Reserved							1	1	1	
	2	Reserved							0	0	0	
	3	Reserved							1	1	1	
	4	Reserved							1	1	1	
	5	Reserved							0	0	0	
	6	Reserved							0	0	0	
		Auto clear		Off	30sec	60sec	120sec					
	7		No. 7	0	0	1	1		1	1	1	
	8		No. 8	0	1	0	1		0	0	0	
SW6	1	Reserved							0	0	0	
	2	Reserved							0	0	0	
	3	Reserved							1	1	1	
	4	Reserved							0	0	0	
	5	Reserved							0	0	0	
	6	Reserved							0	0	0	
	7	Reserved							0	0	0	
	8	Reserved							0	0	0	
SW7	1	Reserved							0	0	0	
	2	Reserved							0	0	0	
	3	Reserved							0	0	0	
	4	Reserved							0	0	1	
	5	Reserved							0	0	0	
	6	Reserved							0	0	0	
	7	Reserved							1	1	1	
	8	Reserved							1	1	1	

SW NO.	DATA NO.	ITEM	Switch setting and function		Initial setting			Remarks
			1	0	DE	IT	H	
SW8	1	Reserved			0	0	0	
	2	Reserved			0	0	0	
	3	Reserved			0	0	1	
	4	Reserved			1	1	1	
	5	Reserved			0	0	0	
	6	Reserved			0	0	0	
	7	Reserved			0	0	0	
	8	Reserved			1	1	1	
SW9	1	Reserved			0	0	1	
	2	Reserved			0	0	0	
	3	Reserved			0	0	0	
	4	Reserved			1	1	1	
	5	Reserved			0	0	0	
	6	Reserved			1	1	1	
	7	Reserved			1	1	1	
	8	Reserved			0	0	0	
SW10	1	Reserved			1	1	1	
	2	Reserved			0	0	0	
	3	Reserved			0	0	0	
	4	Reserved			0	0	0	
	5	Reserved			0	0	0	
	6	Reserved			0	0	0	
	7	Reserved			0	0	0	
	8	Reserved			0	0	0	
SW11	1	Reserved			0	0	0	
	2	Reserved			0	0	0	
	3	Reserved			0	0	0	
	4	Reserved			0	0	0	
	5	Reserved			0	0	0	
	6	Reserved			0	0	0	
	7	Reserved			0	0	0	
	8	Reserved			0	0	0	
SW12	1	Reserved			0	0	0	
	2	Reserved			1	1	1	
	3	Reserved			0	0	0	
	4	Reserved			1	1	0	
	5	Reserved			1	1	1	
	6	Reserved			0	0	0	
	7	Reserved			0	0	0	
	8	Reserved			0	0	0	
SW13	1	Reserved			0	0	0	
	2	Reserved			1	1	1	
	3	Reserved			1	1	1	
	4	Reserved			1	1	0	
	5	Reserved			1	1	1	
	6	Reserved			0	0	0	
	7	Reserved			0	0	0	
	8	Reserved			0	0	0	
SW14	1	Reserved			1	1	1	
	2	Reserved			0	0	0	
	3	Reserved			1	1	0	
	4	Reserved			0	0	0	
	5	Reserved			0	0	1	
	6	Reserved			0	0	0	
	7	Reserved			0	0	0	
	8	Reserved			0	0	0	

SW NO.	DATA NO.	ITEM	Switch setting and function		Initial setting			Remarks
			1	0	DE	IT	H	
SW15	1	Reserved			1	1	1	
	2	Reserved			1	1	1	
	3	Reserved			1	1	1	
	4	Reserved			0	0	0	
	5	Reserved			1	1	1	
	6	Reserved			1	1	1	
	7	Reserved			1	1	1	
	8	Reserved			0	0	0	
SW16	1	Reserved			0	0	0	
	2	Reserved			0	0	0	
	3	Reserved			0	0	0	
	4	Reserved			1	0	0	
	5	Reserved			0	0	0	
	6	Reserved			0	0	0	
	7	Reserved			0	0	0	
	8	Reserved			0	0	0	
SW17	1	Reserved			0	0	0	
	2	Reserved			1	1	1	
	3	Reserved			1	1	1	
	4	Reserved			1	1	1	
	5	Reserved			0	0	0	
	6	Reserved			1	1	1	
	7	Reserved			0	0	0	
	8	Reserved			1	1	1	
SW18	1	Key push sound	On	Off	1	1	1	
	2	Reserved			0	0	0	
	3	Reserved			1	1	1	
	4	Reserved			1	1	1	
	5	Reserved			0	0	0	
	6	Reserved			0	0	0	
	7	Reserved			0	0	0	
	8	Reserved			0	0	0	
SW19	1	Reserved			0	0	0	
	2	Reserved			0	0	0	
	3	Reserved			0	0	0	
	4	Reserved			0	0	0	
	5	Reserved			1	1	1	
	6	Reserved			0	0	0	
	7	Reserved			1	1	1	
	8	Reserved			0	0	0	
SW20	1	Reserved			0	0	0	
	2	Reserved			1	0	0	
	3	Reserved			0	1	0	
	4	Reserved			0	0	0	
	5	Reserved			1	1	0	
	6	Reserved			1	1	1	
	7	Reserved			0	0	0	
	8	Reserved			0	0	0	
SW21	1	Reserved			1	1	1	
	2	Reserved			0	0	0	
	3	Reserved			0	0	0	
	4	Reserved			0	0	0	
	5	Reserved			0	0	0	
	6	Reserved			1	1	1	
	7	Reserved			0	0	0	
	8	Reserved			1	1	1	

SW NO.	DATA NO.	ITEM	Switch setting and function						Initial setting			Remarks
			1			0			DE	IT	H	
SW22	1	Print mode when printer life over	Continue			Stop			1	1	1	
	2	Print mode when drum life over	Continue			Stop			1	1	1	
	3	Print mode when toner empty	Continue			Stop			0	0	0	
	4	Print mode when toner unsuitable	Continue			Stop			0	0	0	
	5	Print mode when paper size error	Continue			Stop			1	1	1	
	6	Print mode when paper tray removed	Continue			Stop			0	0	0	
	7	Reserved							1	1	1	
	8	Reserved							1	1	1	
SW23		Paper size at tray		Letter	A4	Legal	N/A					
	1		No. 1	0	0	0	x		0	0	0	
	2		No. 2	0	0	0	x		0	0	0	
	3		No. 3	0	0	1	x		0	0	0	
	4		No. 4	0	1	0	x		1	1	1	
		Fan time after printing		10min.	20min.	30min.	5min.					
	5		No. 5	0	0	1	1		0	0	0	
	6		No. 6	0	1	0	1		0	0	0	
	7	Reserved							0	0	0	
	8	Reserved							0	0	0	
SW24	1	Reserved							0	0	0	
	2	Reserved							0	0	0	
	3	Reserved							0	0	0	
	4	Reserved							0	0	0	
	5	Reserved							0	0	0	
	6	Reserved							0	0	0	
	7	Reserved							0	0	0	
	8	Reserved							0	0	0	
SW25		Copy default content type		Text	Photo							
	1		No. 1	0	1				0	0	0	
	2		No. 2	0	0				0	0	0	
		Copy default quality		300	600							
	3		No. 3	0	1				0	0	0	
	4		No. 4	0	1				0	0	0	
		Copy default center contrast (for TEXT)		Dark	Normal	Light	Normal					
	5		No. 5	0	0	1	1		0	0	0	
	6		No. 6	0	1	0	1		1	1	1	
		Copy default center contrast (for PHOTO)		Dark	Normal	Light	Normal					
	7		No. 7	0	0	1	1		0	0	0	
	8		No. 8	0	1	0	1		0	0	0	
SW26	1	Reserved							0	0	0	
	2	Reserved							0	0	0	
	3	Reserved							0	0	0	
	4	Reserved							0	0	0	
	5	Reserved							0	0	0	
	6	Reserved							0	0	0	
	7	Reserved							0	0	0	
	8	Reserved							0	0	0	

SW NO.	DATA NO.	ITEM	Switch setting and function						Initial setting			Remarks
			1			0			DE	IT	H	
SW27	1	Reserved							0	0	0	
	2	Reserved							1	1	1	
	3	Reserved							0	0	0	
	4 5 6	Copy default contrast		No. 4	No. 5	No. 6						
			Darker	0	0	0						
			Dark	0	0	1						
			Normal	0	1	0						
			Light	0	1	1						
			Lighter	1	0	0						
			Lightest	1	1	0			0	0	0	
			Darkest	1	0	1			1	1	1	
			Normal	Other setting					0	0	0	
	7	Reserved							0	0	0	
	8	Reserved							0	0	0	
SW28	1	Reserved							0	0	0	
	2	Reserved							0	0	0	
	3	Reserved							0	0	0	
	4	Reserved							1	1	1	
	5	Reserved							0	0	1	
	6	Reserved							0	0	0	
	7	Reserved							0	0	1	
	8	Reserved							0	0	0	
SW29	1	Reserved							0	0	1	
	2	Reserved							1	1	0	
	3	Reserved							1	1	0	
	4	Reserved							0	0	1	
	5	Reserved							1	1	0	
	6	Reserved							1	1	0	
	7	Reserved							0	0	0	
	8	Reserved							0	0	0	
SW30	1	Reserved							0	0	0	
	2	Reserved							0	0	0	
	3	Reserved							0	0	0	
	4	Reserved							0	0	0	
	5	Reserved							0	0	0	
	6	Reserved							0	0	0	
	7	Reserved							0	0	0	
	8	Reserved							0	0	0	
SW31	1	USB high speed setting	Disable			Enable			0	0	0	
	2	Reserved							0	0	0	
	3	Reserved							0	0	0	
	4	Reserved							0	0	0	
	5	Reserved							0	0	0	
	6	Reserved							1	1	1	
	7	Reserved							0	0	0	
	8	Reserved							0	0	0	
SW32	1	Reserved							0	0	0	
	2	Reserved							0	0	0	
	3	Reserved							0	0	0	
	4	Reserved							0	0	0	
	5	Reserved							1	1	1	
	6	Reserved							0	0	0	
	7	Reserved							0	0	0	
	8	Reserved							0	0	0	

SW NO.	DATA NO.	ITEM	Switch setting and function		Initial setting			Remarks
			1	0	DE	IT	H	
SW33	1	Reserved			0	0	0	
	2	Reserved			0	0	0	
	3	Reserved			0	0	0	
	4	Reserved			0	0	0	
	5	Reserved			0	0	0	
	6	Reserved			0	0	0	
	7	Reserved			0	0	0	
	8	Reserved			0	0	0	
SW34	1	Reserved			0	0	0	
	2	Reserved			0	0	0	
	3	Reserved			0	0	0	
	4	Reserved			0	0	0	
	5	Reserved			0	0	0	
	6	Reserved			0	0	0	
	7	Reserved			0	0	0	
	8	Reserved			0	0	0	
SW35	1	Reserved			0	0	0	
	2	Reserved			0	0	0	
	3	Reserved			0	0	0	
	4	Reserved			0	0	0	
	5	Reserved			0	0	0	
	6	Reserved			0	0	0	
	7	Reserved			0	0	0	
	8	Reserved			0	0	0	
SW36	1	Reserved			0	0	0	
	2	Reserved			0	0	0	
	3	Reserved			0	0	0	
	4	Reserved			0	0	0	
	5	Reserved			0	0	0	
	6	Reserved			0	0	0	
	7	Reserved			0	0	0	
	8	Reserved			0	0	0	
SW37	1	Reserved			0	0	0	
	2	Reserved			0	0	0	
	3	Reserved			0	0	0	
	4	Reserved			0	0	0	
	5	Reserved			0	0	0	
	6	Reserved			0	0	0	
	7	Reserved			0	0	0	
	8	Reserved			0	0	0	
SW38	1	Reserved			0	0	0	
	2	Reserved			0	0	0	
	3	Reserved			0	0	0	
	4	Reserved			0	0	0	
	5	Reserved			0	0	0	
	6	Reserved			0	0	0	
	7	Reserved			0	0	0	
	8	Reserved			0	0	0	
SW39	1	Reserved			0	0	0	
	2	Reserved			0	0	0	
	3	Reserved			0	0	0	
	4	Reserved			0	0	0	
	5	Reserved			0	0	0	
	6	Reserved			0	0	0	
	7	Reserved			0	0	0	
	8	Reserved			0	0	0	

SW NO.	DATA NO.	ITEM	Switch setting and function		Initial setting			Remarks
			1	0	DE	IT	H	
SW40	1	Reserved			0	0	0	
	2	Reserved			0	0	0	
	3	Reserved			0	0	0	
	4	Reserved			0	0	0	
	5	Reserved			0	0	0	
	6	Reserved			0	0	0	
	7	Reserved			0	0	0	
	8	Reserved			0	0	0	
SW41	1	Reserved			0	0	0	
	2	Reserved			0	0	0	
	3	Reserved			0	0	0	
	4	Reserved			0	0	0	
	5	Reserved			0	0	0	
	6	Reserved			0	0	0	
	7	Reserved			0	0	0	
	8	Reserved			0	0	0	
SW42	1	Reserved			0	0	0	
	2	Reserved			0	0	0	
	3	Reserved			0	0	0	
	4	Reserved			0	0	0	
	5	Reserved			0	0	0	
	6	Reserved			0	0	0	
	7	Reserved			0	0	0	
	8	Reserved			0	0	0	
SW43	1	Reserved			0	0	0	
	2	Reserved			0	0	0	
	3	Reserved			0	0	0	
	4	Reserved			0	0	0	
	5	Reserved			0	0	0	
	6	Reserved			0	0	0	
	7	Reserved			0	0	0	
	8	Reserved			0	0	0	
SW44	1	Reserved			0	0	0	
	2	Reserved			0	0	0	
	3	Reserved			0	0	0	
	4	Reserved			0	0	0	
	5	Reserved			0	0	0	
	6	Reserved			0	0	0	
	7	Reserved			0	0	0	
	8	Reserved			0	0	0	
SW45	1	Reserved			0	0	0	
	2	Reserved			0	0	0	
	3	Reserved			0	0	0	
	4	Reserved			0	0	0	
	5	Reserved			0	0	0	
	6	Reserved			0	0	0	
	7	Reserved			0	0	0	
	8	Reserved			0	0	0	
SW46	1	Reserved			0	0	0	
	2	Reserved			0	0	0	
	3	Reserved			0	0	0	
	4	Reserved			0	0	0	
	5	Reserved			0	0	0	
	6	Reserved			0	0	0	
	7	Reserved			0	0	0	
	8	Reserved			0	0	0	

SW NO.	DATA NO.	ITEM	Switch setting and function		Initial setting			Remarks
			1	0	DE	IT	H	
SW47	1	Reserved			0	0	0	
	2	Reserved			0	0	0	
	3	Reserved			0	0	0	
	4	Reserved			0	0	0	
	5	Reserved			0	0	0	
	6	Reserved			0	0	0	
	7	Reserved			0	0	0	
	8	Reserved			0	0	0	
SW48	1	Reserved			0	0	0	
	2	Reserved			0	0	0	
	3	Reserved			0	0	0	
	4	Reserved			0	0	0	
	5	Reserved			0	0	0	
	6	Reserved			0	0	0	
	7	Reserved			0	0	0	
	8	Reserved			0	0	0	
SW49	1	Reserved			0	0	0	
	2	Reserved			0	0	0	
	3	Reserved			0	0	0	
	4	Reserved			0	0	0	
	5	Reserved			0	0	0	
	6	Reserved			0	0	0	
	7	Reserved			0	0	0	
	8	Reserved			0	0	0	
SW50 I SW99	1	Reserved			0	0	0	
	2	Reserved			0	0	0	
	3	Reserved			0	0	0	
	4	Reserved			0	0	0	
	5	Reserved			0	0	0	
	6	Reserved			0	0	0	
	7	Reserved			0	0	0	
	8	Reserved			0	0	0	

5.2. Soft switch function description

SW1 No. 1 Reserved

Set to “0”.

SW1 No. 2 Reserved

Set to “1”.

SW1 No. 3 Reserved

Set to “0”.

SW1 No. 4 Reserved

Set to “1”.

SW1 No.5, No.6 Reserved

Set to “0”.

SW1 No. 7 Reserved

Set to “1”.

SW1 No. 8 Reserved

Set to “0”.

SW2 No. 1 ~ No. 3 Reserved

Set to “0”.

SW2 No. 4 Reserved

Set to “1”.

SW2 No.5, No.6 Reserved

Set to “0”.

SW2 No. 7 Reserved

Set to “1”.

SW2 No. 8 Reserved

Set to “0”.

SW3 No. 1 ~ No. 3 Reserved

Set to “0”.

SW3 No. 4 Reserved

Set to “1”.

SW3 No.5, No.6 COPY/SCAN mode

An operation mode for each copy, or PC scan is set.

SW-3 No. 7 Reserved

Set to “1”.

SW-3 No.8 Reserved

Set to “0”.

SW-4 No. 1 ~ No. 4 Reserved

Set to “0”.

SW4 No. 5 Reserved

Set to “1”.

SW4 No. 6 Reserved

Set to “0”.

SW4 No. 7 Reserved (AM-300DE/IT)

Set to “0”.

SW4 No. 7 Reserved (AM-300H)

Set to “1”.

SW4 No. 8 Reserved

Set to “0”.

SW5 No. 1 Reserved

Set to “1”.

SW5 No. 2 Reserved

Set to “0”.

SW5 No. 3, No. 4 Reserved

Set to “1”.

SW5 No. 5, No. 6 Reserved

Set to “0”.

SW5 No. 7, No. 8 Auto Clear

Used to set the retention time for the copy settings. After the specified auto clear time elapses, the default settings return.

SW6 No. 1, No. 2 Reserved

Set to “0”.

SW6 No. 3 Reserved

Set to “1”.

SW6 No. 4 ~ No. 8 Reserved

Set to “0”.

SW7 No. 1 ~ No. 3 Reserved

Set to “0”.

SW7 No. 4 Reserved (AM-300DE/IT)

Set to "0".

SW7 No. 4 Reserved (AM-300H)

Set to "1".

SW7 No. 5, No.6 Reserved

Set to "0".

SW7 No. 7, No.8 Reserved

Set to "1".

SW8 No. 1, No. 2 Reserved

Set to “0”.

SW8 No. 3 Reserved (AM-300DE/IT)

Set to "0".

SW8 No. 3 Reserved (AM-300H)

Set to "1".

SW8 No. 4 Reserved

Set to "1".

SW8 No. 5 ~ No. 7 Reserved

Set to "0".

SW8 No.8 Reserved

Set to "1".

SW9 No.1 Reserved (AM-300DE/IT)

Set to "0".

SW9 No.1 Reserved (AM-300H)

Set to "1".

SW9 No. 2, No.3 Reserved

Set to "0".

SW9 No. 4 Reserved

Set to "1".

SW9 No. 5 Reserved

Set to "0".

SW9 No. 6, No. 7 Reserved

Set to "1".

SW9 No. 8 Reserved

Set to "0".

SW10 No. 1 Reserved

Set to "1".

SW10 No. 2 ~ No. 8 Reserved

Set to "0".

SW11 No. 1 ~ No. 8 Reserved

Set to "0".

SW12 No. 1 Reserved

Set to "0".

SW12 No. 2 Reserved

Set to "1".

SW12 No. 3 Reserved

Set to "0".

SW12 No. 4 Reserved (AM-300DE/IT)

Set to "1".

SW12 No. 4 Reserved (AM-300H)

Set to "0".

SW12 No. 5 Reserved

Set to "1".

SW12 No. 6 ~ No. 8 Reserved

Set to "0".

SW13 No. 1 Reserved

Set to "0".

SW13 No. 2, No. 3 Reserved

Set to "1".

SW13 No. 4 Reserved (AM-300DE/IT)

Set to "1".

SW13 No. 4 Reserved (AM-300H)

Set to "0".

SW13 No. 5 Reserved

Set to "1".

SW13 No. 6 ~ No. 8 Reserved

Set to "0".

SW14 No. 1 Reserved

Set to "1".

SW14 No. 2 Reserved

Set to "0".

SW14 No. 3 Reserved (AM-300DE/IT)

Set to "1".

SW14 No. 3 Reserved (AM-300H)

Set to "0".

SW14 No. 4 Reserved

Set to "0".

SW14 No. 5 Reserved (AM-300DE/IT)

Set to "0".

SW14 No. 5 Reserved (AM-300H)

Set to "1".

SW14 No. 6 ~ No. 8 Reserved

Set to "0".

SW15 No. 1 ~ No. 3 Reserved

Set to "1".

SW15 No. 4 Reserved

Set to "0".

SW15 No. 5 ~ No. 7 Reserved

Set to "1".

SW15 No. 8 Reserved

Set to "0".

SW16 No. 1 ~ No. 3 Reserved

Set to "0".

SW16 No. 4 Reserved (AM-300DE)

Set to "1".

SW16 No. 4 Reserved (AM-300IT/H)

Set to "0".

SW16 No. 5 ~ No. 8 Reserved

Set to "0".

SW17 No. 1 Reserved

Set to "0".

SW17 No. 2 ~ No. 4 Reserved

Set to "1".

SW17 No. 5 Reserved

Set to "0".

SW17 No. 6 Reserved

Set to "1".

SW17 No. 7 Reserved

Set to "0".

SW17 No. 8 Reserved

Set to "1".

SW18 No. 1 Key push sound

Used to toggle the key sound between on and off.

SW18 No. 2 Reserved

Set to "0".

SW18 No. 3, No. 4 Reserved

Set to "1".

SW18 No. 5 ~ No. 8 Reserved

Set to "0".

SW19 No.1 ~ No. 4 Reserved

Set to "0".

SW19 No. 5 Reserved

Set to "1".

SW19 No. 6 Reserved

Set to "0".

SW19 No. 7 Reserved

Set to "1".

SW19 No. 8 Reserved

Set to "0".

SW20 No. 1 Reserved

Set to "0".

SW20 No. 2 Reserved (AM-300DE)

Set to "1".

SW20 No. 2 Reserved (AM-300IT/H)

Set to "0".

SW20 No. 3 Reserved (AM-300DE/H)

Set to "0".

SW20 No. 3 Reserved (AM-300IT)

Set to "1".

SW20 No. 4 Reserved

Set to "0".

SW20 No. 5 Reserved (AM-300DE/IT)

Set to "1".

SW20 No. 5 Reserved (AM-300H)

Set to "0".

SW20 No. 6 Reserved

Set to "1".

SW20 No. 7, No. 8 Reserved

Set to "0".

SW21 No. 1 Reserved

Set to "1".

SW21 No. 2 ~ No. 5 Reserved

Set to "0".

SW21 No. 3, No. 4 Busy tone detection pulse number

Used to set detection of Busy tone intermittent sounds.

SW21 No. 6 Reserved

Set to "1".

SW21 No. 7 Reserved

Set to "0".

SW21 No. 8 Reserved

Set to "1".

SW22 No. 1 Print mode when printer life over

Used to set whether the printing operation stops or not when the PRINTER LIFE OVER error occurs.

SW22 No. 2 Print mode when drum life over

Used to set whether the printing operation stops or not when the DRUM LIFE OVER error occurs.

SW22 No. 3 Print mode when toner empty

Used to set whether the printing operation stops or not when the TONER EMPTY error occurs.

SW22 No. 4 Print mode when toner unsuitable

Used to set whether the printing operation stops or not when the TONER UNSUITABLE error occurs.

SW22 No. 5 Print mode when size error

Used to set whether the printing operation stops or not when the SIZE ERROR occurs.

SW22 No. 6 Print mode when paper tray removed

Used to set whether the printing operation stops or not when the PAPER TRAY REMOVED error occurs.

SW22 No. 7, No. 8 Reserved

Set to "1".

SW23 No. 1 ~ No. 4 Paper size at tray

The paper size in the tray is set.

SW23 No. 5, No. 6 Fan time after printing

Set the FAN rotation time for completed print operation.

SW23 No. 7, No. 8 Reserved

Set to "0".

SW24 No. 1 ~ No. 8 Reserved

Set to "0".

SW25 No. 1, No. 2 Copy default content type

The default copy scanning quality is set.

SW25 No. 3, No. 4 Copy default quality

Copy scanning resolution is set.

SW25 No. 5, No. 6 Copy default center contrast (for TEXT)

When the copy scanning quality is set to the TEXT mode, this switch is used to set the reference contrast of the center value for the default contrast setting (SW27 No. 4 ~ No. 6).

SW25 No. 7, No. 8 Copy default center contrast (for PHOTO)

When the copy scanning quality is set to the PHOTO mode, this switch is used to set the reference contrast of the center value for the default contrast setting (SW27 No. 4 ~ No. 6).

SW26 No. 1 ~ No. 8 Reserved

Set to "0".

SW27 No. 1, No. 2 Fax default center contrast

Used to set the reference contrast of the center value for the fax contrast setting.

SW27 No. 3 Reserved

Set to "0".

SW27 No. 4 ~ No. 6 Copy default contrast

The default is set in the copy contrast setting.

SW27 No. 7, No. 8 Reserved

Set to "0".

SW28 No. 1 ~ No. 3 Reserved

Set to "0".

SW28 No. 4 Reserved

Set to "1".

SW28 No. 5 Reserved (AM-300DE/IT)

Set to "0".

SW28 No. 5 Reserved (AM-300H)

Set to "1".

SW28 No. 6 Reserved

Set to "0".

SW28 No. 7 Reserved (AM-300DE/IT)

Set to "0".

SW28 No. 7 Reserved (AM-300H)

Set to "1".

SW28 No. 8 Reserved

Set to "0".

SW29 No. 1 Reserved (AM-300DE/IT)

Set to "0".

SW29 No. 1 Reserved (AM-300H)

Set to "1".

SW29 No. 2, No. 3 Reserved (AM-300DE/IT)

Set to "1".

SW29 No. 2, No. 3 Reserved (AM-300H)

Set to "0".

SW29 No. 4 Reserved (AM-300DE/IT)

Set to "0".

SW29 No. 4 Reserved (AM-300H)

Set to "1".

SW29 No. 5, No. 6 Reserved (AM-300DE/IT)

Set to "1".

SW29 No. 5, No. 6 Reserved (AM-300H)

Set to "0".

SW29 No. 7, No. 8 Reserved

Set to "0".

SW30 No. 1 ~ No. 8 Reserved

Set to "0".

SW31 No. 1 USB high speed setting

Used to set whether the USB high speed mode is activated or not.

SW31 No. 2 ~ No. 5 Reserved

Set to "0".

SW31 No. 6 Reserved

Set to "1".

SW31 No. 7, No. 8 Reserved

Set to "0".

SW32 No. 1 ~ No. 4 Reserved

Set to "0".

SW32 No. 5 Reserved

Set to "1".

SW32 No. 6 ~ No. 8 Reserved

Set to "0".

SW33 ~ SW99 No. 1 ~ No. 8 Reserved

Set to "0".

CHAPTER 3. MECHANICAL DESCRIPTION

[1] Mechanical description

1. Facsimile block

1.1. Document feed block and diagram

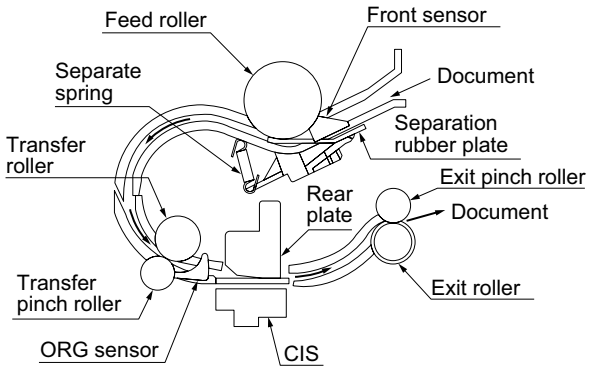

Fig. 1

2. Document feed operation

1) As shown in Fig.1, the document set in the hopper (the front sensor is on) is fed with the let out roller and paper feed roller which rotate together with the pulse motor.
2) When a specified number of pulses are received from the document sensor after the document lead edge is sensed, scanning will be started.
3) When a specified number of pulses are received from the document sensor after the document rear edge is sensed, scanning will be ended to discharge the document to the tray.
4) If the front sensor is on (the document is set up in the hopper), the next document is supplied and fed nearly when the last document is completely read and discharged. If the front sensor is off (no document is set up in the hopper), the drive will be stopped when the document is discharged to the tray.

3. Hopper mechanism

3.1. General view

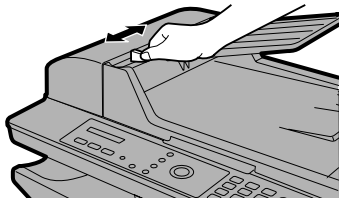

Fig. 2

The hopper is used to align documents with the document guides adjusted to the paper width.

NOTE: Adjust the document guides before and after inserting the document.

3.2. Automatic document feed

1) Use of the paper feed roller and separation rubber plate ensures error-free transport and separation of documents. The plate spring presses the document to the paper feed roller to assure smooth feeding of the document.
2) Document separation system:

   Separation rubber plate/speed reduction ratio/roller backlash separation system

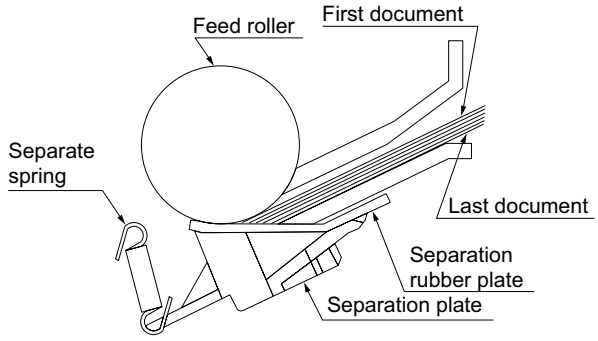

Fig. 3

3.3. Loading the documents

1) Make sure that the documents are of suitable size and thickness, and free from creases, folds, curls, wet glue, wet ink, clips, staples and pins.
2) Place documents face down in the hopper.
   - Adjust the document guides to the document width.
   - Align the top edge of documents and gently place them into the hopper. The first page under the stack will be taken up by the feed roller to get ready for transmission.

NOTE: 1) Curled edge of documents, if any, must be straighten out.
2) Do not load the documents of different sizes and/or thicknesses together.

3.4. Documents applicable for automatic feed

		Product specifications	
	Indication	Lower Limit	Upper Limit
Weight indication	Metric system indication	52g/m^2	80g/m^2
Thickness indication	Metric system indication	0.06mm	0.1mm
Document size	Document size Range	Minimum (148mm x 182mm) A4 (210mm x 297mm)	
		Letter (216mm x 279mm)	
		Legal (216mm x 356mm)	
Number of ADF sheets	Document size Weight	Minimum ~ Letter/A4 size 20sheets	
		Legal 1 sheet	
Paper quality	Kind	Paper of fine quality/bond paper/ Kent paper	

NOTE: Double-side coated documents and documents on facsimile recording paper should be inserted manually.

Documents heavier than 80g/m^2 in terms of the paper weight must be duplicated on a copier to make it operative in the facsimile.

4. Paper path

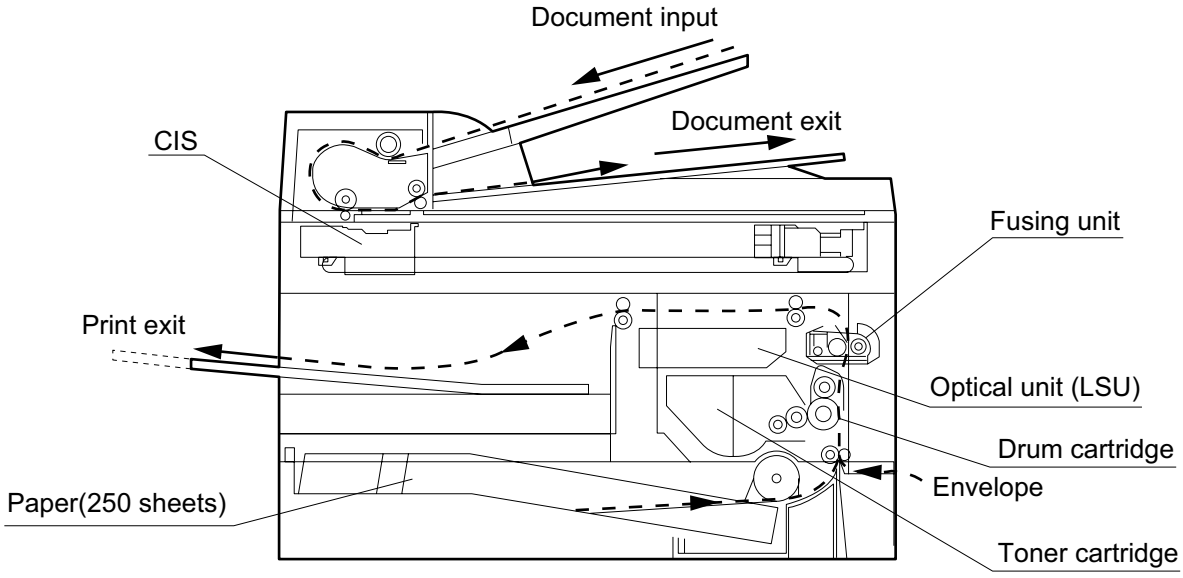

Fig. 4

5. Components layout

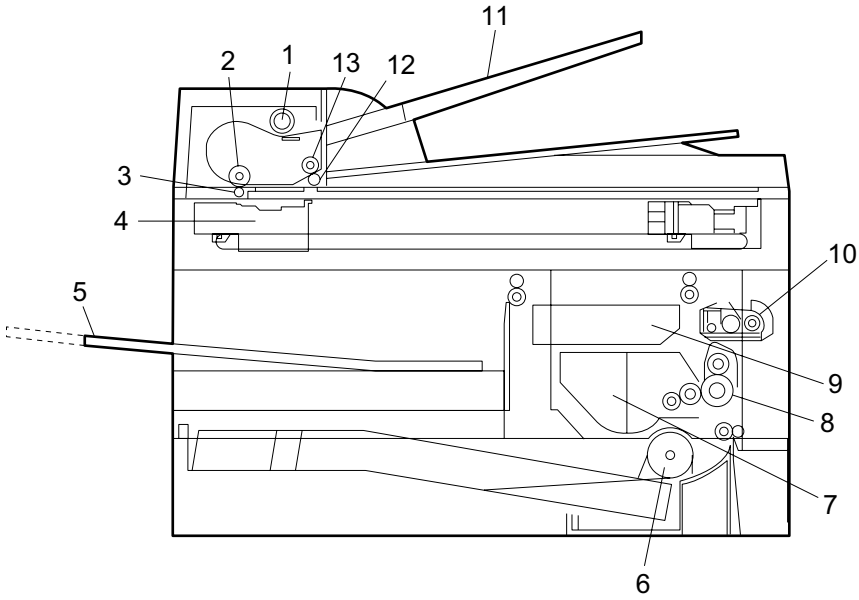

Fig. 5

No.	PARTS NAME	No.	PARTS NAME
1	Feed roller	8	Drum cartridge
2	Transfer roller	9	Optical unit (LSU)
3	Transfer pinch roller	10	Fusing unit
4	CIS	11	Document feeder tray
5	Output tray	12	Exit roller
6	PU roller assay	13	Exit pinch roller
7	Toner cartridge		

6. Switch/Sensor layout

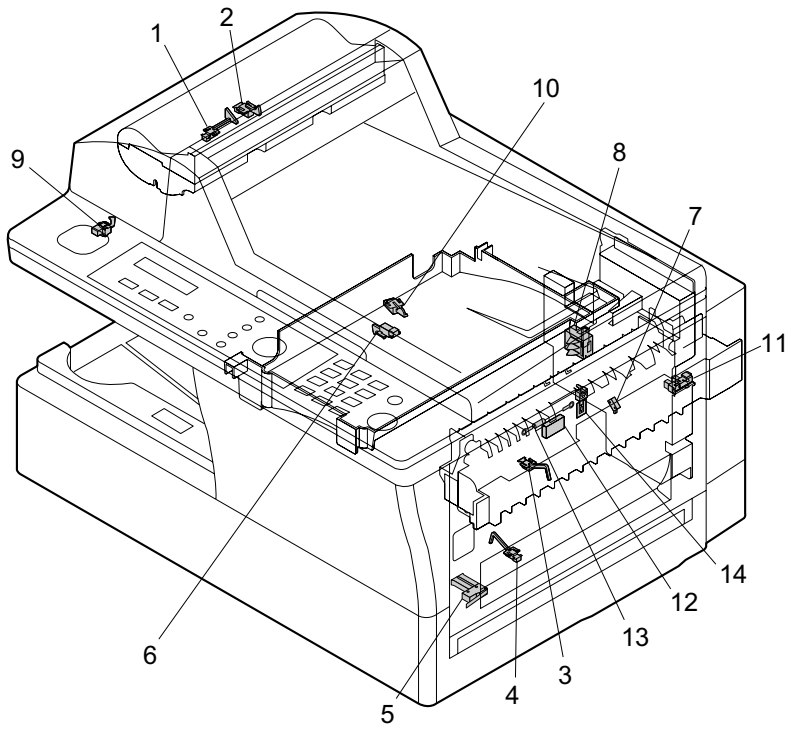

Fig. 6

No.	PARTS NAME	TYPE	DESCRIPTION
1	Front sensor	Microcircuit	When the document is set up in the hopper, the front sensor is on.
2	ORG sensor	Microcircuit	When the ORG sensor is on, the document is fed and scanning will be started.
3	P-IN sensor	Microcircuit	When this switch is turned on, paper transport.
4	Bypass PE sensor	Microcircuit	When this switch is turned on, paper transport.
5	Inter lock switch	Microcircuit	Detects the opening or closing of the Right Cover.
6	PO2 sensor	Microcircuit	Detects when the paper is fed out.
7	Roller switch	Microcircuit	Detects when the Pickup Roller is home position.
8	Toner sensor	Microcircuit	Detects when the Toner Cartridge is set.
9	Home position sensor	Microcircuit	Detects when CIS is ADF scanning position.
10	Tray cover sensor	Microcircuit	Detects when the Paper Tray is set up.
11	PO1 sensor	Photo transistor	Detects when the paper is fed out.
12	Temperature fuse 216°C	Thermal fuse	When the heat roller temperature rises abnormally, this fuse cuts off the power relay power line (+24 V line).
13	Temperature fuse 152°C	Thermal fuse	When the heat roller temperature rises abnormally, this fuse cuts off the heater lamp power line.
14	Thermistor	Thermistor	Detects the temperature on the heat roller.

7. Scanner drive block and diagram

7.1. Overall layout

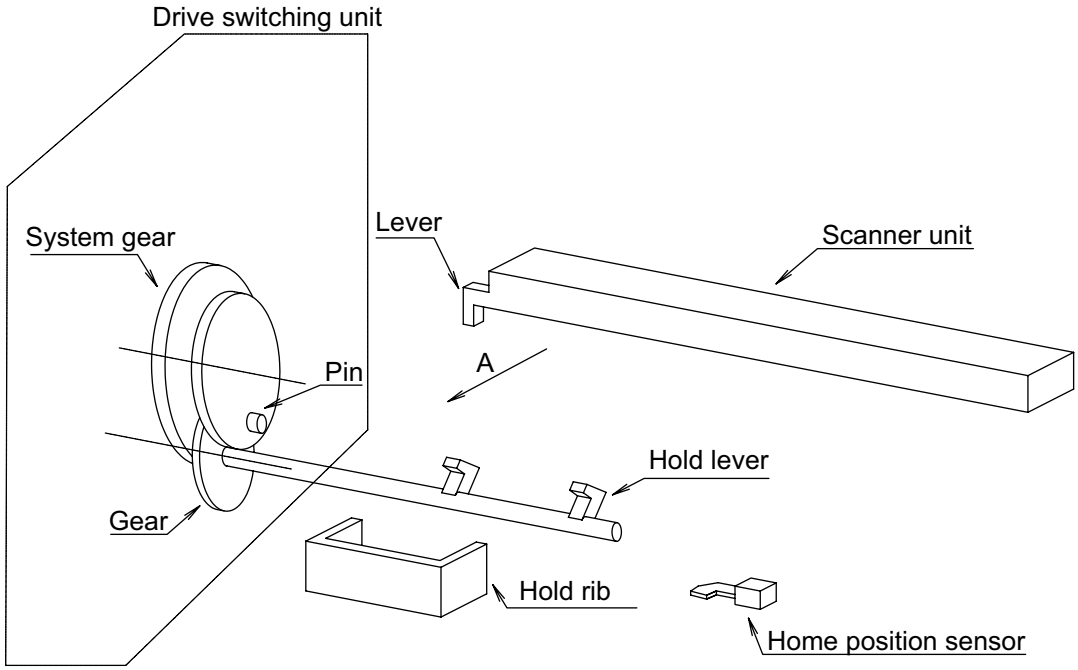

7.2. Gear layout

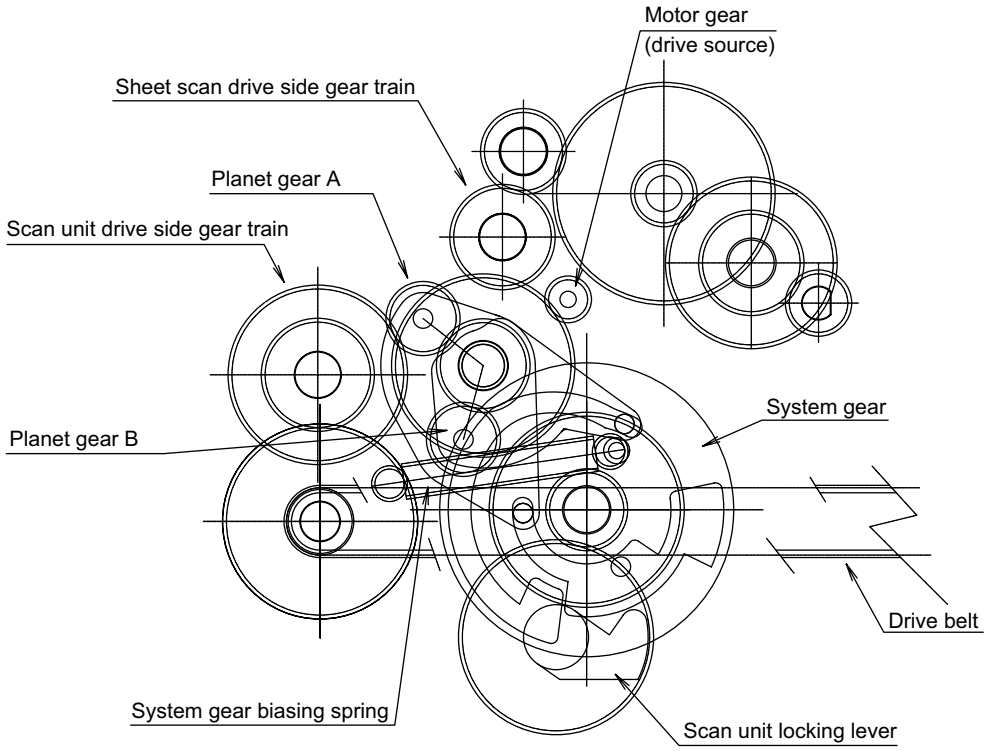

7.3. Fixed scan mode

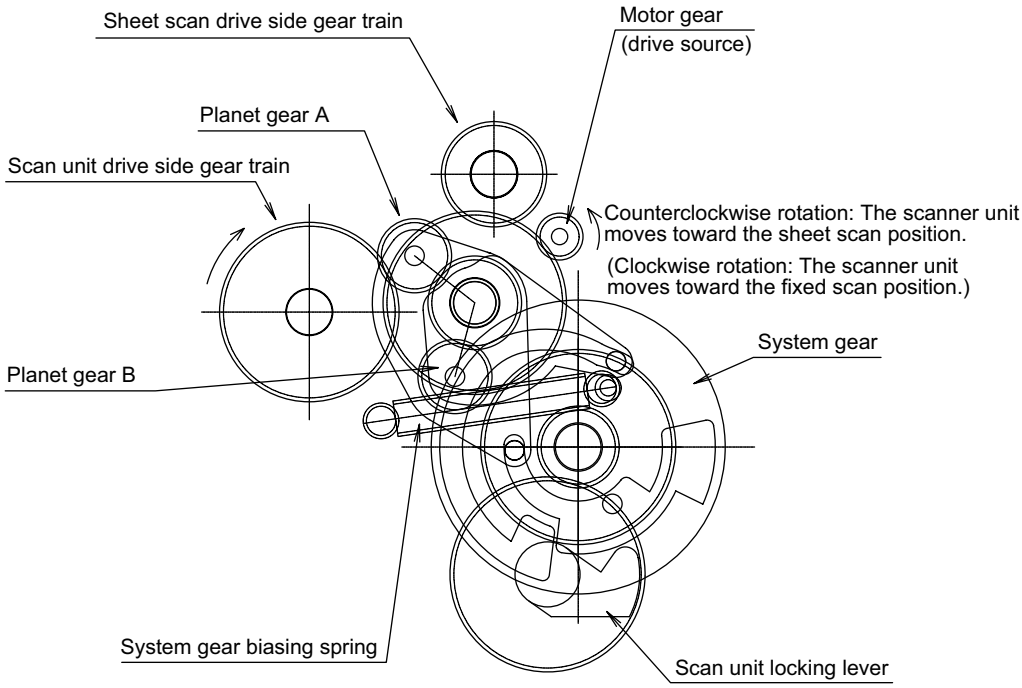

7.4. Sheet scan mode

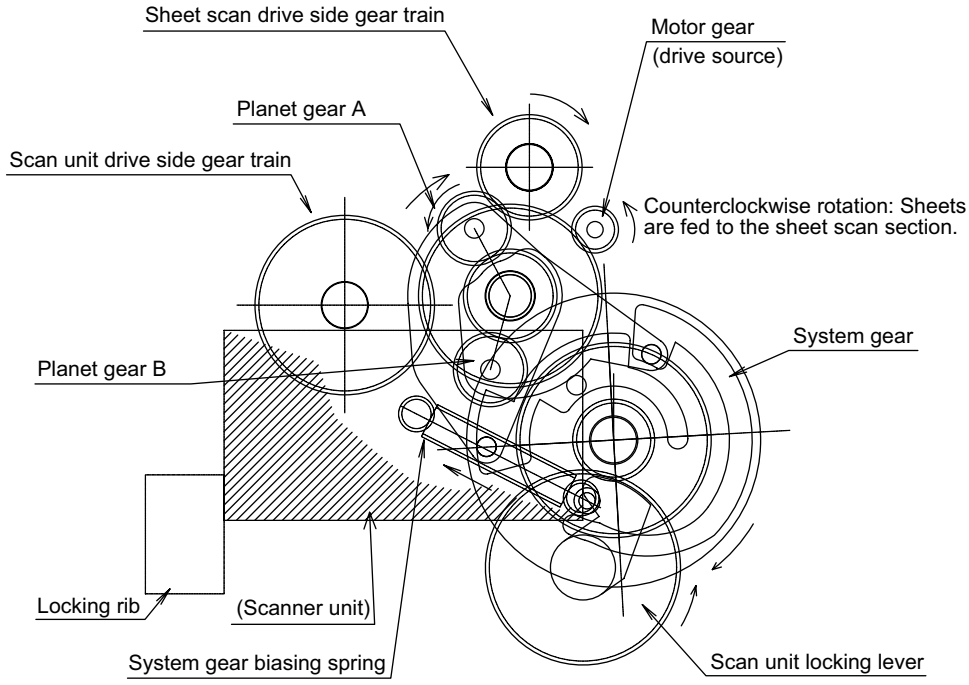

7.5. Switching operation (1) from the sheet scan mode to the fixed scan mode

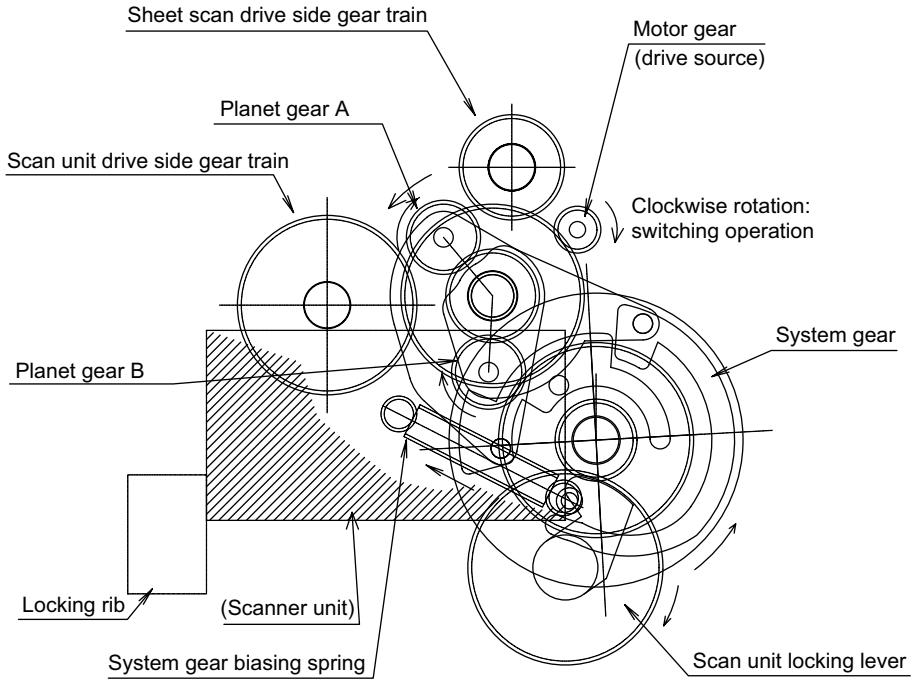

The planet gear A moves toward the scan unit drive side gear and stops at the intermediate position because the pin A on the planet gear A mounting arm is restricted its movement by the cam groove A. The planet gear B moves into engagement with the system gear so that the system gear rotates. Along with the rotation of the system gear, the scan unit locking lever starts rotating in the release direction.

7.6. Switching operation (2) from the sheet scan mode to the fixed scan mode

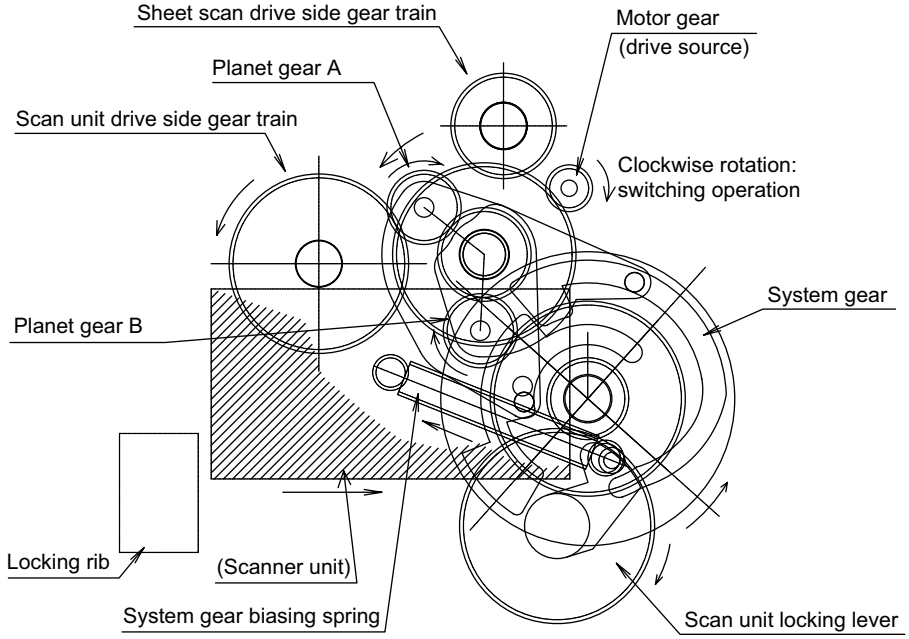

Rotation of the system gear releases the pin A on the planet gear A mounting arm from the cam groove A, and the planetary gear A is engaged with the scan unit drive side gear. The scan unit starts moving toward the fixed scan side.

7.7. Switching operation (3) from the sheet scan mode to the fixed scan mode

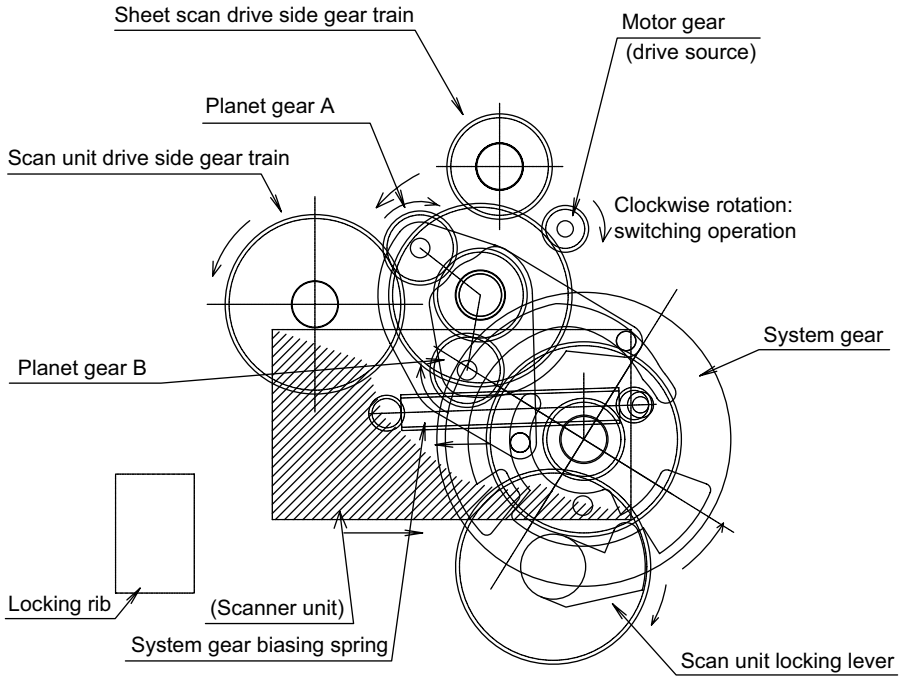

Due to the system gear rotation, the pin B is guided in the cam groove B to turn the planet gear B mounting arm. The planet gear B is disengaged from the system gear, and the system gear loses its power.

7.8. Switching operation (4) from the sheet scan mode to the fixed scan mode

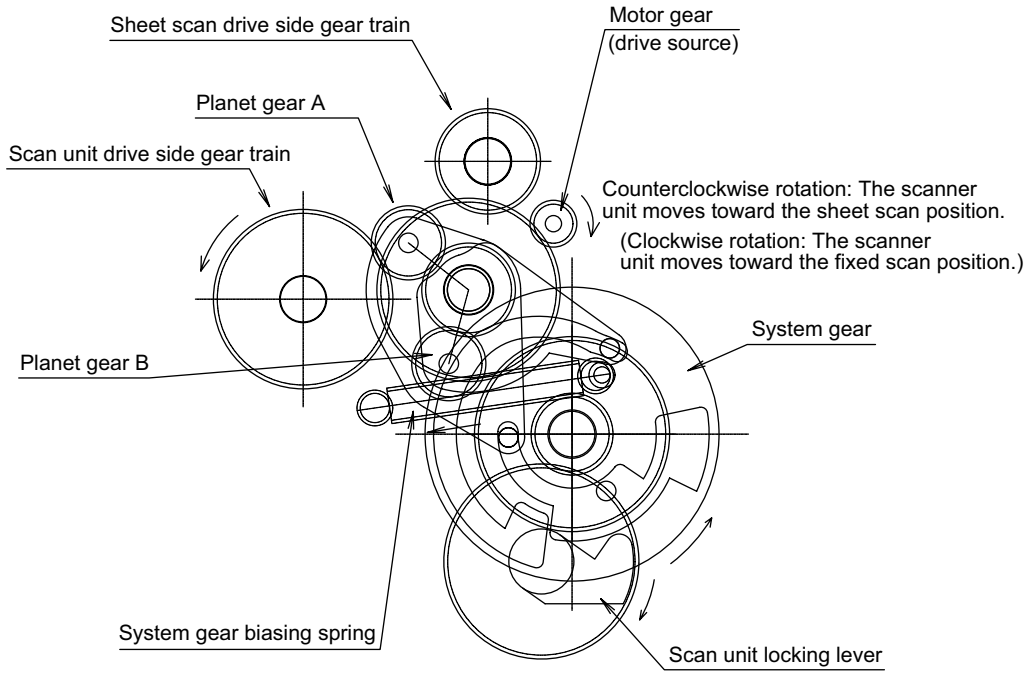

The system gear is driven by the system gear biasing spring until it reaches the stopper at the release position of the scan unit locking lever.

7.9. Switching operation (1) from the fixed scan mode to the sheet scan mode

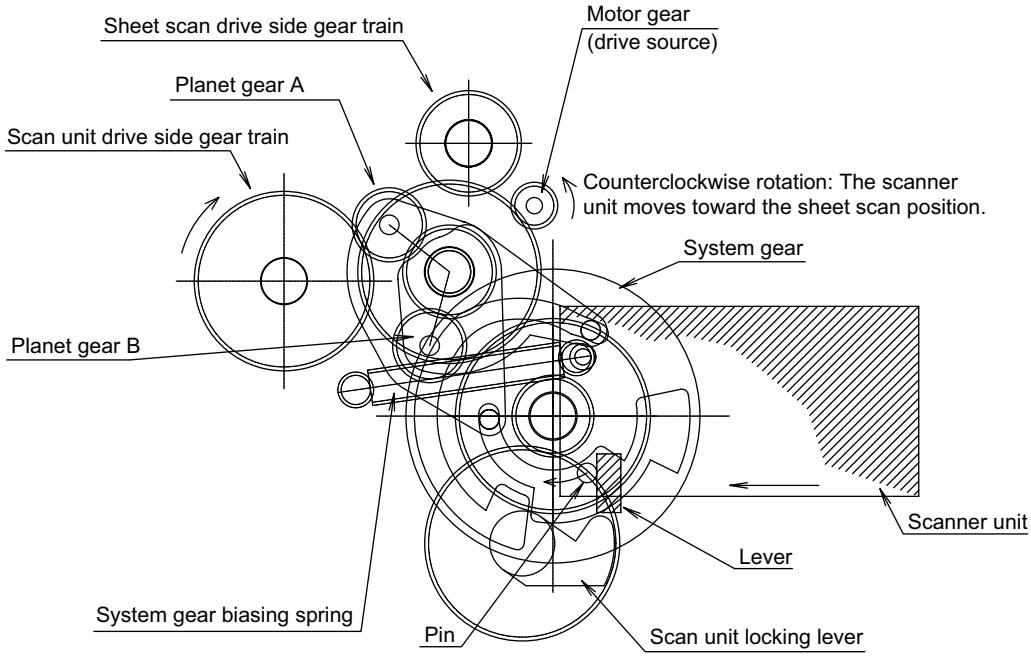

When the scan unit's lever that comes back to the sheet scan position pushes the system gear pin, the system gear starts rotating in clockwise direction.

7.10. Switching operation (2) from the fixed scan mode to the sheet scan mode

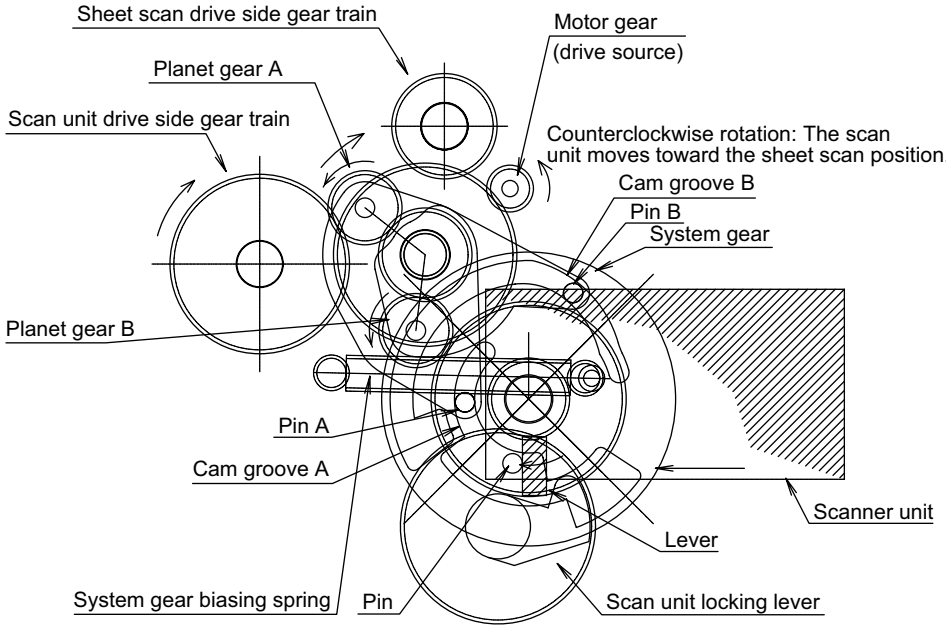

Due to the system gear rotation, the pin B on the planet gear mounting arm is guided in the cam groove B, and the planet gear B is engaged with the system gear. Along with the system gear rotation, the scan unit locking lever moves toward the lock position.

7.11. Switching operation (3) from the fixed scan mode to the sheet scan mode

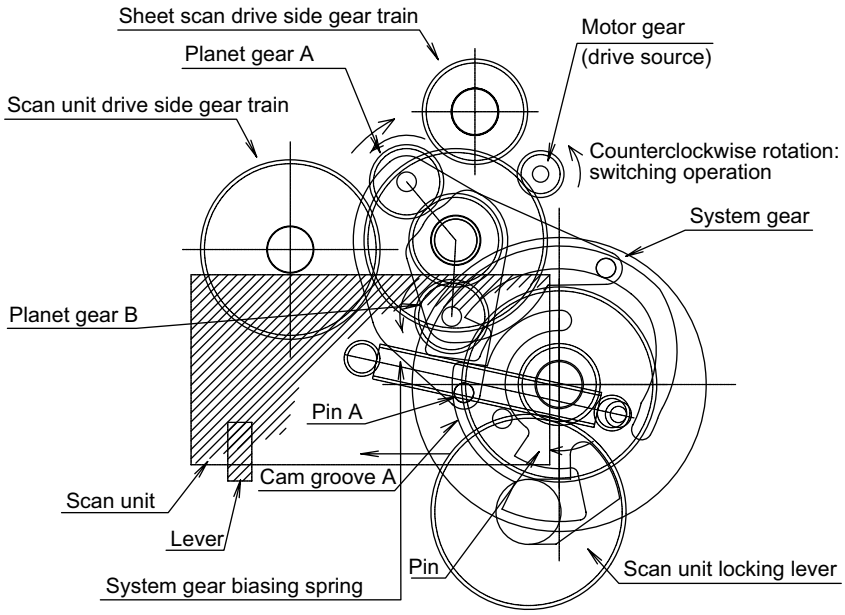

Rotation of the system gear releases the pin A on the planet gear A mounting arm from the cam groove A. The planet gear A moves to the intermediate position between the scan unit drive side gear and the sheet scan drive side gear. At this time, the belt stops moving, and the scan unit stops accordingly just before the sheet scan position.

7.12. Switching operation (4) from the fixed scan mode to the sheet scan mode

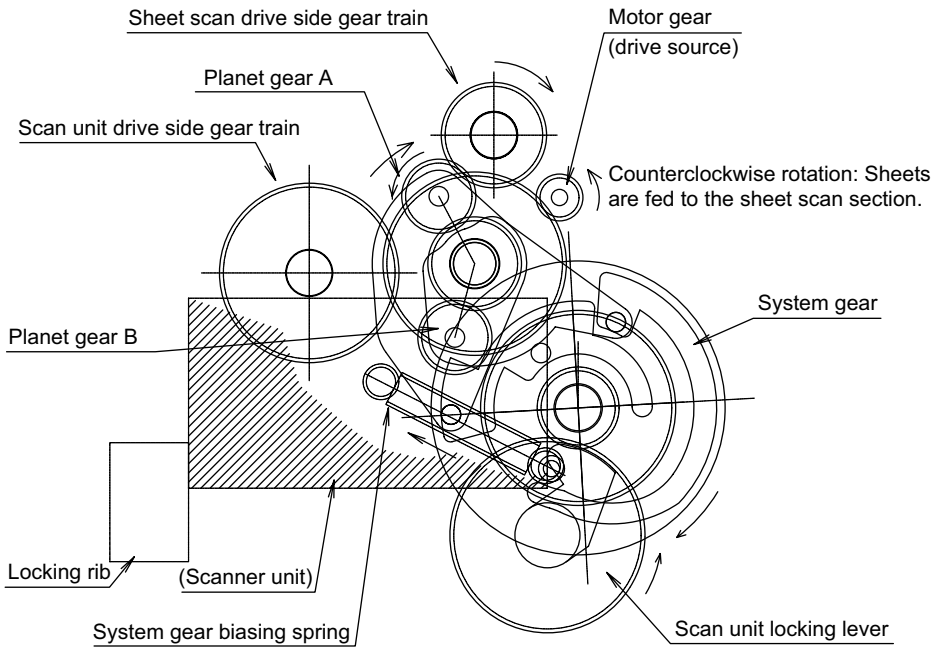

Rotation of the system gear releases the pin B on the planet gear B mounting arm from the cam groove B, and the planet gear B is disengaged from the system gear. After the disengagement, the system gear is kept rotating in clockwise direction by the system gear biasing spring. The scan unit locking lever is moved by the system gear, and it stops after pushing the scan unit to the locking rib. Keep rotating the motor in the counterclockwise direction for the sheet feeding operation.

8. Print process

8.1. Image forming process

Normal paper is used as print paper. A laser beam is used to expose on the OPC surface to form latent electrostatic images, which are developed into visible images (toner images) and are transferred on paper. The basic operation is composed of the five processes: charging, exposure, development, transfer, and cleaning.

8.2. System diagram (1)

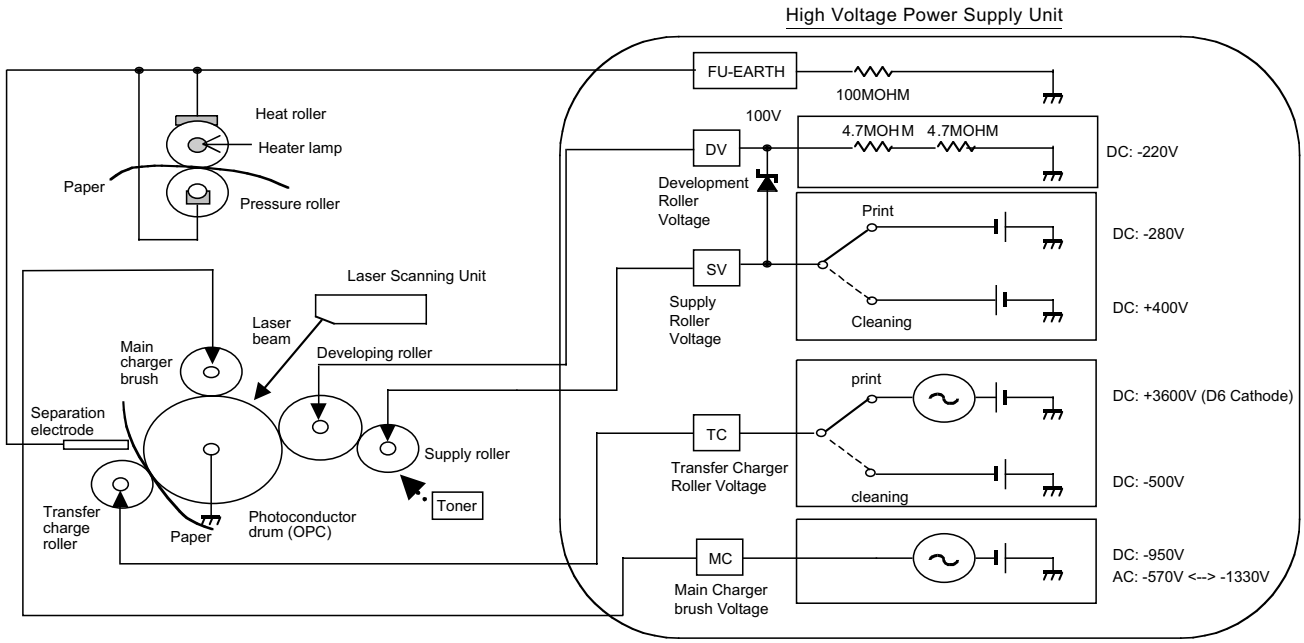

Fig. 7

8.3. System diagram (2)

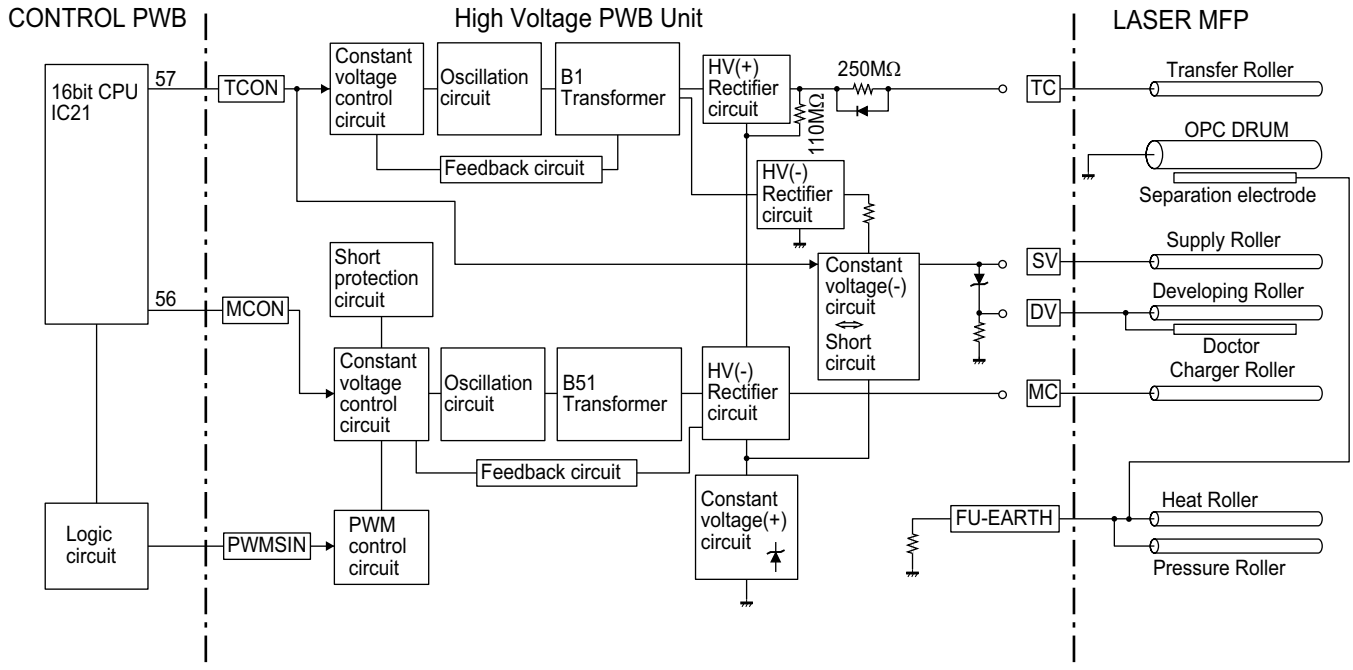

Fig. 8

8.4. Image forming process diagram

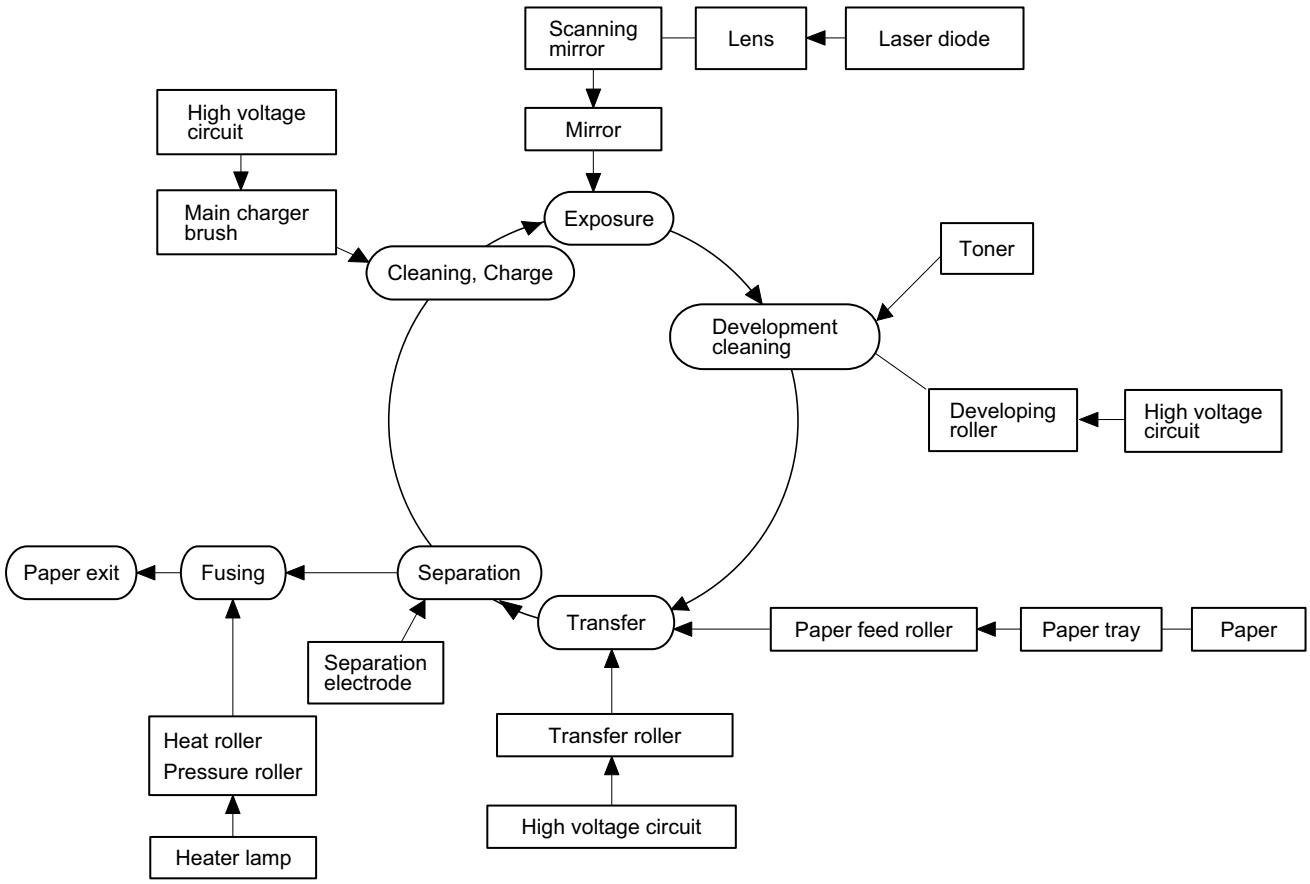

Fig. 9

8.5. Functions and operations of major parts

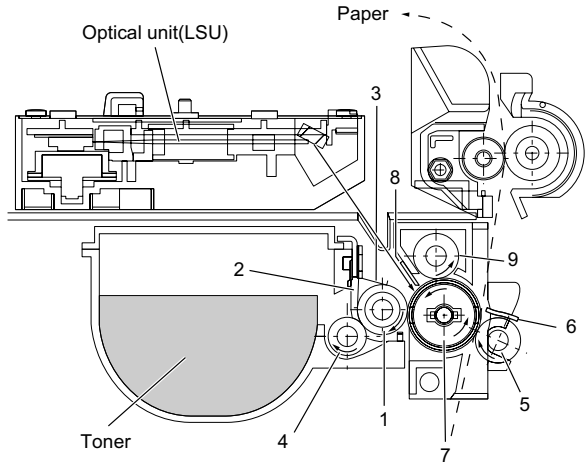

Fig. 10

1	Developing roller	6	Separation electrode
2	Doctor	7	OPC drum
3	Toner stirring plate	8	Discharge plate
4	Toner supply roller	9	Main charger brush
5	Transfer roller		

8.5.1 OPC drum unit

The OPC drum is charged and latent electrostatic images are formed on it and developed into visible toner images.

a. OPC drum

Latent electrostatic images are formed and developed into toner images on the OPC drum.

Organic Photo Conductor is used. The OPC surface is charged negatively by the main charger brush.

When the OPC is exposed to laser beam, the electric resistance of the exposed section falls and electric charge is generated in the OPC. As a result, electric charge on the OPC surface is removed. This principle is used to form latent electrostatic images.

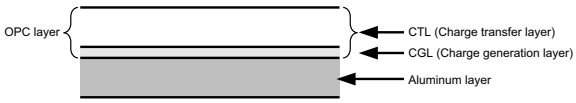

Fig. 11

b. Main charger brush

The main charger brush charges the OPC drum surface. It is composed of brush fiber, and is in the shape of a roller. A high voltage of AC 760V (P-P) and DC-950V are applied to charge the brush.

The main charger brush is in contact with the OPC drum. BY applying electric charge to the OPC drum, the OPC drum is charged to about DC-900V.

8.5.2 Developing unit

Latent electrostatic images formed by laser beam on the OPC drum are developed to visible images by the developing unit. Toner is filled in the developing unit.

a. Developing roller

The developing roller is made of urethane and has a high electric resistance. It is flexible and is in close contact with the OPC drum. Toner on the developing roller is attached to latent electrostatic images on the OPC drum to form visible images on the OPC drum.

A voltage of DC-220V is applied the developing roller.

b. Doctor

The doctor is in close contact with the developing roller. It adjusts toner quantity on the developer roller surface.

The doctor is made of conductive material.

c. Toner supply roller

Toner is supplied to the developing roller by the sponge roller which is connected to the developing roller.

d. Toner stirring plate

This plate stirs toner in the developing unit to transport it to the developing roller smoothly.

8.5.3 Transfer charger roller

The transfer charger roller is made of urethane and has a high electric resistance. It is flexible and is in close contact with the OPC drum.

A high voltage of AC 760V (P-P) and DC +3600V are applied to charge.

It positively charges paper transported from the paper feed section, which transfers negatively charged toner on the OPC drum onto the paper.

8.5.4 Separation electrode

This electrode is connected to the drum ground. It discharges paper which was positively charged in the transfer section to reduce the potential difference with the OPC drum to reduce static electricity between the paper and the OPC drum, thus facilitating separation of paper.

8.6. Image forming operation

STEP 1 (Cleaning, Charging): Residual toner the OPC drum is stirred and negative charges are scattered evenly on the OPC drum. (The OPC drum surface is evenly charged.)

The main charger is a rotating brush roller.

The main charger removes residual toner from the OPC drum by its rotating sweeping action and causes it to stick to the brush.

At the same time, a high voltage of -950V is applied to the main charger roller to generate a discharge of electricity between the roller and the OPC drum, generating positive and negative charges. The negative charges are attracted to the OPC drum, and evenly distributed on the OPC drum. (The OPC drum surface is evenly charged.)

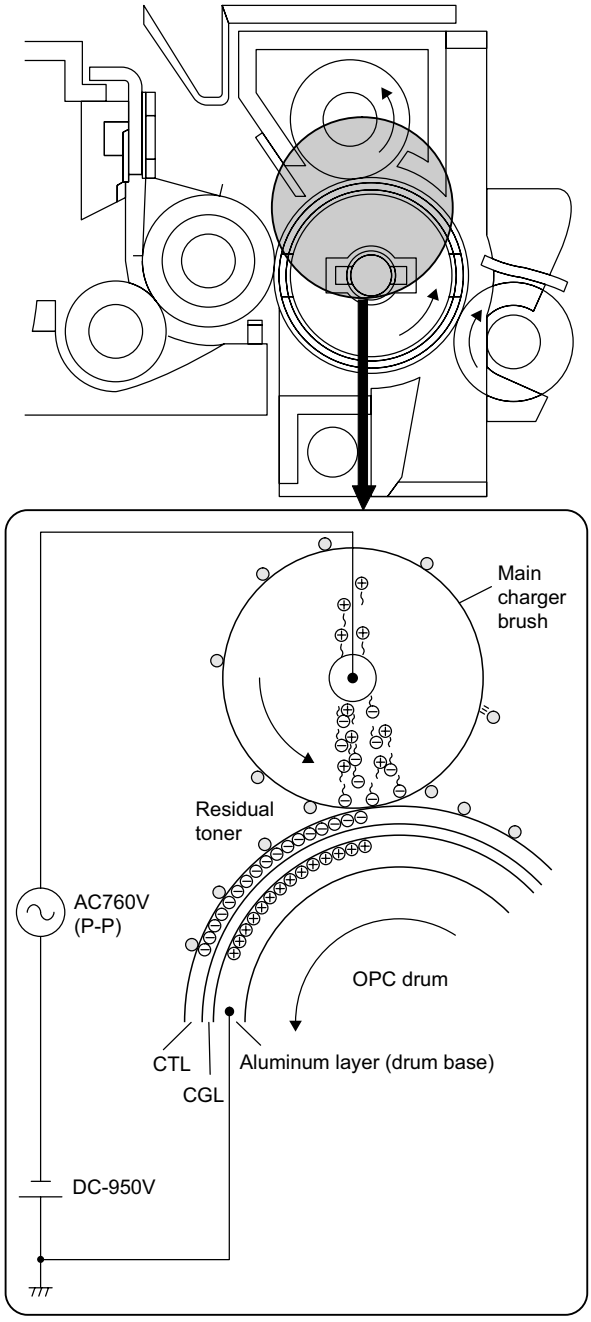

Fig. 12

STEP 2 (Exposure): Laser beam scanning light corresponding to the print data is radiated on the OPC drum.

Positive and negative charges are generated in the OPC drum CGL exposed with the laser beam.

Positive charges generated in the CGL are attracted toward the OPC drum surface (negative charges), and negative charges toward the aluminum layer (positive charges).

Therefore, the positive and negative charges neutralize each other in the laser-exposed area of the OPC drum surface and the aluminum layer, decreasing the potential of the OPC drum surface.

The area which is not exposed to laser beam has no change, and the OPC drum surface remains negatively charged to keep a high potential. As a result, latent electrostatic images are formed on the OPC drum.

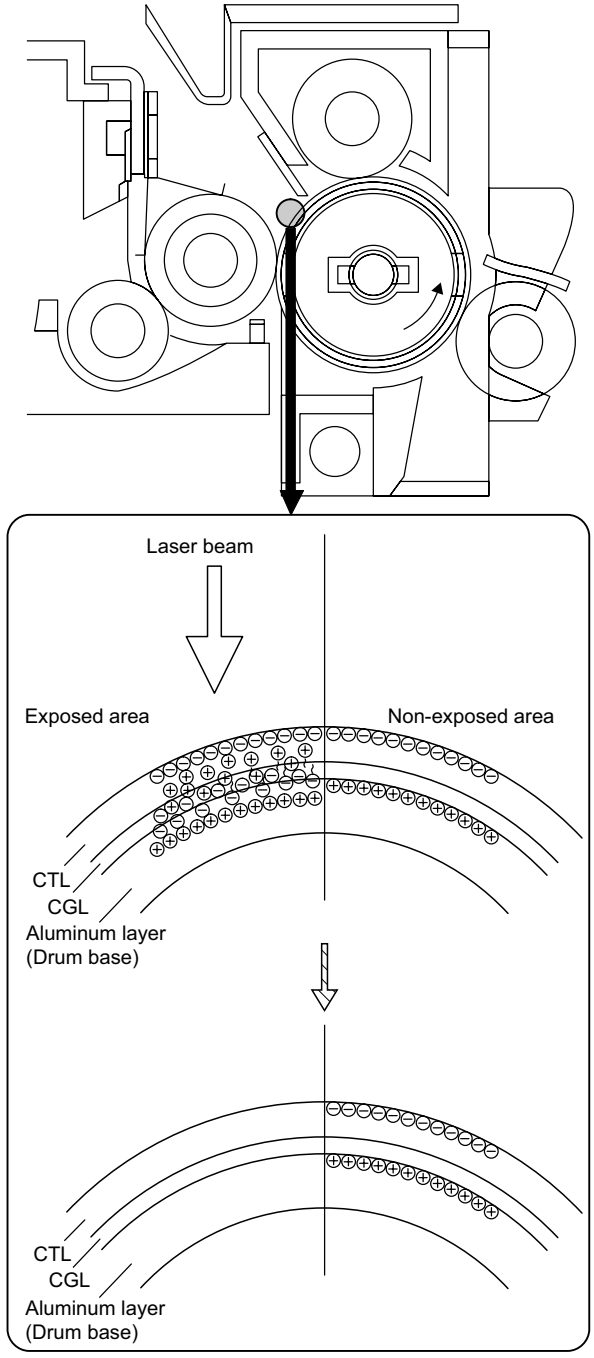

Fig. 13

STEP 3 (Development): Toner is attached to the latent electrostatic images on the OPC drum to form visible images.

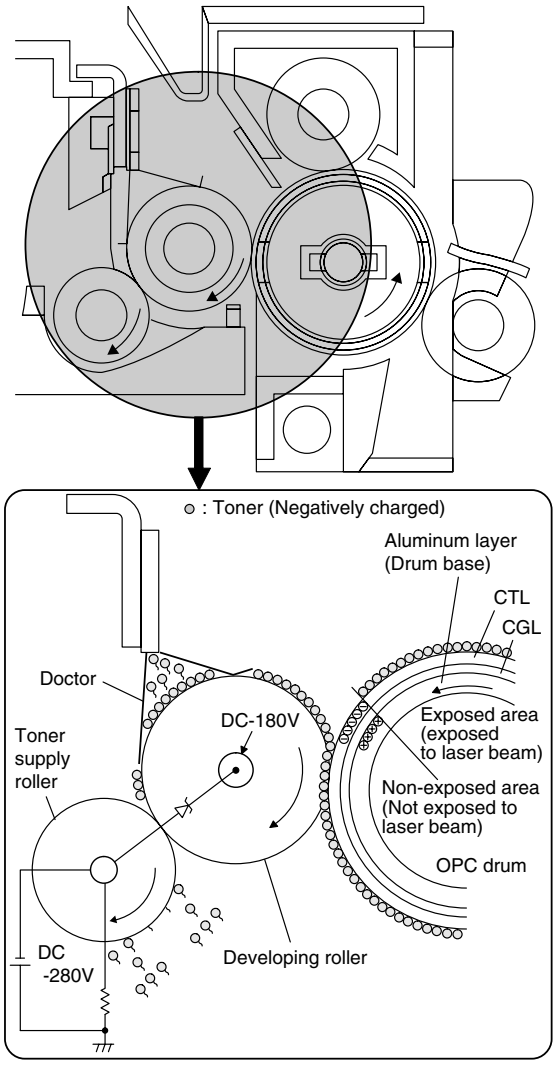

Fig. 14

Toner is transported to the scraper area by the toner supply roller and the developing roller. The quantity of toner to be transported to the doctor section is controlled by the scraper. Toner transported to the doctor section is then passed between the developing roller and the doctor to form a thin toner layer on the developing roller by the pressure applied by the doctor.

When toner passes between the developing roller and the doctor, it is charged negatively by friction.

When an area of OPC drum which was exposed to laser beam and lost its charge comes in contact with the developing roller, toner moves from the developing roller to the OPC drum surface.

The principle of toner movement from the developing roller to the OPC drum surface is as follows.

The bias voltage of DC-280V is applied to the developing roller. Toner is charged negatively by the difference (electrical energy) between the bias voltage and the OPC drum surface potential and is attracted to the OPC drum surface which is positively charged.

At that time, the potential of the area of the OPC drum which was exposed to the laser beam and lost its charge is higher than that of the developing roller.

On the other hand, when an area of OPC drum which was not exposed to the laser beam and did not lose its charge comes in contact with the developing roller, any residual toner attached to the OPC drum is transferred to the developing roller which is more positively charged.

As a result, unnecessary toner on the OPC drum is collected by the developing unit.

The operating principle for that case is contrary to that for transfer of toner from the developing roller to the OPC drum surface. (The electric field energy direction is contrary.)

STEP 4 (Transfer): Visible images of toner on the OPC drum are transferred to the paper.

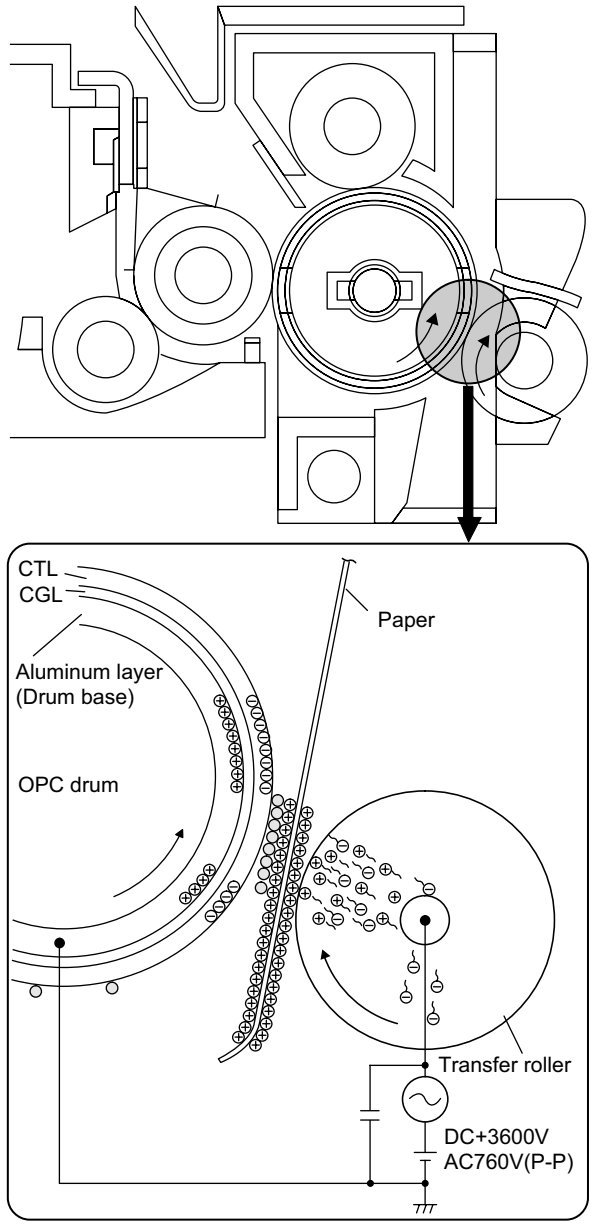

Fig. 15

The high voltage of DC+3600V plus AC760V (P-P) is applied to the transfer roller to generate electric discharge between the roller and the OPC drum, generating positive and negative charges. Positive charges are attracted to the OPC drum and attached to the paper transported between the transfer roller and the OPC drum. Therefore the paper has a strong positive charge.

Negatively charged toner on the OPC drum is attracted by the paper which is positively charged, and the visible images of toner are transferred onto the paper.

STEP 5 (Paper separation): The paper is separated from the OPC drum.

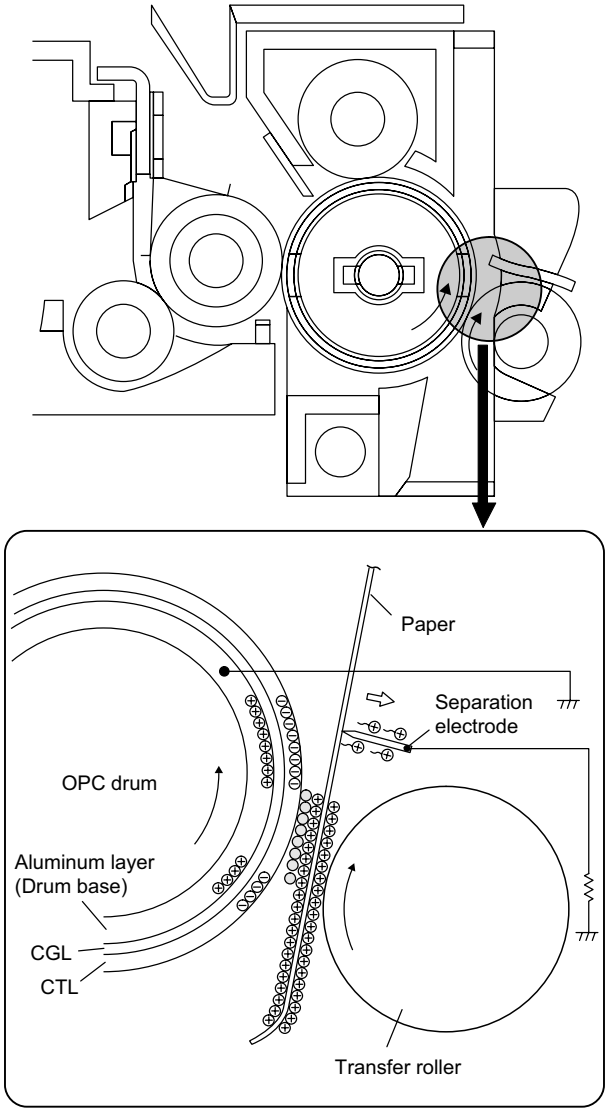

Fig. 16

There is an electrostatic force between the paper which is positively charged in transfer operation and the OPC drum which is negatively charged. The positive charge on the paper is released to the separation electrode, which is the same potential as the aluminum layer of the OPC drum, to reduce the potential difference between the OPC drum and the paper, reducing the electrostatic force.

This operation facilitates separation of the paper from the OPC drum.

STEP 6 (Discharge): The drum surface is discharged to facilitate cleaning of the drum surface. (The remaining toner is easily collected by the main charger roller.)

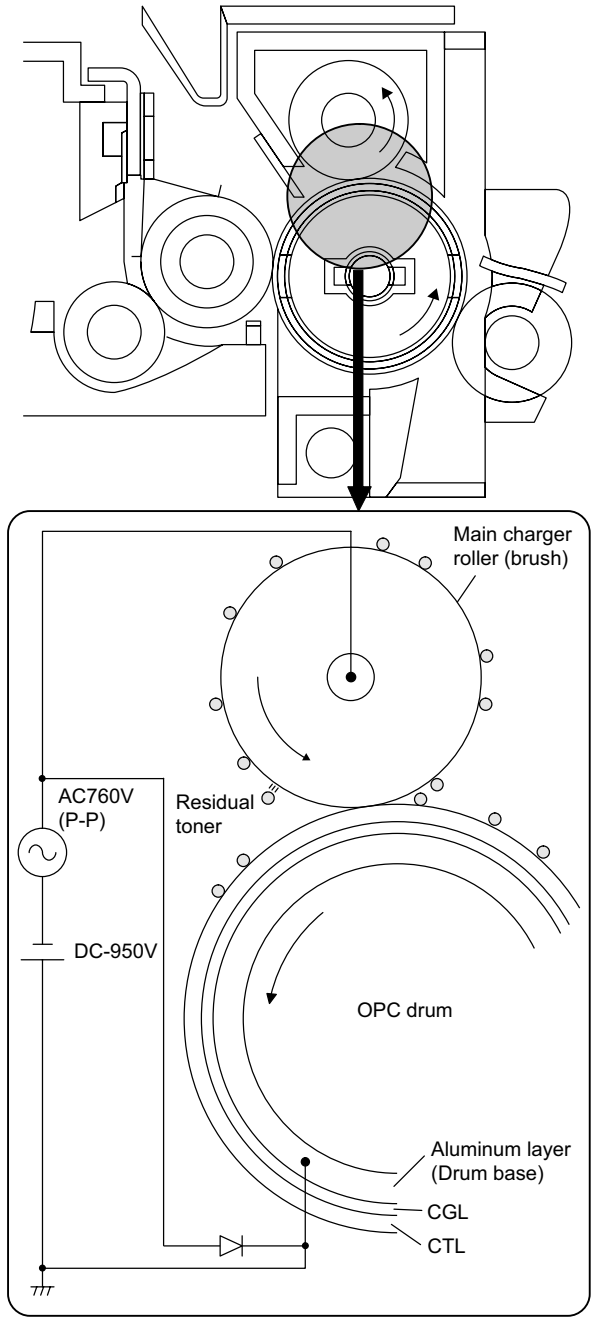

Fig. 17

STEP 7 (Cleaning): Residual toner on the OPC drum is removed.

The main charger is a rotating brush roller.

The main charger removes residual toner from the OPC drum by its rotating sweeping action and causes it to stick to the brush. The main charger brush is in close contact with the mesh-type brush cleaning plate which removes toner and paper dust from the main charger brush mechanically.

8.7. OPC drum surface potential

8.7.1 Transition of OPC drum surface potential by print operation

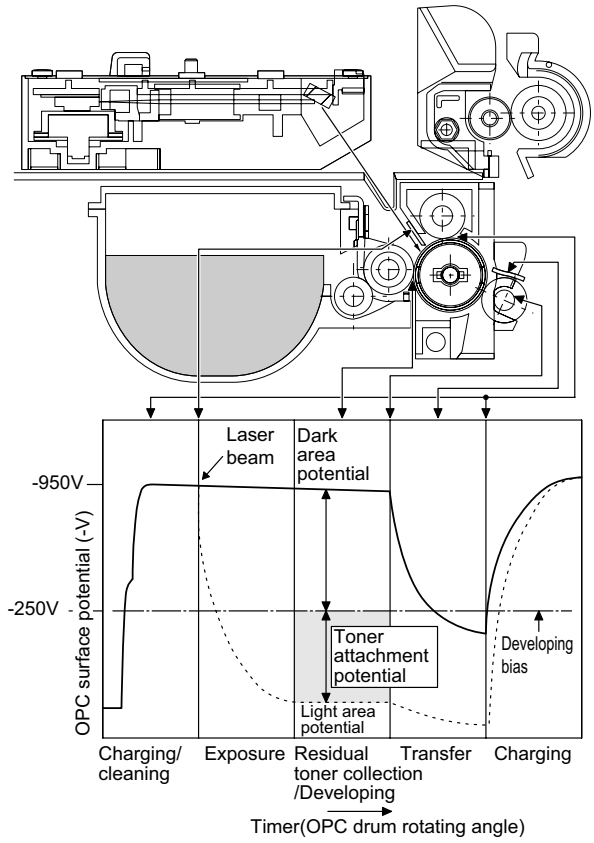

Fig. 18

8.7.2 OPC drum surface potential and developing bias voltage in development

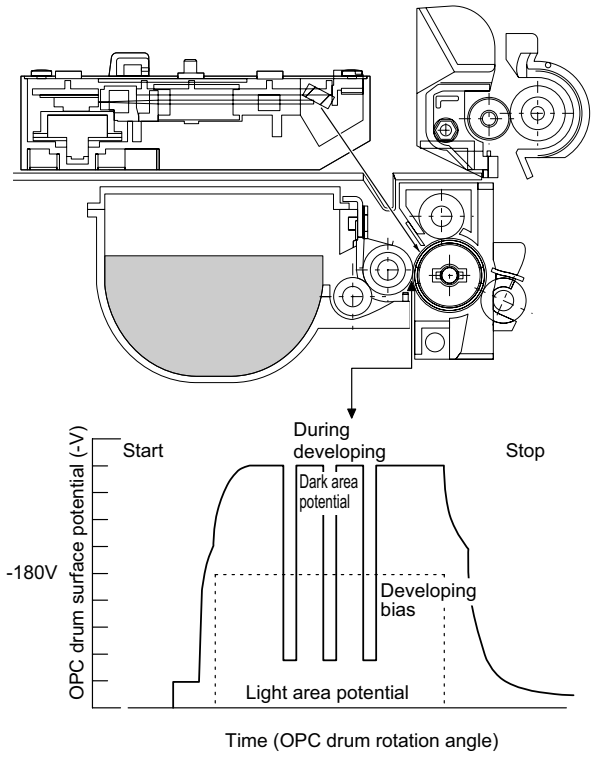

Fig. 19

9. Timing chart

9.1. Print process

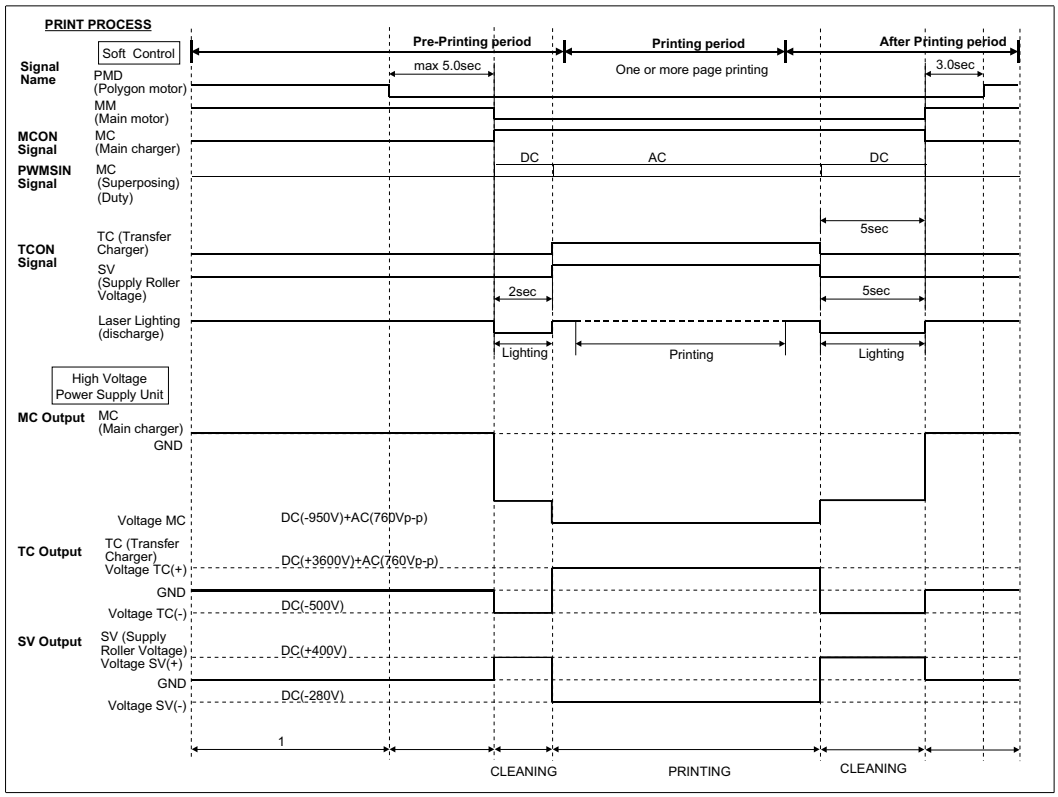

9.2. Cleaning process

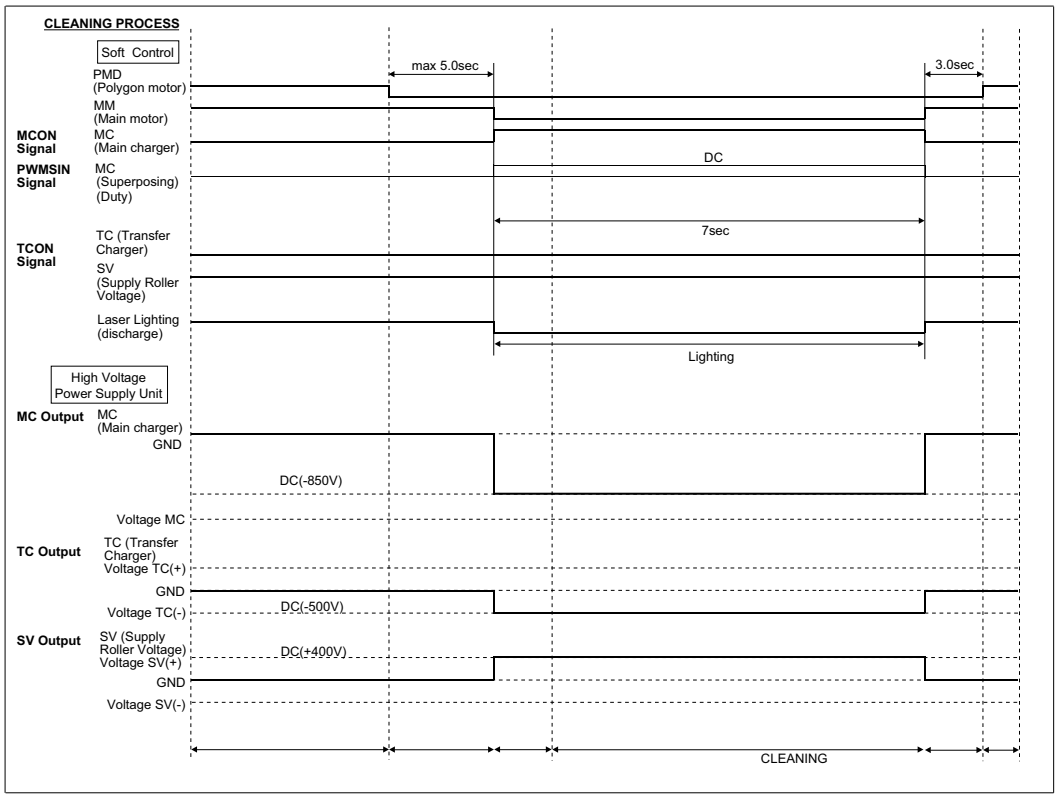

[2] Disassembly and assembly procedures

- This chapter mainly describes the disassembly procedures. For the assembly procedures, reverse the disassembly procedures.
- Easy and simple disassembly/assembly procedures of some parts and units are omitted. For disassembly and assembly of such parts and units, refer to the Parts List.
- The numbers in the illustration, the parts list and the flowchart in a same section are common to each other.
- To assure reliability of the product, the disassembly and the assembly procedures should be performed carefully and deliberately.

1. Rear cover

Parts list (Fig. 1)

No.	Part name	Qty
1	Mechanism unit	1
2	Screw (3x10)	5
3	Hook	4
4	Rear cover	1

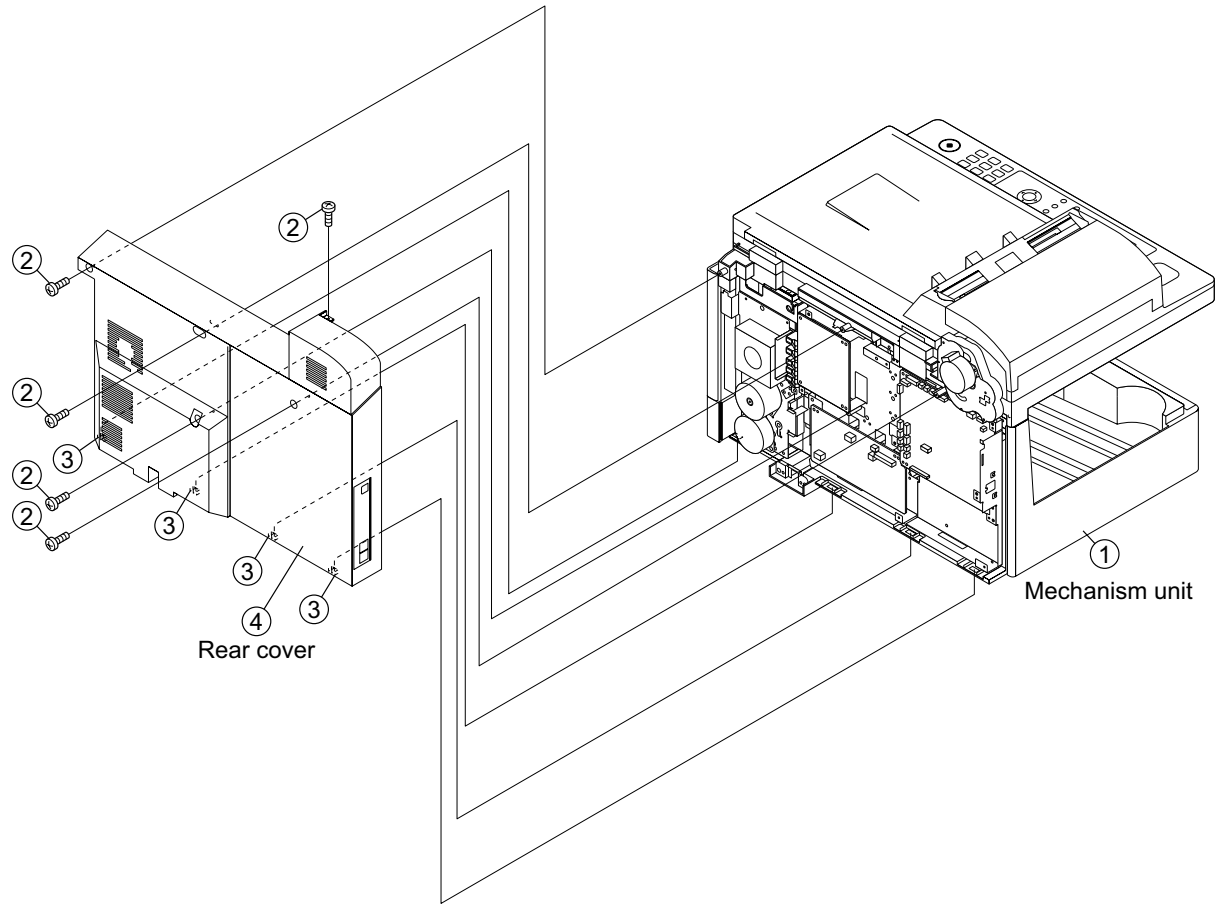

Fig.1

2. PWB unit and PWB plate

Parts list (Fig. 2)

No.	Part name	Qty	No.	Part name	Qty
1	Mechanism unit	1	11	High voltage PWB unit	1
2	Connector	22	12	Screw (3x10)	4
3	Screw (3x8)	3	13	Screw	1
4	Screw (3x10)	1	14	AC cord earth cable	1
5	Control PWB unit	1	15	Screw (3x8)	1
6	Connector	4	16	Earth cable	1
7	Screw (3x8)	2	17	Screw (3x6)	1
8	Power supply PWB unit	1	18	Earth cable	1
9	Screw (3x8)	4	19	PWB plate	1
10	Earth cable	1			

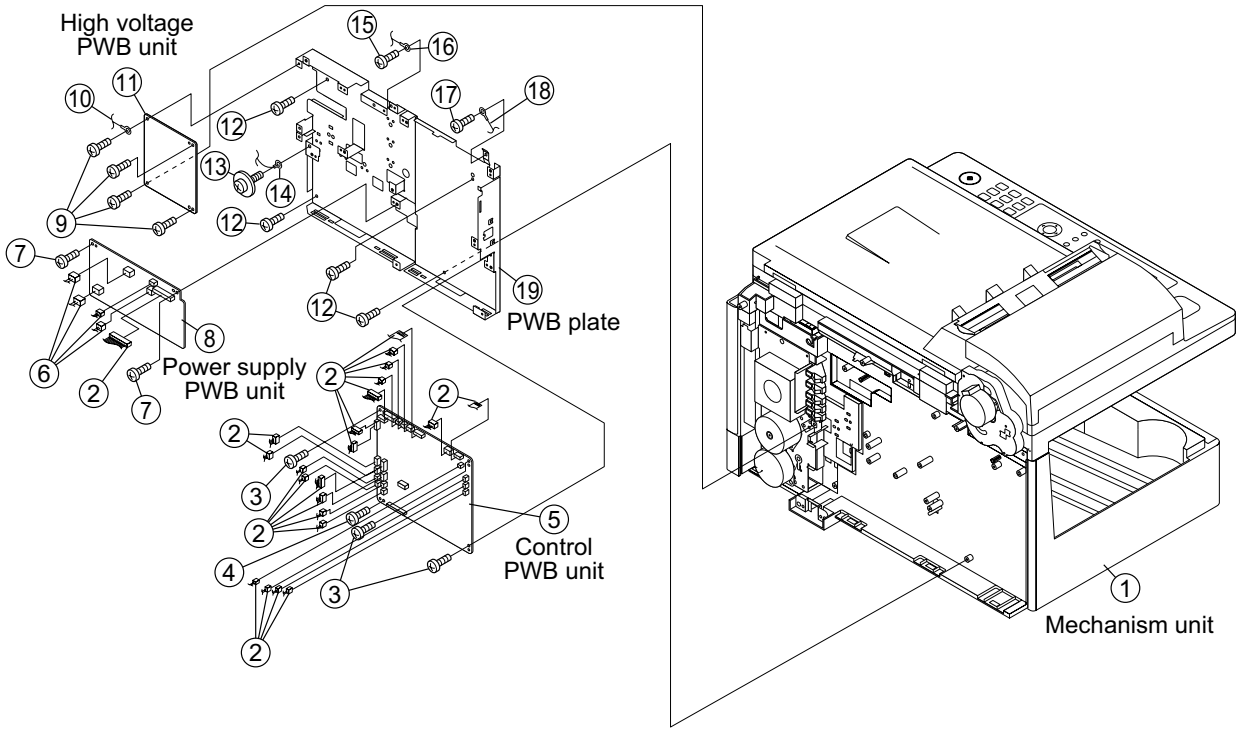

Fig.2

3. Flatbed unit

Parts list (Fig. 3)

No.	Part name	Qty
1	Mechanism unit	1
2	Screw (4x12)	5
3	Flatbed unit	1

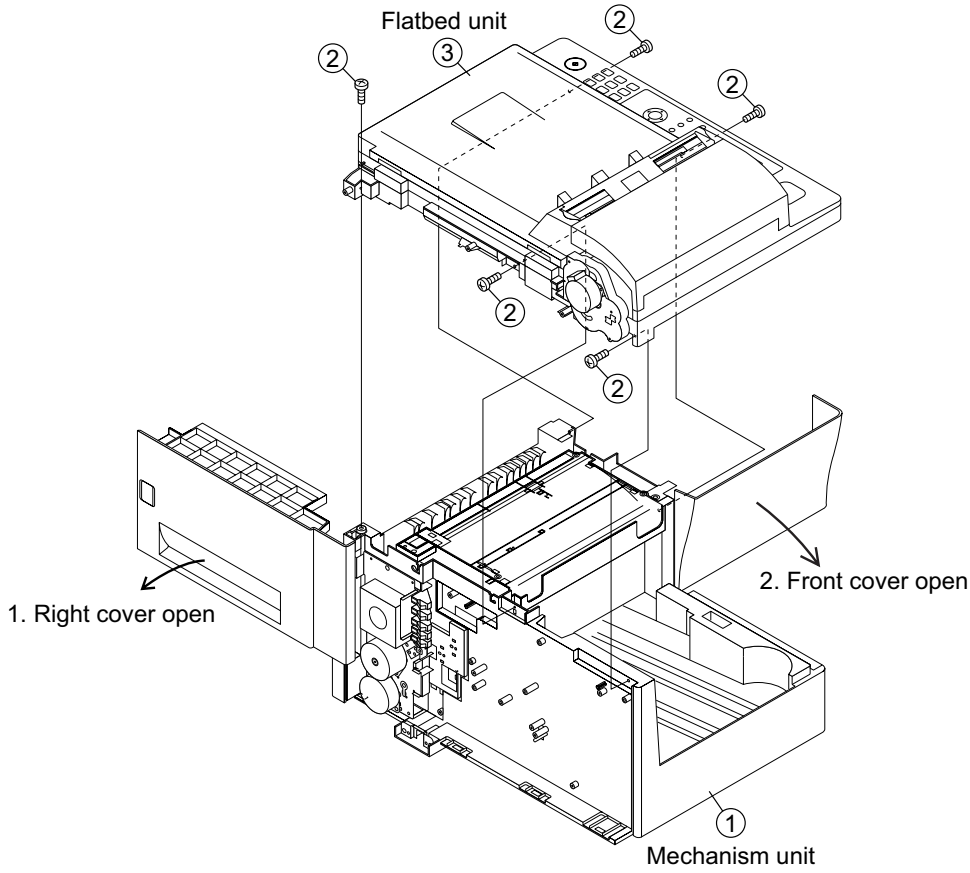

Fig.3

4. Flatbed cover/Scanner unit/Flatbed upper/Drive unit/Flatbed lower

NOTE: For disassembly of the inside of the unit, refer to the exploded view in the parts guide.

Parts list (Fig. 4)

No.	Part name	Qty	No.	Part name	Qty
1	Flatbed cover	1	7	Hook	1
2	Scanner unit	1	8	Screw (3x6)	1
3	Screw (3x12)	1	9	Earth spring	1
4	Screw (3x10)	4	10	Earth spring 1	1
5	Hook	6	11	Screw (3x10)	1
6	Flatbed upper	1	12	Drive unit	1
			13	Flatbed lower	1

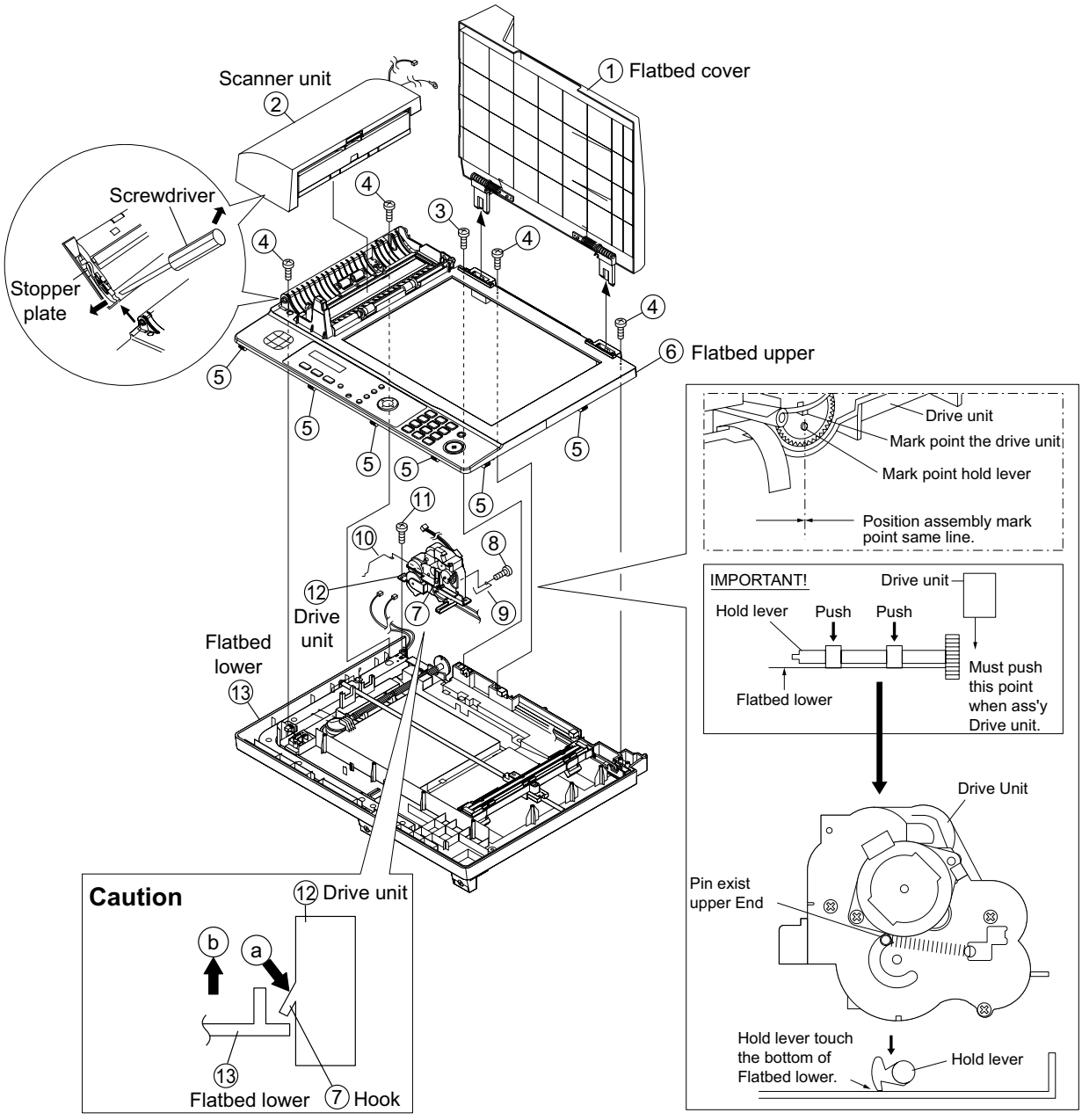

When mounting the drive unit, the hold lever and the teeth of the system gear must be aligned.

Fig.4

5. Right cover/Front cover/Paper exit unit/Optical unit(LSU)/Fusing unit

NOTE: For disassembly of the inside of the unit, refer to the exploded view in the parts guide.

Parts list (Fig. 5)

No.	Part name	Qty	No.	Part name	Qty
1	Mechanism unit	1	8	Screw (3x10)	4
2	Right cover pivot	1	9	Screw (3x8)	1
3	Right cover	1	10	Earth cable	1
4	Screw (3x10)	1	11	Connector	2
5	Front cover	1	12	Optical unit (LSU)	1
6	Screw (3x14)	4	13	Screw	2
7	Paper exit unit	1	14	Fusing unit	1

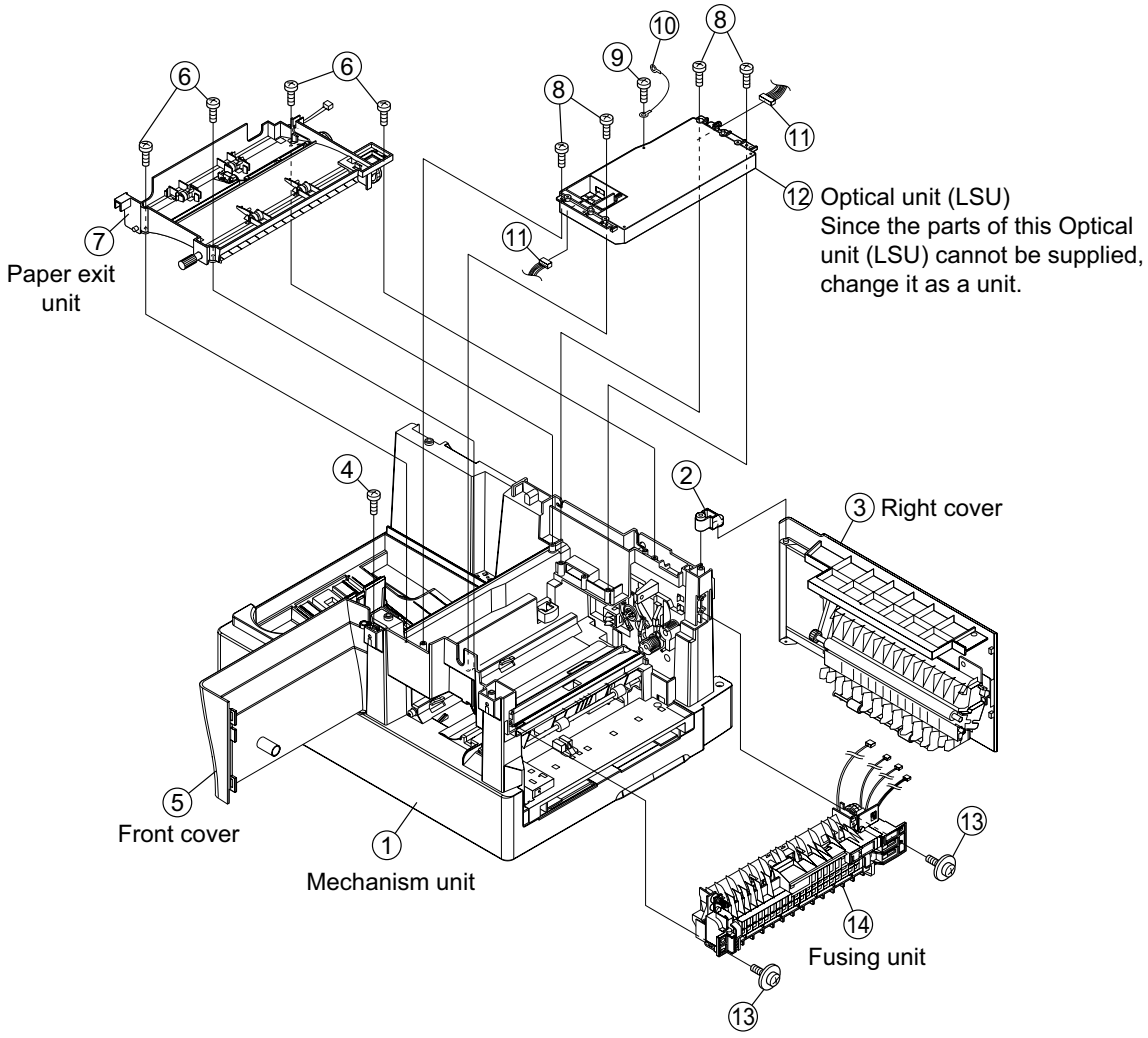

Fig.5

6. Wire treatment

Parts list (Fig. 6)

No.	Part name	Qty
1	Band (100mm)	6
2	Screw	1
3	Wire holder	1
4	Core (F2154)	1
5	Screw (3x8)	1
6	Core (F2146)	1
7	Core (F2147)	1

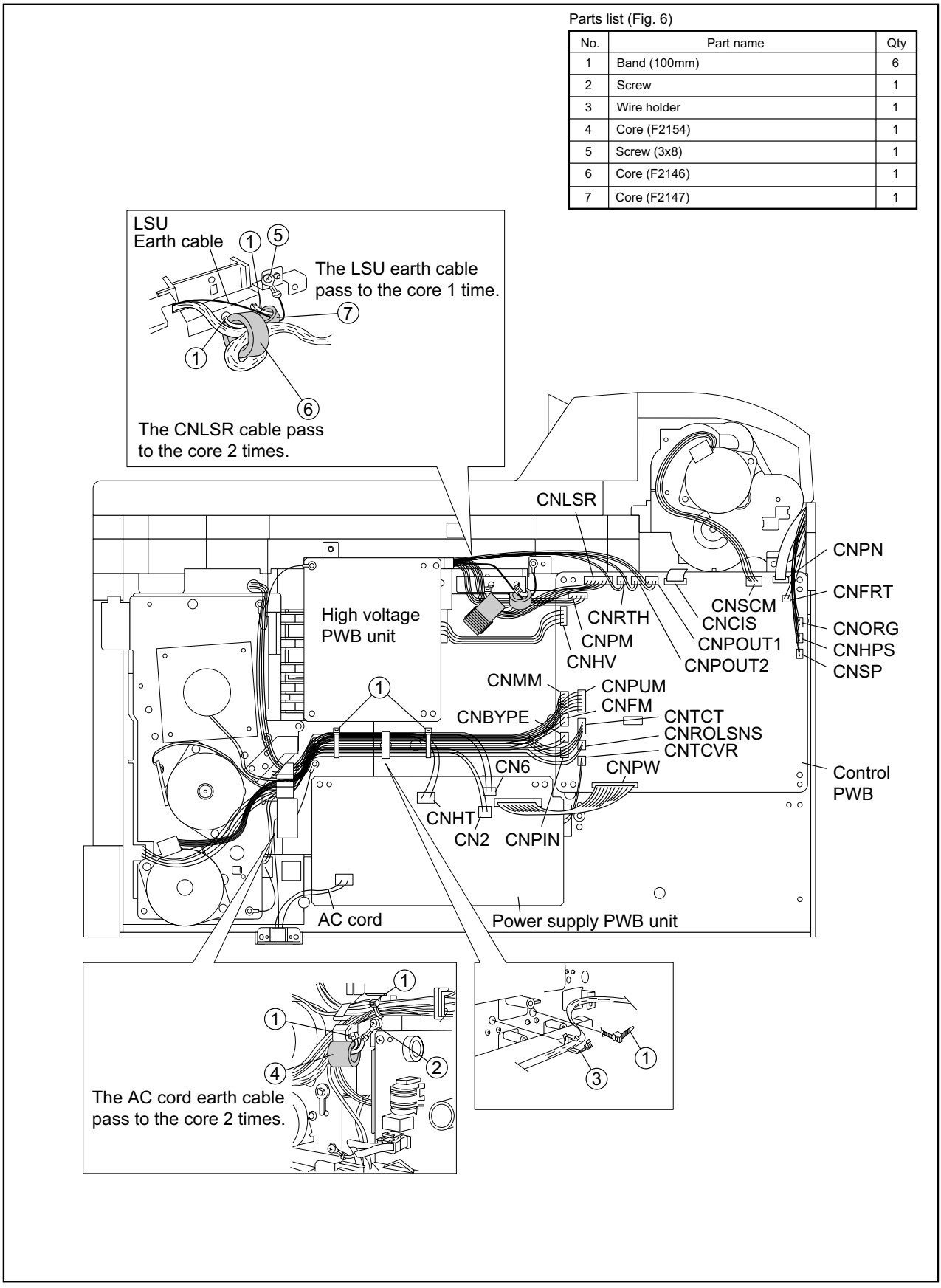

Fig.6

CHAPTER 4. DIAGRAMS

[1] Block diagram

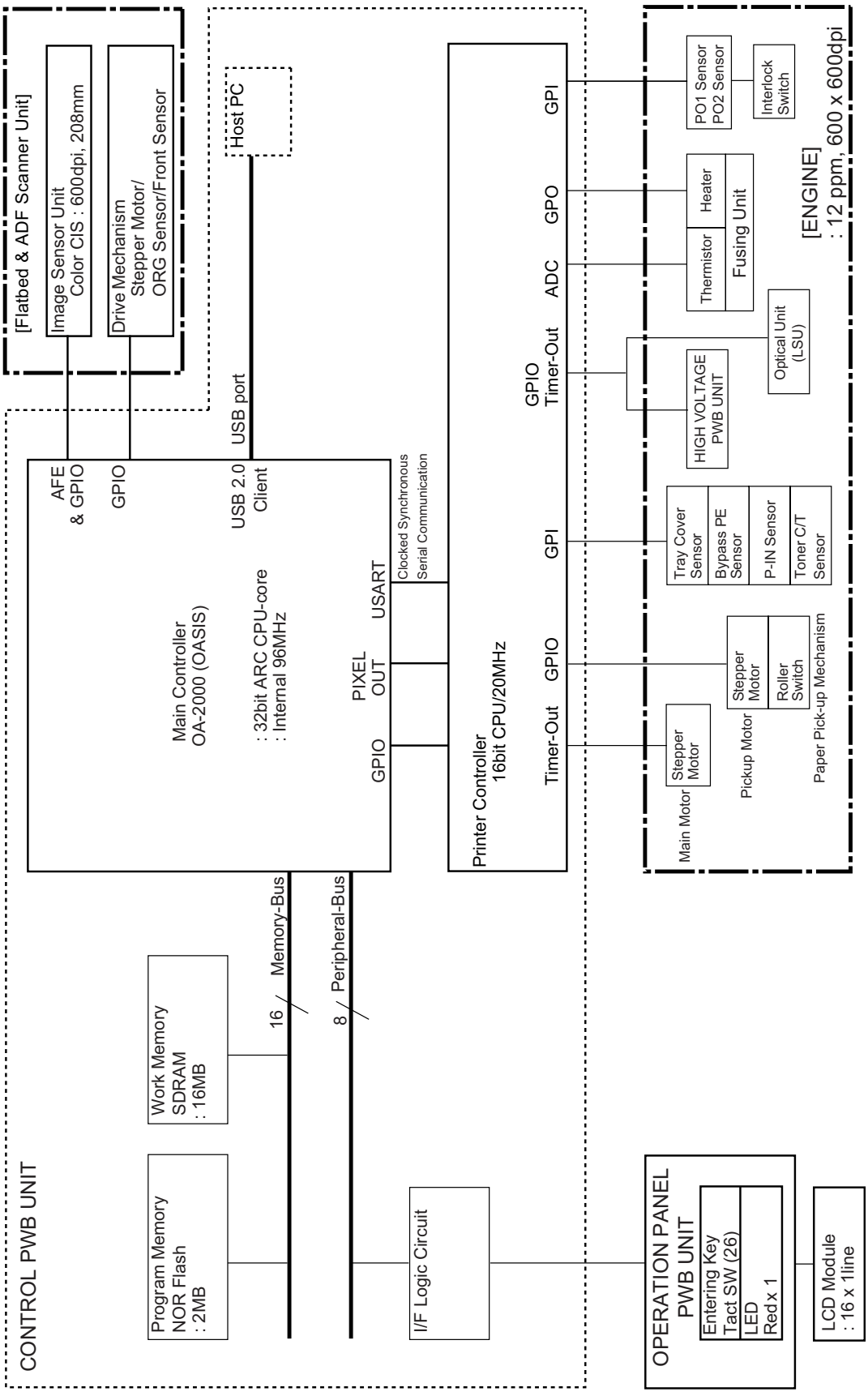

[2] Wiring diagram

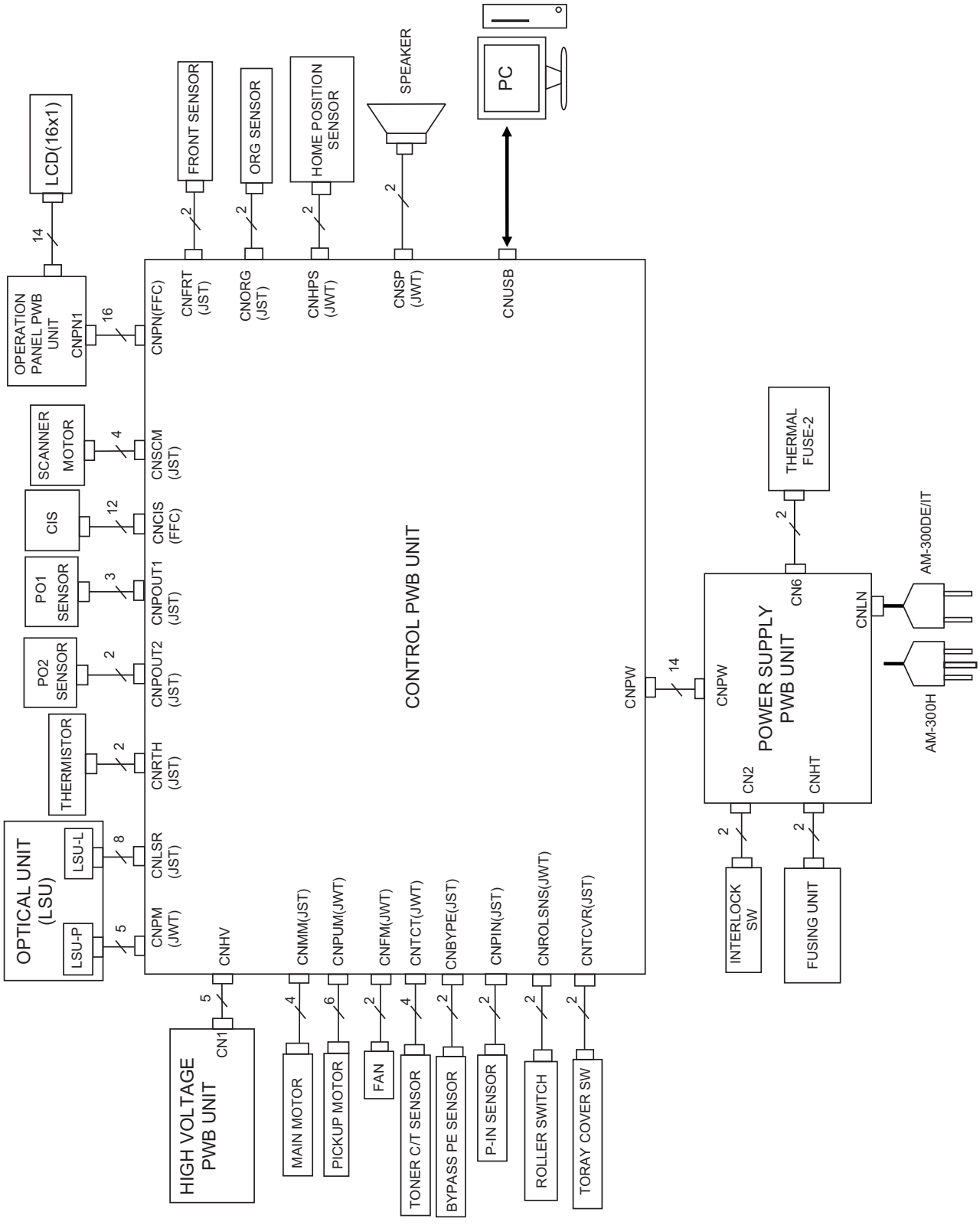

[3] Point-to-point diagram

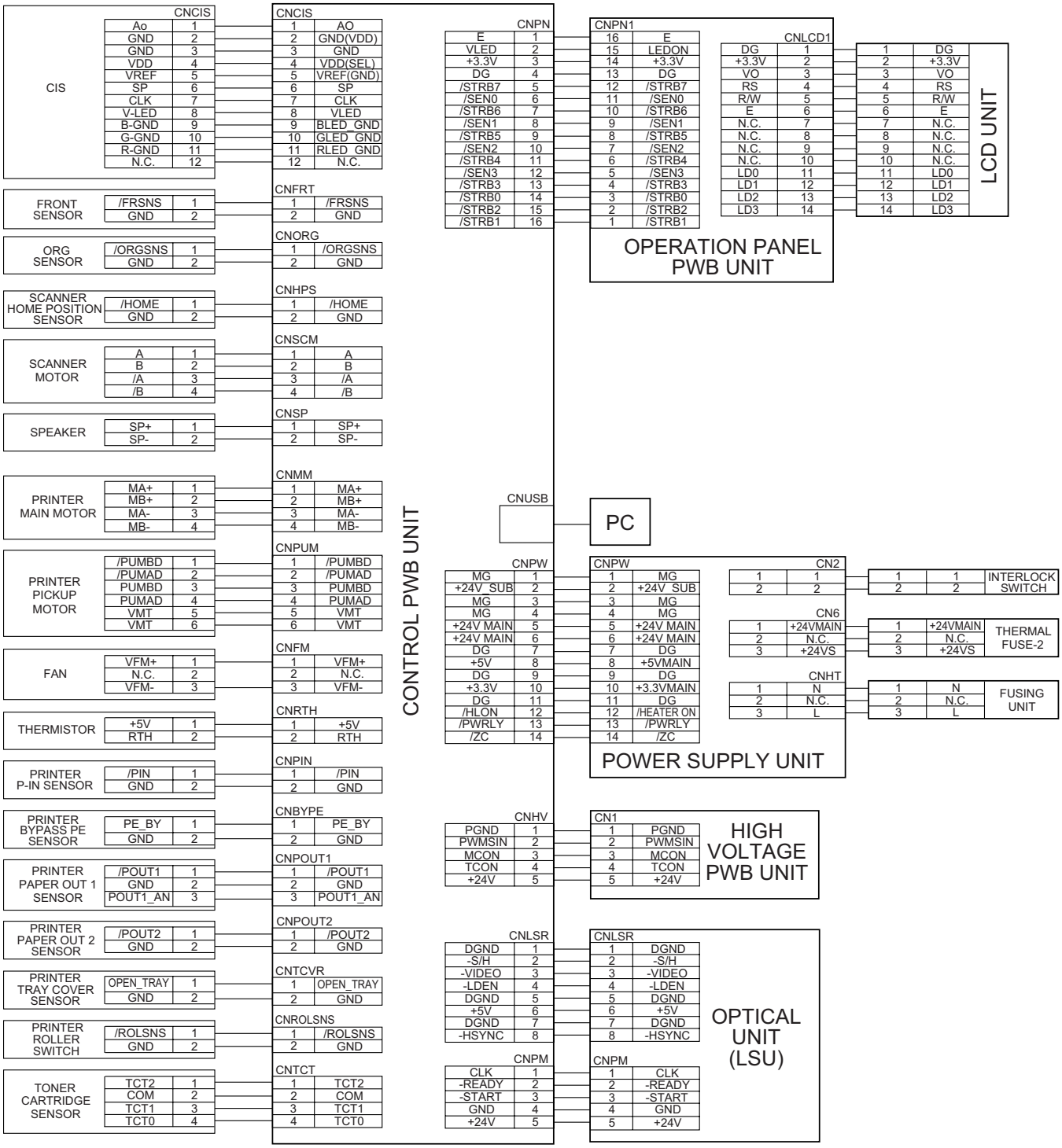

CHAPTER 5. CIRCUIT DESCRIPTION

[1] Circuit description

1. General description

The compact design of the control PWB is obtained by using MFP ASIC OA-2000 in the main control section and high density printing of surface mounting parts. Each PWB is independent according to its function as shown in Fig. 1.

2. PWB configuration

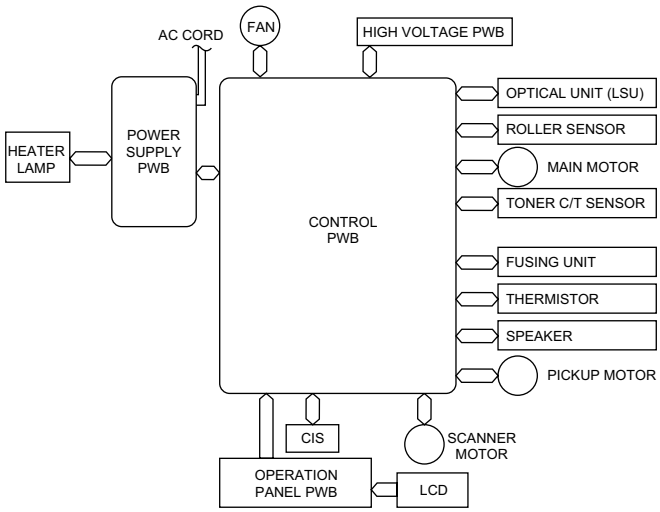

Fig. 1

2.1. Control PWB

The control PWB controls peripheral PWBs, mechanical parts, transmission, and performs overall control of the unit.

2.2. Power supply PWB

This PWB provides voltages of +3.3V, +5V and +24V to the another PWB.

2.3. Panel PWB

The panel PWB allows input of the operation keys.

2.4. High voltage PWB

This PWB provides the high voltage to printer process units.

2.5. LCD PWB

This PWB controls the LCD display.

[2] Circuit description of control PWB

1. General description

The control PWB is composed of the following blocks..

1.1. Main control block

1) Controller block
2) Memory block
3) Speaker block
4) Scanner I/F block
5) Panel I/F block

1.2. Printer control block

1.3. Power section

2. Description of each block

2.1. Main control block

Main control block consisting of CPU OA-2000 with 32bit microprocessor core, SDRAM (128Mbit), FLASH (16Mbit), FAX MODEM, etc., controls scanning, images processing, FAX communication, user interface, USB interface etc., that is all except for printer controlling.

2.1.1 Controller block

1) OA-2000 (IC1): pin-208 QFP (Main CPU)

This is a microcomputer with 32bit microprocessor (ARC) core, which periphery functions are integrated into.

This device is equipped with the following function. The clock inputs 24MHz from outside and operates at 4-times frequency (96MHz) internally.

Feature

- SDRAM Controller

  Addressing, Control and Refresh to SDRAM (IC4)
- USB 2.0 Client I/F (High Speed & Full Speed)

  Connection for PC
- General Purpose I/O port

  Controlling Panel, LIU, Motor driver, etc.

  Inputting of each sensor and status signals
- Contact Image Sensor I/F and Analog Front End

  Processing of SCAN video signal and its A/D conversion.
- Hardware Image Processing Accelerators
- JBIG & JPEG Hardware Image Compression and Decompression
- Serial communication I/F

  Communicating with Printer CPU (IC21)
- Peripheral Bus I/F

  FAX MODEM (IC18) and KEY & STATUS signal buffer (IC10) is connected via Peripheral Bus.
- Pulse Width Modulators

  This generates key input sound, alarm sound and ringer sound.
- Real Time Clock Generator

  It is oscillated with quartz oscillator of 32.768kHz and the clock is provided.

OA-2000 (IC1) Terminal description (1/4)

No.	Pin name	I/O	Pin Description
1	GP_L6	Bidirectional	General Purpose IO
2	GP_L7	Bidirectional	General Purpose IO
3	GP_M0	Bidirectional	General Purpose IO
4	GP_M1	Bidirectional	General Purpose IO
5	GP_M2	Bidirectional	General Purpose IO
6	GP_M3	Bidirectional	General Purpose IO
7	GP_M4	Bidirectional	General Purpose IO
8	GP_M5/UA1_RX_DATA	Bidirectional	General Purpose IO/Serial Communication Interface(Receiving data)
9	GP_M6/UA1_SCLK	Bidirectional	General Purpose IO/Serial Communication Interface(Serial clock)
10	VSS	GND digital	Ground
11	CORE_VDD18	+1.8V digital	Power
12	GP_M7/UA1_TX_DATA	Bidirectional	General Purpose IO/Serial Communication Interface(Sending data)
13	GP_N0/PB_CS0	Bidirectional	General Purpose IO/Peripheral Bus Chip Select 0
14	GP_N1	Bidirectional	General Purpose IO
15	IO_VDD33	+3.3V digital	Power
16	GP_N2	Bidirectional	General Purpose IO
17	GP_N3/PB_CS3	Bidirectional	General Purpose IO/Peripheral Bus Chip Select 3
18	GP_N4/PB_NOE	Bidirectional	General Purpose IO/Peripheral Bus Output Enable
19	GP_N5/PB_NWE	Bidirectional	General Purpose IO/Peripheral Bus Write Enable
20	GP_O0/PB_ADDR0	Bidirectional	General Purpose IO/Peripheral Bus Address
21	GP_O1/PB_ADDR1	Bidirectional	General Purpose IO/Peripheral Bus Address
22	VSS	GND digital	Ground
23	GP_O2/PB_ADDR2	Bidirectional	General Purpose IO/Peripheral Bus Address
24	GP_O3/PB_ADDR3	Bidirectional	General Purpose IO/Peripheral Bus Address
25	GP_O4/PB_ADDR4	Bidirectional	General Purpose IO/Peripheral Bus Address
26	GP_O5	Bidirectional	General Purpose IO
27	GP_O6	Bidirectional	General Purpose IO
28	GP_O7	Bidirectional	General Purpose IO
29	GP_P0/PB_DATA0	Bidirectional	General Purpose IO/Peripheral Bus Data
30	GP_P1/PB_DATA1	Bidirectional	General Purpose IO/Peripheral Bus Data
31	IO_VDD33	+3.3V digital	Power
32	GP_P2/PB_DATA2	Bidirectional	General Purpose IO/Peripheral Bus Data
33	GP_P3/PB_DATA3	Bidirectional	General Purpose IO/Peripheral Bus Data
34	GP_P4/PB_DATA4	Bidirectional	General Purpose IO/Peripheral Bus Data
35	GP_P5/PB_DATA5	Bidirectional	General Purpose IO/Peripheral Bus Data
36	GP_P6/PB_DATA6	Bidirectional	General Purpose IO/Peripheral Bus Data
37	GP_P7/PB_DATA7	Bidirectional	General Purpose IO/Peripheral Bus Data
38	VSS	GND digital	Ground
39	CORE_VDD18	+1.8V digital	Power
40	IO_VDD33	+3.3V digital	Power
41	ADC_AVSS	GND analog	Ground
42	ADC_VIN0	Input analog	A/D Converter Input 0
43	ADC_VIN1	Input analog	A/D Converter Input 1
44	ADC_VIN2	Input analog	A/D Converter Input 2
45	ADC_VIN3	Input analog	A/D Converter Input 3
46	ADC_AVDD33	+3.3V analog	Power
47	ADC_VIN4	Input analog	A/D Converter Input 4
48	ADC_VIN5	Input analog	A/D Converter Input 5
49	ADC_VIN6	Input analog	A/D Converter Input 6
50	ADC_VIN7	Input analog	A/D Converter Input 7
51	ADC_AVSS	GND analog	Ground
52	IO_VDD33	+3.3V digital	Power
53	IO_VDD33	+3.3V digital	Power
54	GP_C0	Bidirectional	General Purpose IO
55	GP_D0	Bidirectional	General Purpose IO
56	GP_C1	Bidirectional	General Purpose IO
57	GP_D1	Bidirectional	General Purpose IO
58	GP_C2	Bidirectional	General Purpose IO
59	GP_C3	Bidirectional	General Purpose IO
60	IO_VDD33	+3.3V digital	Power
61	GP_C4	Bidirectional	General Purpose IO
62	GP_C5	Bidirectional	General Purpose IO
63	GP_C6	Bidirectional	General Purpose IO
64	GP_C7	Bidirectional	General Purpose IO

OA-2000 (IC1) Terminal description (2/4)

No.	Pin name	I/O	Pin Description
65	CORE_VDD18	+1.8V digital	Power
66	VSS	GND digital	Ground
67	GP_F0/PO_PAGE_SYNC	Bidirectional	General Purpose IO/Print Page Synchronous Input
68	GP_F1/PO_LINE_SYNC	Bidirectional	General Purpose IO/Print Line Synchronous Input
69	GP_F2	Bidirectional	General Purpose IO
70	GP_F3	Bidirectional	General Purpose IO
71	IO_VDD33	+3.3V digital	Power
72	GP_F4	Bidirectional	General Purpose IO
73	GP_F5	Bidirectional	General Purpose IO
74	GP_F6	GND digital	General Purpose IO
75	GP_F7	+1.8V digital	General Purpose IO
76	VSS	GND digital	Ground
77	ROM_CS_L	Output	ROM Chip Select
78	SDRAM_DATA0	Bidirectional	SDRAM Data Bus
79	IO_VDD33	+3.3V digital	Power
80	SDRAM_DATA1	Bidirectional	SDRAM Data Bus
81	SDRAM_DATA2	Bidirectional	SDRAM Data Bus
82	SDRAM_DATA3	Bidirectional	SDRAM Data Bus
83	SDRAM_DATA4	Bidirectional	SDRAM Data Bus
84	CORE_VDD18	+1.8V digital	Power
85	VSS	GND digital	Ground
86	SDRAM_DATA5	Bidirectional	SDRAM Data Bus
87	SDRAM_DATA6	Bidirectional	SDRAM Data Bus
88	SDRAM_DATA7	Bidirectional	SDRAM Data Bus
89	SDRAM_DATA8	Bidirectional	SDRAM Data Bus
90	IO_VDD33	+3.3V digital	Power
91	SDRAM_DATA9	Bidirectional	SDRAM Data Bus
92	SDRAM_DATA10	Bidirectional	SDRAM Data Bus
93	SDRAM_DATA11	Bidirectional	SDRAM Data Bus
94	SDRAM_DATA12	Bidirectional	SDRAM Data Bus
95	VSS	GND digital	Ground
96	SDRAM_DATA13	Bidirectional	SDRAM Data Bus
97	SDRAM_DATA14	Bidirectional	SDRAM Data Bus
98	SDRAM_DATA15	Bidirectional	SDRAM Data Bus
99	SDRAM_DQMA0	Output	SDRAM IO Mask
100	IO_VDD33	+3.3V digital	Power
101	SDRAM_DQMA1	Output	SDRAM IO Mask
102	SDRAM_CS0_L	Output	SDRAM Chip Select 0
103	SDRAM_CKE	Output	SDRAM Clock Enable
104	SDRAM_CLK	Output	SDRAM Clock
105	VSS	GND digital	Ground
106	SDRAM_ADDR12	Bidirectional	SDRAM Address Bus
107	SDRAM_ADDR11	Bidirectional	SDRAM Address Bus
108	SDRAM_ADDR10	Bidirectional	SDRAM Address Bus
109	SDRAM_ADDR9	Bidirectional	SDRAM Address Bus
110	IO_VDD33	+3.3V digital	Power
111	SDRAM_ADDR8	Bidirectional	SDRAM Address Bus
112	SDRAM_ADDR7	Bidirectional	SDRAM Address Bus
113	SDRAM_ADDR6	Bidirectional	SDRAM Address Bus
114	SDRAM_ADDR5	Bidirectional	SDRAM Address Bus
115	VSS	GND digital	Ground
116	SDRAM_ADDR4	Bidirectional	SDRAM Address Bus
117	IO_VDD33	+3.3V digital	Power
118	SDRAM_CS1A_L	Output	SDRAM Chip Select 1
119	SDRAM_ADDR3	Bidirectional	SDRAM Address Bus
120	CORE_VDD18	+1.8V digital	Power
121	VSS	GND digital	Ground
122	SDRAM_ADDR2	Bidirectional	SDRAM Address Bus
123	SDRAM_ADDR1	Bidirectional	SDRAM Address Bus
124	SDRAM_ADDR0	Bidirectional	SDRAM Address Bus
125	SDRAM_BA1	Bidirectional	SDRAM Bank Select Address
126	IO_VDD33	+3.3V digital	Power
127	SDRAM_BA0	Bidirectional	SDRAM Bank Select Address
128	SDRAM_RAS_L	Bidirectional	SDRAM Row Address Strobe Command

OA-2000 (IC1) Terminal description (3/4)

No.	Pin name	I/O	Pin Description
129	SDRAM_CAS_L	Bidirectional	SDRAM Column Address Strobe Command
130	SDRAM_WE_L	Bidirectional	SDRAM Write Enable
131	VSS	GND digital	Ground
132	GP_H0/PI_TGEN0	Bidirectional	General Purpose IO/Timing Generator for CIS
133	GP_H1/BASE_CLK	Bidirectional	General Purpose IO/Base Clock Input
134	GP_H2/PI_TGEN2	Bidirectional	General Purpose IO/Timing Generator for CIS
135	GP_H3	Bidirectional	General Purpose IO
136	IO_VDD33	+3.3V digital	Power
137	RTC_VSS	GND digital	Ground
138	RTC_XIN	Crystal/Input	Real Time Clock Crystal
139	RTC_XOUT	Crystal	Real Time Clock Crystal
140	RTC_VDD18	+1.8V digital	Real Time Clock Power
141	VSS	GND digital	Ground
142	CORE_VDD18	+1.8V digital	General Purpose IO
143	GP_H4	Bidirectional	Power
144	GP_H5/PI_TGEN5	Bidirectional	General Purpose IO/Timing Generator
145	GP_H6/PI_TGEN6	Bidirectional	General Purpose IO/Timing Generator
146	GP_H7/PI_TR_TGEN	Bidirectional	General Purpose IO/Timing Generator
147	IO_VDD33	+3.3V digital	Power
148	GP_J0	Bidirectional	General Purpose IO
149	GP_J1	Bidirectional	General Purpose IO
150	GP_J2	Bidirectional	General Purpose IO
151	GP_J3	Bidirectional	General Purpose IO
152	VSS	GND digital	Ground
153	GP_J4	Bidirectional	General Purpose IO
154	GP_J5	Bidirectional	General Purpose IO
155	GP_J6	Bidirectional	General Purpose IO
156	GP_J7	Bidirectional	General Purpose IO
157	IO_VDD33	+3.3V digital	Power
158	GP_K0/PI_TGEN_AUX	Bidirectional	General Purpose IO/Timing Generator
159	GP_K1	Bidirectional	General Purpose IO
160	VSS	GND digital	Ground
161	RESET_L	Bidirectional	Reset signal Input
162	AFE_VINB	Input analog	AFE Video Input
163	AFE_VING	Input analog	AFE Video Input
164	AFE_ANAREF	GND analog	AFE Reference Voltage Input
165	AFE_VINR	Input analog	AFE Video Input
166	AFE_AVSS	GND analog	Ground
167	AFE_VREFN	Analog	AFE Reference Voltage Input
168	AFE_VREFP	Analog	AFE Reference Voltage Input
169	AFE_VCM	Analog	AFE Reference Voltage Input
170	AFE_AVDD33	+3.3 V analog	Power
171	VSS	GND digital	Ground
172	CORE_VDD18	+1.8V digital	Power
173	TCK	Input	(Used only debug mode)
174	TMS	Input	(Used only debug mode)
175	TDI	Input	(Used only debug mode)
176	TDO	Output	(Used only debug mode)
177	CK_PWM1	Bidirectional	Pulse Width Modulators
178	CK_PWM0	Bidirectional	Pulse Width Modulators
179	IO_VDD33	+3.3V digital	Power
180	XOUT	Crystal	Crystal
181	XIN	Crystal/Input	Crystal
182	VSS	GND digital	Ground
183	CORE_VDD18	+1.8V digital	Power
184	PLL_AVDD18	+1.8V analog	Power
185	PLL_AVSS	GND digital	Ground
186	HOST1_DM	Bidir.analog	USB Host Interface
187	HOST1_DP	Bidir.analog	USB Host Interface
188	HOST_AVDD33	+3.3V analog	Power
189	HOST0_DM	Bidir.analog	USB Host Interface
190	HOST0_DP	Bidir.analog	USB Host Interface
191	HOST_AVSS	GND analog	Ground
192	DEV_RSDM	Output analog	USB Device Interface

OA-2000 (IC1) Terminal description (4/4)

No.	Pin name	I/O	Pin Description
193	DEV_RSDP	Output analog	USB Device Interface
194	DEV_DP	Bidir.analog	USB Device Interface
195	DEV_DM	Bidir.analog	USB Device Interface
196	DEV_AVSS	GND analog	Ground
197	DEV_RREF	Analog	USB Device Reference Input
198	DEV_AVDD33	+3.3V analog	Power
199	DEV_VSENSE	Input	USB Device Interface
200	DEV_RUP	Output	USB Device Interface
201	GP_L0/PO_DATA0	Bidirectional	General Purpose IO/Print Video Data Output
202	GP_L1	Bidirectional	General Purpose IO
203	GP_L2	Bidirectional	General Purpose IO
204	GP_L3	Bidirectional	General Purpose IO
205	GP_L4	Bidirectional	General Purpose IO
206	GP_L5	Bidirectional	General Purpose IO
207	VSS	GND digital	Ground
208	IO_VDD33	+3.3V digital	Power

2.1.2 Memory block

1) LH28F160BJE (IC6): pin-48 TSOP (FLASH MEMORY)

16Mbit FLASH Memory.

Firmware being compressed except for boot program, is stored in this device. All of the entry data, user setting and so on are also stored.

2) W9812G6DH-75 or IS42S16800A-7TL (IC4): pin-54 TSOP (SDRAM)

128Mbit (2M x 16bit x 4bank) Synchronous DRAM.

On power on sequence, the firmware being compressed and stored in FLASH memory (IC6) is decompressed to this device. After decompression, this device is used as a program execution memory. It is also used as various work memories and communication buffer etc.

2.1.3 Speaker block

1) Speaker amplifier

The speaker amplifier (IC17) outputs the buzzer and ringer sound generated by Main CPU (IC1).

2.1.4 Scanner I/F block

1) CIS I/F block

The CIS is controlled through buffer (IC14) by Main CPU (IC1), and the output video signal from CIS is input into AFE block of Main CPU (IC1). CIS LED is controlled through LED driving circuit (IC36, Q29~Q34) by Main CPU (IC1).

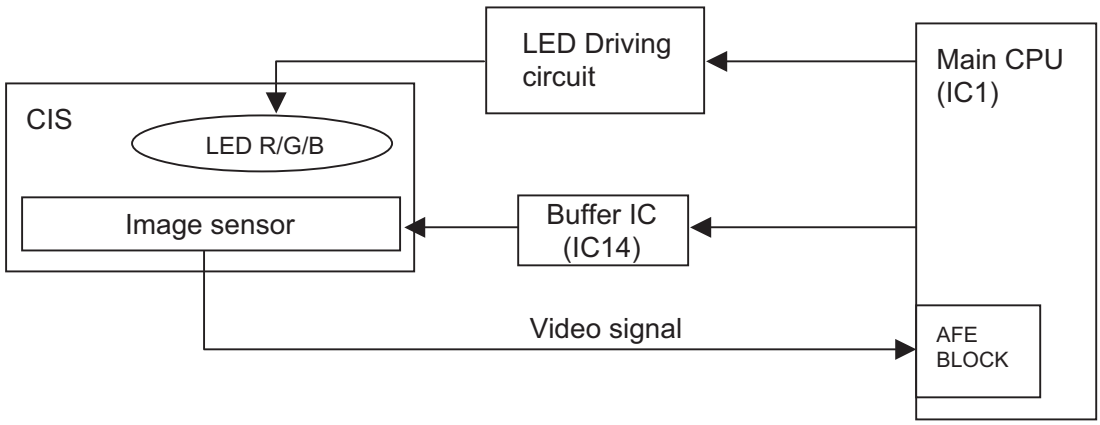

Fig. 2

2) Scanner Motor control

MTD2007F (IC12): pin-28 HSOP (Scanner Motor Driver)

The scanner motor is driven by this Motor Driver which is the constant current motor driver with bipolar, chopper system the rotation speed and its timing of the scanner motor are controlled by Main CPU (IC1).

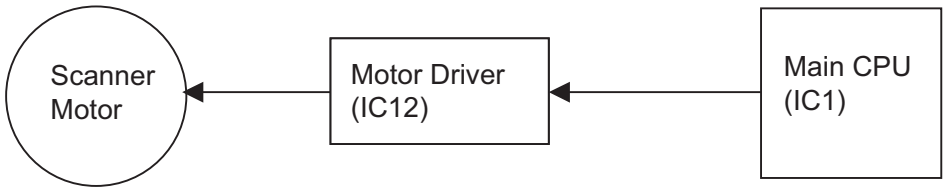

Fig. 3

2.1.5 Panel I/F block

The strobe signals for LCD control and key scanning of the operation panel PWB unit are output from the GPIO port of the Main CPU (IC1). The key switch sense signals from panel unit is connected to peripheral bus via buffer IC (IC14).

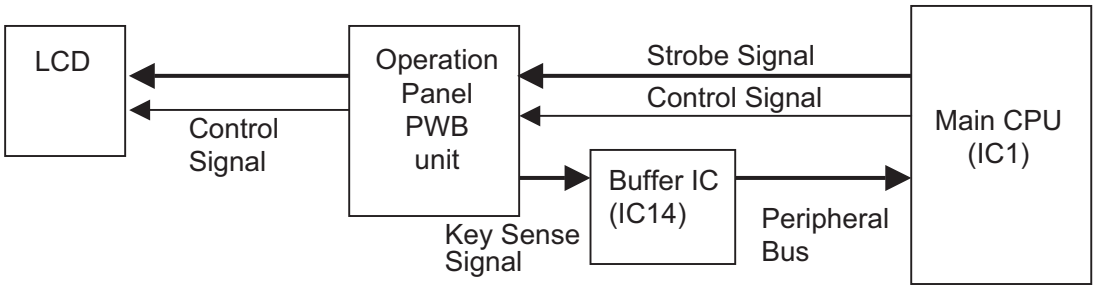

Fig. 4

2.2. Printer control block

Printer control block is composed by a single chip microcomputer "HD64F36049" which built in a 16bit CPU, 96kbyte flash ROM and 3kbyte RAM.

2.2.1 HD64F36049 (IC21): pin-80 QFP

Feature

High-speed H8/300H central processing unit with an internal 16bit architecture.

- Upward-compatible with H8/300 CPU on an object level

  Sixteen 16bit general registers

  62 basic instructions
- Various peripheral functions

  Timer B1 (8bit timer)

  Timer V (8bit timer)

  Timer W (16bit timer)

  Timer Z (16bit timer)

  14bit PWM)

  Watchdog timer

  SC13 (Asynchronous or clocked synchronous serial communication interface) x 3 channels

  10bit A/D converter
- On-chip memory

  ROM (F-ZTAT): 96kbytes

  RAM: 4kbytes
- Operation frequency: 20MHz

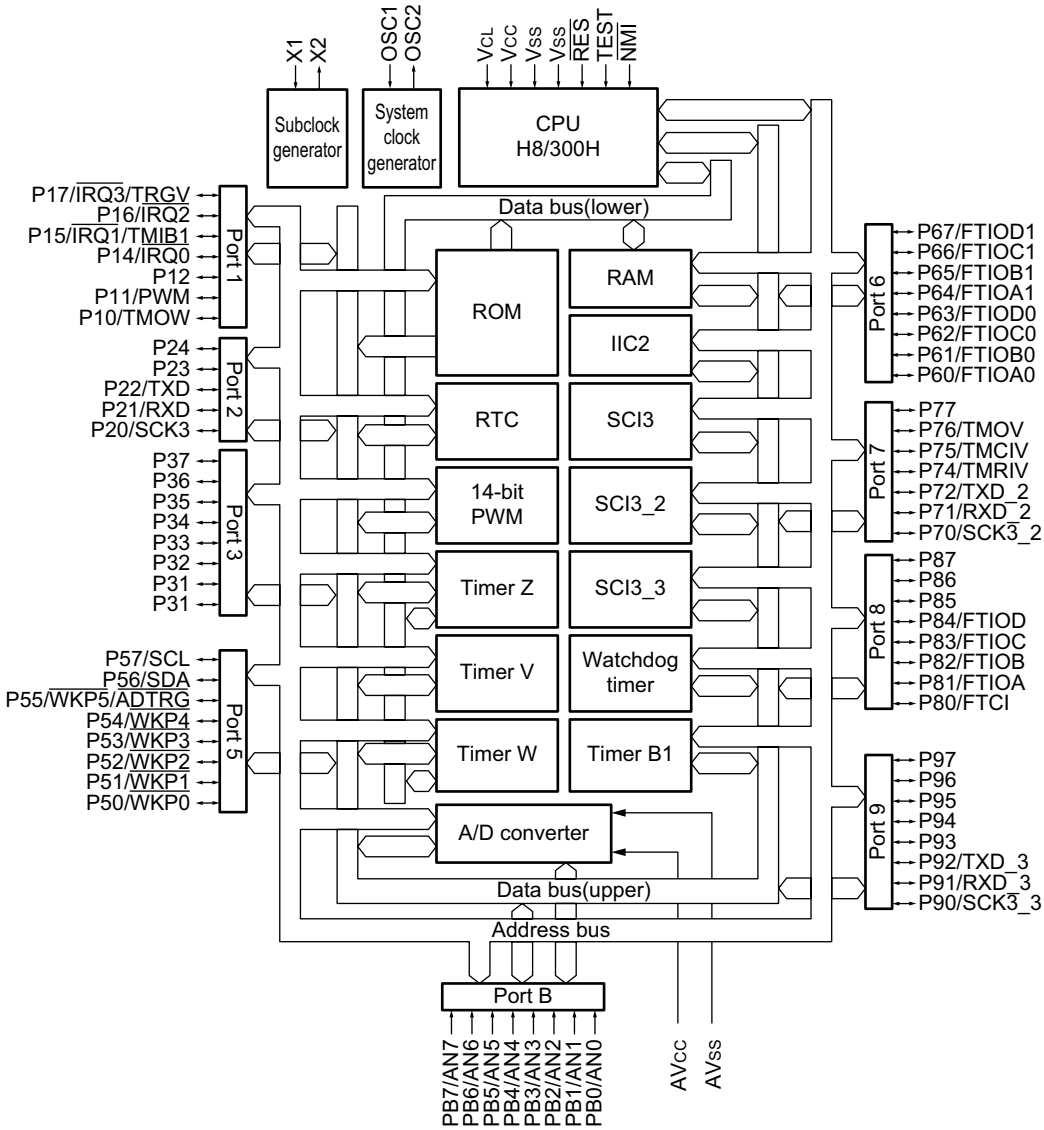

Fig. 5

HD64F36049 (IC21) Terminal description

TYPE	SYMBOL	PIN NO.	I/O	FUNCTIONS
Power supply pins	Vcc	12	I	Power supply pin. Connect this pin to the system power supply.
	Vss	9, 50	I	Ground pin. Connect this pin to the system power supply (0V).
	AVcc	3	I	Analog power supply pin for the A/D converter. When the A/D converter is not used, connect this pin to the system power supply.
	AVss	74	I	Analog ground pin for the A/D converter. Connect this pin to the system power supply (0V).
	V_{CL}	6	I	Internal step-down power supply pin. Connect a capacitor of around 0.1μF between this pin and the Vss pin for stabilization.
Clock pins	OCS1	11	I	These pins connect with crystal or ceramic resonator for the system clock, or can be used to input an external clock.
	OCS2	10	O	
	X1	5	I	These pins connect with a 32.768 kHz crystal resonator for the subclock. See Clock Pulse Generators, for a typical connection.
	X2	4	O	
System control	/RES	7	I	Reset pin. The pull-up resistor (typ. 150 kΩ) is incorporated. When driven low, the chip is reset.
	TEST	8	I	Test pin. Connect this pin to Vss.
External interrupt pins	/NMI	13	I	Non-maskable interrupt request input pin.
	/IRQ0 - /IRQ3	25 - 28	I	External interrupt request input pins. Can select the rising or falling edge.
	/WKP0 - /WKP5	36 - 31	I	External interrupt request input pins. Can select the rising or falling edge.
RTC	TMOW	56	O	This is an output pin for divided clocks.
Timer B1	TMIB1	26	I	External event input pin.
Timer V	TMOV	72	O	This is an output pin for waveforms generated by the output compare function.
	TMCIV	71	I	External event input pin.
	TMRIV	70	I	Counter reset input pin.
	TRGV	28	I	Count start trigger input pin.
Timer Z	FTIOA0	42	I/O	Output compare output/input capture input/external clock input pin.
	FTIOB0	43	I/O	Output compare output/input capture input/PWM output pin.
	FTIOC0	44	I/O	Output compare output/input capture input/PWM synchronous output pin (at a reset or in complementary PWM mode)
	FTIOD0	45	I/O	Output compare output/input capture input/PWM output pin.
	FTIOA1	46	I/O	Output compare output/input capture input/PWM output pin (at a reset or in complementary PWM mode)
	FTIOB1 - FTIOD1	47 - 49	I/O	Output compare output/input capture input/PWM output pin.
Timer W	FTCI	51	I	External event input pin.
	FTIOA - FTIOD	52 - 55	I/O	Output compare output/input capture input/PWM output pin.
14bit PWM	PWM	57	O	14bit PWM square wave output pin.
I²C bus interface 2 (IIC2)	SDA	30	I/O	IIC data I/O pin. Can directly drive a bus by NMOS open-drain output. When using this pin, external pull-up resistor is required.
	SCL	29	I/O	
Serial Communication interface 3 (SCI3)	TXD, TXD_2, TXD_3	39, 69, 61	O	Transmit data output pin.
	RXD, RXD_2, RXD_3	40, 68, 60	I	Receive data input pin.
	SCK3, SCK_2, SCK_3	41, 67, 59	I/O	Clock I/O pin.
A/D converter	AN7 - AN0	2, 1, 80 - 75	I	Analog input pin.
	/ADTRG	31	I	Conversion start trigger input pin.
I/O ports	PB7 - PB0	2, 1, 80 - 75	I	8bit input port.
	P17 - P14, P12 - P10	28 - 25, 58 - 56	I/O	7bit I/O port.
	P24 - P20	37 - 41	I/O	5bit I/O port.
	P37 - P30	17 - 24	I/O	8bit I/O port.
	P57 - P50	29 - 36	I/O	8bit I/O port.
	P67 - P60	49 - 42	I/O	8bit I/O port.
	P77 - P74, P72 - P70	73 - 70, 69 - 67	I/O	7bit I/O port.
	P87 - P80	14 - 16, 55 - 51	I/O	8bit I/O port.
	P97 - P90	66 - 59	I/O	8bit I/O port.

This printer CPU executes the print action in accordance with the command from Main controller. Printer CPU controls each component of Laser Beam Printer (LBP) as follows.

1) Main Motor control
2) Pickup Motor control
3) Fuser control
4) High Voltage Generator control
5) Laser Scanning control
6) Sensor monitor
7) Communication with Main controller

2.2.2 Signal connection

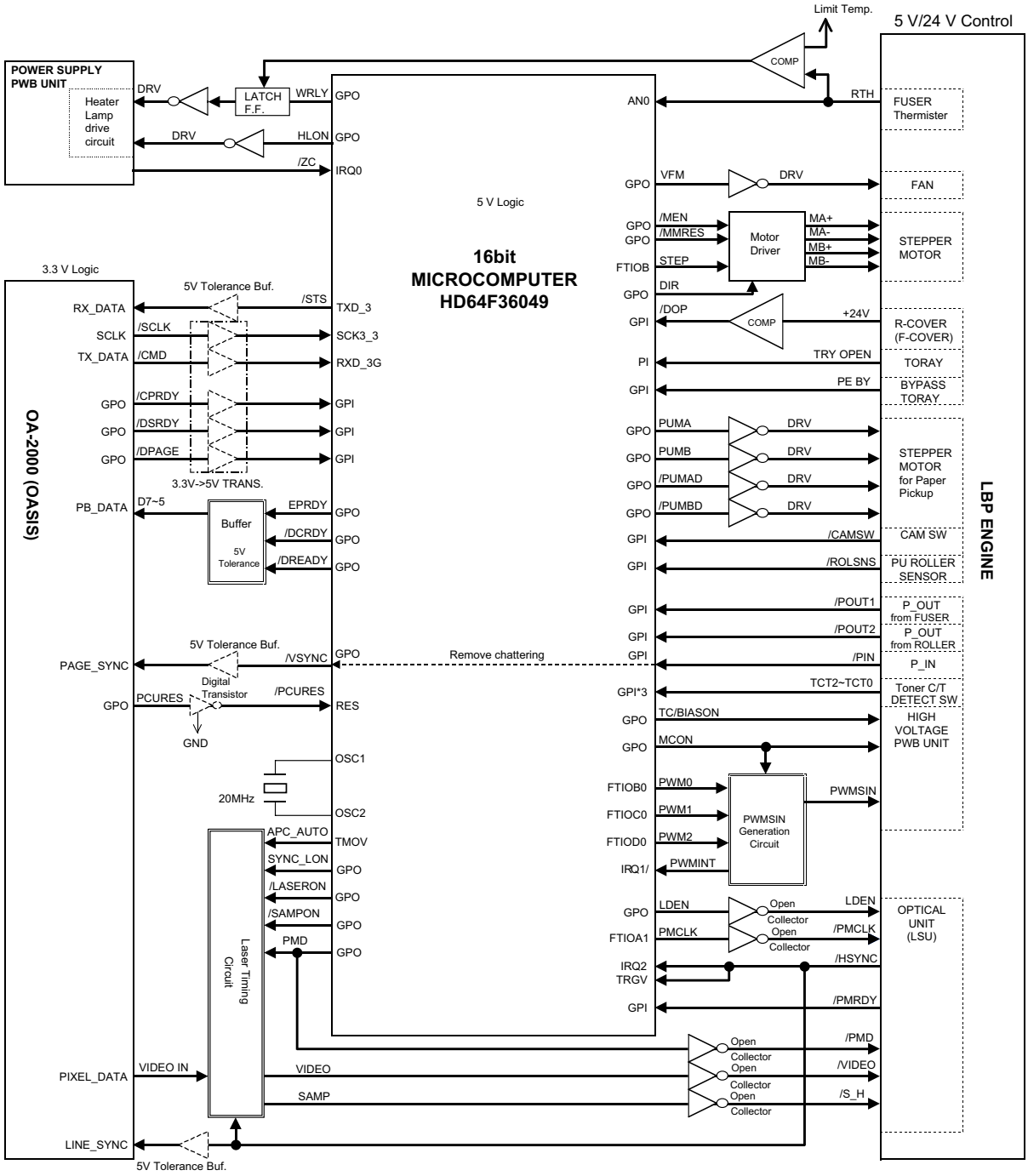

Fig. 6

2.2.3 Signal assignment to the Printer CPU pins

Control unit	Mechanism control CPU		Description
	Signal	Pin No.	
OA-2000 I/F	/STS	TXD	Video I/F signals to/from the main CPU (OA-2000)
	/SCLK	SCK	
	/CMD	RXD	
	/PCURES	RESET	
	/DCRDY	GPO	
	/DREADY	GPO	
	/EPRDY	GPO	
	/VSYNC	GPO	
	/CPRDY	GPI	
	/DPAGE	GPI	
	/DSRDY	GPI	
LSU	APC_AUTO	TMOV	APC timing generation signal for line cycle
	/SYNC	TRGV	Laser main scanning sync signal
		IRQ	
	PMCLK	FTIOA1	Polygon motor clock
	LDEN	GPO	Laser circuit driving signal
	PMD	GPO	Polygon motor driving signal
	/LASERON	GPO	Laser on
	SAMPON	GPO	APC circuit sample signal
	SYN_LON	GPO	Next line laser on (SYNC)
High voltage	PWM0	FTIOB0	Clock for high voltage control clock PWMSIN
	PWM1	FTIOC0	Clock for high voltage control clock PWMSIN
	PWM2	FTIOD0	Clock for high voltage control clock PWMSIN
	/PWMINT	IRQ	Timer setting change interrupt
	MCON	GPO	Charge control
	TC/BSON	GPO	Transfer/DC bias control
Sensor	/PIN	GPI	Main unit paper feed detection (Paper-In)
	/POUT1	GPI	Paper eject detection (Paper-Out/fusing section)
	/POUT2	GPI	Paper eject detection (Paper-Out/exit roller section)
	PE_BY	GPI	Detection of paper presence in the bypass tray
	OPEN_TRAY	GPI	Tray cover open/close detection
	/DOP	GPI	Door open/close detection (front and right doors)
	/CAMSW	GPI	Cam home position detection
	/ROLSNS	GPI	PU roller rotational position detection
	TCT2	GPI	Toner cartridge identification (Destination and initial toner charge)
	TCT1	GPI	
	TCT0	GPI	
Fusing	RTH	AN	Thermistor analog input (temperature detection)
	HLON	GPO	Heater lamp ON/OFF control
Main motor	/MEN	GPO	Excitation enable
	/MMRES	GPO	Reset input (Home State)
	STEP	FTIOA	Step clock
Pickup motor	PUMA	GPO	Excitation phase A
	PUMB	GPO	Excitation phase B
	/PUMA	GPO	Excitation phase /A
	/PUMB	GPO	Excitation phase /B
Fan	VFM	GPO	Fan ON/OFF control
Power supply	/ZC	IRQ	AC zero-cross signal input
	PWRLY	GPO	Power relay ON/OFF signal

1) Main Motor control: Control the rotation of Main Motor and its mechanism

   Main Motor is the stepper motor and drives the whole of the mechanism of LBP. Main Motor is driven in 2-phase excitation by the driver (IC34: A3982SLB). The driver circuit is provided with the fuse (F7) to shut the motor power supply for the safety.

2) Pickup Motor control: Control the rotation of Pickup Motor and its mechanism

   Pickup Motor is the stepper motor and drives the pickup mechanism of print paper. Pickup Motor is driven in 2-phase excitation by the driver (IC32: ULN2003A). The driver circuit is provided with the fuse (F6) to shut the motor power supply for the safety. Printer CPU controls the timing to pickup the paper with watching the roller sensor.

3) Fuser control: Control the temperature of the fuser unit

   The heater lamp is controlled ON/OFF to adjust the temperature of the fusing unit. The heater lamp is driven by the driver (IC32: ULN2003A). The temperature of the fusing unit is monitored with the thermistor. The fuser control circuit is provided with the safety circuit to stop to light the heater lamp automatically when the thermistor detection temperature rises over unusual high temperature.

4) High Voltage Generator control: Control high voltage supplied to LBP

   - Main charger voltage to the drum unit
   - Developing bias voltage to the toner unit
   - Transfer charger voltage to the transfer roller

   The high voltage outputted from High Voltage unit is controlled with PWM and ON/OFF signals ("MCON" and "TCON").

5) Laser Scanning control: Control Optical unit (LSU) to expose the OPC drum.

   The laser beam scanning light expose the OPC drum corresponding to the print data. The circuit of Optical unit (LSU) is composed with the scanning motor drive block and the laser beam drive block.

   a) The control of the scanning motor drive block

      The scanning motor is controlled by the clock of 2659.574Hz ("PMCLK") and ON/OFF signal ("PMD"). Optical unit (LSU) replies by the ready when the rotation of the motor becomes stable. The initialization of the laser beam control is started after the stable rotation of the scanning motor is confirmed.

   b) The laser beam drive block

      The timing of the signals is controlled in accordance with the specifications of Optical unit (LSU). Main CPU (IC1: OA-2000) outputs the print data ("PDATA") synchronized in the horizontal synchronous signal ("SYNC") from Optical unit (LSU). The print data is generated by Main CPU is directly transferred to Optical unit (LSU).

6) Sensor monitor: Monitor each sensor

   Printer CPU controls the timing of the printing action with the following sensor information, and detect the paper jam, the paper empty and the paper size.

   a) PIN: Detect carriage position of the paper
   b) POUT1: Detect carriage position of the paper
   c) POUT2: Detect carriage position of the paper
   d) PEBY: Detect the paper on the bypass tray
   e) OPEN_TRAY: Detect the tray cover setting
   f) TCT2~0: Detect the toner cartridge setting

7) Communication with Main CPU

   The printer information is communicated with Main CPU. At first, Main CPU transfers the command to Printer CPU on serial communication I/F. Then, the action according to the command is executed, e.g. start printing and return the status of the printer.

2.2.4 Hardware controlled protection function

Device		Protective action	Circuit description	Purpose	Status to be activated
Heater lamp (fusing device)	1	The heater lamp is forcibly turned off when the temperature of the fusing device (thermistor value) exceeds the upper limit.	The circuit forcibly turns off (resets) the relay control signal of the heater lamp when the thermistor value reaches 238 ± 6 °C. To turn on the heater lamp again, it is necessary to have the microcomputer change the relay control signal PWRLY from 0 to 1. In other words, once the protective action is performed, the protection is not canceled automatically even if the temperature detected by the thermistor decreases.	Avoiding the abnormally high temperature of the fusing device.	The protection is activated when F/W is out of control, the microcomputer ADC is defective, or other abnormality occurred. Normally, the heater lamp is turned on/off by monitoring the temperature using F/W.
Laser (LSU)	1	When the cover is open, the power supply to the laser system circuits is shut off.	Equipped with a regulator circuit for producing the laser system power (+5 V) supplied to the LSU from +24 V power supply interrupted by the interlock.	Avoiding the exposure to laser beam.	Malfunction due to the digital system circuit failure.
	2	When the polygon motor is inactive, the VIDEO signal is disabled (lighting prohibited).	Equipped with a circuit for enabling output of the VIDEO signal when the polygon motor drive signal PMD is received.	Preventing the laser beam from focusing on only one point on the drum.	The polygon motor is stopped while debagging.
	3	The sampling of S/H signal is disabled unless the VIDEO signal is active (laser on).	Equipped with a circuit for enabling output of the S/H signal when the VIDEO signal is received.	Avoiding abnormally high output of the laser.	When F/W under development is defective or runs out of control, the protection is activated. Normally, each signal is controlled following the sequence by F/W.

A fuse is installed in the following power supply lines: Optical unit (LSU) laser, Main motor, Pickup motor

2.3. Power section

The Control PWB requires multi voltage (+1.8V, +3.3V, +5V, +24V, +24VH).

+3.3V, +5V, +24V and +24VH are supplied from the power supply unit, and +1.8 V are generated by the regulator (IC8).

+3.3VR is generated by regulator (IC9) on the Control PWB, is the exclusive use as clean power for scanner.

INT5V is generated by regulator (IC22) on the Control PWB, is the exclusive use as interlocking power for Optical unit (LSU).

Its structure is as shown below.

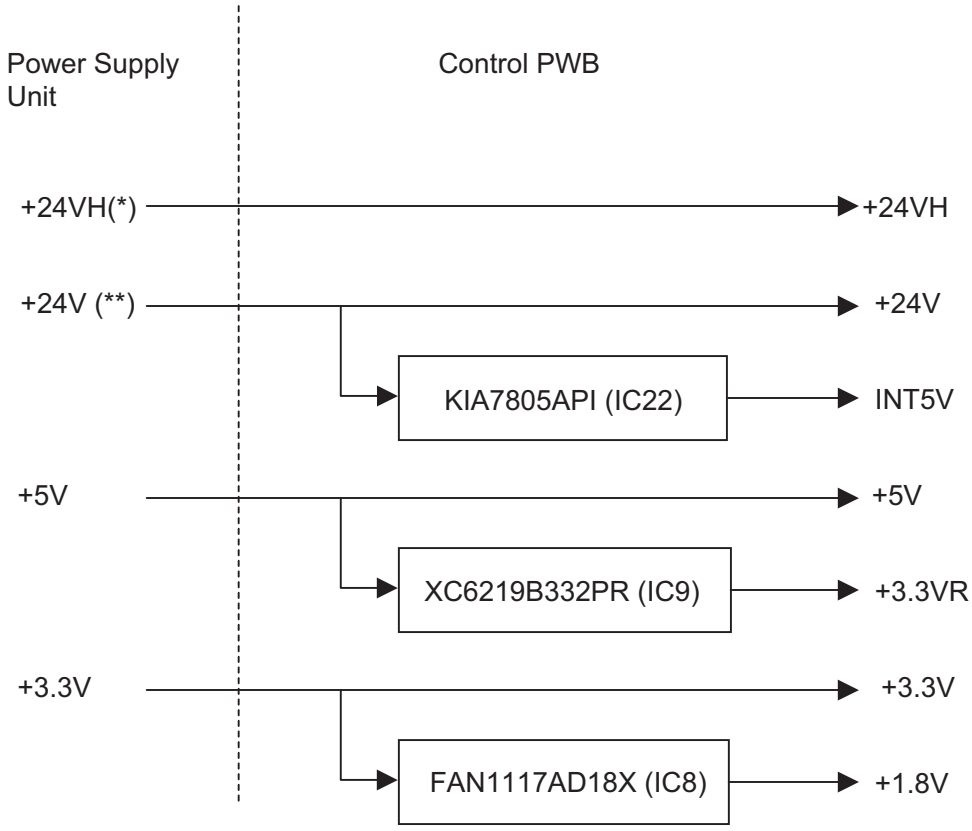

(*) Supplied always regardless of door open/close.

(**) Supplied only when door is close.

Fig. 7

3. Printer mechanism control block

3.1. Unit control

3.1.1 High voltage unit control

The high voltage unit outputs the following voltages:

- Main charger voltage (DC-950V + AC760V peak to peak)
- Transfer charger voltage (DC+3600V + AC760V peak to peak)
- Developing bias voltage (DC-180V)

  The following signals are outputted from the CPU and Logic to control the above voltages.

- **MCON**

  This signal is to turn on/off the main charger.

  When this signal is outputted.

  As a result, the main charger voltage is outputted to the secondary side of the transformer (B51).

- **TCON**

  This signal is to turn on/off the transfer charger and the developing bias voltage.

- **PWMSIN**

  This signal is to control the main charger voltage and the transfer charger voltage. The PWM pulse of about 300Hz is outputted.

  This pulse waveform adds the AC component to the main charger voltage and the transfer charger voltage.

  By changing the pulse duty of this signal, the main charger voltage and the transfer charger voltage are controlled.

3.1.2 Electrical connection

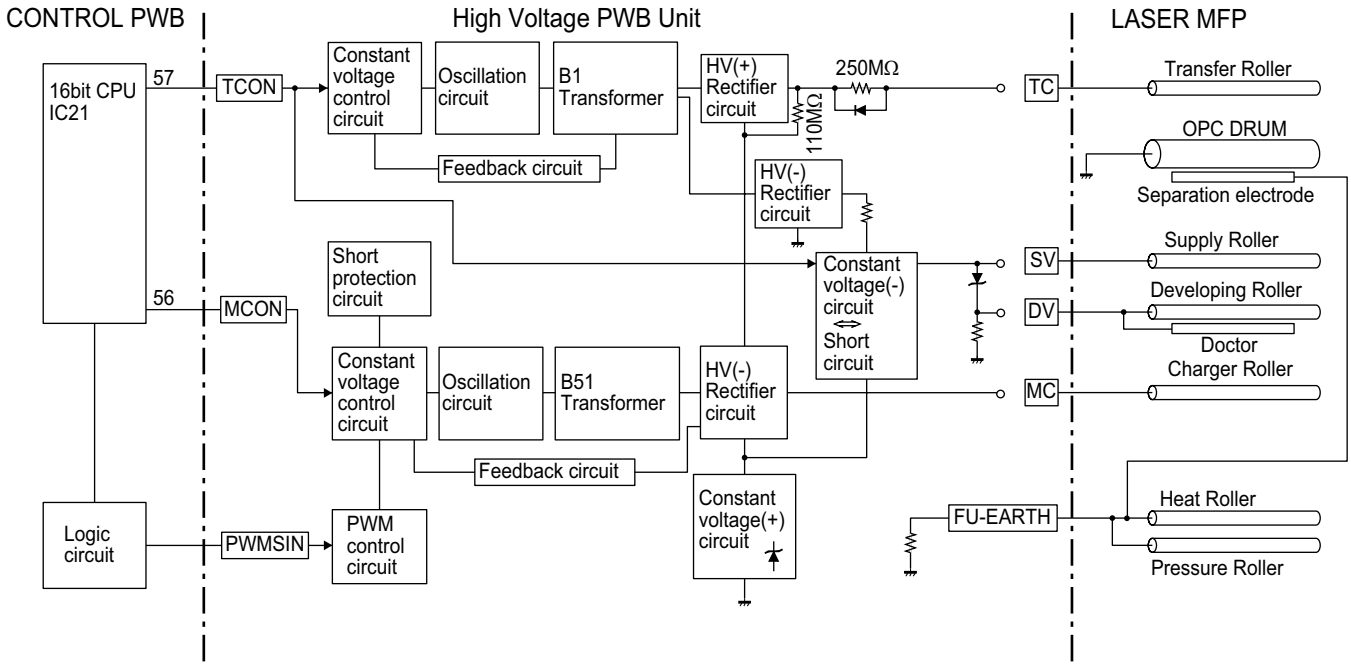

Fig. 8

3.1.3 Laser scanning unit

This unit controls the laser beam power and laser beam scanning.

The control is performed with the signals inputted outputted to or from the CPU and Logic circuit.

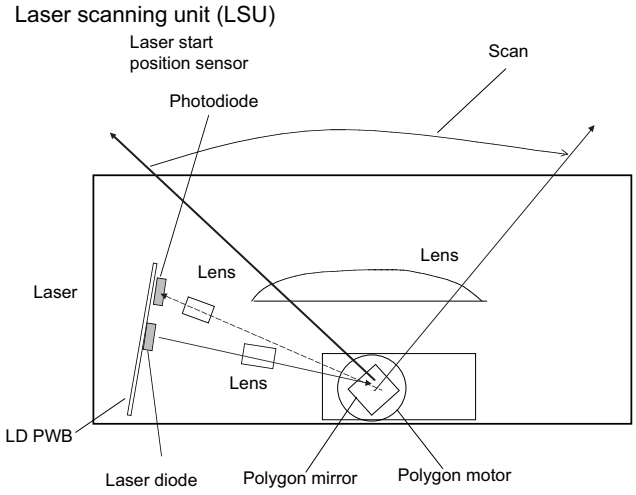

Fig. 9

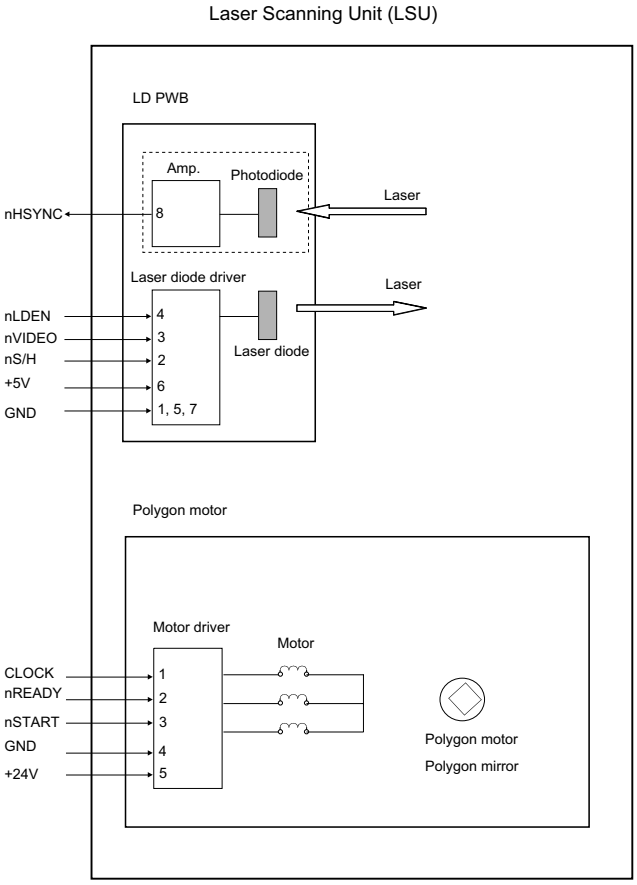

Fig. 10

1) Signal functions

PMCLK

Clock signal for driving the scanning motor. (2659.57Hz)

PMD

Scanning motor ON/OFF signal.

HSYNC

This signal is outputted when the laser beam scanned by the laser beam sensor signal is sensed by sensor (Photo diode).
Used for the left margin control.

VIDEO

This signal is used to control the laser diode emitting.
Not only when the laser beam is emitted to perform the LEND process, but also when the laser beam is emitted as image data, 16bit CPU (IC21) controls and the signal is outputted from video terminal.

2) Laser beam power control

The laser beam power is controlled in the laser scanning unit.

This circuit functions to keep the laser beam output power at a constant level.

The laser beam output is monitored with photo diode for monitor. When the laser beam output rises above the specified value, the impedance of photo diode is decreased to decrease the monitor input voltage of the laser diode control IC.

Then the laser diode drive voltage is decreased to decrease the laser beam output to the specified level.

When the laser beam output is decreased below the specified level, the contrary operation are performed.

3) Timing of scanning

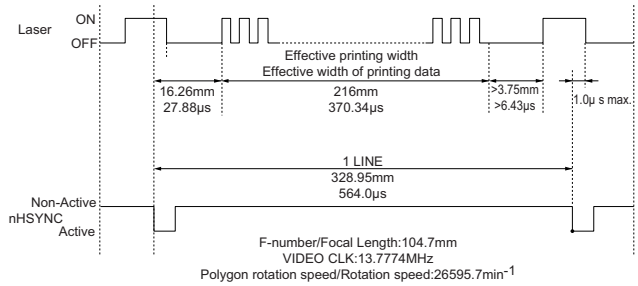

Fig. 11

a) Scanning motor interface

Pin No.	Terminal	I/O	Function
1	CLOCK	Input	Clock input
2	nREADY	Output	Motor rotation detect signal "L" : Synchronous "OPEN" : Asynchronous
3	nSTART	Input	Motor control signal "L" : Start "OPEN" : Stop
4	GND	-	GND
5	+24V	-	Power supply (+24V)

b) Laser Drive circuit operation timing

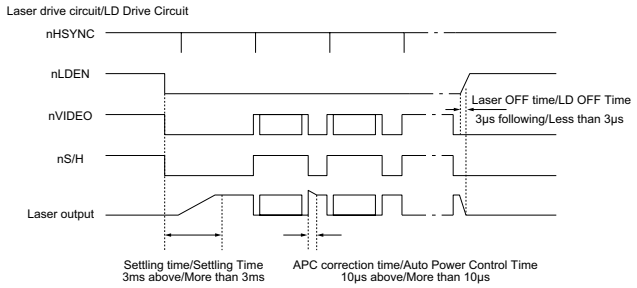

Fig. 12

c) Each signal injection timing of the scanner motor

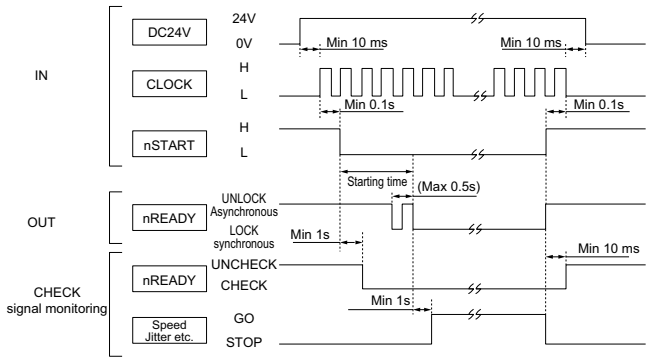

Fig. 13

d) Laser Drive circuit interface

Pin No.	Terminal	I/O	Function
4	nLDEN	Input	Signal enables Laser driven "H" : Disable "L" : Enables
2	nS/H	Input	APC control signal "H" : Hold "L" : Sampling
3	nVIDEO	Input	Laser control signal "H" : Laser OFF "L" : Laser ON
1	GND	-	GND
5	GND	-	GND
7	GND	-	GND
6	+5V	-	Power supply (+5V)
8	nHSYNC	Output (Open-collector)	Horizontal synchronize signal "H" : Asynchronous "L" : Synchronous

3.1.4 Fusing unit control

The fusing section is heated by the heater lamp (500W). The heater lamp is controlled (turned on/off) to keep the optimum temperature. The following signals are outputted by the CPU and Logic circuit for control.

1) **Signal functions**

- **HLON**

  This signal is to turn on/off the heater lamp. When this signal is outputted turn on triac TRA1. Then an AC power is supplied to the heater lamp to turn on the heater lamp.

- **RHT**

  This is the output signal of the thermistor which detects the surface temperature of the heat roller. It is inputted to the CPU. The heater lamp is turned on/off depending on the value of RTH voltage.

2) **Protect against overheat**

Though the heater lamp ON signal (HLON-) is normal, if triac TRA1 are kept ON, overheat may result.

To prevent against this, temperature fuses are used.

When the fusing roller surface temperature exceeds about 214 degrees C, the temperature fuse blows off to open the +24V power line which drives the power relay RL1, opening the power line for the photo triac TRA1. Therefore, the power is not supplied to the heater lamp.

A temperature fuse is also provided in the heater lamp power line. In case of overheating, the heater lamp power line is opened directly.

3) **Timing of temperature detection and heater control**

As shown by the following timings, four values of software thermistor voltage are input as A/D conversion values. The mean value of two medians among these four is regarded as the newest thermistor value (temperature).

- The value is compared with the temperature (200°C) control value every 100 ms.
- If the value is higher than 200°C, the heater becomes OFF. If lower, the heater becomes ON.
- The heater ON timing is in accordance with the timing of Power Zero Cross interrupt.

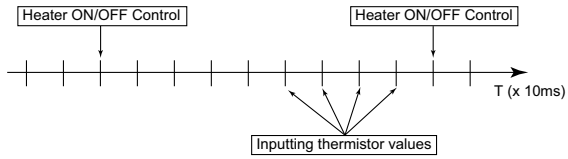

Timings of thermistor value input and heater control

Fig. 14

4) **Heater control (Temperature control)**

Control method

a) Base machine printing (Copy, List, Receiving)

- Temperature control is started when data to be printed are produced (or when slips are to be prepared).
- Temperature is controlled at 200°C. (Heater OFF over 200°C. Heater ON below 200°C.)
- After printing, temperature is not controlled. (Heater is not turned ON.)
- Fan motor starts revolving from the beginning of temperature control and stops 120 seconds after printing is finished.

b) PC printing

- Temperature control is started when PC starts printing.
- Temperature is controlled at 200°C. (Heater OFF over 200°C. Heater ON below 200°C.
- After printing, temperature is not controlled.
- Fan motor starts revolving from the beginning of temperature control and stops 120 seconds after printing is finished.

Temperature control is not started from the start of printing because the first copying time should be within 28 seconds.

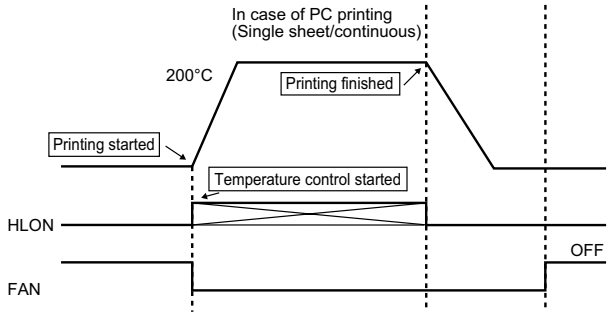

Fig. 15

3.1.5 Electrical connection

Heater lamp:	The 500W halogen lamp is used.
Thermistor:	Thermistor of chip type with good response is used to respond to rapid heating of the heat roller.
Temperature fuse 1 (152°C):	Temperature fuse 1 is installed to the fusing cover. It blows off when the ambient temperature of the fusing cover rises abnormally (152°C).
Temperature fuse 2 (216°C):	Temperature fuse 2 is in close contact with the heat roller. It blows off when the heat roller temperature rises abnormally high (216°C).

The heat roller surface temperature is maintained to the optimum level by controlling ON/OFF of the heater lamp according to the temperature data (voltage) from the thermistor. The heat roller surface temperature is controlled to 200°C. Two temperature fuses are provided to protect the heat machine from an abnormally high temperature in the fusing section. The heater lamp is lighted by the AC power.

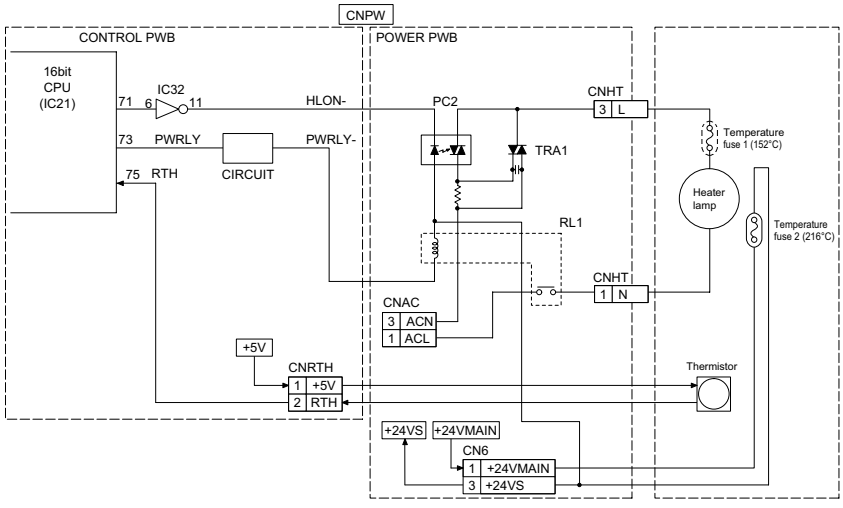

Fig. 16

[3] Circuit description of power supply PWB

This power supply unit has the function to convert the AC230 V (50/60 Hz) to DC+24V, and provide these output to the equipment. The following explains the function of each block. (See Fig. 17)

1. Filter circuit block

This circuit reduces the outgoing noise through the input lines which is generated in the power supply unit, and prevents the invasion of the noise from the lines. (The excessive surge such as thunder is prevented by the varistor (Z1).)

2. Rectification and smoothing circuit block

This circuit rectifies and smoothes AC input, and provides the DC voltage to the switching circuit block.

3. Switching circuit block

This circuit converts the DC voltage (provided from the rectification and smoothing circuit block) to the high-frequency pulse voltage by FET (Q1)'s switching (on/off repeat), and provides the energy to the transformer (T1). It discharges the energy (charged during the FET ON time) to the secondary side during the FET OFF time through the secondary windings. The output voltages on the secondary side provided by the energy depend on the ratio of the winding turns (primary : secondary) etc..

4. Control circuit block

This circuit block controls the output voltage by transmitting the detected +24V voltage to the primary control circuit through the photo-coupler (PC1). In case of the over-current, this circuit reduces providing the energy to the transformer. In case of the over-voltage, this circuit reduces providing the energy to the transformer by letting the power-zener (D104 : connected between the +24V output voltage and GND) into the short mode and letting the over-current protection circuit work.

5. +24 V SUB output circuit block

This circuit block rectifies and smoothes the high-frequency pulse voltage provided by the transformer, and provides the DC+24V output to the equipment. The output voltage is adjusted by the variable resistor (VR101).

6. +24 V MAIN output circuit block

This circuit block supplies DC+24V output to equipment through a connector (CN2) from +24V provided by the transformer.

7. +5 V output circuit block

This circuit block rectifies and smoothes the high-frequency pulse voltage provided by the transformer and provides about DC+7V output to the regulator IC, and provides the DC+5V output to the equipment.

8. +3.3 V output circuit block

This circuit block supplies +3.3V output that is stable by the chopper circuit which considered the above-mentioned +24V as the input. This system supplies energy to load through L271 during the ON of MOS FET Q271, and is making the energy accumulated L271 return to load by D271 during the OFF. Control of constant voltage is performing +5V output by applying detection and feedback by Integrated circuit regulator IC201. It maintains an output OFF state until Q274 turns off a short circuit protection circuit and it re-switches on a power supply, when output voltage becomes lower than the Zener potential of D274.

9. AC output circuit block

This circuit block supplies AC output from AC input to equipment through the optical-isolator (PC2) and the power-relay (RL1) by signals (+24VS, /HEATER_ON, /PWRLY).

10. Zero cross circuit block

This circuit block rectifies the AC input, and provides the ZC signal to equipment through the photo-coupler (PC3).

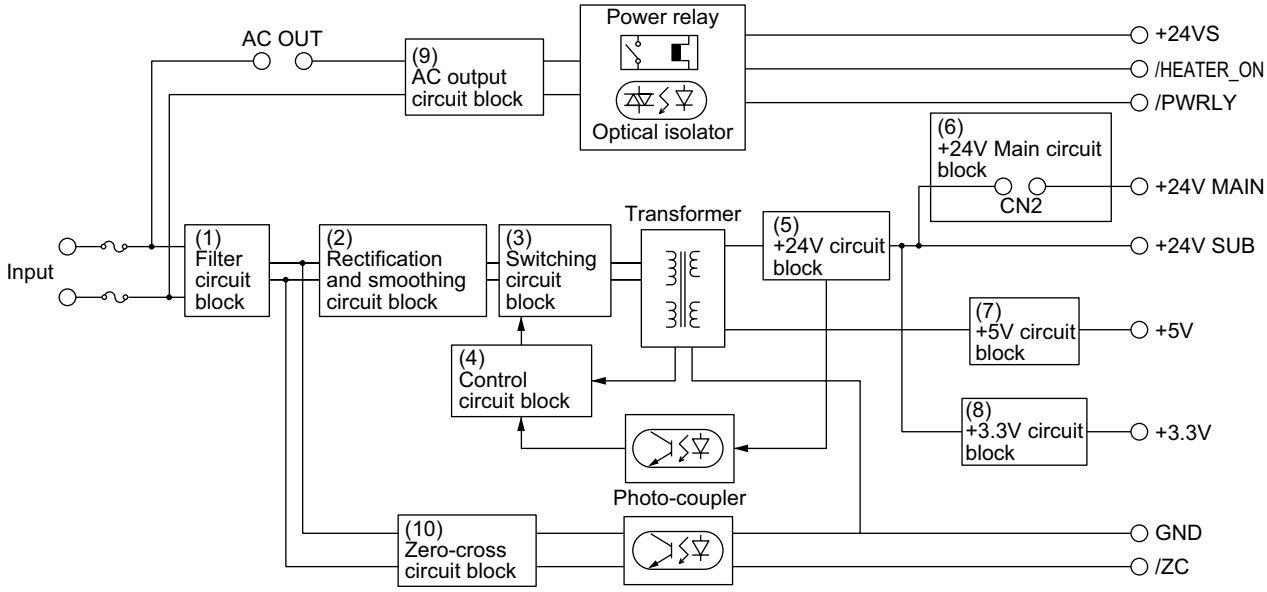

Fig. 17

11. Waveforms of Power circuit

At standby

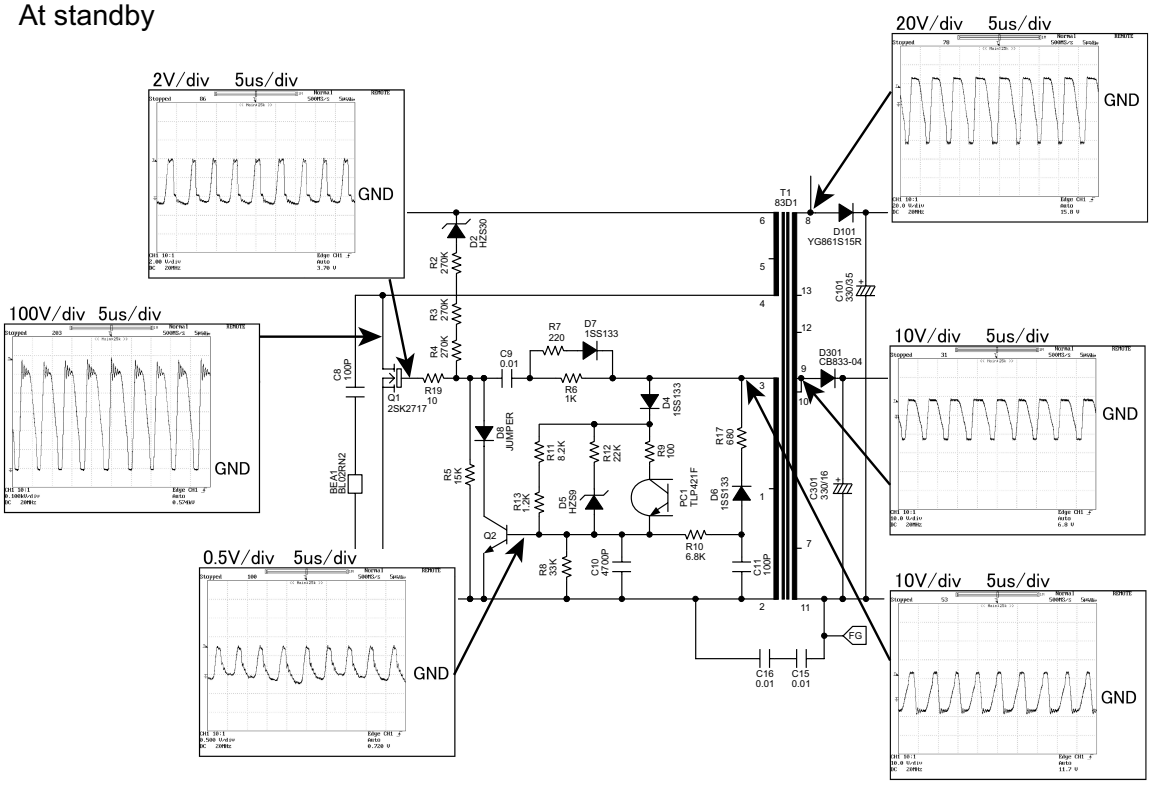

When the over current protection circuit works

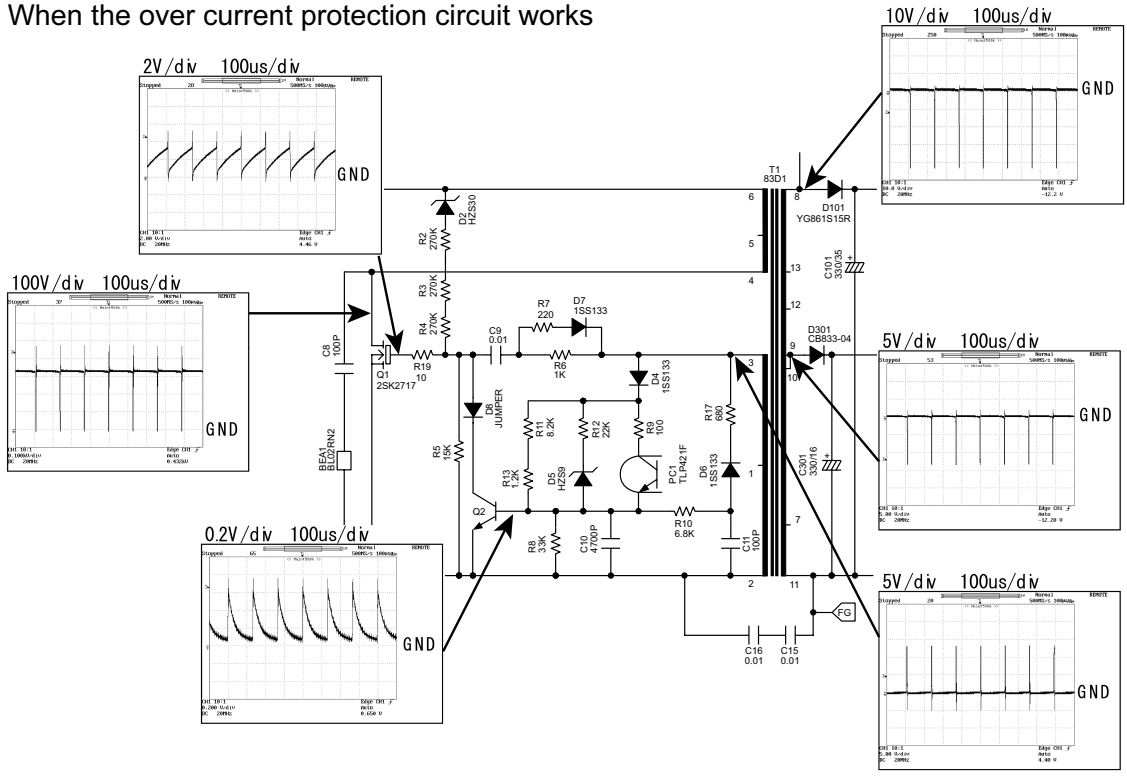

[4] Circuit description of CIS unit

1. CIS

CIS is an image sensor which scans the original paper in close contact with the full-size sensor, being a color type with the pixel number of 5,148 dots and the scanning density of 600 dpi. It is composed of sensor, rod lens, LED light source of Red, Green and Blue, Analog memory circuits and so on.

2. Block diagram

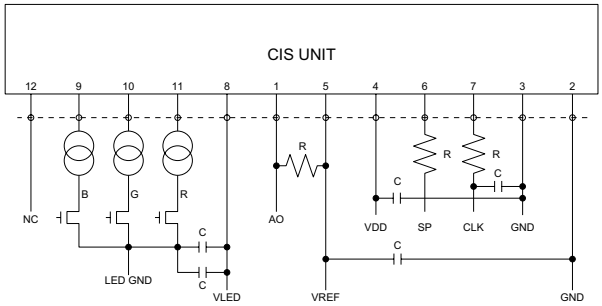

Fig. 18

3. Waveform

3.1. Timing chart 1

1) CLK timing chart

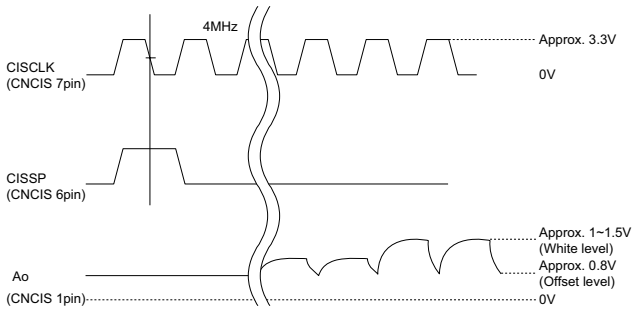

Fig. 19

2) Data output timing chart

After turning on the SP pulse, the analog output starts from the setting up point of 64 clock pulse.

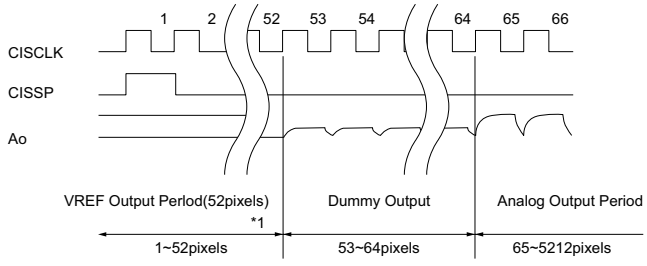

Fig. 20

3.2. Timing chart 2

1) Reading color document

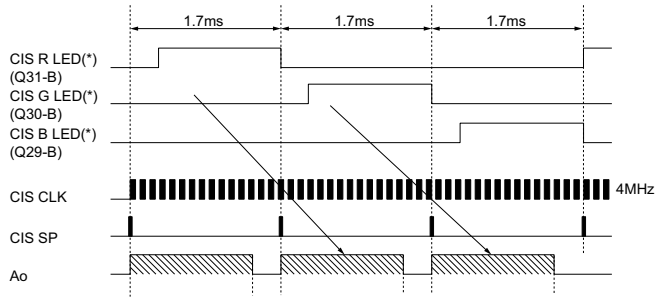

Fig. 21

(*): The pulse width of CIS R LED/CIS G LED/CIS B LED are adjusted automatically every scan, so it is a change.

2) Reading monochrome document

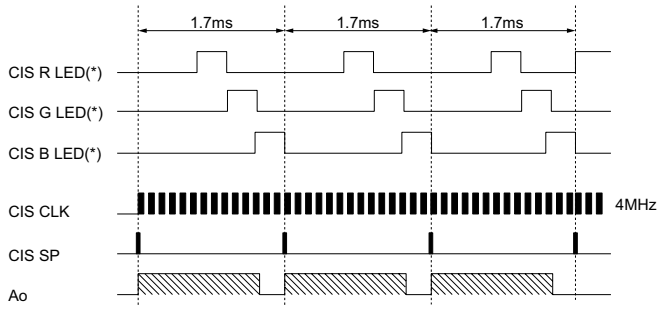

Fig. 22

(*): The pulse width of CIS R LED/CIS G LED/CIS B LED are adjusted automatically every scan, so it is a change.

[5] Circuit description of operation panel PWB

1. Operational description

1) Operation panel PWB

The operation panel PWB consists of 30 keys.

This PWB includes the eight STRB lines (8bit) and the four SEN lines (4bit). The eight STRB lines are controlled by OA-2000 (CPU) on control PWB and the four SEN lines return signals to control PWB. The LED on this PWB is also controlled by LEDON (1bit signal) from control PWB. The LD (5bit) include signal line for four LCD data lines and RS line.

2) LCD

The LCD uses the one-chip LCD driver IC to display 16 digits x 1 line. The LCD display density is not controlled.

2. Block diagram

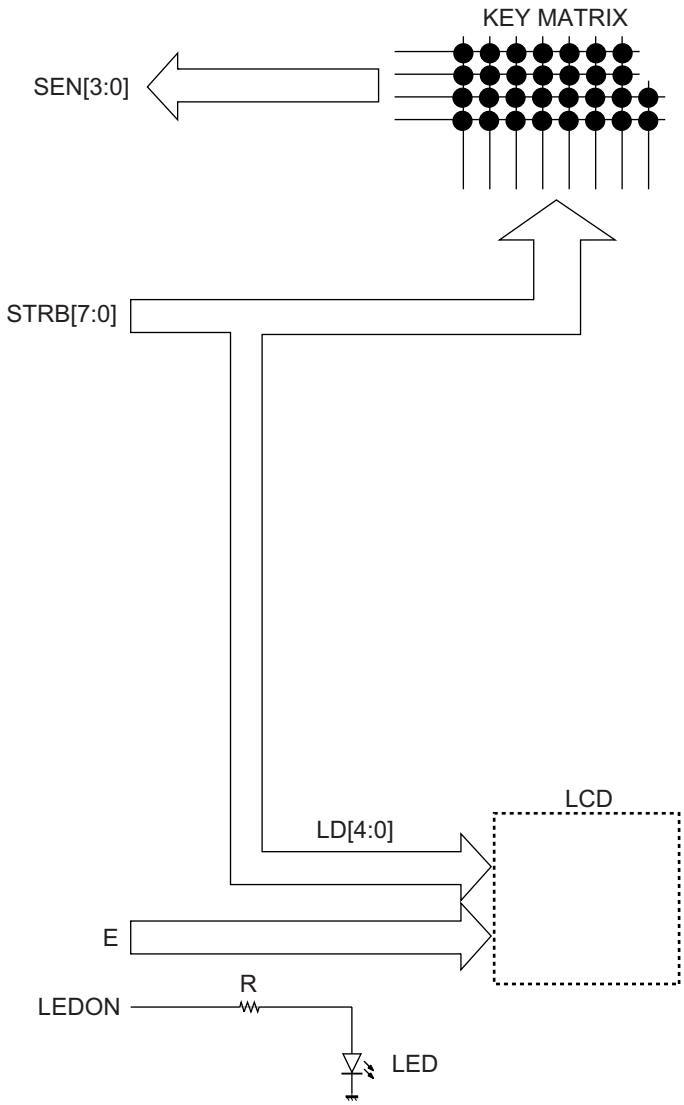

Fig. 23

[6] Data flow chart

1. COPY

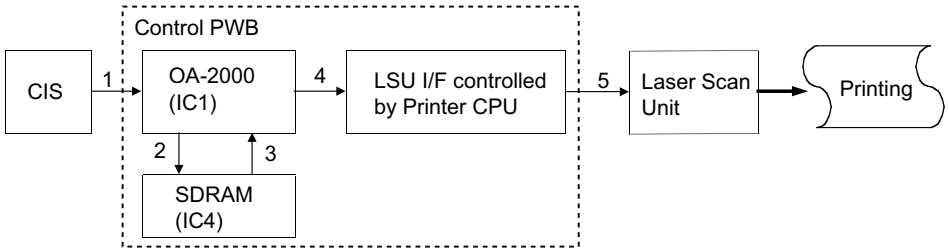

2. PC PRINT

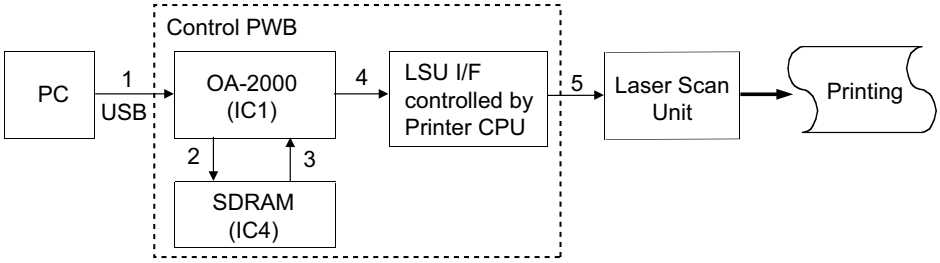

3. PC SCAN

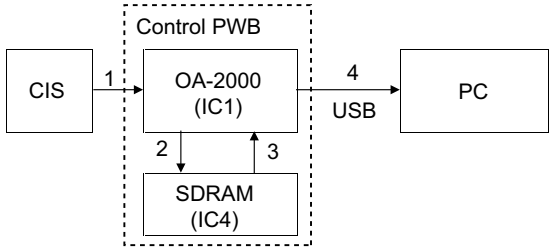

[7] Troubleshooting

1. Printer error code

PAPER JAM	The roller sensor could not detect its home position after driving the pick up motor for the specified period.
	The roller sensor could not become NOT-Active after passing the specified period from picking up paper.
SYSTEM ERROR [P2]	The printer controller detected the optical unit (LSU) error.
	The external interrupt signal for optical unit (LSU) or High-voltage control did not become active after passing the specified period.
SYSTEM ERROR [P3]	Thermistor error was detected.
SYSTEM ERROR [P4]	ROM or RAM error was detected on the printer control unit.
SYSTEM ERROR [P5]	High temperature error was detected.
SYSTEM ERROR [P6]	Low temperature error was detected.
SYSTEM ERROR [P7]	Communication error between the main controller and the printer controller was detected.

2. Scanner message

CHK SCANNER LOCK	The scanner unit could not detect change point of home postion. (ON -> OFF or OFF -> ON)

3. Troubleshooting of control PWB

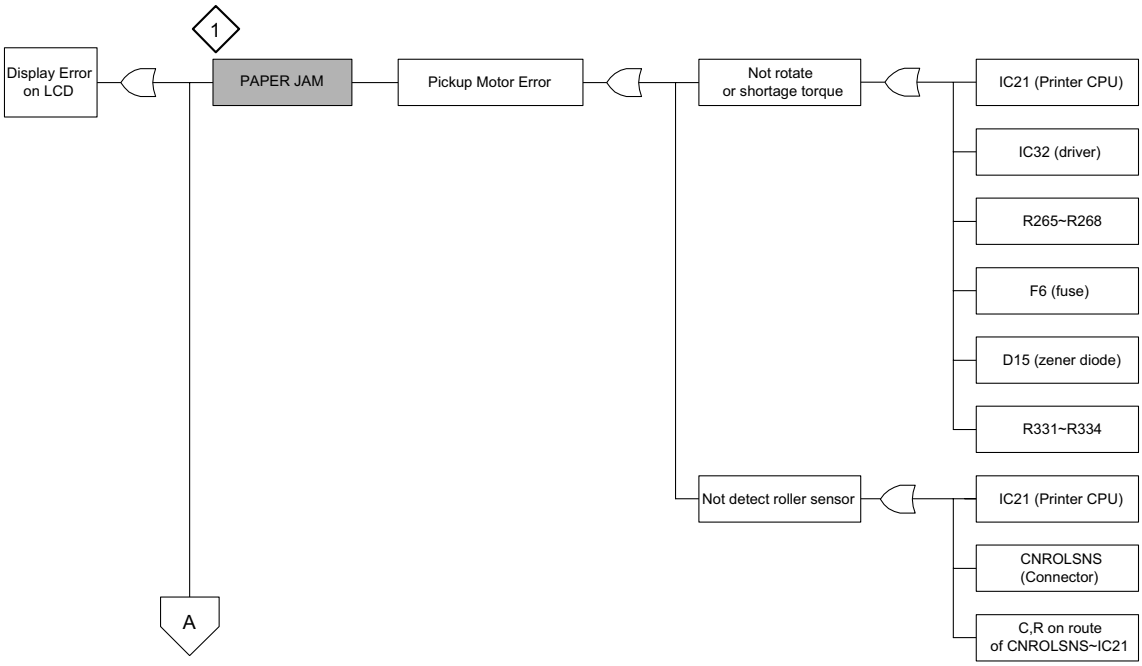

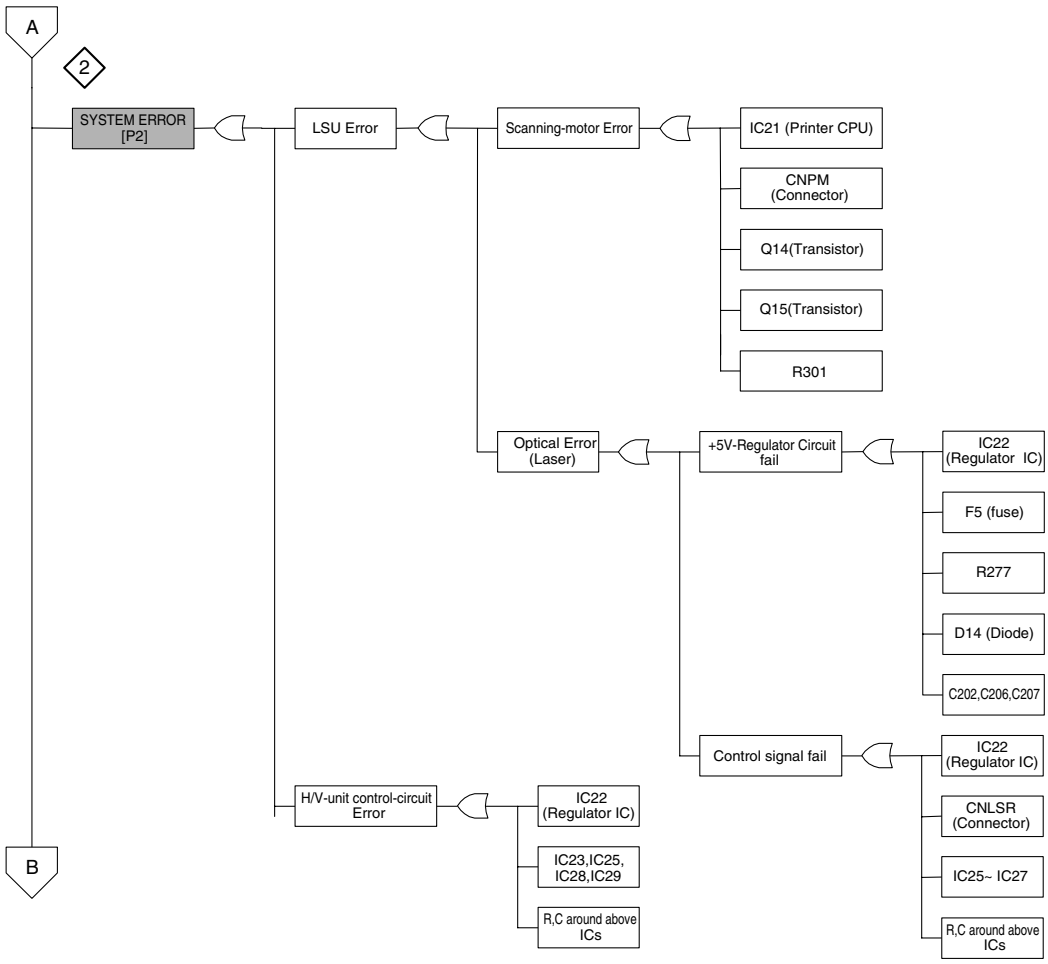

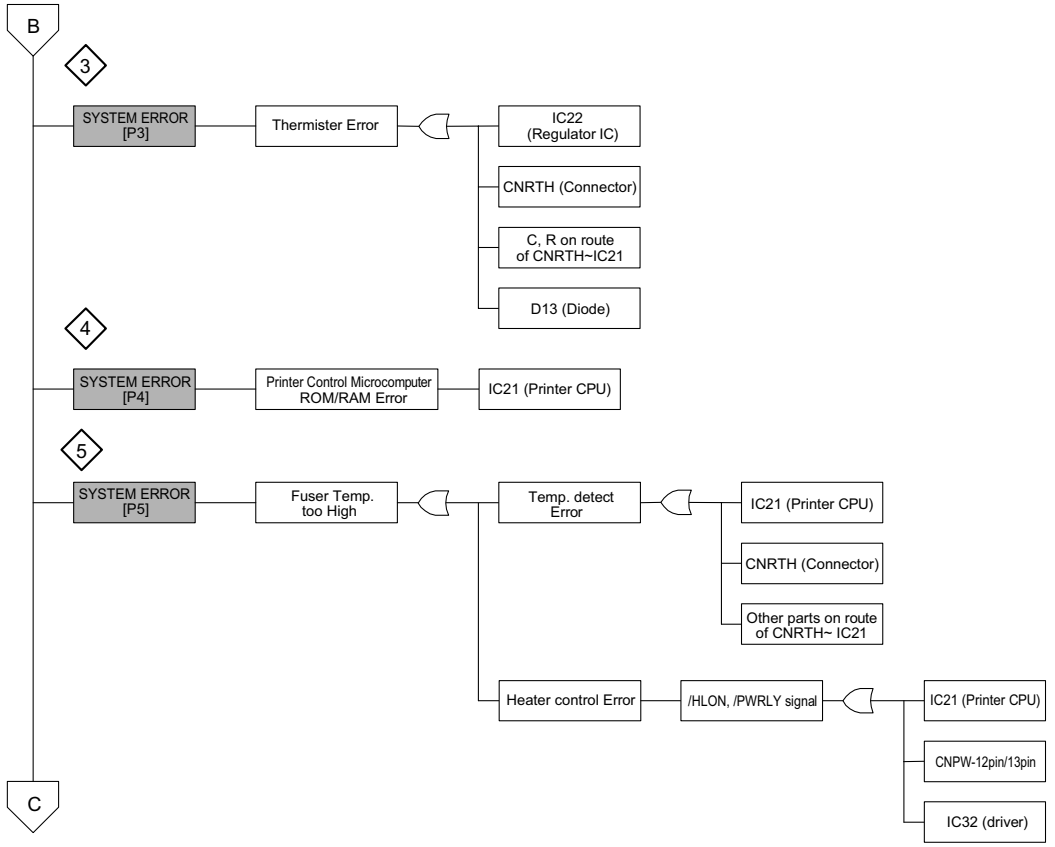
B
3
SYSTEM ERROR [P3]
Thermister Error
IC22 (Regulator IC)
CNRTH (Connector)
C, R on route of CNRTH~IC21
D13 (Diode)
4
SYSTEM ERROR [P4]
Printer Control Microcomputer ROM/RAM Error
IC21 (Printer CPU)
5
SYSTEM ERROR [P5]
Fuser Temp. too High
Temp. detect Error
IC21 (Printer CPU)
CNRTH (Connector)
Other parts on route of CNRTH~ IC21
Heater control Error
/HLON, /PWRLY signal
IC21 (Printer CPU)
CNPW-12pin/13pin
IC32 (driver)
C

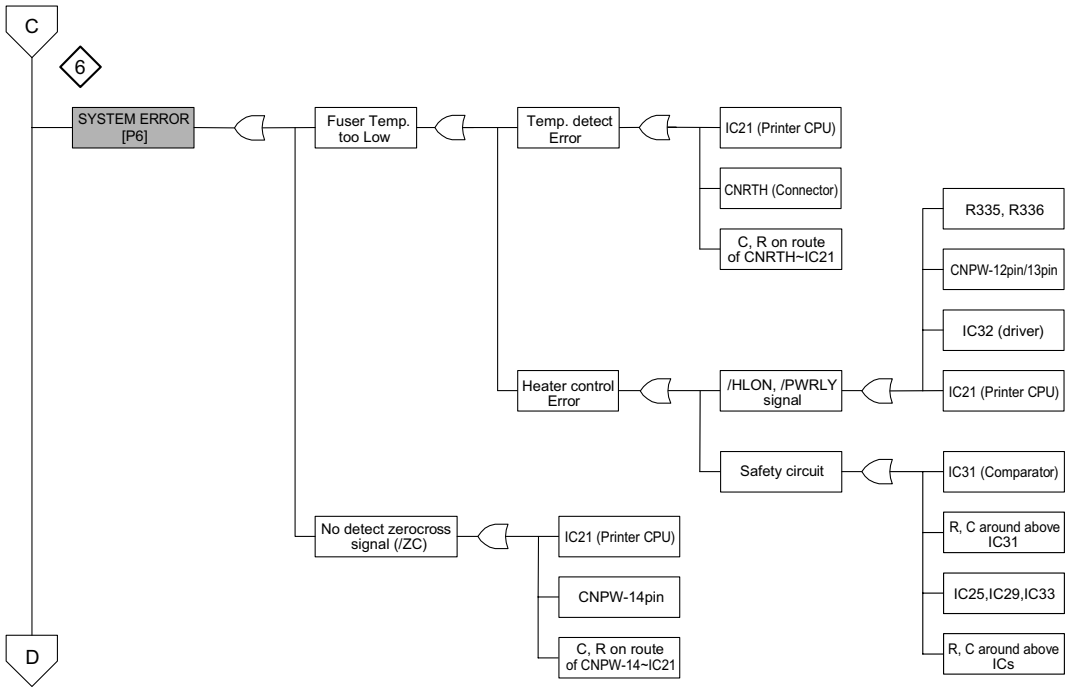
C
6
SYSTEM ERROR [P6]
Fuser Temp. too Low
Temp. detect Error
IC21 (Printer CPU)
CNRTH (Connector)
C, R on route of CNRTH~IC21
Heater control Error
/HLON, /PWRLY signal
R335, R336
CNPW-12pin/13pin
IC32 (driver)
IC21 (Printer CPU)
Safety circuit
IC31 (Comparator)
R, C around above IC31
IC25,IC29,IC33
R, C around above ICs
No detect zerocross signal (/ZC)
IC21 (Printer CPU)
CNPW-14pin
C, R on route of CNPW-14~IC21
D

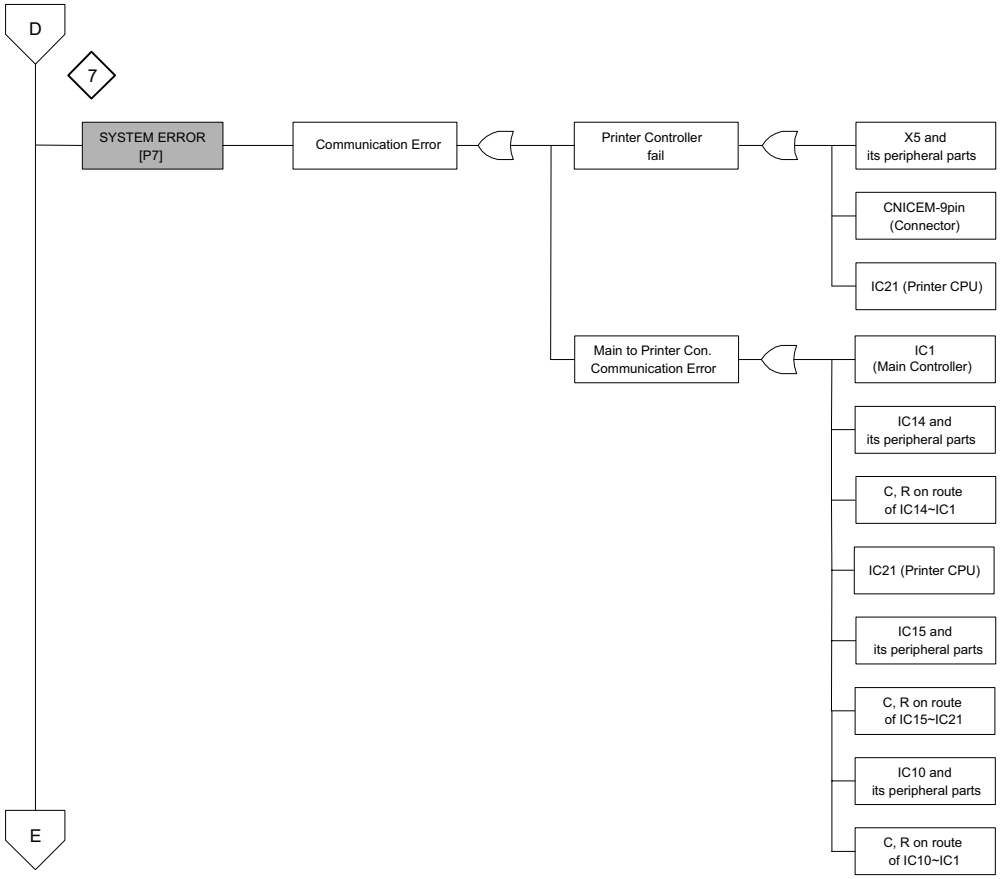
D
7
SYSTEM ERROR [P7]
Communication Error
Printer Controller fail
X5 and its peripheral parts
CNICEM-9pin (Connector)
IC21 (Printer CPU)
Main to Printer Con. Communication Error
IC1 (Main Controller)
IC14 and its peripheral parts
C, R on route of IC14~IC1
IC21 (Printer CPU)
IC15 and its peripheral parts
C, R on route of IC15~IC21
IC10 and its peripheral parts
C, R on route of IC10~IC1
E

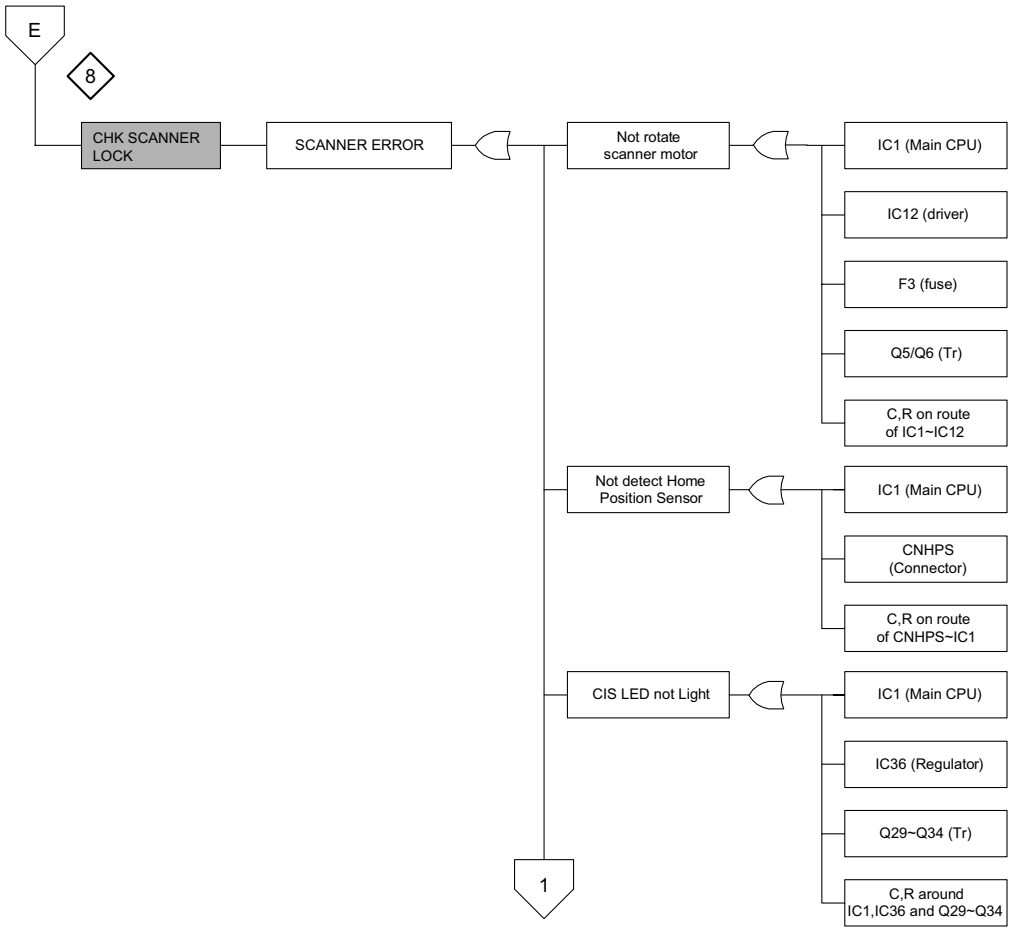
E
8
CHK SCANNER LOCK
SCANNER ERROR
Not rotate scanner motor
IC1 (Main CPU)
IC12 (driver)
F3 (fuse)
Q5/Q6 (Tr)
C,R on route of IC1~IC12
Not detect Home Position Sensor
IC1 (Main CPU)
CNHPS (Connector)
C,R on route of CNHPS~IC1
CIS LED not Light
IC1 (Main CPU)
IC36 (Regulator)
Q29~Q34 (Tr)
C,R around IC1,IC36 and Q29~Q34
1

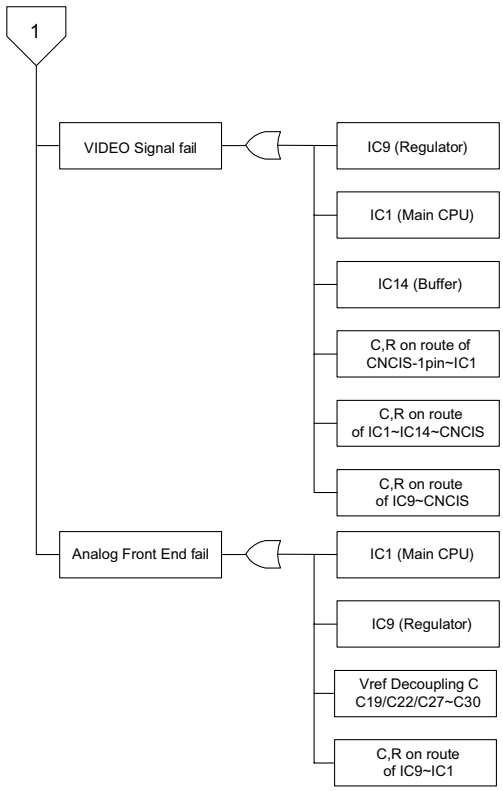
1
VIDEO Signal fail
IC9 (Regulator)
IC1 (Main CPU)
IC14 (Buffer)
C,R on route of CNCIS-1pin~IC1
C,R on route of IC1~IC14~CNCIS
C,R on route of IC9~CNCIS
Analog Front End fail
IC1 (Main CPU)
IC9 (Regulator)
Vref Decoupling C C19/C22/C27~C30
C,R on route of IC9~IC1

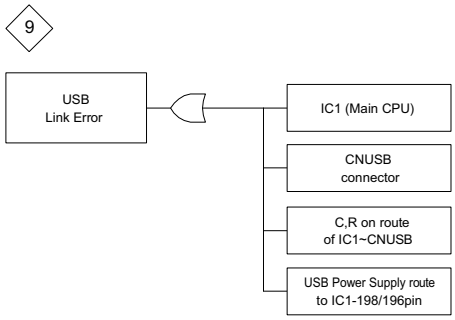
9
USB Link Error
IC1 (Main CPU)
CNUSB connector
C,R on route of IC1~CNUSB
USB Power Supply route to IC1-198/196pin

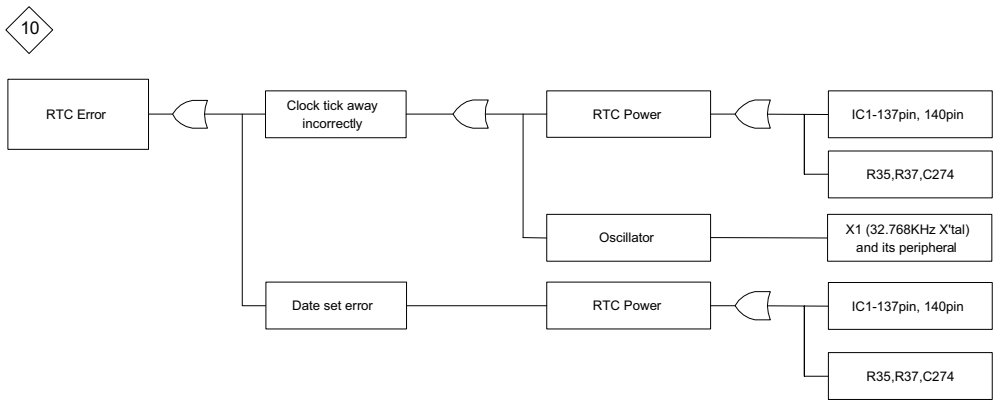
10
RTC Error
Clock tick away incorrectly
RTC Power
IC1-137pin, 140pin
R35,R37,C274
Oscillator
X1 (32.768KHz X'tal) and its peripheral
Date set error
RTC Power
IC1-137pin, 140pin
R35,R37,C274

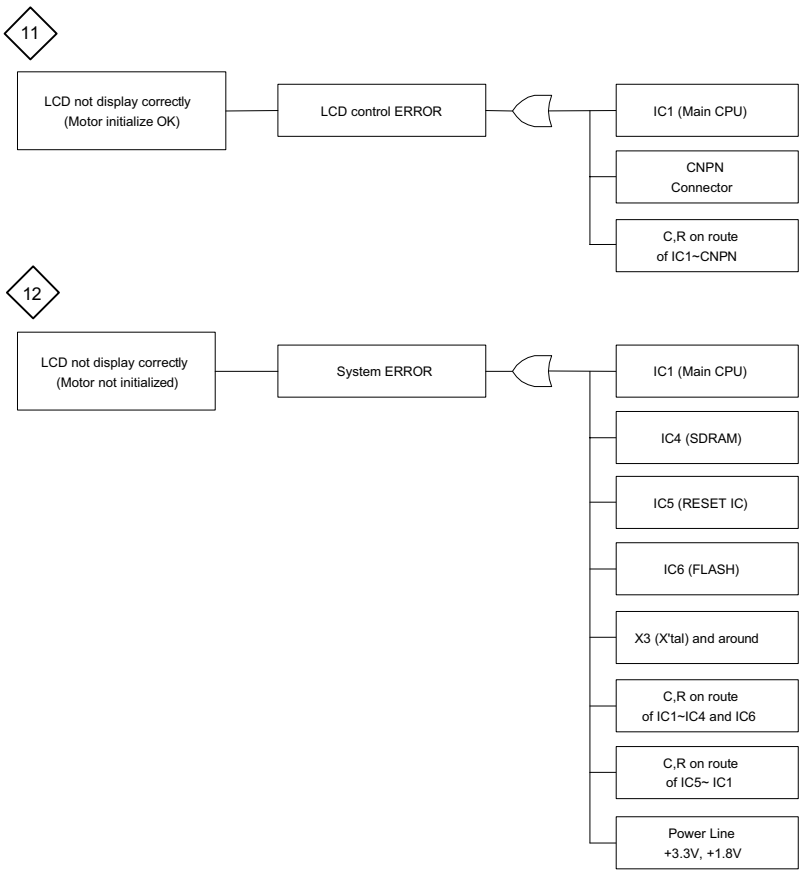
11
LCD not display correctly
(Motor initialize OK)
LCD control ERROR
IC1 (Main CPU)
CNPN
Connector
C,R on route
of IC1~CNPN
12
LCD not display correctly
(Motor not initialized)
System ERROR
IC1 (Main CPU)
IC4 (SDRAM)
IC5 (RESET IC)
IC6 (FLASH)
X3 (X'tal) and around
C,R on route
of IC1~IC4 and IC6
C,R on route
of IC5~ IC1
Power Line
+3.3V, +1.8V

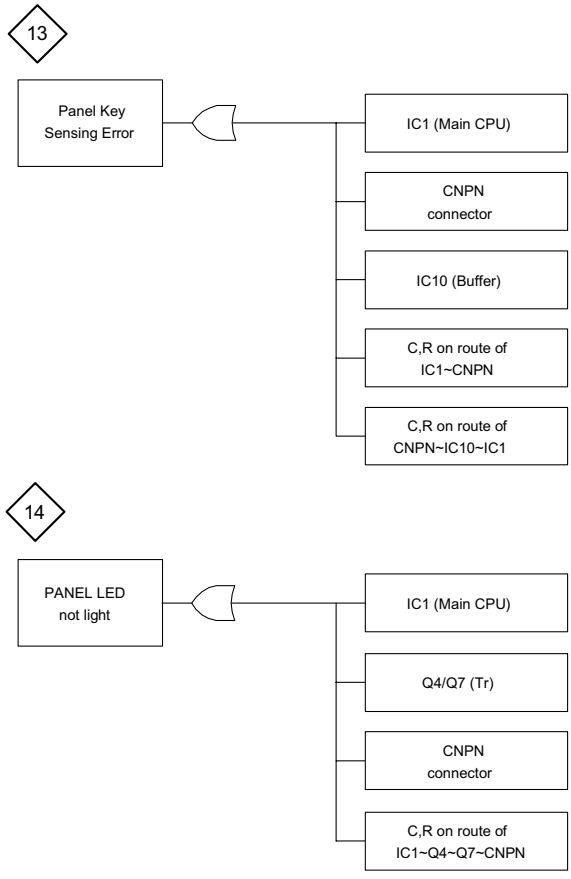
13
Panel Key
Sensing Error
IC1 (Main CPU)
CNPN
connector
IC10 (Buffer)
C,R on route of
IC1~CNPN
C,R on route of
CNPN~IC10~IC1
14
PANEL LED
not light
IC1 (Main CPU)
Q4/Q7 (Tr)
CNPN
connector
C,R on route of
IC1~Q4~Q7~CNPN

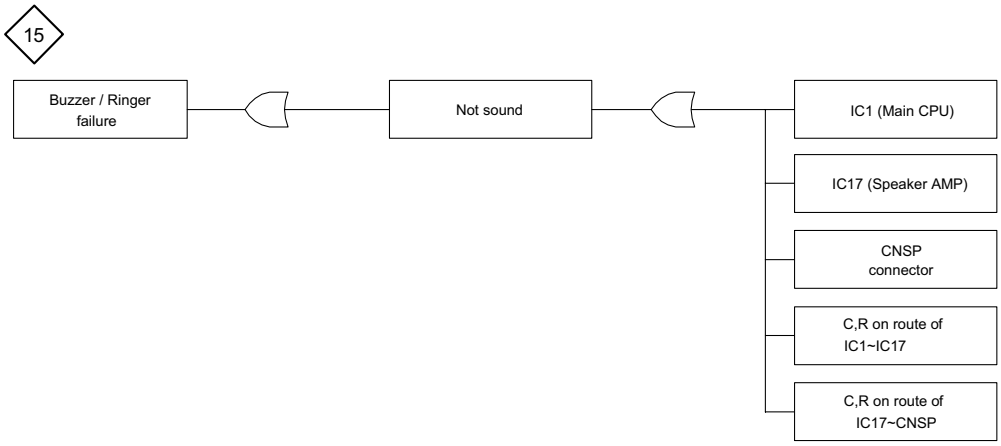
15
Buzzer / Ringer failure
Not sound
IC1 (Main CPU)
IC17 (Speaker AMP)
CNSP connector
C,R on route of IC1~IC17
C,R on route of IC17~CNSP

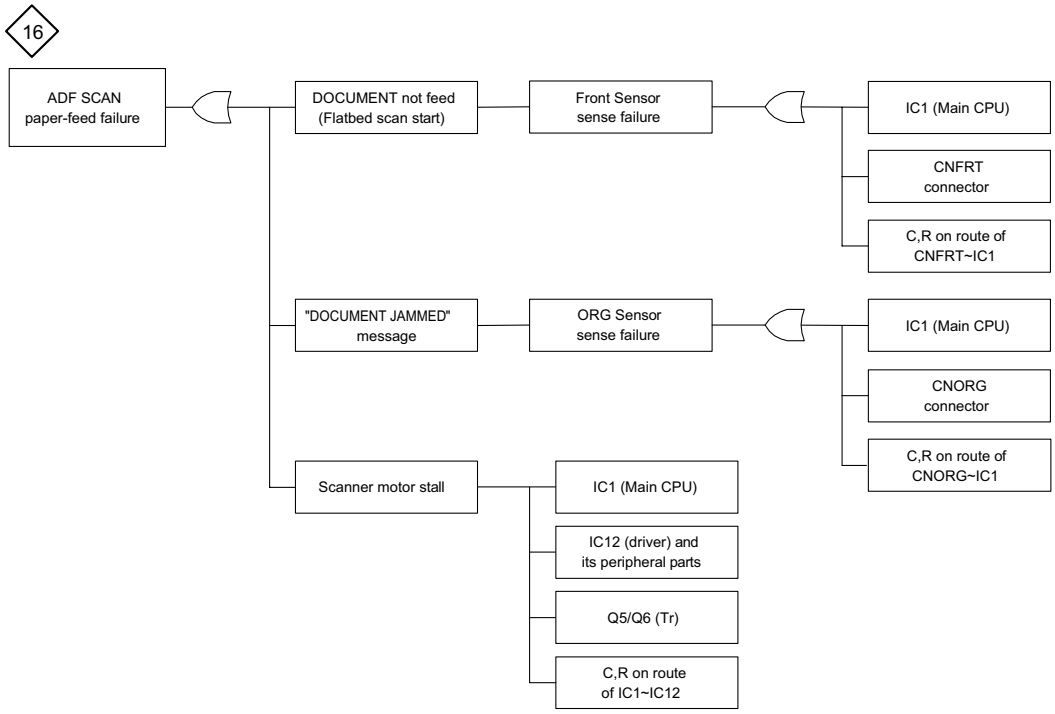
16
ADF SCAN paper-feed failure
DOCUMENT not feed (Flatbed scan start)
Front Sensor sense failure
IC1 (Main CPU)
CNFRT connector
C,R on route of CNFRT~IC1
"DOCUMENT JAMMED" message
ORG Sensor sense failure
IC1 (Main CPU)
CNORG connector
C,R on route of CNORG~IC1
Scanner motor stall
IC1 (Main CPU)
IC12 (driver) and its peripheral parts
Q5/Q6 (Tr)
C,R on route of IC1~IC12

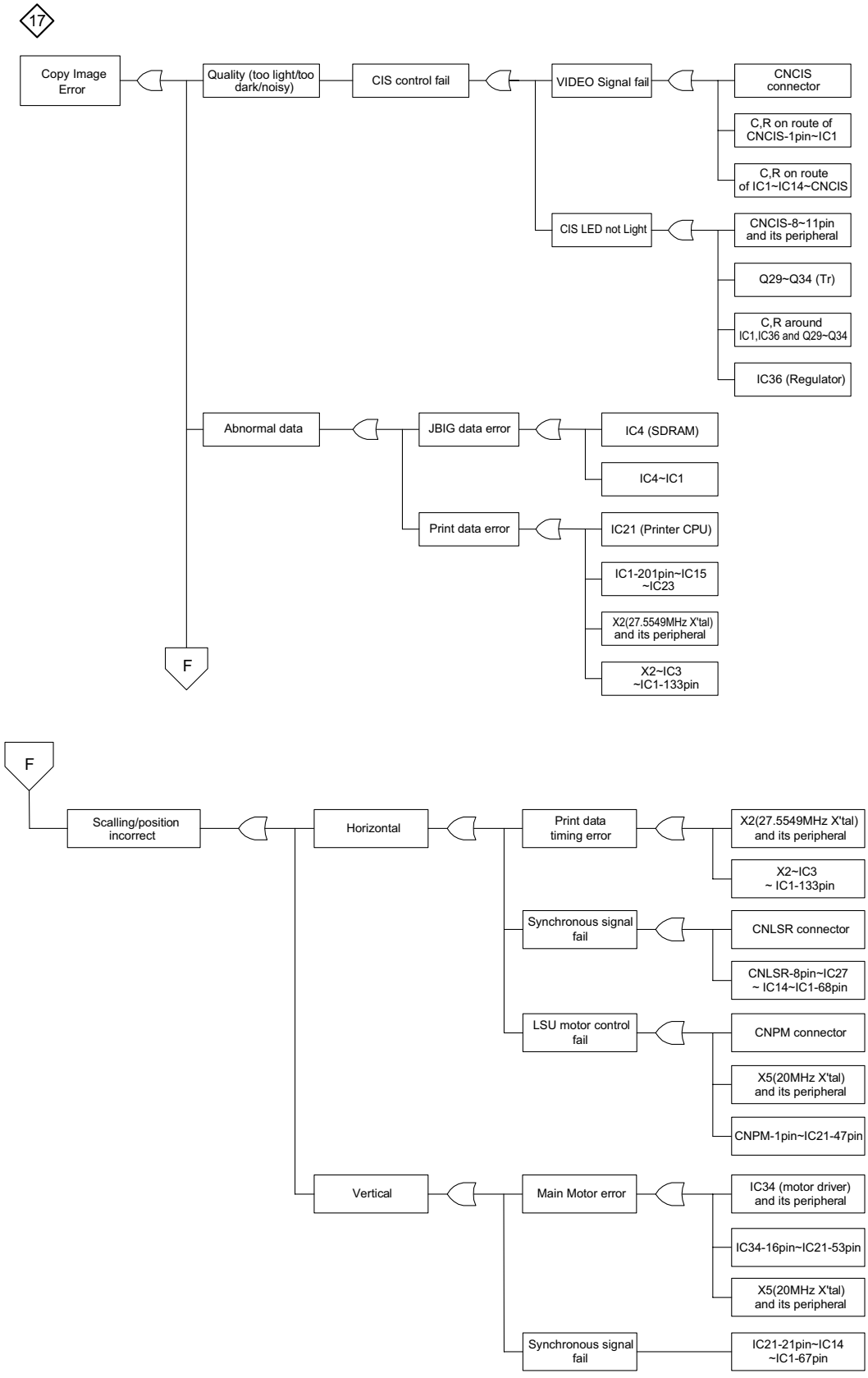
17
Copy Image Error
Quality (too light/too dark/noisy)
CIS control fail
VIDEO Signal fail
CNCIS connector
C,R on route of CNCIS-1pin~IC1
C,R on route of IC1~IC14~CNCIS
CIS LED not Light
CNCIS-8~11pin and its peripheral
Q29~Q34 (Tr)
C,R around IC1,IC36 and Q29~Q34
IC36 (Regulator)
Abnormal data
JBIG data error
IC4 (SDRAM)
IC4~IC1
Print data error
IC21 (Printer CPU)
IC1-201pin~IC15 ~IC23
X2(27.5549MHz X'tal) and its peripheral
X2~IC3 ~IC1-133pin
F
F
Scalling/position incorrect
Horizontal
Print data timing error
X2(27.5549MHz X'tal) and its peripheral
X2~IC3 ~ IC1-133pin
Synchronous signal fail
CNLSR connector
CNLSR-8pin~IC27 ~ IC14~IC1-68pin
LSU motor control fail
CNPM connector
X5(20MHz X'tal) and its peripheral
CNPM-1pin~IC21-47pin
Vertical
Main Motor error
IC34 (motor driver) and its peripheral
IC34-16pin~IC21-53pin
X5(20MHz X'tal) and its peripheral
Synchronous signal fail
IC21-21pin~IC14 ~IC1-67pin

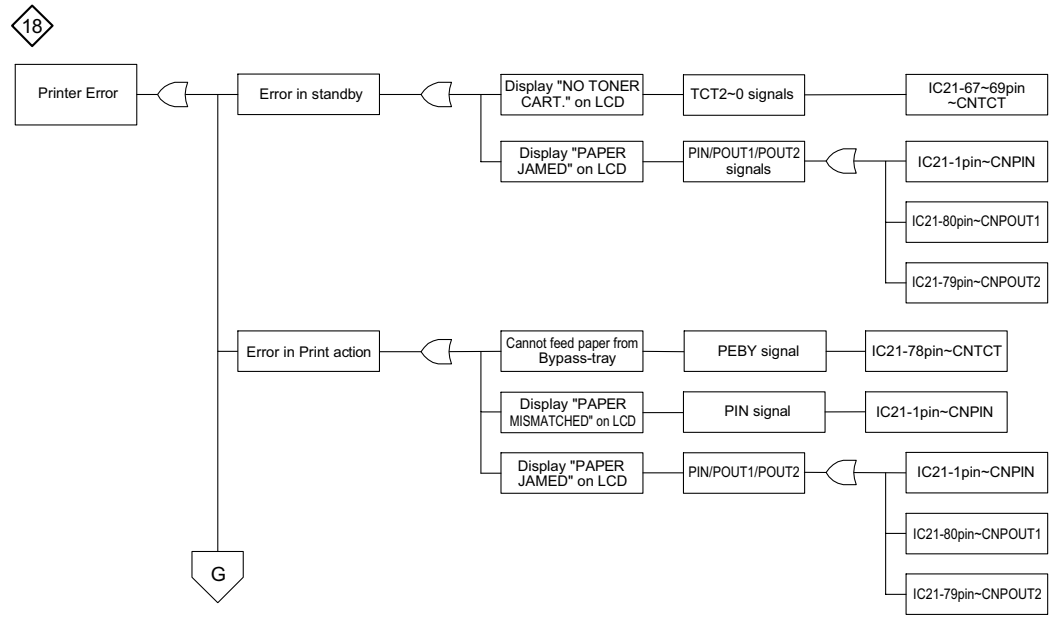
18
Printer Error
Error in standby
Display "NO TONER CART." on LCD
TCT2~0 signals
IC21-67~69pin ~CNTCT
Display "PAPER JAMED" on LCD
PIN/POUT1/POUT2 signals
IC21-1pin~CNPIN
IC21-80pin~CNPOUT1
IC21-79pin~CNPOUT2
Error in Print action
Cannot feed paper from Bypass-tray
PEBY signal
IC21-78pin~CNTCT
Display "PAPER MISMATCHED" on LCD
PIN signal
IC21-1pin~CNPIN
Display "PAPER JAMED" on LCD
PIN/POUT1/POUT2
IC21-1pin~CNPIN
IC21-80pin~CNPOUT1
IC21-79pin~CNPOUT2
G

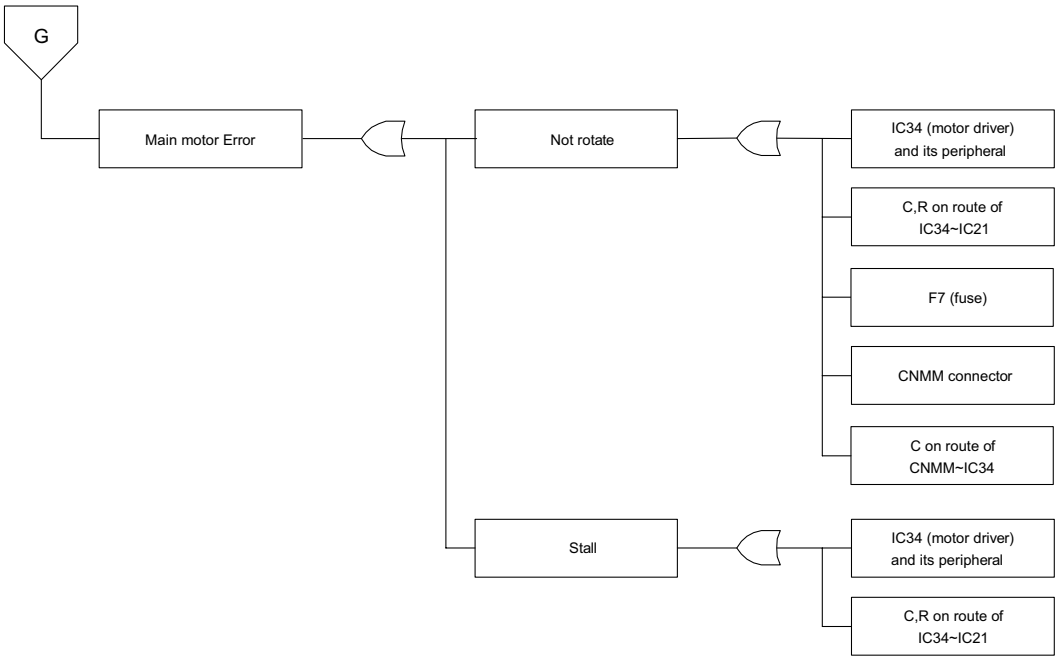
G
Main motor Error
Not rotate
IC34 (motor driver) and its peripheral
C,R on route of IC34~IC21
F7 (fuse)
CNMM connector
C on route of CNMM~IC34
Stall
IC34 (motor driver) and its peripheral
C,R on route of IC34~IC21

CHAPTER 6. CIRCUIT SCHEMATICS AND PARTS LAYOUT

[1] Control PWB circuit

1. Main Controller Block (1a/10)

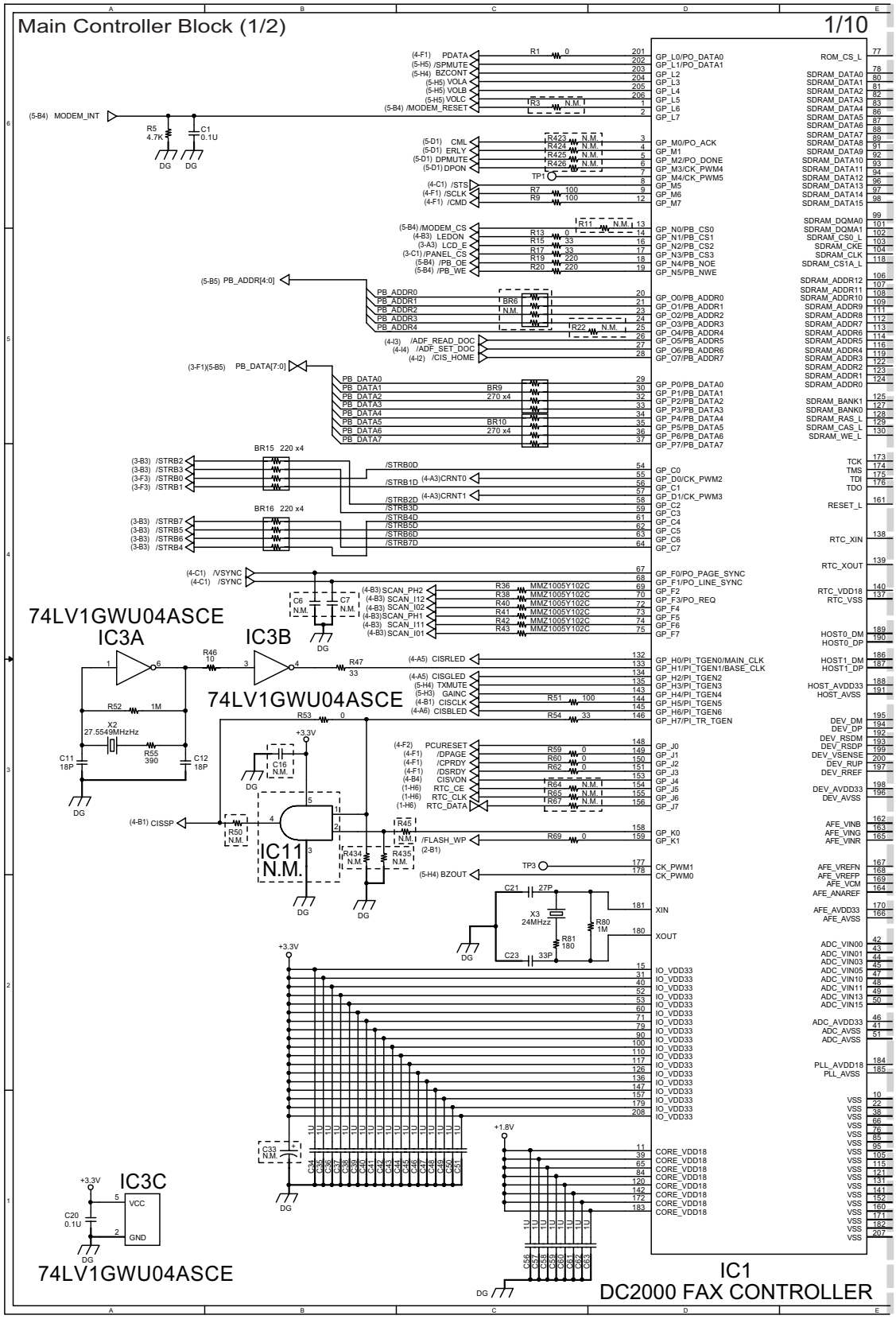

2. Main Controller Block (1b/10)

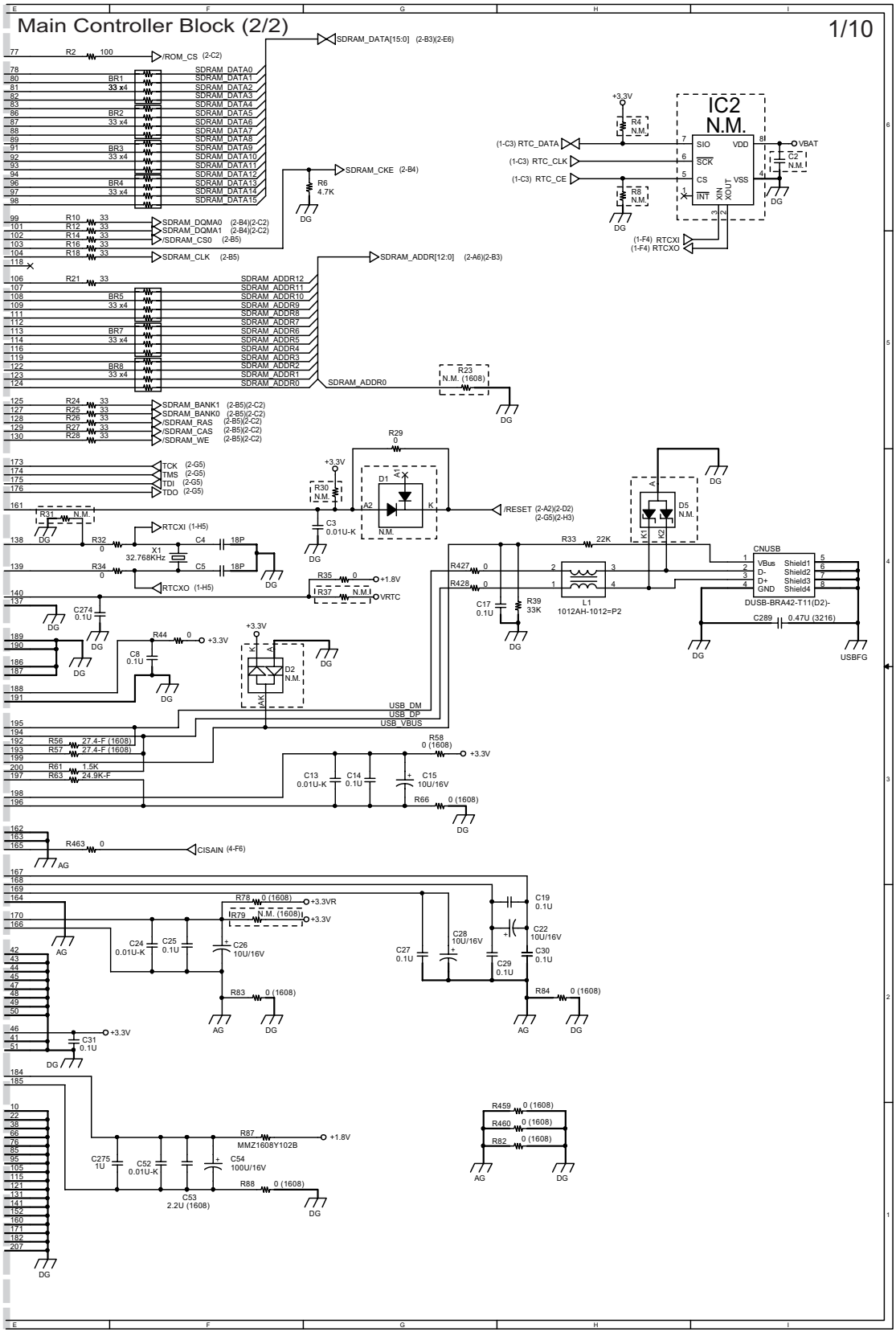

3. Memory Block (2/10)

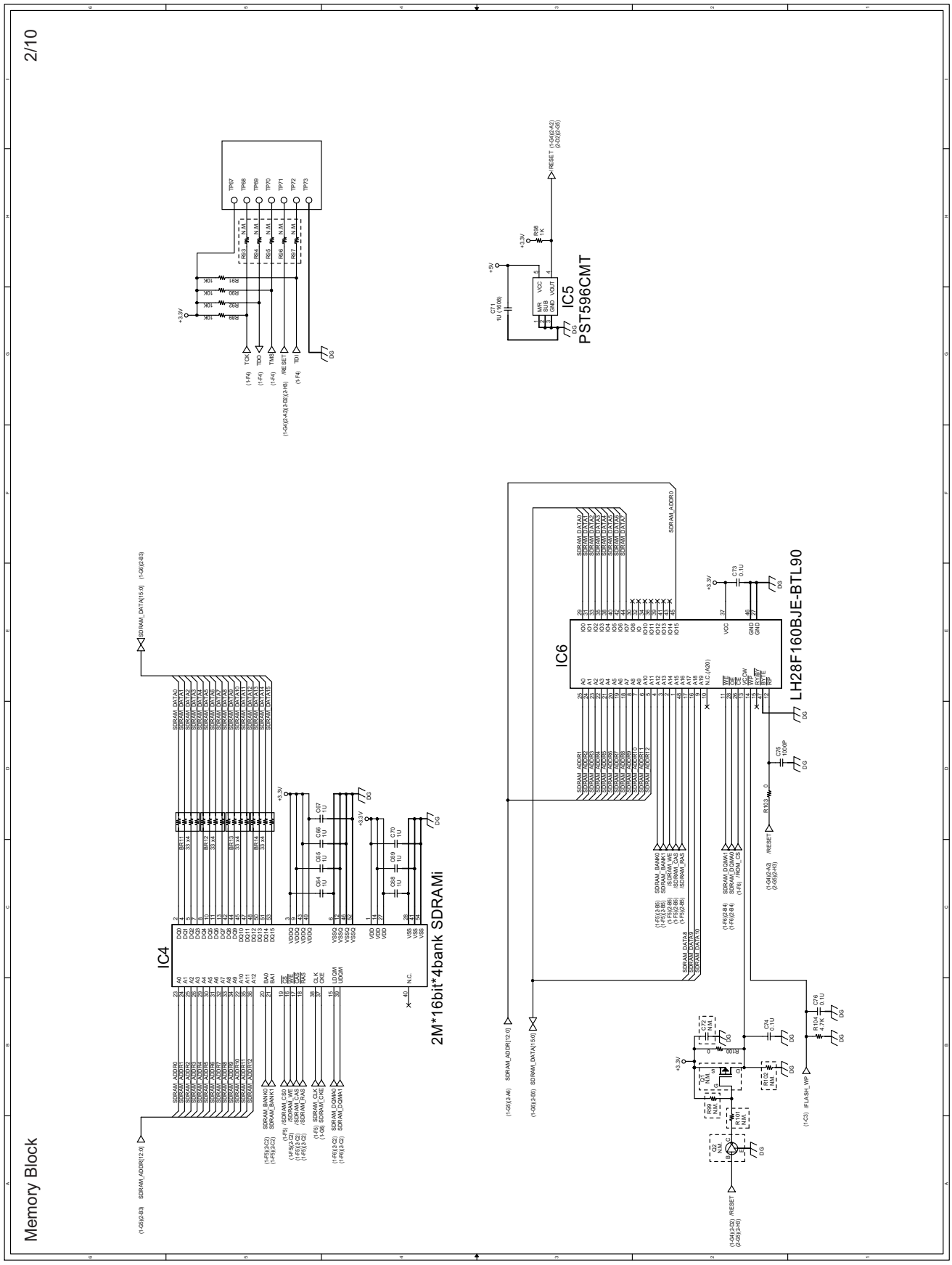

4. User I/F, Regulator Block (3/10)

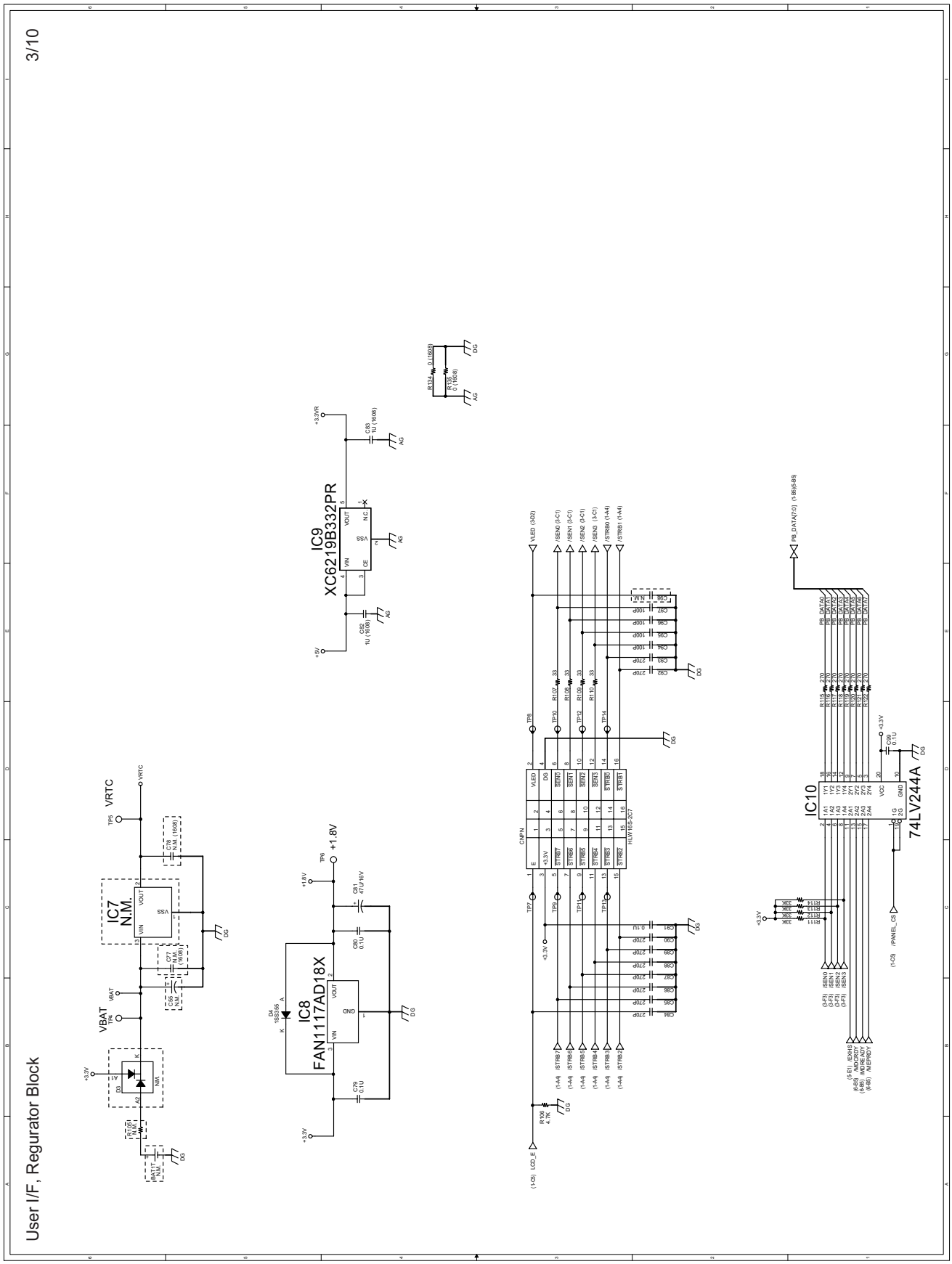

5. Scanner & Printer I/F Block (4/10)

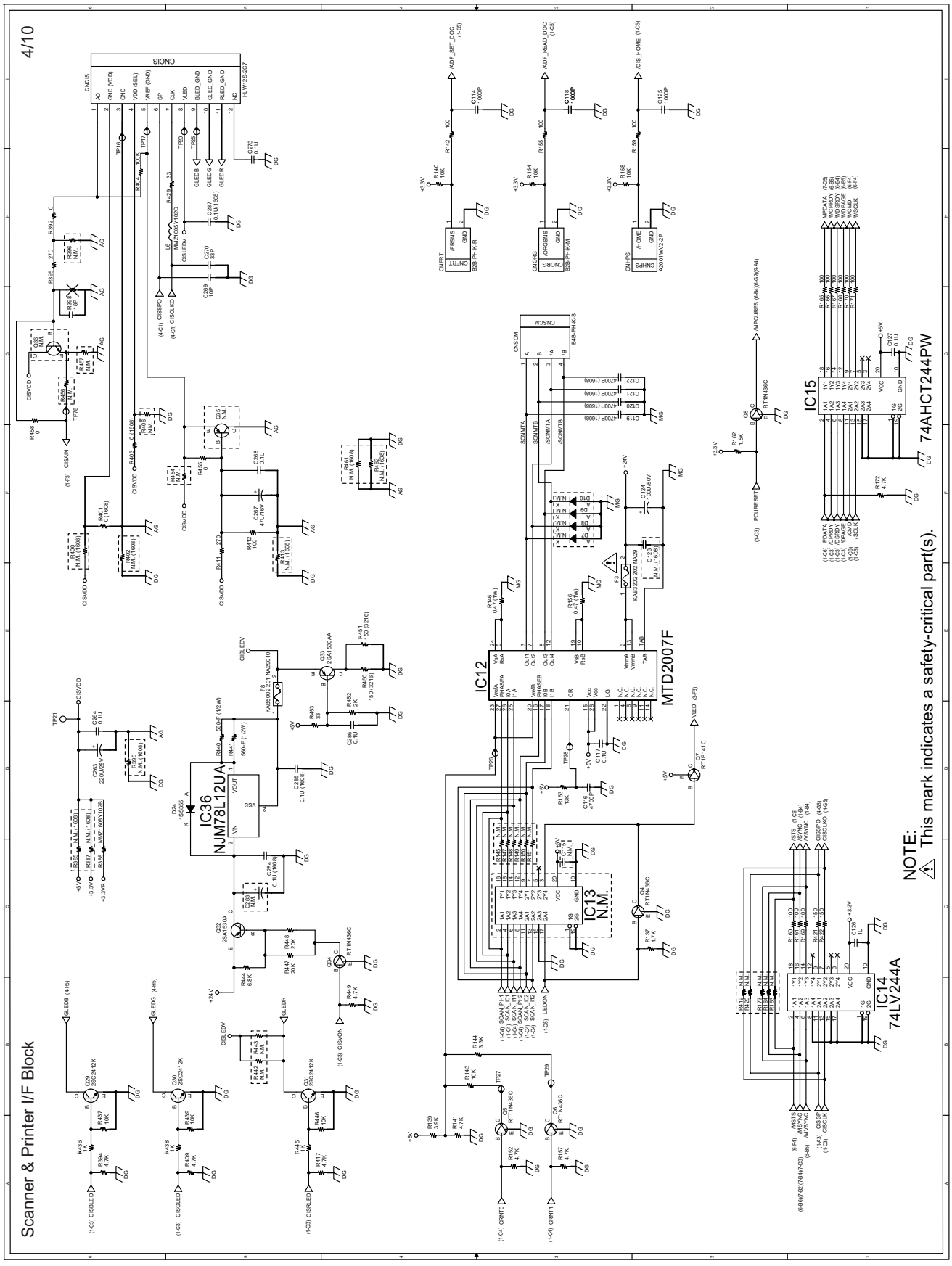

6. Speaker Block (5/10)

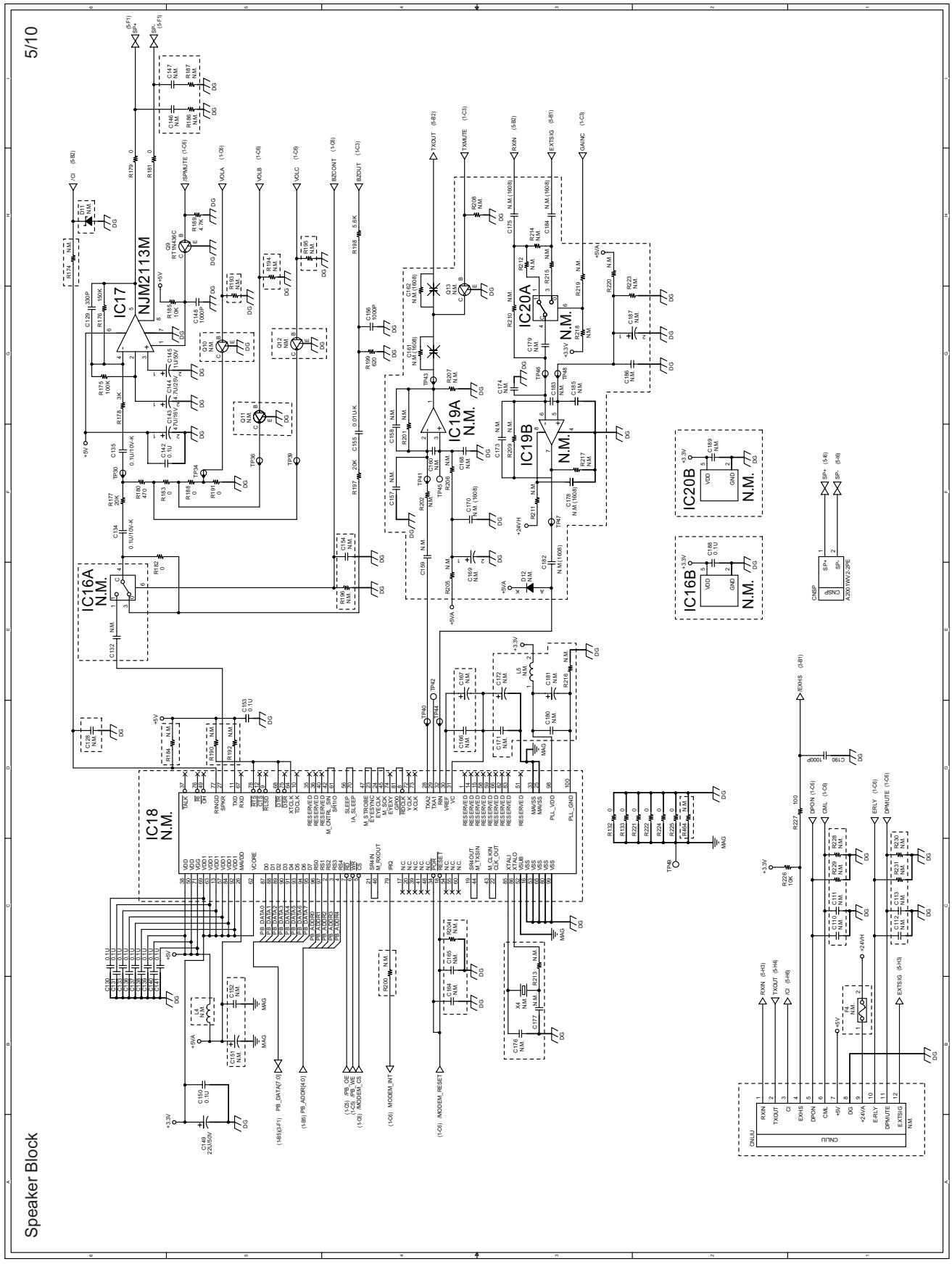

7. Printer Controller Block (6/10)

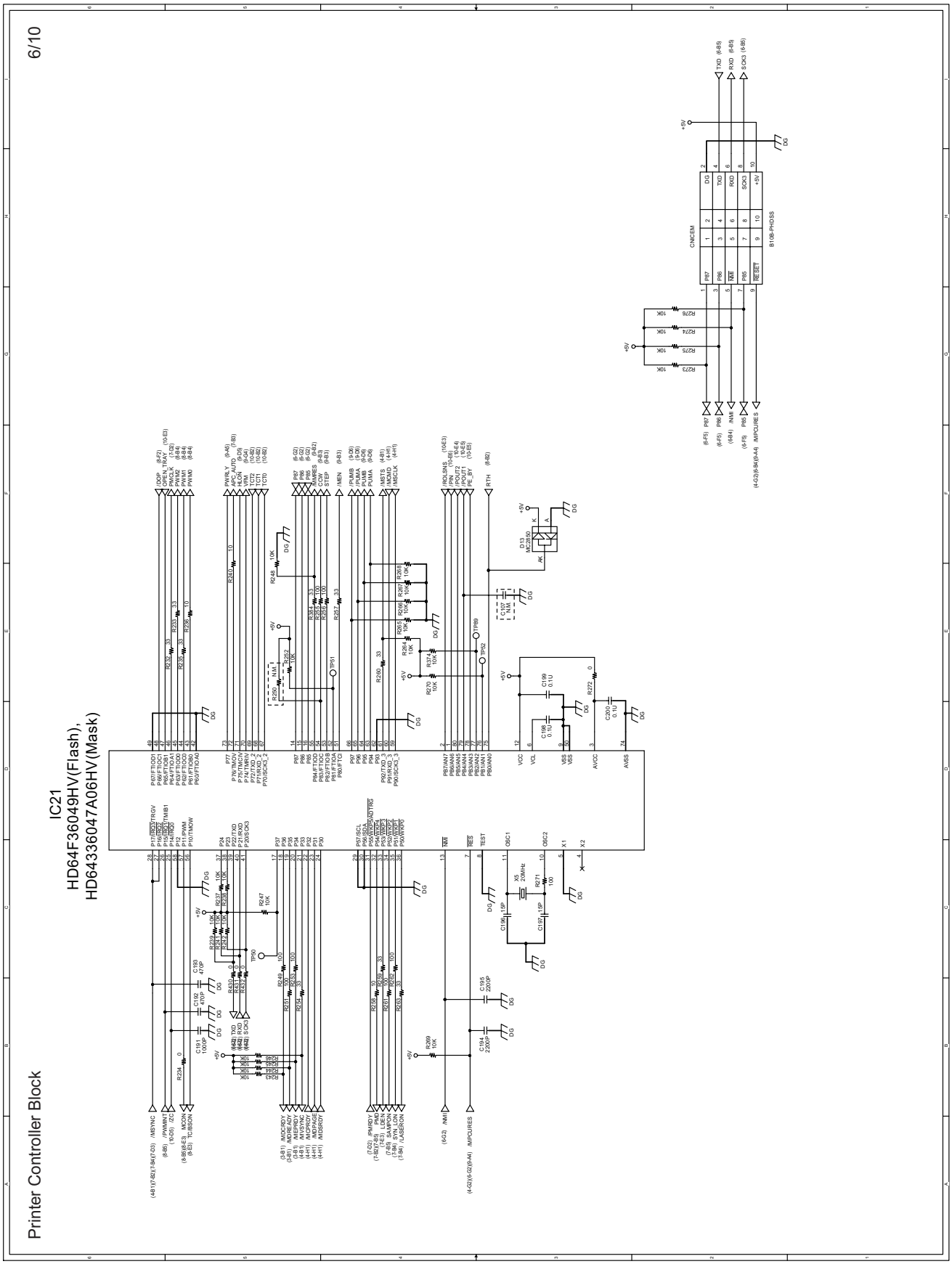

8. Optical Unit (LSU) Control Block (7/10)

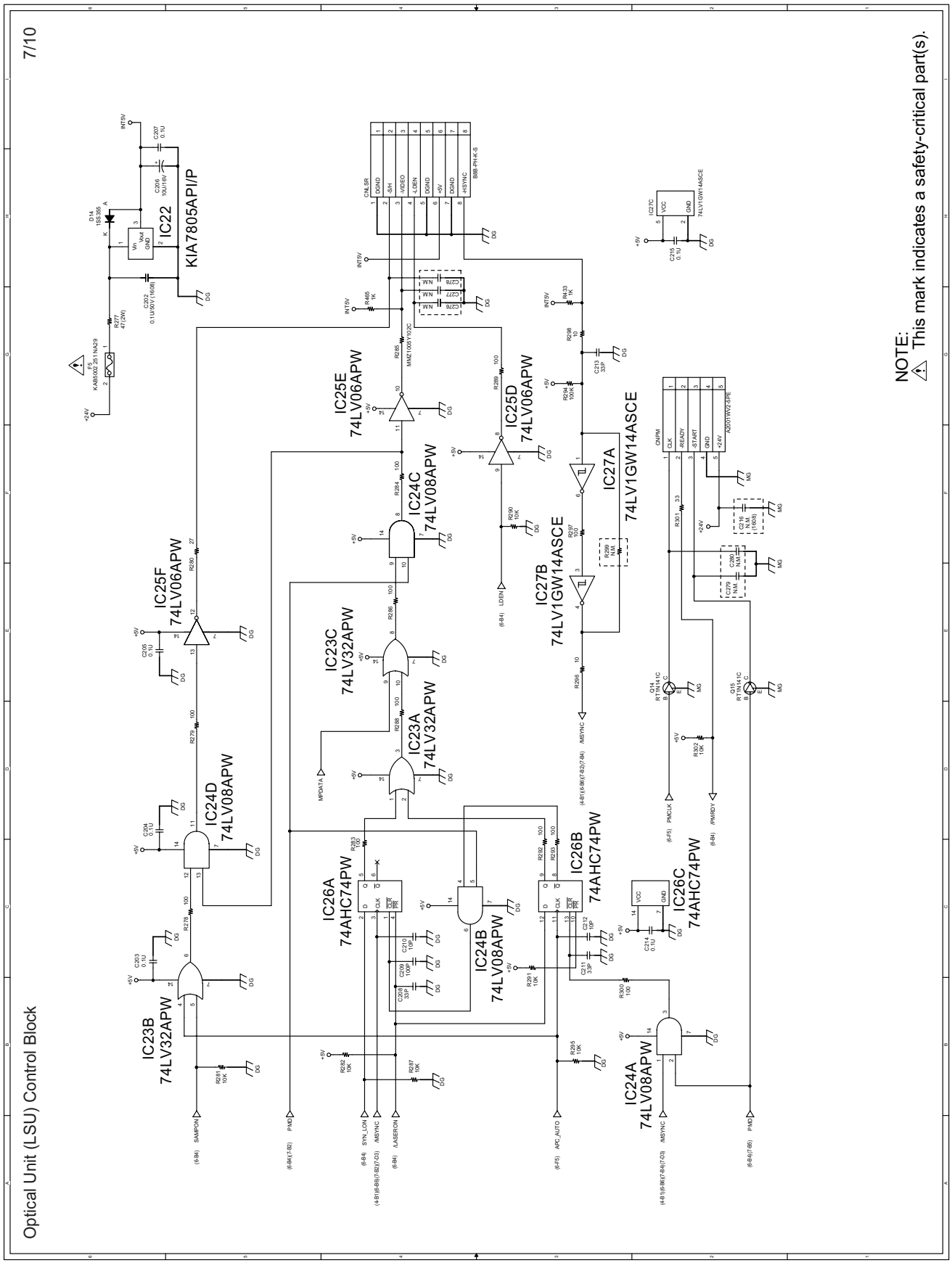

9. High Voltage Control & Thermistor Input Block (8/10)

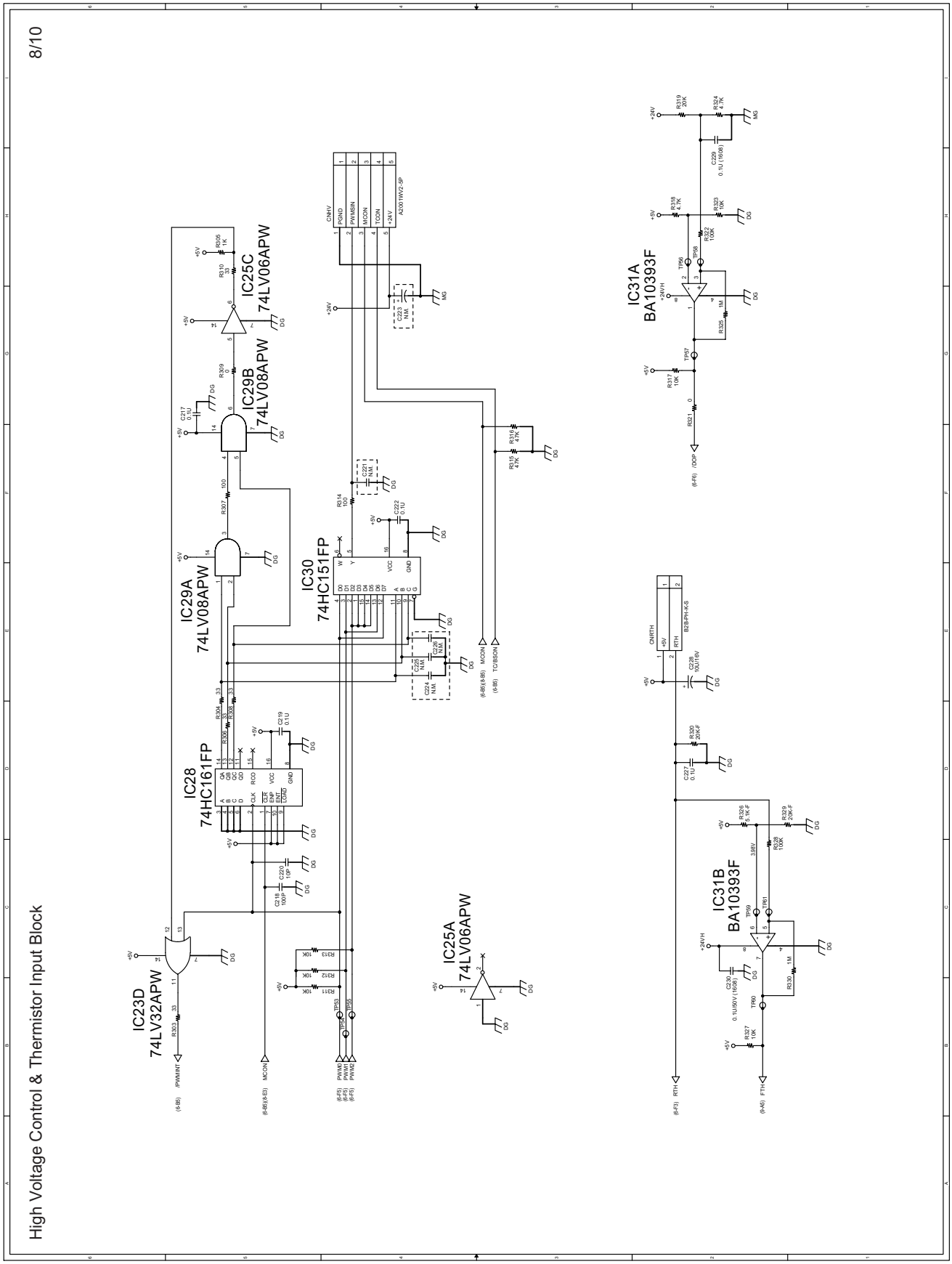

10. Driver Block (9/10)

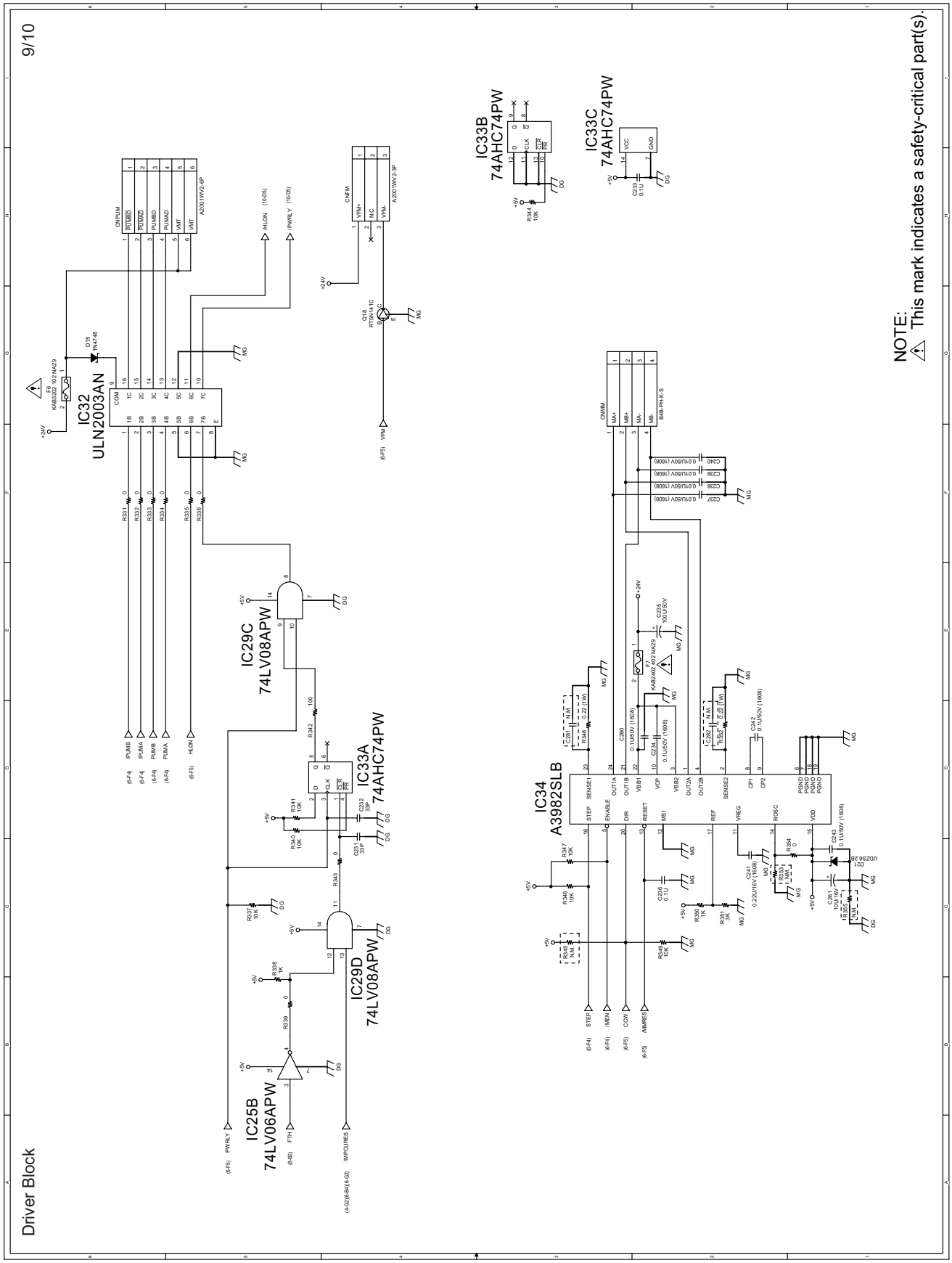

11. Sensor Connector & Power Supply Block (10/10)

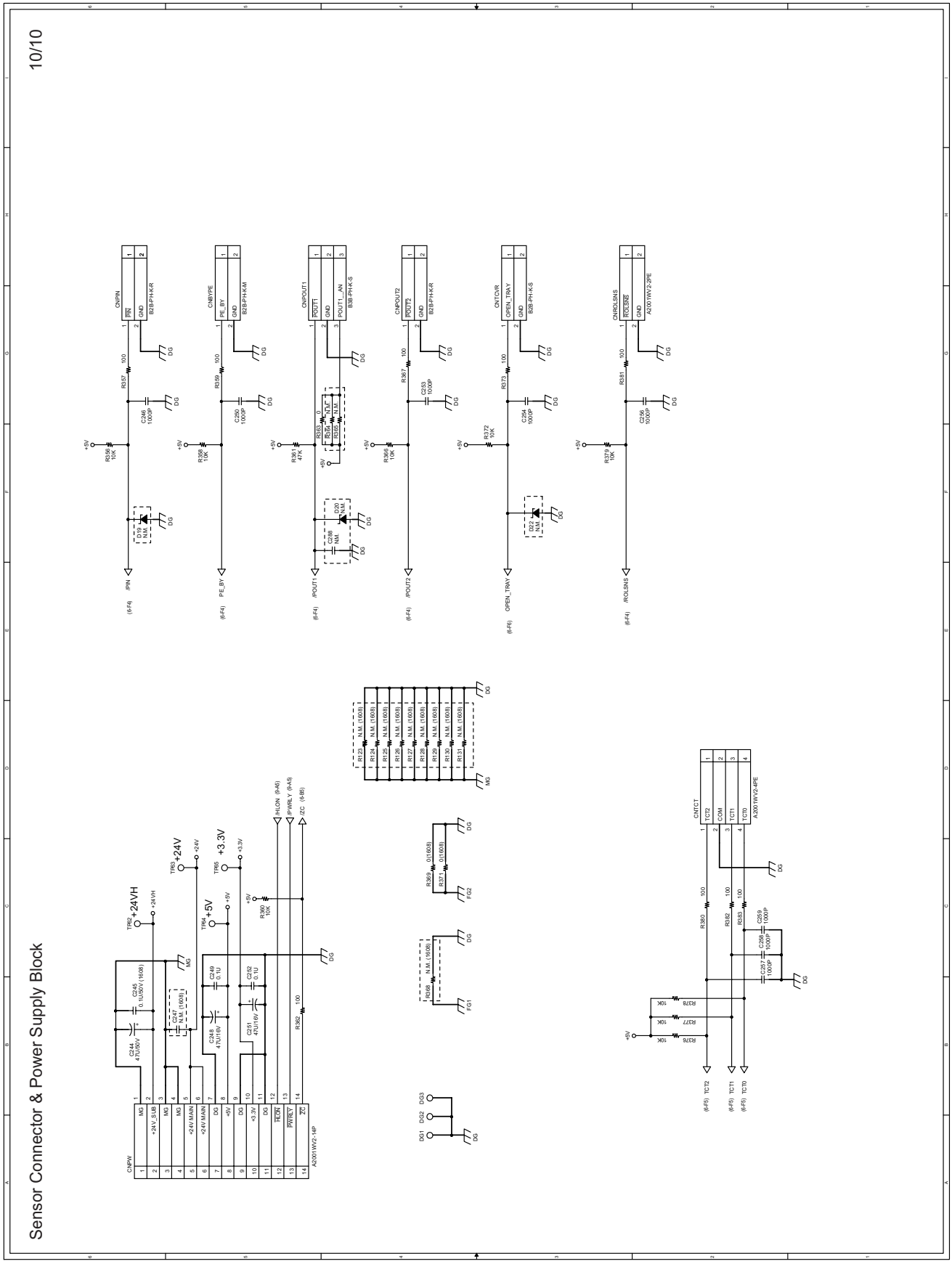

12. Control PWB parts layout (Top side)

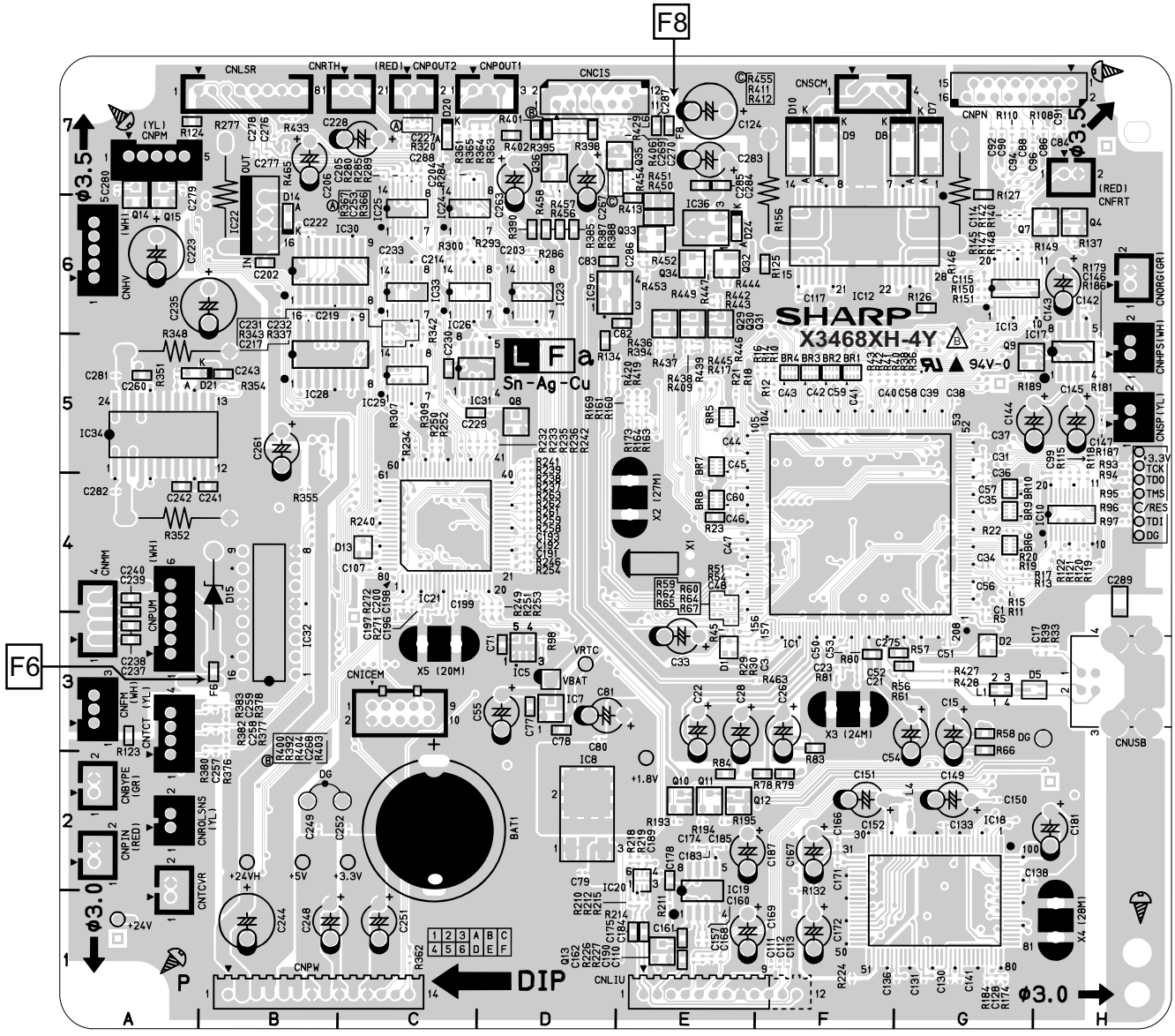

The CONTROL PWB of the model employs lead-free solder.

13. Control PWB parts layout (Bottom side)

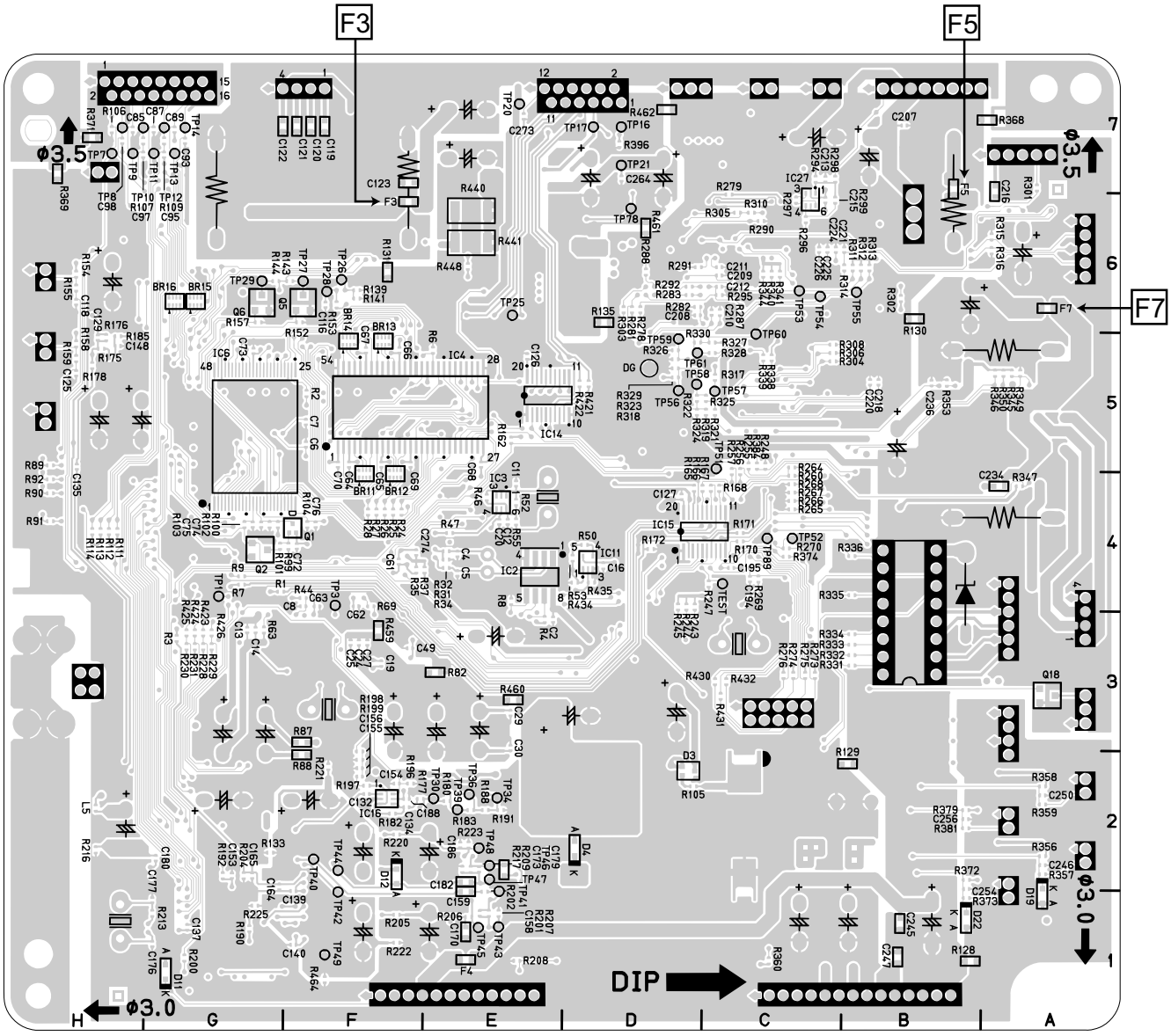

LFa Sn-Ag-Cu **The CONTROL PWB of the model employs lead-free solder.**

[2] Power Supply PWB circuit

1. Power Supply PWB circuit

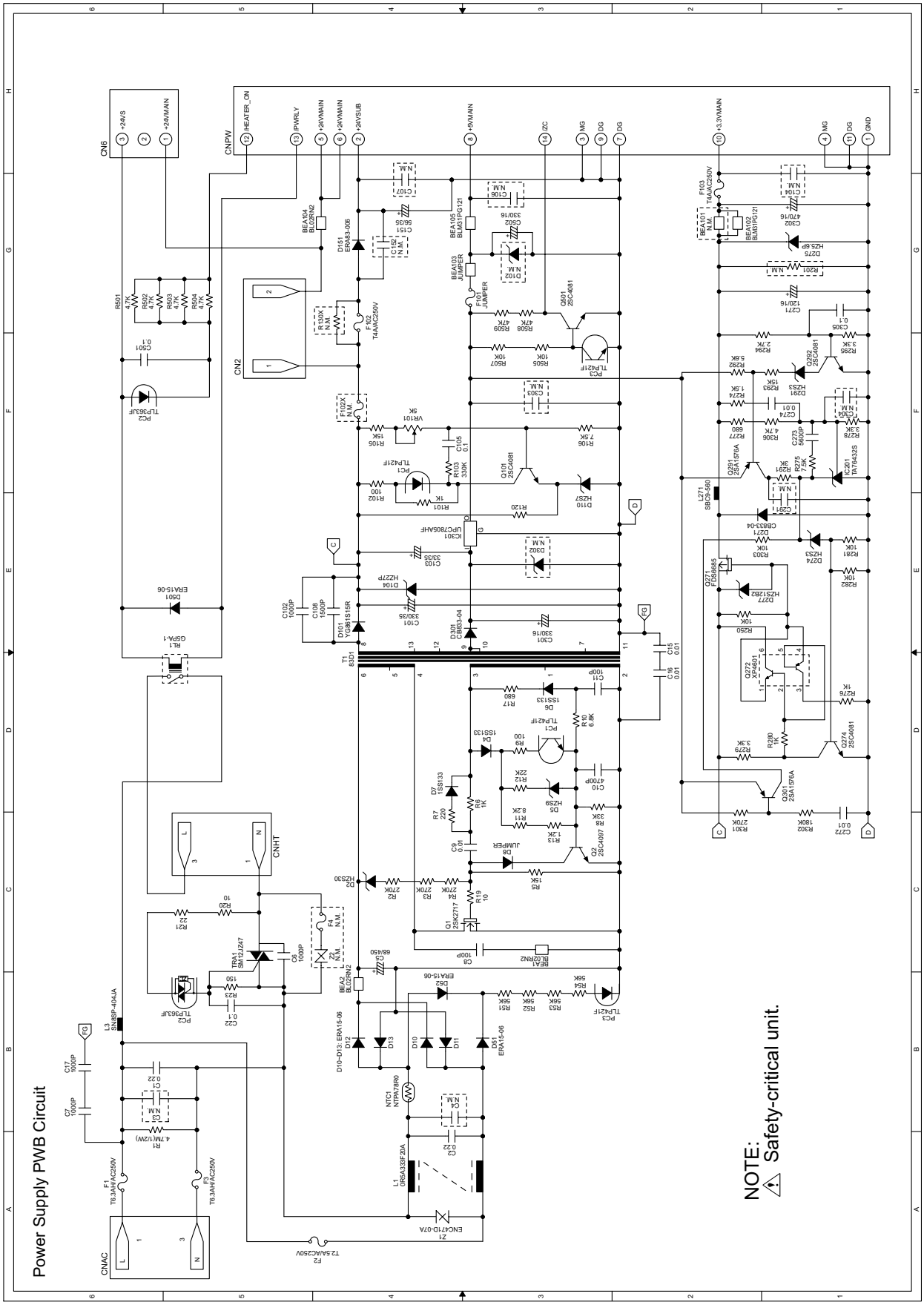

2. Power Supply PWB parts layout (Top side)

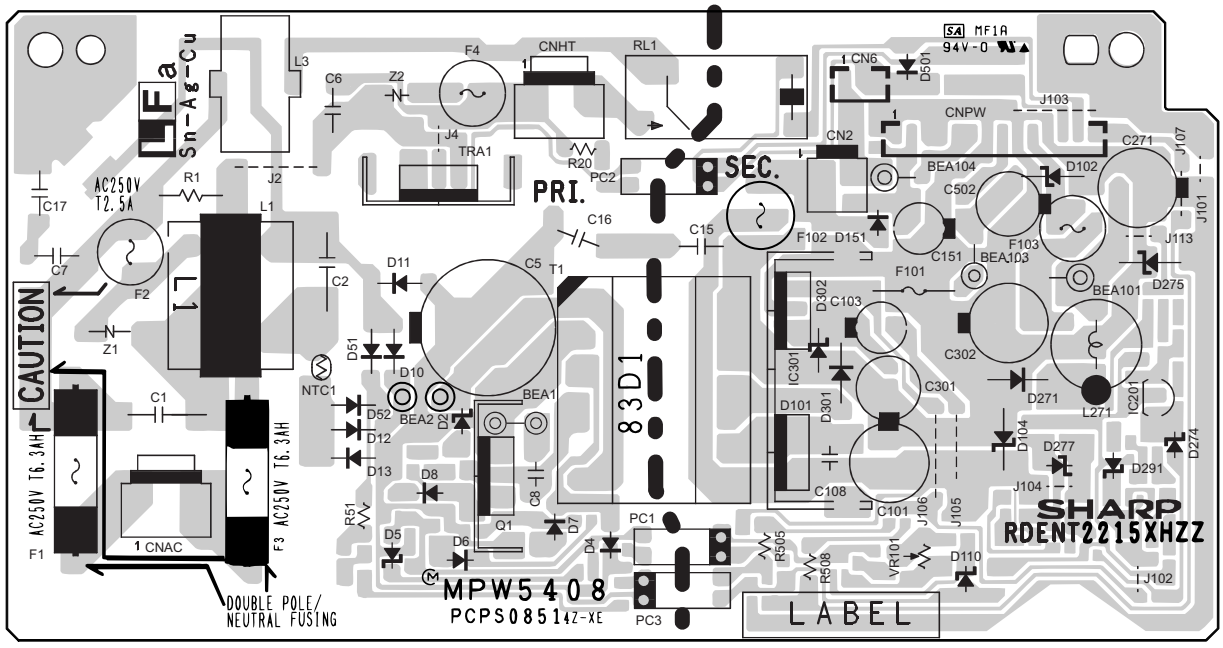

LFa Sn-Ag-Cu **The POWER SUPPLY PWB of the model employs lead-free solder.**

3. Power Supply PWB parts layout (Bottom side)

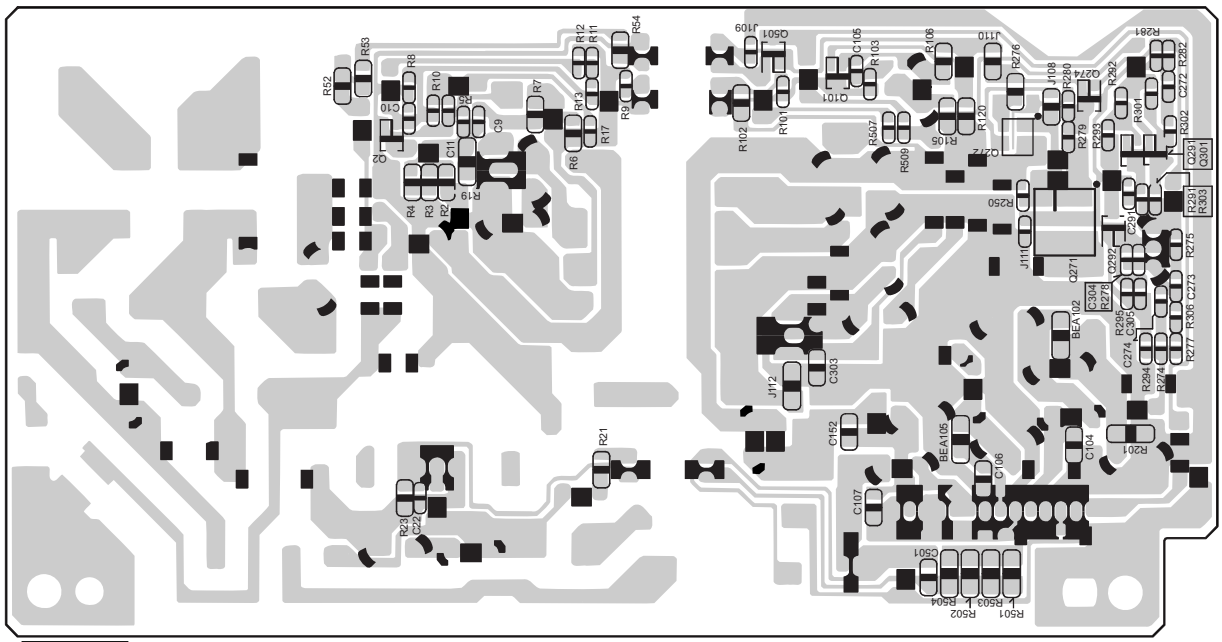

LFa Sn-Ag-Cu **The POWER SUPPLY PWB of the model employs lead-free solder.**

[3] High Voltage PWB circuit

1. High Voltage PWB circuit

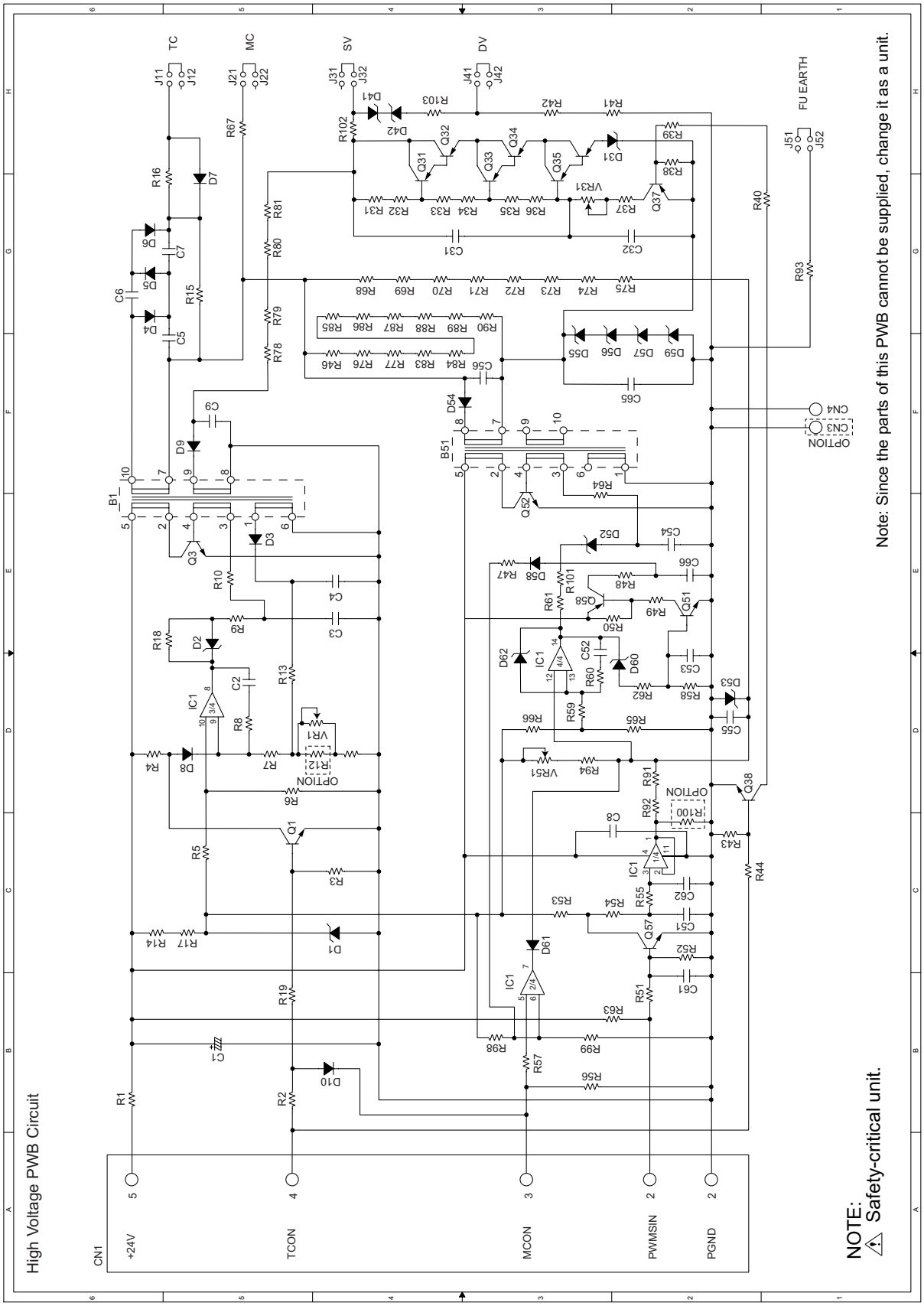

2. High voltage PWB parts layout (Top side)

Note: Since the parts of this PWB cannot be supplied, change it as a unit.

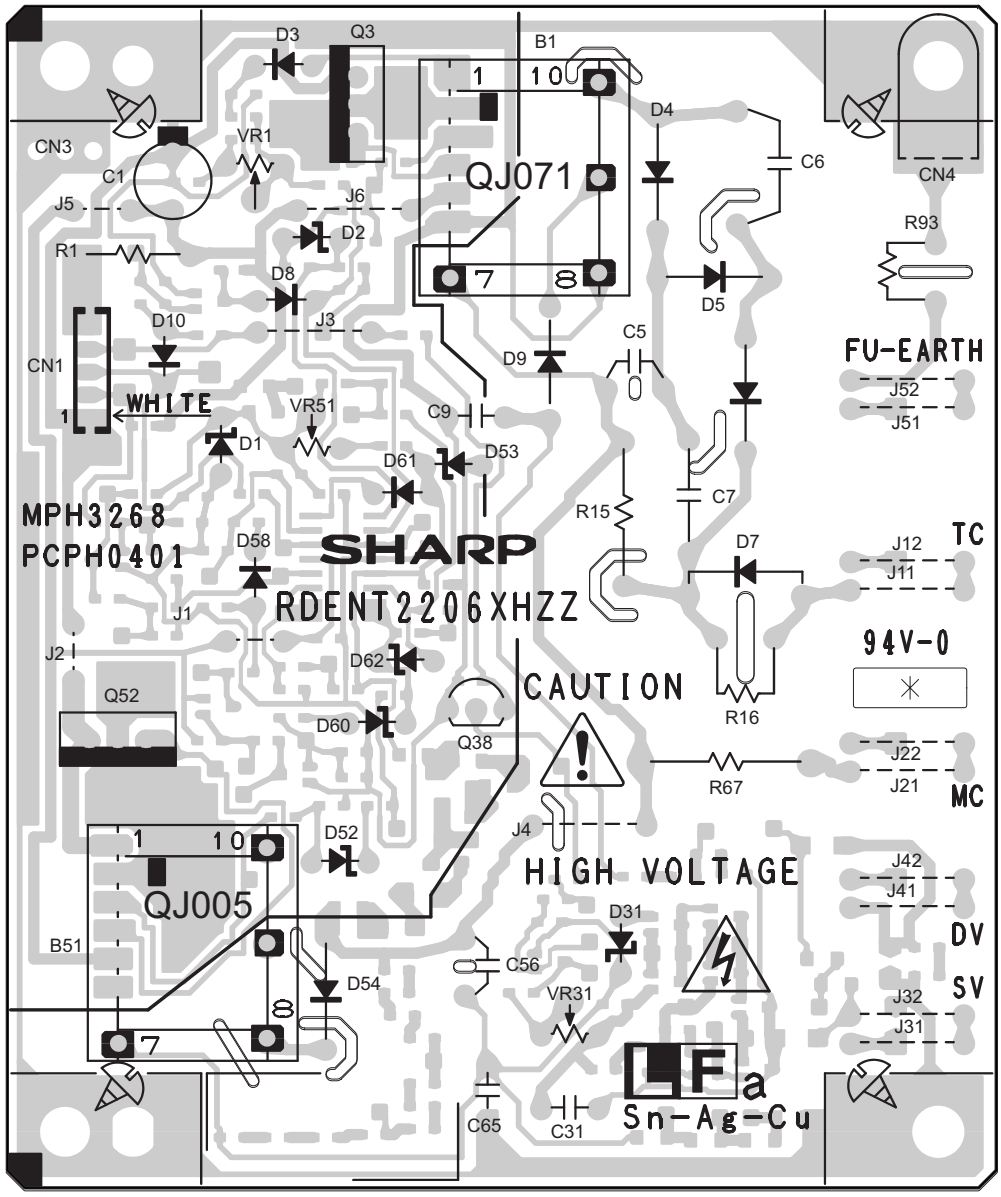

CAUTION - HIGH VOLTAGE
The unit's back cover should never be opened by anyone other than a qualified serviceperson. There are many high voltage parts inside the unit, and touching them is dangerous.

LFa Sn-Ag-Cu **The HIGH VOLTAGE PWB of the model employs lead-free solder.**

3. High Voltage PWB parts layout (Bottom side)

Note: Since the parts of this PWB cannot be supplied, change it as a unit.

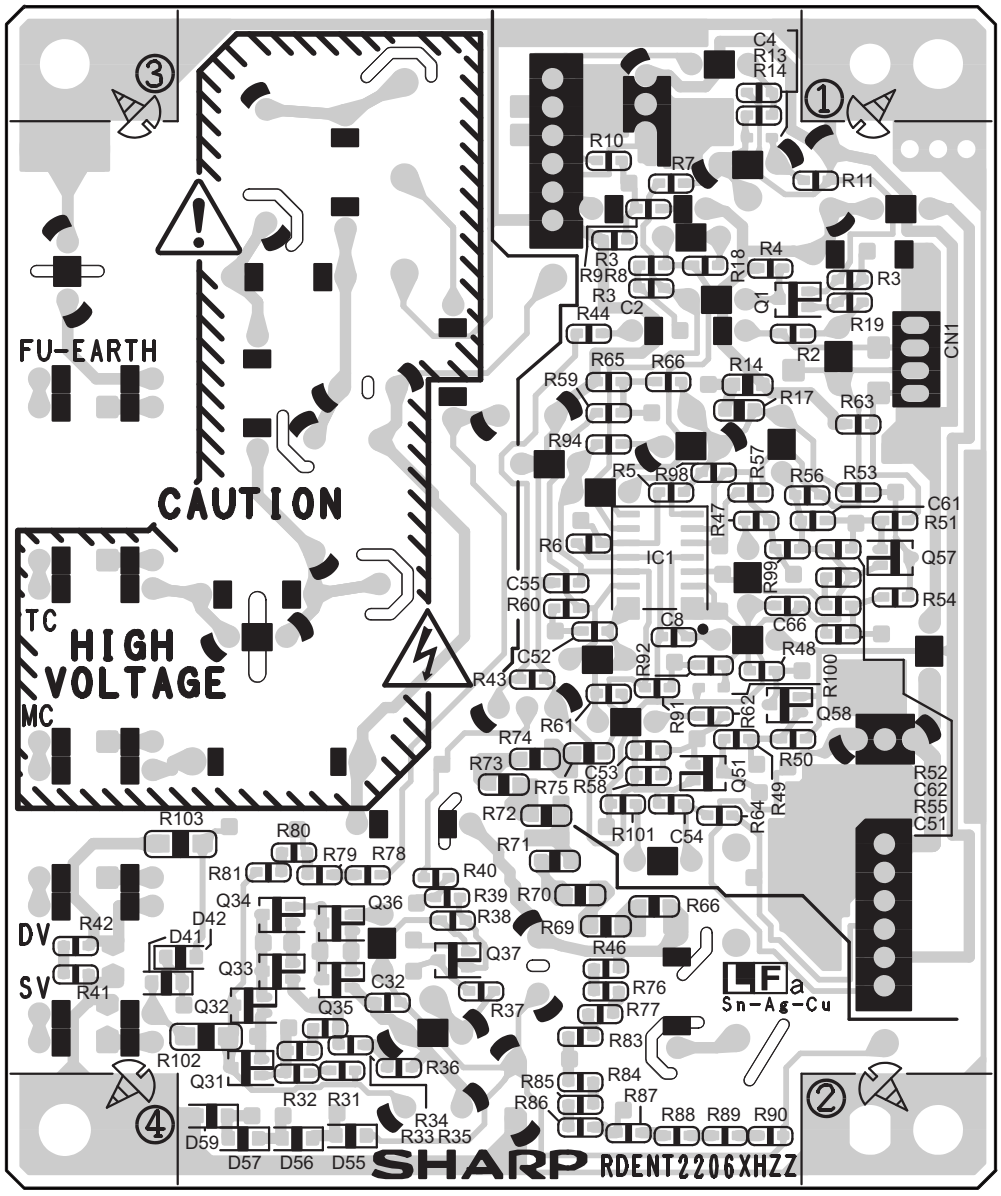

CAUTION - HIGH VOLTAGE
The unit's back cover should never be opened by anyone other than a qualified serviceperson. There are many high voltage parts inside the unit, and touching them is dangerous.

The HIGH VOLTAGE PWB of the model employs lead-free solder.

[4] Operation Panel PWB circuit

1. Operation Panel PWB circuit

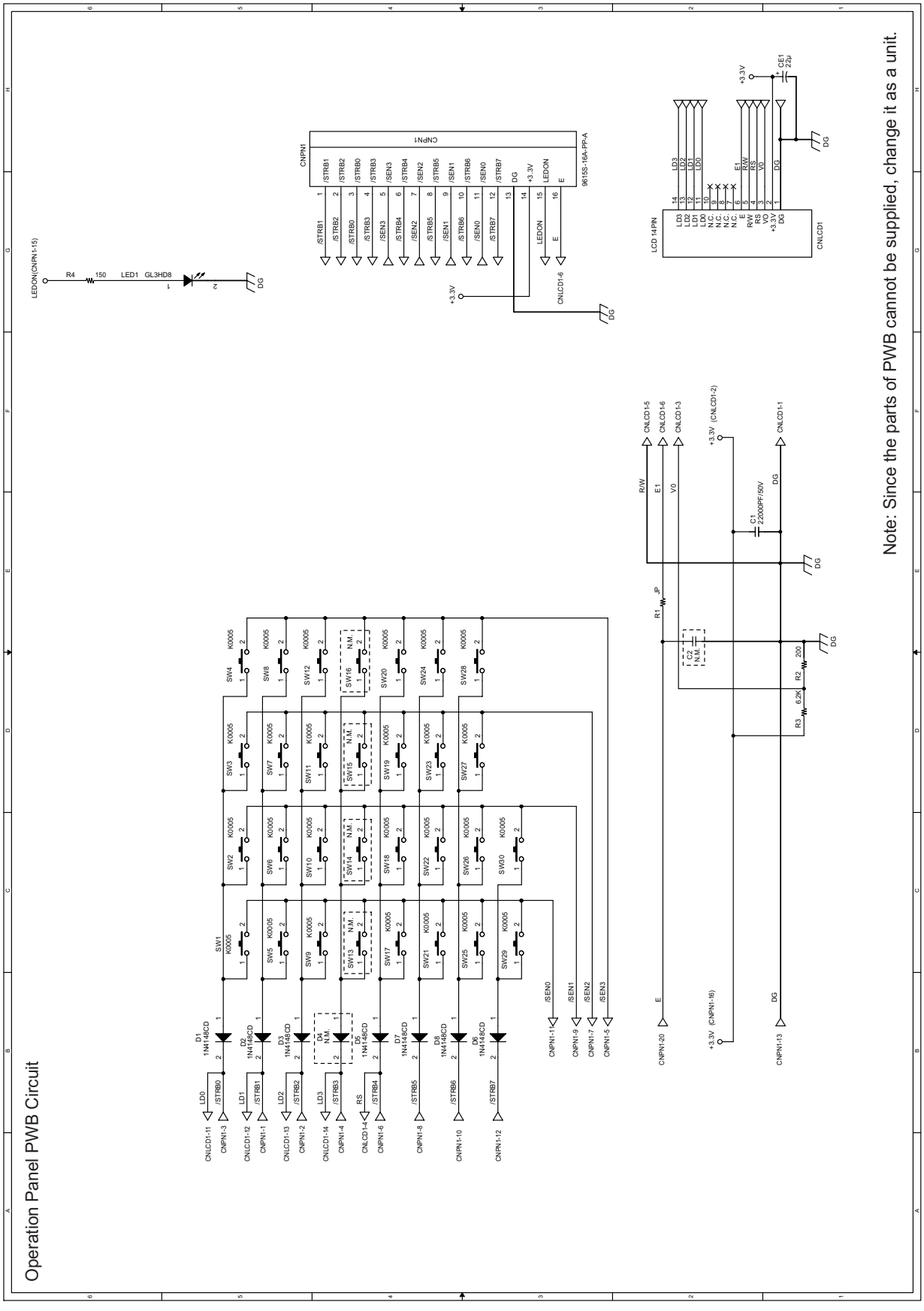

2. Operation Panel PWB parts layout

Note: Since the parts of PWB cannot be supplied, change it as a unit.

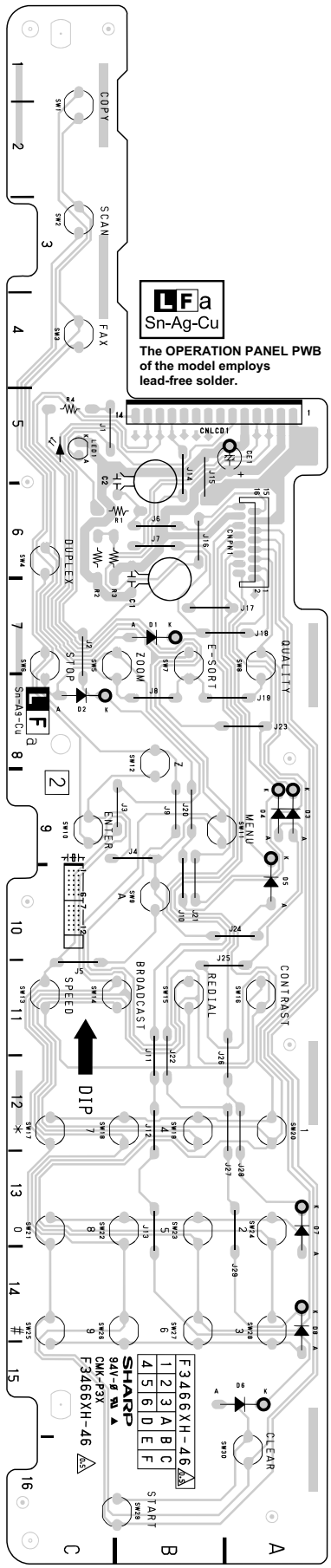

CHAPTER 7. OPERATION FLOWCHART

[1] Power on sequence

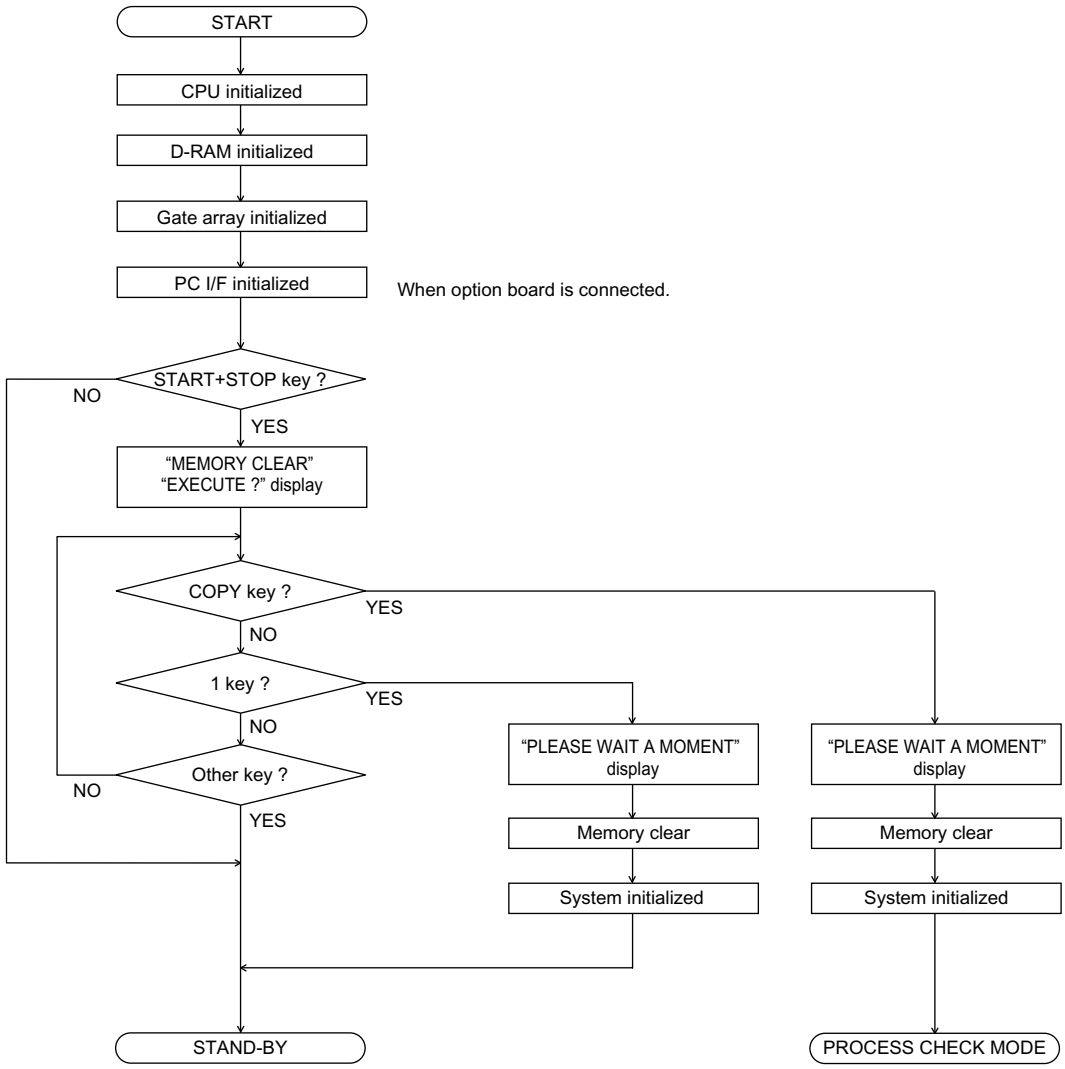

CHAPTER 8. OTHER

[1] Service tools

1. List

NO.	PARTS CODE	DESCRIPTION	REF NO.	QTY	PRICE RANK
1	CPWBS3511SC01	Extension board unit with FFC connector 4 pcs.	-	1	CF
2	QCNCW2556SC1B	FFC CONNECTOR	CNCIS A/B	2	AG
3	QCNCW2556SC1F	FFC CONNECTOR	CNPN A/B	2	AG
4	QCNWK383CSCZZ	PANEL EXTENSION CABLE (16PIN)	CNPN	1	
5	QCNWK384CSCZZ	CIS EXTENSION CABLE (12PIN)	CNCIS	1	
6	QCNWK364CSCZZ	OPTICAL UNIT (LSU-P) EXTENSION CABLE (5PIN)	CNPM	1	AX
7	QCNWK365CSCZZ	OPTICAL UNIT (LSU-L) EXTENSION CABLE (8PIN)	CNLSR	1	AX
8	QCNWK366CSCZZ	ORG SENSOR EXTENSION CABLE (2PIN)	CNORG	1	AX
9	QCNWK367CSCZZ	HOME POSITION SENSOR EXTENSION CABLE (2PIN)	CNHPS	1	AR
10	QCNWK368CSCZZ	FRONT SENSOR EXTENSION CABLE (2PIN)	CNFRT	1	AR
11	QCNWK369CSCZZ	BYPASS PE SENSOR EXTENSION CABLE (2PIN)	CNBYPE	1	AR
12	QCNWK370CSCZZ	POWER SUPPLY PWB UNIT EXTENSION CABLE (14PIN)	CNPW	1	BC
13	QCNWK371CSCZZ	TRAY COVER SENSOR EXTENSION CABLE (2PIN)	CNTCVR	1	AR
14	QCNWK372CSCZZ	PO1 SENSOR EXTENSION CABLE (3PIN)	CNPOUT1	1	AT
15	QCNWK373CSCZZ	PO2 SENSOR EXTENSION CABLE (2PIN)	CNPOUT2	1	AR
16	QCNWK374CSCZZ	P-IN SENSOR EXTENSION CABLE (2PIN)	CNPIN	1	AR
17	QCNWK375CSCZZ	ROLLER SENSOR EXTENSION CABLE (2PIN)	CNROLSNS	1	AR
18	QCNWK376CSCZZ	TONER CARTRIDGE SENSOR EXTENSION CABLE (4PIN)	CNTCT	1	AV
19	QCNWK377CSCZZ	SPEAKER EXTENSION CABLE (2PIN)	CNSP	1	AR
20	QCNWK378CSCZZ	THERMISTOR EXTENSION CABLE (2PIN)	CNRTH	1	AR
21	QCNWK379CSCZZ	MAIN MOTOR EXTENSION CABLE (4PIN)	CNMM	1	AV
22	QCNWK380CSCZZ	PICKUP MOTOR EXTENSION CABLE (6PIN)	CNPUM	1	AY
23	QCNWK381CSCZZ	SCANNER MOTOR EXTENSION CABLE (4PIN)	CNSCM	1	AV
24	QCNWK382CSCZZ	HIGH VOLTAGE PWB UNIT EXTENSION CABLE (5PIN)	CNHV	1	AX
25	QCNWK385CSCZZ	FAN MOTOR EXTENSION CABLE (3PIN)	CNFM	1	

2. Connection

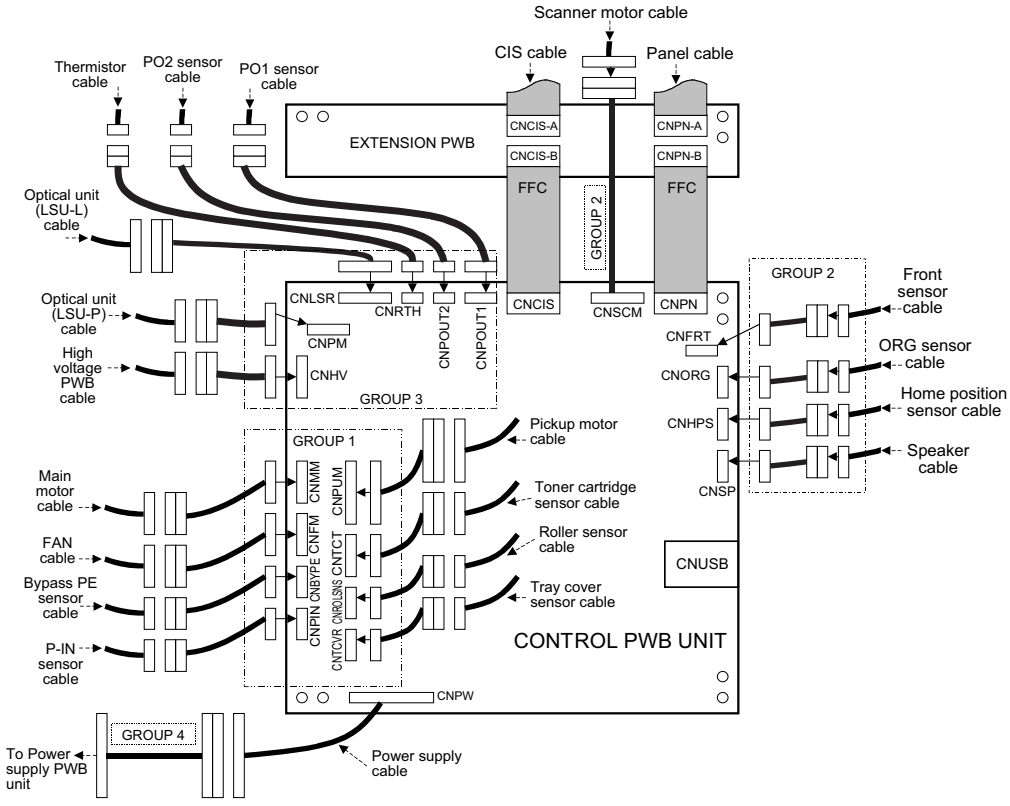

[2] Rewriting version up the FLASH ROM

1. Preliminary setting for USB connection

Printer and Scanner driver should be installed to your PC to be able to communicate between your PC and AM-300 via USB. (Refer to the Setup guide)

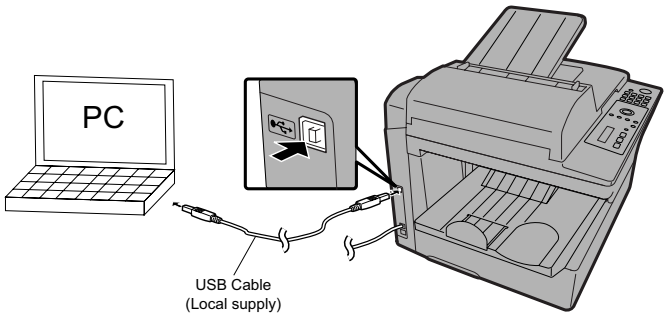

2. Download the new firmware

1. Connect your PC and AM-300 with USB cable.
2. Copy the file "TE18 ✳ (*).exe" to your PC.

   (*): TE18 ✳ .exe will be able to get SHARP web site.
3. Double-click "TE18 ✳ .exe"

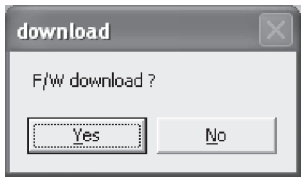

4. Click "Yes" to start download a firmware.



TASK bar indicates the progress.

↓



↓

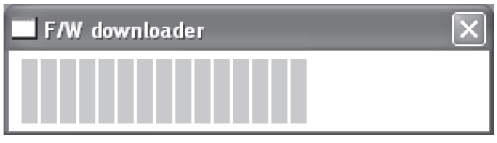

"FIRMWARE UPDATE" will appear on the LCD of AM-300.

↓

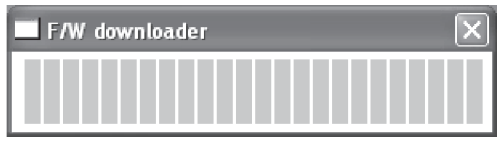

↓



5. Click "OK" to finish. AM-300 will be rebooted automatically.

SHARP PARTS GUIDE

No. 00ZAM300DESME

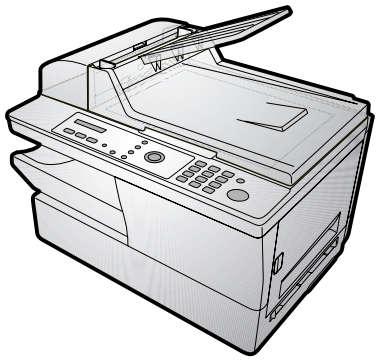

Illustration:AM-300DE

DIGITAL MULTIFUNCTIONAL SYSTEM

MODEL AM-300DE

MODEL	SELECTION CODE	DESTINATION
AM-300	DE	Germany
AM-300	IT	Italy
AM-300	H	U.K.

CONTENTS

[1] Cabinet,etc.

[2] Flatbed unit

[3] Scanner unit

[4] Paper exit unit

[5] Fusing unit

[6] Printer drive unit

[7] Drive unit

[8] Packing material & Accessories

[9] Control PWB unit

[10] Power supply PWB unit

[11] High voltage PWB unit

[12] Operation panel PWB unit

■ INDEX

Parts marked with "⚠" are important for maintaining the safety of the set. Be sure to replace these parts with specified ones for maintaining the safety and performance of the set.

SHARP CORPORATION

This document has been published to be used for after sales service only.
The contents are subject to change without notice.

[1] Cabinet,etc.

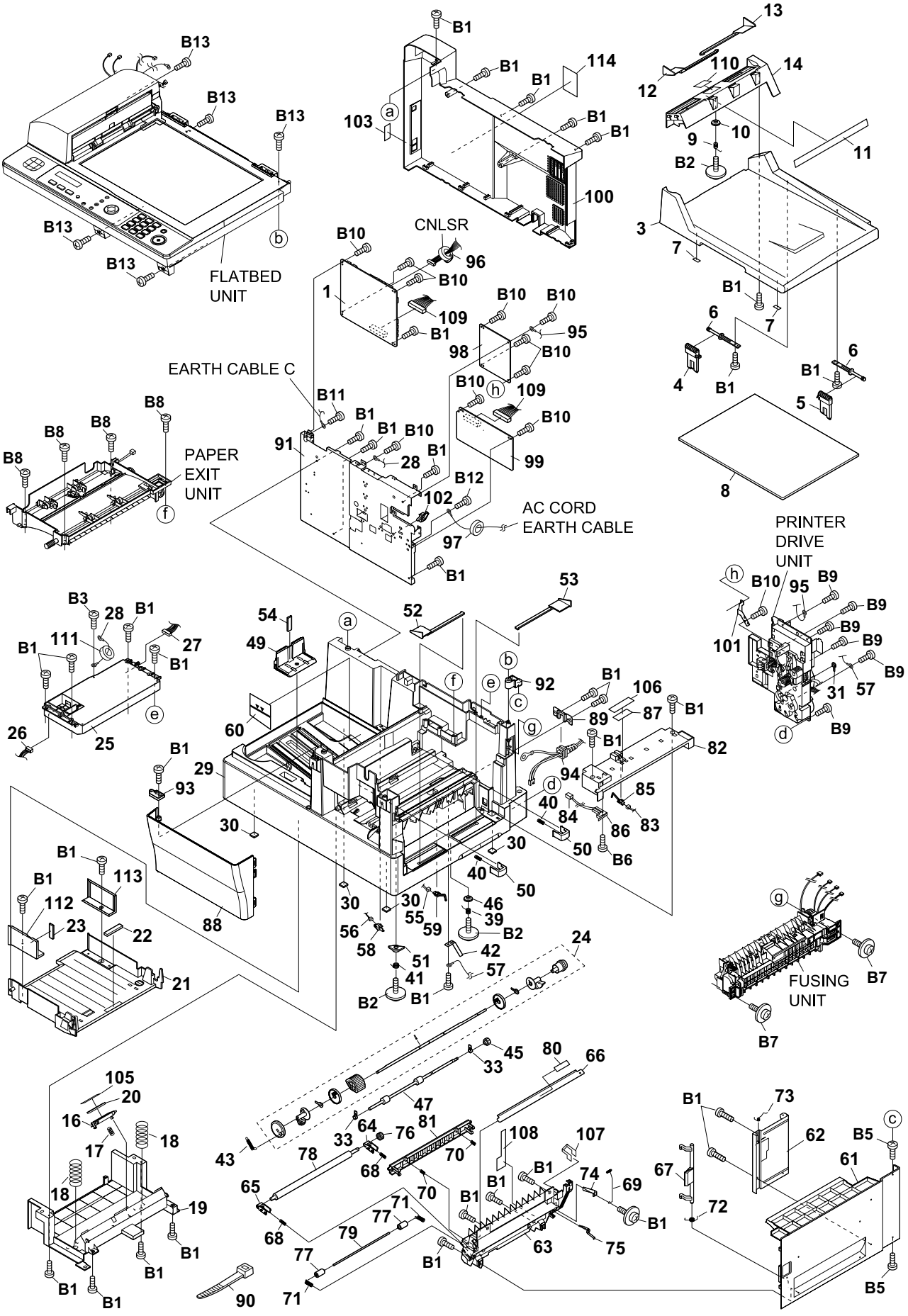

NO.	PARTS CODE	PRICE RANK	NEW MARK	PART RANK	DESCRIPTION
[1] Cabinet,etc.					
1	DCEKC981UXHZZ	CC	N	E	Control PWB unit(Within ROM)(DE)
1	DCEKC086VXHZZ		N	E	Control PWB unit(Within ROM)(IT)
1	DCEKC085VXHZZ		N	E	Control PWB unit(Within ROM)(H)
3	GCOVA2510XHSA	BA		C	Flatbed cover
4	LPLTP3335XHSA	AF		C	Hinge,left
5	LPLTP3336XHSA	AF		C	Hinge,right
6	NSFTP2393XHZZ	AF		C	Hinge shaft
7	PCUSS2226XHZZ	AE		C	Flatbed cushion
8	PSHEZ3855XHZZ	AY		C	Back sheet
9	MSPRC3301XHZZ	AB		C	Hopper spring
10	NGERP2318XHZZ	AD		C	Pinion gear
11	PBRS-2074XHZZ	AG		C	Static brush
12	PGiDM2679XHSA	AF		C	Hopper guide,left
13	PGiDM2680XHSA	AF		C	Hopper guide,right
14	PHOP-2120XHSA	AQ		C	Hopper
16	LPLTP3342XHZZ	AE		C	Separate plate
17	MSPRC3505XHZZ	AD		C	Separate spring
18	MSPRC3506XHZZ	AF		C	Up spring
19	PGiDM2689XHZZ	AW		C	Paper guide lower
20	LPLTG3386XHZZ	AL		C	Separate rubber
21	LPLTP3349XHZZ	AU		C	Rotation plate
22	LPLTG3388XHZZ	AG		C	Rotation plate pad
23	PSPO-2001XHZZ	AD		C	Tray width sponge
24	CROLR2528XH51			C	PU roller ass'y
25	DUNTK273DXHZZ	BV		E	Optical unit(LSU)
26	QCNWN246CXHZZ	AL		C	Optical cable 1
27	QCNWN247CXHZZ	AL		C	Optical cable 2
28	QCNWN316CXHZZ	AG		C	Earth cable
29	GCABB2450XHSA	BR		D	Bottom cabinet
30	GLEGG2089XHZZ	AE		C	Leg rubber
31	LBSHP2113XHZA	AE		C	Bearing
33	LBSHP2161XHZZ	AE		C	Regist roller bearing
39	MSPRC3301XHZZ	AB		C	Guide spring
40	MSPRC3590XHZZ	AE		C	DV press spring
41	MSPRD3545XHZZ	AE		C	TC stopper spring
42	MSPRP3591XHZZ	AE		C	Regist roller spring
43	MSPRT3507XHZZ	AE		C	Cam spring
45	NGERH2661XHZZ	AE		C	Regist gear,23Z
46	NGERP2318XHZZ	AD		C	Pinion gear
47	NROLR2527XHZZ	AQ		C	Regist roller
49	PGiDM2677XHSA	AG		C	Tray back guide
50	PGiDM2687XHZZ	AE		C	DV press guide
51	PGiDM2688XHZZ	AE		C	TC stopper
52	PGiDM2694XHSA	AE		C	Bypass hopper guide,left
53	PGiDM2695XHSA	AE		C	Bypass hopper guide,right
54	PSPO-2013XHZZ	AE		C	Tray back guide sponge
55	QCNWN259CXHZZ	AG		C	Tray sensor cable
56	QCNWN278CXHZZ	AG		C	P-IN sensor cable
57	QCNWN315CXHZZ	AG		C	Earth cable 3
58	QSW-M2221XHZA	AL		C	P-IN sensor
59	QSW-M2296XHZZ	AD		C	Tray cover sensor
60	TLABM224JXHZZ	AE		D	Paper limit label
61	GCOVA2513XHSA	AY		C	Right cover
62	LANGF2869XHZZ	AN		C	Right cover bracket
63	LFRM-2264XHZZ	AT		C	Right cover frame
64	LHLDZ2295XHZZ	AE		C	TR roller holder,right
65	LHLDZ2296XHZZ	AE		C	TR roller holder,left
66	LPLTM0163GCZZ	AE		C	Discharge plate
67	MLEVP2410XHSA	AK		C	Release lever
68	MSPRC3522XHZZ	AD		C	TR spring
69	MSPRC3525XHZZ	AE		C	TR term spring B
70	MSPRC3527XHZZ	AD		C	Paper guide plate spring
71	MSPRC3576XHZZ	AE		C	Pinch roller spring
72	MSPRD3523XHZZ	AE		C	Release lever spring
73	MSPRD3548XHZZ	AE		C	Discharge spring B
74	MSPRP3524XHZZ	AE		C	TC terminal spring
75	MSPRP3534XHZZ	AF		C	Discharge spring A
76	NGERH2677XHZZ	AE		C	TR gear
77	NROLP2334XHZA	AC		C	Pinch roller
78	NROLP2530XHZZ	BD		C	TR roller
79	NSFTZ2402XHZZ	AK		C	Pinch roller shaft
80	PBRS-2075XHZZ	AE		C	Static brush
81	PGiDM2699XHZZ	AH		C	Paper guide plate
82	PGiDM2692XHSA	AQ		C	Bypass guide
83	QCNWN256CXHZZ	AG		C	Bypass PE sensor cable
84	QCNWN267CXHZZ	AN		C	Inter lock switch cable
85	QSW-M2221XHZA	AL		C	Bypass PE sensor
86	QSW-M2343XHZZ	AN		C	Inter lock switch
87	TCAUZ2044XHZZ	AK		D	Laser caution label
88	GCOVA2515XHSA	AU		C	Front cover
89	LANGF2870XHZZ	AG		C	AC cord bracket
90	LBNDJ2006XHZZ	AA		C	Band
91	LPLTP3346XHZZ	AZ		C	PWB plate
92	PGiDM2678XHZZ	AE		C	Right cover pivot
93	PGiDM2700XHZZ	AE		C	Front cover pivot

	NO.	PARTS CODE	PRICE RANK	NEW MARK	PART RANK	DESCRIPTION
	[1] Cabinet,etc.					
⚠	94	QACCE2082XHZZ	AX		B	AC cord ass'y(DE/IT)
⚠	94	QACCB2080XHZZ	BA		B	AC cord ass'y(H)
	95	QCNWN261CXHZZ	AG		C	Earth cable
⚠	96	RCORF2146XHZZ	AG		B	Core
⚠	97	RCORF2154XHZZ	AG		B	Core
⚠	98	RDENT2206XHZZ	BK		E	High voltage PWB unit
⚠	99	RDENT2215XHZZ	BQ		E	Power supply PWB unit
	100	GCOVA2514XHSA	BA		C	Rear cover
	101	LANGJ2847XHZZ	AG		C	Earth plate
	102	LHLDW2310XHZZ	AE		C	Wire holder
	103	PSHEZ3875XHZZ	AG	N	C	Jack label
	105	PSHEP3879XHZZ	AE		C	Separate sheet
	106	TCAUZ2046XHZZ	AK		D	Drum caution label 2
	107	PSHEP3883XHZZ	AG		C	Cover sheet
	108	PBRS-2076XHZZ	AF		C	Static brush
	109	QCNWN390CXHZZ	AN		C	Power supply cable
	110	TLABH362JXHZZ			D	Face up label(DE)
	110	TLABH409JXHZZ		N	D	Face up label(IT)
⚠	111	RCORF2147XHZZ	AG		B	Core
	112	PGIDM2690XHSA		N	C	A4 width guide,front
	113	PGIDM2691XHSA		N	C	A4 width guide,rear
	114	TLABH3335XHZZ	AF		D	Laser class 1 label
	B1	XEBS730P10000	AC		C	Screw(3x10)
	B2	LX-BZ2205XHZ7	AE		C	Screw
	B3	XEBS730P08000	AC		C	Screw(3x8)
	B5	XHBS730P10000	AD		C	Screw(3x10)
	B6	XEBS720P10000	AE		C	Screw(2x10)
	B7	LX-BZ2321XHZ7	AE		C	Screw
	B8	XEBS730P14000	AD		C	Screw(3x14)
	B9	XEBS730P12000	AC		C	Screw(3x12)
	B10	XHBS730P08000	AB		C	Screw(3x8)
	B11	XHBS730P06000	AC		C	Screw(3x6)
	B12	LX-BZ2282XHZ7	AE		C	Screw
	B13	XJBS740P12000	AB		C	Screw(4x12)

[2] Flatbed unit

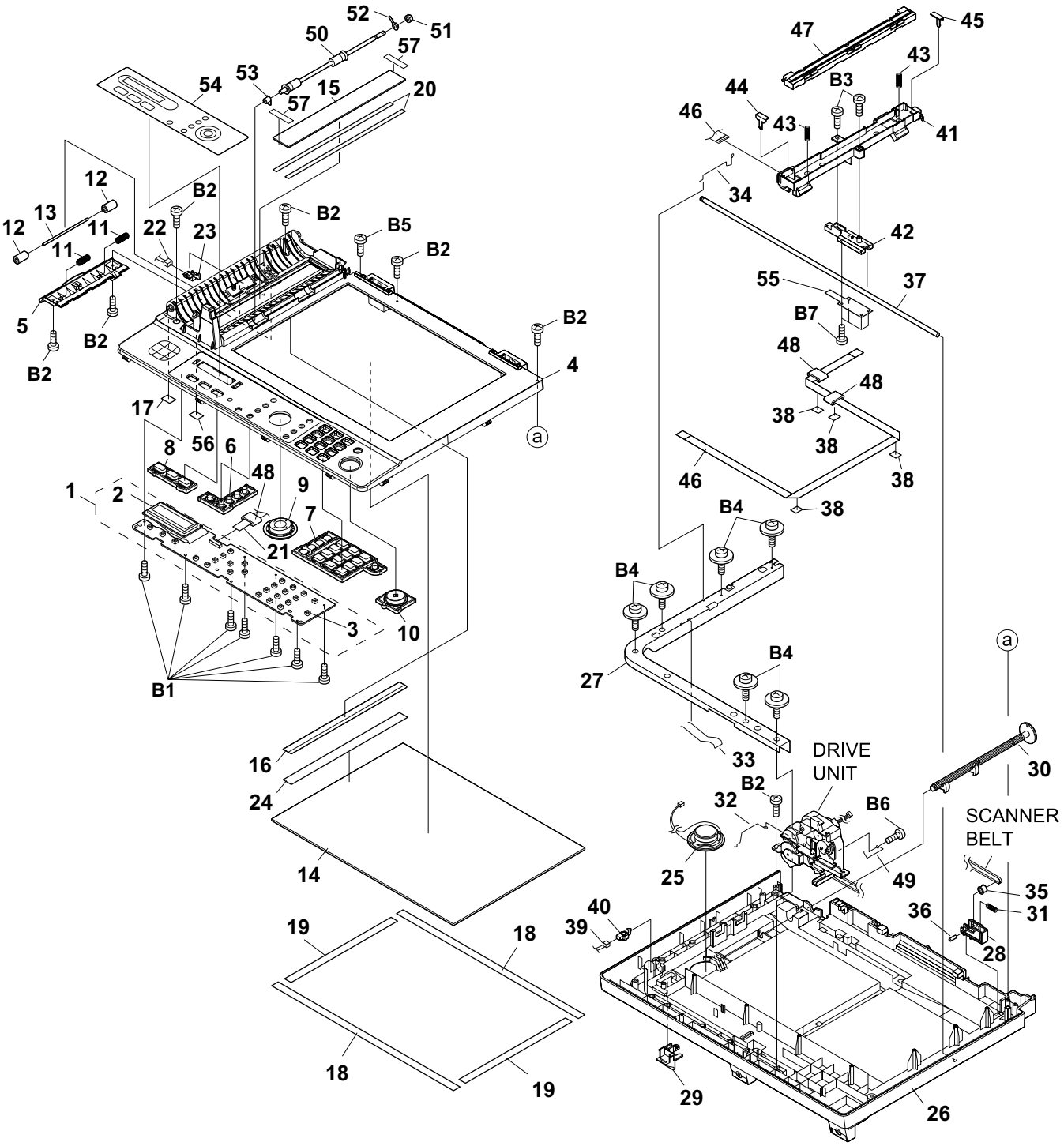

NO.	PARTS CODE	PRICE RANK	NEW MARK	PART RANK	DESCRIPTION
[2] Flatbed unit					
1	DCEKP304DXH03	BD	N	E	Operation panel PWB unit
2	RUiTZ2001XHZZ	AZ		E	LCD unit
3	QSW-K0005AWZZ	AC		C	Tact switch [SW]
4	GCABA2451XHSA	BB		C	Flatbed,upper
5	GCOVA2512XHZZ	AH		C	Sensor cover
6	JBTN-2483XHSA	AF		C	Function key
7	JBTN-2484XHSB	AL	N	C	12 key
8	JBTN-2486XHSB		N	C	Mode key
9	JBTN-2487XHSA	AK		C	Cursor key
10	JBTN-2489XHSA	AE		C	Start key
11	MSPRC2568XHZZ	AE		C	Pinch roller spring
12	NROLP2334XHZA	AC		C	Pinch roller
13	NSFTZ2407XHZZ	AH		C	Pinch roller shaft

NO.	PARTS CODE	PRICE RANK	NEW MARK	PART RANK	DESCRIPTION
[2] Flatbed unit					
14	PGLSP2064XHZZ	AY		C	Sheet glass
15	PGLSP2065XHZZ	AQ		C	ADF glass
16	PSHEZ3854XHZZ	AH		C	Rear book sheet
17	PSHEZ3866XHZZ	AE		C	Blind fold sheet
18	PTPEZ2116XHZZ	AE		C	Book long double tape
19	PTPEZ2117XHZZ	AE		C	Book short double tape
20	PTPEZ2118XHZZ	AE		C	ADF doble tape
21	QCNWN245CXHZZ	AL		C	Panel cable
22	QCNWN249CXHZZ	AG		C	ORG sensor cable
23	QSW-Z2237XHZB	AL		C	ORG sensor
24	PSEL-2043XHZZ	AE		C	Shield tape
25	CCNWN346CXH01	AP		C	Speaker ass'y
26	GCABB2452XHSA	BF		C	Flatbed,lower
27	LPLTP3338XHZZ	AW		C	Reinforce plate
28	LPLTP3339XHZZ	AE		C	Pulley plate
29	MLEVP2403XHSA	AG		C	Scanner hold lever
30	MLEVP2404XHZZ	AG		C	Hold lever
31	MSPRC3542XHZZ	AD		C	Tension spring
32	MSPRD3543XHZZ	AE		C	Earth spring 1
33	MSPRD3560XHZZ	AE		C	Speaker spring
34	MSPRD3570XHZZ	AE		C	Earth spring 2
35	NPLYD2088XHZZ	AC		C	Pulley
36	NSFTZ2396XHZZ	AG		C	Pulley shaft
37	NSFTZ2397XHZZ	AS		C	Guide shaft
38	PTPEZ2127XHZZ	AC		C	Double tape
39	QCNWN254CXHZZ	AG		C	Home position sensor cable
40	QSW-M2324XHZZ	AN		C	Home position sensor
41	LHLDZ2299XHZZ	AH		C	CIS holder
42	LHLDZ2300XHZZ	AG		C	Shaft holder
43	MSPRC3572XHZZ	AE		C	CIS spring
44	PGiDM2704XHZZ	AE		C	CIS guide,left
45	PGiDM2705XHZZ	AE		C	CIS guide,right
46	QCNWN248CXHZZ	AN		C	CIS cable
47	RUiTZ2006XHZZ	BT		B	CIS
⚠ 48	RCORF2152SCZZ	AL		B	Core
49	MSPRD3569XHZZ	AE		C	Exit roller earth spring
50	NROLR2526XHZZ	AS		C	Exit roller
51	NGERH2543XHZZ	AC		C	Exit roller gear
52	LBSHP2113XHZZ	AH		C	Roller bearing
53	LBSHP2136XHZZ	AC		C	Roller bearing
54	HPNLH2450XHSE	AP	N	D	Decoration panel(DE)
54	HPNLH2450XHSJ		N	D	Decoration panel(IT)
54	HPNLH2450XHSH		N	D	Decoration panel(H)
55	LPLTM3387XHZZ	AF		C	Shaft holder plate
56	PSHEZ3884XHZZ	AE		C	Blind fold sheet
57	PSPAP2290XHZZ		N	C	ADF spacer
B1	XEBS720P06000	AC		C	Screw(2x6)
B2	XEBS730P10000	AC		C	Screw(3x10)
B3	XEBS730P08000	AC		C	Screw(3x8)
B4	XJPS740P10X00	AC		C	Screw(4x10)
B5	XEBS730P12000	AC		C	Screw(3x12)
B6	XHBS730P06000	AC		C	Screw(3x6)
B7	LX-BZ2323XHZ7	AE		C	Screw(3x8)

[3] Scanner unit

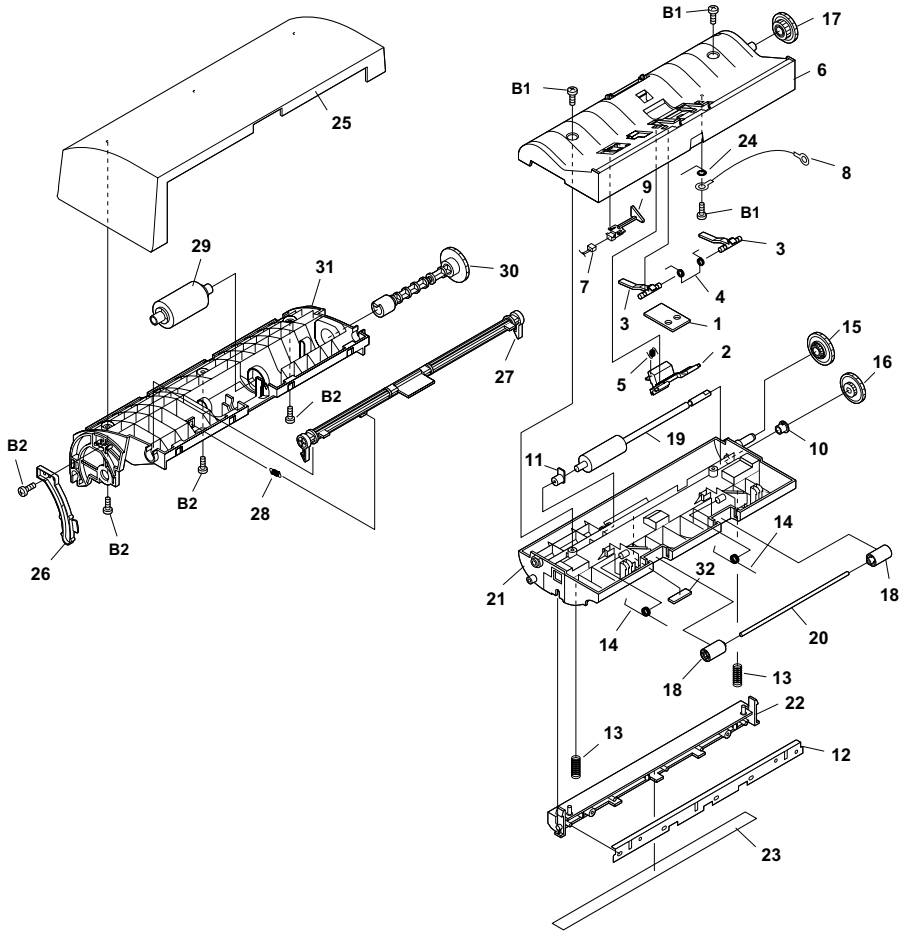

NO.	PARTS CODE	PRICE RANK	NEW MARK	PART RANK	DESCRIPTION
[3] Scanner unit					
1	LPLTG3307XHZZ	AF		C	Separate rubber
2	LPLTP2790XHZZ	AD		C	Separate plate
3	MARMP2025XHZZ	AF		C	Feed plate arm
4	MSPRD3564XHZZ	AE		C	Feed spring
5	MSPRT3563XHZZ	AD		C	Separate spring
6	PGiDM2681XHSA	AN		C	Guide middle upper
7	QCNWN255CXHZZ	AG		C	Front sensor cable
8	QCNWN260CXHZZ	AG		C	Earth cable C
9	QSW-Z2250XHZA	AL		C	Front sensor
10	LBSHP2135XHZZ	AC		C	Roller bearing
11	LBSHP2136XHZZ	AC		C	Roller bearing
12	LPLTP3363XHZZ	AH		C	Back guide bracket
13	MSPRC3589XHZZ	AD		C	Back guide spring
14	MSPRD3566XHZZ	AE		C	Exit pinch roller spring
15	NGERH2542XHZZ	AE		C	ADF gear
16	NGERH2547XHZZ	AE		C	Transfer gear,42/17Z
17	NGERH2657XHZZ	AE		C	Reduction gear
18	NROLP2334XHZA	AC		C	Exit pinch roller
19	NROLR2525XHZZ	AQ		C	Transfer roller
20	NSFTZ2406XHZZ	AH		C	Exit pinch roller shaft
21	PGiDM2682XHSA	AN		C	Guide middle lower
22	PGiDM2703XHZZ	AK		C	Back guide
23	PSHEZ3843XHZZ	AF		C	Rear sheet
24	MSPRC3567XHZZ	AE		C	Earth spring
25	GCOVA2511XHSA	AS		C	Top cover
26	LSTPP2063XHZZ	AE		C	Stopper plate
27	MLEVP2402XHSA	AG		C	Release lever
28	MSPRT3565XHZZ	AD		C	Release lever spring
29	NROLR2333XHZZ	AP		C	Feed roller
30	NSFTP2394XHZZ	AF		C	Feed roller shaft
31	PGiDM2683XHSA	AQ		C	Guide upper
32	PSHEZ3886XHZZ			C	ADF guide sheet
B1	XEBS730P10000	AC		C	Screw(3x10)
B2	XEBS730P08000	AC		C	Screw(3x8)

[4] Paper exit unit

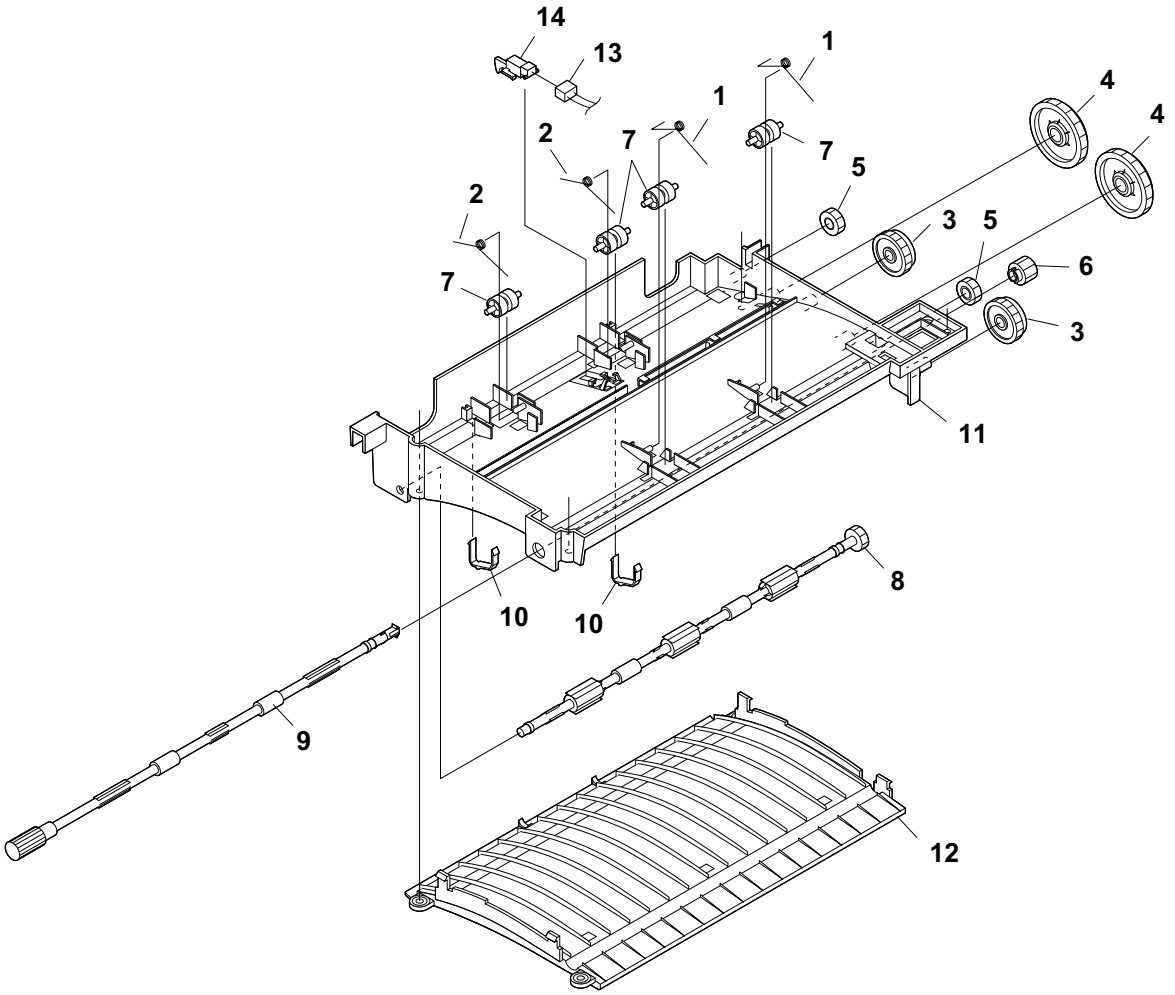

NO.	PARTS CODE	PRICE RANK	NEW MARK	PART RANK	DESCRIPTION
[4] Paper exit unit					
1	MSPRD3574XHZZ	AE		C	Pinch roller spring 1
2	MSPRD3575XHZZ	AE		C	Pinch roller spring 2
3	NGERH2466XHZZ	AE		C	Idler gear,32Z
4	NGERH2602XHZZ	AH		C	Idler gear,50Z
5	NGERH2603XHZZ	AE		C	Idler gear,17Z(17Z)
6	NGERH2662XHZZ	AE		C	Feed roller gear,15Z
7	NROLP2332XHZA	AL		C	PO pinch roller
8	NROLP2420XHZZ	AM		C	Paper exit roller
9	NSFTP2400XHZZ	AS		C	Feed roller shaft
10	PGIDM2696XHZZ	AE		C	Anti curl guide
11	PGIDM2697XHZZ	AU		C	Paper exit guide upper
12	PGIDM2698XHZZ	AS		C	Paper exit guide lower
13	QCNWN264CXHZZ	AG		C	PO sensor cable
14	QSW-Z2237XHZB	AL		C	PO2 sensor

[5] Fusing unit

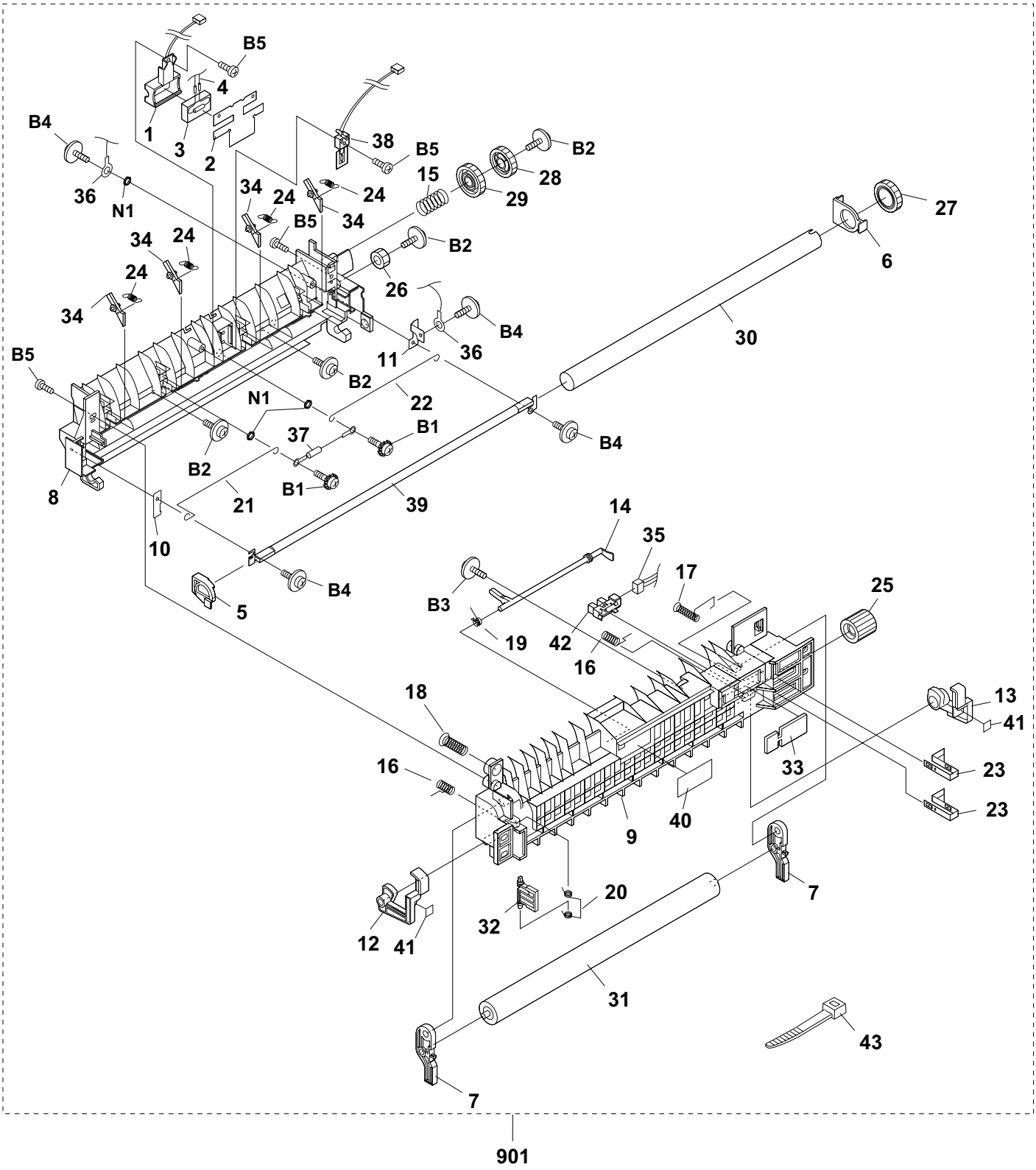

NO.	PARTS CODE	PRICE RANK	NEW MARK	PART RANK	DESCRIPTION
[5] Fusing unit					
1	LHLDZ2297XHZZ	AE		C	Fuse holder
2	PSHEP3853XHZZ	AG		C	Fuse sheet
3	PSPO-2024XHZZ	AG		C	Fuse sponge
4	QFS-T2020XHZZ	AT		A	Fuse-2
5	LBSHP2162XHZZ	AE		C	Heat roller bearing 1
6	LBSHP2167XHZZ	AK		C	Heat roller bearing 2
7	LBSHP2168XHZZ	AE		C	FU bearing
8	LFRM-2265XHZZ	AU		C	FU frame,left
9	LFRM-2266XHZZ	AV		C	FU frame,right
10	LPLTP3348XHZZ	AG		C	FU terminal
11	LPLTP3376XHZZ	AK		C	FU AC terminal
12	MLEVP2411XHZZ	AF		C	FU release lever,front
13	MLEVP2412XHZZ	AF		C	FU release lever,rear
14	MLEVP2413XHZZ	AF		C	FU sensor lever
15	MSPRC3528XHZZ	AE		C	Rachet gear spring
16	MSPRC3530XHZZ	AD		C	FU pinch spring
17	MSPRC3531XHZZ	AE		C	FU earth spring
18	MSPRC3595XHZZ	AE		C	Right cover open spring
19	MSPRD3529XHZZ	AE		C	FU sensor lever spring
20	MSPRD3550XHZZ	AE		C	Rear cover spring
21	MSPRK3549XHZZ	AF		C	Fuse bar 1
22	MSPRK3590XHZZ	AE		C	Fuse bar 2
23	MSPRP3535XHZZ	AE		C	Earth spring
24	MSPRT3594XHZZ	AE		C	Separating pawl spring
25	NGERH2576XHZA	AF		C	Idler gear,21Z
26	NGERH2582XHZA	AY		C	Idler gear,15Z
27	NGERH2678XHZZ	AF		C	Heat roller gear
28	NGERH2679XHZZ	AE		C	Idler gear,27Z
29	NGERH2680XHZZ	AE		C	Idler gear,28Z
30	NROLP2536XHZZ	BD		C	Heat roller
31	NROLR2539XHZZ	BD		C	FU roller
32	PGiDM2702XHZZ	AE		C	Rear cover
33	PSHEZ3864XHZZ	AG		C	Photo sheet
34	PTME-2081XHZZ	AF		C	Separating pawl
35	QCNWN262CXHZZ	AG		C	Photo sensor cable
36	QCNWN266CXHZZ	AK		C	FU AC cord
37	QFS-T2019XHZZ	AQ		A	Fuse-1
38	RDTCT2001XHZZ	AV		B	Thermistor
39	RLMPU2016XHZZ	BE		B	Heater
40	TCAUH2041XHZZ	AG		D	Heat caution
41	TLABH351JXHZZ	AD		D	FU release label
42	VHPSG2482A+-1	AN		B	PO1 sensor
43	LBNDJ2006XHZZ	AA		C	Band
B1	LX-BZ0956XHZ7	AE		C	Screw
B2	LX-BZ2138XHZ7	AD		C	Screw
B3	LX-BZ2222XHZ7	AD		C	Screw
B4	XBPS730P08KS0	AB		C	Screw(3x8)
B5	XEBS730P10000	AC		C	Screw(3x10)
N1	XNGS730-18000	AD		C	Nut(M3)
	(Unit)				
901	CFRM-2265XH02			E	Fusing unit

[6] Printer drive unit

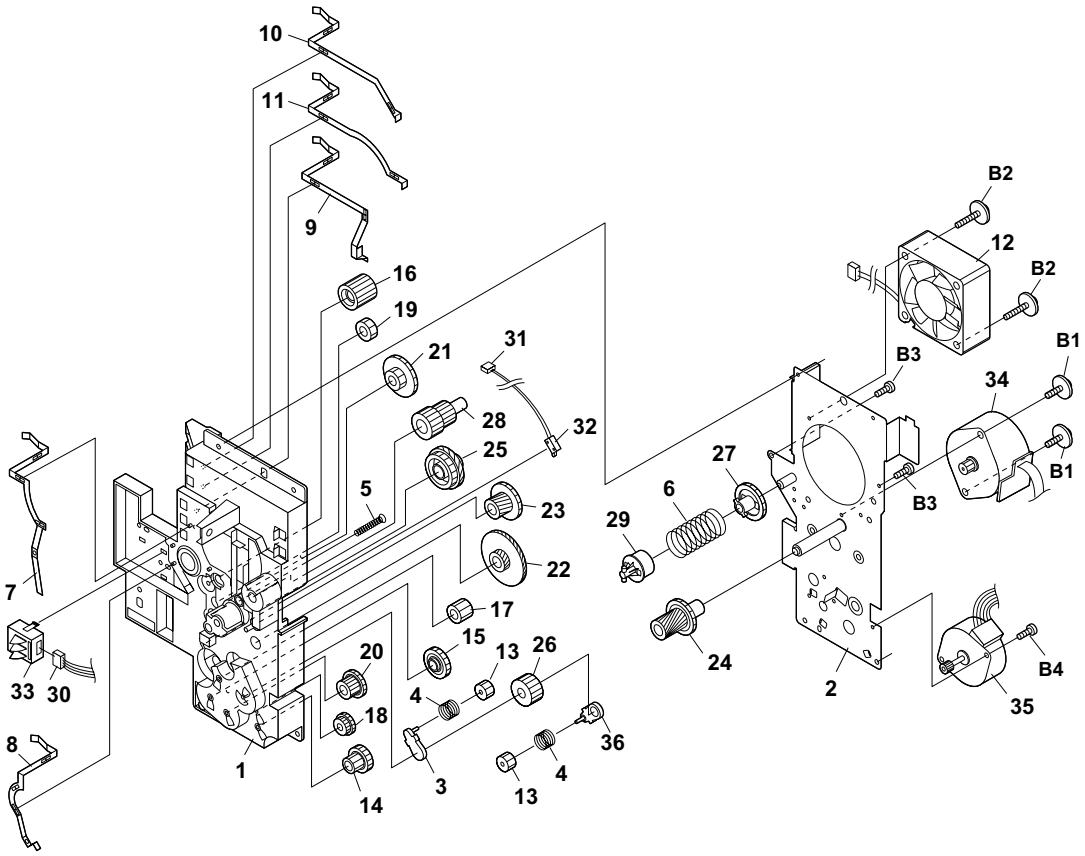

NO.	PARTS CODE	PRICE RANK	NEW MARK	PART RANK	DESCRIPTION
[6] Printer drive unit					
1	LFRM-2263XHZZ	AW		C	Printer drive frame
2	LPLTP3343XHZZ	AV		C	Printer drive bracket
3	MLEVP2409XHZZ	AE		C	Planet lever A
4	MSPRC2735XHZZ	AC		C	Planet gear spring
5	MSPRC3519XHZZ	AE		C	OPC earth spring
6	MSPRC3547XHZZ	AE		C	Coupling spring
7	MSPRP3514XHZZ	AG		C	DVE-TE spring
8	MSPRP3515XHZZ	AG		C	SROL-T spring
9	MSPRP3516XHZZ	AG		C	MC-TER spring
10	MSPRP3517XHZZ	AG		C	Earth spring
11	MSPRP3518XHZZ	AH		C	TR-TER spring
12	NFANP2005XHZZ	AY		B	Fan
13	NGERH2458XHZZ	AB		C	Planet gear
14	NGERH2480XHZZ	AB		C	Reduction gear,17/28Z
15	NGERH2700XHZZ	AF		C	Reduction gear,17/23Z
16	NGERH2576XHZB	AF		C	Idler gear,21Z
17	NGERH2577XHZZ	AD		C	Idler gear,20Z
18	NGERH2581XHZZ	AC		C	Idler gear,25Z
19	NGERH2699XHZZ	AL		C	Idler gear
20	NGERH2621XHZZ	AF		C	Reduction gear,15/30Z
21	NGERH2663XHZZ	AE		C	Reduction gear,15/52Z
22	NGERH2664XHZZ	AE		C	Reduction gear,15/70Z
23	NGERH2697XHZZ	AG		C	Jgma gear,15/28Z
24	NGERH2698XHZZ	AG		C	Jgma gear,15/28Z
25	NGERH2667XHZZ	AE		C	Reduction gear,29/32Z
26	NGERH2670XHZZ	AE		C	Sun gear
27	NGERH2671XHZZ	AE		C	Coupling gear
28	NGERH2673XHZZ	AE		C	Reduction gear,20/18Z
29	NSFTP2401XHZZ	AE		C	Coupling shaft
30	QCNWN297CXHZZ	AH		C	Toner sensor cable
31	QCNWN317CXHZZ	AE		C	Roller switch cable
32	QSW-F2224SCZZ	AE		C	Roller switch
33	QSW-M2342XHZZ	AV		C	Toner sensor
34	RMOTS2199XHZZ	BC		B	Main motor
35	RMOTS2202XHZZ	AY		B	Pickup motor
36	MLEVP2409XHZB		N	C	Planet lever B
B1	LX-BZ2241XHZ7	AD		C	Screw
B2	LX-BZ2314XHZ7	AD		C	Screw
B3	XEBS730P12000	AC		C	Screw(3x12)
B4	XHBS730P06000	AC		C	Screw(3x6)

[7] Drive unit

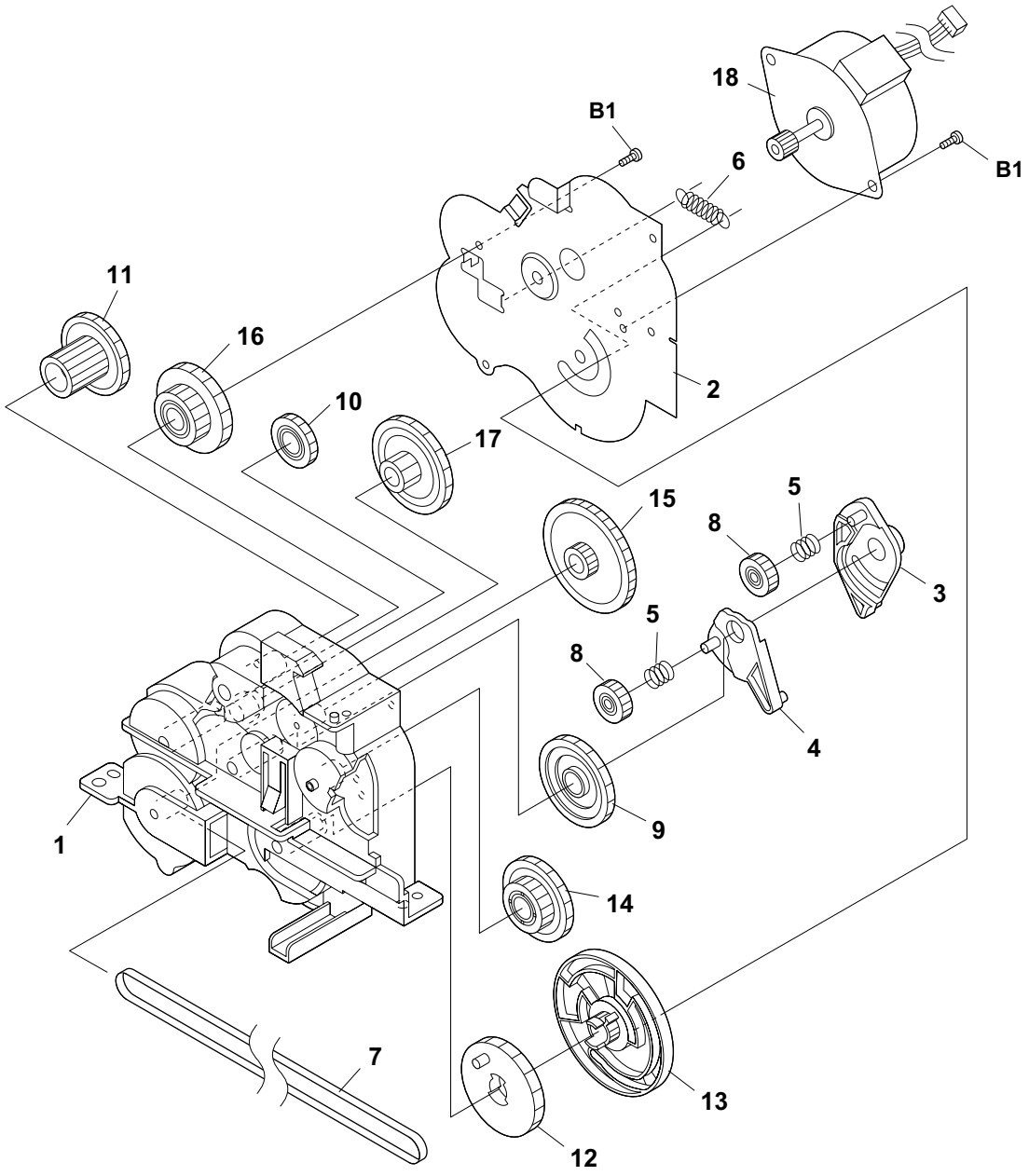

NO.	PARTS CODE	PRICE RANK	NEW MARK	PART RANK	DESCRIPTION
[7] Drive unit					
1	LFRM-2262XHZZ	AN		C	Drive frame
2	LPLTP3340XHZZ	AK		C	Motor plate
3	MLEVP2405XHZZ	AE		C	Planet lever A
4	MLEVP2406XHZZ	AE		C	Planet lever B
5	MSPRC2735XHZZ	AC		C	Planet spring
6	MSPRT3571XHZZ	AD		C	Hold spring
7	NBLTK2067XHZZ	AS		C	Drive belt
8	NGERH2278XHZZ	AC		C	Planet gear
9	NGERH2517XHZZ	AE		C	Reduction gear
10	NGERH2541XHZZ	AE		C	Reduction gear,25Z
11	NGERH2573XHZZ	AD		C	Reduction gear,20/40Z
12	NGERH2655XHZZ	AE		C	System gear A
13	NGERH2656XHZZ	AE		C	System gear B
14	NGERH2657XHZZ	AE		C	Reduction gear,42/25Z
15	NGERH2658XHZZ	AE		C	Reduction gear,55/15Z
16	NGERH2693XHZZ	AE		C	Reduction gear,27/44Z
17	NPLYD2099XHZZ	AE		C	Pulley reduction gear,48Z
18	RMOTZ2201XHZZ	AW		B	Scanner motor
B1	XEBS730P10000	AC		C	Screw(3x10)

[8] Packing material & Accessories

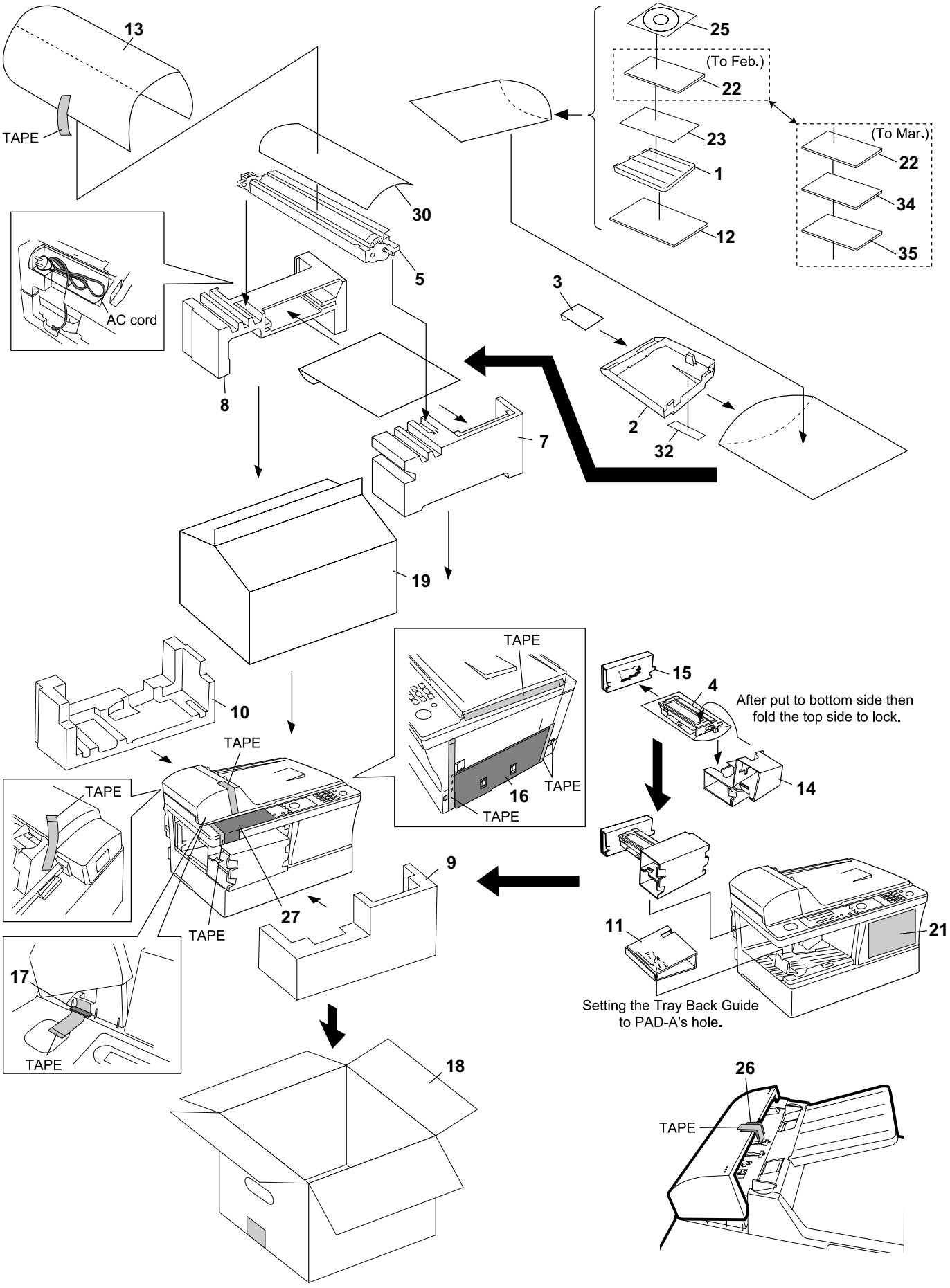

NO.	PARTS CODE	PRICE RANK	NEW MARK	PART RANK	DESCRIPTION
[8] Packing material & Accessories					
1	PHOP-2121XHSA	AV		C	Document feeder tray
2	LPLTP3344XHSA	AY		C	Output tray
3	LPLTP3345XHSA	AK		C	Output sub tray
4	DUNT-291DXH07		N	S	Toner cartridge(Initial starter cartridge)(DE)
4	DUNT-291DXH13		N	S	Toner cartridge(Initial starter cartridge)(IT)
4	DUNT-291DXH12		N	S	Toner cartridge(Initial starter cartridge)(H)
5	DUNT-292DXH05		N	S	Drum cartridge(Initial starter cartridge)(DE)
5	DUNT-292DXH13		N	S	Drum cartridge(Initial starter cartridge)(IT)
5	DUNT-292DXH12		N	S	Drum cartridge(Initial starter cartridge)(H)
7	SPAKA279GXHZZ	AQ		D	Packing add.,top,front
8	SPAKA280GXHZZ	AS		D	Packing add.,top,rear
9	SPAKA281GXHZZ	AQ		D	Packing add.,bottom,front
10	SPAKA282GXHZZ	AQ		D	Packing add.,bottom,rear
11	SPAKA286GXHZZ	AG		D	Pad A
12	SPAKA429GXHZZ	AE		D	Protection B
13	SPAKA428GXHZZ	AE		D	Protection A
14	SPAKA356GXHZZ	AG		D	Pad,toner cartridge,left
15	SPAKA357GXHZZ	AG		D	Pad,toner cartridge,right
16	SPAKA373GXHZZ	AD		D	Pad D
17	SPAKA374GXHZZ	AD		D	Spacer
18	SPAKC378GXHTZ		N	D	Packing case
19	SPAKP285GXHZZ	AK		D	Unit cover
21	TCADZ3791XHZZ		N	D	Pop card(DE)
21	TCADZ3806XHZZ		N	D	Pop card(IT)
21	TCADZ3805XHZZ		N	D	Pop card(H)
22	TCADH3786XHZZ	AG		D	Setup guide(To Feb.)(DE for German)
22	TCADH3796XHZZ			D	Setup guide(To Mar.)(IT for Italian)
22	TCADH3785XHZZ	AG		D	Setup guide(To Mar.)(H for England)
23	TGANG2345XHZZ			D	Warranty card(DE)
23	TGANE2344XHZZ		N	D	Warranty card(H)
25	UDSKA2053XHZZ	BB	N	D	CD ROM(To Feb.)(DE/H)
25	UDSKA2053XHZA		N	D	CD ROM(From Mar.)(DE/IT/H)
26	SPAKA386GXHZZ	AE		D	Release pad
27	PSHEZ3880XHZZ	AN		D	Release lever caution sheet 2
30	PSHEZ3885XHZZ			C	Shading sheet
32	TLABH363JXHZZ			D	Output tray label(DE)
32	TLABH411JXHZZ			D	Output tray label(IT)
34	TCADH3796XHZZ		N	D	Setup guide(From Mar.)(DE for Italian)
35	TCADH3797XHZZ		N	D	Setup guide(From Mar.)(DE for French)
[9] Control PWB unit					
1	VRS-CG1JF330J	AC		C	Block resistor(33Ω x4) [BR1]
2	VRS-CG1JF330J	AC		C	Block resistor(33Ω x4) [BR2]
3	VRS-CG1JF330J	AC		C	Block resistor(33Ω x4) [BR3]
4	VRS-CG1JF330J	AC		C	Block resistor(33Ω x4) [BR4]
5	VRS-CG1JF330J	AC		C	Block resistor(33Ω x4) [BR5]
6	VRS-CG1JF330J	AC		C	Block resistor(33Ω x4) [BR7]
7	VRS-CG1JF330J	AC		C	Block resistor(33Ω x4) [BR8]
8	VRS-CG1JF271J			C	Block resistor(270Ω x4) [BR9]
9	VRS-CG1JF271J			C	Block resistor(270Ω x4) [BR10]
10	VRS-CG1JF330J	AC		C	Block resistor(33Ω x4) [BR11]
11	VRS-CG1JF330J	AC		C	Block resistor(33Ω x4) [BR12]
12	VRS-CG1JF330J	AC		C	Block resistor(33Ω x4) [BR13]
13	VRS-CG1JF330J	AC		C	Block resistor(33Ω x4) [BR14]
14	VRS-CG1JF221J	AC		C	Block resistor(220Ω x4) [BR15]
15	VRS-CG1JF221J	AC		C	Block resistor(220Ω x4) [BR16]
16	VCKYCZ1CF104Z	AB		C	Capacitor(16WV 0.1μ F) [C1]
17	VCKYCZ1CB103K	AA		C	Capacitor(16WV 0.01μ F) [C3]
18	VCCCCZ1EH180J	AA		C	Capacitor(25WV 18PF) [C4]
19	VCCCCZ1EH180J	AA		C	Capacitor(25WV 18PF) [C5]
20	VCKYCZ1CF104Z	AB		C	Capacitor(16WV 0.1μ F) [C8]
21	VCCCCZ1EH180J	AA		C	Capacitor(25WV 18PF) [C11]
22	VCCCCZ1EH180J	AA		C	Capacitor(25WV 18PF) [C12]
23	VCKYCZ1CB103K	AA		C	Capacitor(16WV 0.01μ F) [C13]
24	VCKYCZ1CF104Z	AB		C	Capacitor(16WV 0.1μ F) [C14]
25	VCEAEA1CW106M	AC		C	Capacitor(16WV 10μ F) [C15]
26	VCKYCZ1CF104Z	AB		C	Capacitor(16WV 0.1μ F) [C17]
27	VCKYCZ1CF104Z	AB		C	Capacitor(16WV 0.1μ F) [C19]
28	VCKYCZ1CF104Z	AB		C	Capacitor(16WV 0.1μ F) [C20]
29	VCCCCZ1EH270J	AA		C	Capacitor(25WV 27PF) [C21]
30	VCEAEA1CW106M	AC		C	Capacitor(16WV 10μ F) [C22]
31	VCCCCZ1EH330J	AC		C	Capacitor(25WV 33PF) [C23]
32	VCKYCZ1CB103K	AA		C	Capacitor(16WV 0.01μ F) [C24]
33	VCKYCZ1CF104Z	AB		C	Capacitor(16WV 0.1μ F) [C25]
34	VCEAEA1CW106M	AC		C	Capacitor(16WV 10μ F) [C26]
35	VCKYCZ1CF104Z	AB		C	Capacitor(16WV 0.1μ F) [C27]
36	VCEAEA1CW106M	AC		C	Capacitor(16WV 10μ F) [C28]
37	VCKYCZ1CF104Z	AB		C	Capacitor(16WV 0.1μ F) [C29]
38	VCKYCZ1CF104Z	AB		C	Capacitor(16WV 0.1μ F) [C30]
39	VCKYCZ1CF104Z	AB		C	Capacitor(16WV 0.1μ F) [C31]
40	VCKYCZ0JF105Z	AC		C	Capacitor(6.3WV 1μ F) [C34]
41	VCKYCZ0JF105Z	AC		C	Capacitor(6.3WV 1μ F) [C35]
42	VCKYCZ0JF105Z	AC		C	Capacitor(6.3WV 1μ F) [C36]
43	VCKYCZ0JF105Z	AC		C	Capacitor(6.3WV 1μ F) [C37]

NO.	PARTS CODE	PRICE RANK	NEW MARK	PART RANK	DESCRIPTION	
[9] Control PWB unit						
44	VCKYCZ0JF105Z	AC		C	Capacitor(6.3WV 1μ F)	[C38]
45	VCKYCZ0JF105Z	AC		C	Capacitor(6.3WV 1μ F)	[C39]
46	VCKYCZ0JF105Z	AC		C	Capacitor(6.3WV 1μ F)	[C40]
47	VCKYCZ0JF105Z	AC		C	Capacitor(6.3WV 1μ F)	[C41]
48	VCKYCZ0JF105Z	AC		C	Capacitor(6.3WV 1μ F)	[C42]
49	VCKYCZ0JF105Z	AC		C	Capacitor(6.3WV 1μ F)	[C43]
50	VCKYCZ0JF105Z	AC		C	Capacitor(6.3WV 1μ F)	[C44]
51	VCKYCZ0JF105Z	AC		C	Capacitor(6.3WV 1μ F)	[C45]
52	VCKYCZ0JF105Z	AC		C	Capacitor(6.3WV 1μ F)	[C46]
53	VCKYCZ0JF105Z	AC		C	Capacitor(6.3WV 1μ F)	[C47]
54	VCKYCZ0JF105Z	AC		C	Capacitor(6.3WV 1μ F)	[C48]
55	VCKYCZ0JF105Z	AC		C	Capacitor(6.3WV 1μ F)	[C49]
56	VCKYCZ0JF105Z	AC		C	Capacitor(6.3WV 1μ F)	[C50]
57	VCKYCZ0JF105Z	AC		C	Capacitor(6.3WV 1μ F)	[C51]
58	VCKYCZ1CB103K	AA		C	Capacitor(16WV 0.01μ F)	[C52]
59	VCKYCY1AB225K	AB		C	Capacitor(10WV 2.2μ F)	[C53]
60	VCEAEA1CW107M	AC		C	Capacitor(16WV 100μ F)	[C54]
61	VCKYCZ0JF105Z	AC		C	Capacitor(6.3WV 1μ F)	[C56]
62	VCKYCZ0JF105Z	AC		C	Capacitor(6.3WV 1μ F)	[C57]
63	VCKYCZ0JF105Z	AC		C	Capacitor(6.3WV 1μ F)	[C58]
64	VCKYCZ0JF105Z	AC		C	Capacitor(6.3WV 1μ F)	[C59]
65	VCKYCZ0JF105Z	AC		C	Capacitor(6.3WV 1μ F)	[C60]
66	VCKYCZ0JF105Z	AC		C	Capacitor(6.3WV 1μ F)	[C61]
67	VCKYCZ0JF105Z	AC		C	Capacitor(6.3WV 1μ F)	[C62]
68	VCKYCZ0JF105Z	AC		C	Capacitor(6.3WV 1μ F)	[C63]
69	VCKYCZ0JF105Z	AC		C	Capacitor(6.3WV 1μ F)	[C64]
70	VCKYCZ0JF105Z	AC		C	Capacitor(6.3WV 1μ F)	[C65]
71	VCKYCZ0JF105Z	AC		C	Capacitor(6.3WV 1μ F)	[C66]
72	VCKYCZ0JF105Z	AC		C	Capacitor(6.3WV 1μ F)	[C67]
73	VCKYCZ0JF105Z	AC		C	Capacitor(6.3WV 1μ F)	[C68]
74	VCKYCZ0JF105Z	AC		C	Capacitor(6.3WV 1μ F)	[C69]
75	VCKYCZ0JF105Z	AC		C	Capacitor(6.3WV 1μ F)	[C70]
76	VCKYCY1AF105Z	AC		C	Capacitor(10WV 1μ F)	[C71]
77	VCKYCZ1CF104Z	AB		C	Capacitor(16WV 0.1μ F)	[C73]
78	VCKYCZ1CF104Z	AB		C	Capacitor(16WV 0.1μ F)	[C74]
79	VCKYCZ1EB102K	AA		C	Capacitor(25WV 1000PF)	[C75]
80	VCKYCZ1CF104Z	AB		C	Capacitor(16WV 0.1μ F)	[C76]
81	VCKYCZ1CF104Z	AB		C	Capacitor(16WV 0.1μ F)	[C79]
82	VCKYCZ1CF104Z	AB		C	Capacitor(16WV 0.1μ F)	[C80]
83	VCEAGA1CW476M	AB		C	Capacitor(16WV 47μ F)	[C81]
84	VCKYCY1AF105Z	AC		C	Capacitor(10WV 1μ F)	[C82]
85	VCKYCY1AF105Z	AC		C	Capacitor(10WV 1μ F)	[C83]
86	VCCCCZ1EH271J	AA		C	Capacitor(25WV 270PF)	[C84]
87	VCCCCZ1EH271J	AA		C	Capacitor(25WV 270PF)	[C85]
88	VCCCCZ1EH271J	AA		C	Capacitor(25WV 270PF)	[C86]
89	VCCCCZ1EH271J	AA		C	Capacitor(25WV 270PF)	[C87]
90	VCCCCZ1EH271J	AA		C	Capacitor(25WV 270PF)	[C88]
91	VCCCCZ1EH271J	AA		C	Capacitor(25WV 270PF)	[C89]
92	VCCCCZ1EH271J	AA		C	Capacitor(25WV 270PF)	[C90]
93	VCKYCZ1CF104Z	AB		C	Capacitor(16WV 0.1μ F)	[C91]
94	VCCCCZ1EH271J	AA		C	Capacitor(25WV 270PF)	[C92]
95	VCCCCZ1EH271J	AA		C	Capacitor(25WV 270PF)	[C93]
96	VCCCCZ1EH101J	AA		C	Capacitor(25WV 100PF)	[C94]
97	VCCCCZ1EH101J	AA		C	Capacitor(25WV 100PF)	[C95]
98	VCCCCZ1EH101J	AA		C	Capacitor(25WV 100PF)	[C96]
99	VCCCCZ1EH101J	AA		C	Capacitor(25WV 100PF)	[C97]
100	VCKYCZ1CF104Z	AB		C	Capacitor(16WV 0.1μ F)	[C99]
101	VCKYCZ1EB102K	AA		C	Capacitor(25WV 1000PF)	[C114]
102	VCKYCZ1EB472K	AA		C	Capacitor(25WV 4700PF)	[C116]
103	VCKYCZ1CF104Z	AB		C	Capacitor(16WV 0.1μ F)	[C117]
104	VCKYCZ1EB102K	AA		C	Capacitor(25WV 1000PF)	[C118]
105	VCKYCY1HB472K	AA		C	Capacitor(50WV 4700PF)	[C119]
106	VCKYCY1HB472K	AA		C	Capacitor(50WV 4700PF)	[C120]
107	VCKYCY1HB472K	AA		C	Capacitor(50WV 4700PF)	[C121]
108	VCKYCY1HB472K	AA		C	Capacitor(50WV 4700PF)	[C122]
109	VCEAGA1HW107M	AA		C	Capacitor(50WV 100μ F)	[C124]
110	VCKYCZ1EB102K	AA		C	Capacitor(25WV 1000PF)	[C125]
111	VCKYCZ0JF105Z	AC		C	Capacitor(6.3WV 1μ F)	[C126]
112	VCKYCZ1CF104Z	AB		C	Capacitor(16WV 0.1μ F)	[C127]
113	VCKYCZ1HB331K	AA		C	Capacitor(50WV 330PF)	[C129]
114	VCKYCZ1CF104Z	AB		C	Capacitor(16WV 0.1μ F)	[C130]
115	VCKYCZ1CF104Z	AB		C	Capacitor(16WV 0.1μ F)	[C131]
116	VCKYCZ1CF104Z	AB		C	Capacitor(16WV 0.1μ F)	[C133]
117	VCKYCZ1AB104K	AC		C	Capacitor(10WV 0.1μ F)	[C134]
118	VCKYCZ1AB104K	AC		C	Capacitor(10WV 0.1μ F)	[C135]
119	VCKYCZ1CF104Z	AB		C	Capacitor(16WV 0.1μ F)	[C136]
120	VCKYCZ1CF104Z	AB		C	Capacitor(16WV 0.1μ F)	[C137]
121	VCKYCZ1CF104Z	AB		C	Capacitor(16WV 0.1μ F)	[C138]
122	VCKYCZ1CF104Z	AB		C	Capacitor(16WV 0.1μ F)	[C139]
123	VCKYCZ1CF104Z	AB		C	Capacitor(16WV 0.1μ F)	[C140]
124	VCKYCZ1CF104Z	AB		C	Capacitor(16WV 0.1μ F)	[C141]
125	VCKYCZ1CF104Z	AB		C	Capacitor(16WV 0.1μ F)	[C142]
126	VCEAGA1CW476M	AB		C	Capacitor(16WV 47μ F)	[C143]
127	VCEAEA1EW475M	AA		C	Capacitor(25WV 4.7μ F)	[C144]
128	VCEAEA1HW105M	AC		C	Capacitor(50WV 1μ F)	[C145]

NO.	PARTS CODE	PRICE RANK	NEW MARK	PART RANK	DESCRIPTION	
[9] Control PWB unit						
129	VCKYCZ1EB102K	AA		C	Capacitor(25WV 1000PF)	[C148]
130	VCEAGA1HW226M	AB		C	Capacitor(50WV 22μF)	[C149]
131	VCKYCZ1CF104Z	AB		C	Capacitor(16WV 0.1μF)	[C150]
132	VCKYCZ1CF104Z	AB		C	Capacitor(16WV 0.1μF)	[C153]
133	VCKYCZ1CB103K	AA		C	Capacitor(16WV 0.01μF)	[C155]
134	VCKYCZ1EB102K	AA		C	Capacitor(25WV 1000PF)	[C156]
135	VCKYCZ1CF104Z	AB		C	Capacitor(16WV 0.1μF)	[C188]
136	VCKYCZ1EB102K	AA		C	Capacitor(25WV 1000PF)	[C190]
137	VCKYCZ1EB102K	AA		C	Capacitor(25WV 1000PF)	[C191]
138	VCKYCZ1EB471K	AD		C	Capacitor(25WV 470PF)	[C192]
139	VCKYCZ1EB471K	AD		C	Capacitor(25WV 470PF)	[C193]
140	VCKYCZ1EB222K	AB		C	Capacitor(25WV 2200PF)	[C194]
141	VCKYCZ1EB222K	AB		C	Capacitor(25WV 2200PF)	[C195]
142	VCCCCZ1EH150J	AC		C	Capacitor(25WV 15PF)	[C196]
143	VCCCCZ1EH150J	AC		C	Capacitor(25WV 15PF)	[C197]
144	VCKYCZ1CF104Z	AB		C	Capacitor(16WV 0.1μF)	[C198]
145	VCKYCZ1CF104Z	AB		C	Capacitor(16WV 0.1μF)	[C199]
146	VCKYCZ1CF104Z	AB		C	Capacitor(16WV 0.1μF)	[C200]
147	VCKYCY1HF104Z	AA		C	Capacitor(50WV 0.1μF)	[C202]
148	VCKYCZ1CF104Z	AB		C	Capacitor(16WV 0.1μF)	[C203]
149	VCKYCZ1CF104Z	AB		C	Capacitor(16WV 0.1μF)	[C204]
150	VCKYCZ1CF104Z	AB		C	Capacitor(16WV 0.1μF)	[C205]
151	VCEAEA1CW106M	AC		C	Capacitor(16WV 10μF)	[C206]
152	VCKYCZ1CF104Z	AB		C	Capacitor(16WV 0.1μF)	[C207]
153	VCCCCZ1EH330J	AC		C	Capacitor(25WV 33PF)	[C208]
154	VCCCCZ1EH101J	AA		C	Capacitor(25WV 100PF)	[C209]
155	VCCCCZ1EH100D	AA		C	Capacitor(25WV 10PF)	[C210]
156	VCCCCZ1EH330J	AC		C	Capacitor(25WV 33PF)	[C211]
157	VCCCCZ1EH100D	AA		C	Capacitor(25WV 10PF)	[C212]
158	VCCCCZ1EH330J	AC		C	Capacitor(25WV 33PF)	[C213]
159	VCKYCZ1CF104Z	AB		C	Capacitor(16WV 0.1μF)	[C214]
160	VCKYCZ1CF104Z	AB		C	Capacitor(16WV 0.1μF)	[C215]
161	VCKYCZ1CF104Z	AB		C	Capacitor(16WV 0.1μF)	[C217]
162	VCCCCZ1EH101J	AA		C	Capacitor(25WV 100PF)	[C218]
163	VCKYCZ1CF104Z	AB		C	Capacitor(16WV 0.1μF)	[C219]
164	VCCCCZ1EH100D	AA		C	Capacitor(25WV 10PF)	[C220]
165	VCKYCZ1CF104Z	AB		C	Capacitor(16WV 0.1μF)	[C222]
166	VCKYCZ1CF104Z	AB		C	Capacitor(16WV 0.1μF)	[C227]
167	VCEAEA1CW106M	AC		C	Capacitor(16WV 10μF)	[C228]
168	VCKYCY1HF104Z	AA		C	Capacitor(50WV 0.1μF)	[C229]
169	VCKYCY1HF104Z	AA		C	Capacitor(50WV 0.1μF)	[C230]
170	VCCCCZ1EH330J	AC		C	Capacitor(25WV 33PF)	[C231]
171	VCCCCZ1EH330J	AC		C	Capacitor(25WV 33PF)	[C232]
172	VCKYCZ1CF104Z	AB		C	Capacitor(16WV 0.1μF)	[C233]
173	VCKYCY1HF104Z	AA		C	Capacitor(50WV 0.1μF)	[C234]
174	VCEAGA1HW107M	AA		C	Capacitor(50WV 100μF)	[C235]
175	VCKYCZ1CF104Z	AB		C	Capacitor(16WV 0.1μF)	[C236]
176	VCKYCY1HB103K	AA		C	Capacitor(50WV 0.01μF)	[C237]
177	VCKYCY1HB103K	AA		C	Capacitor(50WV 0.01μF)	[C238]
178	VCKYCY1HB103K	AA		C	Capacitor(50WV 0.01μF)	[C239]
179	VCKYCY1HB103K	AA		C	Capacitor(50WV 0.01μF)	[C240]
180	VCKYCY1CF224Z	AB		C	Capacitor(16WV 0.22μF)	[C241]
181	VCKYCY1HF104Z	AA		C	Capacitor(50WV 0.1μF)	[C242]
182	VCKYCY1HF104Z	AA		C	Capacitor(50WV 0.1μF)	[C243]
183	VCEAGA1HW476M	AB		C	Capacitor(50WV 47μF)	[C244]
184	VCKYCY1HF104Z	AA		C	Capacitor(50WV 0.1μF)	[C245]
185	VCKYCZ1EB102K	AA		C	Capacitor(25WV 1000PF)	[C246]
186	VCEAGA1CW476M	AB		C	Capacitor(16WV 47μF)	[C248]
187	VCKYCZ1CF104Z	AB		C	Capacitor(16WV 0.1μF)	[C249]
188	VCKYCZ1EB102K	AA		C	Capacitor(25WV 1000PF)	[C250]
189	VCEAGA1CW476M	AB		C	Capacitor(16WV 47μF)	[C251]
190	VCKYCZ1CF104Z	AB		C	Capacitor(16WV 0.1μF)	[C252]
191	VCKYCZ1EB102K	AA		C	Capacitor(25WV 1000PF)	[C253]
192	VCKYCZ1EB102K	AA		C	Capacitor(25WV 1000PF)	[C254]
193	VCKYCZ1EB102K	AA		C	Capacitor(25WV 1000PF)	[C256]
194	VCKYCZ1EB102K	AA		C	Capacitor(25WV 1000PF)	[C257]
195	VCKYCZ1EB102K	AA		C	Capacitor(25WV 1000PF)	[C258]
196	VCKYCZ1EB102K	AA		C	Capacitor(25WV 1000PF)	[C259]
197	VCKYCY1HF104Z	AA		C	Capacitor(50WV 0.1μF)	[C260]
198	VCEAEA1CW106M	AC		C	Capacitor(16WV 10μF)	[C261]
199	VCEAGA1EW227M	AB		C	Capacitor(25WV 220μF)	[C263]
200	VCKYCZ1CF104Z	AB		C	Capacitor(16WV 0.1μF)	[C264]
201	VCEAGA1CW476M	AB		C	Capacitor(16WV 47μF)	[C267]
202	VCKYCZ1CF104Z	AB		C	Capacitor(16WV 0.1μF)	[C268]
203	VCCCCZ1EH100D	AA		C	Capacitor(25WV 10PF)	[C269]
204	VCCCCZ1EH330J	AC		C	Capacitor(25WV 33PF)	[C270]
205	VCKYCZ1CF104Z	AB		C	Capacitor(16WV 0.1μF)	[C273]
206	VCKYCZ1CF104Z	AB		C	Capacitor(16WV 0.1μF)	[C274]
207	VCKYCZ0JB105K	AB		C	Capacitor(6.3WV 1.0μF)	[C275]
208	VCKYCY1HF104Z	AA		C	Capacitor(50WV 0.1μF)	[C284]
209	VCKYCY1HF104Z	AA		C	Capacitor(50WV 0.1μF)	[C285]
210	VCKYCZ1CF104Z	AB		C	Capacitor(16WV 0.1μF)	[C286]
211	VCKYCY1HF104Z	AA		C	Capacitor(50WV 0.1μF)	[C287]
212	VCKYTQ1CF474Z	AB		C	Capacitor(16WV 0.47μF)	[C289]
213	QCNCM2442SC0B	AB		C	Connector(2pin)	[CNBYPE]

NO.	PARTS CODE	PRICE RANK	NEW MARK	PART RANK	DESCRIPTION	
[9] Control PWB unit						
214	QCNCW2556SC1B	AG		C	Connector(12pin)	[CNCIS]
215	QCNCM2694XH0C	AE		C	Connector(3pin)	[CNFM]
216	QCNCM2401SC0B	AA		C	Connector(2pin)	[CNFRT]
217	QCNCM2694XH0B	AE		C	Connector(2pin)	[CNHPS]
218	QCNCM2694XH0E	AE		C	Connector(5pin)	[CNHV]
219	QCNCM7014SC0H	AB		C	Connector(8pin)	[CNLSR]
220	QCNCM7014SC0D	AB		C	Connector(4pin)	[CNMM]
221	QCNCM2442SC0B	AB		C	Connector(2pin)	[CNORG]
222	QCNCM2401SC0B	AA		C	Connector(2pin)	[CNPIN]
223	QCNCM2666XH0E	AE		C	Connector(5pin)	[CNPM]
224	QCNCW2556SC1F	AG		C	Connector(16pin)	[CNPN]
225	QCNCM2401SC0B	AA		C	Connector(2pin)	[CNPOUT2]
226	QCNCM7014SC0C	AA		C	Connector(3pin)	[CNPOUT1]
227	QCNCM2694XH0F	AE		C	Connector(6pin)	[CNPUM]
228	QCNCM2694XH1D	AE		C	Connector(14pin)	[CNPW]
229	QCNCM2666XH0B	AD		C	Connector(2pin)	[CNROLSNS]
230	QCNCM7014SC0B	AD		C	Connector(2pin)	[CNRTH]
231	QCNCM7014SC0D	AB		C	Connector(4pin)	[CNSCM]
232	QCNCM2666XH0B	AD		C	Connector(2pin)	[CNSP]
233	QCNCM2666XH0D	AD		C	Connector(4pin)	[CNTCT]
234	QCNCM7014SC0B	AD		C	Connector(2pin)	[CNTCVR]
235	QCNCM2710XHZZ	AK		C	Connector	[CNUSB]
236	VHD1SS355//-1	AB		B	Diode(1SS355)	[D4]
237	VHDMC2850T1-1	AE		B	Diode(MC2850)	[D13]
238	VHD1SS355//-1	AB		B	Diode(1SS355)	[D14]
239	VHE1N4748A/-1	AC		B	Diode(1N4748A)	[D15]
240	VHEUDZS6R2B-1	AE		B	Zener diode(UDZS6.2B)	[D21]
241	VHD1SS355//-1	AB		B	Diode(1SS355)	[D24]
⚠ 242	QFS-L1027YCZZ	AE		A	IC protector(KAB3202 202)	[F3]
⚠ 243	QFS-L2021XHZZ	AE		A	IC protector(KAB5002 251)	[F5]
⚠ 244	QFS-L0004QCZZ	AE		A	IC protector(KAB3202 102)	[F6]
⚠ 245	QFS-L2025XHZZ	AE		A	IC protector(KAB2402 402)	[F7]
⚠ 246	QFS-L2016XHZZ	AD		A	IC protector(KAB5002 201)	[F8]
247	RH-iX2425XHZZ	BS		B	IC(OA-2000)	[IC1]
248	RH-iX2459XHZZ	AG		B	IC(74LV1GWU04ASCE-E)	[IC3]
249	RH-iX2446XHZZ	BK		B	IC(W9812G6DH-75/IS42S16800A-7TL)	[IC4]
250	VHiPST596CMT1	AF		B	IC(PST596CMT)	[IC5]
251	VHiF016/TE18B		N	E	Service IC,FLASH ROM(DE)(16MB)(Ver.:TE18B)	[IC6]
251	VHiF016/TE25A		N	E	Service IC,FLASH ROM(IT)(16MB)(Ver.:TE25A)	[IC6]
251	VHiF016/TE23A		N	E	Service IC,FLASH ROM(H)(16MB)(Ver.:TE23A)	[IC6]
252	RH-iX2448XHZZ	AL		B	IC(FAN1117AD18X)	[IC8]
253	RH-iX2494XHZZ	AH		B	IC(XC6219B332PR)	[IC9]
254	RH-iX2411XHZZ	AG		B	IC(SN74LV244APWR)	[IC10]
255	RH-iX2462XHZZ	AZ		B	IC(MTD2007F-3072)	[IC12]
256	RH-iX2411XHZZ	AG		B	IC(SN74LV244APWR)	[IC14]
257	RH-iX2451XHZZ	AH		B	IC(SN74AHCT244PWR)	[IC15]
258	VHiNJM2113M-1	AG		B	IC(NJM2113M)	[IC17]
259	VHiF001/TE53E	BL		B	Service IC,MASK ROM(1MB)(Ver.:TE53E)	[IC21]
260	RH-iX2461XHZZ	AH		B	IC(KIA7805API/P)	[IC22]
261	RH-iX2454XHZZ	AG		B	IC(SN74LV32APWR)	[IC23]
262	RH-iX2453XHZZ	AG		B	IC(SN74LV08APWR)	[IC24]
263	RH-iX2452XHZZ	AG		B	IC(SN74LV06APWR)	[IC25]
264	RH-iX2450XHZZ	AG		B	IC(SN74AHC74PWR)	[IC26]
265	RH-iX2457XHZZ	AG		B	IC(74LV1GW14ASCE-E)	[IC27]
266	RH-iX2456XHZZ	AG		B	IC(74HC161FPEL-E)	[IC28]
267	RH-iX2453XHZZ	AG		B	IC(SN74LV08APWR)	[IC29]
268	RH-iX2455XHZZ	AG		B	IC(74HC151FPEL-E)	[IC30]
269	VHiBA10393F-1	AC		B	IC(BA10393F)	[IC31]
270	VHiULN2003AN/	AE		B	IC(ULN2003AN)	[IC32]
271	RH-iX2450XHZZ	AG		B	IC(SN74AHC74PWR)	[IC33]
272	RH-iX2447XHZZ	AX		B	IC(A3982SLB)	[IC34]
273	RH-iX2493XHZZ	AH		B	IC(NJM78L12UA)	[IC36]
274	RCiLF2195XHZZ			C	Filter(1012AH-1012=P2)	[L1]
275	RCiLZ2193XHZZ	AE		C	Coil(MMZ1005Y102C)	[L6]
276	VSRT1N436CT-1	AE		B	Transistor(RT1N436C)	[Q4]
277	VSRT1N436CT-1	AE		B	Transistor(RT1N436C)	[Q5]
278	VSRT1N436CT-1	AE		B	Transistor(RT1N436C)	[Q6]
279	VSRT1P141CT-1	AB		B	Transistor(RT1P141C)	[Q7]
280	VSRT1N436CT-1	AE		B	Transistor(RT1N436C)	[Q8]
281	VSRT1N436CT-1	AE		B	Transistor(RT1N436C)	[Q9]
282	VSRT1N141CT-1	AE		B	Transistor(RT1N141C)	[Q14]
283	VSRT1N141CT-1	AE		B	Transistor(RT1N141C)	[Q15]
284	VSRT5N141CT-1	AE		B	Transistor(RT5N141C)	[Q18]
285	VS2SC2412K/-1	AB		B	Transistor(2SC2412K)	[Q29]
286	VS2SC2412K/-1	AB		B	Transistor(2SC2412K)	[Q30]
287	VS2SC2412K/-1	AB		B	Transistor(2SC2412K)	[Q31]
288	VS2SA1530AT-1	AE		B	Transistor(2SA1530A)	[Q32]
289	VS2SA1530AT-1	AE		B	Transistor(2SA1530A)	[Q33]
290	VSRT1N436CT-1	AE		B	Transistor(RT1N436C)	[Q34]
291	VRS-CZ1JB000J	AA		C	Resistor(1/16W 0Ω ± 5%)	[R1]
292	VRS-CZ1JB101J	AA		C	Resistor(1/16W 100Ω ± 5%)	[R2]
293	VRS-CZ1JB472J	AA		C	Resistor(1/16W 4.7KΩ ± 5%)	[R5]
294	VRS-CZ1JB472J	AA		C	Resistor(1/16W 4.7KΩ ± 5%)	[R6]
295	VRS-CZ1JB101J	AA		C	Resistor(1/16W 100Ω ± 5%)	[R7]
296	VRS-CZ1JB101J	AA		C	Resistor(1/16W 100Ω ± 5%)	[R9]

NO.	PARTS CODE	PRICE RANK	NEW MARK	PART RANK	DESCRIPTION	
[9] Control PWB unit						
297	VRS-CZ1JB330J	AA		C	Resistor(1/16W 33Ω ± 5%)	[R10]
298	VRS-CZ1JB330J	AA		C	Resistor(1/16W 33Ω ± 5%)	[R12]
299	VRS-CZ1JB000J	AA		C	Resistor(1/16W 0Ω ± 5%)	[R13]
300	VRS-CZ1JB330J	AA		C	Resistor(1/16W 33Ω ± 5%)	[R14]
301	VRS-CZ1JB330J	AA		C	Resistor(1/16W 33Ω ± 5%)	[R15]
302	VRS-CZ1JB330J	AA		C	Resistor(1/16W 33Ω ± 5%)	[R16]
303	VRS-CZ1JB330J	AA		C	Resistor(1/16W 33Ω ± 5%)	[R17]
304	VRS-CZ1JB330J	AA		C	Resistor(1/16W 33Ω ± 5%)	[R18]
305	VRS-CZ1JB221J	AD		C	Resistor(1/16W 220Ω ± 5%)	[R19]
306	VRS-CZ1JB221J	AD		C	Resistor(1/16W 220Ω ± 5%)	[R20]
307	VRS-CZ1JB330J	AA		C	Resistor(1/16W 33Ω ± 5%)	[R21]
308	VRS-CZ1JB330J	AA		C	Resistor(1/16W 33Ω ± 5%)	[R24]
309	VRS-CZ1JB330J	AA		C	Resistor(1/16W 33Ω ± 5%)	[R25]
310	VRS-CZ1JB330J	AA		C	Resistor(1/16W 33Ω ± 5%)	[R26]
311	VRS-CZ1JB330J	AA		C	Resistor(1/16W 33Ω ± 5%)	[R27]
312	VRS-CZ1JB330J	AA		C	Resistor(1/16W 33Ω ± 5%)	[R28]
313	VRS-CZ1JB000J	AA		C	Resistor(1/16W 0Ω ± 5%)	[R29]
314	VRS-CZ1JB000J	AA		C	Resistor(1/16W 0Ω ± 5%)	[R32]
315	VRS-CZ1JB223J	AA		C	Resistor(1/16W 22KΩ ± 5%)	[R33]
316	VRS-CZ1JB000J	AA		C	Resistor(1/16W 0Ω ± 5%)	[R34]
317	VRS-CZ1JB000J	AA		C	Resistor(1/16W 0Ω ± 5%)	[R35]
318	RCiLZ2193XHZZ	AE		C	Coil(MMZ1005Y102C)	[R36]
319	RCiLZ2193XHZZ	AE		C	Coil(MMZ1005Y102C)	[R38]
320	VRS-CZ1JB333J	AA		C	Resistor(1/16W 33KΩ ± 5%)	[R39]
321	RCiLZ2193XHZZ	AE		C	Coil(MMZ1005Y102C)	[R40]
322	RCiLZ2193XHZZ	AE		C	Coil(MMZ1005Y102C)	[R41]
323	RCiLZ2193XHZZ	AE		C	Coil(MMZ1005Y102C)	[R42]
324	RCiLZ2193XHZZ	AE		C	Coil(MMZ1005Y102C)	[R43]
325	VRS-CZ1JB000J	AA		C	Resistor(1/16W 0Ω ± 5%)	[R44]
326	VRS-CZ1JB100J	AA		C	Resistor(1/16W 10Ω ± 5%)	[R46]
327	VRS-CZ1JB330J	AA		C	Resistor(1/16W 33Ω ± 5%)	[R47]
328	VRS-CZ1JB101J	AA		C	Resistor(1/16W 100Ω ± 5%)	[R51]
329	VRS-CZ1JB105J	AD		C	Resistor(1/16W 1MΩ ± 5%)	[R52]
330	VRS-CZ1JB000J	AA		C	Resistor(1/16W 0Ω ± 5%)	[R53]
331	VRS-CZ1JB330J	AA		C	Resistor(1/16W 33Ω ± 5%)	[R54]
332	VRS-CZ1JB391J	AD		C	Resistor(1/16W 390Ω ± 5%)	[R55]
333	VRSCY1JB27R4F	AD		C	Resistor(1/16W 27.4Ω ± 1%)	[R56]
334	VRSCY1JB27R4F	AD		C	Resistor(1/16W 27.4Ω ± 1%)	[R57]
335	VRS-CY1JB000J	AA		C	Resistor(1/16W 0Ω ± 5%)	[R58]
336	VRS-CZ1JB000J	AA		C	Resistor(1/16W 0Ω ± 5%)	[R59]
337	VRS-CZ1JB000J	AA		C	Resistor(1/16W 0Ω ± 5%)	[R60]
338	VRS-CZ1JB152J	AA		C	Resistor(1/16W 1.5KΩ ± 5%)	[R61]
339	VRS-CZ1JB000J	AA		C	Resistor(1/16W 0Ω ± 5%)	[R62]
340	VRSCZ1JB2492F	AF		C	Resistor(1/16W 24.9KΩ ± 1%)	[R63]
341	VRS-CY1JB000J	AA		C	Resistor(1/16W 0Ω ± 5%)	[R66]
342	VRS-CZ1JB000J	AA		C	Resistor(1/16W 0Ω ± 5%)	[R69]
343	VRS-CY1JB000J	AA		C	Resistor(1/16W 0Ω ± 5%)	[R78]
344	VRS-CZ1JB105J	AD		C	Resistor(1/16W 1MΩ ± 5%)	[R80]
345	VRS-CZ1JB181J	AA		C	Resistor(1/16W 180Ω ± 5%)	[R81]
346	VRS-CY1JB000J	AA		C	Resistor(1/16W 0Ω ± 5%)	[R82]
347	VRS-CY1JB000J	AA		C	Resistor(1/16W 0Ω ± 5%)	[R83]
348	VRS-CY1JB000J	AA		C	Resistor(1/16W 0Ω ± 5%)	[R84]
349	RCiLZ0285AFZZ	AB		C	Coil(MMZ1608Y102B)	[R87]
350	VRS-CY1JB000J	AA		C	Resistor(1/16W 0Ω ± 5%)	[R88]
351	VRS-CZ1JB103J	AA		C	Resistor(1/16W 10KΩ ± 5%)	[R89]
352	VRS-CZ1JB103J	AA		C	Resistor(1/16W 10KΩ ± 5%)	[R90]
353	VRS-CZ1JB103J	AA		C	Resistor(1/16W 10KΩ ± 5%)	[R91]
354	VRS-CZ1JB103J	AA		C	Resistor(1/16W 10KΩ ± 5%)	[R92]
355	VRS-CZ1JB102J	AA		C	Resistor(1/16W 1KΩ ± 5%)	[R98]
356	VRS-CZ1JB000J	AA		C	Resistor(1/16W 0Ω ± 5%)	[R100]
357	VRS-CZ1JB000J	AA		C	Resistor(1/16W 0Ω ± 5%)	[R103]
358	VRS-CZ1JB472J	AA		C	Resistor(1/16W 4.7KΩ ± 5%)	[R104]
359	VRS-CZ1JB472J	AA		C	Resistor(1/16W 4.7KΩ ± 5%)	[R106]
360	VRS-CZ1JB330J	AA		C	Resistor(1/16W 33Ω ± 5%)	[R107]
361	VRS-CZ1JB330J	AA		C	Resistor(1/16W 33Ω ± 5%)	[R108]
362	VRS-CZ1JB330J	AA		C	Resistor(1/16W 33Ω ± 5%)	[R109]
363	VRS-CZ1JB330J	AA		C	Resistor(1/16W 33Ω ± 5%)	[R110]
364	VRS-CZ1JB333J	AA		C	Resistor(1/16W 33KΩ ± 5%)	[R111]
365	VRS-CZ1JB333J	AA		C	Resistor(1/16W 33KΩ ± 5%)	[R112]
366	VRS-CZ1JB333J	AA		C	Resistor(1/16W 33KΩ ± 5%)	[R113]
367	VRS-CZ1JB333J	AA		C	Resistor(1/16W 33KΩ ± 5%)	[R114]
368	VRS-CZ1JB271J	AA		C	Resistor(1/16W 270Ω ± 5%)	[R115]
369	VRS-CZ1JB271J	AA		C	Resistor(1/16W 270Ω ± 5%)	[R116]
370	VRS-CZ1JB271J	AA		C	Resistor(1/16W 270Ω ± 5%)	[R117]
371	VRS-CZ1JB271J	AA		C	Resistor(1/16W 270Ω ± 5%)	[R118]
372	VRS-CZ1JB271J	AA		C	Resistor(1/16W 270Ω ± 5%)	[R119]
373	VRS-CZ1JB271J	AA		C	Resistor(1/16W 270Ω ± 5%)	[R120]
374	VRS-CZ1JB271J	AA		C	Resistor(1/16W 270Ω ± 5%)	[R121]
375	VRS-CZ1JB271J	AA		C	Resistor(1/16W 270Ω ± 5%)	[R122]
376	VRS-CZ1JB000J	AA		C	Resistor(1/16W 0Ω ± 5%)	[R132]
377	VRS-CZ1JB000J	AA		C	Resistor(1/16W 0Ω ± 5%)	[R133]
378	VRS-CY1JB000J	AA		C	Resistor(1/16W 0Ω ± 5%)	[R134]
379	VRS-CY1JB000J	AA		C	Resistor(1/16W 0Ω ± 5%)	[R135]
380	VRS-CZ1JB472J	AA		C	Resistor(1/16W 4.7KΩ ± 5%)	[R137]
381	VRS-CZ1JB392J	AD		C	Resistor(1/16W 3.9KΩ ± 5%)	[R139]

NO.	PARTS CODE	PRICE RANK	NEW MARK	PART RANK	DESCRIPTION	
[9] Control PWB unit						
382	VRS-CZ1JB103J	AA		C	Resistor(1/16W 10KΩ ± 5%)	[R140]
383	VRS-CZ1JB472J	AA		C	Resistor(1/16W 4.7KΩ ± 5%)	[R141]
384	VRS-CZ1JB101J	AA		C	Resistor(1/16W 100Ω ± 5%)	[R142]
385	VRS-CZ1JB103J	AA		C	Resistor(1/16W 10KΩ ± 5%)	[R143]
386	VRS-CZ1JB332J	AA		C	Resistor(1/16W 3.3KΩ ± 5%)	[R144]
387	VRS-HT3AAR47J	AC		C	Resistor(1W 0.47Ω ± 5%)	[R146]
388	VRS-CZ1JB472J	AA		C	Resistor(1/16W 4.7KΩ ± 5%)	[R152]
389	VRS-CZ1JB133J	AC		C	Resistor(1/16W 13KΩ ± 5%)	[R153]
390	VRS-CZ1JB103J	AA		C	Resistor(1/16W 10KΩ ± 5%)	[R154]
391	VRS-CZ1JB101J	AA		C	Resistor(1/16W 100Ω ± 5%)	[R155]
392	VRS-HT3AAR47J	AC		C	Resistor(1W 0.47Ω ± 5%)	[R156]
393	VRS-CZ1JB472J	AA		C	Resistor(1/16W 4.7KΩ ± 5%)	[R157]
394	VRS-CZ1JB103J	AA		C	Resistor(1/16W 10KΩ ± 5%)	[R158]
395	VRS-CZ1JB101J	AA		C	Resistor(1/16W 100Ω ± 5%)	[R159]
396	VRS-CZ1JB101J	AA		C	Resistor(1/16W 100Ω ± 5%)	[R160]
397	VRS-CZ1JB101J	AA		C	Resistor(1/16W 100Ω ± 5%)	[R161]
398	VRS-CZ1JB152J	AA		C	Resistor(1/16W 1.5KΩ ± 5%)	[R162]
399	VRS-CZ1JB101J	AA		C	Resistor(1/16W 100Ω ± 5%)	[R165]
400	VRS-CZ1JB101J	AA		C	Resistor(1/16W 100Ω ± 5%)	[R166]
401	VRS-CZ1JB101J	AA		C	Resistor(1/16W 100Ω ± 5%)	[R167]
402	VRS-CZ1JB101J	AA		C	Resistor(1/16W 100Ω ± 5%)	[R168]
403	VRS-CZ1JB101J	AA		C	Resistor(1/16W 100Ω ± 5%)	[R169]
404	VRS-CZ1JB101J	AA		C	Resistor(1/16W 100Ω ± 5%)	[R170]
405	VRS-CZ1JB101J	AA		C	Resistor(1/16W 100Ω ± 5%)	[R171]
406	VRS-CZ1JB472J	AA		C	Resistor(1/16W 4.7KΩ ± 5%)	[R172]
407	VRS-CZ1JB104J	AA		C	Resistor(1/16W 100KΩ ± 5%)	[R175]
408	VRS-CZ1JB154J	AD		C	Resistor(1/16W 150KΩ ± 5%)	[R176]
409	VRS-CZ1JB203J	AD		C	Resistor(1/16W 20KΩ ± 5%)	[R177]
410	VRS-CZ1JB302J	AD		C	Resistor(1/16W 3KΩ ± 5%)	[R178]
411	VRS-CZ1JB000J	AA		C	Resistor(1/16W 0Ω ± 5%)	[R179]
412	VRS-CZ1JB471J	AA		C	Resistor(1/16W 470Ω ± 5%)	[R180]
413	VRS-CZ1JB000J	AA		C	Resistor(1/16W 0Ω ± 5%)	[R181]
414	VRS-CZ1JB000J	AA		C	Resistor(1/16W 0Ω ± 5%)	[R182]
415	VRS-CZ1JB000J	AA		C	Resistor(1/16W 0Ω ± 5%)	[R183]
416	VRS-CZ1JB103J	AA		C	Resistor(1/16W 10KΩ ± 5%)	[R185]
417	VRS-CZ1JB000J	AA		C	Resistor(1/16W 0Ω ± 5%)	[R188]
418	VRS-CZ1JB472J	AA		C	Resistor(1/16W 4.7KΩ ± 5%)	[R189]
419	VRS-CZ1JB000J	AA		C	Resistor(1/16W 0Ω ± 5%)	[R191]
420	VRS-CZ1JB103J	AA		C	Resistor(1/16W 10KΩ ± 5%)	[R192]
421	VRS-CZ1JB203J	AD		C	Resistor(1/16W 20KΩ ± 5%)	[R197]
422	VRS-CZ1JB562J	AA		C	Resistor(1/16W 5.6KΩ ± 5%)	[R198]
423	VRS-CZ1JB621J	AA		C	Resistor(1/16W 620Ω ± 5%)	[R199]
424	VRS-CZ1JB472J	AA		C	Resistor(1/16W 4.7KΩ ± 5%)	[R204]
425	VRS-CZ1JB000J	AA		C	Resistor(1/16W 0Ω ± 5%)	[R221]
426	VRS-CZ1JB000J	AA		C	Resistor(1/16W 0Ω ± 5%)	[R222]
427	VRS-CZ1JB000J	AA		C	Resistor(1/16W 0Ω ± 5%)	[R224]
428	VRS-CZ1JB000J	AA		C	Resistor(1/16W 0Ω ± 5%)	[R225]
429	VRS-CZ1JB103J	AA		C	Resistor(1/16W 10KΩ ± 5%)	[R226]
430	VRS-CZ1JB101J	AA		C	Resistor(1/16W 100Ω ± 5%)	[R227]
431	VRS-CZ1JB330J	AA		C	Resistor(1/16W 33Ω ± 5%)	[R232]
432	VRS-CZ1JB330J	AA		C	Resistor(1/16W 33Ω ± 5%)	[R233]
433	VRS-CZ1JB000J	AA		C	Resistor(1/16W 0Ω ± 5%)	[R234]
434	VRS-CZ1JB330J	AA		C	Resistor(1/16W 33Ω ± 5%)	[R235]
435	VRS-CZ1JB100J	AA		C	Resistor(1/16W 10Ω ± 5%)	[R236]
436	VRS-CZ1JB103J	AA		C	Resistor(1/16W 10KΩ ± 5%)	[R237]
437	VRS-CZ1JB103J	AA		C	Resistor(1/16W 10KΩ ± 5%)	[R238]
438	VRS-CZ1JB103J	AA		C	Resistor(1/16W 10KΩ ± 5%)	[R239]
439	VRS-CZ1JB100J	AA		C	Resistor(1/16W 10Ω ± 5%)	[R240]
440	VRS-CZ1JB103J	AA		C	Resistor(1/16W 10KΩ ± 5%)	[R241]
441	VRS-CZ1JB103J	AA		C	Resistor(1/16W 10KΩ ± 5%)	[R242]
442	VRS-CZ1JB103J	AA		C	Resistor(1/16W 10KΩ ± 5%)	[R243]
443	VRS-CZ1JB103J	AA		C	Resistor(1/16W 10KΩ ± 5%)	[R244]
444	VRS-CZ1JB103J	AA		C	Resistor(1/16W 10KΩ ± 5%)	[R245]
445	VRS-CZ1JB103J	AA		C	Resistor(1/16W 10KΩ ± 5%)	[R246]
446	VRS-CZ1JB103J	AA		C	Resistor(1/16W 10KΩ ± 5%)	[R247]
447	VRS-CZ1JB103J	AA		C	Resistor(1/16W 10KΩ ± 5%)	[R248]
448	VRS-CZ1JB101J	AA		C	Resistor(1/16W 100Ω ± 5%)	[R249]
449	VRS-CZ1JB101J	AA		C	Resistor(1/16W 100Ω ± 5%)	[R251]
450	VRS-CZ1JB103J	AA		C	Resistor(1/16W 10KΩ ± 5%)	[R252]
451	VRS-CZ1JB101J	AA		C	Resistor(1/16W 100Ω ± 5%)	[R253]
452	VRS-CZ1JB330J	AA		C	Resistor(1/16W 33Ω ± 5%)	[R254]
453	VRS-CZ1JB101J	AA		C	Resistor(1/16W 100Ω ± 5%)	[R255]
454	VRS-CZ1JB101J	AA		C	Resistor(1/16W 100Ω ± 5%)	[R256]
455	VRS-CZ1JB330J	AA		C	Resistor(1/16W 33Ω ± 5%)	[R257]
456	VRS-CZ1JB100J	AA		C	Resistor(1/16W 10Ω ± 5%)	[R258]
457	VRS-CZ1JB330J	AA		C	Resistor(1/16W 33Ω ± 5%)	[R259]
458	VRS-CZ1JB330J	AA		C	Resistor(1/16W 33Ω ± 5%)	[R260]
459	VRS-CZ1JB101J	AA		C	Resistor(1/16W 100Ω ± 5%)	[R261]
460	VRS-CZ1JB101J	AA		C	Resistor(1/16W 100Ω ± 5%)	[R262]
461	VRS-CZ1JB330J	AA		C	Resistor(1/16W 33Ω ± 5%)	[R263]
462	VRS-CZ1JB103J	AA		C	Resistor(1/16W 10KΩ ± 5%)	[R264]
463	VRS-CZ1JB103J	AA		C	Resistor(1/16W 10KΩ ± 5%)	[R265]
464	VRS-CZ1JB103J	AA		C	Resistor(1/16W 10KΩ ± 5%)	[R266]
465	VRS-CZ1JB103J	AA		C	Resistor(1/16W 10KΩ ± 5%)	[R267]
466	VRS-CZ1JB103J	AA		C	Resistor(1/16W 10KΩ ± 5%)	[R268]

NO.	PARTS CODE	PRICE RANK	NEW MARK	PART RANK	DESCRIPTION	
[9] Control PWB unit						
467	VRS-CZ1JB103J	AA		C	Resistor(1/16W 10KΩ ± 5%)	[R269]
468	VRS-CZ1JB103J	AA		C	Resistor(1/16W 10KΩ ± 5%)	[R270]
469	VRS-CZ1JB101J	AA		C	Resistor(1/16W 100Ω ± 5%)	[R271]
470	VRS-CZ1JB000J	AA		C	Resistor(1/16W 0Ω ± 5%)	[R272]
471	VRS-CZ1JB103J	AA		C	Resistor(1/16W 10KΩ ± 5%)	[R273]
472	VRS-CZ1JB103J	AA		C	Resistor(1/16W 10KΩ ± 5%)	[R274]
473	VRS-CZ1JB103J	AA		C	Resistor(1/16W 10KΩ ± 5%)	[R275]
474	VRS-CZ1JB103J	AA		C	Resistor(1/16W 10KΩ ± 5%)	[R276]
475	VRS-HT3DA470J	AA		C	Resistor(2W 47Ω ± 5%)	[R277]
476	VRS-CZ1JB101J	AA		C	Resistor(1/16W 100Ω ± 5%)	[R278]
477	VRS-CZ1JB101J	AA		C	Resistor(1/16W 100Ω ± 5%)	[R279]
478	VRS-CZ1JB270J	AA		C	Resistor(1/16W 27Ω ± 5%)	[R280]
479	VRS-CZ1JB103J	AA		C	Resistor(1/16W 10KΩ ± 5%)	[R281]
480	VRS-CZ1JB103J	AA		C	Resistor(1/16W 10KΩ ± 5%)	[R282]
481	VRS-CZ1JB101J	AA		C	Resistor(1/16W 100Ω ± 5%)	[R283]
482	VRS-CZ1JB101J	AA		C	Resistor(1/16W 100Ω ± 5%)	[R284]
483	RCiLZ2193XHZZ	AE		C	Coil(MMZ1005Y102C)	[R285]
484	VRS-CZ1JB101J	AA		C	Resistor(1/16W 100Ω ± 5%)	[R286]
485	VRS-CZ1JB103J	AA		C	Resistor(1/16W 10KΩ ± 5%)	[R287]
486	VRS-CZ1JB101J	AA		C	Resistor(1/16W 100Ω ± 5%)	[R288]
487	VRS-CZ1JB101J	AA		C	Resistor(1/16W 100Ω ± 5%)	[R289]
488	VRS-CZ1JB103J	AA		C	Resistor(1/16W 10KΩ ± 5%)	[R290]
489	VRS-CZ1JB103J	AA		C	Resistor(1/16W 10KΩ ± 5%)	[R291]
490	VRS-CZ1JB101J	AA		C	Resistor(1/16W 100Ω ± 5%)	[R292]
491	VRS-CZ1JB101J	AA		C	Resistor(1/16W 100Ω ± 5%)	[R293]
492	VRS-CZ1JB104J	AA		C	Resistor(1/16W 100KΩ ± 5%)	[R294]
493	VRS-CZ1JB103J	AA		C	Resistor(1/16W 10KΩ ± 5%)	[R295]
494	VRS-CZ1JB100J	AA		C	Resistor(1/16W 10Ω ± 5%)	[R296]
495	VRS-CZ1JB101J	AA		C	Resistor(1/16W 100Ω ± 5%)	[R297]
496	VRS-CZ1JB100J	AA		C	Resistor(1/16W 10Ω ± 5%)	[R298]
497	VRS-CZ1JB101J	AA		C	Resistor(1/16W 100Ω ± 5%)	[R300]
498	VRS-CZ1JB330J	AA		C	Resistor(1/16W 33Ω ± 5%)	[R301]
499	VRS-CZ1JB103J	AA		C	Resistor(1/16W 10KΩ ± 5%)	[R302]
500	VRS-CZ1JB330J	AA		C	Resistor(1/16W 33Ω ± 5%)	[R303]
501	VRS-CZ1JB330J	AA		C	Resistor(1/16W 33Ω ± 5%)	[R304]
502	VRS-CZ1JB102J	AA		C	Resistor(1/16W 1KΩ ± 5%)	[R305]
503	VRS-CZ1JB330J	AA		C	Resistor(1/16W 33Ω ± 5%)	[R306]
504	VRS-CZ1JB101J	AA		C	Resistor(1/16W 100Ω ± 5%)	[R307]
505	VRS-CZ1JB330J	AA		C	Resistor(1/16W 33Ω ± 5%)	[R308]
506	VRS-CZ1JB000J	AA		C	Resistor(1/16W 0Ω ± 5%)	[R309]
507	VRS-CZ1JB330J	AA		C	Resistor(1/16W 33Ω ± 5%)	[R310]
508	VRS-CZ1JB103J	AA		C	Resistor(1/16W 10KΩ ± 5%)	[R311]
509	VRS-CZ1JB103J	AA		C	Resistor(1/16W 10KΩ ± 5%)	[R312]
510	VRS-CZ1JB103J	AA		C	Resistor(1/16W 10KΩ ± 5%)	[R313]
511	VRS-CZ1JB101J	AA		C	Resistor(1/16W 100Ω ± 5%)	[R314]
512	VRS-CZ1JB473J	AA		C	Resistor(1/16W 47KΩ ± 5%)	[R315]
513	VRS-CZ1JB473J	AA		C	Resistor(1/16W 47KΩ ± 5%)	[R316]
514	VRS-CZ1JB103J	AA		C	Resistor(1/16W 10KΩ ± 5%)	[R317]
515	VRS-CZ1JB472J	AA		C	Resistor(1/16W 4.7KΩ ± 5%)	[R318]
516	VRS-CZ1JB203J	AD		C	Resistor(1/16W 20KΩ ± 5%)	[R319]
517	VRS-CZ1JB203F	AD		C	Resistor(1/16W 20KΩ ± 1%)	[R320]
518	VRS-CZ1JB000J	AA		C	Resistor(1/16W 0Ω ± 5%)	[R321]
519	VRS-CZ1JB104J	AA		C	Resistor(1/16W 100KΩ ± 5%)	[R322]
520	VRS-CZ1JB103J	AA		C	Resistor(1/16W 10KΩ ± 5%)	[R323]
521	VRS-CZ1JB472J	AA		C	Resistor(1/16W 4.7KΩ ± 5%)	[R324]
522	VRS-CZ1JB105J	AD		C	Resistor(1/16W 1MΩ ± 5%)	[R325]
523	VRS-CZ1JB512F	AE		C	Resistor(1/16W 5.1KΩ ± 1%)	[R326]
524	VRS-CZ1JB103J	AA		C	Resistor(1/16W 10KΩ ± 5%)	[R327]
525	VRS-CZ1JB104J	AA		C	Resistor(1/16W 100KΩ ± 5%)	[R328]
526	VRS-CZ1JB203F	AD		C	Resistor(1/16W 20KΩ ± 1%)	[R329]
527	VRS-CZ1JB105J	AD		C	Resistor(1/16W 1MΩ ± 5%)	[R330]
528	VRS-CZ1JB000J	AA		C	Resistor(1/16W 0Ω ± 5%)	[R331]
529	VRS-CZ1JB000J	AA		C	Resistor(1/16W 0Ω ± 5%)	[R332]
530	VRS-CZ1JB000J	AA		C	Resistor(1/16W 0Ω ± 5%)	[R333]
531	VRS-CZ1JB000J	AA		C	Resistor(1/16W 0Ω ± 5%)	[R334]
532	VRS-CZ1JB000J	AA		C	Resistor(1/16W 0Ω ± 5%)	[R335]
533	VRS-CZ1JB000J	AA		C	Resistor(1/16W 0Ω ± 5%)	[R336]
534	VRS-CZ1JB103J	AA		C	Resistor(1/16W 10KΩ ± 5%)	[R337]
535	VRS-CZ1JB102J	AA		C	Resistor(1/16W 1KΩ ± 5%)	[R338]
536	VRS-CZ1JB000J	AA		C	Resistor(1/16W 0Ω ± 5%)	[R339]
537	VRS-CZ1JB103J	AA		C	Resistor(1/16W 10KΩ ± 5%)	[R340]
538	VRS-CZ1JB103J	AA		C	Resistor(1/16W 10KΩ ± 5%)	[R341]
539	VRS-CZ1JB101J	AA		C	Resistor(1/16W 100Ω ± 5%)	[R342]
540	VRS-CZ1JB000J	AA		C	Resistor(1/16W 0Ω ± 5%)	[R343]
541	VRS-CZ1JB103J	AA		C	Resistor(1/16W 10KΩ ± 5%)	[R344]
542	VRS-CZ1JB103J	AA		C	Resistor(1/16W 10KΩ ± 5%)	[R346]
543	VRS-CZ1JB103J	AA		C	Resistor(1/16W 10KΩ ± 5%)	[R347]
544	VRS-HT3AAR22J	AA		C	Resistor(1W 0.22Ω ± 5%)	[R348]
545	VRS-CZ1JB103J	AA		C	Resistor(1/16W 10KΩ ± 5%)	[R349]
546	VRS-CZ1JB102J	AA		C	Resistor(1/16W 1KΩ ± 5%)	[R350]
547	VRS-CZ1JB302J	AD		C	Resistor(1/16W 3KΩ ± 5%)	[R351]
548	VRS-HT3AAR22J	AA		C	Resistor(1W 0.22Ω ± 5%)	[R352]
549	VRS-CZ1JB000J	AA		C	Resistor(1/16W 0Ω ± 5%)	[R354]
550	VRS-CZ1JB103J	AA		C	Resistor(1/16W 10KΩ ± 5%)	[R356]
551	VRS-CZ1JB101J	AA		C	Resistor(1/16W 100Ω ± 5%)	[R357]

NO.	PARTS CODE	PRICE RANK	NEW MARK	PART RANK	DESCRIPTION	
[9] Control PWB unit						
552	VRS-CZ1JB103J	AA		C	Resistor(1/16W 10KΩ ± 5%)	[R358]
553	VRS-CZ1JB101J	AA		C	Resistor(1/16W 100Ω ± 5%)	[R359]
554	VRS-CZ1JB103J	AA		C	Resistor(1/16W 10KΩ ± 5%)	[R360]
555	VRS-CZ1JB473J	AA		C	Resistor(1/16W 47KΩ ± 5%)	[R361]
556	VRS-CZ1JB101J	AA		C	Resistor(1/16W 100Ω ± 5%)	[R362]
557	VRS-CZ1JB000J	AA		C	Resistor(1/16W 0Ω ± 5%)	[R363]
558	VRS-CZ1JB103J	AA		C	Resistor(1/16W 10KΩ ± 5%)	[R366]
559	VRS-CZ1JB101J	AA		C	Resistor(1/16W 100Ω ± 5%)	[R367]
560	VRS-CY1JB000J	AA		C	Resistor(1/16W 0Ω ± 5%)	[R369]
561	VRS-CY1JB000J	AA		C	Resistor(1/16W 0Ω ± 5%)	[R371]
562	VRS-CZ1JB103J	AA		C	Resistor(1/16W 10KΩ ± 5%)	[R372]
563	VRS-CZ1JB101J	AA		C	Resistor(1/16W 100Ω ± 5%)	[R373]
564	VRS-CZ1JB103J	AA		C	Resistor(1/16W 10KΩ ± 5%)	[R374]
565	VRS-CZ1JB103J	AA		C	Resistor(1/16W 10KΩ ± 5%)	[R376]
566	VRS-CZ1JB103J	AA		C	Resistor(1/16W 10KΩ ± 5%)	[R377]
567	VRS-CZ1JB103J	AA		C	Resistor(1/16W 10KΩ ± 5%)	[R378]
568	VRS-CZ1JB103J	AA		C	Resistor(1/16W 10KΩ ± 5%)	[R379]
569	VRS-CZ1JB101J	AA		C	Resistor(1/16W 100Ω ± 5%)	[R380]
570	VRS-CZ1JB101J	AA		C	Resistor(1/16W 100Ω ± 5%)	[R381]
571	VRS-CZ1JB101J	AA		C	Resistor(1/16W 100Ω ± 5%)	[R382]
572	VRS-CZ1JB101J	AA		C	Resistor(1/16W 100Ω ± 5%)	[R383]
573	VRS-CZ1JB330J	AA		C	Resistor(1/16W 33Ω ± 5%)	[R384]
574	RCiLZ0285AFZZ	AB		C	Coil(MMZ1608Y102B)	[R388]
575	VRS-CZ1JB000J	AA		C	Resistor(1/16W 0Ω ± 5%)	[R392]
576	VRS-CZ1JB472J	AA		C	Resistor(1/16W 4.7KΩ ± 5%)	[R394]
577	VRS-CZ1JB271J	AA		C	Resistor(1/16W 270Ω ± 5%)	[R395]
578	VCCCCZ1EH180J	AA		C	Capacitor(25WV 18PF)	[R398]
579	VRS-CY1JB000J	AA		C	Resistor(1/16W 0Ω ± 5%)	[R401]
580	VRS-CY1JB000J	AA		C	Resistor(1/16W 0Ω ± 5%)	[R403]
581	VRS-CZ1JB104J	AA		C	Resistor(1/16W 100KΩ ± 5%)	[R404]
582	VRS-CZ1JB472J	AA		C	Resistor(1/16W 4.7KΩ ± 5%)	[R409]
583	VRS-CZ1JB271J	AA		C	Resistor(1/16W 270Ω ± 5%))	[R411]
584	VRS-CZ1JB101J	AA		C	Resistor(1/16W 100Ω ± 5%)	[R412]
585	VRS-CZ1JB472J	AA		C	Resistor(1/16W 4.7KΩ ± 5%)	[R417]
586	VRS-CZ1JB151J	AA		C	Resistor(1/16W 150Ω ± 5%)	[R421]
587	VRS-CZ1JB151J	AA		C	Resistor(1/16W 150Ω ± 5%)	[R422]
588	VRS-CZ1JB000J	AA		C	Resistor(1/16W 0Ω ± 5%)	[R427]
589	VRS-CZ1JB000J	AA		C	Resistor(1/16W 0Ω ± 5%)	[R428]
590	VRS-CZ1JB330J	AA		C	Resistor(1/16W 33Ω ± 5%)	[R429]
591	VRS-CZ1JB000J	AA		C	Resistor(1/16W 0Ω ± 5%)	[R430]
592	VRS-CZ1JB000J	AA		C	Resistor(1/16W 0Ω ± 5%)	[R431]
593	VRS-CZ1JB000J	AA		C	Resistor(1/16W 0Ω ± 5%)	[R432]
594	VRS-CZ1JB102J	AA		C	Resistor(1/16W 1KΩ ± 5%)	[R433]
595	VRS-CZ1JB102J	AA		C	Resistor(1/16W 1KΩ ± 5%)	[R436]
596	VRS-CZ1JB103J	AA		C	Resistor(1/16W 10KΩ ± 5%)	[R437]
597	VRS-CZ1JB102J	AA		C	Resistor(1/16W 1KΩ ± 5%)	[R438]
598	VRS-CZ1JB103J	AA		C	Resistor(1/16W 10KΩ ± 5%)	[R439]
599	VRS-TW2HF561F	AF		C	Resistor(1/2W 560Ω ± 1%)	[R440]
600	VRS-TW2HF561F	AF		C	Resistor(1/2W 560Ω ± 1%)	[R441]
601	VRS-CZ1JB682J	AD		C	Resistor(1/16W 6.8KΩ ± 5%)	[R444]
602	VRS-CZ1JB102J	AA		C	Resistor(1/16W 1KΩ ± 5%)	[R445]
603	VRS-CZ1JB103J	AA		C	Resistor(1/16W 10KΩ ± 5%)	[R446]
604	VRS-CZ1JB203J	AD		C	Resistor(1/16W 20KΩ ± 5%)	[R447]
605	VRS-CZ1JB203J	AD		C	Resistor(1/16W 20KΩ ± 5%)	[R448]
606	VRS-CZ1JB472J	AA		C	Resistor(1/16W 4.7KΩ ± 5%)	[R449]
607	VRS-TP2BD151J	AA		C	Resistor(1/8W 150Ω ± 5%)	[R450]
608	VRS-TP2BD151J	AA		C	Resistor(1/8W 150Ω ± 5%)	[R451]
609	VRS-CZ1JB202J	AD		C	Resistor(1/16W 2KΩ ± 5%)	[R452]
610	VRS-CZ1JB330J	AA		C	Resistor(1/16W 33Ω ± 5%)	[R453]
611	VRS-CZ1JB000J	AA		C	Resistor(1/16W 0Ω ± 5%)	[R455]
612	VRS-CZ1JB000J	AA		C	Resistor(1/16W 0Ω ± 5%)	[R458]
613	VRS-CY1JB000J	AA		C	Resistor(1/16W 0Ω ± 5%)	[R459]
614	VRS-CY1JB000J	AA		C	Resistor(1/16W 0Ω ± 5%)	[R460]
615	VRS-CZ1JB000J	AA		C	Resistor(1/16W 0Ω ± 5%)	[R463]
616	VRS-CZ1JB102J	AA		C	Resistor(1/16W 1KΩ ± 5%)	[R465]
617	RCRSB2185XHZZ	AD		B	Crystal(32.768kHz)	[X1]
618	RCRSA2212XHZZ	AK		B	Crystal(27.5549MHz)	[X2]
619	RCRSA2213XHZZ	AK		B	Crystal(24.000MHZ)	[X3]
620	RCRSA2214XHZZ	AK	N	B	Crystal(20.000MHZ)	[X5]
	(Unit)					
901	DCEKC981UXHZZ	CC	N	E	Control PWB unit(Within ROM)(DE)	
901	DCEKC086VXHZZ		N	E	Control PWB unit(Within ROM)(IT)	
901	DCEKC085VXHZZ		N	E	Control PWB unit(Within ROM)(H)	
[10] Power supply PWB unit						
1	0KYL5051AQ002	AF		C	Ferrite beads(BL02RN2)	[BEA1]
2	0KYL5051AQ002	AF		C	Ferrite beads(BL02RN2)	[BEA2]
3	0KYL5116AC002	AH		C	Ferrite beads(BLM31PG121)	[BEA102]
4	0KYW0000AQ005	AC		C	Wire(5mm)	[BEA103]
5	0KYL5051AQ002	AF		C	Ferrite beads(BL02RN2)	[BEA104]
6	0KYL5116AC002	AH		C	Ferrite beads(BLM31PG121)	[BEA105]
7	0KYC2131QS224	AK		C	Film capacitor(275WV 0.22μ F)	[C1]
8	0KYC2131QS224	AK		C	Film capacitor(275WV 0.22μ F)	[C2]
9	0KYC3126YS680	AX		C	Electrolytic capacitor(450WV 68μ F)	[C5]
10	0KYC1384QS102	AG		C	Ceramic capacitor(1000PF)	[C6]

NO.	PARTS CODE	PRICE RANK	NEW MARK	PART RANK	DESCRIPTION	
[10] Power supply PWB unit						
11	0KYC1384QS102	AG		C	Ceramic capacitor(1000PF)	[C7]
12	0KYC10B2SQ101	AF		C	Ceramic capacitor(2KWV 100PF)	[C8]
13	0KYC1102EC103	AC		C	Ceramic capacitor(50WV 0.01μ F)	[C9]
14	0KYC1102EC472	AC		C	Ceramic capacitor(50WV 4700PF)	[C10]
15	0KYC10Q1EQ101	AC		C	Ceramic capacitor(50WV 100PF)	[C11]
16	0KYC1076QQ103	AL		C	Ceramic capacitor(0.01μ F)	[C15]
17	0KYC1076QQ103	AL		C	Ceramic capacitor(0.01μ F)	[C16]
18	0KYC1384QS102	AG		C	Ceramic capacitor(1000PF)	[C17]
19	0KYC10Q2EQ104	AD		C	Ceramic capacitor(50WV 0.1μ F)	[C22]
20	0KYC30A0DQ331	AK		C	Electrolytic capacitor(35WV 330μ F)	[C101]
21	0KYC1186NC102	AG		C	Ceramic capacitor(630WV 1000PF)	[C102]
22	0KYC30A0DQ330	AG		C	Electrolytic capacitor(35WV 33μ F)	[C103]
23	0KYC10Q2EQ104	AD		C	Ceramic capacitor(50WV 0.1μ F)	[C105]
24	0KYC10A9RQ152	AH		C	Ceramic capacitor(1KWV 1500PF)	[C108]
25	0KYC30A0DQ560	AG		C	Electrolytic capacitor(35WV 56μ F)	[C151]
26	0KYC30A0BQ121	AG		C	Electrolytic capacitor(16WV 120μ F)	[C271]
27	0KYC1102EC103	AC		C	Ceramic capacitor(50WV 0.01μ F)	[C272]
28	0KYC1102EC562	AC		C	Ceramic capacitor(50WV 5600PF)	[C273]
29	0KYC1102EC103	AC		C	Ceramic capacitor(50WV 0.01μ F)	[C274]
30	0KYC30A0BQ331	AK		C	Electrolytic capacitor(16WV 330μ F)	[C301]
31	0KYC3075BQ471	AM		C	Electrolytic capacitor(16WV 470μ F)	[C302]
32	0KYC10Q2EQ104	AD		C	Ceramic capacitor(50WV 0.1μ F)	[C305]
33	0KYC1095EQ104	AD		C	Ceramic capacitor(50WV 0.1μ F)	[C501]
34	0KYC30A0BQ331	AK		C	Electrolytic capacitor(16WV 330μ F)	[C502]
35	0KYK2061AQ002	AF		C	Connector(2pin)	[CN2]
36	0KYK2148LS005	AG		C	Connector(3pin)	[CN6]
37	0KYK2051AQ002	AG		C	Connector(3pin)	[CNAC]
38	0KYK2051AQ002	AG		C	Connector(3pin)	[CNHT]
39	0KYK2148LS004	AN		C	Connector(14pin)	[CNPW]
40	0KYD4066AQ105	AF		B	Zener diode(HZS30)	[D2]
41	0KYD2051AQ002	AD		B	Diode(1SS133)	[D4]
42	0KYD4066AQ060	AF		B	Zener diode(HZS9)	[D5]
43	0KYD2051AQ002	AD		B	Diode(1SS133)	[D6]
44	0KYD2051AQ002	AD		B	Diode(1SS133)	[D7]
45	0KYW0000AQ005	AC		C	Wire(5mm)	[D8]
46	0KYD1057AQ006	AF		B	Diode(ERA15-06)	[D10]
47	0KYD1057AQ006	AF		B	Diode(ERA15-06)	[D11]
48	0KYD1057AQ006	AF		B	Diode(ERA15-06)	[D12]
49	0KYD1057AQ006	AF		B	Diode(ERA15-06)	[D13]
50	0KYD1057AQ006	AF		B	Diode(ERA15-06)	[D51]
51	0KYD1057AQ006	AF		B	Diode(ERA15-06)	[D52]
52	0KYD3155AL001	AU		B	Diode(YG861S15R)	[D101]
53	0KYD4061AQ270	AL		B	Zener diode(HZ27P)	[D104]
54	0KYD4066AQ048	AF		B	Zener diode(HZS7)	[D110]
55	0KYD2066AQ006	AH		B	Diode(ERA83-006)	[D151]
56	0KYD3134AA004	AK		B	Diode(CB833-04)	[D271]
57	0KYD4066AQ015	AE		B	Zener diode(HZS3)	[D274]
58	0KYD4061AQ5R6	AK		B	Zener diode(HZ5.6P)	[D275]
59	0KYD4066AQ078	AE		B	Zener diode(HZS12B2)	[D277]
60	0KYD4066AQ015	AE		B	Zener diode(HZS3)	[D291]
61	0KYD3134AA004	AK		B	Diode(CB833-04)	[D301]
62	0KYD1057AQ006	AF		B	Diode(ERA15-06)	[D501]
63	0KYK7135AS006	AM		A	Fuse(T6.3AH/AC250V)	[F1]
64	0KYK7144AR003	AL		A	Fuse(T2.5A/AC250V)	[F2]
65	0KYK7135AS006	AM		A	Fuse(T6.3AH/AC250V)	[F3]
66	0KYW0000AQ012	AC		C	Wire(12.5mm)	[F101]
67	0KYK7144AR005	AL		A	Fuse(T4A/AC250V)	[F102]
68	0KYK7144AR005	AL		A	Fuse(T4A/AC250V)	[F103]
69	0KY0MPS902200	AF		C	Heat sink	[HS1]
70	0KY0MPS902200	AF		C	Heat sink	[HS2]
71	0KY0MPS902100	AH		C	Heat sink	[HS3]
72	0KYH2107AR001	AQ		B	IC(TA76432S)	[IC201]
73	0KYH1050BQ5R0	AT		B	IC(μ PC7805AHF)	[IC301]
74	0KYW0000AQ012	AC		C	Wire(12.5mm)	[J2]
75	0KYW0000AQ005	AC		C	Wire(5mm)	[J4]
76	0KYW0000AQ005	AC		C	Wire(5mm)	[J101]
77	0KYW0000AQ005	AC		C	Wire(5mm)	[J102]
78	0KYW0000AQ012	AC		C	Wire(12.5mm)	[J103]
79	0KYW0000AQ005	AC		C	Wire(5mm)	[J104]
80	0KYW0000AQ010	AC		C	Wire(10mm)	[J105]
81	0KYW0000AQ012	AC		C	Wire(12.5mm)	[J106]
82	0KYW0000AQ007	AC		C	Wire(7.5mm)	[J107]
83	0KYR3121TC000	AB		C	Resistor(1/8W 0Ω)	[J108]
84	0KYR3111VC000	AB		C	Resistor(1/10W 0Ω)	[J109]
85	0KYR3121TC000	AB		C	Resistor(1/8W 0Ω)	[J110]
86	0KYR3131AC000	AC		C	Resistor(1/4W 0Ω)	[J112]
87	0KYW0000AQ005	AC		C	Wire(5mm)	[J113]
88	0KYL1179JL333	AM		C	Inductor(0R5A333F20A)	[L1]
89	0KYL1118RS400	AQ		C	Inductor(SN8SP-404JA)	[L3]
90	0KYL1105SL560	AN		C	Inductor(SBC9-560)	[L271]
91	0KYD7102AR8R0	AM		B	NTC thermistor(NTPA78R0)	[NTC1]
92	0KYH7137AS001	AL		B	Optical isolater(TLP421F)	[PC1]
93	0KYH7151AS001	AW		B	Optical isolater(TLP363JF)	[PC2]
94	0KYH7137AS001	AL		B	Optical isolater(TLP421F)	[PC3]
95	0KYT2717KL002	AY		B	FET(2SK2717)	[Q1]

NO.	PARTS CODE	PRICE RANK	NEW MARK	PART RANK	DESCRIPTION	
[10] Power supply PWB unit						
96	0KYT4097CC002	AG		B	Transistor(2SC4097)	[Q2]
97	0KYT4081CC002	AF		B	Transistor(2SC4081)	[Q101]
98	0KYT1029LC001	AU		B	FET(FDS6685)	[Q271]
99	0KYT1018NC001	AG		B	Transistor(XP4601)	[Q272]
100	0KYT4081CC002	AF		B	Transistor(2SC4081)	[Q274]
101	0KYT1576AC002	AF		B	Transistor(2SA1576A)	[Q291]
102	0KYT4081CC002	AF		B	Transistor(2SC4081)	[Q292]
103	0KYT1576AC002	AF		B	Transistor(2SA1576A)	[Q301]
104	0KYT4081CC002	AF		B	Transistor(2SC4081)	[Q501]
105	0KYR1066BQ475	AE		C	Resistor(1/2W 4.7MΩ)	[R1]
106	0KYR3126TC274	AC		C	Resistor(1/8W 270KΩ)	[R2]
107	0KYR3126TC274	AC		C	Resistor(1/8W 270KΩ)	[R3]
108	0KYR3126TC274	AC		C	Resistor(1/8W 270KΩ)	[R4]
109	0KYR3114VC153	AC		C	Resistor(1/10W 15KΩ)	[R5]
110	0KYR3120TC102	AC		C	Resistor(1/8W 1KΩ)	[R6]
111	0KYR3121TC221	AB		C	Resistor(1/8W 220Ω)	[R7]
112	0KYR3111VC333	AB		C	Resistor(1/10W 33KΩ)	[R8]
113	0KYR3111VC101	AB		C	Resistor(1/10W 100Ω)	[R9]
114	0KYR3111VC682	AB		C	Resistor(1/10W 6.8KΩ)	[R10]
115	0KYR3114VC822	AC		C	Resistor(1/10W 8.2KΩ)	[R11]
116	0KYR3111VC223	AB		C	Resistor(1/10W 22KΩ)	[R12]
117	0KYR3111VC122	AC		C	Resistor(1/10W 1.2KΩ)	[R13]
118	0KYR3111VC681	AB		C	Resistor(1/10W 680Ω)	[R17]
119	0KYR3131AC100	AB		C	Resistor(1/4W 10Ω)	[R19]
120	0KYR3062UQ100	AL		C	Resistor(1/6W 10Ω)	[R20]
121	0KYR3121TC220	AC		C	Resistor(1/8W 22Ω)	[R21]
122	0KYR3121TC151	AC		C	Resistor(1/8W 150Ω)	[R23]
123	0KYR1053UQ563	AC		C	Resistor(1/4W 56KΩ)	[R51]
124	0KYR3121TC563	AC		C	Resistor(1/8W 56KΩ)	[R52]
125	0KYR3121TC563	AC		C	Resistor(1/8W 56KΩ)	[R53]
126	0KYR3121TC563	AC		C	Resistor(1/8W 56KΩ)	[R54]
127	0KYR3114VC102	AC		C	Resistor(1/10W 1KΩ)	[R101]
128	0KYR3120TC101	AC		C	Resistor(1/8W 100Ω)	[R102]
129	0KYR3113VC334	AC		C	Resistor(1/10W 330KΩ)	[R103]
130	0KYR3120TC153	AB		C	Resistor(1/8W 15KΩ)	[R105]
131	0KYR3120TC752	AB		C	Resistor(1/8W 7.5KΩ)	[R106]
132	0KYR3111VC103	AB		C	Resistor(1/10W 10KΩ)	[R250]
133	0KYR3111VC152	AC		C	Resistor(1/10W 1.5KΩ)	[R274]
134	0KYR3114VC752	AC		C	Resistor(1/10W 7.5KΩ)	[R275]
135	0KYR3121TC102	AB		C	Resistor(1/8W 1KΩ)	[R276]
136	0KYR3114VC681	AC		C	Resistor(1/10W 680Ω)	[R277]
137	0KYR3114VC332	AC		C	Resistor(1/10W 3.3KΩ)	[R278]
138	0KYR3111VC332	AC		C	Resistor(1/10W 3.3KΩ)	[R279]
139	0KYR3111VC102	AB		C	Resistor(1/10W 1KΩ)	[R280]
140	0KYR3111VC103	AB		C	Resistor(1/10W 10KΩ)	[R281]
141	0KYR3111VC103	AB		C	Resistor(1/10W 10KΩ)	[R282]
142	0KYR3114VC302	AC		C	Resistor(1/10W 3KΩ)	[R291]
143	0KYR3114VC562	AC		C	Resistor(1/10W 5.6KΩ)	[R292]
144	0KYR3111VC153	AC		C	Resistor(1/10W 15KΩ)	[R293]
145	0KYR3111VC272	AC		C	Resistor(1/10W 2.7KΩ)	[R294]
146	0KYR3111VC332	AC		C	Resistor(1/10W 3.3KΩ)	[R295]
147	0KYR3113VC274	AC		C	Resistor(1/10W 270KΩ)	[R301]
148	0KYR3113VC184	AC		C	Resistor(1/10W 180KΩ)	[R302]
149	0KYR3111VC103	AB		C	Resistor(1/10W 10KΩ)	[R303]
150	0KYR3114VC472	AC		C	Resistor(1/10W 4.7KΩ)	[R306]
151	0KYR3131AC472	AC		C	Resistor(1/4W 4.7KΩ)	[R501]
152	0KYR3131AC472	AC		C	Resistor(1/4W 4.7KΩ)	[R502]
153	0KYR3131AC472	AC		C	Resistor(1/4W 4.7KΩ)	[R503]
154	0KYR3131AC472	AC		C	Resistor(1/4W 4.7KΩ)	[R504]
155	0KYR1053UQ103	AC		C	Resistor(1/4W 10KΩ)	[R505]
156	0KYR3111VC103	AB		C	Resistor(1/10W 10KΩ)	[R507]
157	0KYR1053UQ473	AC		C	Resistor(1/4W 47KΩ)	[R508]
158	0KYR3111VC473	AC		C	Resistor(1/10W 47KΩ)	[R509]
159	0KYK3104AL001	AU		B	Relay(G5PA-1)	[RL1]
160	0KYL2100DS083	BA		B	Transformer(83D1)	[T1]
161	0KYD5013AQ612	AV		B	Triac(SM12JZ47)	[TRA1]
162	0KYR8054EQ502	AG		C	Variable resistor(1/10W 5KΩ)	[VR101]
163	0KYD7062AQ471	AH		B	Transient voltage surge suppressor(ENC471D-07A)	[Z1]
164	0KYM1108AZ001	AE		C	Screw with washer(3x7)	[SR1]
165	0KYM1108AZ001	AE		C	Screw with washer(3x7)	[SR2]
166	0KYM1108AZ001	AE		C	Screw with washer(3x7)	[SR3]
167	0KYM1108AZ001	AE		C	Screw with washer(3x7)	[SR4]
	(Unit)					
⚠ 901	RDENT2215XHZZ	BQ		E	Power supply PWB unit	
[11] High voltage PWB unit						
⚠ 901	RDENT2206XHZZ	BK		E	High voltage PWB unit	
[12] Operation panel PWB unit						
1	QSW-K0005AWZZ	AC		C	Tact switch	[SW]
	(Unit)					
901	DCEKP304DXH03	BD	N	E	Operation panel PWB unit	

■INDEX

PARTS CODE	No.	PRICE RANK	NEW MARK	PART RANK
【 C 】				
CCNWN346CXH01	2-25	AP		C
CFRM-2265XH02	5-901			E
CROLR2528XH51	1-24			C
【 D 】				
DCEKC085VXHZZ	1-1		N	E
〃	9-901		N	E
DCEKC086VXHZZ	1-1		N	E
〃	9-901		N	E
DCEKC981UXHZZ	1-1	CC	N	E
〃	9-901	CC	N	E
DCEKP304DXH03	2-1	BD	N	E
〃	12-901	BD	N	E
DUNT-291DXH07	8-4		N	S
DUNT-291DXH12	8-4		N	S
DUNT-291DXH13	8-4		N	S
DUNT-292DXH05	8-5		N	S
DUNT-292DXH12	8-5		N	S
DUNT-292DXH13	8-5		N	S
DUNTK273DXHZZ	1-25	BV		E
【 G 】				
GCABA2451XHSA	2-4	BB		C
GCABB2450XHSA	1-29	BR		D
GCABB2452XHSA	2-26	BF		C
GCOVA2510XHSA	1-3	BA		C
GCOVA2511XHSA	3-25	AS		C
GCOVA2512XHZZ	2-5	AH		C
GCOVA2513XHSA	1-61	AY		C
GCOVA2514XHSA	1-100	BA		C
GCOVA2515XHSA	1-88	AU		C
GLEGG2089XHZZ	1-30	AE		C
【 H 】				
HPNLH2450XHSE	2-54	AP	N	D
HPNLH2450XHSH	2-54		N	D
HPNLH2450XHSJ	2-54		N	D
【 J 】				
JBTN-2483XHSA	2-6	AF		C
JBTN-2484XHSB	2-7	AL	N	C
JBTN-2486XHSB	2-8		N	C
JBTN-2487XHSA	2-9	AK		C
JBTN-2489XHSA	2-10	AE		C
【 L 】				
LANGF2869XHZZ	1-62	AN		C
LANGF2870XHZZ	1-89	AG		C
LANGJ2847XHZZ	1-101	AG		C
LBNDJ2006XHZZ	1-90	AA		C
〃	5-43	AA		C
LBSHP2113XHZA	1-31	AE		C
LBSHP2113XHZZ	2-52	AH		C
LBSHP2135XHZZ	3-10	AC		C
LBSHP2136XHZZ	2-53	AC		C
〃	3-11	AC		C
LBSHP2161XHZZ	1-33	AE		C
LBSHP2162XHZZ	5-5	AE		C
LBSHP2167XHZZ	5-6	AK		C
LBSHP2168XHZZ	5-7	AE		C
LFRM-2262XHZZ	7-1	AN		C
LFRM-2263XHZZ	6-1	AW		C
LFRM-2264XHZZ	1-63	AT		C
LFRM-2265XHZZ	5-8	AU		C
LFRM-2266XHZZ	5-9	AV		C
LHLDW2310XHZZ	1-102	AE		C
LHLDZ2295XHZZ	1-64	AE		C
LHLDZ2296XHZZ	1-65	AE		C
LHLDZ2297XHZZ	5-1	AE		C
LHLDZ2299XHZZ	2-41	AH		C
LHLDZ2300XHZZ	2-42	AG		C
LPLTG3307XHZZ	3-1	AF		C
LPLTG3386XHZZ	1-20	AL		C
LPLTG3388XHZZ	1-22	AG		C
LPLTM0163GCZZ	1-66	AE		C
LPLTM3387XHZZ	2-55	AF		C
LPLTP2790XHZZ	3-2	AD		C
LPLTP3335XHSA	1-4	AF		C
LPLTP3336XHSA	1-5	AF		C
LPLTP3338XHZZ	2-27	AW		C
LPLTP3339XHZZ	2-28	AE		C
LPLTP3340XHZZ	7-2	AK		C
LPLTP3342XHZZ	1-16	AE		C

PARTS CODE	No.	PRICE RANK	NEW MARK	PART RANK
LPLTP3343XHZZ	6-2	AV		C
LPLTP3344XHSA	8-2	AY		C
LPLTP3345XHSA	8-3	AK		C
LPLTP3346XHZZ	1-91	AZ		C
LPLTP3348XHZZ	5-10	AG		C
LPLTP3349XHZZ	1-21	AU		C
LPLTP3363XHZZ	3-12	AH		C
LPLTP3376XHZZ	5-11	AK		C
LSTPP2063XHZZ	3-26	AE		C
LX-BZ0956XHZ7	5-B1	AE		C
LX-BZ2138XHZ7	5-B2	AD		C
LX-BZ2205XHZ7	1-B2	AE		C
LX-BZ2222XHZ7	5-B3	AD		C
LX-BZ2241XHZ7	6-B1	AD		C
LX-BZ2282XHZ7	1-B12	AE		C
LX-BZ2314XHZ7	6-B2	AD		C
LX-BZ2321XHZ7	1-B7	AE		C
LX-BZ2323XHZ7	2-B7	AE		C
【 M 】				
MARMP2025XHZZ	3-3	AF		C
MLEVP2402XHSA	3-27	AG		C
MLEVP2403XHSA	2-29	AG		C
MLEVP2404XHZZ	2-30	AG		C
MLEVP2405XHZZ	7-3	AE		C
MLEVP2406XHZZ	7-4	AE		C
MLEVP2409XHZB	6-36		N	C
MLEVP2409XHZZ	6-3	AE		C
MLEVP2410XHSA	1-67	AK		C
MLEVP2411XHZZ	5-12	AF		C
MLEVP2412XHZZ	5-13	AF		C
MLEVP2413XHZZ	5-14	AF		C
MSPRC2568XHZZ	2-11	AE		C
MSPRC2735XHZZ	6-4	AC		C
〃	7-5	AC		C
MSPRC3301XHZZ	1-9	AB		C
〃	1-39	AB		C
MSPRC3505XHZZ	1-17	AD		C
MSPRC3506XHZZ	1-18	AF		C
MSPRC3519XHZZ	6-5	AE		C
MSPRC3522XHZZ	1-68	AD		C
MSPRC3525XHZZ	1-69	AE		C
MSPRC3527XHZZ	1-70	AD		C
MSPRC3528XHZZ	5-15	AE		C
MSPRC3530XHZZ	5-16	AD		C
MSPRC3531XHZZ	5-17	AE		C
MSPRC3542XHZZ	2-31	AD		C
MSPRC3547XHZZ	6-6	AE		C
MSPRC3567XHZZ	3-24	AE		C
MSPRC3572XHZZ	2-43	AE		C
MSPRC3576XHZZ	1-71	AE		C
MSPRC3589XHZZ	3-13	AD		C
MSPRC3590XHZZ	1-40	AE		C
MSPRC3595XHZZ	5-18	AE		C
MSPRD3523XHZZ	1-72	AE		C
MSPRD3529XHZZ	5-19	AE		C
MSPRD3543XHZZ	2-32	AE		C
MSPRD3545XHZZ	1-41	AE		C
MSPRD3548XHZZ	1-73	AE		C
MSPRD3550XHZZ	5-20	AE		C
MSPRD3560XHZZ	2-33	AE		C
MSPRD3564XHZZ	3-4	AE		C
MSPRD3566XHZZ	3-14	AE		C
MSPRD3569XHZZ	2-49	AE		C
MSPRD3570XHZZ	2-34	AE		C
MSPRD3574XHZZ	4-1	AE		C
MSPRD3575XHZZ	4-2	AE		C
MSPRK3549XHZZ	5-21	AF		C
MSPRK3590XHZZ	5-22	AE		C
MSPRP3514XHZZ	6-7	AG		C
MSPRP3515XHZZ	6-8	AG		C
MSPRP3516XHZZ	6-9	AG		C
MSPRP3517XHZZ	6-10	AG		C
MSPRP3518XHZZ	6-11	AH		C
MSPRP3524XHZZ	1-74	AE		C
MSPRP3534XHZZ	1-75	AF		C
MSPRP3535XHZZ	5-23	AE		C
MSPRP3591XHZZ	1-42	AE		C
MSPRT3507XHZZ	1-43	AE		C
MSPRT3563XHZZ	3-5	AD		C
MSPRT3565XHZZ	3-28	AD		C

PARTS CODE	No.	PRICE RANK	NEW MARK	PART RANK
MSPRT3571XHZZ	7-6	AD		C
MSPRT3594XHZZ	5-24	AE		C
【 N 】				
NBLTK2067XHZZ	7-7	AS		C
NFANP2005XHZZ	6-12	AY		B
NGERH2278XHZZ	7-8	AC		C
NGERH2458XHZZ	6-13	AB		C
NGERH2466XHZZ	4-3	AE		C
NGERH2480XHZZ	6-14	AB		C
NGERH2517XHZZ	7-9	AE		C
NGERH2541XHZZ	7-10	AE		C
NGERH2542XHZZ	3-15	AE		C
NGERH2543XHZZ	2-51	AC		C
NGERH2547XHZZ	3-16	AE		C
NGERH2573XHZZ	7-11	AD		C
NGERH2576XHZA	5-25	AF		C
NGERH2576XHZB	6-16	AF		C
NGERH2577XHZZ	6-17	AD		C
NGERH2581XHZZ	6-18	AC		C
NGERH2582XHZA	5-26	AY		C
NGERH2602XHZZ	4-4	AH		C
NGERH2603XHZZ	4-5	AE		C
NGERH2621XHZZ	6-20	AF		C
NGERH2655XHZZ	7-12	AE		C
NGERH2656XHZZ	7-13	AE		C
NGERH2657XHZZ	3-17	AE		C
〃	7-14	AE		C
NGERH2658XHZZ	7-15	AE		C
NGERH2661XHZZ	1-45	AE		C
NGERH2662XHZZ	4-6	AE		C
NGERH2663XHZZ	6-21	AE		C
NGERH2664XHZZ	6-22	AE		C
NGERH2667XHZZ	6-25	AE		C
NGERH2670XHZZ	6-26	AE		C
NGERH2671XHZZ	6-27	AE		C
NGERH2673XHZZ	6-28	AE		C
NGERH2677XHZZ	1-76	AE		C
NGERH2678XHZZ	5-27	AF		C
NGERH2679XHZZ	5-28	AE		C
NGERH2680XHZZ	5-29	AE		C
NGERH2693XHZZ	7-16	AE		C
NGERH2697XHZZ	6-23	AG		C
NGERH2698XHZZ	6-24	AG		C
NGERH2699XHZZ	6-19	AL		C
NGERH2700XHZZ	6-15	AF		C
NGERP2318XHZZ	1-10	AD		C
〃	1-46	AD		C
NPLYD2088XHZZ	2-35	AC		C
NPLYD2099XHZZ	7-17	AE		C
NROLP2332XHZA	4-7	AL		C
NROLP2334XHZA	1-77	AC		C
〃	2-12	AC		C
〃	3-18	AC		C
NROLP2420XHZZ	4-8	AM		C
NROLP2530XHZZ	1-78	BD		C
NROLP2536XHZZ	5-30	BD		C
NROLR2333XHZZ	3-29	AP		C
NROLR2525XHZZ	3-19	AQ		C
NROLR2526XHZZ	2-50	AS		C
NROLR2527XHZZ	1-47	AQ		C
NROLR2539XHZZ	5-31	BD		C
NSFTP2393XHZZ	1-6	AF		C
NSFTP2394XHZZ	3-30	AF		C
NSFTP2400XHZZ	4-9	AS		C
NSFTP2401XHZZ	6-29	AE		C
NSFTZ2396XHZZ	2-36	AG		C
NSFTZ2397XHZZ	2-37	AS		C
NSFTZ2402XHZZ	1-79	AK		C
NSFTZ2406XHZZ	3-20	AH		C
NSFTZ2407XHZZ	2-13	AH		C
【 P 】				
PBRS-2074XHZZ	1-11	AG		C
PBRS-2075XHZZ	1-80	AE		C
PBRS-2076XHZZ	1-108	AF		C
PCUSS2226XHZZ	1-7	AE		C
PGiDM2677XHSA	1-49	AG		C
PGiDM2678XHZZ	1-92	AE		C
PGiDM2679XHSA	1-12	AF		C
PGiDM2680XHSA	1-13	AF		C
PGiDM2681XHSA	3-6	AN		C
PGiDM2682XHSA	3-21	AN		C
PGiDM2683XHSA	3-31	AQ		C

PARTS CODE	No.	PRICE RANK	NEW MARK	PART RANK
PGiDM2687XHZZ	1-50	AE		C
PGiDM2688XHZZ	1-51	AE		C
PGiDM2689XHZZ	1-19	AW		C
PGiDM2690XHSA	1-112		N	C
PGiDM2691XHSA	1-113		N	C
PGiDM2692XHSA	1-82	AQ		C
PGiDM2694XHSA	1-52	AE		C
PGiDM2695XHSA	1-53	AE		C
PGiDM2696XHZZ	4-10	AE		C
PGiDM2697XHZZ	4-11	AU		C
PGiDM2698XHZZ	4-12	AS		C
PGiDM2699XHZZ	1-81	AH		C
PGiDM2700XHZZ	1-93	AE		C
PGiDM2702XHZZ	5-32	AE		C
PGiDM2703XHZZ	3-22	AK		C
PGiDM2704XHZZ	2-44	AE		C
PGiDM2705XHZZ	2-45	AE		C
PGLSP2064XHZZ	2-14	AY		C
PGLSP2065XHZZ	2-15	AQ		C
PHOP-2120XHSA	1-14	AQ		C
PHOP-2121XHSA	8-1	AV		C
PSEL-2043XHZZ	2-24	AE		C
PSHEP3853XHZZ	5-2	AG		C
PSHEP3879XHZZ	1-105	AE		C
PSHEP3883XHZZ	1-107	AG		C
PSHEZ3843XHZZ	3-23	AF		C
PSHEZ3854XHZZ	2-16	AH		C
PSHEZ3855XHZZ	1-8	AY		C
PSHEZ3864XHZZ	5-33	AG		C
PSHEZ3866XHZZ	2-17	AE		C
PSHEZ3875XHZZ	1-103	AG	N	C
PSHEZ3880XHZZ	8-27	AN		D
PSHEZ3884XHZZ	2-56	AE		C
PSHEZ3885XHZZ	8-30			C
PSHEZ3886XHZZ	3-32			C
PSPAP2290XHZZ	2-57		N	C
PSPO-2001XHZZ	1-23	AD		C
PSPO-2013XHZZ	1-54	AE		C
PSPO-2024XHZZ	5-3	AG		C
PTME-2081XHZZ	5-34	AF		C
PTPEZ2116XHZZ	2-18	AE		C
PTPEZ2117XHZZ	2-19	AE		C
PTPEZ2118XHZZ	2-20	AE		C
PTPEZ2127XHZZ	2-38	AC		C
【 Q 】				
QACCB2080XHZZ	1-94	BA		B
QACCE2082XHZZ	1-94	AX		B
QCNCM2401SC0B	9-216	AA		C
〃	9-222	AA		C
〃	9-225	AA		C
QCNCM2442SC0B	9-213	AB		C
〃	9-221	AB		C
QCNCM2666XH0B	9-229	AD		C
〃	9-232	AD		C
QCNCM2666XH0D	9-233	AD		C
QCNCM2666XH0E	9-223	AE		C
QCNCM2694XH0B	9-217	AE		C
QCNCM2694XH0C	9-215	AE		C
QCNCM2694XH0E	9-218	AE		C
QCNCM2694XH0F	9-227	AE		C
QCNCM2694XH1D	9-228	AE		C
QCNCM2710XHZZ	9-235	AK		C
QCNCM7014SC0B	9-230	AD		C
〃	9-234	AD		C
QCNCM7014SC0C	9-226	AA		C
QCNCM7014SC0D	9-220	AB		C
〃	9-231	AB		C
QCNCM7014SC0H	9-219	AB		C
QCNCW2556SC1B	9-214	AG		C
QCNCW2556SC1F	9-224	AG		C
QCNWN245CXHZZ	2-21	AL		C
QCNWN246CXHZZ	1-26	AL		C
QCNWN247CXHZZ	1-27	AL		C
QCNWN248CXHZZ	2-46	AN		C
QCNWN249CXHZZ	2-22	AG		C
QCNWN254CXHZZ	2-39	AG		C
QCNWN255CXHZZ	3-7	AG		C
QCNWN256CXHZZ	1-83	AG		C
QCNWN259CXHZZ	1-55	AG		C
QCNWN260CXHZZ	3-8	AG		C
QCNWN261CXHZZ	1-95	AG		C
QCNWN262CXHZZ	5-35	AG		C

PARTS CODE	No.	PRICE RANK	NEW MARK	PART RANK
QCNWN264CXHZZ	4-13	AG		C
QCNWN266CXHZZ	5-36	AK		C
QCNWN267CXHZZ	1-84	AN		C
QCNWN278CXHZZ	1-56	AG		C
QCNWN297CXHZZ	6-30	AH		C
QCNWN315CXHZZ	1-57	AG		C
QCNWN316CXHZZ	1-28	AG		C
QCNWN317CXHZZ	6-31	AE		C
QCNWN390CXHZZ	1-109	AN		C
QFS-L0004QCZZ	9-244	AE		A
QFS-L1027YCZZ	9-242	AE		A
QFS-L2016XHZZ	9-246	AD		A
QFS-L2021XHZZ	9-243	AE		A
QFS-L2025XHZZ	9-245	AE		A
QFS-T2019XHZZ	5-37	AQ		A
QFS-T2020XHZZ	5-4	AT		A
QSW-F2224SCZZ	6-32	AE		C
QSW-K0005AWZZ	2-3	AC		C
〃	12-1	AC		C
QSW-M2221XHZA	1-58	AL		C
〃	1-85	AL		C
QSW-M2296XHZZ	1-59	AD		C
QSW-M2324XHZZ	2-40	AN		C
QSW-M2342XHZZ	6-33	AV		C
QSW-M2343XHZZ	1-86	AN		C
QSW-Z2237XHZB	2-23	AL		C
〃	4-14	AL		C
QSW-Z2250XHZA	3-9	AL		C
【 R 】				
RCiLF2195XHZZ	9-274			C
RCiLZ0285AFZZ	9-349	AB		C
〃	9-574	AB		C
RCiLZ2193XHZZ	9-275	AE		C
〃	9-318	AE		C
〃	9-319	AE		C
〃	9-321	AE		C
〃	9-322	AE		C
〃	9-323	AE		C
〃	9-324	AE		C
〃	9-483	AE		C
RCÖRF2146XHZZ	1-96	AG		B
RCÖRF2147XHZZ	1-111	AG		B
RCÖRF2152SCZZ	2-48	AL		B
RCÖRF2154XHZZ	1-97	AG		B
RCRSA2212XHZZ	9-618	AK		B
RCRSA2213XHZZ	9-619	AK		B
RCRSA2214XHZZ	9-620	AK	N	B
RCRSB2185XHZZ	9-617	AD		B
RDENT2206XHZZ	1-98	BK		E
〃	11-901	BK		E
RDENT2215XHZZ	1-99	BQ		E
〃	10-901	BQ		E
RDTCT2001XHZZ	5-38	AV		B
RH-iX2411XHZZ	9-254	AG		B
〃	9-256	AG		B
RH-iX2425XHZZ	9-247	BS		B
RH-iX2446XHZZ	9-249	BK		B
RH-iX2447XHZZ	9-272	AX		B
RH-iX2448XHZZ	9-252	AL		B
RH-iX2450XHZZ	9-264	AG		B
〃	9-271	AG		B
RH-iX2451XHZZ	9-257	AH		B
RH-iX2452XHZZ	9-263	AG		B
RH-iX2453XHZZ	9-262	AG		B
〃	9-267	AG		B
RH-iX2454XHZZ	9-261	AG		B
RH-iX2455XHZZ	9-268	AG		B
RH-iX2456XHZZ	9-266	AG		B
RH-iX2457XHZZ	9-265	AG		B
RH-iX2459XHZZ	9-248	AG		B
RH-iX2461XHZZ	9-260	AH		B
RH-iX2462XHZZ	9-255	AZ		B
RH-iX2493XHZZ	9-273	AH		B
RH-iX2494XHZZ	9-253	AH		B
RLMPU2016XHZZ	5-39	BE		B
RMÖTS2199XHZZ	6-34	BC		B
RMÖTS2202XHZZ	6-35	AY		B
RMÖTZ2201XHZZ	7-18	AW		B
RUiTZ2001XHZZ	2-2	AZ		E
RUiTZ2006XHZZ	2-47	BT		B
【 S 】				
SPAKA279GXHZZ	8-7	AQ		D
SPAKA280GXHZZ	8-8	AS		D
SPAKA281GXHZZ	8-9	AQ		D
SPAKA282GXHZZ	8-10	AQ		D
SPAKA286GXHZZ	8-11	AG		D
SPAKA356GXHZZ	8-14	AG		D
SPAKA357GXHZZ	8-15	AG		D
SPAKA373GXHZZ	8-16	AD		D
SPAKA374GXHZZ	8-17	AD		D
SPAKA386GXHZZ	8-26	AE		D
SPAKA428GXHZZ	8-13	AE		D
SPAKA429GXHZZ	8-12	AE		D
SPAKC378GXHTZ	8-18		N	D
SPAKP285GXHZZ	8-19	AK		D
【 T 】				
TCADH3785XHZZ	8-22	AG		D
TCADH3786XHZZ	8-22	AG		D
TCADH3796XHZZ	8-22			D
〃	8-34		N	D
TCADH3797XHZZ	8-35		N	D
TCADZ3791XHZZ	8-21		N	D
TCADZ3805XHZZ	8-21		N	D
TCADZ3806XHZZ	8-21		N	D
TCAUH2041XHZZ	5-40	AG		D
TCAUZ2044XHZZ	1-87	AK		D
TCAUZ2046XHZZ	1-106	AK		D
TGANE2344XHZZ	8-23		N	D
TGANG2345XHZZ	8-23			D
TLABH3335XHZZ	1-114	AF		D
TLABH351JXHZZ	5-41	AD		D
TLABH362JXHZZ	1-110			D
TLABH363JXHZZ	8-32			D
TLABH409JXHZZ	1-110		N	D
TLABH411JXHZZ	8-32			D
TLABM224JXHZZ	1-60	AE		D
【 U 】				
UDSKA2053XHZA	8-25		N	D
UDSKA2053XHZZ	8-25	BB	N	D
【 V 】				
VCCCCZ1EH100D	9-155	AA		C
〃	9-157	AA		C
〃	9-164	AA		C
〃	9-203	AA		C
VCCCCZ1EH101J	9-96	AA		C
〃	9-97	AA		C
〃	9-98	AA		C
〃	9-99	AA		C
〃	9-154	AA		C
〃	9-162	AA		C
VCCCCZ1EH150J	9-142	AC		C
〃	9-143	AC		C
VCCCCZ1EH180J	9-18	AA		C
〃	9-19	AA		C
〃	9-21	AA		C
〃	9-22	AA		C
〃	9-578	AA		C
VCCCCZ1EH270J	9-29	AA		C
VCCCCZ1EH271J	9-86	AA		C
〃	9-87	AA		C
〃	9-88	AA		C
〃	9-89	AA		C
〃	9-90	AA		C
〃	9-91	AA		C
〃	9-92	AA		C
〃	9-94	AA		C
〃	9-95	AA		C
VCCCCZ1EH330J	9-31	AC		C
〃	9-153	AC		C
〃	9-156	AC		C
〃	9-158	AC		C
〃	9-170	AC		C
〃	9-171	AC		C
〃	9-204	AC		C
VCEAEA1CW106M	9-25	AC		C
〃	9-30	AC		C
〃	9-34	AC		C
〃	9-36	AC		C
〃	9-151	AC		C
〃	9-167	AC		C
〃	9-198	AC		C
VCEAEA1CW107M	9-60	AC		C
VCEAEA1EW475M	9-127	AA		C
VCEAEA1HW105M	9-128	AC		C

PARTS CODE	No.	PRICE RANK	NEW MARK	PART RANK
VCEAGA1CW476M	9-83	AB		C
〃	9-126	AB		C
〃	9-186	AB		C
〃	9-189	AB		C
〃	9-201	AB		C
VCEAGA1EW227M	9-199	AB		C
VCEAGA1HW107M	9-109	AA		C
〃	9-174	AA		C
VCEAGA1HW226M	9-130	AB		C
VCEAGA1HW476M	9-183	AB		C
VCKYCY1AB225K	9-59	AB		C
VCKYCY1AF105Z	9-76	AC		C
〃	9-84	AC		C
〃	9-85	AC		C
VCKYCY1CF224Z	9-180	AB		C
VCKYCY1HB103K	9-176	AA		C
〃	9-177	AA		C
〃	9-178	AA		C
〃	9-179	AA		C
VCKYCY1HB472K	9-105	AA		C
〃	9-106	AA		C
〃	9-107	AA		C
〃	9-108	AA		C
VCKYCY1HF104Z	9-147	AA		C
〃	9-168	AA		C
〃	9-169	AA		C
〃	9-173	AA		C
〃	9-181	AA		C
〃	9-182	AA		C
〃	9-184	AA		C
〃	9-197	AA		C
〃	9-208	AA		C
〃	9-209	AA		C
〃	9-211	AA		C
VCKYCZ0JB105K	9-207	AB		C
VCKYCZ0JF105Z	9-40	AC		C
〃	9-41	AC		C
〃	9-42	AC		C
〃	9-43	AC		C
〃	9-44	AC		C
〃	9-45	AC		C
〃	9-46	AC		C
〃	9-47	AC		C
〃	9-48	AC		C
〃	9-49	AC		C
〃	9-50	AC		C
〃	9-51	AC		C
〃	9-52	AC		C
〃	9-53	AC		C
〃	9-54	AC		C
〃	9-55	AC		C
〃	9-56	AC		C
〃	9-57	AC		C
〃	9-61	AC		C
〃	9-62	AC		C
〃	9-63	AC		C
〃	9-64	AC		C
〃	9-65	AC		C
〃	9-66	AC		C
〃	9-67	AC		C
〃	9-68	AC		C
〃	9-69	AC		C
〃	9-70	AC		C
〃	9-71	AC		C
〃	9-72	AC		C
〃	9-73	AC		C
〃	9-74	AC		C
〃	9-75	AC		C
〃	9-111	AC		C
VCKYCZ1AB104K	9-117	AC		C
〃	9-118	AC		C
VCKYCZ1CB103K	9-17	AA		C
〃	9-23	AA		C
〃	9-32	AA		C
〃	9-58	AA		C
〃	9-133	AA		C
VCKYCZ1CF104Z	9-16	AB		C
〃	9-20	AB		C
〃	9-24	AB		C
〃	9-26	AB		C
〃	9-27	AB		C
〃	9-28	AB		C

PARTS CODE	No.	PRICE RANK	NEW MARK	PART RANK
〃	9-33	AB		C
〃	9-35	AB		C
〃	9-37	AB		C
〃	9-38	AB		C
〃	9-39	AB		C
〃	9-77	AB		C
〃	9-78	AB		C
〃	9-80	AB		C
〃	9-81	AB		C
〃	9-82	AB		C
〃	9-93	AB		C
〃	9-100	AB		C
〃	9-103	AB		C
〃	9-112	AB		C
〃	9-114	AB		C
〃	9-115	AB		C
〃	9-116	AB		C
〃	9-119	AB		C
〃	9-120	AB		C
〃	9-121	AB		C
〃	9-122	AB		C
〃	9-123	AB		C
〃	9-124	AB		C
〃	9-125	AB		C
〃	9-131	AB		C
〃	9-132	AB		C
〃	9-135	AB		C
〃	9-144	AB		C
〃	9-145	AB		C
〃	9-146	AB		C
〃	9-148	AB		C
〃	9-149	AB		C
〃	9-150	AB		C
〃	9-152	AB		C
〃	9-159	AB		C
〃	9-160	AB		C
〃	9-161	AB		C
〃	9-163	AB		C
〃	9-165	AB		C
〃	9-166	AB		C
〃	9-172	AB		C
〃	9-175	AB		C
〃	9-187	AB		C
〃	9-190	AB		C
〃	9-200	AB		C
〃	9-202	AB		C
〃	9-205	AB		C
〃	9-206	AB		C
〃	9-210	AB		C
VCKYCZ1EB102K	9-79	AA		C
〃	9-101	AA		C
〃	9-104	AA		C
〃	9-110	AA		C
〃	9-129	AA		C
〃	9-134	AA		C
〃	9-136	AA		C
〃	9-137	AA		C
〃	9-185	AA		C
〃	9-188	AA		C
〃	9-191	AA		C
〃	9-192	AA		C
〃	9-193	AA		C
〃	9-194	AA		C
〃	9-195	AA		C
〃	9-196	AA		C
VCKYCZ1EB222K	9-140	AB		C
〃	9-141	AB		C
VCKYCZ1EB471K	9-138	AD		C
〃	9-139	AD		C
VCKYCZ1EB472K	9-102	AA		C
VCKYCZ1HB331K	9-113	AA		C
VCKYTQ1CF474Z	9-212	AB		C
VHD1SS355//-1	9-236	AB		B
〃	9-238	AB		B
〃	9-241	AB		B
VHDMC2850T1-1	9-237	AE		B
VHE1N4748A/-1	9-239	AC		B
VHEUDZS6R2B-1	9-240	AE		B
VHiBA10393F-1	9-269	AC		B
VHiF001/TE53E	9-259	BL		B
VHiF016/TE18B	9-251		N	E
VHiF016/TE23A	9-251		N	E

PARTS CODE	No.	PRICE RANK	NEW MARK	PART RANK
VHiF016/TE25A	9-251		N	E
VHiNJM2113M-1	9-258	AG		B
VHiPST596CMT1	9-250	AF		B
VHiULN2003AN/	9-270	AE		B
VHPSG2482A+-1	5-42	AN		B
VRS-CG1JF221J	9-14	AC		C
〃	9-15	AC		C
VRS-CG1JF271J	9-8			C
〃	9-9			C
VRS-CG1JF330J	9-1	AC		C
〃	9-2	AC		C
〃	9-3	AC		C
〃	9-4	AC		C
〃	9-5	AC		C
〃	9-6	AC		C
〃	9-7	AC		C
〃	9-10	AC		C
〃	9-11	AC		C
〃	9-12	AC		C
〃	9-13	AC		C
VRS-CY1JB000J	9-335	AA		C
〃	9-341	AA		C
〃	9-343	AA		C
〃	9-346	AA		C
〃	9-347	AA		C
〃	9-348	AA		C
〃	9-350	AA		C
〃	9-378	AA		C
〃	9-379	AA		C
〃	9-560	AA		C
〃	9-561	AA		C
〃	9-579	AA		C
〃	9-580	AA		C
〃	9-613	AA		C
〃	9-614	AA		C
VRSCY1JB27R4F	9-333	AD		C
〃	9-334	AD		C
VRS-CZ1JB000J	9-291	AA		C
〃	9-299	AA		C
〃	9-313	AA		C
〃	9-314	AA		C
〃	9-316	AA		C
〃	9-317	AA		C
〃	9-325	AA		C
〃	9-330	AA		C
〃	9-336	AA		C
〃	9-337	AA		C
〃	9-339	AA		C
〃	9-342	AA		C
〃	9-356	AA		C
〃	9-357	AA		C
〃	9-376	AA		C
〃	9-377	AA		C
〃	9-411	AA		C
〃	9-413	AA		C
〃	9-414	AA		C
〃	9-415	AA		C
〃	9-417	AA		C
〃	9-419	AA		C
〃	9-425	AA		C
〃	9-426	AA		C
〃	9-427	AA		C
〃	9-428	AA		C
〃	9-433	AA		C
〃	9-470	AA		C
〃	9-506	AA		C
〃	9-518	AA		C
〃	9-528	AA		C
〃	9-529	AA		C
〃	9-530	AA		C
〃	9-531	AA		C
〃	9-532	AA		C
〃	9-533	AA		C
〃	9-536	AA		C
〃	9-540	AA		C
〃	9-549	AA		C
〃	9-557	AA		C
〃	9-575	AA		C
〃	9-588	AA		C
〃	9-589	AA		C
〃	9-591	AA		C
〃	9-592	AA		C

PARTS CODE	No.	PRICE RANK	NEW MARK	PART RANK
〃	9-593	AA		C
〃	9-611	AA		C
〃	9-612	AA		C
〃	9-615	AA		C
VRS-CZ1JB100J	9-326	AA		C
〃	9-435	AA		C
〃	9-439	AA		C
〃	9-456	AA		C
〃	9-494	AA		C
〃	9-496	AA		C
VRS-CZ1JB101J	9-292	AA		C
〃	9-295	AA		C
〃	9-296	AA		C
〃	9-328	AA		C
〃	9-384	AA		C
〃	9-391	AA		C
〃	9-395	AA		C
〃	9-396	AA		C
〃	9-397	AA		C
〃	9-399	AA		C
〃	9-400	AA		C
〃	9-401	AA		C
〃	9-402	AA		C
〃	9-403	AA		C
〃	9-404	AA		C
〃	9-405	AA		C
〃	9-430	AA		C
〃	9-448	AA		C
〃	9-449	AA		C
〃	9-451	AA		C
〃	9-453	AA		C
〃	9-454	AA		C
〃	9-459	AA		C
〃	9-460	AA		C
〃	9-469	AA		C
〃	9-476	AA		C
〃	9-477	AA		C
〃	9-481	AA		C
〃	9-482	AA		C
〃	9-484	AA		C
〃	9-486	AA		C
〃	9-487	AA		C
〃	9-490	AA		C
〃	9-491	AA		C
〃	9-495	AA		C
〃	9-497	AA		C
〃	9-504	AA		C
〃	9-511	AA		C
〃	9-539	AA		C
〃	9-551	AA		C
〃	9-553	AA		C
〃	9-556	AA		C
〃	9-559	AA		C
〃	9-563	AA		C
〃	9-569	AA		C
〃	9-570	AA		C
〃	9-571	AA		C
〃	9-572	AA		C
〃	9-584	AA		C
VRS-CZ1JB102J	9-355	AA		C
〃	9-502	AA		C
〃	9-535	AA		C
〃	9-546	AA		C
〃	9-594	AA		C
〃	9-595	AA		C
〃	9-597	AA		C
〃	9-602	AA		C
〃	9-616	AA		C
VRS-CZ1JB103J	9-351	AA		C
〃	9-352	AA		C
〃	9-353	AA		C
〃	9-354	AA		C
〃	9-382	AA		C
〃	9-385	AA		C
〃	9-390	AA		C
〃	9-394	AA		C
〃	9-416	AA		C
〃	9-420	AA		C
〃	9-429	AA		C
〃	9-436	AA		C
〃	9-437	AA		C
〃	9-438	AA		C

PARTS CODE	No.	PRICE RANK	NEW MARK	PART RANK
〃	9-440	AA		C
〃	9-441	AA		C
〃	9-442	AA		C
〃	9-443	AA		C
〃	9-444	AA		C
〃	9-445	AA		C
〃	9-446	AA		C
〃	9-447	AA		C
〃	9-450	AA		C
〃	9-462	AA		C
〃	9-463	AA		C
〃	9-464	AA		C
〃	9-465	AA		C
〃	9-466	AA		C
〃	9-467	AA		C
〃	9-468	AA		C
〃	9-471	AA		C
〃	9-472	AA		C
〃	9-473	AA		C
〃	9-474	AA		C
〃	9-479	AA		C
〃	9-480	AA		C
〃	9-485	AA		C
〃	9-488	AA		C
〃	9-489	AA		C
〃	9-493	AA		C
〃	9-499	AA		C
〃	9-508	AA		C
〃	9-509	AA		C
〃	9-510	AA		C
〃	9-514	AA		C
〃	9-520	AA		C
〃	9-524	AA		C
〃	9-534	AA		C
〃	9-537	AA		C
〃	9-538	AA		C
〃	9-541	AA		C
〃	9-542	AA		C
〃	9-543	AA		C
〃	9-545	AA		C
〃	9-550	AA		C
〃	9-552	AA		C
〃	9-554	AA		C
〃	9-558	AA		C
〃	9-562	AA		C
〃	9-564	AA		C
〃	9-565	AA		C
〃	9-566	AA		C
〃	9-567	AA		C
〃	9-568	AA		C
〃	9-596	AA		C
〃	9-598	AA		C
〃	9-603	AA		C
VRS-CZ1JB104J	9-407	AA		C
〃	9-492	AA		C
〃	9-519	AA		C
〃	9-525	AA		C
〃	9-581	AA		C
VRS-CZ1JB105J	9-329	AD		C
〃	9-344	AD		C
〃	9-522	AD		C
〃	9-527	AD		C
VRS-CZ1JB133J	9-389	AC		C
VRS-CZ1JB151J	9-586	AA		C
〃	9-587	AA		C
VRS-CZ1JB152J	9-338	AA		C
〃	9-398	AA		C
VRS-CZ1JB154J	9-408	AD		C
VRS-CZ1JB181J	9-345	AA		C
VRS-CZ1JB202J	9-609	AD		C
VRS-CZ1JB203F	9-517	AD		C
〃	9-526	AD		C
VRS-CZ1JB203J	9-409	AD		C
〃	9-421	AD		C
〃	9-516	AD		C
〃	9-604	AD		C
〃	9-605	AD		C
VRS-CZ1JB221J	9-305	AD		C
〃	9-306	AD		C
VRS-CZ1JB223J	9-315	AA		C
VRSCZ1JB2492F	9-340	AF		C
VRS-CZ1JB270J	9-478	AA		C

PARTS CODE	No.	PRICE RANK	NEW MARK	PART RANK
VRS-CZ1JB271J	9-368	AA		C
〃	9-369	AA		C
〃	9-370	AA		C
〃	9-371	AA		C
〃	9-372	AA		C
〃	9-373	AA		C
〃	9-374	AA		C
〃	9-375	AA		C
〃	9-577	AA		C
〃	9-583	AA		C
VRS-CZ1JB302J	9-410	AD		C
〃	9-547	AD		C
VRS-CZ1JB330J	9-297	AA		C
〃	9-298	AA		C
〃	9-300	AA		C
〃	9-301	AA		C
〃	9-302	AA		C
〃	9-303	AA		C
〃	9-304	AA		C
〃	9-307	AA		C
〃	9-308	AA		C
〃	9-309	AA		C
〃	9-310	AA		C
〃	9-311	AA		C
〃	9-312	AA		C
〃	9-327	AA		C
〃	9-331	AA		C
〃	9-360	AA		C
〃	9-361	AA		C
〃	9-362	AA		C
〃	9-363	AA		C
〃	9-431	AA		C
〃	9-432	AA		C
〃	9-434	AA		C
〃	9-452	AA		C
〃	9-455	AA		C
〃	9-457	AA		C
〃	9-458	AA		C
〃	9-461	AA		C
〃	9-498	AA		C
〃	9-500	AA		C
〃	9-501	AA		C
〃	9-503	AA		C
〃	9-505	AA		C
〃	9-507	AA		C
〃	9-573	AA		C
〃	9-590	AA		C
〃	9-610	AA		C
VRS-CZ1JB332J	9-386	AA		C
VRS-CZ1JB333J	9-320	AA		C
〃	9-364	AA		C
〃	9-365	AA		C
〃	9-366	AA		C
〃	9-367	AA		C
VRS-CZ1JB391J	9-332	AD		C
VRS-CZ1JB392J	9-381	AD		C
VRS-CZ1JB471J	9-412	AA		C
VRS-CZ1JB472J	9-293	AA		C
〃	9-294	AA		C
〃	9-358	AA		C
〃	9-359	AA		C
〃	9-380	AA		C
〃	9-383	AA		C
〃	9-388	AA		C
〃	9-393	AA		C
〃	9-406	AA		C
〃	9-418	AA		C
〃	9-424	AA		C
〃	9-515	AA		C
〃	9-521	AA		C
〃	9-576	AA		C
〃	9-582	AA		C
〃	9-585	AA		C
〃	9-606	AA		C
VRS-CZ1JB473J	9-512	AA		C
〃	9-513	AA		C
〃	9-555	AA		C
VRS-CZ1JB512F	9-523	AE		C
VRS-CZ1JB562J	9-422	AA		C
VRS-CZ1JB621J	9-423	AA		C
VRS-CZ1JB682J	9-601	AD		C
VRS-HT3AAR22J	9-544	AA		C

PARTS CODE	No.	PRICE RANK	NEW MARK	PART RANK
〃	9-548	AA		C
VRS-HT3AAR47J	9-387	AC		C
〃	9-392	AC		C
VRS-HT3DA470J	9-475	AA		C
VRS-TP2BD151J	9-607	AA		C
〃	9-608	AA		C
VRS-TW2HF561F	9-599	AF		C
〃	9-600	AF		C
VS2SA1530AT-1	9-288	AE		B
〃	9-289	AE		B
VS2SC2412K/-1	9-285	AB		B
〃	9-286	AB		B
〃	9-287	AB		B
VSRT1N141CT-1	9-282	AE		B
〃	9-283	AE		B
VSRT1N436CT-1	9-276	AE		B
〃	9-277	AE		B
〃	9-278	AE		B
〃	9-280	AE		B
〃	9-281	AE		B
〃	9-290	AE		B
VSRT1P141CT-1	9-279	AB		B
VSRT5N141CT-1	9-284	AE		B
【 X 】				
XBPS730P08KS0	5-B4	AB		C
XEBS720P06000	2-B1	AC		C
XEBS720P10000	1-B6	AE		C
XEBS730P08000	1-B3	AC		C
〃	2-B3	AC		C
〃	3-B2	AC		C
XEBS730P10000	1-B1	AC		C
〃	2-B2	AC		C
〃	3-B1	AC		C
〃	5-B5	AC		C
〃	7-B1	AC		C
XEBS730P12000	1-B9	AC		C
〃	2-B5	AC		C
〃	6-B3	AC		C
XEBS730P14000	1-B8	AD		C
XHBS730P06000	1-B11	AC		C
〃	2-B6	AC		C
〃	6-B4	AC		C
XHBS730P08000	1-B10	AB		C
XHBS730P10000	1-B5	AD		C
XJBS740P12000	1-B13	AB		C
XJPS740P10X00	2-B4	AC		C
XNGS730-18000	5-N1	AD		C
【 O 】				
0KY0MPS902100	10-71	AH		C
0KY0MPS902200	10-69	AF		C
〃	10-70	AF		C
0KYC1076QQ103	10-16	AL		C
〃	10-17	AL		C
0KYC1095EQ104	10-33	AD		C
0KYC10A9RQ152	10-24	AH		C
0KYC10B2SQ101	10-12	AF		C
0KYC10Q1EQ101	10-15	AC		C
0KYC10Q2EQ104	10-19	AD		C
〃	10-23	AD		C
〃	10-32	AD		C
0KYC1102EC103	10-13	AC		C
〃	10-27	AC		C
〃	10-29	AC		C
0KYC1102EC472	10-14	AC		C
0KYC1102EC562	10-28	AC		C
0KYC1186NC102	10-21	AG		C
0KYC1384QS102	10-10	AG		C
〃	10-11	AG		C
〃	10-18	AG		C
0KYC2131QS224	10-7	AK		C
〃	10-8	AK		C
0KYC3075BQ471	10-31	AM		C
0KYC30A0BQ121	10-26	AG		C
0KYC30A0BQ331	10-30	AK		C
〃	10-34	AK		C
0KYC30A0DQ330	10-22	AG		C
0KYC30A0DQ331	10-20	AK		C
0KYC30A0DQ560	10-25	AG		C
0KYC3126YS680	10-9	AX		C
0KYD1057AQ006	10-46	AF		B
〃	10-47	AF		B
〃	10-48	AF		B

PARTS CODE	No.	PRICE RANK	NEW MARK	PART RANK
〃	10-49	AF		B
〃	10-50	AF		B
〃	10-51	AF		B
〃	10-62	AF		B
0KYD2051AQ002	10-41	AD		B
〃	10-43	AD		B
〃	10-44	AD		B
0KYD2066AQ006	10-55	AH		B
0KYD3134AA004	10-56	AK		B
〃	10-61	AK		B
0KYD3155AL001	10-52	AU		B
0KYD4061AQ270	10-53	AL		B
0KYD4061AQ5R6	10-58	AK		B
0KYD4066AQ015	10-57	AE		B
〃	10-60	AE		B
0KYD4066AQ048	10-54	AF		B
0KYD4066AQ060	10-42	AF		B
0KYD4066AQ078	10-59	AE		B
0KYD4066AQ105	10-40	AF		B
0KYD5013AQ612	10-161	AV		B
0KYD7062AQ471	10-163	AH		B
0KYD7102AR8R0	10-91	AM		B
0KYH1050BQ5R0	10-73	AT		B
0KYH2107AR001	10-72	AQ		B
0KYH7137AS001	10-92	AL		B
〃	10-94	AL		B
0KYH7151AS001	10-93	AW		B
0KYK2051AQ002	10-37	AG		C
〃	10-38	AG		C
0KYK2061AQ002	10-35	AF		C
0KYK2148LS004	10-39	AN		C
0KYK2148LS005	10-36	AG		C
0KYK3104AL001	10-159	AU		B
0KYK7135AS006	10-63	AM		A
〃	10-65	AM		A
0KYK7144AR003	10-64	AL		A
0KYK7144AR005	10-67	AL		A
〃	10-68	AL		A
0KYL1105SL560	10-90	AN		C
0KYL1118RS400	10-89	AQ		C
0KYL1179JL333	10-88	AM		C
0KYL2100DS083	10-160	BA		B
0KYL5051AQ002	10-1	AF		C
〃	10-2	AF		C
〃	10-5	AF		C
0KYL5116AC002	10-3	AH		C
〃	10-6	AH		C
0KYM1108AZ001	10-164	AE		C
〃	10-165	AE		C
〃	10-166	AE		C
〃	10-167	AE		C
0KYR1053UQ103	10-155	AC		C
0KYR1053UQ473	10-157	AC		C
0KYR1053UQ563	10-123	AC		C
0KYR1066BQ475	10-105	AE		C
0KYR3062UQ100	10-120	AL		C
0KYR3111VC000	10-84	AB		C
0KYR3111VC101	10-113	AB		C
0KYR3111VC102	10-139	AB		C
0KYR3111VC103	10-132	AB		C
〃	10-140	AB		C
〃	10-141	AB		C
〃	10-149	AB		C
〃	10-156	AB		C
0KYR3111VC122	10-117	AC		C
0KYR3111VC152	10-133	AC		C
0KYR3111VC153	10-144	AC		C
0KYR3111VC223	10-116	AB		C
0KYR3111VC272	10-145	AC		C
0KYR3111VC332	10-138	AC		C
〃	10-146	AC		C
0KYR3111VC333	10-112	AB		C
0KYR3111VC473	10-158	AC		C
0KYR3111VC681	10-118	AB		C
0KYR3111VC682	10-114	AB		C
0KYR3113VC184	10-148	AC		C
0KYR3113VC274	10-147	AC		C
0KYR3113VC334	10-129	AC		C
0KYR3114VC102	10-127	AC		C
0KYR3114VC153	10-109	AC		C
0KYR3114VC302	10-142	AC		C
0KYR3114VC332	10-137	AC		C

PARTS CODE	No.	PRICE RANK	NEW MARK	PART RANK
0KYR3114VC472	10-150	AC		C
0KYR3114VC562	10-143	AC		C
0KYR3114VC681	10-136	AC		C
0KYR3114VC752	10-134	AC		C
0KYR3114VC822	10-115	AC		C
0KYR3120TC101	10-128	AC		C
0KYR3120TC102	10-110	AC		C
0KYR3120TC153	10-130	AB		C
0KYR3120TC752	10-131	AB		C
0KYR3121TC000	10-83	AB		C
〃	10-85	AB		C
0KYR3121TC102	10-135	AB		C
0KYR3121TC151	10-122	AC		C
0KYR3121TC220	10-121	AC		C
0KYR3121TC221	10-111	AB		C
0KYR3121TC563	10-124	AC		C
〃	10-125	AC		C
〃	10-126	AC		C
0KYR3126TC274	10-106	AC		C
〃	10-107	AC		C
〃	10-108	AC		C
0KYR3131AC000	10-86	AC		C
0KYR3131AC100	10-119	AB		C
0KYR3131AC472	10-151	AC		C
〃	10-152	AC		C
〃	10-153	AC		C
〃	10-154	AC		C
0KYR8054EQ502	10-162	AG		C
0KYT1018NC001	10-99	AG		B
0KYT1029LC001	10-98	AU		B
0KYT1576AC002	10-101	AF		B
〃	10-103	AF		B
0KYT2717KL002	10-95	AY		B
0KYT4081CC002	10-97	AF		B
〃	10-100	AF		B
〃	10-102	AF		B
〃	10-104	AF		B
0KYT4097CC002	10-96	AG		B
0KYW0000AQ005	10-4	AC		C
〃	10-45	AC		C
〃	10-75	AC		C
〃	10-76	AC		C
〃	10-77	AC		C
〃	10-79	AC		C
〃	10-87	AC		C
0KYW0000AQ007	10-82	AC		C
0KYW0000AQ010	10-80	AC		C
0KYW0000AQ012	10-66	AC		C
〃	10-74	AC		C
〃	10-78	AC		C
〃	10-81	AC		C