SHARP SERVICE MANUAL

CODE: 00ZAR151E/A1E

DIGITAL COPIER

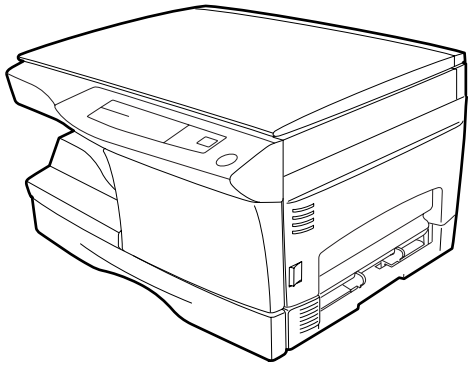

MODEL AR-121E AR-151E

* This Service Manual describes only the differences from the AR-120E/150E. For the common items with the AR-120E/150E, please refer to the AR-120E/150E manual.

CONTENTS

[1] GENERAL . . . . . 1 - 1

[2] CONSUMABLE PARTS . . . . . 2 - 1

[3] SIMULATIONS . . . . . 3 - 1

[4] USER PROGRAM . . . . . 4 - 1

[5] MAINTENANCE . . . . . 5 - 1

Parts marked with "⚠" are important for maintaining the safety of the set. Be sure to replace these parts with specified ones for maintaining the safety and performance of the set.

SHARP CORPORATION

This document has been published to be used for after sales service only.
The contents are subject to change without notice.

[1] GENERAL

The AR-121E/151E is the SRU model of the AR-120E/150E.
While the AR-120E/150E employs the drum replacement, the AR-121E/151E employs the developer replacement. Therefore, the display on the operation panel is changed from " ⊙ " (drum) to " ☼ " (developer) accordingly.

1. Major functions

Item / Model	CPM	SB/MB	2 Tray	SPF	R-SPF	FAX	GDI with USB	GDI without USB	PCL with USB	SOPM	Duplex
AR-121E	12CPM	SB	×	×	×	×	×	Opt	×	×	×
AR-151E	15CPM	SB	×	×	×	×	×	Opt	×	○	×

Descriptions of items

CPM:	Copy speed (Copies Per Minute)
SB/MB:	SB = Manual feed single bypass, MB = Manual feed multi bypass
2 tray:	Second cassette unit.
SPF:	Original feed unit
R-SPF:	Duplex original feed unit
FAX:	FAX function.
GDI with USB:	GDI printer function with USB.
GDI without USB:	GDI printer function without USB.
PCL with USB:	PCL printer function with USB.
SOPM:	Scan Once Print Many function (Many copies are made by one scan.)
Duplex:	Auto duplex copy function

Descriptions of table

○ : Standard provision
× : No function or no option available

2. System Configuration

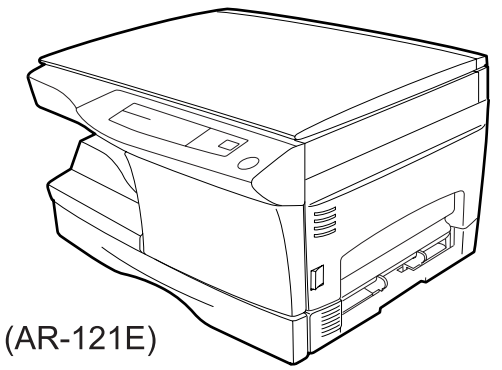

(AR-121E)

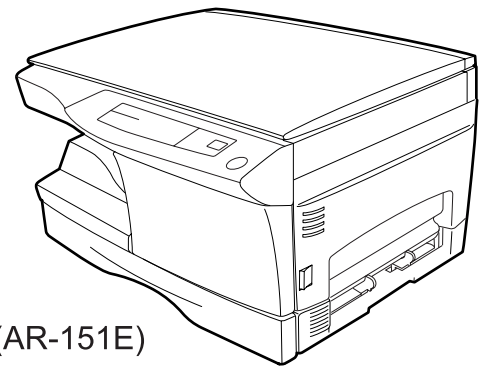

(AR-151E)

Options (AL-10PK/AL-11PK)

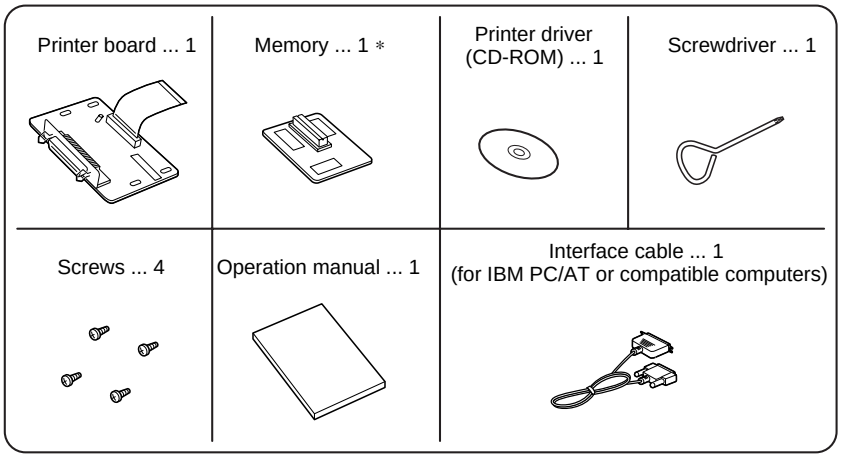

* AR-150E, the memory has been already installed in the machine and is not supplied in the printer upgrade kit(AL-10PK).

[2] CONSUMABLE PARTS

1. Supply system table

A. Europe subsidiaries/East Europe/SCA/SCNZ

No.	Name	Content	Life	Product name	Package	Remark
1	Toner CA(Black) with IC	Toner × 10 (Toner :Net Weight 210g) Polyethylene bag × 10	72K	AR-152LT	1	LT=T∗10
2	Developer	Developer × 10 (Developer :Net Weight 170g)	250K	AR-152LD	1	LD=DV∗10
3	Drum kit	Drum × 1 Drum fixing plate × 1	25K	AR-152DM	10	

Note: Printing of the master/individual cartons is made in 4 languages, English/French/German/Spanish.
Packed together with the machine: DR 25K/Developer UN/Process UN

B. SMEF (Middle East, Africa) Israel/Russia/CIS/Taiwan/Philippines

No.	Name	Content	Life	Product name	Package	Remark
1	Toner CA(Black) with IC	Toner × 10 (Toner :Net Weight 210g) Polyethylene bag × 10	72K	AR-152ET	1	∗ Life setup is based on A4 6%. ET=FT∗10
2	Developer	Developer × 10 (Developer :Net Weight 170g)	250K	AR-152CD	1	CD=SD∗10
3	Drum kit	Drum × 1 Drum fixing plate × 1	25K	AR-152DR	10	

Note: Printing of the master/individual cartons is made in 4 languages, English/French/German/Spanish.
Packed together with the machine: DR 25K/Developer UN/Process UN

C. Asia (Subsidiary)

No.	Name	Content	Life	Product name	Package	Remark
1	Toner CA(Black) with IC	Toner × 10 (Toner :Net Weight 210g) Polyethylene bag × 10	72K	AR-152CT	1	∗ Life setup is based on A4 6%. CT=ST∗10
2	Developer	Developer × 10 (Developer :Net Weight 170g)	250K	AR-152CD	1	CD=SD∗10
3	Drum kit	Drum × 1 Drum fixing plate × 1	25K	AR-152DR	10	

Note: Printing of the master/individual cartons is made in 4 languages, English/French/German/Spanish.
Packed together with the machine: DR 25K/Developer UN/Process UN

2. Developer unit installation

1) 2) 3) Open the side and front cabinets of the copier.
4) Remove the locking tape of the developer unit.
5) Remove the screw which is fixing the copier and Developer unit.
6) Remove Developer unit slowly from the copier.

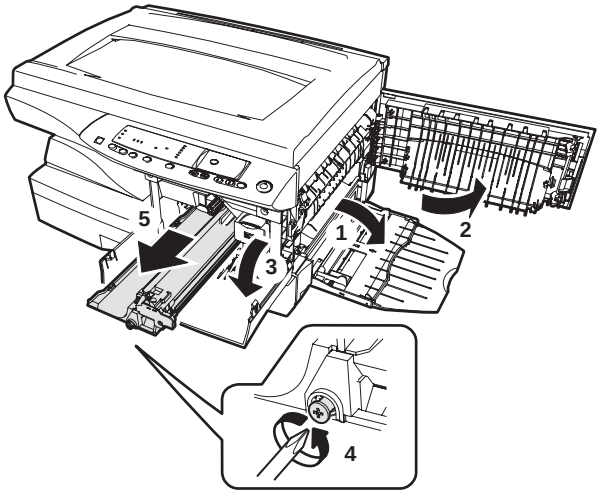

7) Remove the screw (1 pc).
8) Remove Upper developer unit.

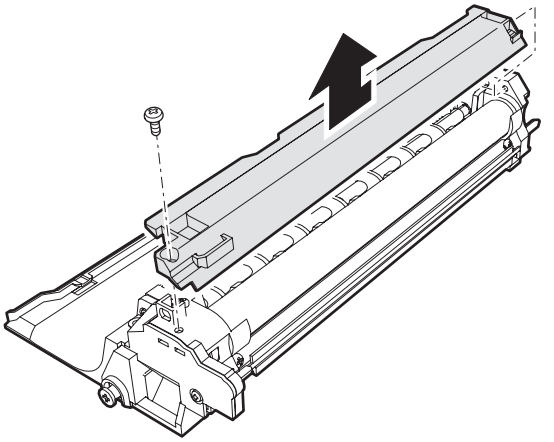

9) Shake the aluminum bag to stir developer
10) Supply developer from the aluminum bag to the top of the MX roller evenly.

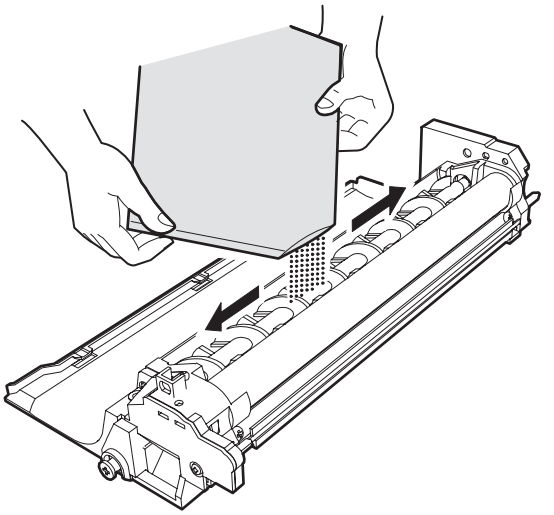

Note: Be careful not to splash developer outside Developer unit.

11) Attach Upper developer unit and fix it with a screw.
12) Rotate the MG roller gear to distribute developer evenly.

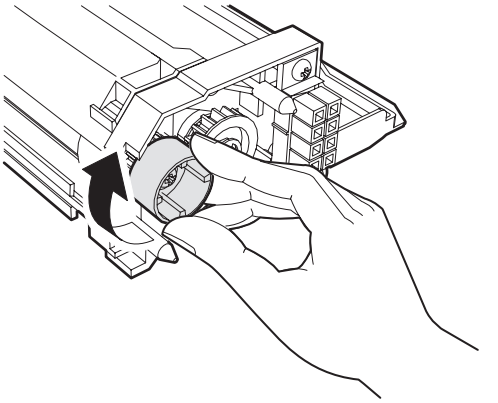

Note: Never rotate the gear in the reverse direction.
Note: When carrying Developer unit, do not tilt it extremely as shown with the arrow in the figure below.
(Prevention of splash of developer)

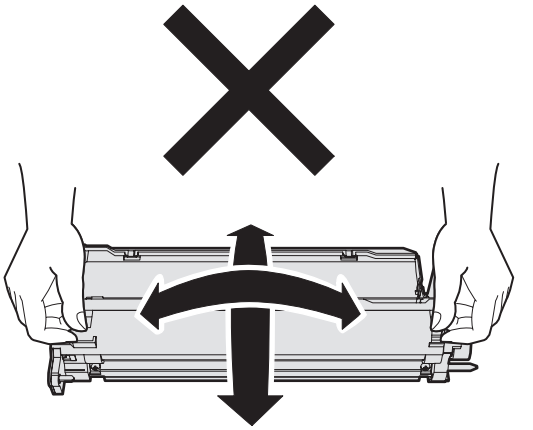

13) Insert Developer unit carefully into the copier.
Note: Quick insertion may result in splash of developer. Be sure to insert carefully.
14) Confirm that Developer unit is completely inserted to the bottom of the machine, fix Developer unit and the machine with a screw.
15) Completion of Developer unit installation

3. Toner cartridge installation

1) To prevent against uneven distribution of toner, hold Toner unit with both hands and shake it several times horizontally.

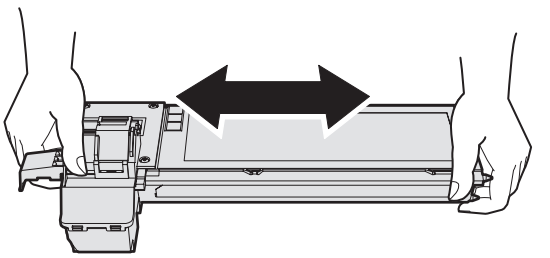

2) Hold the section of Toner unit shown in the figure below, remove the packing tape, and remove the cushion.
3) Pull out the cushion in the arrow direction.

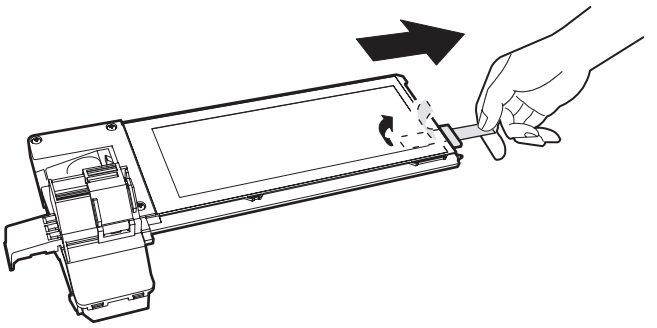

4) Insert Toner unit carefully into the copier.
5) Insert until the hook is engaged with the copier as shown in the figure below.

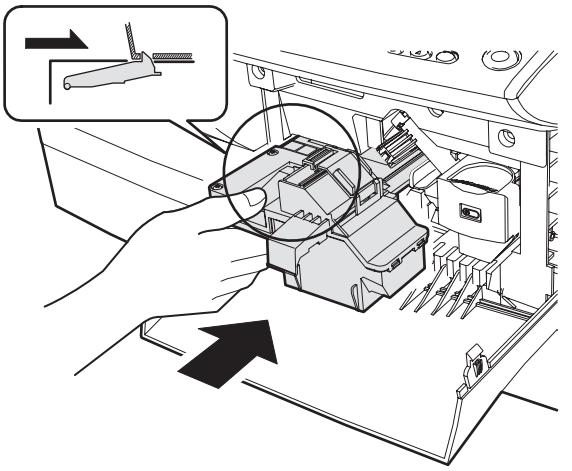

6) Pull out the shutter in the arrow direction.

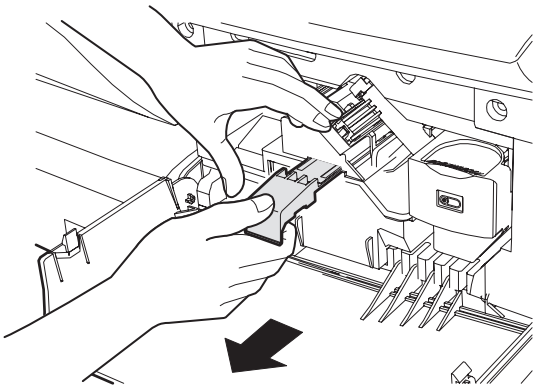

Note: Do not hold and carry the shutter. Otherwise the shutter may drop and Toner unit may drop.

7) Completion of Toner unit installation
Close the front and side cabinets.

4. TD cartridge replacement

1) Open the front and side cabinets of the copier.
2) Keep holding Toner lover, and
3) Carefully pull out Toner unit from the copier.

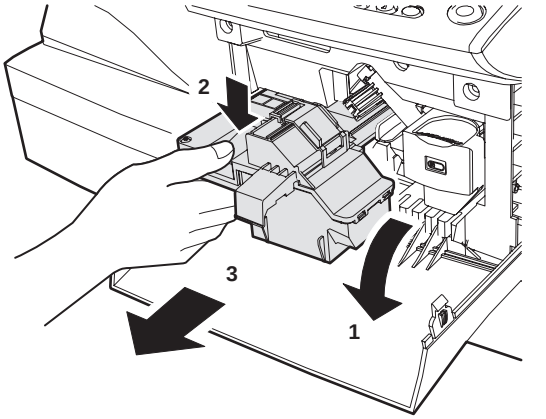

4) Put Toner unit in a collection bag immediately after removing it from the copier

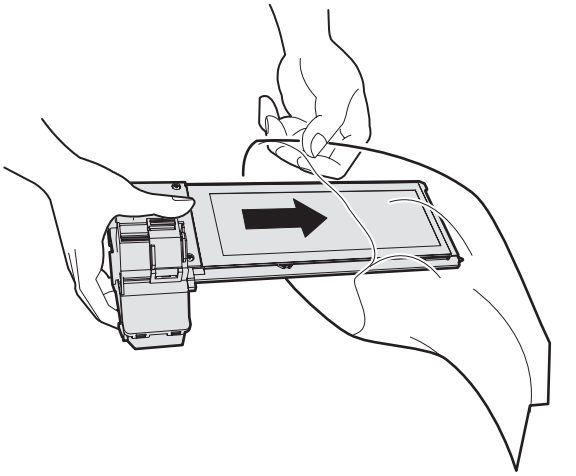

Note: Never carry exposed Toner unit. Be sure to put it in the collection bag.

[3] SIMULATIONS

1. List of simulations

The table below shows the simulations which are not provided for the AR-120E/150E but newly added to the AR-121E/151E.
Simulation 26-38 of the SR-120E/150E is deleted in the AR-121E/151E.

Main code		Sub code	Contents
24	Special counter clear	06	Developer counter clear
26	Various setup	37 55	Cancel of stop at developer over CRUM destination display
46	Exposure adjustment	19	γ Table adjustment (Copy mode)

2. Contents of simulations

Main code	Sub code	Content
24	06	Developer counter clear When the PRINT switch is pressed, the developer count value is reset to 0.
26	37	Cancel of stop at developer life over When this simulation is executed, the current set code is displayed. Enter a new code and press the PRINT switch, and the entered code is registered. Code number: 0 — Setting: Stop at developer life over Code number: 1 — Setting: Stop cancel at developer life over
	55	CRUM destination display When this simulation is executed, the current setup of the CRUM destination stored in the machine is displayed. Code number: 00 — Setting: No setup Code number: 01 — Setting: BTA-A Code number: 02 — Setting: BTA-B Code number: 03 — Setting: BTA-C
46	19	γ table setup When this simulation is executed, the currently set gamma table code number is displayed. Enter the code number corresponding to your desired gamma table and press the PRINT switch, and the setup will be changed. Code number: 1 — γ table: Japan Code number: 2 — γ table: EX Japan

[4] USER PROGRAM

The conditions of factory setting can be changed according to the use conditions.

Functions which can be set with the user program

Function	Contents	Factory setting
Auto clear time	● When a certain time is passed after completion of copying, this function returns to the initial state automatically. The time to reach the initial state can be set in the range of 30 sec to 120 sec by the unit of 30 sec. This function can be disabled.	60 sec
Preheat	● When the copier is left unused with the power ON, the power consumption is automatically reduced to about 40Wh/H (∗ Note). The time to start this function can be set in the range of 30 sec to 90 sec by the unit of 30 sec. This function cannot be disabled. ● When this function is operated, the pre-heat lamp on the operation panel lights up. To return to the initial state, press any key on the operation panel. (When the COPY button is pressed, a copy is made after returning to the initial state.)	90 sec
Auto shut off timer	● When the copier is left unused with the power ON, the power consumption is automatically reduced to about 18Wh/H (∗ Note). The time to start this function can be set in the range of 2 min to 120 min. ● When this function is operated, all the lamps except for the pre-heat lamp on the operation panel turn off. To return to the initial state, press the COPY button.	5 min
Stream feeding	Only models with SPF.	Cancel
Auto shut off	● Used to set or cancel this function.	Set

∗Note: The power consumption values in preheat and auto shut off may be varied depending on the use conditions.

Setting the power save modes, auto clear time, and stream feeding mode

1) Press and hold down the light ( ) and dark ( ) keys simultaneously for more than 5 seconds until all the alarm indicators (, , and) blink and "- -" appears in the display.
2) Use the left copy quantity ( ) key to select a user program number (1: auto clear time, 2: preheat mode, 3: auto power shut-off timer, 4: stream feeding mode, 5: auto power shut-off mode). The selected number will blink in the left side of the display.

Function name	Function code
Auto clear time	1
Preheat	2
Auto shut off timer	3
Stream feeding	4*
Auto shut off	5

[Cancel] If a wrong code is entered, press the clear key and enter the correct function code.

∗ SPF only

∗ The remaining toner quantity is displayed by pressing the % key for 5 sec before entering a program code in the user simulation mode.

3) Press the print ( ) key. The entered program number will be steadily lit and the currently selected parameter number for the program will blink on the right side of the display.
4) Select the desired parameter using the right copy quantity ( ) key. The entered parameter number will blink on the right of the display.

Function name	Set code	Function name	Set code	Function name	Set code	Function name	Set code	Function name	Set code
Auto clear time	0 (Cancel)	Preheat	0 (30 sec)	Auto shut off timer	0 (2 min)	Stream feeding	∗0 (Cancel)	Auto shut off	0 (Cancel)
	1 (30 sec)		1 (60 sec)		∗1 (5 min)		1 (Setting)		∗1 (Setting)
	∗2 (60 sec)		∗2 (90 sec)		2 (15 min)				
	3 (90 sec)				3 (30 min)				
	4 (120 sec)				4 (60 min)				
	5 (10 sec)				5 (120 min)				

∗ : Factory setting

5) Press the print ( ) key. The right-hand number in the display will be steadily lit and the entered value will be stored.
Note: To change the setting or to set another mode, press the clear ( ) key. The copier will return to step 2).
6) Press the light ( ) or dark ( ) key to return to the normal copy mode.

[5] MAINTENANCE

1. Maintenance table

×: Check (Clean, adjust, or replace when required.) ○ : Clean ▲: Replace △ : Adjust ☆: Lubricate

Section	Parts	25K	50K	75K	100K	125	Remark
Developing	Developer	▲	▲	▲	▲	▲	
	DV blade	○	▲	○	▲	○	
	DV side seal (F/R)	○	▲	○	▲	○	
Process peripheral	Drum	▲	▲	▲	▲	▲	

2. Maintenance display system

Toner	Life	7.2K	
	Remaining quantity check ∗1	a. Press and hold the density adjustment LIGHT key for more than 5 sec, and the machine will enter the user program mode. b. Press and hold the "%" key for more than 5 sec, and the remaining quantity will be displayed on the copy quantity display in one of the following levels: (Remaining quantity display levels: 100%, 75%, 50%, 25%, 10%, LO) c. Press the density adjustment LIGHT key to cancel.	
	Remaining quantity	NEAR EMPTY About 10%	EMPTY
	LED	ON	Flash
	Machine	Operation allowed	Stop
Developer	Life	25K	
	LED	ON at 25K of the developer count.	
	Machine	Selection is available between Not Stop and Stop by Service Simulation (SIM 26-37) Setup. (If Stop is selected, the LED will flash and stop at 25K.) ∗ Default: Not Stop ∗ Clear: SIM 24-06	
Maintenance	LED	Selection is available among 18K, 13K, 9K, 6K, 3K, and free (no lighting) with SIM 21-1. ∗ Default: free ∗ Clear: SIM 20-1	
	Machine	Not stop.	

∗1: Installation of a new toner cartridge allows to display the remaining quantity.

SHARP

COPYRIGHT © 2001 BY SHARP CORPORATION
All rights reserved.
Printed in Japan.
No part of this publication may be reproduced,
stored in a retrieval system, or transmitted,
in any form or by any means,
electronic, mechanical, photocopying, recording, or otherwise,
without prior written permission of the publisher.

SHARP CORPORATION
Digital Document Systems Group
Quality & Reliability Control Center
Yamatokoriyama, Nara 639-1186, Japan
2001 January Printed in Japan Ⓝ