SHARP SERVICE MANUAL

CODE : 00ZARD25//A1E

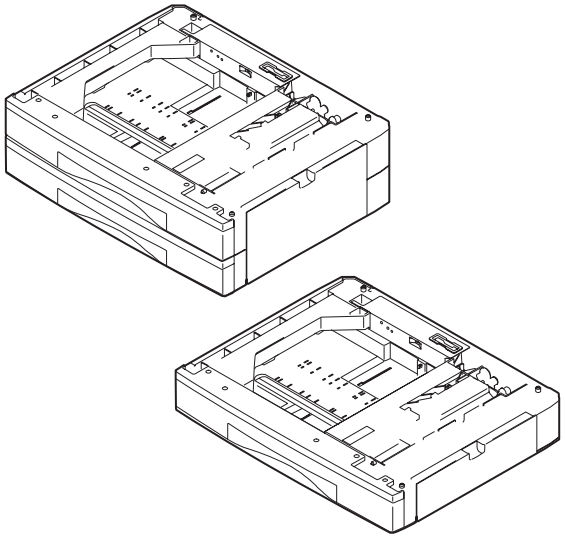

Digital copier
: Paper feed unit

MODEL AR-D24 (250-sheet paper feed unit)
AR-D25 (500-sheet paper feed unit)

CONTENTS

[1] PRODUCT OUTLINE 1

[2] SPECIFICATIONS 1

[3] UNPACKING AND INSTALLATION 2

[4] EXTERNAL VIEW AND INTERNAL STRUCTURE 8

[5] OPERATIONAL DESCRIPTION. 9

[6] DISASSEMBLY AND ASSEMBLY 9

[7] MAINTENANCE 11

[8] ELECTRICAL SECTION. 12

Parts marked with "⚠" are important for maintaining the safety of the set. Be sure to replace these parts with specified ones for maintaining the safety and performance of the set.

SHARP CORPORATION

This document has been published to be used for after sales service only.
The contents are subject to change without notice.

[1] PRODUCT OUTLINE

The 250-sheet paper feed unit and the 500-sheet paper feed unit are the optional paper feed cassettes for the digital copier, and they are the same structure as the 250-sheet cassette of the copier.
The combination of the copier and the paper feed cassette is as shown below:

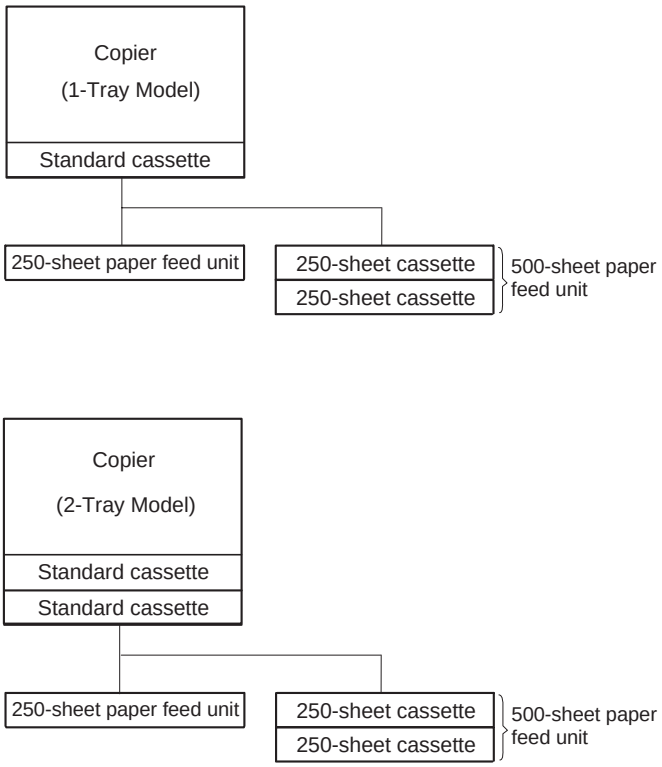

[2] SPECIFICATIONS

1. Paper feed unit

	AR-D24	AR-D25
Paper feed step(s)	1-step	2-step
Paper feed capacity	250 sheets x 1 step	250 sheets x 2 steps
Size detection	None (The paper size is set by the user program.)	
Paper feed detection	Available	
Paper feed size	A3, B4, A4, A4R, B5, B5R 11 x 17, 8.5 x 14, 8.5 x 13, 8.5 x 11, 8.5 x 11R, 8K, 16K, 16KR	
Paper weight	56 ~ 90g/m2 (15 ~ 24lbs)	
Shipping size	AB series: A4 Inch series: 8.5 x 11	
Size selection	User operation (Size setting by the user program) Japan: A3, B4, A4, A4R, B5, B5R Inch series: 11 x 17, 8.5 x 14, 8.5 x 11, 8.5 x 11R EX AB series: A3, B4, A4, A4R Inch series foolscap area: 11 x 17, 8.5 x 14, 8.5 x 13, 8.5 x 11, 8.5 x 11R EX AB series foolscap area: A3, B4, A4, A4R, 8.5 x 13	
Cassette detachment	Possible by the user	
Heater	Available only in Japan model	
Power source	Supplied from the machine.	
External dimension (mm)	W: 590 x D: 471 x H: 88 (Jut portion is not included.)	W: 590 x D: 471 x H: 173.5 (Jut portion is not included.)
Weight	About 4.7kg (With cassette)	About 10.0kg (With cassette)
Power consumption	5.6W	8.4W

[3] UNPACKING AND INSTALLATION

1. Unpacking

(AR-D24)

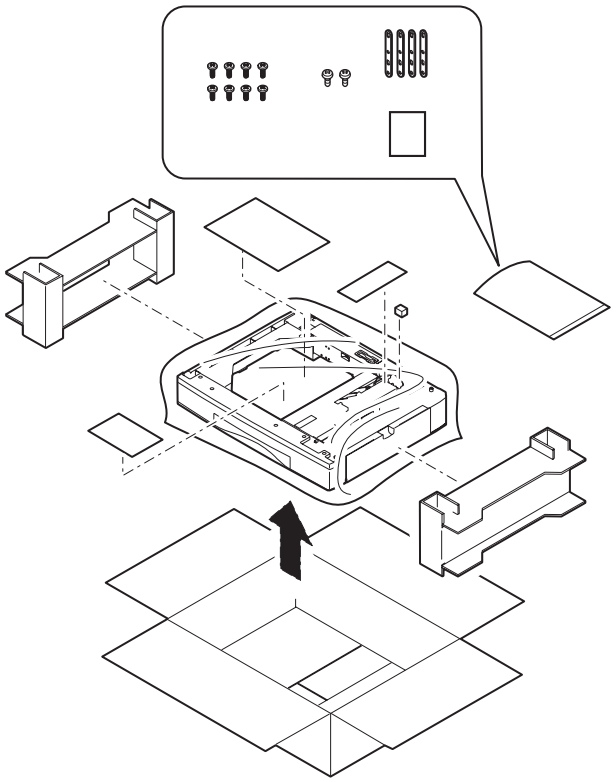

(AR-D25)

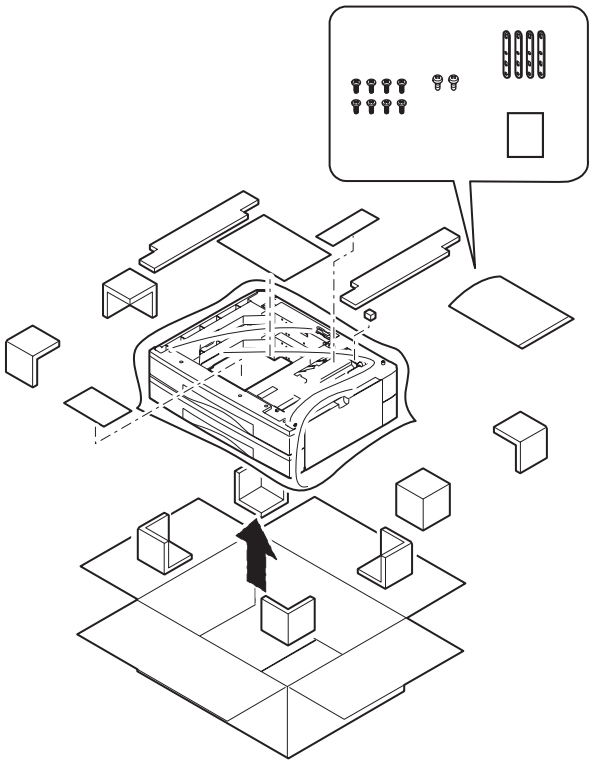

2. Installation

Included parts

Part name	Quantity
Screw (Fixing plate)	8
Screw	2
Screw	1
Fixing plate	3
Fixing plate	1
Connection gear	1

1) Remove the document cover.

Lift the document cover from the copier and tilt it to the rear side to remove it.

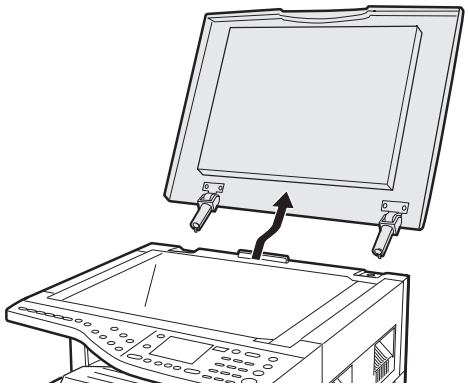

2) Remove the rear cabinet.

Remove the screw and remove the cover. Then, remove the five screws and remove the rear cabinet.

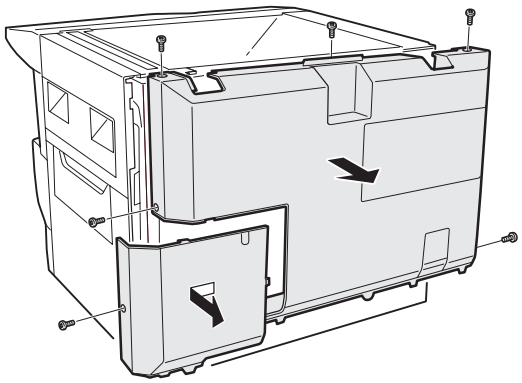

3) Remove the copier rear cover.

Remove the two screws and remove the rear cover.

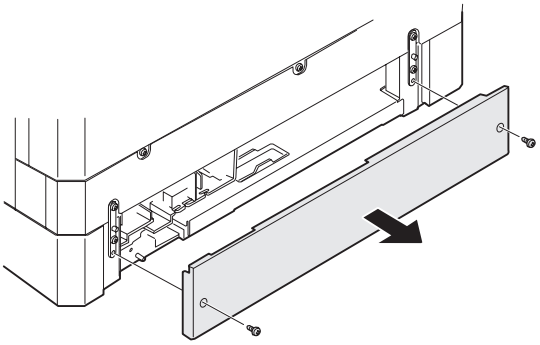

4) Make a hole for connector.

• Copier (1-tray model)

Cut out the portion shown in the illustration with nippers or the like.

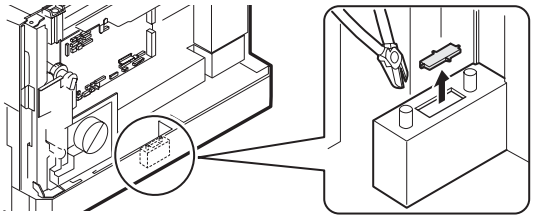

• Copier (2-tray model)

Press the portion shown in the illustration with a screwdriver or the like to remove it.

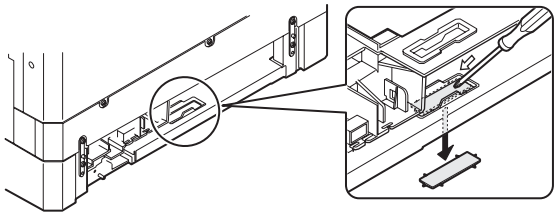

5) Remove the second cassette rear cover.

Remove the rear cover which is attached to the 250-sheet paper feed unit.

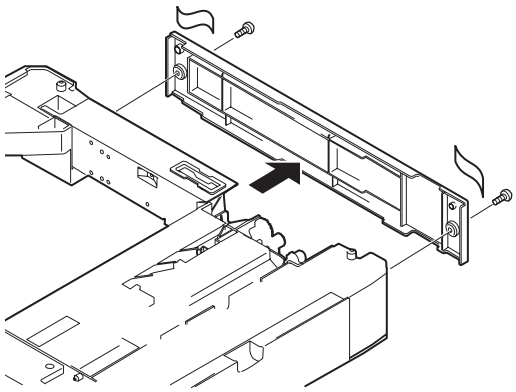

Remove the rear cover (upper stage) from the 500-sheet paper feed unit.

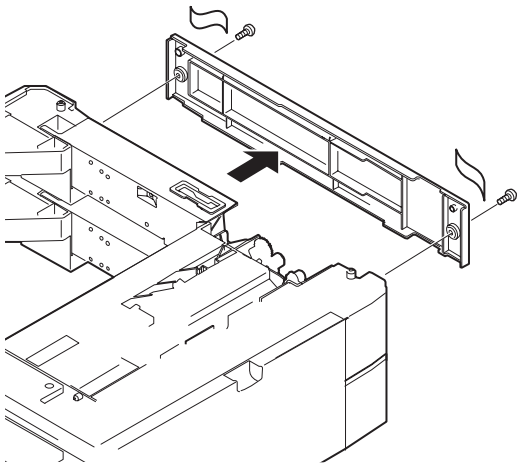

6) Install the copier onto the 250-sheet paper feed unit.

Put the copier on the 250-sheet paper feed unit, and fix with the fixing plates and the screws.

• Copier (1-tray model) + 250-sheet paper feed unit

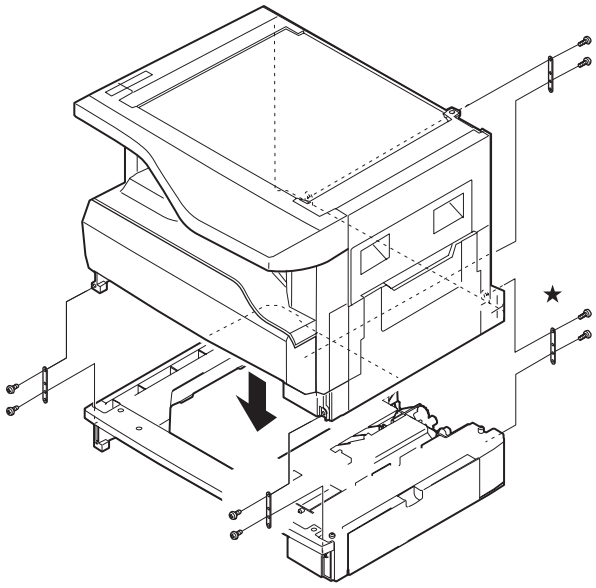

• Copier (2-tray model) + 250-sheet paper feed unit

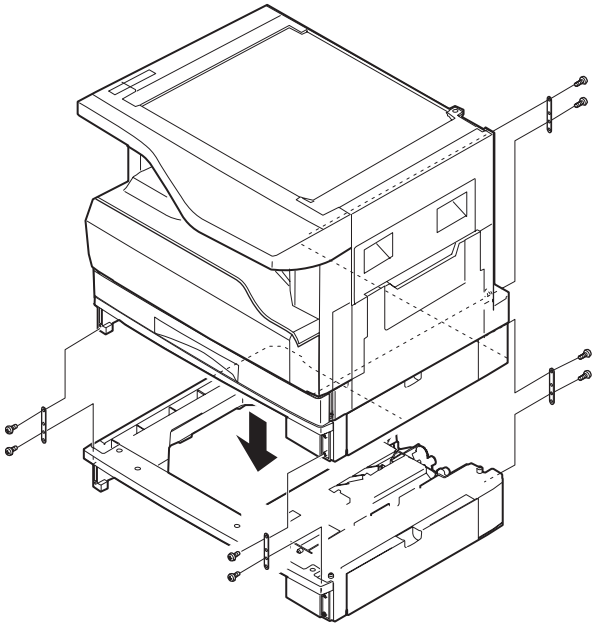

• Copier (1-tray model) + 500-sheet paper feed unit

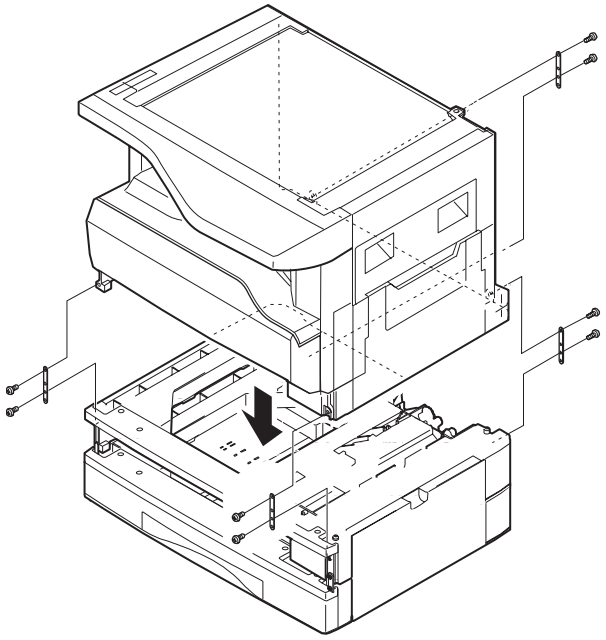

• Copier (2-tray model) + 500-sheet paper feed unit

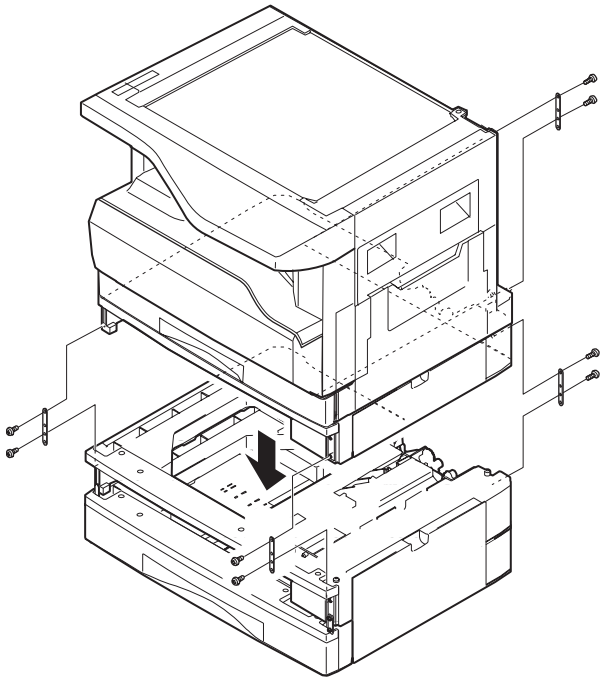

7) Remove the connection gear lock.

Remove the connection gear lock (with the red tug) after setting.

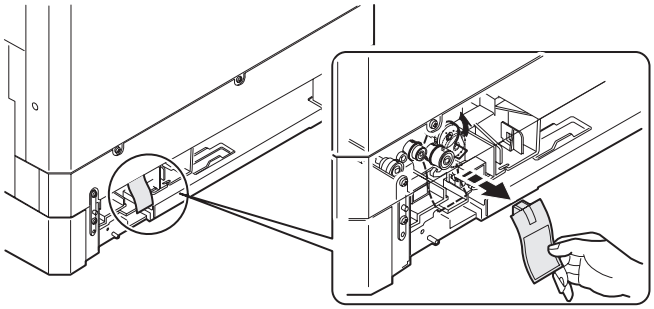

8) Connect the connector

Connect the optional relay harness contained in the 1-tray model (2-tray model) paper feed unit to the PWB of the copier.

• Optional relay harness



• Copier (1-tray model) + 250-sheet paper feed unit

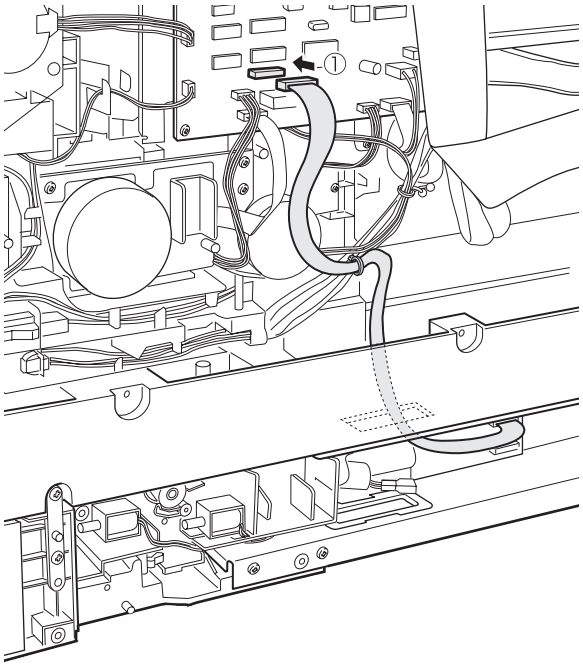

• Copier (2-tray model) + 250-sheet paper feed unit

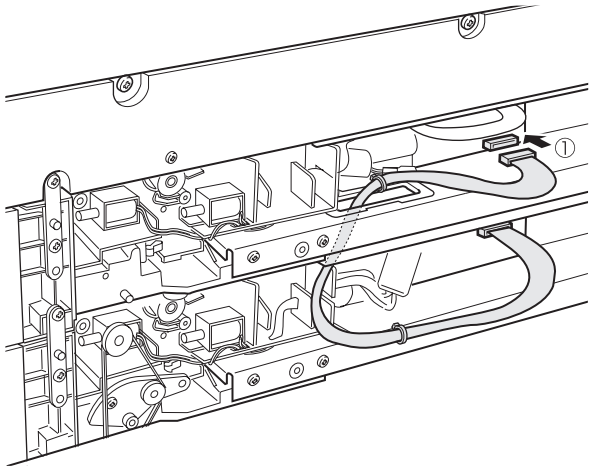

• Copier (2-tray model) + 500-sheet paper feed unit

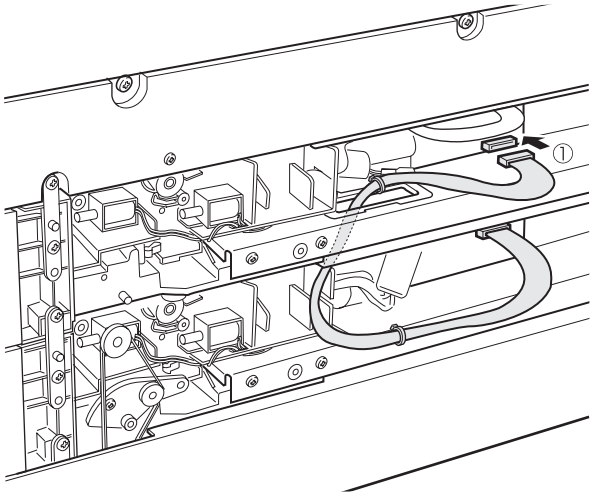

• Copier (1-tray model) + 500-sheet paper feed unit

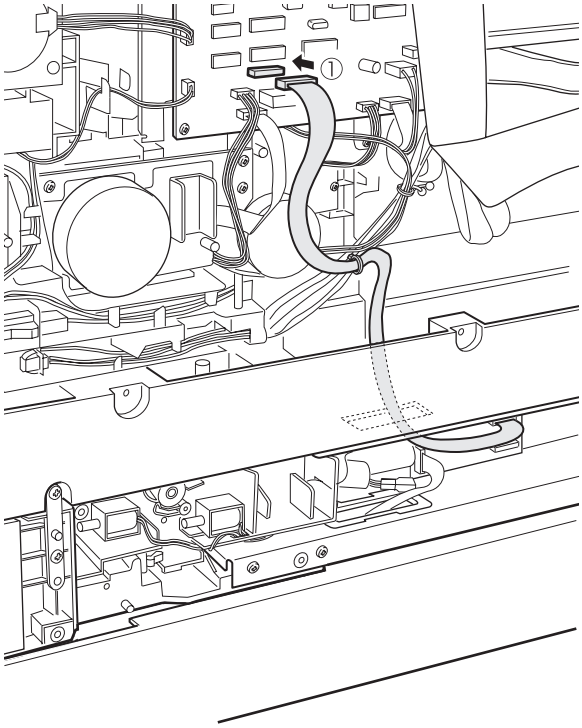

9) Remove the cassette packing fixtures.

Pull the cassette until it stops.

Turn and remove the packing fixture which is fixing the paper pressure plate inside the cassette in the direction of arrow.

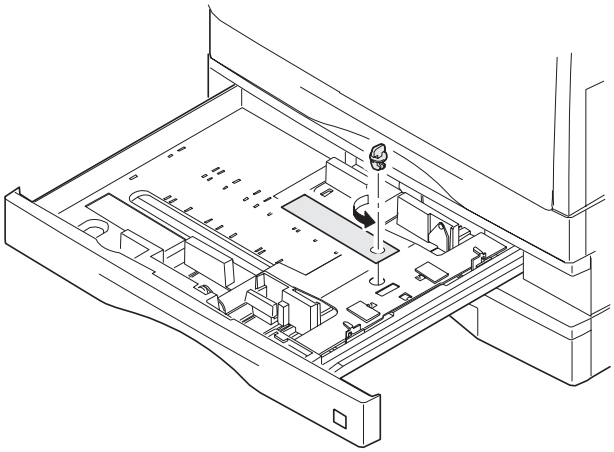

10) Set the cassette side plate.

Hold the knob of the cassette side plate, slide it and set to the position of the paper size to be used.

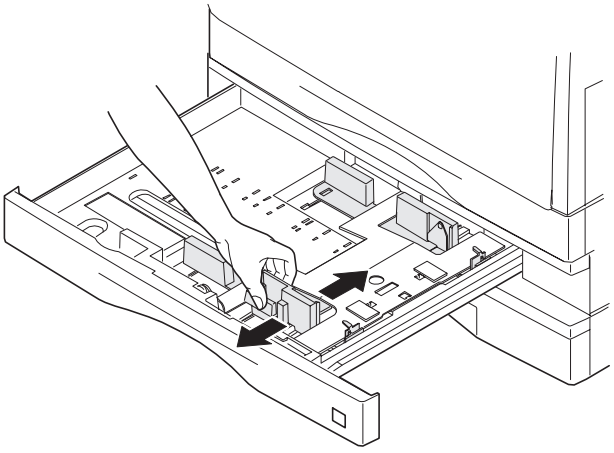

11) Install the cassette rear edge plate.

Install the cassette rear plate to the position of the paper size to be used.

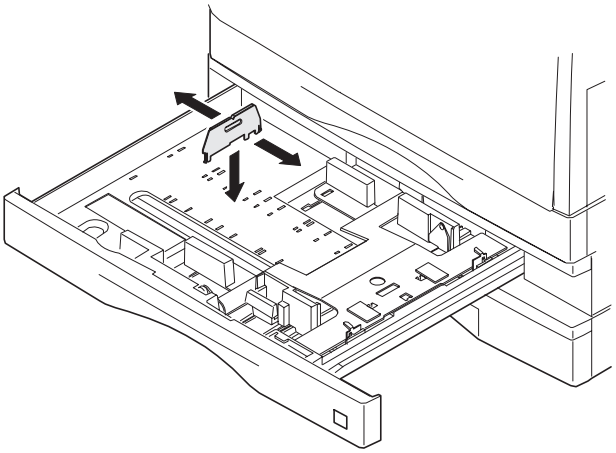

12) Set the paper.

When setting the paper, do not exceed the height of the indication label.

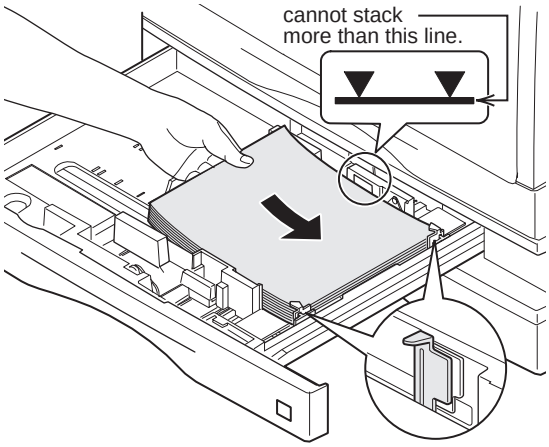

Note: To make the paper center shift adjustment and the lead edge adjustment, insert the power plug of the copier into the power outlet, turn on the power switch, and perform the following procedure.

13) Perform the center shift adjustment.

Set a document on the document glass and make a copy.

∗If the image center is shifted, perform the following procedure.

1. Execute SIM 50-10 with the key operations on the copier.

[Program key] (#) → (=-) → (C) → (=-) → (5) → (0) → (◇) → (1) → (0) → (◇)

2. Turn on the Auto lamp and the lamp of a corresponding tray by Light and Dark key, Enter the set value with the keys on the operation panel to perform the center shift adjustment, make a copy again, and check that the center is not shifted.

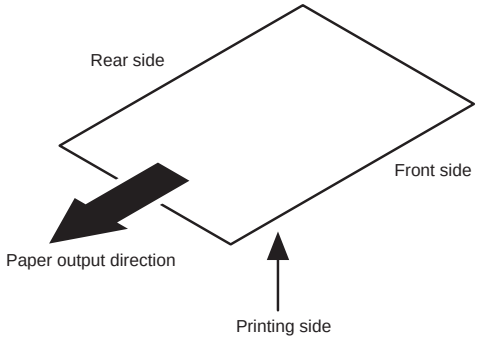

- When the set value is increased, the image is shifted to the rear side.

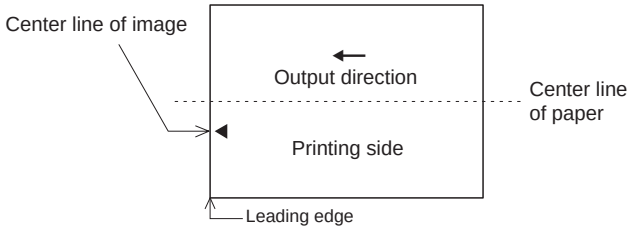

- When the set value is decreased, the image is shifted to the front side.

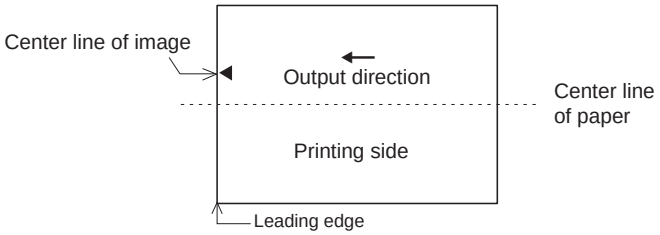

After completion of the adjustment, press the (CA) key to cancel the mode.

14) Perform the lead edge adjustment.

Set a document on the document glass, and make a copy.

1. Execute SIM 50-1 with the key operations on the copier.

[Program key] (#) → (=-) → (C) → (=-) → (5) → (0) → (◇) → (0) → (1) → (◇)

2. Turn on the Auto lamp and the lamp of a corresponding tray by Light and Dark key, Enter the set value with the keys on the operation panel and make a copy to check that the lead edge is within the specified range.
   - When the set value is increased, the copy image moves forward.
   - When the set value is decreased, the copy image moves backward.

After completion of the adjustment, press the (CA) key to cancel the mode.

15) Changing a tray's paper size setting

Follow these steps to change a tray's paper size setting.

Note:

- The paper size setting cannot be changed when the machine has stopped temporarily due to running out of paper or a misfeed, or during interrupt copying.
- During printing (even in copy mode), the paper size setting cannot be changed.
- 5-1/2" x 8-1/2" size paper can only be selected in upper paper tray.
- Do not load paper that is a different size than the paper size setting. Copying will not be possible.

1. Hold down the [PAPER SIZE ENTER] key for more than 5 seconds to set the selected paper size.

   The currently selected paper feed location indicator will blink and the corresponding paper size (which is currently set) indicator will light steadily. All other indicators will go out.

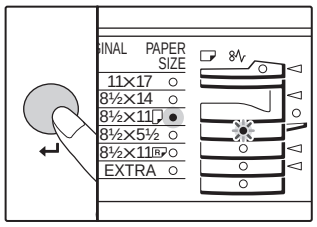

2. Use the [TRAY SELECT] key ( ) to select the paper tray for which you wish to change the paper size setting.

   Each time the [TRAY SELECT] key ( ) is pressed, a paper tray will be indicated with a blinking paper feed location indicator.

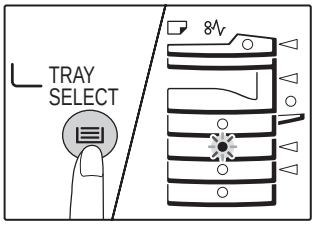

3. Use the [ORIGINAL SIZE ENTER] key to select the paper size.

   The indicator of the selected paper size lights up.

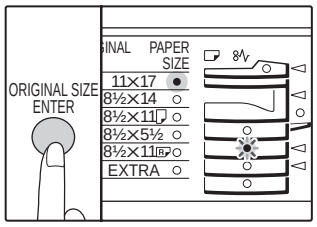

4. Squeeze the lock lever of the front guide and slide the front guide to match the width of the paper, and move the left guide to the appropriate slot as marked on the tray.

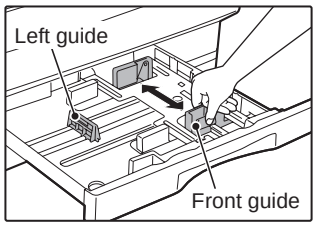

   - The front guide is a slide-type guide. Grasp the locking knob on the guide and slide the guide to the indicator line of the paper to be loaded.
   - The left guide is an insert-type guide. Remove it and then insert it at the indicator line of the paper to be loaded.
   - When using 11" x 17" sized paper store the left guide in the slot at the left front of the paper tray.

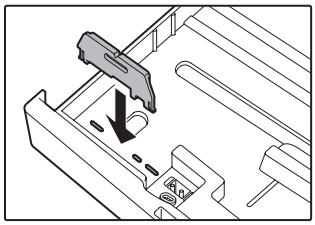

5. Press the [START] key ( ) and then the [PAPER SIZE ENTER] key.

   To change0 the paper size setting of another tray, repeat steps 2 to 3 after pressing the [START] key ( ).

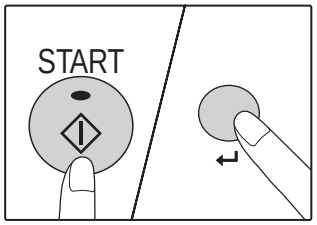

Note: Affix the paper size label for the paper size selected in step 3 to the label position on the right end of the tray.

[4] EXTERNAL VIEW AND INTERNAL STRUCTURE

1. External view

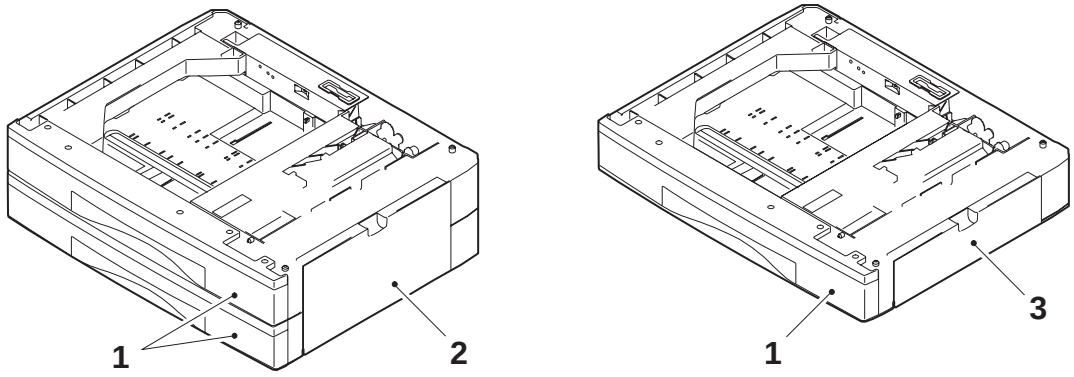

No.	Name	No.	Name	No.	Name
1	Paper feed tray	2	2-step paper feed right cover	3	1-step paper feed right cover

2. Internal structure

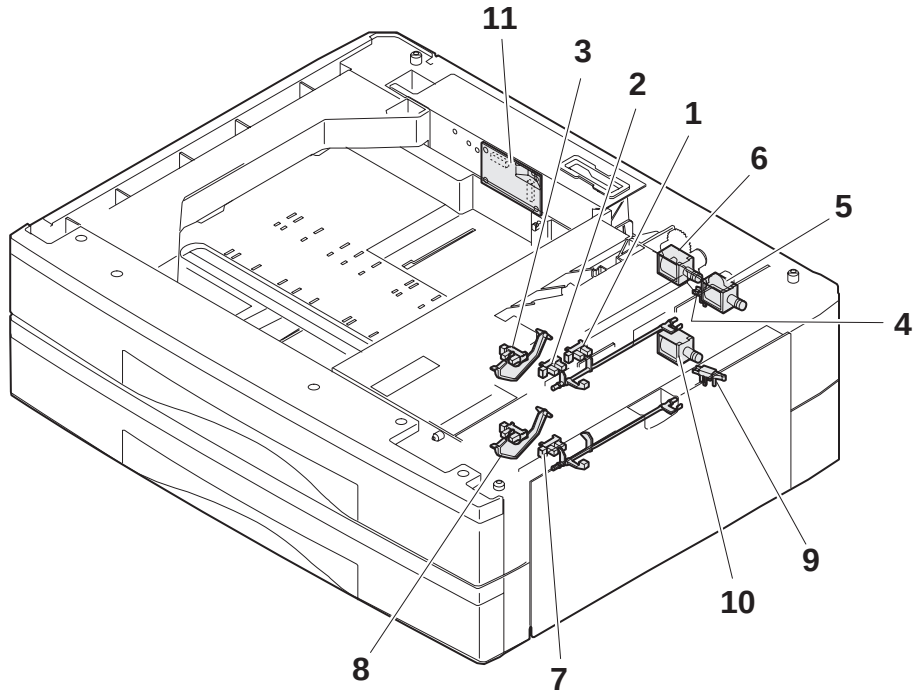

Sensors and detectors

No.	Code	Name	Type	Function, operation	Remark
1	DRS1	Door open/close sensor	Photo transmission	Detects door open/close.	
2	PPD1	Paper entry sensor	Photo transmission	Detects paper transport.	
3	CSS1	Paper empty sensor	Photo transmission	Detects paper presence/empty.	
4	CASS1	Cassette detection SW	Contact	Detects cassette installation.	
5	FSOL1	Transport solenoid	DC solenoid	Transports paper. (for clutch)	
6	PSOL1	Paper feed solenoid	DC solenoid	Feeds paper. (For clutch)	
7	PPD2	Paper entry sensor	Photo transmission	Detects paper transport.	AR-D25 only
8	CSS2	Paper empty sensor	Photo transmission	Detects paper in the cassette.	AR-D25 only
9	CASS2	Cassette detection SW	Contact	Detects cassette installation.	AR-D25 only
10	PSOL2	Paper feed solenoid	DC solenoid	Feeds paper.	AR-D25 only
11	PWB	Interface PWB	—	—	

[5] OPERATIONAL DESCRIPTION

1. Paper transport path

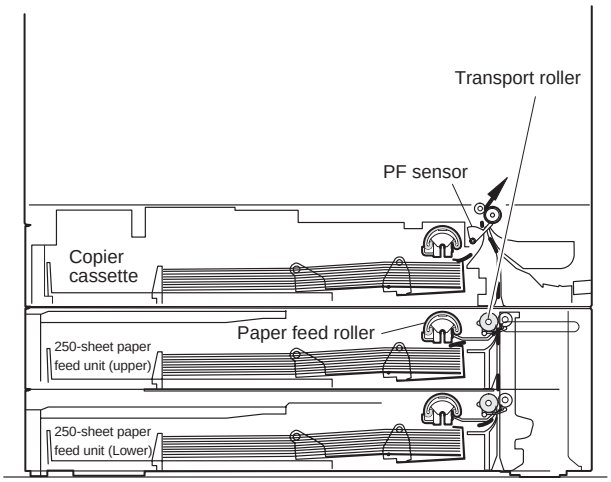

2. Operational descriptions

The operations are controlled by the main body of the copier. the paper feed roller (semi-circular roller) and the transport roller are driven by the gear of the copier.
Paper is separated by the paper feed roller and the separation pawl, and detected by the PF sensor, then transported to the Resist roller by the transport roller.

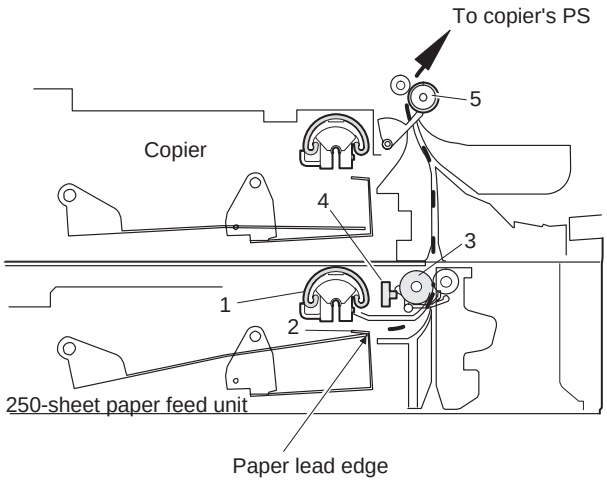

No.	Name	Operation
1	Paper feed roller	Picks up paper.
2	Separation pawl	Prevents against double feed of paper.
3	Transport roller	Transports paper.
4	Paper entry sensor	Detects paper transport.
5	Resist roller	Makes synchronization between the paper lead edge and the image lead edge.

[6] DISASSEMBLY AND ASSEMBLY

1. Rear cover

[AR-D24]

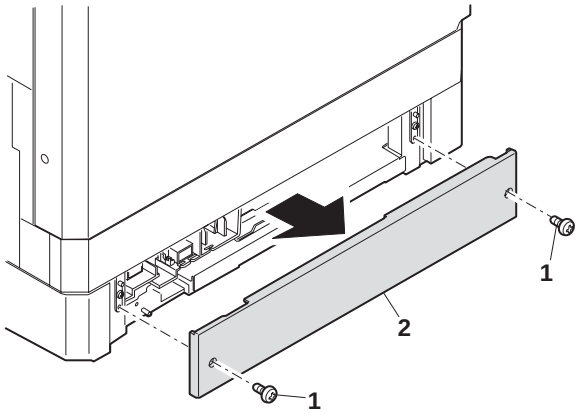

[AR-D25]

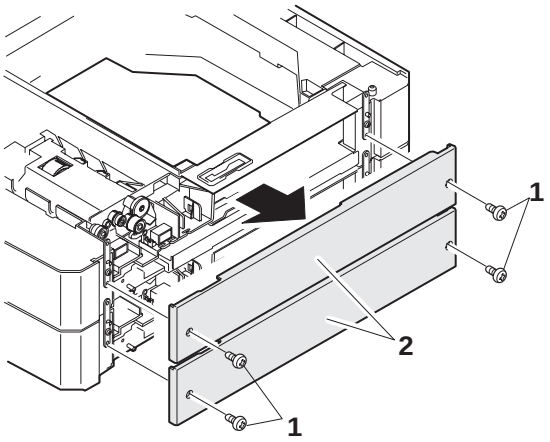

2. Paper feed unit section

[AR-D24]

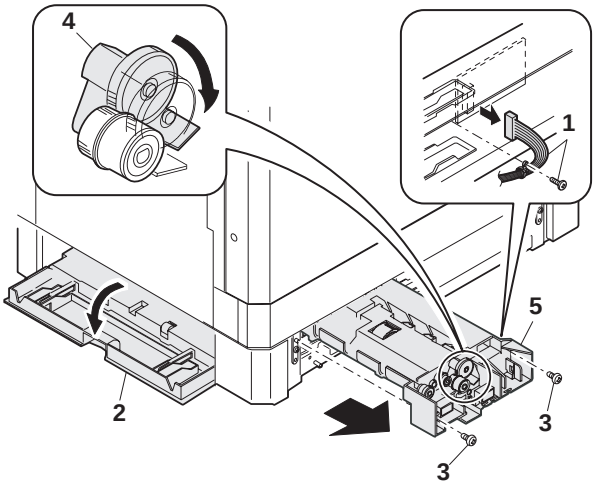

[AR-D25]

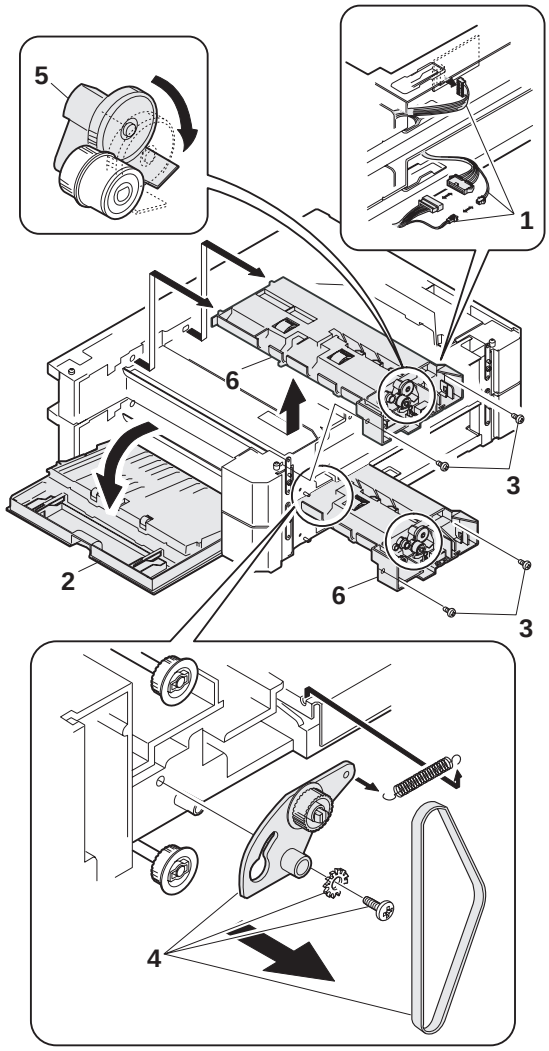

3. Paper feed solenoid, transport solenoid

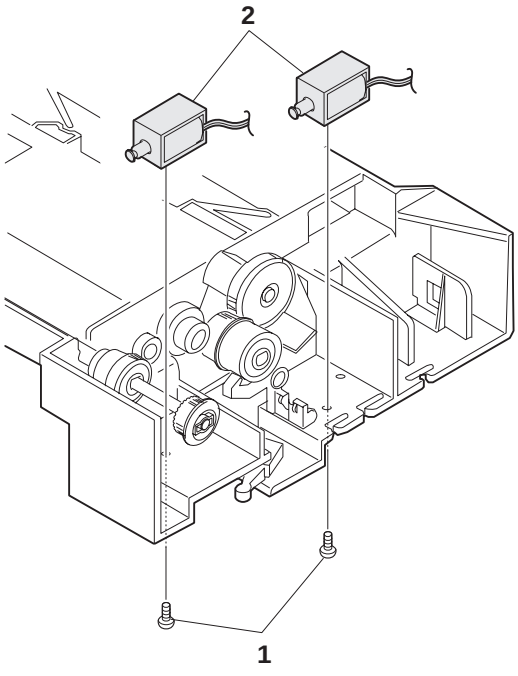

4. Transport roller gear section

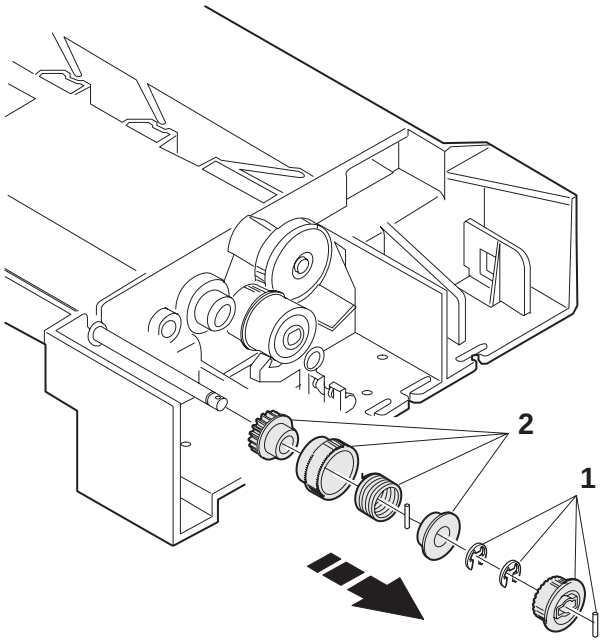

5. Transport roller

[AR-D24]

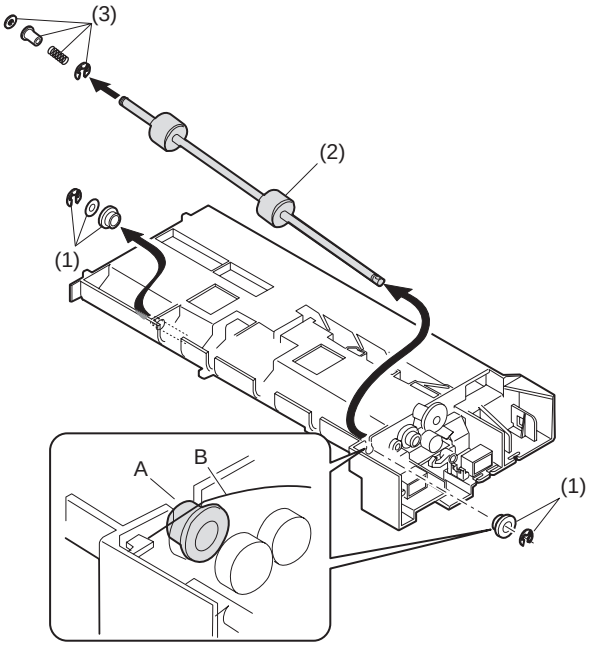

[Only the upper row of AR-D25]

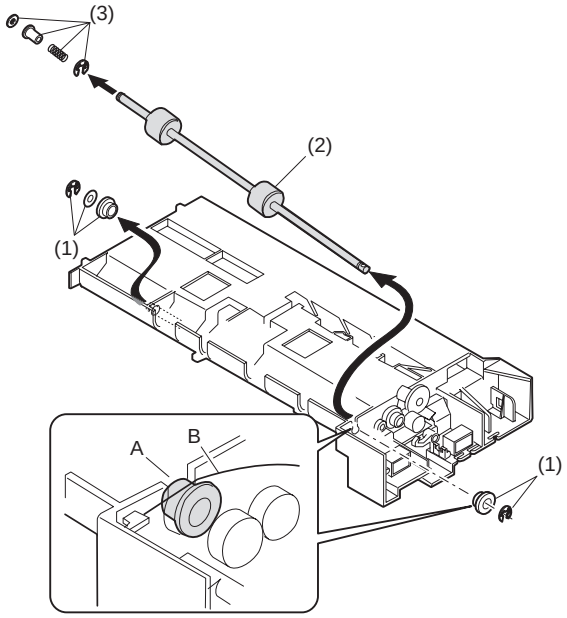

6. Paper feed roller clutch

Note: When asembling the paper feed roller cluch, fit and insert section A (D cut) into the shaft as shown in the figure.

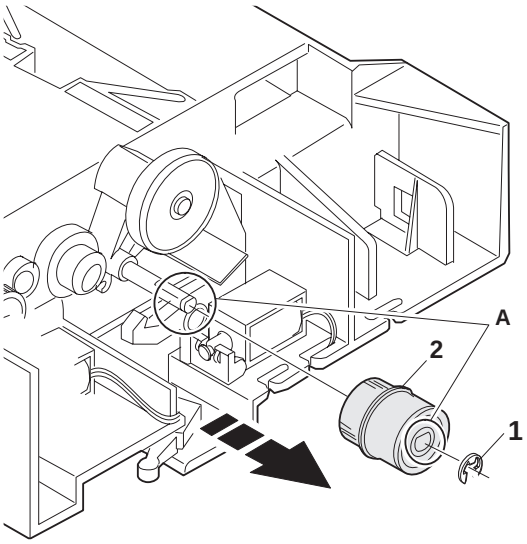

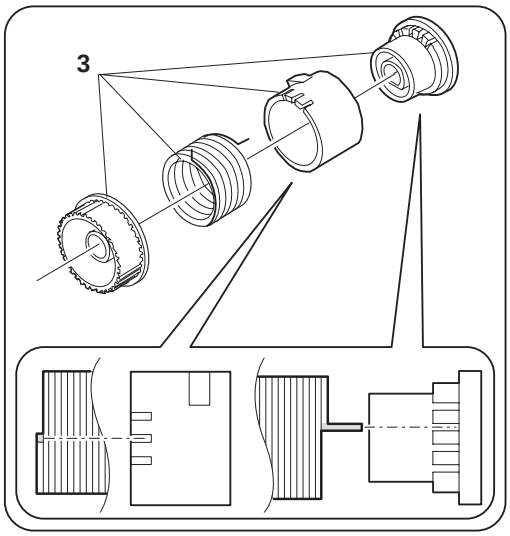

7. Paper feed roller

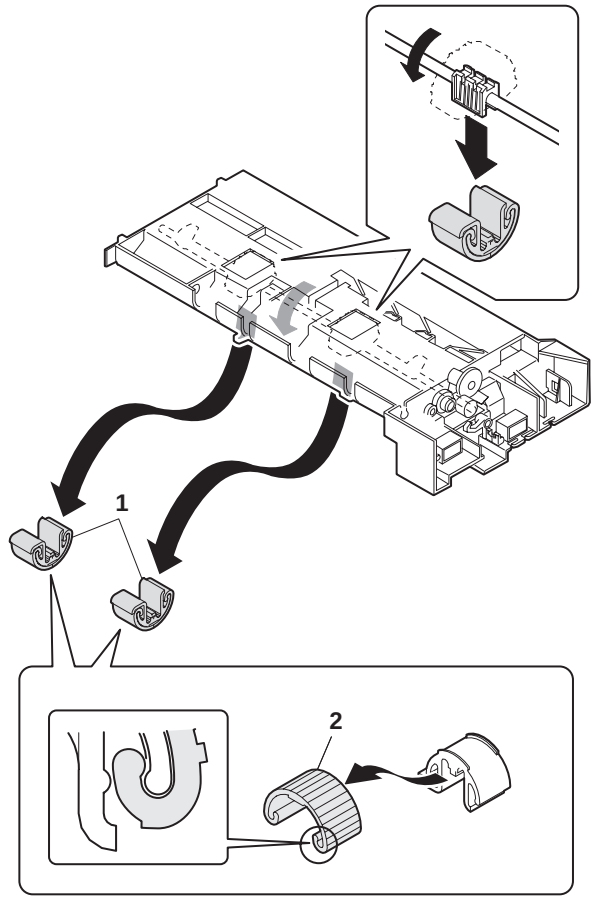

∗Be sure to rotate this part 180 degrees(It turns upward) after attachment.

[7] MAINTENANCE

No.	Name	Work item	When service call	Remark
1	Paper feed roller PA ass'y *1	Cleaning	○	
2	Transport roller	Cleaning	○	

*1 : Replace = 150K

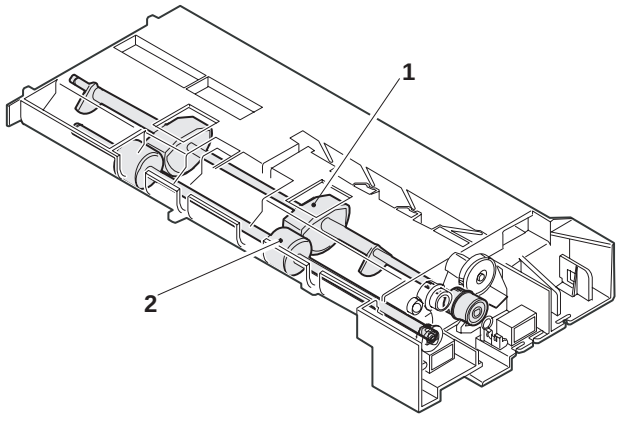

Note: For disassembly and assembly of the paper feed roller and the transport roller, refer to [6] DISASSEMBLY AND ASSEMBLY.

[8] ELECTRICAL SECTION

1. BLOCK DIAGRAM

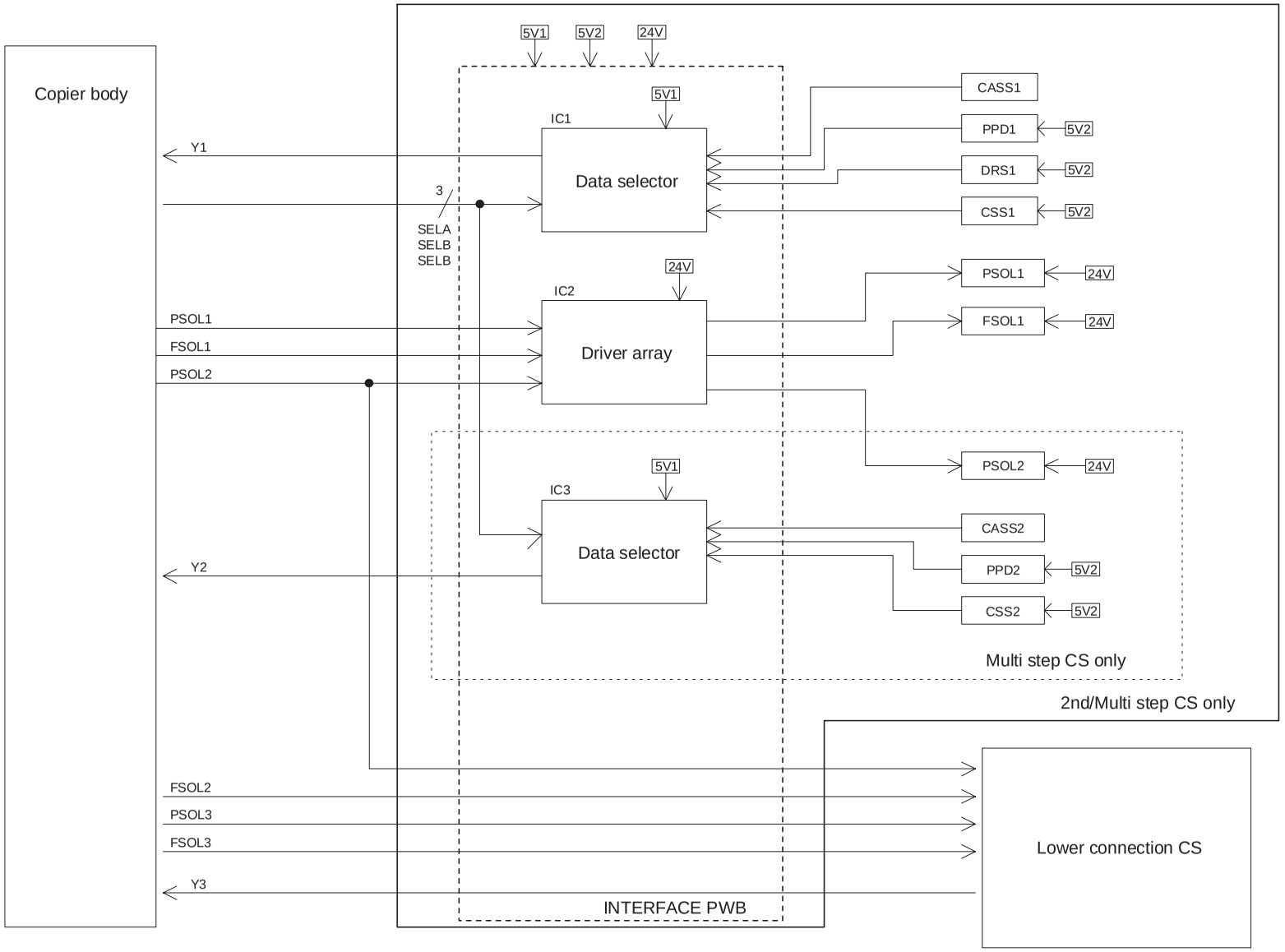

2. ACTUAL WIRING DIAGRM

1. 2nd CS TYPE AR-D24

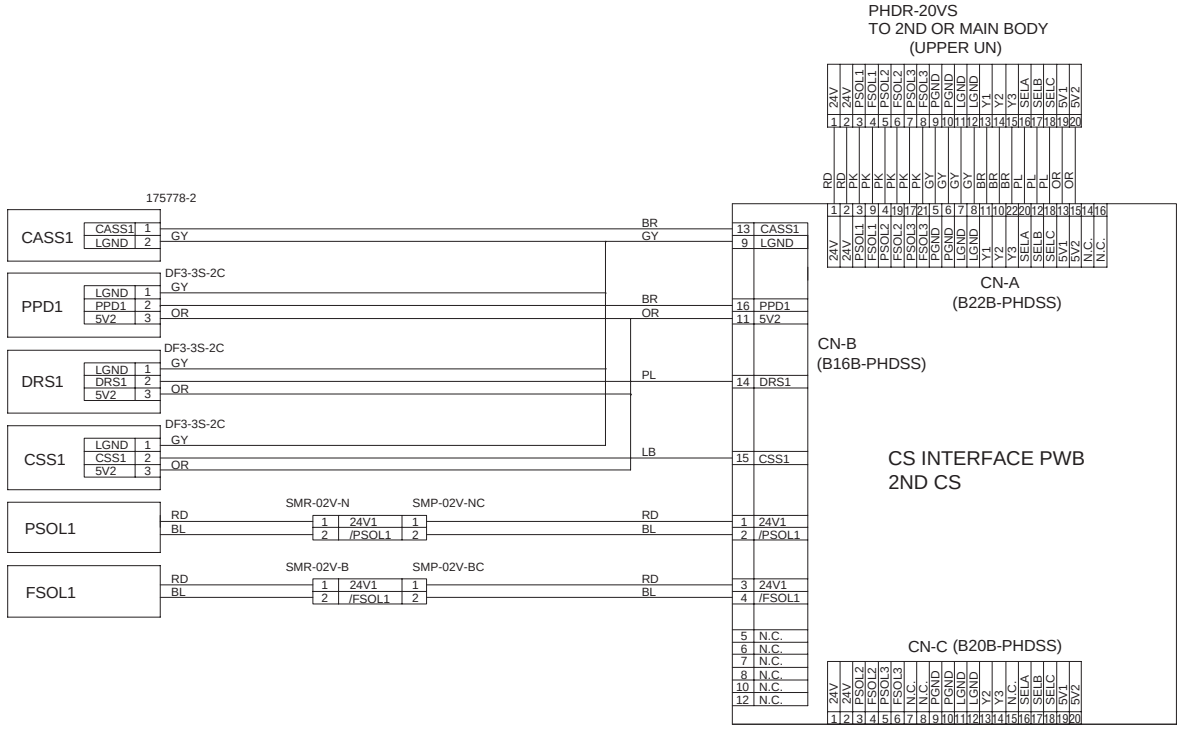

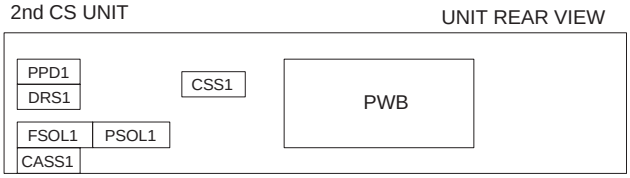

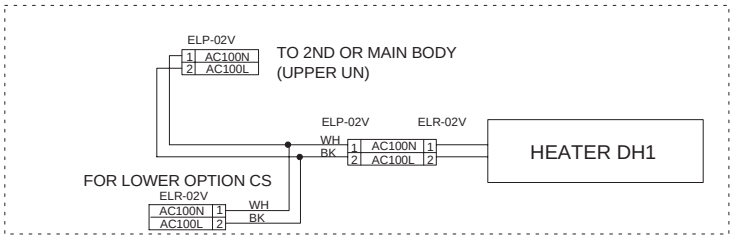

JAPAN ONLY

2. MULTI CS TYPE AR-D25

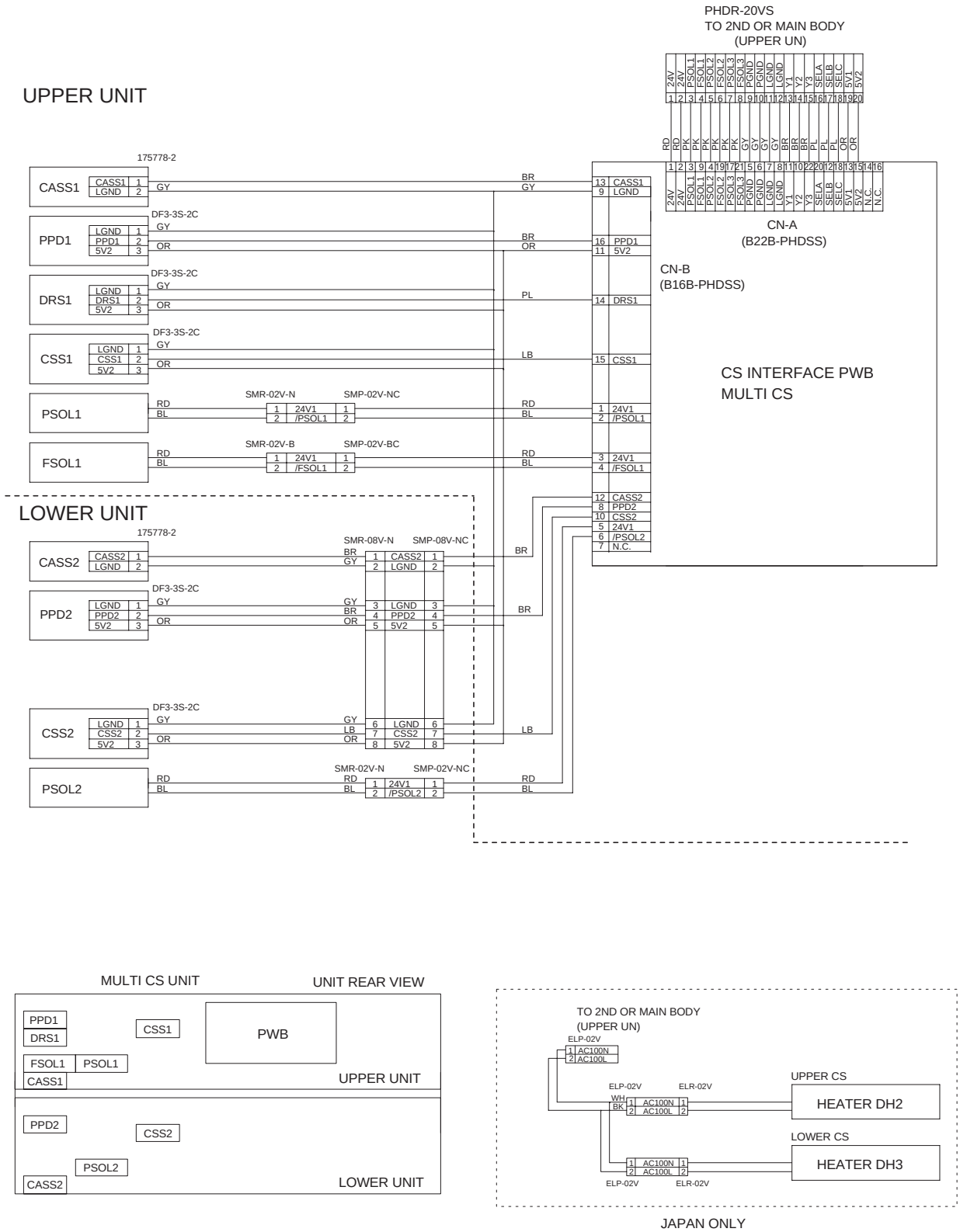

3. INTERFACE PWB CIRCUIT DIAGRAM

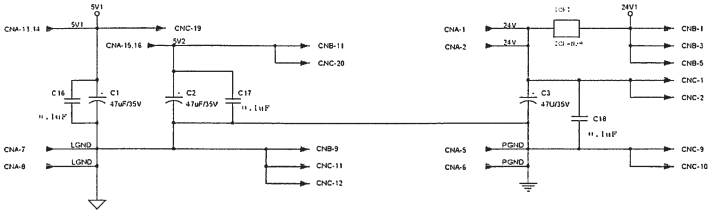

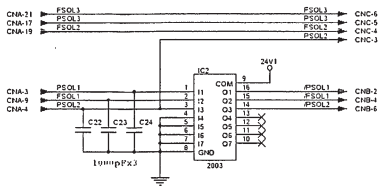

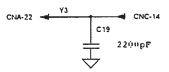

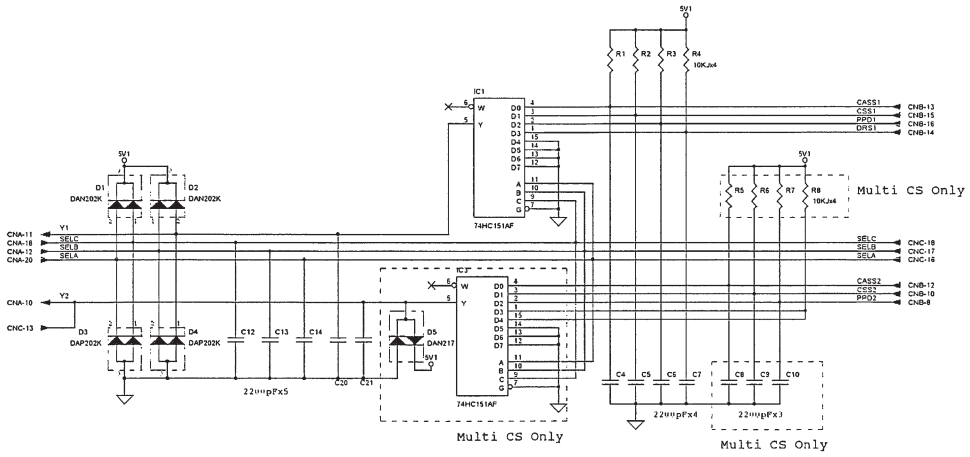

**** NOTES ****

5V1:ALWAYS POWER SUPPLYED
5V2:ENERGY STAR MODE POWER SUPPLY

CASS1:CS UNIT DETECTOR
CSS1:PAPER DETECTOR
PPD1:PAPER PASS DETECTOR
DRS1:DOOR DETECTOR

SENSER MATRIX

SELC	SELB	SELA	Y1	Y2	Y3	
L	L	L	CASS1	CASS2	CASS3	
L	L	H	CSS1	CSS2	CSS3	
L	H	L	PPD1	PPD2	PPD3	
L	H	H	DRS1	DRS2	DRS3	
H	L	L	Low	Low	Low	Multi CS :High
H	L	H	Low	Low	Low	
H	H	L	Low	Low	Low	
H	H	H	Low	Low	Low	

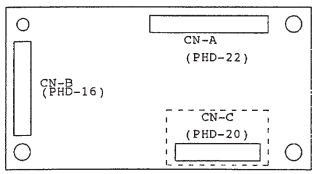

PARTS VIEW

AUTOMATIC RECOGNINITION MATRIX

OPTION	2nd			2nd 2nd			MULTI			2nd MULTI		
	Y1	Y2	Y3	Y1	Y2	Y3	Y1	Y2	Y3	Y1	Y2	Y3
D4	L	H	H	L	L	H	L	H	H	L	L	H
D5	L	H	H	L	L	H	L	L	H	L	L	L

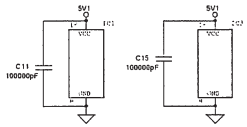

CN-A

B22B-PHDSS

1	24V	2	24V
3	PSOL1	4	PSOL2
5	PGND	6	PGND
7	LGND	8	LGND
9	FSOL1	10	Y2
11	Y1	12	SELB
13	5V1	14	N.C.(5V1)
15	5V2	16	N.C.(5V2)
17	PSOL3	18	SELC
19	FSOL2	20	SELA
21	FSOL3	22	Y3

CN-B

B16B-PHDSS

1	24V1	2	/PSOL1
3	24V1	4	/FSOL1
5	24V1	6	/PSOL2
7	N.C.	8	PPD2
9	LGND	10	CSS2
11	5V2	12	CASS2
13	CASS1	14	DRS1
15	CSS1	16	PPD1

CN-C

B20B-PHDSS

1	24V	2	24V
3	PSOL2	4	FSOL2
5	PSOL3	6	FSOL3
7	N.C.	8	N.C.
9	PGND	10	PGND
11	LGND	12	LGND
13	Y2	14	Y3
15	N.C.	16	SELA
17	SELB	18	SELC
19	5V1	20	5V2

2nd CS Only

4. PARTS ARRANGEMENT

AR-D25 PARTS ARRANGEMENT

[PARTS SURFACE]

CN-B

B16B-PHDSS

1	24V1	2	/PSOL1
3	24V1	4	/FSOL1
5	24V1	6	/PSOL2
7	N.C.	8	PPD2
9	LGND	10	CSS2
11	5V2	12	CASS2
13	CASS1	14	DRS1
15	CSS1	16	PPD1

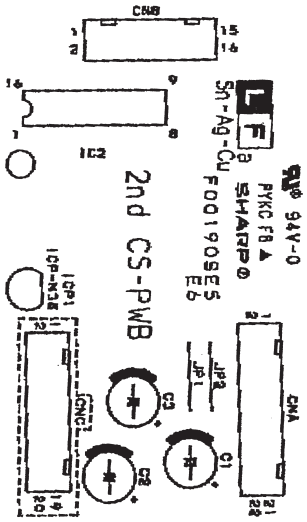

CN-C

B20B-PHDSS

1	24V	2	24V
3	PSOL2	4	FSOL 2
5	PSOL3	6	FSOL 3
7	N.C.	8	N.C.
9	PGND	10	PGND
11	LGND	12	LGND
13	Y2	14	Y3
15	N.C.	16	SELA
17	SELB	18	SELC
19	5V1	20	5V2

CN-A

B22B-PHDSS

1	24V	2	24V
3	PSOL1	4	PSOL2
5	PGND	6	PGND
7	LGND	8	LGND
9	FSOL1	10	Y2
11	Y1	12	SELB
13	5V1	14	N.C.(5V1)
15	5V2	16	N.C.(5V2)
17	PSOL3	18	SELC
19	FSOL2	20	SELA
21	FSOL3	22	Y3

[SOLDER SURFACE]

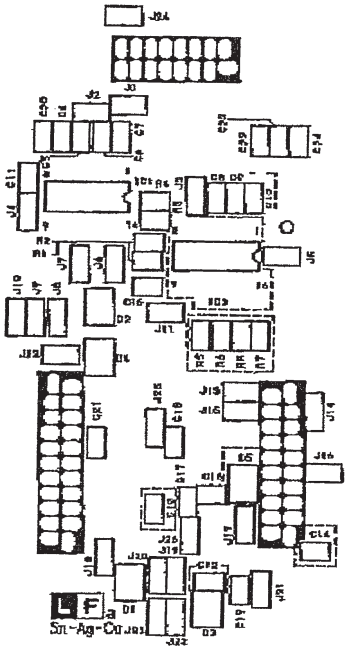

AR-D24 PARTS ARRANGEMENT

[PARTS SURFACE]

CN-B

B16B-PHDSS

1	24V1	2	/PSOL1
3	24V1	4	/FSOL1
5	24V1	6	/PSOL2
7	N.C.	8	PPD2
9	LGND	10	CSS2
11	5V2	12	CASS2
13	CASS1	14	DRS1
15	CSS1	16	PPD1

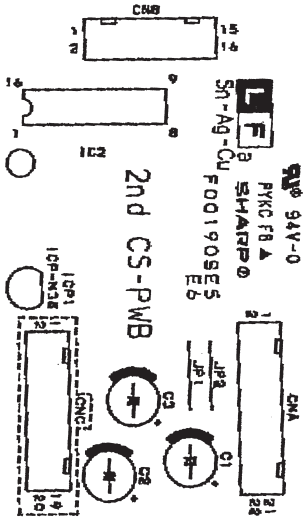

CN-C

B20B-PHDSS

1	24V	2	24V
3	PSOL2	4	FSOL 2
5	PSOL3	6	FSOL 3
7	N.C.	8	N.C.
9	PGND	10	PGND
11	LGND	12	LGND
13	Y2	14	Y3
15	N.C.	16	SELA
17	SELB	18	SELC
19	5V1	20	5V2

CN-A

B22B-PHDSS

1	24V	2	24V
3	PSOL1	4	PSOL2
5	PGND	6	PGND
7	LGND	8	LGND
9	FSOL1	10	Y2
11	Y1	12	SELB
13	5V1	14	N.C.(5V1)
15	5V2	16	N.C.(5V2)
17	PSOL3	18	SELC
19	FSOL2	20	SELA
21	FSOL3	22	Y3

[SOLDER SURFACE]

