SHARP SERVICE MANUAL

CODE : 00ZAREB7//A1E

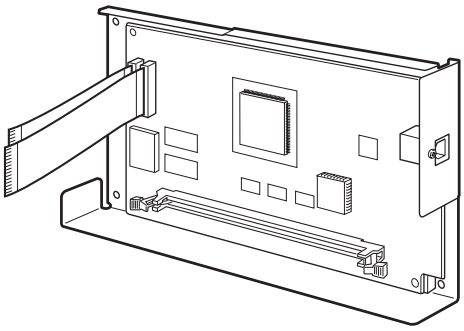

DIGITAL LASER COPIER
PRINTER OPTION
DUAL FUNCTION BOARD

MODEL AR-EB7

CONTENTS

[1] SYSTEM CONFIGURATION 1

[2] SPECIFICATIONS 1

[3] UNPACKING AND INSTALLATION 5

[4] ELECTRICAL SECTION 7

[5] USER PROGRAMS 8

[6] FLASH ROM VERSION UP PROCEDURE 8

[7] CIRCUIT DIAGRAM 13

Parts marked with "⚠" are important for maintaining the safety of the set. Be sure to replace these parts with specified ones for maintaining the safety and performance of the set.

SHARP CORPORATION

This document has been published to be used for after sales service only.
The contents are subject to change without notice.

CONTENTS

[1] SYSTEM CONFIGURATION 1

[2] SPECIFICATIONS 1

1. “Sharp Printer Language with Compression (SPLC)” Printer mode 1

2. IMC board functions 4

[3] UNPACKING AND INSTALLATION 5

1. Unpacking 5

2. Parts included 5

3. Installation procedure 5

4. Installation of additional memory (After installation, proceed to step 5.) 6

[4] ELECTRICAL SECTION 7

1. Block diagram 7

2. Pin arrangement 7

[5] USER PROGRAMS 8

1. List 8

[6] FLASH ROM VERSION UP PROCEDURE 8

1. Preparation 8

2. Initialization (Procedures for setting the serial number) 8

3. Download procedure 9

4. Installation procedure 10

[7] CIRCUIT DIAGRAM 13

[1] SYSTEM CONFIGURATION

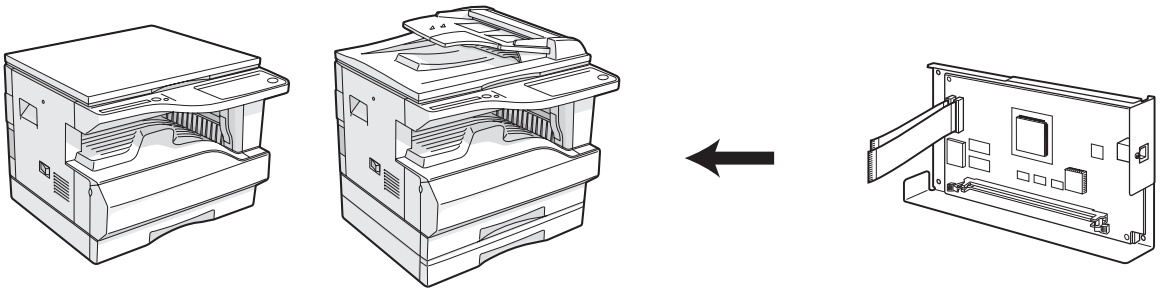

(AR-EB7)

[2] SPECIFICATIONS

1. "Sharp Printer Language with Compression (SPLC)" Printer mode

A. Basic specification

Item	Detail
Print Speed	10ppm (600dpi) (With the AR-EB7 installed) AR-160M (16ppm)/AR-200M (20ppm)
Data resolution	300/600dpi
Input tray	4 Multi size tray 1 Multi Bypass tray (Depending on conditions of the machine and option installation.)
Option memory	+16MB (With the AR-EB7 installed) 128/256/512MB can be added to the AR-EB7.
Printer driver	Two drivers for the case when the AR-EB7 is installed and when it is not are automatically installed by plug & play.
Manual (Online manual)	Standard
Platform	IBM PC/AT (Include compatible machine)
Support OS (Printer Driver)	Windows 95/98/Me Windows NT4.0 Workstation (SP6 or later) Windows 2000 Professional Windows XP Home/Professional Edition

B. Printer driver specification

(1) System

Machine	OS	GDI
IBM PC/AT (Include compatible machine)	Windows 95/98/Me Windows NT4.0 Workstation (SP6 or later) Windows 2000 Professional Windows XP Home/Professional Edition	Yes

(2) Printing function specification

	Function	GDI Driver
Main	Copies	1-999
	Collate	Collate Uncollate
	Document Style	1-sided 2-sided (Book) 2-sided (Tablet)
	N-up printing	2/4
	N-up Order	Z
	N-up Border	Yes/No
	Duplex	1-sided 2-sided (Book) 2-sided (Tablet)
	Binding Edge	Yes/No
	Booklet	Possible
	Booklet Binding Edge	Yes/No
Paper	Paper Size	A3/B4/A4/B5/A5/B6/A6/ Ledger(11x17)/Legal (8.5 x 14)/Foolscap (8.5 x 13)/ Letter (8.5 x 11)/Invoice (5.5 x 8.5)/Folio/Executive/ COM-10/DL/C5/8K/16K/ Custom
	Custom Paper Size	1 size 100 - 297mm(W) 148 - 431.8mm(H)
	Paper Selection	• Auto Select • Bypass • Tray 1/2
	Fit to Page	Yes/No
	Image Orientation	Portrait/Landscape
Advanced	Print Quality	Normal Draft Photo (without Win9x, Me)
	Image Adjustment	Yes/No
	Brightness	0 to 100
	Contrast	0 to 100
	2 Gradation print	Yes/No
Water-marks	Watermark	(None)/TOP SECRET/ CONFIDENTIAL/DRAFT/ ORIGINAL/COPY
	User setting	Add/Update/Delete
	Position	Center X: ±50 Y: ±50
	Size	6 to 300
	Angle	±90
	Gray Scale	0 to 255
	Edit Font	Yes
	On first page only	Yes/No

(3) Scanner function specification

Type	Flat bed color scanner
Scan system	Document table/document feed unit
Light source	White CCFL
Resolution	Basic 600 x 1200dpi Set range: 50 ~ 9600dpi
Document	Sheet/Book
Effective scan range	OC/SPF: Approx.297(V) x 431(H)
Scan speed	OC/SPF: 2.8mm sec/line (Color)
Input data	1bit or 12bit
Output data	1bit or 8bit
Scan color	Black and white binaryGray scaleFull color
Protocol	TWAIN/WIA (XP only)/STI
Interface	USB1.1 USB2.0 (It can be used according to conditions.) (Option support: High speed mode) (Supported when E-sort is installed)
Scanner utility	Sharp Desk/Button Manager
Drop-out color	Provided
Scanner button	Provided (6)
Duplex scan	Provided
Supported OS	Windows98/ME/2000/XP
Void area	Lead edge/rear edge (2.5mm) on the driver side Left/right: 3.0mm
WHQL support	Yes
Memory storage method	JPEG-compression by hardware.

(4) System requirement

Computer	IBM PC/AT (Include compatible machine)
Operating system	Windows 95/98/Me Windows NT 4.0 Workstation (SP5 or later) Windows 2000 Professional Windows XP Home/Professional Edition

Note: Hardware requirements such as CPU and RAM for your operating system must be satisfied.

(5) Print quality

Resolution	600dpi	Print quality is selected from Normal*/Draft/Photo.
2 Gradation print	On	2-Gradation print function is ON.
	Off*	2-Gradation print function is OF.

*Default

(6) Print area

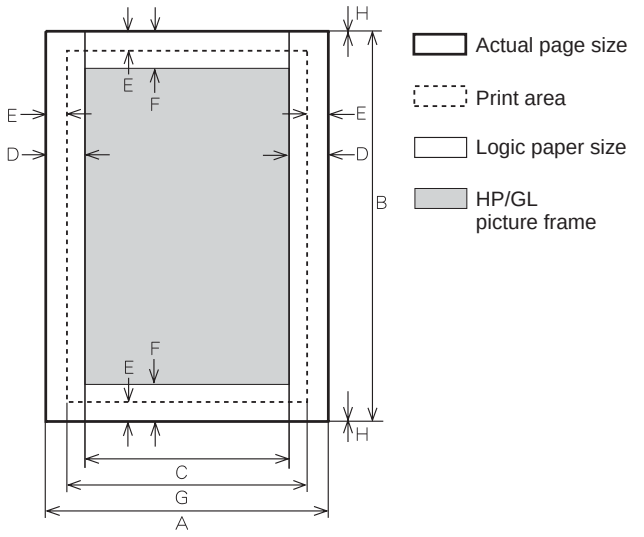

Paper Size	A	B	C	D	E	F	G	H
A3	7014	9920	6730	142	100	300	6814	0
B4	6070	8597	5786	142	100	300	5870	0
A4	4960	7014	4676	142	100	300	4760	0
B5	4298	6070	5770	142	100	300	4098	0
A5	3508	4960	3224	142	100	300	3308	0
Ledger	6600	10200	6300	150	100	300	6400	0
Legal	5100	8400	4800	150	100	300	4900	0
Letter	5100	6600	4800	150	100	300	4900	0
Invoice	3300	5100	3000	150	100	300	3100	0
Foolscap	5100	7800	4800	150	100	300	4900	0
Folio	4980	7800	4680	150	100	300	4780	0
Executive	4350	6300	4050	150	100	300	4150	0
COM-10	2474	5700	2174	150	100	300	2274	0
C5	3826	5408	3542	142	100	300	3626	0
DL	2598	5196	2314	142	100	300	2398	0

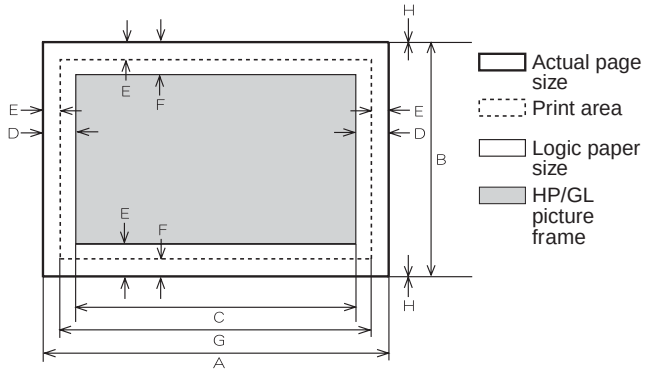

Paper Size	A	B	C	D	E	F	G	H
A3	9920	7014	9684	118	100	300	9720	0
B4	8597	6070	8361	118	100	300	8397	0
A4	7014	4960	6778	118	100	300	6814	0
B5	6070	4298	5830	118	100	300	5870	0
A5	4960	3508	4720	118	100	300	4760	0
Ledger	8400	5100	8160	120	100	300	8200	0
Legal	8400	5100	8160	120	100	300	8200	0
Letter	6600	5100	6360	120	100	300	6400	0
Invoice	5100	3300	2860	120	100	300	4900	0
Foolscap	7800	5100	7560	120	100	300	7600	0
Folio	7800	4980	7560	120	100	300	7600	0
Executive	6300	4350	6060	120	100	300	6100	0
COM-10	5700	2474	3460	120	100	300	5500	0
C5	5408	3826	5172	118	100	300	5208	0
DL	5196	2598	4960	118	100	300	4996	0

∗Top margin

The set value is received from the digital copier, and data are made according to the set value.

∗Left margin

Since the paper size sensor is not set, the digital copier cannot recognize the size and direction of paper which is actually inserted.

Therefore, the left margin is set according to the paper size specified in the print data sent from the computer, and print process is performed.

If the computer does not specify the paper size, or in the case of the custom size, the left margin is set according to the default paper size.

(7) Print reference

This machine employs the center reference system.

Since the digital copier is not provided with the tray size detection feature, formatting and center distribution are performed not by the actual paper size but by the paper size specified by the computer.

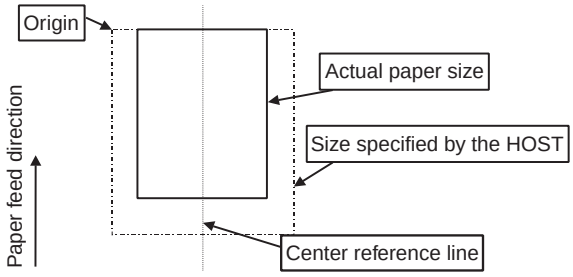

D. Interface

Interface	USB 1.1 (Standard)
	USB 2.0 High speed (With the AR-EB7 installed))

2. IMC2 board functions

∗Sort function (Electronic sort)	100 sheets (max. 765 sheets) <copy mode> with A4 standard documents at 600dpi. Offset paper exit by the shifter function
∗Group function	100 sheets (max. 765 sheets) <copy mode> with A4 standard documents at 600dpi. Offset paper exit by the shifter function
Rotation copy	If there is paper of the same size as the document, the image is rotated to copy even though the paper is set in the different direction from the document direction.
2 in 1, 4 in 1	Copies of 2 pages or 4 pages are integrated into one surface. Divided by solid lines, (Selectable by the user program.)
Edge erase	Images surrounding the document are erased when copying. (Adjustable in 5 ~ 20mm by the user program.)
Center erase	The image at the center is erased when copying. (Adjustable in 5 ~ 20mm by the user program.)
Margin shift	Binding margin is made at the left edge of the set documents. (Adjustable in 5 ~ 20mm by the user program.)
Memory for electronic sort	16MB
∗Memory read capacity	600dpi: 100 sheets (Max. 765 sheets) <copy mode> of A4 standard documents (Sharp A4 standard document)
Memory expansion	DIMM memory slot x 1, max. 256MB x 1 slot + 16MB (Max. 272MB in total)
USB2.0	Standard provision of E-sort (It can be used according to conditions.)
SPLC (JBIG-GDI)	Supported when E-sort is installed.
ROPM	Supported when E-sort is installed.

Caution: The number of sheets for the columns marked with "∗" is calculated supposing that the same quantity is assigned to the ROPM memory and the copy expansion memory.

[3] UNPACKING AND INSTALLATION

1. Unpacking

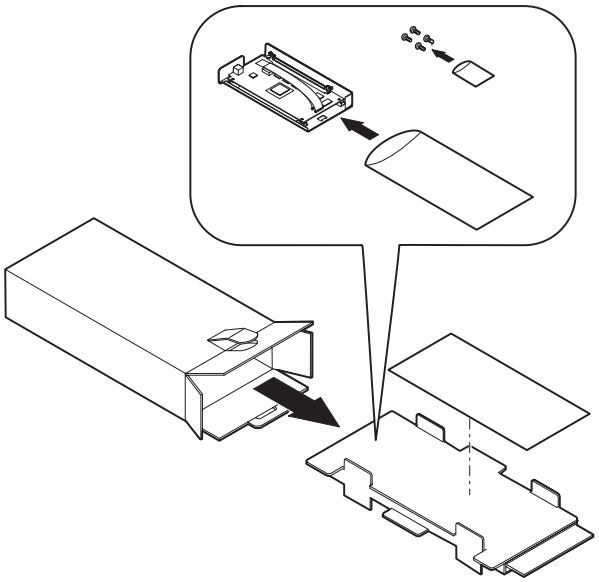

<Before installation>

For improvement of workability, any part of the description in this manual may be modified without prior notice. In this case, refer to the service manual.

2. Parts included

- IMC2 PWB (with frame)

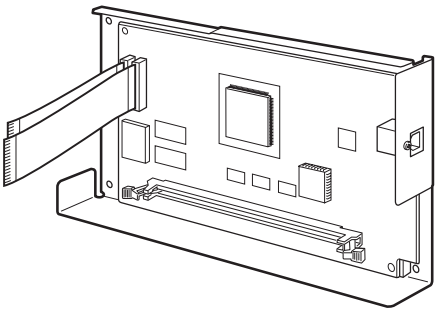

- screw (golden) M3 x 6: 4pcs.



- Installation manual: 1 volume

3. Installation procedure

Turn the main switch of the copier to the "OFF" position and then remove the power plug of the copier from the power supply outlet.

1) Remove the rear cover.

   Remove the screw, push the portion indicated by the arrow to unlock the rear cover, and slide the cover to the right to remove it.

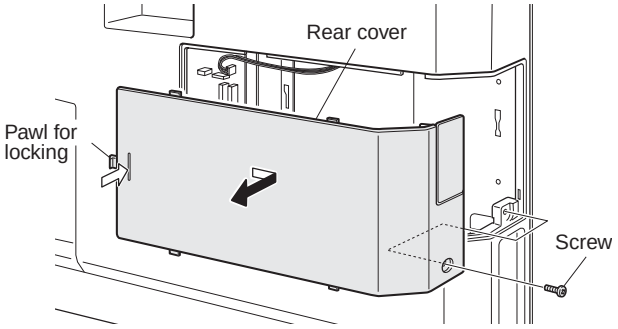

2) Cut out the cut-out portion of the rear cover.

   Cut out the cut-out portion with nippers or the like.
   At this time, be careful about the orientation of the nippers so that the cut plane of the rear cover is flat.

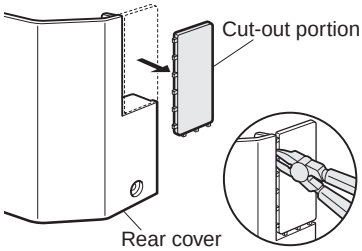

3) Attach the IMC2 PWB.

   Fit the two pawls on the rear surface of the IMC2 PWB frame to the mounting portions of the copier and secure the PWB with the four supplied golden screws M3 x 6.

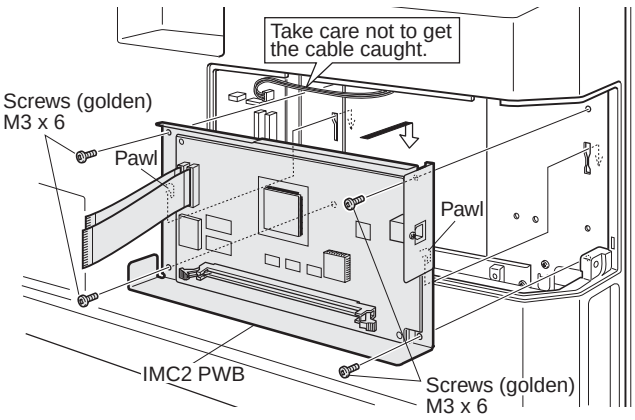

4) Connect the IMC2 PWB to the MCU PWB of the copier.

Connect the flat cables of the IMC2 PWB to the connectors of the MCU PWB of the copier so that the shorter cable comes inside and the longer cable comes outside as shown in the illustration.
Be careful about the orientation of the flat cable insertion and check that both ends of each cable are securely inserted into the connector. (The terminal surface of each flat cable must have contact with the connector terminals.)

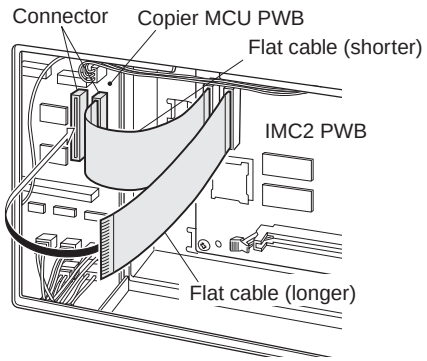

5) Attach the rear cover.

Fit the four pawls of the rear cover to the rear cabinet, slide the cover to the left until it is locked, and then secure the cover with the screw.

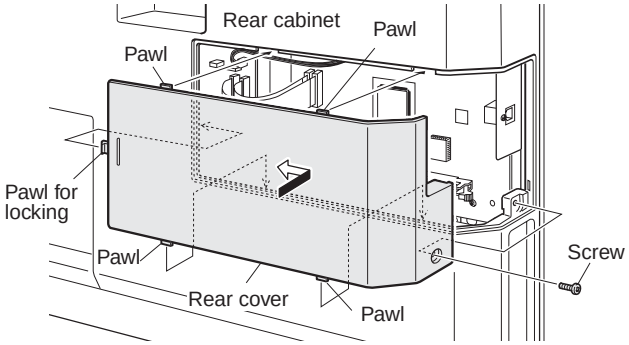

Insert the power plug of the copier into the power supply outlet and turn on the power switch. Then, carry out the following procedure.

6) Check the IMC2 PWB.

Press the SORT/GROUP key on the operation panel to check that the SORT mode indicator lights up.

7) Check printing.

For installation of the driver software on the computer, see the operation manual supplied with the copier.
Connect the USB cable, carry out printing from the computer, and check that printing can be performed normally.

4. Installation of additional memory (After installation, proceed to step 5.)

① Open the two locking clips of the socket.

② Insert the memory matching the orientation of its notches.

③ Close the locking clips of the socket.

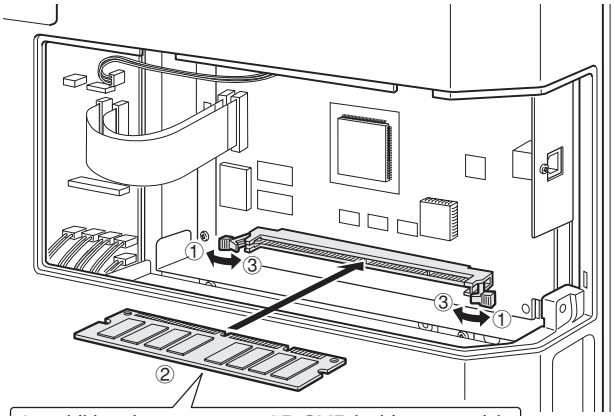

[4] ELECTRICAL SECTION

The OA982 board mounted on the IMC2 board inputs and outputs image data to and from the MCU board, controls SDRAM memory, and communicates with USB2.0 devices.
SDRAM memory is used to store programs and image data as well as for a working area.
USB 2.0 devices communicate with a PC through a USB2.0 cable at a rate of 480 Mbps.
SDRAM memory can be expanded by using 1BANK SDRAM DIMM (AR-SM5).
Communications between the OA982 and the AR-SM5 is held using an ASIC-controlled BUFFER IC (74VCX16244/16245).

1. Block diagram

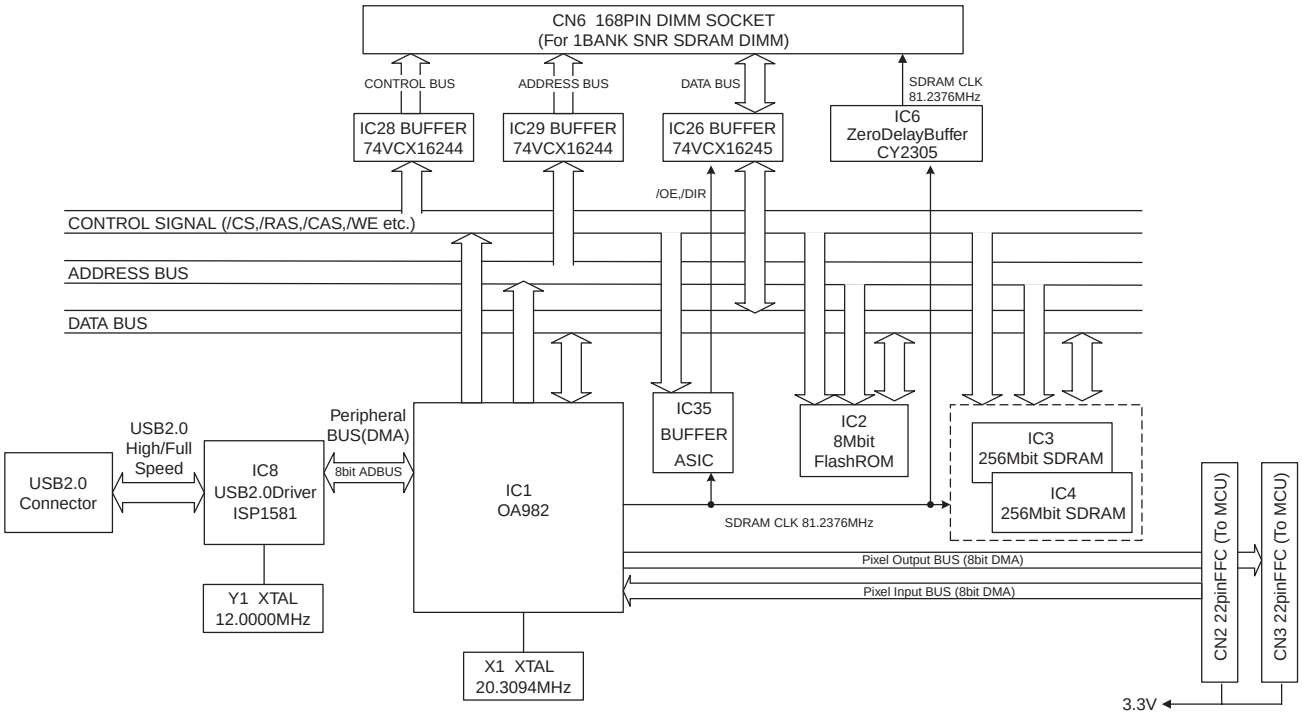

2. Pin arrangement

The table below shows connector pin arrangement between the MCU to IMC2 PWB.

• IMC2 side
Interface-1 CN2 (22FE-BT-VK-N)

Pin No.	Signal name	Processing of connection Pattern = “direct”	Pin No.	Signal name	Processing of connection Pattern = “direct”
1	DGND	(MCU → IMC)	12	PI_DATA2	MCU → IMC
2	ESCMD	IMC → MCU	13	PI_DATA1	MCU → IMC
3	/ESCRDY	MCU → IMC	14	PI_DATA0	MCU → IMC
4	PI_WR	MCU → IMC	15	/HSYNC	MCU → IMC
5	PI_ACK	MCU → IMC	16	/ESPAGE	IMC → MCU
6	PI_REQ	IMC → MCU	17	/PRLINE	MCU → IMC
7	PI_DATA7	MCU → IMC	18	/RESET	MCU → IMC
8	PI_DATA6	MCU → IMC	19	3.3V	(MCU → IMC)
9	PI_DATA5	MCU → IMC	20	3.3V	(MCU → IMC)
10	PI_DATA4	MCU → IMC	21	DGND	(MCU → IMC)
11	PI_DATA3	MCU → IMC	22	DGND	(MCU → IMC)

Interface-2 CN3 (22FE-BT-VK-N)

Pin No.	Signal name	Processing of connection Pattern = “direct”	Pin No.	Signal name	Processing of connection Pattern = “direct”
1	DGND	(MCU → IMC)	12	PO_DATA2	IMC → MCU
2	ESSTS	MCU → IMC	13	PO_DATA1	IMC → MCU
3	/ESSRDY	IMC → MCU	14	PO_DATA0	IMC → MCU
4	(PO_CS)	NOT USE	15	/READY	MCU → IMC
5	PO_ACK	IMC → MCU	16	/SCLINE	MCU → IMC
6	PO_REQ	MCU → IMC	17	/ESDET	IMC (GND) → MCU
7	PO_DATA7	IMC → MCU	18	5V	(MCU → IMC)
8	PO_DATA6	IMC → MCU	19	3.3V	(MCU → IMC)
9	PO_DATA5	IMC → MCU	20	3.3V	(MCU → IMC)
10	PO_DATA4	IMC → MCU	21	DGND	(MCU → IMC)
11	PO_DATA3	IMC → MCU	22	DGND	(MCU → IMC)

[5] USER PROGRAMS

1. List

With the AR-EB7, the following user settings can be made:

[6] 1in1/4in1 solid- and broken-line frame setting

[7] Rotation copy function setting

[16] Adjustment of frame deletion/center deletion width

[17] Change in 2in1 combination

[18] Change in 4in1 combination

[21] Selection of binding margin position

[22] Adjustment of binding margin

[24] Allocation of memory capacity to printer

[33] Selection of USB2.0 mode

[6] FLASH ROM VERSION UP PROCEDURE

1. Preparation

Write the download data (the file with the extension dwl) to the main body.

Necessary files for download

- Maintenance.exe (Maintenance software)
- ProcPegasus.mdl
- ProcPegasus.ini
- ProcPegasus.fmt
- Pegasus.inf
- Usbscan.sys
- Download file:***.dwl

Note:

- The Download file(***.dwl) and the like that are to be downloaded should be copied, in advance, into folders that have a maintenance program.
- When creating a folder for a maintenance tool in the PC, be sure that no lengthy folder name is included in the path.

(Example)

Incorrect c:\Pegasus Download Tool

Correct c:\Pegasus\Downtool

2. Initialization (Procedures for setting the serial number)

Set the serial number on the side of the PC for download. It is not necessary to set the serial number again at a later time, even if software is restarted.

1) PC side:
Start the "Maintenance.exe" and select the model icon of main body.
(Connection with the main body is not necessary for setting the serial number only. However, for the set serial number to be reflected into the main body, a connection should be made between the PC and the main body in download mode for download.)

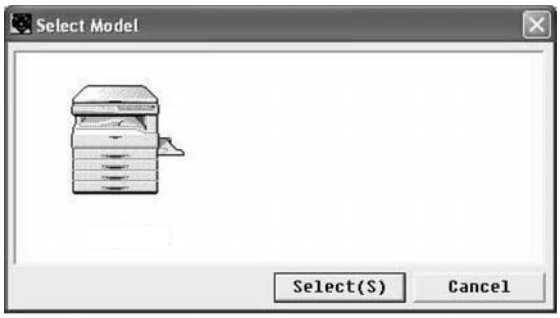

2) Select the "Option" in the menu bar and click on the "Serial Number Setting".

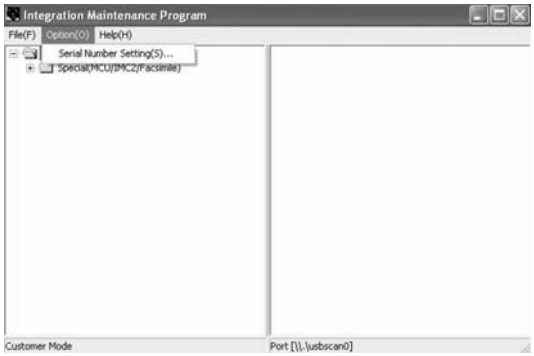

3) Make the setting of the serial number following the instructions below.

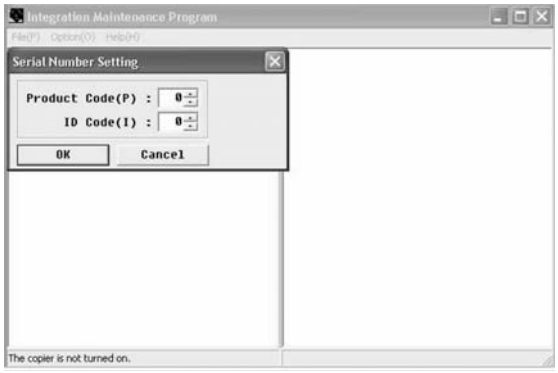

Place of production code (P): Code number assigned on the basis of a production place. (0 - 99)

Enter the number three "3" for service.

ID cord (I): Code number assigned by PC. (0 - 99)
If there is more than one computer that uses "MaintenanceTool.exe", then assign a different code number to each PC.

When the setting is completed, push down the button "OK".

4) The procedures for the change of the serial number has been completed.

3. Download procedure

1) Main body side:
Executable by performing the Service Simulation No. 49-01 (Flash Rom program-writing mode).
(A word "d" appears on the LCD to denote the download mode status.)

2) Connect the PC and the main body with the download cable (USB cable).
(Be sure to use a USB cable for connection. USB2.0 of the AR-EB7 is not applicable.)

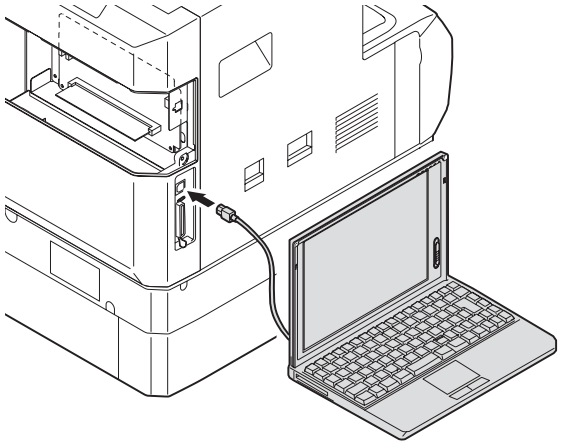

3) PC side:
Boot the maintenance program. Select the model icon of main body.

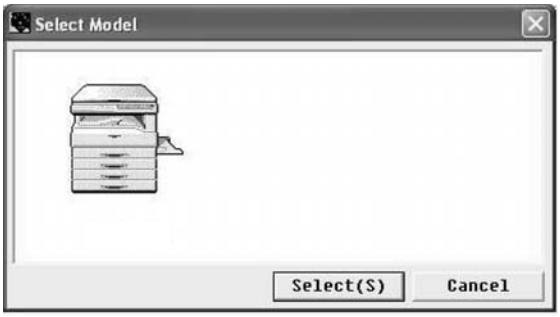

4) PC side:
Confirm that the "Simulation Command List" tree is displayed on the maintenance program.

5) PC side:
When the message "the main body has not got started running" is displayed on the lowest area of the figure below after the "maintenance program" is started up, select the "File" and then "Reconnect" in the menu bar.

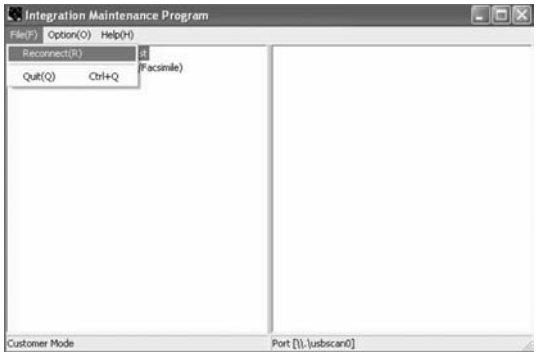

6) PC side:
Confirm a tree is displayed under the "Special (MCU/IMC2/FAX)" on the maintenance program". (If no tree is displayed, confirm that the USB is connected and select the "Reconnect" (the above 5) again.)



7) PC side:
Double click "Special (MCU/MCU2/FAX)" in the main tree item to develop the sub tree items, and double click "DWL Download" in the sub tree items.

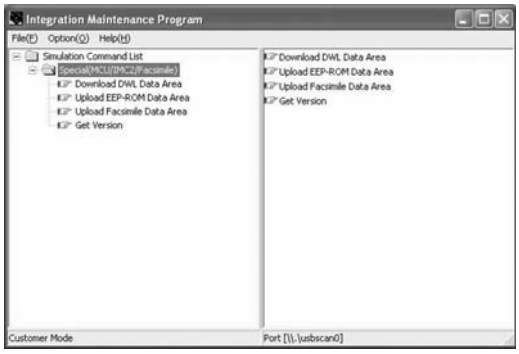

8) PC side:
Specify the download file (*.dwl).

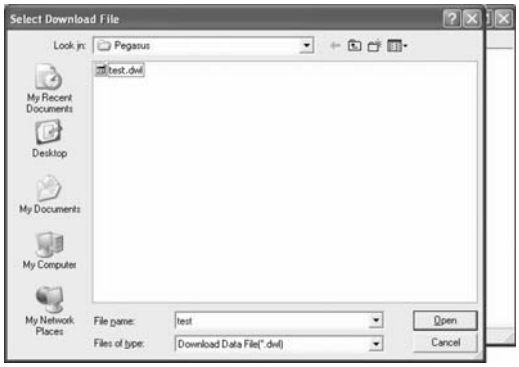

9) PC side:
The download file is specified, download is automatically performed.
The "Automatic paper selection" lamp and "Start" lamp will blink approximately 15 seconds after the download file is specified.

10) PC side:
When the message below is displayed, download is completed.
Completion message: DOWNLOAD COMPLETED

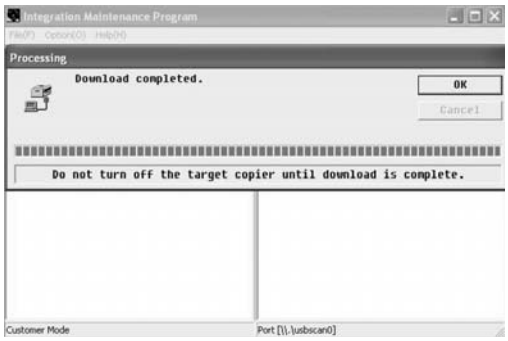

Note (Important):

- Be sure that the power is not turned off and the USB cable is not removed until the word "OFF" appears.

11) Main body side:
Wait until the word "OFF" appears on the operation panel. The appearance of "OFF" indicates the completion of the download (writing into ROM).
Turn the power off.

12) After-process: Terminate the maintenance program, and turn on the power of the main body.

After the download (data transmission) has been completed, exit the software program. The USB cable can be removed at this point.

Note:

- For making a second connection with another machine, select the "File" and "Reconnect" in the menu bar on the maintenance program at the time of the USB being re-connected. Repeat the previous procedures from the above 5).

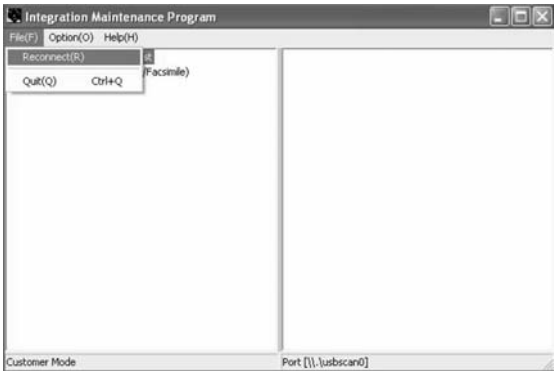

∗Forbidden actions while downloading (Important)

Failure in the download concerned may not allow you to conduct the subsequent download procedures. Added care should be taken to avoid having the situation below arise while downloading.

- Switching off the main body.
- Disconnecting the download cable (USB cable).

4. Installation procedure

A. USB joint maintenance program installation

The driver is installed by plug and play.

B. Installation procedure on Windows XP

1) Main body side:
Executable by performing the Service Simulation No. 49-01 (Flash Rom program-writing mode).
(A word "d" appears on the LCD to denote the download mode status.)

2) Connect the machine and the PC with a USB cable.
(Be sure to use a USB cable for connection. USB2.0 of the AR-EB7 is not applicable.)

3) Check that the following display is shown.
Select "Install from a list or the specific location" and press the NEXT button.



4) Select "Include this location in the serch". If the retrieval area does not include the folder which includes the maintenance tool driver (Pegasus.inf), select "Browse".
If the folder path is properly shown, press the NEXT button to go to procedure 7).



5) Select the folder which includes the maintenance tool driver (Pegasus.inf), and press the OK button.
(When the driver is included in the "C:\Pegasus" folder:)

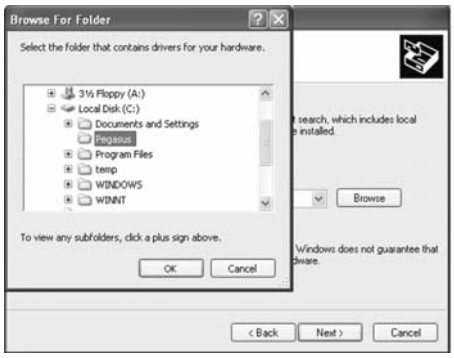

6) Check that the path to the folder which includes the maintenance tool driver (Pegasus.inf) is shown, and press the NEXT button.



7) Check that the following display is shown. Press the Continue Anyway button.



8) When installation is completed, the following display is shown. Press the Finish button.



The installation procedure (on Windows XP) is completed with the above operation.

C. Installation procedure on Windows 2000

1) Main body side:
Executable by performing the Service Simulation No. 49-01 (Flash Rom program-writing mode).
(A word "d" appears on the LCD to denote the download mode status.)
2) Connect the machine and the PC with a USB cable.
(Be sure to use a USB cable for connection. USB2.0 of the AR-EB7 is not applicable.)
3) Check that the new hardware search wizard is shown. Press the NEXT button.



4) Select "Serch for a suitable driver for my device" and press the NEXT button.



5) Select "Specify a location" and press the NEXT button.



6) Press the "Browse" button. Specify the folder which includes the maintenance tool driver (Pegasus.inf)

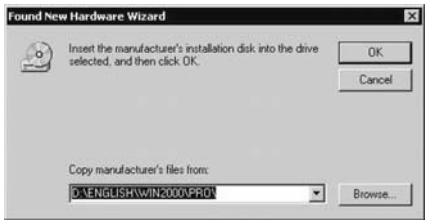

7) Specify the folder which includes the maintenance tool driver (Pegasus.inf), and press the OPEN button.
Check that the path to the folder which includes the maintenance tool driver (Pegasus.inf) is properly displayed, and press the OK button.
(When the maintenance tool driver is included in the folder of "D:\Pegasus")

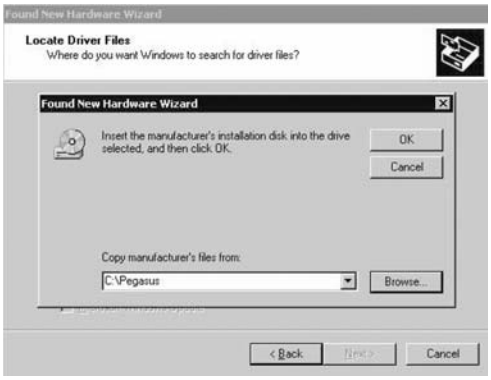

8) Press the NEXT button, and installation is started.



9) When installation is completed, the following display is shown.
Press the Finish button.



The installation procedure of the joint maintenance program on Windows 2000 is completed with the above operation.

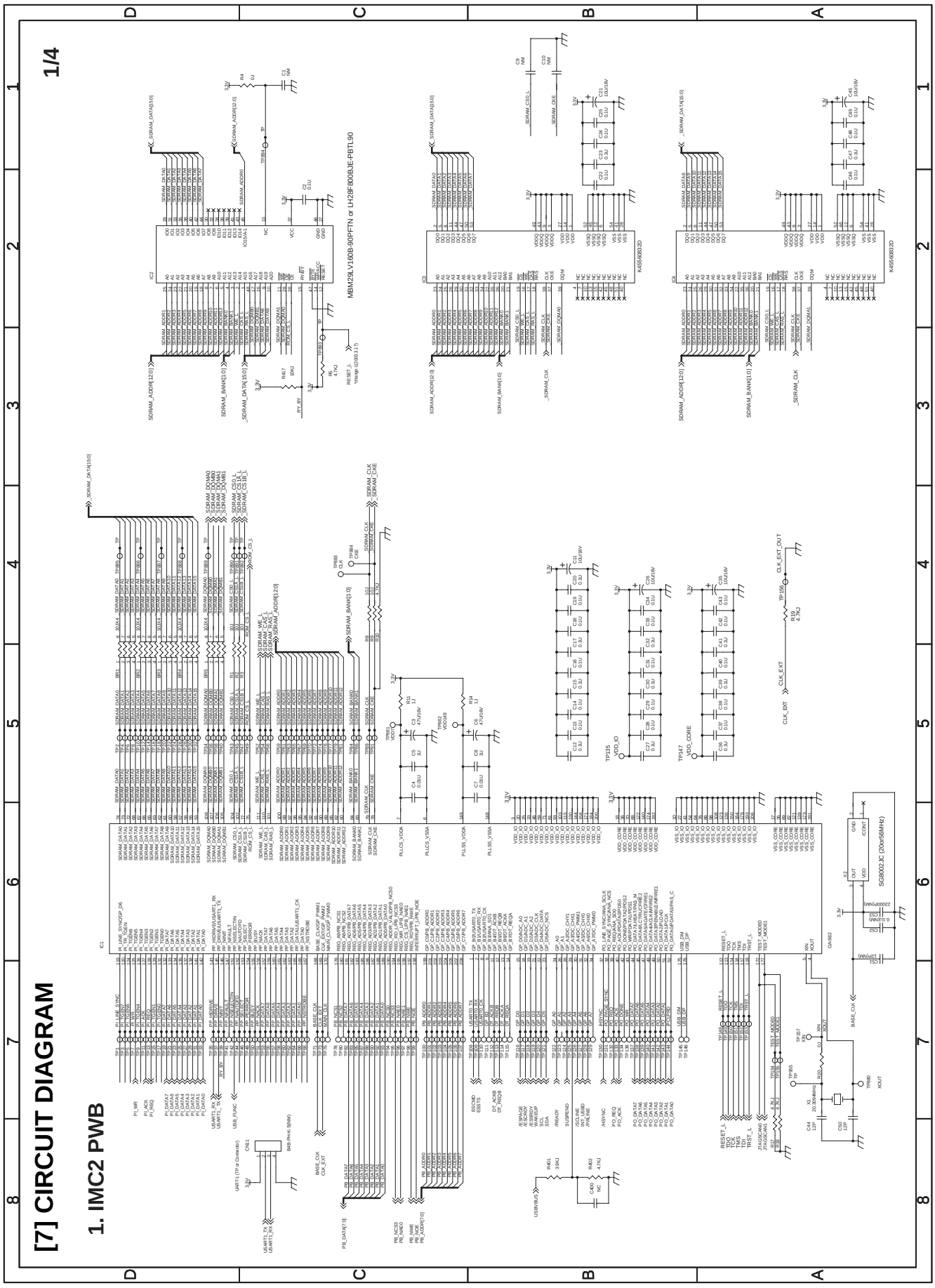
[7] CIRCUIT DIAGRAM
1/4
1. IMC2 PWB

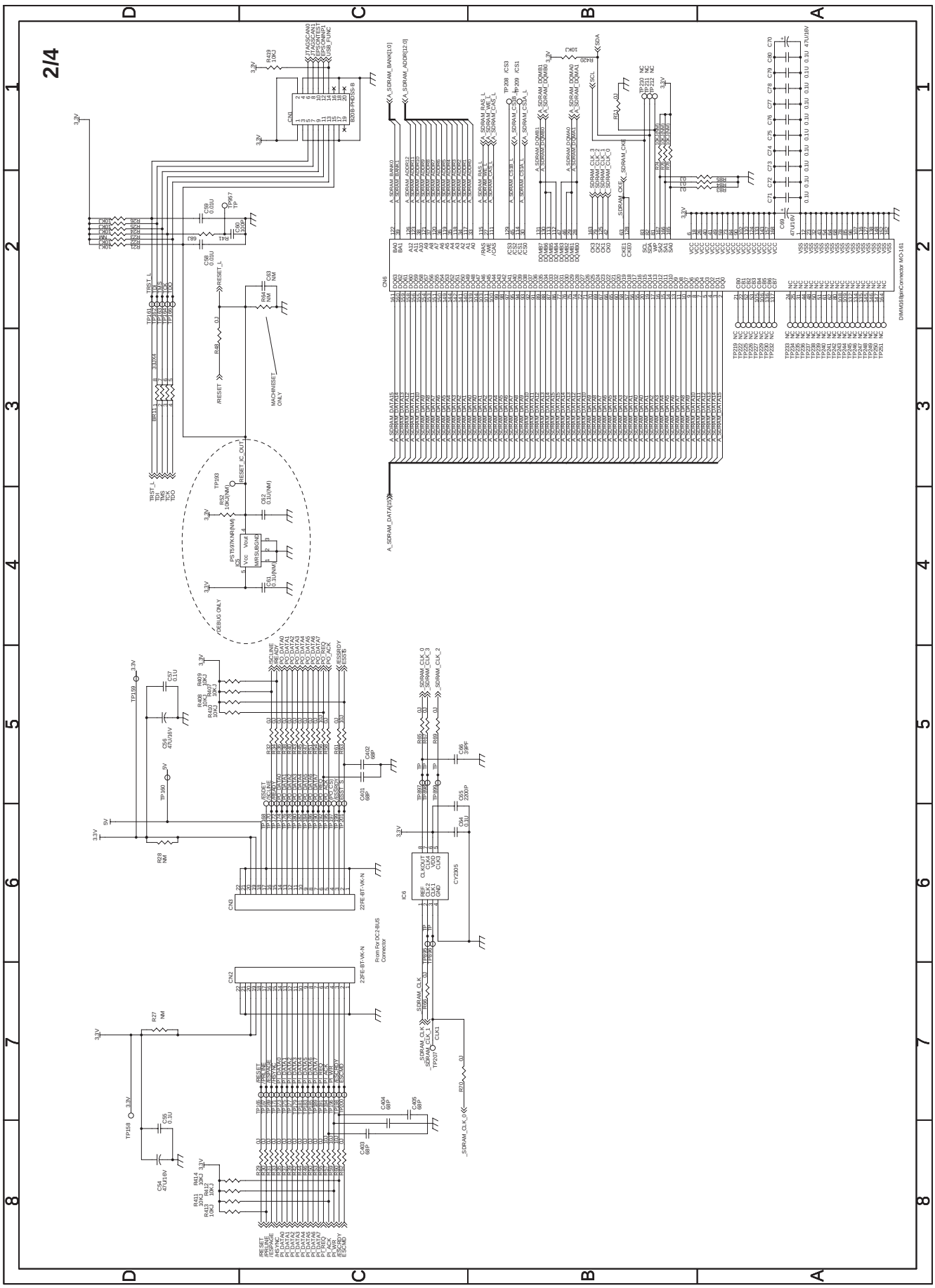
2/4

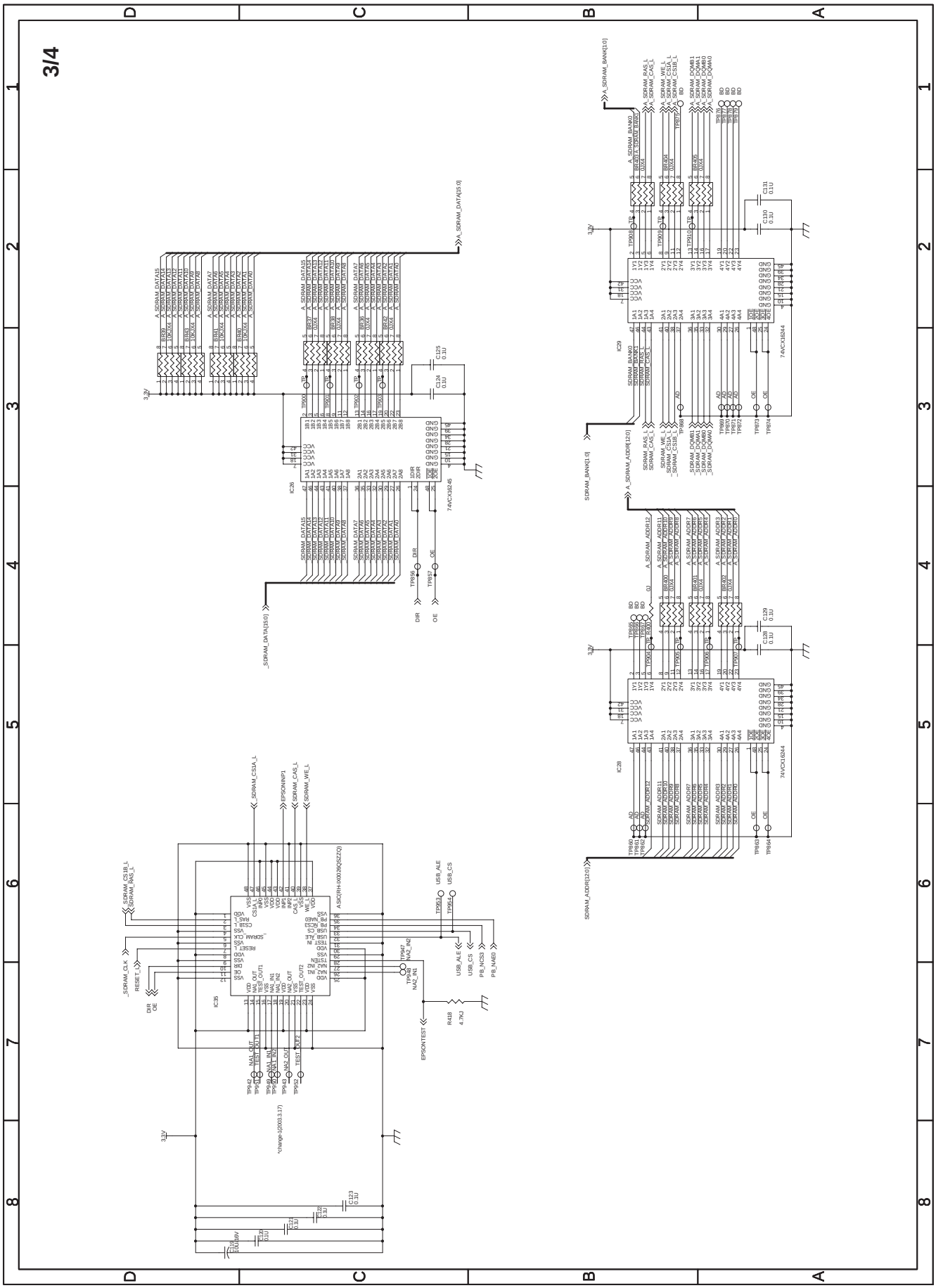
3/4

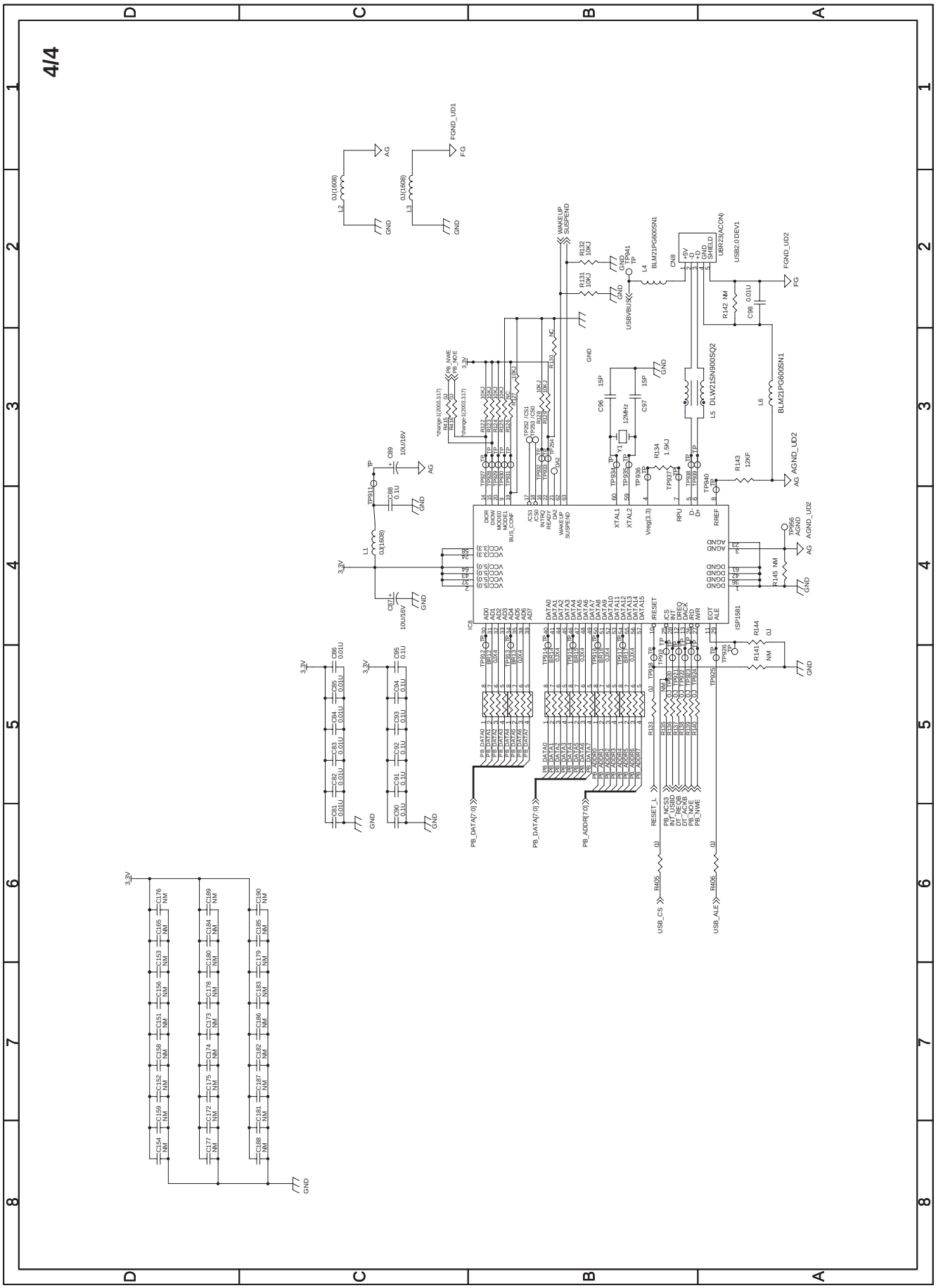
4/4

SHARP

COPYRIGHT © 2003 BY SHARP CORPORATION

All rights reserved.
Printed in Japan.
No part of this publication may be reproduced,
stored in a retrieval system, or transmitted.
In any form or by any means,
electronic, mechanical, photocopying, recording, or otherwise,
without prior written permission of the publisher.

Trademark acknowledgments

Microsoft and Windows are trademarks of Microsoft Corporation in the U.S.A and other countries.
IBM and PC/AT are trademarks of International Business Machines Corporation.
Adobe and Acrobat are trademarks of Adobe Systems Incorporated.
All other trademarks and copyrights are the property of their respective owners.

SHARP CORPORATION
Digital Document Systems Group
Products Quality Assurance Department
Yamatokoriyama, Nara 639-1186, Japan
2003 June Printed in Japan ⓣ