SHARP PARTS GUIDE

CODE:00ZARM205/P2/

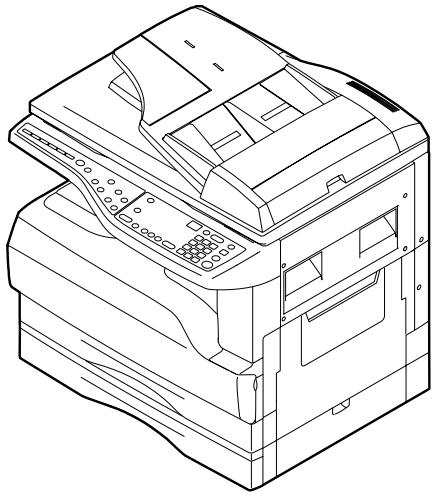

デジタル複合機
DIGITAL COPIER

MODEL

AR-200M [Japan only]
AR-160M [Japan only]
AR-M205 [Except Japan]
AR-M160 [Except Japan]
AR-5220 [Except Japan]
AR-SP6/RP6 [Option]
AR-D24/D25 [Option]
AR-EB7 [Option]

このパーツガイドに掲載されている表示価格ランクは消費税抜きです。

CONTENTS

1 MCU PWB
2 CCD PWB
3 COPY OPE PWB
4 I/F PWB
5 SCAN OPE PWB
6 TRAY PWB
7 SPF/RSPF INTERFACE PWB(Option AR-SP6/RP6)
8 SPF SENSOR PWB(Option AR-SP6/RP6)
9 CASETTE PWB(Option AR-D24/D25)
10 IMC2 PWB(Option AR-EB7)
■ 索引 (Index)

本書はサービス活動用に作成した資料です。
一部内容が製品の改良・改善等により予告なしに変わることがあります。

SHARP CORPORATION

This document has been published to be used for after sales service only.
The contents are subject to change without notice.

補修部品のランク付

市場における補修部品の在庫管理が、適正に運営出来る手助けとなることを、目的とします。

Aランク ： メンテナンスパーツ、メンテナンスパーツには入っていないがメンテナンスパーツに近い消耗パーツ。
Bランク ： 性能・機能パーツ（センサー、クラッチ等の電気パーツ）、消耗パーツ。
Eランク ： 基板含むユニットパーツ。
Dランク ： 整備パーツ（外装、パッキング、同梱パーツ）。
Cランク ： 上記ランク以外のパーツ（基板の子部品を除いたもの）。

DEFINITION

Rank A : Maintenance parts, and consumable parts which are not included in but closely related to maintenance parts
Rank B : Performance/function parts (sensors, clutches, and other electrical parts), consumable parts
Rank E : Unit parts including PWB
Rank D : Preparation parts (External fitting, packing, parts packed together)
Rank C : Parts other than the above (excluding sub components of PWB)

安全性・信頼性確保のため部品は、必ず正規のものをご使用下さい。
⚠ 印の商品は、安全上重要な部品です。交換をする時は、安全及び性能維持のため必ず指定の部品をご使用下さい。

Because parts marked with "⚠" is indispensable for the machine safety maintenance and operation, it must be replaced with the parts specific to the product specification.

○ 当モデルのサービス資料には、この資料以外にサービスマニュアル（回路図含む）があります。合わせてご利用下さい。
○ Other than this Parts Guide, please refer to documents Service Manual (including Circuit Diagram) of this model.
○ Please use the 13 digit code described in the right hand corner of front cover of the document, when you place an order.
○ For U.S. only-Use order codes provided in advertising literature. Do not order from parts department.

---

1 MCU PWB

NO.	PARTS CODE	PRICE RANK		NEW MARK	PART RANK	DESCRIPTION
		Ex.	Ja.			
2	VHi29L0800BQS	BD	GJ		B	Frash ROM [AR-M205/AR-5220][IC10] Frash ROM
3	VHi29L0800CQS	BD	GJ		B	Frash ROM [AR-200M][IC10] Frash ROM
4	QCNCM0017QSZZ	AC	DJ		C	Connector(4pin) [AR-M160/AR-M205/AR-5220][CN29] ｺﾈｸﾀｰ
8	QCNCM0877FCZZ	AF	DS		C	Connector(20pin) [CN36] ｺﾈｸﾀｰ
9	QCNCM0923FC12	AE	DJ		C	Connector(12pin) [CN2] ｺﾈｸﾀｰ
10	QCNCM1005MCZZ	AB	DD		C	Connector(2pin) [CN30] ｺﾈｸﾀｰ
11	QCNCM1006MCZZ	AB	DD		C	Connector(3pin) [CN28] ｺﾈｸﾀｰ
12	QCNCM2334SC0B	AB	DD		C	Connector(2pin) [CN22] ｺﾈｸﾀｰ
13	QCNCM2401SC0C	AB	DJ		C	Connector(3pin) [CN10,CN20] ｺﾈｸﾀｰ
14	QCNCM2401SC0D	AC	DJ		C	Connector(4pin) [CN32] ｺﾈｸﾀｰ
15	QCNCM7014SC0C	AA	DD		C	Connector(3pin) [CN14,CN25] ｺﾈｸﾀｰ
16	QCNCM7014SC0D	AB	DD		C	Connector(4pin) [CN12,CN17,CN27] ｺﾈｸﾀｰ
17	QCNCM7014SC0E	AB	DJ		C	Connector(5pin) [AR-M205 only][CN13] ｺﾈｸﾀｰ
18	QCNCM7014SC0F	AB	DD		C	Connector(6pin) [CN19] ｺﾈｸﾀｰ
19	QCNCM7014SC1C	AC	DD		C	Connector(13pin) [CN35] ｺﾈｸﾀｰ
21	QCNCW0024QSZZ	AF	DS		C	Connector(32pin) [CN5] ｺﾈｸﾀｰ
22	QCNCW0077QSZZ	AK	DX		C	Connector(25pin) [CN9] ｺﾈｸﾀｰ
23	QCNCW0078QSZZ	AF	DS		C	Connector(35Pin) [CN4] ｺﾈｸﾀｰ
26	QCNCW0885FCZZ	AG	DX		C	Connector(12Pin) [CN37] ｺﾈｸﾀｰ
27	QCNCW1124LC0D	AB	DJ		C	Connector(4pin) [CN8] ｺﾈｸﾀｰ
28	QCNCW1124LC0H	AC	DJ		C	Connector(8pin) [CN24] ｺﾈｸﾀｰ
29	QCNCW1124LC1C	AC	DJ		C	Connector(13pin) [CN26] ｺﾈｸﾀｰ
31	QSOCZ0002QSZZ	AD	DJ		C	IC socket(CICO-083-S8-T) [IC3] IC ｿｹｯﾄ
32	RCRSP0016QSZZ	AD	DJ		B	Crystal(19.6608MHz) [X1] ｸﾘｽﾀﾙ
35	RFiLZ0004QSZZ	AM	EG		C	Filter(ZJSR5101-223) [L1,L2,L3,L5,L6,L7] ﾌｨﾙﾀ -
36	RH-DZ0016FCZZ	AB	DD		B	Diode(MA700) [D2] ﾀﾞｲｵｰﾄﾞ
37	RH-iX0001QSZZ	BD	GN		B	SDRAM(MT48LC8M16ATG-8E) SDRAM [AR-M160/AR-5220/AR-200M/AR-160M][IC9]
39	RH-iX7001XCZZ	AQ	EQ		B	SRAM(IS63LV1024L-12J-TR) [IC8,IC11] SRAM
40	RMPTW4100QCJJ	AA	DD		B	Block resistor(10Ω×4) [BR16,BR18,BR19,BR20,BR22] ﾌﾞﾛｯｸﾃｲｺｳ
	RMPTW4100QCJJ	AA	DD		B	Block resistor(10Ω×4) [BR25,BR26,BR28,BR46,BR50] ﾌﾞﾛｯｸﾃｲｺｳ
41	RMPTW4101QCJJ	AB	DD		B	Block resistor(100Ω×4) [BR7,BR38,BR57,BR58,BR63] ﾌﾞﾛｯｸﾃｲｺｳ
42	RMPTW4103QCJJ	AB	DD		B	Block resistor(10KΩ×4) [BR1,BR2,BR3,BR4,BR5] ﾌﾞﾛｯｸﾃｲｺｳ
	RMPTW4103QCJJ	AB	DD		B	Block resistor(10KΩ×4) [BR6,BR8,BR9,BR10,BR11] ﾌﾞﾛｯｸﾃｲｺｳ
	RMPTW4103QCJJ	AB	DD		B	Block resistor(10KΩ×4) [BR12,BR13,BR14,BR15,BR17] ﾌﾞﾛｯｸﾃｲｺｳ
	RMPTW4103QCJJ	AB	DD		B	Block resistor(10KΩ×4) [BR21,BR23,BR24,BR27,BR32] ﾌﾞﾛｯｸﾃｲｺｳ
	RMPTW4103QCJJ	AB	DD		B	Block resistor(10KΩ×4) [BR34,BR36,BR37,BR39,BR40] ﾌﾞﾛｯｸﾃｲｺｳ
	RMPTW4103QCJJ	AB	DD		B	Block resistor(10KΩ×4) [BR41,BR42,BR43,BR44,BR45] ﾌﾞﾛｯｸﾃｲｺｳ
	RMPTW4103QCJJ	AB	DD		B	Block resistor(10KΩ×4) [BR51,BR52,BR59,BR60,BR61] ﾌﾞﾛｯｸﾃｲｺｳ
43	RMPTW4221QCJJ	AA	DD		B	Block resistor(220Ω×4) [BR53,BR54,BR55,BR56] ﾌﾞﾛｯｸﾃｲｺｳ
44	RMPTW4330QCJJ	AB	DD		B	Block resistor(33Ω×4) [BR29,BR30,BR31,BR33,BR35] ﾌﾞﾛｯｸﾃｲｺｳ
45	VCCCCZ1HH101J	AA	DD		C	Capacitor(50WV 100pF) [C4,C5,C25,C28,C96] ｺﾝﾃﾞﾝｻｰ
	VCCCCZ1HH101J	AA	DD		C	Capacitor(50WV 100pF) [C97,C98,C104,C105,C106] ｺﾝﾃﾞﾝｻｰ
	VCCCCZ1HH101J	AA	DD		C	Capacitor(50WV 100pF) [C107,C108,C109,C112,C113] ｺﾝﾃﾞﾝｻｰ
	VCCCCZ1HH101J	AA	DD		C	Capacitor(50WV 100pF) [C114,C115,C116,C117,C118] ｺﾝﾃﾞﾝｻｰ
	VCCCCZ1HH101J	AA	DD		C	Capacitor(50WV 100pF) [C250,C73,C225,C288,C289] ｺﾝﾃﾞﾝｻｰ
	VCCCCZ1HH101J	AA	DD		C	Capacitor(50WV 100pF) [C290,C291,C292,C293,C294] ｺﾝﾃﾞﾝｻｰ
	VCCCCZ1HH101J	AA	DD		C	Capacitor(50WV 100pF) [C285,C286,C287,C17,C20] ｺﾝﾃﾞﾝｻｰ

1 MCU PWB

NO.	PARTS CODE	PRICE RANK		NEW MARK	PART RANK	DESCRIPTION		
		Ex.	Ja.					
45	VCCCCZ1HH101J	AA	DD		C	Capacitor(50WV 100pF)	[C21,C22]	ｺﾝﾃﾞﾝｻｰ
46	VCCCCZ1HH120J	AA	DD		C	Capacitor(50WV 12pF)	[C6,C29,C30,C42,C43]	ｺﾝﾃﾞﾝｻｰ
	VCCCCZ1HH120J	AA	DD		C	Capacitor(50WV 12pF)	[C44,C55,C56,C72,C78]	ｺﾝﾃﾞﾝｻｰ
	VCCCCZ1HH120J	AA	DD		C	Capacitor(50WV 12pF)	[C79,C81,C84,C93,C94]	ｺﾝﾃﾞﾝｻｰ
	VCCCCZ1HH120J	AA	DD		C	Capacitor(50WV 12pF)	[C283,C284]	ｺﾝﾃﾞﾝｻｰ
47	VCCCCZ1HH150J	AA	DD		C	Capacitor(50WV 15pF)	[C74,C75]	ｺﾝﾃﾞﾝｻｰ
48	VCCCCZ1HH220J	AA	DD		C	Capacitor(50WV 22pF)	[C1,C3]	ｺﾝﾃﾞﾝｻ
49	VCCCCZ1HH330J	AA	DD		C	Capacitor(50WV 33pF)	[C100,C102,C120,C265,C316]	ｺﾝﾃﾞﾝｻｰ
	VCCCCZ1HH330J	AA	DD		C	Capacitor(50WV 33pF)	[C317,C318,C319,C320,C321]	ｺﾝﾃﾞﾝｻｰ
50	VCEAGA1CW106M	AA	DD		C	Capacitor(16WV 10μF)	[C9,C151]	ｺﾝﾃﾞﾝｻｰ
51	VCEAGA1CW226M	AB	DD		C	Capacitor(16WV 22μF)	[C80,C221,C222]	ｺﾝﾃﾞﾝｻｰ
52	VCEAGA1CW476M	AB	DD		C	Capacitor(16WV 47μF)	[C41]	ｺﾝﾃﾞﾝｻ-
53	VCEAGA1VW106M	AA	DD		C	Capacitor(35WV 10μF)	[C154]	ｺﾝﾃﾞﾝｻｰ
54	VCEAGA1VW476M	AB	DD		C	Capacitor(35WV 47μF)	[C142,C200,C206,C240]	ｺﾝﾃﾞﾝｻｰ
55	VCKYCY1EF104Z	AA	DD		C	Capacitor(25WV 0.1μF)	[C2,C8,C11,C12,C13]	ｺﾝﾃﾞﾝｻｰ
	VCKYCY1EF104Z	AA	DD		C	Capacitor(25WV 0.1μF)	[C14,C15,C23,C26,C27]	ｺﾝﾃﾞﾝｻｰ
	VCKYCY1EF104Z	AA	DD		C	Capacitor(25WV 0.1μF)	[C31,C32,C34,C36,C38]	ｺﾝﾃﾞﾝｻｰ
	VCKYCY1EF104Z	AA	DD		C	Capacitor(25WV 0.1μF)	[C39,C46,C49,C50,C52]	ｺﾝﾃﾞﾝｻｰ
	VCKYCY1EF104Z	AA	DD		C	Capacitor(25WV 0.1μF)	[C53,C54,C58,C59,C60]	ｺﾝﾃﾞﾝｻｰ
	VCKYCY1EF104Z	AA	DD		C	Capacitor(25WV 0.1μF)	[C62,C63,C65,C67,C71]	ｺﾝﾃﾞﾝｻｰ
	VCKYCY1EF104Z	AA	DD		C	Capacitor(25WV 0.1μF)	[C76,C77,C83,C85,C86]	ｺﾝﾃﾞﾝｻｰ
	VCKYCY1EF104Z	AA	DD		C	Capacitor(25WV 0.1μF)	[C87,C88,C89,C90,C91]	ｺﾝﾃﾞﾝｻｰ
	VCKYCY1EF104Z	AA	DD		C	Capacitor(25WV 0.1μF)	[C92,C95,C99,C101,C103]	ｺﾝﾃﾞﾝｻｰ
	VCKYCY1EF104Z	AA	DD		C	Capacitor(25WV 0.1μF)	[C111,C119,C121,C122,C123]	ｺﾝﾃﾞﾝｻｰ
	VCKYCY1EF104Z	AA	DD		C	Capacitor(25WV 0.1μF)	[C124,C125,C126,C129,C131]	ｺﾝﾃﾞﾝｻｰ
	VCKYCY1EF104Z	AA	DD		C	Capacitor(25WV 0.1μF)	[C132,C133,C134,C135,C138]	ｺﾝﾃﾞﾝｻｰ
	VCKYCY1EF104Z	AA	DD		C	Capacitor(25WV 0.1μF)	[C139,C140,C141,C143,C144]	ｺﾝﾃﾞﾝｻｰ
	VCKYCY1EF104Z	AA	DD		C	Capacitor(25WV 0.1μF)	[C145,C146,C152,C153,C155]	ｺﾝﾃﾞﾝｻｰ
	VCKYCY1EF104Z	AA	DD		C	Capacitor(25WV 0.1μF)	[C160,C161,C162,C163,C164]	ｺﾝﾃﾞﾝｻｰ
	VCKYCY1EF104Z	AA	DD		C	Capacitor(25WV 0.1μF)	[C165,C166,C167,C168,C169]	ｺﾝﾃﾞﾝｻｰ
	VCKYCY1EF104Z	AA	DD		C	Capacitor(25WV 0.1μF)	[C170,C171,C172,C173,C174]	ｺﾝﾃﾞﾝｻｰ
	VCKYCY1EF104Z	AA	DD		C	Capacitor(25WV 0.1μF)	[C175,C176,C177,C178,C179]	ｺﾝﾃﾞﾝｻｰ
	VCKYCY1EF104Z	AA	DD		C	Capacitor(25WV 0.1μF)	[C180,C181,C182,C183,C184]	ｺﾝﾃﾞﾝｻｰ
	VCKYCY1EF104Z	AA	DD		C	Capacitor(25WV 0.1μF)	[C185,C186,C187,C188,C189]	ｺﾝﾃﾞﾝｻｰ
	VCKYCY1EF104Z	AA	DD		C	Capacitor(25WV 0.1μF)	[C190,C191,C192,C193,C194]	ｺﾝﾃﾞﾝｻｰ
	VCKYCY1EF104Z	AA	DD		C	Capacitor(25WV 0.1μF)	[C195,C196,C201,C223,C224]	ｺﾝﾃﾞﾝｻｰ
	VCKYCY1EF104Z	AA	DD		C	Capacitor(25WV 0.1μF)	[C231,C232,C233,C234,C241]	ｺﾝﾃﾞﾝｻｰ
	VCKYCY1EF104Z	AA	DD		C	Capacitor(25WV 0.1μF)	[C245,C246,C247,C248,C261]	ｺﾝﾃﾞﾝｻｰ
	VCKYCY1EF104Z	AA	DD		C	Capacitor(25WV 0.1μF)	[C262,C266,C281,C282,C315]	ｺﾝﾃﾞﾝｻｰ
56	VCKYCY1HB102K	AA	DD		C	Capacitor(50WV 1000pF)	[C267,C268]	ｺﾝﾃﾞﾝｻｰ
57	VCKYCY1HB104K	AA	DD		C	Capacitor(50WV 0.10μF)	[C127,C130,C207,C244]	ｺﾝﾃﾞﾝｻｰ
58	VCKYCY1HB222K	AA	DD		C	Capacitor(50WV 2200pF)	[C269,C270]	ｺﾝﾃﾞﾝｻｰ
59	VCKYCY1HB473K	AA	DD		C	Capacitor(50WV 0.047μF)	[C229]	ｺﾝﾃﾞﾝｻｰ
60	VCKYCZ1CB223K	AB	DD		C	Capacitor(16WV 0.022μF)	[C70,C128,C136]	ｺﾝﾃﾞﾝｻｰ
62	VCKYCZ1HB102K	AA	DD		C	Capacitor(50WV 1000pF)	[C24,C197,C198,C199,C202]	ｺﾝﾃﾞﾝｻｰ
	VCKYCZ1HB102K	AA	DD		C	Capacitor(50WV 1000pF)	[C203,C204,C205,C208,C209]	ｺﾝﾃﾞﾝｻｰ
	VCKYCZ1HB102K	AA	DD		C	Capacitor(50WV 1000pF)	[C210,C211,C212,C213,C214]	ｺﾝﾃﾞﾝｻｰ
	VCKYCZ1HB102K	AA	DD		C	Capacitor(50WV 1000pF)	[C215,C216,C217,C218,C219]	ｺﾝﾃﾞﾝｻｰ
	VCKYCZ1HB102K	AA	DD		C	Capacitor(50WV 1000pF)	[C220,C227,C249,C258,C259]	ｺﾝﾃﾞﾝｻｰ
	VCKYCZ1HB102K	AA	DD		C	Capacitor(50WV 1000pF)	[C260,C263,C264,C311,C312]	ｺﾝﾃﾞﾝｻｰ
	VCKYCZ1HB102K	AA	DD		C	Capacitor(50WV 1000pF)	[C313,C314]	ｺﾝﾃﾞﾝｻｰ
63	VCKYCZ1HB271K	AA	DD		C	Capacitor(50WV 270pF)	[C272]	ｺﾝﾃﾞﾝｻｰ
64	VCKYCZ1HB471K	AA	DD		C	Capacitor(50WV 470pF)	[C303,C304,C305,C306,C307]	ｺﾝﾃﾞﾝｻｰ
	VCKYCZ1HB471K	AA	DD		C	Capacitor(50WV 470pF)	[C308,C309,C310]	ｺﾝﾃﾞﾝｻｰ
65	VCKYCZ1HB821K	AC	DD		C	Capacitor(50WV 820pF)	[C147,C148,C149,C150]	ｺﾝﾃﾞﾝｻｰ
66	VHD1SS355//-1	AB	DJ		B	Diode(1SS355)	[D1,D14,D15,D16,D20]	ﾀﾞｲｵｰﾄﾞ
67	VHDDSS133//-1	AA	DD		B	Diode(1SS133)	[D36,D37,D38]	ﾀﾞｲｵｰﾄﾞ
68	VHDKDS120++-1	AC	DJ		B	diode(KDS120)	[D6,D19,D23,D28]	ﾀﾞｲｵｰﾄﾞ
	VHDKDS120++-1	AC	DJ		B	diode(KDS120)	[D29,D32,D34]	ﾀﾞｲｵｰﾄﾞ
69	VHDKDS121++-1	AC	DJ		B	Diode(KDS121)	[D3,D4,D18,D22,D26]	ﾀﾞｲｵｰﾄﾞ
	VHDKDS121++-1	AC	DJ		B	Diode(KDS121)	[D27,D31,D33]	ﾀﾞｲｵｰﾄﾞ
70	VHDKDS226++-1	AC	DJ		B	Diode(KDS226)	[D5,D13,D17,D21,D24]	ﾀﾞｲｵｰﾄﾞ
	VHDKDS226++-1	AC	DJ		B	Diode(KDS226)	[D25,D30,D35]	ﾀﾞｲｵｰﾄﾞ
71	VHEMTZJ22B/-1	AA	DD		B	Zener diode(MTZJ22B)	[AR-M205 only][D11]	ﾂｪﾅｰﾀﾞｲｵｰﾄﾞ
72	VHEUDZ3.9B/-1	AC	DJ		B	Zener diode(UDZ3.9B)	[ZD1,ZD2,ZD3,ZD4]	ﾂｪﾅｰﾀﾞｲｵｰﾄﾞ
73	VHEUDZ5.6B/-1	AC	DJ		B	Zener diode(UDZ5.6B)	[ZD5]	ﾂｪﾅｰﾀﾞｲｵｰﾄﾞ
74	VHi74HC151M-1	AD	DJ		B	IC(74HC151M)	[IC13,IC15,IC17,IC38]	IC
76	VHi74LCX32M-1	AE	DJ		B	IC(74LCX32M)	[IC29]	IC
77	VHiD65001AF-1	AG	DS		B	IC(D65001AF)	[IC21,IC24,IC25]	IC
78	VHiD65503F+-1	AG	DS		B	IC(D65503F)	[IC22,IC26]	IC
79	VHiEES04L400P	AG	DX		B	IC(EES04L400P)	[IC3]	IC
80	VHiH8S2321+-1	AX	FG		B	IC(HD6412321VF25)	[IC2]	IC
82	VHiKA7805AP-1	AE	DS		B	IC(KIA7805API)	[IC35]	IC
84	VHiKiA358F+-1	AE	DS		B	IC(KIA358F)	[IC27]	IC
85	VHiKiA393F+-1	AE	DS		B	IC(KIA393F)	[IC23]	IC
86	VHiL6219DS+-1	AN	EQ		B	IC(L6219DS)	[IC32]	IC
87	VHiLCX16244-1	AM	EG		B	IC(LCX16244)	[IC19]	IC
88	VHiLCX16374-1	AM	EG		B	IC(74LCX16374MEA)	[IC30,IC28]	IC
89	VHiLCX244WM-1	AG	DX		B	IC(74LCX244WM)	[IC20]	IC
91	VHiLVX4245M-1	AL	EB		B	IC(74LVX4245MT)	[AR-M160/AR-M205/AR-5220][IC31]	IC

1 MCU PWB

NO.	PARTS CODE	PRICE RANK		NEW MARK	PART RANK	DESCRIPTION	
		Ex.	Ja.				
92	VHiM51957BFP1	AH	DX		B	IC(M51957BFP1)	[IC4] IC
93	VHiP2010ASR-1	AN	EQ		B	IC(P2010ASR)	[IC1] IC
94	VHiTA7291AS-1	AF	DX		B	IC(TA7291S)	[IC34] IC
95	VHiTD62064AF/	AM	EG		B	IC(TD62064AF)	[AR-M205 only][IC33] IC
96	VHiVHCT244M-1	AG	DX		B	IC(VHCT244M)	[IC12,IC14,IC16,IC18,IC37] IC
97	VRD-HT2EY472J	AA	DD		C	Resistor(1/4W 4.7KΩ ±5%)	[R84,R102,R103] ﾃｲｺｳ
98	VRN-VT3ATR68J	AC	DD		C	Resistor(1W 0.68Ω ±5%)	[R119,R120] ﾃｲｺｳ
	VRS-CZ1JD000J	AA	DD		C	Resistor(1/16W 0Ω ±5%)	[R2,R5,R6,R11,R12,R13] ﾃｲｺｳ
	VRS-CZ1JD000J	AA	DD		C	Resistor(1/16W 0Ω ±5%)	[R14,R15,R16,R17,R49,R50] ﾃｲｺｳ
99	VRS-CZ1JD000J	AA	DD		C	Resistor(1/16W 0Ω ±5%)	[R54,R56,R59,R63,R64,R213] ﾃｲｺｳ
	VRS-CZ1JD000J	AA	DD		C	Resistor(1/16W 0Ω ±5%)	[R226,R233,R212,R227] ﾃｲｺｳ
	VRS-CZ1JD000J	AA	DD		C	Resistor(1/16W 0Ω ±5%)	[AR-M205 only][R62] ﾃｲｺｳ
	VRS-CZ1JD100J	AA	DD		C	Resistor(1/16W 10Ω ±5%)	[R37,R38,R51,R66,R70] ﾃｲｺｳ
100	VRS-CZ1JD100J	AA	DD		C	Resistor(1/16W 10Ω ±5%)	[R71,R149,R150,R151,R152] ﾃｲｺｳ
	VRS-CZ1JD100J	AA	DD		C	Resistor(1/16W 10Ω ±5%)	[R225,R195] ﾃｲｺｳ
101	VRS-CZ1JD101J	AA	DD		C	Resistor(1/16W 100Ω ±5%)	[R110,R232,R235] ﾃｲｺｳ
102	VRS-CZ1JD102F	AA	DD		C	Resistor(1/16W 1KΩ ±1%)	[R86,R123] ﾃｲｺｳ
	VRS-CZ1JD102J	AA	DD		C	Resistor(1/16W 1.0KΩ ±5%)	[R89,R116,R145,R146,R147] ﾃｲｺｳ
	VRS-CZ1JD102J	AA	DD		C	Resistor(1/16W 1.0KΩ ±5%)	[R166,R167,R168,R169,R170] ﾃｲｺｳ
103	VRS-CZ1JD102J	AA	DD		C	Resistor(1/16W 1.0KΩ ±5%)	[R171,R172,R173,R174,R175] ﾃｲｺｳ
	VRS-CZ1JD102J	AA	DD		C	Resistor(1/16W 1.0KΩ ±5%)	[R176,R177,R178,R182,R217] ﾃｲｺｳ
	VRS-CZ1JD102J	AA	DD		C	Resistor(1/16W 1.0KΩ ±5%)	[R218,R219,R223,R222,R181] ﾃｲｺｳ
	VRS-CZ1JD102J	AA	DD		C	Resistor(1/16W 1.0KΩ ±5%)	[R179] ﾃｲｺｳ
104	VRS-CZ1JD103F	AA	DD		C	Resistor(1/16W 10KΩ ±1%)	[R18,R21,R97,R115] ﾃｲｺｳ
	VRS-CZ1JD103J	AA	DD		C	Resistor(1/16W 10KΩ ±5%)	[R8,R9,R19,R22,R24] ﾃｲｺｳ
	VRS-CZ1JD103J	AA	DD		C	Resistor(1/16W 10KΩ ±5%)	[R30,R32,R34,R35,R36] ﾃｲｺｳ
	VRS-CZ1JD103J	AA	DD		C	Resistor(1/16W 10KΩ ±5%)	[R42,R46,R47,R53,R58] ﾃｲｺｳ
105	VRS-CZ1JD103J	AA	DD		C	Resistor(1/16W 10KΩ ±5%)	[R61,R67,R68,R69,R72] ﾃｲｺｳ
	VRS-CZ1JD103J	AA	DD		C	Resistor(1/16W 10KΩ ±5%)	[R74,R76,R114,R118,R142] ﾃｲｺｳ
	VRS-CZ1JD103J	AA	DD		C	Resistor(1/16W 10KΩ ±5%)	[R143,R144,R183,R184,R185] ﾃｲｺｳ
	VRS-CZ1JD103J	AA	DD		C	Resistor(1/16W 10KΩ ±5%)	[R202,R203,R204,R234,R236] ﾃｲｺｳ
	VRS-CZ1JD103J	AA	DD		C	Resistor(1/16W 10KΩ ±5%)	[R180,R197] ﾃｲｺｳ
106	VRS-CZ1JD105F	AA	DD		C	Resistor(1/16W 1.0MΩ ±1%)	[R87] ﾃｲｺｳ
107	VRS-CZ1JD122F	AA	DD		C	Resistor(1/16W 1.2KΩ ±1%)	[R113] ﾃｲｺｳ
108	VRS-CZ1JD133F	AA	DD		C	Resistor(1/16W 13KΩ ±1%)	[R126] ﾃｲｺｳ
	VRS-CZ1JD152J	AA	DD		C	Resistor(1/16W 1.5KΩ ±5%)	[R77,R78,R80,R81,R82] ﾃｲｺｳ
	VRS-CZ1JD152J	AA	DD		C	Resistor(1/16W 1.5KΩ ±5%)	[R83,R85,R90,R91,R92] ﾃｲｺｳ
109	VRS-CZ1JD152J	AA	DD		C	Resistor(1/16W 1.5KΩ ±5%)	[R95,R96,R99,R100,R104] ﾃｲｺｳ
	VRS-CZ1JD152J	AA	DD		C	Resistor(1/16W 1.5KΩ ±5%)	[R105,R106,R107,R108,R111] ﾃｲｺｳ
	VRS-CZ1JD152J	AA	DD		C	Resistor(1/16W 1.5KΩ ±5%)	[R112,R121,R122] ﾃｲｺｳ
	VRS-CZ1JD203J	AA	DD		C	Resistor(1/16W 20KΩ ±5%)	[R137,R138,R153,R154,R155] ﾃｲｺｳ
	VRS-CZ1JD203J	AA	DD		C	Resistor(1/16W 20KΩ ±5%)	[R156,R157,R158,R159,R160] ﾃｲｺｳ
110	VRS-CZ1JD203J	AA	DD		C	Resistor(1/16W 20KΩ ±5%)	[R161,R162,R163,R164,R165] ﾃｲｺｳ
	VRS-CZ1JD203J	AA	DD		C	Resistor(1/16W 20KΩ ±5%)	[R193,R200,R214,R215,R216] ﾃｲｺｳ
	VRS-CZ1JD203J	AA	DD		C	Resistor(1/16W 20KΩ ±5%)	[R220,R221] ﾃｲｺｳ
111	VRS-CZ1JD220J	AA	DD		C	Resistor(1/16W 22Ω ±5%)	[R7] ﾃｲｺｳ
112	VRS-CZ1JD241J	AA	DD		C	Resistor(1/16W 240KΩ ±5%)	[R94,R93] ﾃｲｺｳ
114	VRS-CZ1JD272J	AA	DD		C	Resistor(1/16W 2.7KΩ ±5%)	[R139] ﾃｲｺｳ
115	VRS-CZ1JD301J	AA	DD		C	Resistor(1/16W 300Ω ±5%)	[R109,R117,R198,R199] ﾃｲｺｳ
116	VRS-CZ1JD302F	AA	DD		C	Resistor(1/16W 3KΩ ±1%)	[R127] ﾃｲｺｳ
117	VRS-CZ1JD303J	AA	DD		C	Resistor(1/16W 30KΩ ±5%)	[R124,R125] ﾃｲｺｳ
118	VRS-CZ1JD330J	AA	DD		C	Resistor(1/16W 33Ω ±5%)	[R25,R26,R27,R28,R29] ﾃｲｺｳ
	VRS-CZ1JD330J	AA	DD		C	Resistor(1/16W 33Ω ±5%)	[R31,R33,R40,R48,R39] ﾃｲｺｳ
119	VRS-CZ1JD470J	AA	DD		C	Resistor(1/16W 47Ω ±5%)	[R20,R23] ﾃｲｺｳ
	VRS-CZ1JD471J	AA	DD		C	Resistor(1/16W 470Ω ±5%)	[R186,R188,R189,R190,R191] ﾃｲｺｳ
120	VRS-CZ1JD471J	AA	DD		C	Resistor(1/16W 470Ω ±5%)	[R192,R205,R206,R207,R208] ﾃｲｺｳ
	VRS-CZ1JD471J	AA	DD		C	Resistor(1/16W 470Ω ±5%)	[R209,R210] ﾃｲｺｳ
121	VRS-CZ1JD473J	AA	DD		C	Resistor(1/16W 47KΩ ±5%)	[R79,R101,R132,R133] ﾃｲｺｳ
122	VRS-CZ1JD752F	AA	DD		C	Resistor(1/16W 7.5KΩ ±1%)	[R88] ﾃｲｺｳ
124	VRS-HT3DA102J	AA	DD		C	Resistor(2W 1.0KΩ ±5%)	[R141] ﾃｲｺｳ
126	VRS-HT3DAR22J	AA	DD		C	Resistor(2W 0.22Ω ±5%)	[R140] ﾃｲｺｳ
127	VS2SB1197//-1	AC	DJ		B	Transistor(2SB1197)	[Q3] ﾄﾗﾝｼﾞｽﾀｰ
128	VSKRA119S++-1	AB	DJ		B	Transistor(KRA119S)	[Q2] ﾄﾗﾝｼﾞｽﾀｰ
129	VSKTA1505S+-1	AC	DJ		B	Transistor(KTA1505S)	[Q1] ﾄﾗﾝｼﾞｽﾀｰ
130	VSUPA502T//-1	AD	DJ		B	Transistor(UPA502T)	[Q4] ﾄﾗﾝｼﾞｽﾀｰ
	(Unit)						
	CPWBX0128QS31	CA	TR		E	MCU PWB	[AR-M160] MCU 基板
	CPWBX0128QS32	CA	TV		E	MCU PWB	[AR-M205] MCU 基板
901	CPWBX0128QS33	CA	TR		E	MCU PWB	[AR-5220] MCU 基板
	CPWBX0128QS34	CA	TV		E	MCU PWB	[AR-200M] MCU 基板
	CPWBX0128QS36	CA	TV		E	MCU PWB	[AR-160M] MCU 基板

2 CCD PWB

NO.	PARTS CODE	PRICE RANK Ex.	PRICE RANK Ja.	NEW MARK	PART RANK	DESCRIPTION
1	QCNCW0024QSZZ	AF	DS		C	Connector(32pin) [CN1] ｺﾈｸﾀｰ
2	RFiLZ0004QSZZ	AM	EG		C	Filter(ZJSR5101-223) [L1,L2,L3,L4] ﾌｨﾙﾀ -
3	RMPTW4100QCJJ	AA	DD		B	Block resistor(10Ω×4) [BR101,BR102] ﾌﾞﾛｯｸﾃｲｺｳ
4	VCCCCZ1HH101J	AA	DD		C	Capacitor(50WV 100pF) [C107,C108,C109] ｺﾝﾃﾞﾝｻｰ
6	VCCCCZ1HH470J	AA	DD		C	Capacitor(50WV 47pF) [C126,C128,C122,C124] ｺﾝﾃﾞﾝｻｰ
	VCCCCZ1HH470J	AA	DD		C	Capacitor(50WV 47pF) [C125,C127,C121,C123] ｺﾝﾃﾞﾝｻｰ
7	VCEAJA1CW226M	AB	DD		C	Capacitor(16WV 22μF) [C5,C4,C1,C8,C7,C6,C3] ｺﾝﾃﾞﾝｻｰ
8	VCEAJA1EW226M	AB	DD		C	Capacitor(25WV 22μF [C2] ｺﾝﾃﾞﾝｻｰ
9	VCKYCZ1CF104Z	AB	DD		C	Capacitor(16WV 0.1μF) [C111,C110,C139,C112,C114] ｺﾝﾃﾞﾝｻｰ
	VCKYCZ1CF104Z	AB	DD		C	Capacitor(16WV 0.1μF) [C115,C138,C137,C141,C140] ｺﾝﾃﾞﾝｻｰ
	VCKYCZ1CF104Z	AB	DD		C	Capacitor(16WV 0.1μF) [C129,C116,C132,C145,C130] ｺﾝﾃﾞﾝｻｰ
	VCKYCZ1CF104Z	AB	DD		C	Capacitor(16WV 0.1μF) [C105,C104,C102,C131,C103] ｺﾝﾃﾞﾝｻｰ
	VCKYCZ1CF104Z	AB	DD		C	Capacitor(16WV 0.1μF) [C133,C134,C106,C135,C136] ｺﾝﾃﾞﾝｻｰ
	VCKYCZ1CF104Z	AB	DD		C	Capacitor(16WV 0.1μF) [C144,C143,C118] ｺﾝﾃﾞﾝｻｰ
11	VHi74VHCT04FT	AF	DS		B	IC(74VHCT04FT) [IC104] IC
15	VRS-CZ1JD000J	AA	DD		C	Resistor(1/16W 0Ω ±5%) [R138] ﾃｲｺｳ
16	VRS-CZ1JD100J	AA	DD		C	Resistor(1/16W 10Ω ±5%) [R153,R111,R154] ﾃｲｺｳ
	VRS-CZ1JD100J	AA	DD		C	Resistor(1/16W 10Ω ±5%) [R112,R155,R113] ﾃｲｺｳ
17	VRS-CZ1JD101J	AA	DD		C	Resistor(1/16W 100Ω ±5%) [R148,R145,R143,R150,R151] ﾃｲｺｳ
18	VRS-CZ1JD202J	AA	DD		C	Resistor(1/16W 2.0KΩ ±5%) [R146,R142,R140] ﾃｲｺｳ
19	VRS-CZ1JD330J	AA	DD		C	Resistor(1/16W 33Ω ±5%) [R128,R119,R152,R110,R156] ﾃｲｺｳ
	VRS-CZ1JD330J	AA	DD		C	Resistor(1/16W 33Ω ±5%) [R114,R118,R157,R115,R125] ﾃｲｺｳ
	VRS-CZ1JD330J	AA	DD		C	Resistor(1/16W 33Ω ±5%) [R109,R122,R134,R133,R132] ﾃｲｺｳ
	VRS-CZ1JD330J	AA	DD		C	Resistor(1/16W 33Ω ±5%) [R131,R130,R129] ﾃｲｺｳ

3 COPE OPE PWB

NO.	PARTS CODE	PRICE RANK Ex.	PRICE RANK Ja.	NEW MARK	PART RANK	DESCRIPTION
2	QSW-P0001ESZZ	AC	DJ		B	Tact swtch(SKQNAB010) [KEY16~44] ﾀｸﾄ SW
4	RH-TX0003ESZZ	AC	DJ		B	Transistor(KRA225S) [Q2,Q3,Q4] ﾄﾗﾝｼﾞｽﾀｰ
6	VCCCCY1HH201J	AA	DD		C	Capacitor(50WV 200pF) [C4,C5,C7,C8] ｺﾝﾃﾞﾝｻｰ
7	VCEAJU1CW476M	AB	DD		C	Capacitor(16WV 47μF) [C1,C2] ｺﾝﾃﾞﾝｻｰ
8	VCKYCY1CB104K	AB	DD		C	Capacitor(16WV 0.1μF) [C3,C6,C9,C11] ｺﾝﾃﾞﾝｻｰ
	VCKYCY1CB104K	AB	DD		C	Capacitor(16WV 0.1μF) [C20,C22] ｺﾝﾃﾞﾝｻｰ
9	VHDDSS133//-1	AA	DD		B	Diode(1SS133) [D1,D2,D3,D4] ﾀﾞｲｵｰﾄﾞ
	VHDDSS133//-1	AA	DD		B	Diode(1SS133) [D5,D6] ﾀﾞｲｵｰﾄﾞ
10	VHi74HC151M-1	AD	DJ		B	IC(74HC151M) [IC1] IC
11	VHiLC7935//-1	AN	EQ		B	IC(LC7935) [IC2] IC
12	VHiNE555///-1	AG	DX		B	IC(NE555) [IC3] IC
13	VHP1LHEE-002A	AC	DJ		B	LED (Red)(1LHEE-002A) [LED28,LED29,LED30,LED32] LED ｱｶ
	VHP1LHEE-002A	AC	DJ		B	LED (Red)(1LHEE-002A) [LED33,LED35,LED36,LED41] LED ｱｶ
	VHP1LHEE-002A	AC	DJ		B	LED (Red)(1LHEE-002A) ()[LED64] LED ｱｶ
14	VHP1LHLE-002A	AC	DJ		B	LED(Green)(LTL-1LHLE-002A) [LED16,LED17,LED18,LED19,LED20] LED ﾐﾄﾞﾘ
	VHP1LHLE-002A	AC	DJ		B	LED(Green)(LTL-1LHLE-002A) [LED21,LED22,LED23,LED24,LED25] LED ﾐﾄﾞﾘ
	VHP1LHLE-002A	AC	DJ		B	LED(Green)(LTL-1LHLE-002A) [LED26,LED27,LED31,LED34,LED37] LED ﾐﾄﾞﾘ
	VHP1LHLE-002A	AC	DJ		B	LED(Green)(LTL-1LHLE-002A) [LED38,LED39,LED40,LED42,LED43] LED ﾐﾄﾞﾘ
	VHP1LHLE-002A	AC	DJ		B	LED(Green)(LTL-1LHLE-002A) [LED44,LED45,LED46,LED47,LED48] LED ﾐﾄﾞﾘ
	VHP1LHLE-002A	AC	DJ		B	LED(Green)(LTL-1LHLE-002A) [LED50,LED51,LED52,LED53,LED54] LED ﾐﾄﾞﾘ
	VHP1LHLE-002A	AC	DJ		B	LED(Green)(LTL-1LHLE-002A) [LED56,LED57,LED58,LED59,LED60] LED ﾐﾄﾞﾘ
	VHP1LHLE-002A	AC	DJ		B	LED(Green)(LTL-1LHLE-002A) [LED61,LED62] LED ﾐﾄﾞﾘ
	VHP1LHLE-002A	AC	DJ		B	LED(Green)(LTL-1LHLE-002A) [Except AR-160M/AR-M160(Other Countries)][LED49,LED55] LED ﾐﾄﾞﾘ
	VHP1LHLE-002A	AC	DJ		B	LED(Green)(LTL-1LHLE-002A) [Except AR-M205(U.S.A,Canada,U.kingdom,Europe)][LED63] LED ﾐﾄﾞﾘ
15	VHP3650AG2J-1	AL	EB		B	LED(7SEGMENT)(LTC-3650AG-02J) [LEDM] LED(7SEGMENT)
16	VRS-CY1JD000J	AA	DD		C	Resistor(1/16W 0Ω ±5%) [R44] ﾃｲｺｳ
17	VRS-CY1JD101J	AA	DD		C	Resistor(1/16W 100Ω ±5%) [R52~55,R60~63] ﾃｲｺｳ
18	VRS-CY1JD102J	AA	DD		C	Resistor(1/16W 1.0KΩ ±5%) [R7,R10,R27,R30,R42] ﾃｲｺｳ
	VRS-CY1JD102J	AA	DD		C	Resistor(1/16W 1.0KΩ ±5%) [R45,R57,R58,R59] ﾃｲｺｳ
19	VRS-CY1JD103J	AA	DD		C	Resistor(1/16W 10KΩ ±5%) [R8,R11,R28,R31,R41] ﾃｲｺｳ
20	VRS-CY1JD151J	AA	DD		C	Resistor(1/16W 150Ω ±5%) [R1,R2,R3,R5,R6,R9] ﾃｲｺｳ
	VRS-CY1JD151J	AA	DD		C	Resistor(1/16W 150Ω ±5%) [R12,R13,R14,R15,R16] ﾃｲｺｳ
	VRS-CY1JD151J	AA	DD		C	Resistor(1/16W 150Ω ±5%) [R17,R18,R19,R20,R21] ﾃｲｺｳ
	VRS-CY1JD151J	AA	DD		C	Resistor(1/16W 150Ω ±5%) [R22,R23,R24,R25,R26] ﾃｲｺｳ
	VRS-CY1JD151J	AA	DD		C	Resistor(1/16W 150Ω ±5%) [R29,R32,R33,R34,R35] ﾃｲｺｳ
	VRS-CY1JD151J	AA	DD		C	Resistor(1/16W 150Ω ±5%) [R36,R37,R38,R39,R68] ﾃｲｺｳ
21	VRS-CY1JD202J	AA	DD		C	Resistor(1/16W 2.0KΩ ±5%) [R48,R49,R50,R51,R64] ﾃｲｺｳ
	VRS-CY1JD202J	AA	DD		C	Resistor(1/16W 2.0KΩ ±5%) [R65,R66,R67] ﾃｲｺｳ
22	VRS-CY1JD244J	AA	DD		C	Resistor(1/16W 240KΩ ±5%) [R40] ﾃｲｺｳ

3 COPE OPE PWB

NO.	PARTS CODE	PRICE RANK Ex.	PRICE RANK Ja.	NEW MARK	PART RANK	DESCRIPTION		
23	VRS-CY1JD471J	AA	DD		C	Resistor(1/16W 470Ω ±5%)	[R4,R47]	ﾃｲｺｳ
24	VRS-CY1JD511J	AA	DD		C	Resistor(1/16W 510Ω ±5%)	[R56]	ﾃｲｺｳ
25	VSDTC143ZKA-1	AC	DJ		B	Transistor(DTC143ZKA)	[Q5]	ﾄﾗﾝｼﾞｽﾀｰ

4 I/F PWB

NO.	PARTS CODE	PRICE RANK Ex.	PRICE RANK Ja.	NEW MARK	PART RANK	DESCRIPTION		
1	DHAi-0310QSZZ	AB	DJ		C	IF GND harness		IF GND ﾊｰﾈｽ
2	QCNCW0078QSZZ	AF	DS		C	Connector(35Pin)	[CN403]	ｺﾈｸﾀｰ
3	QSOCN0002ESZZ	AH	DX		C	Connector(36Pin)(RBE42-36K1153)	[CN401]	ｺﾈｸﾀｰ
4	QSOCN0005ESZZ	AE	DS		C	Connector(4Pin)(UBR23-4K2200)	[CN402]	ｺﾈｸﾀｰ
5	RH-DX0001ESZZ	AC	DJ		B	Diode(11EQS06-TA1B2)	[D401]	ﾀﾞｲｵﾄﾞ
6	RH-iX0005ESZZ	AE	DS		B	IC(IX0005ES)	[IC402]	IC
7	VCCCCY1HH101J	AA	DD		C	Capacitor(50WV 100pF)	[C404,C405,C406,C407,C408]	ｺﾝﾃﾞﾝｻｰ
	VCCCCY1HH101J	AA	DD		C	Capacitor(50WV 100pF)	[C409,C410,C411,C412,C413]	ｺﾝﾃﾞﾝｻｰ
	VCCCCY1HH101J	AA	DD		C	Capacitor(50WV 100pF)	[C414,C415,C417,C418,C419]	ｺﾝﾃﾞﾝｻｰ
	VCCCCY1HH101J	AA	DD		C	Capacitor(50WV 100pF)	[C422,C426]	ｺﾝﾃﾞﾝｻｰ
8	VCCCCY1HH331J	AB	DD		C	Capacitor(50WV 330pF)	[C416]	ｺﾝﾃﾞﾝｻｰ
9	VCCCCY1HH471J	AA	DD		C	Capacitor(50WV 470pF)	[C435-C440]	ｺﾝﾃﾞﾝｻ
10	VCEAGA1CW476M	AB	DD		C	Capacitor(16WV 47μF)	[C401,C402]	ｺﾝﾃﾞﾝｻ-
11	VCKYCY1CF104Z	AA	DD		C	Capacitor(16WV 0.1μF)	[C403,C420,C421,C423,C424]	ｺﾝﾃﾞﾝｻｰ
	VCKYCY1CF104Z	AA	DD		C	Capacitor(16WV 0.1μF)	[C425,C427]	ｺﾝﾃﾞﾝｻｰ
12	VHEUDZS6.2B-1	AC	DJ		B	Zener diode(UDZS6.2B)	[D402]	ﾂｪﾅﾀﾞｲｵｰﾄﾞ
13	VHi74LVX16128	AP	EQ		B	IC(74LVX16128)	[IC403]	IC
14	VHiUSB11AMX-1	AH	DX		B	IC(USB1T11AMX)	[IC401]	IC
15	VRS-CY1JD000J	AA	DD		C	Resistor(1/16W 0Ω ±5%)	[R432]	ﾃｲｺｳ
16	VRS-CY1JD103J	AA	DD		C	Resistor(1/16W 10KΩ ±5%)	[R424,R425,R426]	ﾃｲｺｳ
	VRS-CY1JD103J	AA	DD		C	Resistor(1/16W 10KΩ ±5%)	[R427,R428,R429]	ﾃｲｺｳ
17	VRS-CY1JD152J	AA	DD		C	Resistor(1/16W 1.5KΩ ±5%)	[R423]	ﾃｲｺｳ
18	VRS-CY1JD220J	AA	DD		C	Resistor(1/16W 22Ω ±5%)	[R405,R406,R407,R408,R409]	ﾃｲｺｳ
	VRS-CY1JD220J	AA	DD		C	Resistor(1/16W 22Ω ±5%)	[R410,R411,R412,R413,R414]	ﾃｲｺｳ
	VRS-CY1JD220J	AA	DD		C	Resistor(1/16W 22Ω ±5%)	[R415,R416,R417,R418,R419]	ﾃｲｺｳ
	VRS-CY1JD220J	AA	DD		C	Resistor(1/16W 22Ω ±5%)	[R421,R422]	ﾃｲｺｳ
19	VRS-CY1JD240J	AA	DD		C	Resistor(1/16W 24Ω ±5%)	[R402,R403,R430]	ﾃｲｺｳ
20	VRS-CY1JD332J	AA	DD		C	Resistor(1/16W 3.3KΩ ±5%)	[R420]	ﾃｲｺｳ
	(Unit)							
901	CPWBF0114QSE3	BA	FX		E	I/F PWB		I/F PWB

5 SCAN OPE PWB

NO.	PARTS CODE	PRICE RANK Ex.	PRICE RANK Ja.	NEW MARK	PART RANK	DESCRIPTION		
2	QSW-P0001ESZZ	AC	DJ		B	Tact swtch(SKQNAB010)	[KEY1,KEY2,KEY3,KEY4,KEY5]	ﾀｸﾄ SW
	QSW-P0001ESZZ	AC	DJ		B	Tact swtch(SKQNAB010)	[KEY6,KEY7,KEY8,KEY10,KEY11]	ﾀｸﾄ SW
	QSW-P0001ESZZ	AC	DJ		B	Tact swtch(SKQNAB010)	[KEY12,KEY13,KEY14,KEY15]	ﾀｸﾄ SW
	QSW-P0001ESZZ	AC	DJ		B	Tact swtch(SKQNAB010)	(AR-M205 only)[KEY9]	ﾀｸﾄ SW
3	VHP1LHLE-002A	AC	DJ		B	LED(Green)(LTL-1LHLE-002A)	[LED1,LED2,LED6,LED7,LED8]	LED ﾐﾄﾞﾘ
	VHP1LHLE-002A	AC	DJ		B	LED(Green)(LTL-1LHLE-002A)	[LED9,LED10,LED11,LED12]	LED ﾐﾄﾞﾘ
	VHP1LHLE-002A	AC	DJ		B	LED(Green)(LTL-1LHLE-002A)	[LED13,LED14,LED15]	LED ﾐﾄﾞﾘ
	VHP1LHLE-002A	AC	DJ		B	LED(Green)(LTL-1LHLE-002A) (AR-M205 only)[LED3,LED4,LED5]		LED ﾐﾄﾞﾘ

6 TRAY PWB

NO.	PARTS CODE	PRICE RANK Ex.	PRICE RANK Ja.	NEW MARK	PART RANK	DESCRIPTION		
1	QCNCM2401SC0F	AB	DJ		C	Connector(6pin)	[CN3]	ｺﾈｸﾀｰ
2	QCNCM7014SC0C	AA	DD		C	Connector(3pin)	[CN4,CN5]	ｺﾈｸﾀｰ
3	QCNCP0340QCZZ	AC	DJ		C	Connector(3pin)	[CN2]	ｺﾈｸﾀｰ
4	QCNCW1124LC1C	AC	DJ		C	Connector(13pin)	[CN1]	ｺﾈｸﾀｰ
5	VCEAGA1VW476M	AB	DD		C	Capacitor(35WV 47μF)	[C1]	ｺﾝﾃﾞﾝｻｰ
6	VHEMTZJ22B/-1	AA	DD		B	Zener diode(MTZJ22B)	[D1]	ﾂｪﾅｰﾀﾞｲｵｰﾄﾞ
8	VRD-HT2EY221J	AA	DD		C	Resistor(1/4W 220Ω ±5%)	[R1]	ﾃｲｺｳ
	(Unit)							
901	CPWBF0129QSE1	AQ	EQ		E	Tray PWB		ﾄﾚｲ PWB

7 SPF/RSPF INTERFACE PWB(Option AR-SP6/RP6)

NO.	PARTS CODE	PRICE RANK Ex.	PRICE RANK Ja.	NEW MARK	PART RANK	DESCRIPTION
2	QCNCM0804FCZZ	AE	DS		C	Connector(20pin) [CN6] ｺﾈｸﾀｰ
3	QCNCM0809FCZZ	AE	DS		C	Connector(26pin) [CN5] ｺﾈｸﾀｰ
4	QCNCM2401SC0C	AB	DJ		C	Connector(3pin) [CN1] ｺﾈｸﾀｰ
5	QCNCM7014SC0B	AD	DJ		C	Connector(2pin) [AR-RP6 only][CN4] ｺﾈｸﾀｰ
6	QCNCM7014SC0C	AA	DD		C	Connector(3pin) [CN7] ｺﾈｸﾀｰ
7	QCNCM7014SC0G	AB	DD		C	Connector(7pin) [CN3] ｺﾈｸﾀｰ
8	QCNCP0341QCZZ	AC	DJ		C	Connector(3pin) [CN2] ｺﾈｸﾀｰ
9	VCEAGA1CW106M	AA	DD		C	Capacitor(16WV 10μF) [C2,C3] ｺﾝﾃﾞﾝｻｰ
10	VCEAZA1VW476M	AC	DD		C	Capacitor(35WV 47μF) [C1] ｺﾝﾃﾞﾝｻｰ
11	VCKYCY1EF104Z	AA	DD		C	Capacitor(25WV 0.1μF) [C101,C102 、C108,C109,C112] ｺﾝﾃﾞﾝｻｰ
	VCKYCY1EF104Z	AA	DD		C	Capacitor(25WV 0.1μF) [C116,C120,C127,C128] ｺﾝﾃﾞﾝｻｰ
12	VCKYCY1HB102K	AA	DD		C	Capacitor(50WV 1000pF) [C117,C118,C119,C121,C122] ｺﾝﾃﾞﾝｻｰ
	VCKYCY1HB102K	AA	DD		C	Capacitor(50WV 1000pF) [C123,C124,C125 、C126] ｺﾝﾃﾞﾝｻｰ
13	VCKYCY1HB222K	AA	DD		C	Capacitor(50WV 2200pF) [C107,C113] ｺﾝﾃﾞﾝｻｰ
14	VCKYCY1HB332K	AA	DD		C	Capacitor(50WV 3300pF) [C110,C111] ｺﾝﾃﾞﾝｻｰ
15	VCKYCY1HF473Z	AA	DD		C	Capacitor(50WV 0.047μF) [C103,C104,C105,C106] ｺﾝﾃﾞﾝｻｰ
	VCKYCY1HF473Z	AA	DD		C	Capacitor(50WV 0.047μF) [C114,C115] ｺﾝﾃﾞﾝｻｰ
16	VHEUDZS5.6B-1	AC	DJ		B	Zener diode(UDZS5.6B) [ZD101,ZD102,ZD103,ZD104] ﾂｪﾅｰﾀﾞｲｵｰﾄﾞ
17	VHi74HC151M-1	AD	DJ		B	IC(74HC151M) [IC101] IC
18	VHiMTD13611-1	AR	EQ		B	IC(MTD1361-4101) [IC1] IC
19	VHiTD62003AP1	AG	DX		B	IC(TD620003AP1) [IC2] IC
20	VHViCPN38//-1	AF	DS		B	IC protector(ICPN38) [F1] ICﾌﾟﾛﾃｸﾀｰ
21	VRS-CY1JD102J	AA	DD		C	Resistor(1/16W 1.0KΩ ±5%) [R104,R105] ﾃｨｺｳ
22	VRS-CY1JD103J	AA	DD		C	Resistor(1/16W 10KΩ ±5%) [R111,R112,R113,R114,R115,R116] ﾃｨｺｳ
	VRS-CY1JD103J	AA	DD		C	Resistor(1/16W 10KΩ ±5%) [R117] ﾃｨｺｳ
23	VRS-CY1JD111F	AA	DD		C	Resistor(1/16W 110Ω ±1%) [R110] ﾃｨｺｳ
24	VRS-CY1JD242J	AA	DD		C	Resistor(1/16W 2.4KΩ ±5%) [R102,R106] ﾃｨｺｳ
25	VRS-CY1JD391F	AA	DD		C	Resistor(1/16W 390Ω ±1%) [R108] ﾃｨｺｳ
26	VRS-CY1JD431F	AA	DD		C	Resistor(1/16W 430Ω ±1%) [R109] ﾃｨｺｳ
27	VRS-CY1JD471J	AA	DD		C	Resistor(1/16W 470Ω ±5%) [R118,R119] ﾃｨｺｳ
28	VRS-CY1JD621F	AA	DD		C	Resistor(1/16W 620Ω ±1%) [R103] ﾃｨｺｳ
29	VRS-CY1JD752J	AA	DD		C	Resistor(1/16W 7.5KΩ ±5%) [R101,R107] ﾃｨｺｳ
30	VRS-RE3AA1R5J	AB	DD		C	Resistor(1W 1.5Ω ±5%) [R1,R2] ﾃｨｺｳ
31	VSDTC114EKA-1	AC	DJ		B	Transistor(DTC114EKA) [Q101,Q102] ﾄﾗﾝｼﾞｽﾀｰ
	(Unit)					
901	CPWBF0084QSE3	BA	FX		E	SPF interface PWB [AR-SP6] SPF 中継基板
	CPWBF0084QSE4	BA	FX		E	RSPF interface PWB [AR-RP6] RSPF 中継基板

8 SPF SENSOR PWB(Option AR-SP6/RP6)

NO.	PARTS CODE	PRICE RANK Ex.	PRICE RANK Ja.	NEW MARK	PART RANK	DESCRIPTION
1	QCNCM7014SC0G	AB	DD		C	Connector(7pin) [CN101] ｺﾈｸﾀｰ
2	VCKYPA1HF223Z	AA	DD		C	Capacitor(50WV 22000pF) [C101] ｺﾝﾃﾞﾝｻｰ
3	VHPGP1S58V/-1	AE	DS		B	Photo transistor(GP1S58V) [PT101,PT102,PT103,PT104,PT105] ﾌｫﾄﾄﾗﾝｼﾞｽﾀｰ
4	VRD-HT2EY121J	AA	DD		C	Resistor(1/4W 120Ω ±5%) [R101,R102] ﾃｨｺｳ
5	VRD-HT2EY241J	AA	DD		C	Resistor(1/4W 240Ω ±5%) [R103] ﾃｨｺｳ
	(Unit)					
901	CPWBF0017QSE2	AR	EQ		E	SPF Sensor PWB SPF ｾﾝｻｰ基板

9 CASETTE PWB(Option AR-D24/D25)

NO.	PARTS CODE	PRICE RANK Ex.	PRICE RANK Ja.	NEW MARK	PART RANK	DESCRIPTION
1	QCNCM0877FCZZ	AF	DS		C	Connector(20pin) [AR-D24 only][CN-C] ｺﾈｸﾀｰ
2	QCNCM0923FC16	AF	DS		C	Connector(16pin) [CN-B] ｺﾈｸﾀｰ
3	QCNCM0923FC22	AF	DS		C	Connector(22pin) [CN-A] ｺﾈｸﾀｰ
4	VCEAGA1VW476M	AB	DD		C	Capacitor(35WV 47μF) [C1-3] ｺﾝﾃﾞﾝｻｰ
5	VCKYTV1HB102K	AA	ZZ		C	Capacitor(50WV 1000PF) [C22-24] ｺﾝﾃﾞﾝｻｰ
6	VCKYTV1HB222K	AA	DD		C	Capacitor(50WV 2200pF) [C4-7,C12-14,C19-21] ｺﾝﾃﾞﾝｻｰ
	VCKYTV1HB222K	AA	DD		C	Capacitor(50WV 2200pF) [AR-D25 only][C8-10] ｺﾝﾃﾞﾝｻｰ
7	VCKYTV1HF104Z	AA	DD		C	Capacitor(50WV 0.10μF) [C11,C15,C16-18] ｺﾝﾃﾞﾝｻｰ
8	VHDDAN202K/-1	AB	DD		B	Diode(DAN202K) [D1,2] ﾀﾞｲｵｰﾄﾞ
9	VHDDAN217//-1	AC	DD		B	Diode(DAN217) [AR-D25 only][D5] ﾀﾞｲｵｰﾄﾞ
10	VHDDAP202K/-1	AB	DD		B	Diode(DAP202K) [D3,4] ﾀﾞｲｵｰﾄﾞ
11	VHiTC74HC151F	AG	DS		B	IC(TC74H151F) [IC1] IC
	VHiTC74HC151F	AG	DS		B	IC(TC74H151F) [AR-D25 only][IC3] IC
12	VHiULN2003AN1	AE	DJ		B	IC(ULN2003A) [IC2] IC
13	VHViCPN38//-1	AF	DS		B	IC protector(ICPN38) [ICP1] ICﾌﾟﾛﾃｸﾀｰ
14	VRS-TP2BD000J	AA	DD		C	Resistor(1/8W 0Ω ±5%) [J1-23,J25,J26] ﾃｨｺｳ
15	VRS-TS2AD103J	AA	DD		C	Resistor(1/10W 10KΩ ±5%) [R1-4] ﾃｨｺｳ
	VRS-TS2AD103J	AA	DD		C	Resistor(1/10W 10KΩ ±5%) [AR-D25 only][R5-8] ﾃｨｺｳ
	(Unit)					
901	CPWBF0019QSE5	AV	FG		E	1ST tray interface PWB [AR-D24] 1段ﾄﾚｲ中継基板
	CPWBF0019QSE6	AW	FG		E	2ND tray interface PWB [AR-D25] 2段ﾄﾚｲ中継基板

10 IMC2 PWB(Option AR-EB7)

NO.	PARTS CODE	PRICE RANK		NEW MARK	PART RANK	DESCRIPTION
		Ex.	Ja.			
1	QCNCM0877FCZZ	AF	DS		C	Connector(20pin) [CN1] ｺﾈｸﾀｰ
3	QSOCN0005ESZZ	AE	DS		C	Connector(UBR23-4K2200) [CN8] ｺﾈｸﾀｰ
4	QSOCZ0001QSZZ	AL	EB		C	Connector(DMM168-FLAA2-3A133) [CN6] ｺﾈｸﾀｰ
5	RCiLF1097ACZZ	AG	DS		C	Coil(DLW21SN900SQ2L) [L5] ｺｲﾙ
6	RCiLF2049HCZZ	AB	DJ		C	Coil(BLM21P600SG) [L6,L4] ｺｲﾙ
11	RH-iX0027QSZZ	AM	EG		B	IC(74VCX16244) [IC28,IC29] IC
12	RH-iX0028QSZZ	AM	EG		B	IC(74VCX16245) [IC26] IC
13	RMPTR4000ACZZ	AB	DD		B	Block resistor(0Ω×4) [BR12,BR13,BR14,BR15,BR16] ﾌﾞﾛｯｸﾃｲｺｳ
	RMPTR4000ACZZ	AB	DD		B	Block resistor(0Ω×4) [BR17,BR36,BR37,BR38,BR42] ﾌﾞﾛｯｸﾃｲｺｳ
	RMPTR4000ACZZ	AB	DD		B	Block resistor(0Ω×4) [BR400,BR401,BR402,BR403] ﾌﾞﾛｯｸﾃｲｺｳ
	RMPTR4000ACZZ	AB	DD		B	Block resistor(0Ω×4) [BR404,BR405] ﾌﾞﾛｯｸﾃｲｺｳ
14	RMPTR4100ACZZ	AB	DD		B	Block resistor(10Ω×4) [BR1,BR2,BR3,BR4,BR5] ﾌﾞﾛｯｸﾃｲｺｳ
15	RMPTR4103ACZZ	AB	DD		B	Block resistor(10KΩ×4) [BR39,BR40,BR41,BR43] ﾌﾞﾛｯｸﾃｲｺｳ
16	RMPTR4330ACZZ	AB	DD		B	Block resistor(33Ω×4) [BR11] ﾌﾞﾛｯｸﾃｲｺｳ
17	TLABZ4201FCZZ	AC	DJ		D	Version label [for IC2] ﾊﾞｰｼﾞｮﾝﾗﾍﾞﾙ
18	VCCCCZ1HH101J	AA	DD		C	Capacitor(50WV 100pF) [C60] ｺﾝﾃﾞﾝｻｰ
19	VCCCCZ1HH120J	AA	DD		C	Capacitor(50WV 12pF) [C44,C50] ｺﾝﾃﾞﾝｻｰ
21	VCCCCZ1HH390J	AA	DD		C	Capacitor(50WV 39pF) [C66] ｺﾝﾃﾞﾝｻ
22	VCCCCZ1HH680J	AA	DD		C	Capacitor(50WV 68p) [C401,C402,C403,C404,C405] ｺﾝﾃﾞﾝｻｰ
23	VCCUCY1AJ105Z	AC	DD		C	Capacitor(10WV 1.0μF) [C8,C5] ｺﾝﾃﾞﾝｻｰ
24	VCEAGA1CW106M	AA	DD		C	Capacitor(16WV 10μF) [C11,C21,C26,C35,C45] ｺﾝﾃﾞﾝｻｰ
	VCEAGA1CW106M	AA	DD		C	Capacitor(16WV 10μF) [C87,C89,C119] ｺﾝﾃﾞﾝｻｰ
25	VCEAGA1CW476M	AB	DD		C	Capacitor(16WV 47μF) [C3,C6,C54,C56,C69,C70] ｺﾝﾃﾞﾝｻ-
26	VCKYCZ1CB103K	AA	DD		C	Capacitor(16WV 0.010μF) [C4,C7,C58,C59,C81,C82] ｺﾝﾃﾞﾝｻｰ
	VCKYCZ1CB103K	AA	DD		C	Capacitor(16WV 0.010μF) [C83,C84,C85,C86,C98] ｺﾝﾃﾞﾝｻｰ
27	VCKYCZ1CF104Z	AB	DD		C	Capacitor(16WV 0.1μF) [C2,C12,C13,C14,C15] ｺﾝﾃﾞﾝｻｰ
	VCKYCZ1CF104Z	AB	DD		C	Capacitor(16WV 0.1μF) [C16,C17,C18,C19,C20] ｺﾝﾃﾞﾝｻｰ
	VCKYCZ1CF104Z	AB	DD		C	Capacitor(16WV 0.1μF) [C22,C23,C24,C25,C27] ｺﾝﾃﾞﾝｻｰ
	VCKYCZ1CF104Z	AB	DD		C	Capacitor(16WV 0.1μF) [C28,C29,C30,C31,C32] ｺﾝﾃﾞﾝｻｰ
	VCKYCZ1CF104Z	AB	DD		C	Capacitor(16WV 0.1μF) [C33,C34,C36,C37,C38] ｺﾝﾃﾞﾝｻｰ
	VCKYCZ1CF104Z	AB	DD		C	Capacitor(16WV 0.1μF) [C39,C40,C41,C42,C43] ｺﾝﾃﾞﾝｻｰ
	VCKYCZ1CF104Z	AB	DD		C	Capacitor(16WV 0.1μF) [C46,C47,C48,C49,C55] ｺﾝﾃﾞﾝｻｰ
	VCKYCZ1CF104Z	AB	DD		C	Capacitor(16WV 0.1μF) [C57,C64,C71,C72,C73] ｺﾝﾃﾞﾝｻｰ
	VCKYCZ1CF104Z	AB	DD		C	Capacitor(16WV 0.1μF) [C74,C75,C76,C77,C78] ｺﾝﾃﾞﾝｻｰ
	VCKYCZ1CF104Z	AB	DD		C	Capacitor(16WV 0.1μF) [C79,C80,C88,C90,C91] ｺﾝﾃﾞﾝｻｰ
	VCKYCZ1CF104Z	AB	DD		C	Capacitor(16WV 0.1μF) [C92,C93,C94,C95,C120] ｺﾝﾃﾞﾝｻｰ
	VCKYCZ1CF104Z	AB	DD		C	Capacitor(16WV 0.1μF) [C121,C122,C123,C124,C125] ｺﾝﾃﾞﾝｻｰ
	VCKYCZ1CF104Z	AB	DD		C	Capacitor(16WV 0.1μF) [C128,C129,C130,C131] ｺﾝﾃﾞﾝｻｰ
28	VCKYCZ1HB222K	AA	DD		C	Capacitor(50WV 2200pF) [C65] ｺﾝﾃﾞﾝｻｰ
29	VHiCY2305SC-1	AU	EZ		B	IC(CY2305SC) [IC6] IC
33	VRS-CY1JD000J	AA	DD		C	Resistor(1/16W 0Ω ±5%) [L1,L2,L3] ﾃｲｺｳ
34	VRS-CY1JD103J	AA	DD		C	Resistor(1/16W 10KΩ ±5%) [R420] ﾃｲｺｳ
35	VRS-CY1JD1R0J	AA	DD		C	Resistor(1/16W 1.0Ω ±5%) [R11,R14] ﾃｲｺｳ
36	VRS-CZ1JD000J	AA	DD		C	Resistor(1/16W 0Ω ±5%) [R4,R20,R29,R30,R31] ﾃｲｺｳ
	VRS-CZ1JD000J	AA	DD		C	Resistor(1/16W 0Ω ±5%) [R32,R33,R34,R35,R36] ﾃｲｺｳ
	VRS-CZ1JD000J	AA	DD		C	Resistor(1/16W 0Ω ±5%) [R37,R38,R39,R40,R42] ﾃｲｺｳ
	VRS-CZ1JD000J	AA	DD		C	Resistor(1/16W 0Ω ±5%) [R43,R44,R45,R46,R47] ﾃｲｺｳ
	VRS-CZ1JD000J	AA	DD		C	Resistor(1/16W 0Ω ±5%) [R48,R50,R51,R53,R54] ﾃｲｺｳ
	VRS-CZ1JD000J	AA	DD		C	Resistor(1/16W 0Ω ±5%) [R55,R58,R61,R62,R66] ﾃｲｺｳ
	VRS-CZ1JD000J	AA	DD		C	Resistor(1/16W 0Ω ±5%) [R67,R69,R70,R71,R83] ﾃｲｺｳ
	VRS-CZ1JD000J	AA	DD		C	Resistor(1/16W 0Ω ±5%) [R84,R85,R133,R136,R137] ﾃｲｺｳ
	VRS-CZ1JD000J	AA	DD		C	Resistor(1/16W 0Ω ±5%) [R138,R139,R140,R144,R400] ﾃｲｺｳ
	VRS-CZ1JD000J	AA	DD		C	Resistor(1/16W 0Ω ±5%) [R405,R406,R415,R416] ﾃｲｺｳ
37	VRS-CZ1JD100J	AA	DD		C	Resistor(1/16W 10Ω ±5%) [R1,R2,R3,R8,R9] ﾃｲｺｳ
	VRS-CZ1JD100J	AA	DD		C	Resistor(1/16W 10Ω ±5%) [R56,R57,R59,R60,R63] ﾃｲｺｳ
38	VRS-CZ1JD103J	AA	DD		C	Resistor(1/16W 10KΩ ±5%) [R21,R22,R24,R25,R26] ﾃｲｺｳ
	VRS-CZ1JD103J	AA	DD		C	Resistor(1/16W 10KΩ ±5%) [R122,R123,R124,R125,R127] ﾃｲｺｳ
	VRS-CZ1JD103J	AA	DD		C	Resistor(1/16W 10KΩ ±5%) [R128,R129,R131,R132,R407] ﾃｲｺｳ
	VRS-CZ1JD103J	AA	DD		C	Resistor(1/16W 10KΩ ±5%) [R408,R409,R410,R411,R412] ﾃｲｺｳ
	VRS-CZ1JD103J	AA	DD		C	Resistor(1/16W 10KΩ ±5%) [R413,R414,R417,R419,R402] ﾃｲｺｳ
39	VRS-CZ1JD123F	AA	DD		C	Resistor(1/16W 12KΩ ±1%) [R143] ﾃｲｺｳ
40	VRS-CZ1JD152J	AA	DD		C	Resistor(1/16W 1.5KΩ ±5%) [R134] ﾃｲｺｳ
41	VRS-CZ1JD472J	AA	DD		C	Resistor(1/16W 4.7KΩ ±5%) [R5,R10,R17,R18,R19,R418] ﾃｲｺｳ
42	VRS-CZ1JD680J	AA	DD		C	Resistor(1/16W 68Ω ±5%) [R41] ﾃｲｺｳ
43	VRS-CZ1JD752F	AA	DD		C	Resistor(1/16W 7.5KΩ ±1%) [R401] ﾃｲｺｳ

■ 索引 (Index)

PARTS CODE	JAPAN ONLY ORDER CODE	NO.	PRICE R. Ex.	PRICE R. Ja.	NEW	P/R
【C】						
CPWBF0017QSE2	578 684 1119	8-901	AR	EQ		E
CPWBF0019QSE5	578 684 1103	9-901	AV	FG		E
CPWBF0019QSE6	578 684 1114	9-901	AW	FG		E
CPWBF0084QSE3	578 684 1120	7-901	BA	FX		E
CPWBF0084QSE4	578 684 1121	7-901	BA	FX		E
CPWBF0114QSE3	578 684 1122	4-901	BA	FX		E
CPWBF0129QSE1	578 684 1123	6-901	AQ	EQ		E
CPWBX0128QS31	578 684 1105	1-901	CA	TR		E
CPWBX0128QS32	578 684 1108	1-901	CA	TV		E
CPWBX0128QS33	578 684 1135	1-901	CA	TR		E
CPWBX0128QS34	578 684 1106	1-901	CA	TV		E
CPWBX0128QS36	578 684 1128	1-901	CA	TV		E
【D】						
DHAi-0310QSZZ	578 542 0277	4- 1	AB	DJ		C
【Q】						
QCNCM0017QSZZ	572 510 1051	1- 4	AC	DJ		C
QCNCM0804FCZZ	572 510 0127	7- 2	AE	DS		C
QCNCM0809FCZZ	572 510 0672	7- 3	AE	DS		C
QCNCM0877FCZZ	572 510 0842	10- 1	AF	DS		C
〃	572 510 0842	1- 8	AF	DS		C
〃	572 510 0842	9- 1	AF	DS		C
QCNCM0923FC12	572 510 0939	1- 9	AE	DJ		C
QCNCM0923FC16	572 510 0868	9- 2	AF	DS		C
QCNCM0923FC22	572 510 0869	9- 3	AF	DS		C
QCNCM1005MCZZ	589 510 0004	1- 10	AB	DD		C
QCNCM1006MCZZ	589 510 0020	1- 11	AB	DD		C
QCNCM2334SC0B	595 510 0234	1- 12	AB	DD		C
QCNCM2401SC0C	595 510 0762	1- 13	AB	DJ		C
〃	595 510 0762	7- 4	AB	DJ		C
QCNCM2401SC0D	595 510 0090	1- 14	AC	DJ		C
QCNCM2401SC0F	595 510 0782	6- 1	AB	DJ		C
QCNCM7014SC0B	595 510 0337	7- 5	AD	DJ		C
QCNCM7014SC0C	595 510 0338	1- 15	AA	DD		C
〃	595 510 0338	6- 2	AA	DD		C
〃	595 510 0338	7- 6	AA	DD		C
QCNCM7014SC0D	595 510 0345	1- 16	AB	DD		C
QCNCM7014SC0E	595 510 0744	1- 17	AB	DJ		C
QCNCM7014SC0F	595 510 0346	1- 18	AB	DD		C
QCNCM7014SC0G	595 510 0347	7- 7	AB	DD		C
〃	595 510 0347	8- 1	AB	DD		C
QCNCM7014SC1C	595 510 0355	1- 19	AC	DD		C
QCNCP0340QCZZ	572 510 0921	6- 3	AC	DJ		C
QCNCP0341QCZZ	572 510 0922	7- 8	AC	DJ		C
QCNCW0024QSZZ	572 510 1056	1- 21	AF	DS		C
〃	572 510 1056	2- 1	AF	DS		C
QCNCW0077QSZZ	578 510 0330	1- 22	AK	DX		C
QCNCW0078QSZZ	578 510 0335	1- 23	AF	DS		C
〃	578 510 0335	4- 2	AF	DS		C
QCNCW0885FCZZ	572 510 0834	1- 26	AG	DX		C
QCNCW1124LC0D	572 510 1032	1- 27	AB	DJ		C
QCNCW1124LC0H	594 510 0507	1- 28	AC	DJ		C
QCNCW1124LC1C	594 510 0508	1- 29	AC	DJ		C
〃	594 510 0508	6- 4	AC	DJ		C
QSOCN0002ESZZ	578 527 0030	4- 3	AH	DX		C
QSOCN0005ESZZ	578 527 0032	10- 3	AE	DS		C
〃	578 527 0032	4- 4	AE	DS		C
QSOCZ0001QSZZ	578 527 0024	10- 4	AL	EB		C
QSOCZ0002QSZZ	578 527 0027	1- 31	AD	DJ		C
QSW-P0001ESZZ	578 530 0104	3- 2	AC	DJ		B
〃	578 530 0104	5- 2	AC	DJ		B
【R】						
RCiLF1097ACZZ	596 614 0611	10- 5	AG	DS		C
RCiLF2049HCZZ	567 614 0106	10- 6	AB	DJ		C
RCRSP0016QSZZ	578 616 0063	1- 32	AD	DJ		B
RFiLZ0004QSZZ	578 621 0030	1- 35	AM	EG		C
〃	578 621 0030	2- 2	AM	EG		C
RH-DX0001ESZZ	578 570 0169	4- 5	AC	DJ		B
RH-DZ0016FCZZ	572 570 0001	1- 36	AB	DD		B
RH-iX0001QSZZ	578 573 1147	1- 37	BD	GN		B
RH-iX0005ESZZ	578 573 1162	4- 6	AE	DS		B
RH-iX0027QSZZ	578 573 1352	10- 11	AM	EG		B
RH-iX0028QSZZ	578 573 1353	10- 12	AM	EG		B
RH-iX7001XCZZ	578 573 1347	1- 39	AQ	EQ		B
RH-TX0003ESZZ	578 576 0131	3- 4	AC	DJ		B
RMPTR4000ACZZ	567 631 0098	10- 13	AB	DD		B
RMPTR4100ACZZ	567 631 0099	10- 14	AB	DD		B
RMPTR4103ACZZ	567 631 0100	10- 15	AB	DD		B
RMPTR4330ACZZ	567 631 0109	10- 16	AB	DD		B

PARTS CODE	JAPAN ONLY ORDER CODE	NO.	PRICE R. Ex.	PRICE R. Ja.	NEW	P/R
RMPTW4100QCJJ	572 631 0264	1- 40	AA	DD		B
〃	572 631 0264	2- 3	AA	DD		B
RMPTW4101QCJJ	521 631 0027	1- 41	AB	DD		B
RMPTW4103QCJJ	571 631 0147	1- 42	AB	DD		B
RMPTW4221QCJJ	523 631 0016	1- 43	AA	DD		B
RMPTW4330QCJJ	567 631 0058	1- 44	AB	DD		B
【T】						
TLABZ4201FCZZ	572 917 3231	10- 17	AC	DJ		D
【V】						
VCCCCY1HH101J	507 591 5030	4- 7	AA	DD		C
VCCCCY1HH201J	594 593 0050	3- 6	AA	DD		C
VCCCCY1HH331J	594 593 0052	4- 8	AB	DD		C
VCCCCY1HH471J	571 593 0210	4- 9	AA	DD		C
VCCCCZ1HH101J	521 593 0028	10- 18	AA	DD		C
〃	521 593 0028	1- 45	AA	DD		C
〃	521 593 0028	2- 4	AA	DD		C
VCCCCZ1HH120J	567 593 0312	10- 19	AA	DD		C
〃	567 593 0312	1- 46	AA	DD		C
VCCCCZ1HH150J	521 593 0029	1- 47	AA	DD		C
VCCCCZ1HH220J	521 593 0023	1- 48	AA	DD		C
VCCCCZ1HH330J	521 593 0034	1- 49	AA	DD		C
VCCCCZ1HH390J	567 593 0313	10- 21	AA	DD		C
VCCCCZ1HH470J	521 593 0025	2- 6	AA	DD		C
VCCCCZ1HH680J	567 593 0316	10- 22	AA	DD		C
VCCUCY1AJ105Z	596 593 0899	10- 23	AC	DD		C
VCEAGA1CW106M	541 591 5281	10- 24	AA	DD		C
〃	541 591 5281	1- 50	AA	DD		C
〃	541 591 5281	7- 9	AA	DD		C
VCEAGA1CW226M	541 591 5282	1- 51	AB	DD		C
VCEAGA1CW476M	541 591 5090	10- 25	AB	DD		C
〃	541 591 5090	1- 52	AB	DD		C
〃	541 591 5090	4- 10	AB	DD		C
VCEAGA1VW106M	572 594 0093	1- 53	AA	DD		C
VCEAGA1VW476M	572 594 0091	1- 54	AB	DD		C
〃	572 594 0091	6- 5	AB	DD		C
〃	572 594 0091	9- 4	AB	DD		C
VCEAJA1CW226M	578 594 0012	2- 7	AB	DD		C
VCEAJA1EW226M	595 594 0103	2- 8	AB	DD		C
VCEAJU1CW476M	596 594 0062	3- 7	AB	DD		C
VCEAZA1VW476M	578 594 0149	7- 10	AC	DD		C
VCKYCY1CB104K	567 593 0198	3- 8	AB	DD		C
VCKYCY1CF104Z	571 593 0054	4- 11	AA	DD		C
VCKYCY1EF104Z	507 591 5036	1- 55	AA	DD		C
〃	507 591 5036	7- 11	AA	DD		C
VCKYCY1HB102K	594 593 0044	1- 56	AA	DD		C
〃	594 593 0044	7- 12	AA	DD		C
VCKYCY1HB104K	595 593 1684	1- 57	AA	DD		C
VCKYCY1HB222K	595 593 0027	1- 58	AA	DD		C
〃	595 593 0027	7- 13	AA	DD		C
VCKYCY1HB332K	595 593 1209	7- 14	AA	DD		C
VCKYCY1HB473K	594 593 0330	1- 59	AA	DD		C
VCKYCY1HF473Z	594 593 0207	7- 15	AA	DD		C
VCKYCZ1CB103K	595 593 1450	10- 26	AA	DD		C
VCKYCZ1CB223K	595 593 1451	1- 60	AB	DD		C
VCKYCZ1CF104Z	521 593 0017	10- 27	AB	DD		C
〃	521 593 0017	2- 9	AB	DD		C
VCKYCZ1HB102K	521 593 0030	1- 62	AA	DD		C
VCKYCZ1HB222K	521 593 0032	10- 28	AA	DD		C
VCKYCZ1HB271K	596 593 1668	1- 63	AA	DD		C
VCKYCZ1HB471K	521 593 0033	1- 64	AA	DD		C
VCKYCZ1HB821K	578 593 0389	1- 65	AC	DD		C
VCKYPA1HF223Z	572 593 0029	8- 2	AA	DD		C
VCKYTV1HB102K	588 593 0008	9- 5	AA	ZZ		C
VCKYTV1HB222K	596 593 0080	9- 6	AA	DD		C
VCKYTV1HF104Z	578 593 0038	9- 7	AA	DD		C
VHD1SS355//-1	595 570 0304	1- 66	AB	DJ		B
VHDDAN202K/-1	500 570 5005	9- 8	AB	DD		B
VHDDAN217//-1	500 570 5021	9- 9	AC	DD		B
VHDDAP202K/-1	500 570 0037	9- 10	AB	DD		B
VHDDSS133//-1	500 570 5006	1- 67	AA	DD		B
〃	500 570 5006	3- 9	AA	DD		B
VHDKDS120++-1	578 570 0175	1- 68	AC	DJ		B
VHDKDS121++-1	578 570 0171	1- 69	AC	DJ		B
VHDKDS226++-1	578 570 0172	1- 70	AC	DJ		B
VHEMTZJ22B/-1	567 571 0006	1- 71	AA	DD		B
〃	567 571 0006	6- 6	AA	DD		B
VHEUDZ3.9B/-1	596 571 0169	1- 72	AC	DJ		B
VHEUDZ5.6B/-1	567 571 0089	1- 73	AC	DJ		B
VHEUDZS5.6B-1	594 571 0179	7- 16	AC	DJ		B
VHEUDZS6.2B-1	567 571 0103	4- 12	AC	DJ		B
VHi29L0800BQS	578 573 1355	1- 2	BD	GJ		B

PARTS CODE	JAPAN ONLY ORDER CODE	NO.	PRICE R.		NEW	P/R
			Ex.	Ja.		
VHi29L0800CQS	578 573 1356	1- 3	BD	GJ		B
VHi74HC151M-1	578 573 1185	1- 74	AD	DJ		B
〃	578 573 1185	3- 10	AD	DJ		B
〃	578 573 1185	7- 17	AD	DJ		B
VHi74LCX32M-1	578 573 1177	1- 76	AE	DJ		B
VHi74LVX16128	578 573 1048	4- 13	AP	EQ		B
VHi74VHCT04FT	593 573 3301	2- 11	AF	DS		B
VHiCY2305SC-1	572 573 2019	10- 29	AU	EZ		B
VHiD65001AF-1	578 573 1315	1- 77	AG	DS		B
VHiD65503F+-1	578 573 1316	1- 78	AG	DS		B
VHiEES04L400P	572 573 2414	1- 79	AG	DX		B
VHiH8S2321+-1	578 573 1323	1- 80	AX	FG		B
VHiKA7805AP-1	578 573 1159	1- 82	AE	DS		B
VHiKiA358F+-1	578 573 1317	1- 84	AE	DS		B
VHiKiA393F+-1	578 573 1318	1- 85	AE	DS		B
VHiL6219DS+-1	578 573 1314	1- 86	AN	EQ		B
VHiLC7935//-1	572 573 0454	3- 11	AN	EQ		B
VHiLCX16244-1	578 573 1219	1- 87	AM	EG		B
VHiLCX16374-1	578 573 1164	1- 88	AM	EG		B
VHiLCX244WM-1	578 573 1146	1- 89	AG	DX		B
VHiLVX4245M-1	578 573 1181	1- 91	AL	EB		B
VHiM51957BFP1	567 573 0126	1- 92	AH	DX		B
VHiMTD13611-1	578 573 1140	7- 18	AR	EQ		B
VHiNE555///-1	541 573 1156	3- 12	AG	DX		B
VHiP2010ASR-1	578 573 1322	1- 93	AN	EQ		B
VHiTA7291AS-1	572 573 2570	1- 94	AF	DX		B
VHiTC74HC151F	572 573 1792	9- 11	AG	DS		B
VHiTD62003AP1	595 573 1747	7- 19	AG	DX		B
VHiTD62064AF/	572 573 1832	1- 95	AM	EG		B
VHiULN2003AN1	572 573 0829	9- 12	AE	DJ		B
VHiUSB11AMX-1	578 573 1319	4- 14	AH	DX		B
VHiVHCT244M-1	578 573 1179	1- 96	AG	DX		B
VHP1LHEE-002A	578 574 0042	3- 13	AC	DJ		B
VHP1LHLE-002A	578 574 0043	3- 14	AC	DJ		B
〃	578 574 0043	5- 3	AC	DJ		B
VHP3650AG2J-1	578 574 0051	3- 15	AL	EB		B
VHPGP1S58V/-1	572 568 0002	8- 3	AE	DS		B
VHViCPN38//-1	585 577 0022	7- 20	AF	DS		B
〃	585 577 0022	9- 13	AF	DS		B
VRD-HT2EY121J	507 581 5011	8- 4	AA	DD		C
VRD-HT2EY221J	507 581 5014	6- 8	AA	DD		C
VRD-HT2EY241J	593 581 0088	8- 5	AA	DD		C
VRD-HT2EY472J	507 581 5018	1- 97	AA	DD		C
VRN-VT3ATR68J	578 581 0712	1- 98	AC	DD		C
VRS-CY1JD000J	507 581 5050	10- 33	AA	DD		C
〃	507 581 5050	3- 16	AA	DD		C
〃	507 581 5050	4- 15	AA	DD		C
VRS-CY1JD101J	596 581 0257	3- 17	AA	DD		C
VRS-CY1JD102J	571 581 0007	3- 18	AA	DD		C
〃	571 581 0007	7- 21	AA	DD		C
VRS-CY1JD103J	500 581 5097	10- 34	AA	DD		C
〃	500 581 5097	3- 19	AA	DD		C
〃	500 581 5097	4- 16	AA	DD		C
〃	500 581 5097	7- 22	AA	DD		C
VRS-CY1JD111F	578 581 0329	7- 23	AA	DD		C
VRS-CY1JD151J	500 581 5110	3- 20	AA	DD		C
VRS-CY1JD152J	571 581 0003	4- 17	AA	DD		C
VRS-CY1JD1R0J	567 581 0423	10- 35	AA	DD		C
VRS-CY1JD202J	594 581 0151	3- 21	AA	DD		C
VRS-CY1JD220J	507 581 5055	4- 18	AA	DD		C
VRS-CY1JD240J	578 581 0285	4- 19	AA	DD		C
VRS-CY1JD242J	596 581 2169	7- 24	AA	DD		C
VRS-CY1JD244J	594 581 0684	3- 22	AA	DD		C
VRS-CY1JD332J	500 581 5112	4- 20	AA	DD		C
VRS-CY1JD391F	521 581 0079	7- 25	AA	DD		C
VRS-CY1JD431F	578 581 0331	7- 26	AA	DD		C
VRS-CY1JD471J	571 581 0002	3- 23	AA	DD		C
〃	571 581 0002	7- 27	AA	DD		C
VRS-CY1JD511J	595 581 0110	3- 24	AA	DD		C
VRS-CY1JD621F	594 581 0820	7- 28	AA	DD		C
VRS-CY1JD752J	596 581 0258	7- 29	AA	DD		C
VRS-CZ1JD000J	521 581 0082	10- 36	AA	DD		C
〃	521 581 0082	1- 99	AA	DD		C
〃	521 581 0082	2- 15	AA	DD		C
VRS-CZ1JD100J	567 581 0524	10- 37	AA	DD		C
〃	567 581 0524	1-100	AA	DD		C
〃	567 581 0524	2- 16	AA	DD		C
VRS-CZ1JD101J	521 581 0137	1-101	AA	DD		C
〃	521 581 0137	2- 17	AA	DD		C
VRS-CZ1JD102F	521 581 0187	1-102	AA	DD		C
VRS-CZ1JD102J	521 581 0093	1-103	AA	DD		C

PARTS CODE	JAPAN ONLY ORDER CODE	NO.	PRICE R.		NEW	P/R
			Ex.	Ja.		
VRS-CZ1JD103F	521 581 0127	1-104	AA	DD		C
VRS-CZ1JD103J	521 581 0085	10- 38	AA	DD		C
〃	521 581 0085	1-105	AA	DD		C
VRS-CZ1JD105F	578 581 0716	1-106	AA	DD		C
VRS-CZ1JD122F	578 581 0717	1-107	AA	DD		C
VRS-CZ1JD123F	521 581 0128	10- 39	AA	DD		C
VRS-CZ1JD133F	572 581 2079	1-108	AA	DD		C
VRS-CZ1JD152J	521 581 0175	10- 40	AA	DD		C
〃	521 581 0175	1-109	AA	DD		C
VRS-CZ1JD202J	567 581 0695	2- 18	AA	DD		C
VRS-CZ1JD203J	567 581 0530	1-110	AA	DD		C
VRS-CZ1JD220J	567 581 0532	1-111	AA	DD		C
VRS-CZ1JD241J	578 581 0718	1-112	AA	DD		C
VRS-CZ1JD272J	567 581 0634	1-114	AA	DD		C
VRS-CZ1JD301J	572 581 2154	1-115	AA	DD		C
VRS-CZ1JD302F	521 581 0106	1-116	AA	DD		C
VRS-CZ1JD303J	572 581 2074	1-117	AA	DD		C
VRS-CZ1JD330J	521 581 0202	1-118	AA	DD		C
〃	521 581 0202	2- 19	AA	DD		C
VRS-CZ1JD470J	521 581 0170	1-119	AA	DD		C
VRS-CZ1JD471J	567 581 0617	1-120	AA	DD		C
VRS-CZ1JD472J	521 581 0088	10- 41	AA	DD		C
VRS-CZ1JD473J	521 581 0109	1-121	AA	DD		C
VRS-CZ1JD680J	572 581 2065	10- 42	AA	DD		C
VRS-CZ1JD752F	521 581 0114	10- 43	AA	DD		C
〃	521 581 0114	1-122	AA	DD		C
VRS-HT3DA102J	588 581 0145	1-124	AA	DD		C
VRS-HT3DAR22J	572 581 0135	1-126	AA	DD		C
VRS-RE3AA1R5J	578 581 0316	7- 30	AB	DD		C
VRS-TP2BD000J	507 581 5003	9- 14	AA	DD		C
VRS-TS2AD103J	501 581 5009	9- 15	AA	DD		C
VS2SB1197//-1	571 576 0349	1-127	AC	DJ		B
VSDTC114EKA-1	595 576 0491	7- 31	AC	DJ		B
VSDTC143ZKA-1	594 576 0231	3- 25	AC	DJ		B
VSKRA119S++-1	578 576 0132	1-128	AB	DJ		B
VSKTA1505S+-1	578 576 0134	1-129	AC	DJ		B
VSUPA502T//-1	572 576 0512	1-130	AD	DJ		B

注 意

・電池を正しく交換しないと爆発を起こす危険がある。

・機器製造者が指定したものと同一型名のもの、又は、
その同等の電池とのみ交換すること。

・使用済みの電池は、製造者の指示に従って処分すること。

CAUTION FOR BATTERY REPLACEMENT

(Danish) ADVARSEL !
Lithiumbatteri – Eksplosionsfare ved fejlagtig håndtering.
Udskiftning må kun ske med batteri
af samme fabrikat og type.
Levér det brugte batteri tilbage til leverandoren.

(English) Caution !
Danger of explosion if battery is incorrectly replaced.
Replace only with the same or equivalent type
recommended by the manufacturer.
Dispose of used batteries according to manufacturer's instructions.

(Finnish) VAROITUS
Paristo voi räjähtää, jos se on virheellisesti asennettu.
Vaihda paristo ainoastaan laitevalmistajan suosittelemaan
tyyppiin. Hävitä käytetty paristo valmistajan ohjeiden
mukaisesti.

(French) ATTENTION
Il y a danger d'explosion s' il y a remplacement incorrect
de la batterie. Remplacer uniquement avec une batterie du
même type ou d'un type équivalent recommandé par
le constructeur.
Mettre au rebut les batteries usagées conformément aux
instructions du fabricant.

(Swedish) VARNING
Explosionsfara vid felaktigt batteribyte.
Använd samma batterityp eller en ekvivalent
typ som rekommenderas av apparattillverkaren.
Kassera använt batteri enligt fabrikantens
instruktion.

(German) Achtung
Explosionsgefahr bei Verwendung inkorrekter Batterien.
Als Ersatzbatterien dürfen nur Batterien vom gleichen Typ oder
vom Hersteller empfohlene Batterien verwendet werden.
Entsorgung der gebrauchten Batterien nur nach den vom
Hersteller angegebenen Anweisungen.

CAUTION FOR BATTERY DISPOSAL

(For USA, CANADA)

"BATTERY DISPOSAL"
THIS PRODUCT CONTAINS A LITHIUM PRIMARY
(MANGANESS DIOXIDE) MEMORY BACK-UP BATTERY
THAT MUST BE DISPOSED OF PROPERLY. REMOVE THE
BATTERY FROM THE PRODUCT AND CONTACT YOUR
LOCAL ENVIRONMENTAL AGENCIES FOR INFORMATION
ON RECYCLING AND DISPOSAL OPTIONS.

"TRAITEMENT DES PILES USAGÉES"
CE PRODUIT CONTIENT UNE PILE DE SAUVEGARDE DE
MÉMOIRE LITHIUM PRIMAIRE (DIOXYDE DE MANGANÈSE)
QUI DOIT ÊTRE TRAITÉE CORRECTEMENT. ENLEVEZ LA
PILE DU PRODUIT ET PRENEZ CONTACT AVEC VOTRE
AGENCE ENVIRONNEMENTALE LOCALE POUR DES
INFORMATIONS SUR LES MÉTHODES DE RECYCLAGE ET
DE TRAITEMENT.

SHARP

COPYRIGHT © 2003 BY SHARP CORPORATION

All rights reserved.
Printed in Japan.
No part of this publication may be reproduced,
stored in a retrieval system, or transmitted.
In any form or by any means,
electronic, mechanical, photocopying, recording, or otherwise,
without prior written permission of the publisher.

SHARP CORPORATION
Digital Document Systems Group
Products Quality Assurance Department
Yamatokoriyama, Nara 639-1186, Japan
2003 August Printed in Japan ⓣ