SHARP SERVICE MANUAL

CODE : 00ZARM205/A1E

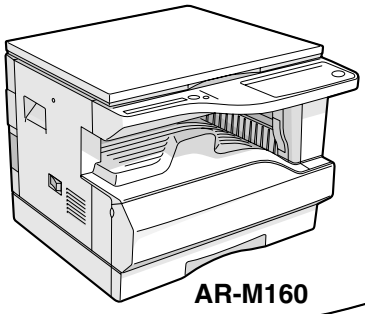

AR-M160

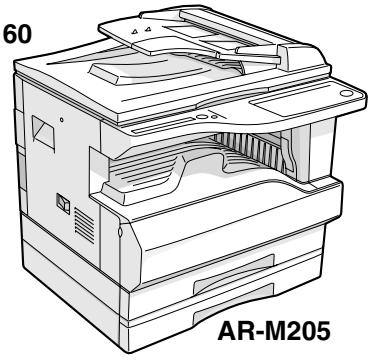

AR-M205

(With RSPF installed)

DIGITAL COPIER

MODEL AR-M160 AR-M205

CONTENTS

[1] GENERAL . . . . . 1 - 1
[2] SPECIFICATIONS . . . . . 2 - 1
[3] CONSUMABLE PARTS . . . . . 3 - 1
[4] EXTERNAL VIEWS AND INTERNAL STRUCTURES . . . . . 4 - 1
[5] UNPACKING AND INSTALLATION . . . . . 5 - 1
[6] ADJUSTMENTS . . . . . 6 - 1
[7] SIMULATIONS . . . . . 7 - 1
[8] USER PROGRAMS . . . . . 8 - 1
[9] TROUBLE CODE LIST . . . . . 9 - 1
[10] MAINTENANCE . . . . . 10 - 1
[11] DISASSEMBLY AND ASSEMBLY . . . . . 11 - 1
[12] FLASH ROM VERSION UP PROCEDURE . . . . . 12 - 1
[13] ELECTRICAL SECTION . . . . . 13 - 1

Parts marked with "⚠" are important for maintaining the safety of the set.
Be sure to replace these parts with specified ones for maintaining the safety and performance of the set.

SHARP CORPORATION

This document has been published to be used for after sales service only.
The contents are subject to change without notice.

CAUTION

This product is a class 1 laser product that complies with 21CFR 1040.10 and 1040.11 of the CDRH standard and IEC825. This means that this machine does not produce hazardous laser radiation. The use of controls, adjustments or performance of procedures other than those specified herein may result in hazardous radiation exposure.
This laser radiation is not a danger to the skin, but when an exact focusing of the laser beam is achieved on the eye's retina, there is the danger of spot damage to the retina.
The following cautions must be observed to avoid exposure of the laser beam to your eyes at the time of servicing.

1) When a problem in the laser optical unit has occurred, the whole optical unit must be exchanged as a unit, not as individual parts.
2) Do not look into the machine with the main switch turned on after removing the developer unit, toner cartridge, and drum cartridge.
3) Do not look into the laser beam exposure slit of the laser optical unit with the connector connected when removing and installing the optical system.
4) The middle frame contains the safety interlock switch.
   Do not defeat the safety interlock by inserting wedges or other items into the switch slot.

Warning!
This product is a class A product.
If it is operated in households, offices or similar surroundings, it can produce radio interferences at other appliances, so that the user has to take adequate countermeasures.

CLASS 1 LASER PRODUCT

LASER KLASSE 1

LUOKAN 1 LASERLAITE

KLASS 1 LASERAPPARAT

VAROITUS!
LAITTEEN KÄYTTÄMINEN MUULLA KUIN TÄSSÄ KÄYTTÖOHJEESSA MAINITULLA TAVALLA SAATTAA ALTISTAA KÄYTTÄJÄN TURVALLISUUSLUOKAN 1 YLITTÄVÄLLE NÄKYMÄTTÖMÄLLE LASERSÄTEILYLLE.

VARNING
OM APPARATEN ANVÄNDS PÅ ANNAT SÄTT ÄN I DENNA BRUKSANVISNING SPECIFICERATS, KAN ANVÄNDAREN UTSÄTTAS FÖR OSYNLIG LASERSTRÅLNING, SOM ÖVERSKRIDER GRÄNSEN FÖR LASERKLASS 1.

CAUTION
INVISIBLE LASER RADIATION,
WHEN OPEN AND INTERLOCKS DEFEATED. AVOID EXPOSURE TO BEAM.

VORSICHT
UNSICHTBARE LASERSTRAHLUNG,
WENN ABDECKUNG GEÖFFNET UND SICHERHEITSVERRIEGELUNG ÜBERBRÜCKT. NICHT DEM STRAHL AUSSETZEN.

VARO !
AVATTAESSA JA SUOJALUKITUS OHITETTAESSA OLET ALTTIINA NÄKYMÄTTÖMÄLLE LASERSÄTEILYLLE ÄLÄ KATSO SÄTEESEEN.

ADVARSEL
USYNLIG LASERSTRÅLNING VED ÅBNING, NÅR SIKKERHEDSBRYDERE ER UDE AF FUNKTION. UNDGÅ UDSAETTELSE FOR STRÅLNING.

VARNING !
OSYNLIG LASERSTRÅLNING NÄR DENNA DEL ÄR ÖPPNAD OCH SPÄRREN ÄR URKOPPLAD. BETRAKTA EJ STRÅLEN. – STRÅLEN ÄR FARLIG.

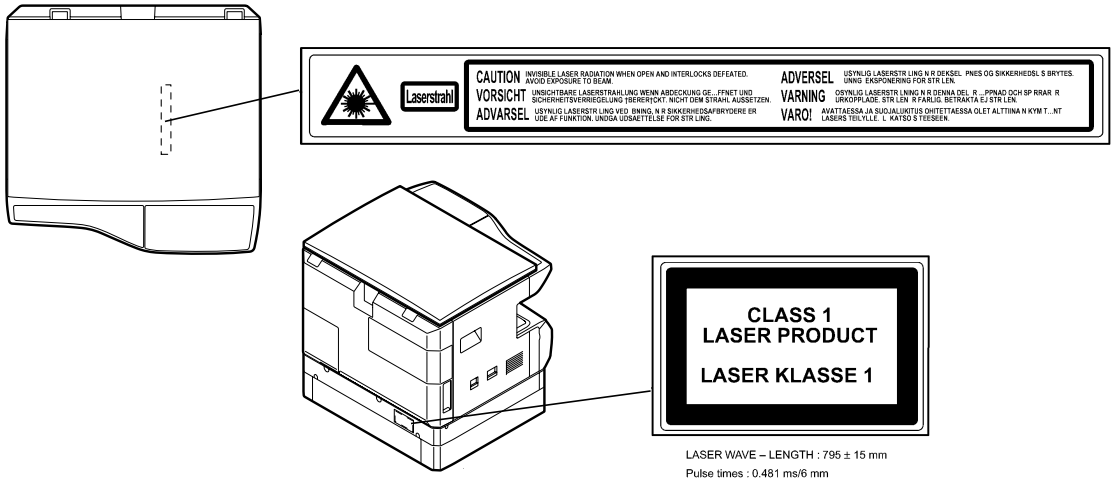

Disconnect the AC cord before servicing the unit.

LASER WAVE – LENGTH : 795 ± 15 mm
Pulse times : 0.481 ms/6 mm
Out put power : 5 mW

CONTENTS

[1] GENERAL

1. Note for servicing 1-1

[2] SPECIFICATIONS

1. Copy mode 2-1

[3] CONSUMABLE PARTS

1. Supply system table 3-1
2. Environmental conditions 3-2
3. Production number identification 3-2

[4] EXTERNAL VIEWS AND INTERNAL STRUCTURES

1. Appearance 4-1
2. Internal 4-1
3. Operation Section 4-2
4. Motor, solenoid, clutch 4-3
5. Sensor, switch 4-4
6. PWB unit 4-5
7. Cross sectional view 4-6

[5] UNPACKING AND INSTALLATION

1. Installing conditions 5-1
2. Removal of protective material and fixing screw 5-1
3. Installing procedure 5-1
4. Removal and storage of fixing screw 5-2
5. Changing the copy paper size in the tray 5-3

[6] ADJUSTMENTS

1. Adjustment item list 6-1
2. Copier adjustment 6-1

[7] SIMULATIONS

1. Entering the simulation mode 7-1
2. Canceling the simulation mode 7-1
3. List of simulations 7-1
4. Contents of simulations 7-3

[8] USER PROGRAMS

1. List of user programs 8-1
2. Setting the user programs 8-3
3. Toner cartridge life 8-3

[9] TROUBLE CODE LIST

1. Trouble code list 9-1
2. Details of trouble codes 9-1

[10] MAINTENANCE

1. Maintenance table 10-1
2. Maintenance display system 10-2
3. Note for replacement of consumable parts 10-2

[11] DISASSEMBLY AND ASSEMBLY

1. High voltage section / Duplex transport section 11-1
2. Optical section 11-2
3. Fusing section 11-4
4. Paper exit section 11-6
5. MCU 11-8
6. Optical frame unit 11-8
7. LSU 11-9
8. Tray paper feed section / Paper transport section 11-9
9. Manual multi paper feed section 11-11
10. Power section 11-13
11. Developing section 11-14
12. Process section 11-15
13. Others 11-15

[12] FLASH ROM VERSION UP PROCEDURE

1. Preparation 12-1
2. Download procedure 12-1
3. Installation procedure 12-2

[13] ELECTRICAL SECTION

1. Block diagram 13-1
2. Circuit descriptions 13-2
3. Actual wiring diagram 13-5

[1] GENERAL

1. Note for servicing

Pictogram

The label (⚠ ♨) in the fusing area of the machine indicates the following:

⚠ : Caution, risk of danger

♨ : Caution, hot surface

A. Warning for servicing

•The fusing area is hot. Exercise care in this area when removing misfed paper.

•Do not look directly at the light source. Doing so may damage your eyes.

B. Cautions for servicing

•Do not switch the machine rapidly on and off. After turning the machine off, wait 10 to 15 seconds before turning it back on.

•Machine power must be turned off before installing any supplies.

•Place the machine on a firm, level surface.

•Do not install the machine in a humid or dusty location.

•When the machine is not used for a long time, for example, during prolonged holidays, turn the power switch off and remove the power cord from the outlet.

•When moving the machine, be sure to turn the power switch off and remove the power cord from the outlet.

•Do not cover the machine with a dust cover, cloth or plastic film while the power is on. Doing so may prevent heat dissipation, damaging the machine.

•Use of controls or adjustments or performance of procedures other than those specified herein may result in hazardous laser radiation exposure.

•The socket-outlet shall be installed near the machine and shall be easily accessible.

C. Note for installation place

Improper installation may damage the machine. Please note the following during initial installation and whenever the machine is moved.

Caution : If the machine is moved from a cool place to a warm place, condensation may form inside the machine. Operation in this condition will cause poor copy quality and malfunctions. Leave the machine at room temperature for at least 2 hours before use.

Do not install your machine in areas that are:

•damp, humid, or very dusty

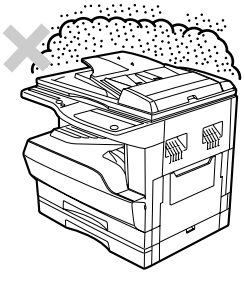

•poorly ventilated

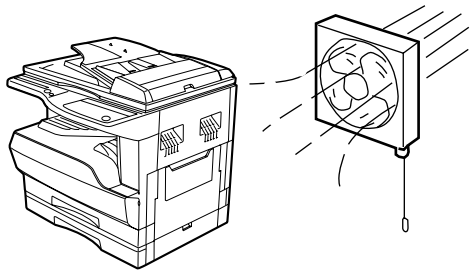

•exposed to direct sunlight

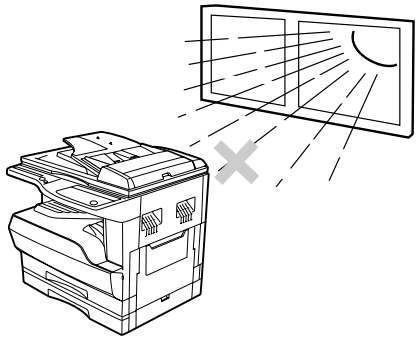

•subject to extreme temperature or humidity changes, e.g., near an air conditioner or heater.

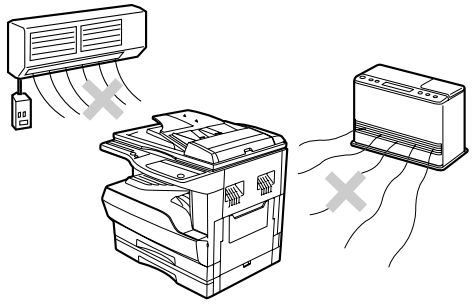

The machine should be installed near an accessible power outlet for easy connection and disconnection.

Be sure to connect the power cord only to a power outlet that meets the specified voltage and current requirements. Also make certain the outlet is properly grounded.

Note : Connect the machine to a power outlet which is not used for other electric appliances. If a lighting fixture is connected to the same outlet, the light may flicker.

Be sure to allow the required space around the machine for servicing and proper ventilation.

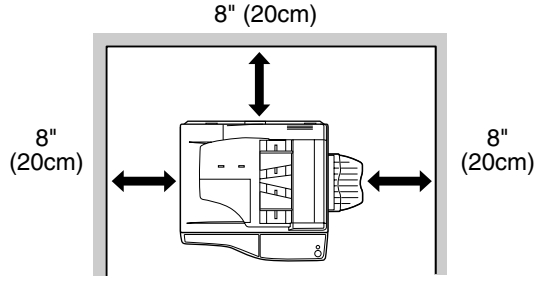

[2] SPECIFICATIONS

1. Copy mode

A. Type

Type	Desk-top
Paper exit	Wing less

B. Machine composition

AR-M160	16-CPM multi function model
AR-M205	20-CPM multi function model

(1) Option

Machine	Model	
250 sheets paper feed unit	AR-D24	
250 sheets x 2 paper feed unit	AR-D25	
SPF	AR-SP6	AR-M160 only
RSPF	AR-RP6	AR-M205 only
Original cover	AR-VR5	
Dual function board	AR-EB7	
Network expansion kit	AR-NB2	Available from October
PS3 expansion kit	AR-PK1/N	option for AR-NB2
256MB optional memory	AR-SM5	

C. Copy speed

(1) Scan One Print many

AR-M205 / M160	Available

Condition: Copy speed in the normal copy from all the paper feed ports including the manual paper feed port.

(2) Continuous copy speed (Sheets/min)

a. AR-M160

Paper size		Normal	Enlargement (200%)	Reduction (50%)
AB system	A3	9	9	9
	B4	10	10	10
	A4	16	16	16
	A4R	12	12	12
	B5	16	16	16
	B5R	14	14	14
Inch system	11" X 17"	9	9	9
	8.5" X 14"	10	10	10
	8.5" X 13"	11	11	11
	8.5" X 11"	16	16	16
	8.5" X 11"R	12	12	12
	8.5" X 5.5"	16	16	16

b. AR-M205

Paper size		Normal	Enlargement (200%)	Reduction (50%)
AB system	A3	11	11	11
	B4	12	12	12
	A4	20	20	20
	A4R	14	14	14
	B5	20	20	20
	B5R	16	16	16
Inch system	11" X 17"	10	10	10
	8.5" X 14"	12	12	12
	8.5" X 13"	12	12	12
	8.5" X 11"	20	20	20
	8.5" X 11"R	15	15	15
	8.5" X 5.5"	20	20	20

D. First copy time

(1) Basic speed

First copy time	7.2sec (A4, 8.5" X 11"/1st tray/with OC) (Polygon motor ready state)

E. Document

Max. document size	A3, 11" X 17"
Document reference position	Left side center
Detection (Platen)	None
Detection size	A3, B4, A4, A4R, B5, B5R, A5 11" X 17", 8.5" X 14", 8.5" X 13", 8.5" X 11", 8.5" X 11"R, 8.5" X 5.5" (8.5" X 13" is detected by key input.)

(1) SPF/R-SPF

Standard/Option	Option SPF: AR-SP6 (AR-M160 only) RSPF: AR-RP6 (AR-M205 only)
Document load capacity	40 sheets (Thickness 4mm or less)
Document size (Max. ~ Min.)	A3 ~ A5 11" x 17" ~ 8.5" x 5.5" (8.5" x 5.5", duplex is inhibited.)
Document replacement speed	AR-M205:20 sheets/min AR-M160:16 sheets/min (A4 , 8.5" x 11" normal copy)
Document set/Paper feed direction	Face up, Center reference, Paper feed from the top
Document weight	56 ~ 90g/m², 15 ~ 24 lbs
Document size detection	On the document feed tray
Document mixture	Copy mode: Not Available

F. Paper feed

Copy size (Max. ~ Min.)	A3 ~ A6 11" x 17" ~ 8.5" x 5.5"	
Paper feed system	1 cassette + Multi manual paper feed	
Paper feed capacity	AR-M205	250 x 2 (Paper feed tray) + 100 (Multi bypass feed tray)
	AR-M160	250 x 1 (Paper feed tray) + 100 (Multi bypass feed tray)
Remaining quantity detection	Cassette section	Only empty detection available
	Manual tray	Only empty detection available

(1) Paper feed section of the copier

Paper feed size	A3, B4, A4, A4R, B5, B5R, A5 11" x 17", 8.5" x 14", 8.5" x 13", 8.5" x 11", 8.5" x 11"R, 8.5" x 5.5" (For A5 and 8.5" x 5.5", only No. 1 tray available.)
Side front	Front
Paper feed capacity	250 sheets (56 ~ 90g/m² equivalent) (15 ~ 21 lbs.)
Detection	Paper empty detection available, size detection (by key input)
Weight	56 ~ 90g/m² (15 lbs. ~ 21 lbs.)
Special paper	Recycled paper

(2) Manual paper feed section

Paper feed size	A3 ~ A6, 11" x 17" ~ 8.5" x 5.5"
Paper feed capacity	100 sheets(56 ~ 80g/m²)
Detection	Size detection not available, paper empty detection available
Weight	56 ~ 200g/m² (15 ~ 34 lbs.)
Special paper	Recycled paper, OHP film, labels
Paper feed	Single except for recycled paper

(3) Option paper feed unit

	1-step paper feed unit	2-step paper feed unit
Model	AR-D24	AR-D25
Paper feed size	A3, B4, A4, A4R, B5, B5R 11" x 17", 8.5" x 14", 8.5" x 13", 8.5" x 11", 8.5" x 11"R	
Capacity (56 ~ 80gm²)	About 250 sheets x 1 step	About 250 sheets x 2 steps
Paper weight	56 ~ 90 g/m² (15 ~ 21 lbs.)	
Moisture preserving heater	None	
Paper empty detection	Available	
Paper size setting	User setting Paper size detection:None	
External dimensions (W x D x H)	590 x 471 x 88mm	590 x 471 x 173.5mm
Weight	About 4.7kg	About 10kg
Special paper	Recycled paper	
Power	Supplied from the machine	

G. Job speed

S-S (1st step)	100% (document replacement rate)

Condition:With SPF/RSPF A4/Letter Normal 1cassette

H. Multi copy

Max. number of multi copy	999 sheets

I. Warm-up time

Warm-up time	45 sec
Pre-heat	Available
Jam recovery	Within 45 sec

J. Copy magnification ratio

Fixed magnification ratio	AB system: 50, 70, 81, 86, 100, 115, 122, 141, 200%
	Inch system: 50, 64, 77, 95, 100, 121, 129, 141, 200%
Zooming	25 ~ 400% SPF/RSPF(50 ~ 200%)
Independent zooming(vertical)	Available (25 ~ 400%) SPF/RSPF(50 ~ 200%)
Independent zooming (horizontal)	Available (25 ~ 400%) SPF/RSPF(50 ~ 200%)

K. Print density

Density mode	Auto / Text / Photo
No. of manual adjustment	5 steps (Text / Photo)
Resolution	Writing: 600 x 600dpi Reading: 600 (main) x 600 (sub) (PHOTO mode) 600 (main) x 300 (sub) (AE mode)
Gradation	Reading: 256 gradations Writing: Binary
Toner save mode	Set by the user program

L. Void width

Void area	Lead edge 1 ~ 4mm, rear edge 4mm or less, both sides 4mm or less
Image loss	4mm or less

M. Auto duplex

Standard/ Option	Standard provision (AR-M205 only) (D → D / D → S enable only when RSPF is installed) Not available for AR-M160

N. Paper exit / finishing

Paper exit section capacity	Face down 250 sheets
Full detection	None
Finishing	Dual function board: Option (AR-EB7)
Electronic sort capacity	A4 (8.5" x 11") standard document 100 sheets
Offset function	Available (by the shifter)
Staple function	None

(1) Electronic sort board (Option)

Electronic sort	Sorting	100 sheets of A4 standard documents
	Grouping	100 sheets of A4 standard documents
Rotation copy	If there is paper of same size as the document, the image is rotated to copy even though the paper is set in the different direction from the document direction.	
2 in 1, 4 in 1	Copies of 2 pages or 4 pages are integrated into one surface. Divided by solid lines, (Selectable by the user program.)	
Edge erase	Images surrounding the document are erased when copying. (Adjustable in 5 ~ 20mm by the user program.)	
Center erase	The image at the center is erased when copying. (Adjustable in 5 ~ 20mm by the user program.)	
Margin shift	Binding margin is made at the left edge of the set documents. (Adjustable in 5 ~ 20mm by the user program.)	
Memory for electronic sort	16MB	
* Memory loading capacity	A4 standard 100 pages	
Memory expansion	DIMM memory slot x 1, max. 256MB x 1 slot + 16MB (Max. 272MB in total)	
USB2.0	Standard provision of E-sort	
SPLC (JBIG-GDI)	Supported when E-sort is installed.	
ROPM	Supported when E-sort is installed.	

O. Additional functions

APS	O	
AMS	O	
Auto tray switching	O	
Memory copy	O	
Rotation copy	△	
E-sort	O	Option
Rotation sort	X	
Independent zooming	O	
1 set 2 copy	O	Enlargement invalid/SPF invalid (Patent rotation)
Binding margin	△	Default AB series: 10mm (5, 10, 15, 20mm) Inch series: 1/2 inch (1/4, 1/2, 3/4, 1 inch)
Edge erase	△	Default AB series: 10mm (5, 10, 15, 20mm) Inch series: 1/2 inch (1/4, 1/2, 3/4, 1 inch)
Center erase	△	Default AB series: 10mm (5, 10, 15, 20mm) Inch series: 1/2 inch (1/4, 1/2, 3/4, 1 inch)
Black/white reverse	X	
2in1/4in1	△	
Sorter	O	Offset function (Shifter) provided
Preheating	O	The conditions are set by the user program.
Auto shut-off	O	The conditions are set by the user program.
User programming	O	
Total counter	O	Supports Total counter, Scan counter, and Copy counter.
Coin vendor support	O	(Supports I/F only.)
Auditor support	O	(Supports I/F only.)
Duplex	O	(Standard provision for the model of 20-sheet model only)
Toner save	O	(Set according to the destination)
Department management	O	(Copy: 20 Dept.)

O : Available △ :Installation of the option is required.
X : Not available

P. Other specifications

Photoconductor type	OPC (Organic Photo Conductor)
Photoconductor drum dia.	30mm
Copy lamp	Cold cathode fluorescent lamp (CCFL)
Developing system	Dry 2-component magnetic brush development
Charging system	Saw teeth charging
Transfer system	(+) DC corotron
Separation system	(-) DC corotron
Fusing system	Heat roller
Cleaning system	Contact blade

Q. Package form

Body	Body / Accessories

R. External view

External dimensions (W x D x H)	590 x 577 x 520 mm(AR-M205) 590 x 577 x 470 mm(AR-M160)
Occupying area (W x D)	590 x 531mm (When the manual tray is installed.)
Weight	About 31.3kg (AR-M160) About 35.1kg (AR-M205)

S. Power source

Voltage	AC120V, 220V, 230V, 240V ±15%
Frequency	50/60Hz common

T. Power consumption

Max. power consumption	1200W

* EnergyStar conformity

Average power consumption in operation	Less than 550W
Power consumption when standby	5W(Not include option)
Energy consumption efficiency	Less than 25W

U. Digital performance

Resolution	Reading	600 x 600dpi (PHOTO mode) 600 x 300dpi (AE mode)
	Writing	600 x 600dpi
Gradation	Reading	256 gradations
	Writing	Binary
Memory	Simplex:16MB Duplex:32MB	
Hard disk	None	

V. Printing function

Print speed	<Standard>12ppm (With the AR-EB7 installed) 16ppm (AR-M160) / 20ppm (AR-M205)
Data resolution	600dpi
Option memory	16MB (with the AR-EB7 installed) 256MB (AR-SM5) can be added to the AR-EB7.
Printer driver	Two drivers for the case when the AR-EB7 is installed and when it is not are automatically installed by plug & play. <Standard> SHARP GDI driver <with the AR-EB7 installed> SPLC driver

W. Scanner function

Type	Flat bed color scanner
Scan system	Document table/document feed unit
Light source	White CCFL
Resolution	Basic 600 x 1200dpi Set range: 50 ~ 9600dpi
Document	Sheet/Book
Effective scan range	OC/SPF: about 297(length) x 431(width) mm
Scan speed	OC/SPF: 2.88msec/line (Color)
Input data	1bit or 12bit
Output data	1bit or 8bit
Scan color	Black and white binaryGray scaleFull color
Protocol	TWAIN/WIA (XP only) / STI
Interface	USB1.1 USB2.0 (Option support: High-speed mode/Full speed mode (Switched by the user program.)) (Supported when E-sort is installed)
Scanner utility	Sharp Desk/Button Manager
Drop-out color	Provided
Scanner button	Provided (6)
Supported OS	Windows98/ME/2000/XP
Void area	Lead edge/rear edge (2.5mm) on the driver side Left/right: 3.0mm
WHQL support	Yes

[3] CONSUMABLE PARTS

1.Supply system table

A.USA/CANADA/Latin America

NO	Name	Content		Life	Product name	Remark
1	Toner cartridge(Black) <With IC>	Toner (Toner: Net Weight 537g) Vinyl bag	x10 x10	160K	AR-202MT	Life setting by A4 6% document
2	Developer	Developer (Developer : Net Weight 400g)	x10	500K	AR-202MD	
3	Drum kit	Drum Drum fixing plate	x1 x1	50K	AR-202DR	

B. Middle East/Africa/Taiwan/Philippine

NO	Name	Content		Life	Product name	Remark
1	Toner cartridge(Black) <With IC>	Toner (Toner: Net Weight 537g) Vinyl bag	x10 x10	160K	AR-202ET	Life setting by A4 6% document
2	Developer	Developer (Developer : Net Weight 400g)	x10	500K	AR-202CD	
3	Drum kit	Drum Drum fixing plate	x1 x1	50K	AR-202DR	

C. Europe/East Europe

NO	Name	Content		Life	Product name	Remark
1	Toner cartridge(Black) <With IC>	Toner (Toner: Net Weight 537g) Vinyl bag	x10 x10	160K	AR-202LT	Life setting by A4 6% document
2	Developer	Developer (Developer : Net Weight 400g)	x10	500K	AR-202LD	
3	Drum kit	Drum Drum fixing plate	x1 x1	50K	AR-202DM	

D. Asia

NO	Name	Content		Life	Product name	Remark
1	Toner cartridge(Black) <With IC>	Toner (Toner: Net Weight 537g) Vinyl bag	x10 x10	160K	AR-202CT	Life setting by A4 6% document
2	Developer	Developer (Developer : Net Weight 400g)	x10	500K	AR-202CD	
3	Drum kit	Drum Drum fixing plate	x1 x1	50K	AR-202DR	

E.Hong Kong/China

NO	Name	Content		Life	Product name	Remark
1	Toner cartridge(Black) <With IC> (Hong Kong only)	Toner (Toner: Net Weight 645g) Vinyl bag	x10 x10	160K	AR-202CT-C	Life setting by A4 6% document
2	Toner cartridge(Black) <With IC> (China only)	Toner (Toner: Net Weight 645g) Vinyl bag	x1 x1	19K	AR-203ST-C	Life setting by A4 6% document
3	Developer	Developer (Developer : Net Weight 4500)	x10	500K	AR-202CD-C	
4	Drum kit	Drum Drum fixing plate	x1 x1	50K	AR-202DR-C	

2. Environmental conditions

A. Transport conditions

(1) Transport conditions

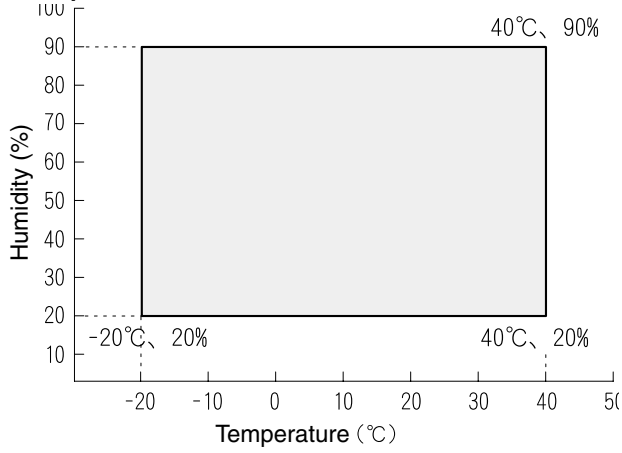

(2) Storage conditions

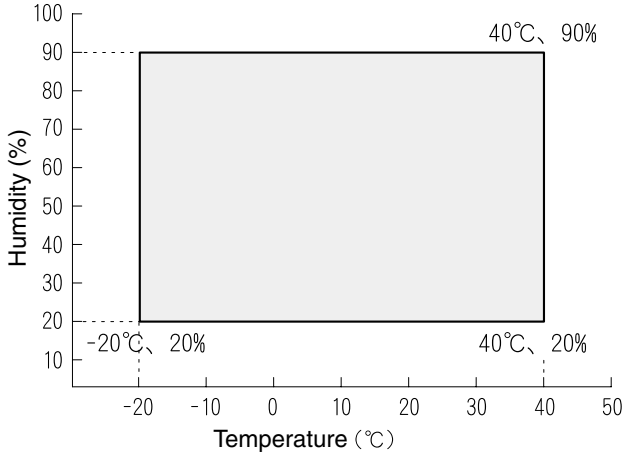

B. Use conditions

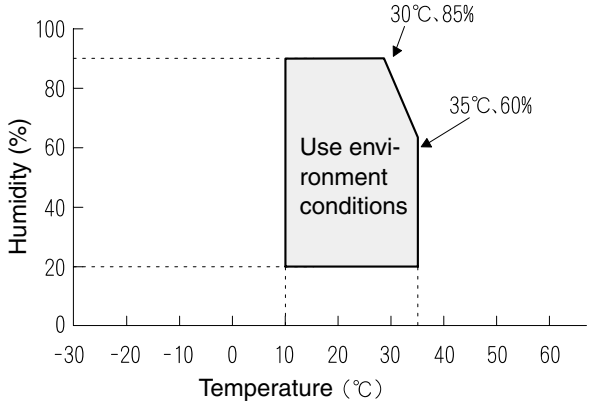

C. Life(packed conditions)

Photoconductor drum (36 months from the production month)
Developer, toner (24 months from the production month)

3. Production number identification

<Toner cartridge>

The label on the toner cartridge shows the date of production.

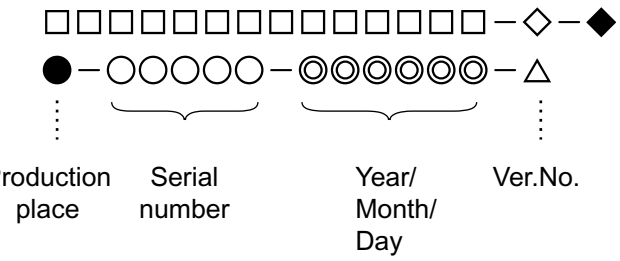

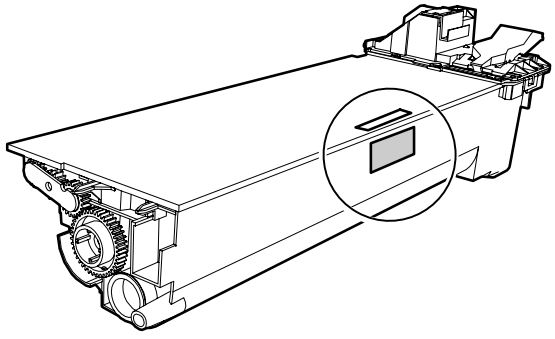

<Drum cartridge>

The lot number, printed on the front side flange, is composed of 6 digits, each digit showing the following content:

1	2	3	4	5	6

1	Alphabet
	Indicates the model conformity code. A for this model.
2	Number
	Indicates the end digit of the production year.
3	Number or X, Y, Z
	Indicates the month of packing.
	X stands for October, Y November, and Z December.
4/5	Number
	Indicates the day of the month of packing.
6	Alphabet
	Indicates the production factory. "A" for Nara Plant, “C“ for SOCC

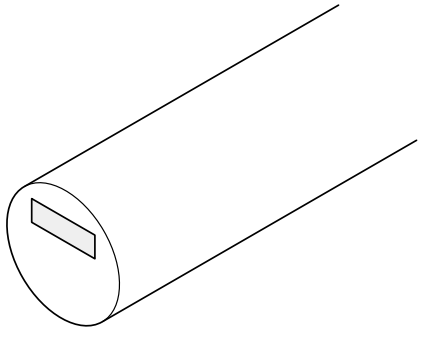

[4] EXTERNAL VIEWS AND INTERNAL STRUCTURES

1. Appearance

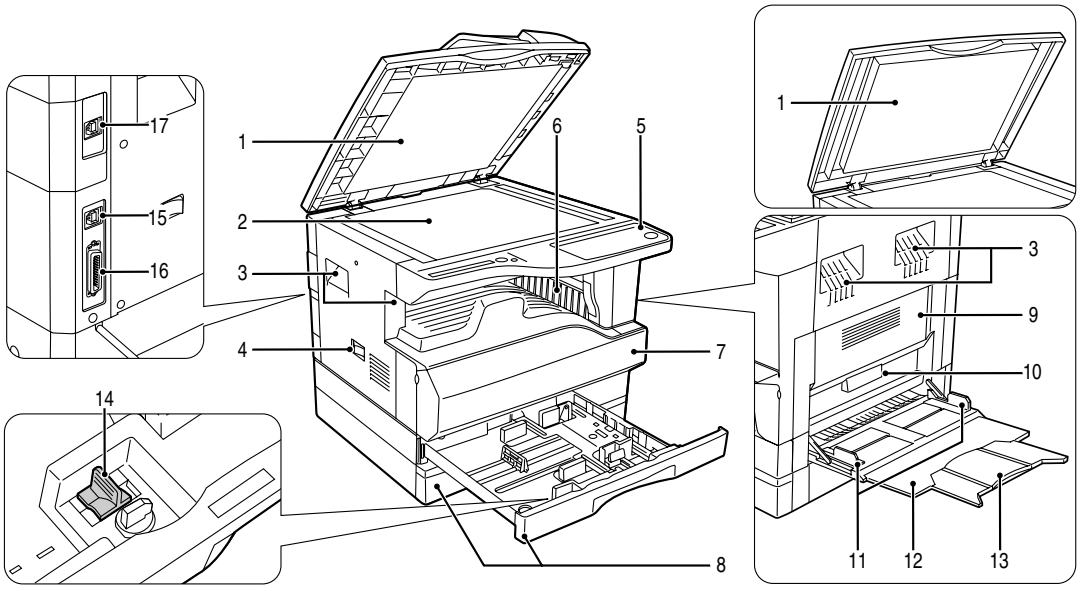

1	Document feeder cover (when the SPF/RSPF is installed) /document cover (when the document cover is installed)	2	Document glass	3	Handles
4	Power switch	5	Operation panel	6	Paper output tray
7	Front cover	8	Paper trays	9	Side cover
10	Side cover handle	11	Bypass tray guides	12	Bypass tray
13	Bypass tray extension	14	Charger cleaner	15	USB 1.1 port
16	Parallel port	17	USB 2.0 port (when the dual function board is installed)		

2. Internal

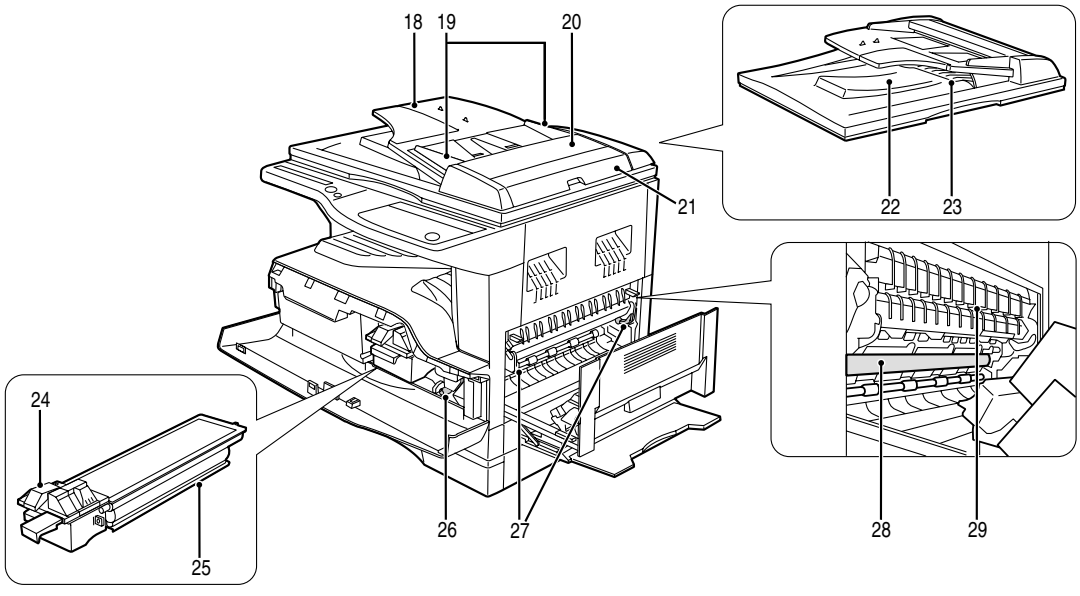

18	Document feeder tray (when the SPF/RSPF is installed)	19	Original guides (when the SPF/RSPF is installed)	20	Feeding roller cover (when the SPF/RSPF is installed)
21	Right side cover (when the SPF/RSPF is installed)	22	Exit area (when the SPF/RSPF is installed)	23	Reversing tray (when the RSPF is installed)
24	Toner cartridge lock release lever	25	Toner cartridge	26	Roller rotating knob
27	Fusing unit release levers	28	Photoconductive drum	29	Fusing unit paper guide

3. Operation Section

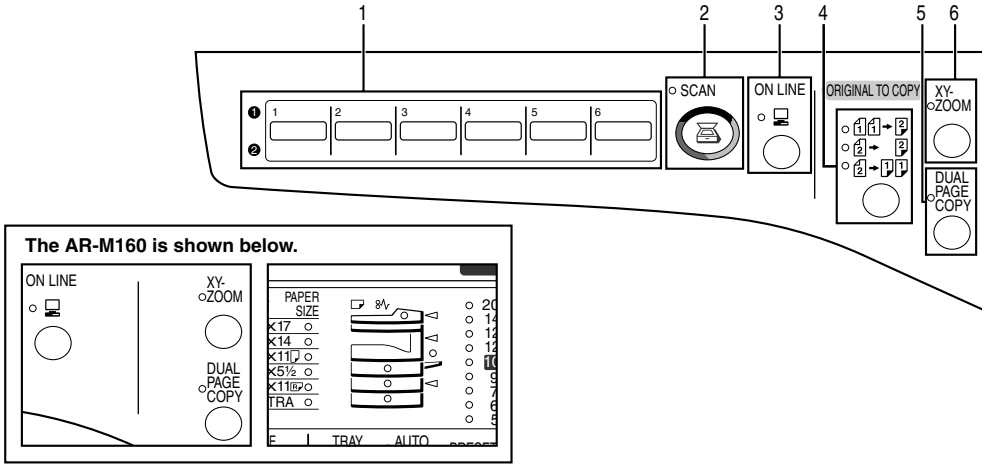

1	SCAN MENU key	2	SCAN key/indicator	3	ON LINE key/indicator
4	ORIGINAL TO COPY key/indicators (AR-M205 only)	5	DUAL PAGE COPY key/indicator	6	XY-ZOOM key/indicator

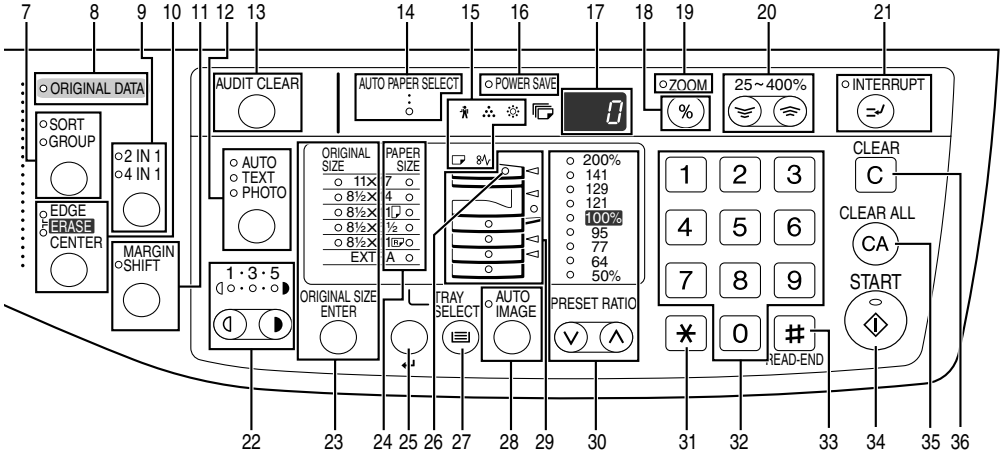

7	SORT/GROUP key/indicators (when the dual function board is installed)	8	ORIGINAL DATA indicator (when the dual function board is installed)	9	2 IN 1 / 4 IN 1 key/indicators (when the dual function board is installed)
10	ERASE key/indicators (when the dual function board is installed)	11	MARGIN SHIFT key/indicator (when the dual function board is installed)	12	AUTO/TEXT/PHOTO key / indicators
13	AUDIT CLEAR key	14	AUTO PAPER SELECT indicator	15	Alarm indicators
16	POWER SAVE indicator	17	Display	18	Copy ratio display key (%)
19	ZOOM indicator	20	Zoom keys (-,+)	21	INTERRUPT key ( ) / indicator
22	Light and Dark keys (,) / indicators	23	ORIGINAL SIZE ENTER key / ORIGINAL SIZE indicators	24	PAPER SIZE indicators
25	PAPER SIZE ENTER key	26	SPR/RSPF indicator (when the SPF/RSPF is installed)	27	TRAY SELECT key ( )
28	AUTO IMAGE key/indicator	29	Paper feed location/misfeed location indicators	30	PRESET RATIO selector keys (,) / indicators
31	[*] key	32	Numeric keys	33	READ-END key (#)
34	START key ( ) /indicators	35	CLEAR ALL key (CA)	36	CLEAR key (C)

4. Motor, solenoid, clutch

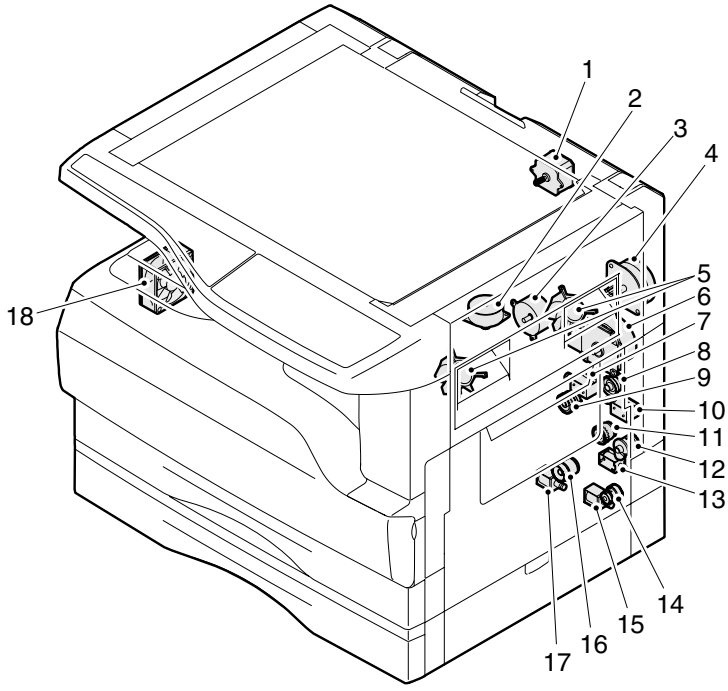

No.	Name	Code	Function operation
1	Mirror motor	MRM	Drives the optical mirror base (scanner unit).
2	Shifter motor	SHTM	Shifts the paper exit tray.
3	Toner motor	TM	Toner supply
4	Duplex motor	DPX	Switchback operation and paper exit motor in duplex.
5	Cooling fan motor	CFM	Cools the inside of the machine.
6	Main motor	MM	Drives the machine.
7	1st tray paper feed clutch	CPFC1	Drive the pick up roller
8	PS clutch	RRC	Drives the resist roller
9	Paper feed solenoid	CPSOL1	Solenoid for paper feed from cassette
10	Resist roller solenoid	RRS	Resist roller rotation control solenoid
11	Manual paper transport clutch	MPTC	Drives the manual paper transport roller.
12	Manual paper feed clutch	MPFC	Drives the manual paper feed roller.
13	Manual paper feed solenoid	MPFS	Manual paper feed solenoid
14	2nd tray transport clutch	CPFC2	Drives the 2nd tray transport roller.
15	2nd tray transport solenoid	FSOL1	2nd tray transport solenoid
16	2nd tray paper feed clutch	CPFC1	Drives the 2nd tray paper feed roller.
17	2nd tray paper feed solenoid	PSOL2	2nd tray transport solenoid
18	Exhaust fan motor	VFM	Cools the inside of the machine.

5. Sensor, switch

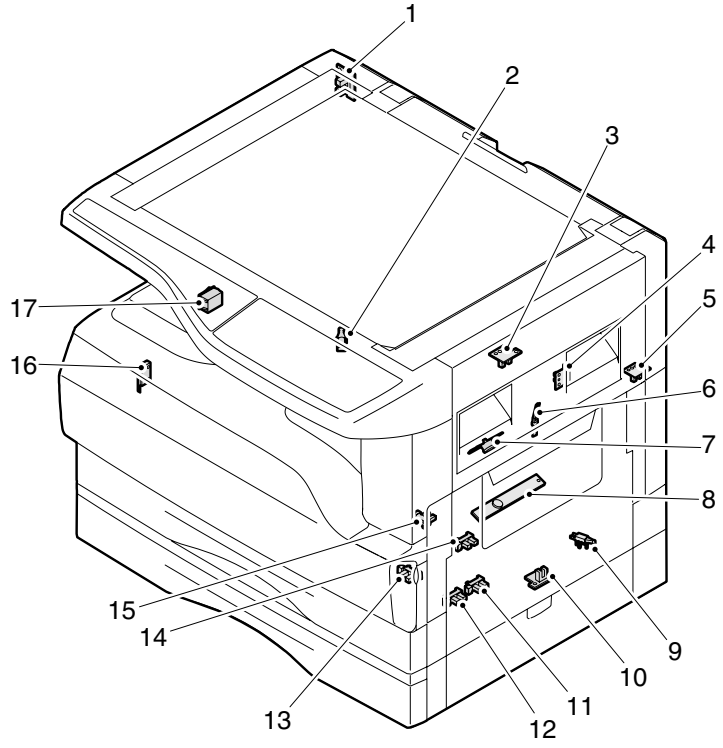

No.	Name	Code	Function operation
1	Mirror home position sensor	MHPS	Detects the mirror (scanner unit) home position.
2	Side door switch	DSWR	Side door open detection
3	Paper exit sensor (paper exit side)	POD1	Detects paper exit.
4	Shifter home position sensor	SFTHP	Shifter home position detection
5	Paper exit sensor (DUP side)	PDPX	Paper transport detection
6	Thermistor	RTH	Fusing section temperature detection
7	Thermostat		Fusing section abnormally high temperature detection
8	Toner density sensor	TCS	Toner quantity detection
9	2nd tray detection switch		2nd tray detection
10	Manual sensor	MPED	Manual transport detection
11	2nd tray door open/close sensor	DRS2	2nd tray door open/close detection
12	2nd tray door paper pass sensor	PPD2	2nd tray paper entry detection
13	2nd tray paper empty sensor	CSS2	2nd tray paper empty detection
14	Paper in sensor	PIN	Paper transport detection
15	Cassette empty		Tray paper entry detection
16	Front cover SW		Front cover open detection
17	Power switch	MAIN SW	Turns ON/OFF the main power source.

6. PWB unit

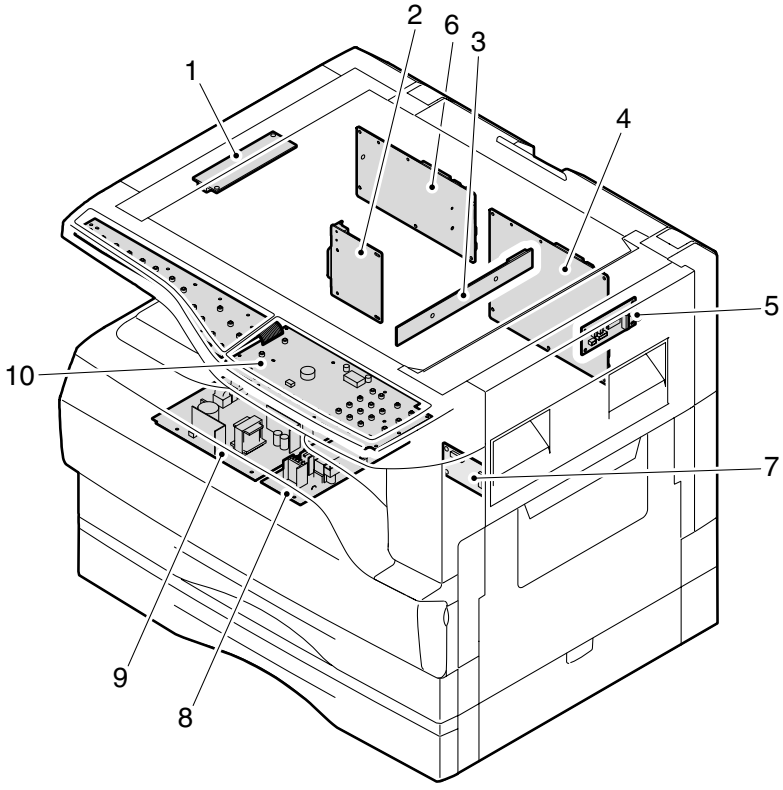

No.	Name	Function operation
1	Copy lamp Inverter PWB	Copy lamp control
2	I / F PWB	USB1.1, IEEE1284 I/F
3	CCD sensor PWB	Image scanning
4	Main control PWB	Main control PWB
5	Tray PWB	Shifter motor control
6	IMC2 PWB	Electronic sort, USB2.0 << Option:AR-EB7>>
7	2nd cassette PWB	2nd cassette control
8	High voltage PWB	High voltage control
9	Power PWB	AC power input/DC power control
10	Operation main PWB	Operation panel input/Display, operation panel section control

7. Cross sectional view

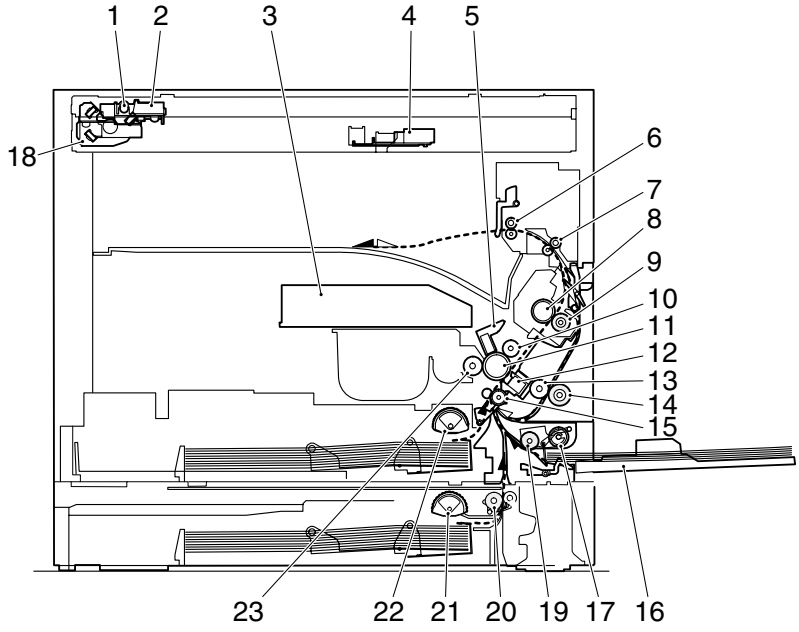

No.	Name	Function/Operation
1	Copy lamp	Image radiation lamp
2	Copy lamp unit	Operates in synchronization with No. 2/3 mirror unit to radiate documents sequentially.
3	LSU unit	Converts image signals into laser beams to write on the drum.
4	Lens unit	Reads images with the lens and the CCD.
5	MC holder unit	Supplies negative charges evenly on the drum.
6	Paper exit roller	Used to discharge paper.
7	Transport roller	Used to transport paper.
8	Upper heat roller	Fuses toner on paper (with the teflon roller).
9	Lower heat roller	Fuses toner on paper (with the silicon rubber roller).
10	Waste toner transport roller	Transports waste toner to the waste toner box.
11	Drum unit	Forms images.
12	Transfer charger unit	Transfer images (on the drum) onto paper.
13	DUP follower roller	
14	Duplex transport roller	Transports paper for duplex .
15	Resist roller	Takes synchronization between the paper lead edge and the image lead edge.
16	Manual paper feed tray	Manual paper feed tray
17	Manual paper pick up roller	Picks up paper in manual paper feed.
18	No. 2/3 mirror unit	Reflects the images from the copy lamp unit to the lens unit.
19	Manual transport roller	Transports paper from the manual paper feed port.
20	2nd tray paper transport roller	Transports paper from the 2nd tray.
21	2nd tray paper pick up roller (semi-circular roller)	Picks up paper from the 2nd tray.
22	1st tray paper feed roller (semi-circular roller)	Picks up paper from the 1st tray.
23	MG roller	Puts toner on the OPC drum.

[5]UNPACKING AND INSTALLATION

1.Installing conditions

A.Copier installation

Do not install your copier in areas that are:
•damp, humid, or very dusty
•exposed to direct sunlight
•poorly ventilated
•subject to extreme temperature or humidity changes, e.g., near an air conditioner or heater.
•Be sure to allow the required space around the machine for servicing and proper ventilation.

B.Power source

•Use an exclusive-use power outlet. If the power plug of this machine is inserted into a power outlet commonly used with other illumination units, flickers of the lamp may be result. Use a power outlet which is not used commonly with any illumination units.
•Avoid complex wiring.

C.Grounding wire connection.

•To avoid danger, be sure to connect a grounding wire. If no grounding wire is connected and a leakage occurs, a fire or an electric shock may be result.

2.Removal of protective material and fixing screw

1) Remove all tapes and protective material.
•Remove all tapes, then open the document cover and remove the protective material of sheet shape

2) Remove the fixing screw.
•Use a coin to remove the fixing screw.
•The fixing screw is required when transporting the machine. Keep it in the tray. (Refer to the later description.)

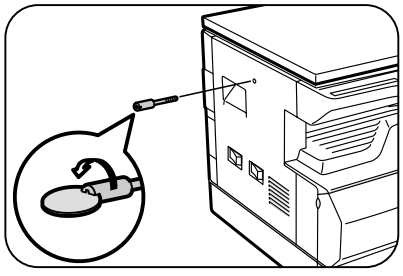

3.Installing procedure

A.Developer cartridge installation

1) Open the manual tray, and open the side cover.

2) Open the front cover.
•Hold the both sides and pull down to open.

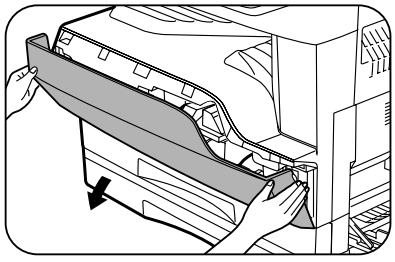

3) Loosen the screw and remove the developer cartridge.

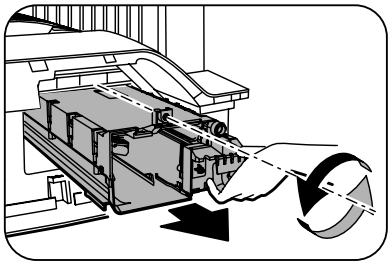

4) Remove the developer tank from the developer cartridge.

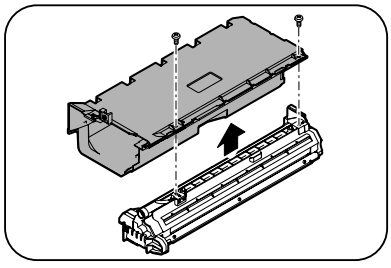

5) Supply developer into the developer tank while rotating the MG roller in the arrow direction.

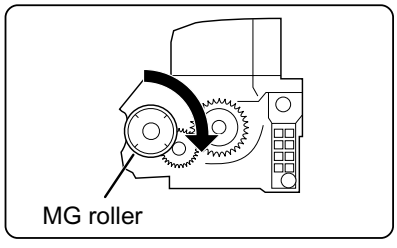

* Shake the developer bag enough before opening it.

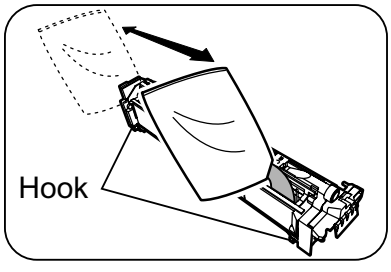

Note: Check that the DV seal is free from developing agent. If developing agent is attached to the DV seal, clean it carefully.
Check to insure that the hook is engaged in two positions.

6) Attach the developer tank to the developer cartridge.
* After supplying developer into the developer cartridge, do not tilt or shake the developer cartridge.
7) Attach the developer cartridge to the copier, and fix it with the screw.

B.Toner cartridge installation

1) Shake the toner cartridge several times horizontally, and remove the tape.

* Do not hold the shutter lever when shaking.

* After removing the tape, do not tilt or shake the toner cartridge.

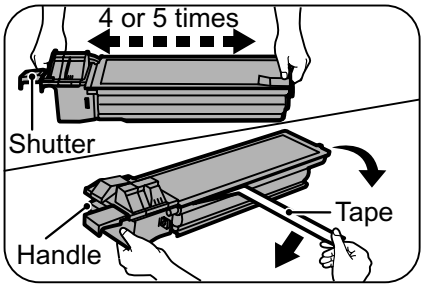

2) Attach the toner cartridge to the copier.

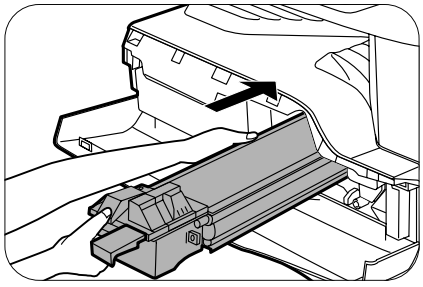

3) Pull the shutter lever.

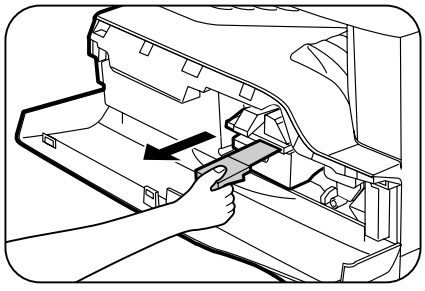

Close the front cover A, then close the side cover B.

•When closing the front cover, gently press the both sides.

•When closing the side cover, hold the knob.

•When closing the covers, be sure to close the front cover first, then close the side cover. If closed in a wrong sequence, the covers may be broken.

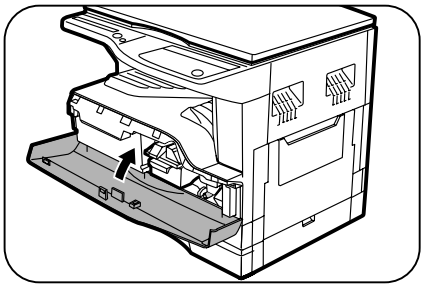

4.Removal and storage of fixing screw

1) Lift the knob and gently pull out the tray.

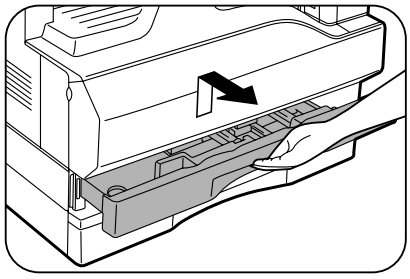

2) Hold the paper pressure plate and turn the fixing screw in the arrow direction.

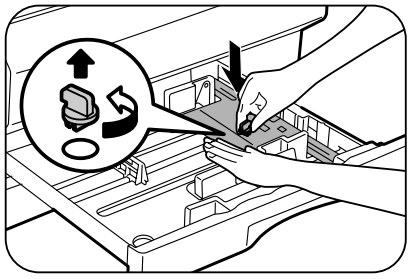

3) Store the fixing pin and the fixing screw in the tray.

•Store the fixing screw which was removed in the above procedure 2 and the fixing screw which was removed in procedure 2 of 2.

•Removal of protective material and fixing screw in the storage place in the tray.

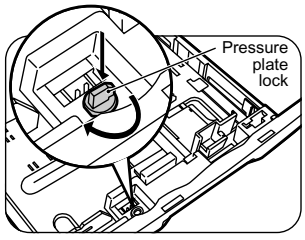

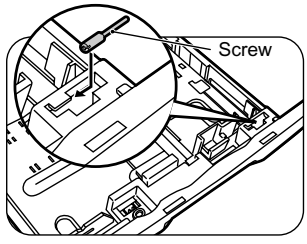

5. Changing the copy paper size in the tray

Note

- The paper size setting cannot be changed when the machine has stopped temporarily due to running out of paper or a misfeed, or during interrupt copying.
- During printing (even in copy mode), the paper size setting cannot be changed.
- 5-1/2" x 8-1/2" size paper can only be selected in upper paper tray.
- Do not load paper that is a different size than the paper size setting. Copying will not be possible.

1) Hold down the [PAPER SIZE ENTER] key for more than 5 seconds to set the selected paper size.
   The currently selected paper feed location indicator will blink and the corresponding paper size (which is currently set) indicator will light steadily.
   All other indicators will go out.

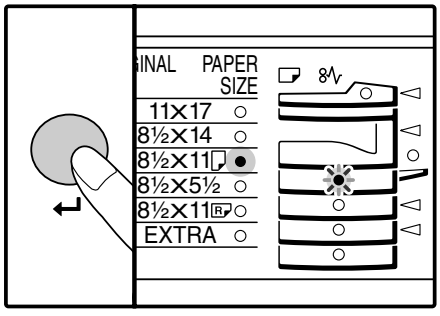

2) Use the [TRAY SELECT] key to select the paper tray for which you wish to change the paper size setting.
   Each time the [TRAY SELECT] key is pressed, a paper tray will be indicated with a blinking paper feed location indicator.

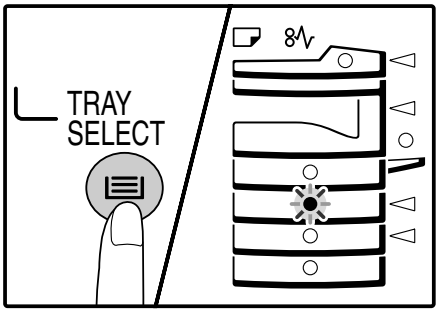

3) Use the [ORIGINAL SIZE ENTER] key to select the paper size.
   The indicator of the selected paper size lights up.

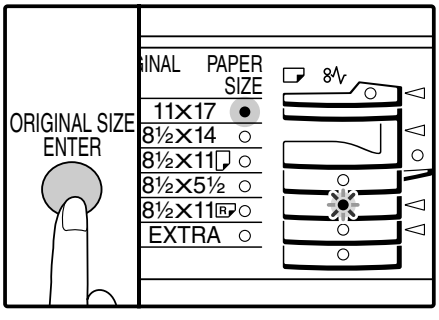

4) Squeeze the lock lever of the front guide and slide the front guide to match the width of the paper, and move the left guide to the appropriate slot as marked on the tray.

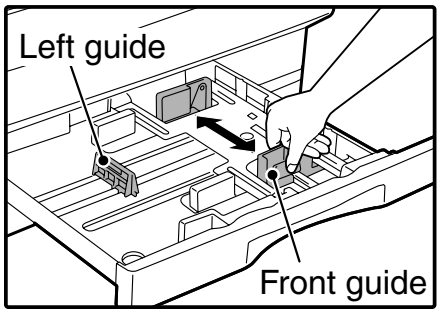

- The front guide is a slide-type guide. Grasp the locking knob on the guide and slide the guide to the indicator line of the paper to be loaded.
- The left guide is an insert-type guide. Remove it and then insert it at the indicator line of the paper to be loaded.
- When using 11" x 17" sized paper store the left guide in the slot at the left front of the paper tray.

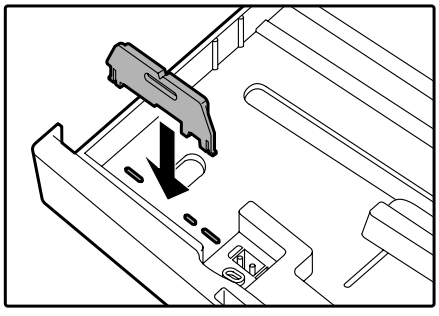

6) Press the [START] key and then the [PAPER SIZE ENTER] key.
   To change the paper size setting of another tray, repeat steps 2 to 3 after pressing the [START] key.

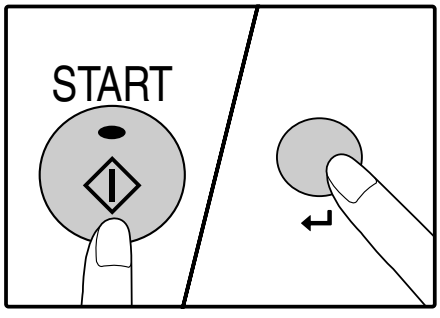

Note

Affix the paper size label for the paper size selected in step 3 to the label position on the right end of the tray.

[6]ADJUSTMENTS

1.Adjustment item list

Section		Adjustment item		Adjustment procedure/SIM No.
A	Process section	(1)	Developing doctor gap adjustment	Developing doctor gap adjustment
		(2)	MG roller main pole position adjustment	MG roller main pole position adjustment
		(3)	Developing bias voltage check	
		(4)	Main charger voltage check	
B	Mechanism section	(1)	Image position adjustment	SIM-50
		(2)	Main scanning direction (FR direction) distortion balance adjustment	No. 2/3 mirror base unit installing position adjustment
				Copy lamp unit installing position adjustment
		(3)	Main scanning direction (FR direction) distortion adjustment	Rail height adjustment
		(4)	Sub scanning direction (scanning direction) distortion adjustment	Winding pulley position adjustment
		(5)	Main scanning direction (FR direction) magnification ratio adjustment	SIM 48-1
		(6)	Sub scanning direction (scanning direction) magnification ratio adjustment	OC mode in copying (SIM 48-1)
				SPF mode in copying (SIM 48-5)
		(7)	Off center adjustment	OC mode (SIM 50-12)
				SPF mode (SIM 50-12)
		(8)	SPF white correction pixel position adjustment (required in an SPF model when replacing the lens unit)	SIM63-7
C	Image density adjustment	(1)	Copy mode	SIM 46-1

2.Copier adjustment

A.Process section

(1) Developing doctor gap adjustment

1) Loosen the developing doctor fixing screw A.
2) Insert a thickness gauge of 1.5mm to the three positions at 20mm and 130mm from the both ends of the developing doctor as shown.

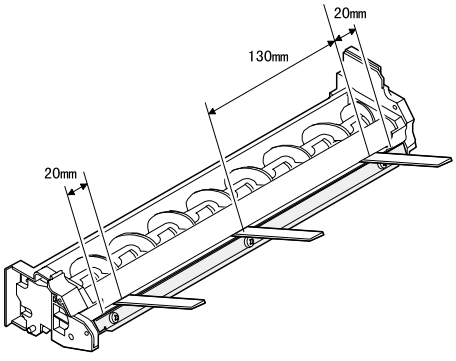

3) Push the developing doctor in the arrow direction, and tighten the developing doctor fixing screw. (Perform the same procedure for the front and the rear frames.)
4) Check the clearance of the developing doctor. If it is within the specified range, then fix the doctor fixing screw with screw lock.

* When inserting a thickness gauge, be careful not to scratch the developing doctor and the MG roller.

<Adjustment specification>

Developing doctor gap

Both ends (20mm from the both ends) : $1.5^{+0.1}_{-0.15}$ mm

C (Center) (150mm from the both ends) :$1.55^{+0.15}_{-0.2}$ mm

(2) MG roller main pole position adjustment

1) Remove and separate the waste toner box and put the developing unit on a flat surface.
2) Tie a string to a needle or a pin.
3) Hold the string and bring the needle close to the MG roller horizontally. (Do not use paper clip, which is too heavy to make a correct adjustment.) (Put the developing unit horizontally for this adjustment.)
4) Do not bring the needle into contact with the MG roller, but bring it to a position 2 or 3mm apart from the MG roller. Mark the point on the MG roller which is on the extension line from the needle tip.
5) Measure the distance from the marking position to the top of the doctor plate of the developing unit to insure that it is 18mm.
   If the distance is not within the specified range, loosen the fixing screw A of the main pole adjustment plate, and move the adjustment plate in the arrow direction to adjust.

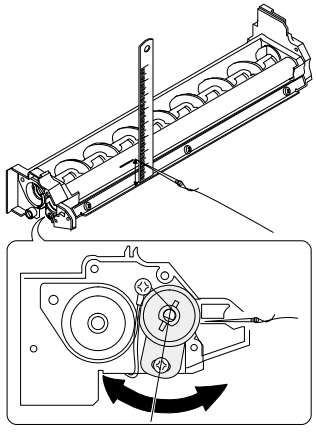

(3)Developing bias voltage check

Note: Use a digital multi-meter with an internal resistance of 10MΩ or more.

1) Set the digital multi-meter range to DC700V.
2) Put the test rod of the digital multi-meter on the developing bias voltage output check pin.
3) Turn on the power, execute SIM25-1.

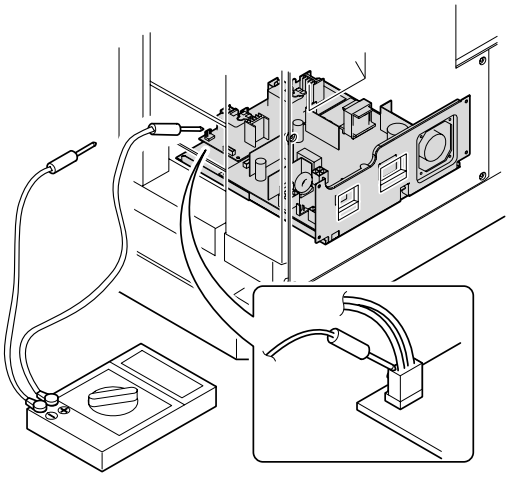

<Specification>

Mode	Specification
Developing bias voltage	DC - 400±8V

(4) Grid bias voltage check

Note: Use a digital multi-meter with an internal resistance of 10MΩ or more.

1) Set the digital multi-meter range to DC700V.
2) Put the test rod of the digital multi-meter on the grid bias voltage output check pin.
3) Turn on the power.
   (The voltage is outputted in the grid bias High output mode during warming up, and in the grid bias Low output mode when warming up is completed.)

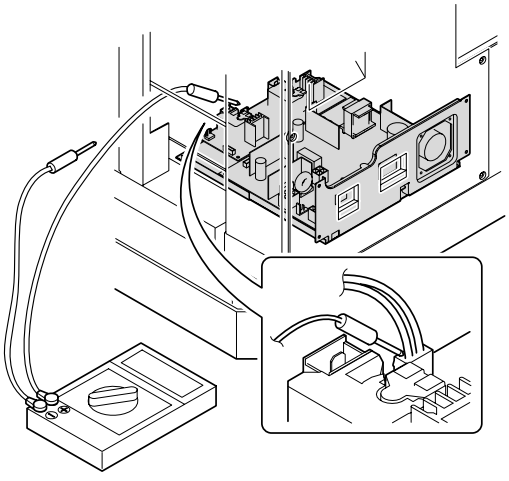

<Specification>

Mode	Specification
Grid bias LOW	DC - 400±8V
Grid bias HIGH	DC - 525±10V

B.Mechanism section

Note: If a jam error or paper empty occurs during copying in the adjustment by the simulation, the image data are not saved, and therefore recopying is required.

(1)Image position adjustment

a.OC image lead edge position adjustment (SIM 50-1)

Note: In advance to this adjustment, the sub scanning magnification ratio adjustment must be performed.

1) Set a scale on the OC table as shown below.

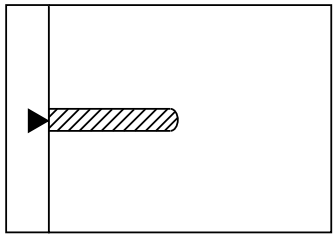

2) Make a copy.
3) Check the copy output. If necessary, perform the following adjustment procedures.
4) Execute SIM 50-1.
5) Set the OC lead edge position set value (Exposure display <<PHOTO>> ON) to [1]
   The OC image scanning start position is shifted inside the document edge.
6) Set the main cassette lead edge void adjustment value (Exposure display <<TEXT>> ON) * to [1]
   The lead edge void becomes the minimum.
7) Set the main cassette print start position value (Exposure display <<AUTO+MAIN CASSETTE LAMP>> ON) to [1] and make a copy.
   The print start position is shifted inside the document edge.

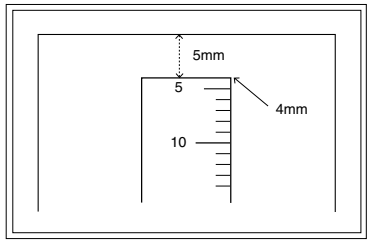

*The dimension varies depending on the model.

8) Measure the image loss R of the copied image. Enter the set value of the image scanning lead edge position (Exposure display <<PHOTO>> ON) again.

•1 step of the set value corresponds to about 0.1mm shift.
•Calculate the set value from the formula below.
R/0.1(mm) = Image loss set value
<R: Image loss measurement value (mm)>

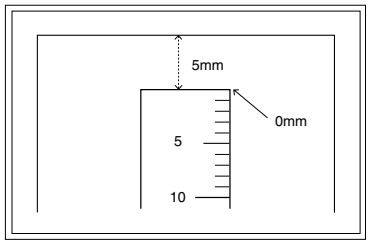

* The scanning edge is set.
(A line may be printed by scanning the document edge.)

Example: 4/0.1 = 40 = about 40

Note: If the set value is not obtained from the above formula, perform the fine adjustment.

9) Measure the distance H between the paper lead edge and the image print start position. Set the image print start position set value (Exposure display <<AUTO+MAIN CASSETTE LAMP>> ON) again.

•1 step of the set value corresponds to about 0.1mm shift.

•Calculate the set value from the formula below.

H/0.1(mm) = Image print start position set value

<H: Print start position measurement value (mm)>

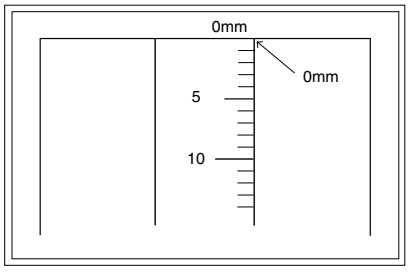

*Fit the print edge with the paper edge, and perform the lead edge adjustment.

Example: 5/0.1 = 50 = about 50

Note: If the set value is not obtained from the above formula, perform the fine adjustment.

10) Set the lead edge void adjustment value (Exposure display <<TEXT>> ON)* again.

•1 step of the set value corresponds to about 0.1mm shift.

•Calculate the set value from the formula below.

B/0.05 (mm) = Lead edge void adjustment value

<B: Lead edge void (mm)>

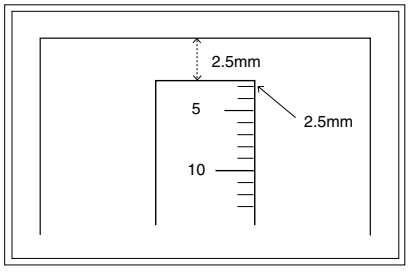

Example: When setting the lead edge void to 2.5mm
:2.5 /0.05 = about 50

Note: If the set value is not obtained from the above formula, perform the fine adjustment.

* 2nd cassette lead edge void adjustment: Exposure display <<AUTO + TEXT + PHOTO>>
Multi bypass tray lead edge void adjustment: Exposure display <<TEXT + PHOTO>>

<Duplex mode adjustment>

OC 2nd print surface (Auto duplex) lead edge position adjustment: SIM50-19 <<PHOTO>>

* For the adjustment procedure, set to S → D mode before execution.

Note: Before performing the 2nd print surface lead edge position adjustment and the lead edge void adjustment, be sure to perform the 1st print surface lead edge position adjustment in advance, and be sure to perform the 2nd print surface lead edge position adjustment and then the lead edge void adjustment in this sequence.

<Adjustment specification>

Adjustment mode	SIM	LED	Set value	Spec value	Set range
OC image lead edge position	SIM 50-1	PHOTO	R/0.1	Lead edge void: 1 - 4mm Image loss: 3mm or less	1 ~ 99
Main cassette print start position		AUTO + MAIN	B/0.1		
2nd cassette print start position		AUTO + 2nd CASSETTE			
Multi bypass tray print start position		AUTO + MULTI			
Lead edge void		TEXT	B/0.05		
OC 2nd print surface lead edge position adjustment	SIM 50-19*	PHOTO	1 step: 0.1mm shift		

* (Set to S → D mode for before execution)

b.SPF image lead edge position adjustment (SIM50-6)

1) Set a scale on the OC table as shown below.

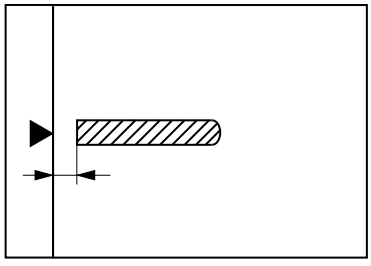

Note: Since the printed copy is used as a test chart, put the scale in paralled with the edge lines.

2) Make a copy, Then use the copy output as an original to make an SPF copy again.
3) Check the copy output. If necessary, perform the following adjustment procedures.
4) Execute SIM 50-6.
5) Set the SPF lead edge position set value (Exposure display <<AUTO>> ON) so that the same image is obtained as that obtained in the previous OC image lead edge position adjustment.

<Adjustment specification>

Adjustment mode	SIM	LED	Set value	Spec value	Set range
SPF image lead edge position (1st print surface)	SIM 50-6	AUTO	1 step: 0.1mm shift	Lead edge void: 1 - 4mm Image loss: 3mm or less	1 ~ 99
(2nd print surface)		TEXT			

c.Rear edge void adjustment (SIM50-1, SIM50-19)

1) Set a scale as shown in the figure below.

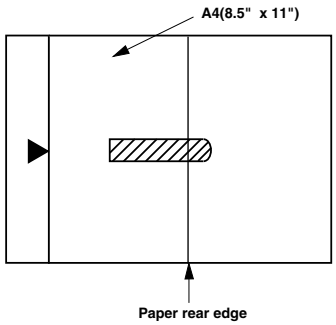

2) Set the document size to A4 (8.5" x 11"), and make a copy at 100%.
3) If necessary, perform the following adjustment procedure.

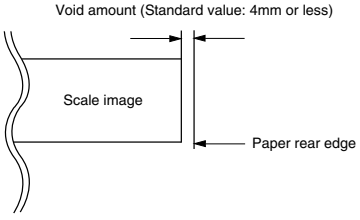

4) Execute SIM 50-1 and set the density mode to AUTO + TEXT + PHOTO (Rear edge void).The currently set adjustment value is displayed.
5) Enter the set value and press the start key. The correction value is stored and a copy is made.

<Duplex mode adjustment>

* 1st print surface (auto duplex) rear edge void adjustment: SIM50-19 <<AUTO>>
* 2nd print surface (auto duplex) rear edge void adjustment: SIM50-19<<TEXT>>
* Set to S → D mode before execution.

Note: Before performing the 2nd print surface rear edge void adjustment, be sure to perform the 2nd print surface lead edge position adjustment. Never reverse the sequence.

<Adjustment specification>

Mode	SIM	LED	Set value	Specification	Set range
Rear edge void	SIM 50-1	AUTO + TEXT + PHOTO	1 step: 0.1mm shift	4mm or less	1 ~ 99
1st print surface rear edge void	SIM 50-19*	AUTO			
2nd print surface rear edge void	SIM 50-19*	TEXT			

* Set to S → D mode before execution

d. Paper off center adjustment (SIM50-10)

1) Set a test chart (UKOG-0089CSZZ) on the document table.
2) Select a paper feed port and make a copy. Compare the copy and the test chart. If necessary, perform the following adjustment procedure.
3) Execute SIM 50-10. After completion of warm-up, shading is performed and the currently set off center adjustment value of each paper feed port is displayed.
4) Enter the set value and press the start key. The correction value is stored and a copy is made.

<Duplex mode adjustment>

* 2nd print surface (auto duplex) off-center adjustment: SIM50-10<<TEXT+MAIN CASSETTE>>

<Adjustment specification>

Mode	SIM	LED	Set value	Specification	Set range
Paper off center	SIM 50-10	AUTO + Selected tray ON	Add 1: 0.1mm shift to R side. Reduce 1: 0.1mm shift to L side.	Single: Center ±2.0mm	1 ~ 99
2nd print surface off-center	SIM 50-10	TEXT + MAIN CASSETTE		Duplex: Center ±2.5mm	

e.Side edge void area adjustment (SIM26-43)

Note: Before performing this adjustment, be sure to check that the paper off center adjustment (SIM 50-10) is completed.

1) Set a test chart (UKOG-0089CSZZ) on the document table.
2) Select a paper feed port and make two copies. Compare the 2nd copy and the test chart. If necessary, perform the following adjustment procedure.

* The 1st copy does not show the void. Be sure to check the 2nd copy.

3) Execute SIM 26-43 and set the density mode to AUTO(right edge void) + TEXT (Left edge void).
   The currently set adjustment value is displayed.
4) Enter the set value and press the start key. The correction value is stored.

<Adjustment specification>

ode	SIM	LED	Set value	Specification	Set range
Left edge void	SIM 26-43	AUTO (right edge) + TEXT (left edge)	1 step: 0.5mm shift	0.5 ~ 4mm	1 ~ 99

* The void adjustment values on the right and the left must be the same.

(2) Main scanning direction(FR direction) distortion balance adjustment

1) Remove the OC glass and the right cabinet.

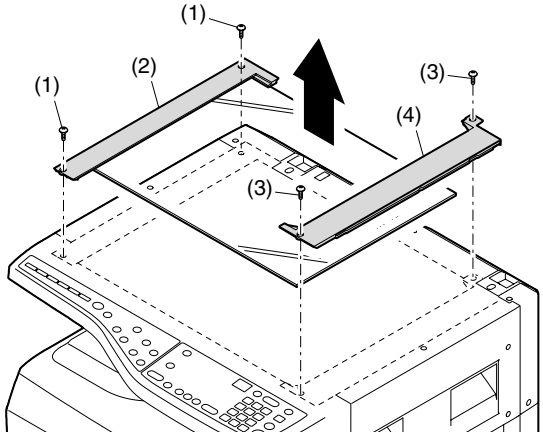

2) Loosen the copy lamp unit wire fixing screw.

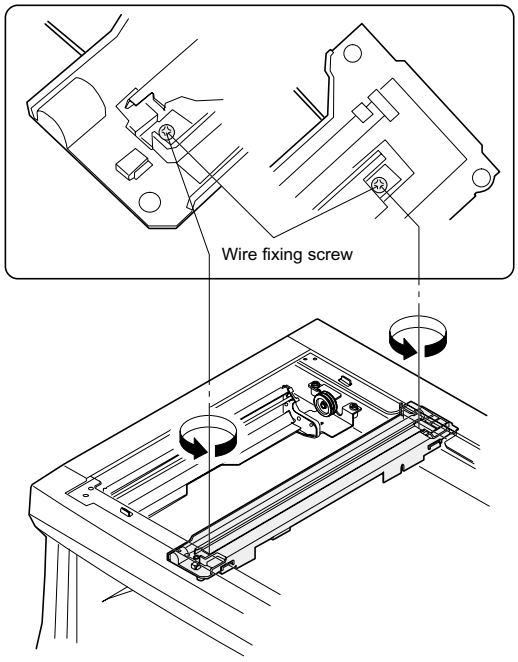

3) Manually turn the mirror base drive pulley and bring No. 2/3 mirror base unit into contact with the positioning plate. At that time, if the front frame side and the rear frame side of No. 2/3 mirror base unit are brought into contact with the positioning plate at the same time, the mirror base unit parallelism is proper. If one of them is in contact with the positioning plate, perform the adjustment of 4).

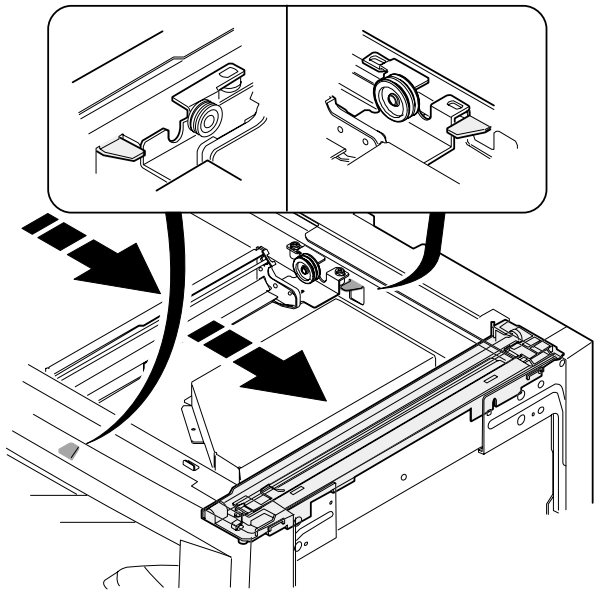

4) Loosen the set screw of the scanner drive pulley which is not in contact with No. 2/3 mirror base unit positioning plate.
5) Without moving the scanner drive pulley shaft, manually turn the scanner drive pulley until the positioning plate is brought into contact with No. 2/3 mirror base unit, then fix the scanner drive pulley.

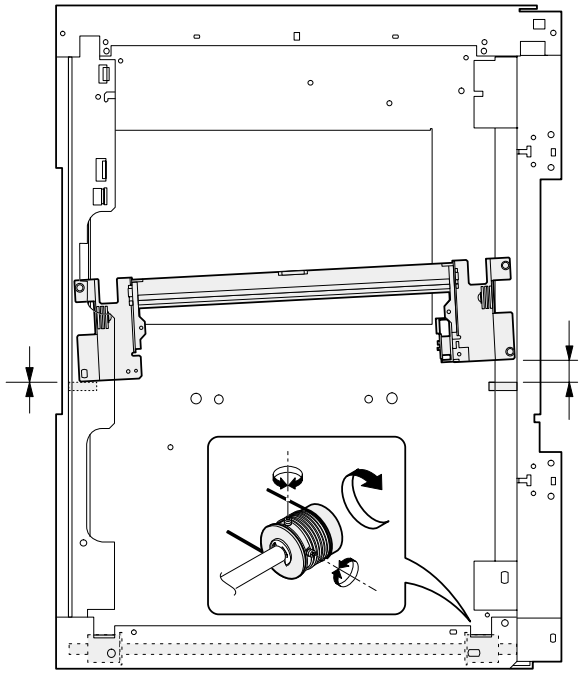

6) Put No. 2/3 mirror base unit on the positioning plate again, push the projections on the front frame side and the rear frame side of the copy lamp unit to the corner frame, and tighten the wire fixing screw.

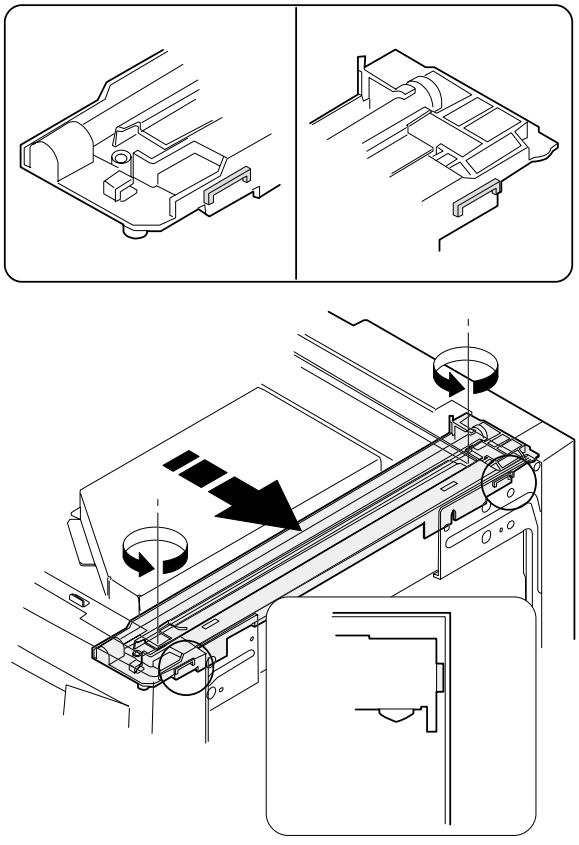

(3)Main scanning direction (FR direction) distortion adjustment

This adjustment must be performed in the following cases:
•When the mirror base drive wire is replaced.
•When the lamp unit, or No. 2/3 mirror holder is replaced.
•When a copy as shown is made.

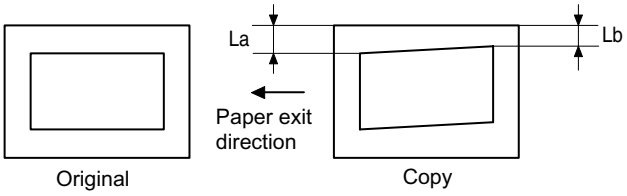

1) Set A3 (11" x 17") white paper on the original table as shown below.

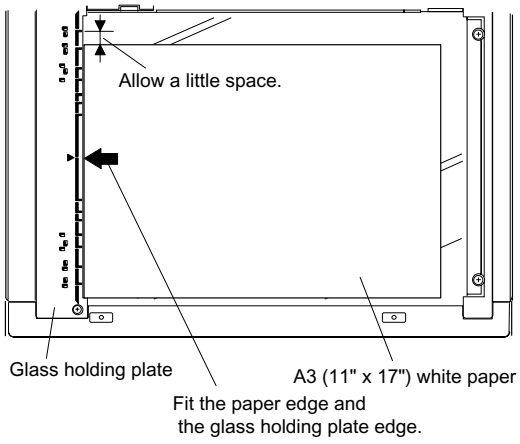

2) Open the original cover and make a normal (100%) copy.
3) Measure the width of the black background at the lead edge and at the rear edge.

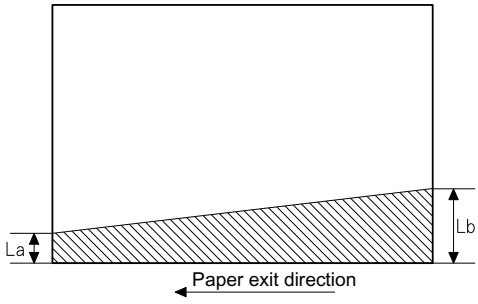

La: Lead edge black background width
Lb: Rear edge black background width

If the width (La) of the black background at the lead edge is equal that (Lb) at the rear edge, there is no need to execute the following procedures of 4) ~ 7).

4) Loosen the mirror base drive pulley fixing screw on the front frame side or on the rear frame side.

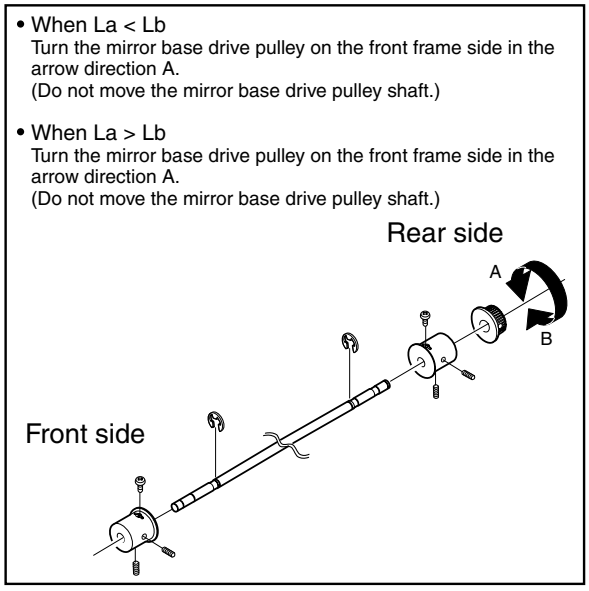

5)Tighten the mirror base drive pulley fixing screw.

<Adjustment specification>

La = Lb

6) Execute the main scanning direction (FR) distartion balance adjustment previously described in 2) again.

(4) Sub scanning direction (scanning direction) distortion adjustment

When there is no skew copy in the mirror base scanning direction and there is no horizontal error (right angle to the scanning direction), the adjustment can be made by adjusting the No. 2/3 mirror base unit rail height.
Before performing this adjustment, be sure to perform the horizontal image distortion adjustment in the laser scanner section.
This adjustment must be performed in the following cases:
•When the mirror base wire is replaced.
•When the copy lamp unit or No. 2/3 mirror unit is replaced.
•When the mirror unit rail is replaced or moved.
•When a following copy is made.

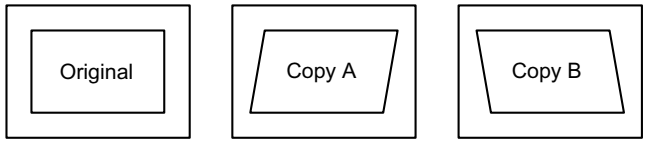

1) Making of a test sheet
Make test sheet by drawing parallel lines at 10mm from the both ends of A3 (11" x 17") white paper as shown below. (These lines must be correctly parallel to each other.)

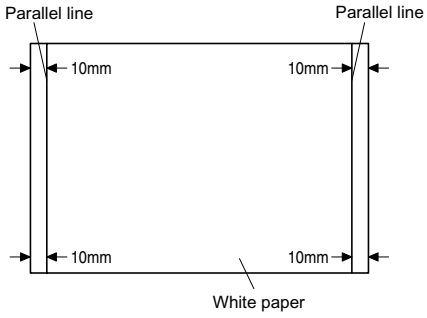

2) Make a normal (100%) copy of the test sheet on A3 (11" x 17") paper. (Fit the paper edge with the glass holding plate edge.)
3) Measure the distances (La, Lb, Lc, Ld) at the four corners as shown below.

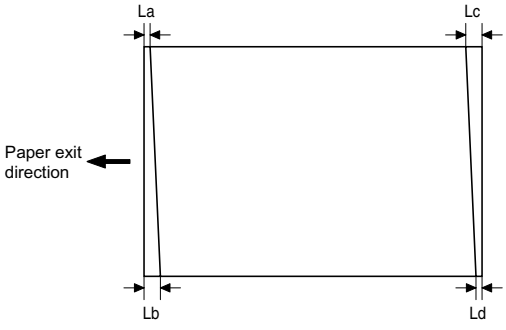

When La = Lb and Lc = Ld, no need to perform the procedures 4) and 5).

4) Move the mirror base F rail position up and down (in the arrow direction) to adjust.

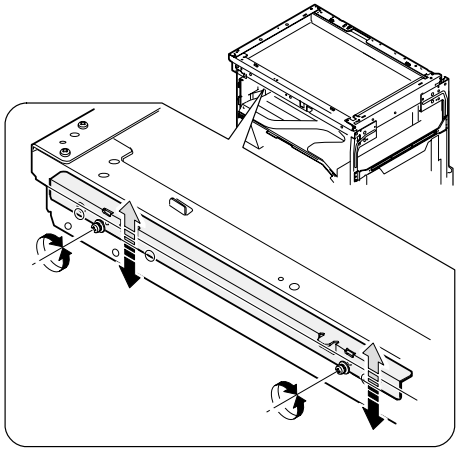

Note: If the rear side rail is used for the adjustment, the scanning position of the white balance sheet is shifted and "E7-04" may occur only when scanning with the SPF. Therefore it is advisable to use the front side rail for the adjustment.

- When La > Lb
  Shift the mirror base B rail upward by the half of the difference of La - Lb.
- When La < Lb
  Shift the mirror base B rail downward by the half of the difference of Lb - La.
  Example: When La = 12mm and Lb = 9mm, shift the mirror base B rail upward by 1.5mm.
- When Lc > Ld
  Shift the mirror base B rail downward by the half of the difference of Lc - Ld.
- When Lc < Ld
  Shift the mirror base B rail downward by the half of the difference of Ld - Lc.

* When moving the mirror base rail, hold the mirror base rail with your hand.

<Adjustment specification>

La = Lb, Lc = Ld

5) After completion of adjustment, manually turn the mirror base drive pulley, scan the mirror base A and mirror base B fully, and check that the mirror bases are not in contact with each other.

* If the mirror base rail is moved extremely, the mirror base may be in contact with the frame or the original glass. Be careful to avoid this.

(5) Main scanning direction (FR direction) magnification ratio adjustment (SIM 48-1)

Note: Before performing this adjustment, be sure to check that the CCD unit is properly installed.

1) Put a scale on the original table as shown below.

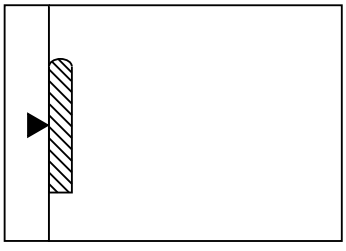

2) Execute SIM 48-1.
3) After warm-up, shading is performed and the current set value of the main scanning direction magnification ratio is displayed on the display section in 2 digits.
4) Select the mode and press the start key again.
5) Manual correction mode (TEXT lamp ON)
Enter the set value and press the start key.
The set value is stored and a copy is made.

<Adjustment specification>

Note: A judgment must be made with 200mm width, and must not be made with 100mm width.

Mode	Specification	SIM	Set value	Set range
Main scanning direction magnification ratio	At normal: ±1.0%	SIM 48-1	Add 1:0.1% increase Reduce 1: 0.1% decrease	1 ~ 99

(6) Sub scanning direction (scanning direction) magnification ratio adjustment (SIM 48-1, SIM 48-5)

a. OC mode in copying (SIM48-1)

Note: Before performing this adjustment, be sure to check that the CCD unit is properly installed.

1) Put a scale on the original table as shown below, and make a normal (100%) copy.
2) Compare the scale image and the actual image. If necessary, perform the following adjustment procedures.
3) Execute SIM 48-1.<<PHOTO>>
4) After warm-up, shading is performed and the current set value of the main scanning direction magnification ratio is displayed on the display section in 2 digits.
5) When the photo lamp is lighted by pressing the density selection key, the current magnification ratio correction value in the sub scanning direction is displayed in lower 2 digits of the display section.
6) Enter the set value and press the start key.
   The set value is stored and a copy is made.

<Adjustment specification>

Mode	Specification	SIM	Set value	Set range
Sub scanning direction magnification ratio (OC mode)	Normal ±1.0%	SIM 48-1 (PHOTO)	Add 1:0.1% increase Reduce 1: 0.1% decrease	1 ~ 99

b. RSPF sub scanning direction magnification ratio (SIM48-5)

Note:

- Before performing this adjustment, be sure to check that the CCD unit is properly installed.
- Before performing this adjustment, the OC mode adjustment in copying must be completed.

1) Put a scale on the original table as shown below, and make a normal (100%) copy to make a test chart.

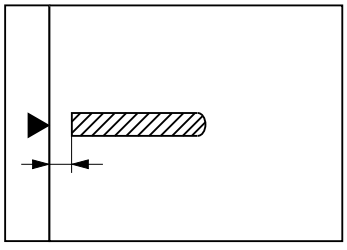

Note: Since the printed copy is used as a test chart, put the scale in parallel with the edge lines.

2) Set the test chart on the SPF and make a normal (100%) copy.
3) Compare the scale image and the actual image. If necessary, perform the following adjustment procedures.
4) Execute SIM 48-5.
5) After warm-up, shading is performed.
   The auto density lamp lights up and the current front surface sub scanning direction magnification ratio correction value is displayed in two digits on the display section.
6) Enter the set value and press the start key.
   The set value is stored and a copy is made.
7) Change the mode from the duplex original mode to the simplex original mode.
   "MANUAL" lamp lights up and the current back surface sub scanning direction magnification ratio is displayed in two digits on the display section.
8) Enter the set value and press the start key.
   The set value is stored and a copy is made.

<Adjustment specification>

Mode	Specification	SIM	Set value	Set range
Sub scanning direction magnification ratio (SPF mode)	Normal ±1.0%	SIM 48-5	Add 1:0.1% increase Reduce 1: 0.1% decrease	1 ~ 99

(7) Off center adjustment (SIM 50-12)

a. OC mode (SIM50-12)

1) Make a test chart as shown below and set it so that its center line is fit with the original guide center mark.

* To make a test chart, draw a line on A3 or 11" x 17" paper at the center in the paper transport direction.

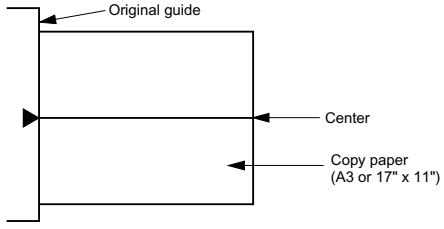

2) Make a normal copy from the manual paper feed tray, and compare the copy and the test chart.
   If necessary, perform the following adjustment procedures.
3) Execute SIM 50-12.
4) After warm-up, shading is performed and the current set value of the off center adjustment is displayed on the display section in 2 digits.
5) Enter the set value and press the start key.
   The set value is stored and a copy is made.

<Adjustment specification>

Mode	Specification	SIM	Set value	Set range
Original off center mode (OC mode)	Single: Center ±2.0mm	SIM 50-12 (AE lamp ON)	Add 1: 0.1mm shift to R side Reduce 1: 0.1mm shift to L side	1 ~ 99

b. SPF original off-center adjustment (SIM50-12)

Note: Before performing this adjustment, be sure to check that the paper off center is properly adjusted.

1) Make a test chart for the center position adjustment and set it on the SPF.

<Adjustment specification>

Draw a line on a paper in the scanning direction.

2) Make a normal copy from the manual paper feed tray, and compare the copy and the original test chart.
   If necessary, perform the following adjustment procedures.
3) Execute SIM 50-12.
4) After warm-up, shading is performed and the current set value of the off center adjustment at each paper feed port is displayed on the display section in 2 digits.
5) Enter the set value and press the start key.
   The set value is stored and a copy is made.

<Adjustment specification>

Mode	Specification	SIM	Set value	Set range
Original off center mode (SPF mode)	Single: Center ±3.0mm(TEXT lamp)	SIM 50-12	Add 1: 0.1mm shift to R side Reduce 1: 0.1mm shift to L side	1 ~ 99
	Duplex: Center ±3.5mm(PHOTO lamp)			

(8) SPF white correction pixel position adjustment(SIM63-7) (required in an SPF model when replacing the lens unit)

1) Fully open the SPF.
2) Execute SIM 63-7.
3) When the operation panel displays "COMPLETE,"the adjustment is completed.
4) If the operation panel displays "ERROR,"perform the following measures.

•When the display is 0:

Check that the SPF is open.

Check that the lamp is ON.(If the lamp is OFF,check the MCU connector.)

Check that the CCD harness is properly inserted into the MCU connector.

•When the display is 281 or above:

1) Remove the table glass.
2) Remove the dark box.
3) Slide the lens unit toward the front side and attach it,then execute SIM.

•When the display is 143 or below:

1) Remove the table glass.
2) Remove the dark box.
3) Slide the lens unit toward the rear side and attach it,then execute SIM.

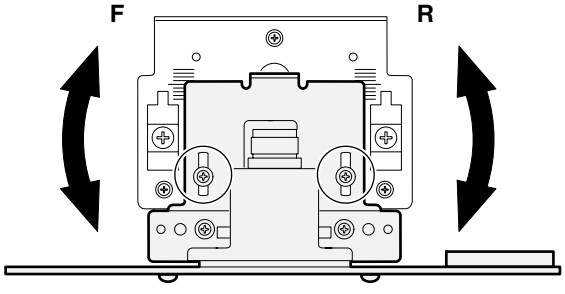

* When the lens unit is moved,execute the OC main scanning magnification ratio auto adjustment,SIM 48-1-1,IM48-3 and the PF original off-center adjustment.

* This adjustment is basically O.K.with IM 63-7.

C.Image density adjustment

(1)Copy mode (SIM 46-1)

1)Set a test chart (UKOG-0162FCZZ) on the OC table as shown below.

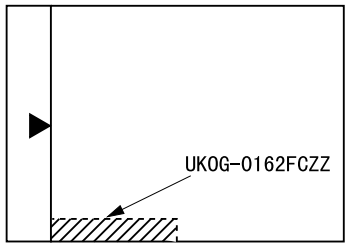

2) Put several sheets of A3 or 11" x 17" white paper on the test chart.
3) Execute SIM 46-1.
4) After warm-up, shading is performed and the current set value of the density level is displayed on the display section in 2 digits.
   For mode selection, use the density select key.
5) Change the set value with the 10-key to adjust the copy image density.
6) Make a copy and check that the specification below is satisfied.

<Adjustment specification>

Density mode	Display lamp	Exposure level	Sharp Gray Chart output	Set value	Set range
Auto	Auto	-	"2" is slightly copied.	The greater the set value is the greater the density is The smaller the set value is the smaller the density is.	1 ~ 99
Text	Text	3	"3" is slightly copied.		
Photo	Photo	3	"2" is slightly copied.		
Toner save	Text/ Photo	3	"3" is slightly copied		
Toner save	Auto/ Photo	-	"2" is slightly copied		

[7] SIMULATIONS

1. Entering the simulation mode

Perform the following procedure to enter the simulation mode.
"#" key → Interrupt key → "C" key → Interrupt key →
Main code → Start key → Sub code → Start key

2. Canceling the simulation mode

When the clear all key is pressed, the simulation mode is cancelled.
When the interruption key is pressed, the process is interrupted and the screen returns to the sub code entering display.

* After canceling the simulation mode, be sure to turn OFF/ON the power and check the operation.

Note: If the machine is terminated by a jam error or paper empty during copying in the adjustment by the simulation, recopying is required.

3. List of simulations

Main code	Sub code	Contents
01	01	Mirror scanning operation
	02	Mirror home position sensor (MHPS) status display
	06	Mirror scanning operation aging
02	01	Single paper feeder (SPF) aging
	02	SPF sensor status display
	03	SPF motor operation check
	08	SPG paper feed solenoid operation check
	09	RSPF reverse solenoid operation check
	10	RSPF paper exit gate solenoid operation check
	11	SPF PS release solenoid operation check
03	02	Shifter sensors status display
	03	Shifter operation check
	11	Shifter home position check
05	01	Operation panel display check
	02	Fusing lamp and cooling fan operation check
	03	Copy lamp lighting check
06	01	Paper feed solenoid operation check
	02	Resist roller solenoid operation check
	10	Main cassette semicircular roller cleaning
07	01	Warm-up display and aging with jam
	06	Intermittent aging
	08	Shifting with warm-up display
08	01	Developing bias output
	02	Main charger output (Grid = HIGH)
	03	Main charger output (Grid = LOW)
	06	Transfer charger output
09	01	Duplex motor forward rotation check
	02	Duplex motor reverse rotation check
	04	Duplex motor RPM adjustment
	05	Duplex motor switchback time adjustment
10	-	Toner motor operation
14	-	Trouble cancel (except for U2)
16	-	U2 trouble cancel
20	01	Maintenance counter clear
21	01	Maintenance cycle setting
	02	Mini maintenance cycle setting
22	01	Maintenance counter display
	02	Maintenance preset display
	03	Jam memory display
	04	Jam total counter display
	05	Total counter display
	06	Developing counter display
	07	Mini maintenance preset display
	08	SPF counter display
	09	Paper feed counter display
	12	Drum counter display
	13	CRUM type display
	14	P-ROM version display
	15	Trouble memory display
	16	Duplex print counter display
	17	Copy counter display
	18	Printer counter display
	19	Scanner mode counter display
	21	Scanner counter display
	22	SPF jam counter display

Main code	Sub code	Contents
24	01	Jam total counter clear
	02	Trouble memory clear
	04	SPF counter clear
	05	Duplex print counter clear
	06	Paper feed counter clear
	07	Drum counter clear
	08	Copy counter clear
	09	Printer counter clear
	13	Scanner counter clear
	14	SPF jam total counter clear
	15	Scanner mode counter clear
25	01	Main motor operation check
	10	Polygon motor operation check
26	02	Size setting
	03	Auditor setting
	04	Copier duplex setting
	05	Count mode setting
	06	Destination setting
	07	Machine condition check (CPM)
	18	Toner save mode setting
	30	CE mark conformity control ON/OFF
	31	Auditor mode exclusive setup
	36	Cancel of stop at maintenance life over
	37	Cancel of stop at developer life over
	38	Cancel of stop at drum life over
	39	Memory capacity check
	42	Transfer ON/OFF timing control setting
	43	Side void amount setting
	51	Copy temporary stop function setting
30	01	Paper sensor status display
42	01	Developing counter clear
43	01	Fusing temperature setting
	10	Postcard paper feed cycle setting
	11	Postcard size paper fusing temperature setting
	12	Standby mode fusing fan rotation setting
	13	Fusing paper interval control allow/inhibit setting
44	34	Transfer current setting
	40	Setting of rotation time before toner supply
46	01	Copy density adjustment (300dpi)
	02	Copy density adjustment (600dpi)
	09	Copy exposure level adjustment, individual setting (Text) 300dpi
	10	Copy exposure level adjustment, individual setting (Text) 600dpi
	11	Copy exposure level adjustment, individual setting (Photo) 600dpi
	18	Image contrast adjustment (300dpi)
	19	Exposure mode setting (Gamma table setting/AE operation mode setting/ Photo image process setting)
	20	SPF exposure correction
	29	Image contrast adjustment (600dpi)
	30	AE limit setting
	31	Image sharpness adjustment
48	01	Main scanning magnification ratio adjustment
	05	SPF/RSPF mode sub scanning magnification ratio adjustment in copying
49	01	Flash ROM program writing mode

Main code	Sub code	Contents
50	01	Image lead edge adjustment
	06	Copy lead edge position adjustment (SPF/RSPF)
	10	Paper off-center adjustment
	12	Document off-center adjustment
	18	Memory reverse position adjustment in duplex copy
	19	Rear edge void adjustment in duplex copy
51	02	Resist amount adjustment
53	08	SPF scanning position automatic adjustment
61	03	HSYNC output check
63	01	Shading check
	07	SPF automatic correction
64	01	Self print

4. Contents of simulations

<table>
<tr><th>Main code</th><th>Sub code</th><th>Contents</th><th>Details of operation</th></tr>
<tr><td>01</td><td>01</td><td>Mirror scanning operation</td><td>When the [START] key is pressed, the home position is checked in the first place, and the mirror base performs A3 full scanning once at the set magnification ratio speed. During this scanning, the set magnification ratio is displayed. The mirror home position sensor status is displayed with the photoconductor cartridge replacement lamp.
(The lamp lights up when the mirror is in the home position.)
During scanning, the copy lamp lights up.
When the [Interrupt] key is pressed, the operation is interrupted to go to the sub code input standby mode.</td></tr>
<tr><td></td><td>02</td><td>Mirror home position sensor (MHPS) status display</td><td>Used to monitor the mirror home position sensor. When the sensor is ON, the photoconductor cartridge replacement lamp is lighted. During that time, the display section displays the sub code.
When the [Interrupt] key is pressed, the machine goes to the sub code input standby mode.
(When the CA key is pressed, the simulation is terminated.)</td></tr>
<tr><td></td><td>06</td><td>Mirror scanning operation aging</td><td>When the [START] key is pressed, the mirror base performs A3 full scanning at the set magnification ratio speed. During scanning, the set magnification ratio is displayed. After 3 seconds, the mirror base performs full scanning again. During scanning, the set magnification ratio is displayed.
* When the [START] key is pressed again, the ready lamp turns and remains off.
The photoconductor cartridge replacement lamp displays the status of the mirror home position sensor. (The lamp lights up when the mirror is in the home position.)
During aging, the copy lamp lights up. When the [Interrupt] key is pressed, the operation is interrupted if operating, and the machine goes into the sub code input standby mode.</td></tr>
<tr><td>02</td><td>01</td><td>Single paper feeder (SPF) aging</td><td>When the [START] key is pressed, the set magnification ratio is acquired and document transport operation of single surface is performed in the case of SPF or document transport operation of duplex surfaces is performed in the case of RSPF. Since, however, there is no limited condition for this operation, it does not stop even at a paper jam. During operation, the LED on the display section corresponding to the selected magnification ratio lights up, and the magnification ratio is displayed on the 7-seg display. When the [Interrupt] key is pressed at that time, the machine goes to the sub code input standby mode. When the [CA] key is pressed, the simulation is terminated.
<Conditions for executing this simulation>
Set paper on the SPF and fix it with tape. If paper is not fixed, the operations cannot be guaranteed.</td></tr>
<tr><td></td><td>02</td><td>SPF sensor status display</td><td>(In order to receive the sensor change notification, the load must be decreased.)
The sensor status (ON/OFF) in the SPF can be checked with the following lamps.
When a sensor detects paper, it turns on. The open/close detection sensor turns on when the machine is opened.
<table>
<tr><th>Display lamp</th><th>Sensor</th></tr>
<tr><td>Developing cartridge replacement lamp</td><td>SPF document set sensor</td></tr>
<tr><td>Copier jam lamp</td><td>SPF document transport sensor</td></tr>
<tr><td>Photoconductor cartridge replacement lamp</td><td>SPF unit (OC cover) open/close sensor</td></tr>
<tr><td>Paper empty lamp</td><td>SPF paper exit sensor</td></tr>
<tr><td>SPF jam lamp</td><td>SPF paper feed cover open/close sensor</td></tr>
<tr><td>Manual paper feed lamp</td><td>SPF paper length sensor 1</td></tr>
<tr><td>Tray jam lamp</td><td>SPF paper length sensor 2</td></tr>
<tr><td>AE lamp</td><td>SPF paper feed width sensor (small)</td></tr>
<tr><td>TEXT lamp</td><td>SPF paper feed width sensor (middle)</td></tr>
<tr><td>PHOTO lamp</td><td>SPF paper feed width sensor (large)</td></tr>
</table>
When the [Interrupt] key is pressed, the machine goes to the sub code input standby mode.
When the [CA] key is pressed, the simulation is terminated.</td></tr>
<tr><td></td><td>03</td><td>SPF motor operation check</td><td>When the [START] key is pressed, the motor rotates for 10 sec at the speed corresponding to the set magnification ratio. When the [Interrupt] key is pressed, the machine stops operation and goes to the sub code input standby mode. When the [CA] key is pressed, the simulation is terminated.</td></tr>
<tr><td></td><td>08</td><td>SPG paper feed solenoid operation check</td><td>The SPF paper feed solenoid (PSOL) is turned ON for 500msec and OFF for 500msec.
This operation is repeated 20 times.
After completion of the process, the machine goes to the sub code input standby mode.
When the [Interrupt] key is pressed during the process, the machine goes to the sub code input standby mode. When the [CA] key is pressed, the simulation is terminated.</td></tr>
<tr><td></td><td>09</td><td>RSPF reverse solenoid operation check</td><td>The RSPF reverse solenoid (PSOL) is turned ON for 500msec and OFF for 500msec.
This operation is repeated 20 times.
After completion of the process, the machine goes to the sub code input standby mode.
When the [Interrupt] key is pressed during the process, the machine goes to the sub code input standby mode. When the [CA] key is pressed, the simulation is terminated.</td></tr>
<tr><td></td><td>10</td><td>RSPF paper exit gate solenoid operation check</td><td>The RSPF paper exit gate solenoid (GSOL) is turned ON for 500msec and OFF for 500msec.
This operation is repeated 20 times.
After completion of the process, the machine goes to the sub code input standby mode.
When the [Interrupt] key is pressed during the process, the machine goes to the sub code input standby mode. When the [CA] key is pressed, the simulation is terminated.</td></tr>
</table>

Main code	Sub code	Contents	Details of operation
02	11	SPF PS release solenoid operation check	The SPF PS release solenoid (CLH) is turned ON for 500msec and OFF for 500msec. This operation is repeated 20 times. After completion of the process, the machine goes to the sub code input standby mode. When the [Interrupt] key is pressed during the process, the machine goes to the sub code input standby mode. When the [CA] key is pressed, the simulation is terminated.
03	02	Shifter sensors status display	The shifter HP sensor is monitored. When the sensor is ON, the [Copier position jam lamp] is lighted. During this operation, the display section displays the sub code. When the [Interrupt] key is pressed, the machine goes to the sub code input standby mode. When the [CA] key is pressed, the simulation is terminated.
	03	Shifter operation check	The shifter is reciprocated 4 times. During the process, the display section displays the sub code. After completion of the process, the machine goes to the sub code input standby mode. When the [Interrupt] key is pressed during the process, the machine goes to the sub code input standby mode. When the [CA] key is pressed, the simulation is terminated. To stop the shifter, however, stop is in the home position.
	11	Shifter home position check	The shifter is moved in one direction by the specified steps. The 7-seg LED displays the sub code. While the shifter is moving, the shifter HP sensor is monitored. While the sensor is ON, the machine position jam lamp is lighted. 3 key: Step toward the front 4 key: Step toward the rear 5 key: Initial When the [Interrupt] key is pressed during the process, the machine goes to the sub code input standby mode. When the [CA] key is pressed, the simulation is terminated.
05	01	Operation panel display check	**<<LED check mode (ALL ON/Individual ON)>>** When the [START] key is pressed in the sub code input mode, all the LED's (including the 7-seg lamps) are turned ON. After 5 sec of all ON, the machine goes to the sub code input standby mode. When the [Mode select] key is pressed during all ON, the lighting mode is shifted to the individual ON mode, where the LED's are individually lighted from the left top, to the left bottom, to the next line top, to the bottom, and so on. (For the 7-seg lamps, the 3-digit lamps are lighted at once.) After completion of lighting of all the lamps, the mode is shifted to the all ON mode. After 5 sec of all ON mode, the machine goes to the sub code input standby mode. Individual ON mode cycle: 300ms for ON 20ms for OFF When the [Interrupt] key is pressed in the LCD check mode, the machine goes back to the sub code input standby mode. When the [CA] key is pressed, the simulation is terminated. When the [START] key is pressed with all the lamps ON, the machine goes back to the key input check mode. **<< Key input check mode>>** When the machine goes into the key input check mode, [- - -] is displayed on the copy quantity display. Every time when a key on the operation panel is pressed, the input value is added on the copy quantity display. [- - -] → [1] → [2] → •••. When a key is pressed once, it is not counted again. When the [START] key is pressed, the input number is added and displayed for 3 sec, and the machine goes into the LED lighting check mode (LED all ON state). When the [Interrupt] key is pressed for the first time, it is counted. When the key is pressed for the second time, the machine goes into the sub code input mode. When the [CA] key is pressed for the first time, it is counted. When the key is pressed for the second time, the simulation is terminated. (Note for the key input check mode). •Press the [START] key at the end. (When the key is pressed during the process, the machine goes into the LED lighting check mode (all ON state).). •When two or more keys are pressed simultaneously, they are ignored.
	02	Fusing lamp and cooling fan operation check	When the [START] key is pressed, the fusing lamp turns ON for 500ms and OFF for 500ms. The operation is repeated 5 times. During this process, the cooling fan motor rotates. After completion of the process, the machine goes into the sub code input standby mode.
	03	Copy lamp lighting check	When the [START] key is pressed, the copy lamp lights up for 5 sec. After completion of lighting, the machine goes into the sub code input mode. When the [Interrupt] key is pressed, the process is interrupted and the machine goes into the sub code input standby mode. When the [CA] key is pressed, the simulation is terminated.

<table>
<tr><th>Main code</th><th>Sub code</th><th>Contents</th><th>Details of operation</th></tr>
<tr><td>06</td><td>01</td><td>Paper feed solenoid operation check</td><td>When this simulation is executed, the sub code is displayed on the 7-seg LED and the lamp corresponding to the solenoid lights up.
Select a solenoid with the tray select key (the lamp corresponding to the solenoid lights up) and press the [START] key, and the machine repeats operation of ON for 500ms and OFF for 500ms. This operation is repeated 20 times.
After that, the machine goes into the sub code entry standby mode.
<table>
<tr><th>Display lamp</th><th>Solenoid</th></tr>
<tr><td>Main cassette lamp</td><td>Main cassette paper feed solenoid</td></tr>
<tr><td>2nd cassette lamp</td><td>* 2nd cassette paper feed solenoid</td></tr>
<tr><td>3rd cassette lamp</td><td>* 3rd cassette paper feed solenoid</td></tr>
<tr><td>4th cassette lamp</td><td>* 4th cassette paper feed solenoid</td></tr>
<tr><td>Manual paper feed lamp</td><td>Manual paper feed solenoid</td></tr>
<tr><td>2nd cassette jam lamp</td><td>* 2nd cassette paper transport solenoid</td></tr>
<tr><td>Machine jam lamp & 2nd cassette jam lamp</td><td>* 3rd cassette transport solenoid</td></tr>
</table>
* Supported for the installed models only. Skipped for the models without installation.</td></tr>
<tr><td></td><td>02</td><td>Resist roller solenoid operation check</td><td>When the [START] key is pressed in the sub code input state, the resist solenoid (RRS) turns ON for 500ms and OFF for 500ms. This operation is repeated 20 times.
After completion of the process, the machine goes into the sub code input standby mode.</td></tr>
<tr><td></td><td>10</td><td>Main cassette semicircular roller cleaning</td><td>The main motor is rotated to rotate the semicircular roller of the main cassette one turn to face the semicircular roller down. (Remove the developing layer when performing this operation.)
During this process, the sub code is displayed on the display section.
After completion of the process, the machine goes into the sub code input standby mode.</td></tr>
<tr><td>07</td><td>01</td><td>Warm-up display and aging with jam</td><td>Copying is repeated to make the set copy quantity. When this simulation is executed, warm-up is started and warm-up time is counted up every second from 0 and displayed. After completion of warm-up, warm-up time count is stopped. When the [CA] key is pressed, the ready lamp lights up. After that, when the copy quantity is inputted with keys and the [START] key is pressed, copying is repeated to make the set copy quantity. (Intermittent 0 sec)This simulation is canceled by turning off the power or performing a simulation that executes hardware reset.</td></tr>
<tr><td></td><td>06</td><td>Intermittent aging</td><td>Copying is repeated to make the set copy quantity. When this simulation is performed, warm-up is performed and the ready lamp is lighted. Enter the copy quantity with the key and press the [START] key, and copying is repeated to make the set copy quantity, the ready state remains for 3 sec, and copying is repeated again to make the set copy quantity. These operations are repeated.
This simulation is canceled by turning off the power or performing a simulation that executes hardware reset.</td></tr>
<tr><td></td><td>08</td><td>Shifting with warm-up display (Shifting similar to pressing the CA key)</td><td>When the simulation code is entered, warm-up is started and warm-up time is counted up every second from 0 and displayed. When the [CA] key is pressed during counting up, the display section displays "0" and count-up process stops. However, warm-up is continued.
After completion of warm-up, counting is stopped. Press the [CA] key to terminate the simulation mode. (This simulation is similar to SIM07-01, but without the aging function.)</td></tr>
<tr><td>08</td><td>01</td><td>Developing bias output</td><td>When the [START] key is pressed, the developing bias signal is turned ON for 30 sec.
However, to calculate the actual output value is calculated, execute SIM25-01.
After completion of the process, the machine goes into the sub code input standby mode.</td></tr>
<tr><td></td><td>02</td><td>Main charger output (Grid = HIGH)</td><td>When the [START] key is pressed, the main charger output is supplied for 30 sec in the grid voltage HIGH mode. After completion of the process, the machine goes into the sub code input standby mode.</td></tr>
<tr><td></td><td>03</td><td>Main charger output (Grid = LOW)</td><td>When the [START] key is pressed, the main charger output is supplied for 30 sec in the grid voltage LOW mode. After completion of the process, the machine goes into the sub code input standby mode.</td></tr>
<tr><td></td><td>06</td><td>Transfer charger output</td><td>Select an output mode with the [Mode select] key and press the [START] key. The transfer charger output is delivered for 30 sec in the selected mode.
After 30 sec of transfer charger output, the machine goes into the sub code entry standby mode.
<table>
<tr><th>Display lamp</th><th>Output mode</th></tr>
<tr><td>AE mode lamp</td><td>Normal size width: Front surface</td></tr>
<tr><td>TEXT mode lamp</td><td>Normal size width: Back surface</td></tr>
<tr><td>AE mode lamp & PHOTO mode lamp</td><td>Small size width: Front surface</td></tr>
<tr><td>TEXT mode lamp & PHOTO mode lamp</td><td>Small size width: Back surface</td></tr>
<tr><td>AE & TEXT & PHOTO mode lamp</td><td>Manual paper feed mode</td></tr>
</table>
•Small size is Letter R (A4R) or smaller.</td></tr>
</table>

<table>
<tr><th>Main code</th><th>Sub code</th><th>Contents</th><th>Details of operation</th></tr>
<tr><td>09</td><td>01</td><td>Duplex motor forward rotation check</td><td>The duplex motor is driven in forward direction (in the paper exit direction) for 30 sec.
During the process, the display section displays the sub code.
After completion of the process, the machine goes into the sub code input standby mode.
When the [Interrupt] key is pressed, the machine goes into the sub code input standby mode.
When the [CA] key is pressed, the simulation is terminated.</td></tr>
<tr><td></td><td>02</td><td>Duplex motor reverse rotation check</td><td>The duplex motor is driven in reverse direction for 30 sec.
During the process, the display section displays the sub code.
After completion of the process, the machine goes into the sub code input standby mode.
When the [Interrupt] key is pressed, the machine goes into the sub code input standby mode.
When the [CA] key is pressed, the simulation is terminated.</td></tr>
<tr><td></td><td>04</td><td>Duplex motor RPM adjustment</td><td>When any key input is made, it is displayed on the display section.
When the [START] key is pressed, the set code data are acquired and stored in the EEPROM, and the machine goes into the sub code input standby mode.
When, however, the [START] key is pressed outside the set range, it is not assured.
<table><tr><td>Set range: 1 - 13</td><td>Default: 4</td></tr></table>At that time, when the [Interrupt] key is pressed, the data are not rewritten and the machine goes into the sub code input standby mode.
When the [CA] key is pressed, the simulation is terminated without rewriting the data.</td></tr>
<tr><td></td><td>05</td><td>Duplex motor switchback time adjustment</td><td>When any key input is made, it is displayed on the display section. When the [START] key is pressed, the set code data are acquired and stored in the EEPROM, and the machine goes into the sub code input standby mode.
<table><tr><td>Set range: 50 ~ 76</td><td>Default: 50</td></tr></table>(Change quantity 1 → 1-2 phase 3 steps)
At that time, when the [Interrupt] key is pressed, the data are not rewritten and the machine goes into the sub code input standby mode.
When the [CA] key is pressed, the simulation is terminated without rewriting the data.</td></tr>
<tr><td>10</td><td>-</td><td>Toner motor operation</td><td>When the [START] key is pressed, the toner motor is driven for 30 sec.
After completion of the process, the machine goes into the main code input standby mode.
When the [Interrupt] key is pressed, the machine goes into the main code input standby mode.</td></tr>
<tr><td>14</td><td>-</td><td>Trouble cancel (except for U2)</td><td>* Trouble to write into the EEPROM such as H trouble is canceled and hardware reset is performed.</td></tr>
<tr><td>16</td><td>-</td><td>U2 trouble cancel</td><td>* U2 trouble is canceled and hardware reset is performed.</td></tr>
<tr><td>20</td><td>01</td><td>Maintenance counter clear</td><td>When the [Start] key is pressed, the maintenance count value is cleared and "000000" is displayed. (Alternate display of "000" and "000")</td></tr>
<tr><td>21</td><td>01</td><td>Maintenance cycle setting</td><td>The current set maintenance cycle code is displayed (initial display), and the set data are stored.
<table><tr><th>Code</th><th>Setting</th></tr><tr><td>0</td><td>5,000 sheets</td></tr><tr><td>1</td><td>7,500 sheets</td></tr><tr><td>2</td><td>10,000 sheets</td></tr><tr><td>3</td><td>25,000 sheets</td></tr><tr><td>4</td><td>50,000 sheets * Default</td></tr><tr><td>5</td><td>Free (999,999 sheets)</td></tr></table></td></tr>
<tr><td></td><td>02</td><td>Mini maintenance cycle setting (Valid only when the destination is set to Japan AB series.)</td><td>The current set maintenance cycle code is displayed (initial display), and the set data are stored.
<table><tr><th>Code</th><th>Setting</th></tr><tr><td>0</td><td>5,000 sheets * Default</td></tr><tr><td>1</td><td>10,000 sheets</td></tr><tr><td>2</td><td>Free (999,999 sheets)</td></tr></table></td></tr>
<tr><td>22</td><td>01</td><td>Maintenance counter display</td><td>The maintenance counter value is displayed.</td></tr>
<tr><td></td><td>02</td><td>Maintenance preset display (Valid only when the destination is set to EX Japan)</td><td>The copy quantity corresponding to the code that is set with SIM21-01 is displayed.
(For example: 50,000 sheets)</td></tr>
<tr><td></td><td>03</td><td>Jam memory display</td><td>The LED of the latest jam position is lighted. Every time when the magnification ratio display key is pressed, the jam memory data is acquired sequentially from the latest. The jam position is judged by the acquired data and the corresponding LED is lighted. The 7-seg display indicates the jam number. At that time, "A" is displayed on the upper first digit. When the last one is displayed, the latest one will be displayed again. Max. 30 jams from the latest are stored. When the [Interrupt] key is pressed, the machine goes into the sub code input standby mode. When the [CA] key is pressed, the simulation is terminated.</td></tr>
<tr><td></td><td>04</td><td>Jam total counter display</td><td>The jam total counter value is displayed.</td></tr>
<tr><td></td><td>05</td><td>Total counter display</td><td>The total counter value is displayed.</td></tr>
<tr><td></td><td>06</td><td>Developing counter display</td><td>The developing counter data is acquired and displayed on the 7-seg display.
When the [Interrupt] key is pressed, the machine goes into the sub code input standby mode.
When the [CA] key is pressed, the simulation is terminated.</td></tr>
</table>

<table>
<tr><th>Main code</th><th>Sub code</th><th>Contents</th><th>Details of operation</th></tr>
<tr><td rowspan="22">22</td><td>07</td><td>Mini maintenance preset display (Valid only when the destination is set to Japan AB series)</td><td>The mini maintenance cycle data is acquired and displayed on the 7-seg display.
When the [Interrupt] key is pressed, the machine goes into the sub code input standby mode.
When the [CA] key is pressed, the simulation is terminated.</td></tr>
<tr><td>08</td><td>SPF counter display</td><td>The SPF counter value is displayed.</td></tr>
<tr><td>09</td><td>Paper feed counter display</td><td>The counter value of the selected paper feed section is acquired from each variable, the data is displayed on the 7-seg display according to the regulations. When this simulation is executed, the value of the first cassette is displayed first. Press the tray select key to select the paper feed tray.
When the [Interrupt] key is pressed, the machine goes into the sub code input standby mode.
When the [CA] key is pressed, the simulation is terminated.</td></tr>
<tr><td>12</td><td>Drum counter display</td><td>The drum counter and the drum rotating time are displayed.
To change the display mode, press the [Mode select] key.<table><tr><td>Display lamp</td><td>Display mode</td></tr><tr><td>AE mode lamp</td><td>Drum counter</td></tr><tr><td>TEXT mode lamp</td><td>Drum rotating time</td></tr></table></td></tr>
<tr><td>13</td><td>CRUM destination display</td><td>When this simulation is executed, the CRUM destination set (written) in the CRUM chip is displayed.
This simulation is valid only for the models where the CRUM is valid.<table><tr><th>7-seg display</th><th>Meaning (CRUM destination)</th><th>7-seg display</th><th>Meaning (CRUM destination)</th></tr><tr><td>00</td><td>Not set yet</td><td>04</td><td>BTA-E</td></tr><tr><td>01</td><td>BTA-A</td><td>99</td><td>Conversion</td></tr><tr><td>02</td><td>BTA-B</td><td>12</td><td>AL series</td></tr><tr><td>03</td><td>BTA-C</td><td></td><td></td></tr></table></td></tr>
<tr><td>14</td><td>P-ROM version display</td><td>The P-ROM version is displayed on the copy quantity display. The main code and the sub code are alternatively displayed by 2 digits. The display interval is same as that of the counter display.
By pressing the fixed magnification ratio key, each version display is switched.<table><tr><th>Display lamp (AB series)</th><th>Display lamp (Inch series)</th><th>Displayed version</th></tr><tr><td>141%</td><td>141%</td><td>Machine program</td></tr><tr><td>115%</td><td>121%</td><td>IMC program</td></tr></table></td></tr>
<tr><td>15</td><td>Trouble memory display</td><td>The trouble codes up to the latest one are acquired from the trouble memory data.
Every time when the magnification ratio display is pressed, the main code of the trouble is displayed on the 1st ~ 2nd digit.
* The latest 20 troubles are stored in the memory.
The 3rd digit indicates the trouble history code, "A" ~ "J" (meaning of 1 ~ 10).
After "J" is displayed, "A" ~ "J" blinks. (Meaning of 11 ~ 20)
After "J" blinks (meaning of 20), "A" ~ "J" is lighted. (Returns to 1.)
When the [START] key is pressed, the sub code is displayed.
When the [Interrupt] key is pressed, the machine goes into the sub code input standby mode.
When the [CA] key is pressed, the simulation is terminated.
* Note that when the history code blinks, the trouble code and the sub code do not blink.</td></tr>
<tr><td>16</td><td>Duplex print counter display</td><td>Data is acquired from the duplex print counter variable, and is displayed.
When the [Interrupt] key is pressed, the machine goes into the sub code input standby mode.
When the [CA] key is pressed, the simulation is terminated.</td></tr>
<tr><td>17</td><td>Copy counter display</td><td>The copy counter value is displayed. When the [Interrupt] key is pressed, the machine goes into the sub code input standby mode. When the [CA] key is pressed, the simulation is terminated.</td></tr>
<tr><td>18</td><td>Printer counter display</td><td>The printer counter value is displayed. When the [Interrupt] key is pressed, the machine goes into the sub code input standby mode. When the [CA] key is pressed, the simulation is terminated.</td></tr>
<tr><td>19</td><td>Scanner mode counter display</td><td>The scanner mode counter value is displayed. When the [Interrupt] key is pressed, the machine goes into the sub code input standby mode. When the [CA] key is pressed, the simulation is terminated.</td></tr>
<tr><td>21</td><td>Scanner counter display</td><td>The scanner counter value is displayed. When the [Interrupt] key is pressed, the machine goes into the sub code input standby mode. When the [CA] key is pressed, the simulation is terminated.</td></tr>
<tr><td>22</td><td>SPF jam counter display</td><td>The SPF jam counter value is displayed. When the [Interrupt] key is pressed, the machine goes into the sub code input standby mode. When the [CA] key is pressed, the simulation is terminated.</td></tr>
<tr><td rowspan="6">24</td><td>01</td><td>Jam total counter clear</td><td>When the [START] key is pressed, the jam total count value is reset to zero, and zero is displayed.</td></tr>
<tr><td>02</td><td>Trouble memory clear</td><td>The trouble memory and the EEPROM trouble history data are cleared and "000" is displayed on the 7-seg display. When the [Interrupt] key is pressed, the machine goes into the sub code input standby mode. When the [CA] key is pressed, the simulation is terminated.</td></tr>
<tr><td>04</td><td>SPF counter clear</td><td>When the [START] key is pressed, the SPF count value is reset to zero and displayed on the 7-seg display. When the [Interrupt] key is pressed, the machine goes into the sub code input standby mode.
When the [CA] key is pressed, the simulation is terminated.</td></tr>
<tr><td>05</td><td>Duplex print counter clear</td><td>The duplex print count data is cleared, and zero is displayed on the 7-seg display.
When the [Interrupt] key is pressed, the machine goes into the sub code input standby mode.
When the [CA] key is pressed, the simulation is terminated.</td></tr>
<tr><td>06</td><td>Paper feed counter clear</td><td>The paper feed counter data of each paper feed section is cleared, and "000" is displayed on the 7-seg display. When the [Interrupt] key is pressed, the machine goes into the sub code input standby mode. When the [CA] key is pressed, the simulation is terminated.</td></tr>
</table>

<table>
<tr><th>Main code</th><th>Sub code</th><th>Contents</th><th>Details of operation</th></tr>
<tr><td>24</td><td>07</td><td>Drum counter clear</td><td>When the [START] key is pressed, the drum count and the drum roasting time are reset to zero, and the drum counter value is displayed on the 7-seg LED. When the [Interrupt] key is pressed, the machine goes into the sub code input standby mode. When the [CA] key is pressed, the simulation is terminated.</td></tr>
<tr><td></td><td>08</td><td>Copy counter clear</td><td>When the [START] key is pressed, the copy count value is reset to zero and displayed on the 7-seg display. When the [Interrupt] key is pressed, the machine goes into the sub code input standby mode. When the [CA] key is pressed, the simulation is terminated.</td></tr>
<tr><td></td><td>09</td><td>Printer counter clear</td><td>When the [START] key is pressed, the printer count value is reset to zero and displayed on the 7-seg display. When the [Interrupt] key is pressed, the machine goes into the sub code input standby mode. When the [CA] key is pressed, the simulation is terminated.</td></tr>
<tr><td></td><td>13</td><td>Scanner counter clear</td><td>When the [START] key is pressed, the scanner count value is reset to zero and displayed on the 7-seg display. When the [Interrupt] key is pressed, the machine goes into the sub code input standby mode. When the [CA] key is pressed, the simulation is terminated.</td></tr>
<tr><td></td><td>14</td><td>SPF jam total counter clear</td><td>When the [START] key is pressed, the SPF jam total count value is reset to zero and displayed on the 7-seg display. When the [Interrupt] key is pressed, the machine goes into the sub code input standby mode. When the [CA] key is pressed, the simulation is terminated.</td></tr>
<tr><td></td><td>15</td><td>Scanner mode counter clear</td><td>When the [START] key is pressed, the scanner mode count value is reset to zero and displayed on the 7-seg display. When the [Interrupt] key is pressed, the machine goes into the sub code input standby mode. When the [CA] key is pressed, the simulation is terminated.</td></tr>
<tr><td>25</td><td>01</td><td>Main motor operation check (Cooling fan motor rotation check)</td><td>When the [START] key is pressed, the main motor (together with the duplex motor for the duplex model) is driven for 30 sec. At that time, to save toner consumption, if the developing until is installed, the developing bias, the main charger, and the grid are outputted. Since, in that case, laser discharge is required when the motor stops, the polygon motor is driven simultaneously. Check if the developing unit is installed or not. If it is not installed, the above high voltage is not outputted and only the motor is rotated. After completion of 30 sec operation, the machine goes into the sub code input standby mode.
* This simulation must not be executed by forcibly turning on the door open/close switch.</td></tr>
<tr><td></td><td>10</td><td>Polygon motor operation check</td><td>When the [START] key is pressed, the polygon motor is rotated for 30 sec. After completion of 30 sec operation, the machine goes into the sub code input standby mode.</td></tr>
<tr><td>26</td><td>02</td><td>Size setting</td><td>Used to set Enable/Disable of the FC (8.5" x 13") size detection.
<table>
<tr><th>Code number</th><th colspan="2">Setting</th></tr>
<tr><td>0</td><td>FC detection Disable</td><td>* Default except for the following</td></tr>
<tr><td>1</td><td>FC detection Enable</td><td>* Default only for SCA/Philippines</td></tr>
</table>
Detection size when a document of the FC ((8.5" x 13") size is used
<table>
<tr><th rowspan="2"></th><th rowspan="2">Unit to be used</th><th rowspan="2">Destination</th><th rowspan="2">Document size</th><th colspan="2">Setting</th></tr>
<tr><th>0 (Disable)</th><th>1 (Enable)</th></tr>
<tr><td rowspan="4">Document</td><td rowspan="4">SPF</td><td rowspan="2">EX Japan AB series (FC)</td><td>FC (8.5" x 13")</td><td>B4</td><td>FC (8.5" x 13")</td></tr>
<tr><td>B4</td><td>B4</td><td>FC (8.5" x 13")</td></tr>
<tr><td rowspan="2">Inch series (FC)</td><td>FC (8.5" x 13")</td><td>LG (8.5" x 14")</td><td>FC (8.5" x 13")</td></tr>
<tr><td>LG (8.5" x 14")</td><td>LG (8.5" x 14")</td><td>FC (8.5" x 13")</td></tr>
</table>
•For the other destinations, this setting is disabled.</td></tr>
<tr><td></td><td>03</td><td>Auditor setting</td><td>Used to set the auditor.
<table>
<tr><th>Code number</th><th>Mode</th></tr>
<tr><td>0</td><td>Built-in auditor mode</td></tr>
<tr><td>1</td><td>Coin vendor mode</td></tr>
<tr><td>2</td><td>Other</td></tr>
</table>
* When the coin vendor mode is selected, if the auditor setup is ON and the standard tray is manual feed tray, the standard tray setup must be changed to the main cassette.</td></tr>
<tr><td></td><td>04</td><td>Copier duplex setting</td><td>When this simulation is executed, the current set duplex code number is displayed. Enter the desired code number of duplex setting and press the [START] key, and the entered code number is set.
<table>
<tr><th>Code number</th><th>Mode</th></tr>
<tr><td>0</td><td>Without duplex</td></tr>
<tr><td>1</td><td>With duplex</td></tr>
</table>
* When this simulation is executed, the binding margin setup is automatically set to the default (left side).</td></tr>
</table>

<table>
<tr><th>Main code</th><th>Sub code</th><th>Contents</th><th>Details of operation</th></tr>
<tr><td>26</td><td>05</td><td>Count mode setting</td><td>When any key input is made, it is displayed on the display section. When the [START] key is pressed, the set code data are acquired and stored to the count mode set variable and in the EEPROM, and the machine goes into the sub code input standby mode. However, if the [START] key is pressed outside the set range, it is not assured. At that time, when the [Interrupt] key is pressed, the data are not rewritten and the machine goes into the sub code input standby mode. When the [CA] key is pressed, the simulation is terminated without rewriting the data.
[*1 : Total counter / Developer counter *2 : maintenance counter]
0: *1= Double count *2= Double count
1: *1= Single count *2 = Double count
2: *1= Double count *2= Single count
3: *1= Single count *2= Single count</td></tr>
<tr><td></td><td>06</td><td>Destination setting</td><td>When this simulation is executed, the current set destination code number is displayed. Enter the desired code number of the destination and press the [START] key to set the destination.
Code number | Destination
0 Japan AB series
1 Inch series
2 EX Japan AB series
3 EX Japan inch series
4 EX Japan AB series (FC)
5 China (EX Japan AB series + China paper support)
6 Taiwan (EX Japan AB series + China paper support)
If this setting is changed, SIM46-19 setting is also changed accordingly.
(The paper size is also changed: AB series is changed to A4, and Inch series to Letter.
The AE limit setup is set to the default.
When the destination is changed (from Japan to EX Japan or from EX Japan to Japan),
the maintenance cycle is also set to the default accordingly.)</td></tr>
<tr><td></td><td>07</td><td>Machine condition check (CPM)</td><td>When this simulation is executed, the current setting of the machine is displayed.
7-seg display | Meaning (CPM information)
15 15CPM
16 16CPM
20 20CPM</td></tr>
<tr><td></td><td>18</td><td>Toner save mode setting</td><td>Used to set ON/OFF of the toner save mode.
Code number | Setting
0 Toner save OFF
1 Toner save ON
* The toner save mode of the user program is also changed accordingly.</td></tr>
<tr><td></td><td>30</td><td>CE mark conformity control ON/ OFF</td><td>When this simulation is executed, the current set code number of CE mark conformity is displayed. Enter the desired code number of CE mark conformity and press the [START] key to set the code number.
Code number | Setting
0 CE mark conformity control OFF *Default for 100V system
1 CE mark conformity control ON</td></tr>
<tr><td></td><td>31</td><td>Auditor mode exclusive setup</td><td>Used to set whether the manual fed tray can be used or not when the auditor mode is set to the coin vendor mode.
Code number | Setting
0 Exclusive setup OFF (Manual paper feed allowed)
1 Exclusive setup ON (Manual paper fed inhibited)
* When this is set to "Exclusive setup ON," if the auditor is set to the coin vendor mode and the standard tray is set to the manual feed tray, the standard tray must be set to the main cassette.</td></tr>
<tr><td></td><td>36</td><td>Cancel of stop at maintenance life over</td><td>Used to set stop at maintenance life over.
Code number | Setting
0 Stop at maintenance life over
1 Cancel of stop at maintenance life over * Default</td></tr>
<tr><td></td><td>37</td><td>Cancel of stop at developer life over</td><td>When this simulation is executed, the current set code number is displayed. Enter the desired code number and press the [START] key to set the code number. The machine goes into the sub code input state.
Code number | Setting
0 Stop at developer life over
1 Cancel of stop at developer life over</td></tr>
</table>

<table>
<tr><th>Main code</th><th>Sub code</th><th>Contents</th><th>Details of operation</th></tr>
<tr><td>26</td><td>38</td><td>Cancel of stop at drum life over</td><td>When this simulation is executed, the current set code number is displayed. Enter the desired code number and press the [START] key to set the code number.
<table>
<tr><th>Code number</th><th>Setting</th></tr>
<tr><td>0</td><td>Stop at drum life over</td></tr>
<tr><td>1</td><td>Cancel of stop at drum life over</td></tr>
</table></td></tr>
<tr><td></td><td>39</td><td>Memory capacity check</td><td>When this simulation is executed, the current memory capacity is displayed.
<table>
<tr><th>7-seg display</th><th>Meaning (Memory capacity)</th></tr>
<tr><td>16</td><td>16MByte</td></tr>
<tr><td>32</td><td>32MByte</td></tr>
</table></td></tr>
<tr><td></td><td>42</td><td>Transfer ON/OFF timing control setting</td><td>When this simulation is executed, the current setting value of transfer ON timing is displayed.
Enter a set value and press the [START] key to set the entered value, and the machine will go into the sub code input standby mode.
When the [Mode select] key is pressed, the ON timing setting and the OFF timing setting are alternatively selected. At that time, the setting is saved and written into the EEPROM.
<table>
<tr><th>Display lamp</th><th>Setting mode</th><th>Default</th></tr>
<tr><td>AE mode lamp</td><td>Transfer ON timing</td><td>50</td></tr>
<tr><td>TEXT mode lamp</td><td>Transfer OFF timing</td><td>50</td></tr>
</table>
•Setting range: 1 ~ 99
When the setting value is increased by 1, time is increased by 2ms.
•The default, 50, of transfer ON timing means "344ms passed from PS release."
The default, 50, of transfer OFF timing means "304ms passed from P-IN OFF."</td></tr>
<tr><td></td><td>43</td><td>Side void amount setting</td><td>Used to set the side void amount on the both sides.
Enter a set value with the 10-key and press the [START] key, and the entered value will be saved and the machine will go into the sub code input standby mode.
The setting range is 0 ~ 10. When the set value is increased by 1, the void amount is increased by 0.5mm. The default is 3 (= 1.5mm).
To select the setting mode, press the [Exposure mode select] key. The set value of the selected mode is displayed on the copy quantity display. At that time, the set value is also saved.
<table>
<tr><th>Display lamp</th><th>Setting mode</th></tr>
<tr><td>AE mode lamp</td><td>Side void amount (Right)</td></tr>
<tr><td>TEXT mode lamp</td><td>Side void amount (Left)</td></tr>
</table>
* When the setting value is increased by 1, time is increased by 0.5ms.</td></tr>
<tr><td></td><td>51</td><td>Copy temporary stop function setting</td><td>When any key is pressed, it is displayed on the display section. When the [START] key is pressed, the set code data is acquired and stored to the setting variable of sort/group copy temporary stop function and to the EEPROM. The machine goes into the sub code input standby mode.
<table>
<tr><th>Code number</th><th>Setting</th></tr>
<tr><td>0</td><td>Not stop</td></tr>
<tr><td>1</td><td>Stop * Default</td></tr>
</table>
When the [Interrupt] key is pressed at that time, the machine goes into the sub code input standby mode without rewriting the data. When the [CA] key is pressed, the simulation mode is terminated without rewriting the data.
* When this is set to "Stop," temporary stop is made for every 250 copies in one copy job.</td></tr>
<tr><td>30</td><td>01</td><td>Paper sensor status display</td><td>The paper sensor status is displayed with the lamps on the operation panel.
* When each sensor detects paper, the corresponding lamp turns on.
<table>
<tr><th>Display lamp</th><th>Sensor name</th></tr>
<tr><td>Developer lamp</td><td>Paper exit sensor</td></tr>
<tr><td>Machine jam lamp</td><td>Duplex sensor</td></tr>
<tr><td>Toner lamp</td><td>Paper entry sensor</td></tr>
<tr><td>Manual paper feed lamp</td><td>Manual feed paper empty sensor</td></tr>
<tr><td>No. 1 cassette lamp</td><td>No. 1 tray paper empty sensor</td></tr>
<tr><td>No. 2 cassette lamp</td><td>No. 2 tray paper empty sensor</td></tr>
<tr><td>No. 3 cassette lamp</td><td>No. 3 tray paper empty sensor</td></tr>
<tr><td>No. 4 cassette lamp</td><td>No. 4 tray paper empty sensor</td></tr>
<tr><td>Tray jam lamp 1</td><td>No. 2 tray paper feed sensor</td></tr>
<tr><td>Tray jam lamp 2</td><td>No. 3 tray paper feed sensor</td></tr>
<tr><td>Paper empty lamp</td><td>No. 4 tray paper feed sensor</td></tr>
</table></td></tr>
<tr><td>42</td><td>01</td><td>Developing counter clear</td><td>The developer counter data in the EEPROM is cleared and 0 is displayed on the 7-seg display.
When the [Interrupt] key is pressed at that time, the machine goes into the sub code input standby mode. When the [CA] key is pressed, the simulation mode is terminated.</td></tr>
</table>

<table>
<tr><th>Main code</th><th>Sub code</th><th>Contents</th><th>Details of operation</th></tr>
<tr><td>43</td><td>01</td><td>Fusing temperature setting (During normal copy)</td><td>When the simulation is terminated, the current set value is displayed. When the [%] key is pressed, the setting is changed. When the [START] key is pressed, the set content is written into the EEPROM and the machine goes into the sub code input standby mode.
<table>
<tr><th>Set temperature (°C)</th><th>Set temperature (°C)</th></tr>
<tr><td>160
165
170 * Default
175
180</td><td>185
190
195
200</td></tr>
</table></td></tr>
<tr><td></td><td>10</td><td>Postcard paper feed cycle setting</td><td>Used to set the paper feed cycle timing in postcard printing. (Pickup interval)[1] ~ [99]
(Center [50], Unit: 100msec)(Example: When 50, pickup interval = 100msec x 50)</td></tr>
<tr><td></td><td>11</td><td>Postcard size paper fusing temperature setting</td><td>When this simulation is executed, the current set value is displayed. When the [%] key is pressed, the setting is changed. When the [START] key is pressed, the set content is written into the EEPROM and the machine goes into the sub code input standby mode.
<table>
<tr><th>Set temperature (°C)</th><th>Set temperature (°C)</th></tr>
<tr><td>160
165
170
175
180</td><td>185
190
195 * Default
200</td></tr>
</table></td></tr>
<tr><td></td><td>12</td><td>Standby mode fusing fan rotation setting</td><td>When this simulation is executed, the current set code number is displayed. Enter the desired code number and press the [START] key to set the code number.
<table>
<tr><th>Code number</th><th>Setting</th></tr>
<tr><td>0
1</td><td>Low speed rotation *Default
High speed rotation</td></tr>
</table></td></tr>
<tr><td></td><td>13</td><td>Fusing paper interval control allow/ inhibit setting</td><td>Used to set the paper feed timing of 21st and later page to A3 or WLT when multi copying or printing paper of narrow width. (A3 or WLT depends on the destination.)
When this simulation is executed, the currently set code number is displayed. Enter a desired code number and press the [START] key, and the entered code number is written into the EEPROM and the machine goes into the sub code entry standby mode.
<table>
<tr><th>Code number</th><th>Setting</th></tr>
<tr><td>0
1</td><td>Inhibit * Default
Allow</td></tr>
</table>
<Applicable paper>
1) Cassette paper feed: A4R, B5R, 8-1/2" X 14", 8-1/2" X 13", 8-1/2" X 11", A5, INV
2) Manual paper feed: A4R, B5R, 8-1/2" X 14", 8-1/2" X 13", 8-1/2" X 11", A5, INV,16KR
* A5 size for manual paper feed is valid only for EX Japan AB series.</td></tr>
<tr><td>44</td><td>34</td><td>Transfer current setting</td><td>Used to set the transfer current for the front surface and that for the back surface. When this simulation is executed, the current set value is displayed on the 7-seg display. Select the set value with the zoom (Up/Down) keys and press the [START] key, and the set content is written into the EEPROM and the machine goes into the sub code input standby mode. Press the [Mode select] key to select each setting mode. At that time, the setup content is written into the EEPROM.
The set range is 90uA ~ 360uA in the increment of 10uA.
<table>
<tr><th>Display lamp</th><th>Setting mode</th></tr>
<tr><td>AE mode lamp
TEXT mode lamp
AE mode lamp & PHOTO mode lamp
TEXT mode lamp & PHOTO mode lamp
AE & TEXT & PHOTO mode lamps</td><td>Normal size width: Front
Normal size width: Back
Small size width: Front
Small size width: Back
Manual paper feed</td></tr>
</table>
* Small size paper must be Letter R (A4R) or smaller.
* For the special size of tray, use the normal size width.</td></tr>
<tr><td></td><td>40</td><td>Setting of rotation time before toner supply</td><td>Used to set the time interval between start of rotation (ready) of the main motor and start of toner supply in previous rotation after supplying the power. [1] ~ [99] (Default [8], unit: sec)</td></tr>
</table>

<table>
<tr><th>Main code</th><th>Sub code</th><th>Contents</th><th>Details of operation</th></tr>
<tr><td>46</td><td>01</td><td>Copy density adjustment (300dpi)</td><td>Used to set the copy density for each mode.
(Operating procedure)
When this simulation is executed, warm-up and shading are operated, and the current set value is displayed in two digits. (Default [50])
* The density LED is not lighted.
Change the set value and press the [START] key, and a copy is made according to the set value. The greater the set value is, the darker the density is, and vise versa. In this case, only a copy at Exp. 3 can be made. When, however, the density is set darker, Exp.1 and Exp. 5 become darker, too. If the dentistry is set lighter, Exp. 1 and Exp. 5 become lighter, too. To select a desired copy mode, press the [Copy mode select] key. The selected copy mode set value is displayed on the copy quantity display. (Adjustment range: 1 ~ 99)
<table>
<tr><th>Display lamp</th><th>Copy mode</th></tr>
<tr><td>AE mode lamp</td><td>AE mode (300dpi)</td></tr>
<tr><td>TEXT mode lamp</td><td>TEXT mode (300dpi)</td></tr>
<tr><td>PHOTO mode lamp</td><td>PHOTO mode</td></tr>
<tr><td>TEXT mode lamp & PHOTO mode lamp</td><td>TS mode (TEXT) (300dpi)</td></tr>
<tr><td>AE mode lamp & PHOTO mode lamp</td><td>TS mode (AE) (300dpi)</td></tr>
</table></td></tr>
<tr><td></td><td>02</td><td>Copy density adjustment (600dpi)</td><td>Used to set the copy density for each mode.
(Operating procedure)
When this simulation is executed, warm-up and shading are operated, and the current set value is displayed in two digits. (Default [50])Change the set value and press the [START] key, and a copy is made according to the set value. The greater the set value is, the darker the density is, and vise versa. In this case, only a copy at Exp. 3 can be made.
When, however, the density is set darker, Exp.1 and Exp. 5 become darker, too.
If the dentistry is set lighter, Exp. 1 and Exp. 5 become lighter, too.
To select a desired copy mode, press the [Copy mode select] key.
The selected copy mode set value is displayed on the copy quantity display.
(Adjustment range: 1 ~ 99)
<table>
<tr><th>Display lamp</th><th>Copy mode</th></tr>
<tr><td>AE mode lamp</td><td>AE mode (600dpi)</td></tr>
<tr><td>TEXT mode lamp</td><td>TEXT mode (600dpi)</td></tr>
<tr><td>PHOTO mode lamp</td><td>PHOTO mode</td></tr>
<tr><td>TEXT mode lamp & PHOTO mode lamp</td><td>TS mode (TEXT) (600dpi)</td></tr>
<tr><td>AE mode lamp & PHOTO mode lamp</td><td>TS mode (AE) (600dpi)</td></tr>
</table></td></tr>
<tr><td></td><td>09</td><td>Copy exposure level adjustment, individual setting (Text) 300dpi</td><td>Used to adjust the shift amount and the inclination value for each density level (1 ~ 5) when the exposure mode is the TEXT mode (including TS)
•The shift amount is the same as the gamma (gradation), and is used to set the overall brightness.
When the shift amount is increased, the overall brightness is decreased.
When the shift amount is decreased, the overall brightness is increased
•The inclination value changes the gamma (gradation).
When the set value is increased, the gamma is increased to increase the contrast.
(Clearer black and white images)
When the set value is decreased, the gamma is decreased to decrease the contrast.
(Increased gradation)
* Press the [%] key to switch between the shift amount and the inclination value.
The 7-seg display shows the mode.
The initial display is "Shift.
Shift is indicated as "b" (Brightness).
Inclination is indicated as "c" (Contrast).
(Example)
[b50] → [%T] key → [c50] → [%] key → [b50] → [%] key → [c50] → •••
* Select the adjustment level with the [Density adjust] key.
The density LED displays the selected level (Exp. 1 ~ Exp. 5)
* Select TEXT or TEXT (TS) with the [Mode select] key.
<table>
<tr><th>Mode lamp</th><th>Exposure mode to be adjusted</th></tr>
<tr><td>TEXT mode lamp</td><td>TEXT mode</td></tr>
<tr><td>TEXT mode lamp & PHOT mode lamp</td><td>TEXT (TS) mode</td></tr>
</table>
* Change the shift amount and the inclination value with the 10-key.
The set range is [1] ~ [99]. The default is [50].
Change the set value and press the [START] key, and a copy is made at the set value.</td></tr>
</table>

<table>
<tr><th>Main code</th><th>Sub code</th><th>Contents</th><th>Details of operation</th></tr>
<tr><td>46</td><td>10</td><td>Copy exposure level adjustment, individual setting (Text) 600dpi</td><td>Used to adjust the shift amount and the inclination value for each density level (1 ~ 5) when the exposure mode is the TEXT mode (including TS)
•The shift amount is the same as the gamma (gradation), and is used to set the overall brightness.
When the shift amount is increased, the overall brightness is decreased.
When the shift amount is decreased, the overall brightness is increased
•The inclination value changes the gamma (gradation).
When the set value is increased, the gamma is increased to increase the contrast.
(Clearer black and white images)
When the set value is decreased, the gamma is decreased to decrease the contrast.
(Increased gradation)
* Press the [%] key to switch between the shift amount and the inclination value.
The 7-seg display shows the mode.
The initial display is "Shift.
Shift is indicated as "b" (Brightness).
Inclination is indicated as "c" (Contrast).
(Example)
[b50] → [%T] key → [c50] → [%] key → [b50] → [%] key → [c50] → •••
* Select the adjustment level with the [Density adjust] key.
The density LED displays the selected level (Exp. 1 ~ Exp. 5)
* Select TEXT or TEXT (TS) with the [Mode select] key.
<table><tr><th>Mode lamp</th><th>Exposure mode to be adjusted</th></tr><tr><td>TEXT mode lamp</td><td>TEXT mode</td></tr><tr><td>TEXT mode lamp & PHOT mode lamp</td><td>TEXT (TS) mode</td></tr></table>* Change the shift amount and the inclination value with the 10-key.
The set range is [1] ~ [99]. The default is [50].
Change the set value and press the [START] key, and a copy is made at the set value.</td></tr>
<tr><td></td><td>11</td><td>Copy exposure level adjustment, individual setting (Photo) 600dpi</td><td>Used to adjust the shift amount and the inclination value for each density level (1 ~ 5) when the exposure mode is the PHOTO mode
•The shift amount is the same as the gamma (gradation), and is used to set the overall brightness.
When the shift amount is increased, the overall brightness is decreased.
When the shift amount is decreased, the overall brightness is increased
•The inclination value changes the gamma (gradation).
When the set value is increased, the gamma is increased to increase the contrast.
(Clearer black and white images)
When the set value is decreased, the gamma is decreased to decrease the contrast.
(Increased gradation)
* Press the [%] key to switch between the shift amount and the inclination value.
The 7-seg display shows the mode.
The initial display is "Shift."
Shift is indicated as "b" (Brightness).
Inclination is indicated as "c" (Contrast).
(Example)
[b50] → [%T] key → [c50] → [%] key → [b50] → [%] key → [c50] → •••
* Select the adjustment level with the [Density adjust] key.
The density LED displays the selected level (Exp. 1 ~ Exp. 5)
* The [Mode select] key is invalid, and the PHOTO lamp lights up.
* Change the shift amount and the inclination value with the 10-key.
The set range is [1] ~ [99]. The default is [50].
Change the set value and press the [START] key, and a copy is made at the set value.</td></tr>
</table>

<table>
<tr><th>Main code</th><th>Sub code</th><th>Contents</th><th>Details of operation</th></tr>
<tr><td>46</td><td>18</td><td>Image contrast adjustment (300dpi)</td><td>Used to adjust the contrast for each mode.
(Operating procedure)
When this simulation is executed, warm-up and shading are performed, and the current set value is displayed in two digits. (Default: 50)
* The density LED is not lighted.
Change the set value and press the [START] key, and a copy is made according to the set value.
The greater the set value is, the higher the contrast is.
The smaller the set value is, the lower the contrast is.
In this case, only a copy at Exp. 3 is made.
However, the contrasts at Exp.1 and Exp. 5 are also changed accordingly.
To select a desired copy mode, press the [Copy mode select] key.
The selected copy mode set value is displayed on the copy quantity display.
(Adjustment range: 1 ~ 99)
<table>
<tr><th>Display lamp</th><th>Copy mode</th></tr>
<tr><td>AE mode lamp</td><td>AE mode (300dpi)</td></tr>
<tr><td>TEXT mode lamp</td><td>TEXT mode (300dpi)</td></tr>
<tr><td>PHOTO mode lamp</td><td>PHOTO mode</td></tr>
<tr><td>TEXT mode lamp & PHOTO mode lamp</td><td>TS mode (TEXT) (300dpi)</td></tr>
<tr><td>AE mode lamp & PHOTO mode lamp</td><td>TS mode (AE) (300dpi)</td></tr>
</table>
</td></tr>
<tr><td></td><td>19</td><td>Exposure mode setting (Gamma table setting / AE operation mode setting / PHOTO image process setting)</td><td>Used set for the following three exposure mode. Enter a code number and press the [START] key, and the entered number is written into the EEPROM and the machine goes into the sub code entry standby mode. (When the [Copy mode select] key is pressed, the number is written into the EEPROM and the set item is changed.)
<<Gamma table setting>>
When this simulation is executed, the current set code number of gamma table is displayed.
(Default: Japan -1. EX Japan -2)
* When setting the gamma table, no "Mode lamps" are lighted.
<table>
<tr><th>Code number</th><th>Setting (Gamma table)</th></tr>
<tr><td>1</td><td>Image quality priority mode * Default for Japan models</td></tr>
<tr><td>2</td><td>Toner consumption priority mode * Default for EX Japan models</td></tr>
</table>
* If this setting is changed, the set content of SIM46-30 is reset to the default.
<<AE mode>>
When the [Copy mode select] key is pressed in gamma table setting, the mode is changed to the AE operation mode setting and the current set code number of the AE operation mode is displayed.
(Default: 0)
* When setting the AE operation mode, the "AE mode lamp" is lighted.
<table>
<tr><th>Code number</th><th>Setting (AE operation mode)</th></tr>
<tr><td>0</td><td>Lead edge stop * Default</td></tr>
<tr><td>1</td><td>Rear time process</td></tr>
</table>
<Photo image process setting>
When the [Copy mode select] key is pressed during the AE operation mode setting, the setting mode is changed to the photo image process setting and the currently set code number of the photo image process setting is displayed.
* When in the photo image process setting, the [Photo mode lamp] is lighted.
<table>
<tr><th>Code number</th><th>Setting (Photo image process setting)</th></tr>
<tr><td>1</td><td>Error diffusion process</td></tr>
<tr><td>2</td><td>Dither process * Default</td></tr>
</table>
* When this setting is changed, SIM 46-1/2/18/29 and SIM 46-31 Photo items are reset to the default. (SIM 46-11 is also linked.)</td></tr>
</table>

<table>
<tr><th>Main code</th><th>Sub code</th><th>Contents</th><th>Details of operation</th></tr>
<tr><td>46</td><td>20</td><td>SPF exposure correction</td><td>Used to adjust the exposure correction amount in the SPF mode (for the OC mode).
(Operating procedure)
When this simulation is executed, the current set value is displayed.
Enter the adjustment value with the 10-key and press the [START] key.
The entered set value is stored and a copy is made.
When the [INTERRUPT] key is pressed, the entered value is saved and the machine goes into the sub code entry standby mode. When the [CA] key is pressed, the entered value is saved and the simulation is terminated. [1] ~ [99] (Center [50])
* The greater the set value is, the darker the density is. The smaller the set value is, the lighter the density is.
* The exposure mode is TEXT fixed. The LED does not change, either. The exposure level can not be adjusted.</td></tr>
<tr><td></td><td>29</td><td>Image contrast adjustment (600dpi)</td><td>Used to adjust the contrast for each mode.
(Operating procedure)
When this simulation is executed, warm-up and shading are performed, and the current set value is displayed in two digits. (Default: 50)
The density LED is not lighted.
Change the set value and press the [START] key, and a copy is made according to the set value.
The greater the set value is, the higher the contrast is.
The smaller the set value is, the lower the contrast is.
In this case, only a copy at Exp. 3 is made.
However, the contrasts at Exp.1 and Exp. 5 are also changed accordingly.
To select a desired copy mode, press the [Copy mode select] key.
The selected copy mode set value is displayed on the copy quantity display.
(Adjustment range: 1 ~ 99)
<table>
<tr><th>Display lamp</th><th>Copy mode</th></tr>
<tr><td>AE mode lamp</td><td>AE mode (600dpi)</td></tr>
<tr><td>TEXT mode lamp</td><td>TEXT mode (600dpi)</td></tr>
<tr><td>PHOTO mode lamp</td><td>PHOTO mode</td></tr>
<tr><td>TEXT mode lamp & PHOTO mode lamp</td><td>TS mode (TEXT) (600dpi)</td></tr>
<tr><td>AE mode lamp & PHOTO mode lamp</td><td>TS mode (AE) (600dpi)</td></tr>
</table></td></tr>
<tr><td></td><td>30</td><td>AE limit setting</td><td>Used to set the AE and the limit value at AE (toner save).The set range is 0 ~ 31. The default is 0.
Change the setting and press the [START] key, and it will be written into the EEPROM and the machine will go into the sub code input standby mode. When the [Copy mode select] key is pressed, the machine goes back to the gamma table setting mode.
<table>
<tr><th>Display lamp</th><th>Setting mode</th></tr>
<tr><td>AE mode lamp</td><td>Limit value for AE</td></tr>
<tr><td>AE mode lamp $ PHOTO mode lamp</td><td>Limit value for AE (Toner save)</td></tr>
</table>
<Remark>
When SIM26-60 (Destination setting) and SIM46-19 (Auto exposure mode) are changed, this set content of this simulation is also changed to the default.</td></tr>
<tr><td></td><td>31</td><td>Image sharpness adjustment</td><td>Used to adjust clear/shading of image for each mode.
(Operating procedure)
When this simulation is executed, warm-up and shading are performed, and the current set value is displayed in two digits. (Default: 1)
Change the set value and press the [START] key, and a copy is made according to the set value.
<table>
<tr><th>Set value</th><th>Image quality</th></tr>
<tr><td>0</td><td>Shading</td></tr>
<tr><td>1</td><td>Standard *Default</td></tr>
<tr><td>2</td><td>Clear</td></tr>
</table>
Use the [Copy mode select] key to select each copy mode. The code number of the selected copy mode is displayed on the copy quantity display.
<table>
<tr><th>Display lamp</th><th>Copy mode</th></tr>
<tr><td>AE mode lamp</td><td>AE mode</td></tr>
<tr><td>TEXT mode lamp</td><td>TEXT mode</td></tr>
<tr><td>PHOTO mode lamp</td><td>PHOTO mode</td></tr>
<tr><td>TEXT mode lamp & PHOTO mode lamp</td><td>TS mode (TEXT)</td></tr>
<tr><td>AE mode lamp & PHOTO mode lamp</td><td>TS mode (AE)</td></tr>
</table></td></tr>
</table>

<table>
<tr><th>Main code</th><th>Sub code</th><th>Contents</th><th>Details of operation</th></tr>
<tr><td>48</td><td>01</td><td>Main scanning/sub scanning direction magnification ratio adjustment</td><td>Used to adjust the magnification ratio in the main scanning direction (front/rear) and the sub scanning direction.
Enter the adjustment value with the 10-key and press the [START] key, and the entered value is saved a copy is made.
(When the set value is increased by 1, the magnification ratio is increased by 0.1 %.)
(Adjustment range: 1 ~ 99, Default: 50)
<table><tr><th>Lighting lamp</th><th>Adjustment mode</th></tr><tr><td>TEXT lamp
PHOTO lamp</td><td>Main scanning direction magnification ratio adjustment
Sub scanning direction magnification ratio adjustment</td></tr></table></td></tr>
<tr><td></td><td>05</td><td>SPF/RSPF mode sub scanning magnification ratio adjustment in copying</td><td>The current SPF/RSPF mode sub scan direction magnification ratio adjustment value is displayed. When the [START] key is pressed, the entered value is acquired and saved into the EEPROM, and a copy is made. When the [CA] key is pressed instead, the simulation mode is terminated.
In RSPF adjustment, after the machine enters the copy mode of one page, select the single copy mode with the duplex key to shift to the single copy mode, making two pages of single copy.
For printing, regardless of the density mode LED and the density level LED display, the density mode = MANUAL, and density level = 3.
<table><tr><th>Lighting lamp</th><th>Adjustment mode</th></tr><tr><td>AE lamp
TEXT lamp</td><td>SPF/RSPF document surface magnification ratio adjustment
RSPF document back magnification ratio adjustment</td></tr></table></td></tr>
<tr><td>49</td><td>01</td><td>Flash ROM program writing mode</td><td>(Operating procedure)
When this simulation is executed, "d" is displayed on the copy quantity display and the machine enters the Flash ROM program writing mode. Use the writing tool on the PC to write the program. During writing, the display is made as follows. After completion of downloading, turn OFF/ON the power to reset.
<table><tr><th>Status</th><th>Copy quantity display</th><th>Pre-heat lamp</th><th>Ready lamp</th></tr><tr><td>Download data reception</td><td>"d"</td><td>ON</td><td>OFF</td></tr><tr><td>Data delete start</td><td>"d"</td><td>ON</td><td>ON</td></tr><tr><td>Data writing (Boot section)</td><td>"d"</td><td>Flash</td><td>OFF</td></tr><tr><td>Data writing (Program section)</td><td>"d"</td><td>Flash</td><td>Flash</td></tr><tr><td>Sum check</td><td>"d"</td><td>ON</td><td>ON</td></tr><tr><td>Completion of downloading</td><td>"OFF"</td><td>OFF</td><td>OFF</td></tr><tr><td>Error status</td><td>"*E"</td><td>OFF</td><td>OFF</td></tr></table>* "*" in the error display indicates the error position.
<table><tr><td>1. Data reception error
2. Loader function transfer
3. Flash ROM delete
4. Flash ROM writing (Boot section)</td><td>5. Flash ROM writing (Program section)
6. Sum check (Loader section)
7. Sum check (Boot section)
8. Sum check (Program section)</td></tr></table></td></tr>
</table>

<table>
<tr><th>Main code</th><th>Sub code</th><th>Contents</th><th>Details of operation</th></tr>
<tr><td>50</td><td>01</td><td>Image lead edge adjustment</td><td>
Used to adjust the copy image position and the lead edge void amount on the copy paper. This adjustment is made by adjusting the image scan start position at 100% and the print start position (resist roller ON timing).
(Operating procedure)
When this simulation is executed, the current set value is displayed in two digits. (Center value: 50) When the copy mode select key is pressed, the setting mode and the display are switched. Enter the adjustment value with the 10-key and press the [START] key, and the entered value is set and a copy is made. (Adjustment range 1 ~ 99) When the [INTERRUPT] key is pressed, the entered value is saved and the machine goes into the sub code entry standby mode. When the [CA] key is pressed, the entered value is saved and the simulation is terminated. When the adjustment is made with the main cassette paper feed, all the adjustment values at the paper feed ports become the same. (When the adjustment value is increased by 1, the position is shifted by about 0.1mm.)
<table>
<tr><th>Lighting lamp</th><th>Adjustment mode</th></tr>
<tr><td>AE, Main cassette lamp</td><td>Print start position (Main cassette paper feed)</td></tr>
<tr><td>AE, 2nd cassette lamp</td><td>★ Print start position (2nd cassette paper feed)</td></tr>
<tr><td>AE, Manual paper feed lamp</td><td>Print start position (Manual paper feed)</td></tr>
<tr><td>TEXT lamp</td><td>Image lead edge void amount</td></tr>
<tr><td>PHOTO lamp</td><td>Image scan start position</td></tr>
<tr><td>AE, TEXT, PHOTO lamp</td><td>Image rear edge void amount</td></tr>
</table>
* The mark, "★", indicates that it is supported only for the installed model, and it is skipped for non-installed models.
Note: When printing is made with manual paper feed, use A3 paper.
When the adjustment value of the print start position is increased by 1, the resist roller ON timing is delayed and the print image is reduced by 0.1mm. When the adjustment value of the image scan start position is increased by 1, the scan start position is shifted to the home position by 0.1mm.
[Adjustment procedure]
(1) Set the print start position (A) (AE ON), the lead edge void amount (B) (TEXT ON), and the scan start position (C) (PHOTO ON) to <1>, and make a 100% copy.
(2) Measure the image loss (R mm) of the scale. Set as C=10 x R (mm). (Example: Set to 40.)
When the value of C is increased by 10, the image loss is decreased by 1mm. (Default: 50)
(3) Measure the distance between the paper lead edge and the image print start position.
Set as A=10 x H (mm). (Example: Set to 50.)
When the value of A is increased by 10, the image lead edge is shifted toward the paper lead edge by 1mm. (Default: 50)
(4) Set the lead edge void area as B=50 (2.5mm). (Default: 50)
When the value of B is increased by 10, the void is increased by about 1mm.
(For 25 or less, however, the void amount is zero.)
(Example)
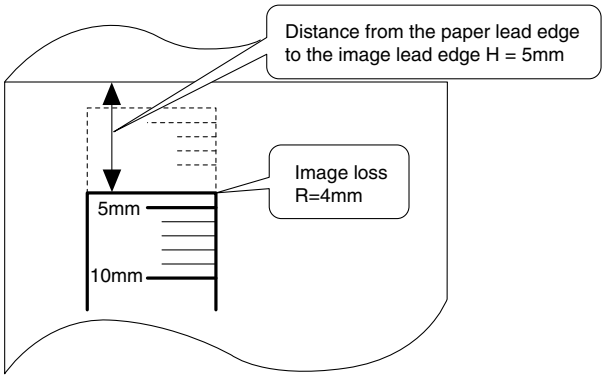

</td></tr>
<tr><td></td><td>06</td><td>Copy lead edge position adjustment (SPF/RSPF)</td><td>
Used to make the SPF copy lead edge position adjustment.
* When the adjustment value of the document scan start position is increased by 1, the scan start timing is advanced by 0.1mm. The print image is shifted to the reverse side of the scan start position.
(Adjustment range: 1 ~ 99, Default: 50)
<Adjustment items>
<table>
<tr><th>Lighting lamp</th><th>Item</th><th>Default</th><th>Variable range</th></tr>
<tr><td>AE</td><td>Front document scan position adjustment</td><td>50</td><td>1 ~ 99</td></tr>
<tr><td>TEXT</td><td>Back document scan position adjustment</td><td>50</td><td>1 ~ 99</td></tr>
<tr><td>PHOTO</td><td>Rear edge void adjustment (SPF)</td><td>50</td><td>1 ~ 99</td></tr>
</table>
</td></tr>
</table>

<table>
<tr><th>Main code</th><th>Sub code</th><th>Contents</th><th>Details of operation</th></tr>
<tr><td>50</td><td>10</td><td>Paper off-center adjustment</td><td>Used to adjust the positions of copy images on copy paper and the center offset position when scanning the document.
(Operating procedure)
When this simulation is executed, the current set value is displayed. Enter the adjustment value with the 10-key and press the [START] key, and the entered value is stored and a copy is made.
When the [INTERRUPT] key is pressed, the entered value is saved and the machine goes into the sub code entry standby mode. When the [CA] key is pressed, the entered value is saved and the simulation is terminated.
(When the set value is increased by 1, the position is shifted by 0.1mm.)
<Supplement>
When the adjustment value is increased, the image is shifted to the left. When the adjustment value is decreased, the image is shifted to the right.
<table><tr><th>Lighting lamp</th><th>Adjustment mode</th></tr><tr><td>AE, Main cassette lamps</td><td>Print center offset (Main cassette paper feed)</td></tr><tr><td>AE, 2nd cassette lamps</td><td>★ Print center offset (2nd cassette paper feed)</td></tr><tr><td>AE, 3rd cassette lamps</td><td>★ Print center offset (3rd cassette paper feed)</td></tr><tr><td>AE, 4th cassette lamps</td><td>★ Print center offset (4th cassette paper feed)</td></tr><tr><td>AE, Manual paper feed lamps</td><td>Print center offset (Manual paper feed)</td></tr><tr><td>TEXT, main cassette lamps</td><td>2nd print center offset (Main cassette paper feed)</td></tr></table>
★ Supported for the installed models only. Skipped for the models without installation.
Note: When the adjustment value is too great, the outside area of shading may be scanned, resulting in black streaks on copy paper.
When printing is made with manual paper feed, use A3 paper.</td></tr>
<tr><td></td><td>12</td><td>Document off-center adjustment</td><td>Used to make the document scan off-center adjustment.
(Adjustment range: 1 ~ 99, Default: 50)
* When the adjustment value is increased by 1, the print image is shifted by 0.1mm to the left when the scan start position is put on the upper side.
<Adjustment item>
<table><tr><th>Lighting lamp</th><th>Item</th><th>Default</th><th>Variable range</th></tr><tr><td>AE</td><td>Platen document scan</td><td>50</td><td>1 ~ 99</td></tr><tr><td>TEXT</td><td>SPF document front scan</td><td>50</td><td>1 ~ 99</td></tr><tr><td>PHOTO</td><td>RSPF document back scan</td><td>50</td><td>1 ~ 99</td></tr></table></td></tr>
<tr><td></td><td>18</td><td>Duplex copy memory reverse position adjustment</td><td>Used to adjust the memory reverse position in duplex copy. When this simulation is executed, the current correction value is displayed.
Enter a correction value with the 10-key and press the [START] key, and the entered value will be saved. (The correction value range is 1 ~ 99. The default is 50.)
<table><tr><th>Lighting lamp</th><th>Item</th></tr><tr><td>AE</td><td>OC memory reverse output position</td></tr><tr><td>TEXT</td><td>SPF memory reverse output position</td></tr></table>
Printing of the front surface in the S-D mode and printing of the even pages in the D-S mode are performed as reverse memory copying from the rear edge of the document.
When, therefore, the printing position adjustment of output image is required, perform the adjustment as follows:
The image direction in reverse memory copying is shown in the figure below. That is, when the document scan direction is as shown with the arrow, the output image is printed from the rear edge of scanning. If, therefore, the print edge section is shifted, set the reference chart with the reference position at the rear edge and use this simulation to change the set value in order to adjust the print lead edge position.
Since printing is started at the print start position and performed from the last, saved data in the memory to the head data, the lead edge position of an image is adjusted by changing the last data position saved in the memory.
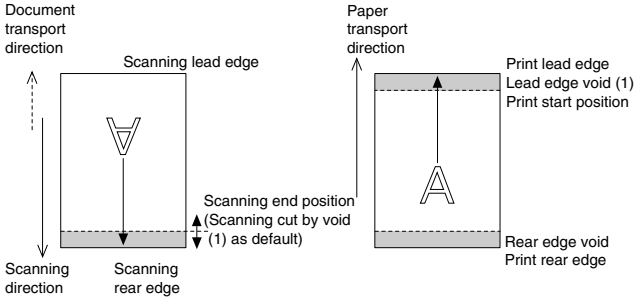
</td></tr>
</table>

<table>
<tr><th>Main code</th><th>Sub code</th><th>Contents</th><th>Details of operation</th></tr>
<tr><td>50</td><td>19</td><td>Duplex copy rear edge void adjustment</td><td>Used to adjust the rear edge void amount in duplex copy.
(Operating procedure)
When this simulation is executed, the current set value is displayed in two digits.
(Adjustment range: 1 ~ 99, Center value: 50)
* When the set value is increased by 1, the void amount is increased by about 0.1mm.
Press the copy mode select key to select a suitable setting mode and a display. Enter the adjustment value with the 10-key and press the [START] key, and the entered value is saved and a copy is made. (Paper information is cleared after every copying).
When the [INTERRUPT] key is pressed, the entered value is saved and the machine goes into the sub code entry standby mode. When the [CA] key is pressed, the entered value is saved and the simulation is terminated.
<table>
<tr><th>Lighting lamp</th><th>Item</th></tr>
<tr><td>AE lamp</td><td>Paper rear edge void amount (First print surface)</td></tr>
<tr><td>TEXT lamp</td><td>Paper rear edge void amount (Second print surface)</td></tr>
<tr><td>PHOTO lamp</td><td>Print start position (duplex back surface)</td></tr>
</table>
</td></tr>
<tr><td>51</td><td>02</td><td>Resist amount adjustment</td><td>Used to adjust the contact pressure of the machine resist roller and the RSPF resist roller onto the paper.
(Operating procedure)
When this simulation is executed, the current set value is displayed.
When the exposure mode key is pressed, the following set items are changed sequentially. Enter an adjustment value with the 10-key and press the [START] key, and the entered value will be saved and a copy will be made. (Adjustment range: 1 ~ 99, Default: 50)
When the [CA] key is pressed, the entered value is saved and the simulation is terminated.
<table>
<tr><th>Lighting lamp</th><th>Adjustment mode</th></tr>
<tr><td>AE, Main cassette lamp</td><td>Main cassette paper feed</td></tr>
<tr><td>AE, 2nd cassette lamp</td><td>★ 2nd cassette paper feed</td></tr>
<tr><td>AE, 3rd cassette lamp</td><td>★ 3rd cassette paper feed</td></tr>
<tr><td>AE, 4th cassette lamp</td><td>★ 4th cassette paper feed</td></tr>
<tr><td>AE, Manual paper feed lamp</td><td>Manual paper feed</td></tr>
<tr><td>AE, TEXT, PHOTO lamps</td><td>★ RSPF document feed (Front surface)</td></tr>
<tr><td>AE, TEXT lamps</td><td>★ RSPF document feed (Back surface)</td></tr>
<tr><td>AE, PHOTO lamp</td><td>★ RSPF document (A5) paper feed (Back surface)</td></tr>
<tr><td>TEXT, PHOTO lamps</td><td>★ Duplex back surface</td></tr>
</table>
★ Supported for the installed models only. Skipped for the models without installation.</td></tr>
<tr><td>53</td><td>08</td><td>SPF scanning position automatic adjustment</td><td>Place the black chart so that it covers both the SPF scan glass and the OC glass. Close the OC cover. When this simulation is executed, the current adjustment value is displayed as the initial display. When the [START] key is pressed, the mirror unit scans from the home position to the SPF scan position with the current adjustment value displayed, and the SPF glass cover edge is calculated from the difference between the SPF glass cover edge and the OC side document glass CCD output level.
* The default is 50, the adjustment range is 1 ~ 99, and the adjustment unit 1= about 0.127mm.
If the adjustment is completed normally, the adjusted value is displayed. If not, the jam lamp lights up with the current set value displayed. When the [START] key is pressed again with the jam lamp ON, the execution is repeated again. When the [Interrupt] key or the [CA] key is pressed during execution, "- -" is displayed and the operation is canceled. The mirror returns to its home position and the simulation mode is terminated. In the case when the [Interrupt key] is pressed, the machine goes into the sub code input standby mode. In the case when the [CA] key is pressed, all the lamps are turned off.
<table>
<tr><th>ON lamp</th><th>Display mode</th></tr>
<tr><td>AE lamp</td><td>SPF scan position automatic adjustment</td></tr>
<tr><td>TEXT lamp</td><td>SPF scan position manual adjustment</td></tr>
</table>
</td></tr>
<tr><td>61</td><td>03</td><td>HSYNC output check</td><td>When the [START] key is pressed, HSYNC is performed and the polygon motor is rotated for 30 sec. Every time when HSYNC is detected, the zoom lamp is lighted for 100msec.</td></tr>
</table>

<table>
<tr><th>Main code</th><th>Sub code</th><th>Contents</th><th>Details of operation</th></tr>
<tr><td>63</td><td>01</td><td>Shading check</td><td>The detection level of the white plate for shading is displayed.
(Operating procedure)
When the [START] key is pressed in the sub code input standby mode, the mirror base unit moves to the white plate for shading and the copy lamp is lighted. Until the light quantity of the copy lamp is stabilized, the sub code of "01" is displayed on the 7-seg display. When the light quantity of the copy lamp is stabilized, it is revised every second, and the level of one pixel at the CCD center where no correction is made is detected for 10 sec, and the detected level is displayed in hexadecimal on the 7-seg display. After completion of 10 sec detection, the machine goes into the sub code input standby mode.</td></tr>
<tr><td></td><td>07</td><td>SPF automatic correction</td><td>The SPF white correction start pixel position is automatically adjusted.
This is performed after replacement of the lens. Open the SPF unit and press the [START] key, and the position (which pixel) of the white sheet for SPF exposure correction in the SPF position is displayed on the 7-seg display.
If the value is 93 ~ 229, it is displayed on the 7-seg display and is written into the EEPROM.
If the value is 0 ~ 92 or 230 ~ 999, it is displayed on the 7-seg display but is not written into the EEPROM.
If the value is 1000 or above, "-------" is displayed on the 7-seg display and is not written into the EEPROM.
The pixel position -34 written into the EEPROM is considered as the SPF white correction start pixel of the machine.
When shi simulation is executed with the SPF unit closed, an error will occur.</td></tr>
<tr><td>64</td><td>01</td><td>Self print</td><td>The optical system status is ignored and a self print is made. Also when a print command is sent from the host, printing is performed.
(Operating procedure)
When this simulation is executed, warm-up is performed and the ready lamp is lighted.
(However, the scanner is invalid and no initial operation is made.)
Enter the code number with the 10-key, and select a cassette with the cassette select key and press the [START] key. The selected cassette start paper feed and printing is performed in the selected pattern.
* Only the tray lamp and the online lamp are lighted, and no other lamps are lighted.
Printing is made in 1 by 2 mode, where one line is printed and the following two liens are not printed, or in the grid pattern.
<table>
<tr><th>Code number</th><th>Pattern</th></tr>
<tr><td>0</td><td>1 by 2</td></tr>
<tr><td>1</td><td>Grid pattern</td></tr>
<tr><td>2</td><td>White paper</td></tr>
<tr><td>3</td><td>Black background</td></tr>
</table>
* Print data are made on A3 size. (A3 paper is preferable.)</td></tr>
</table>

[8] USER PROGRAMS

The user programs allow the parameters of certain functions to be set, changed, or canceled as desired.

1. List of user programs

This copier has the following user programs.

Program name	Program No	Description	Default	Parameters
Auto clear time	1	"Auto clear time" automatically returns the copy settings to the initial settings when a certain period of time elapses after a copy is made. This program is used to select the period of time. "Auto clear time" can also be disabled.	60sec	1 (OFF) 2 (10sec) 3 (20sec) 4 (60sec) 5 (90sec) 6 (120sec)
Preheat mode	2	This function automatically switches the machine to a low power consumption state if the set duration of time elapses without the machine being used when the power is on. The POWER SAVE indicator lights up, however, the keys on the operation panel can be used. Normal operation automatically resumes when a key on the operation panel is pressed, an original is placed, a print job is received, or scanning is begun from a computer.	1min	1 (1min) 2 (5min) 3 (30min) 4 (60min) 5 (120min) 6 (240min)
Auto power shut-off timer	3	This function automatically switches the machine to a state that consumes even less power than preheat mode if the set duration of time elapses without the machine being used when the power is on. All lights except the POWER SAVE indicator and ON LINE indicator go off. To resume normal operation, press the [START] key (⊙). Normal operation also resumes automatically when a print job is received or scanning is begun from a computer. While in auto power shut-off mode, no keys (except the [START] key (⊙)) can be used.	5min	1 (5min) 2 (30min) 3 (60min) 4 (120min) 5 (240min)
Stream feeding mode*1	4	When copying using the SPF/RSPF, during the period of time that the SPF/RSPF indicator blinks after an original has been scanned (about 5 seconds), a subsequent original can be placed and automatically fed into the machine.	OFF	0 (OFF) 1 (ON)
Auto power shut-off setting	5	Use this setting to enable or disable auto power shut-off.	ON	0 (OFF) 1 (ON)
Border line for 2 IN 1 / 4 IN 1*2	6	When copying multiple originals onto a single sheet of paper (2 IN 1 / 4 IN 1 copy), this function can be used to print a solid or broken borderline around each original image.	OFF	1 (OFF) 2 (Solid line) 3 (Broken line)
Rotation copy*2	7	When the auto paper select function is enabled and there is no paper that is the same size as the original and loaded in the same orientation, this function will automatically select paper of the same size that is loaded in the opposite orientation, and rotate the image 90 degrees so that it is copied on the paper in the correct orientation. When the auto ratio select function is operating and the original and paper are loaded in opposite orientations, this function rotates the image so that it is copied on the paper in the correct orientation.	ON	0 (OFF) 1 (ON)
Auto paper select mode	8	This function automatically selects paper that is the same size as the original placed in the SPF/RSPF, or the same size as that selected with the [ORIGINAL SIZE ENTER] key (only for sizes 5-1/2" x 8-1/2", 8-1/2" x 11", 8-1/2" x 11"R, 8-1/2" x 14" and 11" x 14"). The function can be disabled.	ON	0 (OFF) 1 (ON)
Auto tray switching	9	If the paper runs out during printing and there is paper of the same size and orientation in another tray, this function automatically switches to that tray (excluding the bypass tray). The function can be disabled.	ON	0 (OFF) 1 (ON)
Auditing mode	10 to15	See "Enabling Audit Mode".	-	-
Erase width adjustment*2	16	Use this setting to set the width of erasure of shadows that appear around the edges and at the binding margin when a book or similar original is copied.	1/2" (10mm)	1 (0" (0mm)) 2 (1/4" (5mm)) 3 (1/2" (10mm)) 4 (3/4" (15mm)) 5 (1" (20mm))

*1 On models with a SPF/RSPF.

*2 On models with a dual function board.

Program name	Program No	Description	Default	Parameters
Layout in 2 IN 1 copy*2	17	Use this setting to select the layout pattern when two original pages are copied onto a single sheet of paper. 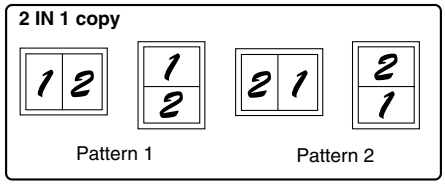	Pattern 1	1 (Pattern 1) 2 (Pattern 2)
Layout in 4 IN 1 copy*2	18	Use this setting to select the layout pattern when four original pages are copied onto a single sheet of paper. 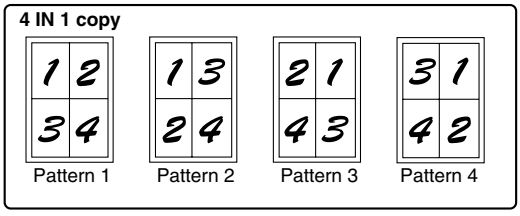	Pattern 1	1 (Pattern 1) 2 (Pattern 2) 3 (Pattern 3) 4 (Pattern 4)
Offset of paper output tray	19	When enabled, this function offsets the position in the output tray of interrupt copy jobs and sets of copies during sort/group copy.	ON	0 (OFF) 1 (ON)
Image rotation in duplex copying*3	20	When a one-sided portrait original is placed in a horizontal orientation (8-1/2" x 11" or 8-1/2" x 14" size) for two-sided copying, the top and bottom of the images on the front and back of the paper will be opposite to each other,	OFF	0 (OFF) 1 (ON)
Location of the margin*2,*3	21	Use this setting to switch between the margin at the top edge and the margin at the left edge.	Left edge	1 (Left edge) 2 (Top edge)
Margin width*2	22	Use this setting to set the margin width.	1/2" (10mm)	1 (0" (0mm)) 2 (1/4" (5mm)) 3 (1/2" (10mm)) 4 (3/4" (15mm)) 5 (1" (20mm))
Resolution in Auto/Text mode	23	The copy resolution in auto and text mode is normally 300 dpi. If high-quality copies are preferred, use this setting to change the resolution to 600 dpi.	300dpi	1 (300dpi) 2 (600dpi)
Memory allocated to printer mode*2	24	Use this to change the proportion of IMC memory used for printer mode.	50%	1 (30%) 2 (40%) 3 (50%) 4 (60%) 5 (70%)
Key auto repeat	25	Use this setting to select whether or not holding down a key causes repeated input of the key. For keys that normally cause a set value to increase when held down (for example, holding down the [ZOOM] key (▽,△)), this program can be used to have the set value not change when the key is held down.	ON	0 (OFF) 1 (ON)
Key press time	26	Use this setting to select how long a key must be pressed for the input to be accepted. By selecting a longer time, you can prevent settings from being changed by the accidental pressing of a key.	Minimum (current response speed)	1 (Minimum (current response speed)) 2 (0.5sec) 3 (1.0sec) 4 (1.5sec) 5 (2.0sec)
Audible signals volume	27	This sets the volume of beep signals.	Low (current volume)	1 (Low (current volume)) 2 (High) 3 (OFF)
Base setting beep signal	28	Use this to sound a beep when a base setting is selected.	OFF	0 (OFF) 1 (ON)
Number of copies limit	29	Use this setting to select 99 or 999 for the maximum number of copies.	999 copies	1 (99 copies) 2 (999 copies)

*2 On models with a dual function board.

*3 On models with automatic two-sided copying.

Program name	Program No	Description	Default	Parameters
Use close paper size	30	When this function is enabled, printing in printer mode will automatically continue using a different size of paper if the specified size of paper runs out in all trays. This feature does not function in copy mode.	OFF	0 (OFF) 1 (ON)
Default tray setting	31	Use this program to select a default tray. This tray is automatically selected each time the power is turned on or each time the machine reverts to the initial settings.	Tray 1	1 (Tray 1) 2 (Tray 2) 3 (Tray 3) 4 (Tray 4) 5 (Bypass tray)
Default exposure mode	32	Use this program to set "AUTO", "TEXT", or "PHOTO" as the default exposure mode.	AUTO	1 (AUTO) 2 (TEEXT) 3 (PHOTO)
USB2.0 mode switch	33	Used to switch USB2.0 mode between Full-Speed and High-Speed.	Full-Speed	1(Full-Speed) 2(High-Speed)

2. Setting the user programs

1) Hold down the [Light] key (Ⓓ) until the alarm indicators (, , , ,) blink.
   •"- -" appears in the display.

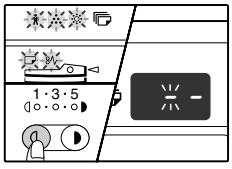

2) Enter the program number with the numeric keys.
   •See "USER PROGRAMS" for the program numbers.
   •The selected program number blinks.
   •To select "Auto clear timer", press the [1] key.

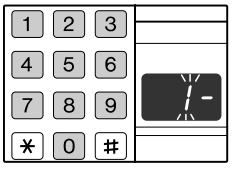

Note: If you enter the wrong number, press the [CLEAR] key (C) and then enter the correct number.

3) Press the [START] key (Ⓢ).
   •The selected program number stops blinking and lights steadily.
   •The currently selected setting code blinks in the 1st digit of the display.

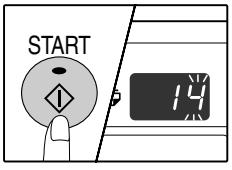

4) Enter the desired setting code by pressing a numeric key.
   •For the setting codes, see "USER PROGRAMS".
   •The selected setting code blinks.
   •To select 90 seconds, press the [5] key.

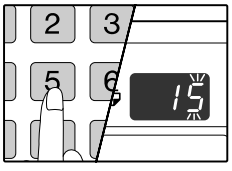

Note: If you enter the wrong number, press the [CLEAR] key (C) and return to step 2).

5) Press the [START] key (Ⓢ).
   •The selected setting code stops blinking and lights steadily.

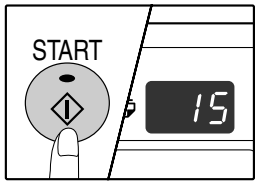

Note: To select a setting for another user program, press the [CLEAR] key (C) and then return o step 2).

6) Press the [Light] key (Ⓓ) to complete the settings.
   •The alarm indicators (, , , ,) go off and the display returns to the number of copies display.

3. Toner cartridge life

To find out the approximate quantity of toner remaining, follow the procedure below.

1) Press and hold the light key for more than 5 seconds until all the alarm indicators (, , , , and) blink and "--" appears in the copy quantity display.

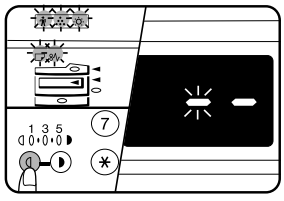

2) Press and hold the copy ratio display key for more than 5 seconds.
   •The approximate quantity of toner remaining will be indicated as a percent in the copy quantity display. ("100", "75", "50", "25", "10" or "LO" is displayed. When "LO" is displayed, the toner is down to less than 10%.)

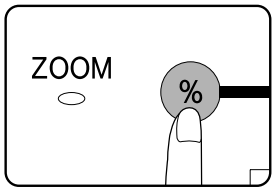

3) Press the light key.
   •All the alarm indicators will go out.

[9]TROUBLE CODE LIST

1.Trouble code list

Main code	Sub code	Content
E1	00	IMC PWB communication trouble
	10	IMC PWB trouble
	11	IMC ASIC error
	13	IMC PWB flash ROM error
	16	IMC PWB DIMM memory read/write check error
	81	Interface error in communication with IMC PWB (Parity)
	82	Interface error in communication with IMC PWB (Overrun)
	84	Interface error in communication with IMC PWB (Framing)
E7	01	Duplex model memory error
	02	LSU trouble
	10	Shading trouble (Black correction)
	11	Shading trouble (White correction)
	12	Shading trouble
	16	Abnormal laser output
F2	04	Improper cartridge (destination error, life cycle error)
		Identification error
		Model error
		Type error
		Destination error
		Data abnormality
		Misc error
F5	02	Copy lamp lighting abnormality
H2	00	Thermistor open
H3	00	Heat roller high temperature detection
H4	00	Heat roller low temperature detection
L1	00	Scanner feed trouble
L3	00	Scanner return trouble
L4	01	Main motor lock detection
	11	Shifter motor trouble
L6	10	Polygon motor lock detection
L8	01	No full wave signal
U2	04	EEPROM read/write error (serial communication error)
	11	Counter check sum error (EEPROM)
	12	Adjustment value check sum error (EEPROM)
	40	CRUM chip communication error
--		Auditor NOT READY
CH ON	None	Side door open
CH Blink	None	Developing cartridge not installed

2.Details of trouble codes

Main code	Sub code		Details of trouble
E1	00	Content	IMC PWB communication trouble
		Detail	An abnormality occurs in communication between the MCU PWB and the IMC PWB.
		Cause	IMC PWB-MCU PWB harness abnormality MCU PWB connector disconnection IMC PWB ROM defect/data abnormality
		Check and remedy	Check connection of the connector and the harness between the IMC PWB and the MCU PWB. Check the ROM of the IMC PWB.
	10	Content	IMC PWB trouble
		Detail	An abnormality occurs in the IMC PWB.
		Cause	USB chip error/CODEC error on the IMC PWB
		Check and remedy	Replace the IMC PWB with a new one.
	11	Content	IMC ASIC error
		Detail	An abnormality occurs in the IMC PWB.
		Cause	Abnormality in ASIC on the IMC PWB
		Check and remedy	Replace the IMC PWB with a new one.
	13	Content	IMC PWB flash ROM error
		Detail	An abnormality occurs in the IMC flash ROM.
		Cause	IMC PWB abnormality
		Check and remedy	Replace the IMC PWB with a new one. If downloading of the program is abnormally terminated, it may cause an error. Download the program again to avoid this.
	16	Content	IMC PWB DIMM memory read/write check error
		Detail	An installation error occurs in the IMC expansion compression memory module. An error occurs during access to the IMC expansion compression memory.
		Cause	Improper installation of the IMC expansion memory module. IMC expansion memory module abnormality IMC expansion memory contact abnormality IMC PWB abnormality.
		Check and remedy	Check installation of the expansion memory module. Replace the expansion memory module. Replace the IMC PWB with a new one.
	81	Content	Interface error (Parity) in communication with the IMC PWB
		Detail	A parity error occurs in communication between the MCU PWB and the IMC PWB.
		Cause	IMC PWB-MCU PWB harness defect Improper connection of the MCU PWB connector IMC PWB ROM defect/data abnormality"
		Check and remedy	Check connection of the connector/harness between the IMC PWB and the MCU PWB. Check the ROM of the IMC PWB.

Main code	Sub code		Details of trouble
E1	82	Content	Interface error (Overrun) in communication with the IMC PWB
		Detail	An overrun error occurs in communication between the MCU PWB and the IMC PWB.
		Cause	IMC PWB-MCU PWB harness defect Improper connection of the MCU PWB connector IMC PWB ROM defect/data abnormality.
		Check and remedy	Check connection of the connector/harness between the IMC PWB and the MCU PWB. Check the ROM of the IMC PWB.
	84	Content	Interface error (Framing) in communication with the IMC PWB
		Detail	A framing error occurs in communication between the MCU PWB and the IMC PWB.
		Cause	IMC PWB-MCU PWB harness defect Improper connection of the MCU PWB connector IMC PWB ROM defect/data abnormality.
		Check and remedy	Check connection of the connector/harness between the IMC PWB and the MCU PWB. Check the ROM of the IMC PWB.
E7	01	Content	Duplex model memory error
		Detail	The memory capacity for the duplex model machine is improper. Insufficient memory capacity
		Cause	The memory capacity of the MCU PWB is improper.
		Check and remedy	Use SIM 26-39 to check that the memory capacity is 32MB. If it is not 32MB, replace the MCU PWB with a suitable one.
	02	Content	LSU trouble
		Detail	The BD signal from the LSU cannot be detected in a certain cycle. (Always OFF or always ON)
		Cause	LSU connector or LSU harness defect or disconnection Polygon motor rotation abnormality Laser beams are not generated. MCU PWB abnormality.
		Check and remedy	Check connection of the LSU connector. Execute SIM 61-03 to check the LSU operations. Check that the polygon motor rotates normally. Check that the laser emitting diode generates laser beams. Replace the LSU unit. Replace the MCU PWB.
	10	Content	Shading trouble (Black correction)
		Detail	The CCD black scan level is abnormal when the shading.
		Cause	Improper connection of the CCD unit flat cable CCD unit abnormality MCU PWB abnormality.
		Check and remedy	Check connection of the CCD unit flat cable. Check the CCD unit."

Main code	Sub code		Details of trouble
E7	11	Content	Shading trouble (White correction)
		Detail	The CCD white scan level is abnormal when the shading.
		Cause	Improper connection of the CCD unit flat cable Dirt on the mirror, the lens, and the reference white plate Copy lamp lighting abnormality CCD unit abnormality MCU PWB abnormality (When occurred in the SPF scan position.) Improper installation of the mirror unit
		Check and remedy	Clean the mirror, lens, and the reference white plate. Check the light quantity and lighting status of the copy lamp (SIM 05-03). Check the MCU PWB.
	12	Content	Shading trouble
		Detail	White correction is not completed in the specified number of operations.
		Cause	CCD unit flat cable connection failure. Dirt on mirrors, lenses, and the reference white plate. Copy lamp lighting abnormality CCD unit abnormality MCU PWB abnormality
		Check and remedy	Clean mirrors, lenses, and the reference white plate. Check the copy lamp light quantity (SIM 05-03) and lighting. Check the CCD unit. Check the MCU PWB.
	16	Content	Abnormal laser output
		Detail	When the laser output is stopped, HSYNC is detected.
		Cause	Laser abnormality MCU PWB abnormality.
		Check and remedy	Check the laser emitting diode operation. Replace the MCU PWB. "
F2	04	Content	Improper cartridge (Destination error, life cycle error)
		Detail	The destination of the machine differs from that of the CRUM. The life cycle information is other than "Not used (FFh)."
		Cause	CRUM chip defect Improper developing unit
		Check and remedy	Replace the CRUM chip. Replace the developing unit.
		Identification error	The trade mark code of the CRUM differs. The company code of the CRUM differs.
		Model error	The boot program model code does not coincide with the CRUM model code.
		Type error	When the CRUM type is other than genuine/ conversion/production rotation.
		Destination error	The machine destination differs from the CRUM destination.
		Data abnormality	When an error value is included in the initial check information. When the max. toner supply time is 00. When the print hard stop is 00.
		Misc error	When the Misc information is other than "Not used (FFh)."

Main code	Sub code		Details of trouble
F5	02	Content	Copy lamp lighting abnormality
		Detail	The copy lamp does not turn on.
		Cause	Copy lamp abnormality Copy lamp harness abnormality CCD PWB harness abnormality.
		Check and remedy	Use SIM 5-3 to check the copy lamp operations. **When the copy lamp lights up.** Check the harness and the connector between the CCD unit and the MCU PWB. **When the copy lamp does not light up.** Check the harness and the connector between the copy lamp unit and the MCU PWB. Replace the copy lamp unit. Replace the MCU PWB. "
H2	00	Content	Thermistor open
		Detail	The thermistor is open. The fusing unit is not installed.
		Cause	Thermistor abnormality Control PWB abnormality Fusing section connector disconnection The fusing unit is not installed.
		Check and remedy	Check the harness and the connector between the thermistor and the PWB. Use SIM 14 to clear the self diagnostic display.
H3	00	Content	Heat roller high temperature detection
		Detail	The fusing temperature exceeds 240C°.
		Cause	Thermistor abnormality Control PWB abnormality Fusing section connector disconnection.
		Check and remedy	Use SIM 5-02 to check the heater lamp blinking operation. **When the lamp blinks normally.** Check the thermistor and its harness. Check the thermistor input circuit on the control PWB. **When the lamp keeps ON.** Check the power PWB and the lamp control circuit on the MCU PWB. Use SIM 14 to clear the self diagnostic display.

Main code	Sub code		Details of trouble
H4	00	Content	Heat roller low temperature detection
		Detail	When the fusing temperature is lower than 150C° after 55sec from the start of warming up. When the warming up complete temperature is not reached in 30sec from reaching 150C°. When the fusing temperature is lower than 100C° after 20sec from ready start. When the fusing temperature is lower than 145C° when printing."
		Cause	Thermistor abnormality Heater lamp abnormality Thermostat abnormality Control PWB abnormality
		Check and remedy	Use SIM 5-02 to check the heater lamp blinking operation. **When the lamp blinks normally.** Check the thermistor and its harness. Check the thermistor input circuit on the control PWB. **When the lamp does not light up.** Check for disconnection of the heater lamp and the thermostat. Check the interlock switch. Check the power PWB and the lamp control circuit on the MCU PWB. Use SIM 14 to clear the self diagnostic display.
L1	00	Content	Scanner feed trouble
		Detail	The scanner does not complete feeding in the specified time.
		Cause	Mirror unit abnormality The scanner wire is disconnected. The origin detection sensor abnormality Mirror motor harness abnormality
		Check and remedy	Use SIM 1-1 to check the mirror reciprocating operations. **When the mirror does not feed.** Check for disconnection of the scanner wire. Check the harness and the connector between the mirror motor and the MCU PWB. Replace the mirror unit. Replace the MCU PWB. **When the mirror does feed.** Use SIM 1-2 to check the mirror home position sensor."
L3	00	Content	Scanner return trouble
		Detail	The scanner does not complete returning in the specified time. The mirror is not in the home position when OC copying is started with the mirror standby in the home position.
		Cause	Mirror unit abnormality Scanner wire disconnection Origin detection sensor abnormality Mirror motor harness abnormality
		Check and remedy	Use SIM 1-1 to check the mirror reciprocating operations. **When the mirror does not return.** Check for disconnection of the scanner wire. Check the harness and the connector between the mirror motor and the MCU PWB. Replace the mirror unit. Replace the MCU PWB. **When the mirror does feed.** Use SIM 1-2 to check the mirror home position sensor.

Main code	Sub code		Details of trouble
L4	01	Content	Main motor lock detection
		Detail	The main motor does not rotate. The motor lock signal is detected for 1sec or more after rotation of the main motor. The motor lock signal is detected for 1sec during rotation of the main motor.
		Cause	Main motor unit abnormality Improper connection or disconnection the main motor and the harness. MCU PWB abnormality
		Check and remedy	Use SIM 25-01 to check the main motor operations. Check connection of the main motor harness/ connector. Replace the main motor. Replace the MCU PWB.
	11	Content	Shifter motor trouble
		Detail	The shifter home position detection signal is not detected when initializing the shifter.
		Cause	Shifter motor abnormality, improper connection or disconnection of the harness, shifter home position sensor abnormality
		Check and remedy	Use SIM 03-11 to check the shifter motor operations. Check connection of the harness/connector of the shifter motor. Replace the shifter motor. Replace the MCU PWB.
L6	10	Content	Polygon motor lock detection
		Detail	The polygon motor does not rotate. The motor lock signal is detected for 6sec after rotation of the polygon motor. The motor lock signal is detected for 1sec during rotation of the polygon motor.
		Cause	Polygon motor unit abnormality Improper connection or disconnection of the polygon motor and the harness. MCU PWB abnormality
		Check and remedy	Use SIM 61-1 to check the polygon motor operations. Check connection of the polygon motor harness/connector. Replace the polygon motor.. Replace the MCU PWB.
L8	01	Content	No full wave signal
		Detail	The zero cross signal is not detected.
		Cause	Power unit abnormality MCU PWB abnormality
		Check and remedy	Check connection of the harness and connectors. Replace the MCU PWB. Replace the power unit.
U2	04	Content	EEPROM read/write error (Serial communication error)
		Detail	EEPROM access process error
		Cause	EEPROM abnormality
		Check and remedy	Check that the EEPROM is properly set. Use SIM 16 to cancel the trouble. Replace the MCU PWB.

Main code	Sub code		Details of trouble
U2	11	Content	Counter check sum error (EEPROM)
		Detail	Check sum error of the counter area in the EEPROM
		Cause	EEPROM abnormality
		Check and remedy	Check that the EEPROM is properly set. Use SIM 16 to cancel the trouble. Replace the MCU PWB.
	12	Content	Adjustment value check sum error (EEPROM)
		Detail	Check sum error of the adjustment value area in the EEPROM
		Cause	EEPROM abnormality
		Check and remedy	Check that the EEPROM is properly set. Use SIM 16 to cancel the trouble. Replace the MCU PWB.
	40	Content	CRUM chip communication error
		Detail	An error occurs during communication between the MCU and the CRUM chip.
		Cause	CRUM chip abnormality Developing unit disconnection MCU PWB abnormality
		Check and remedy	Replace the chip. Check installation of the developing unit. Use SIM 16 to cancel the trouble. Replace the MCU PWB.
--		Content	Auditor NOT READY
		Detail	
		Cause	
		Check and remedy	
CH ON	None	Content	Side door open
		Detail	The side door is open.
		Cause	Side door sensor abnormality MCU PWB abnormality
		Check and remedy	Check that all the side doors are closed. Replace the MCU PWB.
CH Blink	None	Content	Developing cartridge not installed
		Detail	The developing cartridge is not installed. Communication with the CRUM cannot be made in initial check of the CRUM.
		Cause	Developing unit disconnection MCU PWB abnormality CRUM chip abnormality
		Check and remedy	Check installation of the developing unit. Replace the MCU PWB.

[10] MAINTENANCE

1. Maintenance table

X:Check(Clean, adjust, or replace when required.) O:Clean ▲:Replace △:Adjust ☆:Lubricate

Unit name	Part name		When calling	50K	100K	150K
Drum peripheral	OPC drum		-	▲	▲	▲
	Cleaning blade		-	▲	▲	▲
	Side seal F/R		X	X	X	X
	MC unit		X	▲	▲	▲
	(MC charging electrode)		-	(▲)	(▲)	(▲)
	(MC grid)		-	(▲)	(▲)	(▲)
	(MC case)		-	(▲)	(▲)	(▲)
	Transfer wire		O	O	O	O
	Transfer paper guide		O	O	O	O
	MC guide sheet (Cleaning blade attached)		-	▲	▲	▲
	Drum fixing plate B		X	▲	▲	▲
	Process frame unit		X	X	X	▲
	Discharge holder		O	O	O	O
	Separation pawl Star ring x 2 pcs } Only for Viet Nam		X	▲	▲	▲
Developing section	Developer		-	▲	▲	▲
	DV seal		-	X	X	▲
	DV under seal		-	-	-	▲
	DV side seal		-	X	X	▲
	Side Mylar		-	-	-	▲
Optical section	Lamp unit	Reflector	O	O	O	O
		Mirror	O	O	O	O
	No.2/3 mirror unit	Mirror	O	O	O	O
		Pulley	X	X	X	X
	CCD peripheral	Lens	O	O	O	O
	Glass	Table glass	O	O	O	O
		White Plate	O	O	O	O
	Other	Drive wire	X	X	X	X
		Rail	X ☆	X ☆	X ☆	X ☆
		Document cover	O	O	O	O
		Document size sensor	O	O	O	O
LSU		Dust-proof glass	O	O	O	O
Paper feed section	Multi paper feed section	Take-up roller(manual / SPF)	O	O	O	O
		Paper feed roller	O	O	O	O
		Spring clutch	O ☆	O ☆	O ☆	O ☆
Paper transport section		PS roller	O	O	O	O
		Transport (paper exit) rollers	O	O	O	O
		Spring clutch	O ☆	O ☆	O ☆	O ☆
Fusing section		Upper heat roller	O	O	O	▲
		Pressure roller	O	O	O	O
		Pressure roller bearing	X	X	X	O ☆
		Upper separation pawl	X	X	X	O
		Lower separation pawl	X	X	X	O
Drive section		Gears	X ☆	X ☆	X ☆	X ☆
		Belts	X	X	X	O
Paper exit section		Ozone filter*1	X	X	X	X*1

*1:Recommendable replacement time:50K(Letter,5%print)

2. Maintenance display system

Toner	Life,	16K	
	Remaining quantity check *1	a. Press and hold the density adjustment LIGHT key for more than 5 sec, and the machine will enter the user program mode. b. Press and hold the "%" key for more than 5 sec, and the remaining quantity will be displayed on the copy quantity display in one of the following levels: (Remaining quantity display levels: 100%, 75%, 50%, 25%, 10%, LO) c. Press the density adjustment LIGHT key to cancel.	
	Remaining quantity	NEAR EMPTY About 10%	EMPTY
	LED	ON	Flash
	Machine	Operation allowed	Stop
Developer	Life	50K	
	LED	ON at 50K of the developer count	
	Machine	Selection is available between Not Stop and Stop by Service Simulation (SIM 26-37) Setup. (If Stop is selected, the LED will flash and stop at 50K.) * Default: Not Stop * Clear: SIM 42-1	
Maintenance	LED	Selection is available among 50K, 25K, 10K, 7.5K, 5K, and free (no lighting) with SIM 21-1. * Default: 50K * Clear: SIM 20-1	
	Machine	Not stop	

*1: Installation of a new toner cartridge allows to display the remaining quantity.

3. Note for replacement of consumable parts

A. Toner cartridge

When a waste toner cartridge is removed from the machine, it must be put in a polyethylene bag to avoid scattering of toner.

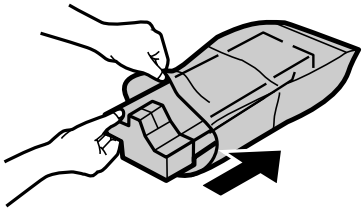

B. DV cartridge

Do not shake or put up the developer cartridge. Otherwise developer may scatter.

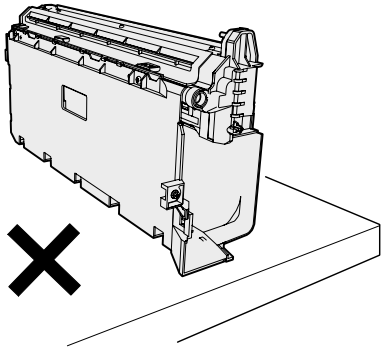

C. DV seal attachment procedure

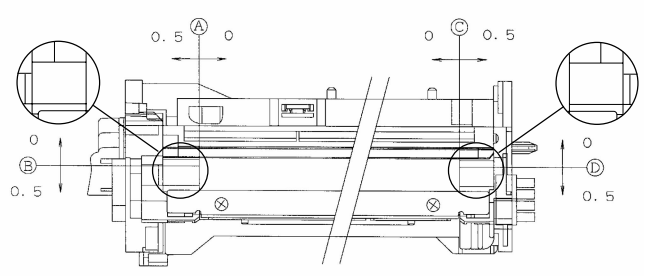

1) When attaching the DV side Mylar, check the position shown in the figure below and attach it properly.

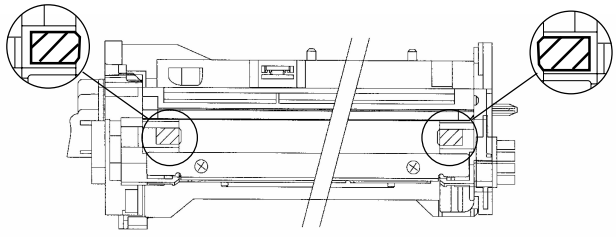

2) When attaching the DV side sheet, check the position shown in the figure below and attach it properly.
(First of all, attach the DV side Mylar.)

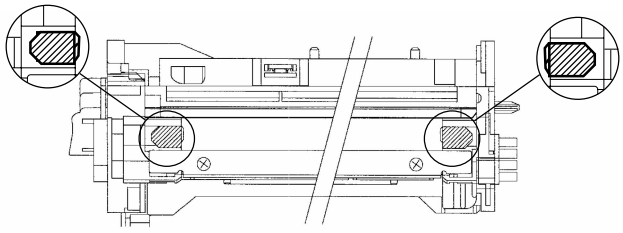

* Be sure to attach the DV side sheet so that the notch is on the outside.

[11]DISASSEMBLY AND ASSEMBLY

WARNING Before performing the disassembly procedure, be sure to remove the power cord to prevent against an electric shock.

No.	Item
1	High voltage section/Duplex transport section
2	Optical section
3	Fusing section
4	Paper exit section
5	MCU
6	Optical frame unit
7	LSU
8	Tray paper feed section/Paper transport section
9	Manual multi paper feed section
10	Power section
11	Developing section
12	Process section
13	Others

1. High voltage section/Duplex transport section

No.	Content
A	Transfer charger unit
B	Charger wire
C	Duplex transport section

A.Transfer charger unit

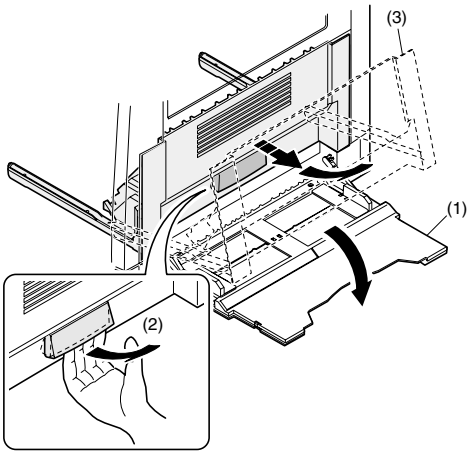

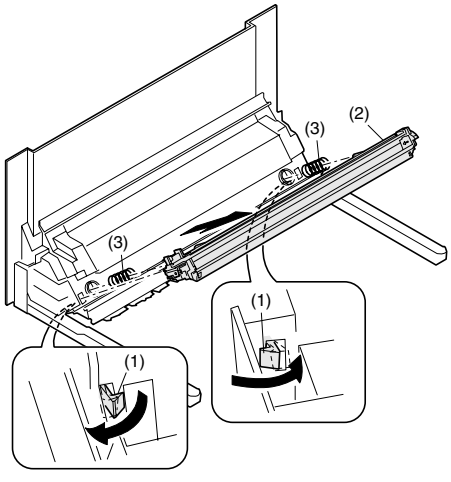

B.Charger wire

Installation: The spring tip must be between two reference ribs.
- The charger wire must be free from twist or bending.
- Be sure to put the charger wire in the V groove.

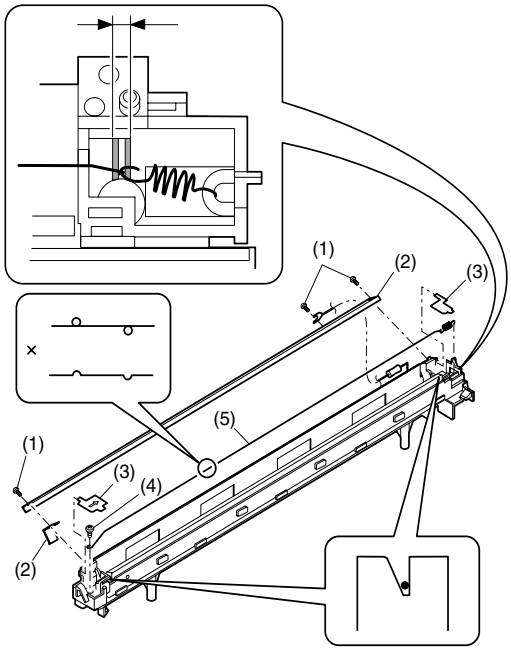

C.Duplex transport section

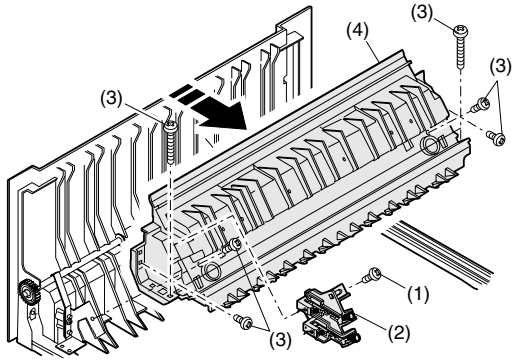

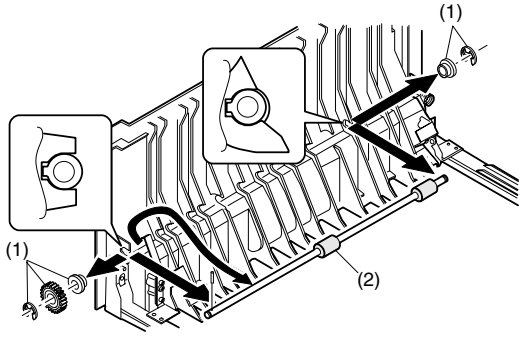

2.Optical section

Note: When disassembling or assembling the optical unit, be careful not to touch the mirror and the reflector.

No.	Content
A	Table glass
B	Copy lamp unit
C	Inverter PWB for copy lamp
D	Copy lamp
E	Lens unit
F	Wire

A.Table glass

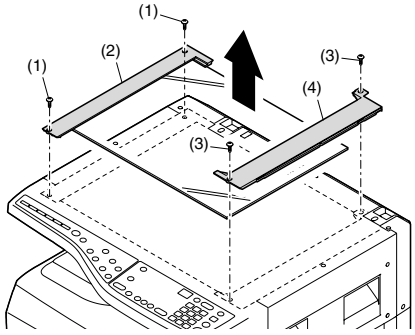

B.Copy lamp unit

Disassembly: Be sure to put No. 2/3 mirror unit to the positioning plate (A).

Assembly: Put the notched surface of wire holder (3) downward, tighten temporarily, and install.

Adjustment: Main scanning direction distortion balance adjustment

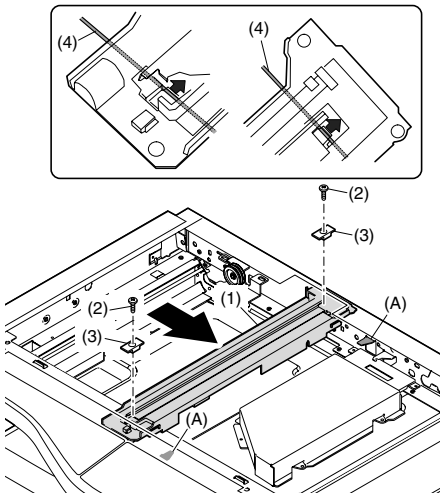

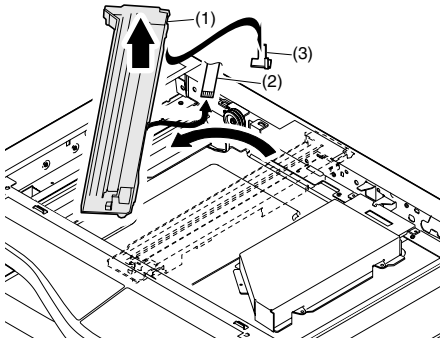

C.Inverter PWB for copy lamp

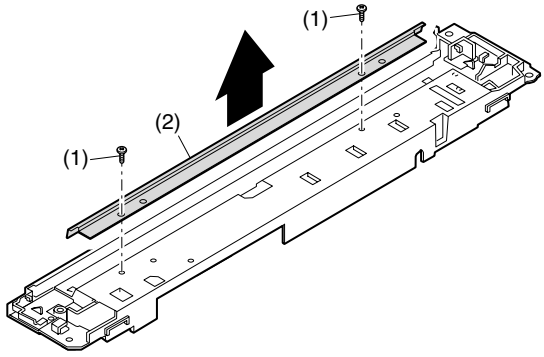

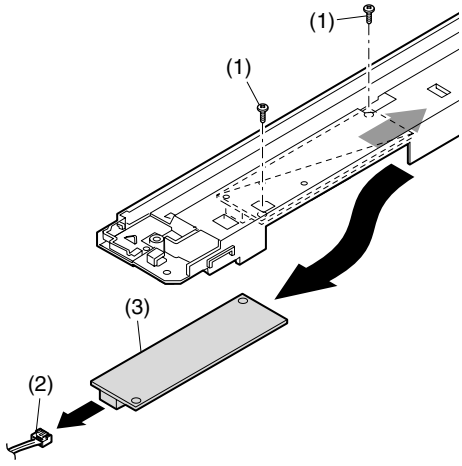

D.Copy lamp

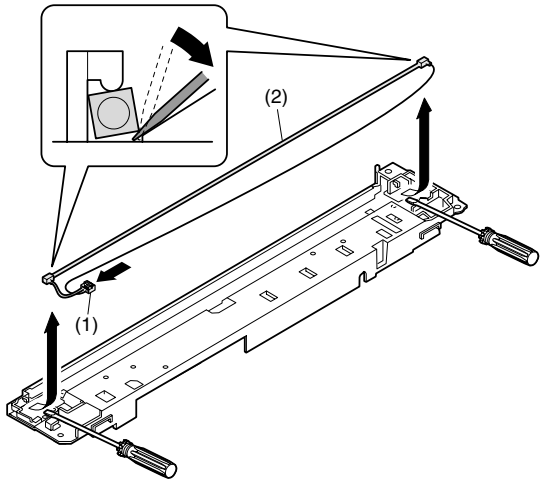

E.Lens unit

Note: Do not remove screws which are not indicated in the figure. If the height of the base plate is changed, it cannot be adjusted in the market.

Note: The CCD/lens unit is factory-adjusted before shipping.
Since these adjustments cannot be performed in the market.
Never touch the screws other than screw 2) of the CCD/lens unit.

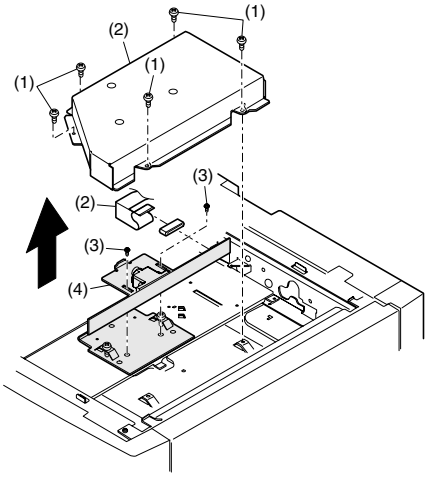

Lens unit attachment

<1>Attach the lens unit so that the lens unit number on the lens adjustment plate is aligned with the scribe line on the base plate.

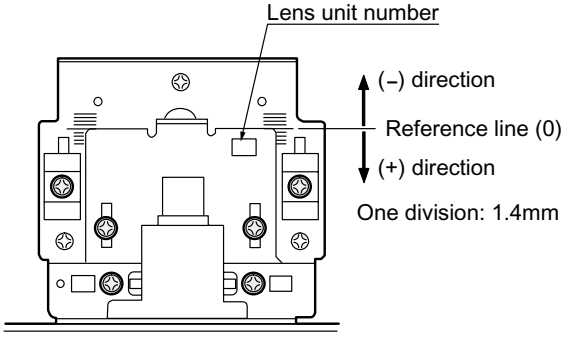

	CCD adjustment value
+4 scales	5.0~
+3 scales	3.6~4.9
+2 scales	2.2~3.5
+1 scale	0.8~2.1
Reference	-0.6~0.7
-1 scale	-2.0~ -0.7
-2 scales	-3.4~ -2.1
-3 scales	-4.8~ -3.5
-4 scales	~ -4.9

<2>Make a sample copy at the above position, and measure the magnification ratio.

<3>Change the installing position in the horizontal direction to adjust the magnification ratio.

•When the copy image is longer than the original, shift to the positive (+) direction.

•When the copy image is shorter than the original, shift to the negative (-) direction.

* 1 scale of the scribed line corresponds to 0.34% of magnification ratio.

* If this adjustment is not satisfactory, make a fine adjustment with SIM 48-2.

F.Wire

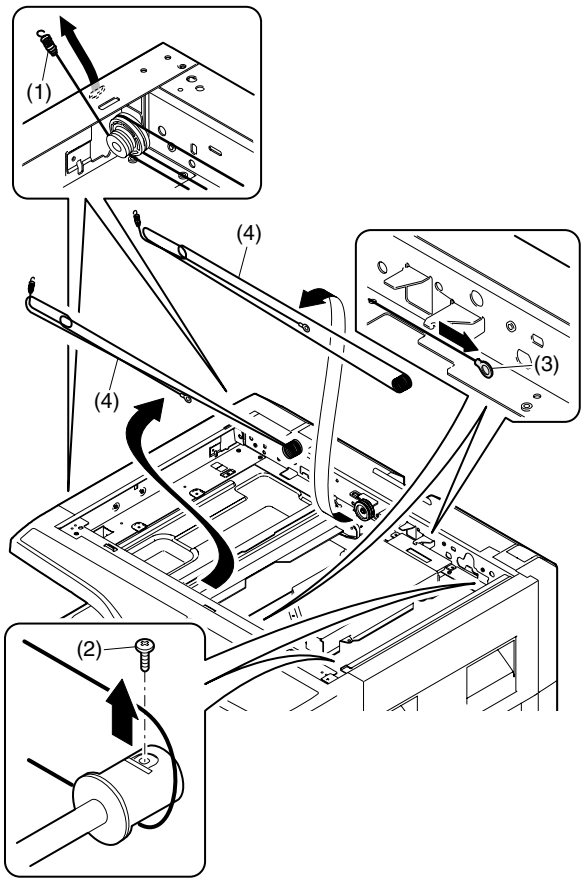

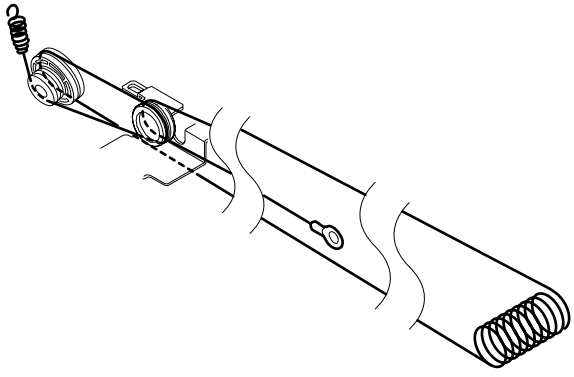

3.Fusing section

No.	Contents
A	Fusing unit
B	Thermostat
C	Thermistor
D	Heater lamp
E	Upper heat roller
F	Separation pawl
G	Lower heat roller
H	Separation pawl

A.Fusing unit removal

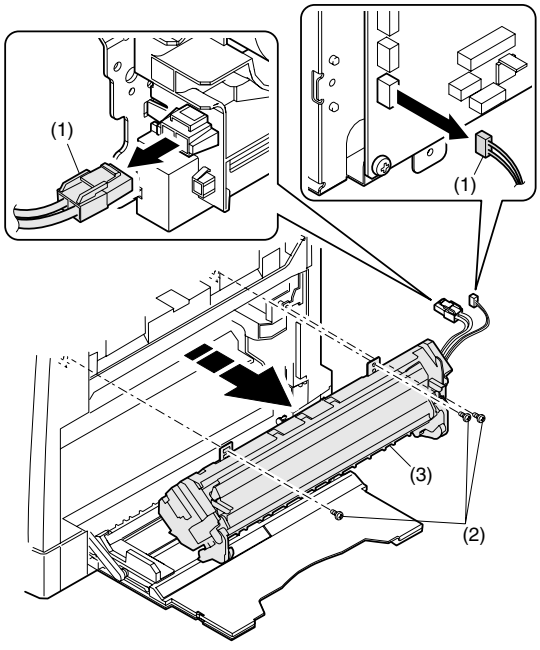

B.Thermostat

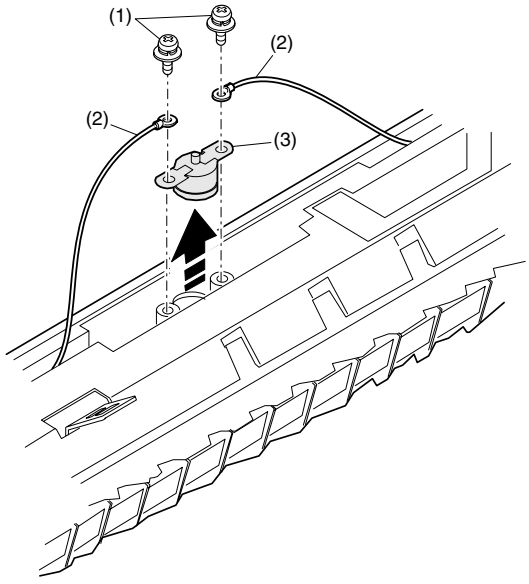

C.Thermistor

Installation: When installing the thermistor, be sure to face the installing projection (A) toward the installing surface.
Check that the thermistor is in contact with the upper heat roller.

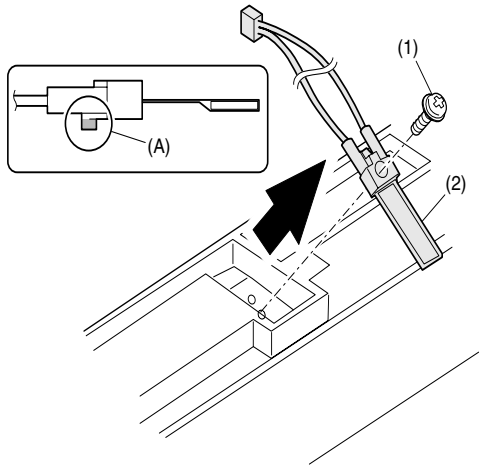

D.Heater lamp

Assembly: Insert the spring (A) into the hole (B) in the fusing frame.

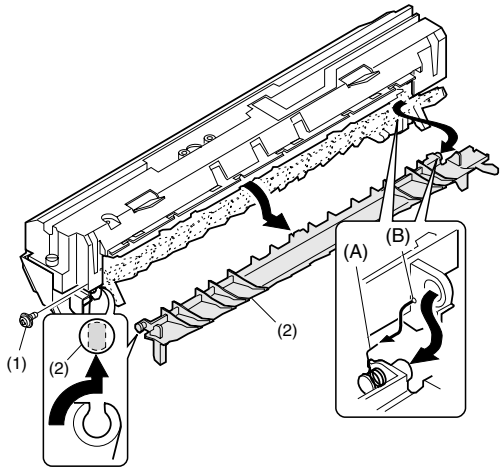

Assembly: Put the paper guide earth spring (A) under the paper guide (B) before fusing.

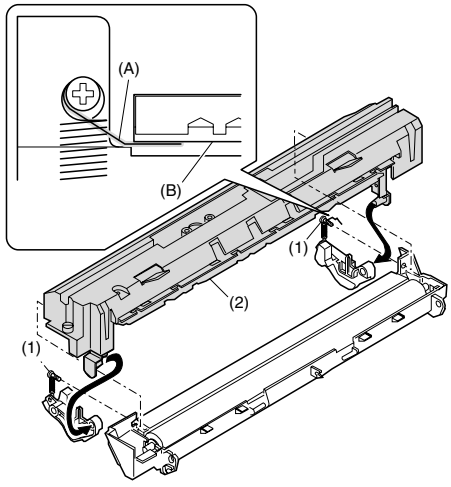

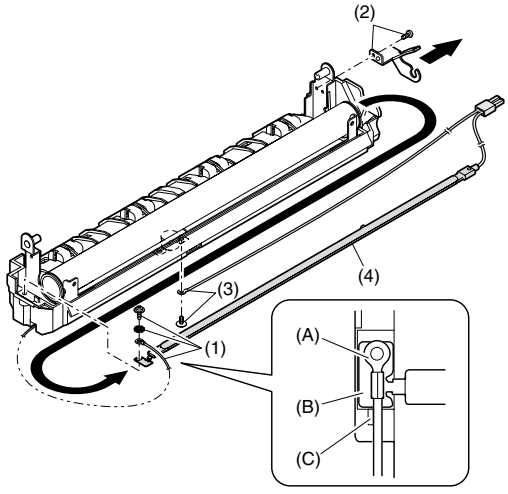

Assembly: Put the fusing harness (A) on the heater lamp (B) as shown in the figure and fix them together.<R>Place the fusing harness inside the rib (C).

E.Upper heat roller

Disassembly: There are three pawls on the fusing cover. Remove the screws and slide the fusing cover to the right to remove. The heater lamp is fixed on the fusing cover with a screw. Slide the fusing cover to the front and remove the screw, then remove the heater lamp.

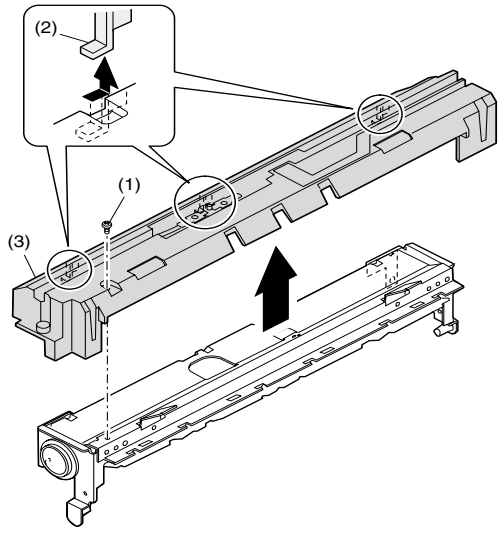

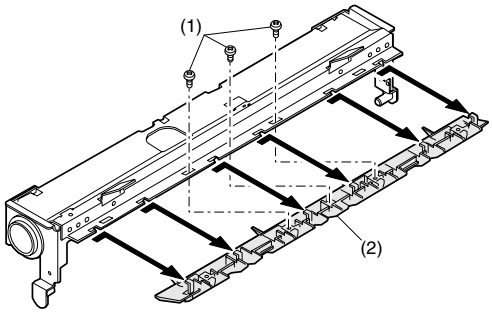

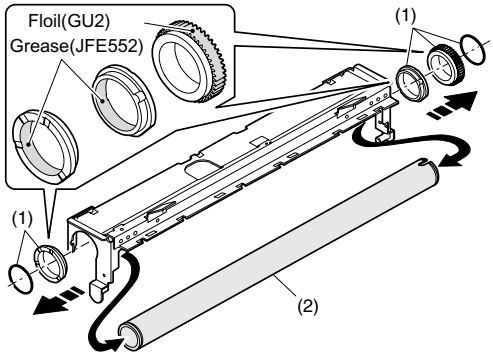

F.Separation pawl

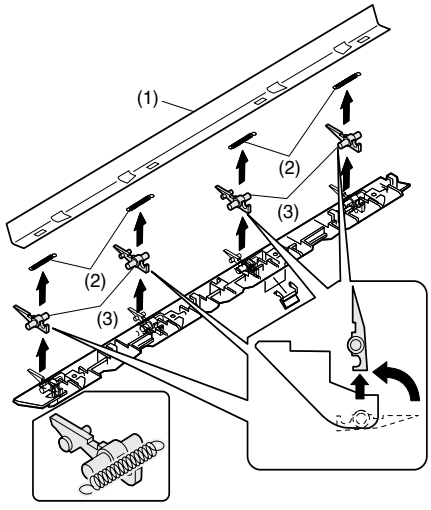

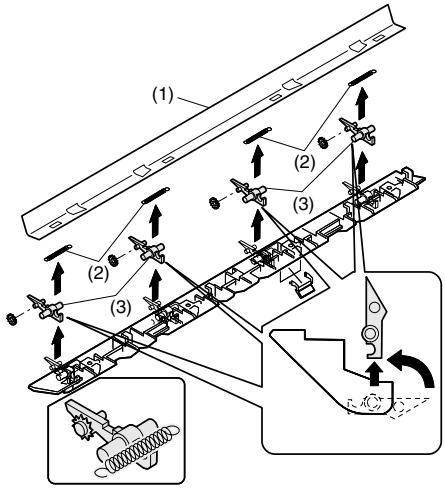

G.Lower heat roller

Assembly: When installing the paper guide (3) before fusing, fix the paper guide fixing plate with screws temporarily so that the paper guide fixing plate (2) is in contact with the frame bottom under fusing (A). Set the paper guide (3) before fusing to the bottom line of the positioning reference (B), and tighten the screw firmly.

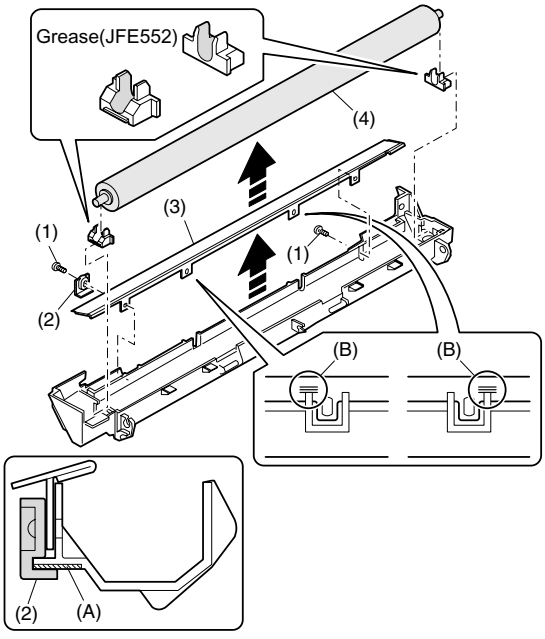

H.Separation pawl

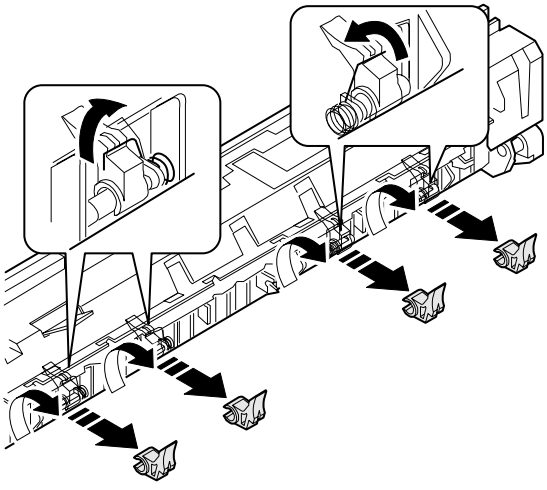

4.Paper exit section

No.	Content
A	Ozone filter
B	Cooling fan
C	Paper exit unit
D	Paper exit sensor / duplex sensor
E	Transport roller
F	Paper exit roller
G	Paper exit interface P.W.B.

A.Ozone filter

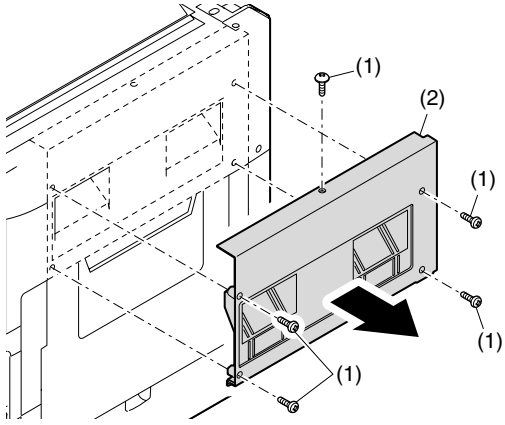

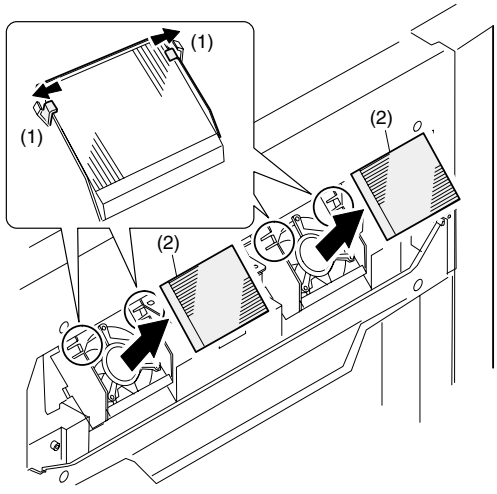

B.Cooling fan

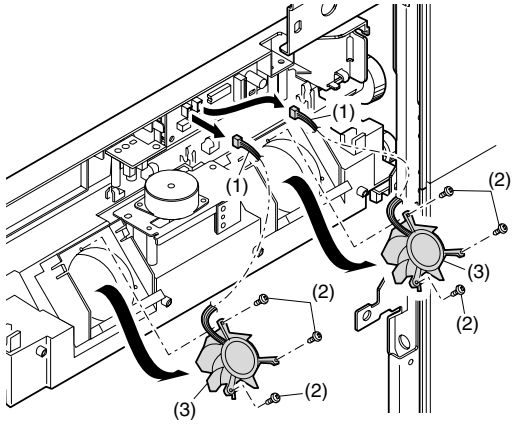

C.Paper exit unit

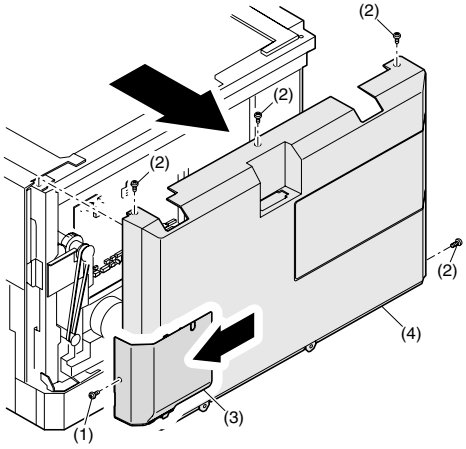

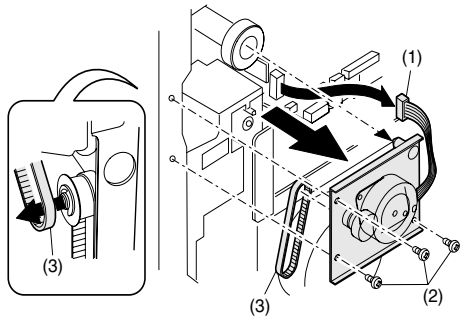

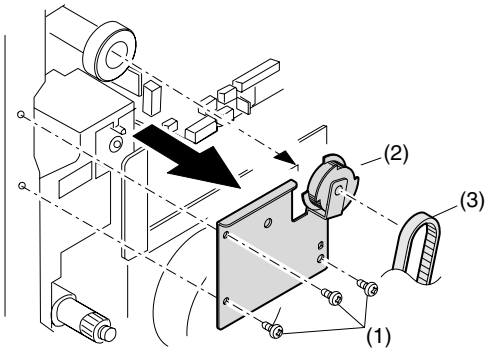

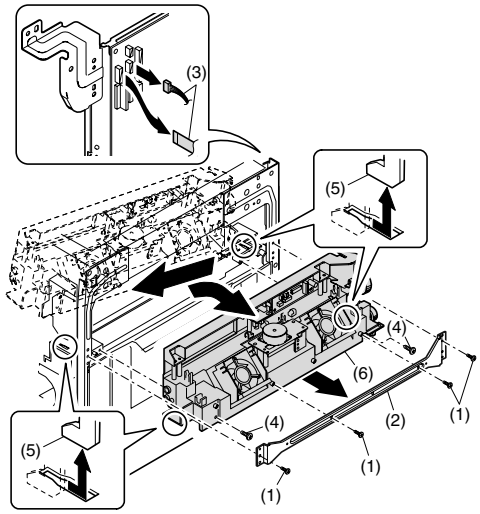

D.Paper exit sensor / duplex sensor

(A)Exit sensor

(B)Duplex sensor

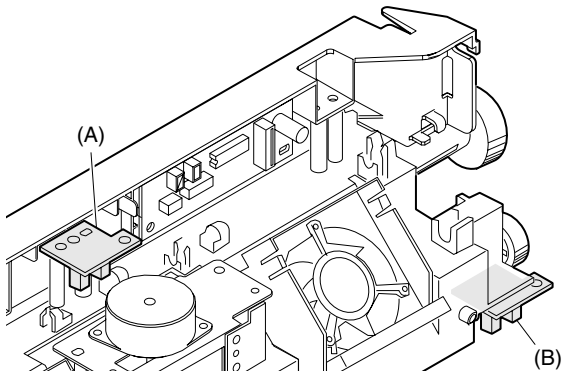

E.Transport roller

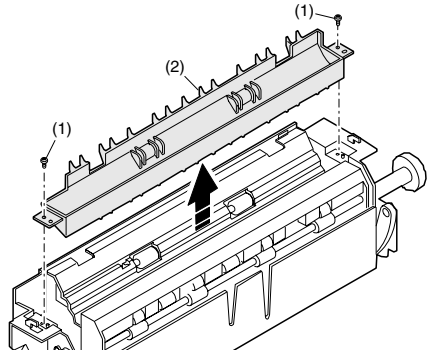

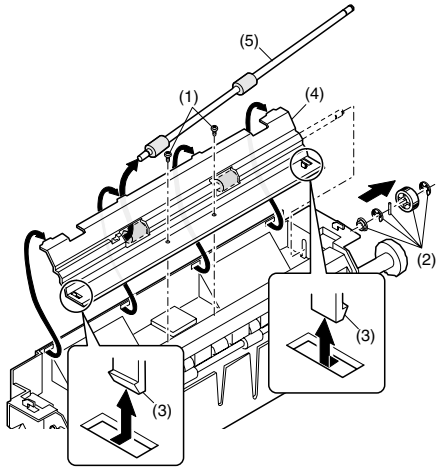

F.Paper exit roller

Assembly: Insert the spring pin so that the waveform (A) of the spring pin faces in the longitudinal direction of the paper exit drive gear long hole (B).<R>Be sure to insert two ribs (C) into the groove (D).

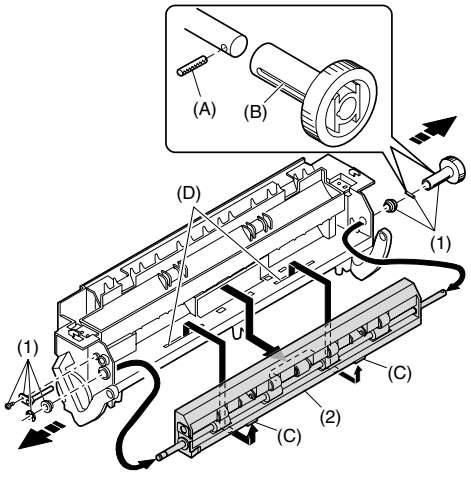

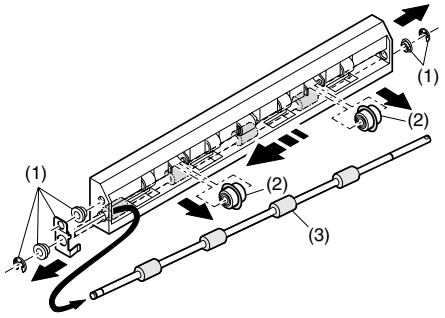

G.Paper exit interface P.W.B.

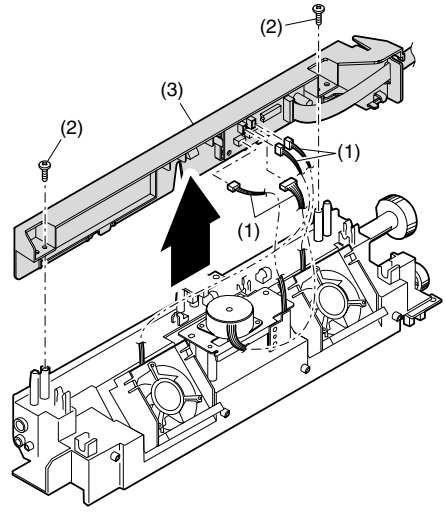

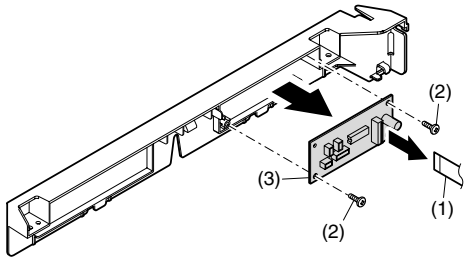

5.MCU

No.	Content
A	MCU disassembly

A.MCU disassembly

Note: When replacing the MCU PWB, be sure to replace the EEPROM of the MCU PWB to be replaced.

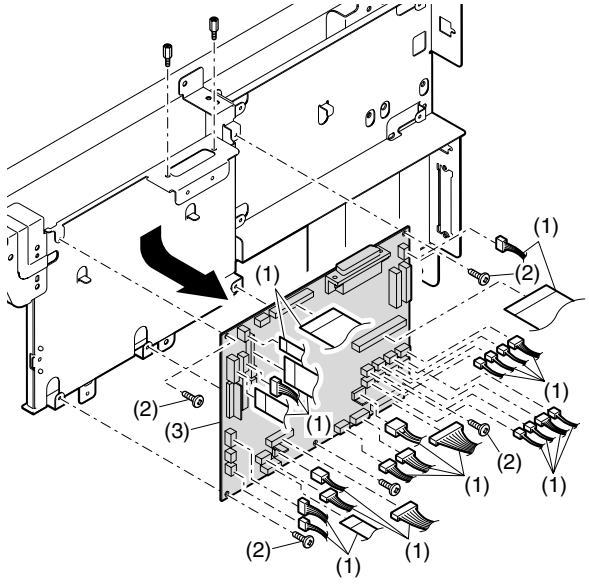

Note: When replacing the MCU PWB, be sure to restore the original jumper conditions.

6.Optical frame unit

No.	Content
A	Optical frame unit

A.Optical frame unit

Installation: Install the optical unit in the sequence shown above.

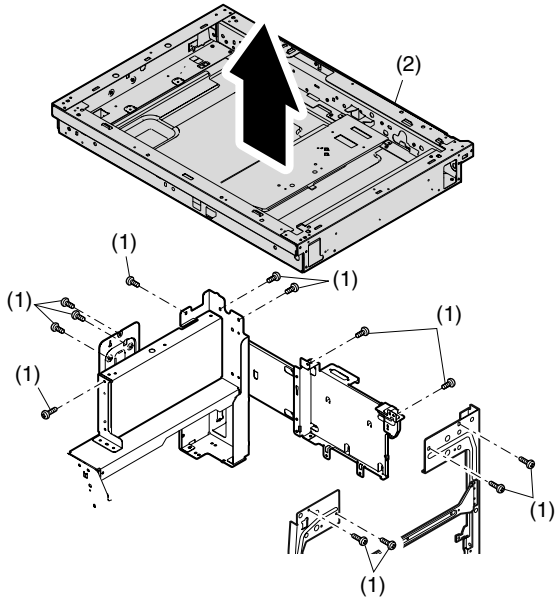

7.LSU

No.	Content
A	LSU unit

A.LSU unit

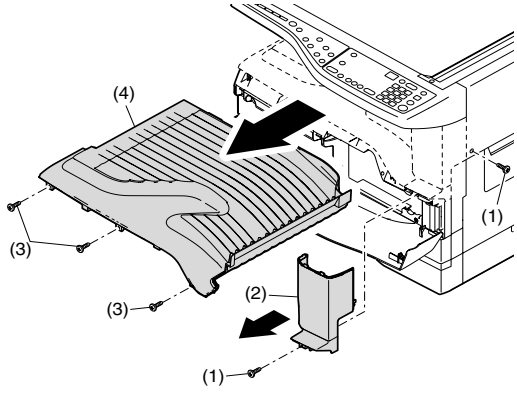

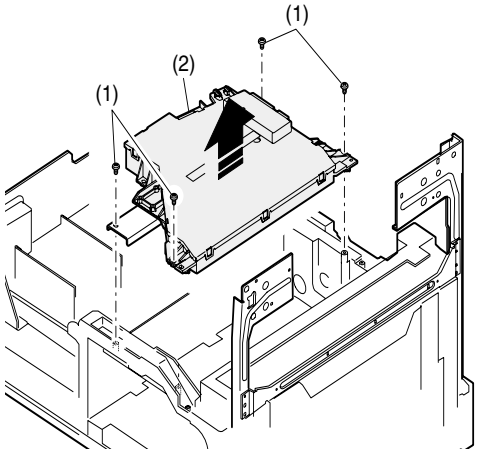

Note: Do not disassemble the LSU.

Note: When replacing the LSU, be careful not to touch the dust-shield glass.

Adjustment:

•Image lead edge position adjustment

•Image left edge position adjustment

•Paper off-center adjustment

•Size of the screwdriver for removing the LSU

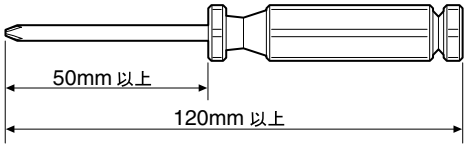

8. Tray paper feed section/Paper transport section

No.	Content
A	Interface frame unit
B	Drive unit
C	Solenoid (paper feed solenoid,, resist roller solenoid)
D	Resist roller clutch / Resist roller
E	Paper feed clutch/Paper feed roller (Semi-circular roller)

A.Intermittent frame unit

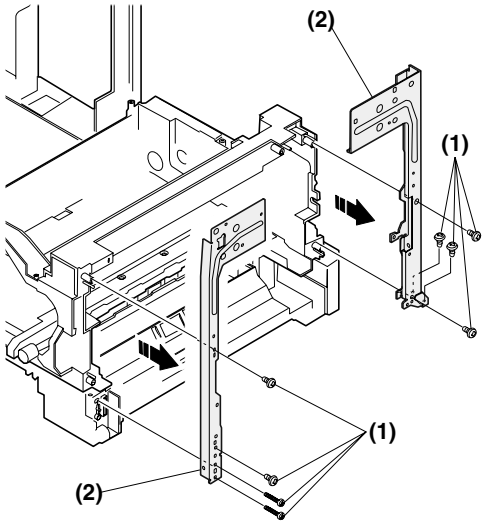

Assembly: Do not miss the door lock pawl.

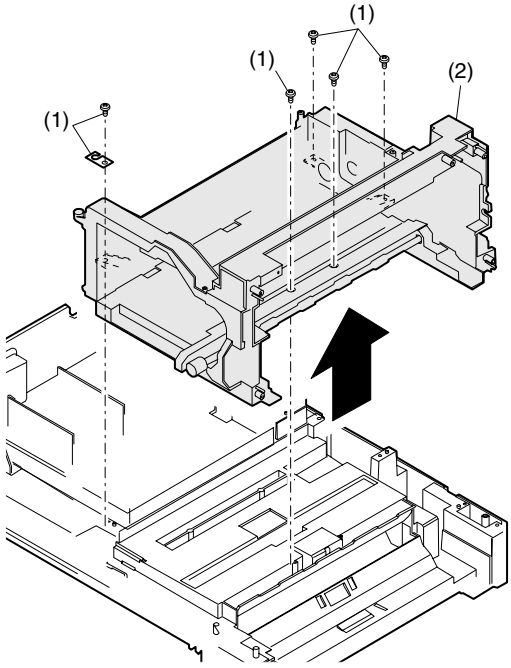

B.Drive unit

Assembly: Move down the clutch pawl as shown below, and avoid the clutch and install.

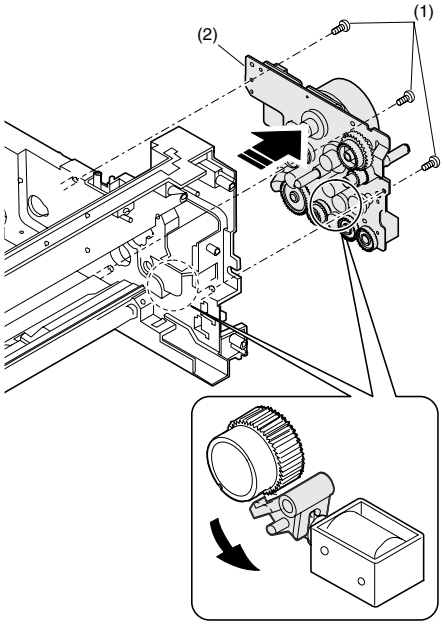

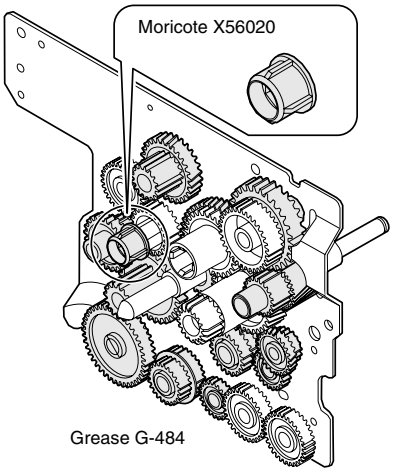

C. Solenoid (paper feed solenoid, resist roller solenoid)

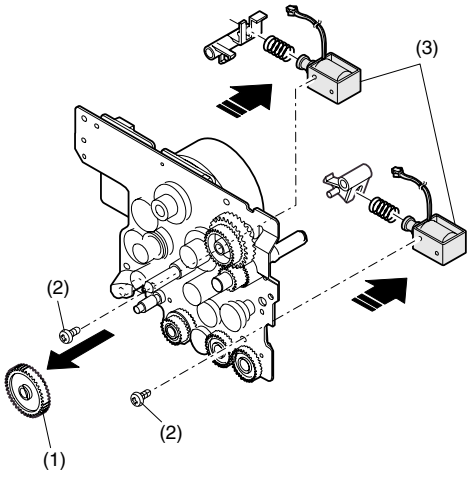

D. Resist roller clutch/Resist roller

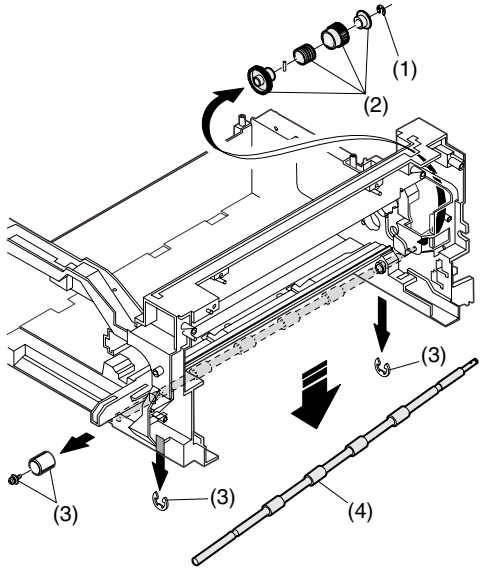

E. Paper feed clutch/Paper feed roller (Semi-circular roller)

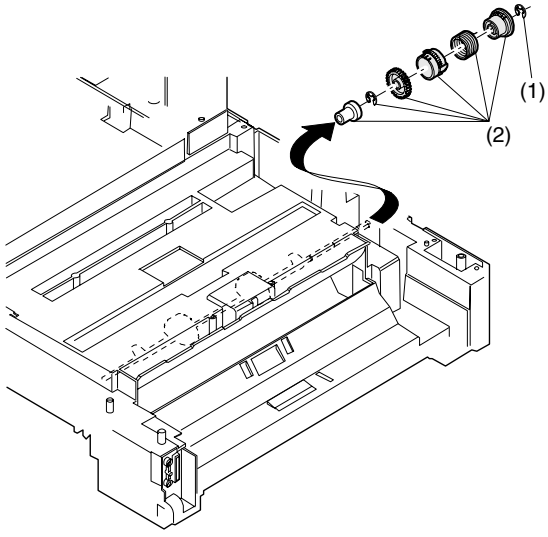

9.Manual multi paper feed section

No.	Content
A	Manual transport roller/Manual paper feed roller
B	Manual multi paper feed
C	Manual feed solenoid
D	Manual transport clutch
E	Pressure plate unit
F	Manual paper feed clutch

A.Manual transport roller/Manual paper feed roller

Note: Push the lever at the right edge of the multi frame cover to the right upper side and remove it.

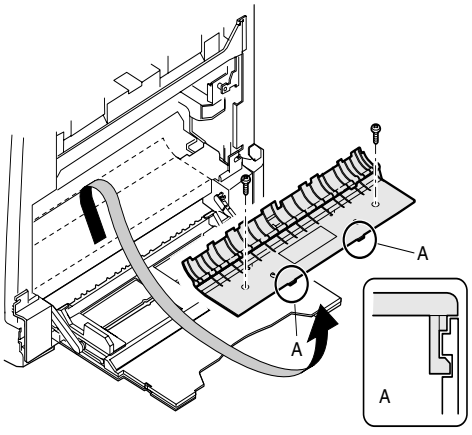

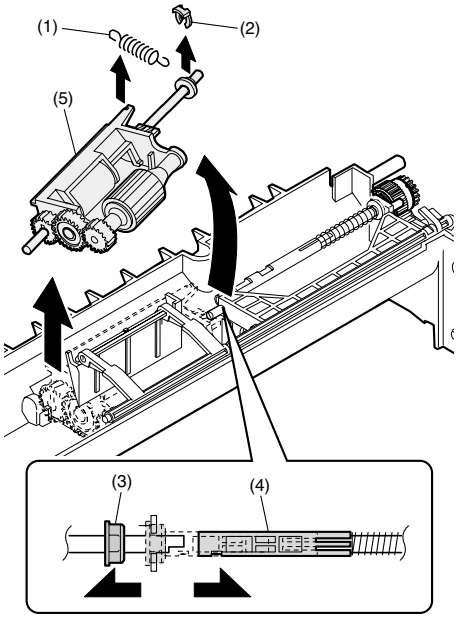

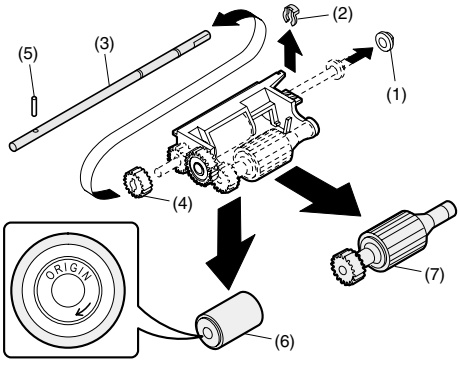

Installation: Be careful of the installing direction of the manual transport roller (6)

B. Manual multi paper feed

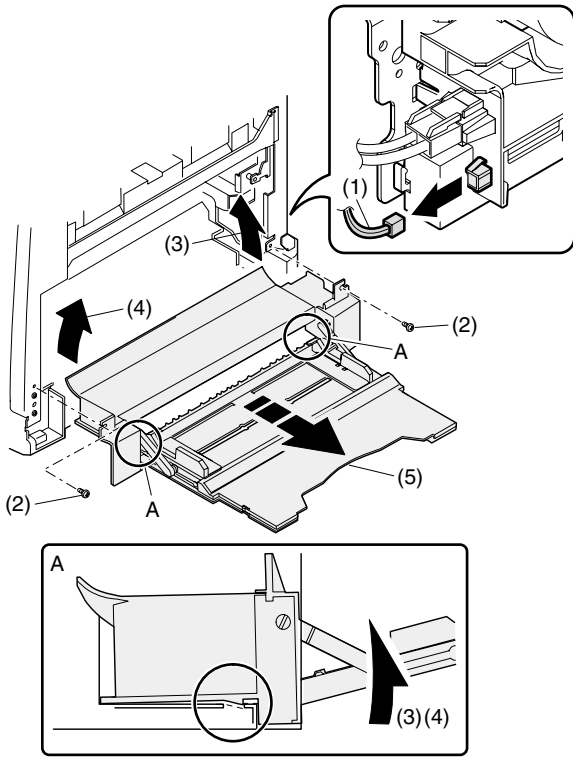

C. Manual feed solenoid

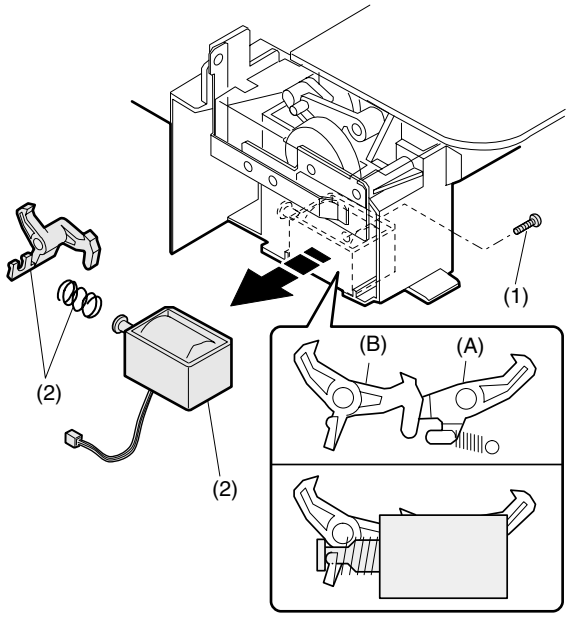

D. Manual transport clutch

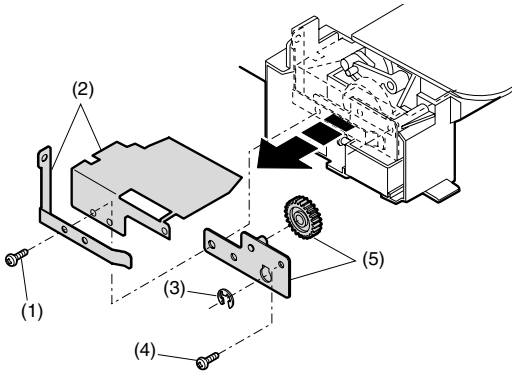

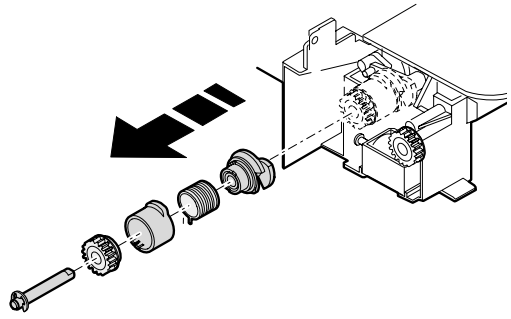

E.Pressure plate unit

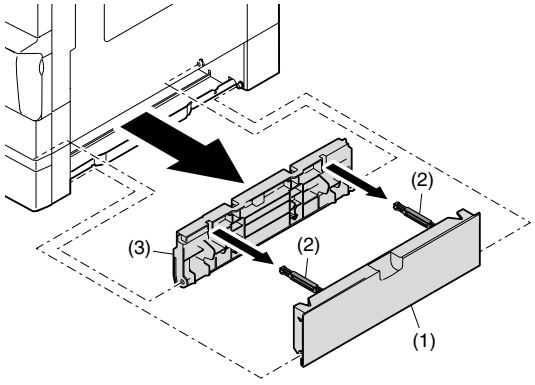

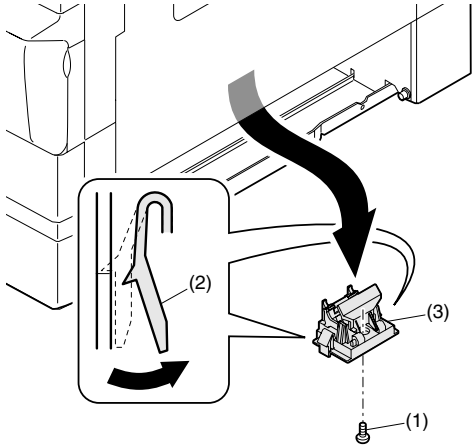

F. Manual paper feed clutch

Note: Push the lever at the right edge of the multi frame cover to the right upper side and remove it.

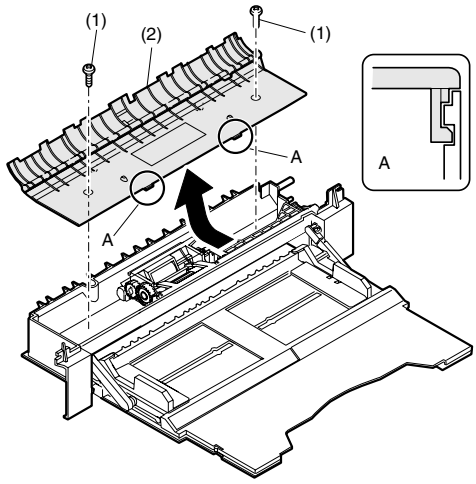

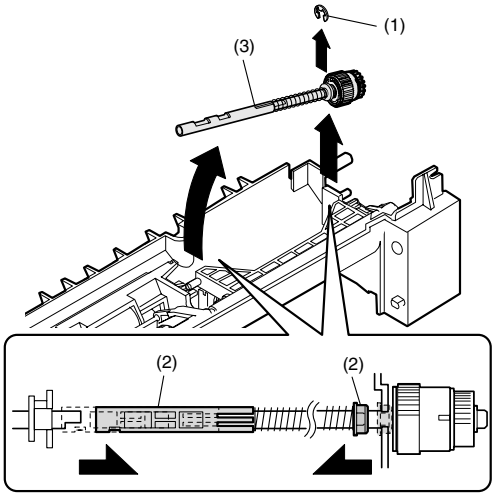

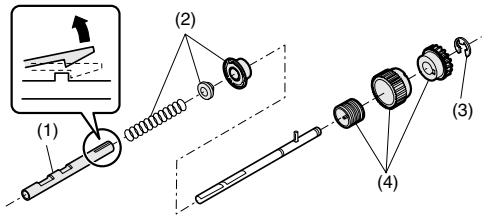

10.Power section

No.	Content
A	Power unit
B	Power fan
C	High voltage P.W.B.
D	Power P.W.B.
E	Power switch

A.Power unit

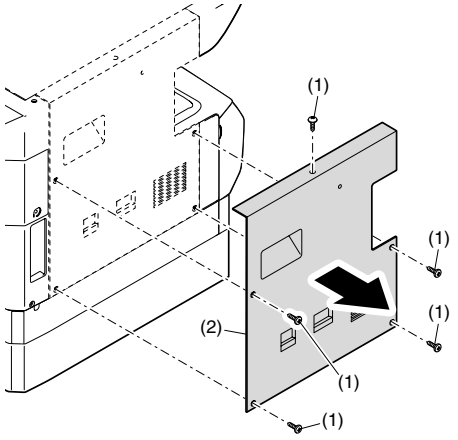

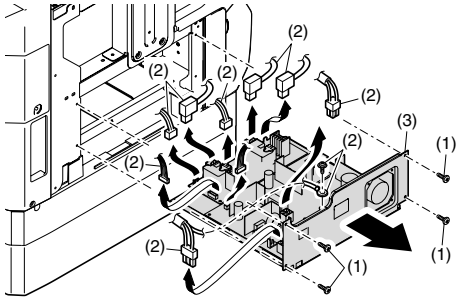

B. Power fan

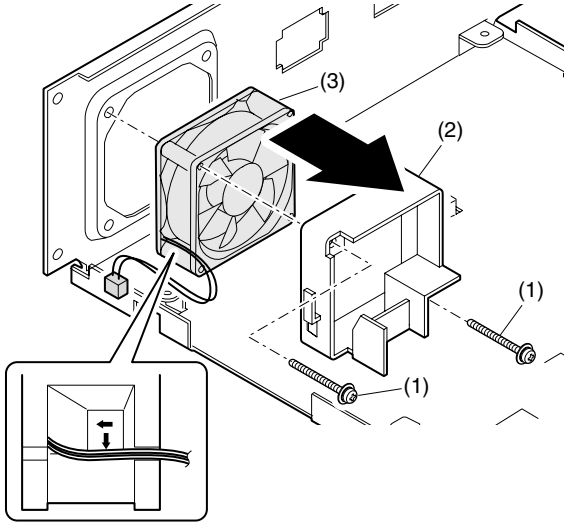

C. High voltage P.W.B.

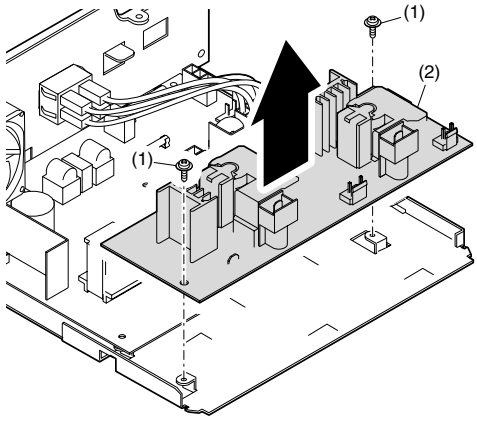

D. Power P.W.B.

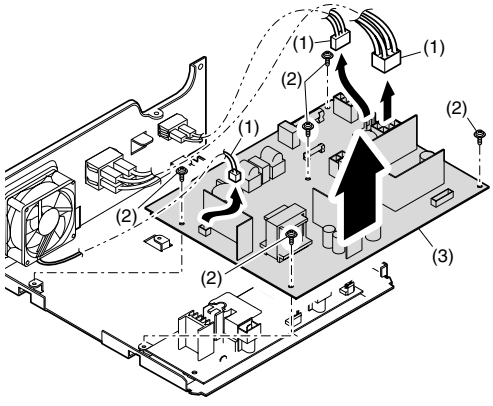

E. Power switch

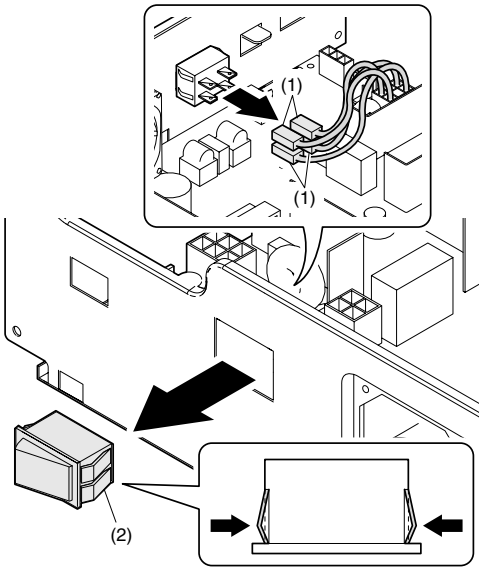

11.Developing section

No.	Contents
A	Developing box
B	Developing doctor
C	MG roller

A.Developing box

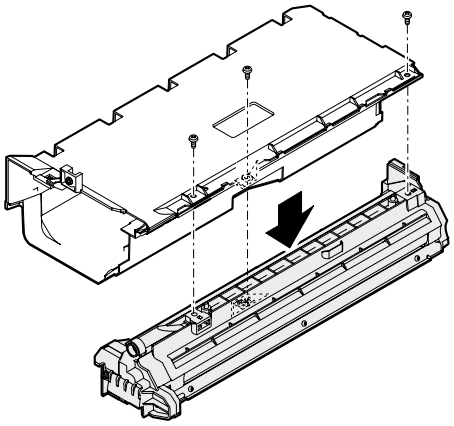

B.Developing doctor

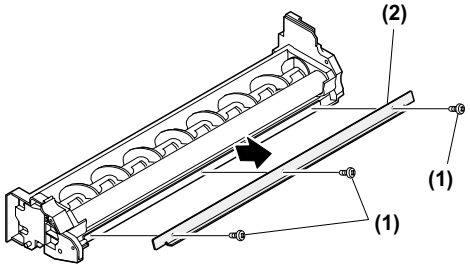

Adjustment: Developing doctor gap adjustment

C.MG roller

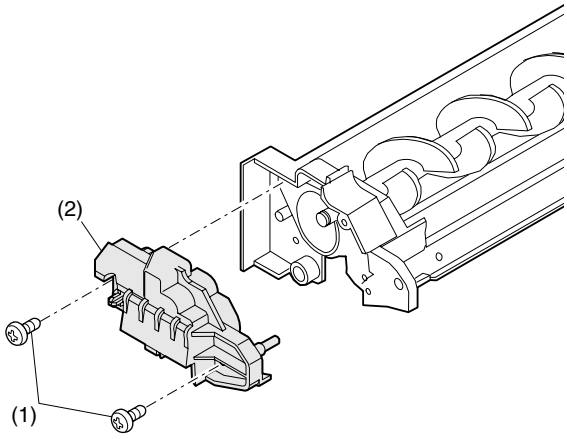

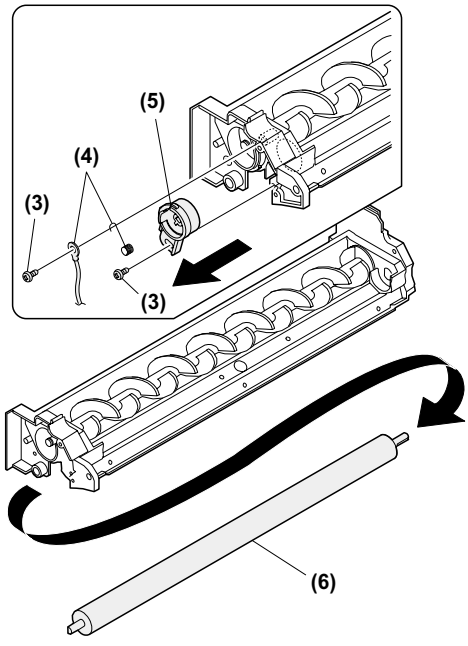

Adjustment: MG roller main pole position adjustment

Note: Attach it to fit with the attachment reference when replacing the DV blade.

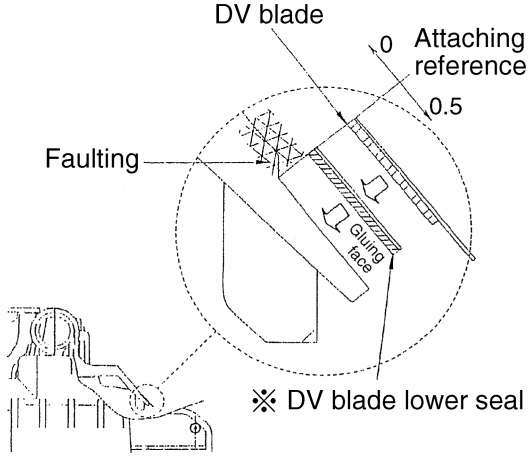

12.Process section

No.	Contents
A	Drum unit
B	Main charger unit
C	Cleaning blade

A.Drum unit

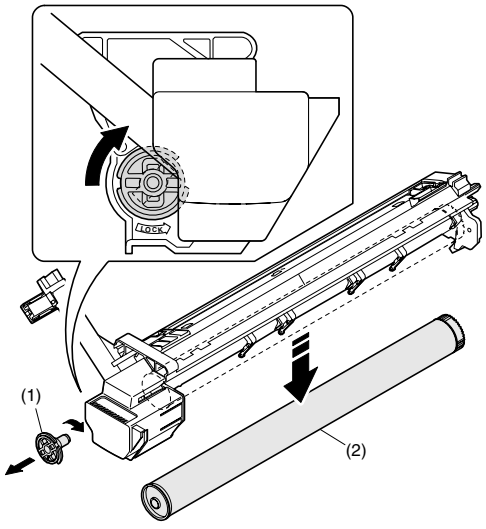

B. Main charger unit

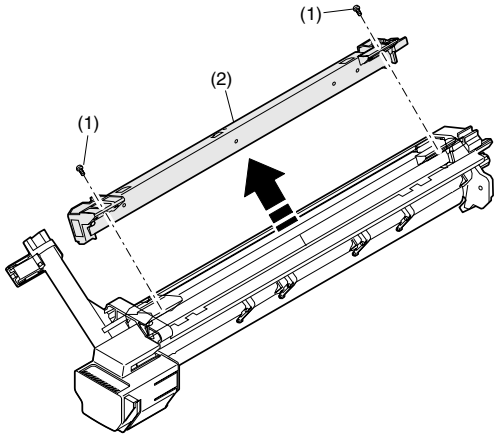

C.Cleaning blade

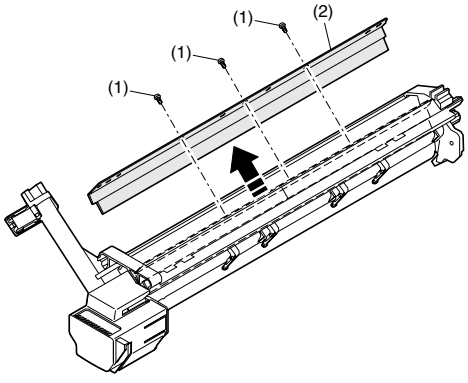

13.Others

No.	Contents
A	Operation P.W.B.
B	Tray interface P.W.B.
C	2nd tray paper entry sensor / Paper empty sensor
D	2nd tray paper feed solenoid / Transport solenoid
E	2nd tray transport clutch
F	2nd tray transport roller
G	2nd tray paper feed clutch
H	2nd tray paper feed roller
I	Main motor
J	I/F P.W.B.
K	Paper entry sensor
L	Paper empty sensor
M	Paper feed roller

A. Operation P.W.B.

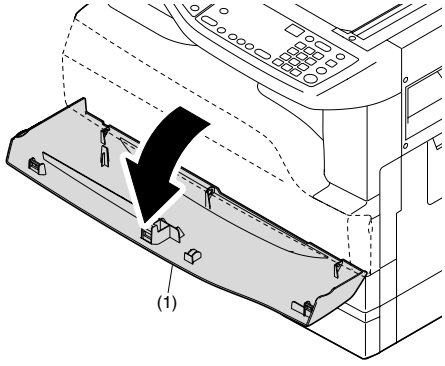

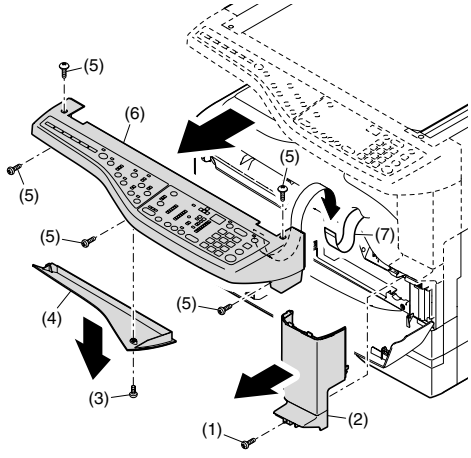

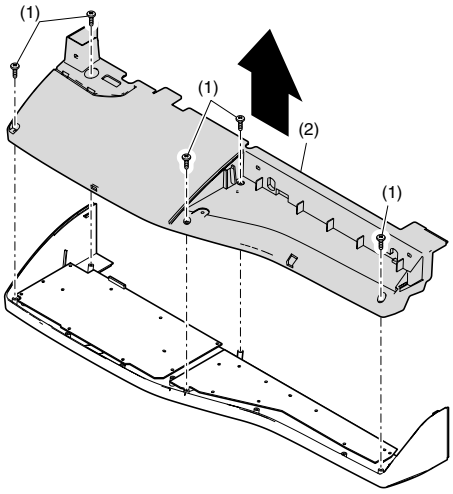

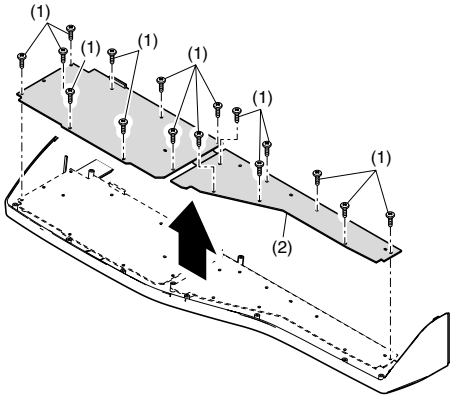

B. Tray interface P.W.B.

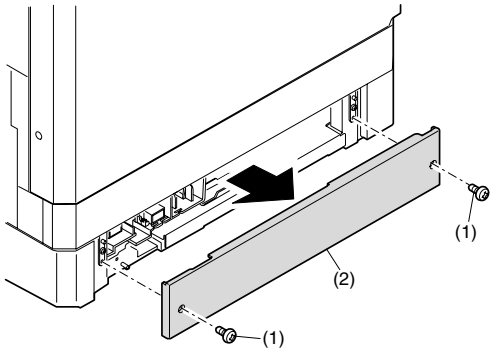

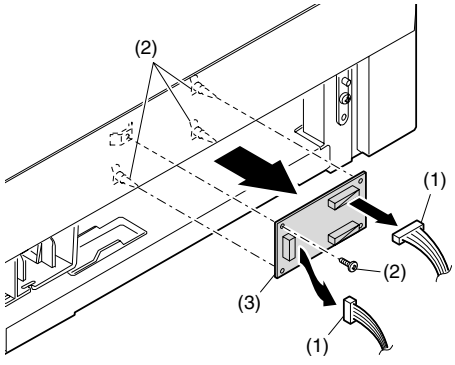

C. 2nd tray paper entry sensor / Paper empty sensor

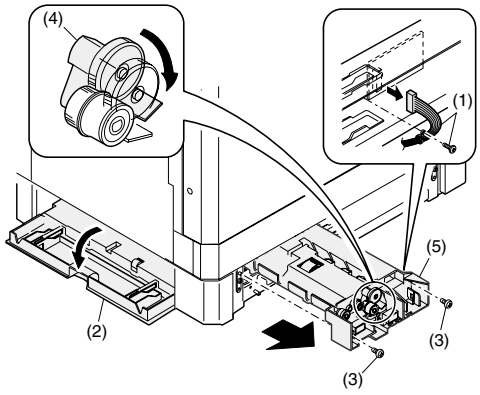

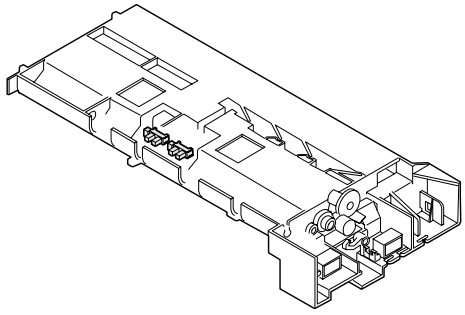

D. 2nd tray paper feed solenoid / Transport solenoid

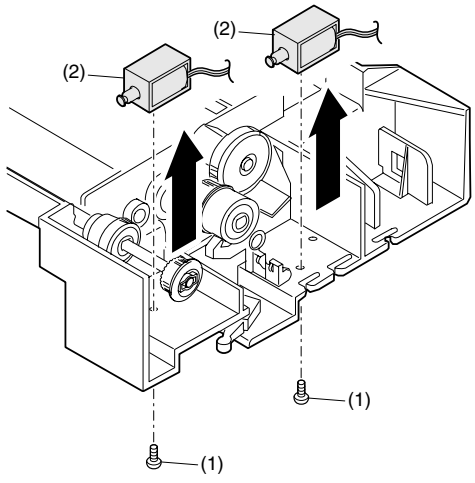

E.2nd tray transport clutch

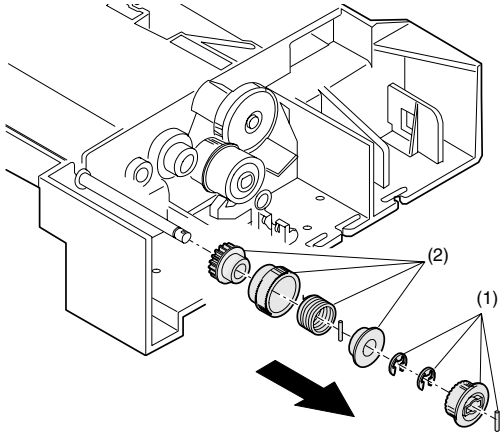

F. 2nd tray transport roller

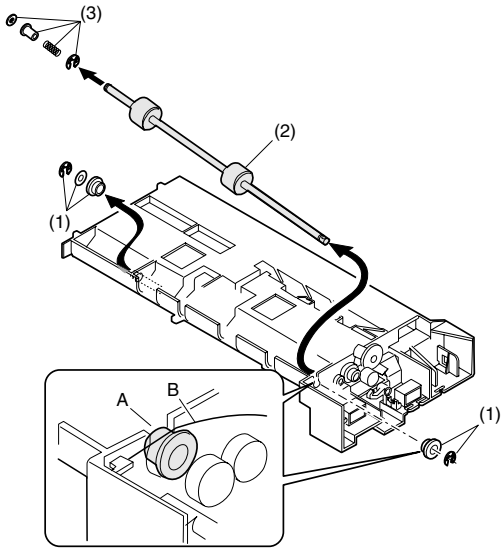

G. 2nd tray paper feed clutch

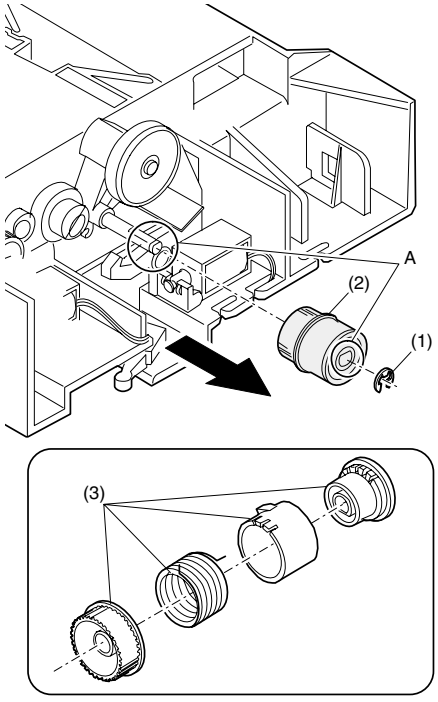

H. 2nd tray paper feed roller

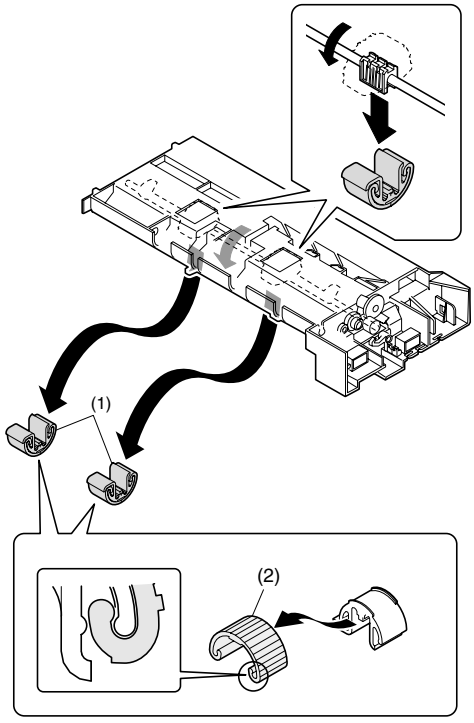

I. Main motor

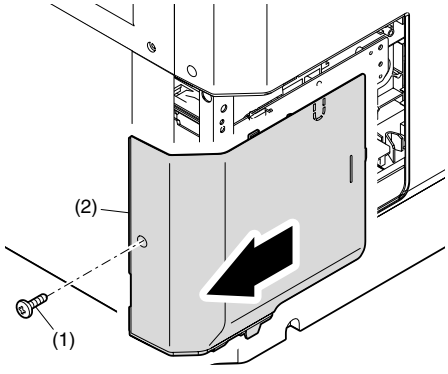

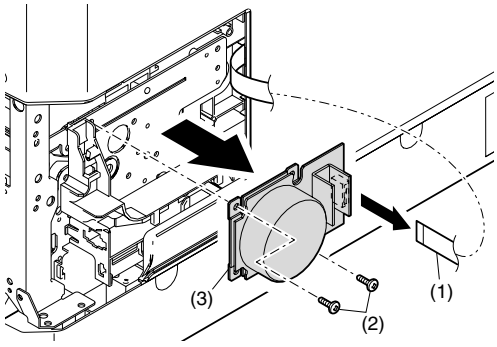

J. I/F P.W.B.

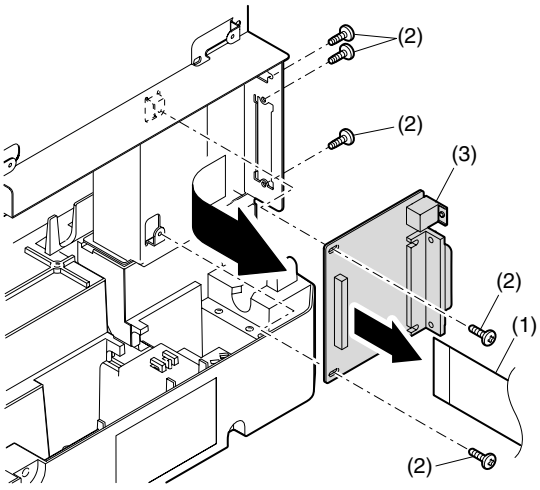

K. Paper entry sensor

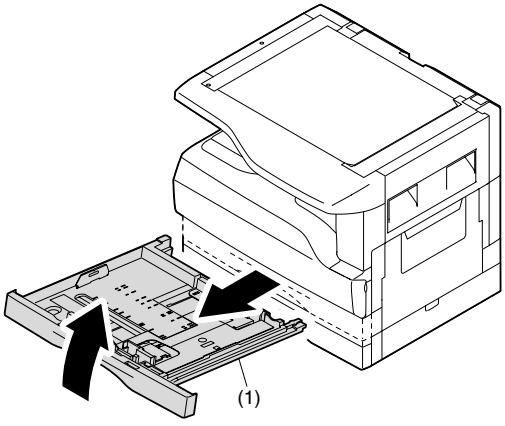

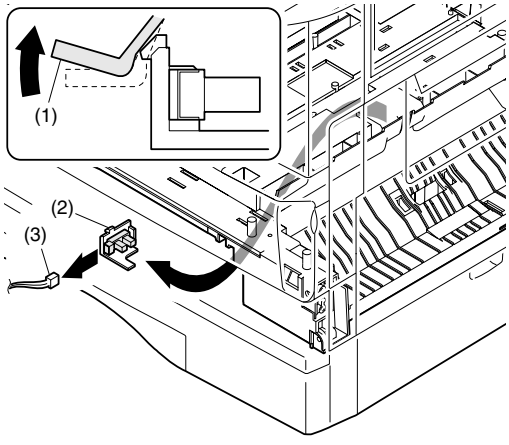

L. Paper empty sensor

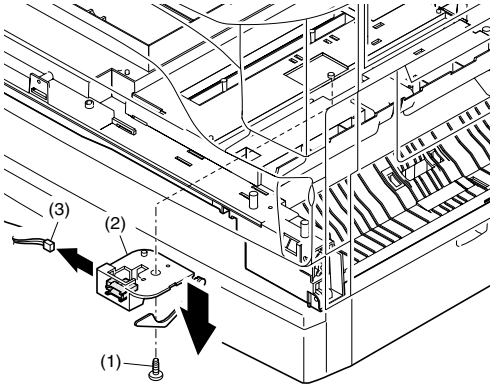

M. Paper feed roller

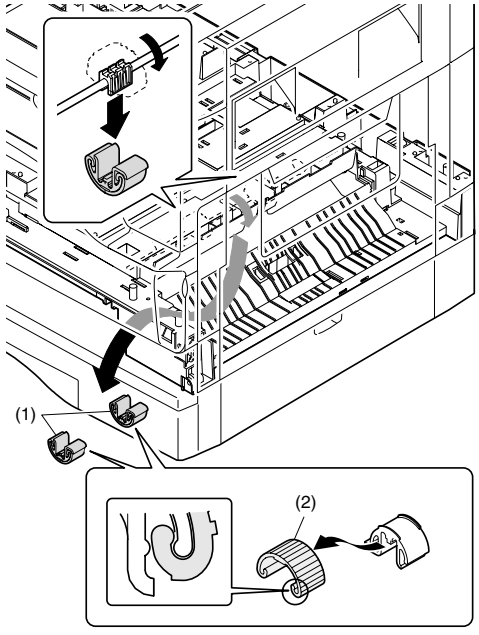

* When removing the paper feed roller, operate the paper feed clutch with SIM 6-1, and keep the paper feed roller down as shown in the figure above for operation.

[12]FLASH ROM VERSION UP PROCEDURE

1.Preparation

Write the download data (the file with the extension dwl) to the main body of AR-M205/M160.

Necessary files for download

- Maintenance.exe (Maintenance software)
- ProcPegasus.mdl
- ProcPegasus.ini
- ProcPegasus.fmt
- Pegasus.inf
- Usbscan.sys
- Download file:***.dwl

<Note>

- The Download file(***.dwl) and the like that are to be downloaded should be copied, in advance, into folders that have a maintenance program.
- When creating a folder for a maintenance tool in the PC, be sure that no lengthy folder name is included in the path.

(Example)
Incorrect c:\Maintenance Download Tool
Correct c:\Maintenance\Downtool

2.Download procedure

1) Main body side:
   Executable by performing the Service Simulation No. 49-01 (Flash Rom program-writing mode).
   (A word "d" appears on the operation panel to denote the download mode status.)

2) Connect the PC and the main body with the download cable (USB cable).
   (Be sure to use a USB cable for connection. USB2.0 of the AR-EB7 is not applicable.)

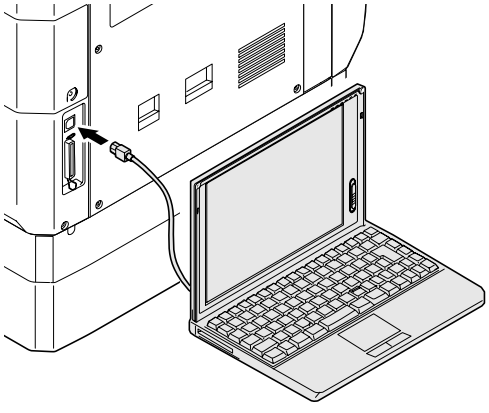

3) PC side:
   Boot the maintenance program. Select the model icon.

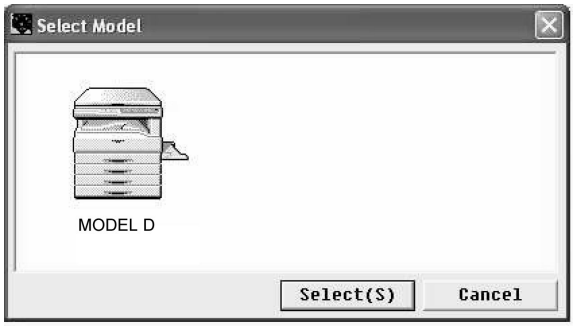

<Sample display>

4) PC side:
   Confirm that the "Simulation Command List" tree is displayed on the maintenance program.

5) PC side:
   When the message "the main body has not got started running" is displayed on the lowest area of the figure below after the "maintenance program" is started up, select the "File" and then "Reconnect" in the menu bar.

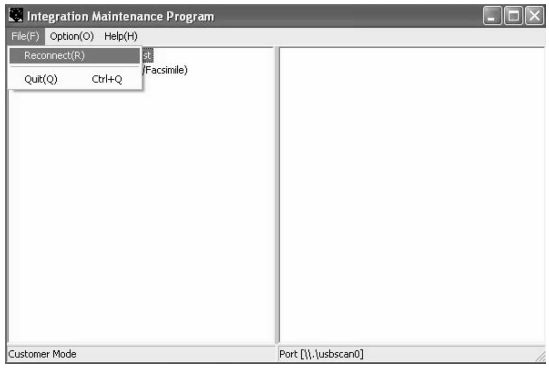

6) PC side:
   Confirm a tree is displayed under the "Special (MCU/IMC2/FAX)" on the maintenance program". (If no tree is displayed, confirm that the USB is connected and select the "Reconnect" (the above 5) again.)

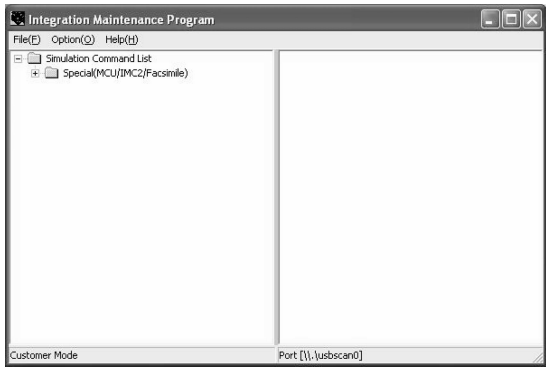

7) PC side:
Double click "Special (MCU/MCU2/FAX)" in the main tree item to develop the sub tree items, and double click "DWL Download" in the sub tree items.

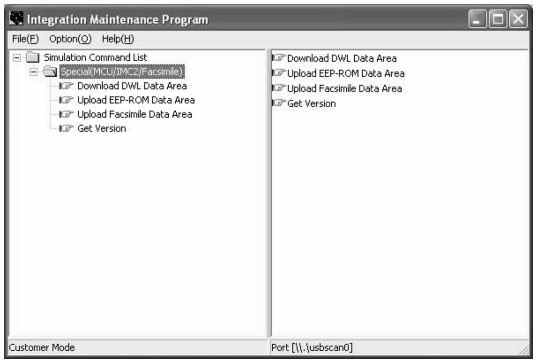

8) PC side:
Specify the download file (*.dwl).

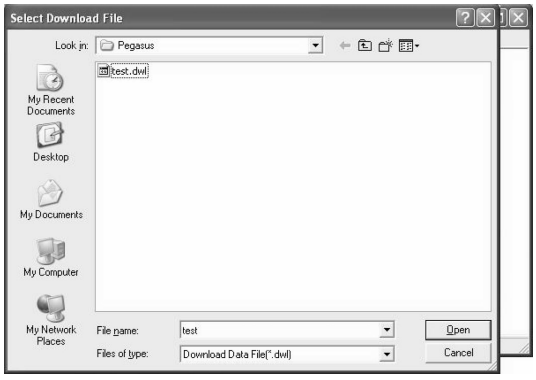

9) PC side:
The download file is specified, download is automatically performed.
The "Automatic paper selection" lamp and "Start" lamp will blink approximately 15 seconds after the download file is specified.

10) PC side:
When the message below is displayed, download is completed.
Completion message: DOWNLOAD COMPLETED

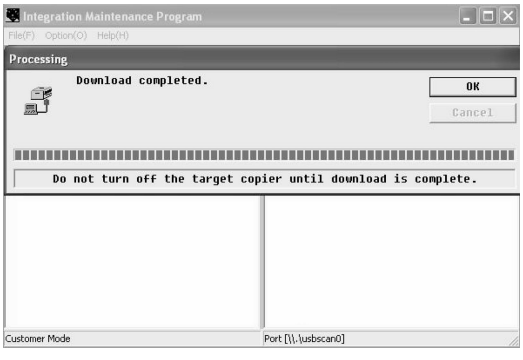

NOTE (Important):
•Be sure that the power is not turned off and the USB cable is not removed until the word "OFF" appears.

11) Main body side:
Wait until the word "OFF" appears on the operation panel.
The appearance of "OFF" indicates the completion of the download (writing into ROM).
Turn the power off.

12) After-process: Terminate the maintenance program, and turn on the power of the main body.

After the download (data transmission) has been completed, exit the software program. The USB cable can be removed at this point.

NOTE:
•For making a second connection with another machine, select the "File" and "Reconnect" in the menu bar on the maintenance program at the time of the USB being re-connected. Repeat the previous procedures from the above 5).

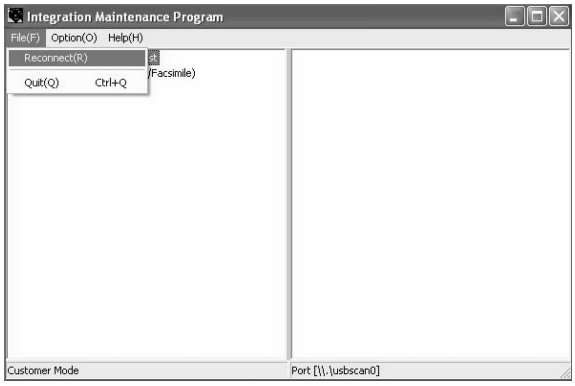

*** Forbidden actions while downloading (Important)**

Failure in the download concerned may not allow you to conduct the subsequent download procedures. Added care should be taken to avoid having the situation below arise while downloading.
•Switching off the main body of AR-M205/M160.
•Disconnecting the download cable (USB cable).

*** If the above inhibit item occurs during downloading:**

Turn OFF and ON the power.
1) If "d" (which means downloading) is displayed on the operation panel LED of the machine, perform downloading again.
2) If "d" (which means downloading) is not displayed on the operation panel LED of the machine, turn OFF the power, and press and hold the zoom (%) key and the "Department counter end" key and turn ON the power. If, then, "d" (which means downloading) is displayed on the operation panel LED of the machine, perform downloading again.
If "d" is still not displayed, the MCU must be replaced.

3. Installation procedure

A. USB joint maintenance program installation

The driver is installed by plug and play.

B. Installation procedure on Windows XP

1) Machine side:
Executable by performing the Service Simulation No. 49-01 (Flash Rom program-writing mode).
(A word "d" appears on the operation panel to denote the download mode status.)

2) Connect the machine and the PC with a USB cable.
(Be sure to use a USB cable for connection. USB2.0 of the AR-EB7 is not applicable.)

3) Check that the following display is shown.
Select "Install from a list or the specific location" and press the NEXT button.



4) Select "Include this location in the serch". If the retrieval area does not include the folder which includes the maintenance tool driver (Pegasus.inf), select "Browse"
If the folder path is properly shown, press the NEXT button to go to procedure 7).

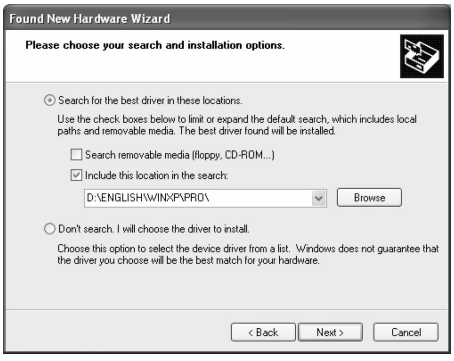

5) Select the folder which includes the maintenance tool driver (Pegasus.inf), and press the OK button.
(When the driver is included in the "C:\Pegasus" folder:)

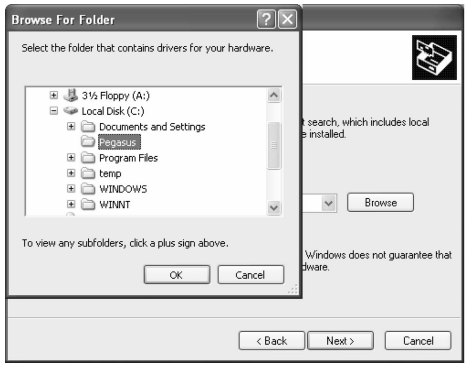

6) Check that the path to the folder which includes the maintenance tool driver (Pegasus.inf) is shown, and press the NEXT button.

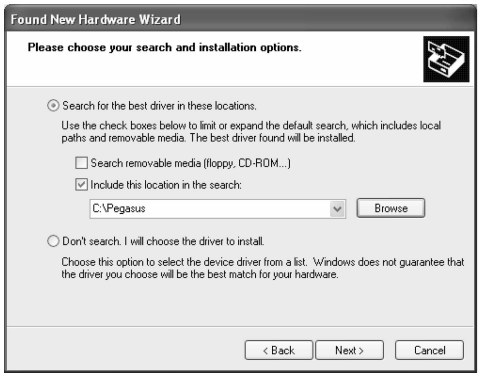

7)) Check that the following display is shown. Press the Continue Anyway button.



8) When installation is completed, the following display is shown.
Press the Finish button.



The installation procedure (on Windows XP) is completed with the above operation.

C. Installation procedure on Windows 2000

1) Machine side:
Executable by performing the Service Simulation No. 49-01 (Flash Rom program-writing mode).
(A word "d" appears on the operation panel to denote the download mode status.)

2) Connect the machine and the PC with a USB cable.
(Be sure to use a USB cable for connection. USB2.0 of the AR-EB7 is not applicable.)

3) Check that the new hardware search wizard is shown. Press the NEXT button.



4) Select "Serch for a suitable driver for my device" and press the NEXT button.

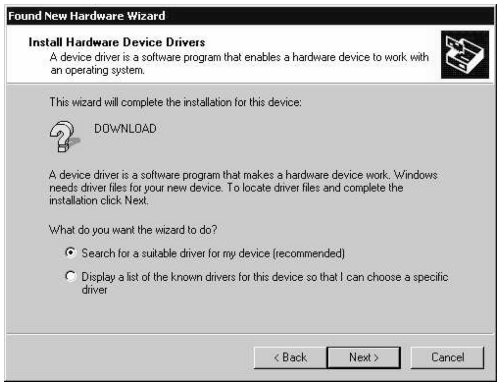

5) Select "Specify a location" and press the NEXT button.

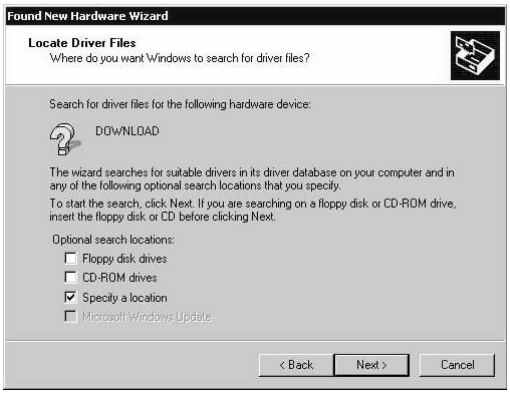

6) Press the "Browse" button. Specify the folder which includes the maintenance tool driver (Pegasus.inf)



7) Specify the folder which includes the maintenance tool driver (Pegasus.inf), and press the OPEN button.
Check that the path to the folder which includes the maintenance tool driver (Pegasus.inf) is properly displayed, and press the OK button.
(When the maintenance tool driver is included in the folder of "D:\Pegasus")

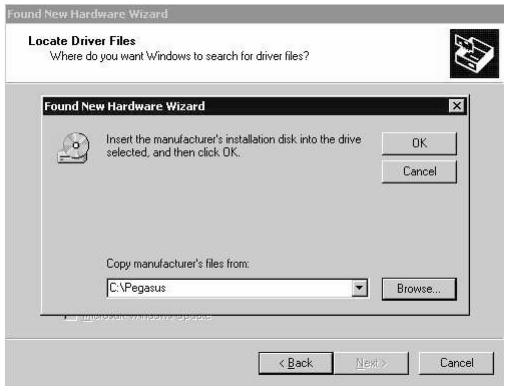

8) Press the NEXT button, and installation is started.

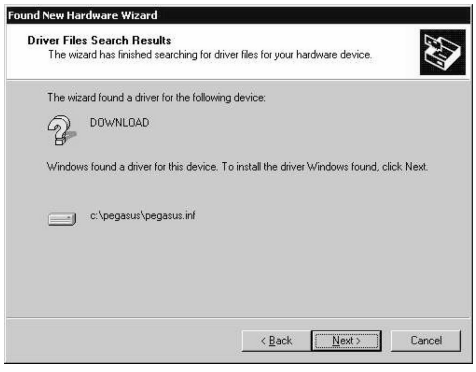

10) When installation is completed, the following display is shown.
Press the Finish button.



The installation procedure of the joint maintenance program on Windows 2000 is completed with the above operation.

[13] ELECTRICAL SECTION

1.Block diagram

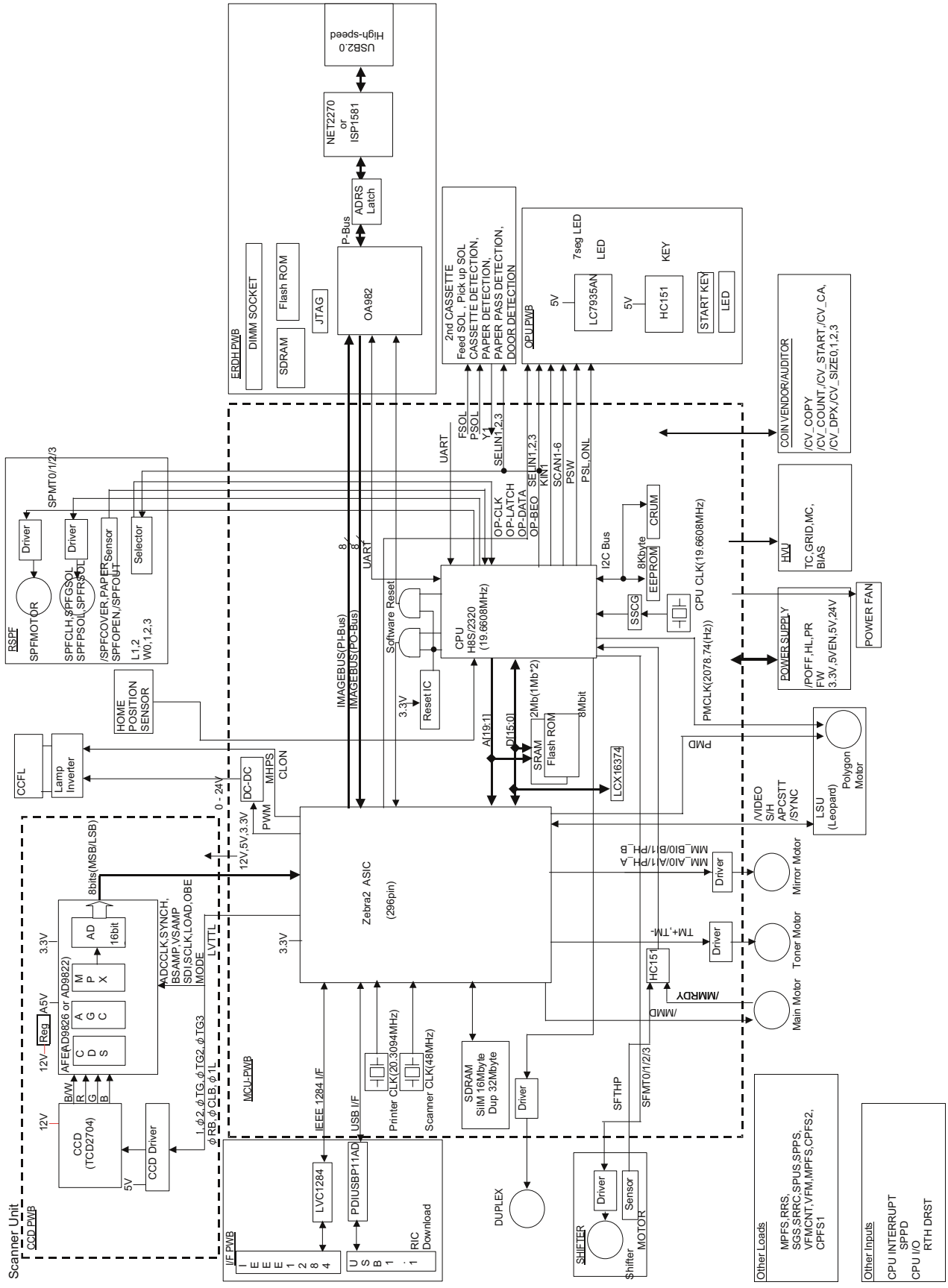

2.Circuit descriptions

A. Main PWB (MCU)

(1) Operation circuit

a. General

The operation circuit is composed of the key matrix circuit and the display matrix circuit.

b. Key matrix circuit

Select signals SELIN 1 - 3 are sent from the CPU of the MCU to the selector in the operation circuit.
The signals detecting OFF/ON of the key are sent to the CPU as KIN 1 - 2.

c. Display circuit

The display is controlled by sending the data signal from the CPU of the MCU, the clock signals, and the latch signals from the ASIC to the LED driver in the operation circuit.

(2) I/F circuit

a. General

The I/F circuit is composed of the USB driver and the IEEE1284 driver, and performs hard interface with the ASIC (MCU PWB).

b. USB circuit

With the USB driver, the differential signals (analog) of USB are converted into digital signal, which are sent to the ASIC. In the reverse procedure, interface between the ASIC (engine) and the host is performed.

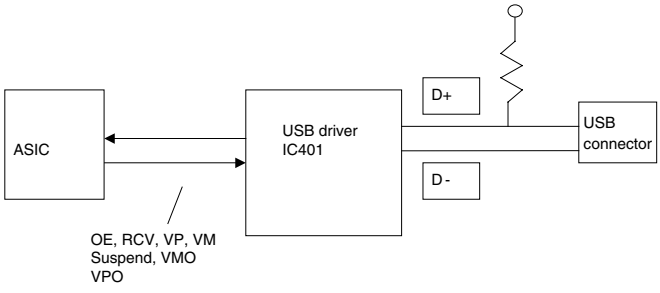

c. IEEE1284 circuit

The IEEE1284 driver is used to perform interface between the ASIC (engine) and the host.

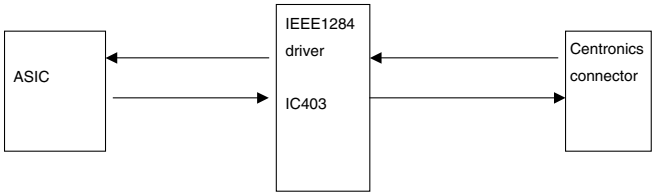

(3) Carriage unit

a. General

The carriage unit is provided with the CCD PWB, the inverter PWB, and the lamps. It scans documents and transfers AD-converted image data to the ASIC.

b. CCD PWB

The CCD on the CCD PWB employs the color image sensor uPD8861 of 5400 pixels x 3 lines, and scans documents in the main scanning direction in the resolution of 600dpi/US letter size.
Image data scanned by the CCD are inputted to the AFE (AD9826), and subject to CDS, amplification, and AD-conversion. Then digital data are outputted to the MCU PWB and to the ASIC, which performs image process of the digital data.

c. Lamp inverter PWB

The transformer is controlled by the lamp control signal from the MCU PWB. The transformer output controls lighting of the cool cathode ray tube.

B. DC power circuit

The DC power circuit directly rectifies the AC power and performs switching-conversion with the DC/DC converter circuit, and rectifies and smoothes again to generate a DC voltage.
The constant voltage control circuit is of +5VEN. +24V are of the non-control system by winding from the +5VEN winding. As shown in fig (1), +24V, and +5V are provided with the ON/OFF function by external signals. +3.3V is outputted from +5VEN to the regulator IC. Refer to the block diagram, fig (1).

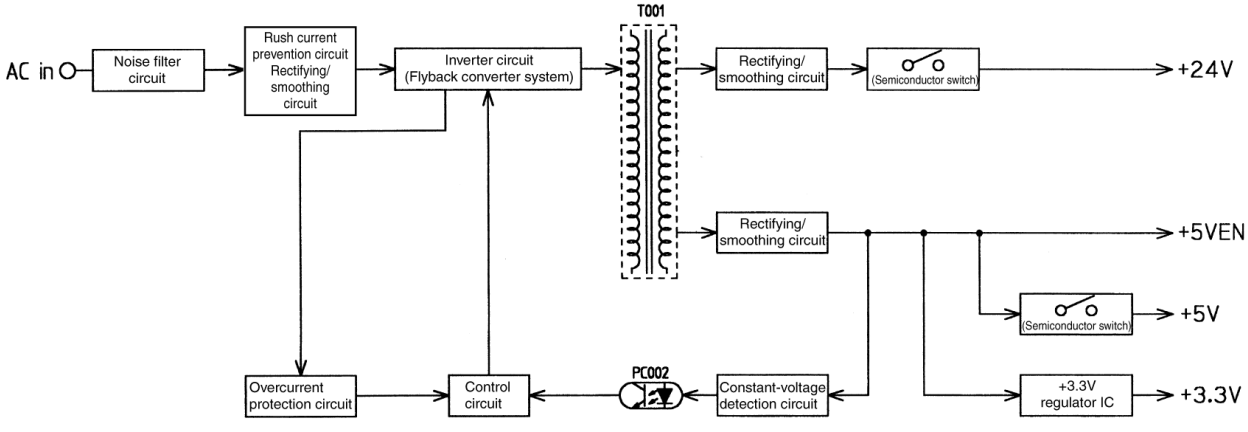

fig (1) Block diagram

(1) Noise filter circuit

The filter circuit is composed of L and C. It reduces common noises and normal mode noises generated from the AC line.
The common noise means that generated in each line for GND. Its noise component is delivered through C001, C003, and C007 to GND.
The normal noise means that overlapped in the AC line or the output line. It is attenuated by C002, L001, C006, and L002. Refer to fig (2).

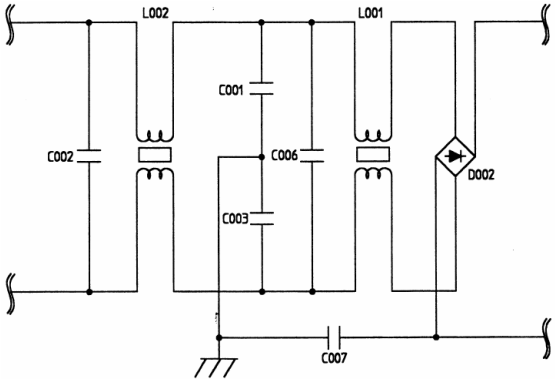

fig (2) Noise filter circuit

(2) Rush current prevention circuit and rectifying/ smoothing circuit

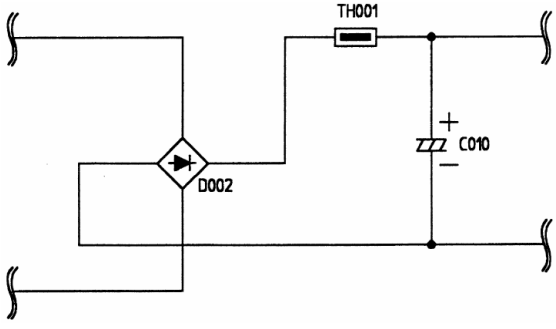

fig (3) Rush current prevention, rectifying/smoothing circuit

fig (3) Rush current prevention, rectifying/smoothing circuit Since the AC power is directly rectified, if there were not this rush current prevention resistor (TH001), an extremely large rush current would flow due to a charging current flowing through the smoothing capacitor C010 when turning on the power.
To prevent against this, the rush current prevention resistor TH001 is provided between the rectifying diode D002 and the smoothing diode C010, suppressing a rush current.
The rectifying/smoothing circuit rectifies a 50/60Hz AC voltage with the rectifying circuit, and smoothes it with the smoothing capacitor C010.

(3) Inverter and control circuit (Flyback converter system)

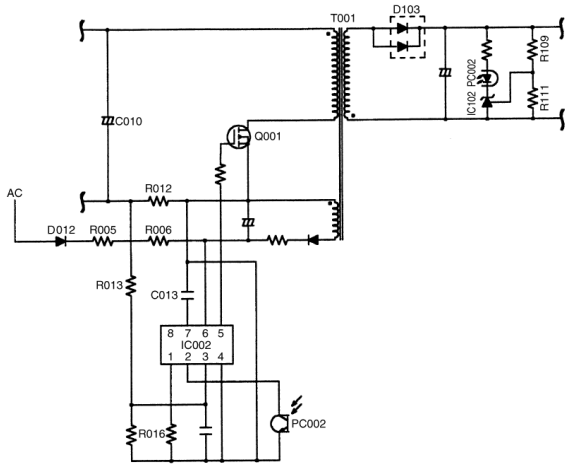

fig (4) Inverter and control circuit

This circuit is one-stone separate excitation DC-DC converter called flyback converter, as shown in fig (4).
When an electromotive voltage of IC is applied through D012, R005, and R006 to IC002, IC002 oscillates to conduct Q001.
As a result, a voltage is applied to the primary winding of the converter transformer (T001) and at the same time a voltage is generated in the driving winding of IC002 to operate IC002. Then IC002 turns ON/OFF Q001 at the frequency of about 70KHz determined by R016.
Under the ON state, the voltage in the secondary winding is reversed to the diode D103 and no current flows through the secondary winding of T001.
Under the OFF state, the current flowing through the primary winding is in the same direction as the primary winding, conducting D103 and transmitting energy to the secondary winding. Refer to fig (4).

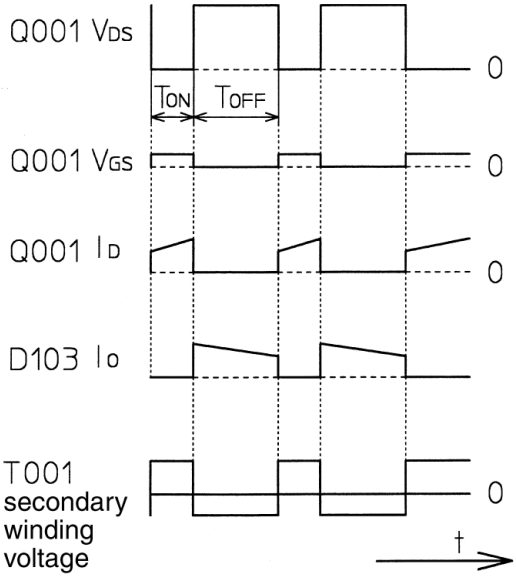

fig (5) Operation waveform of the flyback converter

The control circuit is subject to negative feedback from the secondary side as shown in fig (4). A photo coupler (PC002) is employed to insulate between the primary side and the secondary side to feed back the control signal to the primary side.
When the output voltage is increased by energy transmission from T001, the voltage detected by R109 and R111 is compared with the reference voltage of IC102. When it exceeds the reference voltage, the current flowing through IC102 (that is, the photo diode current of PC002) is increased and transmitted to the primary side. Then the potential at the feedback pin (2 pin) of IC102 is decreased to control Q001. Therefore, the change in the output voltage on the secondary side is passed through IC102 and PC002 to control Q001, stabilizing the output voltage.

(4) Overcurrent protection circuit (Primary side)

The inverter circuit of the primary side is connected with the current detection resistor R012. When an overcurrent occurs in the secondary side, the current flowing through the primary side inverter Q001 is increased. The current is detected by R012, and passed through R013 to IC002 overcurrent restricting pin (3 pin) to turn OFF Q002, shutting off all power. To resupply the power, turn off and on the power. Refer to fig (4).

(5) Rectifying/smoothing circuit (+5V)

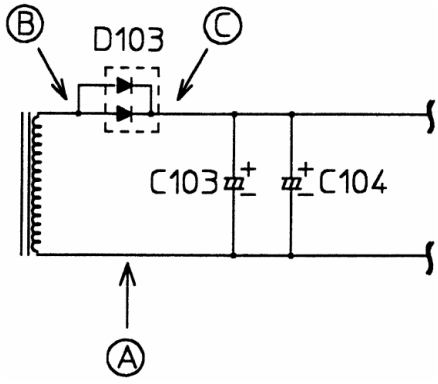

fig (6) Rectifying/smoothing circuit

The high frequency pulse generated by the inverter circuit is decreased by the converter transformer, rectified by the high frequency diode D103, and smoothed by C103 and C104.

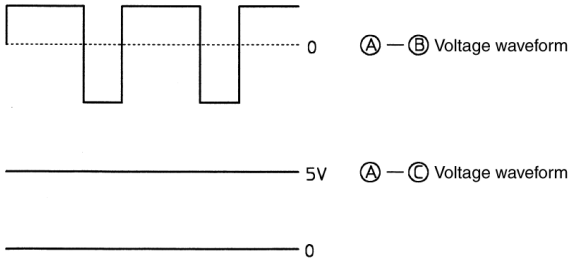

fig (7) +5V rectifying/smoothing circuit voltage waveform

3.Actual wiring diagram

ACTUAL WIRING DIAGRAM 1/7

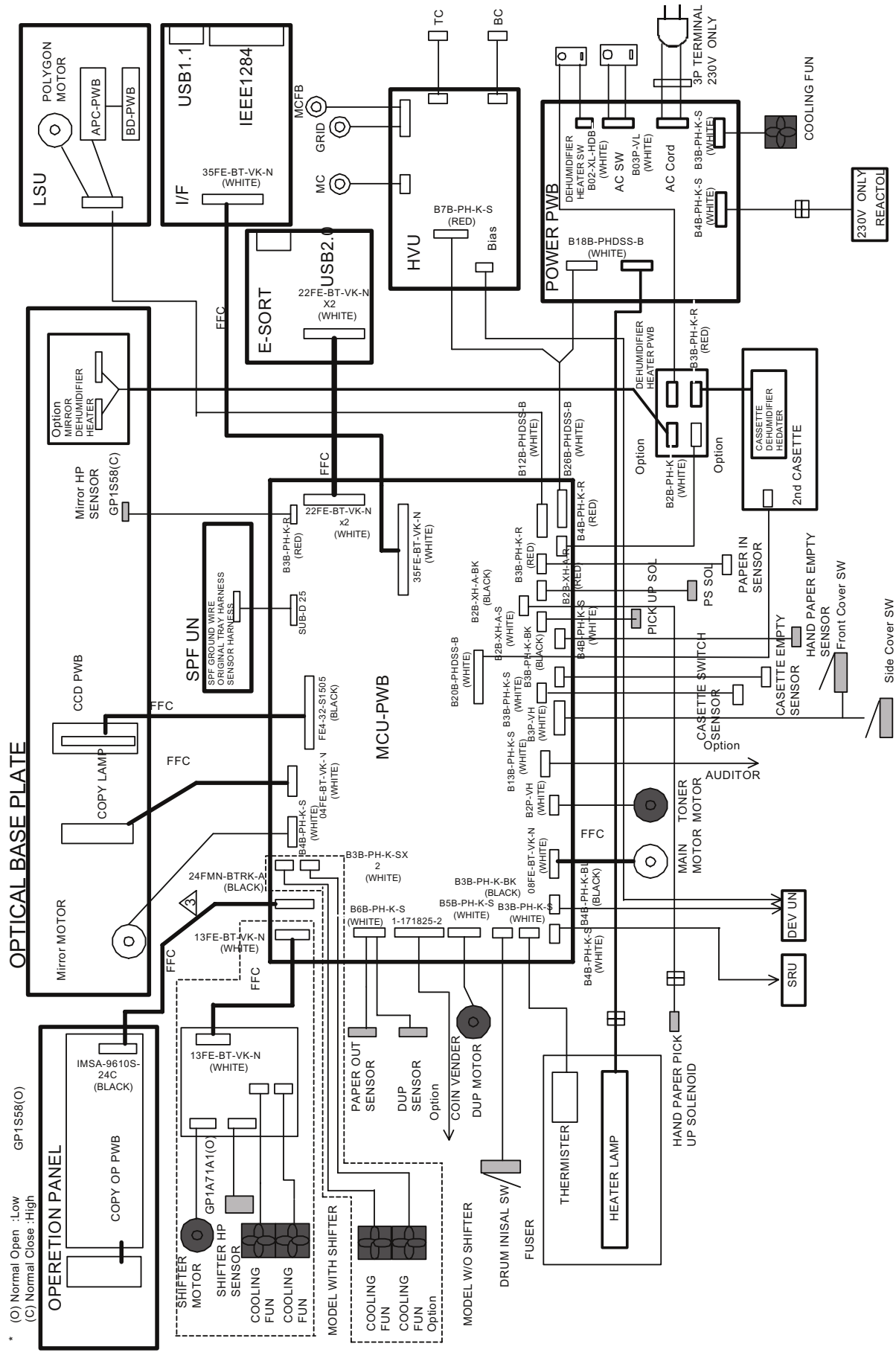

ACTUAL WIRING DIAGRAM 2/7

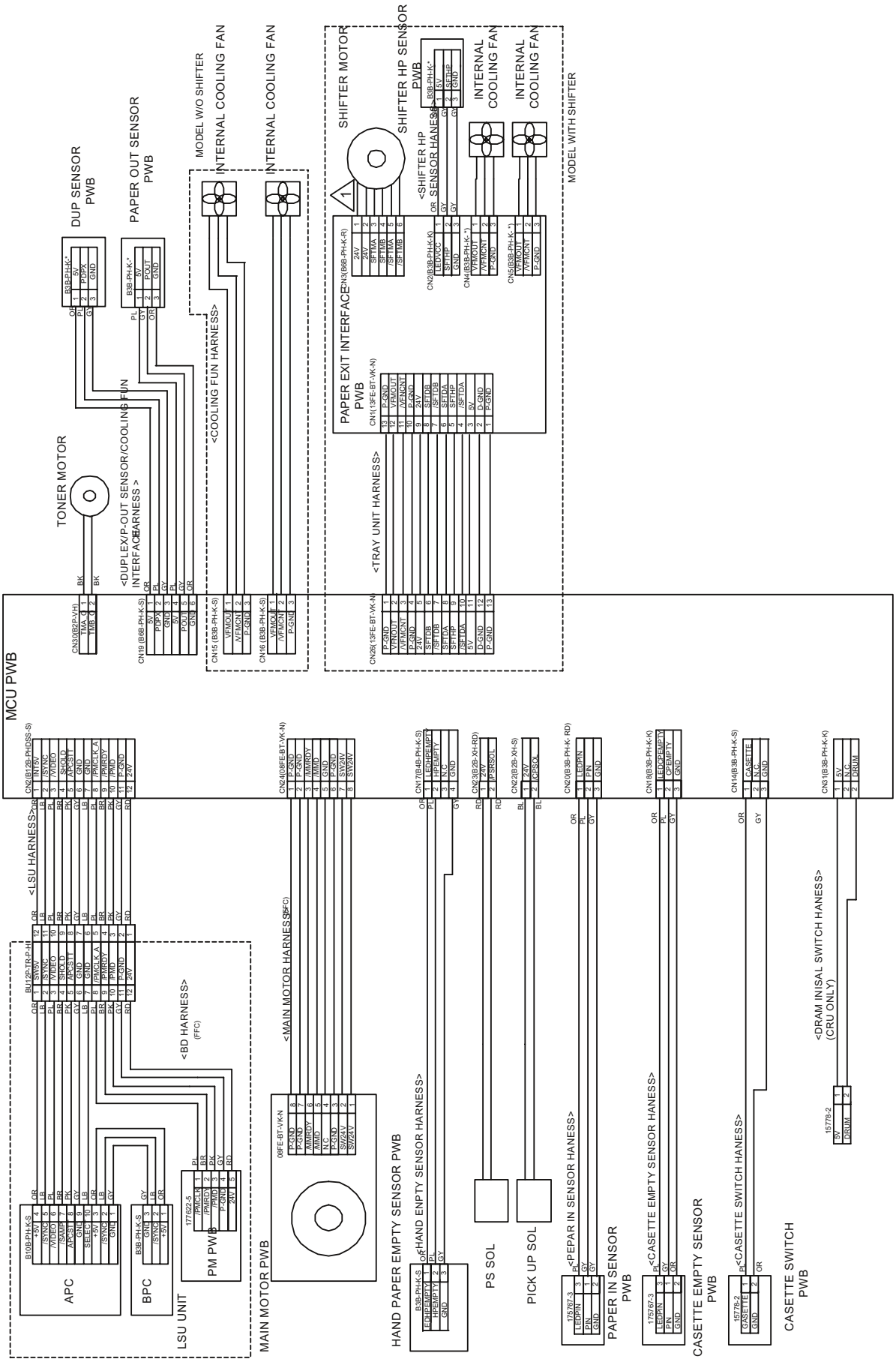

ACTUAL WIRING DIAGRAM 3/7

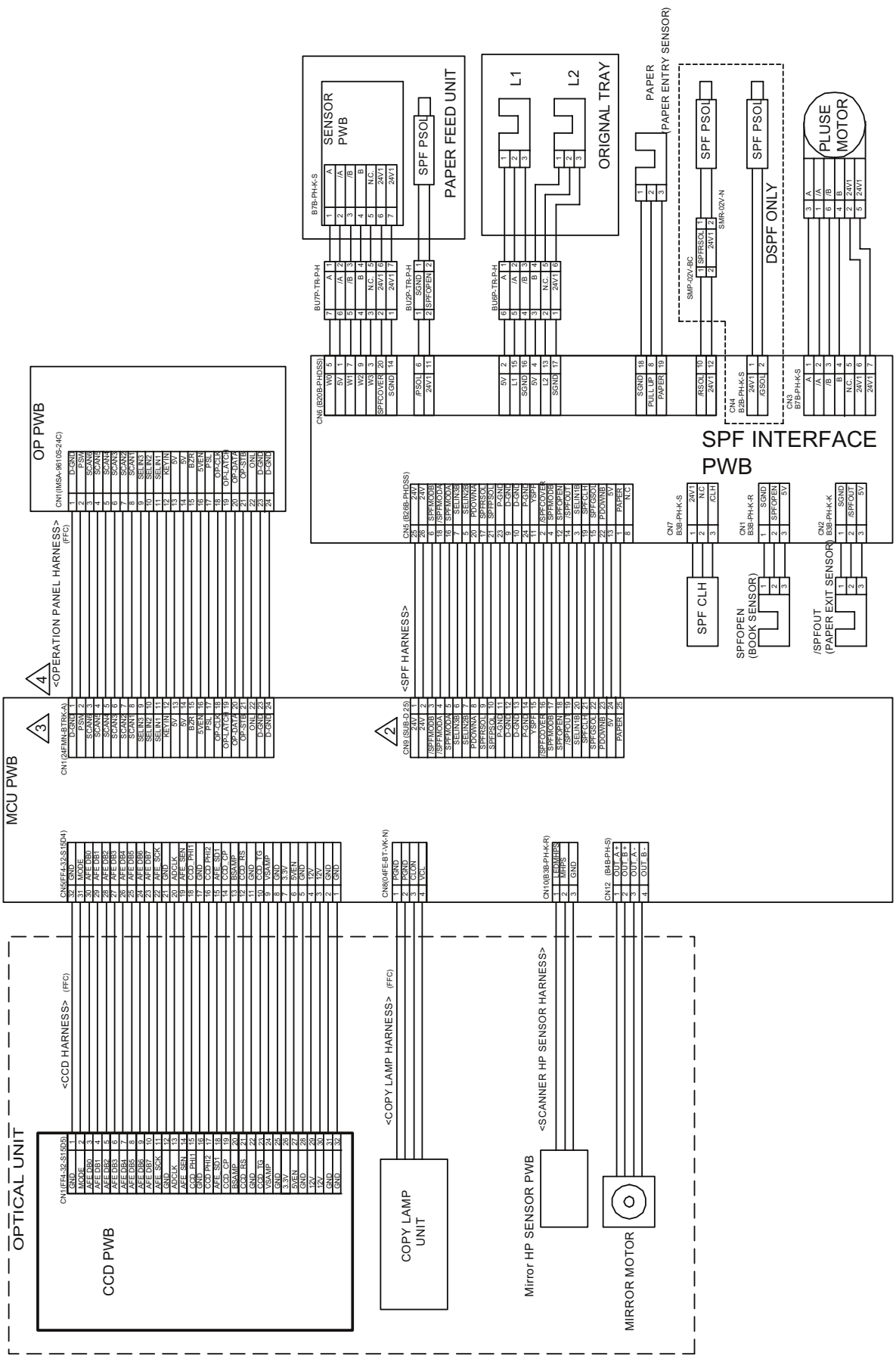

ACTUAL WIRING DIAGRAM 4/7

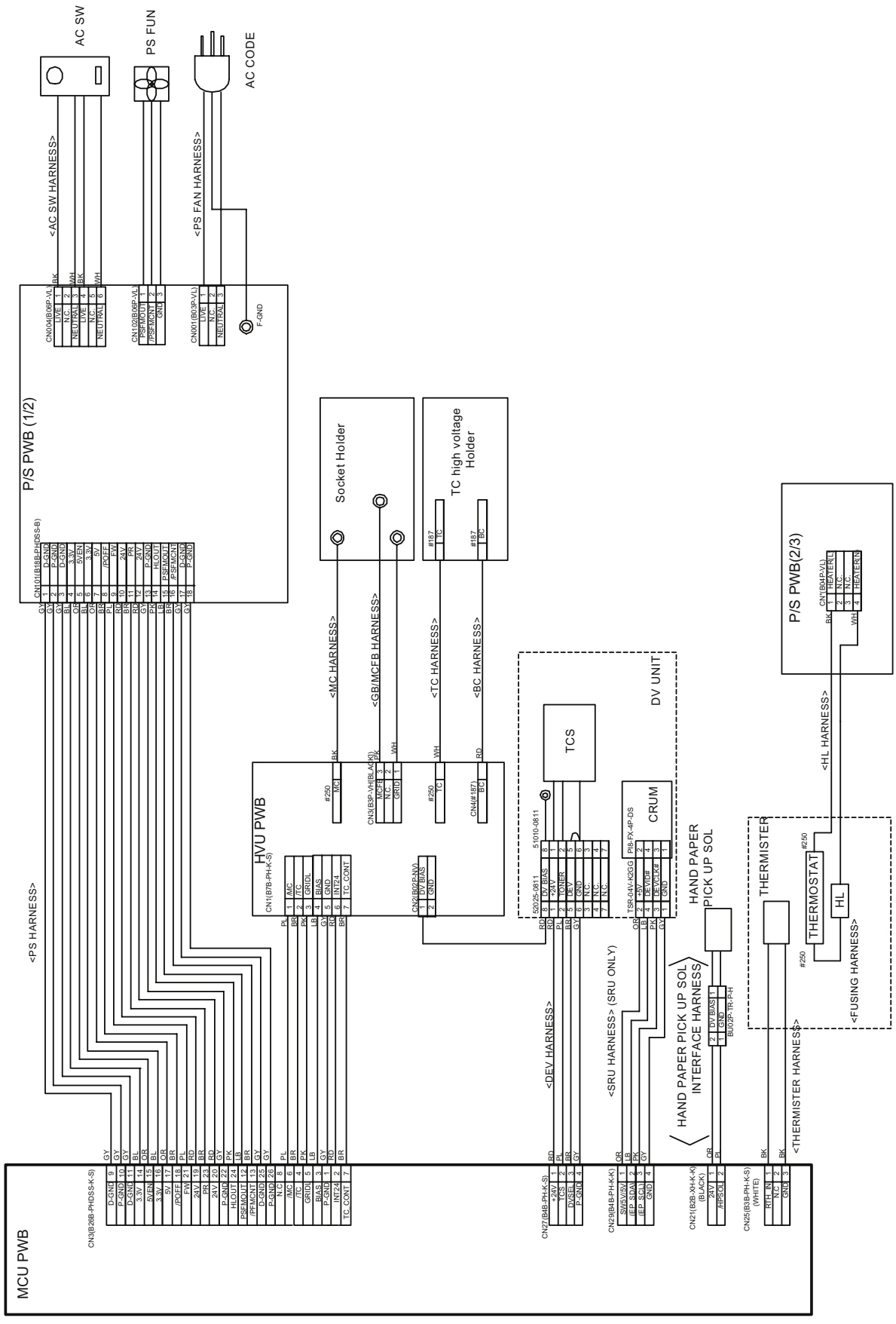

ACTUAL WIRING DIAGRAM 5/7

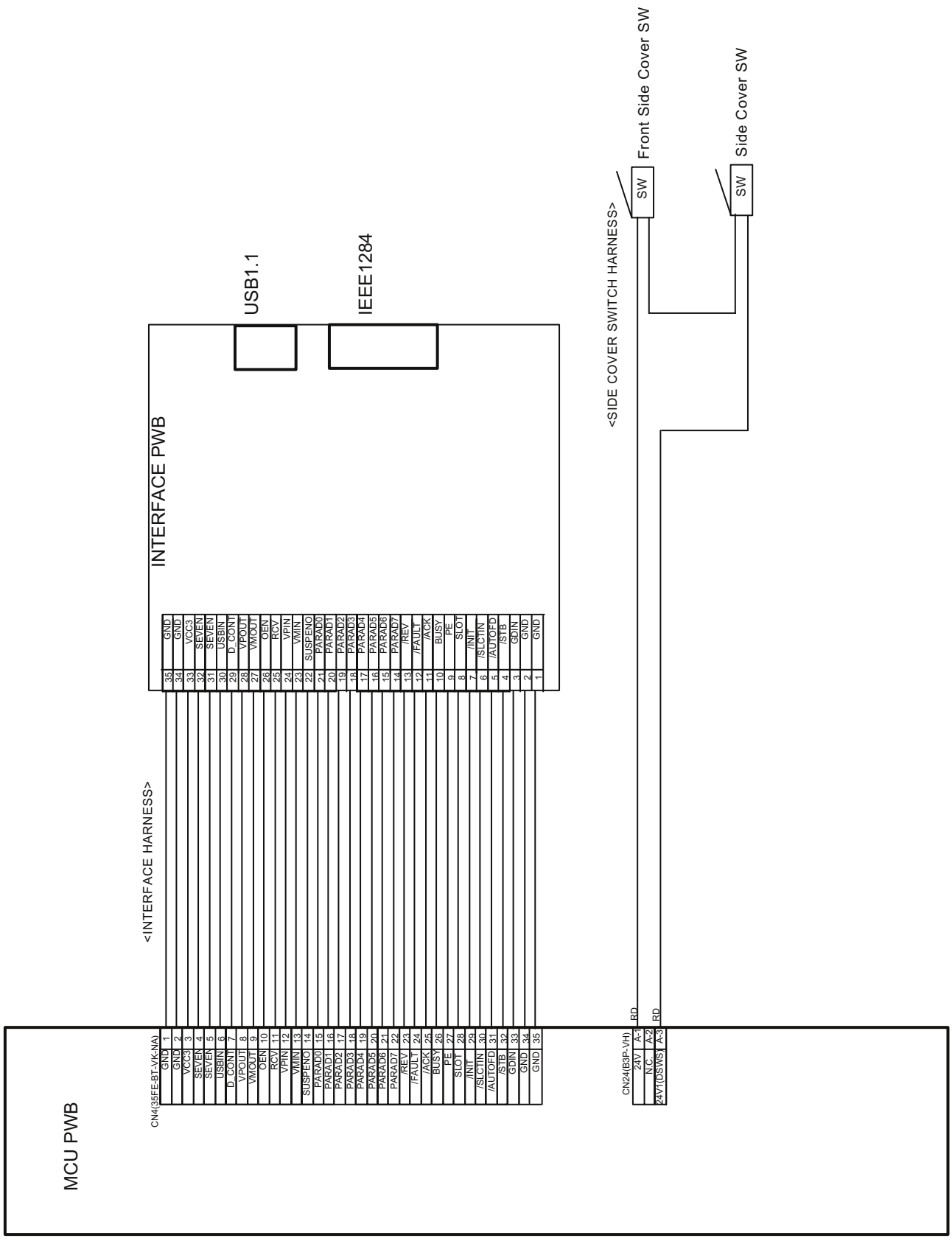

ACTUAL WIRING DIAGRAM 6/7

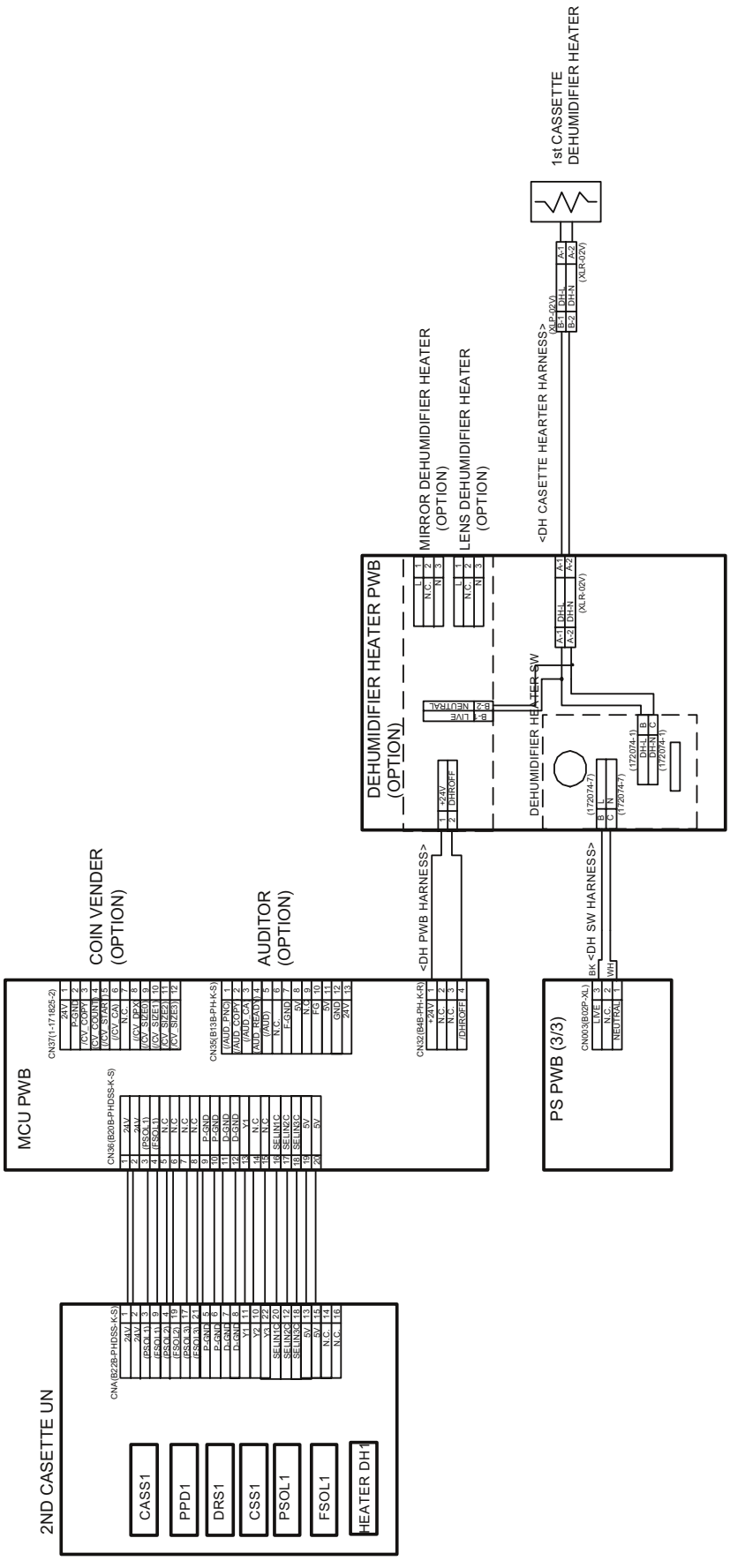

ACTUAL WIRING DIAGRAM 7/7

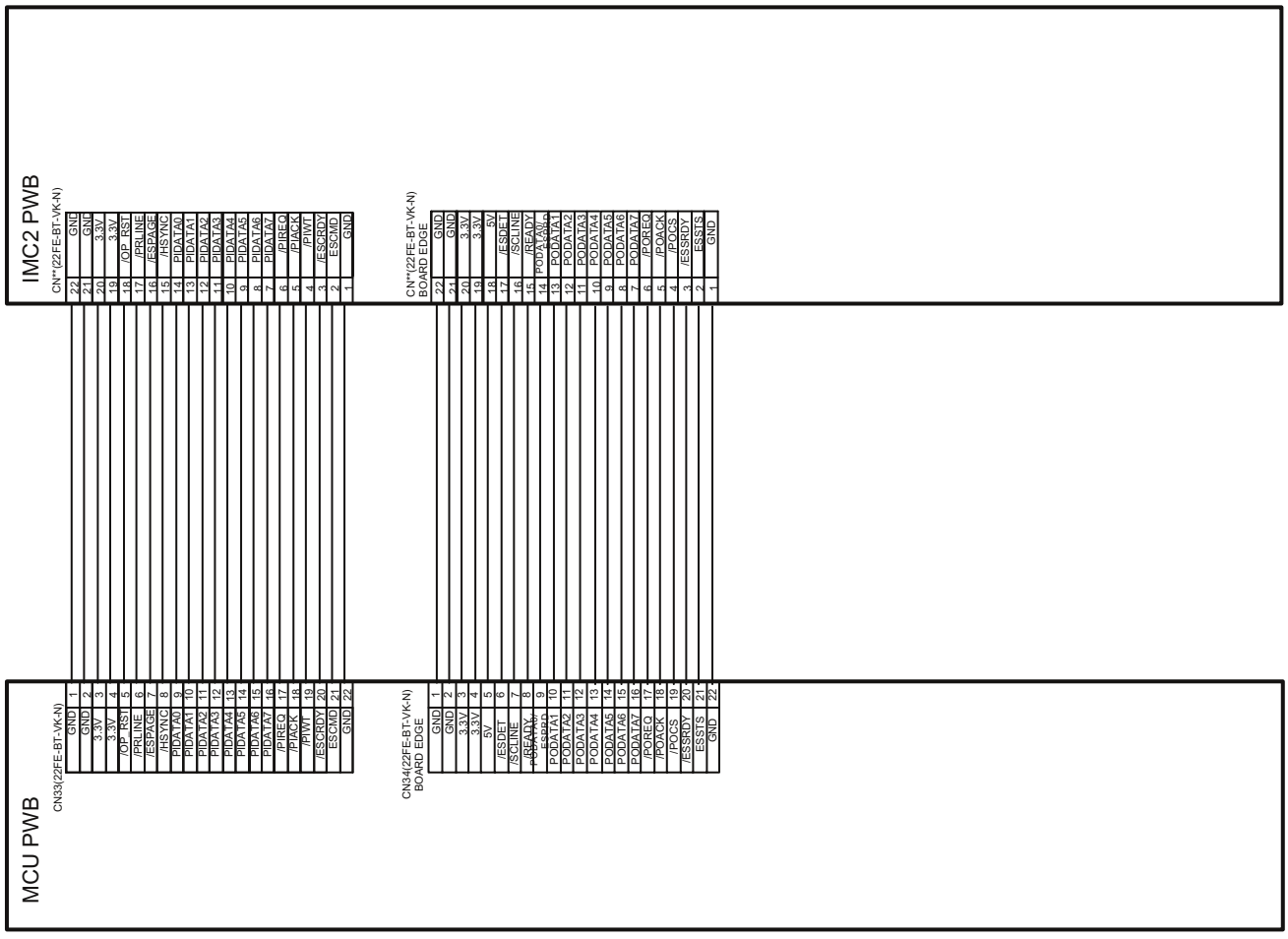

LEAD-FREE SOLDER

The PWB's of this model employs lead-free solder. The "LF" marks indicated on the PWB's and the Service Manual mean "Lead-Free" solder.
The alphabet following the LF mark shows the kind of lead-free solder.

Example:

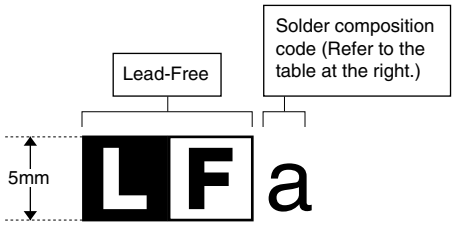

<Solder composition code of lead-free solder>

Solder composition	Solder composition code
Sn-Ag-Cu	a
Sn-Ag-Bi Sn-Ag-Bi-Cu	b
Sn-Zn-Bi	z
Sn-In-Ag-Bi	i
Sn-Cu-Ni	n
Sn-Ag-Sb	s
Bi-Sn-Ag-P Bi-Sn-Ag	p

(1) NOTE FOR THE USE OF LEAD-FREE SOLDER THREAD

When repairing a lead-free solder PWB, use lead-free solder thread.
Never use conventional lead solder thread, which may cause a breakdown or an accident.
Since the melting point of lead-free solder thread is about 40°C higher than that of conventional lead solder thread, the use of the exclusive-use soldering iron is recommendable.

(2) NOTE FOR SOLDERING WORK

Since the melting point of lead-free solder is about 220°C, which is about 40°C higher than that of conventional lead solder, and its soldering capacity is inferior to conventional one, it is apt to keep the soldering iron in contact with the PWB for longer time. This may cause land separation or may exceed the heat-resistive temperature of components. Use enough care to separate the soldering iron from the PWB when completion of soldering is confirmed.
Since lead-free solder includes a greater quantity of tin, the iron tip may corrode easily. Turn ON/OFF the soldering iron power frequently.
If different-kind solder remains on the soldering iron tip, it is melted together with lead-free solder. To avoid this, clean the soldering iron tip after completion of soldering work.
If the soldering iron tip is discolored black during soldering work, clean and file the tip with steel wool or a fine filer.

CAUTION FOR BATTERY REPLACEMENT

(Danish) ADVARSEL !

Lithiumbatteri – Eksplosionsfare ved fejlagtig håndtering.
Udskiftning må kun ske med batteri
af samme fabrikat og type.
Levér det brugte batteri tilbage til leverandoren.

(English) Caution !

Danger of explosion if battery is incorrectly replaced.
Replace only with the same or equivalent type
recommended by the manufacturer.
Dispose of used batteries according to manufacturer's instructions.

(Finnish) VAROITUS

Paristo voi räjähtää, jos se on virheellisesti asennettu.
Vaihda paristo ainoastaan laitevalmistajan suosittelemaan
tyyppiin. Hävitä käytetty paristo valmistajan ohjeiden
mukaisesti.

(French) ATTENTION

Il y a danger d'explosion s' il y a remplacement incorrect
de la batterie. Remplacer uniquement avec une batterie du
même type ou d'un type équivalent recommandé par
le constructeur.
Mettre au rebut les batteries usagées conformément aux
instructions du fabricant.

(Swedish) VARNING

Explosionsfara vid felaktigt batteribyte.
Använd samma batterityp eller en ekvivalent
typ som rekommenderas av apparattillverkaren.
Kassera använt batteri enligt fabrikantens
instruktion.

(German) Achtung

Explosionsgefahr bei Verwendung inkorrekter Batterien.
Als Ersatzbatterien dürfen nur Batterien vom gleichen Typ oder
vom Hersteller empfohlene Batterien verwendet werden.
Entsorgung der gebrauchten Batterien nur nach den vom
Hersteller angegebenen Anweisungen.

CAUTION FOR BATTERY DISPOSAL

(For USA,CANADA)

Contains lithium-ion battery. Must be disposed of properly.
Remove the battery from the product and contact
federal or state environmental
agencies for information on recycling and disposal options.

SHARP

COPYRIGHT © 2003 BY SHARP CORPORATION
All rights reserved.
Printed in Japan.
No part of this publication may be reproduced,
stored in a retrieval system, or transmitted,
in any form or by any means,
electronic, mechanical, photocopying, recording, or otherwise,
without prior written permission of the publisher.

Trademark acknowledgments
Windows and Windows NT are trademarks of Microsoft Corporation in the U.S.A. and other countries.
IBM and PC/AT are trademarks of International Business Machines Corporation.
PCL is a trademark of Hewlett-Packard Company.
Pentium is a registered trademark of Intel Corporation.
All other trademarks and copyrights are the property of their respective owners.

SHARP CORPORATION
Digital Document System Group
Products Quality Assurance Department
Yamatokoriyama, Nara 639-1186, Japan
2003 June Printed in Japan (N)