SHARP SERVICE MANUAL

CODE: 00ZARP11//A1E

DIGITAL LASER COPIER/ PRINTER OPTION PRINTER EXPANSION KIT

MODEL AR-PK1 AR-P11

CONTENTS

[1] SYSTEM CONFIGURATION 1-1

[2] SPECIFICATIONS 1-1

[3] INSTALLATION 3-1

[4] SETTING AND ADJUSTMENTS 4-1

[5] SIMULATION 4-3

[6] CONFIGURATION REPORT AND TEST PAGE 6-1

[7] FLASH ROM VERSION UP PROCEDURE 7-1

[8] PRINTER STATUS MONITOR/PRINTER MANAGEMENT UTILITY 8-1

[9] TROUBLE CODE LIST 9-1

[10] CIRCUIT DIAGRAM 10-1

PARTS GUIDE

Parts marked with "⚠" are important for maintaining the safety of the set. Be sure to replace these parts with specified ones for maintaining the safety and performance of the set.

SHARP CORPORATION

This document has been published to be used for after sales service only.
The contents are subject to change without notice.

CONTENTS

[1] SYSTEM CONFIGURATION 1-1

[2] SPECIFICATIONS

1. Basic specification 1-1
2. Network specification 1-1
3. Printer driver specification 1-1
   - A. System 1-1
   - B. Printing function specification 1-2
   - C. System requrement 1-3
   - D. Paper handling specifications 1-3
   - E. Print enable area 1-4
   - F. Print reference 1-4

[3] INSTALLATION

(AR-P11) 3-1

1. Parts included 3-1
2. Installation procedure 3-1
3. Mounting of additional memory 3-2

(AR-PK1) 3-2

1. Parts included 3-2
2. Installation procedure 3-2
4. Software installation 3-2
   - A. Before installing 3-2
   - B. Driver installation 3-2
   - C. Installing the resident font information for PPD (Windows 95/98/Me) 3-3
   - D. Uninstalling unnecessary software 3-3

[4] SETTING AND ADJUSTMENTS

1. Menus and key operation sequences 4-1
   - A. Set the print method on the operation panel 4-1
   - B. Configuration menu 4-2
2. AR-PK1 (PS expansion kit) setup 4-3
   - A. Setup content 4-3
   - B. Setup enable conditions 4-3
   - C. Setup menu 4-3
   - D. Function cancel menu 4-3
3. Email alert status 4-3
   - A. Setup contents 4-3
   - B. Setup enable conditions 4-3
   - C. Setup menu 4-3
   - D. Function cancel display 4-3

[5] SIMULATION

1. Simulation mode key operation 4-3
2. Simulation contents 4-3

[6] CONFIGURATION REPORT AND TEST PAGE

1. Kinds of test pages 6-1
2. Print method 6-1
3. Samples 6-1

[7] FLASH ROM VERSION UP PROCEDURE

1. Printer control board program download procedure 7-1

[8] PRINTER STATUS MONITOR/PRINTER ADMINISTRATION UTILITY

1. Printer status monitor 8-1
   - A. Purpose 8-1
   - B. Operating environment 8-1
   - C. V3.0 limitations and notes 8-1
   - D. Outline of functions 8-1
2. Printer administration utility 8-3
   - A. Purpose 8-3
   - B. Operating environment 8-3
   - C. Outline of functions 8-3

[9] TROUBLE CODE LIST 9-1

[10] CIRCUIT DIAGRAM

1. Block diagram 10-1
2. Circuit diagram 10-2

[1] SYSTEM CONFIGURATION

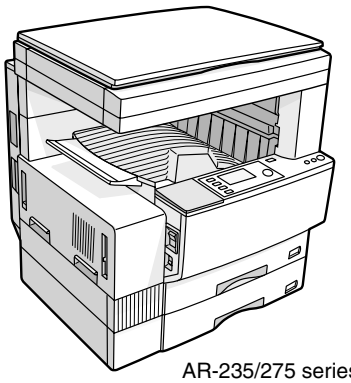

AR-235/275 series

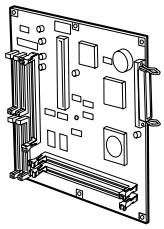

Printer expansion kit
(AR-P11)

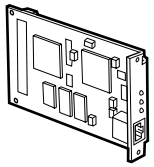

Print server card
(AR-NC5J)

[2] SPECIFICATIONS

1. Basic specification

Item		Detail
Print Speed		AR-275: 27ppm at 600dpi 13.5ppm at 1200dpi AR-235: 23ppm at 600dpi 13.5ppm at 1200dpi
Resolution		300dpi, 600dpi, 1200dpi
Smoothing		AR-275: 27ppm at 1200dpi x 600dpi AR-235: 23ppm at 1200dpi x 600dpi
Toner Save Mode		Standard
Input tray		Multi Bypass tray Tray 1, Tray 2, Tray 3, Tray 4
Duplex Print		Standard
Finisher		Option
NIC		10/100baseTX
Printer driver		Standard
PostScript Level3		Option/Standard
Barcode Font		Option
Manual (Online manual)		Standard
Platform		IBM PC/AT (Include compatible machine) Power Macintosh, iMac, iBook
Support OS (Printer Driver)	Custom PS	Windows 95/98/Me Windows NT 4.0 Windows2000
	Custom PCL6 (PCL5e, XL)	Windows 95/98/Me Windows NT 4.0 Windows2000
	PPD only	Windows 95/98/Me Windows NT 4.0 Windows2000 MacOS 8.51 or later
PDL Emulation		PCL5e emulation PCL6 emulation PostScript Level 3 emulation
Memory	Standard	SDRAM 32MB
	Max	288MB
Expansion Slot for Memory		2 DIMM Slots
Expansion Memory		168pin 32 MB/64 MB/128 MB DIMM

Item		Detail
Resident Fonts	For PS	136 Outline Fonts
	For PCL5e, XL	45 Outline Fonts Line Printer
	For PCL	Barcode Fonts (Option)
Screen Fonts	For PS	136 Outline Fonts
	For PCL 5e, XL	45 Outline Fonts
	For PCL	Barcode Fonts (Option)

2. Network specification

	Interface	Support OS	Support Protocol
AR-NC5J	10Base-T 100Base-TX	NetWare, Windows NT, Mac OS	IPX/SPX, TCP/IP, EtherTalk, Peer to Peer (TCP/IP) NetBEUI

3. Printer driver specification

A. System

Machine	OS	PCL6 Custom	PCL5e Custom	PostScript Custom	PPD File
IBM PC/AT (Include compatible machine)	Windows 95	Yes	Yes	Yes	Yes
	Windows 98				
	Windows Me				
	Windows NT 4.0				
	Windows 2000				
Mac, Power Mac	MacOS8.51 to 9.x	N/A	N/A	N/A	Yes

B. Printing function specification

Function		PCL5e Custom Driver	PS Custom Driver	Macintosh PPD file	PPD file	PCL6 (XL) Custom Driver
General	Copies	1-999	←	←	←	←
	Orientation	Portrait Landscape	←	←	←	←
	Duplex	1-Sided 2-Sided	←	←	←	←
	Binding Edge	N/A	Long/Short	←	←	N/A
	Pamphlet Style	N/A	N/A	N/A	N/A	N/A
	Pamphlet Binding Edge	Left / Right		N/A		Left / Right
	N-up	2/4/6/8/16	2/4/6/8/16	2/4/6/9/16	2/4 *1	2/4/6/8/16
	N-up Order	Z	←	←	←	←
	N-up Border	Yes / No	←	None / Single hairline / Single thin line / Double hairline / Double thin line	Always Yes	Yes / No
Paper Input	Paper Size	A3 / B4 / A4 / B5 / A5 / 11 x 17 / B6 / A6 8.5 x 14 / 8.5 x 13 / 8.5 x 11 / 5.5 x 8.5 / Folio / Exective / COM-10/ DL / C5/ 8K / 16K	←	←	←	←
	Custom Paper Size	1 size	←	N/A	3 sizes *2	1 size
	Source Selection	Auto Bypass-Tray (Auto) Bypass-Tray (Manual) Tray 1/2/3/4	←	←	←	←
	Different 1st (Cover) Page	Yes / No	←	←	N/A	Yes / No
	Transparency Print	Yes / No	←	←	N/A	Yes / No
	Transparency Inserts	No Yes (Blank) Yes (Printed)	←	←	N/A	No Yes (Blank) Yes (Printed)
Paper Output	Output Tray Selection	Upper Tray Center Tray Offset Tray	←	←	←	←
	Staple	Finisher Yes / No	←	←	←	←
Graphic	Resolution Setting	600/300 dpi	1200/600 dpi	←	←	1200/600/300 dpi
	Halftone Setting	N/A	Screen Frequency 8 to 360.0 in 0.1 steps Screen angle 0.0 to 360.0 in 0.1 steps	N/A	←	←
	Graphics Mode	Raster HP-GL2	N/A	←	←	Raster Vector
	Smoothing	Yes / No	←	←	←	←
	Toner save	Yes / No	←	←	←	←
	Photo Enhancement	N/A	Yes / No	N/A	←	Yes / No
	Negative Image	N/A	Yes / No	←	←	N/A
	Mirror Image	N/A	Horizontal Vertical	←	Yes / No	N/A
	Zoom	N/A	←	25-400%	←	N/A
	Fit to Page	Yes / No	←	N/A	←	Yes / No
Font	Resident Font	45 fonts + 1	136 fonts	35 fonts	136 fonts *4	45 fonts + 1
	Download Font	Bitmap TrueType Graphics	Bitmap Type1 TrueType	N/A	Bitmap Type1 TrueType	Bitmap TrueType Graphics
Others	Configuration Setting	Yes (Automatic)	←	←	Yes	Yes (Automatic)
	ROPM	Yes / No	←	←	←	←
	Print Auditor	Yes / No	←	←	N/A	Yes / No

Function		PCL5e Custom Driver	PS Custom Driver	Macintosh PPD file	PPD file	PCL6 (XL) Custom Driver
Others	Watermark	Yes / No	←	Yes / No (with limit)	←	Yes / No
	Page Protection	Yes / No	←	N/A	Yes / No	←
	Job Compression	N/A	None Fastest Fast Medium Best Compression	N/A	←	←
	Bitmap Compression	N/A	None Very High High Medium Draft	N/A	←	←

*1:N-up printing is not supported by Windows NT. For Windows2000, 2/4/6/9/16, Booklet are supported.

*2:Custom paper size is not supported by Windows NT. For Windows2000, only one size is supported.

*3:Halftone setting is not supported by Windows NT.

*4:For Windows95/98/Me, the Font Setup Utility is required. For Win NT, 35 fonts.

C. System requirement

Computer	IBM PC/AT compatible machines (DOS/V machines) Power Macintosh, iMac, iBook
Operating system	Microsoft Windows 95 Microsoft Windows 98 Microsoft Windows Me Microsoft Windows NT 4.0 Microsoft Windows 2000 MacOS 8.51 or later

Note: Hardware requirements such as CPU and RAM for your operating system must be satisfied.

D. Paper handling specifications

(1) Paper feed direction

a. Paper size and image transfer direction

Name	Size mm (inch)	Bypass Tray	Tray 1	Tray 2	Tray 3	Tray 4	Duplex	Exit Tray		2tray Finisher		
								Center Tray	Upper Tray	Top Tray	Offset Tray	Staple
A6R	105 × 148	Yes	N/A	N/A	N/A	N/A	N/A	Yes	Yes	N/A	N/A	N/A
B6R	128 × 182	Yes	N/A	N/A	N/A	N/A	N/A	Yes	Yes	N/A	N/A	N/A
Invoice	215.9 × 139.7 (8.5” × 5.5”)	Yes	Yes	N/A	N/A	N/A	N/A	Yes	Yes	Yes	N/A	N/A
Invoice-R	139.7 × 215.9 (5.5” × 8.5”)	Yes	N/A	N/A	N/A	N/A	N/A	Yes	Yes	Yes	N/A	N/A
A5	210 × 148	Yes	Yes	N/A	N/A	N/A	Yes	Yes	Yes	Yes	N/A	N/A
A5R	148 × 210	Yes	N/A	N/A	N/A	N/A	N/A	Yes	Yes	Yes	N/A	N/A
B5	257 × 182	Yes	Yes	Yes	Yes	Yes	Yes	Yes	Yes	Yes	Yes	Yes
B5R	182 × 257	Yes	Yes	Yes	Yes	Yes	Yes	Yes	Yes	Yes	Yes	N/A
Executive-R	186.7 × 266.7 (7.35” × 10.5”)	Yes	N/A	N/A	N/A	N/A	N/A	Yes	Yes	Yes	Yes	N/A
Letter	279.4 × 215.9 (11” × 8.5”)	Yes	Yes	Yes	Yes	Yes	Yes	Yes	Yes	Yes	Yes	Yes
Letter-R	215.9 × 279.4 (8.5” × 11”)	Yes	Yes	Yes	Yes	Yes	Yes	Yes	Yes	Yes	Yes	Yes
A4	297 × 210	Yes	Yes	Yes	Yes	Yes	Yes	Yes	Yes	Yes	Yes	Yes
A4-R	210 × 297	Yes	Yes	Yes	Yes	Yes	Yes	Yes	Yes	Yes	Yes	Yes
Folio	210 × 330 (8.3” × 13”)	Yes	N/A	N/A	N/A	N/A	N/A	Yes	Yes	Yes	Yes	N/A
Legal	215.9 × 355.6 (8.5” × 14”)	Yes	Yes	Yes	Yes	Yes	Yes	Yes	Yes	Yes	Yes	Yes
Foolscap	215.9 × 330.2 (8.5” × 13”)	Yes	Yes	Yes	Yes	Yes	Yes	Yes	Yes	Yes	Yes	Yes
B4	257 × 364	Yes	Yes	Yes	Yes	Yes	Yes	Yes	Yes	Yes	Yes	Yes
A3	297 × 420	Yes	Yes	Yes	Yes	Yes	Yes	Yes	Yes	Yes	Yes	Yes
Ledger	279.4 × 431.8 (11” × 17”)	Yes	Yes	Yes	Yes	Yes	Yes	Yes	Yes	Yes	Yes	Yes
8K	270 × 390	Yes	Yes	Yes	Yes	Yes	Yes	Yes	Yes	Yes	Yes	N/A
16K	270 × 195	Yes	Yes	Yes	Yes	Yes	Yes	Yes	Yes	Yes	Yes	N/A
16KR	195 × 270	Yes	Yes	Yes	Yes	Yes	Yes	Yes	Yes	Yes	Yes	N/A
COM10	4.12 × 9.5	Yes	N/A	N/A	N/A	N/A	N/A	Yes	Yes	N/A	N/A	N/A
C5	162 × 229	Yes	N/A	N/A	N/A	N/A	N/A	Yes	Yes	N/A	N/A	N/A
DL	110 × 220	Yes	N/A	N/A	N/A	N/A	N/A	Yes	Yes	N/A	N/A	N/A

Name	Size mm (inch)	Bypass Tray	Tray 1	Tray 2	Tray 3	Tray 4	Duplex	Exit Tray		2tray Finisher		
								Center Tray	Upper Tray	Top Tray	Offset Tray	Staple
Transparency		Yes	N/A	N/A	N/A	N/A	N/A	Yes	Yes	N/A	N/A	N/A
Heavy stock		Yes	N/A	N/A	N/A	N/A	N/A	Yes	Yes	N/A	N/A	N/A
Label		Yes	N/A	N/A	N/A	N/A	N/A	Yes	Yes	N/A	N/A	N/A

Setting direction toward paper feed port = Long side

Transfer direction

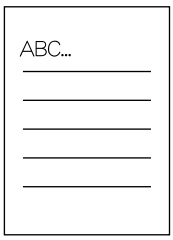

Setting direction toward paper feed port = Short side

Transfer direction

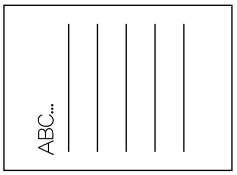

E. Print enable area

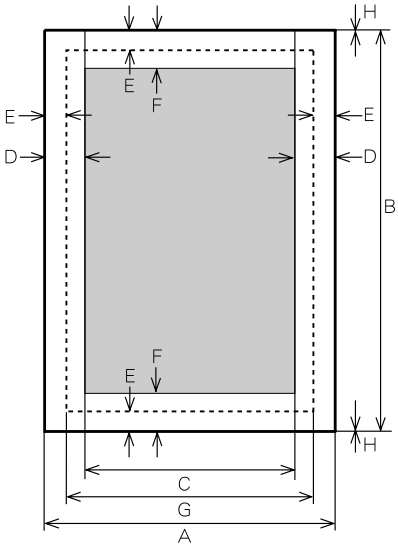

Paper Size	A	B	C	D	E	F	G	H
A3	7014	9920	6730	142	100	300	6814	0
B4	6070	8597	5786	142	100	300	5870	0
A4	4960	7014	4676	142	100	300	4760	0
B5	4298	6070	5770	142	100	300	4098	0
A5	3508	4960	3224	142	100	300	3308	0
Ledger	6600	10200	6300	150	100	300	6400	0
Legal	5100	8400	4800	150	100	300	4900	0
Letter	5100	6600	4800	150	100	300	4900	0
Invoice	3300	5100	3000	150	100	300	3100	0
Foolscap	5100	7800	4800	150	100	300	4900	0
Folio	4980	7800	4680	150	100	300	4780	0
Executive	4350	6300	4050	150	100	300	4150	0
COM-10	2474	5700	2174	150	100	300	2274	0
C5	3826	5408	3542	142	100	300	3626	0
DL	2598	5196	2314	142	100	300	2398	0

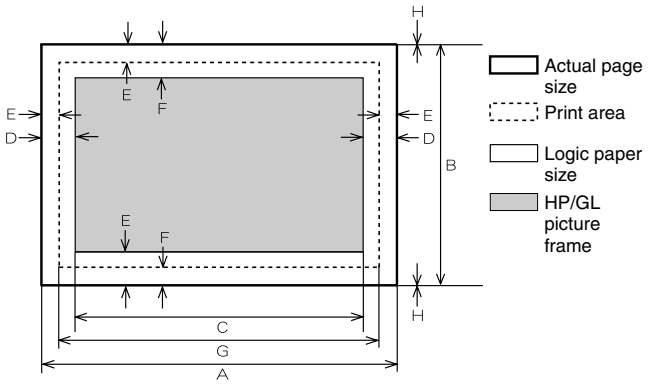

Paper Size	A	B	C	D	E	F	G	H
A3	9920	7014	9684	118	100	300	9720	0
B4	8597	6070	8361	118	100	300	8397	0
A4	7014	4960	6778	118	100	300	6814	0
B5	6070	4298	5830	118	100	300	5870	0
A5	4960	3508	4720	118	100	300	4760	0
Ledger	8400	5100	8160	120	100	300	8200	0
Legal	8400	5100	8160	120	100	300	8200	0
Letter	6600	5100	6360	120	100	300	6400	0
Invoice	5100	3300	2860	120	100	300	4900	0
Foolscap	7800	5100	7560	120	100	300	7600	0
Folio	7800	4980	7560	120	100	300	7600	0
Executive	6300	4350	6060	120	100	300	6100	0
COM-10	5700	2474	3460	120	100	300	5500	0
C5	5408	3826	5172	118	100	300	5208	0
DL	5196	2598	4960	118	100	300	4996	0

* Top margin

The set value is received from the digital copier, and data are made according to the set value.

* Left margin

Since the paper size sensor is not set, the digital copier cannot recognize the size and direction of paper which is actually inserted.
Therefore, the left margin is set according to the paper size specified in the print data sent from the computer, and print process is performed. If the computer does not specify the paper size, or in the case of the custom size, the left margin is set according to the default paper size.

F. Print reference

This machine employs the center reference system.
Since the digital copier is not provided with the tray size detection feature, formatting and center distribution are performed not by the actual paper size but by the paper size specified by the computer.

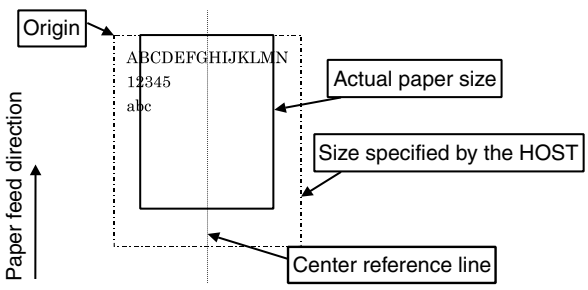

[3] INSTALLATION

(AR-P11)

1. Parts included

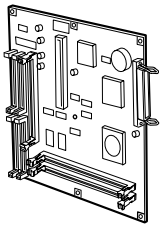		
PCL PWB: 1	Screws M3 × 8: 2	M3 screws with washer: 8
CD-ROM: 1	Operation manual: 1	Installation manual: 1

2. Installation procedure

Turn off the main switch of the copier and then remove the power plug of the copier from the outlet.

1) Remove the shielding plate.

   Remove five screws and remove the shielding plate.

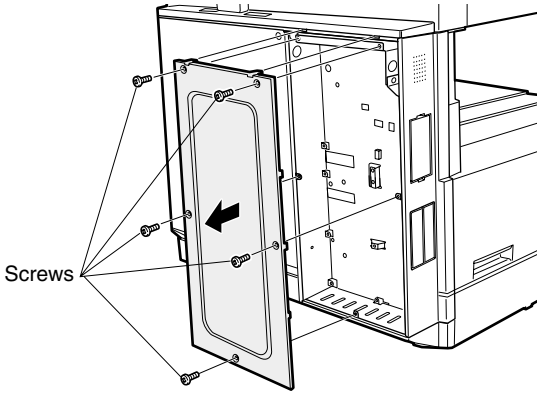

2) Cut and remove the cut-out portion from the left rear cabinet.

   Cut and remove the cut-out portion from the left rear cabinet using a tool such as nippers. (Be careful about the direction of the tool so that the cut surface is flat.)

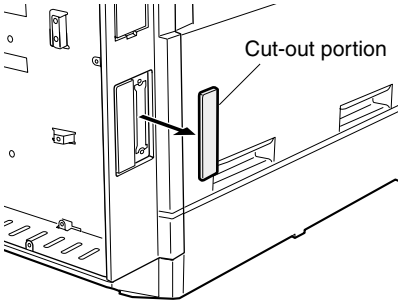

3) Attach the PCL PWB unit.

   Connect the parallel connector to the mounting plate for options in the main unit, connect the connector of the PCL PWB to the connector of the mother board, and attach the PCL PWB using the supplied eight M3 screws with washer.

   Then, attach the parallel connector portion using the supplied two screws (M3 x 8).

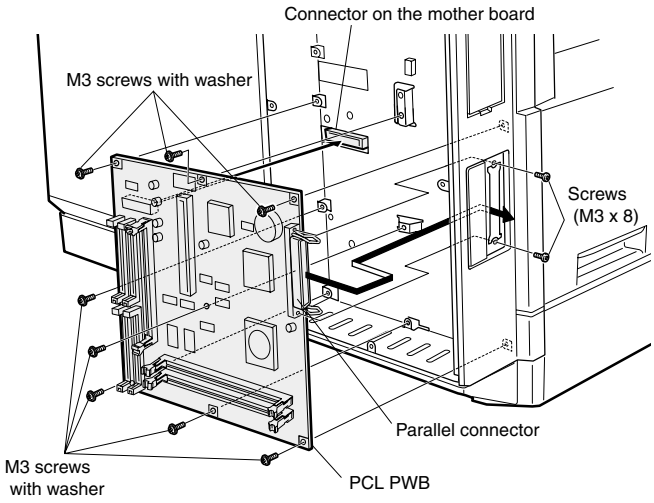

4) Attach the shielding plate.

   Attach the shielding plate using five screws.

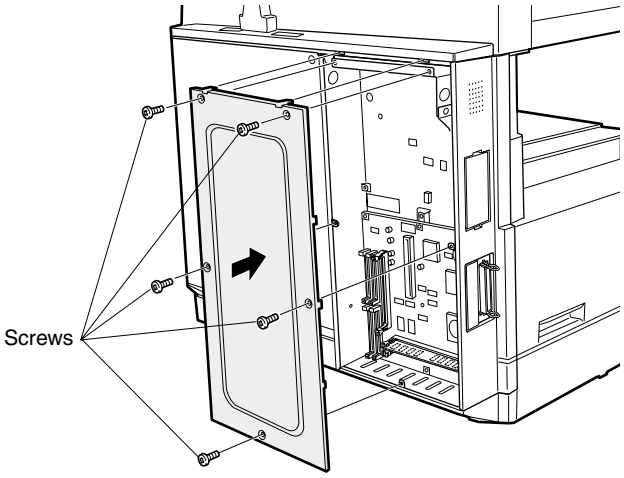

Insert the power plug of the copier to the outlet and turn on the main switch. Then, carry out the following procedure.

5) Check for the PCL PWB.

   Press the PRINT key on the operation panel to check to see if the copier enters the print mode.

6) Check for the language.

   Check for the language setting (26-22) following the procedure described in the service manual (section of simulation).

7) Check for printing.

   For installation of printer drivers on a computer, see the supplied operation manual.

   Then, connect a parallel cable to the computer and execute printing to check to see if printing can be executed properly.

3. Mounting of additional memory

(After mounting it, Installation proceed to step 4.)

Open the two bail clips, insert the memory matching the orientation of its connector with that of the PWB, and then close the bail clips.

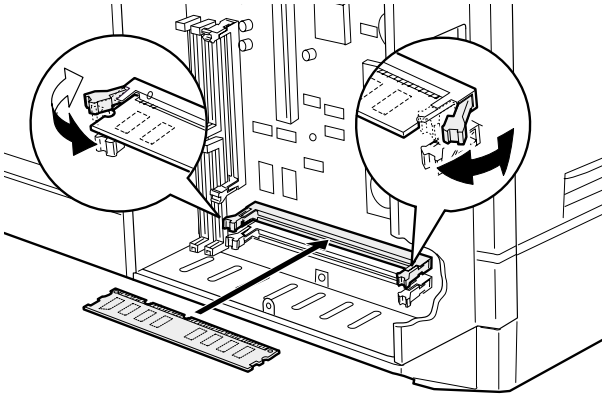

(AR-PK1)

1. Parts included

CD-ROM: 1
License agreement: 1
Installation manual: 1

2. Installation procedure

To enable the PS3, the product key must be acquired.
(For the method of acquiring the product key, contact the SHARP authorized dealer.)

1) Check that AR-P11 operates normally.
   - Turn on the power and wait until warming up is complete.
   - Press the PRINT key on the operation panel of the main unit.
   - If the LCD in the operation panel of the main unit switches to the print mode normally, AR-P11 is operating normally.
   - If it is not operating normally, follow the AR-P11 Installation Manual to check and modify the system configuration settings and check the operation.
2) Enable the PS3.

   To enable the system configuration, use the keys on the main unit to set the mode.

• Enter the product key.

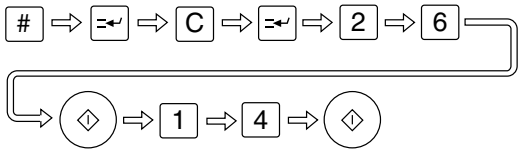

Enter the product key that has been acquired in the display using the numeric keys and press the OK key.

The message " PS KIT KEY OK " will appear in the display.

Setting of the product key is complete. To update the system, press the CA key to exit the setting mode.

3) Check the PS3.

   Make the following sequence of selections on the control panel.
   - Press Special Functions , highlight Configuration and press OK.
   - Use the up and down keys to highlight Test print menu and press OK.
   - Use the up/down keys to highlight Configuration page and press OK.

   A configuration page will be printed.

   Check that the option memory capacity is 128 MB or more.

   Check that the PS3 has been installed.

Please keep below important information.
This information will use for other products.

AR-PK1

APPLICATION NUMBER

MACHINE SERIAL NUMBER

PRODUCT KEY

4. Software installation

A. Before installing

To use this printer with your computer, you must install a printer driver.

A printer driver is software designed to convert print data from any application into data understandable by the printer so that the printer can quickly and efficiently print out the data.

Install the printer driver using the supplied SHARP PRINTER UTILITIES CD-ROM. For installation using the installer in the CD-ROM, see the document "USING THE DIGITAL COPYING MACHINE AS A PRINTER".

* It is recommended that you use the PCL6 printer driver. If you have a problem printing from older software using the PCL6 driver, use the PCL5e driver.

* You can use the PostScript Level 3 printer driver if you have installed the PS3 expansion kit (AR-PK1) that is optional for some models.

(1) CD-ROM contains

Also the CD-ROM includes the following utilities and fonts.

- Printer Status Monitor: Utility for monitoring the status of a printer in network environment
- Printer Administration Utility: Utility for monitoring and adjusting the settings of printers in network environment
- Resident font information for PPD: Residents font information used with the PPD driver for Windows 95, Windows 98, and Windows Me
- Display font: Fonts to be displayed on the computer screen to check the print image on the screen

(2) System requirements

The following hardware and software is required in order to install the printer drivers.

- IBM PC/AT or compatible computer equipped with a bi-directional parallel interface or a network interface
- Windows 95, Windows 98, Windows Me, Windows NT 4.0 or Windows 2000 is installed. (Hardware requirements such as CPU and RAM for your operating system must be satisfied.)

B. Driver installation

If you use Windows 95, Windows 98, Windows Me or Windows 2000 and you connect the printer to your computer with parallel interface, a printer driver can be installed with the Plug and Play feature.

* The Plug and Play feature is effective if both the computer and peripheral equipment are equipped with IEEE 1284 compliant parallel interface.

(1) Installation with Plug & Play

1) Ensure that the printer cable is connected between your computer and the printer and then turn on the printer.

   Note:

   Before installing the printer driver, be sure to close all other open applications.

2) Follow the on-screen instructions.

   To specify the printer driver path, see the table below.

   To enter the printer name, use the following name.

   "SHARP" + printer model name + printer driver

   Example: SHARP AR-235 PCL6

(2) Installation with Add Printer wizard

If you use the Add Printer wizard to install a printer driver, follow the standard procedure of your operating system.

An example of installation is described below for Windows 98.

1) On the Start menu, highlight "Settings", then highlight and click on "Printers".
2) Insert a PRINTER UTILITIES CD-ROM into a CD-ROM drive.

   If your computer is configured for auto start, the license agreement will be displayed. Click the "Cancel" button.

3) From the Printers window, select "Add Printer" to run the Add Printer Wizard. Then click "Next".
4) If Windows 98 has been configured for network operation, it might be necessary to select "Local printer" or "Network printer". Select the appropriate option, and click "Next" to continue.
5) If "Network printer" was selected, specify the appropriate Network Path or Queue Name and click "Next".
6) The installation window will display a list of printer models and manufacturers. Click the "Have Disk" button.
7) Follow the on-screen instructions.

   To specify the printer driver path, see the table below.

   To enter the printer name, use the following name.

   "SHARP" + printer model name + printer driver

   Example: SHARP AR-235 PCL6

(3) Printer driver path

* The CD-ROM drive is assigned as drive R here.

Printer driver	Operating System	Path
PCL5e	Windows 95/98/Me	R:\Option\English\9x_me_pcl5e
	Windows NT 4.0	R:\Option\English\nt_pcl5e
	Windows 2000	R:\Option\English\2k_pcl5e
PCL6	Windows 95/98/Me	R:\Option\English\9x_me_pcl6
	Windows NT 4.0	R:\Option\English\nt_pcl6
	Windows 2000	R:\Option\English\2k_pcl6
PostScript	Windows 95/98/Me	R:\Option\English\9x_me_ps
	Windows NT 4.0	R:\Option\English\nt_ps
	Windows 2000	R:\Option\English\2k_ps
PPD	Windows 95/98/Me	R:\Option\English\9x_me_psppd
	Windows NT 4.0	R:\Option\English\nt_psppd
	Windows 2000	R:\Option\English\2k_psppd

C. Installing the resident font information for PPD (Windows 95/98/Me)

If you have installed the PPD printer driver for Windows 95/ Windows 98/ Windows Me, install the resident font information following the procedure below.

Note:

- Before installing the resident font information, be sure to install the printer driver.
- When installing the resident font information, be sure to close all other open applications.
- If you have changed the port for the printer from Properties of the printer driver when the printer is used as a network printer, reinstall the resident font information.
- If printer resident fonts cannot be specified from application software, the resident font information has not been installed or the information is not proper. In this case, reinstall the resident font information.
- With the PPD driver for Windows NT 4.0, the printer resident fonts cannot be specified. Font downloading, therefore, is always performed when printing is executed. To use the printer resident fonts under Windows NT 4.0, install the PS, PCL5e or PCL6 driver. For Windows 2000, the resident font information is automatically installed with the printer driver.

(1) Installation procedure

1) Start Windows.
2) Insert the supplied PRINTER UTILITIES CD-ROM into a CD-ROM drive.

   If your computer is configured for auto start, the license agreement will be displayed. Click the "Cancel" button.

3) On the "Start" menu, click "Run".
4) Enter the CD-ROM drive and "packages\english\psppd9x\Pfmsetup. exe". Then click the "OK" button.

   Example: If the CD-ROM drive is designated as drive R, type "R:\packages\english\psppd9x\Pfmsetup. exe" and click "OK".

5) Click the "OK" button.

   If the printer driver has not been installed, installation of the resident font information will not be performed.

6) Click the "OK" button.
7) After the resident font information has been installed, restart Windows.

D. Uninstalling unnecessary software

To uninstall a printer driver or a printer utility that has been installed using the installer, follow the procedure shown below.

1) On the "Start" menu, highlight "Settings", then highlight and click on "Control Panel".
2) Double-click "Add/ Remove Programs".
3) Select the driver or utility to be deleted and click "Add/ Remove".
4) Click "Yes".

To delete a printer driver that has been installed using the Plug and Play feature or from the Add Printer wizard, follow the procedure shown below.

1) On the "Start" menu, highlight "Settings", then highlight and click on "Printers".
2) Right-click the printer driver to be deleted.
3) Click "Delete" and then follow the instructions on your screen.

[4] SETTING AND ADJUSTMENTS

1. Menus and key operation sequences

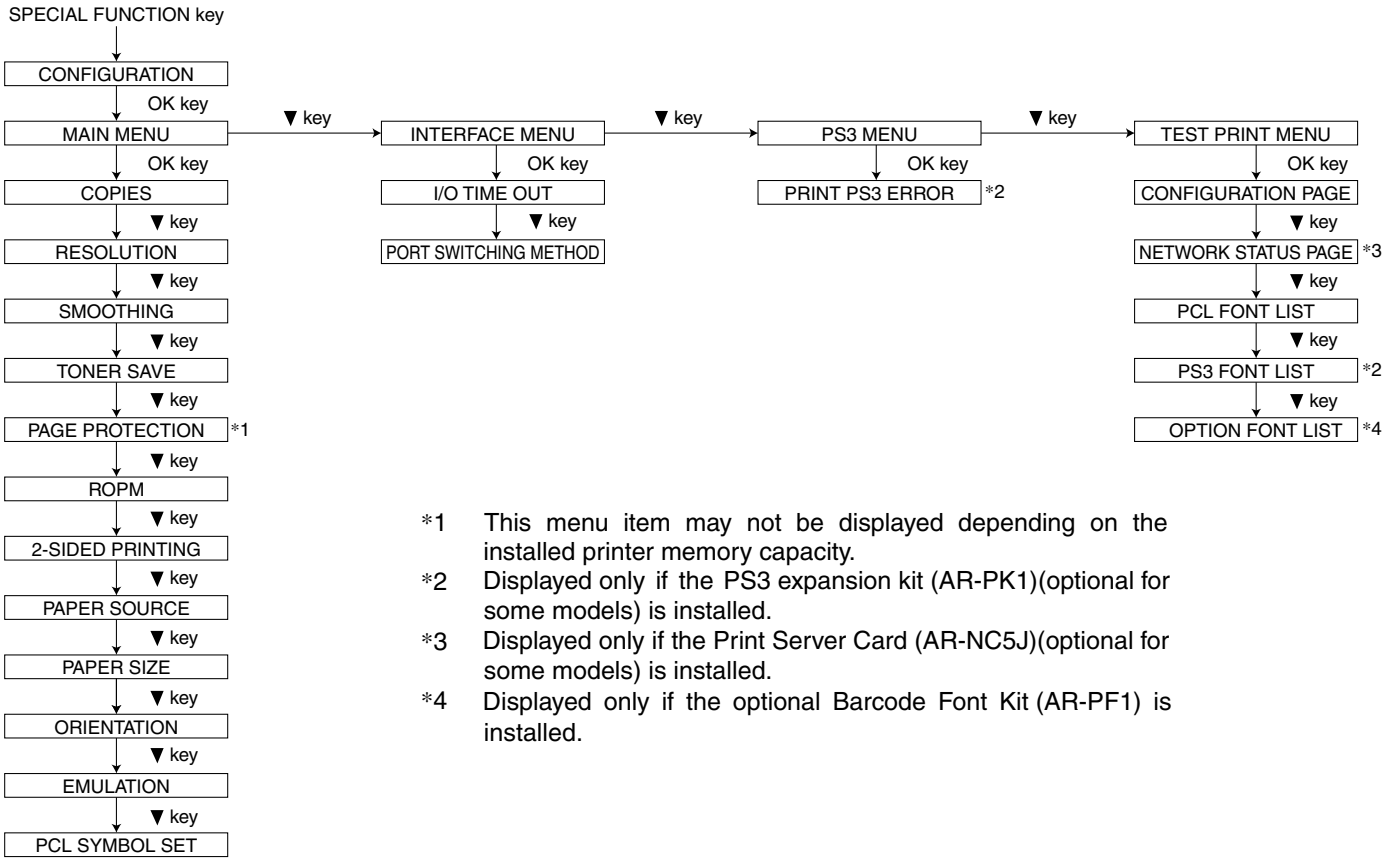

*1 This menu item may not be displayed depending on the installed printer memory capacity.

*2 Displayed only if the PS3 expansion kit (AR-PK1)(optional for some models) is installed.

*3 Displayed only if the Print Server Card (AR-NC5J)(optional for some models) is installed.

*4 Displayed only if the optional Barcode Font Kit (AR-PF1) is installed.

A. Set the print method on the operation panel

You can control printing using either the operation panel on the printer or the printer driver installed on your computer. This section explains the menus that may be set from the operation panel of the printer and their operation procedures.

NOTE:

When printing from an application on your computer, some of the items which you can set with the printer driver can also be set with keys of the operation panel (for example, the number of copies printed). In these cases, the value set in the printer driver overrides the value set on the operation panel.

(Basic menu setting procedure)

NOTE:

The menus and items displayed may be different depending on the optional functions installed.

To access the printer configuration menu, follow the steps below.

1) Press the PRINT key to select the print mode.
   Make sure the PRINT indicator lights up and the basic screen is displayed on the display.
2) Press the [down] key to select the OFFLINE mode.
3) Press the SPECIAL FUNCTION key.
4) Ensure that "CONFIGURATION" is selected and press the OK key.
   - The printer configuration menu will appear.

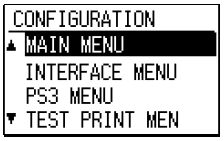

   - The menu items are: MAIN MENU, INTERFACE MENU, PS3 MENU, and TEST PRINT MENU. The PS3 menu appears only if the PS3 expansion kit (AR-PK1) (optional for some models) is installed.
5) Use the [UP] and [DOWN] keys to select the desired menu and press the OK key.

NOTE:

The menus and items displayed may be different depending on the optional functions installed.

6) Use the [UP] and [down] keys to select the desired function and press the OK key.
   - For some functions, a check box is displayed to the left of the function name. If the OK key is pressed, a check mark will appear and the function will be set. If the OK key is pressed again, the check mark will disappear and the function will be canceled. Proceed to step 8.
   - For other programs, the setting screen of the function will appear when the OK key is pressed.
7) Follow instructions for the function.
   - Use the [UP] and [down] keys to select the desired item or use the numeric keys to enter a number. Then press the OK key.
   - If a mistake is made during entry, press the CLEAR key to clear the entry.
8) To continue with other functions, use the [UP] and [down] keys to select another program. To select a function of another menu, press the BACK key and select the desired menu.
   - To exit the configuration setting, press the CLEAR ALL key.

B. Configuration menu

The following items may be set with the menus of the operation panel. Values in bold letters are factory default settings. Values that you set are preserved even if the printer is turned off. Note that the functions with the settings "On" and "Off" are set by pressing the OK key so that a check mark is displayed in the check box.

(1) Main menu

Item	Possible settings	Description
COPIES	**1** - 999	Sets how many copies to print.
RESOLUTION	1200DPI / **600DPI** / 300DPI	Sets the printing resolution.
SMOOTHING	**On** / Off	Sets whether smoothing is done or not. This function improves the appearance of printed documents by smoothing the angles and curves of images. This allows printing at a higher apparent resolution. For example, if the printer is set to 600dpi, resolution equivalent to 1200dpi can be achieved. When printing bit- mapped images, you may need to select "Off" to achieve best results.
TONER SAVE	On / **Off**	Sets whether toner save mode is in effect or not. This function prints slightly fainter to save toner. This item is different from the copier "toner save mode".
PAGE PROTECTION	On / **Off**	Sets page protection. Page protection is a function designed to prevent data loss errors when complex data is printed.
ROPM	On / **Off**	Sets whether the ROPM function is enabled. If the ROPM function is enabled, print data will be stored in the printer memory once for printing onto multiple sheets. This function can reduce transmission quantity between the printer and your computer.
2- SIDED PRINTING	**OFF** / BOOK / TABLET	Select "Book" to print on both sides of the paper and to bind the left margin. Select "Tablet" to print on both sides of the paper and to bind the top margin.
PAPER SOURCE	**AUTO** / TRAY1 / TRAY2 / TRAY3 * / TRAY4 * / BYPASS TRAY (MANUAL) / BYPASS TRAY (AUTO)	Sets the tray used for paper feeding. Setting to "AUTO" automatically selects the paper tray loaded with the paper of the size specified in the "PAPER SIZE" item. * The available settings reflect the installed trays.
PAPER SIZE	A3 / B4 / **A4** * / B5 / A5 / B6 / A6 / 11 x 17 / 8- 1/2 x 14 / **8-1/2 x11** * / 8-1/2 x 13 / 8. 3 x 13 / 7-1/ 4 x 10-1/2 / 5-1/2 x 8-1/2 / 8K / 16K / COM10 / DL / C5	Sets the size of the paper where data will be printed. If this size is different from the paper size present in the tray, the size set for this item takes precedence. * Depending on where the printer was purchased, the default value is either "A4" or "Letter".
ORIENTATION	**PORTRAIT** / LANDSCAPE	Sets the page orientation for printing. Specify "PORTRAIT" to print the paper with its long side (longer edge) vertical. Specify "LANDSCAPE" to print the paper with its long side (longer edge) horizontal.
EMULATION	**AUTO** / PCL / PS3 *	Specifies the printer language used. * Displayed only if the PS3 expansion kit (AR- PK1)(optional for some models) is installed. If "AUTO" is selected, the emulation to PCL5e, PCL6 or PS3 is automatically set depending on the received data.
PCL SYMBOL SET	**1** - 35	Specifies a PCL symbol set. (The symbol set is used to assign a part of character codes to characters of a country.) See the table on the next page. The factory default setting is 1 (Roman-8).

PCL symbol set

No.	Symbol set	No.	Symbol set
1	Roman- 8	19	Math-8
2	ISO 8859- 1 Latin 1	20	PS Math
3	PC- 8	21	Pi Font
4	PC- 8 Danish/ Norwegian	22	ISO 8859- 2 Latin 2
5	PC- 850	23	ISO 8859- 9 Latin 5
6	ISO 6 ASCII	24	ISO 8859- 10 Latin 6
7	Legal	25	PC- 852
8	ISO 21 German	26	PC- 775
9	ISO 17 Spanish	27	PC- Turkish
10	ISO 69 French	28	MC Text
11	ISO 15 Italian	29	Windows 3.1 Latin 1
12	ISO 60 Norwegian v1	30	Windows 3.1 Latin 2
13	ISO 4 United Kingdom	31	Windows 3.1 Latin 5
14	ISO 11 Swedish: names	32	Windows Baltic (not 3. 1)
15	PC- 1004 (OS/ 2)	33	Windows 3.0 Latin 1
16	DeskTop	34	Symbol
17	PS Text	35	Wingdings
18	Microsoft Publishing		

(2) Interface Menu

Item	Setting choice	Description
I/ O TIME OUT	1 SEC. - **60 SEC** - 999	Sets I/ O time out. If no data is received within the preset time, print processing will be canceled.
PORT SWITCHING METHOD	**SWITCH AT END OF JOB** / SWITCH AFTER I/ O TIMEOUT	Determines which switching method to use for the interface port.

(3) PS3 Menu

Displayed only if the PS3 expansion kit (AR-PK1) (optional for some models) is installed.

Item	Setting choice	Description
PRINT PS3 ERROR	On / **Off**	Prints a PostScript error page when there are problems with a print job if this function is set.

(4) Test Print Menu

Item	Description
CONFIGURATION PAGE	Prints the configuration page.
NETWORK STATUS PAGE	Prints the outline of network settings. This item is displayed only if the Print Server Card (AR- NC5J) (optional for some models) is installed.
PCL FONT LIST	Prints the PCL6 font list.
PS3 FONT LIST	Prints the PS3 font list. Displayed only if the PS3 expansion kit (AR-PK1) (optional for some models) is installed.
OPTION FONT LIST	Prints the barcode font list. This item is displayed only if the optional barcode font Kit (AR- PF1) is installed.

2. AR-PK1 (PS expansion kit) setup

A. Setup content

- The soft key is supplied by registering the manufacturing number and the model name of the machine and the application number attached to the PS expansion kit via the Web site.
  Enter the soft key to the machine, and the PS3 function can be operated.
  If, however, the setup enable conditions are not satisfied, inputs are disabled.
- When the soft key is erroneously inputted:
  When the function lock is canceled: the function lock turns to work.
  When the function lock is working: the function lock is kept working.

B. Setup enable conditions

- The printer expansion kit (including the standard equipment) should be installed.
- The Japanese font ROM should be installed to the printer board. (Japan only)
- The printer function should be provided as standard provision.

C. Setup menu

Enter the soft key to the machine with SIM 26-11.

D. Function cancel menu

- When the diag menu or the key operator program menu is displayed, the current machine state (the key is canceled or not) is displayed.
- Display content
  ON: The function lock is working.
  OFF: The function lock is canceled.
- Regardless of the display position

3. Email alert status

A. Setup contents

- The soft key is supplied by registering the manufacturing number and the model name of the machine and the fixed application number via the Web site.
  Enter the soft key to the machine, and the email alert and status function can be operated.
  If, however, the setup enable conditions are not satisfied, inputs are disabled.
- When the soft key is erroneously inputted:
  When the function lock is canceled: the function lock turns to work.
  When the function lock is working: the function lock is kept working.

B. Setup enable conditions

- The printer expansion kit (including the standard equipment) should be installed.
- The network expansion kit (NIC) should be installed.

C. Setup menu

Enter the soft key to the machine with SIM 26-12.

D. Function cancel display

- When the diag menu or the key operator program menu is displayed, the current machine state (the key is canceled or not) is displayed.
- Display content
  ON: The function lock is working.
  OFF: The function lock is canceled.
- Regardless of the display position

[5] SIMULATION

1. Simulation mode key operation

	Procedure		Key operation
1	Simulation mode selection	Normal mode	# → INTERRUPT → C → INTERRUPT
2	Main code selection		10-key (Input main code) → START
3	Sub code selection		10-key (Input sub code) → START
4	Selection of the mode and item		10-key and ↑ ↓
5	Start simulation operation		OK or START
6	Returns to the sub code selection		INTERRUPT
	Simulation mode clear		CA

2. Simulation contents

Main code	Sub code	Detail	Details of operation
22	1	Various counters display	The current printer (various) counter value is displayed.
24	9	Printer/other counter clear	Printer (other) counter clear.
67	14	Printer Flash ROM data download	Enters the Flash ROM version-up mode of the printer PWB. (For details, refer to the Flash ROM version up procedures described later.)

[6] CONFIGURATION REPORT AND TEST PAGE

1. Kinds of test pages

Test pages are available in the following 5 kinds:

- Setup list
- PCL built-in Europe language fonts list
- PostScript built-in Europe language fonts list
- Option fonts list (Only when bar code font option is installed.)
- Network status page (Only when the NIC option is installed.)

2. Print method

1) Push the special function key.
2) Select the test print setup on the operation panel.
3) Select the test page to be printed, and push the OK key.

When the OK key is pushed, the LCD panel display returns to the initial menu of the printer mode.

3. Samples

SHARP AR-275

Printer Configuration Page

HARDWARE STATUS

Machine Information
Language: English

Hardware Specs
Base Memory: 32MB
Optional Memory: None
Total Memory: 32MB

Firmware Version
PRT: 00.99
BOOT: 00.44b
MCU: 00.67

Installed Device
Paper Input Trays: 4 Trays
Output Device: Staple Finisher Tray
Network Interface Card: Installed

Available Paper Size
Tray 1: Letter (8½x11)
Tray 2: A4
Tray 3: A4
Tray 4: A4
Bypass-Tray: (No Paper)

SOFTWARE STATUS

PostScript Emulation
Job Timeout: 0sec.
Manual Feed Timeout: 0sec.
Wait Timeout: 300sec.

PCL Emulation
Font Source: Resident
Font Number: 0
Font: Courier
Pitch Size: 10.00
Point Size: 12.00

Network Information
NIC Firmware Version: 01.00b18
NetWare Print Server Name: SC001434
EtherTalk Printer Name: SC001434
EtherTalk Zone: *
NetBEUI Workgroup Name:Sharp-Printer
NetBEUI Printer Name:SC001434

Total Page Count
1133

KEY MENU STATUS

Main Menu
Copies: 1
Resolution: 600dpi
Smoothing: On
Print Toner Save: Off
Page Protection: Off
ROPM: Off
2-Sided Printing: Off
Paper Source: Auto
Paper Size: A4
Orientation: Portrait
Emulation: Auto
PCL Symbol Set: Roman-8

Interface Menu
I/O Timeout: 60sec.
Port Switching Method: Switch at End of Job

PS3 Menu
Print PS3 Error: No

Printer Key Operator Settings
Exposure Level: Normal
Notice Page: Yes
Rotated Print: Yes
Forced Output of Print: No
Auto Tray Switch: Yes
Tray Excluded from ATS: No
Exclude Bypass-Tray from ATS: Yes
Disable Main Menu Changes: No
Disable Interface Menu Changes: No
Disable PS3 Menu Changes: No
IP Address: 10.36.157.26
Subnet Mask: 255.255.255.0
Default Gateway: 10.36.157.1
Enable TCP/IP: Yes
Enable NetWare: No
Enable EtherTalk: No
Enable NetBEUI: No
Disable Interrupt Print Job: No
Printer Accounting Mode: No
Cancel Jobs of Invalid Accounts: No

PCL is a registered trademark of Hewlett-Packard Company. PostScript is a trademark of Adobe Systems Incorporated, that may be registered in certain jurisdictions. NetWare is a registered trademark of Novell, Inc. All other trademarks and copyrights are the property of their respective owners.

[7] FLASH ROM VERSION UP PROCEDURE

(Items necessary for upgrade)

A Personal computer

B Parallel (printer) cable

C Software for upgrade

(Type of ROM)

Flash ROM is directly attached to each PWB

(Targeted PWBs)

1 PCL-PWB

Diagrammatic sketch for upgrade method

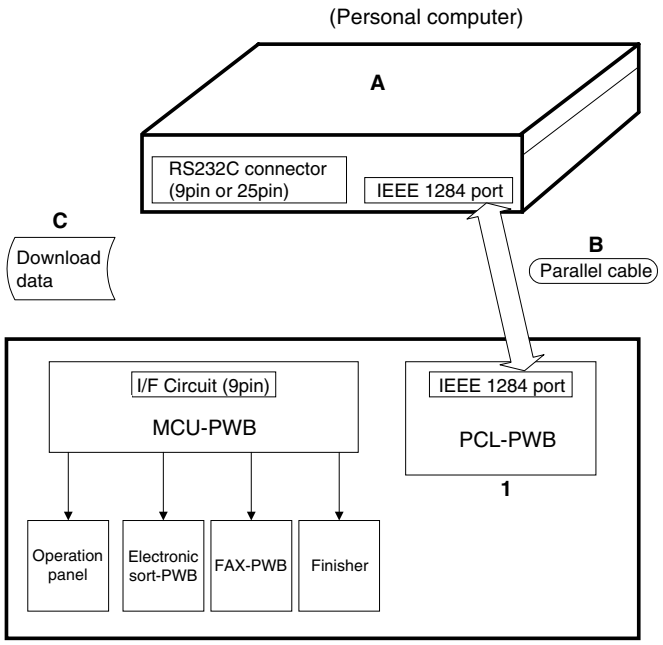

(AR-235/275)

(Necessary files for download)

• Printer control board data transfer tool: fcopy.exe

The maintenance program performs the following program download operations:

• Printer control board program download

1. Printer control board program download procedure

The download procedures of the printer control board are as follows:

1) Preliminary procedure: Connect the PC and the main body (printer control board) with the parallel cable.

Note: If the download cable (RS-232C cable) is connected to the PC and the main body, be sure to disconnect the cable.

2) Main body side: Turn on the power of the main body.

3) PC side: Confirm that the tree is displayed on the maintenance program.

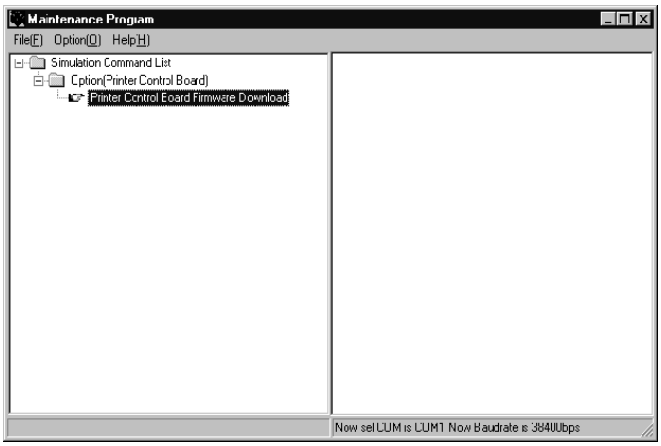

4) Enter the test command mode of the main body and execute SIM 67-14 "Flash memory writing."

5) Main body side: Wait until the program transfer start allow message ("Pleas Send Data", etc.) is displayed on the main body panel.

6) PC side: Double click "Option (printer control board)" in the main tree items of the maintenance software to develop the sub tree items. Double click "Printer control board program download" in the sub tree items.

7) PC side: The maintenance software asks you the printer control board program download file. Specify the file name.

   Printer control board program download file name: pagesXXX.hex
   XXX: Release version

9) PC side: Data transmission is started. Wait for a while.

10) PC side: When data transmission is completed normally, the message below is displayed.

    Message: Data transmission complete

11) Main body side: Wait until the main body status display is shown on the main body panel.

12) After-work: Terminate the maintenance program and press the [CA] key to reset the main body.

With the above procedures, the printer control board program download is completed.

NOTE:

When upgrading the version of the PCL board with NIC installed, it may take about 30 sec to display "Please Send Data" in the above step 6).

This is because initialization of the NIC is not completed until the DHCP server has completed retrieval and the IP address has been acquired (or 30 sec time-out). To avoid this, perform either of the following measures and complete the above step.

Measures to avoid:

• Remove the NIC.

• Turn off DHCP of the NIC.

• Connect to a network with a DHCP server in it.

2. Others (Error list)

The list below describes errors occurring during download and countermeasures.

No	Error message	Descriptions
01	COM Port Open Error !	This error message is displayed when a COM port which is disabled is selected or when there is an abnormal COM port.
		[Countermeasures] Select another COM port which is enable. Check if there is any software which is using the COM port.
02	TimeOut Error !	This error message is displayed when no response is sent back from the remote party for 10 sec.
		[Countermeasures] Once reset the maintenance software and the machine, then download again.
03	Receive Error !	This error message is displayed when data received from the remote party are abnormal.
		[Countermeasures] Once reset the maintenance software and the machine, then download again.
04	Panel Size Error !	This error message is displayed when the download file size is specified to 8MB though the machine panel is of 4MB size.
		[Countermeasures] Specify a download size suitable for the machine panel size, and download again.
05	Destination Error !	This error message is displayed when the destination of the machine panel does not coincide with that of the download file.
		[Countermeasures] Specify the download file suitable for the destination of the machine panel, and download again.
06	Printer Control Board FirmWare Download Send Error !	This error message is displayed when an error occurs during downloading of the printer control board firmware.
		[Countermeasures] Execute SIM 67-14 on the machine panel to check that "Please Send Data" is displayed, and download again.

[8] PRINTER STATUS MONITOR/PRINTER ADMINISTRATION UTILITY

1. Printer status monitor

A. Purpose

- Is printing enabled or disabled?
- Is toner sufficiently supplied?
- Is paper sufficiently supplied?
- Is the previous printing completed?

This application provides easy and simple view of the above items.

B. Operating environment

Windows95, Windows98, WindowsMe, WindowsNT4.0 Workstation (SP3 or later), Windows2000 Professional, TCP/IP necessary

C. V3.0 limitations and notes

(1) Requisites of printer to be monitored

- The printer driver should have been installed. (Necessary)
- The driver should allow peer-to-peer printing.
  For the AR-235/275 series, the attached SC-Print2000 should be installed to the AR-NC5J, and the "Print destination port" of the printer should be set to TCP/IP port,

or

- In the case where the driver is shared with the printer server, the printer should be connected with TCP/IP. In this case, monitoring is allowed after printing once.

(2) Install and uninstall

In the case of WindowsNT/2000, the administrator authority is required for install and uninstall.

D. Outline of functions

(1) Status display

Simple view: For beginners

Detailed view: For experts

Simple/Detailed selection allowed

(2) Status change notification

Device status when the machine is sending a job

Print enable

Print disable

Paper jam

Toner empty

Cover open

Off-line

Printer error (Service call)

Notifying method:

Status window pop-up

Tip pop-up

Sound

(3) Selection of printer to be monitored

If the driver is installed, the printer can be monitored.

(4) Job complete notification

Status of the job which was sent by the machine

Print complete

Error

(5) Information supply to the driver

The obtained option information is reflected to the driver setup.

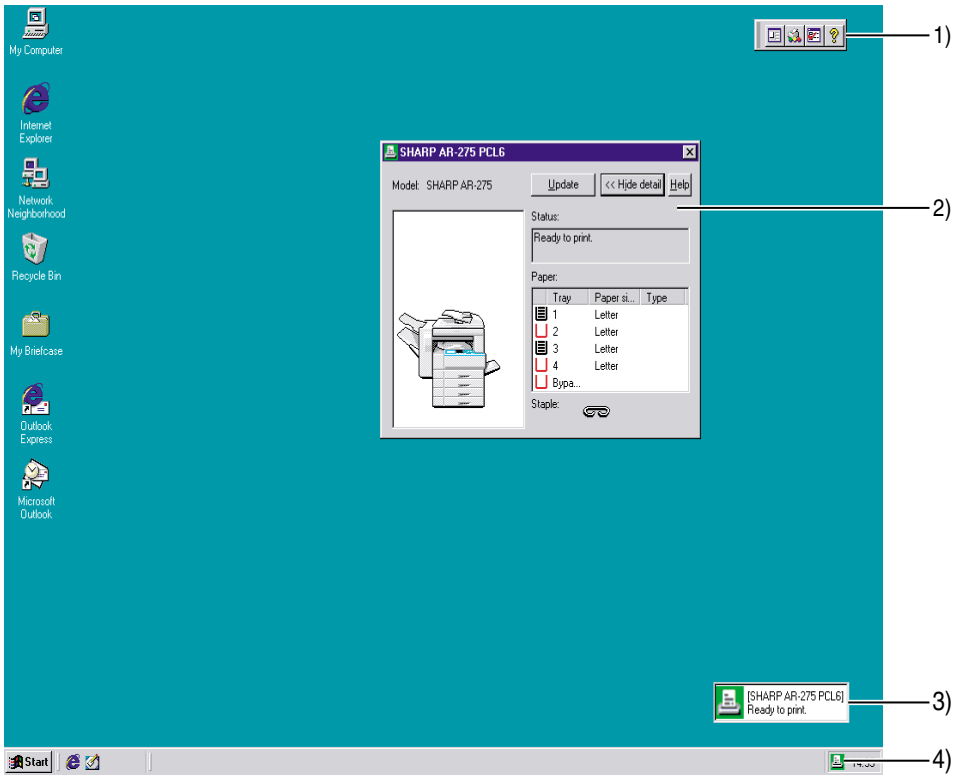

1) Tool bar
   Displays the status window, revises the display to the latest state, makes setups, and displays Help.
2) Status window
   Displays the printer status.
   Selection of Simple/Detailed view is allowed.
   Pop-up to indicate a change in the status is also allowed by setup.
3) Dip
   Turns on for a certain time (when setting) when the status changes.
4) Task tray icon
   Memory-resident. Displays the printer status which is monitored.

(6) Job complete notification

When a print job is completed (or interrupted by an error), a notification from the printer is received and displayed.

The dialog pop-up shows the notification.

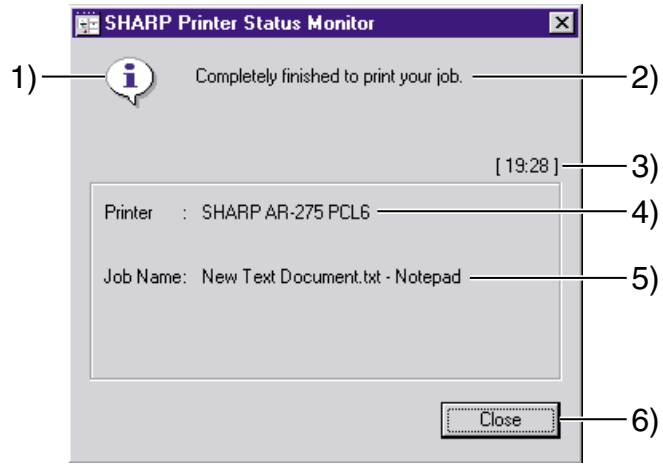

1) "Normal" icon
2) Message
3) Notifying time
4) Printer driver name
5) Job name
6) "CLOSE" button

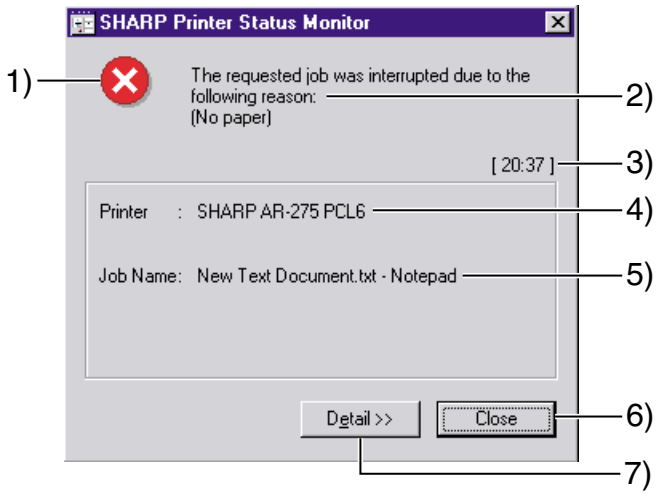

1) "Error" icon
2) Message
3) Notifying time
4) Printer driver name
5) Job name
6) "CLOSE" button
7) "DETAIL" button

(7) Status advice immediately before printing (23-page machine/27-page machine)

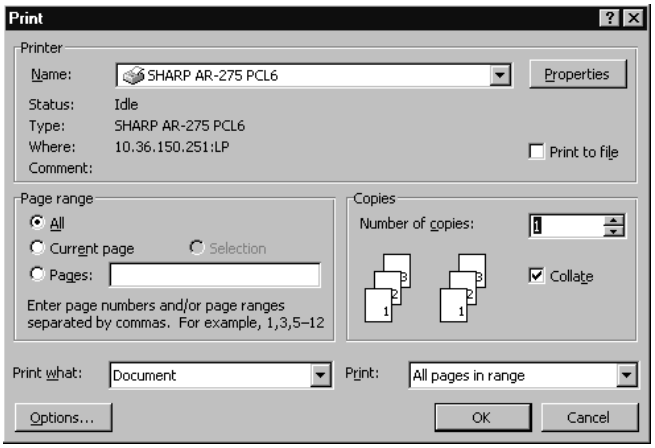

The status is checked when printing is performed.

If any trouble occurs

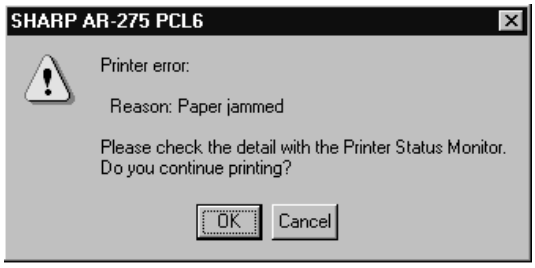

The dialog to select Continue or Cancel printing is displayed.

(8) Information supply to the printer driver

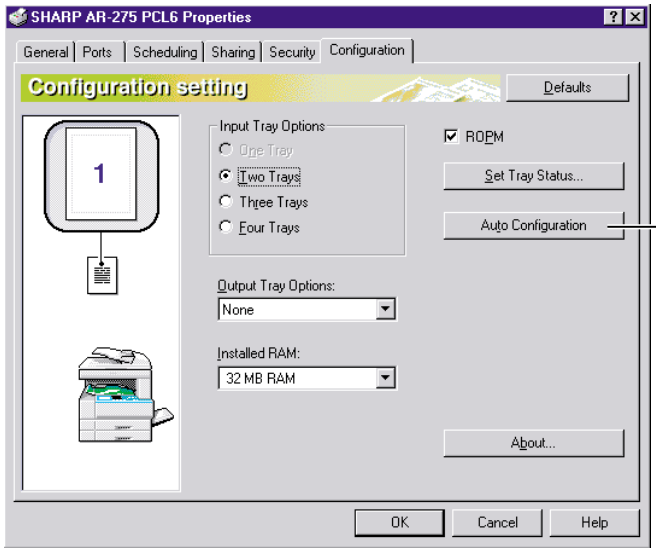

Option information is obtained from the printer status monitor and reflected to the "Device composition setup" tab of the driver.

2. Printer administration utility

A. Purpose

This application provides easy and simple view of the following items:

- What kinds of network printers are connected in the network?
- Are the network printers operating normally?
- What functions does the printer have?

B. Operating environment

Windows95/98/Me/NT4.0 Workstation (SP3 or later)/2000 Professional, TCP/IP, Winsock2 necessary

C. Outline of functions

(1) Network printer retrieval/list display

- Retrieval and list display of the network printers which conform to the Printer MIB (RFC1759) specifications.
- Printer status display by the color of the icon
  - Normal state (No color)
  - Warning state (Yellow)
  - Paper low, toner near empty, printer warning
  - Error state (Red)

    Paper empty, cover open, toner empty, paper jam, printer error
- List display filter function

(2) Alert/log function

- Alert by the pop-up/sound when the printer status changes.
- Making of the alert/log file

(3) Printer property display

- Device information
  Model name, status, name, installing place, RAM size, max. print speed, etc.
- Paper exit tray information
  Tray name, number of trays, paper empty/presence of each tray, paper exit method, printing sequence, etc.
- Paper feed tray information
  Number of trays, tray name, paper empty/presence of each tray, paper size etc,
- Print setup
  Channel & PDL information, default PDL, paper direction, single/duplex print information
- Resource information
  Print quantity, toner status, waste toner status
- Summary information
  Information on the system and network
- SHARP NIC information
  NetWare setup, IP address, hardware address, etc.

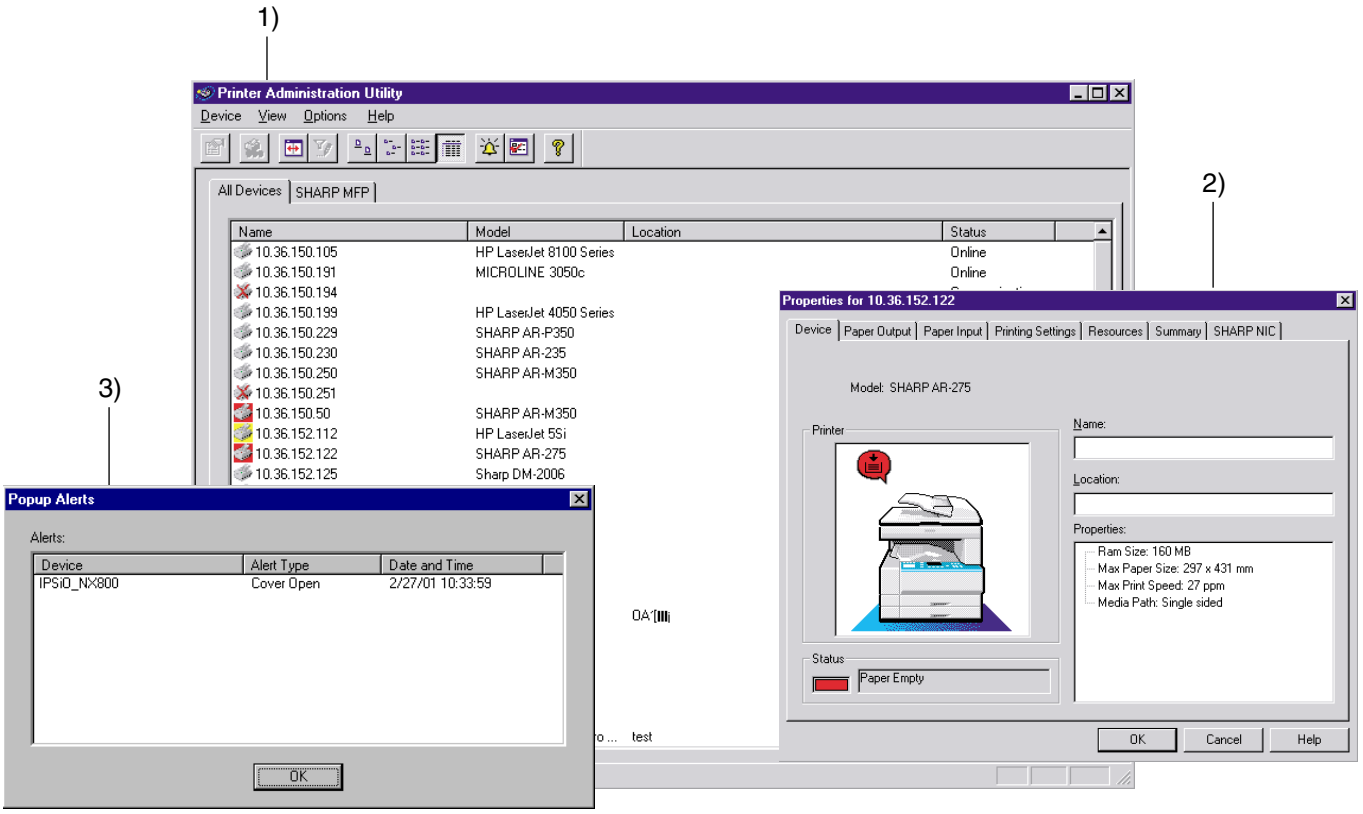

1) Main window
   List display of network printers.
   The status of a printer is indicated by the color of the icon.
2) Printer property page
   Detailed information (on the functions and status) of a printer is displayed.
3) Pop-up alert
   The pop-up-alert can be displayed by the setup when the printer status changes.

Printer property page (Select a printer from the list and double click it to display this page.)

[Device tab]

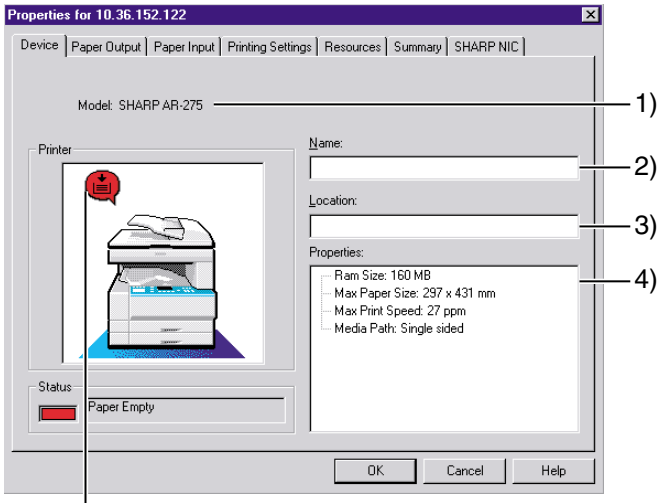

	Toner Low		Toner Empty
	Offline		Paper Jam
	Paper Empty		Printer Error
	Cover Open		

1) Model
2) Name: Can be set.
3) Installing place: Can be set.
4) Property:
   RM size
   Max. paper size
   Max. print speed
   Paper path

[Paper exit tab]

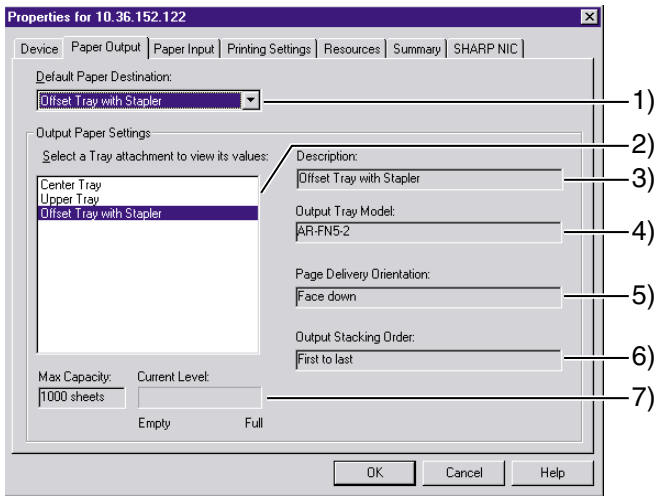

1) Paper exit tray for normal use:
   If the driver does not specify any paper exit tray, the printer uses this tray.
2) List of paper output trays:
3) Description: = Tray name
4) Model name: (Not set in some models.)
5) Paper exit method: Face-up or face-down
6) Printing sequence: "First To Last" or "Last To First"
7) Max. paper capacity: The paper presence is detected and displayed only when the job separator is installed.

Information on the tray selected from the list is displayed.

[Paper feed tab]

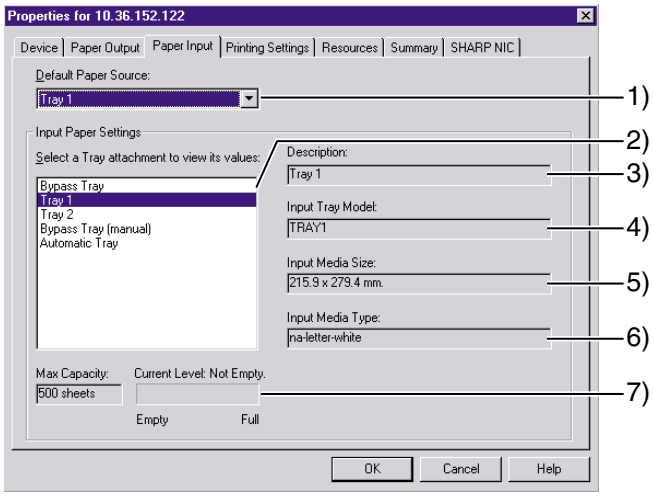

1) Paper feed tray for normal use:
   If the driver does not specify any paper feed tray, the printer uses this tray.
2) List of paper feed trays:
3) Description: = Tray name
4) Model name: (Not set in some models.)
5) Paper size: Length x width (mm)
6) Paper kind: Name defined by ISO/IEC 10175DPA
7) Max. paper capacity: AR-160/200 series detects the presence of paper only.

Information on the tray selected from the list is displayed.

[Print setup tab]

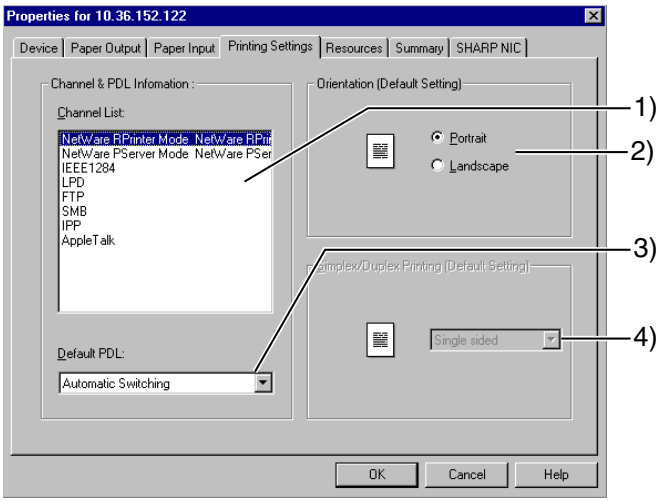

1) Channel list: List of the effective channels
2) Paper direction: If the driver does not specify the direction, the printer uses this direction for normal use. (No change allowed for some models.)
3) Default PDL: If the driver does not specify any PDL, the printer uses this PDL for normal use. (No change allowed for some models.)
4) Single/Duplex print: If the driver does not specify single/duplex print, the printer uses this print path for normal use. (No change allowed for some models.)

[Resource type]

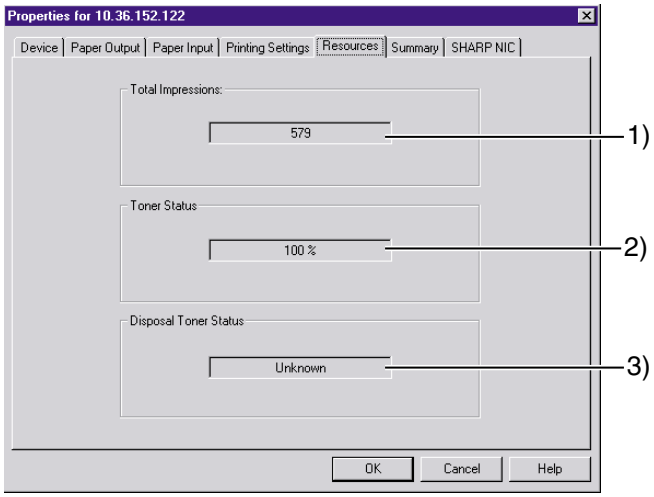

1) Print quantity: The quantity of printouts. The paper jams are not counted. The outputs of copy and FAX are not counted, either.
2) Toner status: OK or toner empty.
(Only toner empty or not is detected in some models.)
3) Waste toner status: (Not supported in the models which have not a waste toner bottle.)

[Summary tab]

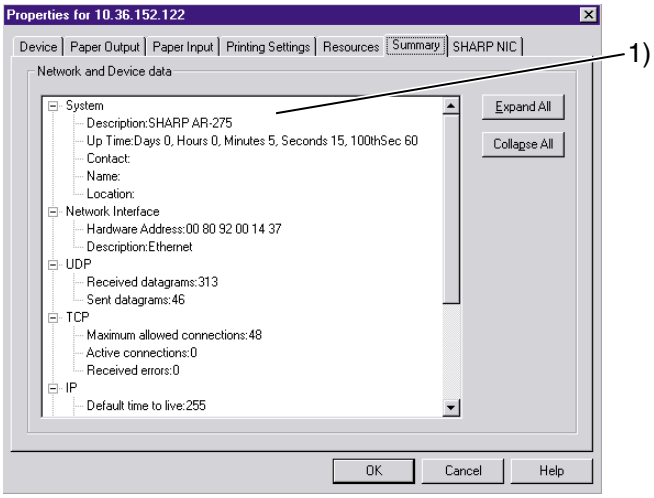

1) Network and device information:
Device information
– Descriptions, operating time, etc.
Network information
– TCP, IP, the number of send/receive packet of SNMP

[SHARP NIC tab]

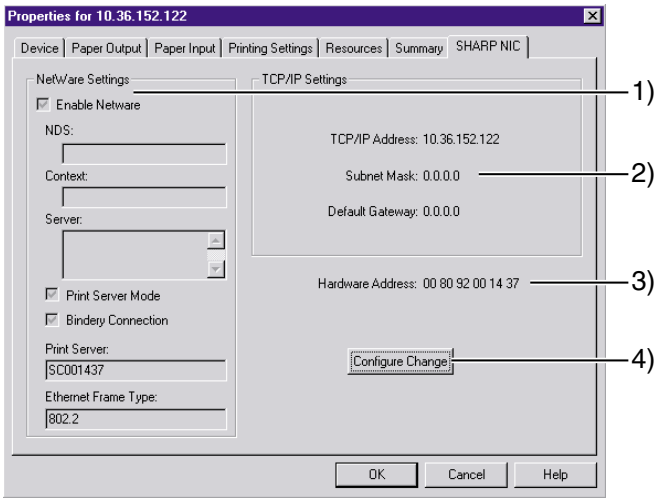

1) NetWare setup: Setup of NetWare enable/disable
If set to enable, setup and display and changes are made on the following items:
NDS mode or Bindery mode
NDS tree name, context name
Bindery server name,
Ethernet frame name
2) TCP/IP setup: TCP/IP address, sub-net mask, default gateway
3) Hardware address: Hardware address of the network card in the target printer.
4) Link to the device Web page (Provided only the models which have an assembly Web server.)

[Application]

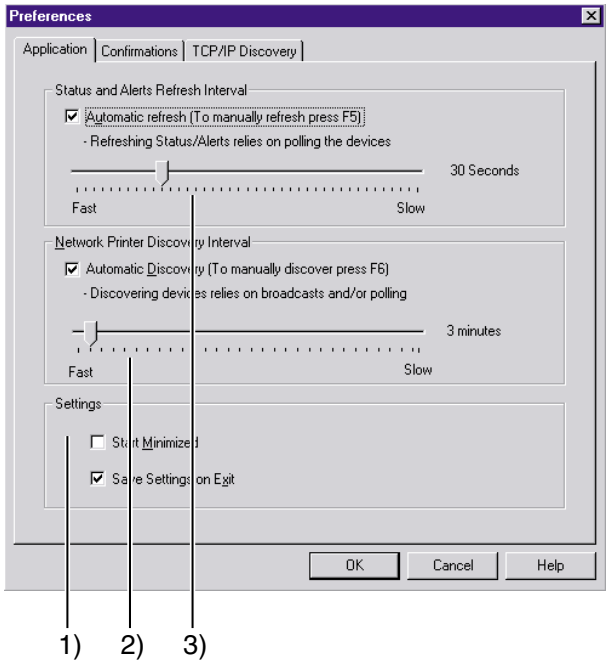

1) Setup: Used to set that the icon is minimized when booting or not, and that the setup content is stored when terminating or not.
2) Network printer retrieval interval: Used to set automatic retrieval of a printer on the network.
The printers to be retrieved can be set with the "Printer retrieval (TCP/IP)" tab.
The retrieval interval is 1min to 60min. The default is 3min.
3) State and alert revision interval
Used to set automatic revision of the printer status. The revision interval is 10sec to 90sec. The default is 30sec.

[Confirmation]

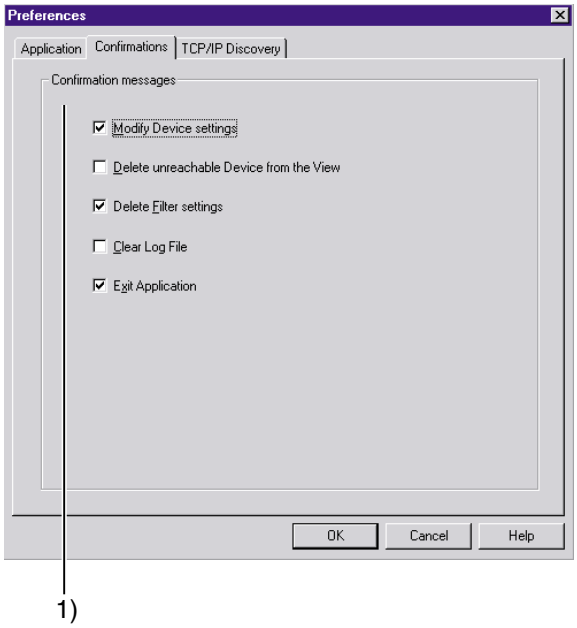

1) Confirmation message: Used to set that the confirmation pop-up menu is displayed when;
   the device setup is changed.
   the device is deleted,
   the filter setup is deleted,
   the log file is deleted,
   the application is terminated.

[Printer retrieval]

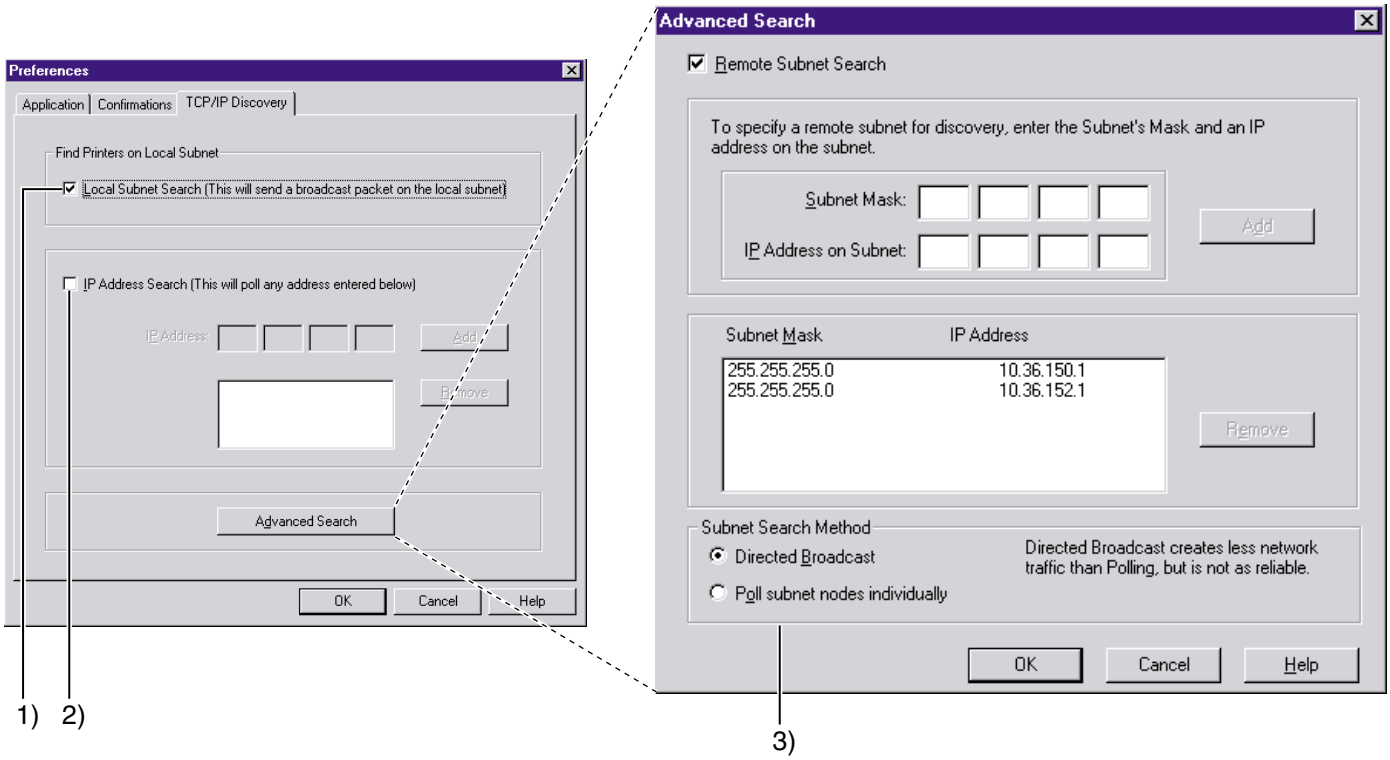

1) Printer retrieval on the local network:
   When this box is checked, the local network address is obtained from the IP address and the sub net mask of the PC where PAU is installed, and a printer on the local network is retrieved.
2) Retrieval by IP address:
   A certain IP address can be obtained.
   Only when this box is checked, the printers which have IP addresses listed on the list can be retrieved.
3) Advanced retrieval dialog box
   Used to set the printer retrieval on an external network.
   To specify an external network to be retrieved, enter the network address and the sub net mask of that network.

System diagram

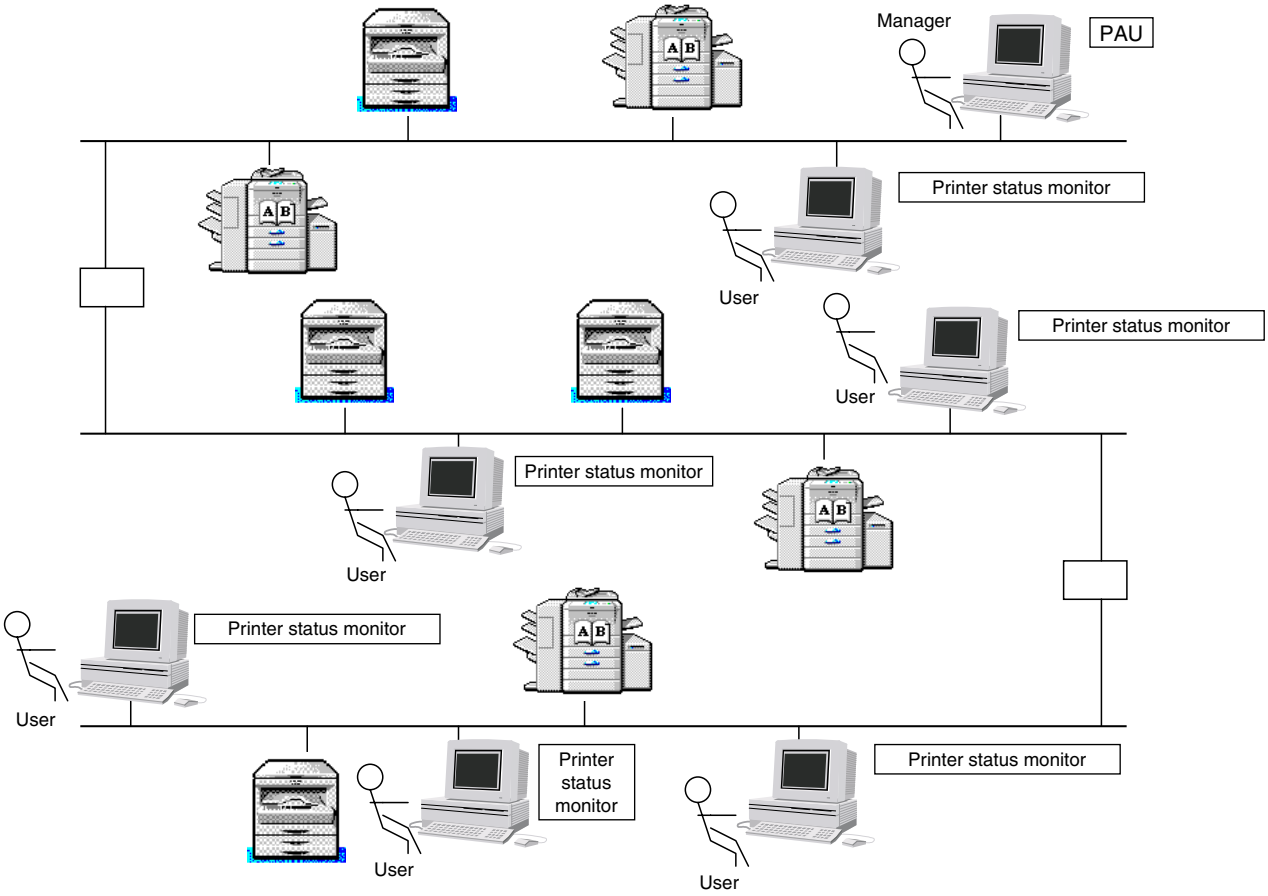

[9] TROUBLE CODE LIST

Trouble code		Details of trouble	
Main code	Sub code		
F9	00	Content	F9-**: MCU-PRT communication trouble
		Details	Communication establishment error/ framing/parity/protocol error
		Cause	Printer PWB connector disconnection Harness trouble between the printer PWB and the MCU PWB Motherboard connector pin breakage Printer PWB ROM trouble/Data disturbance
		Check and remedy	Check the connectors and harness of the printer PWB and MCU PWB. Check the grounding of the copier. Check ROM on printer PWB.
	10	Content	Printer PWB trouble
		Details	Communication trouble between MCU and printer PWB
		Cause	Printer PWB connector disconnection Harness trouble between the printer PWB and the MCU PWB Motherboard connector pin breakage Printer PWB ROM trouble/Data disturbance
		Check and remedy	Check the connectors and harness of the printer PWB and MCU PWB. Check the grounding of the copier. Check ROM on printer PWB.
	80	Content	Printer PWB communication trouble (Protocol)
		Details	Communication trouble between MCU and printer PWB (Protocol error)
		Cause	Printer PWB connector disconnection Harness trouble between the printer PWB and the MCU PWB Motherboard connector pin breakage Printer PWB ROM trouble/Data disturbance
		Check and remedy	Check the connectors and harness of the printer PWB and MCU PWB. Check the grounding of the copier. Check ROM on printer PWB.
	81	Content	Printer PWB communication trouble (Parity)
		Details	Communication trouble between MCU and printer PWB (Parity error)
		Cause	Printer PWB connector disconnection Harness trouble between the printer PWB and the MCU PWB Motherboard connector pin breakage Printer PWB ROM trouble/Data disturbance
		Check and remedy	Check the connectors and harness of the printer PWB and MCU PWB. Check the grounding of the copier. Check ROM on printer PWB.
	82	Content	Printer PWB communication trouble (Overrun)
		Details	Communication trouble between MCU and printer PWB (Overrun error)
		Cause	Printer PWB connector disconnection Harness trouble between the printer PWB and the MCU PWB Motherboard connector pin breakage Printer PWB ROM trouble/Data disturbance
		Check and remedy	Check the connectors and harness of the printer PWB and MCU PWB. Check the grounding of the copier. Check ROM on printer PWB.
	84	Content	Printer PWB communication trouble (Framing)
		Details	Communication trouble between MCU and printer PWB (Framing error)
		Cause	Printer PWB connector disconnection Harness trouble between the printer PWB and the MCU PWB Motherboard connector pin breakage Printer PWB ROM trouble/Data disturbance
		Check and remedy	Check the connectors and harness of the printer PWB and MCU PWB. Check the grounding of the copier. Check ROM on printer PWB.
	88	Content	Printer PWB communication trouble (Timeout)
		Details	Communication trouble between MCU and printer PWB (Timeout error)
		Cause	Printer PWB connector disconnection Harness trouble between the printer PWB and the MCU PWB Motherboard connector pin breakage Printer PWB ROM trouble/Data disturbance
		Check and remedy	Check the connectors and harness of the printer PWB and MCU PWB. Check the grounding of the copier. Check ROM on printer PWB.
	99	Content	Machine-PCL board language error
		Details	The machine language setup does not coincide with the PCL board language setup.
		Cause	PCL board connection error SIM setup error
		Check and remedy	Check the firmware of the PCL board and the combination of the panel screen data, and download the correct version, if necessary. Check the machine language information. (Machine language setup: SIM 26-22)

[10] CIRCUIT DIAGRAM

1. Block diagram

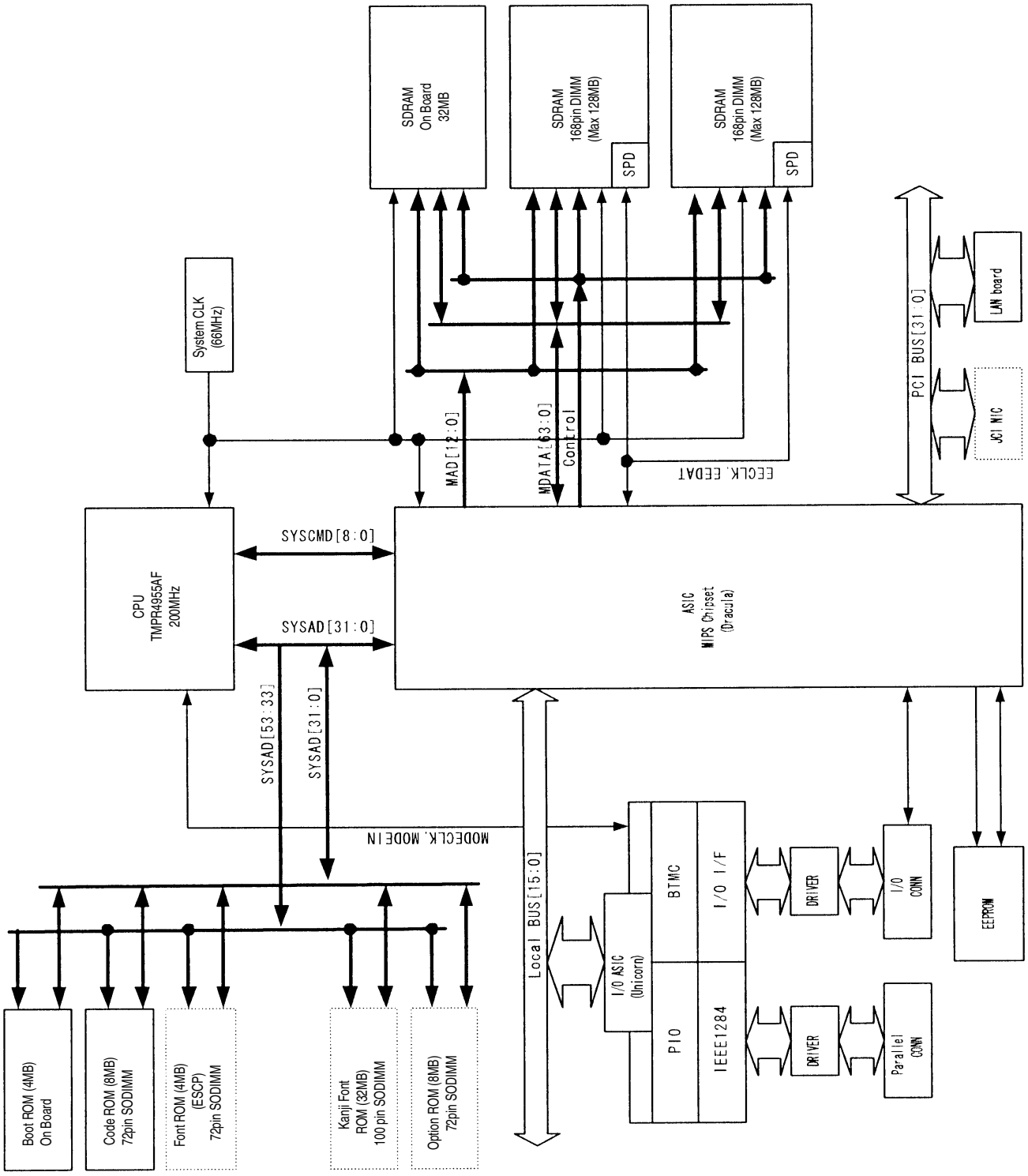

2. CIRCUIT DIAGRAM

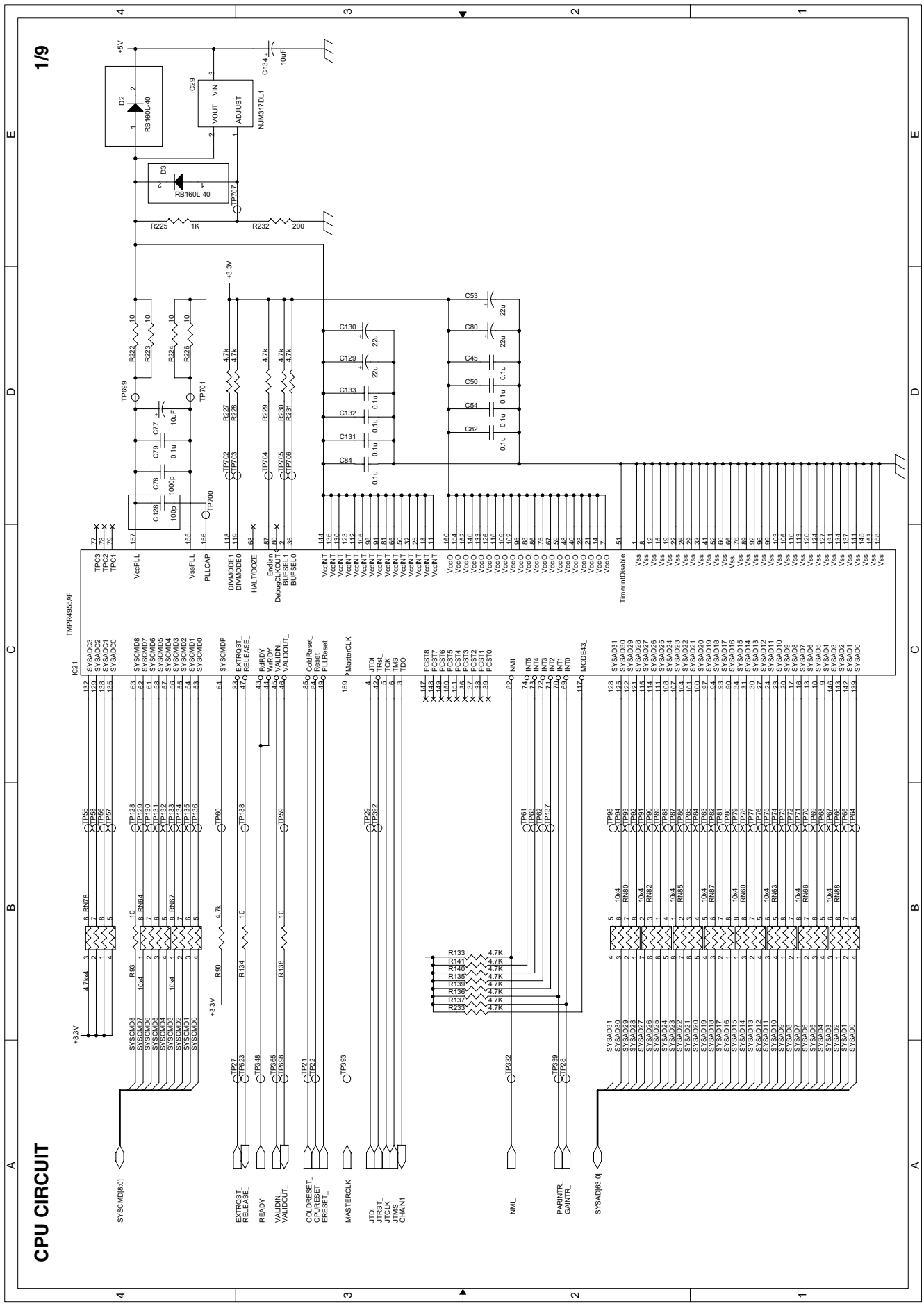

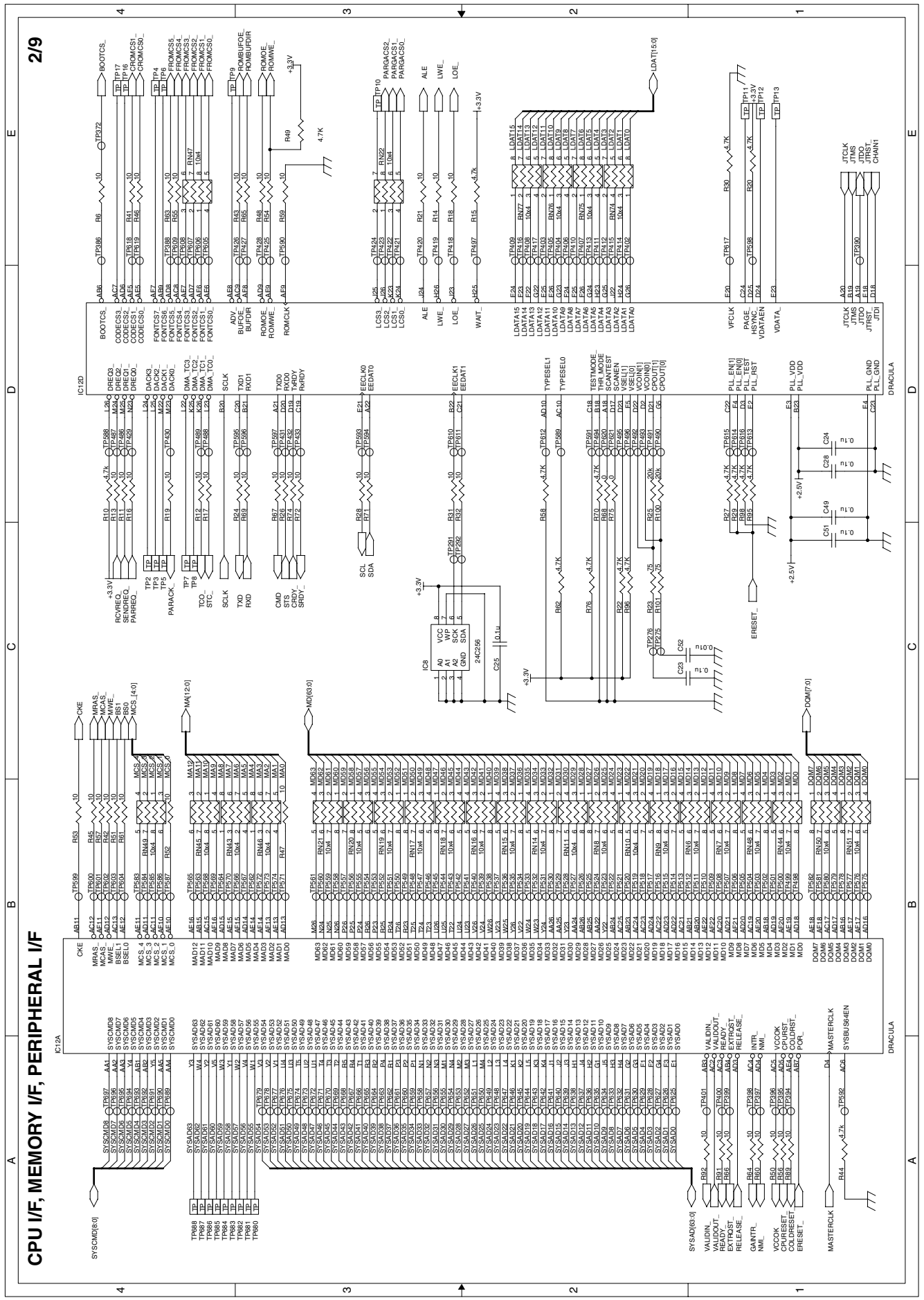
CPU I/F, MEMORY I/F, PERIPHERAL I/F
2/9
IC12A
DRACULA
IC12D
DRACULA
IC8
24C256
SYSCMD[8:0]
MA[12:0]
MD[63:0]
DQM[7:0]
SYSAD[63:0]
MASTERCLK
VALUDIN_
VAUDOUT_
READY_
COLDRST_
RELEASE_
GAINTR_
NMI_
VCCOK
CPURESET_
COLDRESET_
ERESET_
BOOTCS_
CODECS3_
CODECS2_
CODECS1_
CODECS0_
FONTCS7_
FONTCS6_
FONTCS5_
FONTCS4_
FONTCS3_
FONTCS2_
FONTCS1_
FONTCS0_
ADV
BUFOE_
BUFDIR
ROMOE_
ROMWE_
ROMCLK
LCS3
LCS2
LCS1
LCS0_
ALE
LWE_
LOE_
WAIT_
VFCLK
PAGE_
HSYNC_
VDATAEN
VDATA_
JTCLK
JTMS
JTDO
JTRST_
CHAIN1
LDAT[15:0]
PLL_EN[1]
PLL_EN[0]
P/L_TEST
P/L_RST
PLL_VDD
PLL_GND
RCVREQ_
SENDREQ_
PAREQ_
PARACK_
TCO_
STC_
SCLK
TXD
RXD
CMD
STS
CMDRDY_
SRDY_
SCL
SDA
TYPESEL1
TYPESEL0
TESTMODE_
THR_MODE
SCANTEST
SCANEN
VSEL1[1]
VSEL1[0]
VCOIN[1]
VCOIN[0]
CPOUT[1]
CPOUT[0]
DMA_TC3
DMA_TC2
DMA_TC1
DMA_TC0_
DACK3
DACK2
DACK1
DACK0_
DREQ3_
DREQ2_
DREQ1_
DREQ0_
EECLK0
EEDAT0
EECLK1
EEDAT1
TXD0
RXD0
CMDRDY_
RxRDY
ADV
BUFOE_
BUFDIR
ROMOE_
ROMWE_
ROMBUFOE_
ROMBUFDIR
PARGACS2_
PARGACS1_
PARGACS0_
ALE
LWE_
LOE_
+3.3V
+2.5V
4.7K
0.1u
10
10K
20K
75

CLOCK BUFFER, ROM_BUS BUFFER CIRCUIT

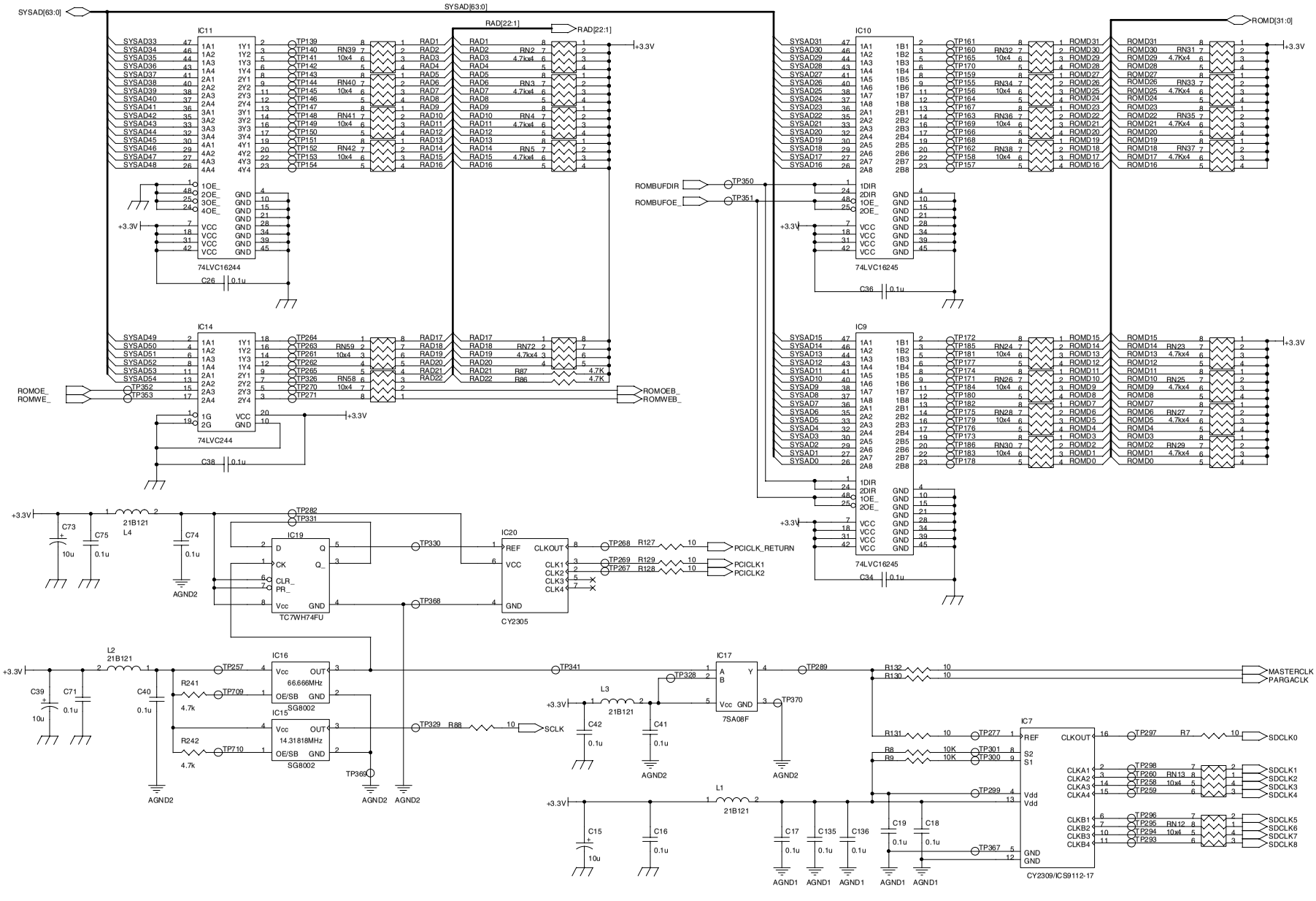

OnBoard (Standard) ROM CIRCUIT

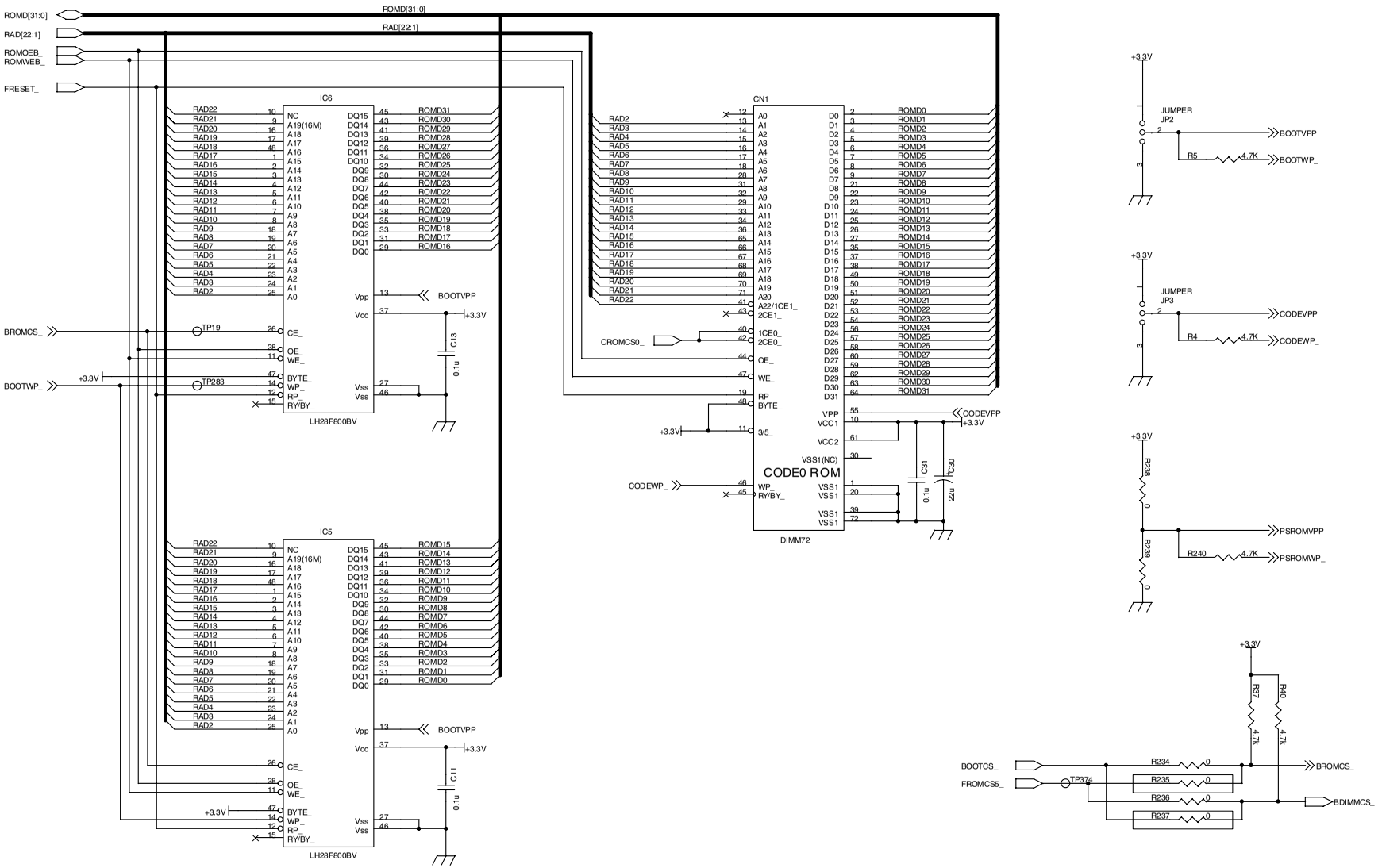

Option ROM SOCKET CIRCUIT

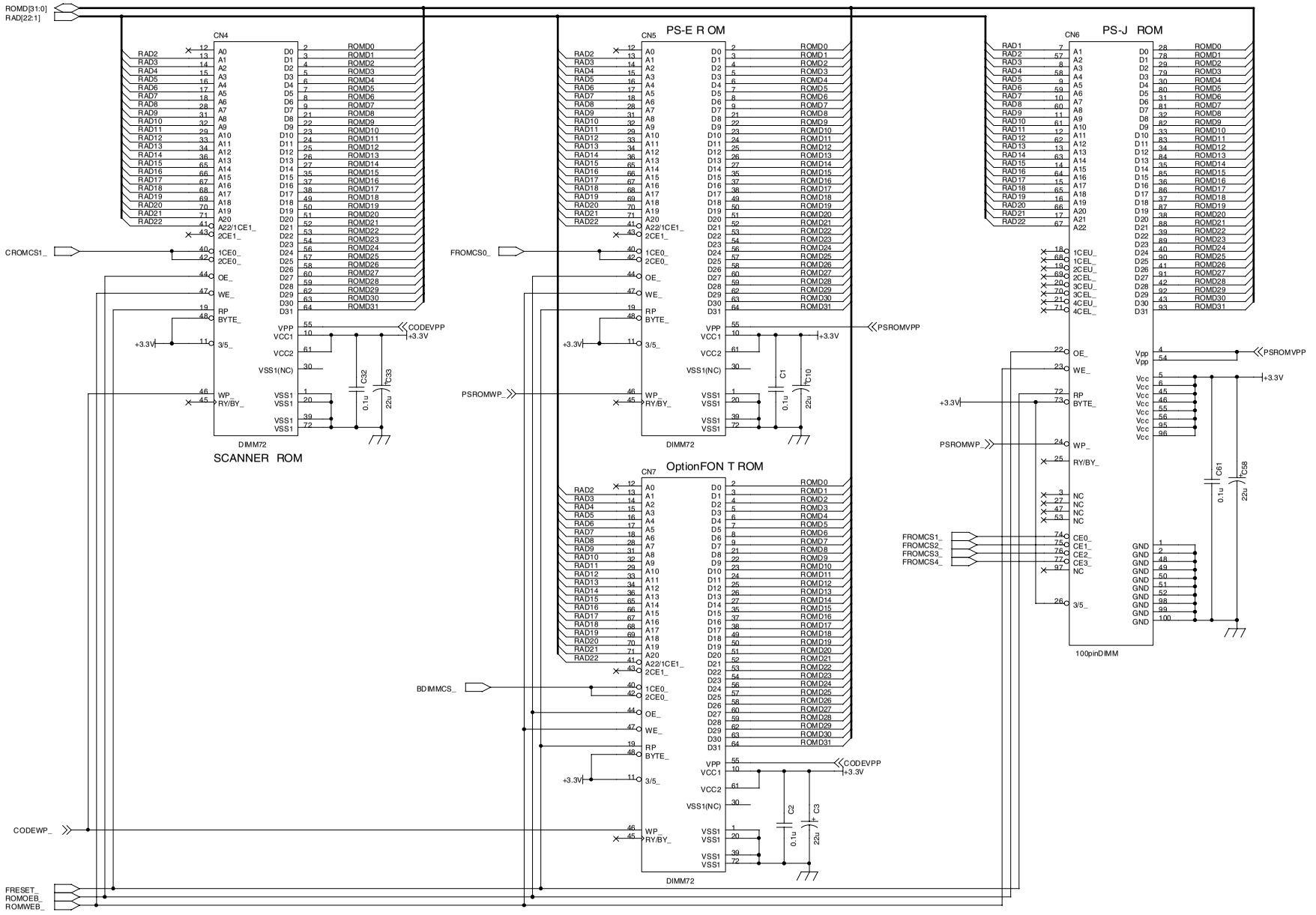

SDRAM CIRCUIT

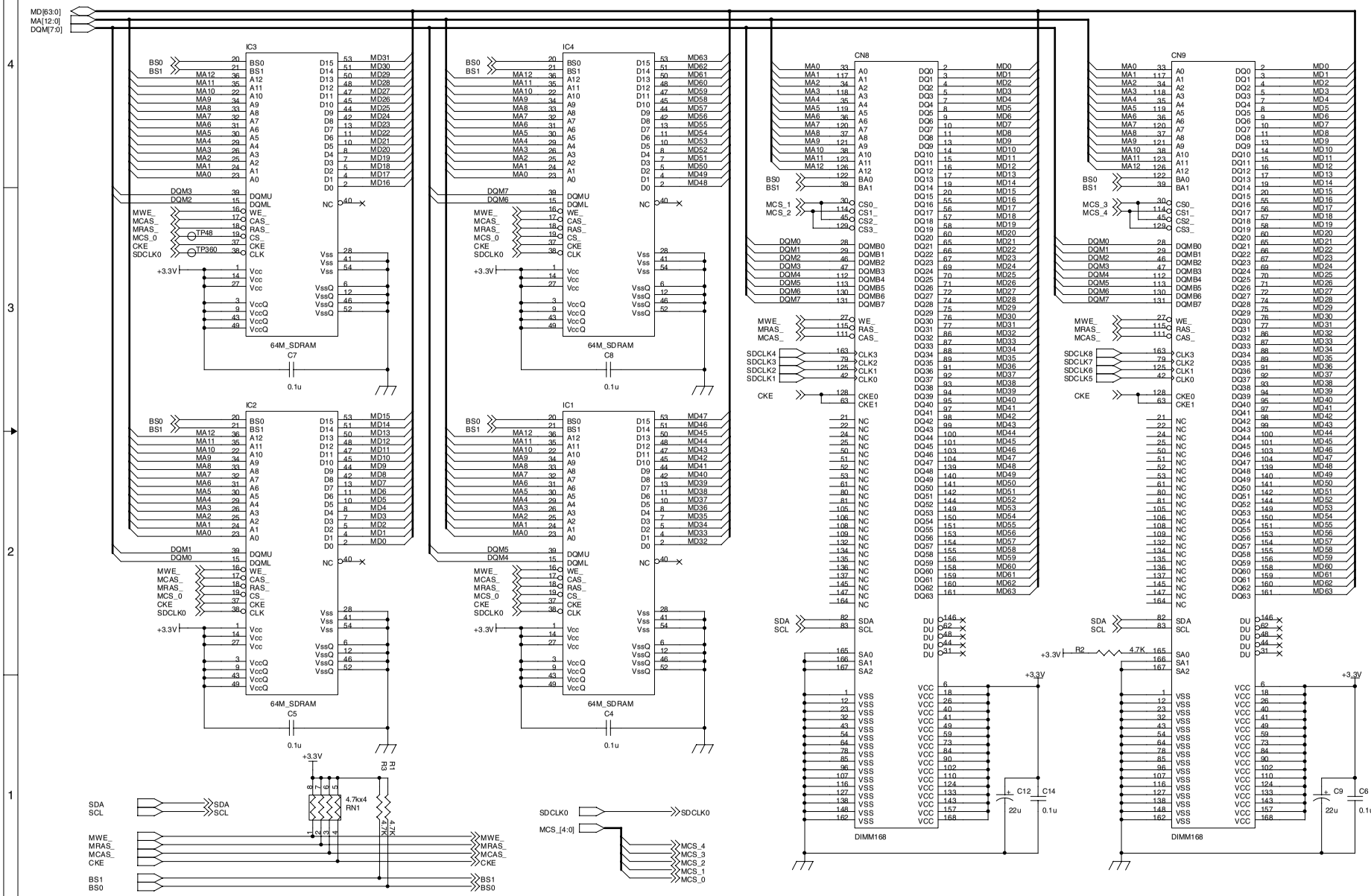

PCI BUS CIRCUIT

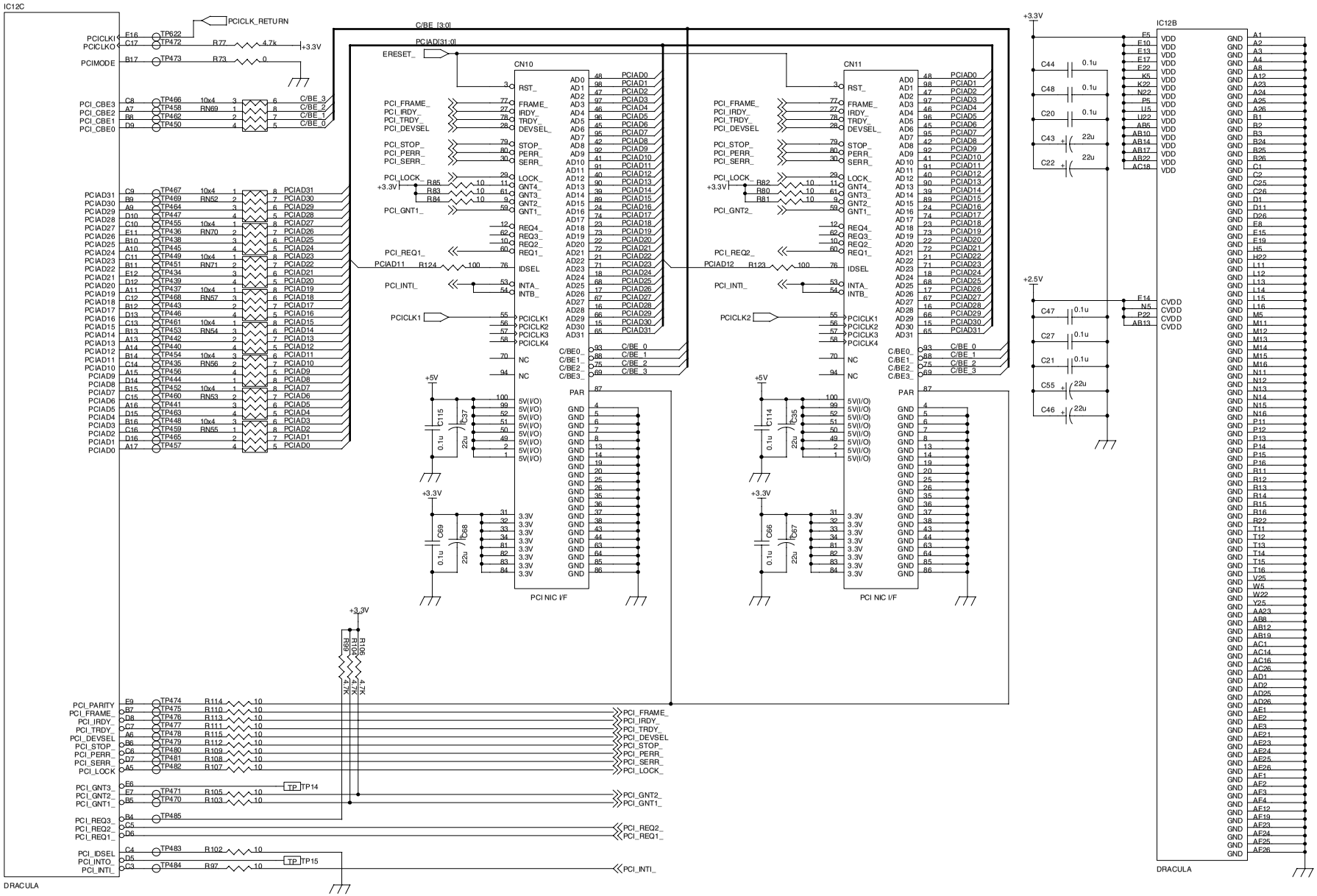

AR-P11 CIRCUIT DIAGRAM - 8

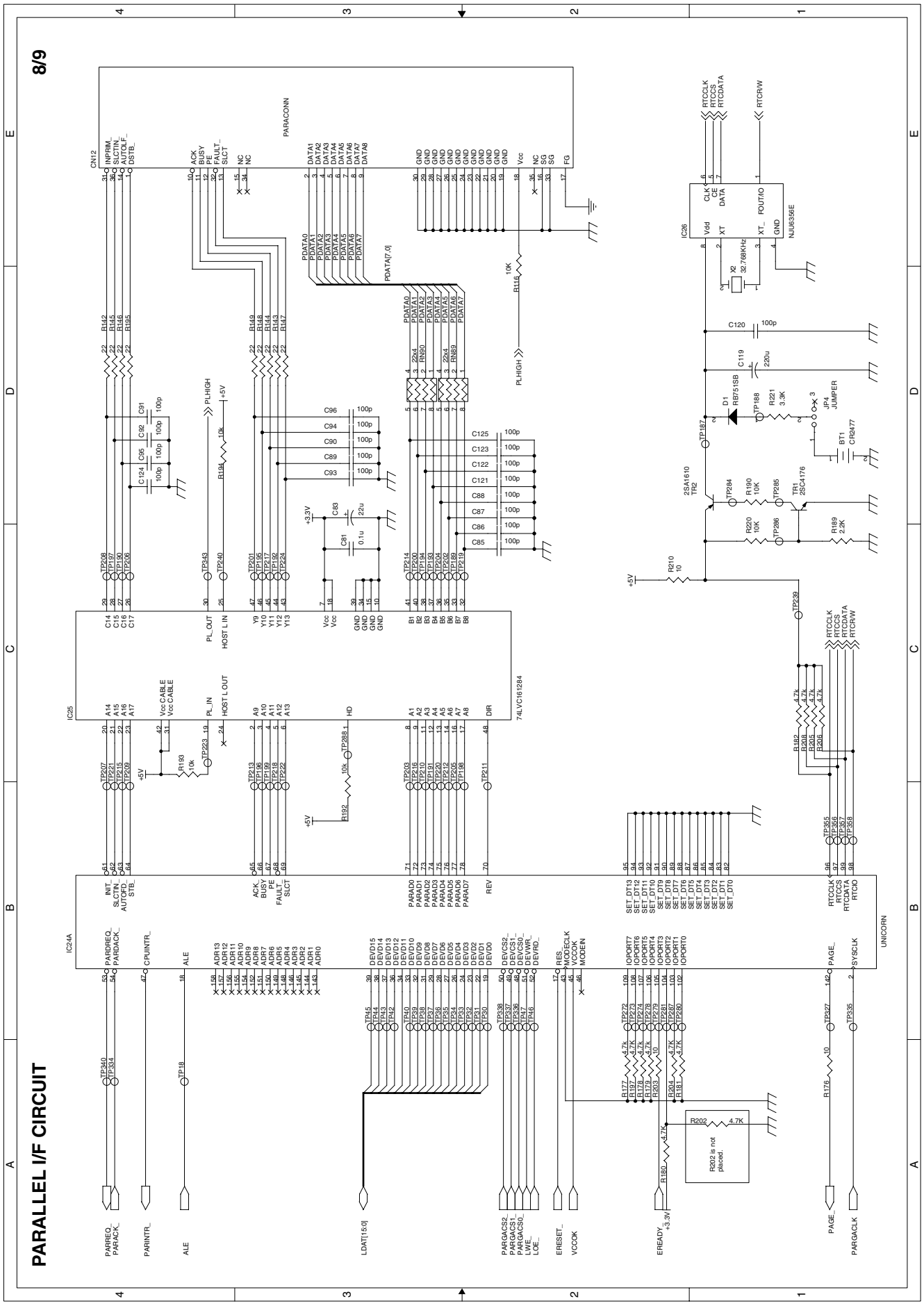
PARALLEL I/F CIRCUIT
8/9
PARACONN
CN12
IC25
74LVC161284
IC24A
UNICORN
IC26
NJU6356E
R202 is not placed.

MBUS CIRCUIT

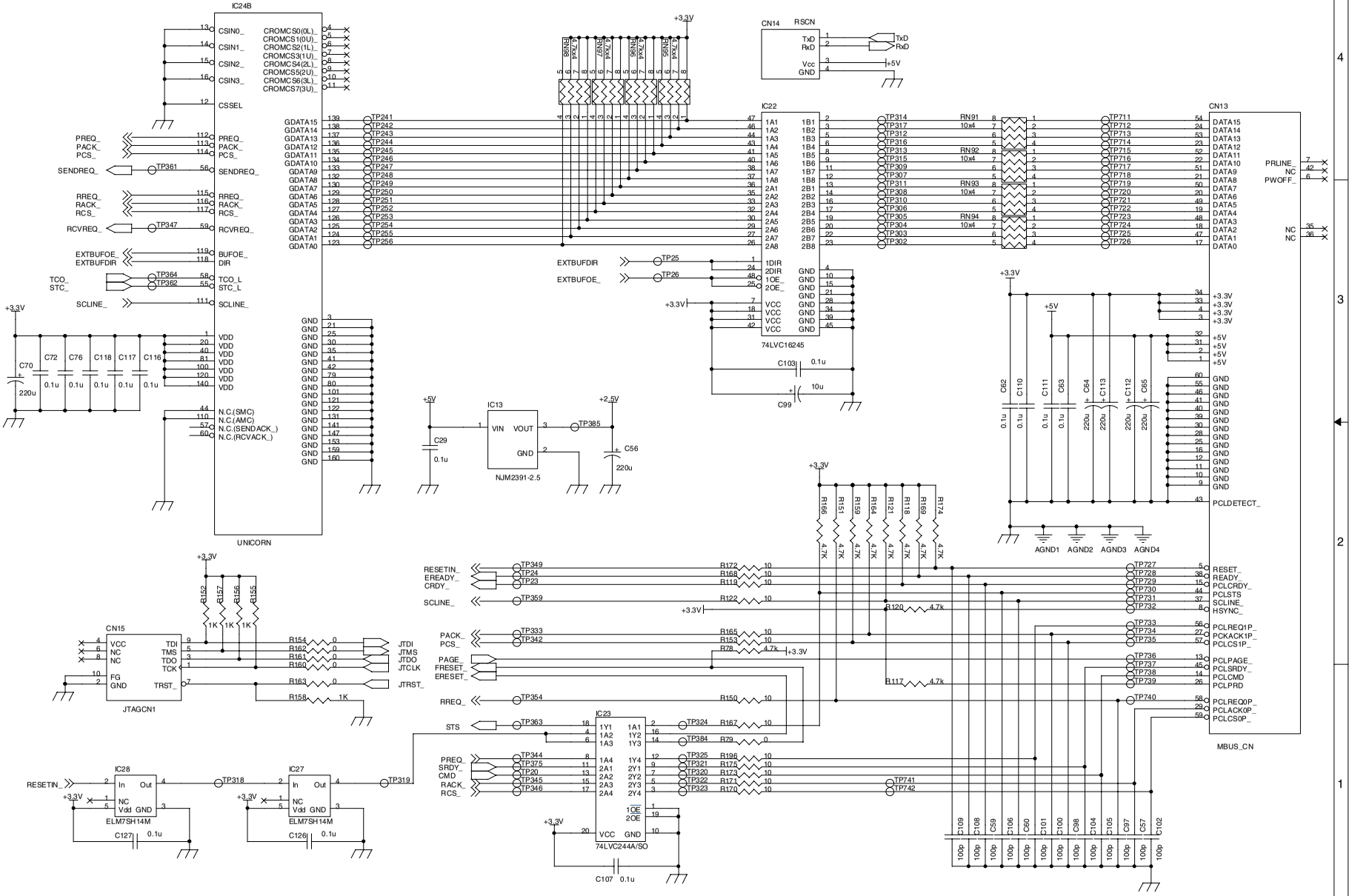

SHARP

PARTS GUIDE

MODEL AR-P11 AR-PK1

CONTENTS

1 AR-P11 Packing material & Accessories

2 AR-PK1 Packing material & Accessories

3 AR-P11 PCL PWB unit

■ Index

DEFINITION

The definition of each Rank is as follows and also noted in the list

A : Parts necessary to be stocked as High usage parts.

B : Parts necessary to be stocked as Standard usage parts.

C : Low usage parts.

D : Parts necessary for refurbish.

E : Unit parts recommended to be stocked for efficient after sales service.
Please note that the lead time for the said parts may be longer than normal parts.

S : Consumable parts.

Please note that the following parts used in Copier under the same description are classified into A or B Rank depending upon the place used.

Example: Gear made of Metal, Sprocket, Bearing, Belt made of Rubber, Spring clutch mechanism.

A Rank : The parts which may be with the revolution or loading.

B Rank : Parts similar to A Rank parts, but are not included in Rank A.

Because parts marked with "⚠" is indispensable for the machine safety maintenance and operation, it must be replaced with the parts specific to the product specification.

○ Other than this Parts Guide, please refer to documents Service Manual (including Circuit Diagram) of this model.

○ Please use the 13 digit code described in the right hand corner of front cover of the document, when you place an order.

○ For U.S. only-Use order codes provided in advertising literature. Do not order from parts department.

1 AR-P11 Packing material & Accessories

NO.	PARTS CODE	PRICE RANK	NEW MARK	PART RANK	DESCRIPTION
1	S P A K A 3 9 9 A C C Z Z	AB		D	Vinyl bag
3	S S A K A 0 0 0 6 U C Z Z	AA		D	Vinyl bag (50X60)
5	C D S K A 0 0 0 3 Q S 3 1	AL	N	D	CD-ROM
9	L X – B Z 0 0 2 4 Q S Z Z	AA		C	Screw
10	X B B S D 3 0 P 0 8 K S 0	AA		C	Screw (3X8KS)

2 AR-PK1 Packing material & Accessories

NO.	PARTS CODE	PRICE RANK	NEW MARK	PART RANK	DESCRIPTION
1	S P A K A 0 3 2 3 Q S Z Z	AG		D	Spacer
4	S P A K C 0 3 2 1 Q S 1 1	AH		D	Packing case
101	S S A K A 0 0 0 6 U C Z Z	AA		D	Vinyl bag (50X60)

1 AR-P11 Packing material & Accessories

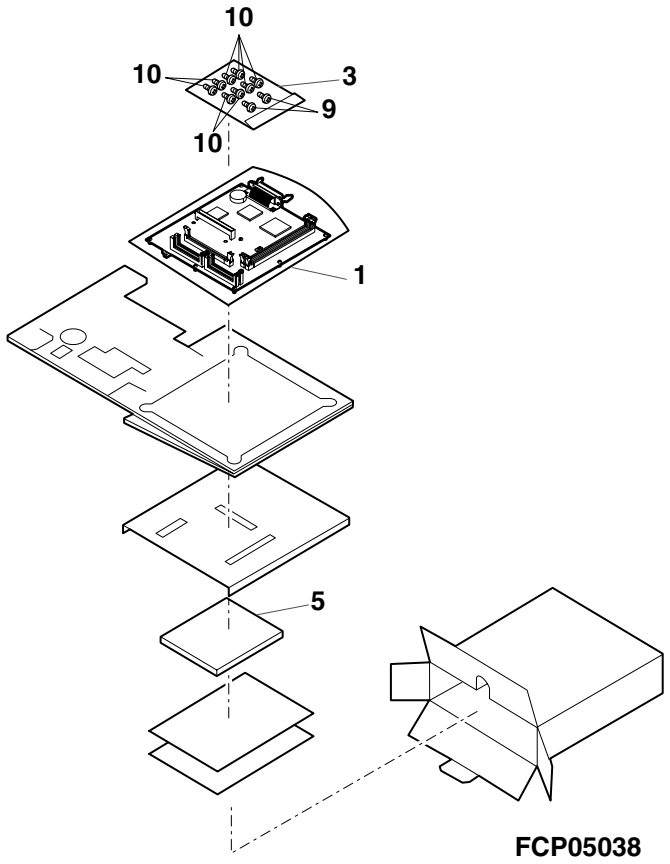

FCP05038

2 AR-PK1 Packing material & Accessories

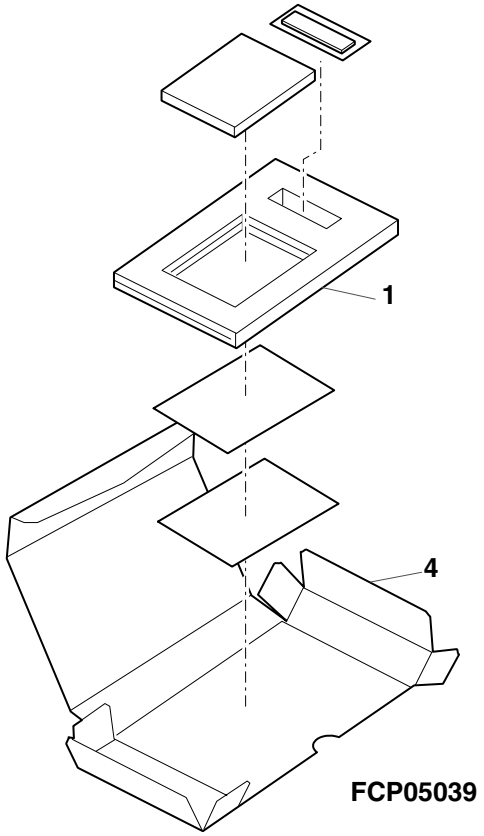

FCP05039

3 AR-P11 PCL PWB unit

NO.	PARTS CODE	PRICE RANK	NEW MARK	PART RANK	DESCRIPTION	
1	PCAPH0010GCZZ	AD		D	Cap (JM-2W-96)	[JP2,3,4]
2	PCŌVP1468FCZZ	AD		D	FAX battery cover	
3	QCNCM0040QSZZ	AL		C	Connector (TX25-60P-12ST-H1)	[CN13]
4	QCNCM0041QSZZ	AP		C	Connector (TX25-100P12)	[CN10]
5	QCNCW0071GCZZ	AH		C	Connector (57pin)(57RE-40360-830B)	[CN12]
6	QPiN-0003GCZZ	AC		C	Pin (T3B-SQ)	[JP2,3,4]
7	QSŌCZ0001QSZZ	AL		C	Socket (DMM168-FLAA2-3A133)	[CN8,9]
8	QSŌCZ0073FCZZ	AL		C	Connector (72pin)	[CN1,7]
9	RC-EZ2273QCZZ	AE	N	C	Capacitor (16WV 220μF)	[C56,64,65,70,112,113,119]
10	RCRSP6676RCZZ	AG		B	Crystal (32.768KHz)	[X2]
11	RCRUA0008QSZZ	AP	N	B	Crystal (14.318MHz)	[IC15]
12	RCRUA0009FCZZ	AP	N	B	Crystal (66.666MHz)	[IC16]
13	RFiLN0008QSZZ	AC	N	C	Chip bead (BLM21B121SDPT)	[L1,2,3,4]
14	RMPTR4100ACZZ	AB		B	Block resistor (10Ω×4)	[RN6~22,24,26,28]
	RMPTR4100ACZZ	AB		B	Block resistor (10Ω×4)	[RN30,32,34,36,38~60]
	RMPTR4100ACZZ	AB		B	Block resistor (10Ω×4)	[RN63,64,66,67,69,70,71]
	RMPTR4100ACZZ	AB		B	Block resistor (10Ω×4)	[RN74~77,80,82,85]
	RMPTR4100ACZZ	AB		B	Block resistor (10Ω×4)	[RN87,88,91,92,93,94]
15	RMPTR4220ACZZ	AB		B	Block resistor (22Ω×4)	[RN90,89]
17	RMPTR4472ACZZ	AB		B	Block resistor (4.7KΩ×4)	[RN1~5,23,25,27,29,31,33]
	RMPTR4472ACZZ	AB		B	Block resistor (4.7KΩ×4)	[RN35,37,72,78,95~98]
18	UBATi0014FCZZ	AN		B	Battery (CR2477-H01)	[BT1]
19	VCCCCZ1HH101J	AA		C	Capacitor (50WV 100pF)	[C59,60,85~96]
	VCCCCZ1HH101J	AA		C	Capacitor (50WV 100pF)	[C104,105,106,108,109]
	VCCCCZ1HH101J	AA		C	Capacitor (50WV 100pF)	[C120~125]
20	VCEAPS1CC226M	AC	N	C	Capacitor (16WV 22μF)	[C3,9,10,12,22,30,33,35,37]
	VCEAPS1CC226M	AC	N	C	Capacitor (16WV 22μF)	[C43,46,53,55,58,67,68,80]
	VCEAPS1CC226M	AC	N	C	Capacitor (16WV 22μF)	[C83,129,130]
21	VCEAPH1CW106M	AC	N	C	Capacitor (16WV 10μF)	[C15,39,73,77,99,134]
22	VCKYCZ1CB102K	AA	N	C	Capacitor (16WV 0.010μF)	[C78]
23	VCKYCZ1CB103K	AA		C	Capacitor (16WV 0.010μF)	[C52]
24	VCKYCZ1CF104Z	AB		C	Capacitor (16WV 0.10μF)	[C1,2,4~8,11,13,14]
	VCKYCZ1CF104Z	AB		C	Capacitor (16WV 0.10μF)	[C16~21,23~29]
	VCKYCZ1CF104Z	AB		C	Capacitor (16WV 0.10μF)	[C31,32,34,36,38,40,41,42]
	VCKYCZ1CF104Z	AB		C	Capacitor (16WV 0.10μF)	[C44,45,47~51,54,61,62]
	VCKYCZ1CF104Z	AB		C	Capacitor (16WV 0.10μF)	[C63,66,69,71,72,74,75,76]
	VCKYCZ1CF104Z	AB		C	Capacitor (16WV 0.10μF)	[C79,81,82,84,103,107,110]
	VCKYCZ1CF104Z	AB		C	Capacitor (16WV 0.10μF)	[C111,114~118,126,127]
	VCKYCZ1CF104Z	AB		C	Capacitor (16WV 0.10μF)	[C131,132,133,135,136]
25	VHDRB751V40-1	AD		B	Diode (RB751V40)	[D1]
26	VHi24WC256K-1	AV	N	B	IC (24WC256K)	[IC8]
29	VHi74LVX16128	AP		B	IC (74LVX16128)	[IC25]
30	VHiKS0U1347-1	BN		B	IC (KS0U1347)	[IC12]
31	VHiLCX16244-1	AM	N	B	IC (LCX16244)	[IC11]
32	VHiLCX16245-1	AM	N	B	IC (LCX16245)	[IC9,10,22]
33	VHiLCX244WM-1	AG		B	IC (74LCX244WM)	[IC14,23]
34	VHiN2391D25-1	AG	N	B	IC (N2391D25)	[IC13]
35	VHiNJM317DL-1	AK	N	B	IC (NJM317DL)	[IC29]
36	VHiNJU6356E-1	AK		B	IC (NJU6356E)	[IC26]
37	VHiPi6C2305-1	AP	N	B	IC (PI6C2305)	[IC20]
38	VHiPi6C2309-1	AR	N	B	IC (PI6C2309)	[IC7]
39	VHiSD4M16L1-1	AZ	N	B	IC (SD4M16L1)	[IC1,2,3,4]
40	VHiT4955A20-1	BF		B	IC (T4955A20)	[IC21]
41	VHiTC7WH74FU1	AG		B	IC (TC7WH74FU1)	[IC19]
42	VHiEL7SH14T-1	AE	N	B	IC (EL7SH14T)	[IC17]
43	VHiEL7SH14T-1	AE	N	B	IC (EL7SH14T)	[IC27,28]
44	VHiUPD659436M	AX	N	B	IC (UPD659436M)	[IC24]
45	VRS-CZ1JD000J	AA		C	Resistor (1/16W 0Ω ±5%)	[R68,73,75,79,154,160~163]
	VRS-CZ1JD000J	AA		C	Resistor (1/16W 0Ω ±5%)	[R234,236,238,241,242]
46	VRS-CZ1JD100J	AA		C	Resistor (1/16W 10Ω ±5%)	[R6,7,11~14,16,17,18]
	VRS-CZ1JD100J	AA		C	Resistor (1/16W 10Ω ±5%)	[R19,21,24,26,28,31,32,41]
	VRS-CZ1JD100J	AA		C	Resistor (1/16W 10Ω ±5%)	[R42,43,45~48,50~57]
	VRS-CZ1JD100J	AA		C	Resistor (1/16W 10Ω ±5%)	[R59,60,61,63~67,69,71,72]
	VRS-CZ1JD100J	AA		C	Resistor (1/16W 10Ω ±5%)	[R74,80~85,88,89,91]
	VRS-CZ1JD100J	AA		C	Resistor (1/16W 10Ω ±5%)	[R92,93,97,102,103,105,107~115]
	VRS-CZ1JD100J	AA		C	Resistor (1/16W 10Ω ±5%)	[R119,122,127,128,129,130,131]
	VRS-CZ1JD100J	AA		C	Resistor (1/16W 10Ω ±5%)	[R132,134,138,150,153,165,167]
	VRS-CZ1JD100J	AA		C	Resistor (1/16W 10Ω ±5%)	[R168,170,171,172,173,175,176]
	VRS-CZ1JD100J	AA		C	Resistor (1/16W 10Ω ±5%)	[R196,203,210,222,223,224,226]
47	VRS-CZ1JD101J	AA		C	Resistor (1/16W 100Ω ±5%)	[R123,124]
48	VRS-CZ1JD102J	AA		C	Resistor (1/16W 1.0KΩ ±5%)	[R152,155~158,225]
49	VRS-CZ1JD103J	AA		C	Resistor (1/16W 10KΩ ±5%)	[R8,9,116,190,192,193,194,220]
50	VRS-CZ1JD201J	AA		C	Resistor (1/16W 200Ω ±5%)	[R232]
51	VRS-CZ1JD203J	AA		C	Resistor (1/16W 20KΩ ±5%)	[R25,100]
52	VRS-CZ1JD220J	AA		C	Resistor (1/16W 22Ω ±5%)	[R142~149,195]
53	VRS-CZ1JD222J	AA		C	Resistor (1/16W 2.2KΩ ±5%)	[R189]
55	VRS-CZ1JD332J	AA		C	Resistor (1/16W 3.3KΩ ±5%)	[R221]
56	VRS-CZ1JD472J	AA		C	Resistor (1/16W 4.7KΩ ±5%)	[R1~5,10,15,20,22]
	VRS-CZ1JD472J	AA		C	Resistor (1/16W 4.7KΩ ±5%)	[R27,29,30,37,40,44,49,58]
	VRS-CZ1JD472J	AA		C	Resistor (1/16W 4.7KΩ ±5%)	[R62,70,76,77,78,86,87,90]

3 AR-P11 PCL PWB unit

NO.	PARTS CODE	PRICE RANK	NEW MARK	PART RANK	DESCRIPTION	
56	VRS−CZ1JD472J	AA		C	Resistor (1/16W 4.7KΩ ±5%)	[R95,96,98,99,104,106,117]
	VRS−CZ1JD472J	AA		C	Resistor (1/16W 4.7KΩ ±5%)	[R118,120,121,133,135,136]
	VRS−CZ1JD472J	AA		C	Resistor (1/16W 4.7KΩ ±5%)	[R137,139,140,141,151,159]
	VRS−CZ1JD472J	AA		C	Resistor (1/16W 4.7KΩ ±5%)	[R164,166,169,174,177~182]
	VRS−CZ1JD472J	AA		C	Resistor (1/16W 4.7KΩ ±5%)	[R197,204,205,206,208]
	VRS−CZ1JD472J	AA		C	Resistor (1/16W 4.7KΩ ±5%)	[R227~231,233,240]
57	VRS−CZ1JD750J	AA		C	Resistor (1/16W 47Ω ±5%)	[R23,101]
58	VS2SA1586Y+−1	AC	N	B	Transistor (2SA1586Y)	[TR2]
59	VS2SC4116Y+−1	AC	N	B	Transistor (2SC4116Y)	[TR1]

■ Index

PARTS CODE	NO.	PRICE RANK	NEW MARK	PART RANK	
【C】					
CDSKA0003QS31	1- 5	AL	N	D	
【L】					
LX-BZ0024QSZZ	1- 9	AA		C	
【P】					
PCAPH0010GCZZ	3- 1	AD		D	
PCOVP1468FCZZ	3- 2	AD		D	
【Q】					
QCNCM0040QSZZ	3- 3	AL		C	
QCNCM0041QSZZ	3- 4	AP		C	
QCNCW0071GCZZ	3- 5	AH		C	
QPiN-0003GCZZ	3- 6	AC		C	
QSOCZ0001QSZZ	3- 7	AL		C	
QSOCZ0073FCZZ	3- 8	AL		C	
【R】					
RC-EZ2273QCZZ	3- 9	AE	N	C	
RCRSP6676RCZZ	3- 10	AG		B	
RCRUA0008QSZZ	3- 11	AP	N	B	
RCRUA0009FCZZ	3- 12	AP	N	B	
RFiLN0008QSZZ	3- 13	AC	N	C	
RMPTR4100ACZZ	3- 14	AB		B	
RMPTR4220ACZZ	3- 15	AB		B	
RMPTR4472ACZZ	3- 17	AB		B	
【S】					
SPAKA0323QSZZ	2- 1	AG		D	
SPAKA399ACCZZ	1- 1	AB		D	
SPAKC0321QS11	2- 4	AH		D	
SSAKA0006UCZZ	1- 3	AA		D	
〃	2-101	AA		D	
【U】					
UBATi0014FCZZ	3- 18	AN		B	
【V】					
VCCCCZ1HH101J	3- 19	AA		C	
VCEAPH1CW106M	3- 21	AC	N	C	
VCEAPS1CC226M	3- 20	AC	N	C	
VCKYCZ1CB102K	3- 22	AA	N	C	
VCKYCZ1CB103K	3- 23	AA		C	
VCKYCZ1CF104Z	3- 24	AB		C	
VHDRB751V40-1	3- 25	AD		B	
VHi24WC256K-1	3- 26	AV	N	B	
VHi74LVX16128	3- 29	AP		B	
VHiEL7SH14T-1	3- 42	AE	N	B	
〃	3- 43	AE	N	B	
VHiKS0U1347-1	3- 30	BN		B	
VHiLCX16244-1	3- 31	AM	N	B	
VHiLCX16245-1	3- 32	AM	N	B	
VHiLCX244WM-1	3- 33	AG		B	
VHiN2391D25-1	3- 34	AG	N	B	
VHiNJM317DL-1	3- 35	AK	N	B	
VHiNJU6356E-1	3- 36	AK		B	
VHiPi6C2305-1	3- 37	AP	N	B	
VHiPi6C2309-1	3- 38	AR	N	B	
VHiSD4M16L1-1	3- 39	AZ	N	B	
VHiT4955A20-1	3- 40	BF		B	
VHiTC7WH74FU1	3- 41	AG		B	
VHiUPD659436M	3- 44	AX	N	B	
VRS-CZ1JD000J	3- 45	AA		C	
VRS-CZ1JD100J	3- 46	AA		C	
VRS-CZ1JD101J	3- 47	AA		C	
VRS-CZ1JD102J	3- 48	AA		C	
VRS-CZ1JD103J	3- 49	AA		C	
VRS-CZ1JD201J	3- 50	AA		C	
VRS-CZ1JD203J	3- 51	AA		C	
VRS-CZ1JD220J	3- 52	AA		C	
VRS-CZ1JD222J	3- 53	AA		C	
VRS-CZ1JD332J	3- 55	AA		C	
VRS-CZ1JD472J	3- 56	AA		C	
VRS-CZ1JD750J	3- 57	AA		C	
VS2SA1586Y+-1	3- 58	AC	N	B	
VS2SC4116Y+-1	3- 59	AC	N	B	
【X】					
XBBSD30P08KS0	1- 10	AA		C	

PARTS CODE	NO.	PRICE RANK	NEW MARK	PART RANK	

CAUTION FOR BATTERY REPLACEMENT

(Danish) ADVARSEL !
Lithiumbatteri –Eksplosionsfare ved fejlagtig håndtering.
Udskiftning må kun ske med batteri
af samme fabrikat og type.
Levér det brugte batteri tilbage til leverandoren.

(English) Caution !
Danger of explosion if battery is incorrectly replaced.
Replace only with the same or equivalent type
recommended by the manufacturer.

"BATTERY DISPOSAL"
CONTAINS MANGANESE DIOXIDE LITHIUM BATTERY
MUST BE DISPOSED OF PROPERLY.
REMOVE THE BATTERY FROM THE PRODUCT AND
CONTACT FEDERAL OR STATE ENVIRONMENTAL
AGENCIES FOR INFORMATION ON RECYCLING
AND DISPOSAL OPTIONS.

"BATTERY DISPOSAL"
CONTAINS LITHIUM-ION BATTERY.
MUST BE DISPOSED OF PROPERLY.
REMOVE THE BATTERY FROM THE PRODUCT AND
CONTACT FEDERAL OR STATE ENVIRONMENTAL
AGENCIES FOR INFORMATION ON RECYCLING
AND DISPOSAL OPTIONS.

(Finnish) VAROITUS
Paristo voi räjähtää, jos se on virheellisesti asennettu.
Vaihda paristo ainoastaan laitevalmistajan suosittelemaan
tyyppiin. Hävitä käytetty paristo valmistajan ohjeiden
mukaisesti.

(French) ATTENTION
Il y a danger d'explosion s' il y a remplacement incorrect
de la batterie. Remplacer uniquement avec une batterie du
même type ou d'un type équivalent recommandé par
le constructeur.
Mettre au rebut les batteries usagées conformément aux
instructions du fabricant.

(Swedish) VARNING
Explosionsfara vid felaktigt batteribyte.
Använd samma batterityp eller en ekvivalent
typ som rekommenderas av apparattillverkaren.
Kassera använt batteri enligt fabrikantens
instruktion.

(German) Achtung
Explosionsgefahr bei Verwendung inkorrekter Batterien.
Als Ersatzbatterien dürfen nur Batterien vom gleichen Typ oder
vom Hersteller empfohlene Batterien verwendet werden.
Entsorgung der gebrauchten Batterien nur nach den vom
Hersteller angegebenen Anweisungen.

SHARP®

COPYRIGHT © 2001 BY SHARP CORPORATION

All rights reserved.
Printed.
No part of this publication may be reproduced,
stored in a retrieval system, or transmitted,
in any form or by any means,
electronic; mechanical; photocopying; recording or otherwise
without prior written permission of the publisher.

Trademark Acknowledgments

Microsoft Windows, MS-DOS, Windows NT, Windows 2000 are trademarks of Microsoft Corporation in the U. S. A. and other countries.

Macintosh, Power Macintosh, Mac OS, LaserWriter, and AppleTalk are registered trademarks of Apple Computer, Inc.

IBM, PC/ AT, and PowerPC are trademarks of International Business Machines Corporation.

Pentium is a registered trademark of Intel Corporation.

PCL is a trademark of the Hewlett- Packard Company.

PostScript® is a registered trademark of Adobe Systems Incorporated.

NetWare is a registered trademark of Novell, Inc.

All other trademarks and copyrights are the property of their respective owners.

Digital Document Systems Group
Quality & Reliability Control Center
Yamatokoriyama, Nara 639-1186, Japan
2001 April Printed