SHARP SERVICE MANUAL

CODE : 00ZARSP6//A1E

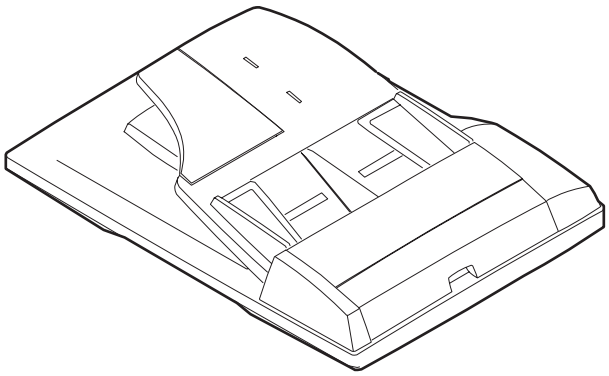

Digital copier
Reverse Single Pass Feeder (RSPF)
Single Pass Feeder (SPF)

MODEL AR-RP6 AR-SP6

CONTENTS

[1] PRODUCT OUTLINE 1

[2] SPECIFICATIONS 1

[3] UNPACKING AND INSTALLATION 1

[4] EXTERNAL VIEW AND INTERNAL STRUCTURE 4

[5] OPEREATIONAL DESCRIPTIONS 5

[6] ADJUSTMENTS 7

[7] DISASSEMBLY AND ASSEMBLY 8

[8] MAINTENANCE 14

[9] ELECTRICAL SECTION. 15

Parts marked with "⚠" are important for maintaining the safety of the set. Be sure to replace these parts with specified ones for maintaining the safety and performance of the set.

SHARP CORPORATION

This document has been published to be used for after sales service only.
The contents are subject to change without notice.

[1] PRODUCT OUTLINE

This machine is a duplex document auto feeder attached to a digital copier.

It feeds originals automatically to allow continuous copying.

[2] SPECIFICATIONS

	AR-RP6	AR-SP6
Document set direction	Face up	
Document set position	Right/Center reference	
Document transport system	Sheet through type	
Document feed sequence	Top take-up feed	
Document size	AB series: A3 ~ A5 Inch series: 11 x 17 ~ 8.5 x 5.5	
Document weight	56 ~ 90g/m^2, 15 ~ 24lbs	
Document set quantity	Max. 40 sheets (Stack range: within 4mm) (90g/m^2: Set capacity = 30 sheets)	
Dimensions	583mm (W) x 435mm (D) x 133mm (H)	
Weight	About 5.4 kg	About 5.0 kg
Power source	Supplied from the copier. (DC 24V)	Supplied from the copier. (DC 24V, 5V)
Power consumption	26.4W	21W
Document size detection	On the document feed tray	
Detection size	Japan: A3, B4, A4, A4R, B5, B5R, A5 Inch series: 11 x 17, 8.5 x 14, 8.5 x 11, 8.5 x 11R, 8.5 x 5.5 EX AB series: A3, B4, A4, A4R, A5, B5, B5R, A5R	
Mixture of different document sizes	Mixture paper feed: Not available Random paper feed: Not available	
Document reverse	Allowed (without 8.5 x 5.5)	Not allowed
Display section (LED)	None	
Document exchange speed	S → S, 16 sheets/min (AR-160M) S → S, 20 sheets/min (AR-200M)	

[3] UNPACKING AND INSTALLATION

1. Unpacking

For unpacking, refer to the figure below.

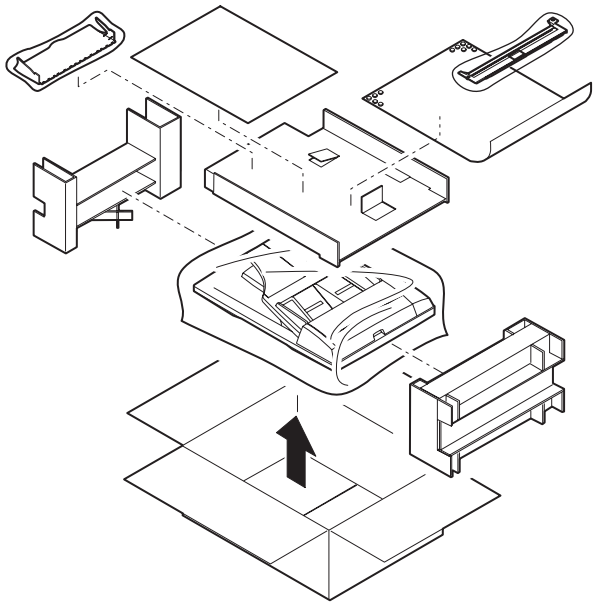

2. Installation

Turn the main switch of the copier to the “OFF” position and then remove the power plug of the copier from the outlet.

1. Remove the document cover.

Lift the document cover from the copier and tilt it to the rear side to remove it.

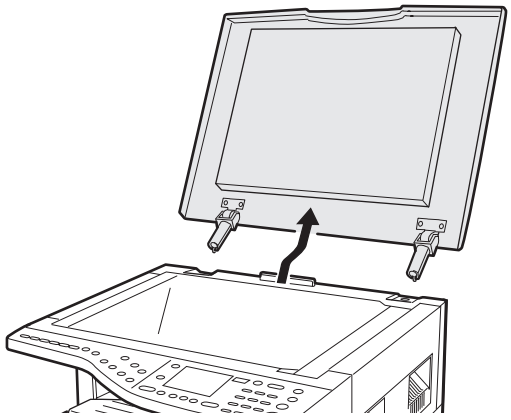

2. Remove the right cabinet.

Remove the screws and remove the right cabinet.

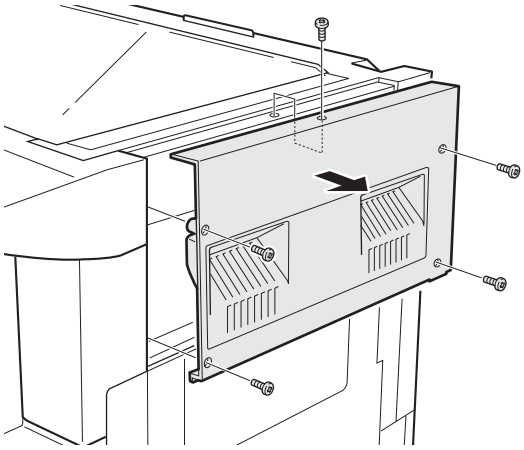

3. Remove the document glass and the right document glass holder.

Remove the screws, remove the document glass from the copier, and then remove the right document glass holder.

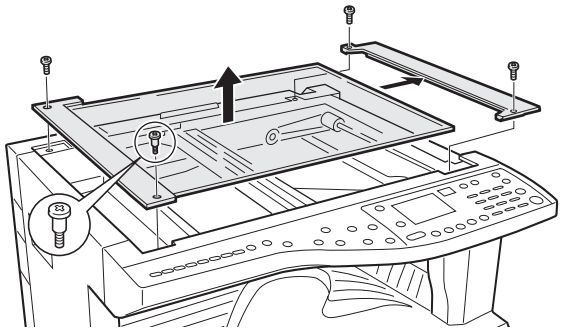

4. Attach the SPF glass holder.

Fit the SPF glass holder to the document glass.
Attach the document glass to the copier and fix it with the screws.

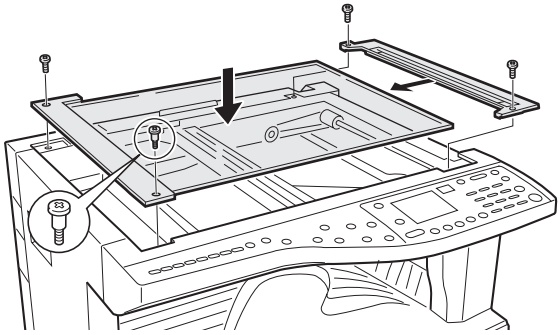

5. Attach the right cabinet.

Reattach the right cabinet to its original position and fix it with the screws.

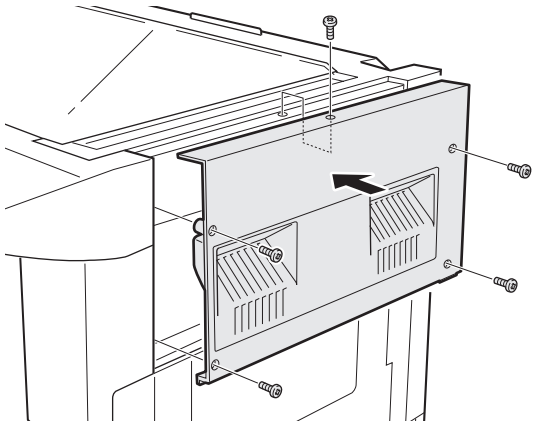

6. Cut out the cut-out portion.

Cut out the cut-out portion of the rear cabinet with nippers or the like.
At this time, be careful about the orientation of the nippers so that the cut plane of the rear cabinet is flat.

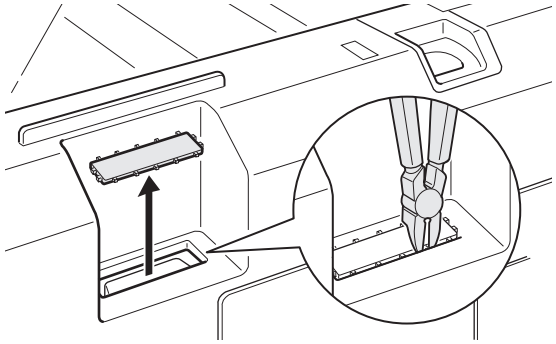

7. Attach the automatic document feeder.

Insert the hinge portions of the document feeder into the mounting portions of the copier by holding the feeder at an angle toward the rear side.

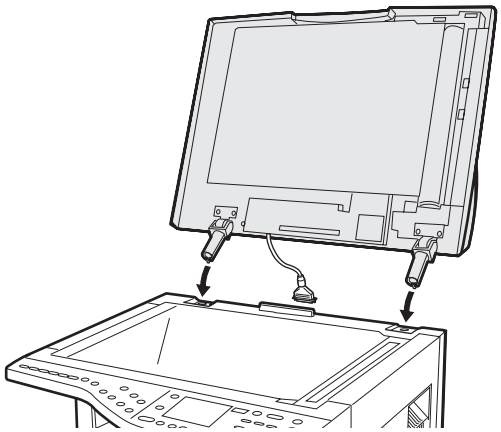

8. Connect the relay connector.

Connect the harness of the automatic document feeder to the connector of the copier and tighten the screws on the connector.

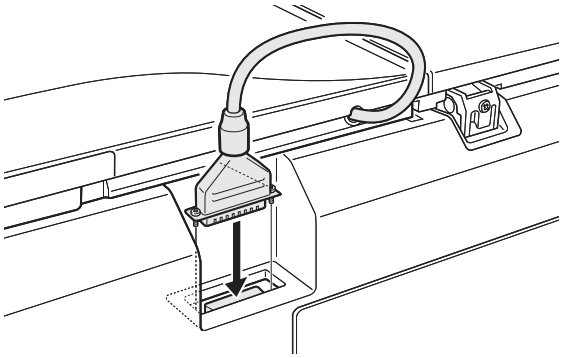

9. Remove the filament tape.

Remove the filament tape located in the positions shown in the illustration.

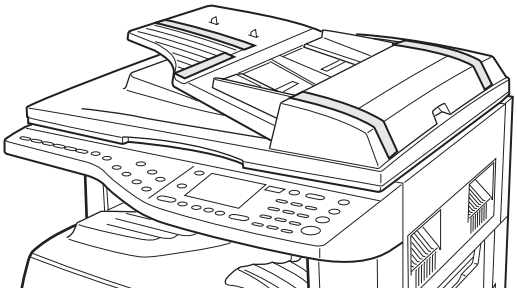

10. Attach the intermediate tray. (AR-RP6 only)

Insert the intermediate tray all the way into the document feeder.

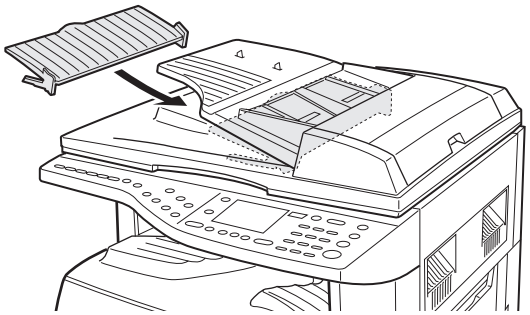

Insert the power plug of the copier to the outlet and turn on the main switch of the copier.

11. Adjust the white compensation pixels.

- Open the automatic document feeder, execute simulation 63-7 referring to the service manual, and adjust the automatic white compensation pixels of the document feeder.

12. Check the copy magnification ratio.

- Set an original on the document glass and copy it.
  Then, set an original in the document feeder tray and copy it.
- If the magnification ratio of the copy from the document feeder is different from that of the copy from the document glass, execute simulation 48-5 to carry out adjustment referring to the service manual.

13. Check the center displacement.

- Set an original on the document glass and copy it.
  Then, set an original in the document feeder tray and copy it.
- If the center of the copy image from the document feeder is different from that of the copy image from the document glass, execute simulation 50-12 to carry out adjustment referring to the service manual.

14. Check the top end position.

- Set an original on the document glass and copy it.
  Then, set an original in the document feeder tray and copy it.
- If the top end position of the copy image from the document feeder is different from that of the copy image from the document glass, execute simulation 50-06 to carry out adjustment referring to the service manual.

[4] EXTERNAL VIEW AND INTERNAL STRUCTURE

1. External view

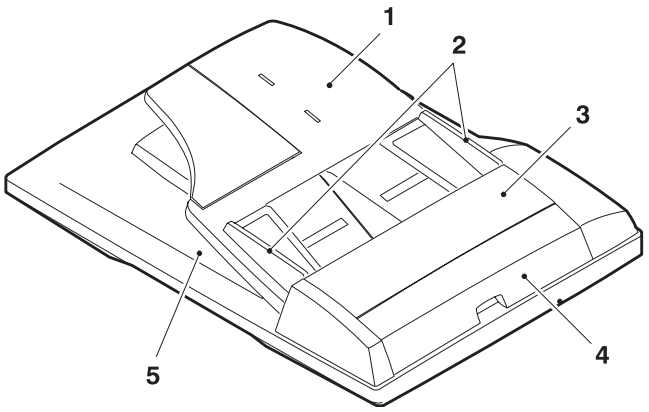

No.	Name
1	Document set tray
2	Document guide
3	Document feed section cover
4	Document transport section cover
5	Document exit section

2. Internal structure

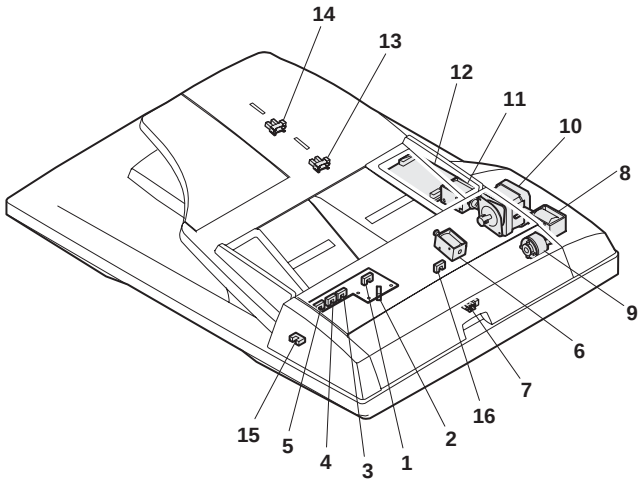

Sensor, detector, etc.

No.	Code	Name	Type	Function/Operation	Note
1	W0	Document set sensor	Photo transmission	Detects presence of documents.	
2	COVER	Open/close sensor	Photo transmission	Detects open/close of the paper feed unit.	
3	W1	Document width sensor (A4R, LTR, A5)	Photo transmission	Detects the document width on the tray.	
4	W2	Document width sensor (B4, B5)	Photo transmission	Detects the document width on the tray.	
5	W3	Document width sensor (WL, TR, A5R, A4, LT)	Photo transmission	Detects the document width on the tray.	
6	PSOL	Pickup solenoid	—	—	
7	PAPER	Paper entry sensor	Photo transmission	Detects presence of documents.	
8	RSOL	Pressure release solenoid	—	—	AR-RP6 only
9	CLH	Transport clutch	—	—	
10	MOT	SPF (RSPF) motor	Stepping motor	Drives document feed on the tray, transport, and paper exit roller.	
11	GSOL	Gate solenoid	—	—	AR-RP6 only
12	—	Interface PWB	—	—	
13	L1	Document length detection SW (Short)	Photo transmission	Detects the document length on the tray.	
14	L2	Document length detection SW (Long)	Photo transmission	Detects the document length on the tray.	
15	COVER OPEN	Book sensor	Photo transmission	Detects the SPF (RSPF) float.	
16	PO	Paper exit sensor	Photo transmission	Detects presence of documents.	

[5] OPEREATIONAL DESCRIPTIONS

1. Major parts of the paper feed section

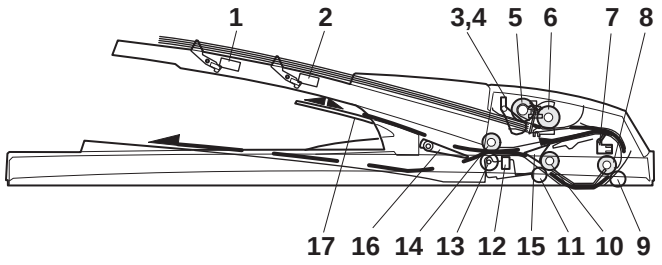

No.	Part name	Operation	Note
1	Document length sensor (L2)	Detects the document length on the tray.	
2	Document length sensor (L1)	Detects the document length on the tray.	
3	Document set sensor (W0)	Detects presence of documents.	
4	Document width sensor (W1, W2, W3)	Detects the document width.	
5	Pickup roller	Picks up documents.	
6	Paper feed roller	Feeds and transports documents.	
7	Paper entry sensor (PAPER)	Detects transport of documents.	
8	PS roller	Makes synchronization between the document lead edge and the image lead edge.	
9	PS follower roller	Makes synchronization between the document lead edge and the image lead edge.	
10	Transport roller	Transports documents.	
11	Transport follower roller	Transports documents.	
12	Paper exit sensor (PO)	Detects transport of documents.	
13	Paper exit follower roller	Discharges documents.	
14	Paper exit roller	Discharges documents.	
15	Reverse gate	Opens/closes the document reverse path.	
16	Paper exit gate	Separate document exit to the intermediate or the paper exit tray.	AR-RP6 only
17	Intermediate tray	Discharges documents to the intermediate tray during document reverse.	AR-RP6 only

2. Out line of operations

■ AR-RP6 (RSPF)

[Duplex documents]

1) Document set (Document set sensor ON)
↓
2) Document size detection (Document width sensors W1, W2, W3 detect the document width, and document length sensors L1, L2 detect the document length.)
↓
3) Copier COPY key ON
↓
4) RSPF motor ON
↓
5) Pickup solenoid ON
↓
6) Pickup roller and paper feed roller rotation
↓
7) Paper entry sensor detects the document presence.
↓
8) PS roller rotation
↓
9) Copying (Front surface of document)
↓
10) Transport roller rotation
↓
11) Paper exit roller rotation
↓
12) Paper exit gate falls down.
(Documents are discharged to the intermediate tray.)
↓
13) Reverse gate falls down.
↓
14) Paper exit roller reverse rotation
(Documents are fed to the reverse path.)
↓
15) Paper entry sensor detects document presence.
↓
16) PS roller rotation
↓
17) Copying (Back surface of document)
↓
18) Transport roller rotation
↓
19) Paper exit roller rotation
↓
20) Paper exit gate falls down
(Documents are discharged to the intermediate tray.)
↓
21) Reverse gate falls down.
↓
22) Paper exit roller reverse rotation
(Documents are fed to the reverse path.)
↓
23) Paper entry sensor detects document presence.
↓
24) PS roller rotation
↓
25) Paper exit roller rotation
↓
26) Paper exit gate lifts up.
↓
27) Documents are fed to the paper exit tray.
↓
28) Next document → (YES) → Go to 4).
↓ (NO)
29) RSPF motor OFF

■ **AR-SP6 (SPF)**

1) Document set (Document set sensor ON)
↓
2) Document size detection (Document width sensors W1, W2, W3 detect the document width, and document length sensors L1, L2 detect the document length.)
↓
3) Copier COPY key ON
↓
4) SPF motor ON
↓
5) Pickup solenoid ON
↓
6) Pickup roller and paper feed roller rotation
↓
7) Paper entry sensor detects the document presence.
↓
8) PS roller rotation
↓
9) Copying (Front surface of document)
↓
10) Transport roller rotation
↓
11) Paper exit roller rotation
↓
12) Documents are fed to the paper exit tray.
↓
13) Next document → (YES) → Go to 4).
↓ (NO)
14) SPF motor OFF

3. Document size detection

1) Document size detection with the document set tray

When documents are set on the document set tray in the auto selection mode of paper/copy magnification ratio, the document size is detected and paper and the copy magnification ratio are automatically selected. When different sizes of documents are set, the max. size is detected. The document width is detected by the document width sensors (W1, W2, W3), and the document length is detected by the document length sensors (L1, L2) to identify the document size. Judgement of the document size is made in a certain timing after detecting the document with the document set sensor (W0).

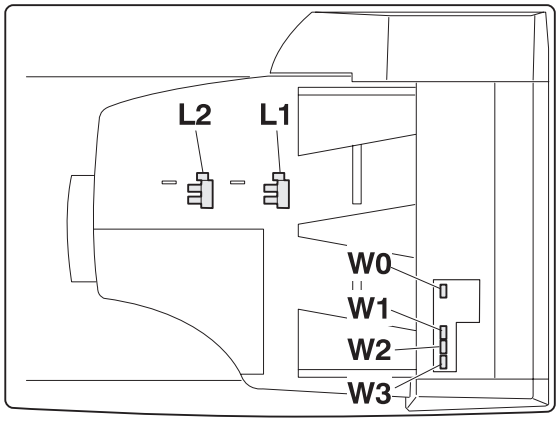

	Document set size and set direction	Document width sensor			Document length sensor	
		W1	W2	W3	L1	L2
AB series	A5	○	●	●	●	●
	B5	○	○	●	●	●
	A5R	●	●	●	●	●
	A4	○	○	○	●	●
	B5R	●	●	●	○	●
	A4R	○	●	●	○	●
	8.5” x 13”	○	●	●	○	○
	B4	○	●	●	○	○
	A3	○	○	○	○	○
Inch series	8.5” x 5.5”	○	●	●	●	●
	8.5” x 5.5”R	●	●	●	●	●
	11” x 8.5”	○	○	○	●	●
	11” x 8.5”R	○	●	●	○	●
	8.5” x 13”	○	●	●	○	○
	8.5” x 14”	○	●	●	○	○
	11” x 17”	○	○	○	○	○

Note: Detection sensor ON: ○, OFF: ●

[6] ADJUSTMENTS

(1) Auto white correction pixel adjustment

[Function]

The white correction start pixel position is automatically adjusted. This adjustment is performed after the lens unit is replaced.

[Operation]

Open the SPF (RSPF) unit and press the [OK] key.
7-segment indicates the order number of the pixel of the white sheet for SPF (RSPF) exposure correction in the SPF (RSPF) position.
It will display on 7-segment, if values are 93-299, and data are written into the EEPROM.
It will display on 7-segment, it values are 0-92 or 230-999, and data are not written into the EEPROM.
It will display "--" on 7-segment, it values is 1000 or larger, and data are not written into the EEPROM..

[CA] key: Cancels the test command.
[Interruption] key: Shifts to the sub code entry menu.

The SPF white correction start pixel = Displayed pixel position - 34

・Interruption is inhibited during execution.

If the simulation is executed with the SPF unit closed, an error is resulted.

・During execution,"EXEC" is highlighted

(2) Magnification ratio adjustment

Note: • When performing this adjustment, check that the CCD unit is properly installed.
• When performing this adjustment, check that the OC mode adjustment in copying is completed.

1) Place a scale on the document table as shown below, and make a normal copy to make a test chart.

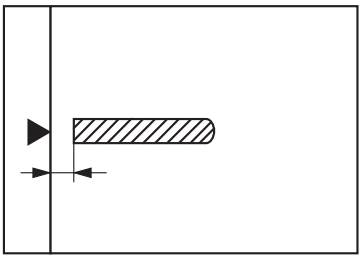

Note: Since the printed paper is used as the test chart, place the scale in parallel to both sides.

2) Set the test chart to the SPF (RSPF) and make a normal copy.
3) Compare the copy and the test chart.
If an adjustment is needed, perform the following procedures.
4) Execute SIM 48-5.
5) The current correction value is displayed on the display section in two digits.
6) Enter the set value, and press the START key.
The entered correction value is stored and a copy is made.
7) Change the TEXT mode.
The TEXT lamp lights up, and the current correction value of the back surface sub scanning direction magnification ratio is displayed on the display section in two digits.
8) Enter the set value, and press the START key.
The entered correction value is stored and a copy is made.

<Adjustment specifications>

Mode	Spec	SIM	Set value	Set range
Magnification ratio adjustment	Normal: ± 1.0%	SIM 48-5 AE: Surface TEXT: Back	Add 1: 0.1% increase Reduce 1: 0.1% decrease	1 ~ 99

(3) Document off center adjustment

Note: When performing this adjustment, check that the paper off-center is properly adjusted.

1) Set the center position adjustment test chart (made by yourself) on the SPF (RSPF).

<Adjustment specifications>
Draw a line in the center of paper. (In the scanning direction)

2) Make a normal copy from the manual feed tray, and compare the copy and the test chart.
If an adjustment is required, perform the following procedures.
3) Execute SIM 50-12.
4) The current off-center adjustment value is displayed on the display section in two digits.
5) Enter the set value and press the START key.
The entered correction value is started and a copy is made.

<Adjustment specifications>

Mode	Specification	SIM	Set value	Set range
Document off-center (AR-RP6)	Simplex: Center ± 3.0mm Duplex: Center ± 3.5mm	SIM 50-12 TEXT: SPF surface PHOTO: SPF back	Add 1: 0.1mm shifted to R side. Reduce 1: 0.1mm shifted to L side.	1 ~ 99
Document off-center (AR-SP6)		AE: Surface TEXT: Back		

(4) Image lead edge position adjustment

1) Set a scale on the OC table as shown below.

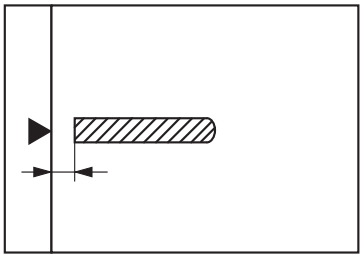

Note: Since the printed paper is used as the test chart, place the scale in parallel to both sides.

2) Make a copy, and use the copied paper as the document and make a copy from SPF (RSPF) again.
3) Check the copied paper. If an adjustment is required, perform the following procedures.
4) Execute SIM 50-6.
5) Set the SPF/RSPF lead edge position set value so that the image similar to the adjusted image at the OC image lead edge position described previously is printed.

<Adjustment specifications>

Adjustment mode	SIM	Set value	Specification	Set range
Image lead edge position	SIM 50-6	1step: 0.1mm shift	Lead edge void: 1 ~ 4mm Image loss: 3mm or less	1 ~ 99

[7] DISASSEMBLY AND ASSEMBLY

1. External fitting section

Note: Turn the paw in the arrow direction.

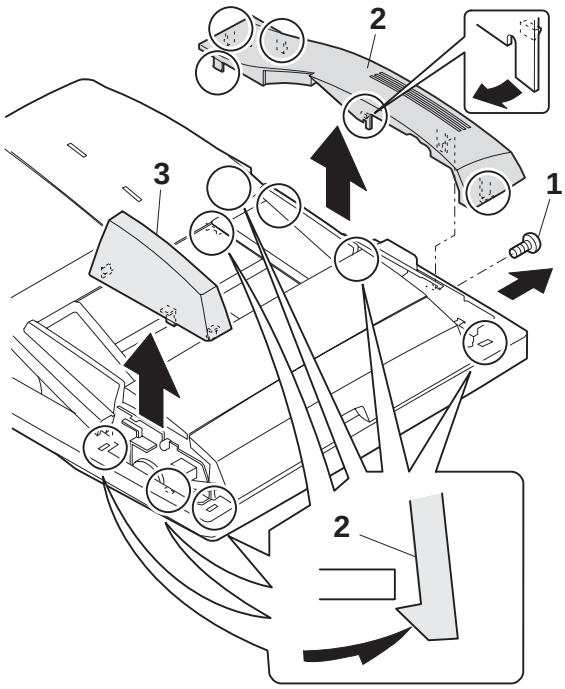

2. Paper feed unit section

1) Paper feed unit

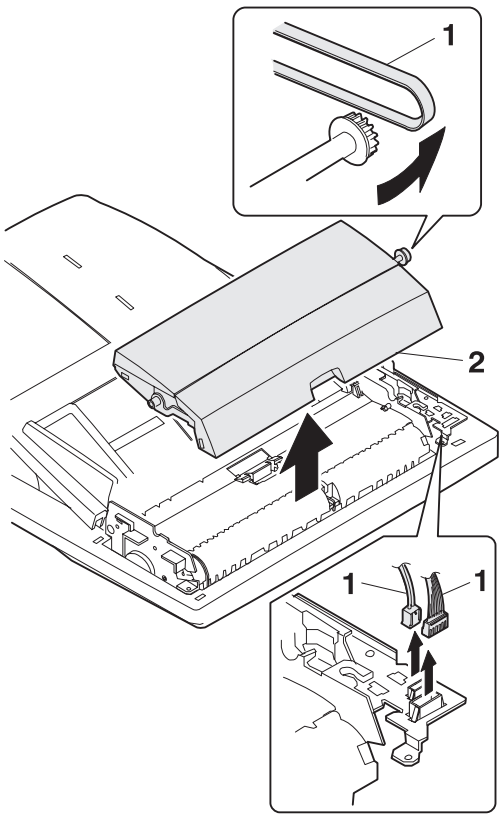

2) Document feed section cover

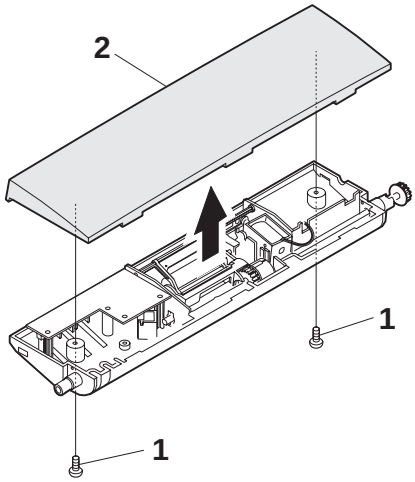

3) Sensor PWB

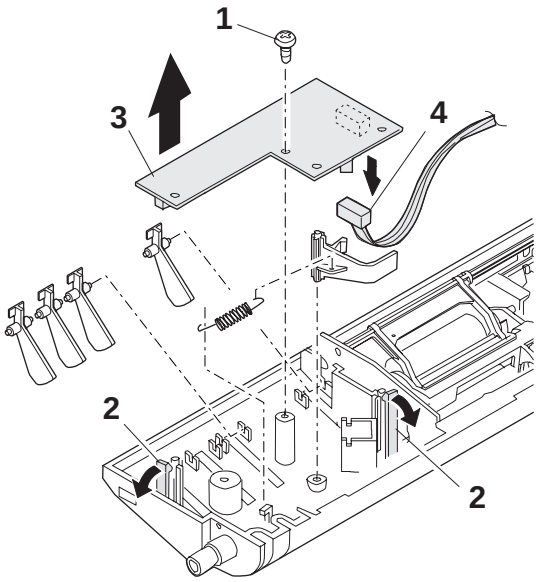

4) Pickup solenoid

Note: Remove section A of the pickup solenoid from the solenoid arm groove.
When assembling, adjust the spacing between the clutch latch and sleeve with the pick-up solenoid pulled. The size should be the distance from the tip of the clutch latch and the root of the clutch sleeve latch.

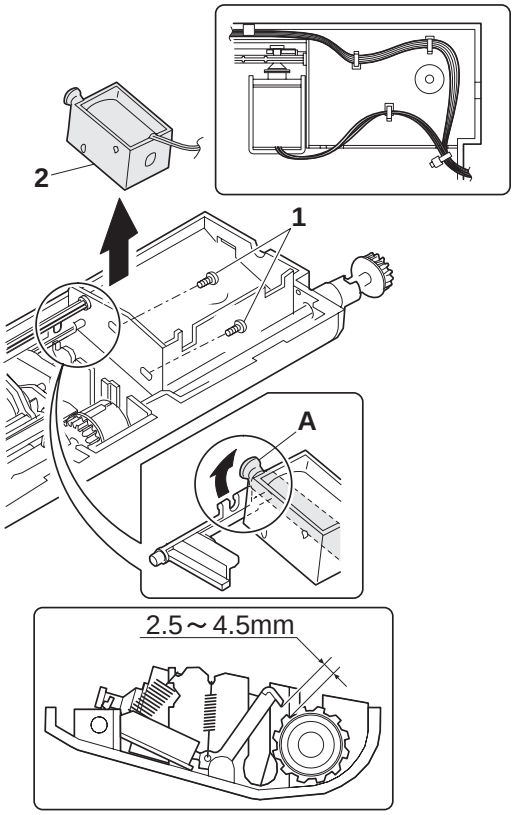

5) Clutch gear ass'y

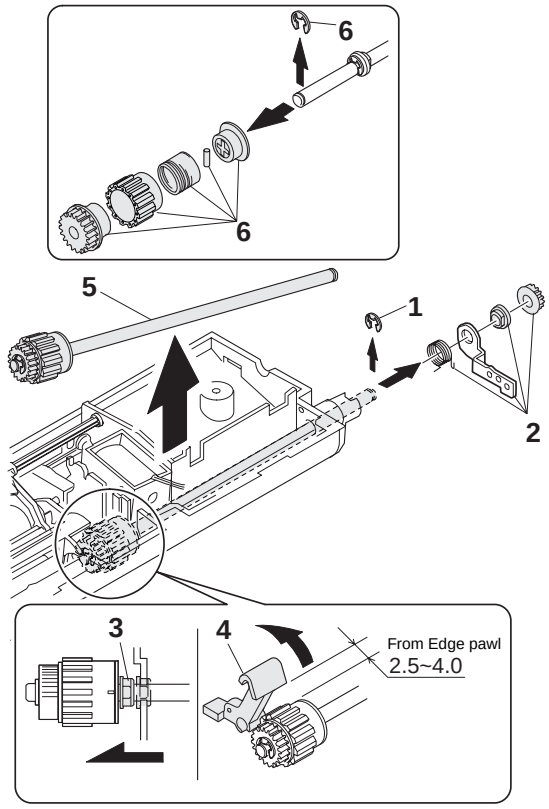

6) Pickup roller ass'y

Note: When assembling the pickup roller ass'y 4, check that rib A is on the rib of the solenoid arm.

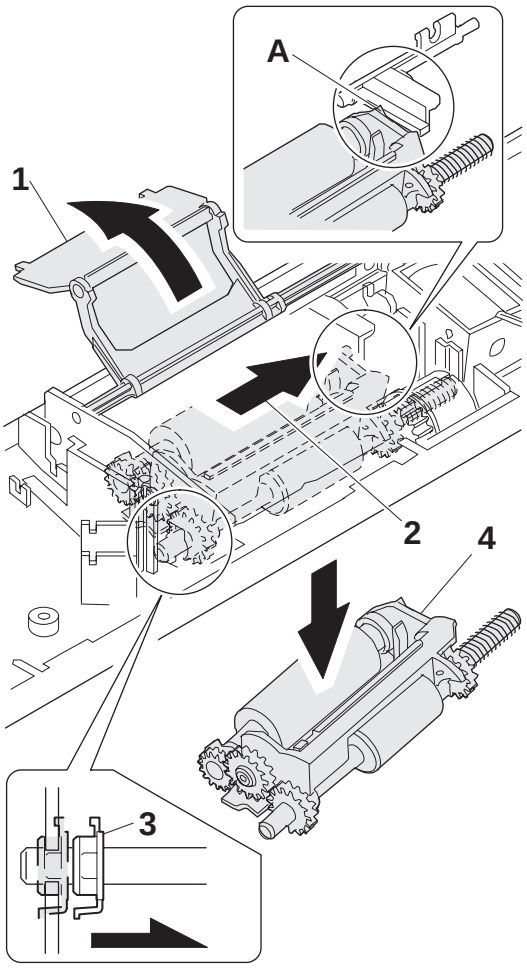

7) Pick up roller, paper feed roller

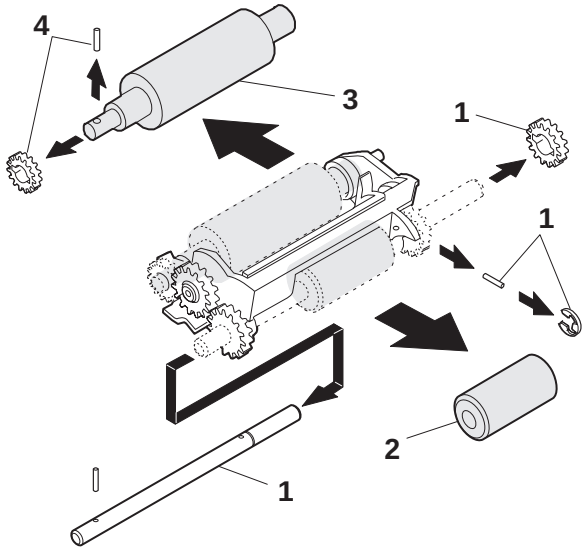

3. Interface PWB

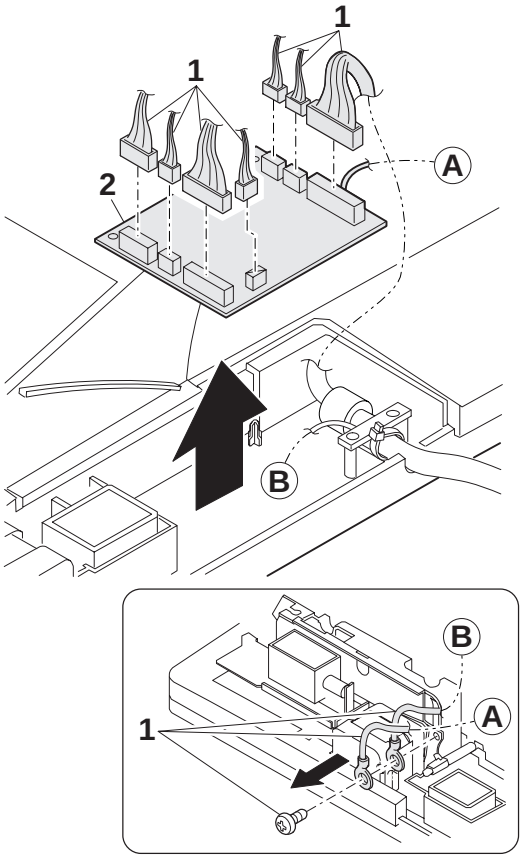

4. Gate solenoid

■ **AR-RP6 only**

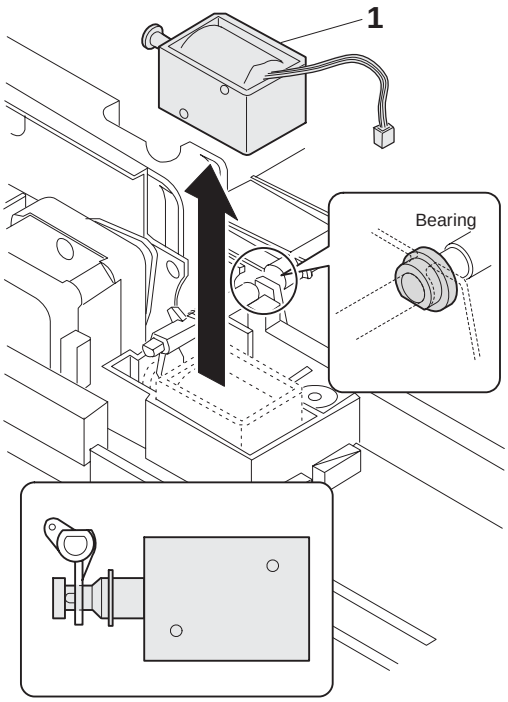

Note: When assembling, check that the paper exit gate hook is set in the solenoid groove.
When assembling, the bearing D-cut surface shuold be faced down.

5. Document tray section

1) Document tray

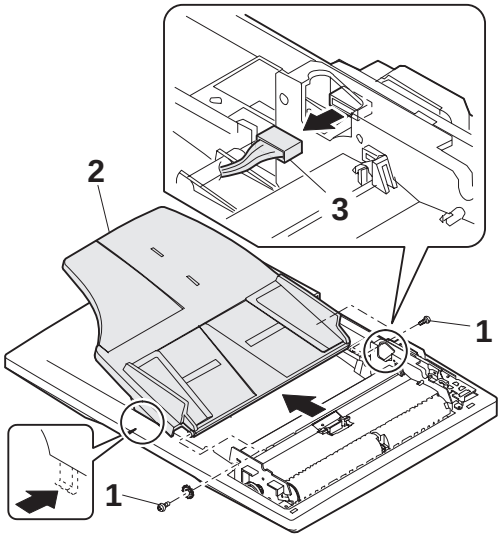

2) Rack cover

■ **AR-RP6**

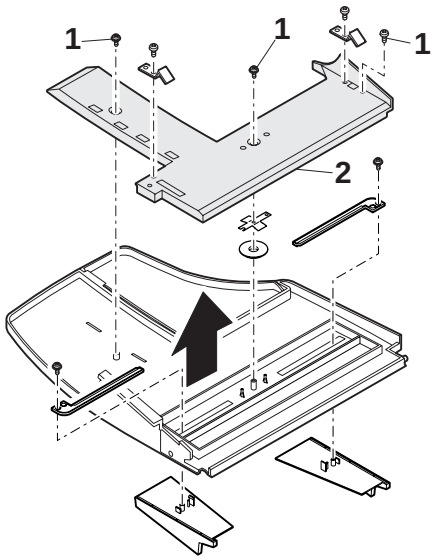

■ **AR-SP6**

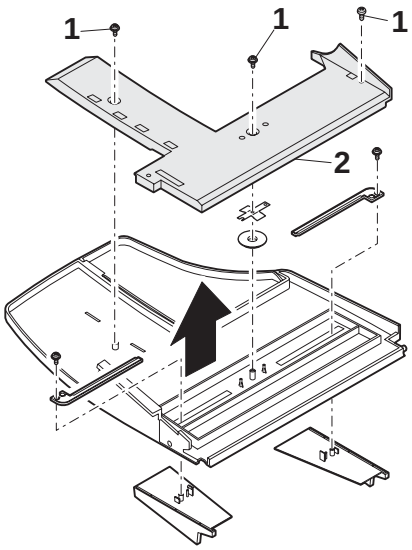

3) Document length sensor SW

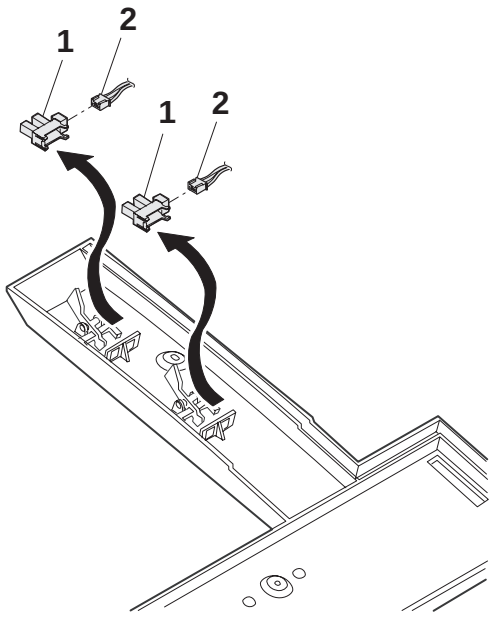

2) Drive frame unit

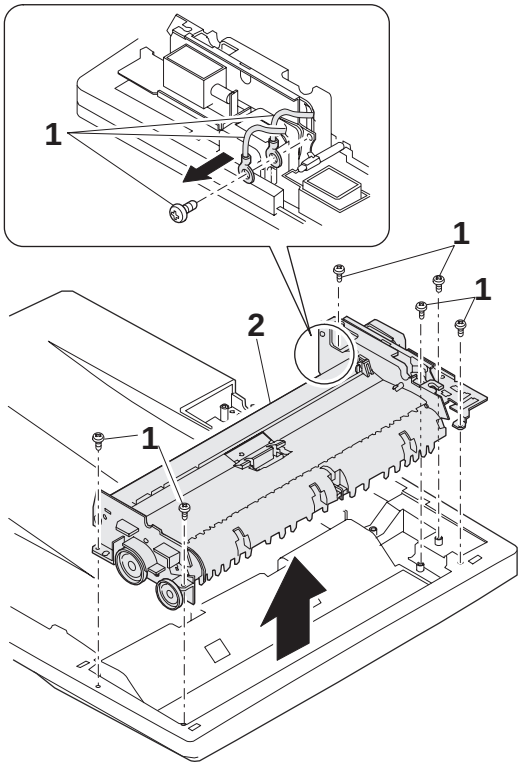

6. Drive frame section

1) Book sensor

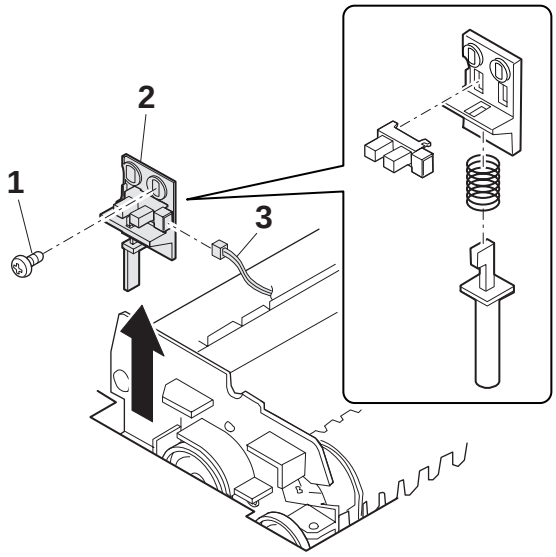

3) Drive frame ass'y and drive belt

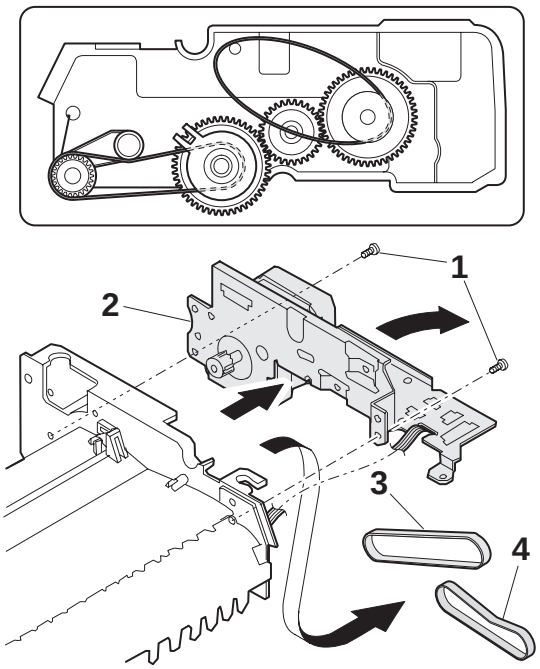

4) Pressure release solenoid

■AR-RP6 only

Note: Make sure the spring pin A is inserted into the slot.
Make sure that the clearance between the position at which force is applied and the sound deadening sponge is 0.5 ~ 2 mm when the pressure release solenoid plunger is pulled toward the solenoid side.

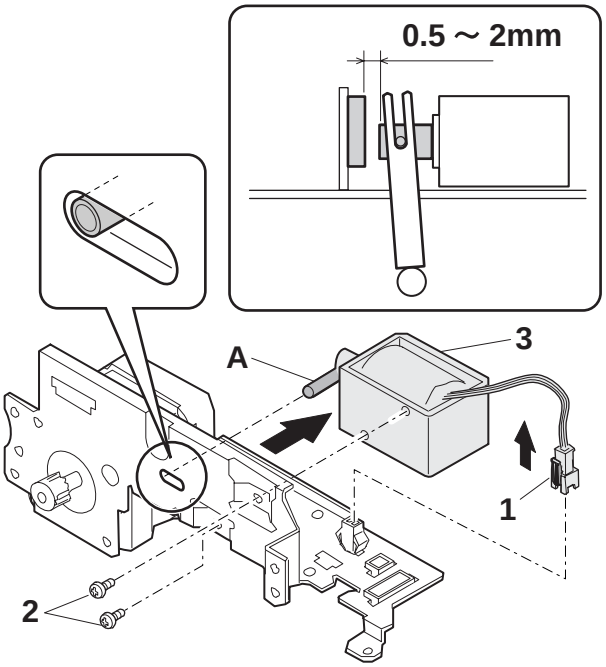

5) RSPF motor / SPF motor

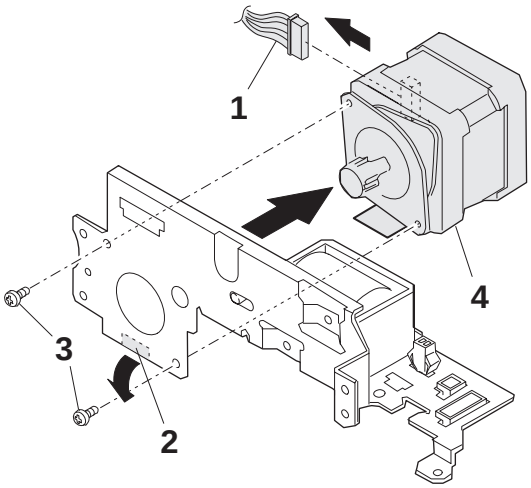

7. Transport section

1) Clutch

Note: When assembling, check that the rib is in the clutch groove A and fix it with E-ring.

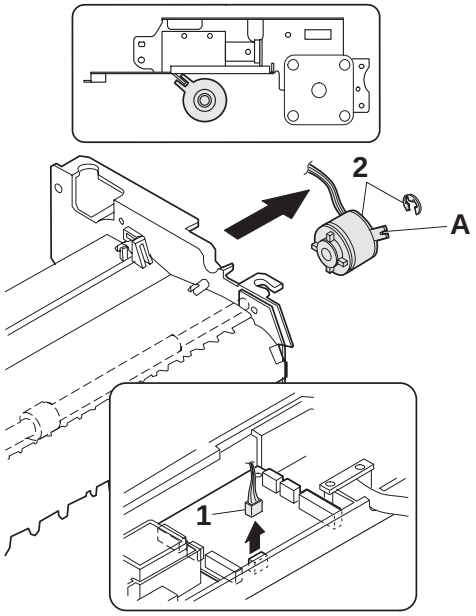

2) Transport roller gear

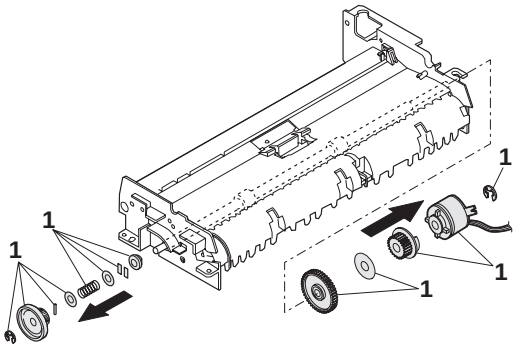

3) Reverse gate

■AR-RP6 only

Note: When assembling the inversion gate, apply grease G-484 on the area A.

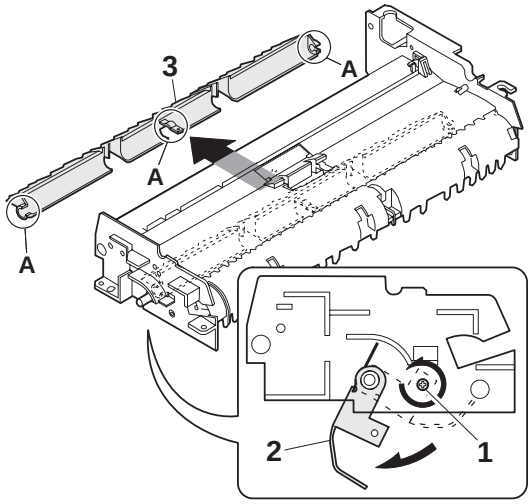

4) Transport roller

Note: Note that the spring will come off when removing.

■ **AR-RP6**

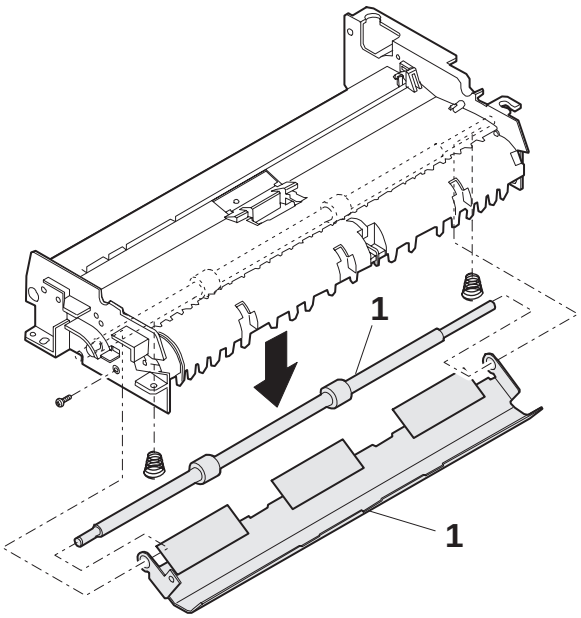

■ **AR-SP6**

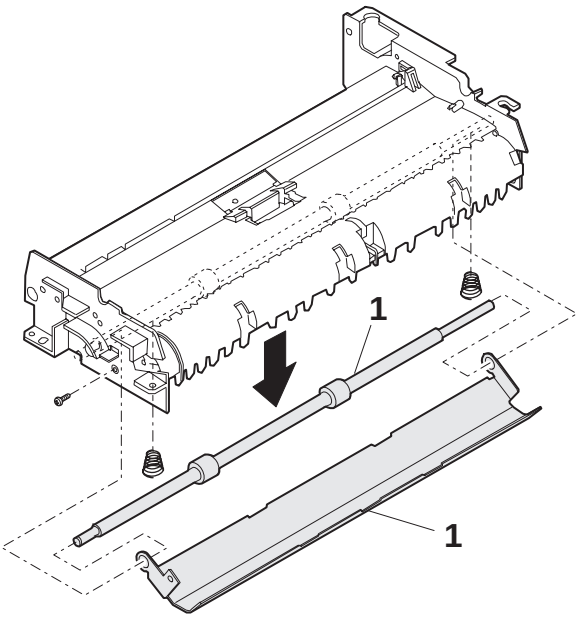

5) PS roller

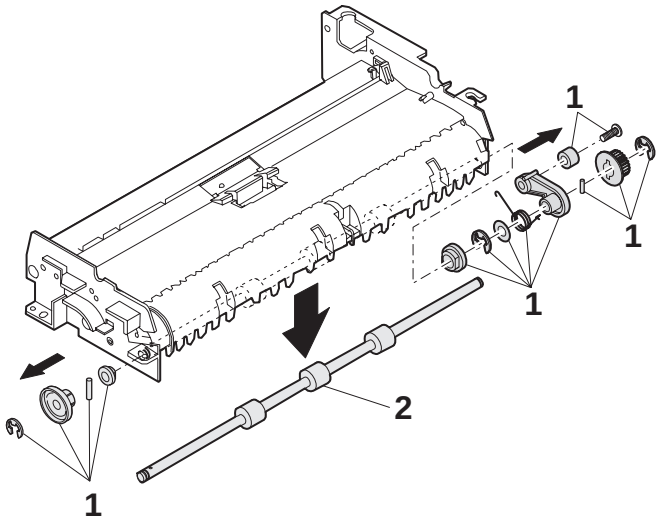

6) Paper feed paper guide lower

Note: When assembling, check that the paper feed paper guide lower is securely set to rib A and boss B.

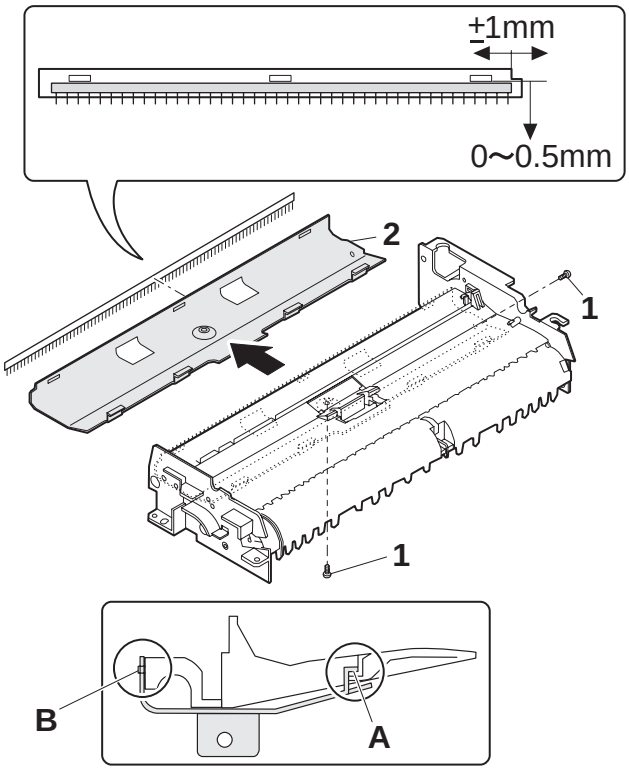

7) Paper feed paper guide upper

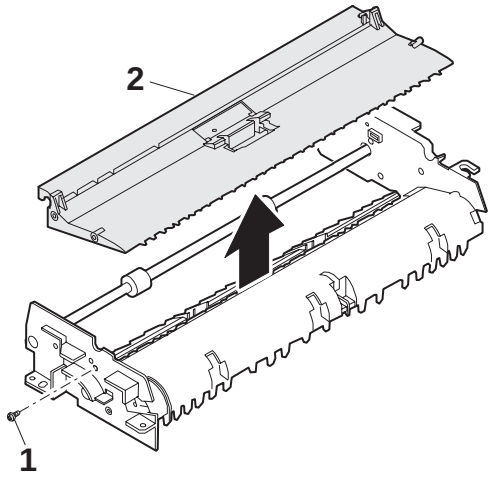

8) Paper exit roller

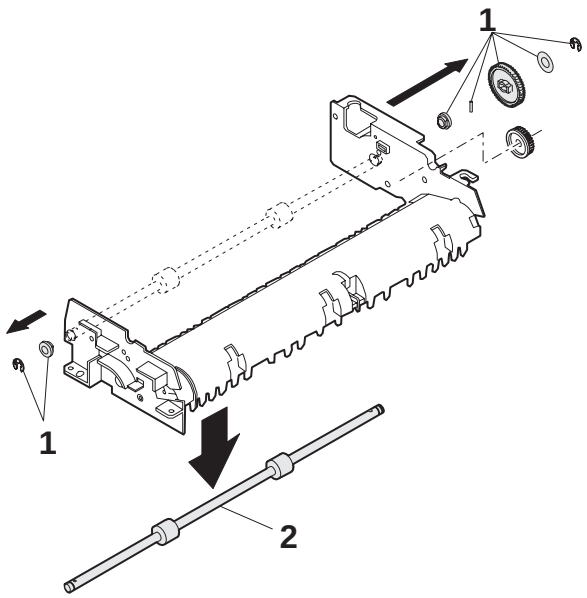

8. Hinge L

Note: When assembling the hinge L, reference is based on the mark of base tray and the center line of the 5 lines of the hinge L extended horizontally.

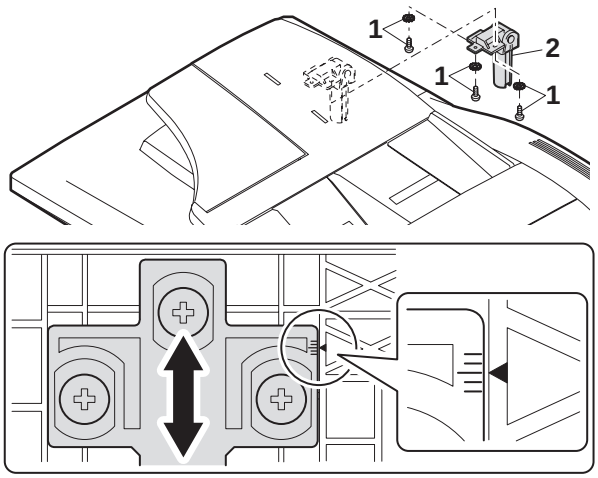

[8] MAINTENANCE

1. Maintenance parts

No.	Name	Work item	Service call	Remark
1	Pickup roller	Cleaning	O	
2-1	Separation unit	Cleaning	O	Replace when worn down.
2-2	Front separation sheet	Cleaning	O	
3	Paper feed roller	Cleaning	O	
4	PS roller	Cleaning	O	
5	Transport roller	Cleaning	O	
6	Paper exit roller	Cleaning	O	

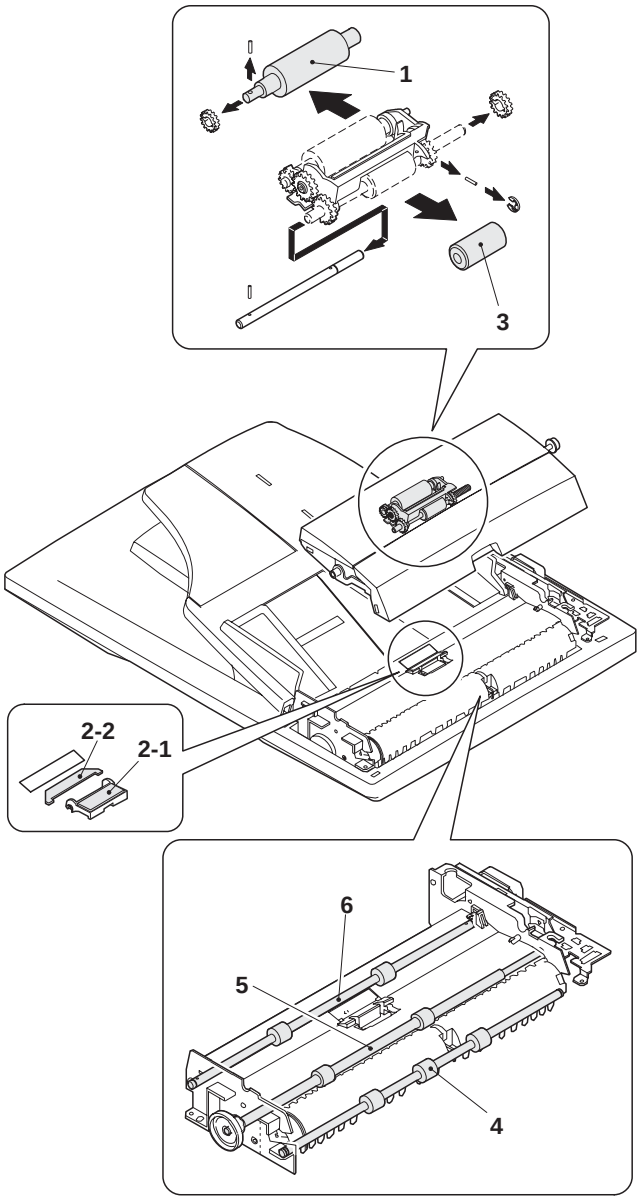

Note: When performing maintenance, refer to [7] DISASSEMBLY AND ASSEMBLY.

[9] ELECTRICAL SECTION

1. Block diagram

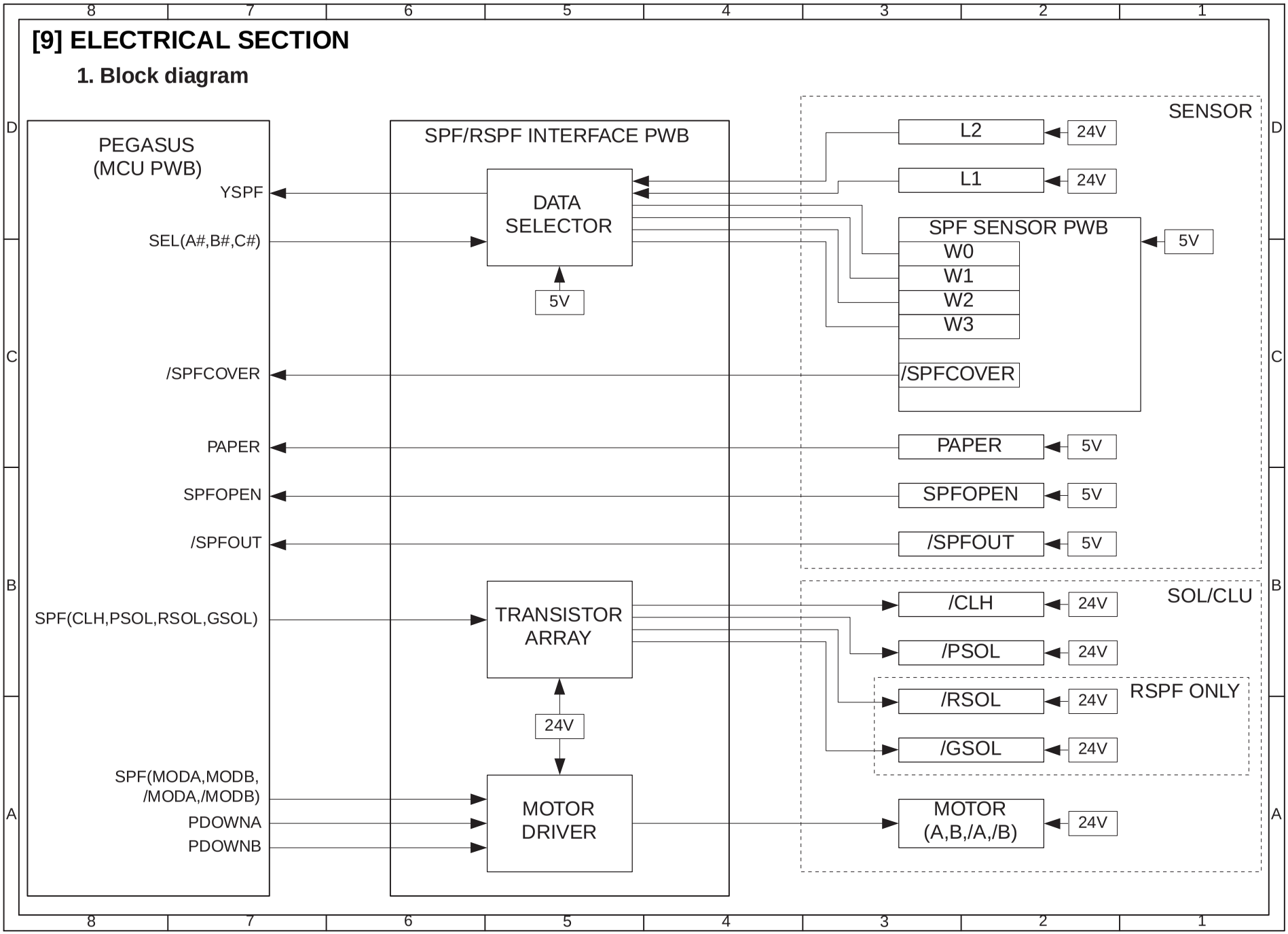

2. Actual wiring diagram

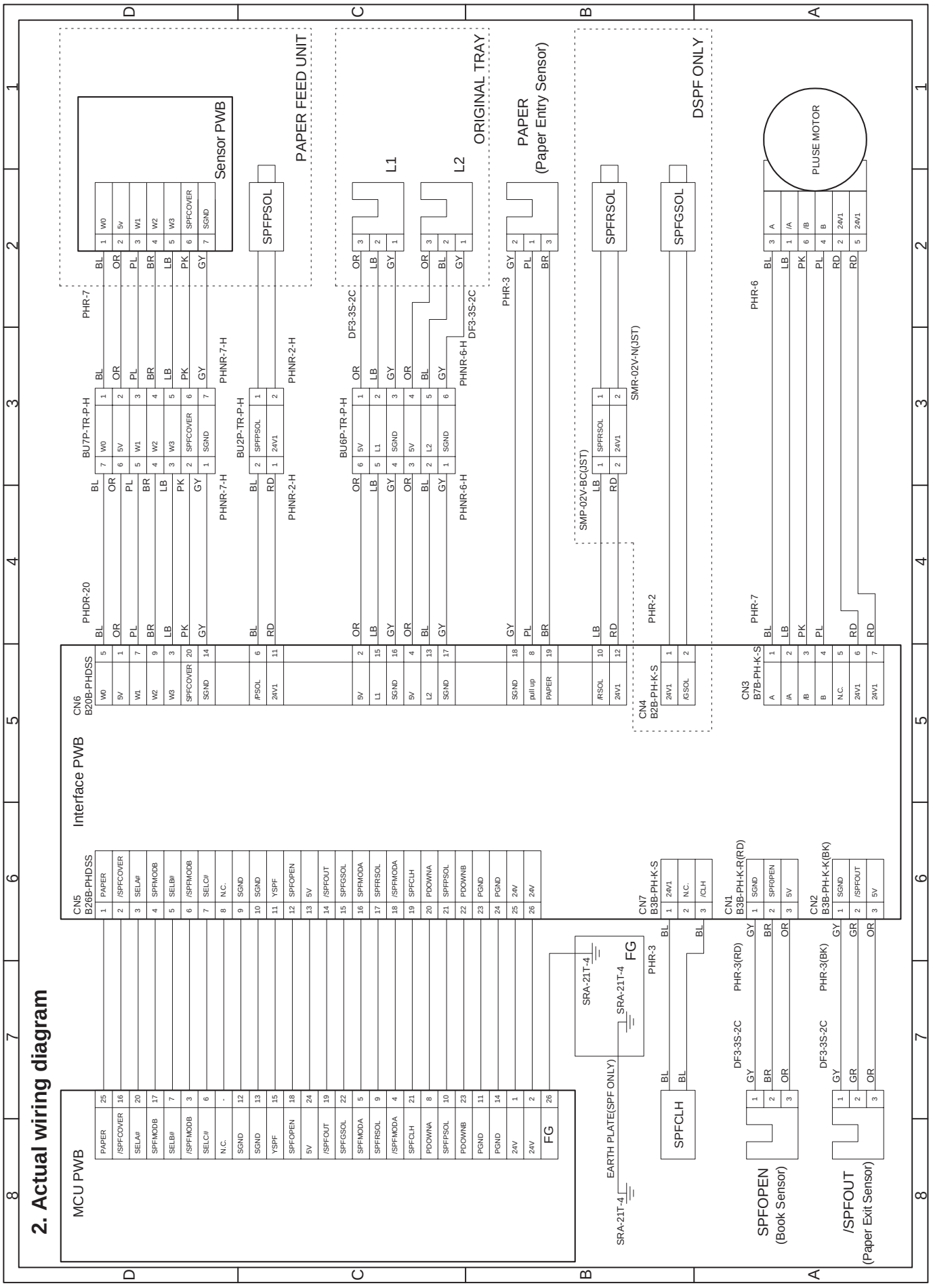

3. Circuit Diagram

3-1. Interface PWB (1/2)

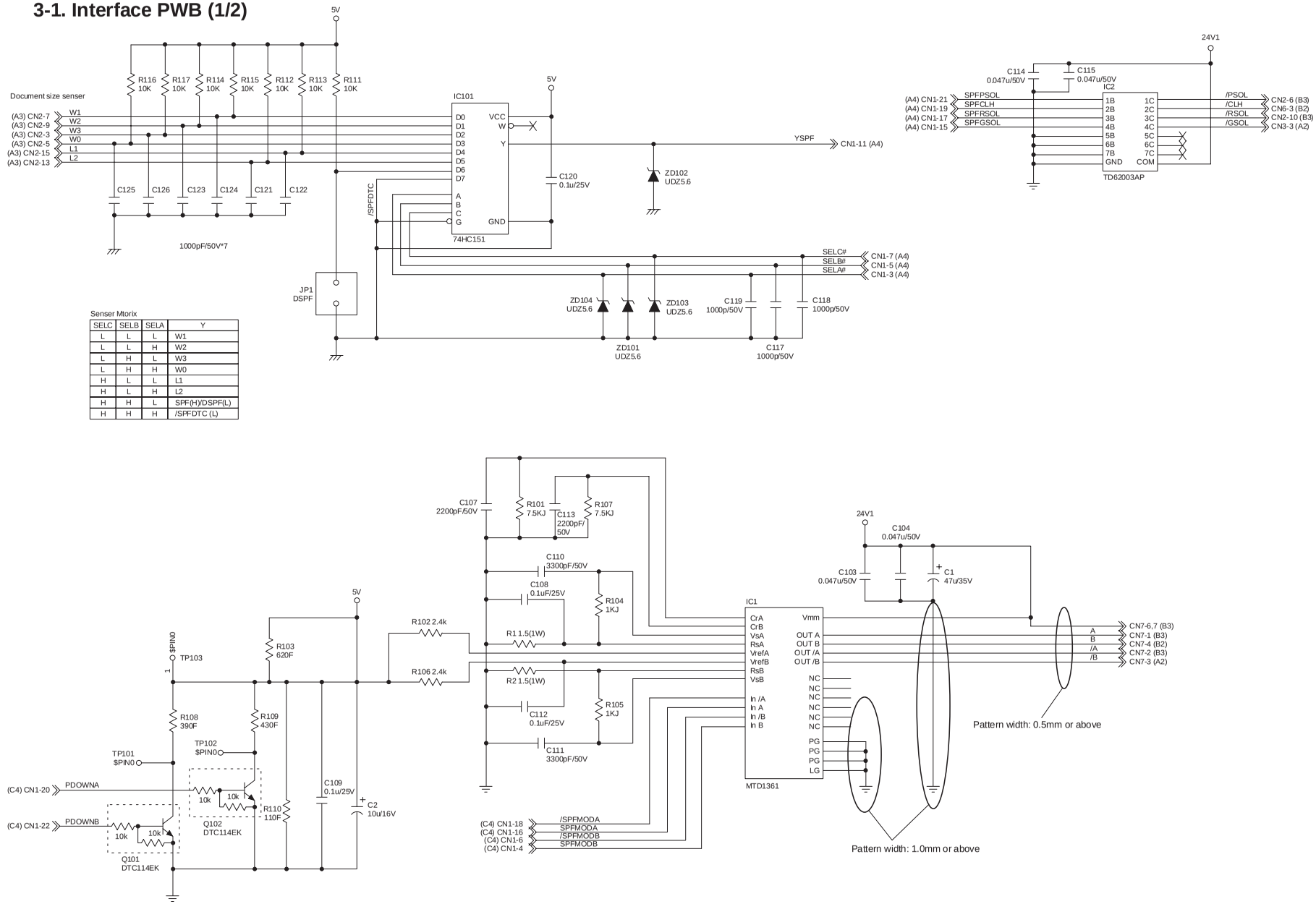

Senser Mtorix

SELC	SELB	SELA	Y
L	L	L	W1
L	L	H	W2
L	H	L	W3
L	H	H	W0
H	L	L	L1
H	L	H	L2
H	H	L	SPF(H)/DSPF(L)
H	H	H	/SPFDTC (L)

3-2. Interface PWB (2/2)

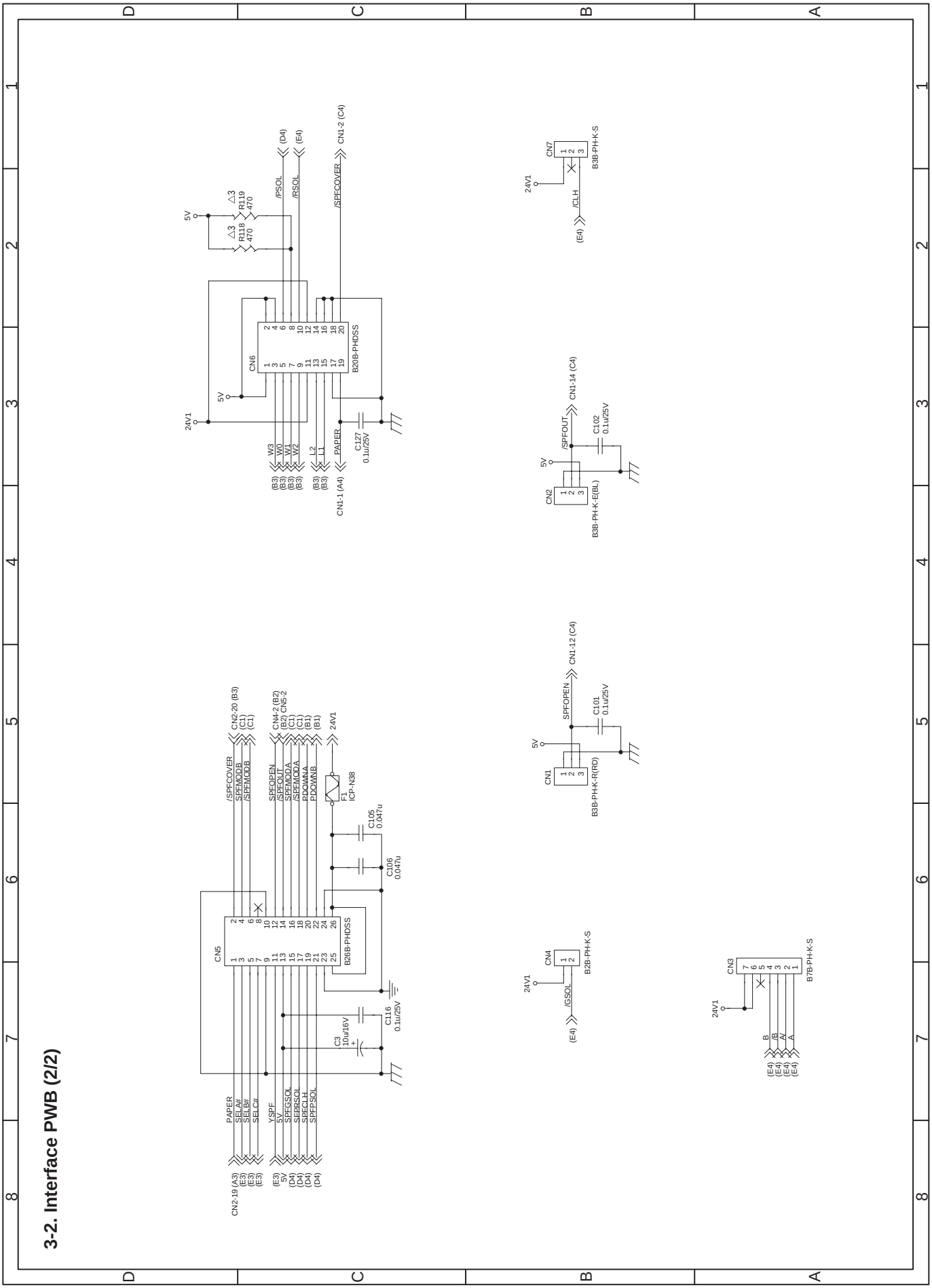

3-3. Sensor PWB

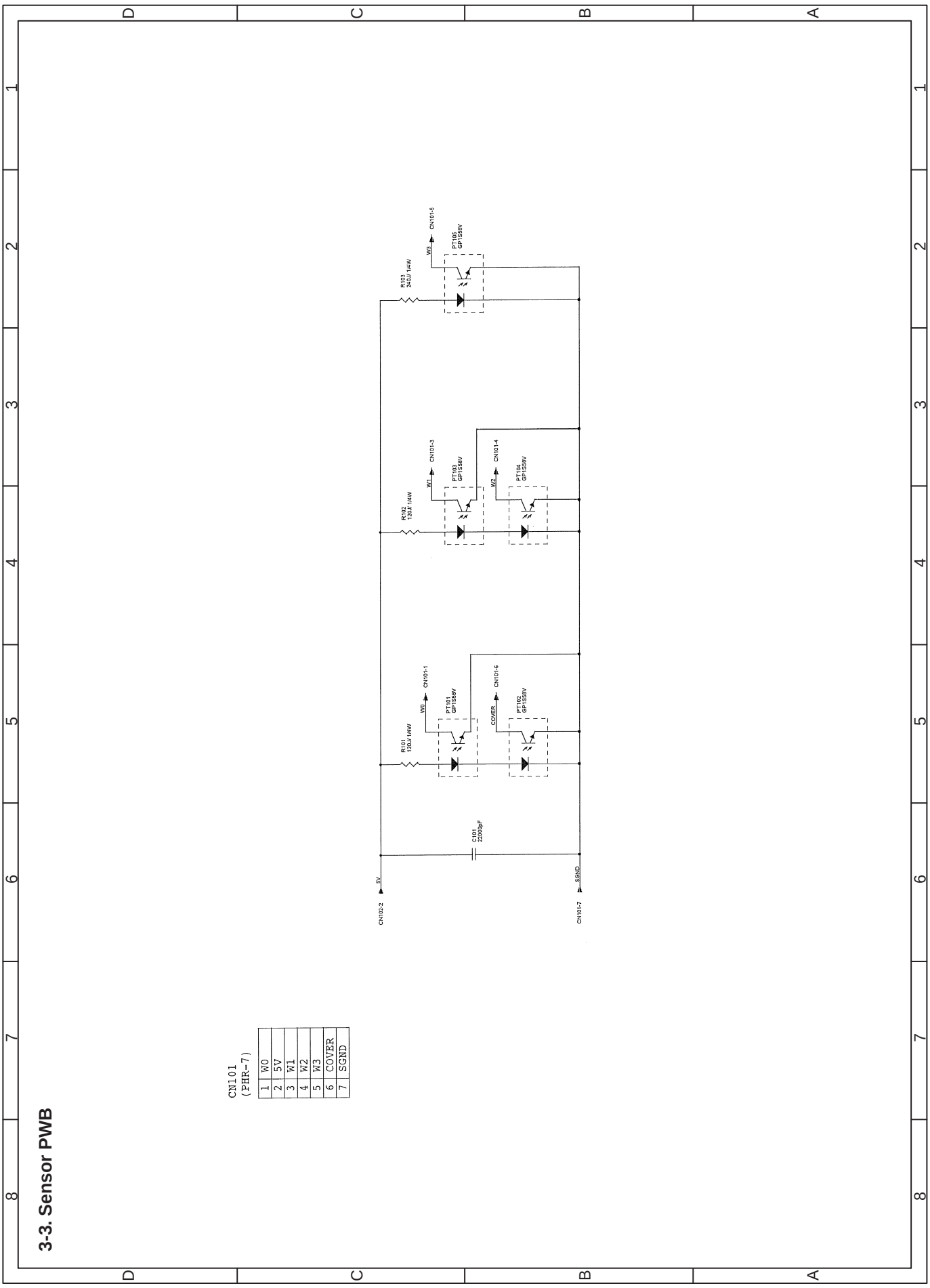

4. Parts arrangement

4-1. Interface PWB

a. Parts surface

CN3(B7B-PH-K-S)

1	A
2	/A
3	/B
4	B
5	N.C.
6	24V1
7	24V1

CN4(B2B-PH-K-S)

1	24V1
2	/GSOL

CN6(B20B-PHDSS)

2	5V	1	5V
4	5V	3	W3
6	/PSOL	5	W0
8	Pull up	7	W1
10	/RSOL	9	W2
12	24V1	11	24V1
14	SGND	13	L2
16	SGND	15	L1
18	SGND	17	SGND
20	SPFCOVER	19	PAPER

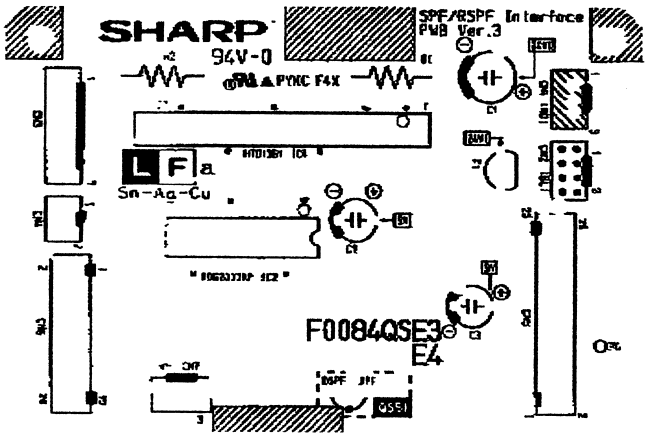

CN7(B3B-PH-K-S)

1	24V1
2	N.C.
3	/CLH

CN1(B3B-PH-K-R RD)

1	SGND
2	SPFOPEN
3	5V

CN2(B3B-PH-K-E BK)

1	SGND
2	/SPFOUT
3	5V

CN5(B26B-PHDSS)

25	24V1	26	24V1
23	PGND	24	PGND
21	SPFPSOL	22	PDOWNB
19	SPFCLH	20	PDOWNA
17	SPFRSOL	18	/SPFMODA
15	SPFGSOL	16	SPFMODA
13	5V	14	/SPFOUT
11	YSPF	12	SPFOPEN
9	SGND	10	SGND
7	SELC#	8	N.C.
5	SELB#	6	/SPFMODB
3	SELA#	4	SPFMODB
1	PAPER	2	/SPFCOVER

b. Solder surface

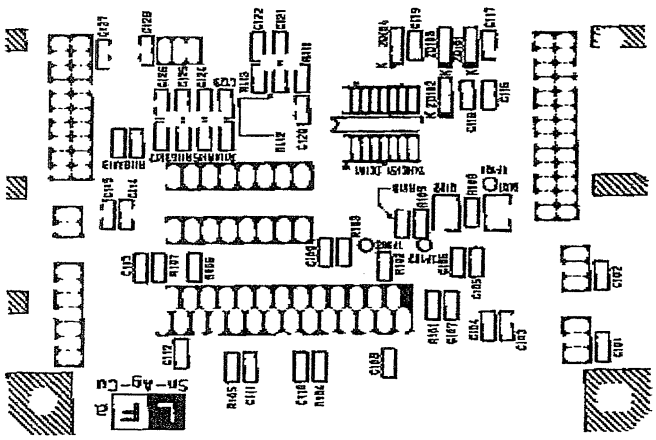

4-2. Sensor PWB

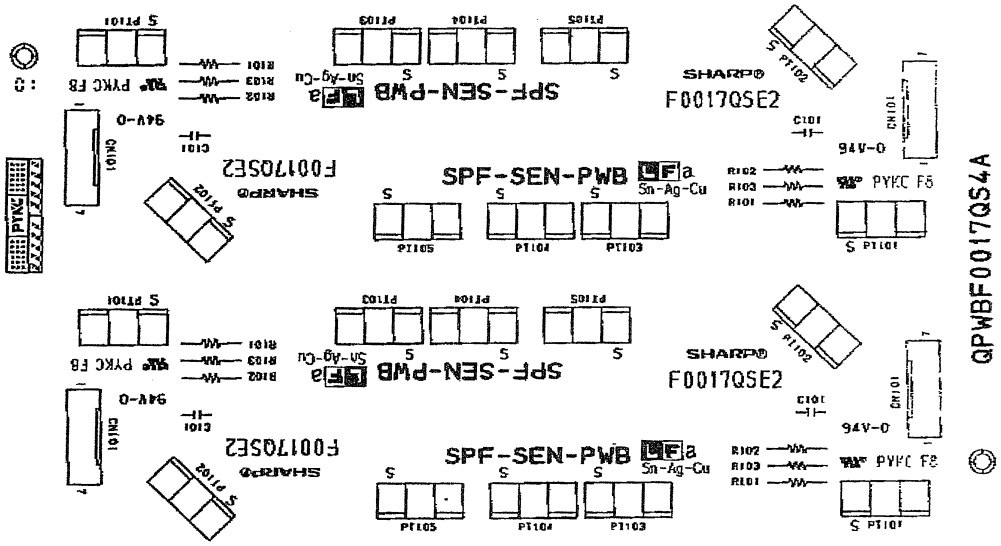

SHARP

COPYRIGHT © 2003 BY SHARP CORPORATION

All rights reserved.
Printed in Japan.
No part of this publication may be reproduced,
stored in a retrieval system, or transmitted.
In any form or by any means,
electronic, mechanical, photocopying, recording, or otherwise,
without prior written permission of the publisher.

SHARP CORPORATION
Digital Document Systems Group
Products Quality Assurance Department
Yamatokoriyama, Nara 639-1186, Japan
2003 June Printed in Japan ⓣ