SHARP SERVICE MANUAL

CODE: 00ZSF1116/A1E

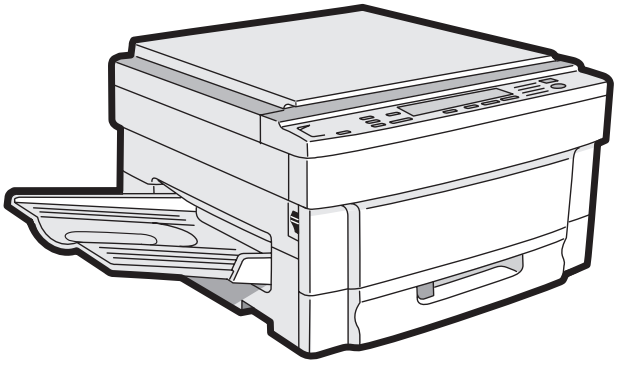

MODEL SF-1116

CONTENTS

[1] PRODUCT OUTLINE . . . . . 1 – 1

[2] PRODUCT SPECIFICATIONS . . . . . 2 – 1

[3] PRODUCT VIEWS . . . . . 3 – 1

[4] UNPACKING AND INSTALLATION . . . . . 4 – 1

[5] DESCRIPTION ON EACH SECTION . . . . . 5 – 1

[6] DISASSEMBLY AND ASSEMBLY . . . . . 6 – 1

[7] ADJUSTMENT . . . . . 7 – 1

[8] SIMULATIONS . . . . . 8 – 1

[9] SELF DIAGNOSTICS . . . . . 9 – 1

[10] MEMORY TROUBLES, FLOWCHART FOR REPLACEMENT OF MAIN CONTROL PWB . . . . . 10 – 1

[11] MAINTENANCE . . . . . 11 – 1

[12] ELECTRICAL SECTION . . . . . 12 – 1

Parts marked with "⚠" is important for maintaining the safety of the set. Be sure to replace these parts with specified ones for maintaining the safety and performance of the set.

SHARP CORPORATION

This document has been published to be used for after sales service only.
The contents are subject to change without notice.

Contents

[1] PRODUCT OUTLINE 1-1

1. Product features 1-1
2. System configuration (options) 1-1

[2] PRODUCT SPECIFICATIONS 2-1

1. Basic specifications 2-1
2. Description of each section 2-2
3. Supply parts 2-3
4. Optional specifications 2-5
   (1) Automatic document feeder (ADF) 2-5
   (2) 10-bin sorter 2-5
   (3) 10-bin staple sorter (10-bin SS) 2-6
   (4) Exclusive-use desk 2-6

[3] PRODUCT VIEWS 3-1

1. External view and internal structure 3-1
2. Operation panel 3-2
3. Clutches, solenoids, and motors 3-3
4. PWB 3-4
5. Sensors and switches 3-5
6. Rollers, mirrors, etc. 3-6

[4] UNPACKING AND INSTALLATION 4-1

1. Unpacking 4-1
2. Installation 4-1
   (1) Environment 4-1
   (2) Space around the machine 4-2
   (3) Installation base 4-2
   (4) Power source 4-2
   (5) Grounding wire connection 4-2
3. Optical system lock release 4-3
   A. No. 2/3 mirror unit lock release 4-3
   B. Lens and No. 4/5 mirror unit lock release . 4-3
4. Charger cleaning 4-3
   A. Main charger unit electrode cleaning 4-3
5. Developing unit setting 4-4
   A. Developing unit setting 4-4
6. Toner density sensor level adjustment 4-5
   A. Developing unit level adjustment 4-5
7. Accessory installation 4-5
   A. Copier tray installation 4-5
8. Toner supply 4-5
9. Center shift adjustment 4-7
10. Label attachment 4-7
    A. Label attachment 4-7

[5] DESCRIPTIONS OF EACH SECTION . . 5-1

1. Paper feed section 5-1
   1) General descriptions 5-1
   2) Basic operations 5-1
2. Developing section 5-2
   1) General descriptions 5-2
   2) Basic composition 5-2
   3) Basic operations 5-3
3. Optical section 5-3
   1) General description 5-3
   2) Basic operations 5-6
4. Copy process 5-8
   1) Photoconductor 5-8
   2) Process diagram 5-9
   3) Details of image forming process 5-10
   4) Transition of photoconductor surface potential 5-14
   5) Photoconductor drum sensitivity correction 5-14
   6) Process control function 5-14
5. TRANSPORT/FUSING SECTION 5-16
   1) General 5-16
   2) Basic composition and functions 5-16
6. Fusing paper exit section 5-16
7. High voltage section 5-17
   1) General 5-17
   2) Basic composition 5-17

[6] DISASSEMBLY AND ASSEMBLY 6-1

1. Paper feed unit 6-1
   1-1. Paper feed unit 6-1
   1-2. Paper feed roller ass'y removal 6-1
   1-3. PS front roller ass'y 6-2
   1-4. Separation roller 6-2
   1-5. Paper feed roller, take-up roller 6-2
2. Transport unit 6-3
   2-1. Resist roller, transfer roller 6-3
   2-2. Transport belt 6-4
3. Fusing section 6-4
   3-1. Fusing unit removal 6-4
   3-2. Heater lamp replacement 6-5
   3-3. Upper heat roller ass'y removal 6-5
   3-4. Upper separation pawl replacement 6-5
   3-5. Lower heat roller replacement 6-5
   3-6. Lower separation pawl replacement 6-6
   3-7. Thermistor/thermostat removal 6-6
4. Optical system 6-6

1) Copy lamp replacement 6-6
2) Mirror base wire replacement and adjustment 6-7
3) No. 2/3 mirror unit (mirror base B) installation (Mirror base B positioning) . . . 6-9
4) Copy lamp unit installation (Mirror base A positioning) 6-10
5) No. 4/5 mirror unit (mirror base C) replacement 6-10
6) Lens wire replacement 6-12
7) Lens unit replacement 6-15
5. High voltage section 6-15
5-1. Main charger (MC) unit 6-15
5-2. Transfer/separation charger (TC/SC) unit 6-16
6. Process section 6-17
6-1. Process unit 6-17
6-2. Waste toner bottle replacement (required when waste toner full detection/ maintenance) 6-17
6-3. Drum (Replace every 60K copies) 6-18
6-4. Blank lamp unit (Clean every 60K copies.) 6-18
6-5. Discharge lamp unit (Clean every 60K copies.) 6-19
6-6. Cleaner blade (Replace every 60K copies.) 6-19
6-7. Drum separation pawl (Replace every 60K copies.) 6-19
6-8. Process control PWB (Clean the sensor section every 60K copies.) 6-19
6-9. Drum mark sensor PWB (Clean the sensor section every 60K copies.) 6-19
6-10. Toner reception seal (Replace every 60K copies.) 6-19
7. Developing section 6-20
A. DV side seals F/R replacement (Replace every 120K copies.) 6-20
B. DB blade replacement (Replace every 120K copies.) 6-20
C. V ring attachment 6-20
D. Note for toner hopper drive gear (31T) and stirring shaft attachment 6-21
8. Operation panel/intermediate cabinet 6-21
9. Frame major parts 6-21
9-1. Cooling fan motor replacement 6-21
9-2. Power unit 6-22
9-3. Tray size detecting PWB 6-22
9-4. Main PWB unit 6-23
9-5. AC power PWB 6-23
9-6. Ozone filter (Check every 60K copies, and clean every 300K copies.) 6-23
10. Multi paper feed unit 6-24
10-1. Separation roller 6-24
10-2. Take-up roller/paper feed roller 6-24

[7] ADJUSTMENTS 7-1

1. Developing section 7-1
1-1. Developing doctor clearance adjustment 7-1
1-2. Developing magnet roller main pole position adjustment 7-1
2. Optical system 7-2
2-1. Adjustment items 7-2
2-2. Note for adjustments 7-3
2-3. Adjustment of each section 7-4
A. Lens reference position adjustment 7-4
B. No.4/5 mirror reference position adjustment 7-4
C. Vertical copy magnification ratio adjustment 7-5
D. Resolution adjustment (Focus adjustment) 7-6
E. Horizontal copy magnification ratio adjustment 7-8
F. Comparison table of lens values and simulation input values 7-9
G. Vertical skew adjsutment 7-10
H. Horizontal skew adjustment 7-10
I. Center shift adjustment 7-12
J. Exposure balance adjustment 7-12
K. Copy lead edge adjustment 7-13
2-4. Copy density adjustment 7-16
2-5. Process section adjustment 7-20

[8] SIMULATION 8-1

1. Outline 8-1
2. Purpose 8-1
3. Operating procedure 8-1
4. List of simulations 8-2
5. Details of simulations 8-3
6. User simulation 8-16
(1) Functions which can be set and canceled by the user simulation 8-16
(2) User simulation 8-16
(3) User simulation code table 8-17
(4) Department counter setting content (Set with user program P10 ~ P15) 8-17

[9] SELF DIAGNOSTICS 9-1

1. Summary/purpose 9-1
2. Operation 9-1
3. Clearing the self diag display 9-1

[10] SERVICING AT MEMORY TROUBLE AND MAIN CONTROL PWB REPLACEMENT 10-1

1. General 10-1
2. Purpose 10-1
3. Remedies 10-1
4. Set value recording sheet 10-3
5. Memory simulation list 10-4

[11] MAINTENANCE 11-1

1. Maintenance cycle and maintenance items . . 11-1

[12] ELECTRICAL SECTION 12-1

1. System block diagram 12-1
2. Main circuit 12-3
   (1) Block diagram 12-3
   (2) CPU (IC6) SC3041K12F 12-4
   (3) Detector circuit of sensor signal 12-8
   (4) Start/stop control circuit 12-8
   (5) Heater lamp control circuit 12-9
   (6) Driver circuit (Solenoid, electromagnetic clutch) 12-10
   (7) Stepping motor drive circuit 12-10
   (8) AE (Auto Exposure) sensor circuit 12-11
   (9) Toner supply motor drive circuit 12-11
   (10) Reset IC (IC13) 12-11
   (11) Operation panel 12-12
   (12) EnergyStar circuit description 12-13

[1] PRODUCT OUTLINE

1. Product features

(1) Compact body

- Compact body size
  The body width of 600mm is the smallest in the class.
- The employment of the front loading tray and the folding-type multi manual paper feed cassette realizes the small occupying area. (Option)

(2) Clean copy gentle to the environment

- Silent design,
- Low level of ozone, use of recyclable materials
- The energy-saving mode reduces the power consumption.

(3) High capacity of copying

- Warm-up time is less than 35 sec. The first copy of 5.3 sec.

(4) Fully expandable system. (Refer to "2. System configuration.")

2. System configuration (options)

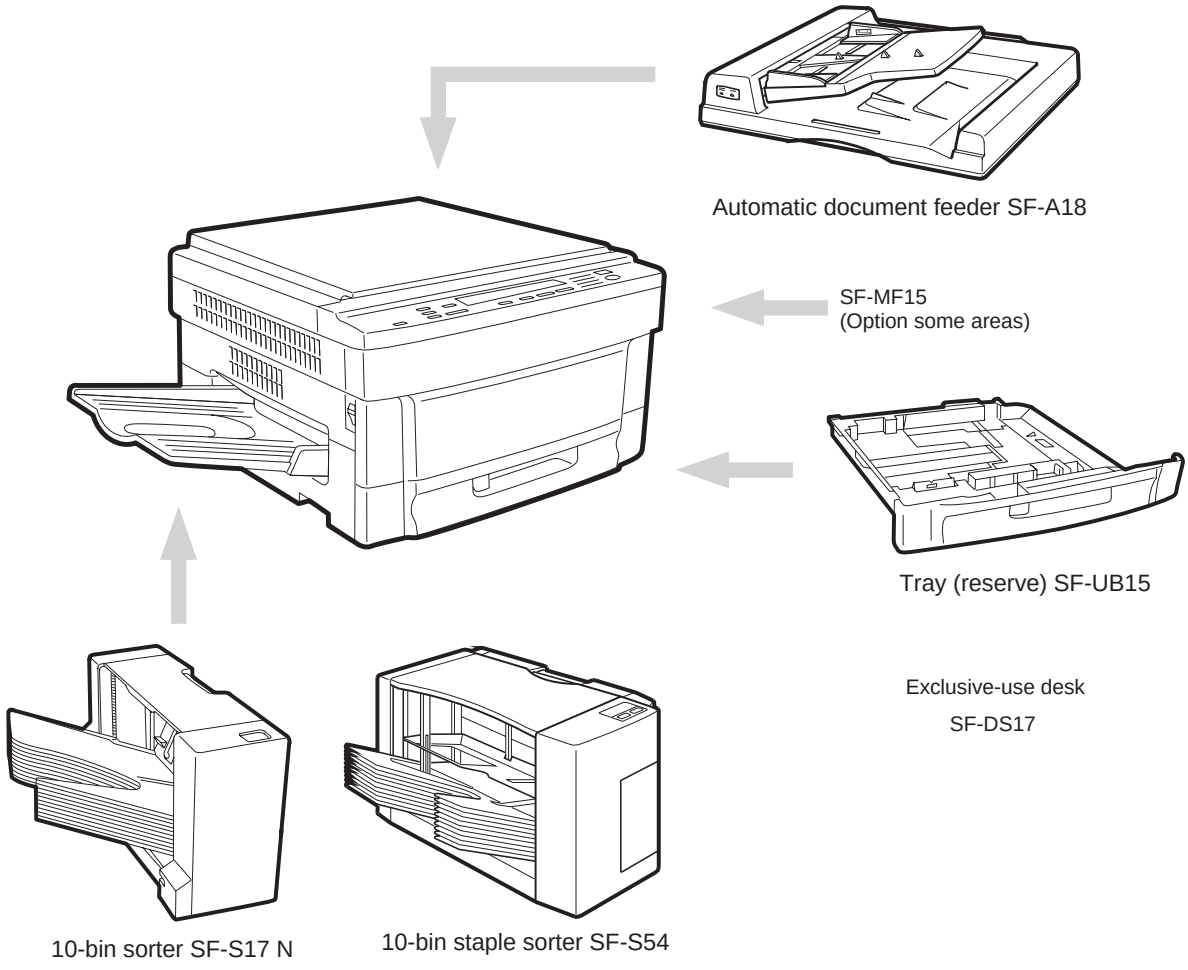

Note: When installing the SF-S54, the exclusive-use desk (SF-DS17) is reguired.

[2] PRODUCT SPECIFICATIONS

1. Basic specifications

(1) Type: Table top

(2) Copy speed:

	Normal	Enlargement (Magnification)	Reduction (Magnification)
A3	9 sheets/min	9 sheets/min (200%)	9 sheets/min (50%)
B4	11 sheets/min	11 sheets/min	11 sheets/min
A4 (Portrait)	16 sheets/min	13 sheets/min	13 sheets/min
A4 (Landscape)	13 sheets/min	13 sheets/min	13 sheets/min
B5 (Portrait)	16 sheets/min	13 sheets/min	13 sheets/min
B5 (Landscape)	13 sheets/min	13 sheets/min	13 sheets/min
Ledger	9 sheets/min	9 sheets/min	9 sheets/min
Legal	11 sheets/min	11 sheets/min	11 sheets/min
Letter (Portrait)	16 sheets/min	13 sheets/min	13 sheets/min
Letter (Landscape)	13 sheets/min	13 sheets/min	13 sheets/min

(Note) The copy speeds for enlargement and reduction are minimum speed values.

(3) Warm up time: 35 sec or less

(4) First copy time: 5.3 sec (Tray)

(5) Jam recovery time: 8 sec (Conditions: After leaving the door open for 60 sec, the standard conditions)

(6) Multi copy Max. 99 sheets

(7) Original

Max. original size	A3/Ledger
Reference original size	Left side/Center
Original sensing	No

(8) Copy magnification ratio

Fixed magnification: AB series: 200, 141, 122, 115, 100, 86, 81, 70, 50% (9 steps)
Inch series: 200, 141, 129, 121, 100, 95, 77, 64, 50% (9 steps)

Zoom range: 50% ~ 200% (151 steps by the increment of 1%)

(9) Exposure

Exposure mode: Auto/Manual/Photo

No. of manual steps: 9 steps

(10) Void width

Void area: Lead edge/rear edge: 3mm or less

Image loss Normal: 4mm or less

(11) Paper exit/finishing

Paper exit tray capacity: 250 sheets

Finishing: option 10-bin sorter, 10-bin staple sorter

(12) Additional functions

	Function	Remark
Auto Paper Selection	×	
Auto Magnification ratio Selection	×	
Shift	○	
1-set 2-copy	○	Enlargement is impossible.
Edge erase	○	
Built-in auditor password mode	○	20 departments
Interruption	○	
Monochrom	×	
AICS	○	
Pre-heat mode	○	
Auto shut off	○	
Auto power save	○	
Auto tray switching	×	
Cover insertion	×	
OHP insertion paper	×	
Overlay	×	

(13) External dimensions

W x D x H	600 × 595 × 365 mm 23-5/8″ × 23-7/16″ × 14-3/8″
Occupying area (W x D)	885 × 595 mm 34-27/32″ × 23-7/16″
Weight	41.0Kg (90.4 lbs)

(14) Power source

Voltage: 100V 50/60Hz
110V 50/60Hz
120V 60Hz
127V 60Hz
220 ~ 230V 50/60Hz
240V 50Hz

Frequency: 50/60Hz common

(15) Power consumption

Max. power consumption	1.5kw	(Note)	Max. when the option is installed
Energy efficiency	64Wh/h or less		
Auto power shut off (for EPA)	5W or less		

2. Description of each section

(1) Paper feed section

Copying size	A3 ~ A6/Ledger ~ Invoice
Paper feed system	1 tray + multi manual feed
Paper feed capacity	250 sheets × 1

Cassette		Paper size	Paper weight	Paper kind
Tray		AB series: A3 ~ A5	56 ~ 80g/m^2	Standard paper, recycled paper
		Inch series: Ledger ~ Invoice	15 ~ 21 lbs	
Multi manual paper feed	Multi	AB series: A3 ~ A6R Inch series: Ledger ~ Invoice	56 ~ 80g/m^2	Standard paper, specified paper, special paper, OHP film, Second original paper, postcards (without folding)
			15 ~ 21 lbs	
	Single	AB series: A3 ~ A6R Inch series: Ledger ~ Invoice	52 ~ 128g/m^2	
			14 ~ 34 lbs	

(2) Optical section

Light source	Halogen lamp
Exposure system	Slit exposure by moving the light source
Zooming system	By changing the lens positions and the scan speed.
Lens	Fixed focus lens

(3) Process

Charging system	(–) DC saw teeth electrode system
Transfer system	(–) tungsten system
Separation system	(AC) separation tungsten system

(4) Developing section

Developing system	Dry, two-component magnetic brush development (developer replacement)
Developing bias voltage	DC–200V ±5V

(5) Fusing section

Fusing system	Heat roller system
Upper heat roller surface temperature	190 degrees C
Heater lamp	Halogen lamp 1000W × 1

3. Supply parts

Middle East/Africa

	Name	Content		Life	Product name
1	Photoconductor kit	Photoconductor drum Cleaner blade Drum separation pawl	x 1 x 1 x 2	60K	SF-226DM
2	Black developer	Black developer (530g)	x 10	60K x 10	SF-226LD
3	Black toner	Black toner bottle (280g)	x 10	6K x 10	SF-126LT
4	Upper heat roller kit	Upper heat roller Upper separation pawl Fusing bearing	x 1 x 4 x 1	120K	SF-216HU
5	Lower heat roller kit	Lower heat roller Lower separation pawl	x 1 x 4	120K	SF-220LH
6	Staple cartridge	Staple cartridge (For SF-S54)	x 3	5K staples x 3	SF-LS12
7	Upper heat roller	Upper heat roller	x 1	120K	SF-216HU
8	Upper separation pawl	Upper separation pawl x 4	x 10	120K x 10	SF-216UP
9	Heat roller gear	Heat roller gear	x 10	120K x 10	SF-216HG
10	Lower heat roller	Lower heat roller	x 1	120K	SF-216HR
11	Lower separation pawl	Lower separation pawl x 4	x 10	120K x 10	SF-216LP
12	Screen grid	Screen grid	x 10	120K x 10	SF-216SU
13	Cleaner blade	Cleaner blade	x 10	6K x 10	SF-216CB
14	Charging plate	Charging plate	x 10	120K x 10	SF-216PU
15	Ozone filter	Ozone filter	x 10	300K x 10	SF-216FL
16	Copy lamp	Copy lamp	x 10	—	SF-216CL
17	MC case unit	MC case unit	x 10	—	SF-216MC

Middle & South America/Asia (excluding China)

	Name	Content		Life	Product name
1	Photoconductor kit	Photoconductor drum Cleaner blade Drum separation pawl	x 1 x 1 x 2	60K	SF-226DR
2	Black developer	Black developer (530g)	x 10	60K x 10	SF-226CD
3	Black toner	Black toner bottle (280g)	x 10	6K x 10	SF-126CT
4	Upper heat roller kit	Upper heat roller Upper separation pawl Fusing bearing	x 1 x 4 x 1	120K	SF-216HU
5	Lower heat roller kit	Lower heat roller Lower separation pawl	x 1 x 4	120K	SF-220LH
6	Staple cartridge	Staple cartridge (For SF-S54)	x 3	5K staples x 3	SF-LS12
7	Upper heat roller	Upper heat roller	x 1	120K	SF-216HU
8	Upper separation pawl	Upper separation pawl x 4	x 10	120K x 10	SF-216UP
9	Heat roller gear	Heat roller gear	x 10	120K x 10	SF-216HG
10	Lower heat roller	Lower heat roller	x 1	120K	SF-216HR
11	Lower separation pawl	Lower separation pawl x 4	x 10	120K x 10	SF-216LP
12	Screen grid	Screen grid	x 10	120K x 10	SF-216SU
13	Cleaner blade	Cleaner blade	x 10	6K x 10	SF-216CB
14	Charging plate	Charging plate	x 10	120K x 10	SF-216PU
15	Ozone filter	Ozone filter	x 10	300K x 10	SF-216FL
16	Copy lamp	Copy lamp	x 10	—	SF-216CL
17	MC case unit	MC case unit	x 10	—	SF-216MC

4. Optional specifications

(1) Automatic document feeder (ADF)

<Model name: SF-A18>

Original set direction	Face up
Original set position	Center reference
Original transport system	Belt (half size) system
Original feed sequence	Bottom taking (Face up exit)
Original size	A3 ~ A5/11" x 17" ~ 8 1/2" x 5 1/2"
Original change speed (S → S)	16 sheets/min
Original weight	50 ~ 128g/m^2 (14 to 34 lbs)
Original set quantity	50 sheets, 50 ~ 80 g/cm^2, 80 ~ 128 g/m^2 (21 to 34 lbs) thickness max. 5 mm (3/16")
Original stop system	Position control system
Dimensions	571 (W) x 521 (D) x 110 (H) (mm) 22-31/64" (W) x 20-33/64" (D) x 4-11/32" (H) (Height: excluding the tray)
Weight	About 11.5kg (25.4 lbs.)
Power source	Supplied from the copier's power section.
Power consumption	65W

Functions

Original sensing on the tray	YES (Scanning read for uncertain size originals.)
Sensing size	Inch series: 11" x 17", 8 1/2" x 14", 8 1/2" x 11", 8 1/2" x 11"R, 8 1/2" x 5 1/2" AB series: A3, B4, A4, A4R, A5
Original mixture	Allowed (However, no linkage with the AMS)
Original reverse	NO

(2) 10-bin sorter

<Model name: SF-S17 N>

Type		Copier installation type/Hanging type
Distribution system		Bin shift by lead screw
No. of bins		10 bins (The top bin is used also for non-sort.)
Capacity		30 sheets/bin (L4/letter size), 100 sheets for the top bin only.
Sorting		30 sheets (A4/letter)
		15 sheets (B4/legal)
		15 sheets (A3/Ledger)
Grouping		20 sheets (A4/letter)
		15 sheets (B4/legal)
		15 sheets (A3/Ledger)
Paper size	(Non-sort)	A3 ~ A6 (Postcard)R/11" x 17" ~ 8 1/2" x 5 1/2"
	(Sort/group)	A3 ~ A5/11" x 17" ~ 8 1/2" x 5 1/2"
Paper transport		Center reference
Paper reception		Face up
Paper weight	(Non-sort)	52 ~ 128g/m^2 (14 ~ 34lbs)
	(Sort/group)	56 ~ 80g/m^2 (15 ~ 21lbs)
Dimensions		335 (W) x 493 (D) x 298 (H) (mm) 13-13/64" (W) x 19-27/64" (D) x 11-47/64" (H) (Width: Including the tray.)
Weight		8.6kg [9.8kg (21.6 lbs.) Including mounted fittings]
Power source		Supplied from the copier. DC24V (1.2A)
Power consumption		Max. 30W

(3) 10-bin staple sorter (10-bin SS)

<Model name: SF-S54>

Type	Copier installation type/hanging type
Distribution system	Bin shift system by lead screw
No. of bins	10 bins (The top bin is commonly used for non-sort.
Capacity	30 sheets for each bin (A4, 8 1/2" × 11", 80g/m^2) 100 sheets for the top bin
Sort	30 sheets (A4, 8 1/2" × 11")
	15 sheets (B4, 8 1/2" × 14", 8 1/2" × 13")
	15 sheets (A3, 11" × 17") 80g/m^2 (21 lbs.)
Grouping	20 sheets (A4, 8 1/2" × 11")
	15 sheets (B4, 8 1/2" × 14")
	15 sheets (A3, 11" × 17"), 80g/m^2 (21 lbs.)
Staple sort	30 sheets (A4, 8 1/2" × 11")
	15 SHEETS (B4, 8 1/2" × 14")
	15 sheets (A3, 11" × 17") 80g/m^2 (21 lbs.)

Paper size	Non-sort	A3 ~ A6R 11" × 17" ~ 8 1/2" × 5 1/2"
	Sort/group	A3 ~ A5 11" × 17" ~ 8 1/2" × 5 1/2"
	Staple sort	A3, B4, A4, A4R, B5, 11 × 17", 8 1/2 × 14", 8 1/2 × 11", 8 1/2 × 11R

Alignment (Sorting)	Max. shift 2mm (Alignment operation)
Paper transport	Center reference
Paper loading	Face up

Paper weight	Non-sort	49 ~ 128g/m^2 (13 ~ 34 lbs.)
	Sort/group/staple sort	56 ~ 80g/m^2 (15 ~ 21 lbs.)

Dimensions	390(W) × 542(D) × 400(H)mm 15-23/64" (W) × 21-11/32" (D) × 15-3/4" (H)
Weight	About 11.5kg, 15kg (33.1 lbs.) [including the installation kit]
Power source	DC24V (1.5A) supplied from the copier.
Power consumption	Max. 36W

Staple section

Type	Copier stapler
Stapling time	1.8 sec
No. of stapled sheets	30 sheets (80g/m^2, 21 lbs.)
Binding reference	Front reference
Staple supply	Cartridge (5,000 pcs.)
Staple	SF-LS12
No staple/no cartridge/ no stapler detection	Available
Staple jam detection	Available
Manual staple mode	Available (excluding manual stapling)

Note: When installing the SF-S54, the exclusive-use desk (SF-DS17, SF-DS17E) is required.

(4) Exclusive-use desk

SF-DS17

Dimensions	570(W) × 523(D) × 520(H)mm	
Weight	About 19.5kg	
Functions	Caster	Provided
	Adjuster	None
	Door	None

[3] PRODUCT VIEWS

1. External view and internal structure

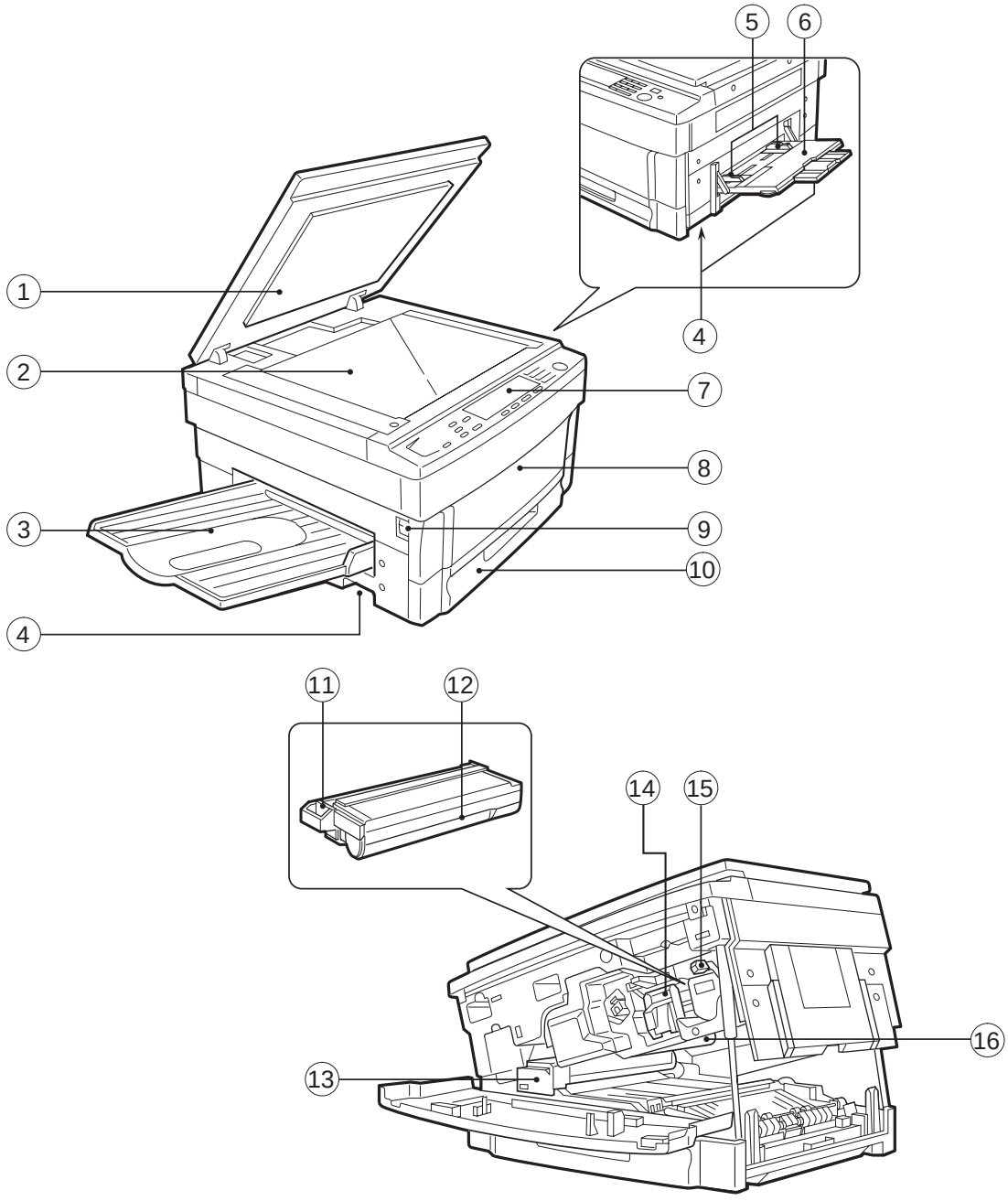

No.	Name	No.	Name	No.	Name
①	Original cover	②	Original table	③	Paper exit tray
④	Grip	⑤	Manual feed original guide	⑥	Manual feed tray
⑦	Operation panel	⑧	Front cover	⑨	Power switch
⑩	Paper tray	⑪	Developing unit grip	⑫	Toner hopper
⑬	Fusing unit	⑭	Developing unit lock lever	⑮	Release lever
⑯	Drum				

2. Operation panel

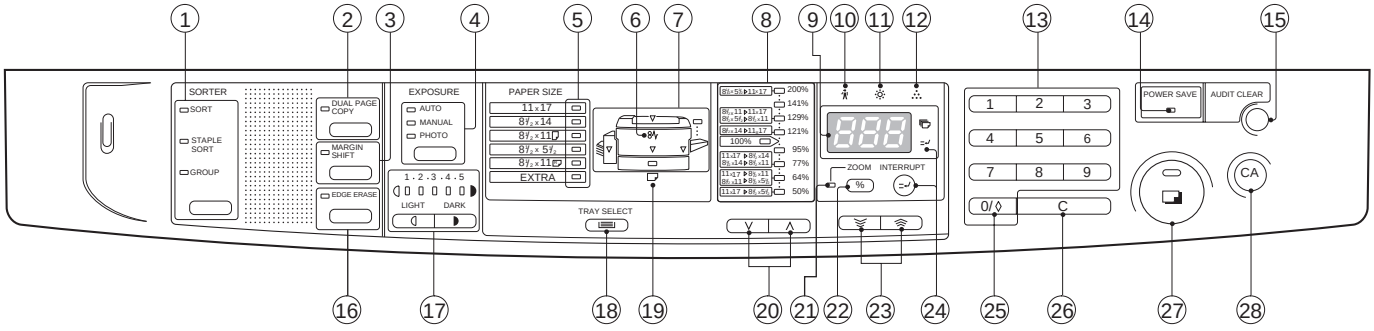

No.	Name	No.	Name	No.	Name
①	SORTER key and indicators	②	DUAL PAGE COPY key and indicator	③	MARGIN SHIFT key and indicator
④	AUTO/MANUAL/PHOTO key and indicators	⑤	PAPER SIZE indicators	⑥	Misfeed indicator
⑦	Paper feed location/misfeed location indicators	⑧	Preset ratio indicators	⑨	Copy quantity display
⑩	Maintenance required indicator	⑪	Developer replacement required indicator	⑫	Toner required indicator
⑬	10-key pad	⑭	POWER SAVE indicator	⑮	AUDIT CLEAR key
⑯	EDGE ERASE key and indicator	⑰	LIGHT and DARK keys and indicators	⑱	TRAY SELECT key
⑲	Paper required indicator	⑳	Copy ratio selector keys	㉑	ZOOM indicator
㉒	Copy ratio display key	㉓	Zoom keys	㉔	INTERRUPT key and indicator
㉕	Zero/readout key	㉖	Clear key	㉗	Print button and READY indicator
㉘	Clear all key				

3. Clutches, solenoids, and motors

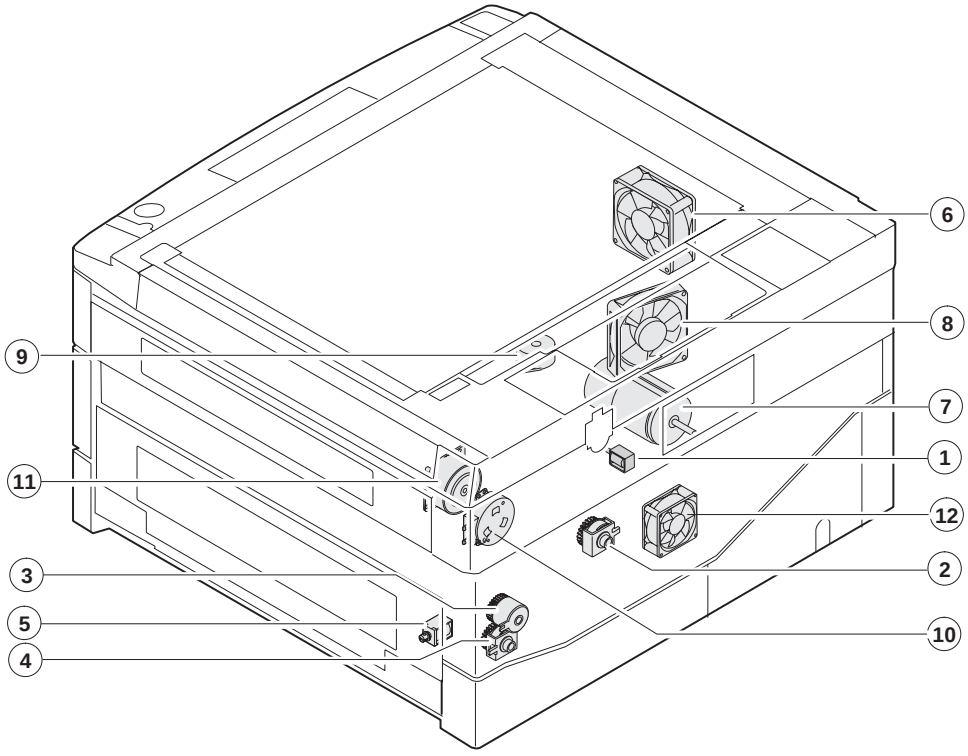

Clutches and solenoids

No.	Signal name	Name	Functions, operations
①	PSPS	Paper separation solenoid	Paper separation solenoid drive
②	RRC	Resist roller clutch	For resist roller rotation
③	TRC	Transport roller clutch	For transport roller rotation
④	CPFC1	Tray paper feed clutch	For paper feed roller rotation
⑤	MPFS	Manual paper feed solenoid	For pressing take-up roller

Motors

No.	Signal name	Name	Functions, operations	Type
⑥	VFM	Ventilation fan motor	Used to ventilate around the fusing section, cools down the machine, and remove ozone.	DC brushless
⑦	MM	Main motor	Used to drive the body.	DC brush
⑧	CFM	Optical system cooling fan	Used to cool and ventilate the optical system.	DC brushless
⑨	LM	Lens motor	Used to move the optical lens.	DC stepping
⑩	TM	Toner motor	Used to stir toner.	DC synchronous
⑪	MRM	Mirror motor	Used to move the mirror base.	DC stepping
⑫	SMF	Suction fan motor	Used to ventilate the suction section.	DC brushless

4. PWB

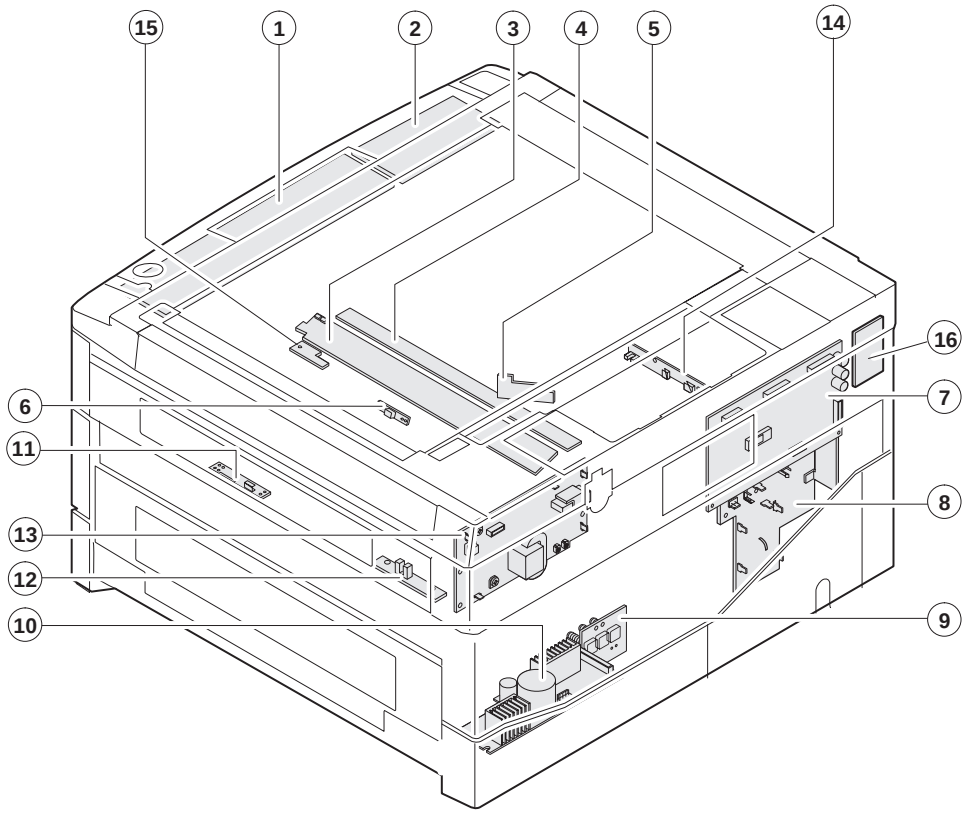

No	Name	Description	No	Name	Description
①	Operation PWB A	Operation input, display control	②	Operation PWB B	Operation input, display control
③	Blank lamp PWB	Used to control the blank lamp.	④	DL PWB	Used to drive the discharge lamp.
⑤	Optical PWB	AE sensor and lens motor interface	⑥	Process control PWB	Used to sense the toner density.
⑦	Main PWB	Used to control the body.	⑧	AC circuit PWB	AC power input
⑨	CSD PWB	Used to sense the body cassette size.	⑩	DC circuit PWB	DC power input
⑪	PID PWB	Manual paper entry detection	⑫	PPD PWB	Body PR roller JAM detection
⑬	High voltage PWB	Process high voltage, developing bias voltage supply	⑭	POD PWB	Body paper exit section JAM detection, ventilation fan motor interface
⑮	Mark sensor PWB	Drum marking point detection	⑯	Sub DC power PWB	Supplies power in the energy saving mode. (Supplies 5V to the main PWB and the operation PWB.)

5. Sensors and switches

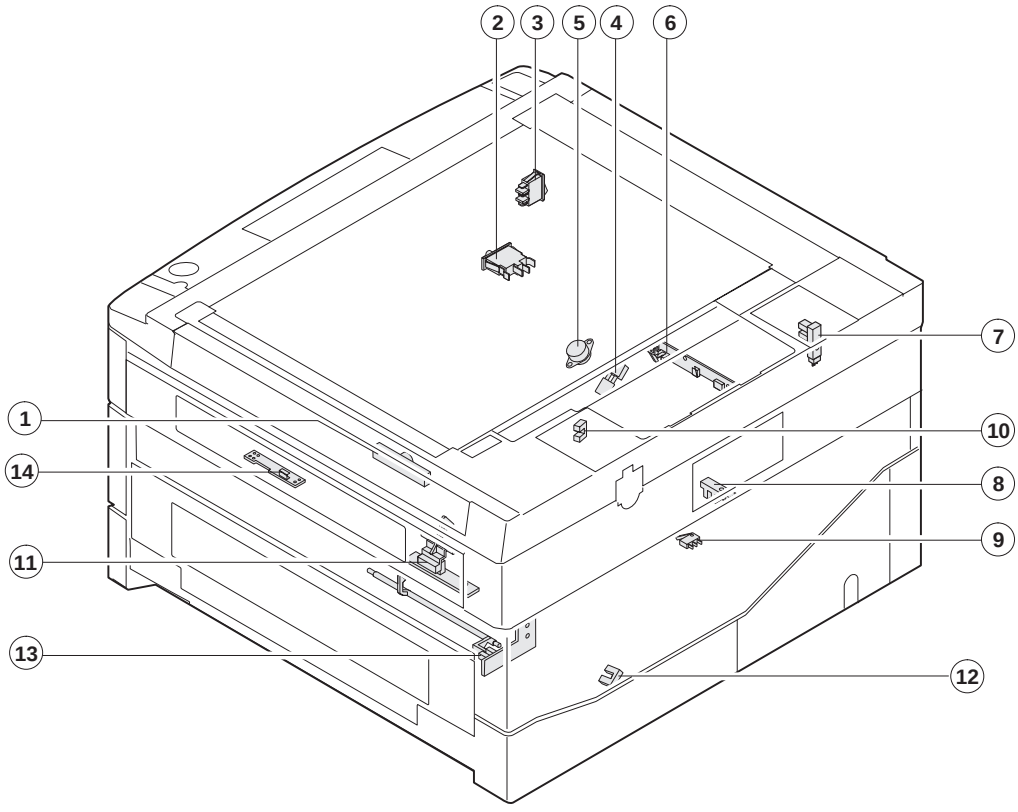

No.	Signal name	Name	Type	Operation, function
①	TCS	Toner density control sensor	Transmission sensor	HIGH when toner density falls.
②	ILSW	Front cabinet open/close switch	Interlock switch	ON when closed.
③	MSW	Power switch	Seesaw switch	
④	TH	Fusing heater thermistor	Thermistor	Greater resistance at low temperature
⑤	TS	Fusing heater thermostat	Thermostat	Contact open at abnormally high temperature
⑥	POD	Paper exit paper sensor	Transmission photo sensor	LOW when paper is present.
⑦	MHPS	Mirror home position sensor	Transmission photo sensor	HIGH when paper is sensed.
⑧	MMRE	Main motor encoder	Transmission photo sensor	Rotation pulse output
⑨	TFD	Waste toner full switch	Lead switch	HIGH when sensed.
⑩	LHPS	Lens home position sensor	Transmission photo sensor	LOW when reduction.
⑪	PPD	Paper transport sensor	Transmission photo sensor	LOW when paper is present.
⑫	PED1	Body upper tray paper presence detection	Transmission photo sensor	HIGH when paper is present.
⑬	DPPD1	Body upper tray paper transport sensor	Transmission photo sensor	LOW when paper is present.
⑭	PID	Single manual feed paper entry sensor	Transmission photo sensor	HIGH when paper is present.

6. Rollers, mirrors, etc.

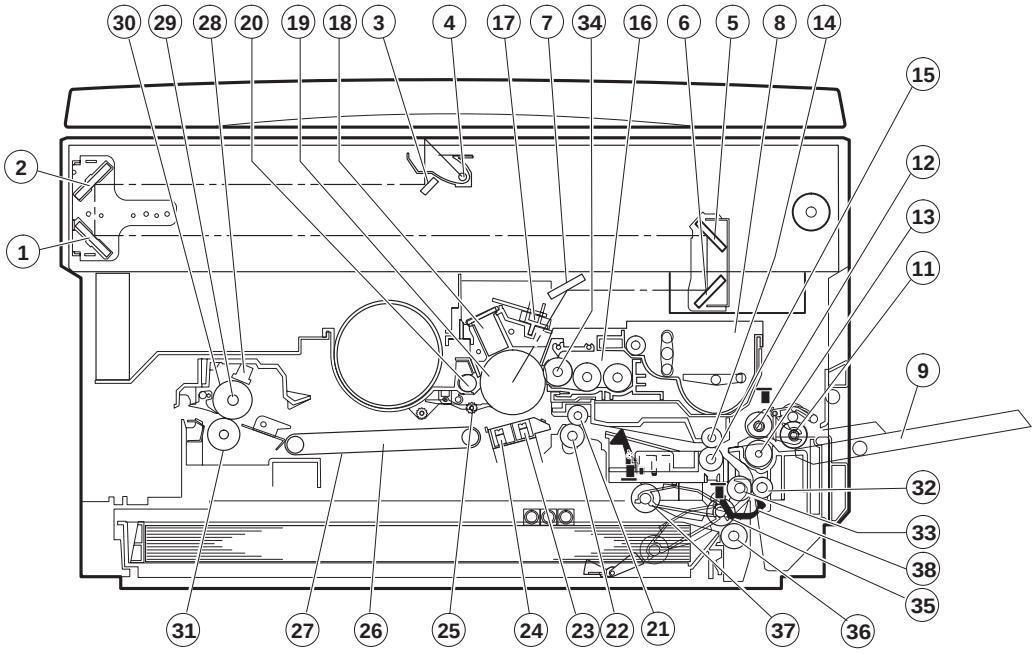

No.	Name	No.	Name	No.	Name
①	No. 3 mirror	②	No. 2 mirror	③	No. 1 mirror
④	Copy lamp	⑤	No. 4 mirror	⑥	No. 5 mirror
⑦	No. 6 mirror	⑧	Developing unit toner box	⑨	Manual tray
⑩	—	⑪	Take-up roller	⑫	Paper feed roller
⑬	Reverse roller	⑭	PS front roller follower roll	⑮	PS front roller
⑯	Developing unit	⑰	Blank lamp	⑱	Main charger unit
⑲	Photoconductor drum	⑳	Cleaner unit	㉑	Resist roller follower roll
㉒	Resist roller	㉓	Transfer charger	㉔	Separation charger
㉕	Drum separation pawl	㉖	Suction unit	㉗	Suction belt
㉘	Fusing thermistor	㉙	Heater lamp	㉚	Upper heat roller
㉛	Lower heat roller	㉜	Transport roller (upper) follower roller	㉝	Transport roller (upper)
㉞	Developing magnet roller	㉟	Tray paper feed roller	㊱	Tray paper feed reverse roller
㊲	Tray paper feed take-up roller	㊳	PE actuator		

[4] UNPACKING AND INSTALLATION

1. Unpacking

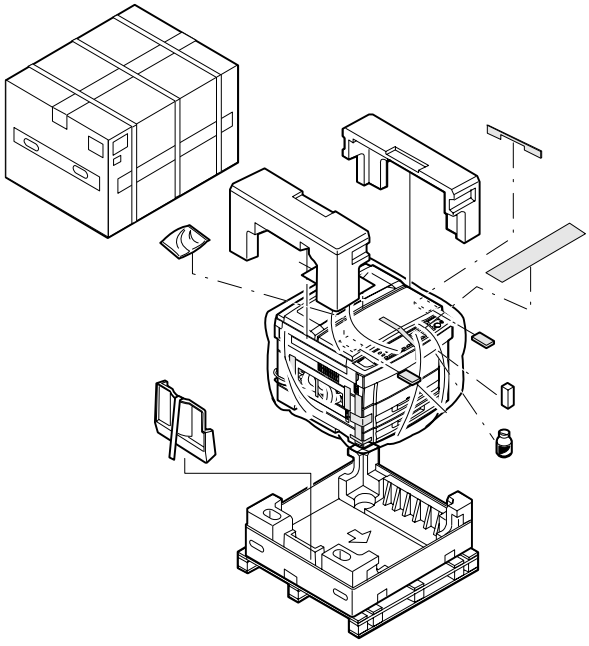

Packing material/accessory list

	Name	Q'ty
1	Paper exit tray	1
2	Instruction manual	1
3	Maintenance card	1
4	Dust cover	1
5	Service contract	1
6	Installation manual	1
7	Magnification ratio select label	1

2. Installation

Installing conditions

The surrounding conditions of the machine affect the machine performance greatly. Use great care for the following items.

(1) Environment

① Avoid direct sunlight, and avoid installation near the window. (Curtains or blinds must be shut completely.)

If not, the plastic parts and the original cover may be deformed. Even if the window is of frosted glass, there is no difference.

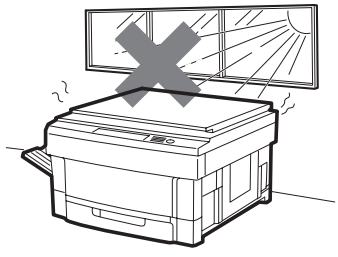

② Avoid high temperature and high humidity, and avoid sudden temperature change. (Avoid installation near a cooler or a heater.) If not, paper absorbs moisture and dew forms in the machine, causing paper jam or degraded image quality.

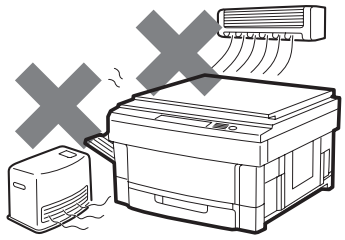

(Standard condition): The best condition to use the machine.
20 ~ 25℃: 65±5%RH
(Temperature and humidity): 15 ~ 30℃
20% ~ 85% RH
35°C for 65%

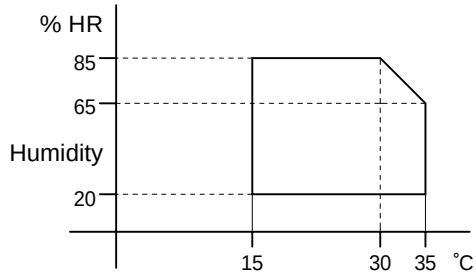

③ Avoid dust and vibrations.
If dust enters the machine, malfunctions may occur.

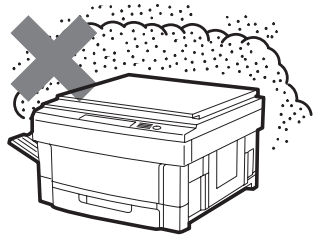

④ Avoid installation on an unstable surface.
Keep the machine in level state to maintain the performance.

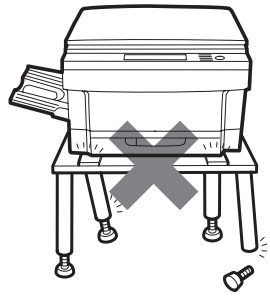

⑤ Avoid installation to a poorly ventilated place.

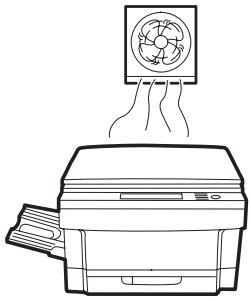

⑥ Avoid installation to a place where there are flammable materials or ammonia gas, etc. If the machine is installed near a diazo copier, the picture quality may be degraded and malfunctions may occur.

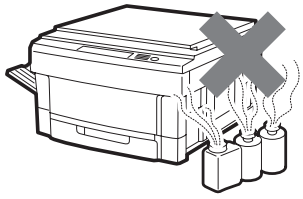

⑦ Install near a power outlet.

(2) Space around the machine

Install the machine with its rear side about 10cm (6 inches) apart from the wall in order to allow space to ventilation by the cooling fan.

Also allow enough space around the machine for proper operation.

(3) Installation base

Set the machine in horizontal position in the following procedure.

Be sure to use a leveling instrument (UKOGM0054CSZZ) to install the machine on a flat, horizontal place.

(Note) If the machine is not in horizontal position, the toner density control function may not work normally, resulting in degraded picture quality.

(4) Power source

① Use the power source of the rated capacity.

② Avoid complicated wiring. If not, the breaker or the fuse may be overloaded.

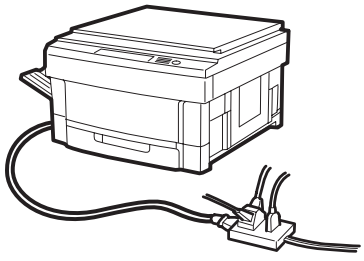

(5) Grounding wire connection

① Connect the grounding wire to prevent against a danger.

② When connecting the grounding wire, connect only to the grounding object (the grounding terminal of the power outlet, etc.) and never connect to a gas pipe.

3. Optical system lock release

A. No. 2/3 mirror unit lock release

Remove the one fixing screw of the No. 2/3 mirror unit on the left side of the copier.

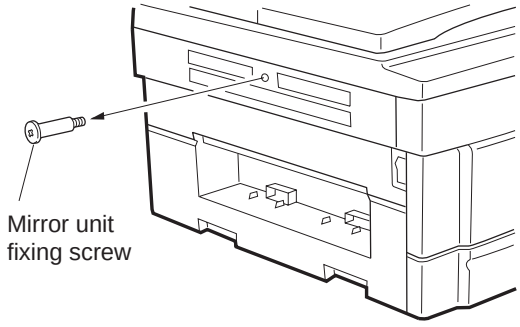

B. Lens and No. 4/5 mirror unit lock release

Remove two fixing screws of the No. 4/5 mirror unit on the right inside of the copier.
Open the front cabinet and remove one fixing screw of the lens on the lower side of the operation panel.

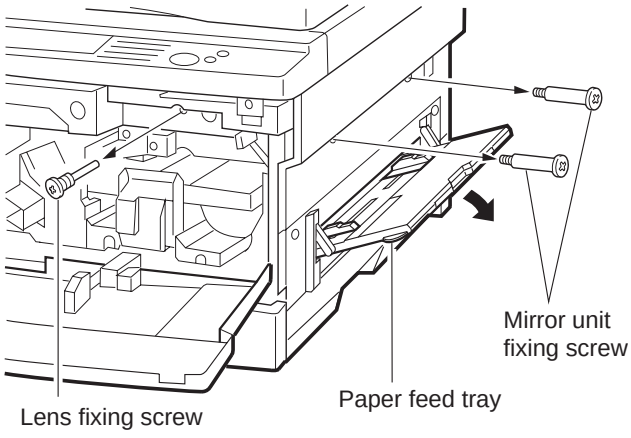

4. Charger cleaning

A. Main charger unit electrode cleaning

① Press the hook section of the main charger unit to release lock, and pull out and remove the main charger unit from the copier.

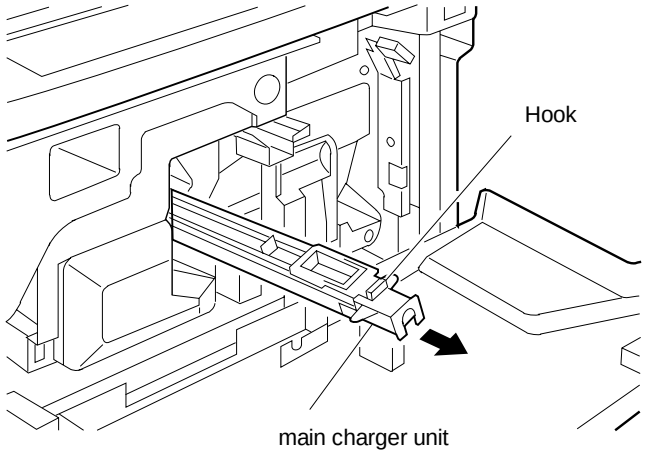

② Remove one fixing screw of the main charger unit (on the back side).

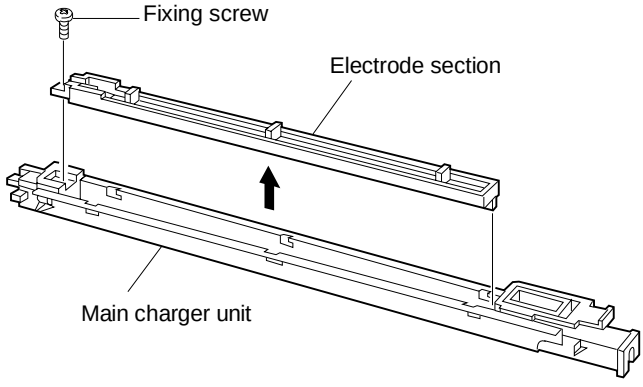

③ Press the electrode cleaner onto the tips of the electrode so that the tips are inserted into the cleaner a few times to clean.

(Note)

- Do not move the cleaner back and forth with the electrode tips inserted into it.
- When cleaning, clean thoroughly at one time. Avoid partial cleaning.

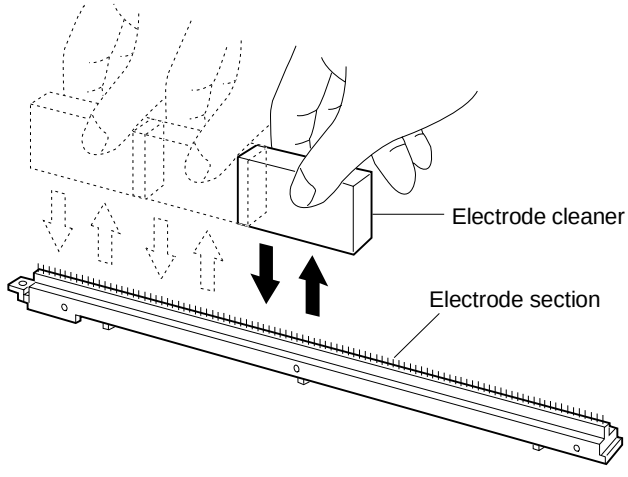

④ Return the electrode section to the original position and fix it with a screw.

⑤ Insert the main charger unit along the guide groove in the copier fully to the bottom.

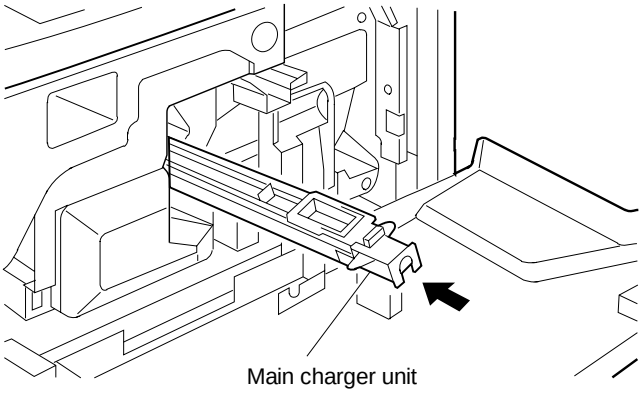

5. Developing unit setting

A. Developing unit setting

① Open the front cabinet, remove the installation toner fixed to the developing unit level with tape, and pull the developing unit lever toward you.

② Hold the grip of the developing unit, and slowly pull out the developing unit until it stops.

Then hold the hand carry strap and press the developing lever, and remove the developing unit.

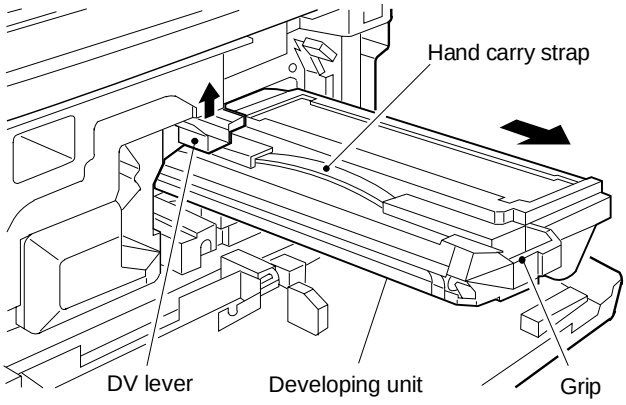

③ Remove three fixing screws of the toner hopper of the developing unit, and remove the toner hopper.

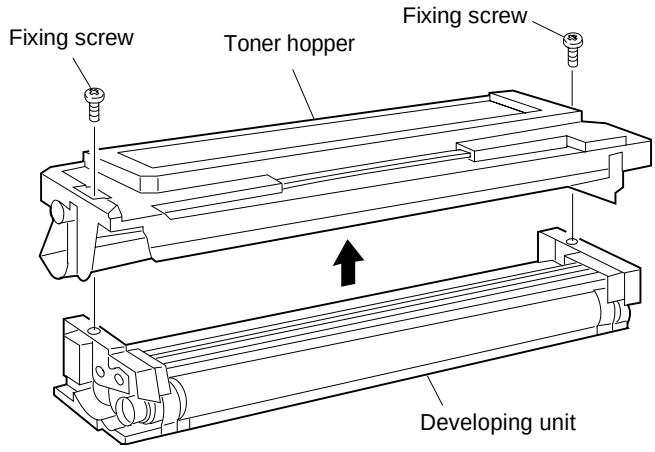

④ While supplying developer from the developer supply port of the developing unit, turn the MG gear clockwise with a screwdriver or a scale to supply fully in the developing unit.

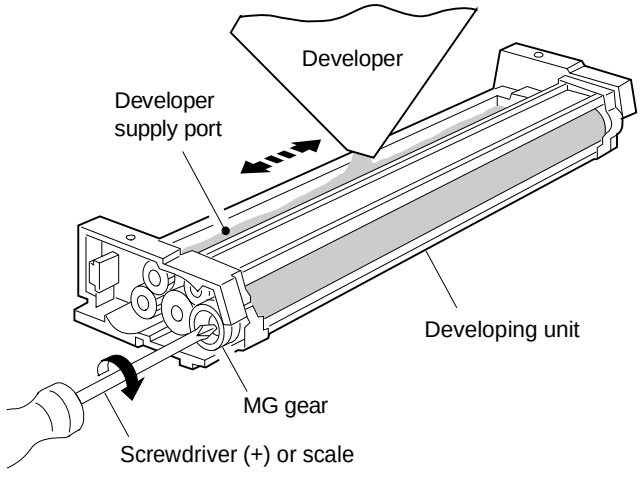

⑤ Install the toner hopper to the developing unit and fix it with two screws.

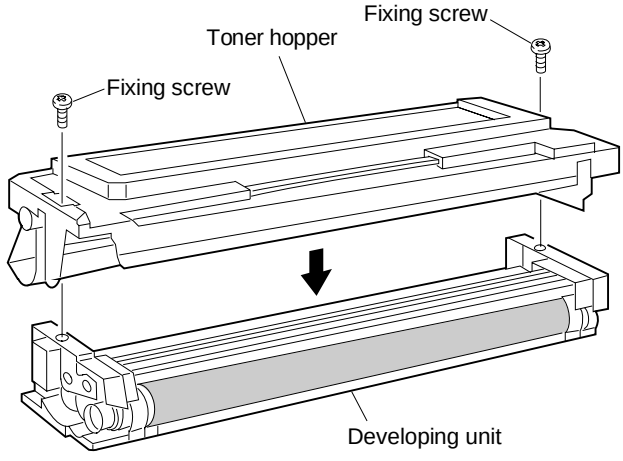

⑥ Hold the hand carry strap of the developing unit and insert it into the copier fully to the bottom.

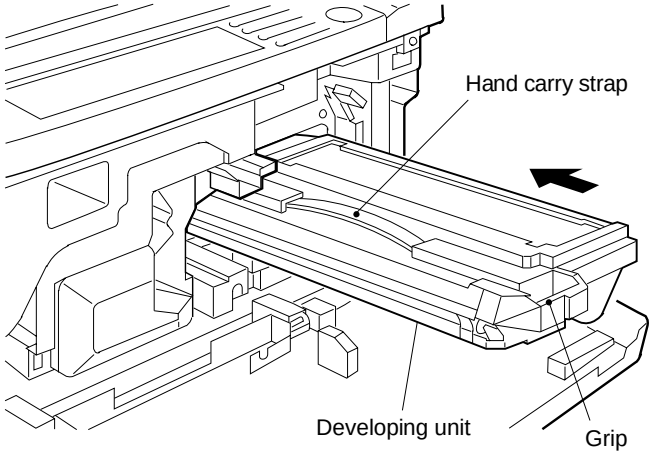

⑦ Close the developing unit lever and close the front cabinet.

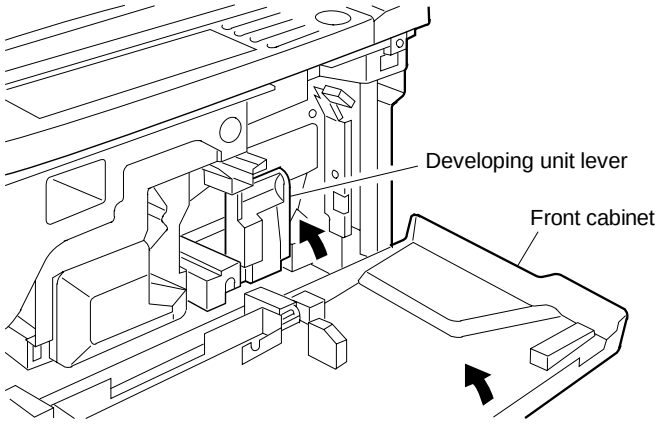

With the above procedure, setting of the developing unit is completed.

6. Toner density sensor level adjustment

Turn on the copier power switch.

A. Developing unit level adjustment

① Execute simulation 25.

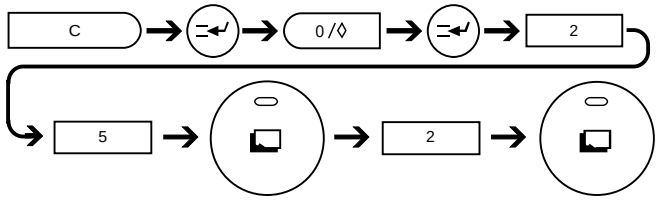

② After 3 minutes, simulation 25 is completed.

(Note) If the simulation is terminated halfway, automatic reading is not performed. Do not terminate it halfway.

③ Cancel simulation 25 with the CA key.

7. Accessory installation

A. Copier tray installation

Install the copy tray to the paper exit section on the left side of the copier.

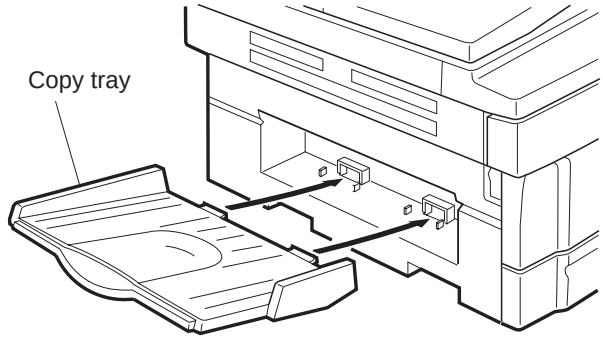

8. Toner supply

① Open the front cover.

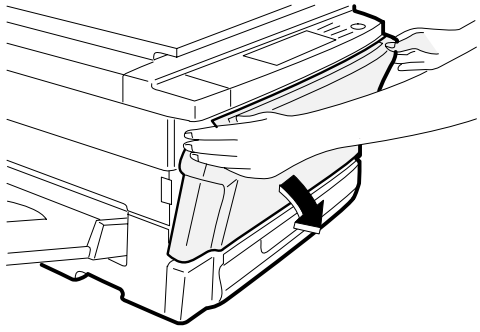

② Pull down the developer unit lock lever and pull the developer unit out slowly unit it stops.

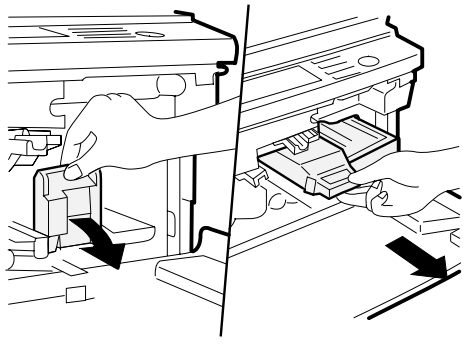

③ Hold the new toner bottle as shown and shake it four or five times.

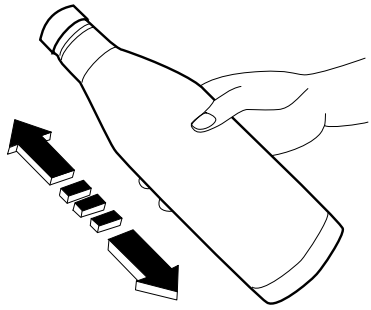

④ Open the toner hopper cover.

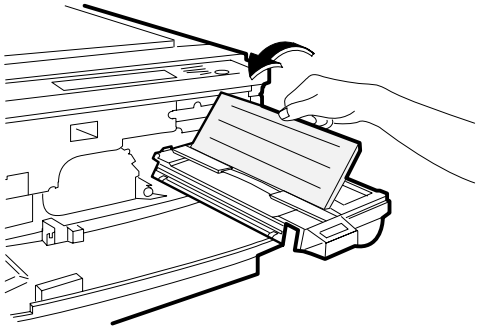

⑤ Pour the toner evenly into the toner hopper.

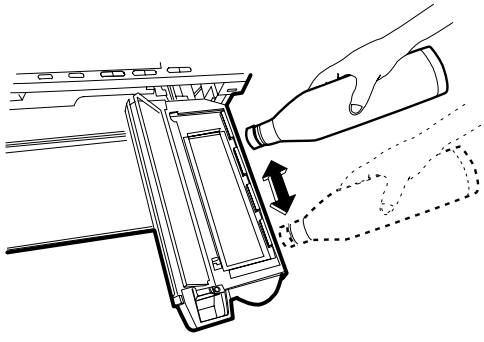

⑥ Close the toner hopper cover.

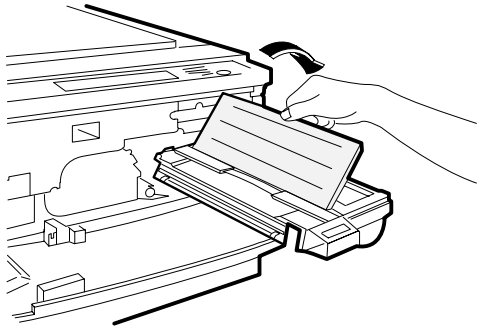

⑦ Slide the developer unit into the copier.

⑧ Return the developer unit lock lever into place.

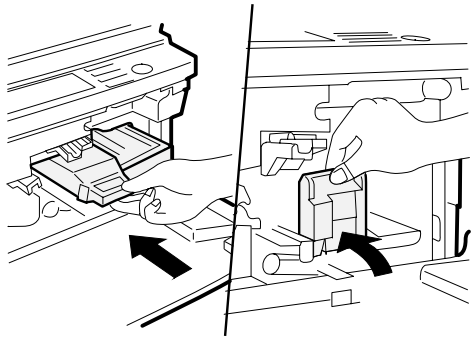

⑨ Close the front cover.

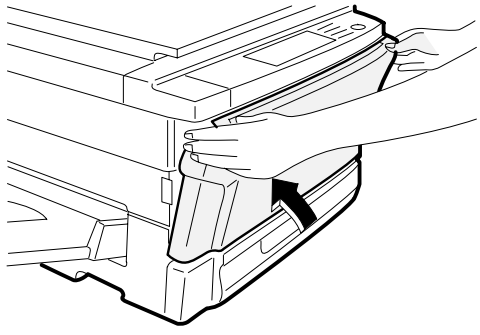

9. Center shift adjustment

There is basically no need to perform the center shift adjustment because it is made when shipping. If the center should be shifted, adjust in the following procedures.
Make a copy. If the center is shifted as shown in Fig. 1 or Fig. 2, loosen the four screws which are fixing the cassette grip cabinet.

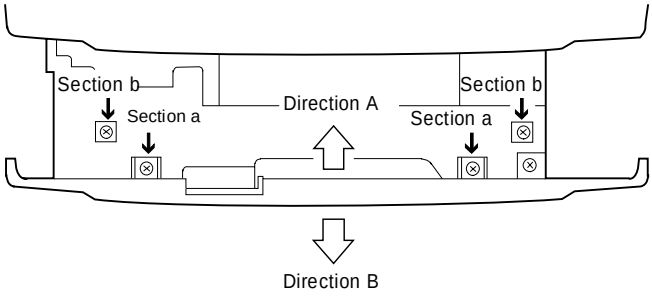

(Note) When fixing the cassette cabinet, the fixing screws and the cabinet clearance a and b are in symmetry.

[Reference figure]

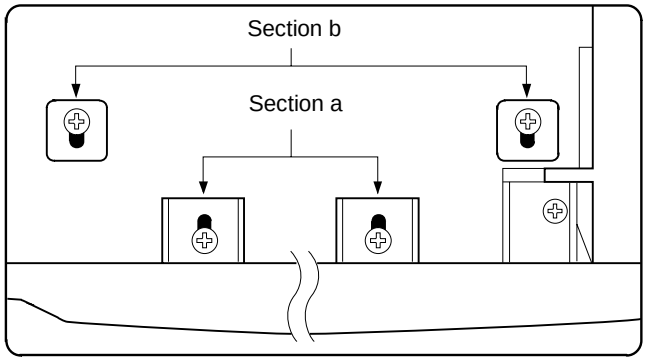

(1) Fig. 1

Move the cassette grip cabinet in direction A, tighten two fixing screws (a) and tow fixing screws (b) in this sequence. Make a copy again and check the center.

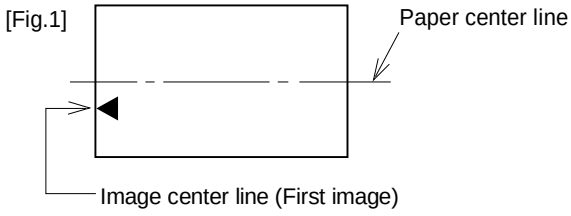

(2) Fig. 2

Move the cassette grip cabinet in direction B, tighten two fixing screws (a) and tow fixing screws (b) in this sequence. Make a copy again and check the center.

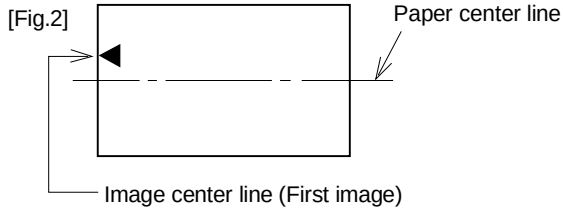

10. Label attachment

A. Label attachment

Attach the magnification ratio select label packed together with the Operation manual to the position shown in the figure below.

- When attaching the label to the copier with the original cover.

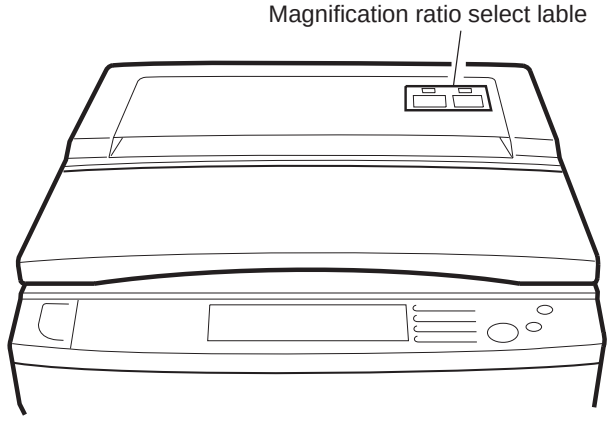

- When attaching the label to the optional automatic original feeder (SF-A18)

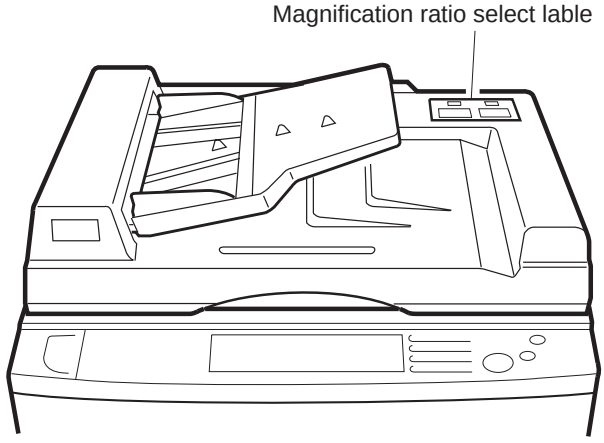

[5] DESCRIPTIONS OF EACH SECTION

Descriptions are made on the following sections:

① Paper feed section
② Developing section
③ Optical section
④ Process section
⑤ Separation/transport section
⑥ Fusing/paper exit section
⑦ High voltage section

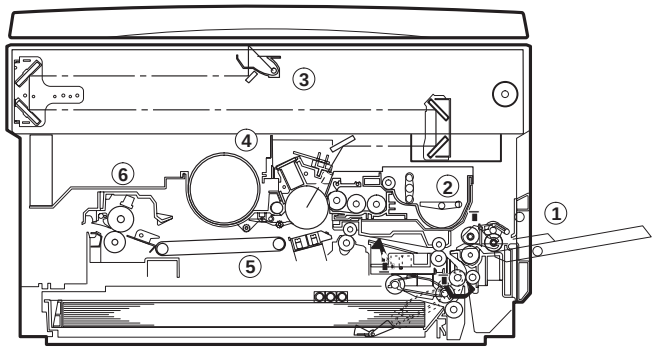

1. Paper feed section

1) General descriptions

To realize the compact design, the front loading system and the foldable multi paper feed unit (Option for some areas) are employed.

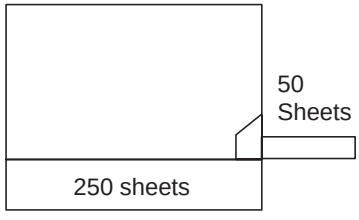

The paper feed tray is of the universal type and has capacity of 250 sheets. The front loading system allows the tray to be loaded from the lower side of the front cabinet.
Manual paper feed is made in the multi paper feed.

2) Basic operations

(Tray paper feed operation)

When the CPFC (Cassette paper feed clutch) turn on, the paper feed roller shaft, the paper feed roller, and the take-up roller rotate in the direction of A. At the same time, the limiter spring moves down the roller release arm. As a result, the take-up roller falls by its own weight onto the paper surface, starting paper feed.

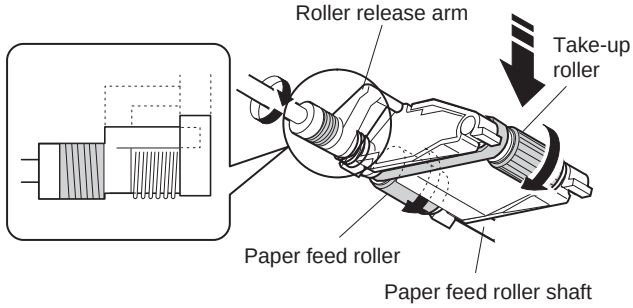

When the CPFC turns off, rotation stops and the take-up roller is pushed up to the original position by the roller release arm spring.

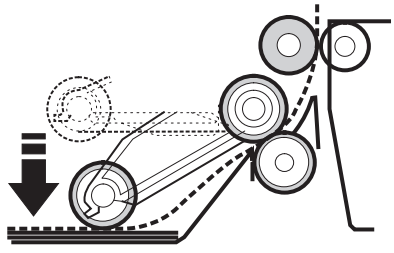

(Manual paper feed operation)

There is no special mechanism for manual paper feed other than the manual feed paper sensing actuator and the paper guide.
When the CPFC turns off, rotation stops and the take-up roller is pushed up to the original position.

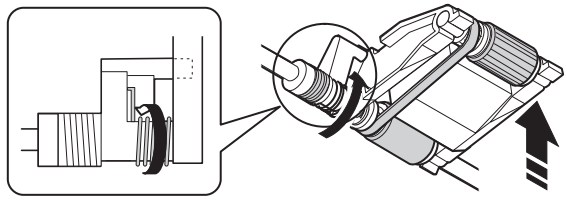

2. Developing section

1) General descriptions

(1) Two-component developer

The developer is composed of toner and carrier.
Carrier serves as a medium for attaching toner onto the electrostatic image on the photoconductor drum.
By stirring toner and carrier, they are rubbed to be charged positive (+) and negative (–) respectively.
Since developer will deteriorate to degrade copy quality, it should be replaced regularly.

(2) Two-component magnetic brush development

The rotatable non-magnetic sleeve is provided over the magnet roller and is rotated.
Carrier forms a magnetic brush on the sleeve surface by magnetic force to attach toner onto the electrostatic image on the photoconductor drum.

(3) Developing bias

When the photoconductor is charged and exposed to light (exposure), the surface potential (voltage) of the photoconductor will not be lost completely. (The residual potential remains.)
Toner is attracted to the photoconductor by this residual potential, dirtying the photoconductor. As a result, a dirty copy of white background is generated.
To prevent against this, a voltage of the same polarity and higher than the residual potential is applied to the MG roller, preventing toner from being attached to the photoconductor surface.

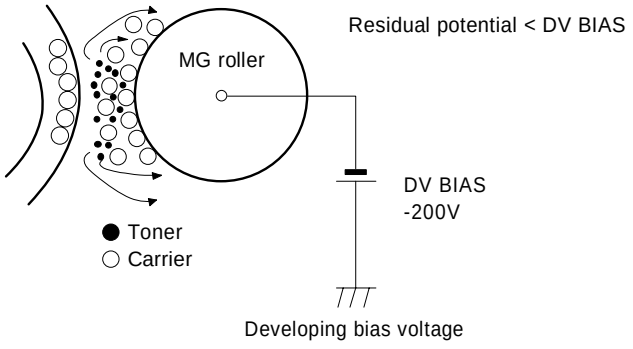

(4) DV harness

The toner density sensor, the developing bias, harness.
(For details, refer to [6] DISASSEMBLY AND ASSEMBLY.)

(Viewed from the rear of develoing unit)

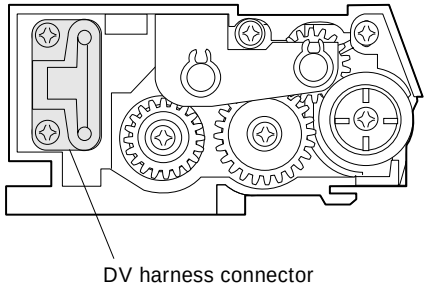

(Details of DV harness connector)

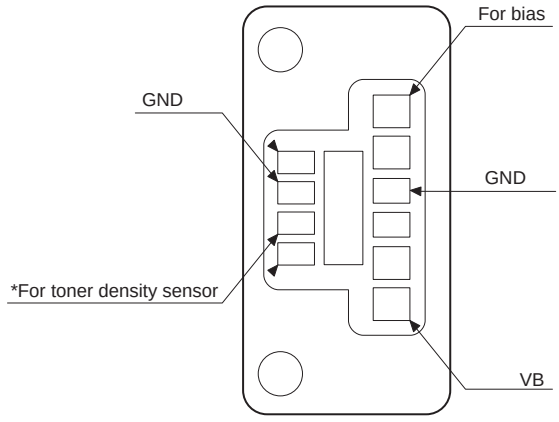

*Resistance value is identified by color

2) Basic composition

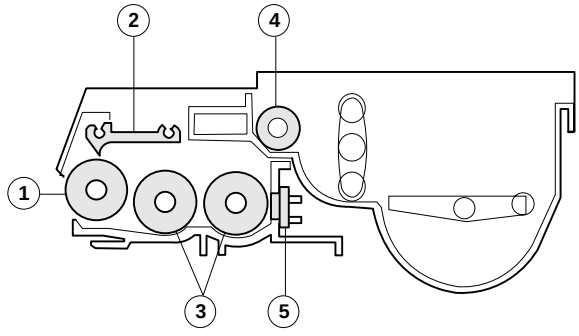

No.	Name	
①	Magnet roller	Forms a magnetic brush of carrier by magnetic force.
②	Developing doctor blade	Limits the height of the magnetic brush.
③	Developing MIX roller	Stirs carrier in the developing unit and distributes toner evenly.
④	Toner transport roller	Transport toner sent from the toner hopper unit to the stirring section.
⑤	Toner density sensor	Senses toner density in developer.

3) Basic operations

(Cassette paper feed)

When the CPFC (cassette paper feed clutch) is turned on, the paper feed roller shaft, the paper feed roller, and the take-up roller rotates in the direction of A, and the roller release arm is moved downward by the limiter spring. As a result, the take-up roller falls by its weight to reach the paper surface, feeding the paper. When the CPFC is turned off, the take-up roller is pushed up to the position by the roller release arm spring.

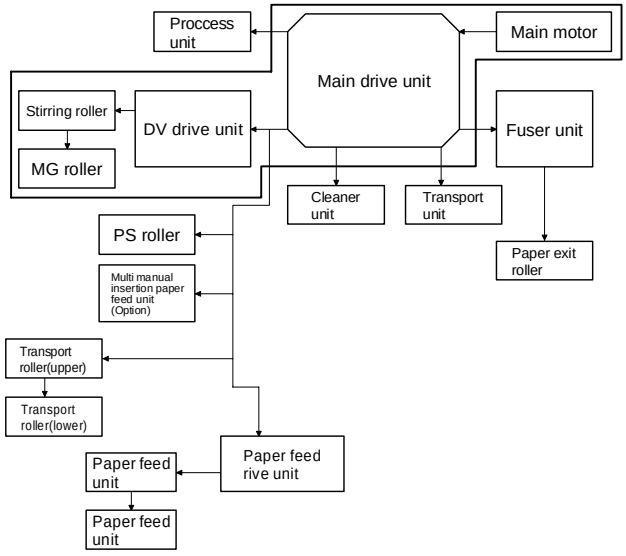

3. Optical section

1) General description

- The optical section of this model is composed of the fixed focus lens and six mirrors. Since the fixed focus lens is used, No. 4/5 mirror base is shifted according to the shift of the lens to change the distance between the original and the drum (OID, Original Image Distance) in reduction or enlargement copy.
  The lens and No. 4/5 mirror unit are shifted by driving the stepping motor with the signals from the main control PWB, allowing zooming of 151 steps in 1% increment in the range of 0.50 to 2.00.
- Exposure is adjusted by changing the copy lamp voltage. The AE sensor is provided in the zoom base to sense the density of the original.
  The copy lamp light is reflected by the original to the AE sensor, which senses the density of the original and adjust the copy lamp light quantity according to the density.
- The exposure system is the slit exposure system by moving light source.

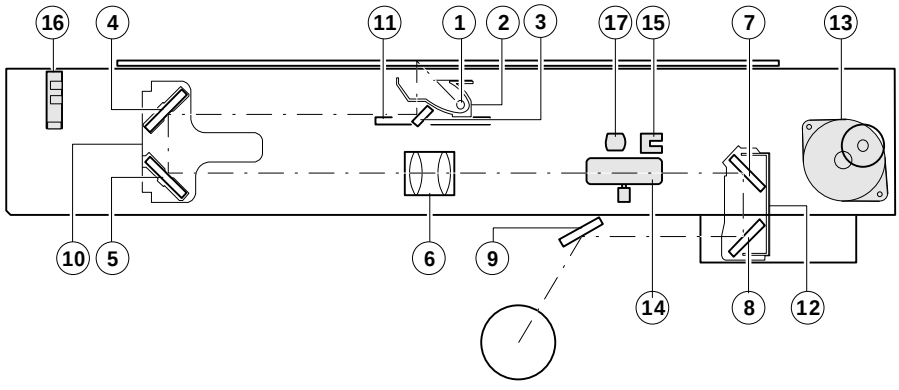

①	Copy lamp	②	Reflector	③	No. 1 mirror
④	No. 2 mirror	⑤	No. 3 mirror	⑥	Lens
⑦	No. 4 mirror	⑧	No. 5 mirror	⑨	No. 6 mirror
⑩	No. 2/3 mirror base unit	⑪	Copy lamp unit	⑫	No. 4/5 mirror base unit
⑬	Mirror motor	⑭	Lens/No. 4/5 mirror base drive motor	⑮	Lens home position sensor
⑯	Mirror home position sensor	⑰	Automatic exposure (AE) sensor/ Optical system dirt sensor		

(1) Original table

The original table is fixed. The original is set in the left center position.

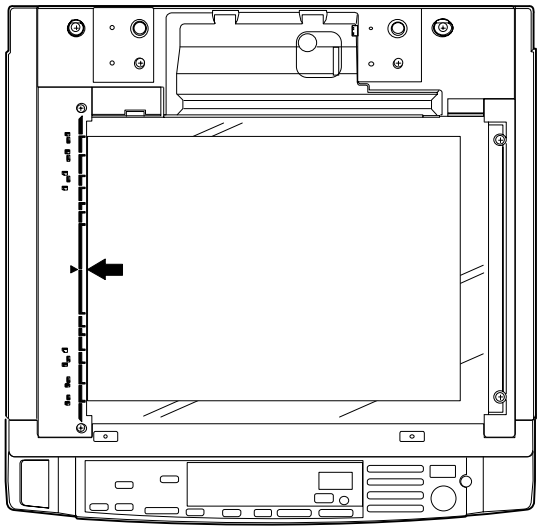

(2) Copy lamp

100V series: 85V, 275W
200V series: 170V, 310W

(3) Mirror

This model uses six mirrors.
No. 1 mirror is attached to the copy lamp unit, No. 2/3 mirrors are attached to No. 2/3 mirror base, No. 4/5 mirrors are attached to No. 4/5 mirror base.
The copy lamp unit and the No. 2/3 mirror base unit are scanned in copying. The No. 4/5 mirror base is shifted in zoom copying to change the distance between ten original and the drum.

(4) Lens (fixed focus lens)

- Construction (1 group 3 lenses)
- Brightness (F8.5)
- Focus: (195mm ±1%)

(5) Lens home position sensor (LHPS)

This sensor senses the lens home position. The output signal of this sensor is the basic signal to control the copy magnification ratio.

(6) Lens base

The lens is mounted to the lens base, which is shifted toward the paper feed direction in reduction copy or toward the paper exit direction in enlargement copy by the lens drive motor.

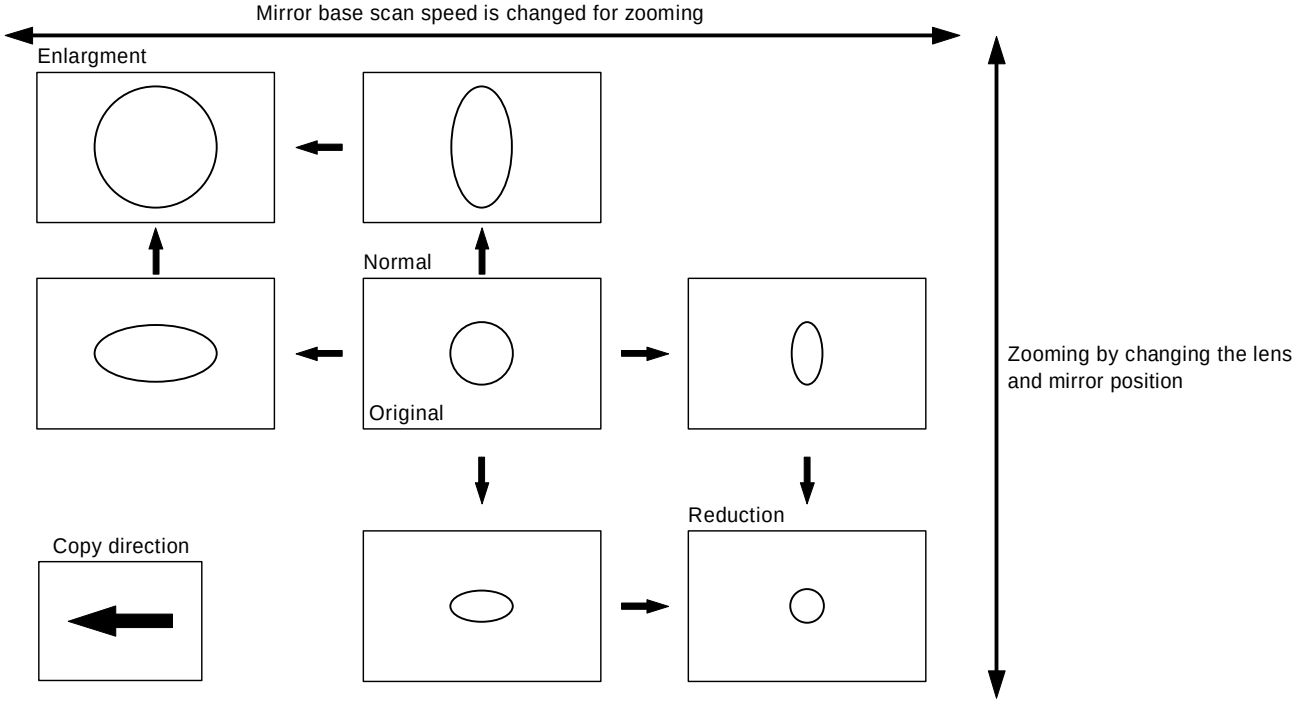

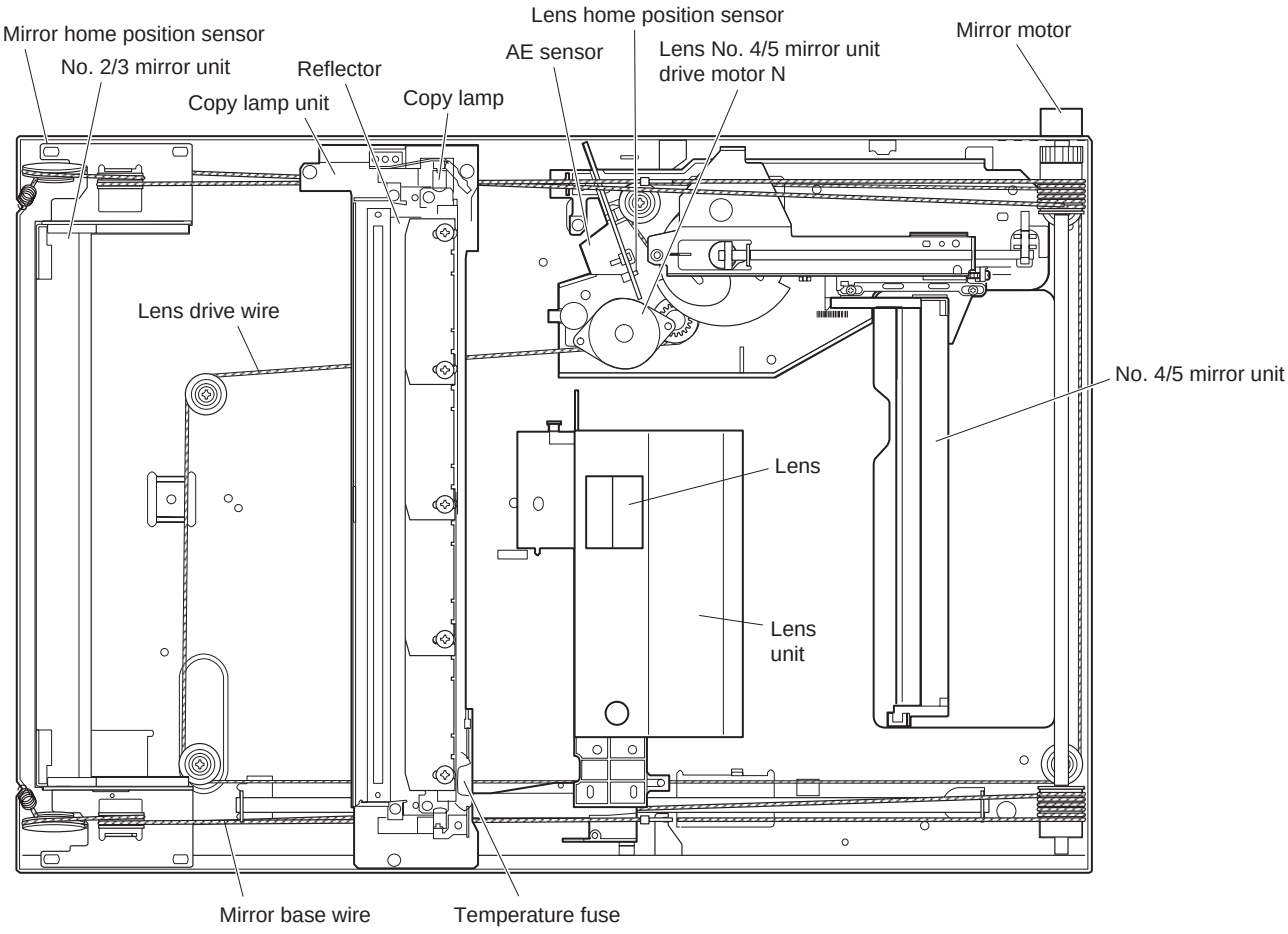

(7) Lens drive shaft

This shaft controls the optical axis of the lens in zoom copy. The lens follows along the slide base shaft.

(8) Lens drive wire

This is to shift the lens unit and the No. 4/5 mirror base.

(9) No. 4/5 mirror unit

No. 4/5 mirrors are attached to this unit. It is shifted by the lens drive motor to change the distance between the original and the drum according to the zooming ratio.

(10) Mirror motor

This stepping motor shifts the copy lamp unit and the No. 2/3 mirror base. It is rotated at the rpm according to each zooming ratio.

(11) Mirror home position sensor (MHPS)

This sensor senses the home position of the copy lamp unit. It is of light transmission type.

(12) No. 2/3 mirror unit

No. 2/3 mirrors are attached to this unit. It is scanned by the mirror motor.

(13) Copy lamp unit

This is composed of No. 1 mirror, the temperature fuse, the copy lamp, the exposure adjustment plate, and the reflector, and scanned by the mirror motor.

(14) Temperature fuse

This is attached closely to the reflector to prevent against abnormal temperature rise in the optical system. If the temperature rises abnormally, it turns off the copy lamp power directly.
100V series (117°C)
200V series (117°C)

(15) Reflector

Light from the copy lamp is reflected by the reflector to the original.

(16) Exposure adjustment plate

Four exposure adjustment plates are attached to the copy lamp unit to adjust exposure balance in back and forth direction of the frame.

(17) Mirror base drive wire

This wire transmits the mirror motor power to the copy lamp unit and the No. 2/3 mirror base to scan the mirror base.

(18) Lens drive motor

This stepping motor drives the lens and the No. 4/5 mirror base.

(19) AE sensor

This AE sensor senses the original density by the light emitted from the copy lamp and reflected by the original, controlling the developing bias. The photometric area is about 100m width at the center and in the mirror base scanning direction.
The element is photo diodes.

2) Basic operations

(Positions of the original, the lens, and the image in each magnification ratio)

Normal: The distance between the original set on the table glass and the lens is equal to the distance between the lens and the drum, resulting in the equal size of the original and the image.

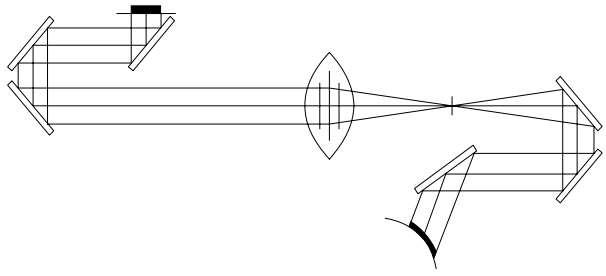

Enlargement: Compared to the normal copy, the lens is nearer to the original and the distance between the original and the lens is shorter.
The distance between the No. 4/5 mirror unit and the lens is greater, and the distance between the lens and the drum is also greater.
The distance between the original and the exposure surface of the drum is greater than that in the normal copy.

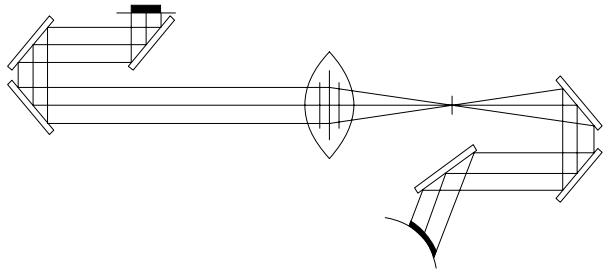

Reduction: Compared to the normal copy, the lens is nearer to the drum, and the distance between the original surface and the lens is longer.
The distance between the lens and the exposure surface of the drum is shorter.
The distance between the No. 4/5 mirror unit and the lens is greater.
The distance between the original and the exposure surface of the drum is greater than that in the normal copy.

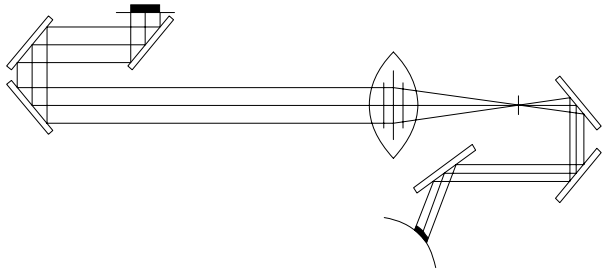

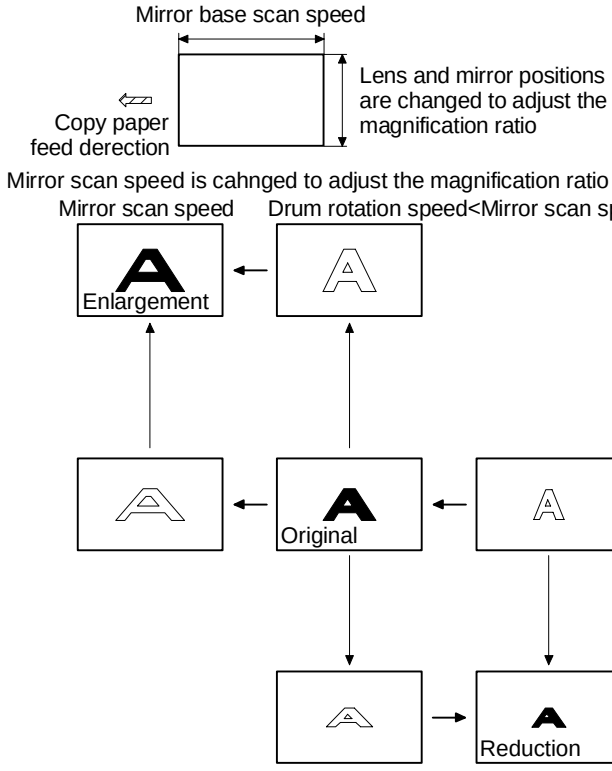

(Copy lamp control in each copy density)

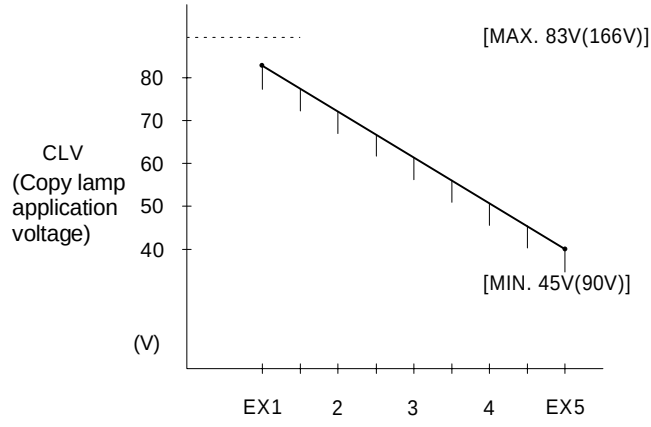

Execute Sim 46-01 to determine the copy lamp application voltage (CLV) in EX1 and EX5.
Then divide the difference between the voltages of EX1.0 and EX5.0 into nine.
The application voltage of the copy lamp in each exposure level is determined by varying the ON timer duty of the copy lamp ON control signal.

- Photo density copy mode
  Make the same control procedures as the manual density copy mode.
  The image density is controlled by lowering the grid bias voltage of the charging charger. To maintain the reproduction quality in half tone, the ON time duty of the copy lamp ON signal is made shorter than in the manual density copy mode. (The application voltage is lower.)

(Optical system dirt correction)

This model perform dirt correction by changing the copy lamp intensity according to the dirt degree in the optical system (the copy lamp unit, No. 1 mirror, No.2 mirror, No.3 mirror) to prevent against remarkable degrading of copy quality.

The reference value is the AE sensor output value which is obtained when the reference plate is exposed with the copy lamp voltage of 67.0V (134.0V) at power ON.

This value is checked with sim 44-08, 09.

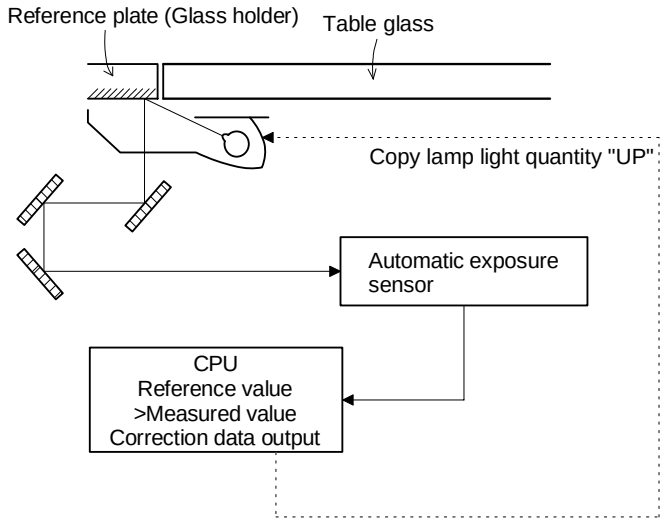

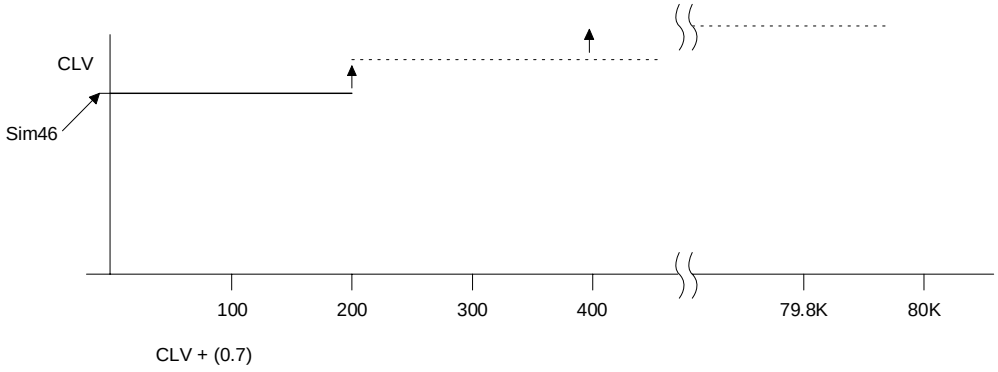

(1) Setting the reference value for optical system correction.

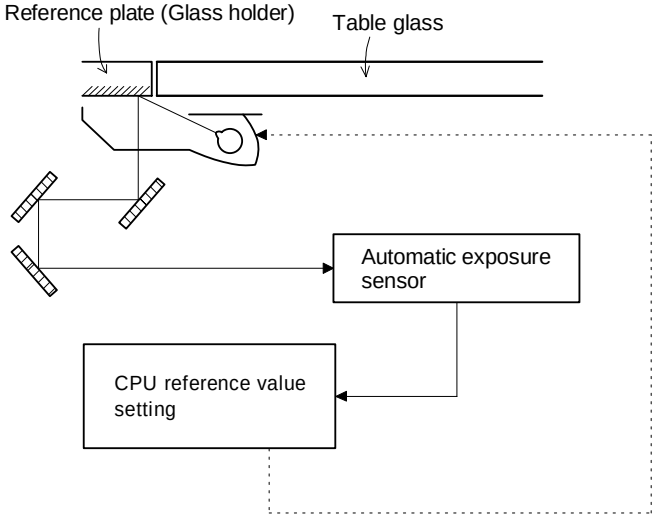

① Clean the optical system at every maintenance.

② Perform Simulation 46-1.
(The previous data are cleared.)

③ After completion of Simulation 46-1, when performing the first mirror initialization, measure light quantity of the copy lamp.
Obtain the average value from the four measurement values and use the average value as the reference value for correction.

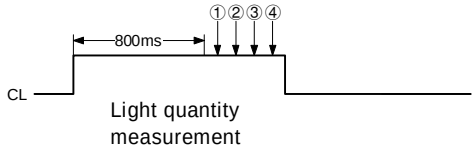

Obtain the average value of four AE sensor values, and store it.

(2) Dirt correction

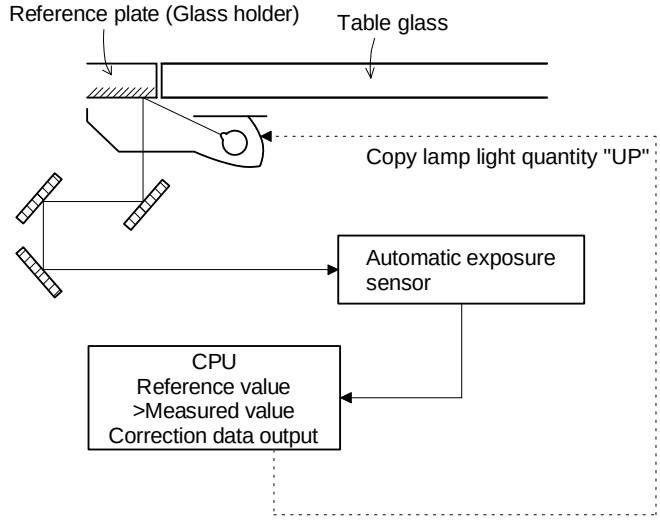

① Measure light quantity when performing mirror initialization.

② Store the correction data into memory.

③ Reset the register inside the CPU.

4. Copy process

This model basic process and structure

- The Scorotron method is used to evenly charge the photoconductor surface to the given potential in the charge process. The corona wire regularly used is now replaced with a new corona charge mechanism that employs the 0.1mm thick stainless steel saw teeth plate, in order to suppress ozone generated when the oxide molecule in air is ionized.
- Considering the service efficiency, the process separation mechanism is adopted.
- To prevent high voltage leakage by the loose corona charge unit, a one-touch stopper mechanism is adopted.

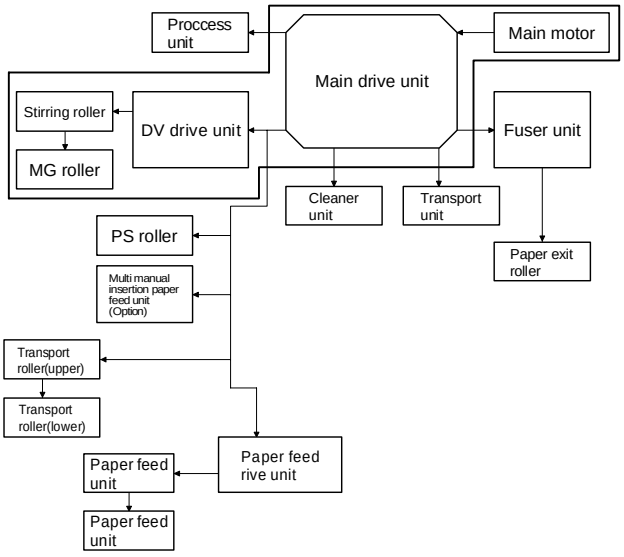

1) Photoconductor

- This model uses OPC (organic photoconductor) as photoconductive material. (ϕ50 mm)

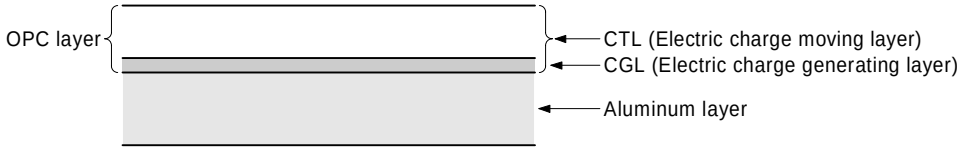

2) Process diagram

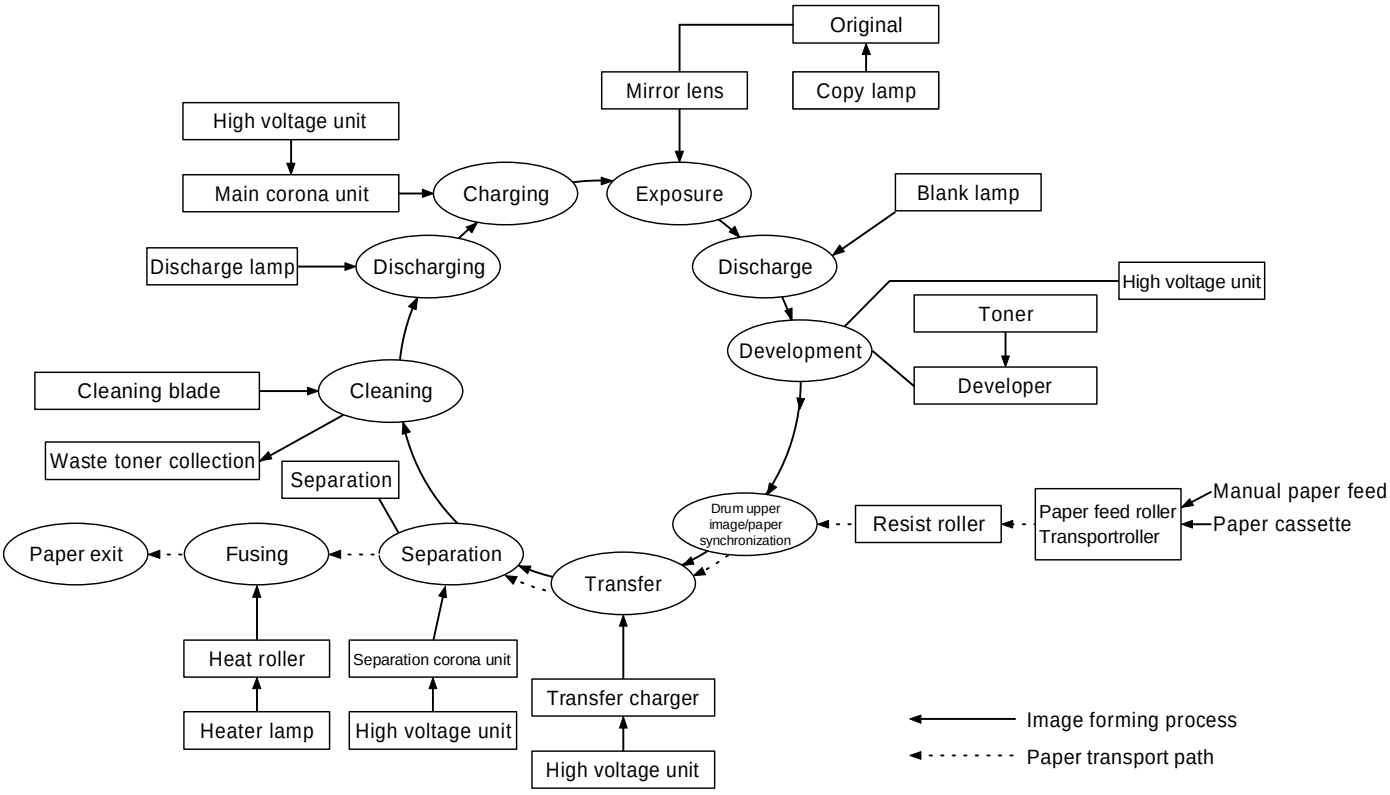

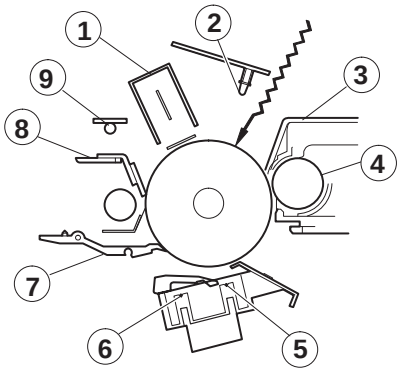

① Main corona unit
② Blank lamp
③ Developer unit
④ MG roller
⑤ Transfer corona unit
⑥ Separation corona unit
⑦ Separation pawl
⑧ Cleaning blade
⑨ Discharge lamp

3) Details of image forming process

Step 1 (Main Charging)

By negative discharging of the main charger, uniform negative charges are applied to the OPC drum surface.
The OPC drum surface potential is controlled by the screen grid voltage to maintain the grid voltage at a constant level.

- When the drum surface potential is lower than the grid voltage, electric charges generated by discharging of the charger go through the screen grid to charge the drum surface potential until it becomes equal to the grid voltage.
- When the drum surface potential virtually reaches the grid potential level, electric charges generated by discharging of the charger flows through the electrode of the screen grid to the high voltage unit grid voltage output circuit, thus always maintaining the drum surface potential at a level virtually equal to the grid voltage.
- The main corona unit employs the scorotron system to charge the photoconductor surface to a certain level uniformly.
  In addition, the conventional corona wire is replaced with the corona charging mechanism by saw-teeth plate (stainless steel plate of 0.1 mm thick). In corona discharge, oxygen molecules in the air are ionized to generate ozone (O_3). The mechanism restrict the generation of ozone.

① Main corona unit
② Blank lamp
③ Developer unit
④ MG roller
⑤ Transfer corona unit
⑥ Separation corona unit
⑦ Separation pawl
⑧ Cleaning blade
⑨ Discharge lamp

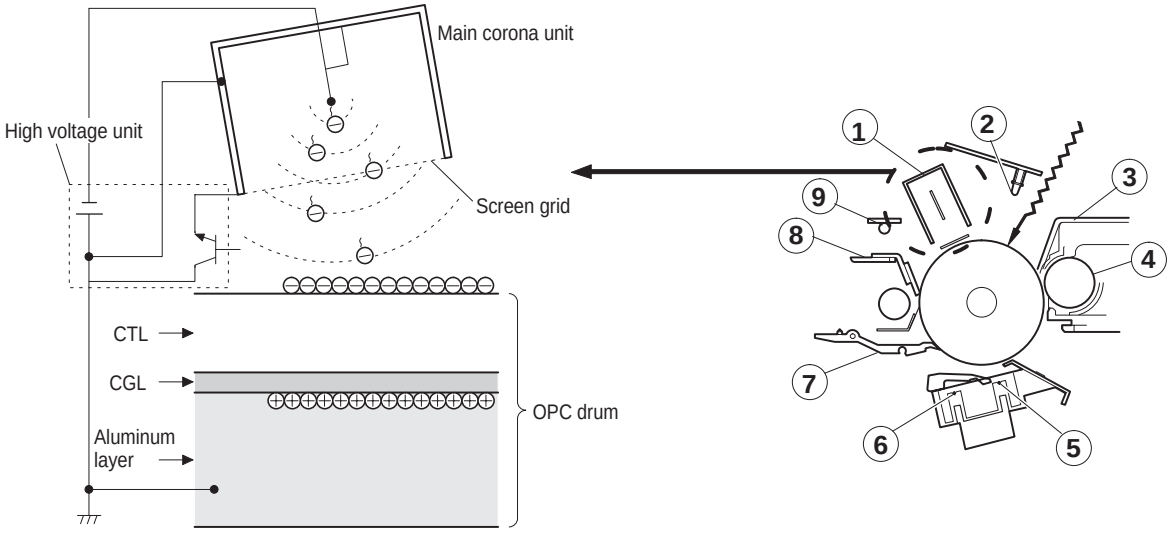

Step 2 (Exposure)

Light from the copy lamp is radiated on the document, and the optical image of the document is reflected by the mirrors and projected through the lens to the OPC drum.
The lighter portion of the document reflects more light (high intensity) to the OPC drum, and the darker portion of the document reflect less light (low intensity) to the OPC drum. Positive or negative charges are generated in the CGL of the OPC drum where lights are radiated.
Negative charges generated in the CGL move towards the positive charges in the aluminum layer generated in step 3. While the positive charges in the CGL move towards the negative charges on the CPU drum surface generated in step 3. Therefore, positive charges and negative charges are neutralized in the aluminum layer and the OPC drum surface at the light radiating position, decreasing the OPC drum surface potential. The CGL electric charge generating amount increases in proportion to the document density, that is, reflected light intensity (the OPC drum surface intensity). Therefore, electric charges are generated less in the CGL layer corresponding to the lighter density of document (higher intensity of the OPC drum surface), and a greater quantity of the negative charges on the OPC drum surface is neutralized, decreasing the OPC drum surface potential more.

On the contrary, electric charges are generated more in the CGL layer corresponding to the darker density of document (lower intensity of the OPC drum surface), and less quantity of the negative charges on the CPU drum surface is neutralized, decreasing the OPC drum surface less. Therefore, the OPC drum surface potential corresponding to the lighter portion of the document is lower, and that corresponding to the darker portion of the document is higher. Latent static-electricity images are formed in the above manner.

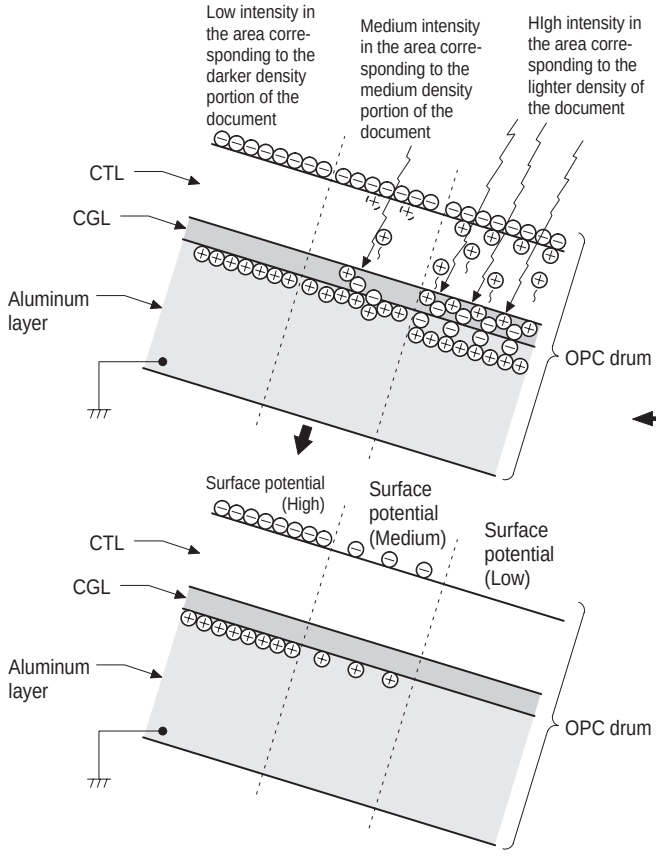

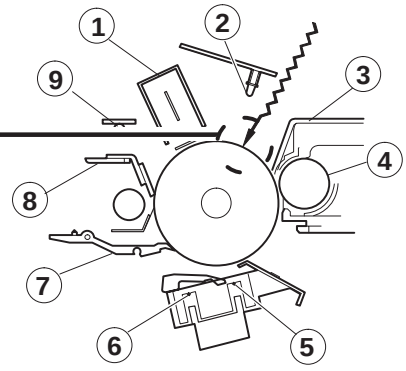

① Main corona unit
② Blank lamp
③ Developer unit
④ MG roller
⑤ Transfer corona unit
⑥ Separation corona unit
⑦ Separation pawl
⑧ Cleaning blade
⑨ Discharge lamp

Step 3 (Development)

Toner is attached to the latent static-electricity images on the drum surface to change them to visible images. The two-component magnetic brush development system charges toner positively by friction with carriers, and toner is attached to negative charges on the drum surface. The potential in the darker document projecting area (low intensity) is high (much negative charges) and attracts more toner. The potential in the lighter document projecting portion (high intensity) is low (less negative charges), and attracts less toner.

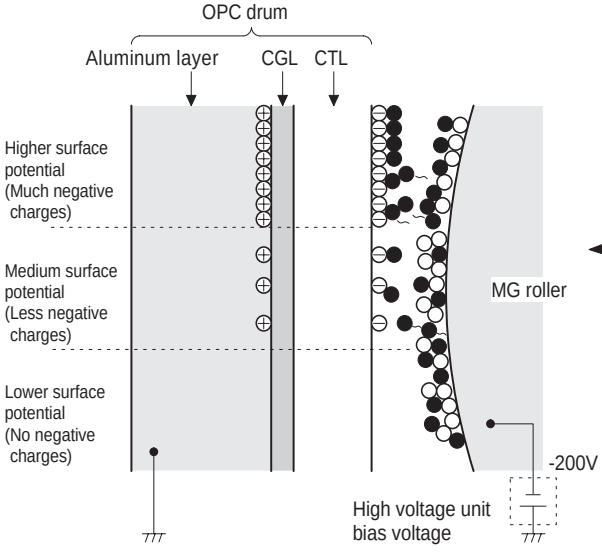

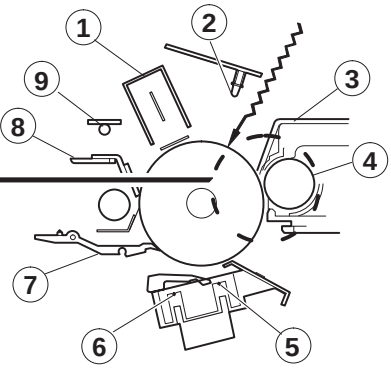

At that time, a bias of –200V is applied to the MG roller (magnet roller), which is provided for preventing toner from being attracted by the residual voltage (about –80V to –100V) in the lighter portion after exposure.

Step 4 (Transfer)

The transfer paper is charged higher than the OPC drum surface potential by strong negative discharge of the transfer charger, making the binding force between the transfer paper and toner stronger than that between the drum and toner, attracting toner to the transfer paper.

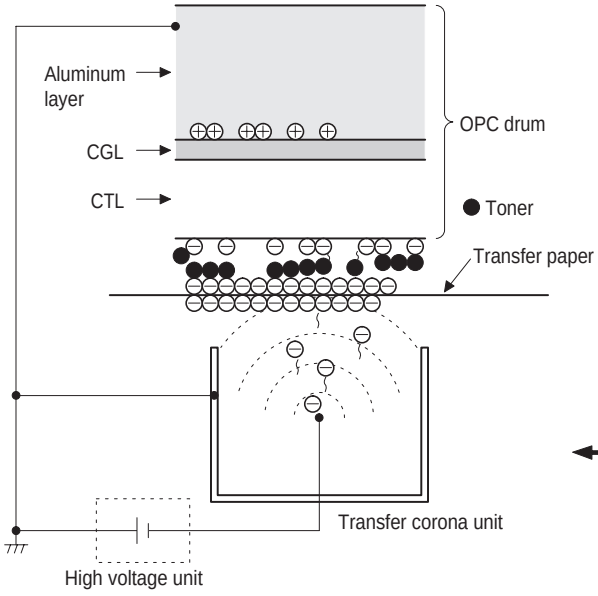

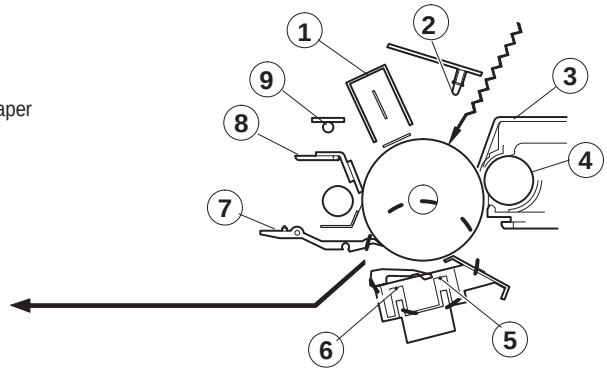

Step 5 (Separation)

After transfer, the copy paper and the drum are negatively charged. Since, however, the negative potential of the copy paper is higher than that of the drum, a attraction force is applied between the drum and the copy paper. To avoid this, AC corona is applied to the copy paper by the separation charger to decrease the copy paper potential to the same level as the drum surface potential. The attraction between the copy paper and the drum is weakened by this, allowing separation of the copy paper by its own extending force. If the copy paper is not separated by the separation charger, it is separated by the separation pawl mechanically.

① Main corona unit
② Blank lamp
③ Developer unit
④ MG roller
⑤ Transfer corona unit
⑥ Separation corona unit
⑦ Separation pawl
⑧ Cleaning blade
⑨ Discharge lamp

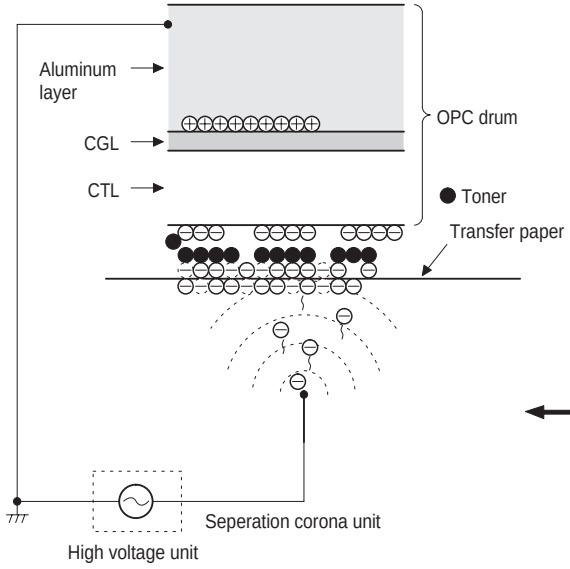

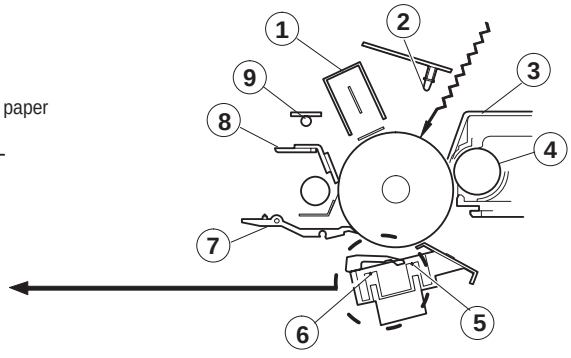

Step 6 (Cleaning)

Residual toner on the drum is removed by the cleaning blade. The removed toner is sent to the waste toner container by the waste toner transport screw.

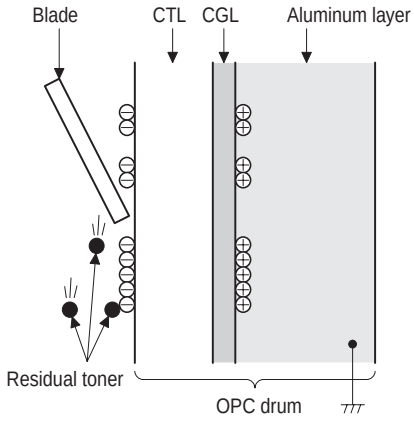

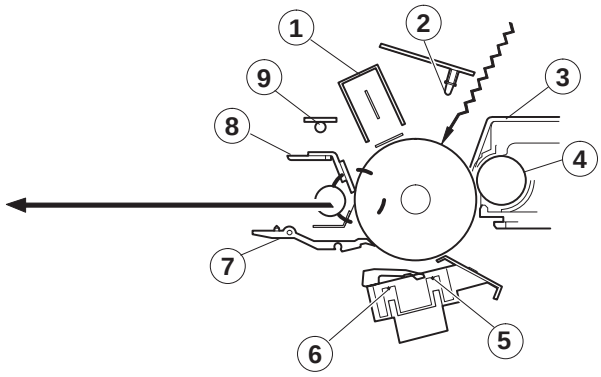

Step 7 (Discharging)

When the OPC drum is exposed to the discharge lamp light, positive and negative charges are generated in the OPC drum CGL. The negative charges generated in the CGL move towards the residual positive charges in the aluminum layer, while the positive charges in the CGL move towards the residual negative charges on the OPC drum surface. Therefore, the positive and the negative charges are neutralized in the aluminum layer and on the OPC drum surface, removing the residual charges on the OPC drum surface. As a result, the OPC drum surface potential becomes 20V ~ 30V.

① Main corona unit
② Blank lamp
③ Developer unit
④ MG roller
⑤ Transfer corona unit
⑥ Separation corona unit
⑦ Separation pawl
⑧ Cleaning blade
⑨ Discharge lamp

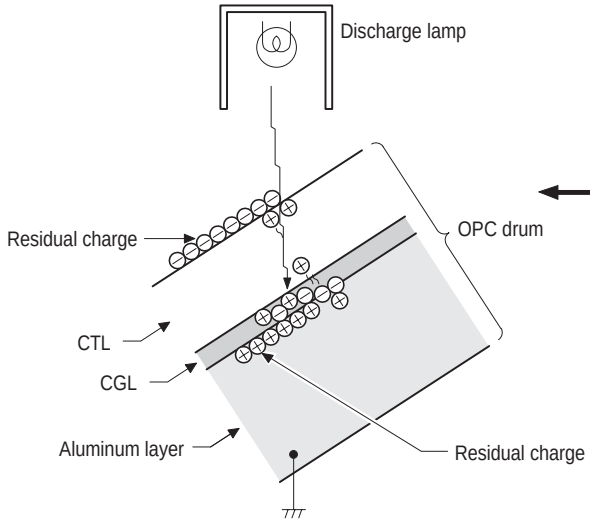

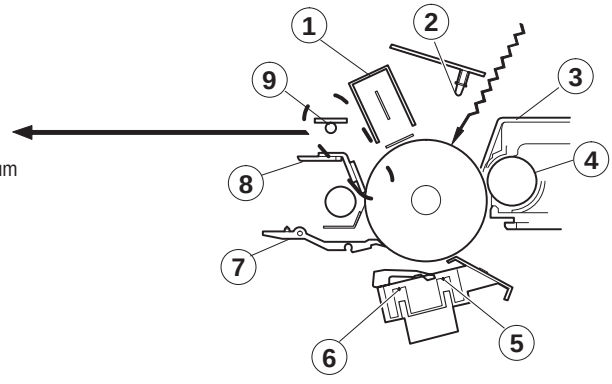

① Main corona unit
② Blank lamp
③ Developer unit
④ MG roller
⑤ Transfer corona unit
⑥ Separation corona unit
⑦ Separation pawl
⑧ Cleaning blade
⑨ Discharge lamp

4) Transition of photoconductor surface potential

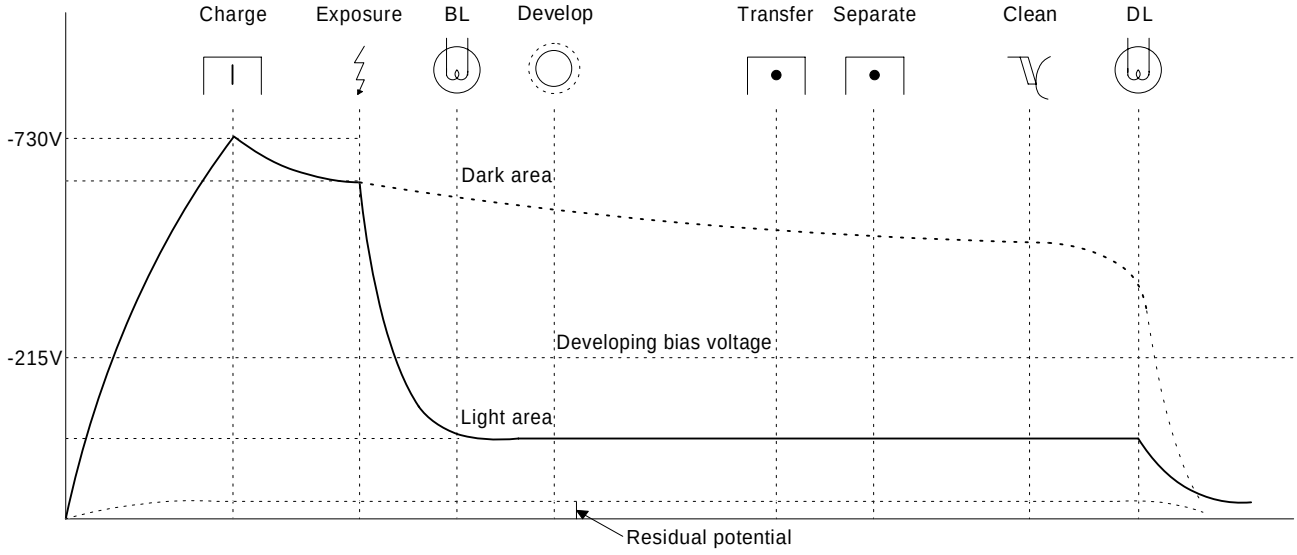

5) Photoconductor drum sensitivity correction

In this model, fall in sensitivity due to long use of the photoconductor drum is corrected by the copy lamp light intensity to prevent against considerable change in copy quality.
The photoconductor drum sensitivity fall correction is performed as follows:

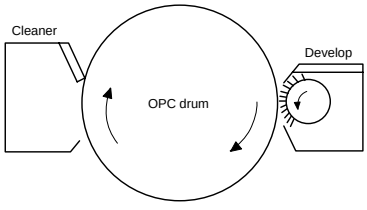

Change the tickness of the carrier transport layer (CTL).
By the developper.
By the cleaner blade.

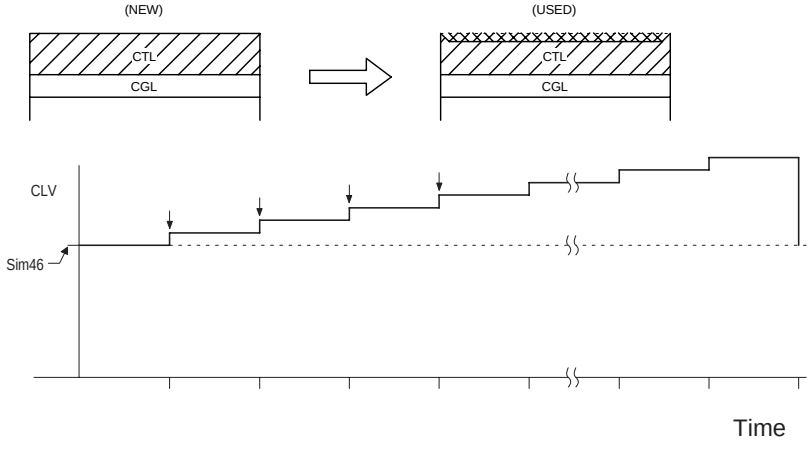

6) Process control function

[Summary]

The process control function detects the density of the standard toner image formed on the photoconductor, the density of the initial image and controls the charging grid voltage so that the same level as the initial image density is provided.
That is, the process conditions are established and the high voltage output and exposure level are controlled to stabilize the toner density.
In this model, the density sensing level is automatically set.

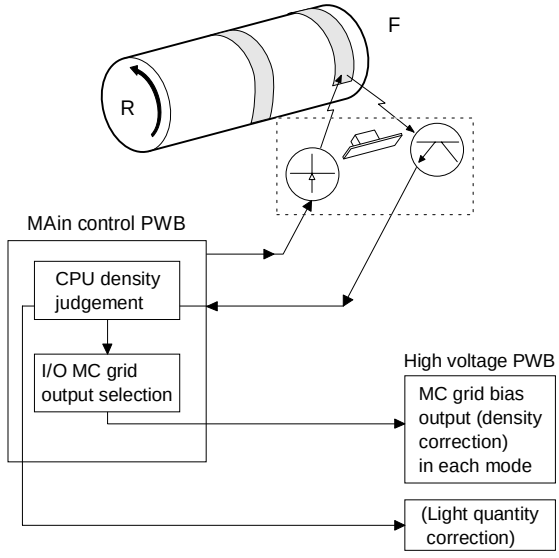

Process control

① Toner patch images are formed on the photoconductor surface under the three process conditions (MC grid bias voltage).
At the first process control, a toner parch image is formed with the reference grid voltage –410V as the center and ±30V. At the second or later process control, the MC grid bias voltage determined at the former process control is used as the center, and a toner patch is formed under the process condition of ±30V to the center value.

② Measure the three toner patch images formed in the above and the drum surface with the process density sensor to obtain the relations.

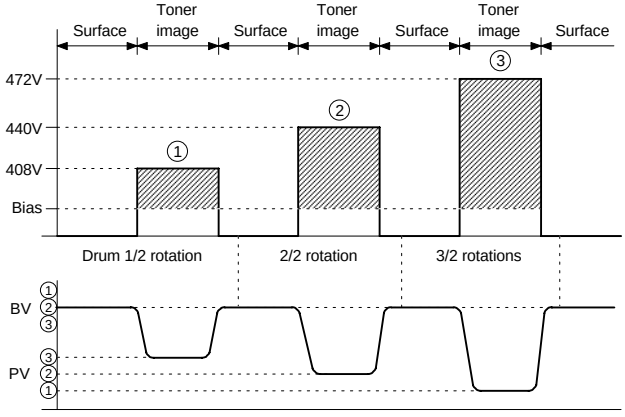

BVS: Sensor detection level on the photoconductor drum surface
PVS: Sensor detection level with the toner patch image

Obtain the above two levels from the calculation formula and record them as the reference values.

A. STD BA: Reference level when detecting the drum surface
→ STD BA = BV x 20

B. STD PA: Reference level when detecting the toner patch image
→ STD PA = PV x 20
In the density correction, the process conditions are determined so that the ratio of the reference levels $\left(\frac{\text{STD PA}}{\text{STD BA}}\right)$ set in the above may be maintained at constant.

③ Obtain the MC grid bias voltage from the reference level ratio.

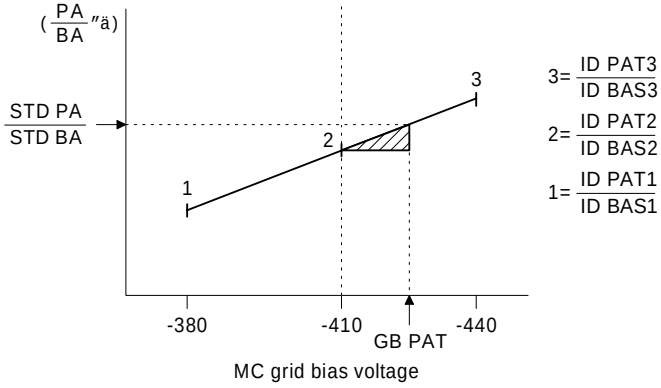

In this model, the absolute value of the output of the density sensor is not directly used for control calculation, but the ratio of the sensor output value (BA) on the drum surface and the sensor output (PA) of the toner patch image is used for control calculation.

✳ The grid bias value is obtained so that the ratio of the drum surface level and the sensor level when forming patch level and the sensor level when forming patch images is 200:40.

Though, therefore the light quantity of the reflection type sensor is varied by dirt or deterioration, the ratio (PA/PB) will not be affected by change in light quantity to provide stable control.

The grid voltage value where the same density level as the reference level is obtained is displayed by Sim. 44-9 "a". This value is displayed with 50 as the center in the range of 0 ~ 99 in integer numbers. The correction for 50 is 0V (–410V), and the correction for 56 is +30V (–440V).

④ When the MC grid bias voltage is corrected by the process control, the corresponding light quantity is calculated to control the copy lamp.
To correct the MC grid voltage, the delta value of the sensitivity level when the initially recorded reference grid voltage is –410V and the MC grid voltage where the same density is obtained in process control is fed back to the MC grid voltage of each mode.

Process control timing

In this model, the process control is performed in the following timing:

① When the main switch is turned on and the first copy is made:

② At every specified copy quantity (First copy after 1,000 copies) Judged by the total counter.

③ After the specified time after turning on the main switch. (First copy after 44, 60, 120, 180 min)

Drum marking

In this model, a toner patch image is formed in the same position on the photoconductor drum surface to improve the accuracy of the process control.
A marking is provided on the drum and the marking is sensed before forming a toner patch image. If the marking level is not sensed, the developing lamp blinks and the trouble code (F2-32) is displayed.

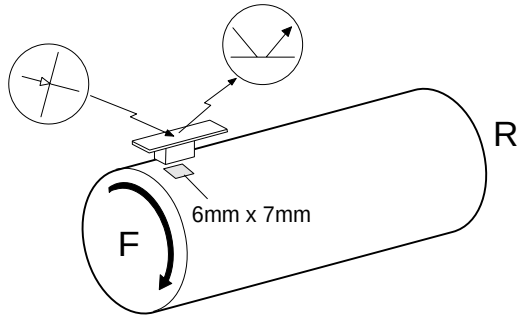

Basic structure

Photoconductor drum:	The 50mmϕ ground plate of the OPC drum is on the rear frame side of the drum unit so that it contacts the drum locator pin.
Blank lamp:	The non-image area is exposed by the light from the blank lamp to erase the positive potential outside the drum CTL. Use of the latchet simplifies the lamp position adjustment.
Discharge lamp:	Eight bulbs cast light over the drum surface to erase the positive potential in CTL. Ventilation hole provided in the drum frame releases heat from bulbs.
Cleaning mechanism:	The cleaning blade removes the toner remaining on the drum surface. The blade always rests on the drum surface.
Main corona:	The saw teeth corona charge method is used. Use of the screen grid maintains the even charge potential over the photoconductor surface.
Enforced separation mechanism:	Using two pieces of separation pawl, the copy paper stuck over the drum surface is forced to separate from the drum surface.

Waste toner transport mechanism:

The waste toner is passed through waste toner transport screw ① and waste toner pipe ② to waste toner bottle ③.
Waste toner bottle ③ is rotated by the main drive gear via gear ④ to transport toner evenly.
When the waste toner bottle is full of waste toner, the rotation torque of gear ④ is increased to escape gear ⑤ in the arrow direction Ⓐ, and switch ⑥ is turned on at the same time to light the waste toner replacement lamp.

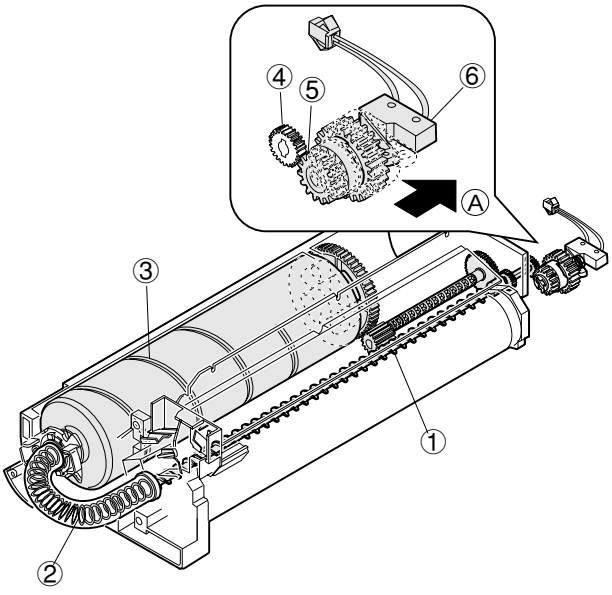

5. TRANSPORT/FUSING SECTION

1) General

This model allows transport of paper of max. A3 (11" x 17") and min. A5 (8 1/2" x 5 1/2").
After images are transferred on the paper, the paper is separated from the drum by the separation pawl and transported to the fuser section by rotations of the resist roller and the transport belt.
The drum separation pawl is provided under the process unit. It is made by turning on (separating) the solenoid inside the main drive unit.

2) Basic composition and functions

① Transport belts (2pcs)
The transport belts are provided with notches to hold paper rear ends.

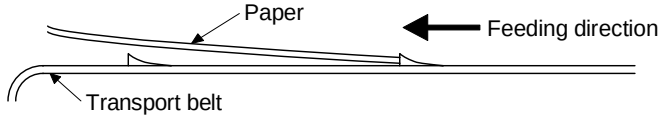

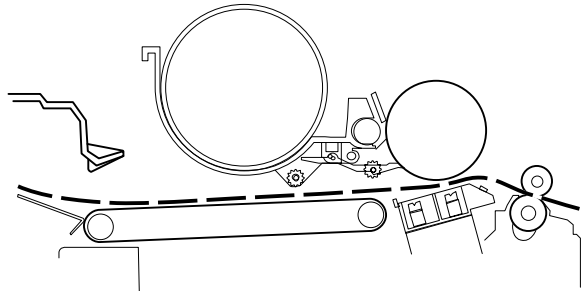

6. Fusing paper exit section

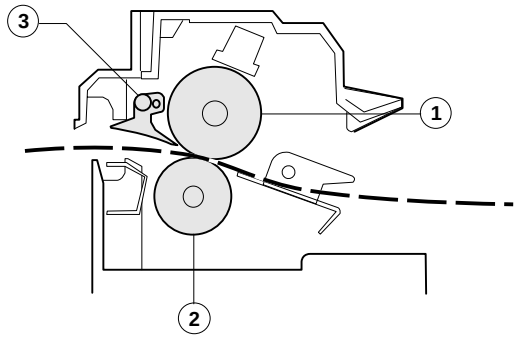

① Upper heat roller
The upper heat roller is teflon-coated.

② Lower heat roller
A silicone rubber roller is used.

③ Separation pawl
The upper heat roller is equipped with four pawls which are teflon coated to reduce friction.
the lower heat roller is equipped with two pawls.

④ Upper/lower separation function
The upper and lower heat roller sections are separated by rotating operations with the transport roller as a fulcrum, providing better serviceability.

⑤ Drive system division

The fuser unit is rotated by the main drive unit. In case of manual rotation of the fuser unit to remove paper jam, however, excessive loads may be applied to the gears. To prevent against this, the pressure of the upper/lower heat rollers is reduced when the machine clamshells are opened. In addition, the fusing gear is so constructed that the drive is not transferred to the drive system.

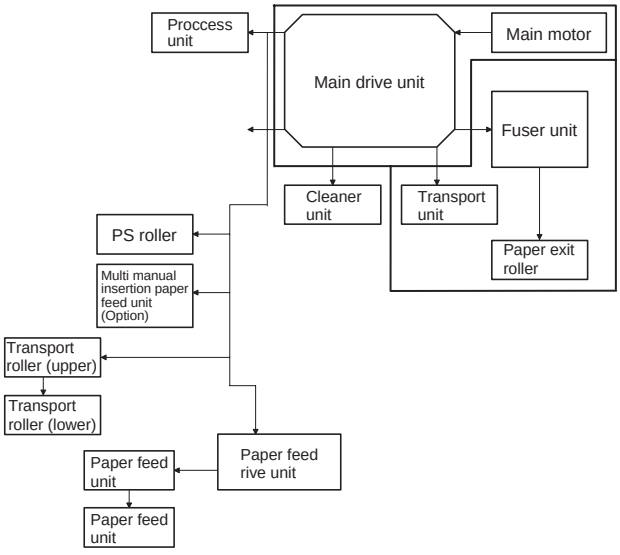

Thermo control

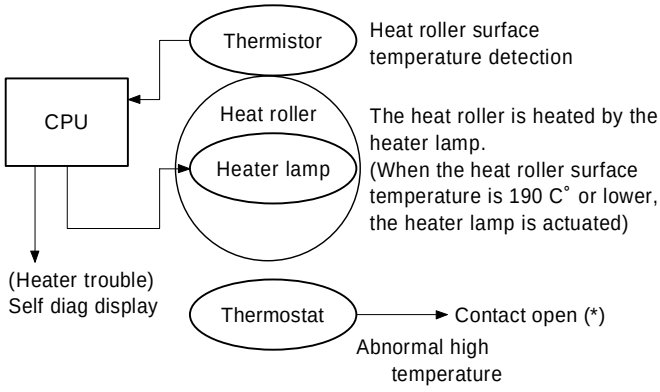

- Abnormally high temperature (H3) 240°C or upper
- Abnormally low temperature (H4)
- Thermistor disconnection (H2)

✳ When the thermostat contact is open, it is required to press the reset button in the upper side of the thermostat. (The contact is not reset automatically.)

7. High voltage section

1) General

There are three kinds of coronas; the main corona, the transfer corona, and the separation corona. The main corona employs the scorotron system, where the drum surface is evenly charged with negative charges controlled by the screen grid between the corona and the drum. The transfer corona is used to transfer toner images on the drum to the copy paper. A high, negative voltage is applied to the rear side of the paper. The separation corona applies AC corona to the copy paper to eliminate potential difference with the drum to allow separation of the paper.

The output voltage of the main charger and the transfer charger is supplied by transformer 1. The feedback current from the transfer charger is controlled to be constant and outputted to the main charger.

2) Basic composition

① Main (charging) corona – High voltage transformer (MHVG)

	Grid voltage	Developing bias voltage
Standard mode	–750V	–200V
Photo mode	–500V	
TSM mode	–650V	

② Main transfer corona – High voltage transformer (THVG)

–41μA (Electrode sheet front-rear balance difference: max. 7.0μA)

③ Separation corona – High voltage transformer (SHVG)

AC4KV ±0.1KV

[6] DISASSEMBLY AND ASSEMBLY

The descriptions are divided into the following sections.

1. Paper feed section
2. Transport section and power section
3. Fusing section
4. Optical system
5. SPF section
6. Drum section
7. Developing section
8. Operation panel section and intermediate cabinet
9. Major parts on the frame side
10. Manual multi paper feed unit

1. Paper feed section

1-1. Paper feed unit

① Open the front cover and lift up the upper clamshell. Remove two fixing screws of the manual paper feed section, and remove the manual paper feed section.

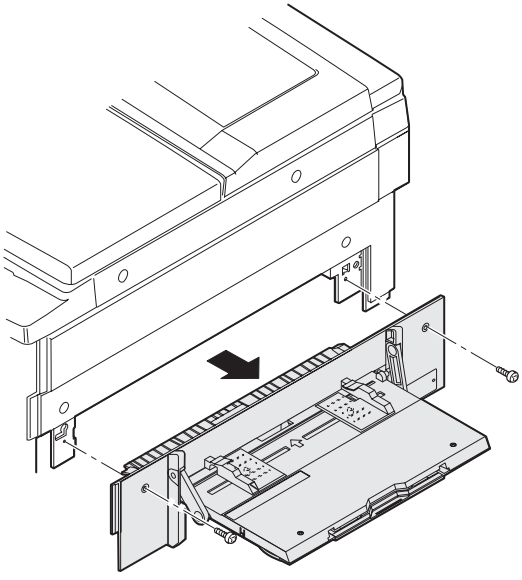

② Remove the four fixing screws of the paper feed unit, and lift the rear frame side of the paper feed unit and remove it. (Since there is the 8-pin connector on the back of the rear frame side, it requires some force to remove. Carefully pull it out straight.)

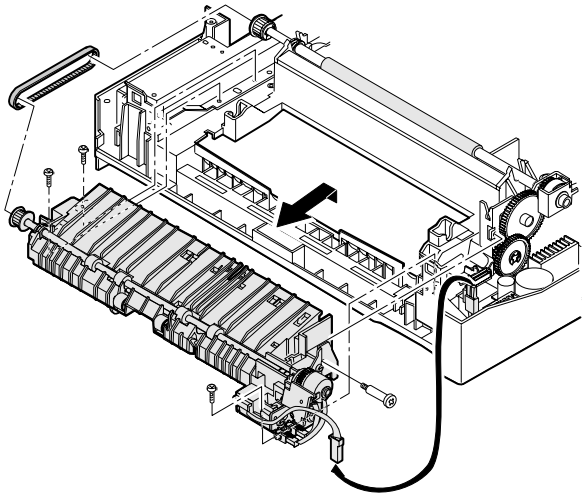

(Note for assembly)

1) There is the 8-pin connector on the back of the rear frame side. When assembling it, carefully insert.
2) The belt must be on the paper feed unit gear and the resist roller gear.

1-2. Paper feed roller ass'y removal

1) Remove the rear frame side electromagnetic clutch connector.
2) Remove the front frame side stopper and the bearing.
3) Remove the roller release arm spring from the paper feed frame.

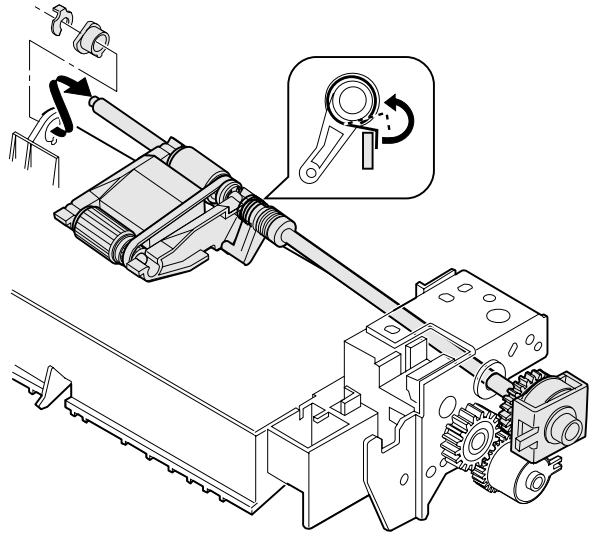

4) Remove the rear frame bearing, and one side of the paper feed roller ass'y will be disengaged. To remove the ass'y completely, remove the E-ring.

(Note for assembly 1)

With roller release arm spring A hooked on the spring notch, attach the paper feed roller ass'y to the paper feed unit, and hook the spring on the paper feed frame.

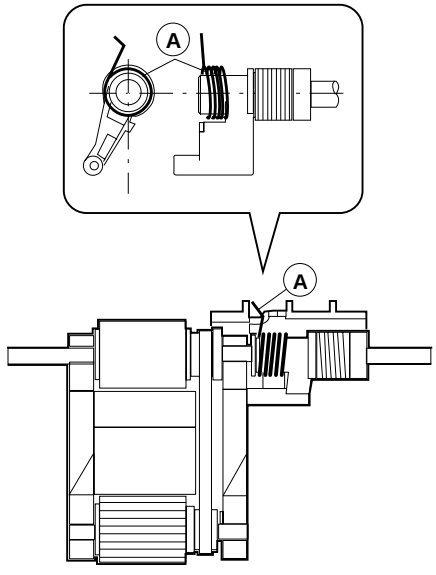

(Note for assembly 2)

When attaching the paper feed section roller ass'y, adjust so that the paper feed roller clutch and the PS front roller ass'y clutch projection face toward the paper feed side.

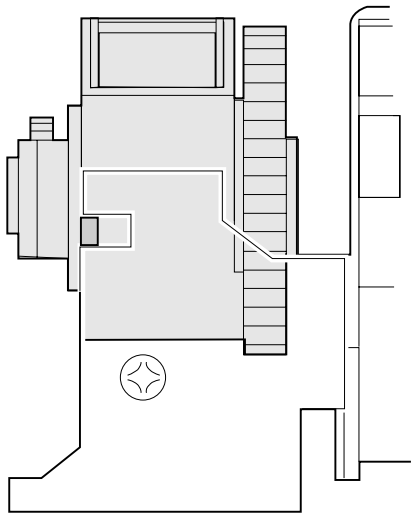

1-3. PS front roller ass'y

① Remove the paper feed unit. (For the details, refer to the 1-1.)

② Disengage the hook section of the front frame side bearing, remove the connector on the rear frame side, and remove the PS front roller ass'y from the paper feed frame.

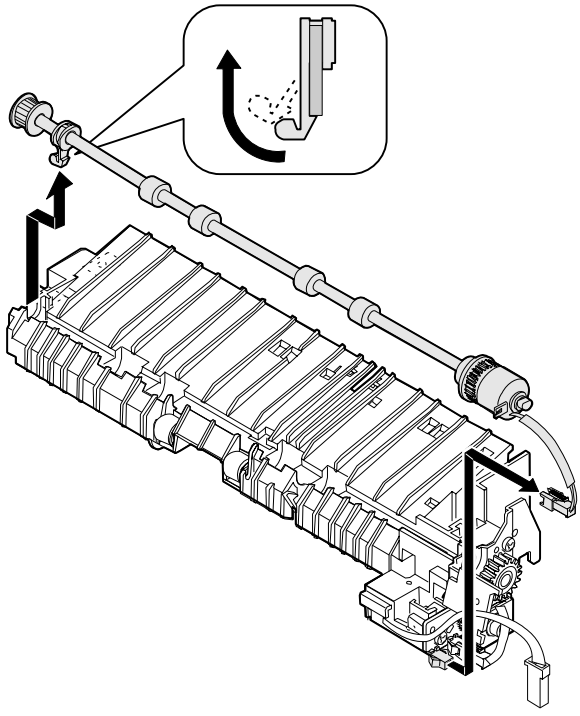

1-4. Separation roller

① Remove the paper feed unit and remove the separation roller.

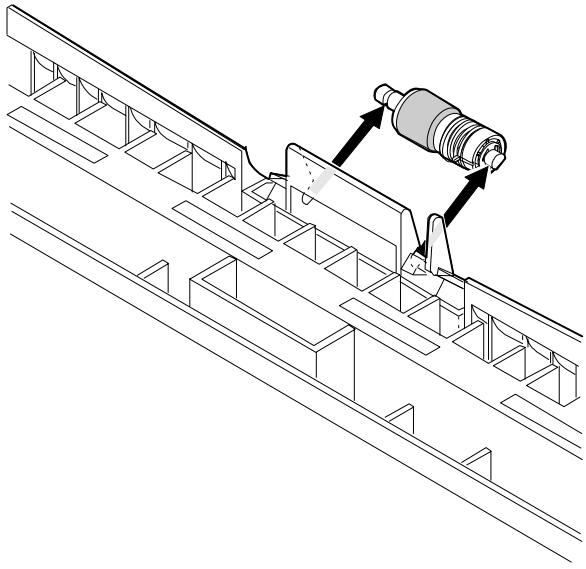

1-5. Paper feed roller, take-up roller

① Remove the paper feed roller, and remove the take-up roller.

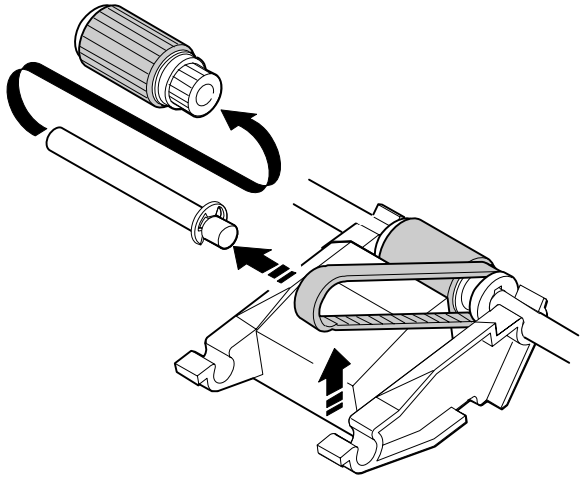

② Remove the roller holder, the stop ring, the bearing, and the paper feed roller.

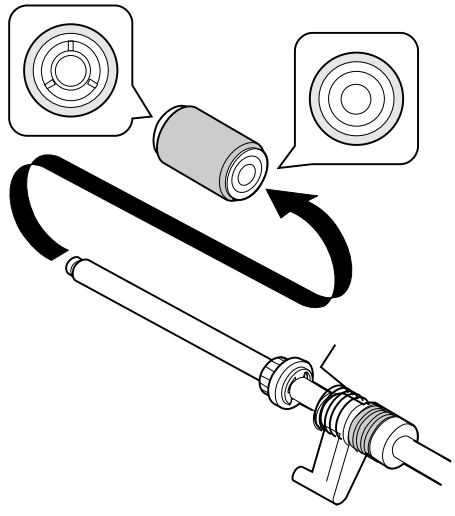

(Note for assembly)

Attach the paper feed roller so that the one-way clutch is on the rear frame side. (Be careful of the direction.)
Attach the roller holder as shown below.

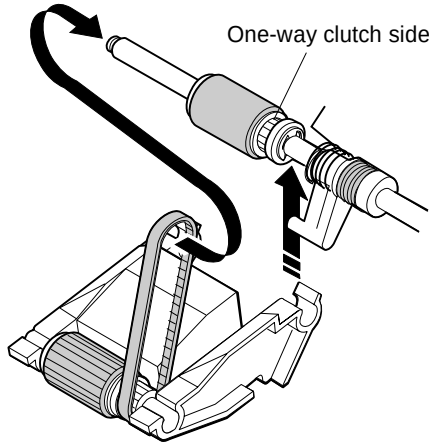

2. Transport unit

2-1. Resist roller, transfer roller

① Open the front cover.

② Release two lock pawls of the TC case, and lift the front side of the TC case to remove.

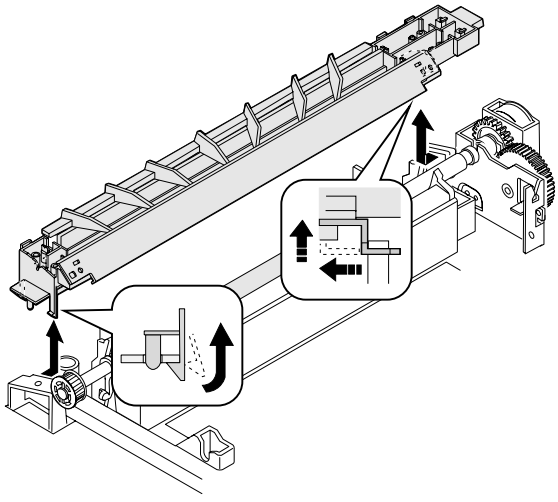

③ Remove the hook of the front frame side bearing, and lift it up to remove it toward the upper frame side. Remove the rear frame side connector, and slide and remove the resist roller ass'y toward the rear frame side.

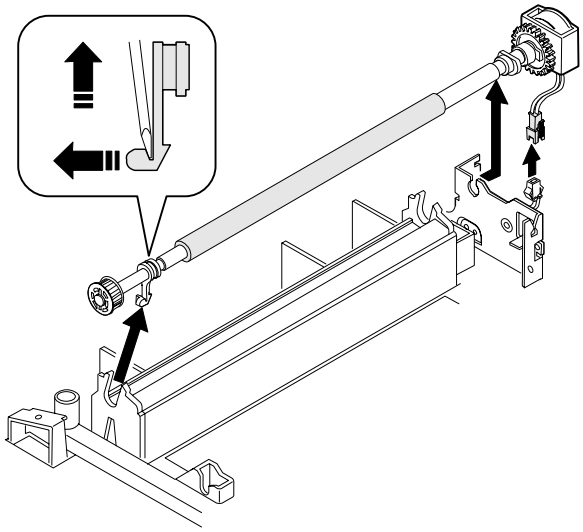

④ Remove the clutch and the gears as shown below.

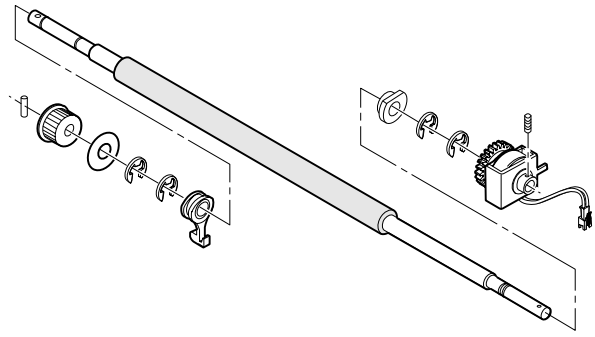

(Note for assembly)

1) Attach so that the resist roller clutch projection is on the paper exit side as shown in the figure below.
2) Arrange the cable and the power grounding wire from the resist roller clutch as shown in the figure below.
3) Hook the hook section of the TC case as shown below.

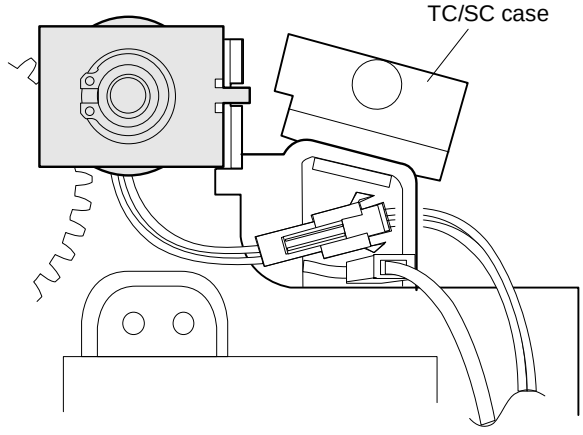

4) When attaching the resist roller ass'y to the copier, attach over the upper side of the PS roller lower mylar, then rotate the roller to set the mylar to the normal position. (If the mylar is deformed, it may cause paper jam. Replace it if deformed.)

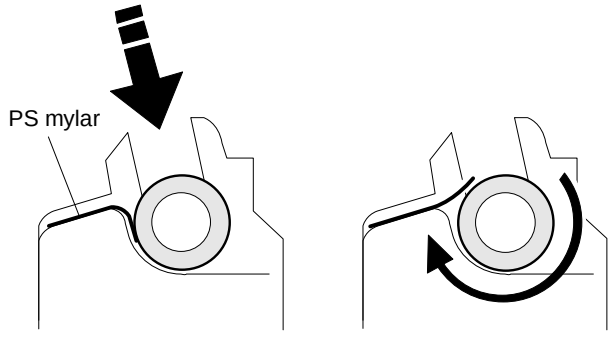

2-2. Transport belt

① Remove the fusing unit.

② Remove the TC case.

③ Disengage the transport belt drive shaft holder on the TC case side, then disengage the drive shaft on the paper exit side and remove the belt.

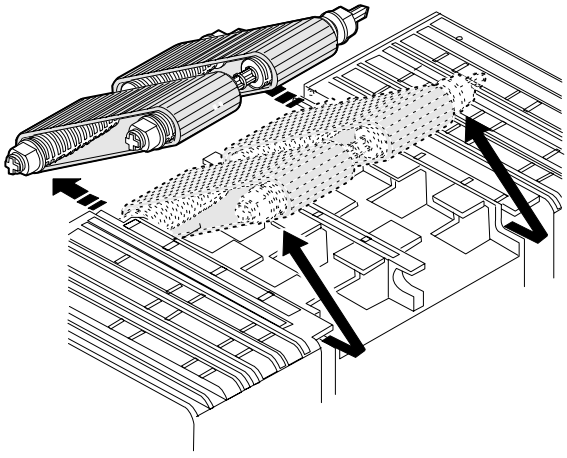

(Note for assembly)

① There is a mark (⬅) on the transport belt. Set so that the tip of the mark faces toward the paper exit direction.

② Be careful of the installing direction of the transport belt drive shaft.

3. Fusing section

3-1. Fusing unit removal

① Open the front cover.

② Push the open/close lever down to the right side, and slowly open the upper unit.

③ Remove the fixing screw of the fusing connector cover and remove the cover.

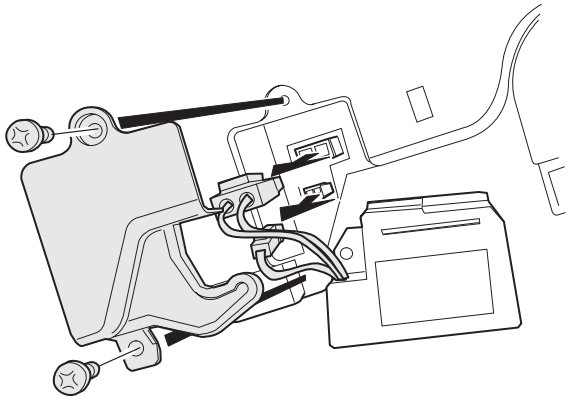

④ Remove two connectors from the unit.

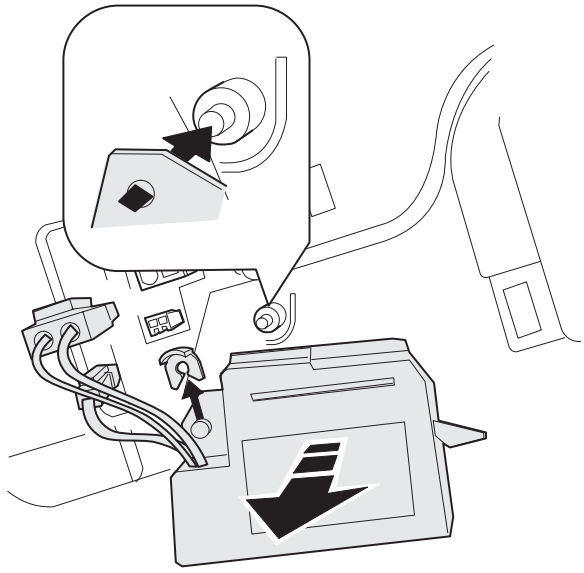

⑤ Remove the stop ring and remove the unit.

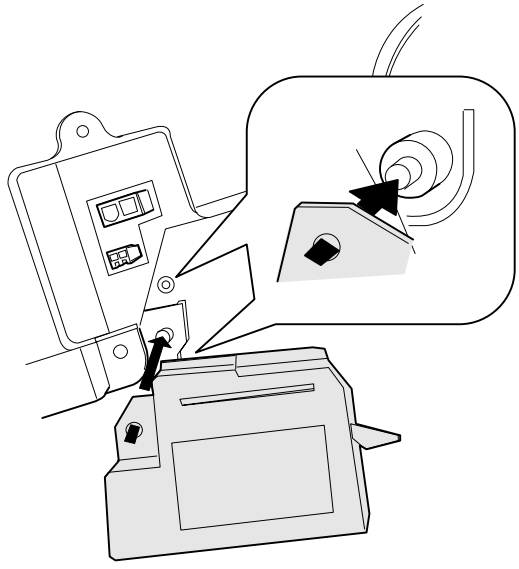

(Note for assembly)

When removing the unit from the copier, ba careful not to scratch the photoconductor drum and the lower heat roller. Be careful not to break the actuator of the paper exit sensor (POD).

3-2. Heater lamp replacement

① Remove the fusing cover fixing screw (1 pc.), and slide the cover to the front side to remove.

② While pressing the Fasten terminal projection connected to the thermostat, remove the lead wire from the connection section.

③ Remove the fixing screw of the lamp holder on the upper side of the rear frame, and remove the holder.

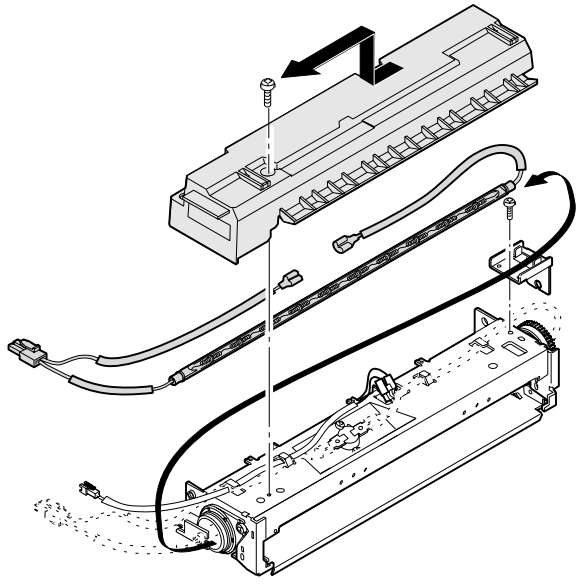

④ Pull out the heater lamp from the front frame side.

For assembly, reverse the disassembly procedures.

3-3. Upper heat roller ass'y removal

① Remove two fixing screws of bearings of the front and the rear frames.

② Push the paper guide down to the paper exit side and separate the separation pawl from the roller and fix it.

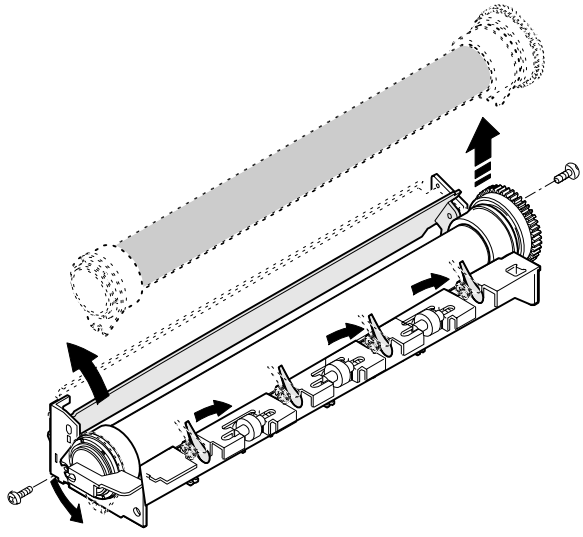

③ Rotate the bearing fixing screws about 45 degrees downward and remove the ass'y.

For assembly, reverse the disassembly procedures.

3-4. Upper separation pawl replacement

① Remove the fusing unit, and remove the cover.

② Put the fusing unit so that the paper guide is on the lower side of the fusing unit (the separation pawl is on the upper side).

③ Remove the tension spring, hold the separation pawl tip and remove it from the supporting section, and remove it from the unit by tilting.

For assembly, reverse the disassembly procedures.

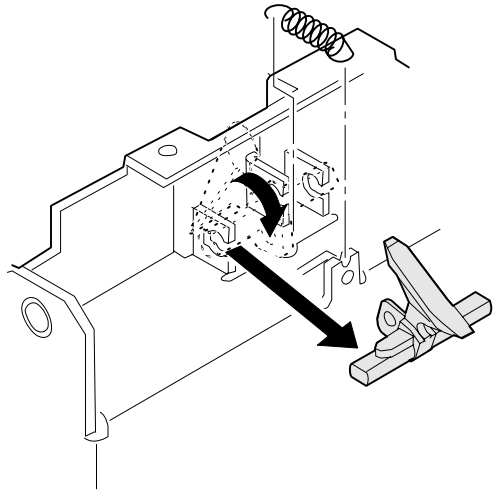

3-5. Lower heat roller replacement

① Remove the fusing unit.

② With the lower separation pawl upright, slide it to the rear frame side and keep the lower separation pawl upright.

③ Remove the lower heat roller together with the bearing.

For assembly, reverse the disassembly procedures.

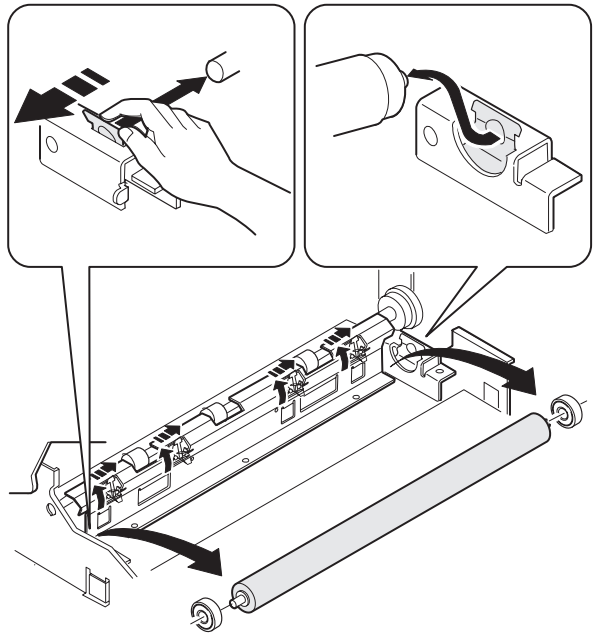

(Note for assembly)

Assemble so that the lower separation pawl is on the upper side of the lower heat roller. (At that time, return the separation pawl which was set upright in procedure (2).)

3-6. Lower separation pawl replacement

① Remove the fusing unit.

② Remove the lower heat roller, after removing the lock panel.

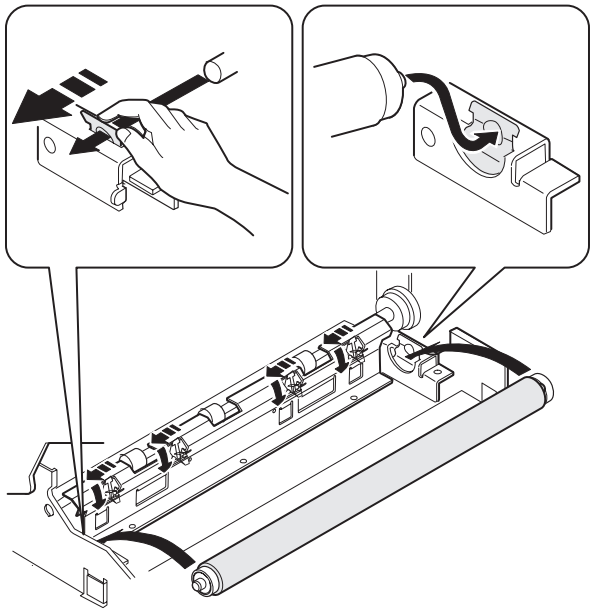

③ Remove three screws and remove the lower separation pawl unit.

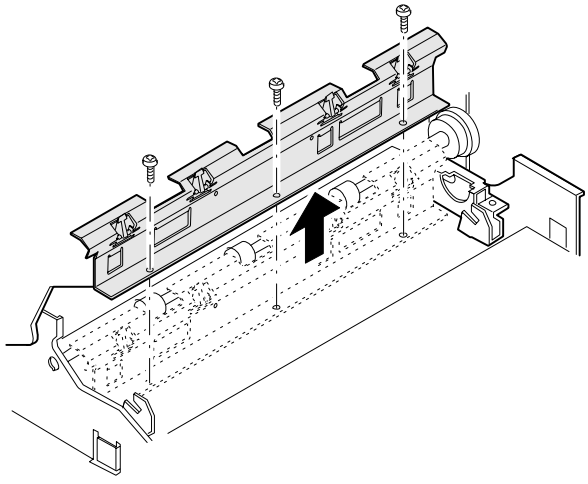

⑤ Remove the tension spring, hold the separation pawl tip to remove it from the supporting section, and remove it by tilting.

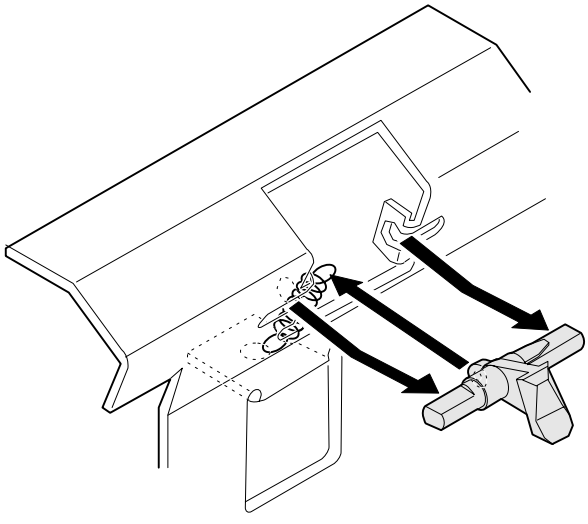

3-7. Thermistor/thermostat removal

① Remove the fusing unit.

② Remove the fusing cover, and remove the thermistor/thermostat.

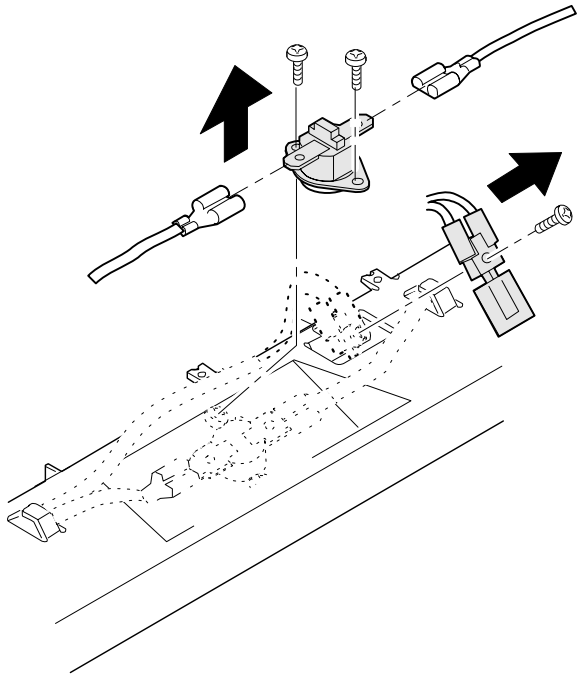

∗ **Note for assembly**

- Check that the thermistor center is in contact with the heat roller.
- Clean the thermistor surface with alcohol to remove foreign materials.

4. Optical system

The optical system is an integrated finish product delivered by the maker as stated in the previous section. The replacement procedures for the major parts in the optical system are described here.

1) Copy lamp replacement

① Remove the OR guide, and remove the table glass. (2 screws)

② Slide the copy lamp unit to the notch at the rear of the upper cabinet. Push the copy lamp electrode (section A) in the arrow direction B, and remove the lamp.
Do not move the optical adjustment plate. (If it is moved, the light balance will go wrong.)

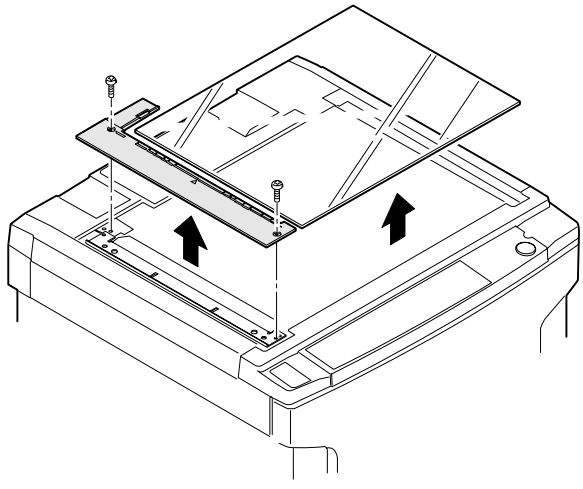

Note: Be careful of the installing direction of the copy lamp.

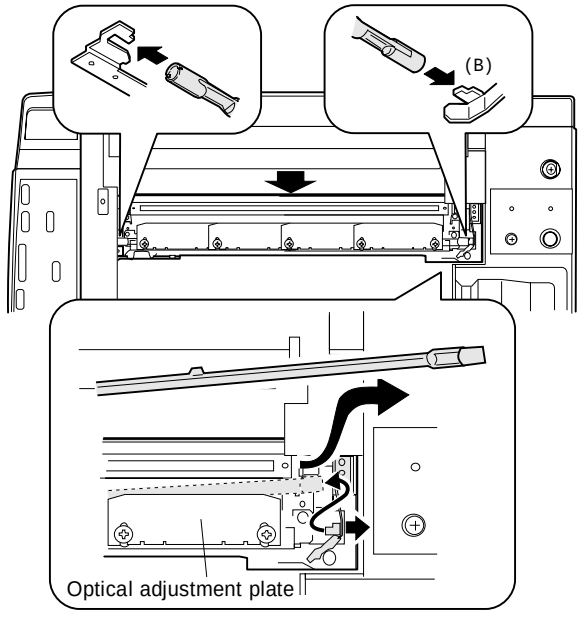

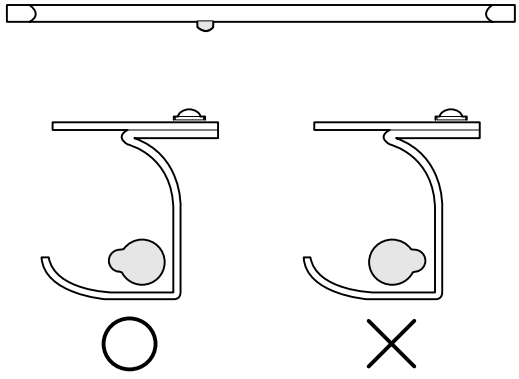

Install so that the projected portion of the copy lamp is near the rear side as shown above.

2) Mirror base wire replacement and adjustment

A. Copy lamp unit removal

① Remove OR guides R/L, and remove the table glass.

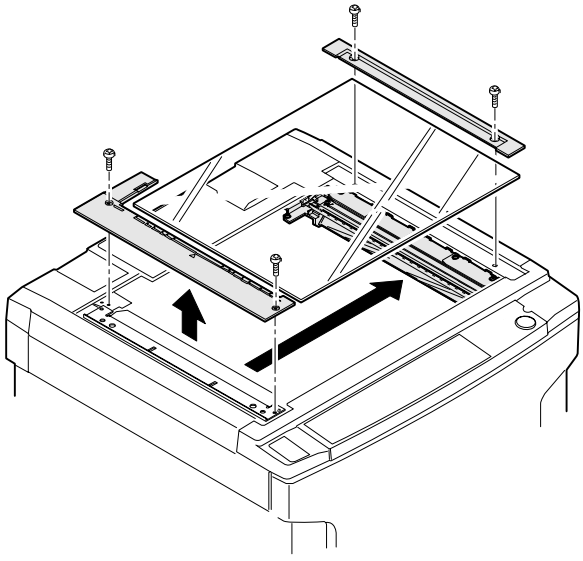

② Remove the operation panel, the upper cabinet R, and the right cabinet.

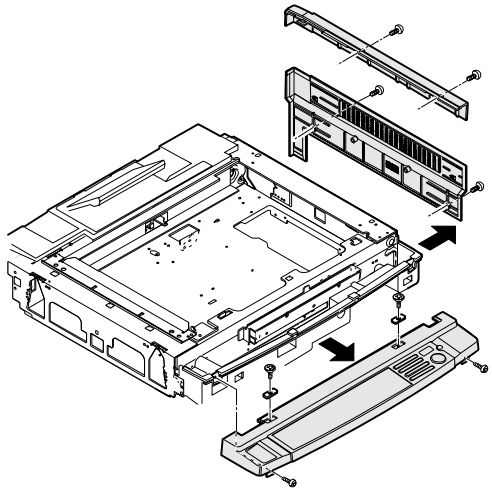

③ Remove the dark box cover upper.

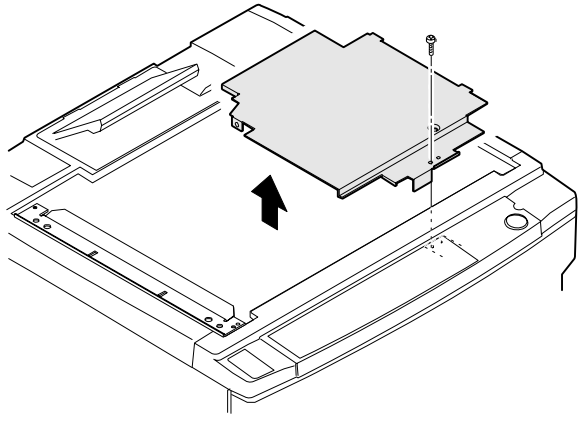

④ Manually move mirror base B. (Within the range where the wire fixing plate fixing screw can be removed.)

⑤ Remove the wire fixing plate in the front/rear frame side of the copy lamp unit, and remove the wire from the side plates F/R.

⑥ Remove the harness from the copy lamp unit.

⑦ Rotate the copy lamp unit counterclockwise to remove.

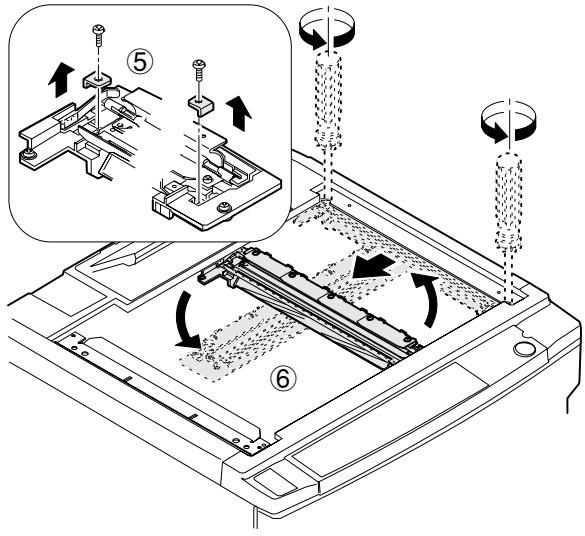

B. Mirror base wire removal

① Remove the upper cabinet L, and the left cabinet.

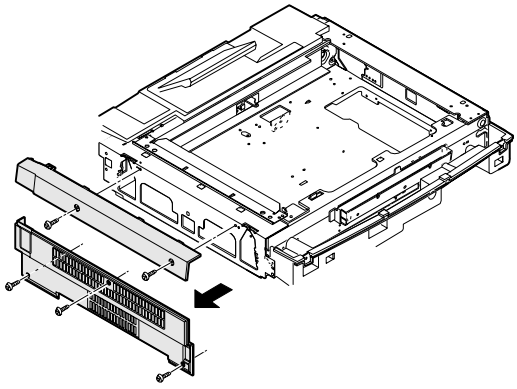

② Remove the mirror wire spring from the groove on the left side of the optical base plate.

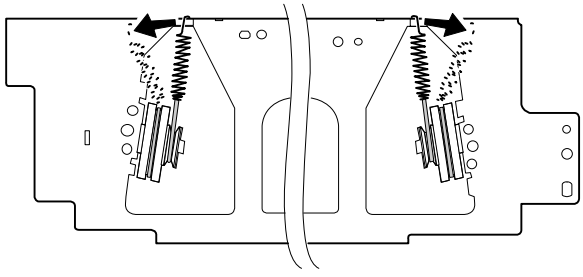

③ Remove the mirror base wire from the winding pulley.
(Remove he wire fixing screw.)

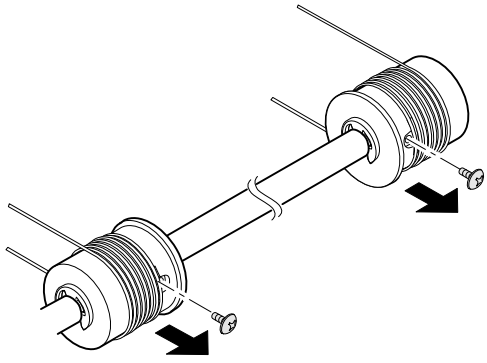

C. No. 2/3 mirror unit (mirror base B) removal

① Move the mirror base B to the center between the positioning and the optical base plate left surface.

② Lift the front side of mirror base B and separate it from the rail. (The front side only)

③ Rotate the mirror base B counterclockwise to remove.

④ Disconnect the connector from the copy lamp unit on the rear frame side and from the No. 2/3 mirror unit.

⑤ Rotate the No. 2/3 mirror unit counterclockwise and remove.

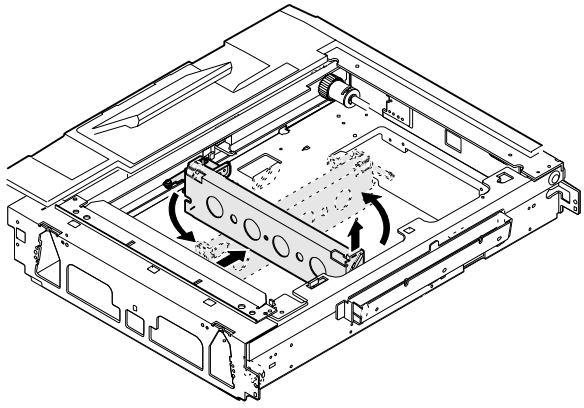

D. No. 2/3 mirror unit (mirror base B) assembly

Reverse the above procedures.

E. Mirror base wire stretching

Check that the wire groove in the front winding pulley is aligned with the wire groove in the rear winding pulley.
(If there is too much a shift in the circumference, loosen two pulley fixing screws, and visually fit the positions and fix.

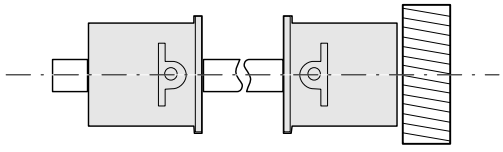

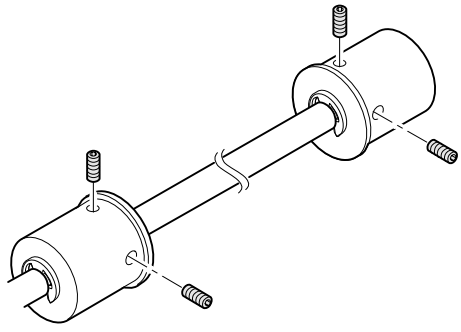

① Hook the metal fixture of the mirror base wire on the optical base plate hook.

② Pass the mirror base wire along the groove outside the double pulley.

<Note> At the time, put the No. 2/3 mirror unit on the mirror base positioning plate.
Hold it so that the winding pulley groove is on the upper side, and wind the wire.

④ Pass it under the L pulley supporting plate and wind it around the fixed pulley.

⑤ Pass it along the groove inside the double pulley.

⑥ Pass in through the fixed pulley.

⑦ Hook the mirror base wire spring on the groove at the left of the optical base plate.
(Same in the front and the rear side.)

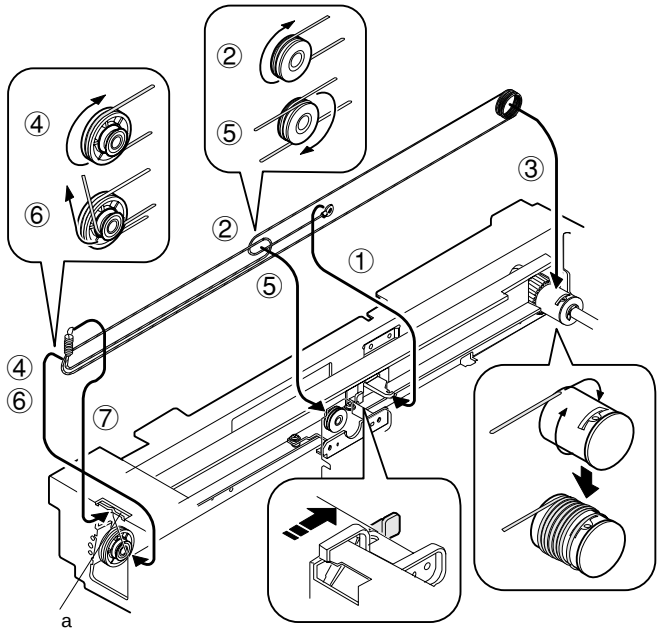

F. Mirror base wire fixing

① Manually turn the mirror base drive pulley to bring the mirror base B into contact with the mirror base positioning plate.

② Shift the 9th winding tip of the mirror base wire from the pulley screw hole section.

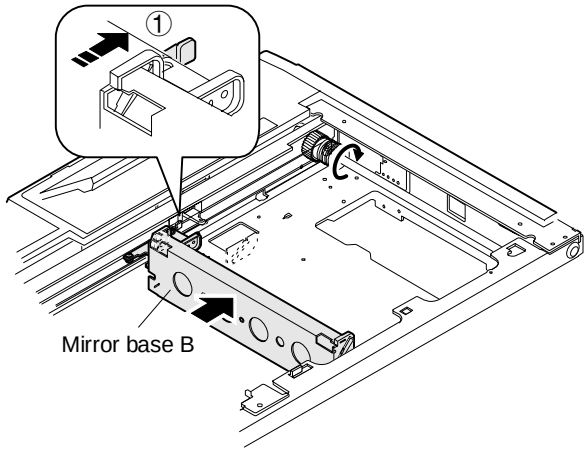

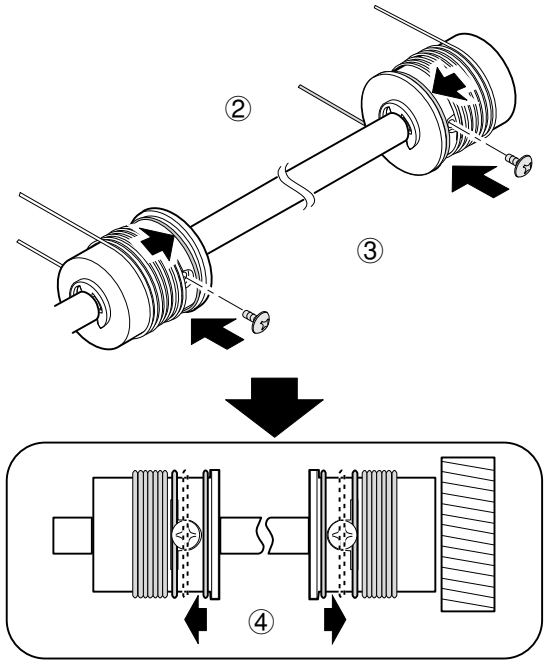

③ Fix the mirror base wire to the pulley with the mirror base wire fixing screw.

④ Return the 9th winding tip of the mirror base wire to the original position. (Perform the same procedure for the front frame side and the rear frame side.)

(Note) After replacing the mirror base drive wire, perform the vertical skew adjustment, the focus adjustment, and the horizontal skew adjustment.

3) No. 2/3 mirror unit (mirror base B) installation (Mirror base B positioning)

This is to adjust the parallelism of mirror base B and the drum surface and the original surface.
This adjustment must be performed in the following cases:

- When the mirror base drive wire is replaced.
- When mirror base A or mirror base B is replaced.

① Manually turn the mirror base drive pulley to bring the mirror base B in contact with the mirror base positioning plate. If the front side and the rear side of the mirror base B make contact with the mirror base positioning plate simultaneously, the parallelism of the mirror base B is proper, and there is no further adjustment.

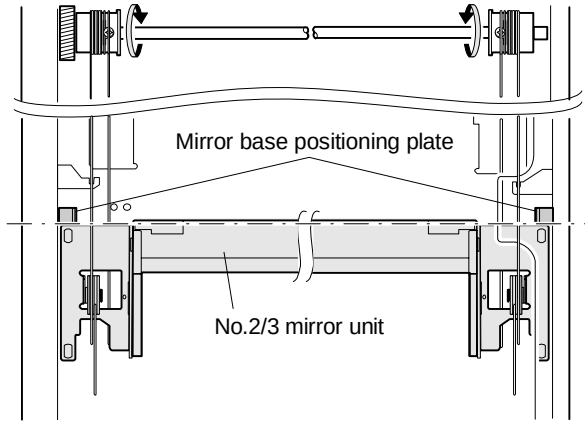

② If the parallelism of the mirror base B is improper as shown in the figure below (one side of the mirror base B is in contact with the positioning plate and the other side is not in contact), perform the following procedure.

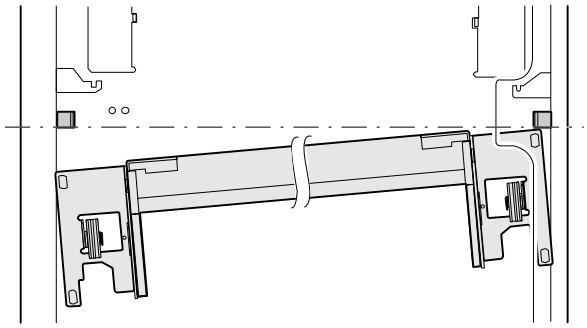

③ Loosen the mirror base drive pulley fixing screw on the side where the mirror base B is not in contact with the positioning plate.

④ Manually rotate the mirror base drive pulley on the side where the mirror base B is not in contact with the positioning plate to bring the mirror base B into contact with the positioning plate.

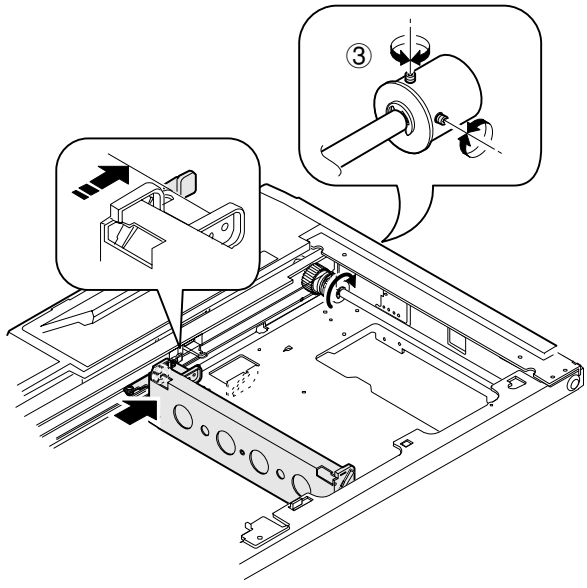

⑤ Tighten the mirror base drive pulley fixing screw.

⑥ Manually rotate the mirror base drive pulley to separate the mirror base B from the mirror base positioning plate once, then bring it into contact with the positioning plate.
Check that the front side and the rear side of the mirror base B make contact with the positioning plate simultaneously.

⑦ If the condition of ⑥ is not satisfied, repeat procedures ③ through ⑥ until the condition is satisfied.

4) Copy lamp unit installation (Mirror base A positioning)

This adjustment must be performed in the following cases:

- When the mirror base drive wire is replaced.
- When the mirror base A or B is replaced.
- When any part in the dark box is replaced.

When installing the mirror base, reverse the removal procedure of (2)-A.

① Put the mirror base A in the copier. Pass the mirror base drive wires in the front frame side and the rear frame side through the clearance between the mirror base A and the mirror base wire fixing plate. Do not tighten the mirror base A wire fixing screw at that time.

② Bring the mirror base B into contact with the positioning plate, put a flat jig (such as a scale edge) onto the right surface of the optical base plate (paper feed side), press the projection of the copy lamp unit onto the jig and fix it with two screws.

(Note) When tightening the copy lamp unit fixing screws, be sure to press the projection onto the scale.

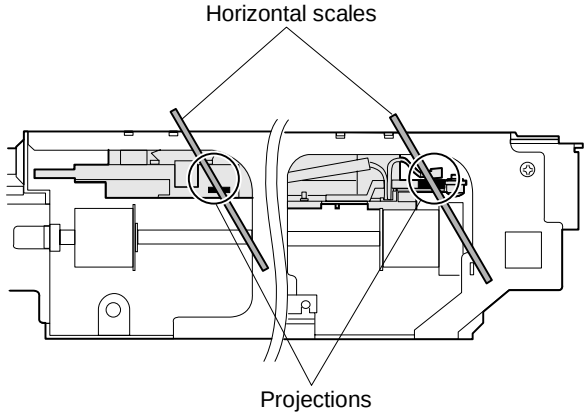

5) No. 4/5 mirror unit (mirror base C) replacement

A. No. 4/5 mirror removal

① Remove the OR guide L and R, the remove the table glass.

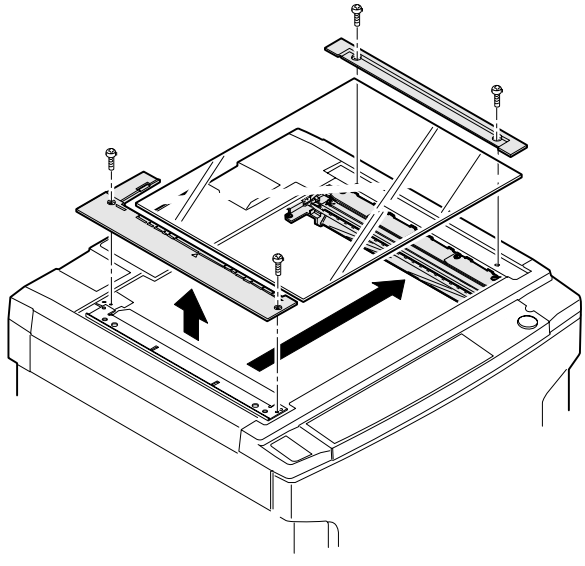

② Remove the dark box cover upper.

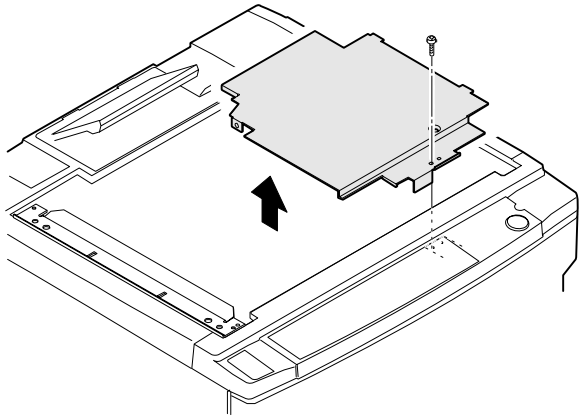

③ Remove the right cabinet.

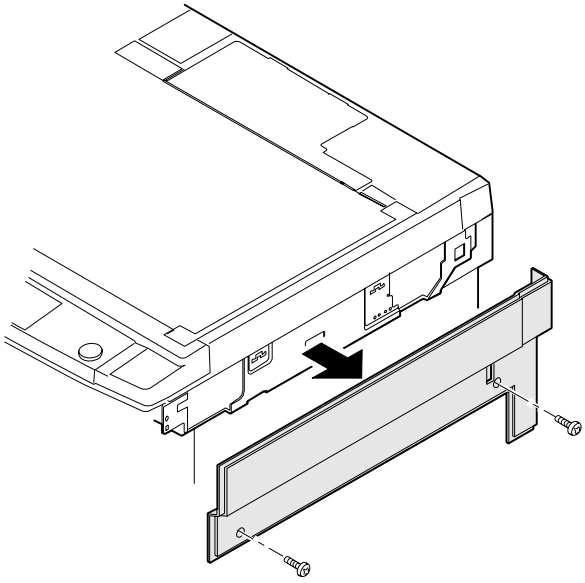

④ Remember the positions of the lens drive shaft attachment plate (in the directions of A and B) (Inscribe a line).

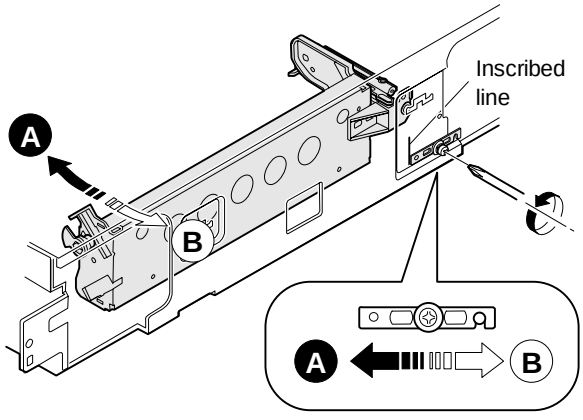

∗ (IMPORTANT) This is to prevent against defective focusing. (Measurable with a scale.)

⑤ Remove the drive springs 4 and 5.

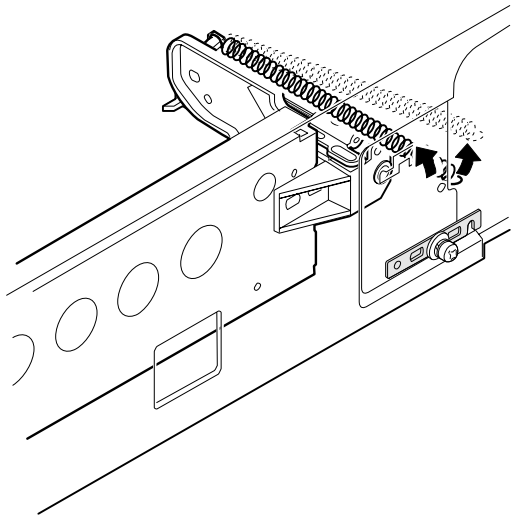

⑥ Remove the zooming rack of the roll holder unit.

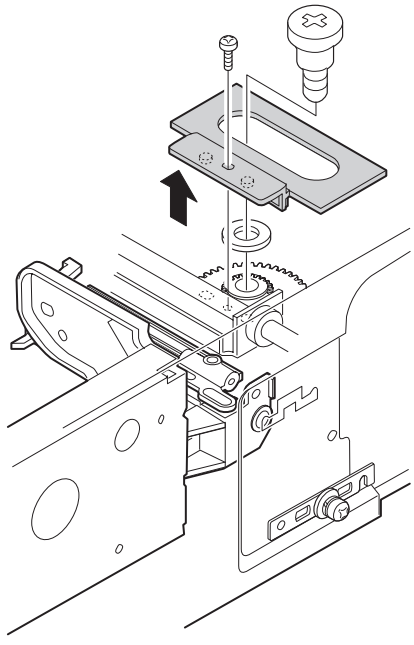

⑦ Remove the lens drive shaft attachment plate.

⑧ Remove the drive shafts 4 and 5.

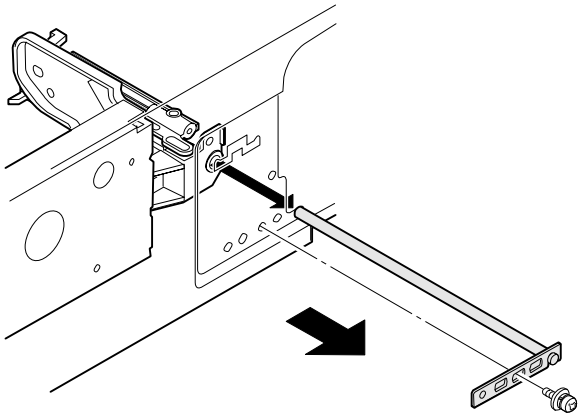

∗ When removing the No. 4/5 mirror unit, remember the positions (scales) of the arrow marks of the drive holder 4 and 5.

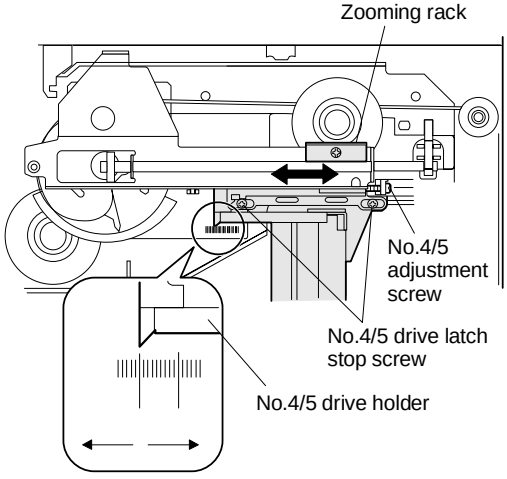

B. No. 4/5 mirror unit assembly

Reverse the above procedures.

<Note>
When attaching the lens drive shaft attachment plate, attach it to position 5 in the above description.
Fit the arrow positions of the drive holder 4 and 5 as the previous state.

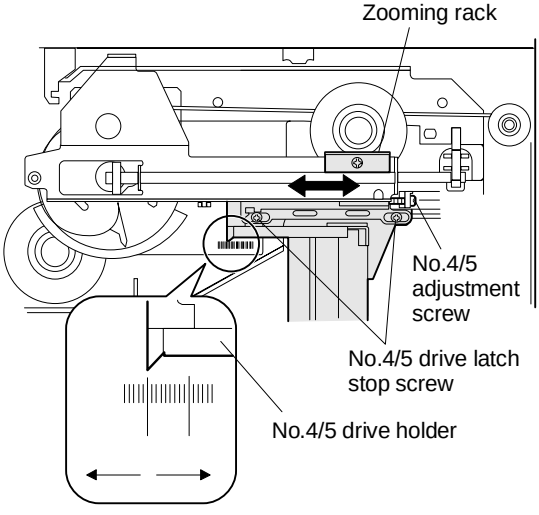

∗ When the arrow positions cannot be fit:

① Loosen the zooming rack screw and slide it to adjust.

② Loosen the two screws which are fixing the driver holder 4 and 5 and the drive latch 4 and 5. Adjust with the drive holder 4 and 5. After completion of adjustment, tighten the two screws.

6) Lens wire replacement

A. Lens wire removal

① Remove the OR guide L and R, and remove the table glass.

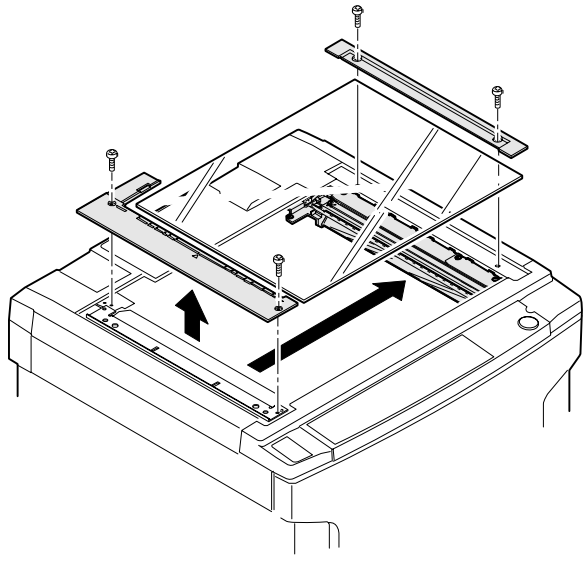

② Remove the dark box cover upper.

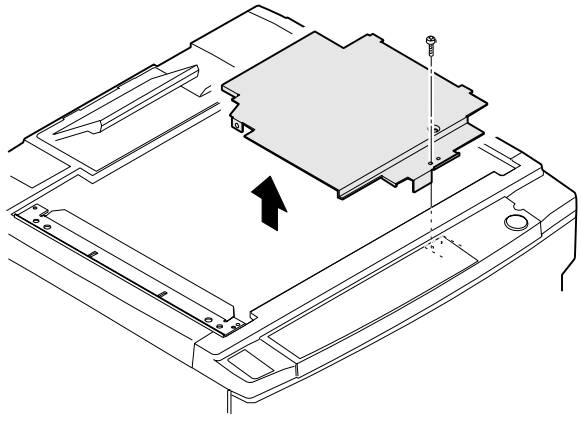

③ Remove the lens motor.

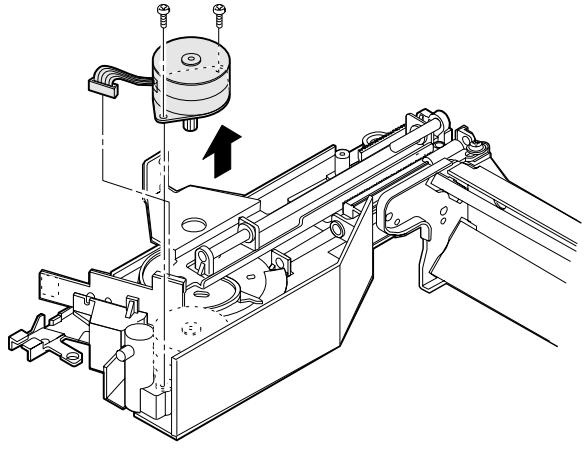

④ Remove drive spring 4 and 5.

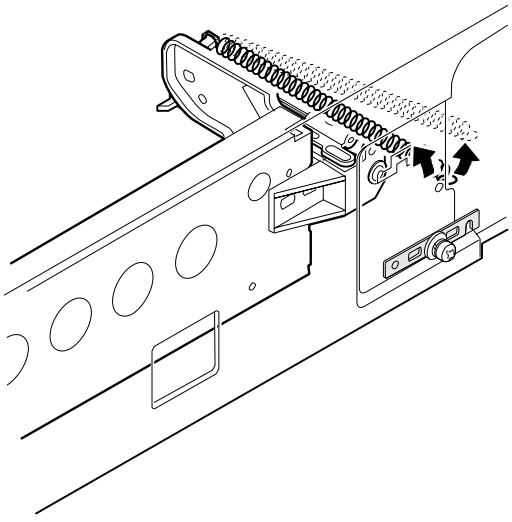

⑤ Remove the E-ring which is fixing the roll holder drive shaft, and remove the roll holder unit.

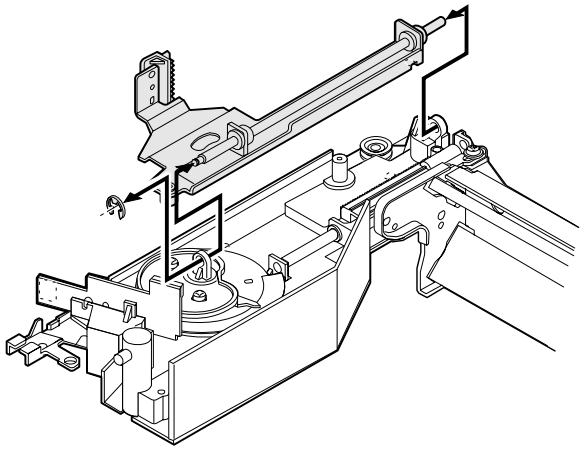

⑥ Remove the zooming cam and the zooming cam drive gear (which are fixed with screws).

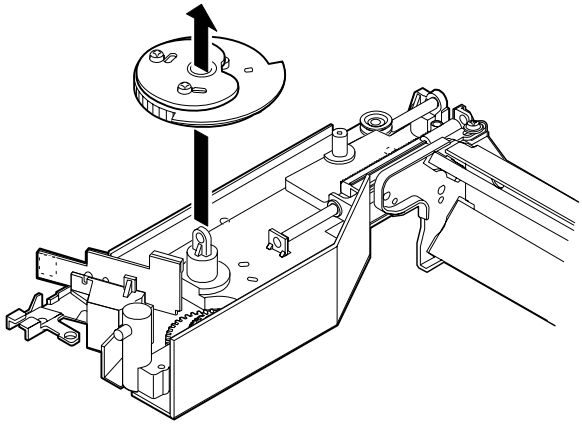

⑦ Remove the drive wire spring and the wire hook from the lens carriage boss.

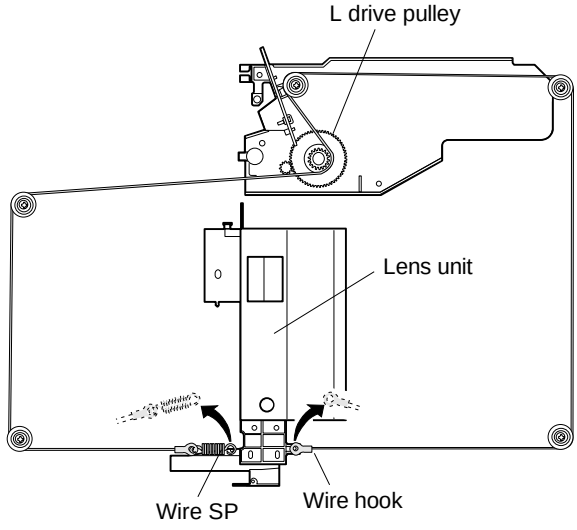

⑧ Remove the L pulley and the L drive pulley from the lens wire.

B. Lens wire stretching

1. This procedure is performed in the following case.

(1) When the lens unit is removed.

(2) When No. 4/5 mirror drive unit is disassembled.

(3) When the copy is out of focus because relative position of the lens unit and No. 4/5 mirror unit is shifted by moving the lens unit itself back and forth without turning the L drive pulley.

∗ In order to move the lens unit of this machine back and forth in servicing, be sure to turn the L drive pulley. (If the lens unit itself is moved, the wire may slip at the L drive pulley and the relative position of the lens unit and No. 4/5 mirror unit is shifted, resulting in improper focusing.)

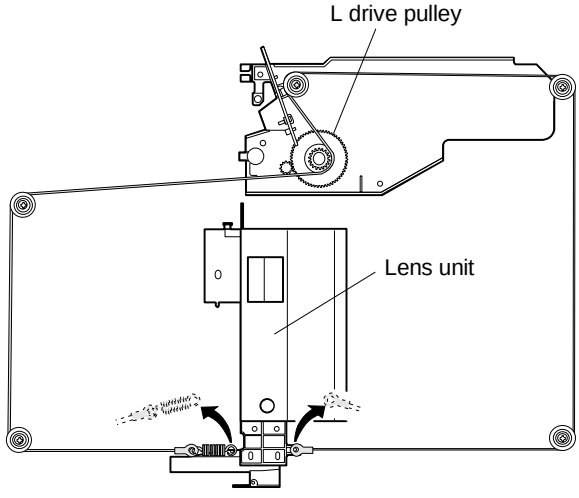

2. Procedures

① Manually move the lens carriage unit to fit the lens carriage hole with the optical unit frame hole (which is not the home position hole but the reduction side hole). Insert a pin into the holes, fix the lens unit, and stretch the wire.

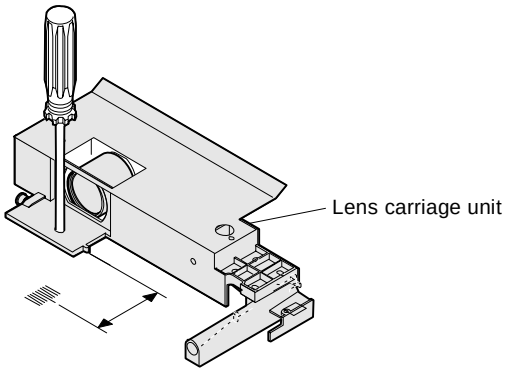

② Under the above state, fit the zooming cam drive gear hole with the No. 4/5 drive unit base hole A (by inserting a pin, etc.), and insert the zooming can drive gear into the shaft.

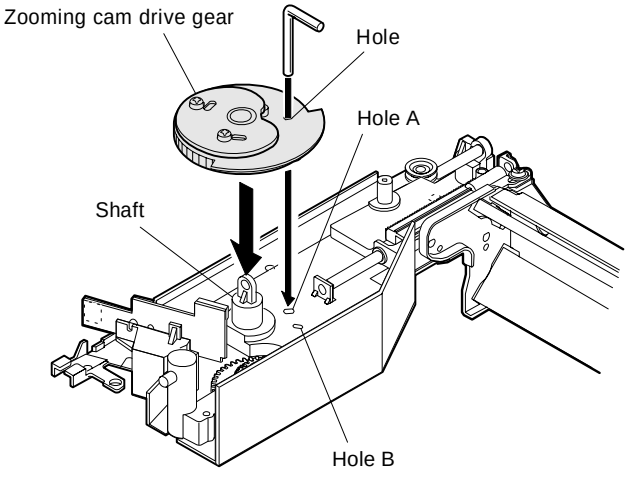

③ Remove the pin which fixes the lens unit and the zooming cam.

④ Manually turn the zooming can drive gear to fit the zooming cam drive gear hole and No. 4/5 mirror drive unit base hole B.

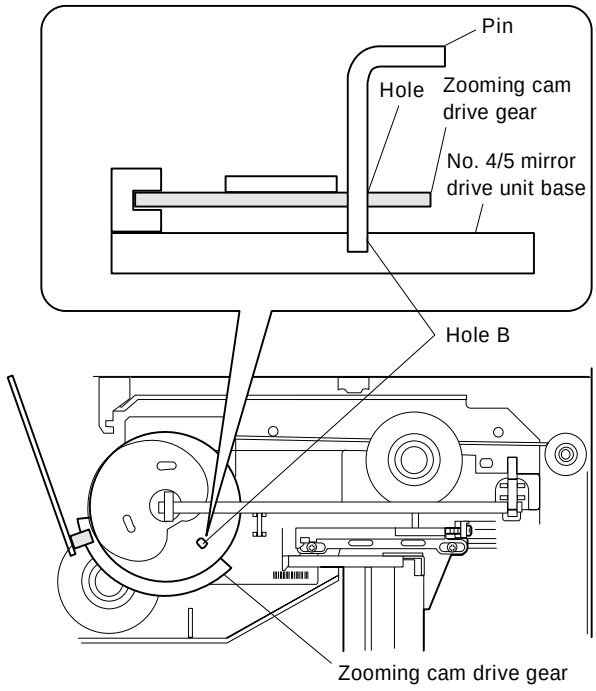

⑤ Install No. 4/5 mirror drive shaft unit and the rack.

∗ When installing the rack, be sure to fit No. 4/5 mirror unit projection with No. 4/5 mirror drive shaft unit hole.

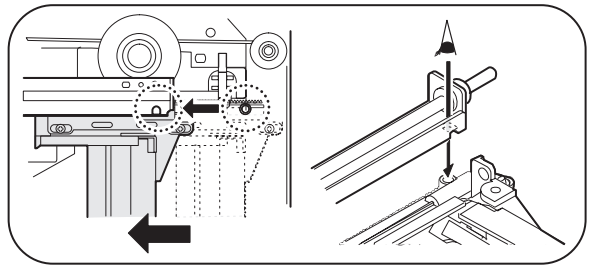

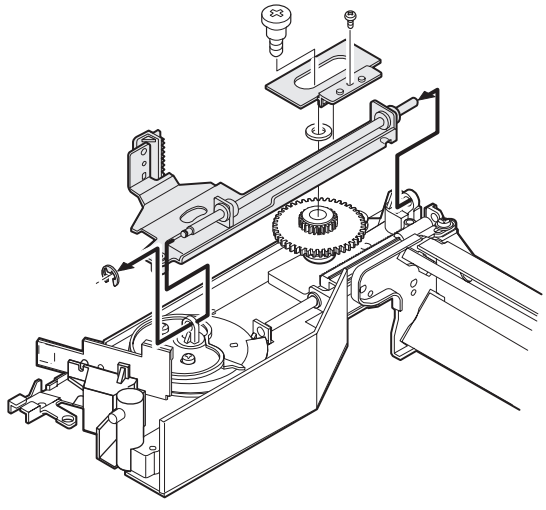

⑥ Loosen the zooming cam screw, and fit the mark of zooming cam drive gear with the mark of No. 4/5 drive shaft.

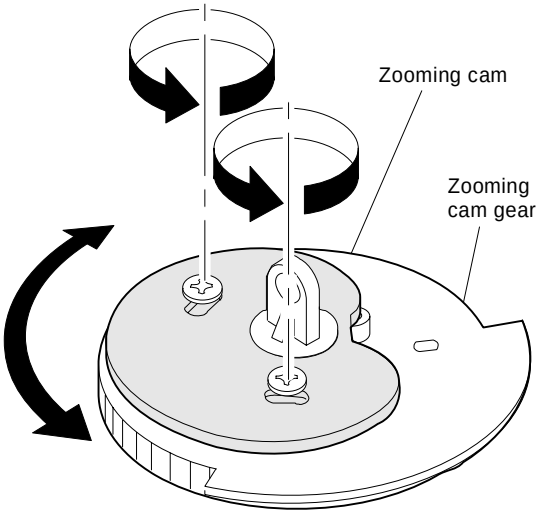

∗Do not move the zooming cam gear at this time.

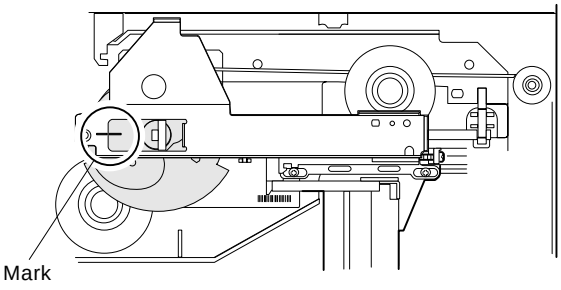

∗ After this procedure, be sure to perform the optical system adjustments (focus adjustment, etc.). (Refer to [7] ADJUSTMENTS.)

7) Lens unit replacement

A. Lens removal

① Remove the lens wire. (Refer to the procedure of "A. Lens wire removal" in 16) Lens wire replacement.)

② Hold the lens drive shaft with radio nippers and remove it.

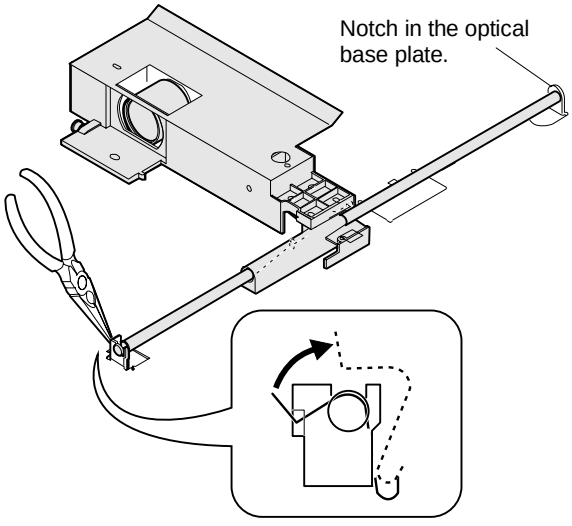

③ Remove the lens drive shaft from the notch in the optical base plate. The lens unit is removed at that moment.

B. Lens unit installation

Reverse the disassembly procedures. (Refer to (6)-B. Lens wire stretching.)

5. High voltage section

Clean the MC case, and the TC/SC case every 50K copies. Clean the screen grid, the charging plate (saw teeth), and the TC/SC wire every 50K copies, and replace them every 100K copies.

5-1. Main charger (MC) unit

① Open the front cover.

② Hold the MC unit lock section, and pull out the MC unit.

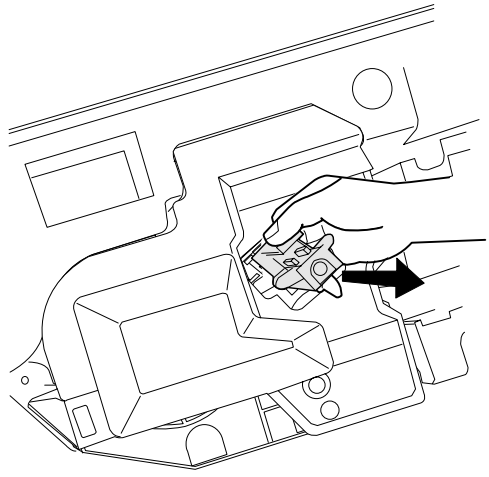

③ Loosen screws Ⓐ and Ⓑ, and remove screen grid Ⓔ.
(When attaching the screen grid, tighten screw Ⓑ until the marking position Ⓕ of grid holder Ⓒ in the above figure is aligned with marking position Ⓕ of MC holder Ⓓ, and tighten screw Ⓐ.)

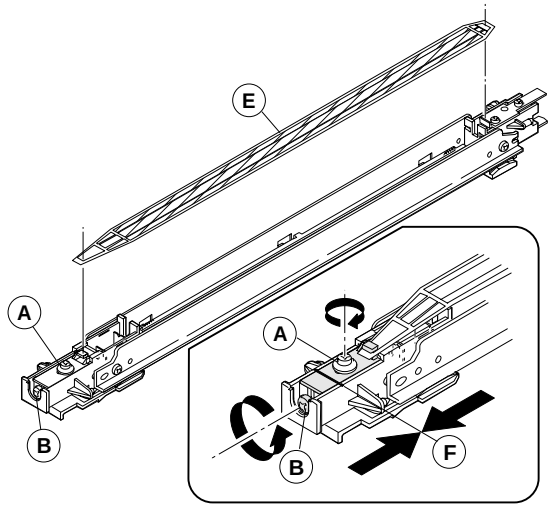

④ Remove the screw and remove the charging plate (saw teeth) ass'y.

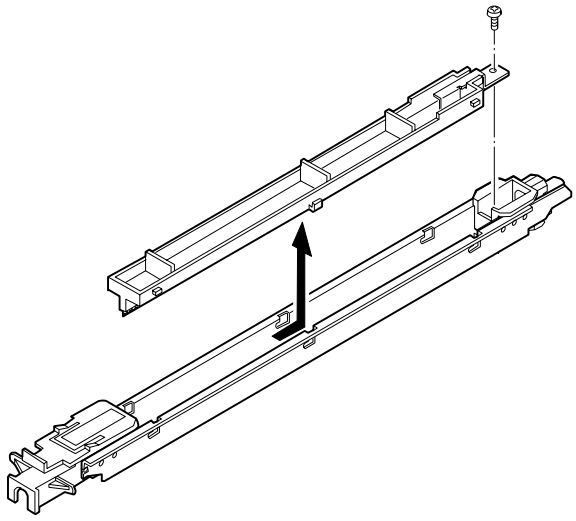

(Cleaning/replacement and note)

① When attaching the screen grid, be careful not to deform and dirt the screen grid. Check that the screen grid is securely in position.

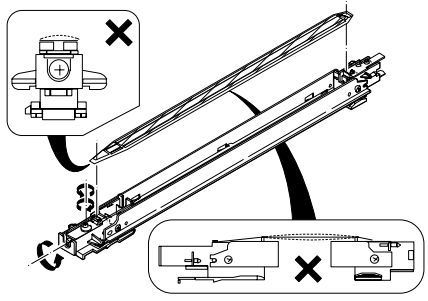

② Be careful not to deform the saw teeth edge of the saw teeth ass'y.

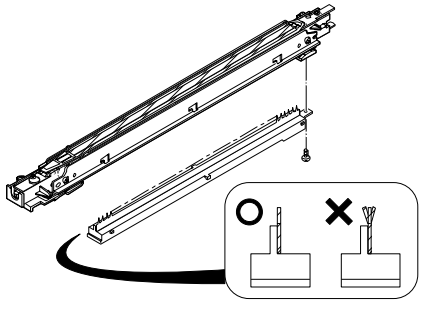

③ Do not touch the inside (saw teeth ass'y) of the MC case, the screen grid, and the saw teeth.

④ To clean the MC saw teeth, push styrene foam onto the saw teeth at right angles and remove dirt.

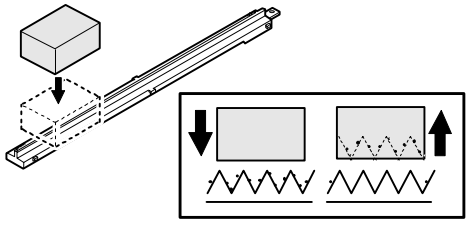

5-2. Transfer/separation charger (TC/SC) unit

① Open the font cover, open the body up.

② Push TC/SC unit pawl sections Ⓐ (2 positions) and lift the front side and pull it out.

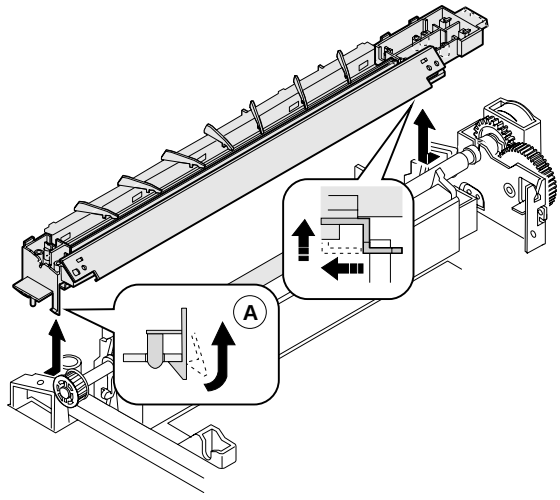

(Cleaning/replacement and precautions)

① Set the charger SP length to 17 ±1.0mm.

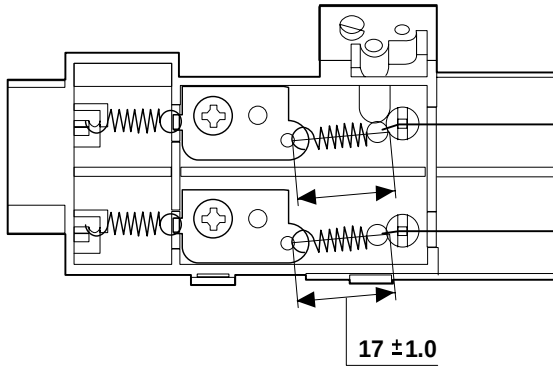

② The charger wire must be free from distortion and deformation, and must be in the wire positioning groove of each holder.

③ The charger case must be free from oil, dirt or adhesion of foreign material.

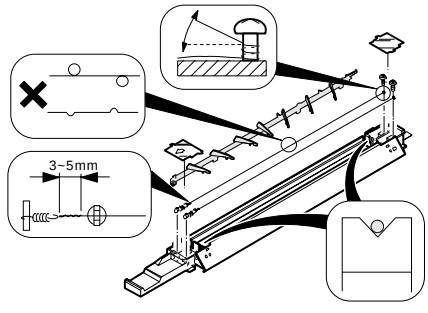

④ Clean the wire with alcohol.

⑤ When installing the unit to the body, check that the grounding spring is in contact with the TC/SC case (metal section) on the rear and the front sides. (Visually check, and push the center of the TC/SC unit to check that it can be moved up and down.)

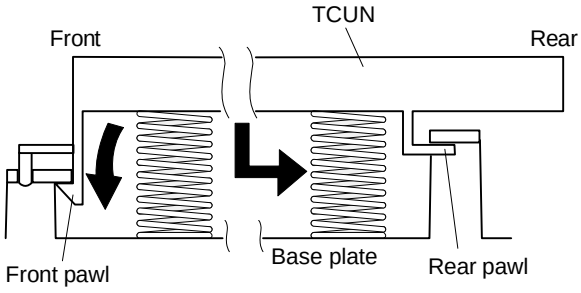

⑥ Transfer mylar lower

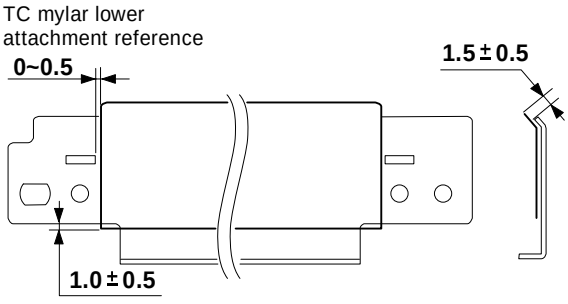

6. Process section

6-1. Process unit

① Open the front cover, remove the developing unit, and open the clamshell.

② Remove process cover Ⓐ. (Loosen the screw and release the lock pawl to remove.)

③ Loosen two blue screws which are fixing the unit. Remove one screw, disconnect one connector, and remove unit Ⓑ. (Do not hold the toner transport pipe.)

<Note> Remove the developing unit in advance.

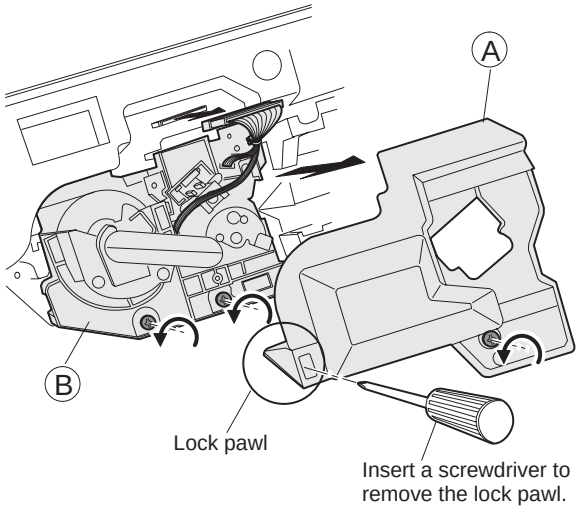

6-2. Waste toner bottle replacement (required when waste toner full detection/maintenance)

① Take out the process unit as shown above,

<Note> If the unit is removed by holding the toner transport pipe, toner is spilled. Avoid this.

② Remove the bottle cover. (2 screws)

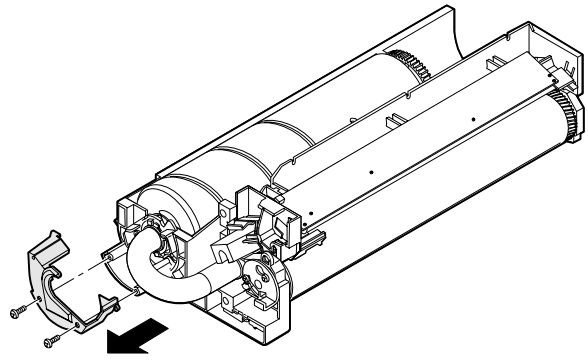

③ Rotate waste toner bearing 1 Ⓐ 90 degrees counterclockwise. Hole the base of toner transport pipe Ⓑ and pull it out. (At this time, toner may be spilled. Put a sheet under the pipe.

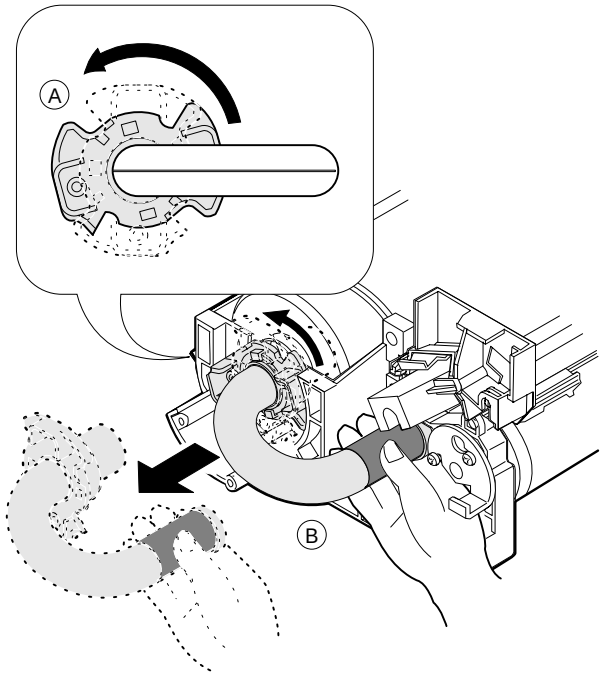

④ While pushing waste toner bottle in the direction of Ⓐ and lift it and remove.

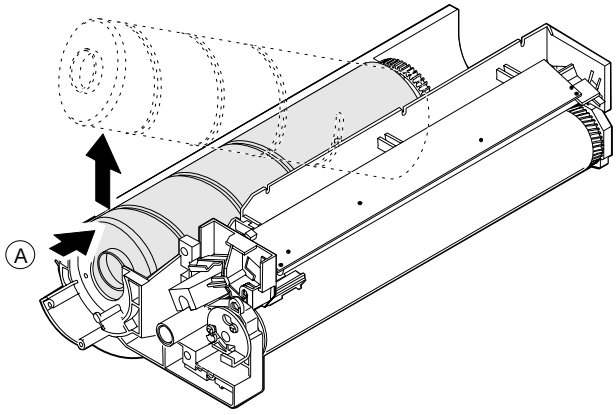

(Note for assembly/maintenance)

① As shown in the figure below, attach so that two projections of gear 19T ㊸ are on the rear frame side (on the screws supporting plate ㊷ side).

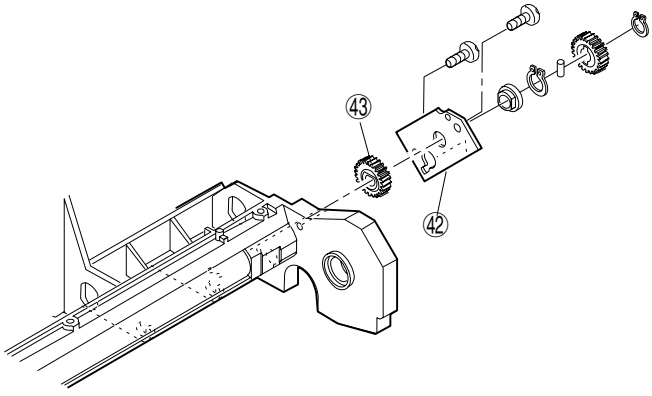

② Replace the waste toner bottle when waste toner full is detected or at 50K maintenance. At this time, clean and remove the waste toner from waste toner pipe Ⓐ.

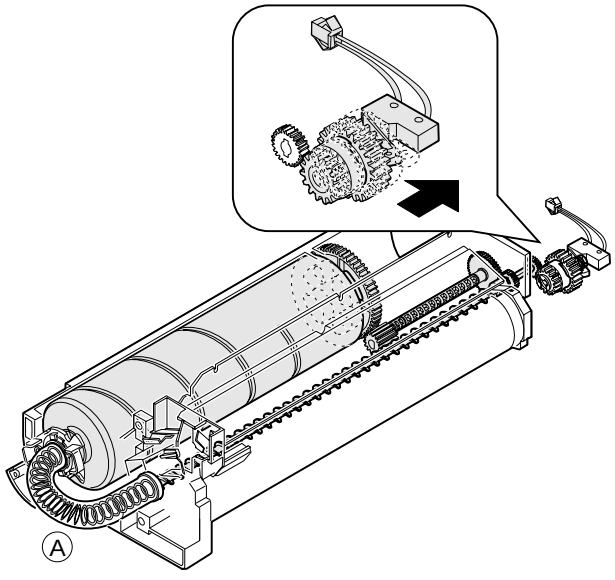

6-3. Drum (Replace every 60K copies)

① Remove the process unit from the copier. (Refer to 6-1.)

② Loosen two blue screws which are fixing the drum, rotate the plate slightly to the right and pull it out.

③ Remove the drum.

<Note> Be careful not to scratch the drum.

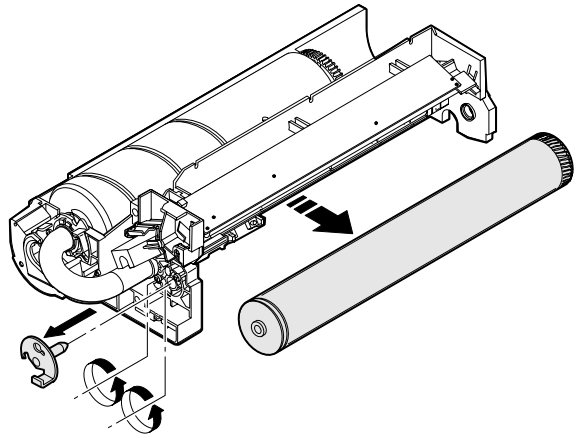

6-4. Blank lamp unit (Clean every 60K copies.)

① Remove three blue screws which are fixing the process unit holder, slide the holder and remove it.

② Tighten the blank lamp unit position adjustment screw completely, and remove the unit rear side, then loosen the screw.

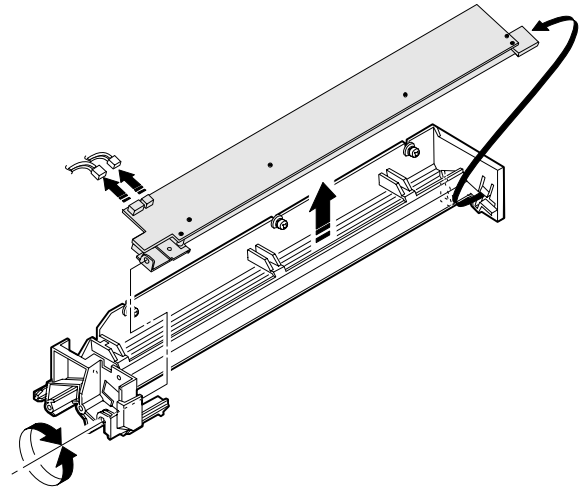

③ Remove two connectors of the blank lamp PWB, and remove the blank lamp unit.

<Note> When the unit is installed or replaced, adjust according to "Blank lamp position adjustment" in [7] ADJUSTMENTS.

6-5. Discharge lamp unit (Clean every 60K copies.)

① Remove three blue screws which are fixing the process unit holder, slide the holder and remove it.

② Remove the discharge lamp unit. (one screw, one connector)

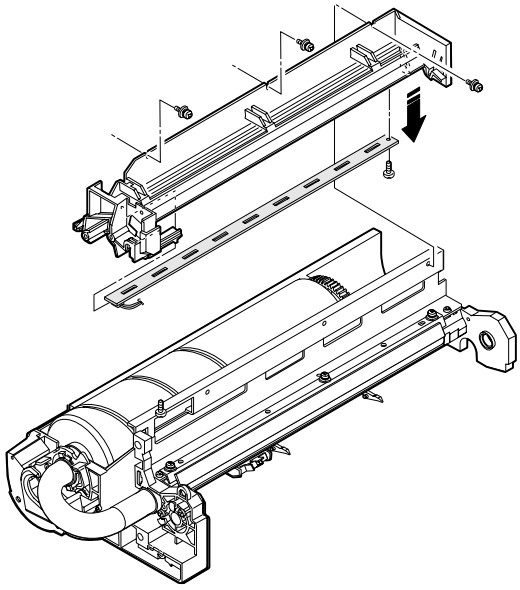

6-6. Cleaner blade (Replace every 60K copies.)

① Remove the holder from the process unit. (3 blue screws)

② Remove the cleaning blade. (3 blue screws)

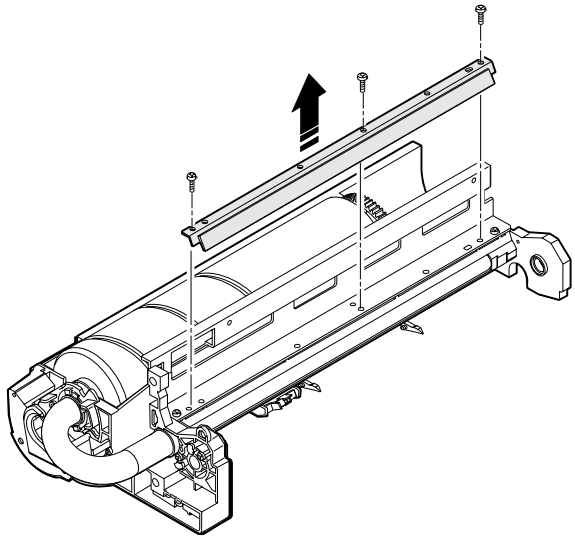

6-7. Drum separation pawl (Replace every 60K copies.)

Slide and remove the blue pin to remove the separation pawl.
Replace the star-shape washer with a new one if it is worn down.

6-8. Process control PWB (Clean the sensor section every 60K copies.)

① Remove the holder from the process unit (3 blue screws), and remove the connector of the process control PWB.

② Remove the holder of the process control PWB (2 screws), and remove the PWB (2 screws).

6-9. Drum mark sensor PWB (Clean the sensor section every 60K copies.)

Remove the holder from the process unit (3 blue screws), and remove the marking sensor PWB. (1 screw).

6-10. Toner reception seal (Replace every 60K copies.)

Remove the drum and remove two screws to remove the seal.

7. Developing section

A. DV side seals F/R replacement (Replace every 120K copies.)

① Remove two screws which are connecting the hopper section and the developing unit, and separate them each other.

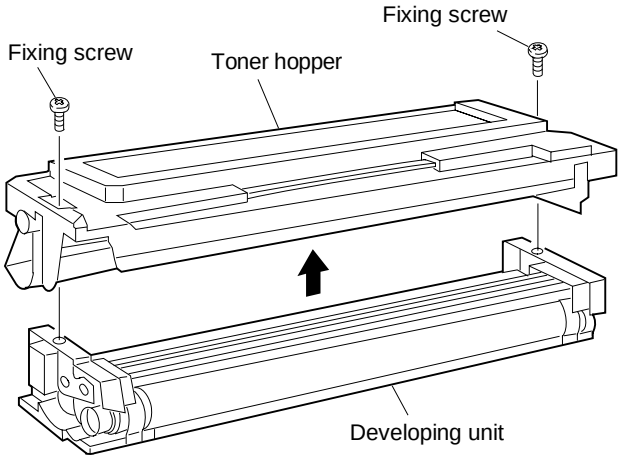

② Replace the developing unit side seals F/R as shown below.

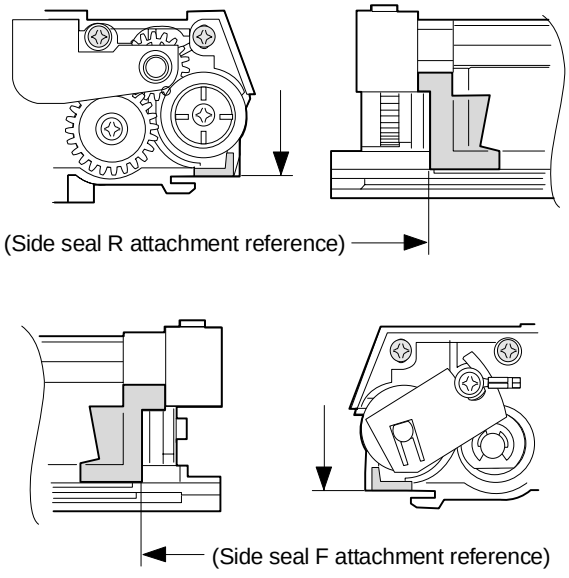

Note: Since the developing side seals are in the vicinity of the drum, be careful of peeling off and defective attachment.

B. DB blade replacement (Replace every 120K copies.)

① Remove the old DV blade from the DV cover. (Remove the duplex tape.)

② Attach the new DV blade with the pasteboard as shown below. (Attach the DV blade to the reference of A and the inscribed line (凸0.2). Do not allow extrusion from the edge. Do not allow covering the inscribed line. The allowable reference shift is within 0.5mm from the inscribed line. Attach the sheet without being wavy.

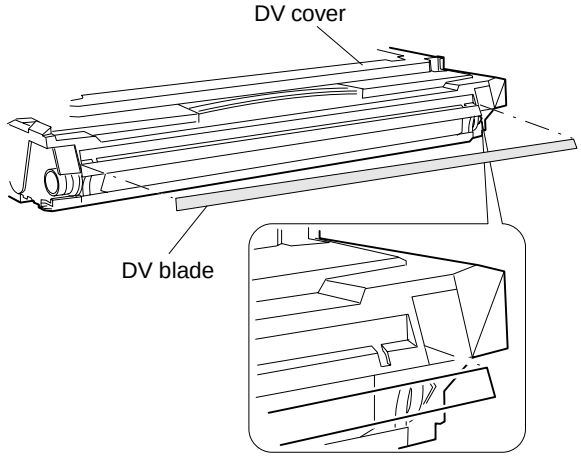

③ Remove the base pasteboard from the DV blade.

Note: If the pasteboard is not removed, the drum is scratched.

C. V ring attachment

Be careful of the direction of the V ring when attaching it to the MG roller and the MX roller.

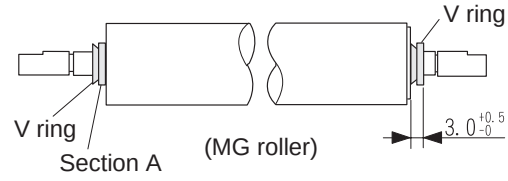

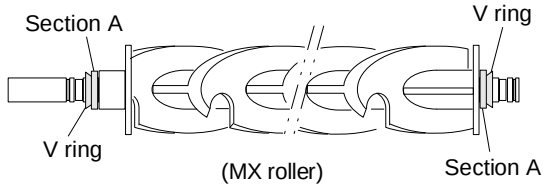

① As shown above, be careful of the direction of the V ring.

② Do not allow clearance at section (A) between the V ring and each roller.

③ Attach the MG roller and the right V ring as shown in the figure. (3.0^{+5}_{-0})

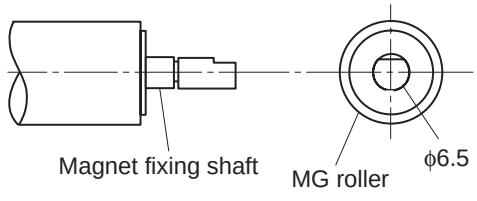

※ Note: When attaching the MG roller, put the milled surface up.

D. Note for toner hopper drive gear (31T) and stirring shaft attachment

- Be careful of the stirring shafts A and B attachment positions.

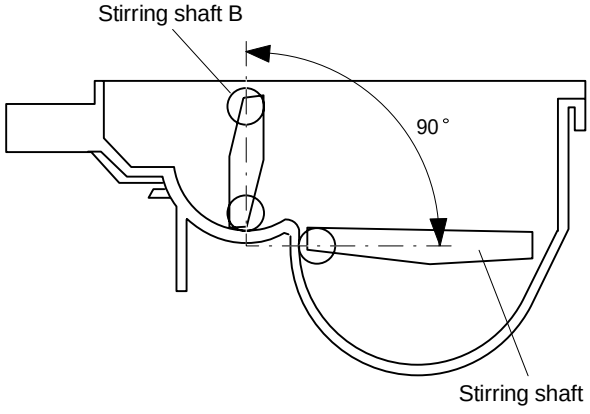

Attach so that the angle between stirring shaft A and B is 90 degrees.

- When attaching the toner hopper drive gear (31T), be careful of the E-ring stop position as shown below. (If the E ring is on the milled surface, it is apt to disengage.)

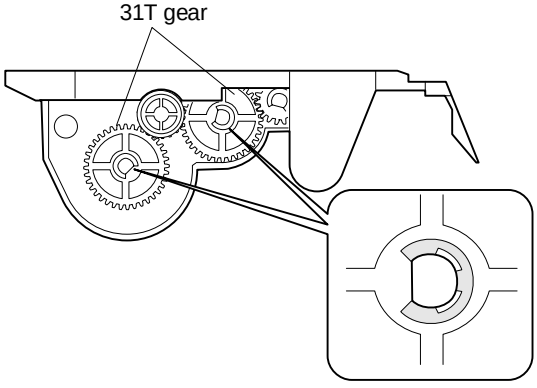

8.Operation panel/intermediate cabinet

① Open the front cabinet.

② Remove two screws Ⓐ, two screws Ⓑ, and two harnesses connected to the operation panel unit.

② Remove the operation panel unit.

③ Remove the process cover unit, remove six screws Ⓒ and two connectors, and remove the intermediate cabinet.

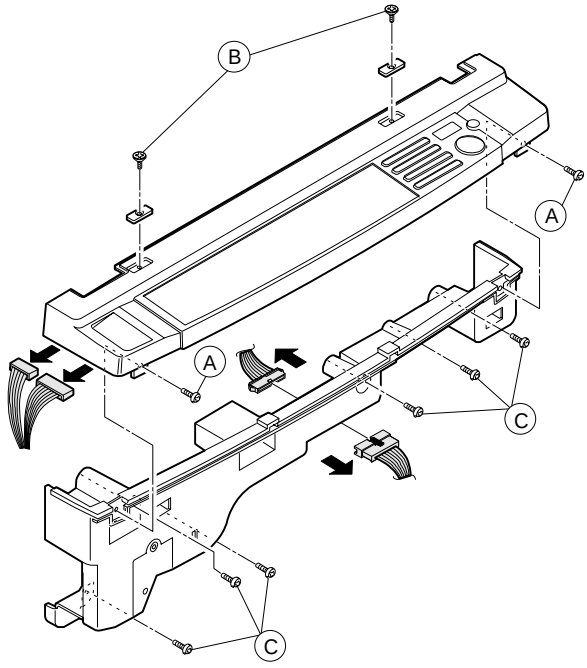

9. Frame major parts

9-1. Cooling fan motor replacement

A. Cooling fan motor removal

① Remove the original cover, the original guide, the upper cabinet left, and the upper cabinet right.

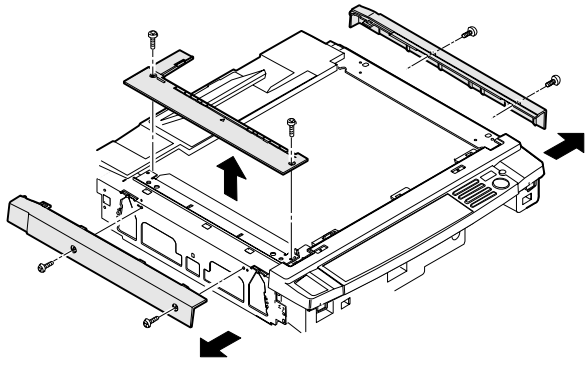

② Remove the upper cabinet and the rear cabinet.

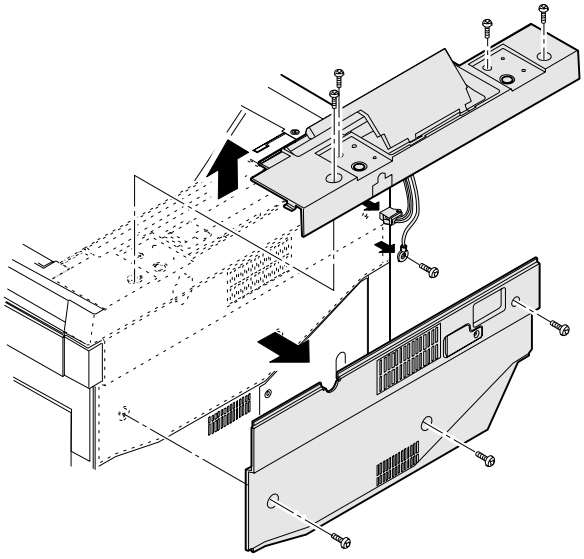

③ Remove the cooling fan from the CFM duct. (2 screws, 1 connector)

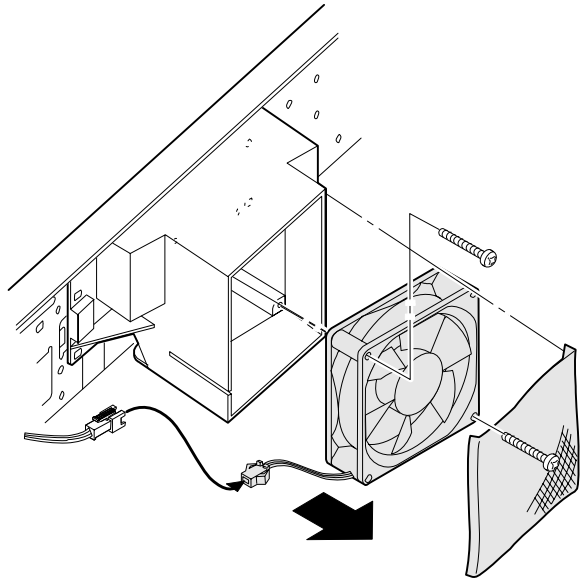

B. Cooling fan motor

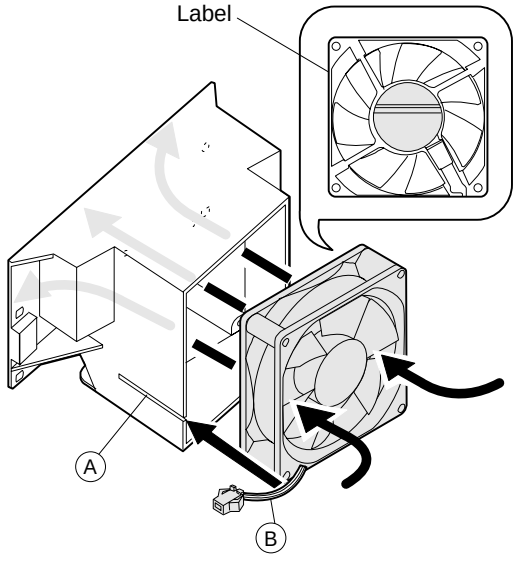

Reverse the removal procedures.

<Note> When attaching the cooling fan motor, put the harness section Ⓑ and the CFm duct groove section Ⓐ in the same direction, and pass the harness in the groove.
Check that the fan center label is on the back when viewed from the rear of the machine.
Check that air blows in the arrow direction (toward the machine).

9-2. Power unit

① Remove the rear upper and lower cabinets.

② Remove two connectors, hold the PWB fixing bush with radio nippers and slide it toward the paper exit side to remove.

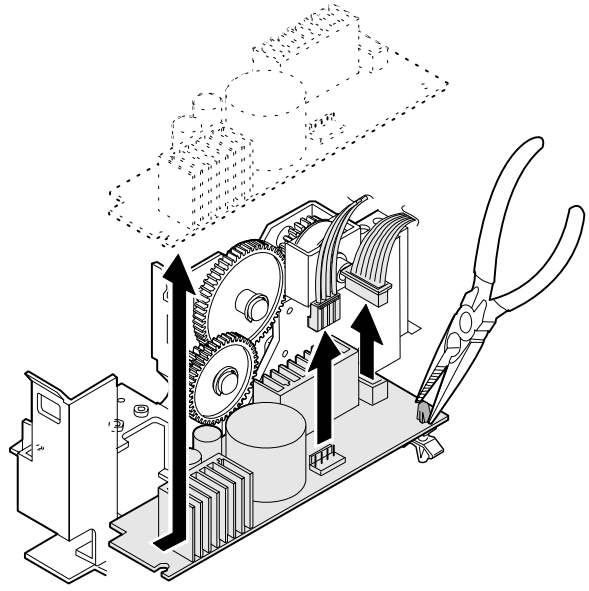

9-3. Tray size detecting PWB

① Remove the rear upper/lower cabinets.

② Remove the power unit.

③ Remove one fixing screw, one connector, and remove the tray size detection PWB.

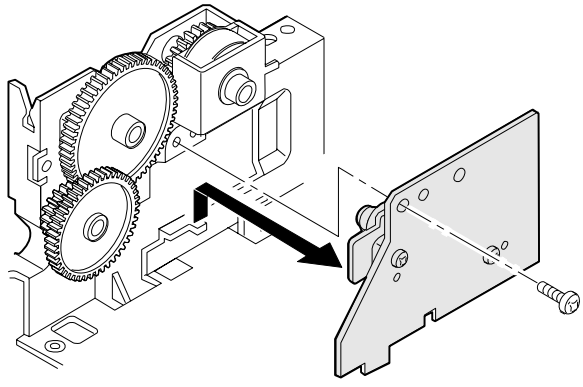

9-4. Main PWB unit

① Remove the rear cabinet upper.

② Disconnect all the connectors (6 connectors) connected to the main PWB.

③ Remove the main PWB plate (one screw).

④ Remove the main PWB from the plate. (2 screws)

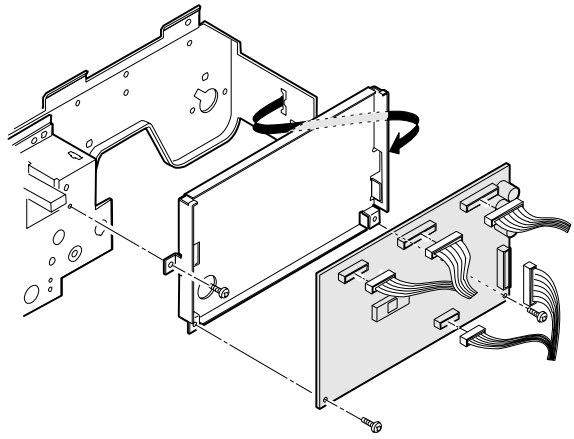

9-5. AC power PWB

① Remove the main PWB unit. (Refer to 9-3.)

② Remove the rear cabinet lower.

③ Remove all the connectors (11 connectors) of the AC power PWB and remove one grounding wire connected between the AC power PWB and the copier chassis.

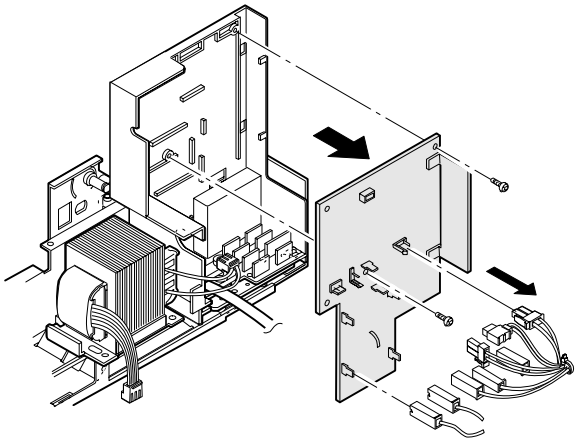

④ Remove two screws which are fixing the AC power PWB, and remove the PWB.

9-6. Ozone filter (Check every 60K copies, and replace every 300K copies.)

① Remove the upper cabinet left, and the left cabinet. (5 screws)

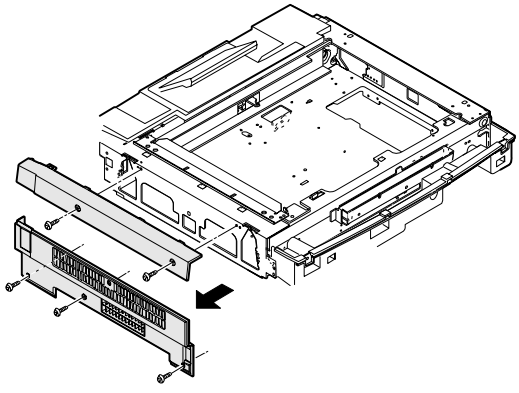

② Remove the ventilation fan motor (2 screws).

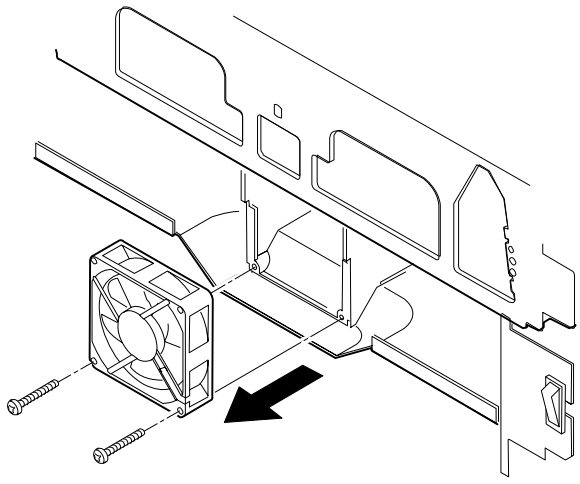

③ Remove the process unit. Insert a screwdriver from the process unit position into the copier to push out the oZone filter.

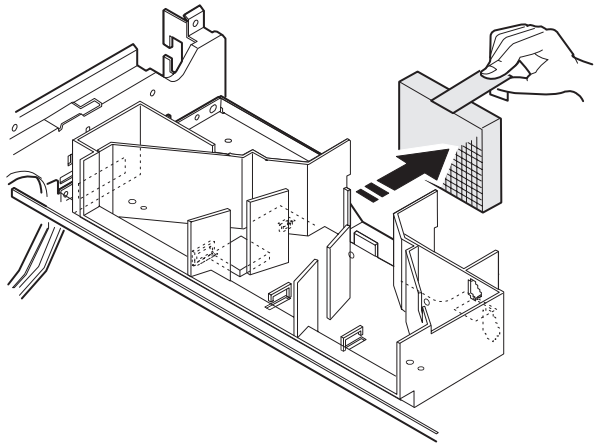

10. Multi paper feed unit

10-1. Separation roller

① Remove three screws and remove the paper feed/take-up roller ass'y.

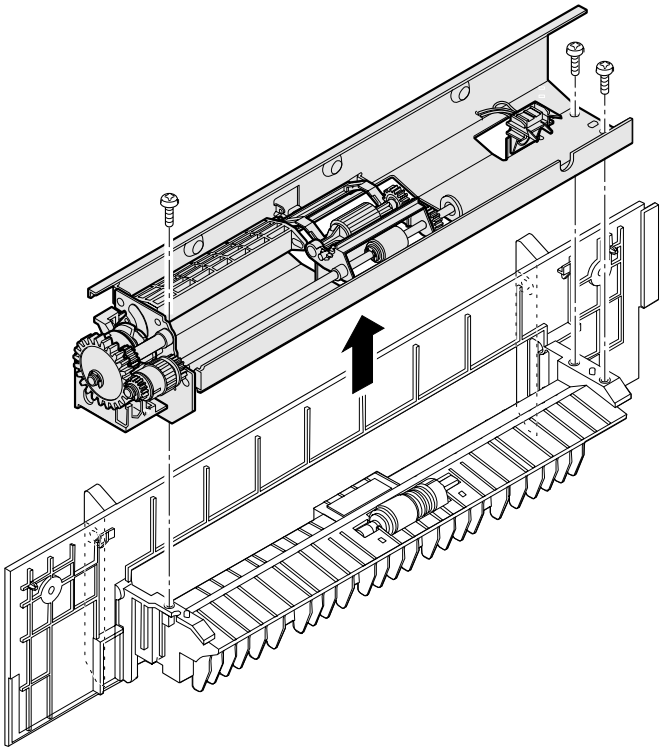

② Remove the separation roller.

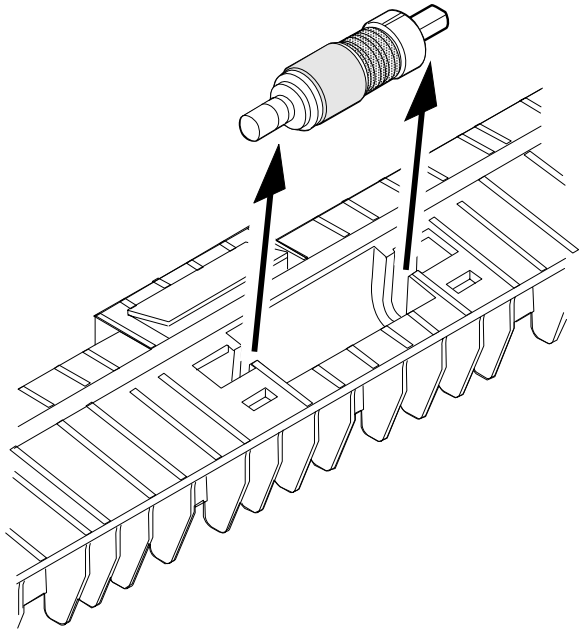

※ When attaching the roller, engage the D-cut section with the groove.

10-2. Take-up roller/paper feed roller

① Remove the manual feed arm spring, the bearing stopper, and the E-ring. (At this time, slide the bearing from the guide section in advance.)

② Lift the manual feed stopper, and remove the manual feed shaft ass'y.

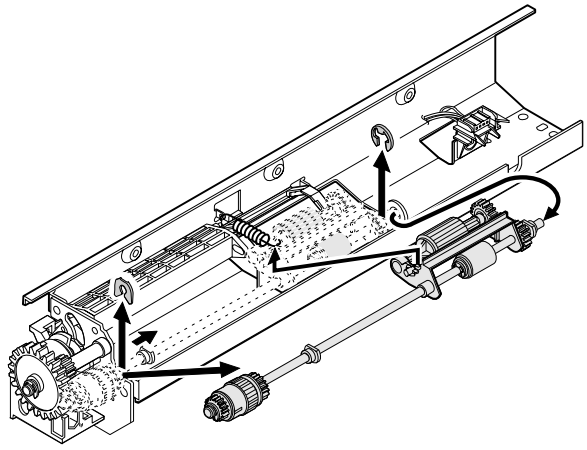

③ Remove the take-up roller.

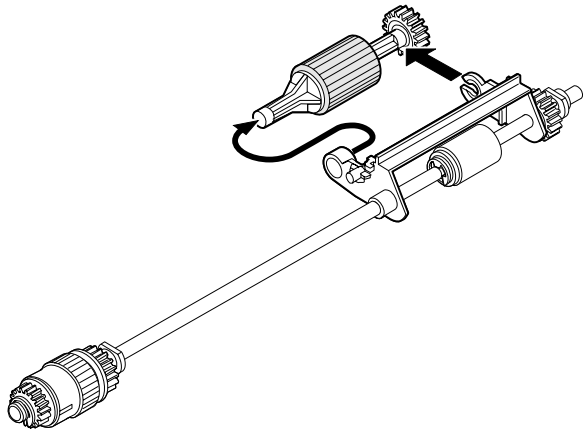

④ Remove three E-rings, and remove the manual feed shaft. then the paper feed roller will come off.

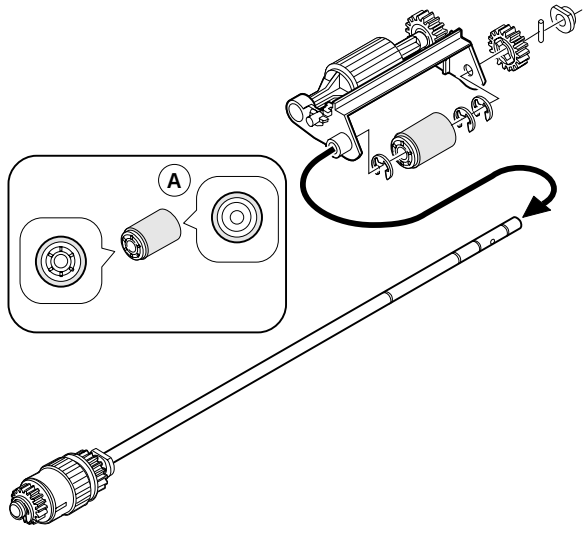

(Note for assembly)
The paper feed roller is provided with the one-way clutch, which must be installed in the proper direction. Attach so that the side where there is the one-way clutch (specified with "LOCK") is on the front frame side.

[7] ADJUSTMENTS

1. Developing section

1-1. Developing doctor clearance adjustment

a. If the clearance between the developing doctor and the MAG roller is improper, the following trouble may occur.

- Insufficient coy density
- Background copy
- Toner splash

<Adjustment procedure>

(1) Remove the developing unit from the copier.

(2) Loosen four screws (A) which hold plate D fixed.

(3) Insert two clearance gauges of 0.6mm into the clearance between plate D and the MAG roller.

<Note> For insertion of the clearance gauges, refer to the figure below.

(4) With two clearance gauges inserted, gently press plate D and tighten four screws (A).

(5) Check that the clearances at two points 50 ~ 80 mm from the both ends of the developing doctor are within the specified range (0.6 ± 0.03mm).

<Note 1> When inserting the clearance gauges, be careful not to scratch the plate D and the MAG roller.

<Note 2> When adjusting or checking, be careful not to allow foreign materials (oil, etc.) to attach to the MAG roller sleeve.

(6) After adjustment, apply screw lock to the four screws (A).

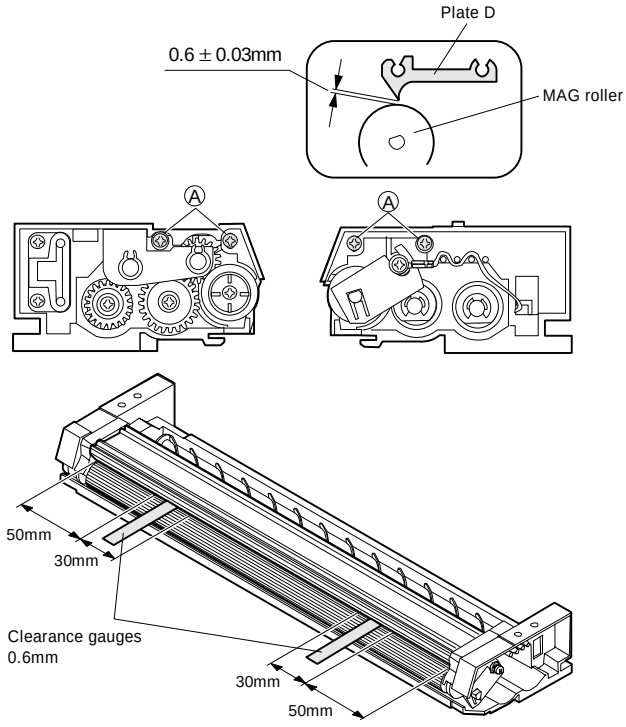

1-2. Developing magnet roller main pole position adjustment

a. If the MAG roller main pole position is improper, the following troubles may occur.

- Insufficient copy density
- Toner splash

<Adjustment procedure>

(1) Remove the developing unit from the copier.

(2) Tie a thread to a needle as shown below.

(3) Hold the thread and bring the needle close to the MAG roller.

(4) Mark the contact point of the thread on the MAG roller sleeve surface.

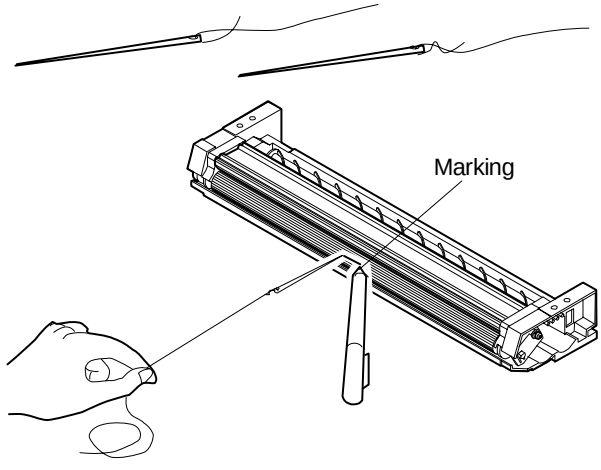

(5) Measure the distance from the marking position to the bottom (A) of the developing unit and check that the distance is 17.6mm. If the distance is not as specified above, loosen the MG adjustment plate fixing screw, move the adjustment plate in the arrow directions and perform procedures (3) to (5) again.

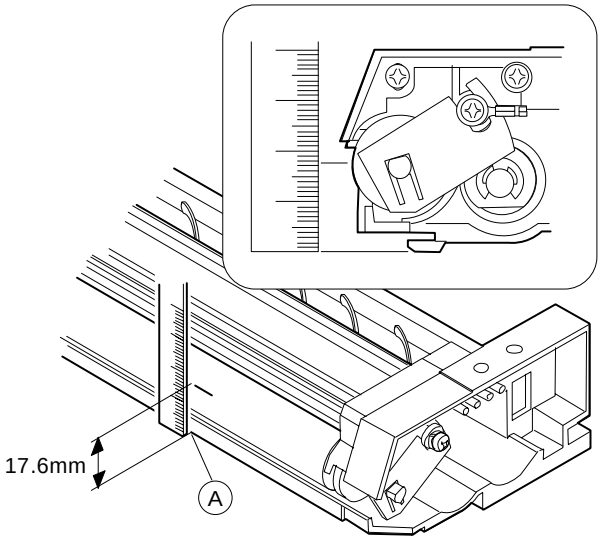

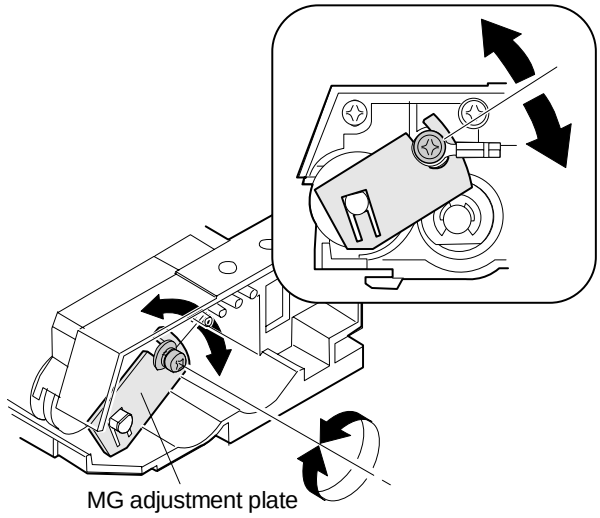

(6) After completion of adjustment, tighten the MG adjustment plate fixing screw. When tightening, check that the bias terminal is as shown below. After tightening the screw, apply screw lock to it.

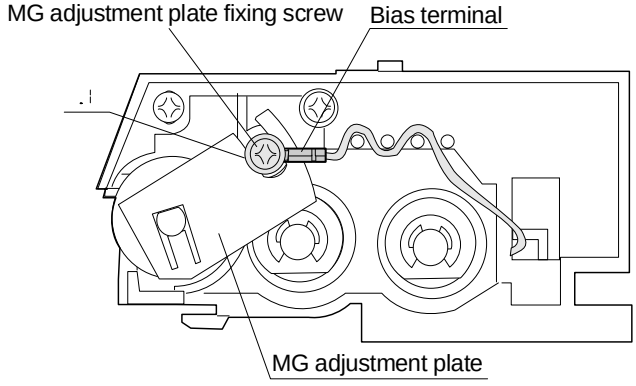

2. Optical system

2-1. Adjustment items

1. Lens reference position adjustment
2. No. 4/5 mirror reference position adjustment
3. Vertical copy magnification ratio adjustment
4. Resolution adjustment
5. Horizontal copy magnification ratio adjustment
6. Comparison table of lens values and simulation input values
7. Vertical skew adjustment
8. Horizontal skew adjustment
9. Center shift adjustment
10. Exposure balance adjustment
11. Copy lead edge adjustment

2-2. Note for adjustments

1. Only the exposure balance adjustment, the blank lamp adjustment, and the copy lead edge adjustment can be performed individually.
   For the other adjustments, follow the flowchart below.

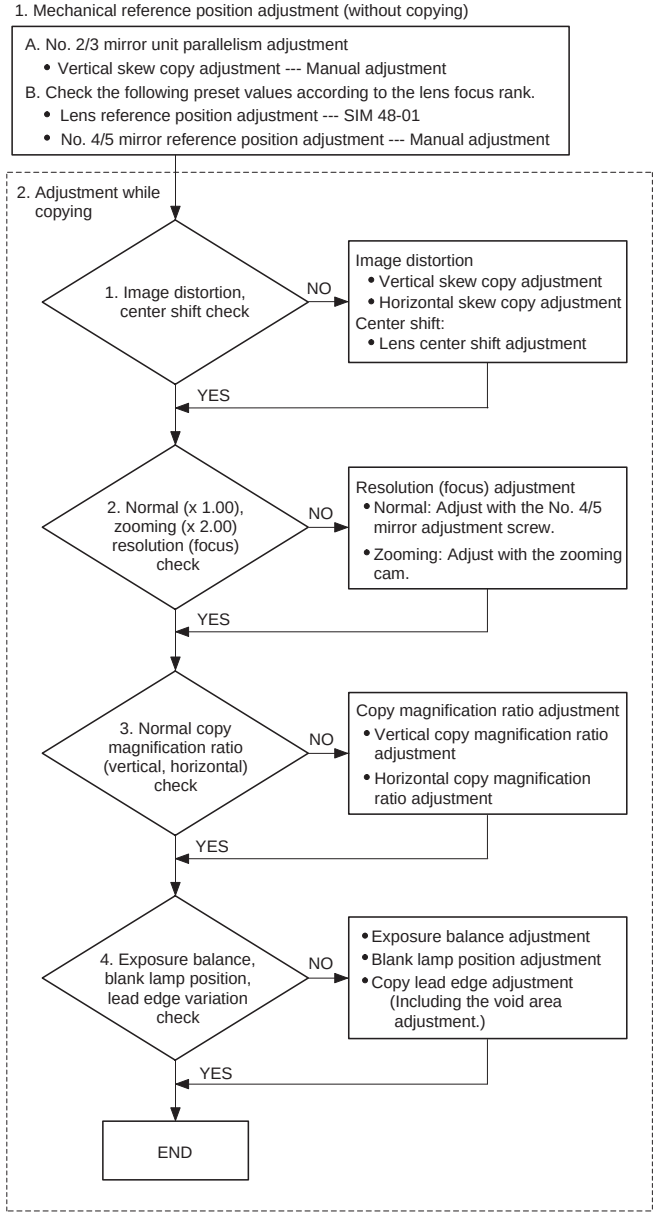

2-3. Adjustment of each section

A. Lens reference position adjustment

In this model, the reference value according to each lens characteristics must be entered. With this value, the lens home position is determined.

<Procedure>

(1) Execute simulation 48-01

- Perform the following key operation.

C — (=↵) — 0/◇ — (=↵) — 4 — 8 — PSW — 1 — PSW

"A" is displayed on the third digit of the copy quantity display, and the previously set value or 50 is displayed on the second and the first digits.

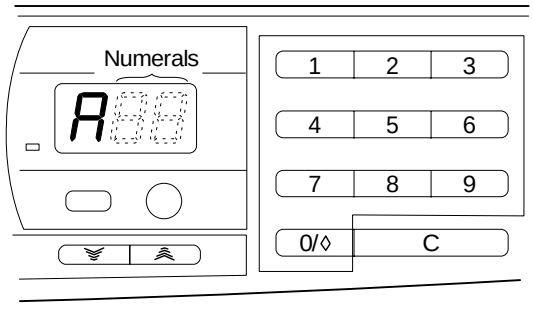

- Substitute the "O – L" value (variation in the distance between the original and the lens) on the lens value label attached to position B shown in the figure below into the following formula, and input the obtained value.

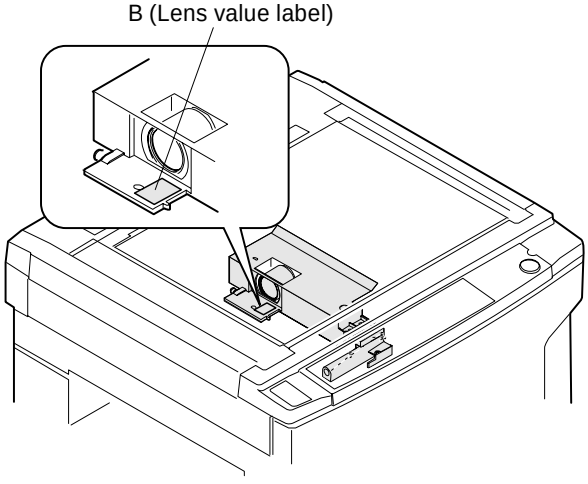

50 – {(O – L value) × 5} = Correction reference value

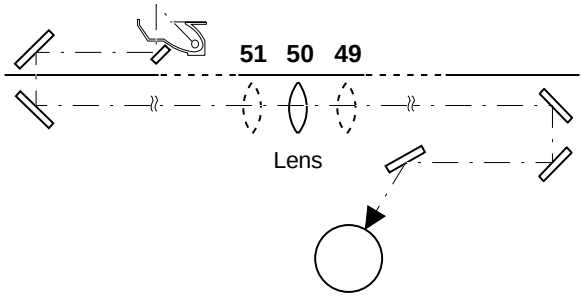

<Example> When the lens value is +1.2;
50 – (1.2 ×5) = 44 (Correction reference value = input value)

<Check after adjustment>

Be sure to check that the magnification ratio cam is at the home position as shown in the figure below.

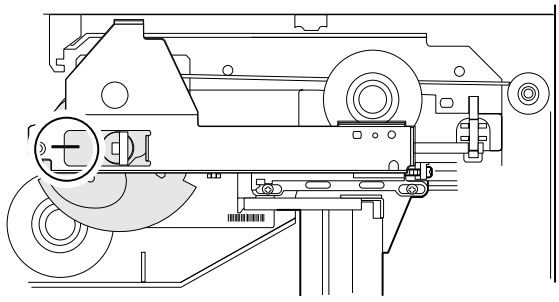

B. No. 4/5 mirror reference position adjustment

<Procedure>

(1) Remove the external fittings.

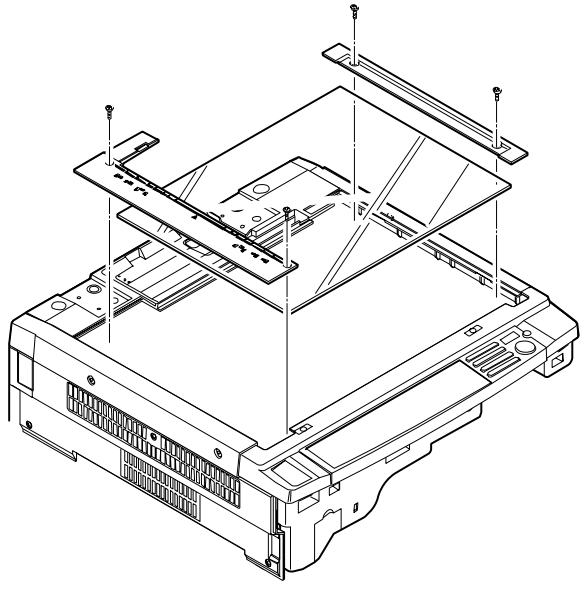

(2) Loosen two screws (A) which are fixing the No. 4/5 mirror and the No. 4/5 mirror drive holder to the No. 4/5 mirror holder.

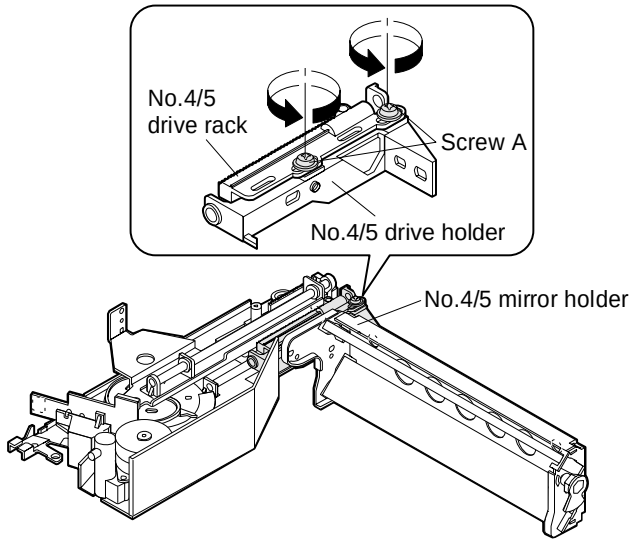

(3) Check to confirm the lens value specified on the lens value label.

(4) Insert a screwdriver into hole (P) in the right rear side (paper feed side) of the optical base plate, and adjust the adjustment screw. The scale on the zoom base at section Q in the figure below determines the position of the No. 4/5 mirror corresponding to the lens value.

<Example> When the lens value is +1.2, loosen the adjustment screw and adjust so that the arrow section of the No. 4/5 mirror drive holder points to the zoom base scale at +1.2.
Turning the adjustment screw clockwise moves the No. 4/5 mirror drive holer arrow section in the (–) direction, and turning it counterclockwise moves the arrow section in the (+) direction.

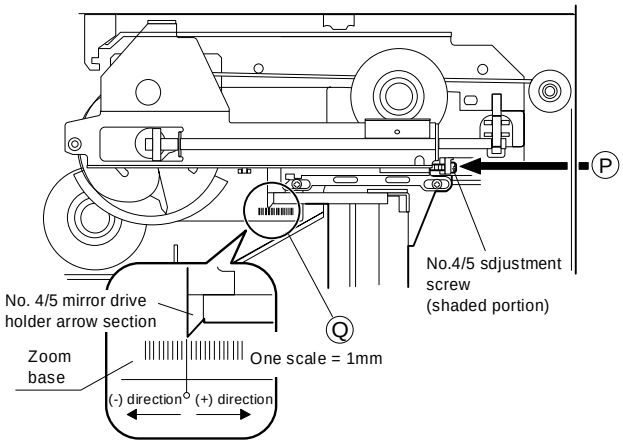

C. Vertical copy magnification ratio adjustment

Be sure to check that mirror bases A, B and C are in parallel and that the focus is proper before executing this adjustment.
This adjustment must be performed in the following cases.

- When the lens home position sensor (LHPS) is replaced or its installation position is changed.
- When the lens is replaced.
- When the mirror base is replaced or its installing position is changed.
- When the main PWB is replaced.
- When the EEPROM inside the main PWB is replaced.

<Procedure>

(1) Put a scale on the original table as shown in the figure below.

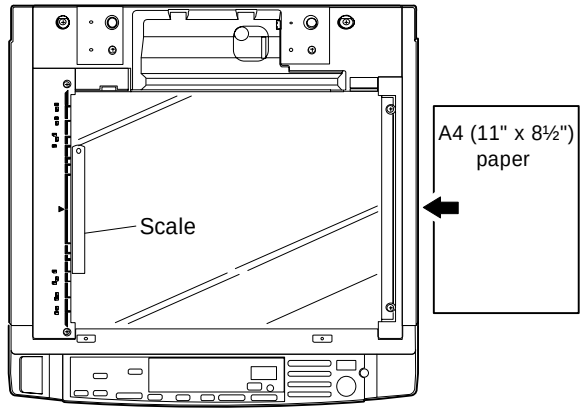

(2) Make a normal copy (100%) on an A4 (11" ×8½") paper.

(3) Compare the scale image length and the scale length.

(When a 100mm scale is used as the original.)

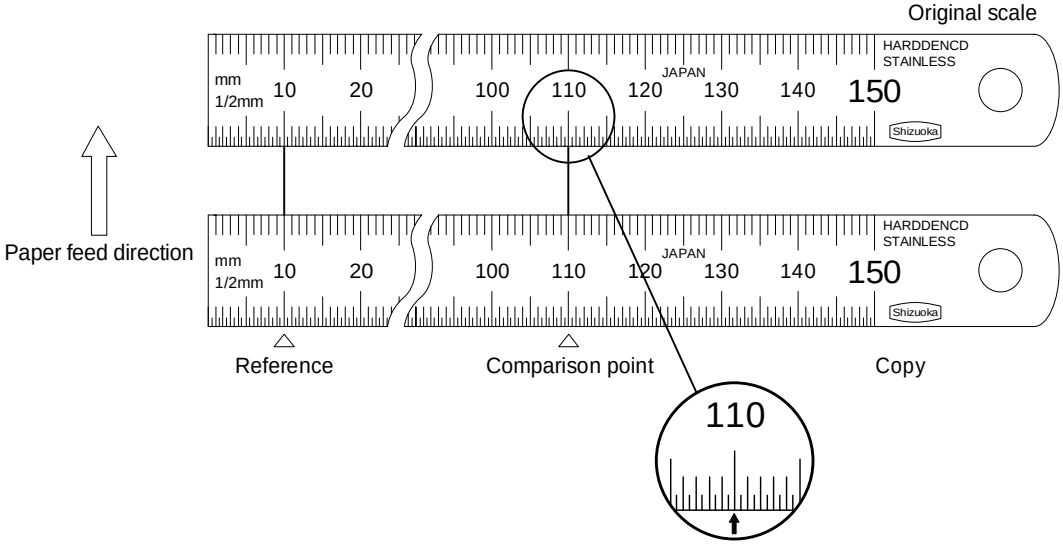

(4) Calculate the copy magnification ratio.

$$\text{Copy magnification ratio} = \frac{\text{Copy image size}}{\text{Original size}} \times 100\%$$

(5) Check that the obtained copy magnification ratio is within the specified range (100 ± 0.8%). If it is within the specified range, go to procedure (7). If not, execute simulation 48-1.

- Perform the following key operation.

C — (=) — 0/◇ — (=) — 4 — 8
— PSW — 1 — PSW

"A" is displayed on the third digit of the copy quantity display, and the previously set value or 50 is displayed on the second and the first digits. (Refer to "D-1. Lens reference position adjustment.")

(6) Perform the magnification ratio adjustment according to the flowchart below.

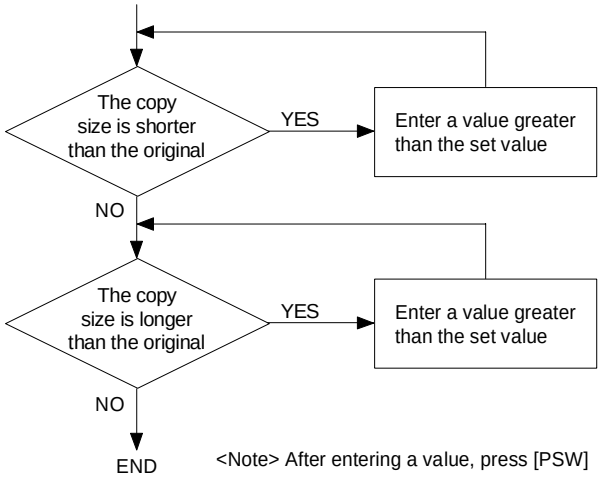

<Note> After entering a value, press [PSW]

(7) Copy the scale at 200%.

(8) Check that the copy magnification ratio is within the specified range (100 ±0.9%). If it is within the specified range, go to procedure (9). If not, enter [%] key in simulation 48-1 as follows:

- Perform the following key operation.

C — (=) — 0/◇ — (=) — 4 — 8
— PSW — 1 — PSW — %

"B" is displayed on the third digit of the copy quantity display, and the previously set value of 50 is displayed on the second and the first digits.

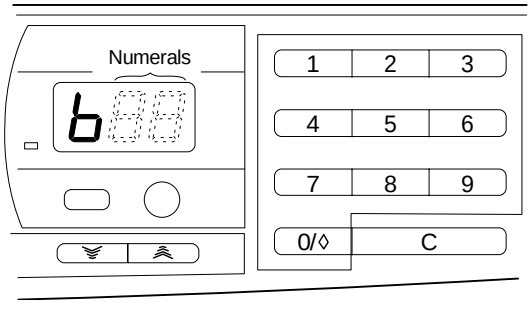

(9) Adjust the copy magnification ratio according to the flowchart shown in (6).

(10) Make a copy at 50%.

(11) Check that the copy magnification ratio is within the specified range (100 ±0.9%). If it is in the specified range, the vertical copy magnification ratio is completed. If not, enter [%] in simulation 48-1 as follows:

- Perform the following key operation.

C — (=) — 0/◇ — (=) — 4 — 8
— PSW — 1 — PSW — % — %

"C" is displayed on the third digit of the copy quantity display, and the previously set value or 50 is displayed on the second and the first digits.

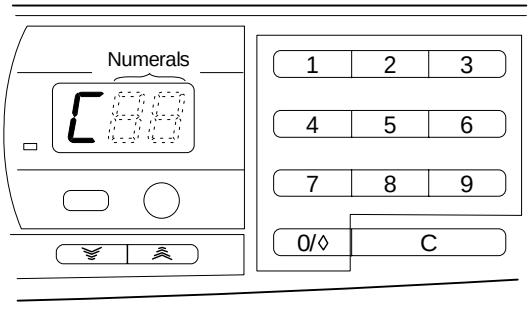

(12) Adjust the copy magnification ratio according to the flowchart shown in (6).

D. Resolution adjustment (Focus adjustment)

Normal copy ratio focus adjustment is made with No. 4/5 mirrors. Enlargement/reduction focus adjustment is made with the zooming cam.

① Normal copy ratio focus adjustment

(1) Check the "O.L value" on the lens value label of the lens unit, and fit the reference position of No. 4/5 mirror. (Use the No. 4/5 mirror adjustment screw for positioning. Loosen screw A at this time.)

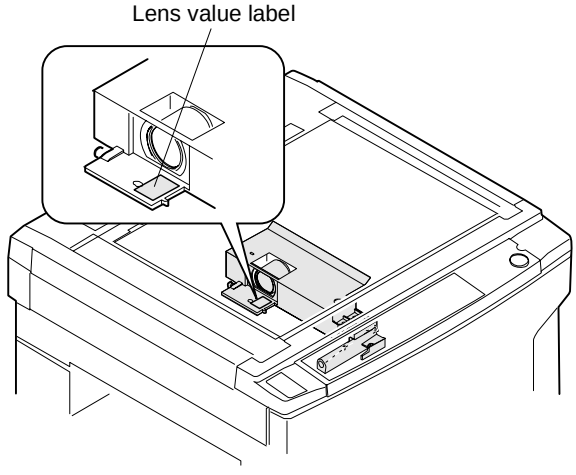

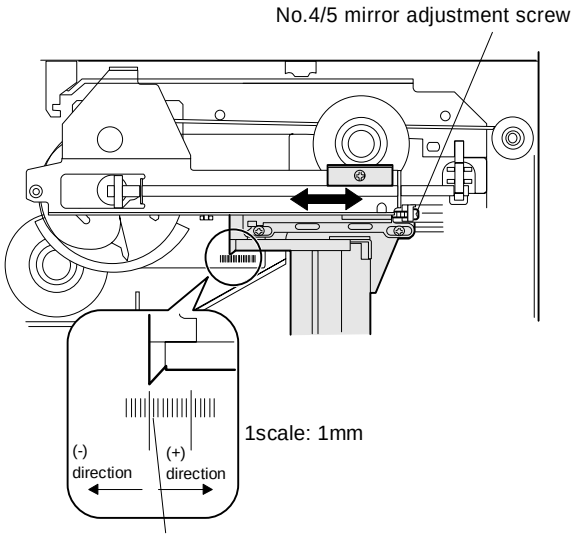

Example: In the case of O.L value +1.0, this position is the reference position.

(2) Turn off/on the power to initialize the lens and No. 4/5 mirror unit. Check the focus in the normal ratio.

(3) If the focus is improper, perform the focus adjustment of the normal ratio as follows:

(3)-1 Make a copy of the test chart on an A4 or 8 1/2″ × 11″ paper.

(3)-2 Check the resolution at the four corners and the center of the copy image. If the resolutions are within the specified range, the adjustment is completed. If not, adjust No. 4/5 mirror adjustment screw. (Loosen screw A at that time.)

(3)-3 If the resolutions are not within the specified range, use the No. 4/5 adjustment screw to adjust. (Loosen screw A at this time.)

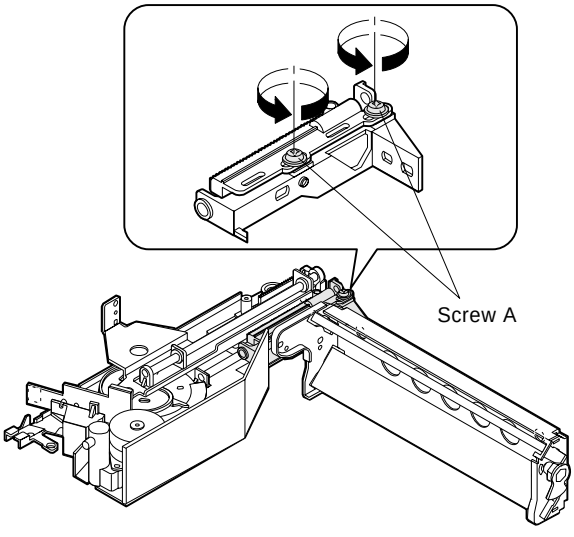

(4) Turn off/on the power to initialize the lens and No. 4/5 mirror unit. Check the focus in the normal ratio again.

Resolution standards (Unit: lines/mm)

	Copy center	Corners
Normal (100%)	5.0	4.5
Enlargement (200%)	5.0	4.5
Reduction (50%)	3.2	2.8

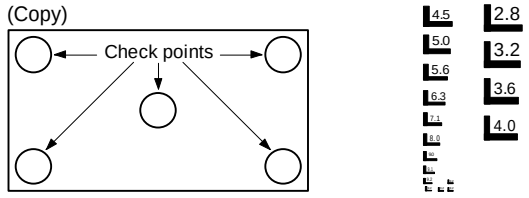

② Perform the focus adjustment in the enlargement mode (200%).

(1) Make a copy of the test chart on an A4 or 8 1/2″ × 11″ paper.

(2) Check the resolution at the four corners and the center of the copy image. If the resolutions are within the specified range, the adjustment is completed. If not, adjust by shifting the relative position of the zooming can to the drive cam.

(3) Turn off/on the power to initialize the lens and No. 4/5 mirror unit. Check the focus in the enlargement mode again.

Resolution standards (Unit: lines/mm)

	Copy center	Corners
Normal (100%)	5.0	4.5
Enlargement (200%)	5.0	4.5
Reduction (50%)	3.2	2.8

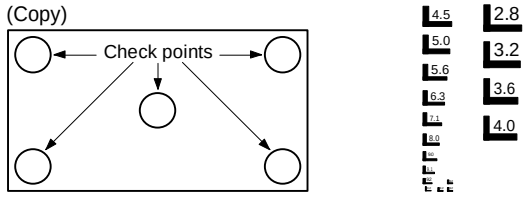

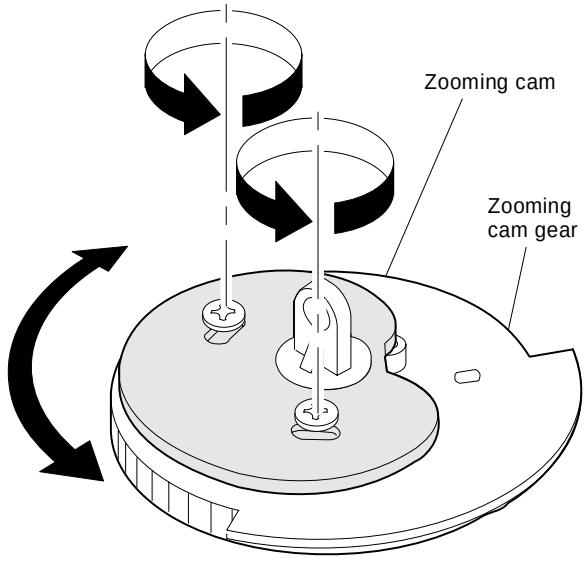

∗Do not move the zooming cam gear at this time.

③ When the zooming can position is changed in ②, check the focus in the normal mode again. If the resolutions are out of the specified range, perform the focus adjustment in the normal mode again.

∗ Repeat ② and ③ until the proper focus is obtained in the reduction mode (50%) and the enlargement mode (200%).

E. Horizontal copy magnification ratio adjustment

a. This adjustment is performed to meet the displayed magnification ratio with the actual one.

b. This adjustment must be performed in the following cases:

- When the main PWB is replaced.
- When the EEPROM in the main PWB is replaced.
- When the mirror motor is replaced.
- When self diag. U2 occurs.

The scanning speed of the mirror base is changed to adjust the horizontal (paper transport direction) copy magnification ratio.

<Adjustment procedure>

(1) Put a scale on the original table as shown in the figure below, and execute simulation 48-02. The machine starts warming up and the ready lamp lights up. At the same time, the previously set value (1 ~ 99) is displayed. Under this state, make a normal copy and calculate the copy magnification ratio.

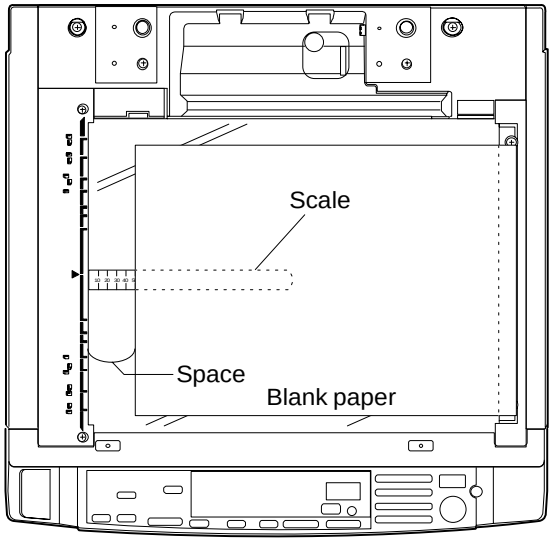

(2) Replace the displayed value with the copy magnification ratio correction rate obtained in (1).
(Input value) = (Previously set value) / (Copy magnification ratio correction rate [%]) ×10

(Example) When the previously set value is 25, the input values of examples 1 and 2 are as follows:

- Example 1: 35 = 25 + (1 × 10)
- Example 2: 15 = 25 + (–1 × 10)
  Enter the input value and press the print switch. The value is stored and the ready lamp lights up.

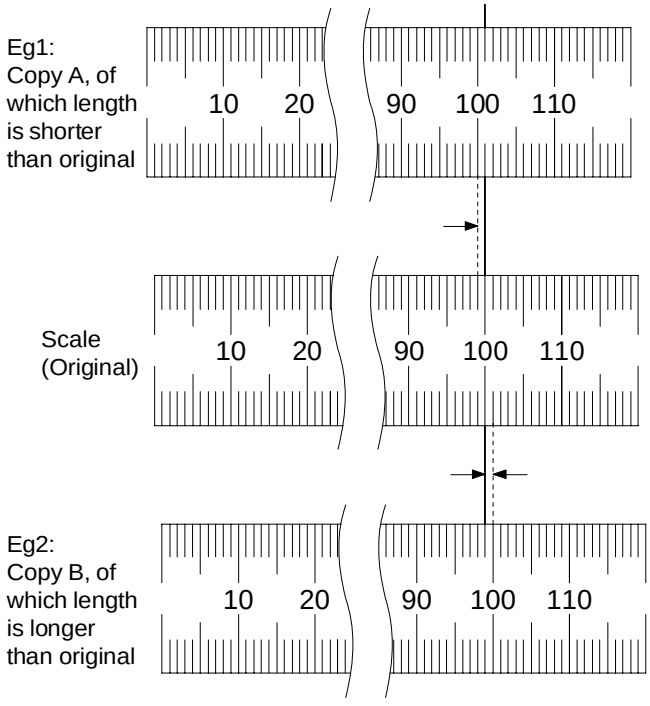

(3) Cancel simulation 48-02.

Note: Input correction can be made in the range of 1 – 99 (simulation set range).

F. Comparison table of lens values and simulation input values

Lens display value	Sim 48-01	Zoom correction (Enlargement) Sim 48-01 — %	Zoom correction (Reduction) Sim 48-01 — % — %
+4.0	30	70	70
+3.9	31	69	69
+3.8	31	69	69
+3.7	32	68	68
+3.6	32	68	68
+3.5	33	67	67
+3.4	33	67	67
+3.3	34	66	66
+3.2	34	66	66
+3.1	35	65	65
+3.0	35	65	65
+2.9	36	64	64
+2.8	36	64	64
+2.7	37	63	63
+2.6	37	63	63
+2.5	38	62	62
+2.4	38	62	62
+2.3	39	61	61
+2.2	39	61	61
+2.1	40	60	60
+2.0	40	60	60
+1.9	41	59	59
+1.8	41	59	59
+1.7	42	58	58
+1.6	42	58	58
+1.5	43	57	57
+1.4	43	57	57
+1.3	44	56	56
+1.2	44	56	56
+1.1	45	55	55
+1.0	45	55	55
+0.9	46	54	54
+0.8	46	54	54
+0.7	47	53	53
+0.6	47	53	53
+0.5	43	52	52
+0.4	48	52	52
+0.3	49	51	51
+0.2	49	51	51
+0.1	50	50	50
0	50	50	50
–0.1	50	50	50
–0.2	51	49	49
–0.3	51	49	49
–0.4	52	48	48
–0.5	52	48	48
–0.6	53	47	47
–0.7	53	47	47

Lens display value	Sim 48-01	Zoom correction (Enlargement) Sim 48-01 — %	Zoom correction (Reduction) Sim 48-01 — % — %
–0.8	54	46	46
–0.9	54	46	46
–1.0	55	45	45
–1.1	55	45	45
–1.2	56	44	44
–1.3	56	44	44
–1.4	57	43	43
–1.5	57	43	43
–1.6	58	42	42
–1.7	58	42	42
–1.8	59	41	41
–1.9	59	41	41
–2.0	60	40	40
–2.1	60	40	40
–2.2	61	39	39
–2.3	61	39	39
–2.4	62	38	38
–2.5	62	38	38
–2.6	63	37	37
–2.7	63	37	37
–2.8	64	36	36
–2.9	64	36	36
–3.0	65	35	35
–3.1	65	35	35
–3.2	66	34	34
–3.3	66	34	34
–3.4	67	33	33
–3.5	67	33	33
–3.6	68	32	32
–3.7	68	32	32
–3.8	69	31	31
–3.9	69	31	31
–4.0	70	30	30

G. Vertical skew adjustment

a. This adjustment is performed when a skew copy is made as shown below or when a part of the mirror base drive wire or the No. 1/2 mirror base is replaced.

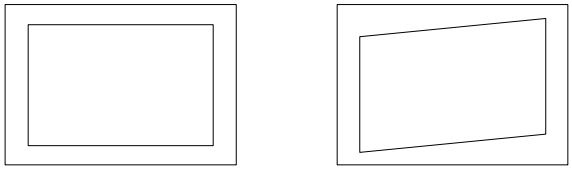

Document Copy

<Adjustment procedure>

(1) Put an A3 (11" ×17") white paper on the original glass neatly to the glass holding plate and the front frame side as shown below.

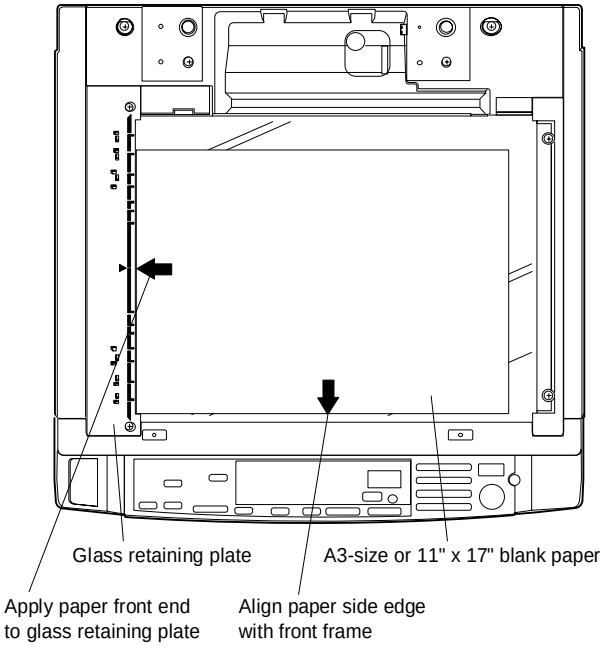

(2) With the original cover open, make a normal (100%) copy on an A3 (11" ×17") white paper.

(3) Measure the width of the black background at the front side and the rear side.

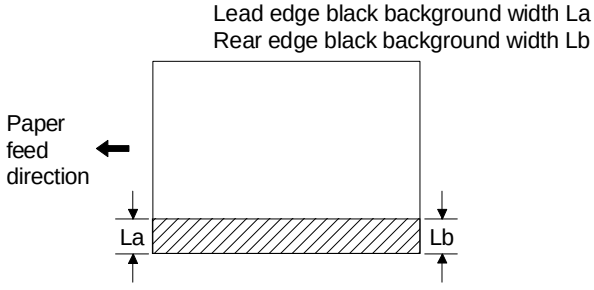

(4) Loosen the fixing screw of the rear frame side mirror base drive pulley.
When La > Lb, rotate the rear frame side mirror base drive pulley in the arrow direction A. (Do not move the flange and the mirror base drive pulley shaft.)
When La < Lb, rotate the rear frame side mirror base drive pulley in the arrow direction B. (Do not move the flange and the mirror base drive pulley shaft.)

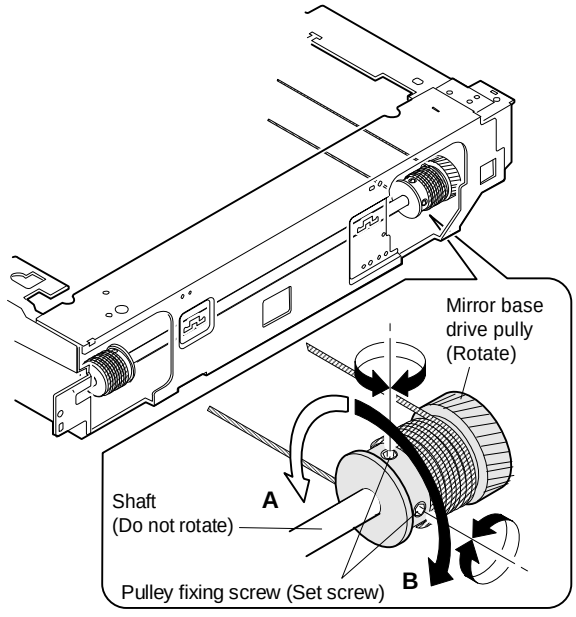

(5) Tighten the fixing screw of the mirror base drive pulley.

(6) Perform procedures (1) ~ (3).

(7) If La=Lb is not satisfied, perform procedures (4) and (5). (If La=Lb, the adjustment is completed.)
Repeat procedures (1) ~ (6) until La=Lb is satisfied.

H. Horizontal skew adjustment

a. This adjustment is performed in the following cases:

- When a horizontal skew is made.
- When the mirror base drive wire is replaced or its installing position is changed.
- When the No. 1/2 mirror base is replaced or its installing position is changed.
- When the No. 2/3 mirror base rail is replaced or its installing position is changed.

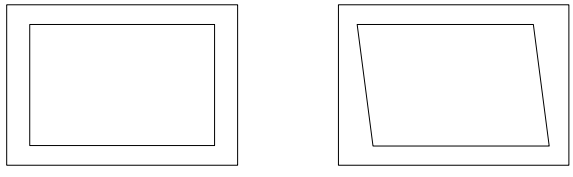

Document Copy

<Adjustment procedure>

(1) Make an original for adjustment.
Draw parallel lines at 10cm from the both edges of an A3 or 11" × 17" white paper. (Be careful to draw precisely parallel lines.)

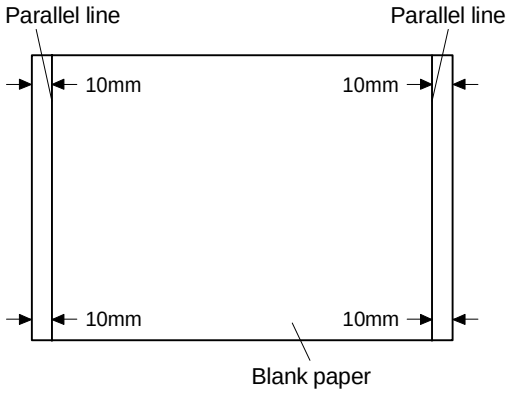

(2) Set the adjustment original made in (1) as shown below.

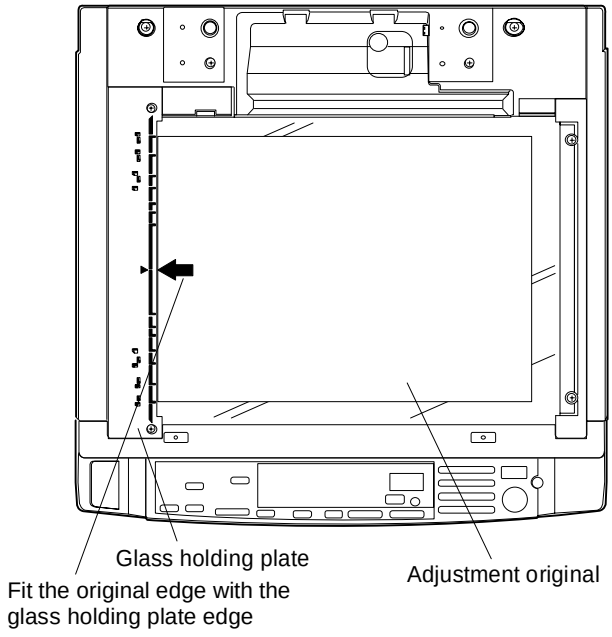

(3) Make a normal (100%) copy on an A3 or 11" × 17" white paper.

(4) Measure the distances at four points as shown below:

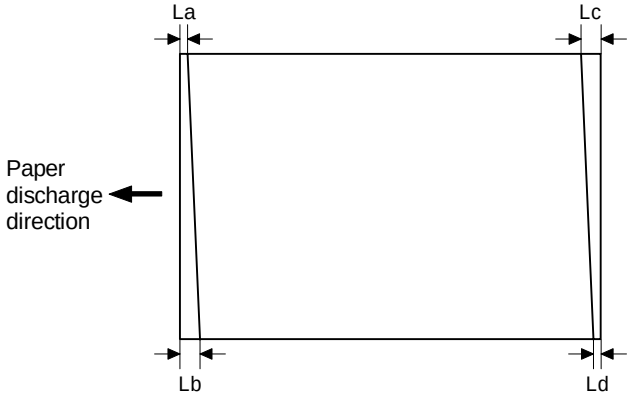

Adjustment procedure (1)

When La>Lb (Lc<Ld): Rotate to increase the height of the front frame side of the No. 4/5 mirror base unit.

When La<Lb (Lc>Ld): Rotate to decrease the height of the front frame side of the No. 4/5 mirror base unit.
Open the front cabinet, insert a screwdriver as shown below, and turn the eccentric screw to adjust the height of the No. 4/5 mirror base.

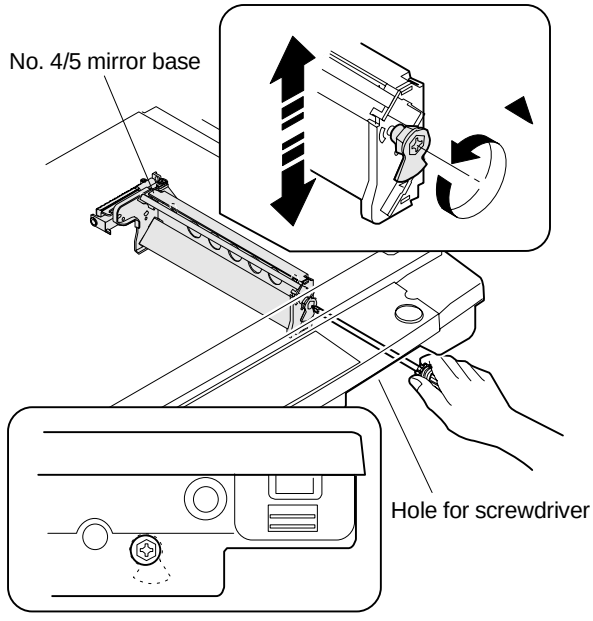

<Note> When turning the eccentric screw, remember how much it is rotated from the original position. When the eccentric screw is turned 36 degrees, the height of the front frame side of the No. 4/5 mirror base is increased or decreased by 2mm and the difference (La – Lb) is varied by 4mm.

If the above adjustment is not effective, then follow the Adjustment procedure (2) .

Adjustment procedure (2)

① Move the mirror base rail B up and down in the arrow directions to adjust.

- When La > Lb, shift the mirror base B rail upward by half of the difference of La – Lb.
- When La < Lb, shift the mirror base B rail downward by half of the difference of La – Lb.

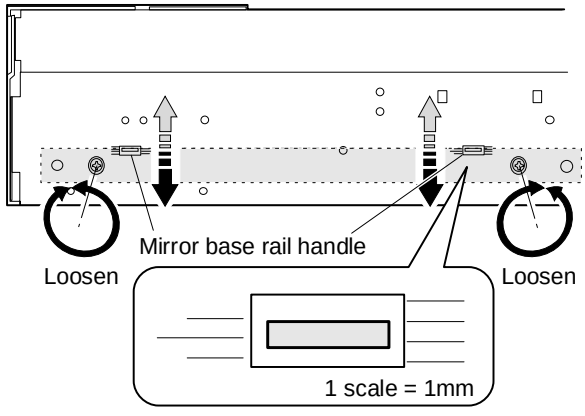

(Example) When La=12mm and Lb=9mm, shift the paper exit side mirror base B rail upward by 1.5mm.

- When Lc > Ld, shift the mirror base B rail downward by half of the difference of Lc – Ld.
- When Lc < Ld, shift the mirror base B rail upward by half of the difference of Lc – Ld.

(When moving the mirror base rail, hold the mirror base rail handle.)

② Adjust according to procedure (1) so that La=Lb and Lc=Ld are satisfied.

③ After completion of the adjustment, turn the mirror base drive pulley manually to full scan mirror base A and mirror base B, and check that the mirror bases are not brought into contact with each other.

(Note) When the mirror bases are moved extremely, they may be brought into contact. Carefully avoid it.

I. Center shift adjustment

a. This adjustment must be performed in the following cases:

- The copy (100%) center is shifted from the original center more than 2mm.
- When any part of the lens rail or the lens unit is replaced.

<Adjustment procedure>

(1) Make a test chart for center position adjustment. (Refer to the figure below.)

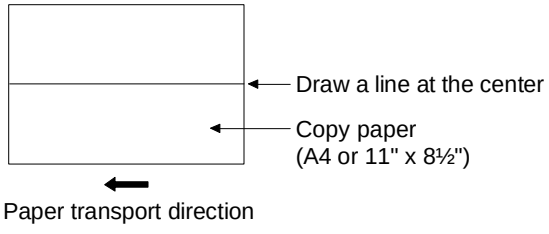

(2) Set the test chart for the center position adjustment to the document reference line, and make a normal (100%) copy with an A4 or 11" × 8½" paper.

(3) Check that the copied image line is at the center of the copy paper.

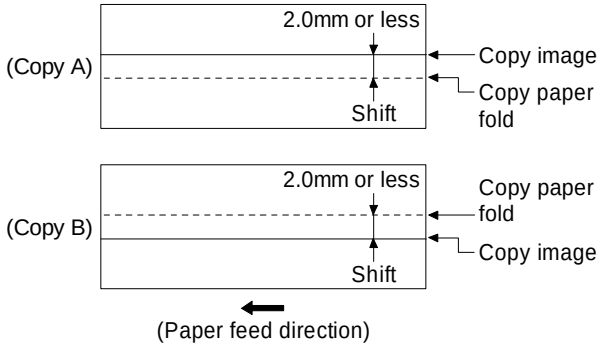

(4) If the error of the copy image line is within the specified range (0±2.0mm), the adjustment is not required. If not, perform the following procedures.

(5) Remove the document reference plate and the right upper side cabinet, and remove the document table glass.

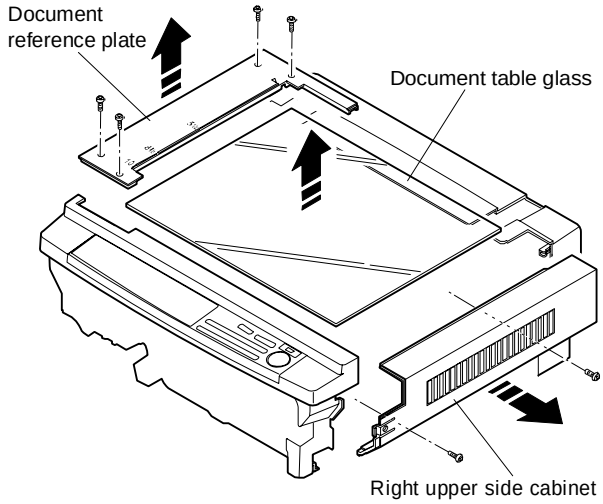

(6) Loosen the three fixing screws of the optical system unit and slide the optical system unit to adjust the center position.

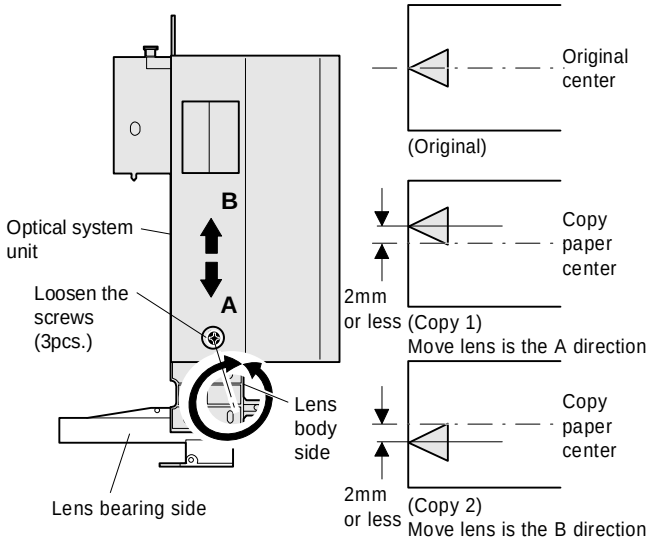

(7) After adjustment, set the removed parts in the reversed sequence. make a copy of the test chart to check that the center shift is within the specified range (0 ±2.0mm). If the center shift is within the specified range, the adjustment is completed. If not, repeat procedures (2) – (7) until it is within the specified range.

J. Exposure balance adjustment

a. This adjustment is to provide uniform exposure, and must be performed in the following cases:

- When the reflector is replaced.
- When the copy lamp is replaced.
- When the exposure adjustment plate is replaced.

<Adjustment procedure>

(1) Set a half tone paper on the original table and make a half tone copy at 100%.

(2) If the exposure of the half tone copy is uniform, the adjustment is not required. If it is varied as shown below, perform the following procedures.

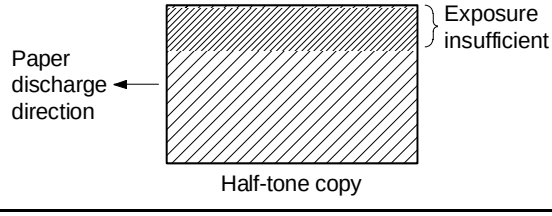

(3) Remove the original reference plate and the right upper side cabinet, and remove the original table glass.

(4) Move the exposure plates a, b, c, and d in arrows directions A and B to adjust exposure. Moving the plates in the direction of arrow A makes the copy darker, and moving in the direction of arrow B makes the copy lighter.

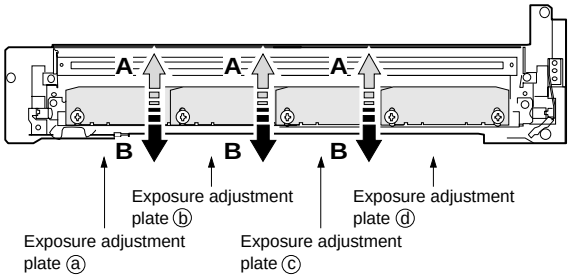

(Example) If the half tone copy is as shown below, move the exposure adjustment plate a in the direction of arrow B to balance exposure.

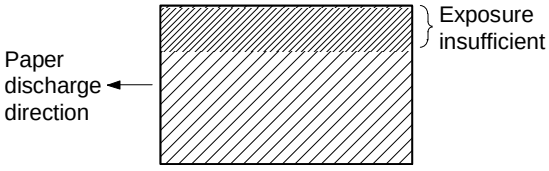

Half-tone copy

(5) After adjustment, set the original table glass. Make a copy to check uniformity of copy density. If the copy exposure is not uniform, repeat procedures (1) – (5).

K. Copy lead edge adjustment

a. This adjustment is performed to provide the maximum effective copy size, proper void area, improve separation in the photoconductor section, fusing section, and reducing dirt in the fusing section pawls.

b. This adjustment must be performed in the following cases.

- When the mirror home position sensor (MHPS) is replaced or its installing position is changed.
- When the mirror base is replaced.
- When the resist roller and the resist roller clutch are replaced.
- When the main control PWB is replaced.
- When the ADF is installed or disassembled.
- When the original guides L and R are removed and the glass is removed.

<Adjustment procedure>

∗ The copy lead edge adjustment is performed with simulation 50-01 and 50-02.

When the copy lead edge adjustment is made with simulation 50-01:

In this simulation, the following keys and the display section have special functions.

Reduction key: Makes the magnification ratio 50%.
Enlargement key: Makes the magnification ratio 200%.

- % key:
  Pressing the % key changes A → b → c → d → A → sequentially, and the set value corresponding to the display is displayed on the copy quantity display.
  A: RRC-A set value
  b: RRC-B set value
  C: Lead edge void amount set value
  d: Rear edge void amount set value

(The value displayed before pressing the % key is stored in the memory by pressing the zoom up key.)

Display section:
During execution of the simulation, the RRC-A value is displayed on the copy quantity display.

Top digit: Displays A, b, C, d.

Lower two digits: Displays RRC-A value, RRC-B value, or void area value.

<Adjustment procedure>

(1) Put a scale on the original table.

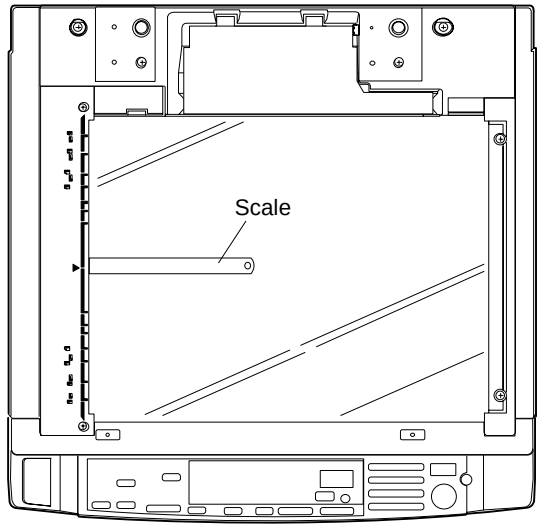

(2) Press keys as follows:

[C] → [=✓] → [0/◊] → [=✓] → [5] →
[0/◊] → [PSW] → [1] → [PSW]

Simulation 50-01 is executed and the ready lamp lights up. The previously set value (1 – 99) is displayed. (RRC-A content)

(3) Set values A and B to zero, and make copies at 100% and 200%.

- [0/◊] → [0/◊] → [% key] →
  [0/◊] → [0/◊] → [PSW] (A copy at 100% is made.)
- [Enlargement key] → (Lens shift, ready) → [PSW] (A copy at 200% is made.)

(4) Measure the distance between the copy paper lead edge and the copy image lead edge in each copy. Obtain RRC-A and RRC-B values from the following formulas.

If the RRC-A preset value is not proper, the lead edge position varies in each magnification ratio. The RRC-B is to adjust the RRC ON timing for fitting the drum image lead edge and the transfer paper lead edge.

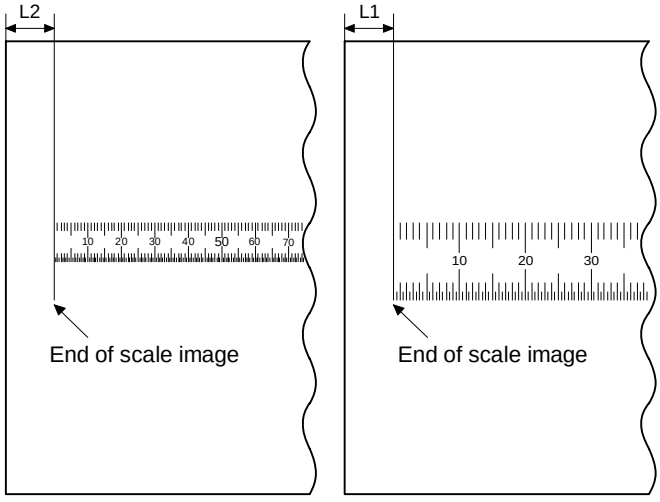

Full-size(100%) copy Enlarged(200%) copy

- La: Led edge shift at 200% (mm)
- L2: Lead edge shift at 1005 (mm)
- RRC-A = 6.151 × (L1 – L2)
- RRC-B = 15.385 × L2 – 7.692 × L1

(5) Enter the RRC-A and RRC-B values obtained from the above formulas with the 10 digit key pad in the same manner as procedure (3).

(6) Make copies at 200%, 100%, and 50%, and check variations in the magnification ratios. (About 1.0mm)
If there is a considerable variation, repeat from procedure (3).

(7) Make a normal copy and check that the lead edge image loss is within the range of 0 ~ 4mm. If the image loss is outside the above range, change the RRC-B value and adjust again until the image loss is within the above range.

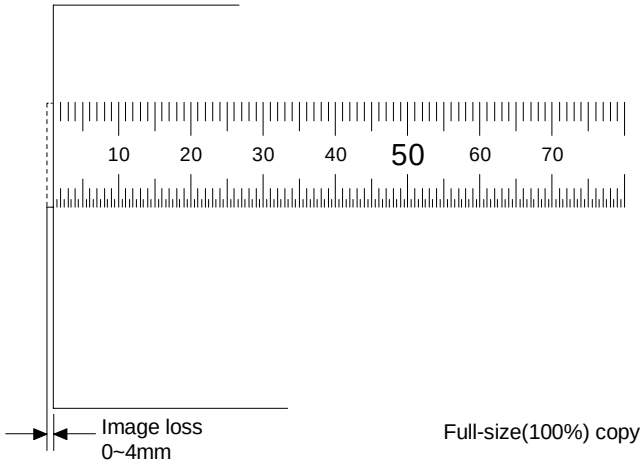

Full-size(100%) copy

Note: The above image loss range is effective only for simulation 50-01, and is not the final one.

(8) Put a scale and an A3 (11" × 17") white paper on the original table as shown below.

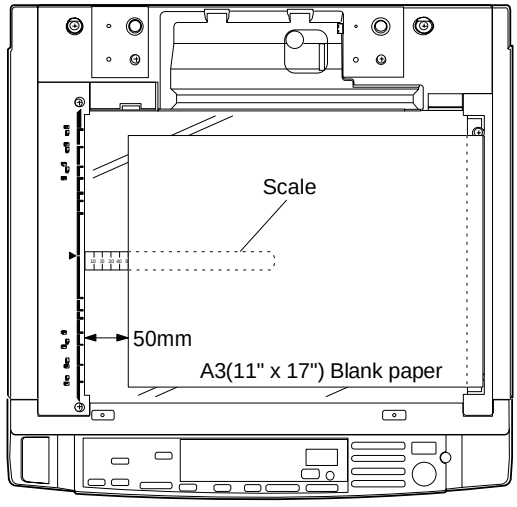

(9) Press the zoom key to display "C" in the lowest digit of the magnification ratio display. (Void amount adjustment mode)

(10) Make a copy and enter the normal copy lead edge void area adjustment set value so that the black background edge comes to the scale 1 – 3mm of the copy image scale.

□ → □ → PSW

With the above key operation, a copy is made and the adjustment value is inputted. When the adjustment value is changed by 1, the void area is changed by about 0.13mm. The greater the adjustment value is, the greater the void amount is.

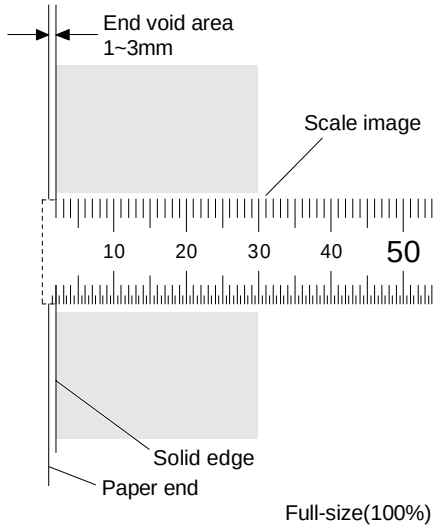

Full-size(100%) copy

(11) Make a normal copy and check that the image loss and the void amount are within the specified range.

(Specified range)

- Image loss: 0 ~ 4mm
- Void amount: 1 ~ 3mm

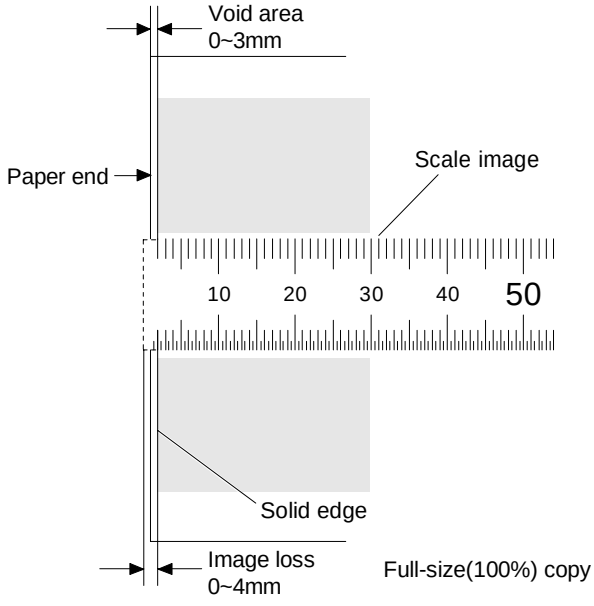

(12) Press the clear key and cancel simulation 50-01.

Note: When the RRC-A and RRC-B values are changed in simulation 50-01, be sure to adjust the copy lead edge void area.

When adjustment is made with simulation 50-02:

<Note> The keys and display functions are the same as simulation 50-01. In simulation 50-02, L1 and L2 values can be directly set. It is easy and simple. The void area adjustment is also the same as simulation 50-01.

[Adjustment procedure]

(1) Put a scale on the original table.

(2) [C] → [P] → [0/◊] → [P] → [5] → [0/◊] → [PSW] → [2] → [PSW]

With the above key operation, simulation 50-02 is performed and the machine starts warming up.

(3) The lower two digits of L1 value is displayed on the copy quantity display. The top digit is for data identification.

- L1 : Lead edge shift at 200% (○○○mm, 3 digits)
- L2 : Lead edge shift at 100% (✕✕✕mm, 3 digits)

Example of display

- For 42.5mm, the display is [2] [5].

(4) Use the % key and the 10 digit key pad to set A and b values to zero. Make copies at 100% and 200%.

- [0/◊] → [0/◊] → [0/◊] → [% key] → [0/◊] → [0/◊] → [0/◊] → [PSW] (A copy at 100% is made.)
- [Enlargement key] → (Lens shift, ready) → [PSW] (A copy at 200% is made.)

(5) Measure the distance between the copy paper lead edge and the copy image lead edge in each copy. Enter L1 and L2 values with the zoom key and the 10 digit key pad. With this operation, RRC-A and RRC-B values in simulation 50-01 are automatically calculated and stored.
Input procedure

(Example)
When L1 = 24.5 mm and L2 = 15.0mm:
Check that the lowest digit of the magnification ratio display is "A," and perform the following key operation.

[2] → [4] → [5] ("45" is displayed on the copy quantity display.) → [% key] → [1] → [5] → [0] ("50" is displayed.) → [PSW]

(6) After this, check shift and image loss, and void amount in each copy similarly to simulation 50-01.

2-4. Copy density adjustment

A. When the copy density adjustment is required:

The copy density adjustment must be performed in the following cases:

- When maintenance is performed.
- When the output current of the main charger and the transfer charger, the separation charger bias voltage, or the grid voltage is adjusted. (When the charger unit or the high voltage unit is replaced.)
- When the developing bias is adjusted.
- When any part of the AC PWB unit is replaced.
- When the AE sensor is replaced.
- When the copy lamp is replaced.
- When the optical unit is replaced.
- When the optical unit is disassembled, repaired, or adjusted.
- When exposure adjustment plate is moved.
- When the drum is replaced.
- When the main PWB is replaced.

B. Note for copy density adjustment

- The charger output and the developing bias voltage are properly adjusted in advance.
- The half-tone uniformity is within the limit sample range.
- Sim. 44-01 is set to "7."

C. Copy density adjustment procedure

(1) Set the automatic exposure level to "3."

(When the mode select key is pressed for 5 sec in the photo mode, the mode is switched to the automatic exposure mode. In this mode, press the exposure select key to set the exposure level to "3.")

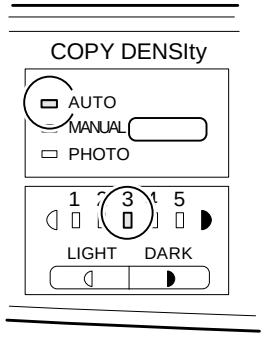

(2) Drum sensitivity setting

(1) Execute Sim. 26-07, and check that the top digit of the 9-digit drum number printed on the flange in front of the drum is displayed on the copy quantity display.

(2) If the displayed number is different from the drum number, change the setting with the 10 digit key pad.

(Note) When the 10 digit key pad is used to enter a number, the display shows only in the range of 1 ~ 3.

(3) AE sensor level adjustment

(1) Execute Sim. 47.
(The mirror base starts scanning and stops at the AE sensor level measurement position.)

(2) Put several sheets of A3 (11" x 17") paper on the original table.

(3) Press the PSW again, and the copy lamp will light up and the sensor output will be displayed on the copy quantity display. This output level is stored.

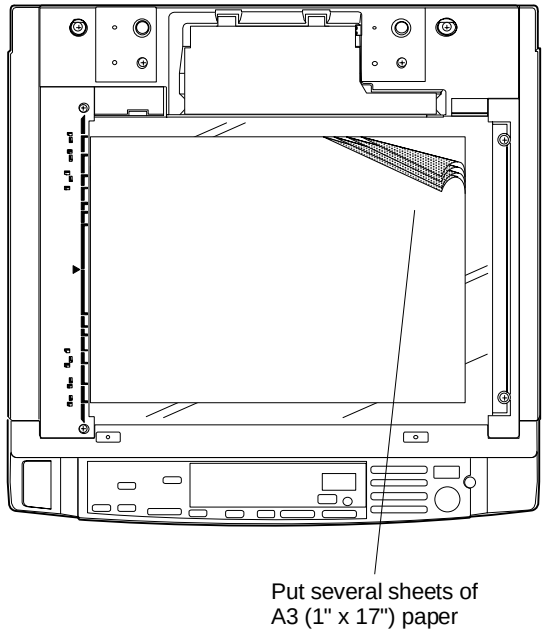

(4) Test chart setting

(1) Put several sheets of white paper (Sharp specified paper) of about 120mm wide and about 420mm long to the center reference.

(2) Put the test chart (UKOG-0162FCZZ) as shown below:

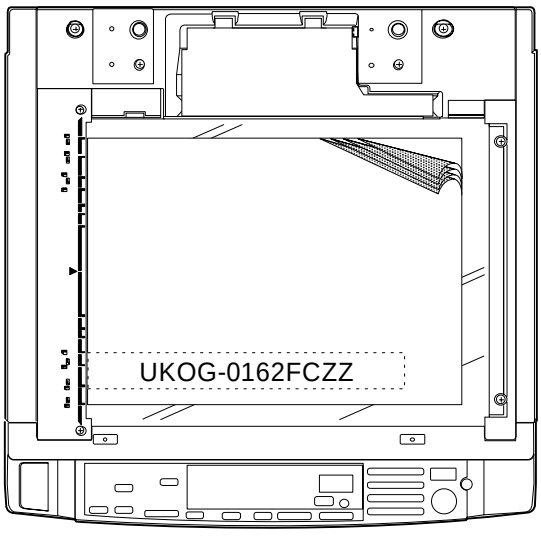

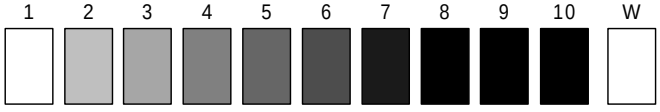

Test chart comparison table

UKOG-0162FCZZ DENSITY No.	1	2	3	4	5	6	7	8	9	10	W
UKOG-0089CSZZ DENSITY No.	0.1		0.2		0.3				0.5	1.9	0
KODAK GRAY SCALE		1		2		3		4		19	A

SHARP CORPORATION
MODE IN JAPAN

(5) Manual exposure (ME) mode adjustment

1) Normal mode exposure adjustment

(1) Execute Sim. 46-01.
Exposure "1" in the manual exposure mode is displayed on the exposure display.
"0" of value A is first displayed on the coy quantity display. After sensing the drum mark, the two-digit number corresponding to the sensed mark number is displayed.

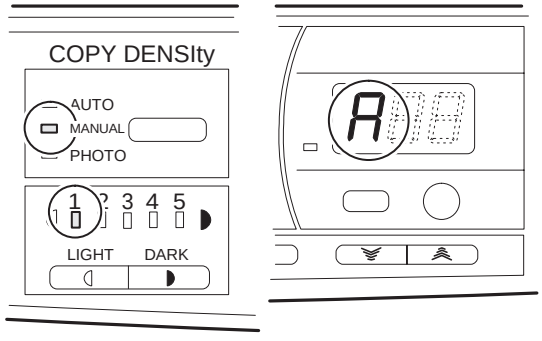

(2) Make a copy.
Check that "6" of the test chart is slightly displayed.

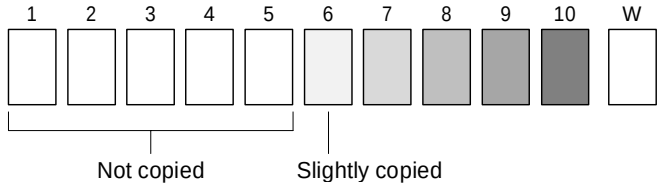

<When too light> Make the value displayed on the copy quantity display smaller.

<When too dark> Make the value displayed on the copy quantity display greater.

- ✳ The range of set values is 1 ~ 99.
- ✳ Entry number "1" corresponds to a change of about 0.33V in the copy lamp voltage.

(3) Make a copy.
When the copy exposure is within the exposure limit sample range, press the DARK exposure key to set to exposure "5." ("b" is displayed on the copy quantity display.)

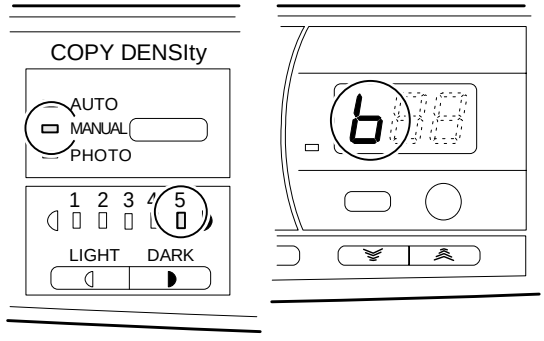

(4) Make a copy.
Check that "2" of the test chart is clearly copied.

<When too light> Make the value displayed on the copy quantity display smaller.

<When too dark> Make the value displayed on the copy quantity display greater.

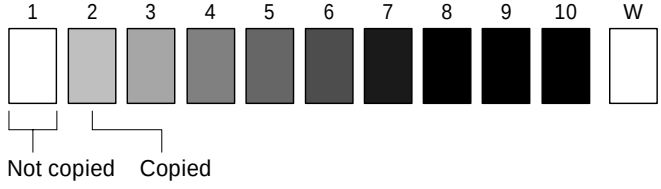

2) Toner save mode adjustment

(1) Press the exposure select key to set to the toner save mode.
The manual mode lamp and the photo mode lamp are simultaneously lighted and exposure "1" is displayed on the exposure display section. "C" is displayed on the copy quantity display.

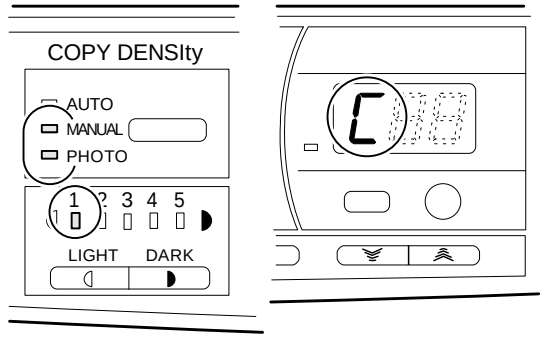

(2) Perform the same procedures of (2) through (4) in "1) Normal mode exposure adjustment."

3) Photo mode exposure adjustment

(1) Press the exposure select key to set to the photo mode.
The photo mode lamp is lighted and exposure "1" is displayed on the exposure display section. "E" is displayed on the copy quantity display.

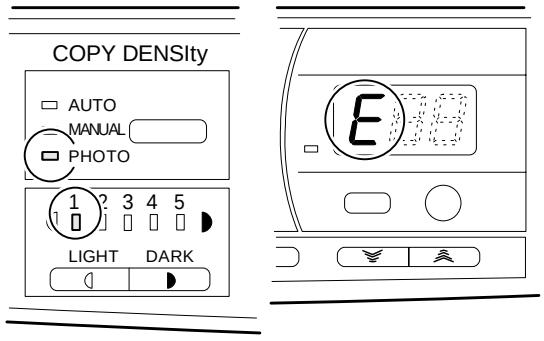

(2) Perform the same procedures of (2) through (4) in "1) Normal mode exposure adjustment."

(6) Automatic exposure mode adjustment

1) Automatic exposure (normal mode) adjustment

(1) Press the exposure select key to set to the automatic exposure mode (normal mode).
The automatic exposure mode lamp is lit and exposure "1" is displayed on the exposure display section. "G" is displayed on the copy quantity display.

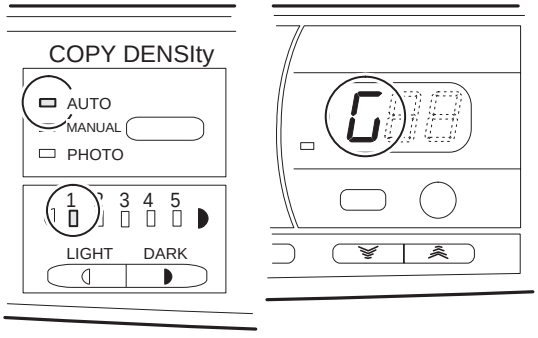

(2) Check that "0" is displayed on the copy quantity display.

(3) Press the DARK exposure key to set to exposure "5." ("H" is displayed on the copy quantity display.)

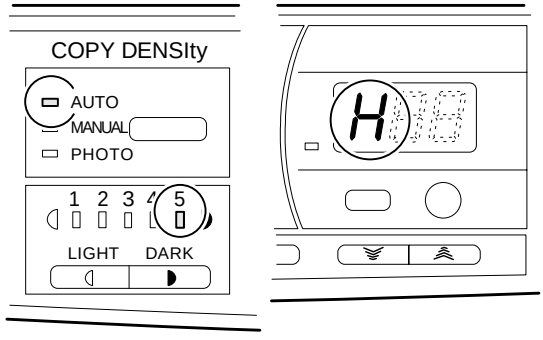

(4) Make a copy.
Check that "3" of the test chart is slightly copied.

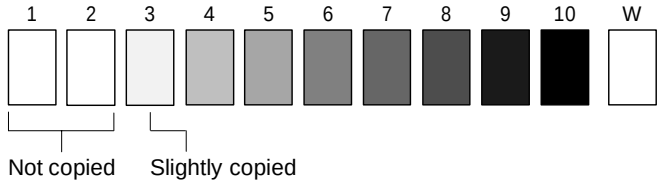

<When too light> Make the value displayed on the copy quantity display smaller.

<When too dark> Make the value displayed on the copy quantity display greater.

2) Automatic exposure (toner save mode) adjustment

(1) Press the exposure select key to set to the automatic exposure mode (toner save mode).
The automatic exposure mode lamp and the photo mode lamp are lit and exposure "1" is displayed on the exposure display section. "1" is displayed on the copy quantity display.

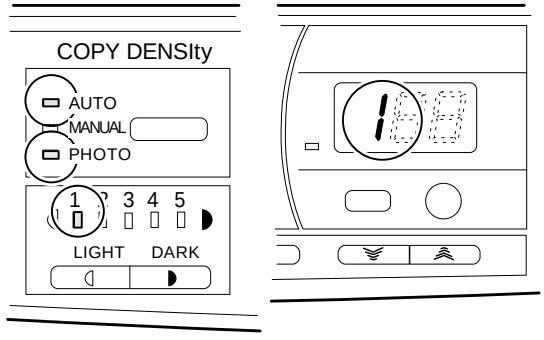

(2) Perform the same procedures of (2) through (4) in "1) Normal mode exposure adjustment."

Copy density adjustment

Item	Content
Automatic exposure level initial setting	3 (Standard level)
TSM mode initial setting	5 (Standard mode)
AE sensor level adjustment	Execution of Sim. 47
Drum sensitivity setting	Execution of Sim. 26-07
Test chart setting	Test chart comparison table

UKOG-0162FCZZ DENSITY No.	1	2	3	4	5	6	7	8	9	10		W
UKOG-0089CSZZ DENSITY No.	0.1		0.2		0.3				0.5	1.9		0
KODAK GRAY SCALE		1		2		3		4		19		A

SHARP CORPORATION
MADE IN JAPAN

Copy density adjustment		
	Developing bias output voltage adjustment	200V (Manual exposure 1) Execution of Sim. 8-01
	Manual exposure copy density adjustment	Execution of Sim. 46-01
	ME1	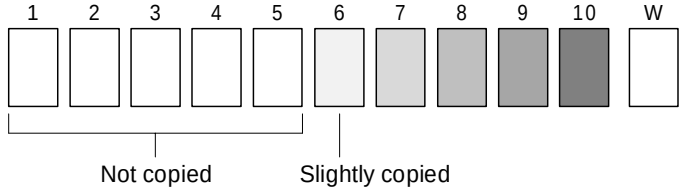
	ME5	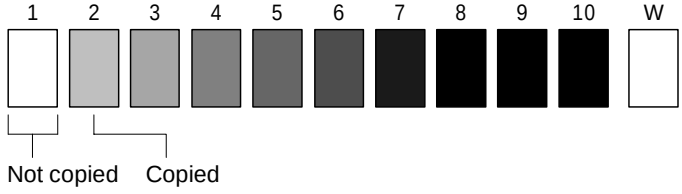
	TSM mode copy density adjustment	
	TS1	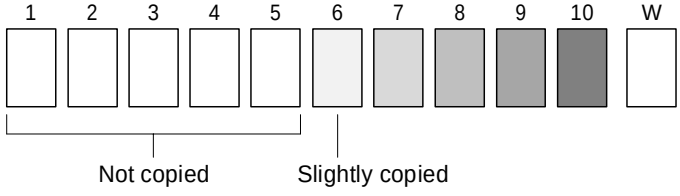
	TS5	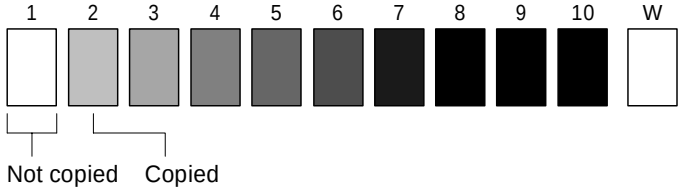
	Photo mode copy density adjustment	
	PE1	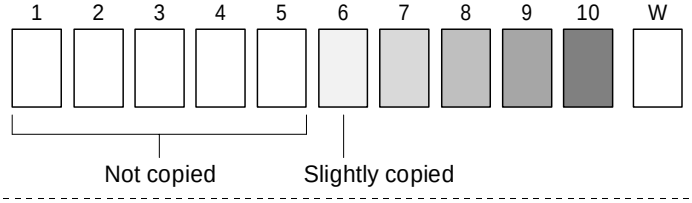
	PE5	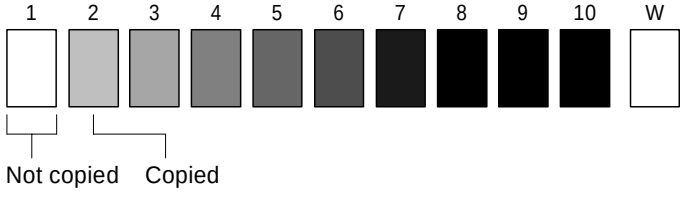

Item			Content
	Automatic exposure copy density adjustment		Enter "0" with the 10 digit key pad.
		Normal mode AE1	
		AE5	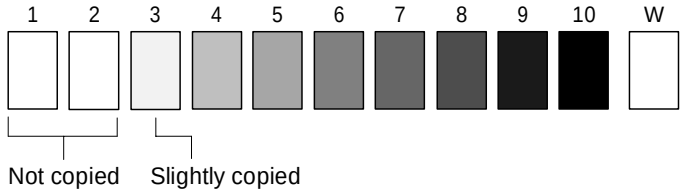
		TSM mode AE1 (TS)	Enter "0" with the 10 digit key pad.
		AE5 (TS)	

2-5. Process section adjustment

A. Blank lamp (BL) position adjustment

① Check that the center shift is within 0.2mm. (If the center shift exceeds 0.2mm, adjust the center shift.)

② Set a white original of A3 (11" x 17"), and make a reduction copy (x 0.64) on an A3 paper (11" x 17") with the original cover open.

③ Measure the black background sizes on both ends, and slide the blank lamp unit back and forth to adjust so that the size difference is within 1 mm.

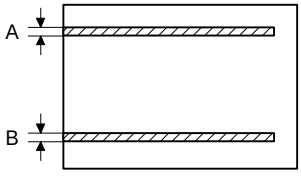

IA-BI≦1mm

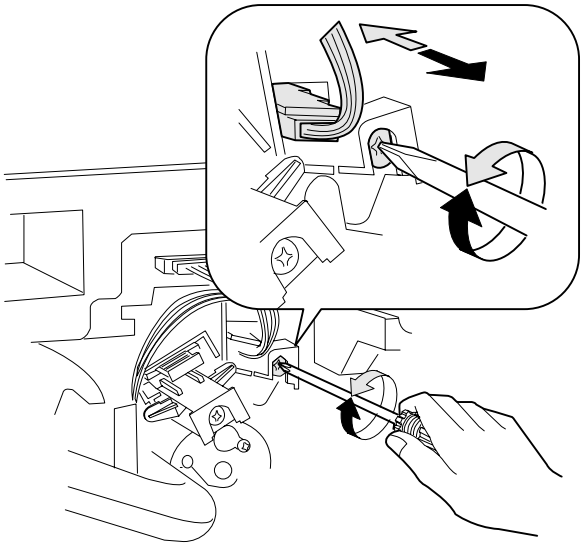

B. High voltage output balance adjustment

This model employs the one transformer system where the output power is common to the charging charger (MC) and the transfer charger (TC). The feedback current from the transfer charger (TC) is constant-current controlled and outputted for charging.
For the output adjustment of each high voltage, follow the procedures below.

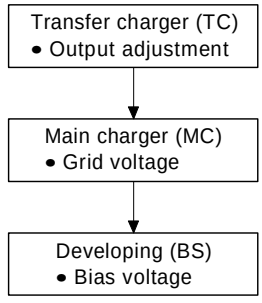

A. Use of special measurement tools

- Tool: UKOGE0043CS01 (Digital multi meter)
- Electrode sheet (UKOG-0110FCZZ)

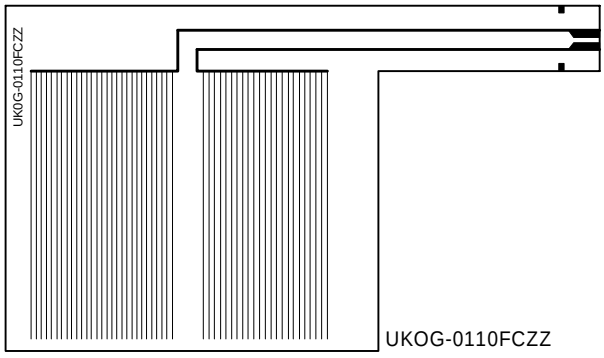

Adjustment output	Sim	Adjustment range	F/R difference	Tester range
TC current	08-02	–41.0 ±4.0 μA	7.0 μA	DC1000 μA
MC grid voltage	44-11	Standard (A) –750 ±5V Photo (b) –500 ±5V TS (c) –650 ±5V	—	DC1000V
DV bias voltage	08-01	–200±5V	—	DC1000V

Electrode sheet harness (DHAI-0304FCZZ)

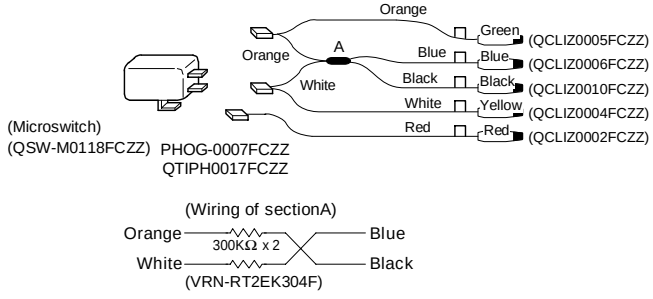

C. Transfer charger output check

1) Transfer charger current adjustment

① Remove the developing unit, the transfer/separation charger unit, and the main charger unit from the copier.

② Remove the process unit from the copier.
When removing (attaching) the process unit from (to) the copier, do not hold the toner transport pipe.

③ Remove the photoconductor drum from the process unit, and attach the electrode sheet by using rubber ring and tape.

④ Attach the photoconductor drum with the electrode sheet attached to it to the process unit.

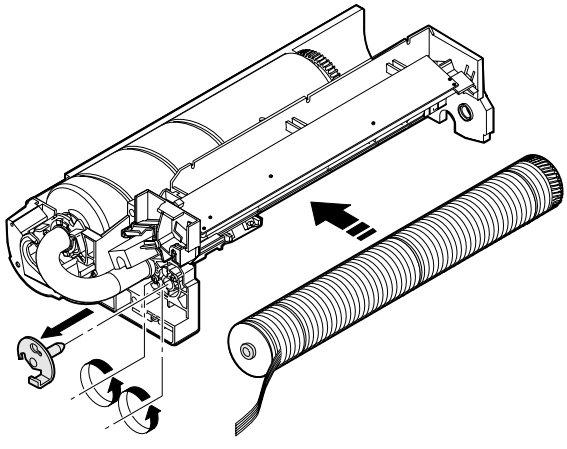

⑤ Attach the process unit to the copier. (Attach so that the electrode sheet lead wire extends from the developing unit side.)

⑥ Clean the transfer charger wire, and attach the transfer/separation charger unit to the copier.
(Do not install the main charger unit.)

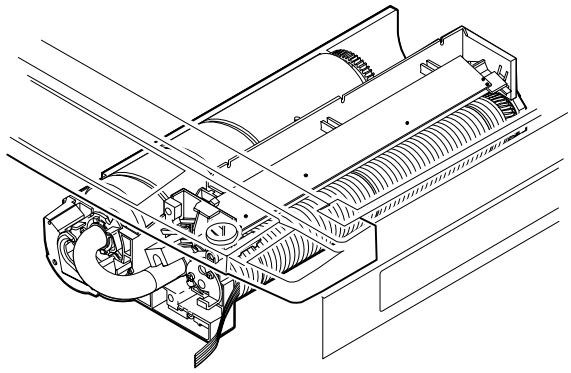

⑦ Connect the electrode sheet and the digital multi meter (or an ammeter). Manually turn on the door switch.

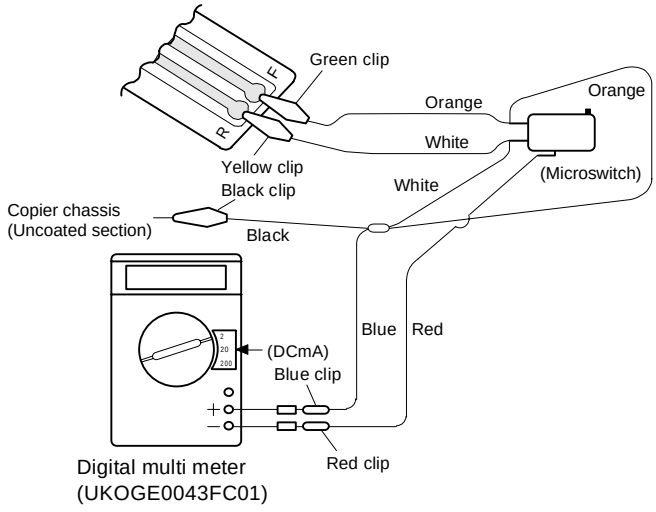

(Note) Check that the black clip is firmly grounded to the chassis.
When the UKOGE0043CS01 is used:
Control 1: Set to "2" of DCmA.
Red clip: Connect to ⊕.
Blue clip: Connect to ⊖.
When a DC ammeter is used:
Red clip: Connect to ⊖ of the DC ammeter.
Blue clip: Connect to ⊕ of the DC ammeter.

⑧ Transfer charger output current check and adjustment

a. Turn on the main switch and execute simulation 8-02. (MTHV is turned on for 30 sec.)

b. Adjust VR102 (MTHV output adjustment control) so that the output current of MTHV is –41 ±4.0 μA.

⑨ Check the drum current in the front frame side and the rear frame side. Difference between the front frame side current and the rear frame side current must be within 7.0 uA.

a. Turn on the main switch and execute simulation 8-02. (MTHV is turned on for about 30 sec.)

b. Measure the drum current in the front frame side and in the rear frame side.

- When the microswitch is OFF: The drum current in the front frame side is displayed.
- When the microswitch is ON: The drum current in the rear frame side is displayed.



c. Check that the difference between the front frame current and the rear frame current is within 7.0 μA. If the difference exceeds 7.0 μA, the charger unit is abnormal. Replace the charger unit in that case.

2) Charging grid voltage adjustment

Before this adjustment, check that the photoconductor drum, and developing unit, and the charger (MC/TC) units are attached.
(Measurement and adjustment at the high voltage PWB check point)

① Remove the rear cabinet.

② Set the digital multi meter range to DCV, and connect to the grid voltage output check pin (GB).

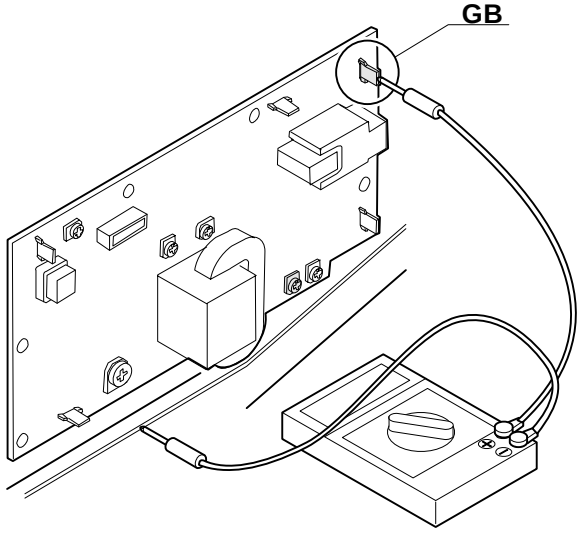

③ Turn on the copier power and execute simulation 44-11.

④ Select the standard mode (A) with the magnification ratio display key on the operation panel. (The mode is displayed on the copy quantity display.)

Execution of simulation 44-11

Select the standard mode (A) with the magnification ratio select key.

(Reference)

Display	Mode		
A	Standard	–750 ±5V	
b	Photo	–500 ±5V	
C	TS	–650 ±5V	
d	GB patch	–410V	→ GB is not adjustable.

⑤ Use the 10-key pad to adjust so that the measurement value by the tester in the standard mode (A) is –750 ±5V. (Input value 1 corresponds to 5V.)

✳ For the voltage check, enter the value with the 10-key pad and press the PRINT button to store it, and press the PRINT button again and measure the voltage with the tester while copying.

⑥ Adjust similarly in the photo mode (b), and in the toner save mode (C).

Check the GP patch (d) after adjustment of standard (A), photo (b) and TS (c).

- Grid voltage adjustment
  (Sim 44-11)

Display	Mode	Grid	Input value (Standard)
A	Standard	–750±5V	48
b	Photo	–500±5V	46
C	TS	–650±5V	46
d	GB patch	–410V	41

✳ ① (Input value 1 corresponds to 5V.)
② d (GB) is fixed.

- Grid voltage check

Sim No.	Mode	Grid voltage ✳ Drum marking number: 1	✳ Drum marking number: 2
8-2	Standard	–740	–770
8-3	Photo	–480	–480
8-4	TS	–630	–650

✳ Drum marking number 1 = SHARP
Drum marking number 2 = Mitsubishi

✳ This model performs the process correction according to the number of drum mark(s). With Sim 8, the grid voltage after correction can be checked.

3) Developing bias (BS) voltage adjustment

The developing bias voltage is measured and adjusted with the check pin (DV BIAS) on the high voltage PWB and the control knob (VR301).
In advance to this adjustment, check that the photoconductor drum, the developing unit, and the charger (MC/TC) units are installed.

① Remove the rear cover.

② Set the digital multi meter range to DCV, and connect it to the developing bias output check pin (DV BIAS).

③ Turn on the copier power, and execute simulation 8-01.

④ During execution of the simulation, check that the developing bias output monitor voltage is –200 ±5V. If the voltage is outside the range, adjust with the control knob (VR301).

[8] SIMULATION

1. Outline

This model is equipped with the simulations feature which allows the following operations with the keys on the operation panel:

1) Adjustments
2) Setting of specifications and functions
3) Resetting trouble codes
4) Checking operations

2. Purpose

The purpose of the simulations feature is to improve serviceability in repairs and adjustments.
Since the mechanical adjustments can be performed electrically, the above purpose is achieved with low costs.

3. Operating procedure

Simulations operating procedure

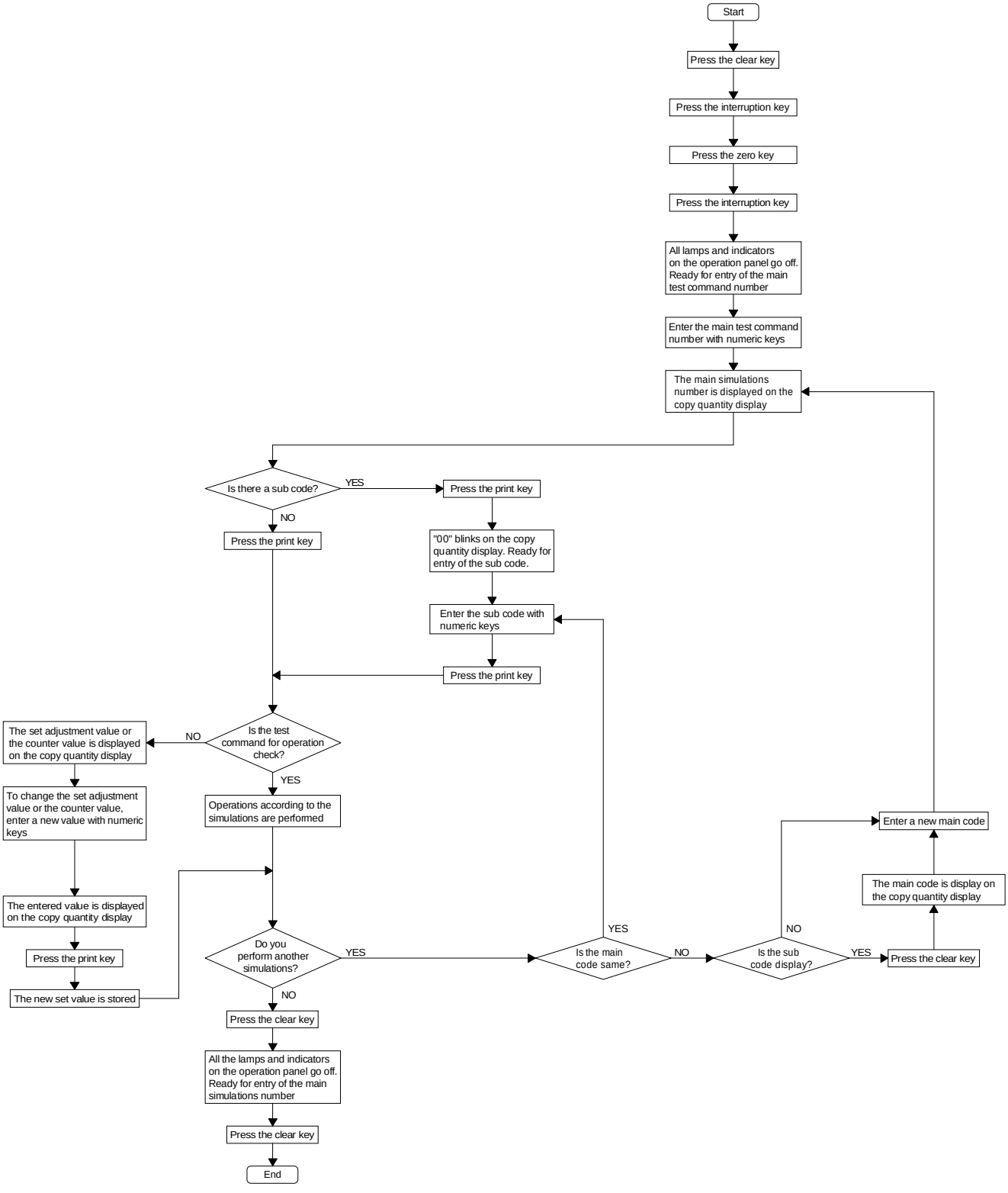

4. List of simulations

Main code	Sub code	Content
1	01	Mirror scanning
	02	Optical system sensor check
	03	Lens operation check
	04	Lens operation aging
2	01	ADF aging
	02	ADF sensor check
	03	ADF individual load operation check (Paper feed motor forward rotation)
	04	ADF individual load operation check (Paper feed motor reverse rotation)
	05	ADF individual load operation check (Transport motor forward rotation)
	06	ADF individual load operation check (Transport motor reverse rotation)
	08	ADF individual load operation check (Paper feed solenoid)
	10	ADF individual load operation check (Paper feed motor normal rotation + paper feed solenoid)
3	02	Sorter sensor check
	03	Sorter individual load operation check (Transport motor)
	04	Sorter individual load operation check (Bin motor)
	05	Sorter individual load operation check (Buzzer)
	06	Sorter individual load operation check (Alignment motor) (SF-S54 only)
	07	Sorter individual load operation check (Pinch hold motor) (SF-S54 only)
5	01	Operation panel display check
	02	Heater lamp check
	03	Copy lamp check
	04	DL lighting check
	05	BL lighting check
6	01	PSPS operation check
7	01	Warm-up time display and aging
	04	Warm-up omitting
	06	Intermittent aging
	08	Warm-up time display
8	01	Developing bias output
	02	Main/transfer charger output/grid check (ME)
	03	Main/transfer charger output/grid check (PE)
	04	Main/transfer charger output/grid check (T/S)
	07	Separation charger output
10	—	Toner motor aging
14	—	Trouble cancel (Excluding U2 trouble)
15	—	Waste toner full (blinking) cancel
16	—	U2 trouble cancel
20	—	Maintenance counter clear
21	01	Maintenance cycle setting

Main code	Sub code	Content
22	01	Maintenance counter display
	02	Maintenance preset counter display
	03	JAM memory display
	04	Total JAM counter display
	05	Total counter display
	06	DV counter display
	07	DV preset counter display
	08	ADF counter display
	10	Staple counter display
	11	Toner concentration correction counter display
	15	Trouble memory display
24	01	JAM memory/total JAM counter clear
	02	Trouble memory clear
	04	ADF counter clear
	05	Staple counter clear
25	01	Drive system check
	02	Automatic developer adjustment
26	05	Counter mode setting
	06	Destination setting
	07	Drum sensitivity setting
	10	AE document density setting
	13	Warm-up mode setting
	18	Toner save mode setting
	20	Rear edge void setting
	29	AC power voltage setting
30	01	Copier sensor check (paper sense)
42	—	Developer counter (counter clear)
43	01	Fusing temperature setting
44	01	Process control operation setting
	05	Grid voltage correction test
	06	Grid voltage correction compulsive execution
	07	Image density/drum mark sensor operation test
	08	Process control data display
	09	Process control data display (Latest value)
	10	Grid voltage correction (Drum surface/patch) data display
	11	Initial grid bias setting
	12	Copy operation check with process control OFF
46	01	Exposure adjustment
47	—	AE sensor characteristics measurement (AE sensor gain automatic adjustment)
48	01	Front/rear magnification ratio adjustment
	02	Paper transport direction magnification ratio adjustment (Mirror speed correction)
50	01	Copy lead edge adjustment
	02	Lead edge adjustment (Simple type)
51	02	Resist amount adjustment
53	01	ADF stop position adjustment value (normal paper) setting
	04	ADF resist sensor, width sensor adjustment
	06	ADF timing sensor adjustment
54	03	Take-out buzzer setting

5. Details of simulations

Simulation input procedure: C → =↵ → 0 → =↵

<table>
<tr><th>Main code</th><th>Sub code</th><th>Content</th></tr>
<tr><td rowspan="4">01</td><td>01</td><td>Mirror operation check
When the print button is pressed, the mirror is scanned at a speed corresponding to the currently set copy magnification ratio.
The copy magnification ratio can be arbitrarily set.</td></tr>
<tr><td>02</td><td>Optical system sensors (MHPS, LHPS) state display
ON/OFF state of the optical system sensor can be monitored by the LED on the operation panel.
<table>
<tr><th>Sensor name</th><th>Operation panel LED</th></tr>
<tr><td>MHPS</td><td>Paper empty lamp (▭)</td></tr>
<tr><td>LHPS</td><td>JAM lamp (☇)</td></tr>
</table></td></tr>
<tr><td>03</td><td>Lens operation check
The lens unit moves to the following positions of the magnification ratios continuously.
AB series: 100% → 115% → 122% → 141% → 200% → 86% → 81% → 70% → 50% → 100%
Inch series: 100% → 121% → 129% → 141% → 200% → 95% → 77% → 64% → 50% → 100%</td></tr>
<tr><td>04</td><td>Lens aging
The operation of SIM 1-3 is repeated continuously.</td></tr>
<tr><td rowspan="10">02</td><td>01</td><td>ADF aging
The ADF original transport operation is performed.</td></tr>
<tr><td>02</td><td>ADF sensors states display
The ADF sensors ON/OFF states can be monitored with the LED on the operation panel.
When the third digit of the multi display is “0” the following display is made.
<table>
<tr><th>Sensor name</th><th>Operation panel LED</th></tr>
<tr><td>Original set sensor</td><td>JAM lamp (☇)</td></tr>
<tr><td>Resist sensor</td><td>Paper empty sensor (▭)</td></tr>
<tr><td>Timing sensor</td><td>Drum position jam lamp (▼)</td></tr>
<tr><td>Repulsion sensor</td><td>Resist position jam lamp (▼)</td></tr>
<tr><td>ADF open/close sensor</td><td>ADF position jam lamp (▼)</td></tr>
<tr><td>Paper feed cover sensor</td><td>Paper exit position jam lamp (▼)</td></tr>
</table>
If, at that time, the magnification ratio display key is pressed, the third digit of the multi display is changed to “1” and the following display is made.
<table>
<tr><th>Sensor name</th><th>Operation panel LED</th></tr>
<tr><td>Tray width sensor (297mm, 11")</td><td>First step paper size lamp</td></tr>
<tr><td>Tray width sensor (257mm)</td><td>Second step paper size lamp</td></tr>
<tr><td>Tray width sensor (210mm, 8.5")</td><td>Third step paper size lamp</td></tr>
<tr><td>Tray width sensor (182mm)</td><td>Fourth step paper size lamp</td></tr>
<tr><td>Tray vertical sensor (240mm)</td><td>Resist position jam lamp (▼)</td></tr>
<tr><td>Tray vertical sensor (300mm)</td><td>Paper exit position jam lamp (▼)</td></tr>
<tr><td>Original width size sensor</td><td>Manual feed selection lamp</td></tr>
</table></td></tr>
<tr><td>03</td><td>ADF individual load operation check (paper feed motor forward rotation)</td></tr>
<tr><td>04</td><td>ADF individual load operation check (paper feed motor reverse rotation)</td></tr>
<tr><td>05</td><td>ADF individual load operation check (transport motor forward rotation)</td></tr>
<tr><td>06</td><td>ADF individual load operation check (transport motor reverse rotation)</td></tr>
<tr><td>08</td><td>ADF individual load operation check (Paper feed solenoid)</td></tr>
<tr><td>10</td><td>ADF individual load operation check (paper feed motor + paper feed solenoid)</td></tr>
</table>

<table>
<tr><th>Main code</th><th>Sub code</th><th>Content</th></tr>
<tr><td>03</td><td>02</td><td>Sorer sensor state display
The ADF sensor ON/OFF states can be monitored with the LED on the operation panel.
When the third digit of the multi display is “0” the following display is made.
<table>
<tr><th>Sensor name</th><th>Operation panel LED</th></tr>
<tr><td>Entrance sensor</td><td>Jam lamp (⚠)</td></tr>
<tr><td>Tray paper presence/empty sensor</td><td>Paper empty sensor (▭)</td></tr>
<tr><td>Upper limit sensor</td><td>Manual feed selection lamp</td></tr>
<tr><td>Lower limit sensor</td><td>Resist position jam lamp (▼)</td></tr>
<tr><td>Bin home position sensor</td><td>Drum position jam lamp (▼)</td></tr>
<tr><td>Take-out sensor</td><td>Paper exit jam lamp (▼)</td></tr>
<tr><td>Alignment bar home sensor</td><td>ADF section jam lamp (▼) SF-S54 only</td></tr>
</table>
If, at that time, the magnification ratio display key is pressed, the third digit of the multi display is changed to “1” and the following display is made.
<table>
<tr><th>Sensor name</th><th>Operation panel LED</th></tr>
<tr><td>Pinch (hold) home sensor</td><td>Jam lamp (⚠) SF-S54 only</td></tr>
<tr><td>Stapler home sensor</td><td>Paper exit position jam lamp (▼) SF-S54 only</td></tr>
<tr><td>Stapler paper sensor</td><td>Paper empty jam lamp (▭) SF-S54 only</td></tr>
<tr><td>Stapler near end sensor</td><td>Resist position jam lamp (▼) SF-S54 only</td></tr>
</table></td></tr>
<tr><td></td><td>03</td><td>Sorter individual load operation check (Transport motor)</td></tr>
<tr><td></td><td>04</td><td>Sorter individual load operation check (Bin motor)</td></tr>
<tr><td></td><td>05</td><td>Sorter individual load operation check (Buzzer)</td></tr>
<tr><td></td><td>06</td><td>Sorter individual load operation check (Alignment motor)</td></tr>
<tr><td></td><td>07</td><td>Sorter individual load operation check (Pinch hold motor)</td></tr>
<tr><td>05</td><td>01</td><td>Operation panel display check
All the LED’s on the operation panel are lighted for 5 sec.
When the automatic original feed unit is installed, the original feed lamp and the original remaining lamp are also lighted for 5 sec.</td></tr>
<tr><td></td><td>02</td><td>Heater lamp lighting check
The heater lamp is turned on/off in the following sequence.
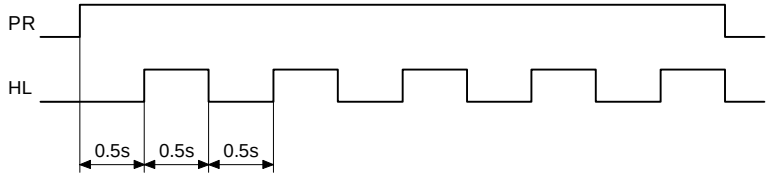
</td></tr>
<tr><td></td><td>03</td><td>Copy lamp lighting check
The copy lamp is turned on/off in the following sequence.
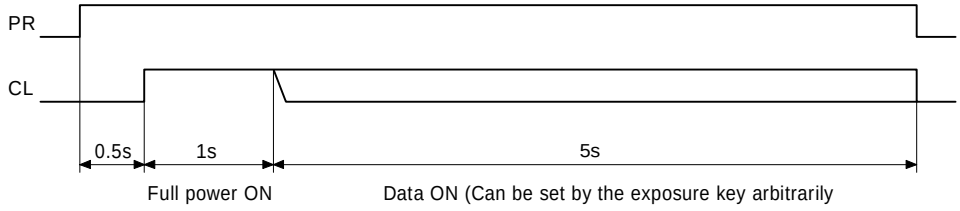
</td></tr>
<tr><td></td><td>04</td><td>DL lamp lighting check
The discharge lamp is lighted for 30 sec.</td></tr>
<tr><td></td><td>05</td><td>BL lamp lighting check
The blank lamp is turned on/off every 0.5 sec.</td></tr>
</table>

Main code	Sub code	Content
06	01	PSPS operation check The separation pawl is turned on/off 30 times in the following sequence. 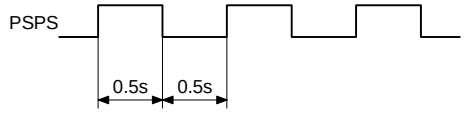
07	01	Warm-up time display and aging After execution of the simulation, warm-up is started, and the swarm-up time is displayed every second on the copy quantity display. When warm-up is completed (RPL ON), count adding of the display is stopped. Press the CA key to clear warm-up time display, set the copy quantity and press the PRINT button to make the set number of copies repeatedly.
	04	Warm-up omitting After completion of the simulation, the machine goes to the ready state. (RPL ON)
	06	Intermittent aging After execution of the simulation, the machine starts warm-up. After completion of warm-up, press the CA key to clear warm-up time display, set the copy quantity and press the PRINT button to make the set number of copies repeatedly. After the interval time (2 min) from completion of making the set number of copies, the machine resumes copying.
	08	Warm-up time display Aging function is deleted from SIM 7-1.
08	01	DVBIAS check The developing bias is turned on for 30 sec.
	02	MTHV (main, transfer), grid check (ME) The main/transfer charger is turned on for 30 sec. For the grid bias, the ME value is outputted.
	03	MTHV (main, transfer), grid check (PE) The main/transfer charger is turned on for 30 sec. For the grid bias, the PE value is outputted.
	04	MTHV (main, transfer), grid check (T/S) The main/transfer charger is turned on for 30 sec. For the grid bias, the T/S value is outputted.
	07	SHV (separation) check The separation charger is turned on for 30 sec.
10	—	Toner motor aging The toner motor is turned on.
14	—	Cancel of troubles (except for U2) Troubles (except for U2) are canceled and the simulation is also canceled automatically.
15	—	Cancel of waste toner full (blinks) The waste toner full indication (blinks) is canceled, and the simulation is also canceled automatically.
16	—	U2 trouble cancel U2 trouble is canceled, and the simulation is automatically canceled.
20	(Note)	Maintenance counter clear The maintenance counter is cleared and the maintenance counter value is displayed on the copy quantity display. (“000” is displayed because the counter value is cleared.) (Note) Cleared by entering the sub code “01.”

<table>
<tr><th>Main code</th><th>Sub code</th><th>Content</th></tr>
<tr><td>21</td><td>01</td><td>Maintenance cycle setting
Used to set the lighting cycle of the maintenance lamp (🧍).
When this simulation is executed, the currently set maintenance cycle is displayed on the copy quantity display.
After setting the number, press the print button to memory the value.
<table><tr><th>Set value</th><th>Maintenance cycle</th></tr><tr><td>0</td><td>60,000 sheets</td></tr><tr><td>1</td><td>30,000 sheets</td></tr><tr><td>2</td><td>10,000 sheets</td></tr><tr><td>3</td><td>5,000 sheets</td></tr><tr><td>4</td><td>2,500 sheets</td></tr><tr><td>5</td><td>Free (Not lighted.)</td></tr></table>← Initial value</td></tr>
<tr><td>22</td><td>01</td><td>Maintenance counter display
The maintenance counter value is displayed on the copy quantity display.</td></tr>
<tr><td></td><td>02</td><td>Maintenance preset counter display
The maintenance cycle set with SIM 21-1 is displayed on the copy quantity display.</td></tr>
<tr><td></td><td>03</td><td>Jam memory display
The cause (position) of the jam occurred in copying is displayed.
When this simulation is executed, the jam cause (jam position) is displayed on the jam cause display. By pressing the magnification ratio key, the history of jam causes can be checked sequentially.</td></tr>
<tr><td></td><td>04</td><td>Total jam counter display
The total number of jams occurred in copying is displayed on the copy quantity display.</td></tr>
<tr><td></td><td>05</td><td>Total counter display
The total counter value is displayed on the copy quantity display.</td></tr>
<tr><td></td><td>06</td><td>Developer counter display
The counter value of the developer which is installed is displayed on the copy quantity display.</td></tr>
<tr><td></td><td>07</td><td>Developer preset counter display
The developer replacement cycle (mini maintenance cycle for Japan) of the developer which is installed is displayed on the copy quantity display.</td></tr>
<tr><td></td><td>08</td><td>ADF counter display
The number of originals transported by the ADF is displayed on the copy quantity display.</td></tr>
<tr><td></td><td>10</td><td>Staple counter display
The number of stapling is displayed on the copy quantity display.</td></tr>
<tr><td></td><td>15</td><td>Trouble memory display
“A” is displayed on the third digit of the copy quantity display, and the latest trouble code (main code) is displayed on the second and the third digit.
When the PRINT button is pressed at that time, the sub code of the corresponding trouble is displayed during the PRINT button is being pressed.
When the magnification ratio key is pressed while the main code is displayed, the previous trouble is displayed.
Maximum 20 recent troubles are stored.</td></tr>
<tr><td>24</td><td>01</td><td>Jam memory/total jam counter clear
The cause (position) of a jam which occurred during copying and the jam total counter are cleared, and the jam total counter value is displayed on the copy quantity display. (“000” is displayed because the counter is cleared.)</td></tr>
<tr><td></td><td>02</td><td>Trouble memory clear
The main code and the sub code of a trouble is cleared.
(“000” is displayed because the memory is cleared.)</td></tr>
<tr><td></td><td>04</td><td>ADF counter clear
Used to clear the ADF counter and to display the ADF counter value on the copy quantity display.
(“000” is cleared because the counter is cleared.)</td></tr>
<tr><td></td><td>05</td><td>Staple counter clear
Used to clear the staple counter and to display the staple counter value on the copy quantity display.
(“000” is displayed because the counter is cleared.)</td></tr>
</table>

<table>
<tr><th>Main code</th><th>Sub code</th><th>Content</th></tr>
<tr><td>25</td><td>01</td><td>Drive system check
Used to turn on the main motor, the developing bias, and the discharge lamp for 3 min.
The input value of the toner density is displayed on the second digit of the copy quantity display during the main motor is rotating.
<table><tr><th colspan="2">Copy quantity display</th><th rowspan="2">Color of developer</th></tr><tr><th>Third digit</th><th>Second, first digit</th></tr><tr><td>A</td><td>1 ~ 99</td><td>Black</td></tr></table></td></tr>
<tr><td></td><td>02</td><td>Automatic developer adjustment
Same as SIM 25-1. The average value of toner density sensor inputs is stored as the toner density adjustment value after 3 min from starting the main motor rotation.
The display on the copy quantity display is same as SIM 25-1.</td></tr>
<tr><td>26</td><td>05</td><td>Count mode setting
Used to set the count mode of the total counter, the developer counter (mini maintenance counter for Japan), and the maintenance counter in A3/WLT copy.
When this simulation is executed, the currently set count mode is displayed on the copy quantity display.
Enter the set value and press the PRINT button to store it.
<table><tr><th>Set value</th><th>Total/Developer counter</th><th>Maintenance count</th></tr><tr><td>0</td><td>Double count</td><td>Double count</td></tr><tr><td>1</td><td>Single count</td><td>Double count</td></tr><tr><td>2</td><td>Double count</td><td>Single count</td></tr><tr><td>3</td><td>Single count</td><td>Single count</td></tr></table>← Initial value</td></tr>
<tr><td></td><td>06</td><td>Destination setting
Used to set the destination (Japan, SEC, etc.).
When this simulation is executed, the currently set destination is displayed on the copy quantity display.
Enter the set value and press the PRINT button to store it.
<table><tr><th>Set value</th><th>Destination</th></tr><tr><td>0</td><td>Japan</td></tr><tr><td>1</td><td>SEC</td></tr><tr><td>2</td><td>SECL</td></tr><tr><td>3</td><td>SEEG</td></tr><tr><td>4</td><td>SUK</td></tr><tr><td>5</td><td>SCA</td></tr><tr><td>6</td><td>EX inch series</td></tr><tr><td>7</td><td>EX AB series</td></tr><tr><td>8</td><td>EX inch series (FC)</td></tr><tr><td>9</td><td>EX AB series (FC)</td></tr><tr><td>10</td><td>Taiwan/China</td></tr></table></td></tr>
<tr><td></td><td>07</td><td>Drum sensitivity setting
Used to set the drum sensitivity.
When this simulation is executed, the currently set drum sensitivity is displayed on the copy quantity display.
Enter the set value and press the PRINT button to store it.
<table><tr><th>Set value</th><th>Drum sensitivity</th></tr><tr><td>1</td><td>1</td></tr><tr><td>2</td><td>2</td></tr><tr><td>3</td><td>3</td></tr></table>← Initial value</td></tr>
</table>

<table>
<tr><th>Main code</th><th>Sub code</th><th>Content</th></tr>
<tr><td>26</td><td>10</td><td>AE original density setting
Used to set the original density.
When this simulation is executed, the currently set original density is displayed on the copy quantity display.
Enter the set value and press the PRINT button to store it.
<table><tr><th>Set value</th><th>Original density</th></tr><tr><td>0</td><td>Normal</td></tr><tr><td>1</td><td>Thin original</td></tr></table>← Initial value
When a dark original is copied in the AE mode, the lead edge (about 4mm) is not copied. If it is necessary to copy the lead edge, set this simulation to “1.”</td></tr>
<tr><td></td><td>13</td><td>Warm-up mode setting
Used to set the main motor operation mode during warm-up.
When this simulation is executed, the currently set warm-up mode is displayed on the copy quantity display.
Enter the set value and press the PRINT button to store it.
<table><tr><th>Set value</th><th>Warm-up mode</th></tr><tr><td>0</td><td>Normal mode</td></tr><tr><td>1</td><td>The main motor rotates until warm-up is completed.</td></tr></table>← Initial value</td></tr>
<tr><td></td><td>18</td><td>Toner save mode setting (Japan/SUK only)
Used to set ON/OFF of the toner save mode.
When this simulation is executed, the currently set value is displayed on the copy quantity display.
Enter the set value and press the PRINT button to store it.
<table><tr><th>Set value</th><th>Toner save mode</th></tr><tr><td>0</td><td>ON</td></tr><tr><td>1</td><td>OFF</td></tr></table>← Initial value</td></tr>
<tr><td></td><td>20</td><td>Rear edge void setting
Used to set YES/NO of the paper rear edge void.
When this simulation is executed, the currently set rear edge void mode is displayed on the copy quantity display.
Enter the set value and press the PRINT button to store it.
<table><tr><th>Set value</th><th>Rear edge void</th></tr><tr><td>0</td><td>Yes</td></tr><tr><td>1</td><td>No</td></tr></table>← Initial value</td></tr>
<tr><td></td><td>29</td><td>AC power voltage setting
Used to set the AC power voltage to 100V or 200V.
(For compliance with the CE mark)
<table><tr><th>Set value</th><th>Power voltage</th></tr><tr><td>0</td><td>100V series</td></tr><tr><td>1</td><td>200V series</td></tr></table>← Initial value</td></tr>
</table>

<table>
<tr><th>Main code</th><th>Sub code</th><th>Content</th></tr>
<tr><td>30</td><td>01</td><td>Paper sensor state display
Used to monitor the ON/OFF state of the sensors in the main body with the LED on the operation panel.
<table>
<tr><th>Sensor name</th><th>Operation panel LED</th></tr>
<tr><td>PID</td><td>Manual feed tray selection lamp</td></tr>
<tr><td>PPD</td><td>Drum position jam lamp (▼)</td></tr>
<tr><td>DPPD1</td><td>Resist position jam lamp (▼)</td></tr>
<tr><td>POD</td><td>Paper exit position jam lamp (▼)</td></tr>
<tr><td>PED1</td><td>Body upper step tray selection lamp (▼)</td></tr>
</table></td></tr>
<tr><td>42</td><td>(Note)</td><td>Developer counter clear
Used to clear the currently installed developing unit counter and to display the developer counter value on the copy quantity display.
(“000” is displayed because the counter is cleared.)
(Note) The counter is cleared by entering the sub code “01.”</td></tr>
<tr><td>43</td><td>01</td><td>Fusing temperature setting
Used to set the fusing control temperature.
When this simulation is executed, the currently set fusing temperature is displayed on the copy quantity display.
The set value is changed by pressing the magnification ratio display key.
Select the fusing temperature and press the PRINT button to store it.
The setting range is 160 ~ 205℃ (in the increment of 5℃).</td></tr>
<tr><td>44</td><td>01</td><td>Process control operation setting
Used to set valid/invalid of the grid voltage correction, optical dirt correction, and drum membrane decrease correction.
When this simulation is executed, the currently set value is displayed on the copy quantity display.
To make each correction mode valid, enter the sum of the codes of the correction modes, and press the PRINT button to store it.
<table>
<tr><th>Code</th><th>Correction mode</th></tr>
<tr><td>+1</td><td>Grid voltage correction</td></tr>
<tr><td>+2</td><td>Optical dirt correction</td></tr>
<tr><td>+4</td><td>Drum membrane decrease correction</td></tr>
</table>
The initial value is “7.” (All corrections are valid.)
The grid voltage correction is always valid regardless of set value. (Even if it is set to “0,” the grid voltage correction is not canceled.)</td></tr>
</table>

<table>
<tr><th>Main code</th><th>Sub code</th><th>Content</th></tr>
<tr><td>44</td><td>05</td><td>
Grid voltage correction operation test
Used to perform the grid voltage correction and to display the measure data on the copy quantity display.
When this simulation is executed, the grid voltage correction is automatically performed. The image density sensor is read when -30V, 0V, and +30V are applied to the latest patch forming grid voltage.
After completion of the operation, the measure data are displayed on the copy quantity display.
Since there are two or more display items, the third digit is used to make distinction between the light reception level and the original judgment level, and the lower two digits are used to display the data.
The display is selected by the magnification ratio key.
<table>
<tr><th colspan="2">Copy quantity display</th><th rowspan="2">Display data (Image density sensor A/D input value)</th></tr>
<tr><th>3rd digit</th><th>2nd, 1st digits</th></tr>
<tr><td>A</td><td rowspan="6">Measured data</td><td>Drum surface data (patch forming grid voltage) –30V is applied.</td></tr>
<tr><td>b</td><td>Drum surface data (patch forming grid voltage) is applied.</td></tr>
<tr><td>C</td><td>Drum surface data (patch forming grid voltage) is applied.</td></tr>
<tr><td>d</td><td>Patch data (patch forming grid voltage) -30V is applied.</td></tr>
<tr><td>E</td><td>Patch data (patch forming grid voltage) is applied.</td></tr>
<tr><td>F</td><td>Patch data (patch forming grid voltage) +30V is applied.</td></tr>
</table>
The data displayed by the lower two digits are A/D input values of the original sensor, and is expressed in decimal. (Display range: 0 ~ 99)
The patch forming grid voltage after execution of this simulation can be checked with SIM 44-9.
</td></tr>
<tr><td></td><td>06</td><td>
Grid voltage correction compulsory execution
The grid voltage correction is forcibly executed during the simulation.
When the operation is completed, the patch forming grid voltage after grid voltage correction is displayed on the copy quantity display. The relationship between the display value and the patch forming grid voltage value is as shown below.
<table>
<tr><th>Display value</th><th>Patch forming grid voltage</th></tr>
<tr><td>8</td><td>200 V</td></tr>
<tr><td>50</td><td>410 V</td></tr>
<tr><td>99</td><td>655 V</td></tr>
</table>
Display range: 8 ~ 99
When the display is changed by 1, the voltage is changed by 5V.
The drum surface data and the patch data after execution of this simulation can be checked with SIM 44-10.
(Note) When this simulation is executed, the patch forming grid voltage is stored, and the grid voltage amount may be changed from the patch forming grid voltage before and after execution.
</td></tr>
<tr><td></td><td>07</td><td>
Image density sensor, drum mark sensor operation test
Used to read the light reception level for the light emitting amount of the image density sensor and the drum mark sensor and to display on the copy quantity display.
When this simulation is executed, the light emitting levels of the image density sensor and the drum mark sensor are changed in 5 steps and each light reception level is read.
After completion of operation, the measured data are displayed on the copy quantity display.
Since there are two or more display items, the third digit is used to make distinction between the light reception level and the original judgment level, and the lower two digits are used to display the data.
The display is selected by the magnification ratio key.
<table>
<tr><th colspan="2">Copy quantity display</th><th rowspan="2">Display data</th></tr>
<tr><th>3rd digit</th><th>2nd, 1st digits</th></tr>
<tr><td>A</td><td rowspan="5">Measured data</td><td>Image density sensor input value, when light emitting 1V</td></tr>
<tr><td>b</td><td>Image density sensor input value, when light emitting 2V</td></tr>
<tr><td>C</td><td>Image density sensor input value, when light emitting 3V</td></tr>
<tr><td>d</td><td>Image density sensor input value, when light emitting 4V</td></tr>
<tr><td>E</td><td>Image density sensor input value, when light emitting 5V</td></tr>
<tr><td>F</td><td rowspan="5">Judgement data</td><td>Drum mark sensor level, when light emitting 1V</td></tr>
<tr><td>G</td><td>Drum mark sensor level, when light emitting 2V</td></tr>
<tr><td>H</td><td>Drum mark sensor level, when light emitting 3V</td></tr>
<tr><td>I</td><td>Drum mark sensor level, when light emitting 4V</td></tr>
<tr><td>J</td><td>Drum mark sensor level, when light emitting 5V</td></tr>
</table>
The data displayed with the lower two digits:
“A” ~ “E”: Image density sensor A/D input value. Converted into a decimal number and displayed. (Display range: 0 ~ 99)
“F” ~ “J”: Drum mark sensor level is displayed with 0 and 1.
“0”: Drum mark sensor sensing impossible
“1”: Drum mark sensor sensing possible
</td></tr>
</table>

<table>
<tr><th>Main code</th><th>Sub code</th><th>Content</th></tr>
<tr><td>44</td><td>08</td><td>
Grid voltage correction, optical dirt correction, drum membrane decrease correction data display
Used to display each correction data of the grid voltage correction, the optical dirt correction, and the drum membrane decrease correction on the copy quantity display.
Since there are two or more display items, the third digit is used to make distinction between the light reception level and the original judgment level, and the lower two digits are used to display the data.
The display is selected by the magnification ratio key.
<table>
<tr><th colspan="2">Copy quantity display</th><th rowspan="2">Display data</th></tr>
<tr><th>3rd digit</th><th>2nd, 1st digits</th></tr>
<tr><td>A</td><td>8 ~ 99</td><td>Patch forming grid voltage (initial value)
Gird voltage when the display value is 50 = 410V
When the display value is decreased by 1, the grid voltage is decreased by 5V.
When the display value is increased by 1, the grid voltage is increased by 5V.</td></tr>
<tr><td>b</td><td>1 ~ 99</td><td>Normal mode grid voltage (initial value)
Display value × 10V is the grid voltage output.</td></tr>
<tr><td>C</td><td>0 ~ 99</td><td>Optical dirt correction reference value
The AE sensor input value measured after execution of SIM 46-1.
(Converted into a decimal number and displayed.)</td></tr>
<tr><td>d</td><td>0 ~ 99</td><td>Drum rotating time (accumulated value)
When the display value is increased by 1, it corresponds to one hour.</td></tr>
<tr><td>E</td><td>0 ~ 99</td><td>DV unit (black) rotating time (accumulated value)
When the display value is increased by 1, it corresponds to one hour.</td></tr>
</table>
</td></tr>
<tr><td></td><td>09</td><td>
Grid voltage correction, optical dirt correction, drum membrane decrease correction data display (the newest value)
Used to display each correction data of the grid voltage correction, the optical dirt correction, and the drum membrane decrease correction on the copy quantity display.
Since there are two or more display items, the third digit is used to make distinction between the light reception level and the original judgment level, and the lower two digits are used to display the data.
The display is selected by the magnification ratio key.
<table>
<tr><th colspan="2">Copy quantity display</th><th rowspan="2">Display data</th></tr>
<tr><th>3rd digit</th><th>2nd, 1st digits</th></tr>
<tr><td>A</td><td>8 ~ 99</td><td>Patch forming grid voltage (latest value)
Gird voltage when the display value is 50 = 410V
When the display value is decreased by 1, the grid voltage is decreased by 5V.
When the display value is increased by 1, the grid voltage is increased by 5V.</td></tr>
<tr><td>b</td><td>1 ~ 99</td><td>Normal mode grid voltage (latest value)
Display value × 10V is the grid voltage output.</td></tr>
<tr><td>C</td><td>0 ~ 10</td><td>Optical dirt correction reference value
Display value × 0.7V = Copy lamp voltage correction value</td></tr>
<tr><td>d</td><td>0 ~ 20</td><td>Drum membrane decease correction value
Drum membrane decease correction value when normal mode exp. 1</td></tr>
<tr><td>E</td><td>0
31 ~ 35</td><td>Trouble data display when the grid voltage correction is performed.
0 --------- No trouble
31 ~ 35 --- Trouble (The sub code is displayed.)</td></tr>
</table>
</td></tr>
</table>

<table>
<tr><th>Main code</th><th>Sub code</th><th>Content</th></tr>
<tr><td>44</td><td>10</td><td>
Drum voltage correction drum surface data, patch data display
Used to display the drum surface data and the patch data after execution of the grid voltage after simulation 44-5, 6 or during normal operation is displayed on the copy quantity display.
Since there are two or more display items, the third digit is used to make distinction between the light reception level and the original judgment level, and the lower two digits are used to display the data.
The display is selected by the magnification ratio key.
<table>
<tr><th colspan="2">Copy quantity display</th><th rowspan="2">Display data
(Image density sensor A/D input value)</th></tr>
<tr><th>3rd digit</th><th>2nd, 1st digits</th></tr>
<tr><td>A</td><td rowspan="6">Measured data</td><td>Drum surface data (patch forming grid voltage) –30V is applied.</td></tr>
<tr><td>b</td><td>Drum surface data (patch forming grid voltage) is applied.</td></tr>
<tr><td>C</td><td>Drum surface data (patch forming grid voltage) is applied.</td></tr>
<tr><td>d</td><td>Patch data (patch forming grid voltage) –30V is applied.</td></tr>
<tr><td>E</td><td>Patch data (patch forming grid voltage) is applied.</td></tr>
<tr><td>F</td><td>Patch data (patch forming grid voltage) +30V is applied.</td></tr>
</table>
The data displayed by the lower two digits are A/D input values of the original sensor, and is expressed in decimal.
</td></tr>
<tr><td></td><td>11</td><td>
Initial grid bias setting
Used to set the initial grid bias in the normal mode, the photo mode, the toner save mode, and the patch measurement mode.
When this simulation is executed, war-up is started and the currently set normal mode initial grid bias is displayed on the copy quantity display.
Since there are two or more display items, the third digit is used to make distinction between the light reception level and the original judgment level, and the lower two digits are used to display the data.
The display is selected by the magnification ratio key.
<table>
<tr><th colspan="2">Copy quantity display</th><th rowspan="2">Display data</th></tr>
<tr><th>3rd digit</th><th>2nd, 1st digits</th></tr>
<tr><td>A</td><td rowspan="3">1 ~ 99</td><td>Initial grid bias data (normal mode)
Set the grid voltage to 750V.
When the grid voltage is decreased by 1, the voltage is decreased by 5V. When the grid voltage is increased by 1, the voltage is increased by 5V.</td></tr>
<tr><td>b</td><td>Initial grid bias data (Photo mode)
Set the grid voltage to 750V.
When the grid voltage is decreased by 1, the voltage is decreased by 5V. When the grid voltage is increased by 1, the voltage is increased by 5V.</td></tr>
<tr><td>C</td><td>Initial grid bias data (Toner save mode)
Set the grid voltage to 750V.
When the grid voltage is decreased by 1, the voltage is decreased by 5V. When the grid voltage is increased by 1, the voltage is increased by 5V.</td></tr>
<tr><td>d</td><td>41</td><td>Initial grid bias data (Patch measurement mode)
Display value “41” : Set to 410V.
Setting cannot be changed.</td></tr>
</table>
Enter the set value and press the PRINT button to store the value and start copying. After completion of setting, press the CA key to cancel the adjustment mode.
</td></tr>
<tr><td></td><td>12</td><td>
Copying without grid bias correction
Used to make copying without grid bias correction and drum mark check.
When this simulation is executed, warm-up is started and “A 1” is displayed on the copy quantity display (for identification of execution of this simulation.)
During warm-up, drum mark check is not performed.
After completion of warm-up, press the PRINT button to start copying.
After starting copying, the grid bias correction is not performed.
The number of multi copy cannot be set. (Single copy only)
After checking the operation, press the CA key to cancel the mode.
(Note) This simulation is used to judge whether the F2 trouble is caused by the grid bias correction or by the process or the high voltage section trouble.
</td></tr>
</table>

<table>
<tr><th>Main code</th><th>Sub code</th><th>Content</th></tr>
<tr><td>46</td><td>01</td><td>
Exposure level adjustment
Used to set the copy density (copy lamp output voltage) in each exposure mode.
When this simulation is executed, warm-up is started and the currently set manual (ME) upper limit value is displayed on the copy quantity display.
When warm-up is completed, the ready lamp lights up. When the PRINT button is pressed, copying is performed in the currently set exposure mode.
Since there are two or more display items, the third digit is used to make distinction between the light reception level and the original judgment level, and the lower two digits are used to display the data.
The display is selected by the magnification ratio key, the exposure key, or the density select key.
<table>
<tr><th colspan="2">Copy quantity display</th><th colspan="2" rowspan="2">Exposure section display</th><th rowspan="2">Display data</th></tr>
<tr><th>3rd digit</th><th>2nd, 1st digits</th></tr>
<tr><td>A</td><td rowspan="10">1 ~ 99</td><td>ME</td><td>exp. 1</td><td>Manual (ME) upper limit value</td></tr>
<tr><td>b</td><td>ME</td><td>exp. 5</td><td>Manual (ME) lower limit value</td></tr>
<tr><td>C</td><td>ME + PE</td><td>exp. 1</td><td>Manual (ME) toner save upper limit value</td></tr>
<tr><td>d</td><td>ME + PE</td><td>exp. 5</td><td>Manual (ME) toner save lower limit value</td></tr>
<tr><td>E</td><td>PE</td><td>exp. 1</td><td>Photo (PE) upper limit value</td></tr>
<tr><td>F</td><td>PE</td><td>exp. 5</td><td>Photo (PE) lower limit value</td></tr>
<tr><td>G</td><td>AE</td><td>exp. 1</td><td>Auto (AE) slant</td></tr>
<tr><td>H</td><td>AE</td><td>exp. 5</td><td>Auto (AE) lower limit value</td></tr>
<tr><td>I</td><td>AE + PE</td><td>exp. 1</td><td>Auto (AE) toner save slant</td></tr>
<tr><td>J</td><td>AE + PE</td><td>exp. 5</td><td>Auto (AE) toner save lower limit</td></tr>
</table>
The setting range is 1 ~ 99. The greater the set value is, the brighter the copy density is.
After completion of setting, press the CA key to cancel the adjustment mode.
(Note) Auto (AE) slant and auto (AE) toner save slant must be set to 0.
</td></tr>
<tr><td>47</td><td>—</td><td>
AE sensor characteristics measurement
Used to read the E sensor input value when the copy lamp is lighted at the specified voltage and to set the AE sensor gain.
When this simulation is executed, the mirror base is initialized and fed to the measurement position. After completion of feeding, the previously measured AE sensor input value is displayed on the copy quantity display and the ready lamp is lighted.
Press the PRINT button, and the copy lamp is lighted at the specified voltage interval. The AE sensor input value at that time is read and stored. After completion of reading, the copy lamp is turned off and the measured AE sensor is displayed on the copy quantity display.
At that time, the AE sensor gain is automatically adjusted.
(Note) Place 4 or 5 white sheets on the table glass during execution of this simulation.
</td></tr>
<tr><td>48</td><td>01</td><td>
Front/rear direction magnification ratio adjustment
Used to set the vertical (front/rear direction) copy magnification ratio.
When this simulation is executed, warm-up is started and the currently set normal correction value is displayed on the copy quantity display.
Since there are two or more display items, the third digit is used to make distinction between the light reception level and the original judgment level, and the lower two digits are used to display the data.
The display is selected by the magnification ratio key.
<table>
<tr><th colspan="2">Copy quantity display</th><th rowspan="2">Display data</th></tr>
<tr><th>3rd digit</th><th>2nd, 1st digits</th></tr>
<tr><td>A</td><td>1 ~ 99</td><td>Normal correction value</td></tr>
<tr><td>b</td><td rowspan="2">10 ~ 90</td><td>Zooming correction value (reduction)</td></tr>
<tr><td>C</td><td>Zooming correction value (enlargement)</td></tr>
</table>
The setting range is:
normal correction range; 1 ~ 99 (initial value: 50)
zooming correction value; 10 ~ 90 (initial value: 50)
After completion of setting, press the CA key to cancel the adjustment mode.
</td></tr>
</table>

<table>
<tr><th>Main code</th><th>Sub code</th><th>Content</th></tr>
<tr><td>48</td><td>02</td><td>Paper transport direction magnification ratio adjustment
Used to set the horizontal (paper transport direction) magnification ratio.
When this simulation is executed, warm-up is started and the currently set mirror speed correction value is displayed on the copy quantity display.
When warm-up is completed, the ready lamp is lighted. Press the PRINT button to start copying.
After completion of setting, press the CA key to cancel the adjustment mode.</td></tr>
<tr><td rowspan="2">50</td><td>01</td><td>Lead edge image position adjustment
Used to set the lead edge image position (RRC ON timing), the lead edge void position (blank lamp ON timing), and the rear edge void position (grid output timing).
When this simulation is executed, warm-up is started and the currently set resist adjustment A is displayed on the copy quantity display.
Since there are two or more display items, the third digit is used to make distinction between the light reception level and the original judgment level, and the lower two digits are used to display the data.
The display is selected by the magnification ratio key.
<table><tr><th colspan="2">Copy quantity display</th><th rowspan="2">Display data</th></tr><tr><th>3rd digit</th><th>2nd, 1st digits</th></tr><tr><td>A</td><td rowspan="4">1 ~ 99</td><td>Resist adjustment A</td></tr><tr><td>b</td><td>Resist adjustment B</td></tr><tr><td>C</td><td>Lead edge void adjustment</td></tr><tr><td>d</td><td>Rear edge void adjustment</td></tr></table>Set range: 1 ~ 99
After completion of setting, press the CA key to cancel the adjustment mode.
(Lead edge adjustment procedure)
① Set resist adjustment A and B to 0. Make 100% and 200% copy.
② Measure the distance between the paper lead edge and the image lead edge in each copy mode.
③ Enter the measured value in the following formula to obtain resist adjustment A and B.
200% lead edge shift : L1
100% lead edge shift : L2
(Resist adjustment A) = 6.151 × (L1 – L2)
(Resist adjustment B) = (15.385 × L2) – (7.692 × L1)
④ Set the obtained values.</td></tr>
<tr><td>02</td><td>Lead edge image position adjustment (measurement value substitution formula)
Used to set the lead edge image position and the lead edge void position similarly with SIM 50-1.
This simulation allows to directly enter the measured values L1 and L2 for setting of the lead edge image position.
<table><tr><th colspan="2">Copy quantity display</th><th rowspan="2">Display data</th></tr><tr><th>3rd digit</th><th>2nd, 1st digit</th></tr><tr><td>A</td><td rowspan="4">1 ~ 99</td><td>L1</td></tr><tr><td>b</td><td>L2</td></tr><tr><td>C</td><td>Lead edge void adjustment</td></tr><tr><td>d</td><td>Rear edge void adjustment</td></tr></table>(Example)
When L1 = 24.5mm, enter [2] [4] [5] .
After entering, the copy quantity display shows “A45.”
Note for entering L1 and L2 values
• The significant digits of L1 and L2 are 3 digits. (Only lower two digits are displayed. The top digit is not displayed.)
• Enter L1 and L2 to one decimal place. (If the first decimal place is 0, enter 0 at the end.)
• If four digits is entered for L1 or L2, the last three digits are effective. If only two digits is entered, the lowest digit (1st digit) of the previous input is used as the top digit (3rd digit) of this time.
(Example) If the previous input is 245, and the current input is 24, the stored value is 524.
• Only when the PRINT button is pressed after setting L1 and L2, resist adjustment A and B in SIM 50-1 are calculated and revised (stored). Pressing the magnification ratio key or the CA key cannot revise the resist adjustment A and B.</td></tr>
</table>

<table>
<tr><th>Main code</th><th>Sub code</th><th>Content</th></tr>
<tr><td>51</td><td>02</td><td>Resist amount adjustment
Used to set the warp amount of paper in the resist section.
When this simulation is executed, warm-up is started and the currently set tray resist amount is displayed on the copy quantity display.
After completion of warm-up, the ready lamp is lighted. Press the PRINT button to start copying.
Since there are two or more display items, the third digit is used to make distinction between the light reception level and the original judgment level, and the lower two digits are used to display the data.
The display is selected by the magnification ratio key.
<table><tr><th colspan="2">Copy quantity display</th><th rowspan="2">Display data</th><th></th></tr><tr><th>3rd digit</th><th>2nd, 1st digits</th></tr><tr><td>A</td><td rowspan="2">1 ~ 99</td><td>Tray resist amount</td><td>← Initial set value: 45</td></tr><tr><td>b</td><td>Manual feed resist amount</td><td>← Initial set value: 50</td></tr></table>The details of the adjustment are as follows.
This adjustment is used to set the time (resist amount) from the paper transport sensor (PPD) ON to paper feed operation OFF. The set range is 1 ~ 99.
Set value × 1 msec + 70 msec = Resist amount
• A ... Cassette (Initial set value 40)
• B ... Manual feed
For WLT, A3, LG, B4, foolscap, LTR, or A4R, however, +15 is added to the simulation set value by the software.
(Example) When the simulation set value is 40, +15 is added to 40 by the software and the actual value is 55.</td></tr>
<tr><td rowspan="3">53</td><td>01</td><td>ADF (single) stop position setting
Used to set the original stop position in ADF (single) transport.
When this simulation is executed, the currently set stop position data is displayed on the copy quantity display.
Enter the set value and press the PRINT button to store it.
Setting range: 0 ~ 15</td></tr>
<tr><td>04</td><td>ADF resist sensor adjustment
Used to adjust the ADF resist sensor original judgement level.
When this simulation is executed, the resist sensor original judgement level is adjusted. After completion of adjustment, the original judgement level is displayed on the copy quantity display.
Display range: 0 ~ FFh (hexadecimal)</td></tr>
<tr><td>06</td><td>ADF timing sensor adjustment
When this simulation is executed, the paper exit reverse sensor original judgement level is adjusted. After completion of this adjustment, the original judgement level is displayed on the copy quantity display.
Display range: 0 ~ FFh (hexadecimal)</td></tr>
<tr><td>54</td><td>03</td><td>Sorter buzzer setting
Used to adjust the sound volume of the sorter removal buzzer and the staple warning buzzer.
(When the SF-S54 is installed)
<table><tr><th>Set value</th><th>Buzzer setting</th><th></th></tr><tr><td>0</td><td>Volume Large</td><td>← Initial setting</td></tr><tr><td>1</td><td>Volume Middle</td><td></td></tr><tr><td>2</td><td>Volume Small</td><td></td></tr><tr><td>3</td><td>OFF</td><td></td></tr></table>(When the SF-S17N is installed)
<table><tr><th>Set value</th><th>Buzzer setting</th><th></th></tr><tr><td>0</td><td>ON</td><td>← Initial setting</td></tr><tr><td>3</td><td>OFF</td><td></td></tr></table></td></tr>
</table>

6. User simulation

This simulation allows to change and set the following setting which has been set when shipping from the factory.

(1) Functions which can be set and canceled by the user simulation

Function name	Function and setting content	Factory setting
Auto clear	• After completion of copying, when a certain time is passed, the machine returns to the initial state automatically. The time to return to the initial state is set in the range of 30 - 120 sec in increment of 30 sec. This function can be cleared.	60 sec
Pre-heat	• When the copier is left without copying with the power ON, the power consumption is automatically lowered to 60Wh. The time to start this function is set in the range of 1 min - 120 min. • When this function operates, the pre-heat lamp on the operation panel is lighted. To return to the initial state: Press any key on the operation panel. (If the COPY button is pressed, the machine returns to the initial state and performs copying.) If also the original is set or the tray is pulled out, the machine returns to the initial state.	15 min
Auto power shut off	• When the copier is left without copying with the power ON, the power consumption is automatically lowered to 10Wh. The time to start this function is set in the range of 5 min - 120 min. • When this function operates, al the lamps on the operation panel except for the pre-heat lamp are turned off. **To return to the initial state:** Press the COPY button. The machine returns to the initial state.	30 min
Auto pre-heat control	• This function learns the use conditions of the copier to automatically control the time to start the pre-heat function and the auto power shut off function to the optimum level. This function can be activated or inactivated. • When this function is activated, the time settings in the pre-heat function and the auto power shut off function are ignored.	Set
Auto shut OFF	• When the copier is left without copying for a certain period, this function is used to enable or disable the function of lowering the power consumption.	Cancel
Auto document feeding unit manual document feed mode	• By use of the auto document feeder (option), originals of different sizes are fed manually. • When this function is activated, set an original during the original feed lamp blinks after completion of copying of the previous original, and the original is fed automatically.	Cancel
Sorter take-out mode	• When the sorter (option) is installed, the interval between bins can be extended to facilitate to take out the copy by pressing the copy take-out key.	Set

∗ Note: The value of power consumption in pre-heat or in auto power shut off may vary according to the use conditions.

(2) User simulation

Simulation procedure	State	Paper jam/Maintenance/ Mini maintenance/ Paper supply/Toner supply/ Warning LED	Copy quantity display	Copy button LED
1. Press the tray selection key for 5 sec or more.	User simulation input is allowed.	Blink		OFF
2. Enter the simulation code No. with the10-key pad.	Selection of simulation code No.	Blink	1 –	ON
3. Press the COPY button.	Determination of simulation code	Blink	1 1 –	ON
4. Enter the selection code No. with the 10-key pad.	Selection of simulation code menu	Blink	1 2 –	ON
5. Press the COPY button.	Determination of simulation code menu	Blink	1 2	OFF
6. Press the tray selection key.	Escape from user simulation. • When this key is pressed during selection of user simulation, the mode returns to 1 (User simulation is allowed.).	OFF	Returns to the copy quantity display.	—
∗ Press the clear key.	(Use this key in case of erroneous input) • After setting the program, when this key is pressed, the next program input is allowed.	Blink	– –	OFF

(: Blink)

(3) User simulation code table

Program	Sim. code	Selection code: Set content	Factory setting
Auto clear passing time setting	[1]	[0]: Cancel [1]: 30 sec [2]: 60 sec [3]: 90 sec [4]: 120 sec	2
Pre-heat mode setting and passing time setting	[2]	[0]: Cancel [1]: 1 min [2]: 15 min [3]: 60 min [4]: 120 min	2
Auto power shut off mode setting and passing time setting	[3]	[1]: 5min [2]: 15 min [3]: 30 min [4]: 60 min [5]: 120 min [6]: 240 min	3
Auto pre-heat control mode setting and cancel	[4]	[0]: Cancel [1]: Setting	1
Auto document feeder manual document feed mode setting	[5]	[0]: Cancel [1]: Setting	0
Sorter take-out mode	[7]	[0]: Cancel [1]: Setting	1
Auto power shut OFF setting	[20]	[0]: Cancel [1]: Setting	0

(4) Department counter setting content (Set with user program P10 ~ P15)

	Function name	Setting content	Factory setting
P10	Department counter setting/cancel	The department counter is set or canceled.	Cancel
P11	Department No. registration	The department number is registered. Up to 20 departments can be registered.	No setting
P12	Department No. change	The registered department number is changed.	No change allowed.
P13	Department No. delete	The registered department numbers are deleted. One department number or all the department numbers can be deleted.	No delete allowed.
P14	Copy quantity display (Total)	The copy quantity of each department is displayed. The count is made up to 50,000. After that, the count starts from 0 again.	No display allowed.
P15	Copy quantity delete (Total delete)	The counted copy quantity is deleted. One department or all the department can be deleted.	No display allowed. (∗)

(∗): Because of no registration of department No. at all.

[9] SELF DIAGNOSTICS

1. Summary/purpose

This model has the self diag function for the following purposes:

1) When a trouble occurs in the machine, the machine detects the trouble and displays the trouble content on the copy quantity display to alert the customer and the serviceman.
2) When any abnormality is detected, the power supply line is cut off immediately for safety and to protect the machine from damage.

2. Operation

The self diag content is displayed in the following procedure.

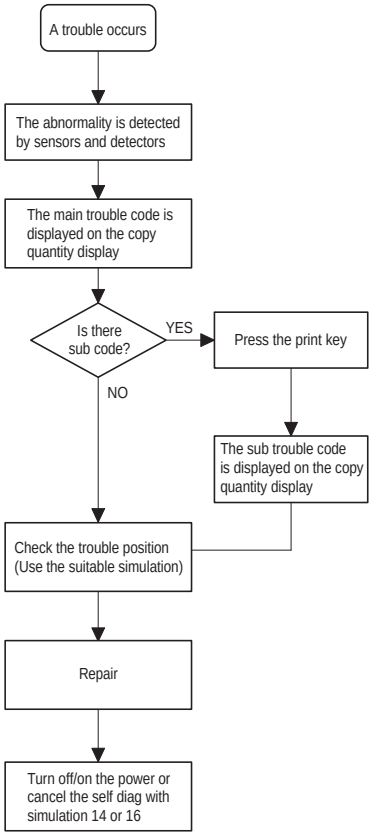

3. Clearing the self diag display

After repairing the trouble section, clear the self diag display according to the table below:
Clearing the self diag display

Self diag display	Display clearing procedure
L1, L3, L4, L5, L8, U5, F1, F2, EE, P	Turn off/on the power.
H2, H3, H4	Execute simulation 14.
U2	Execute simulation 16.
CH, PC	When the trouble is cancelled, the display is cleared.

Trouble code	Sub code	Content	Condition
L1	00	Mirror feed trouble	• When initializing, MHPS is not turned off within 1.5 sec from starting feeding of the mirror. • When copying, MHPS is not turned off within 0.5 sec from starting feeding of the mirror. • When feeding the mirror is started during copying, the mirror is not at the home position (MHPS is turned off).
L3	00	Mirror return trouble	• When initializing, MHPS is not turned on within 2.5 sec from starting returning of the mirror. • When copying, MHPS is not turned on within 2 sec from starting returning of the mirror.
L4	01	Main motor trouble	• During rotation of the main motor, MMRE (encoder) pulse is not sensed for more than 0.05 sec.
L5	02	Lens trouble	• The lens shift operation is not completed within 10 sec from starting. • When the lens is moving to the home position (normal position), LHPS is not sensed even though the lens is shifted by the specified steps.
L8	01	Zero cross pulse (FW) trouble	• The zero cross pulse width is shifted more than 10%.
	03	AE sensor trouble	• When the AE sensor characteristics measurement (simulation 47) is executed, the AE sensor input does not change.
H2	00	Fusing thermistor open detection	• The thermistor (TH) input value exceeds 4.07V.
H3	00	Fusing high temperature trouble	• The fusing temperature is sensed as abnormally high as 240 degrees C (thermistor input value 0.38V or less).
H4	00	Fusing low temperature trouble	• When warming up, the ready temperature is not reached within 90 sec. • When controlling the temperature after completion of warm up, the fusing temperature (set temperature) is sensed as –40℃ or less.
U2	01	Backup memory trouble	• The counter addition value and the check sum value are different from each other.
	04	Backup IC (EEPROM) access error	• Data read/write to the backup IC (EEPROM) cannot be performed.
U5	00	ADF communication error	• An error occurred in communication of the ADF and the main unit.
	01	Resist sensor, resist width sensor adjustment trouble	• When executing the resist sensor and the resist width sensor adjustment (simulation 53-4), the adjustment value is outside the specified range.
	02	Paper exit/reverse sensor adjustment trouble	• When executing the paper exit/reverse sensor adjustment (simulation 53-5), the adjustment value is outside the specified range.
	05	Timing sensor adjustment trouble	• When the timing sensor adjustment (SIM 53-6) is executed, the adjustment value is outside the adjustment range.
	11	Paper feed motor trouble	• During rotation of the paper feed motor, the rotation pulse is not sensed for 0.1 sec or more.
	16	ADF fan motor	• The ADF fan motor lock signal is sensed continuously for 2 sec.
F1	00	Sorter communication error	• An error occurred in communication between the sorter and the main unit.
	02	Transport motor trouble	• During rotation of the transport motor, the rotation pulse is not sensed for 0.5 sec or more.
	04	Bin upper limit/lower limit trouble	• When shifting the bins, the upper limit or the lower limit is erroneously sensed.
	05	Bin home sensor trouble	• When initializing the bins, the bin home sensor is not sensed within 1 sec.
	06	Bin motor trouble	• During rotation of the bin motor, the rotation pulse is not sensed for 0.5 sec or more.
	14	Take-out sensor trouble	• When the take-out sensor A/D input value is 3V or more.
	16	Grasping motor trouble	• During rotation of the grasping motor, the rotation pulse is not sensed for 0.05 sec.

Trouble code	Sub code	Content	Condition
F2	31	Image density sensor trouble	• When the light emitting quantity of the image density sensor is increased to the maximum level, the input value does not reach 3.75V. • When the light emitting quantity of the image density sensor is decreased to the minimum level, the input value does not fall below 4.5V. • During execution of the grid voltage correction, the element level is 3V or lower.
	32	Drum mark sensor trouble	• During one and a quarter rotations of the drum, the drum mark is not sensed (the sensor input does not become HIGH). • The drum mark sensor input level is not in the specified range.
	33	Grid voltage correction trouble (Limit over)	• When obtaining the grid voltage correction value, the result of the patch voltage is not in the range of 200 ~ 650V.
	35	Grid voltage correction trouble	• When obtaining the grid voltage correction value, the patch voltage is not in the range of 200 ~ 650V. • The grid voltage correction cannot be performed properly. (The correction value cannot be obtained.)
	37	Drum mark sensor gain adjustment trouble	• Though the drum mark sensor light emitting quantity is increased to 1.45V, the sensor input level does not become LOW.
EE	EU	Auto developer adjustment under toner detection	• After completion of the auto developer adjustment (simulation 25-2), the toner density sensor input voltage is over the specified range. (Under toner)
	EL	Auto developer adjustment over toner detection	• After completion of the auto developer adjustment (simulation 25-2), the toner density sensor input voltage is under the specified range. (Over toner)

[10] SERVICING AT MEMORY TROUBLE AND MAIN CONTROL PWB RE-PLACEMENT

1. General

The EEPROM in the control PWB and the EEPROM are storing various set values, adjustment values, and counter values.
These data are very important and used for operating the machine properly and for service control.
In the following cases, therefore, various set values, adjustment values and counter values must be set again.

∗ When a memory trouble (U2) occurs.

∗ When the EEPROM in the main control PWB is replaced.

∗ When the main control PWB is replaced.

When "U2" trouble occurs, the data cannot be relied upon, and they must be set properly.

2. Purpose

The purpose is to reset the memory data to operate the machine properly.
Use the attached service memory data recording sheet to memorize the newest data when servicing in order to cope with the above situations. This improves efficiency in servicing and realizes quick recovery.

3. Remedies

Perform the procedures according to the following flowcharts.
"Sim" in the flowchart means "Simulation."

Memory trouble

Procedures for memory trouble, main control PWB replacement, and main control PWB EEPROM replacement

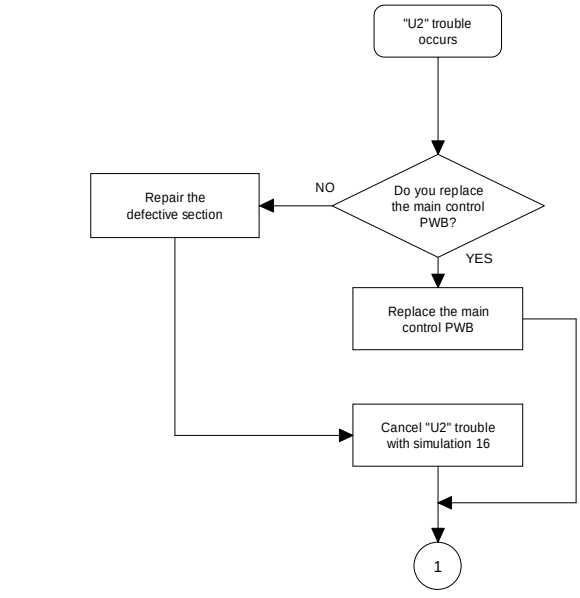

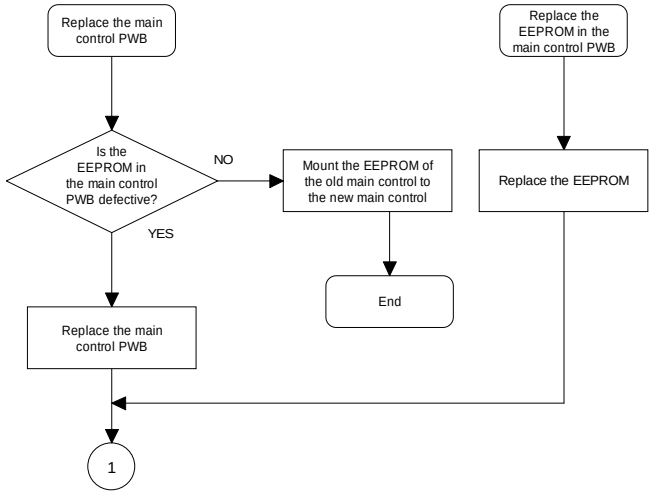

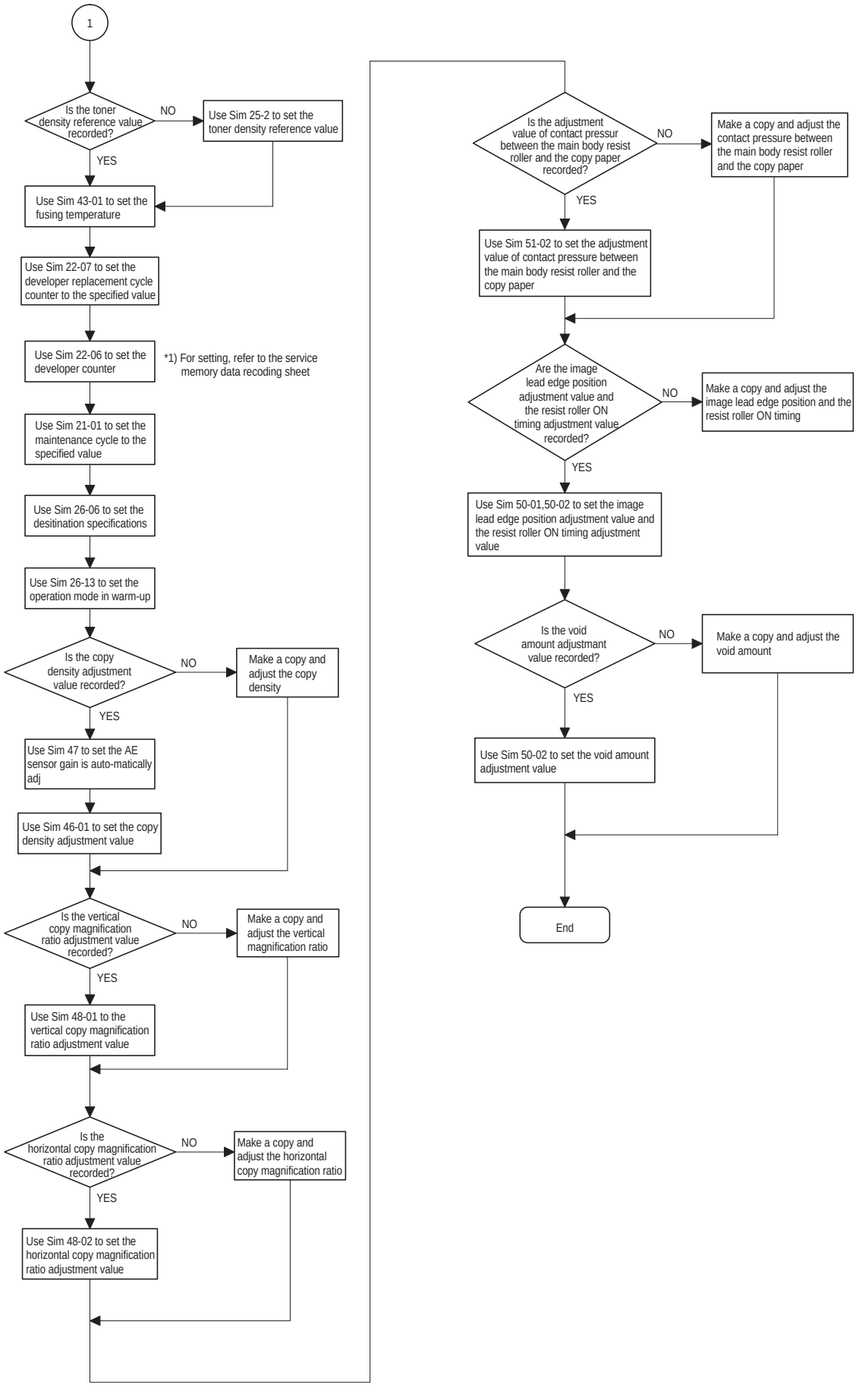
1
Is the toner density reference value recorded?
NO
Use Sim 25-2 to set the toner density reference value
YES
Use Sim 43-01 to set the fusing temperature
Use Sim 22-07 to set the developer replacement cycle counter to the specified value
Use Sim 22-06 to set the developer counter
*1) For setting, refer to the service memory data recoding sheet
Use Sim 21-01 to set the maintenance cycle to the specified value
Use Sim 26-06 to set the desitination specifications
Use Sim 26-13 to set the operation mode in warm-up
Is the copy density adjustment value recorded?
NO
Make a copy and adjust the copy density
YES
Use Sim 47 to set the AE sensor gain is auto-matically adj
Use Sim 46-01 to set the copy density adjustment value
Is the vertical copy magnification ratio adjustment value recorded?
NO
Make a copy and adjust the vertical magnification ratio
YES
Use Sim 48-01 to the vertical copy magnification ratio adjustment value
Is the horizontal copy magnification ratio adjustment value recorded?
NO
Make a copy and adjust the horizontal copy magnification ratio
YES
Use Sim 48-02 to set the horizontal copy magnification ratio adjustment value
Is the adjustment value of contact pressur between the main body resist roller and the copy paper recorded?
NO
Make a copy and adjust the contact pressure between the main body resist roller and the copy paper
YES
Use Sim 51-02 to set the adjustment value of contact pressure between the main body resist roller and the copy paper
Are the image lead edge position adjustment value and the resist roller ON timing adjustment value recorded?
NO
Make a copy and adjust the image lead edge position and the resist roller ON timing
YES
Use Sim 50-01,50-02 to set the image lead edge position adjustment value and the resist roller ON timing adjustment value
Is the void amount adjustmant value recorded?
NO
Make a copy and adjust the void amount
YES
Use Sim 50-02 to set the void amount adjustment value
End

4. Set value recording sheet

Purpose/kind	Section	Contents			
		Main code	Sub code	Set value	Description
Adjustment	Paper feed section	51	02		Adjustment value of contact pressure of the paper on the main body resist roller
	Optical unit	50	01		Copy paper lead edge void amount adjustment (Resist adjustment A)
					Copy paper lead edge void amount adjustment (Resist adjustment B)
					Copy paper lead edge void amount adjustment (Lead edge void adjustment)
					Copy paper lead edge void amount adjustment (Rear edge void adjustment)
		46	01		Adjustment value of copy density (exposure level) in each copy mode and of copy density gradient (exposure gradient)
					Manual copy mode density level 1
					Manual copy mode density level 5
					Manual copy mode density level 1 (Toner save mode)
					Manual copy mode density level 5 (Toner save mode)
					Auto copy mode density level 1 (Not toner save mode)
					Auto copy mode density level 5 (Not toner save mode)
					Auto copy mode density level 1 (Toner save mode)
					Auto copy mode density level 5 (Toner save mode)
					Photo copy mode density level 1 (Not toner save mode)
					Photo copy mode density level 5 (Not toner save mode)
		47			The AE sensor and the optical section characteristics memory data for the change in the copy lamp application voltage
		48	01		The vertical copy magnification ratio adjustment value
			02		The horizontal copy magnification ratio adjustment value (when the document table is used)
	Developing unit	25	02		Toner density initial set value
Setting	Specifications	26	06		Destination specifications
	Fuser unit	26	13		Setting of the main motor operation mode in warming up
		43	01		The set value of fusing temperature
	Maintenance counter	21	01		Setting of the maintenance cycle
Counter	Developing unit	22	06		The developer count of the installed developer unit can be checked.
			07		The developer replacement cycle of the installed developer unit can be checked.

Memorize set values in the column of "Set value" for efficient servicing when the memory trouble occurs and the EEPROM is replaced.
Make a copy of this sheet and use with the service sheet.

5. Memory simulation list

<table>
<tr><th rowspan="2">Purpose/kind</th><th rowspan="2">Section</th><th colspan="4">Contents</th><th rowspan="2">Ref. page</th></tr>
<tr><th>Main code</th><th>Sub code</th><th>Default value</th><th>Description</th></tr>
<tr><td rowspan="20">Adjustment</td><td>Paper feed section</td><td>51</td><td>02</td><td>50</td><td>Adjustment value of contact pressure of the paper on the main body resist roller</td><td>8-12</td></tr>
<tr><td rowspan="18">Optical unit</td><td rowspan="4">50</td><td rowspan="4">01</td><td></td><td>Copy paper lead edge void amount adjustment (Resist adjustment A)</td><td rowspan="4">8-11</td></tr>
<tr><td></td><td>Copy paper lead edge void amount adjustment (Resist adjustment B)</td></tr>
<tr><td></td><td>Copy paper lead edge void amount adjustment (Lead edge void adjustment)</td></tr>
<tr><td></td><td>Copy paper lead edge void amount adjustment (Rear edge void adjustment)</td></tr>
<tr><td rowspan="12">46</td><td rowspan="12">01</td><td></td><td>Adjustment value of copy density (exposure level) in each copy mode and of copy density gradient (exposure gradient)</td><td rowspan="12">8-10</td></tr>
<tr><td></td><td>Manual copy mode density level 1 (Not toner save mode)</td></tr>
<tr><td></td><td>Manual copy mode density level 5 (Not toner save mode)</td></tr>
<tr><td></td><td>Manual copy mode density level 1 (Toner save mode)</td></tr>
<tr><td></td><td>Manual copy mode density level 5 (Toner save mode)</td></tr>
<tr><td></td><td>Auto copy mode density level 1 (Not toner save mode)</td></tr>
<tr><td></td><td>Auto copy mode density level 5 (Not toner save mode)</td></tr>
<tr><td></td><td>Auto copy mode density level 1 (Toner save mode)</td></tr>
<tr><td></td><td>Auto copy mode density level 5 (Toner save mode)</td></tr>
<tr><td></td><td>Photo copy mode density level 1 (Not toner save mode)</td></tr>
<tr><td></td><td>Photo copy mode density level 5 (Not toner save mode)</td></tr>
<tr><td>47</td><td></td><td></td><td>The AE sensor and the optical section characteristics memory data for the change in the copy lamp application voltage</td><td>8-11</td></tr>
<tr><td rowspan="2">48</td><td>01</td><td>50</td><td>The vertical copy magnification ratio adjustment value</td><td>8-11</td></tr>
<tr><td>02</td><td>50</td><td>The horizontal copy magnification ratio adjustment value (when the document table is used)</td><td>8-11</td></tr>
<tr><td>Developer unit</td><td>25</td><td>02</td><td></td><td>Toner density initial set value</td><td>8-5</td></tr>
<tr><td rowspan="9">Setting</td><td>Specifications</td><td>26</td><td>06</td><td></td><td>Specifications setting by destination
<table><tr><th>Code No.</th><th>Destination</th></tr><tr><td>0</td><td>Japan</td></tr><tr><td>1</td><td>U.S.A.</td></tr><tr><td>2</td><td>Canada</td></tr><tr><td>3</td><td>Europe except U.K.</td></tr><tr><td>4</td><td>U.K.</td></tr><tr><td>5</td><td>Australia</td></tr><tr><td>6</td><td>Inch series outside Japan</td></tr><tr><td>7</td><td>AB series outside Japan</td></tr></table></td><td>8-6</td></tr>
<tr><td>Fuser unit</td><td>26</td><td>13</td><td>0</td><td>Setting of the main motor operation mode in warming up.
<table><tr><th>Code No.</th><th>Operation mode</th><th>Operation</th></tr><tr><td>0</td><td>Normal mode</td><td>When the fusing temperature reaches the specified level, the main motor stops.</td></tr><tr><td>1</td><td>Long mode</td><td>The main motor keeps rotating until the completion of the warming up.</td></tr></table></td><td>8-6</td></tr>
<tr><td></td><td>43</td><td>01</td><td>185°C</td><td>Fusing temperature set value</td><td>8-7</td></tr>
<tr><td rowspan="2">Maintenance counter</td><td rowspan="2">21</td><td>01</td><td></td><td>Maintenance cycle setting</td><td>8-5</td></tr>
<tr><td>02</td><td></td><td>Mini maintenance cycle setting</td><td>8-5</td></tr>
<tr><td rowspan="2">Developer unit</td><td rowspan="2">22</td><td>06</td><td></td><td>Used to confirm the developer counter value of the installed developer unit.</td><td>8-5</td></tr>
<tr><td>07</td><td></td><td>Used to confirm the developer replacement cycle of the installed developer unit.</td><td>8-5</td></tr>
</table>

[11] MAINTENANCE

1. Maintenance cycle and maintenance items

Maintenance of this model should be performed at every 60K.

<Content> ★ = Lubricate, ○ = Clean, △ = Adjust, ▲ = Replace/attach, □= Shift position
✕ = Check (Clean, replace, or adjust if necessary.)

∗ The toner consumption and the waste toner bottle replacement cycle are those when the reference chart is used.

Section	Parts	60K	120K	180K	240K	300K	Remark
Developing	Developer	▲	▲	▲	▲	▲	
	DV blade	○	▲	○	▲	○	
	DV side seal (F/R)	○	▲	○	▲	○	
Process peripheral	Drum	▲	▲	▲	▲	▲	
	Cleaner blade	▲	▲	▲	▲	▲	
	Toner reception seal	▲	▲	▲	▲	▲	
	Drum separation pawl	▲	▲	▲	▲	▲	
	Charging plate (saw teeth)	○	▲	○	▲	○	
	MC case	○	○	○	○	○	
	Screen grid	○	▲	○	▲	○	
	Discharge lamp	○	○	○	○	○	
	Blank lamp	○	○	○	○	○	
	Drum mark sensor	○	○	○	○	○	
	Drum density sensor	○	○	○	○	○	
	Waste toner bottle	○	○	○	○	○	
	TC/SC case	○	○	○	○	○	
	TC/SC wire	○	▲	○	▲	○	
Suction	Suction belt	○	○	○	○	○	
Ozone filter	Ozone filter	✕	○	✕	○	▲	
Fusing	Upper heat roller	✕	▲	✕	▲	✕	
	Lower heat roller	✕	▲	✕	▲	✕	
	Upper separation pawl	○	▲	○	▲	○	
	Lower separation pawl	✕	▲	✕	▲	✕	
	Thermistor	○	○	○	○	○	
	Heat roller gear	★	▲	★	▲	★	
Optical	Mirror/lens/reflector	○	○	○	○	○	
	Drive wire/pulley	✕	✕	✕	✕	✕	
	Rails	✕	★	✕	★	✕	
	Table glass/OC cover	○	○	○	○	○	
	Dust-proof glass/Sensor	○	○	○	○	○	
Paper feed (including multi paper feed section)	Pick-up roller	○ (✕)	○ (✕)	○ (✕)	▲	○ (✕)	
	Paper feed roller	○ (✕)	○ (✕)	○ (✕)	▲	○ (✕)	
	Separation roller	○ (✕)	○ (✕)	○ (✕)	▲	○ (✕)	Do not use alcohol. Wipe with water.
Transport	PC roller pair	○	○	○	○	○	
	Transport roller pair	○	○	○	○	○	
	Transport paper guides	○	○	○	○	○	
	Transport system sensors	○	○	○	○	○	
Drive	Main motor	○	○	○	○	▲	At 300K maintenance, replace
	Gears (specified gears only)	★	★	★	★	★	
Image		△	△	△	△	△	

[12] ELECTRICAL SECTION

1. System block diagram

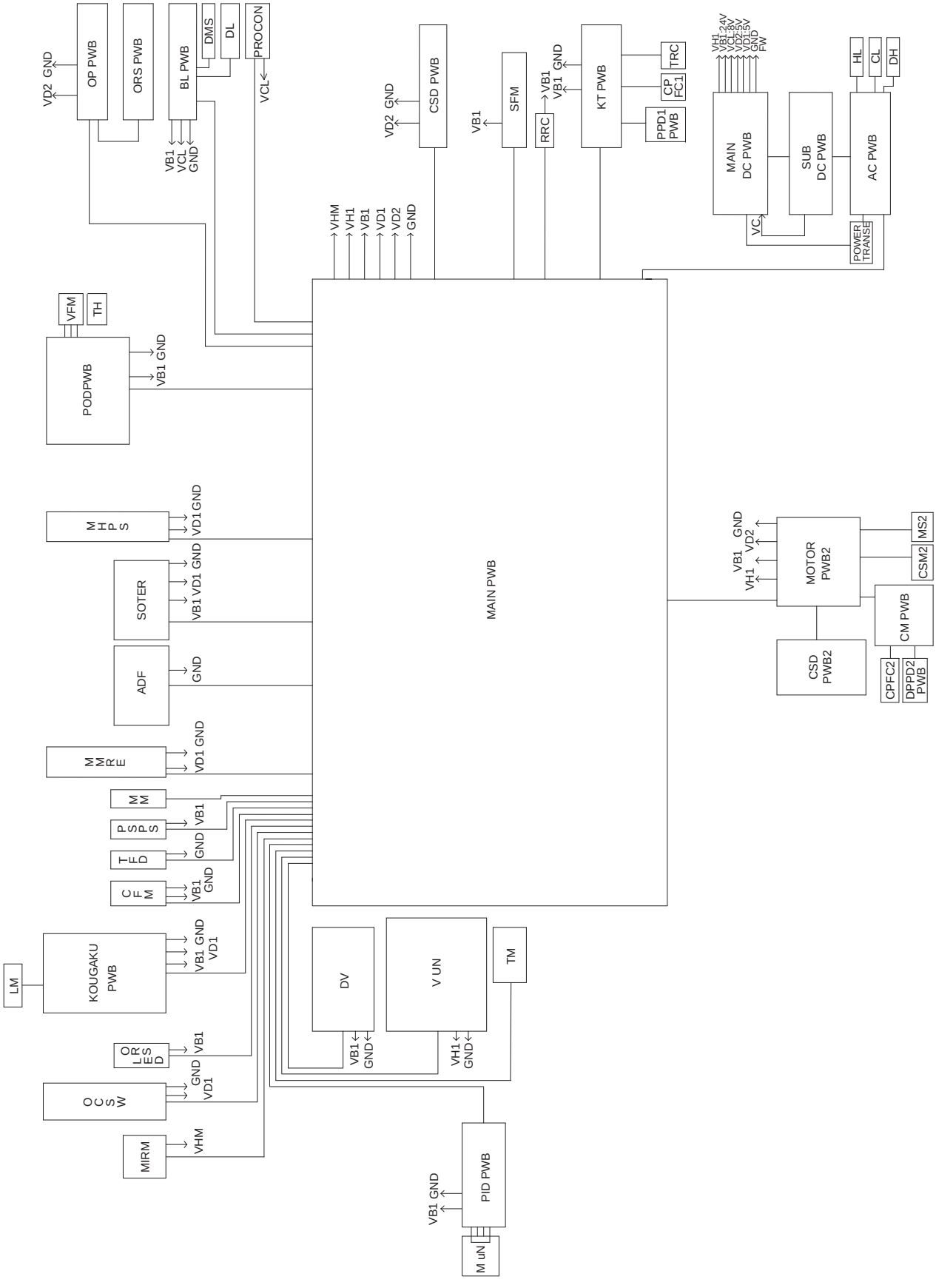

System operation when the power is turned on:

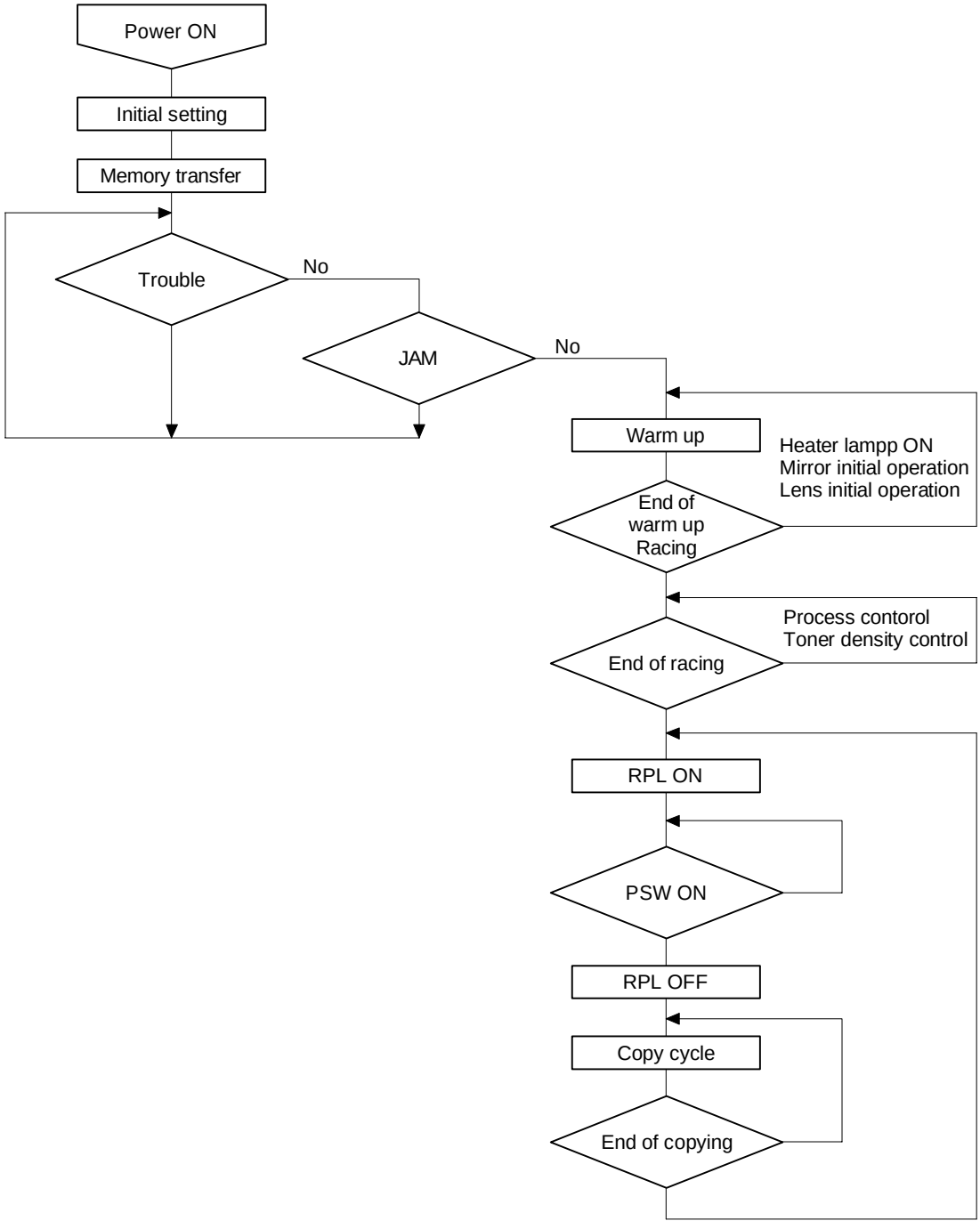

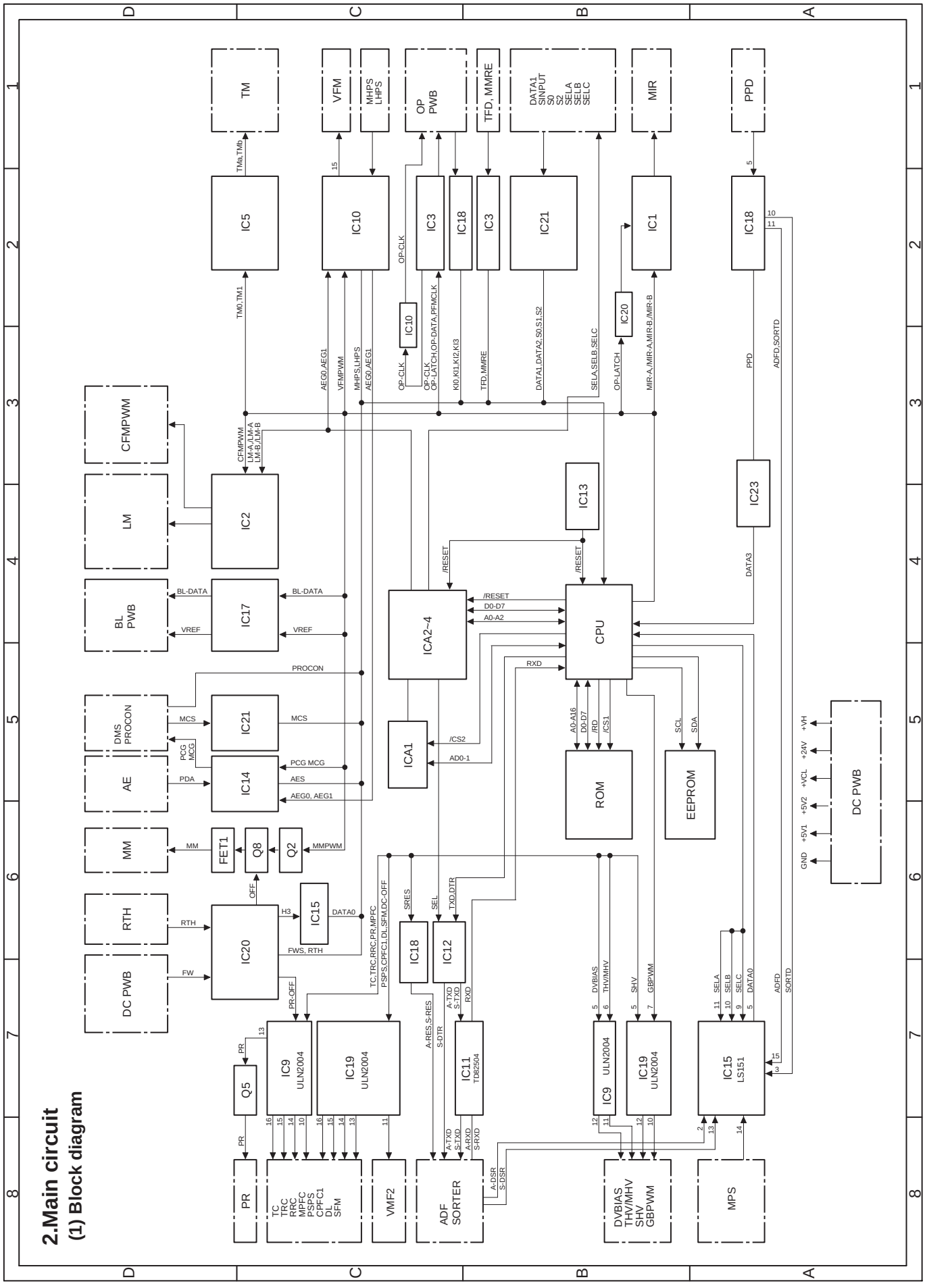
2.Main circuit
(1) Block diagram
TM
VFM
MHPS
LHPS
OP
PWB
TFD, MMRE
DATA1
SINPUT
S0
S2
SELA
SELB
SELC
MIR
PPD
IC5
IC10
IC3
IC18
IC3
IC21
IC1
IC18
IC20
CFMPWM
LM
BL
PWB
IC2
IC17
IC13
IC23
ICA2~4
CPU
ICA1
ROM
EEPROM
DMS
PROCON
AE
IC21
IC14
MM
FET1
Q8
Q2
RTH
DC PWB
IC20
IC15
IC18
IC12
Q5
IC9
ULN2004
IC19
ULN2004
IC11
TD62504
IC9
ULN2004
IC19
ULN2004
IC15
LS151
DC PWB
PR
TC
TRC
RRC
MPFC
PSPS
CPFC1
DL
SFM
VMF2
ADF
SORTER
DVBIAS
THV/MHV
SHV
GBPWM
MPS
GND
+5V1
+5V2
+VCL
+24V
+VH
TM0,TM1
TMa,TMb
OP-CLK
AEG0,AEG1
VFMPWM
MHPS,LHPS
KI0,KI1,KI2,KI3
TFD,MMRE
DATA1,DATA2,S0,S1,S2
SELA,SELB,SELC
OP-LATCH
MIR-A,/MIR-A,MIR-B,/MIR-B
PPD
ADFD,SORTD
DATA3
CFMPWM
LM-A,/LM-A
LM-B,/LM-B
/RESET
D0-D7
A0-A2
RXD
/CS2
AD0-1
A0-A16
/RD
/CS1
SCL
SDA
BL-DATA
VREF
PROCON
MCS
PCG
MCG
PDA
AES
AEG0, AEG1
MM
MMPWM
OFF
H3
DATA0
RTH
FW
FWS, RTH
PR-OFF
TC,TRC,RRC,PR,MPFC
PSPS,CPFC1,DL,SFM,DC-OFF
SRES
SEL
TXD,DTR
A-RES,S-RES
S-DTR
A-TXD
S-TXD
RXD
A-RXD
S-RXD
A-DSR
S-DSR
DVBIAS
THV/MHV
SHV
GBPWM
SELA
SELB
SELC
DATA0
ADFD
SORTD

(2) CPU (IC6) SC3041K12F

① General

The CPU controls the loads of the main body and controls the system in synchronization with data transmission and reception through the optional controllers and serial data communication line.

② Features

The SC3041K12F is a high performance single-chip micro computer which is integrated with the necessary peripheral devices as well as the main core of 32-bit H8/300H CPU.

The 32-bit H8/300H CPU is of internal 32-bit composition, and is provided with simple and optimum commands designed for high speed operations with 16 bit x 16 general-purpose registers. It handles 16MB linear address space.

As the peripheral devices, included are the ROM, the RAM, the 16-bit integrated timer unit (ITU), the programmable timing pattern controller (TPC), the watch dog timer (WDT), the serial communication interface (SCI), the A/D convertor, the D/A convertor, the I/O port, the MDA controller (DMAC), and the refresh controller.

③ Pin arrangement

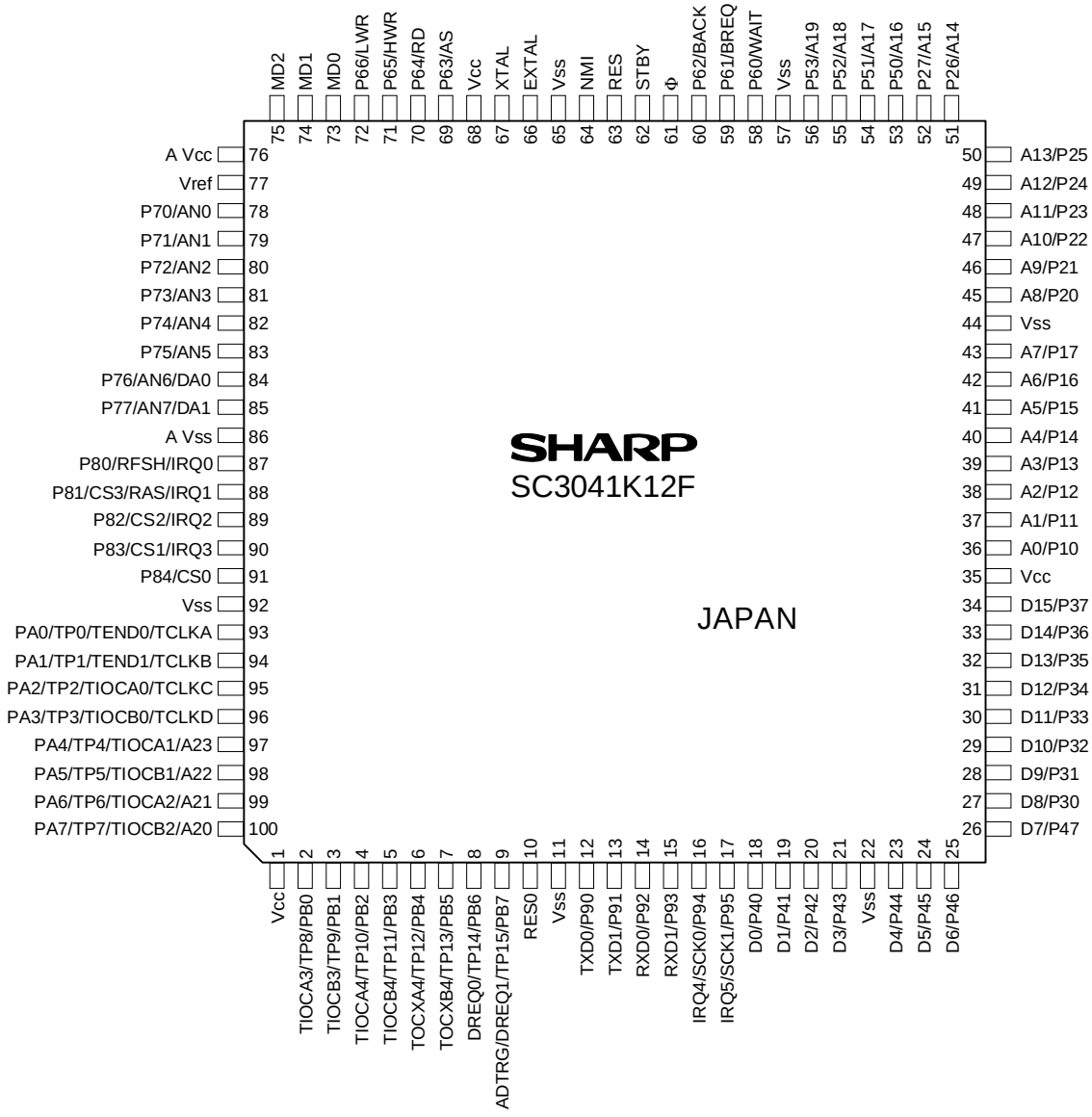

④ **Internal block diagram**

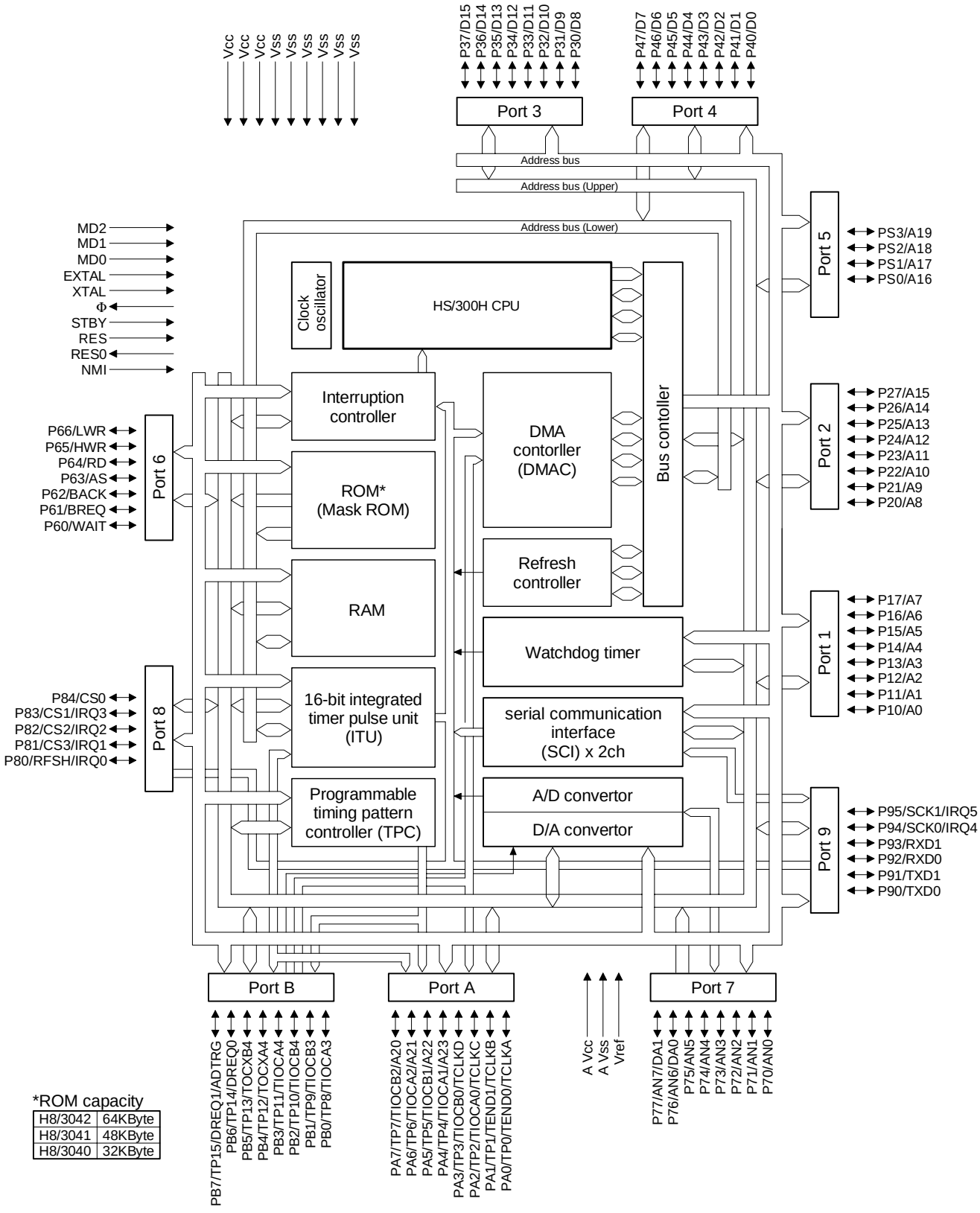

*ROM capacity

H8/3042	64KByte
H8/3041	48KByte
H8/3040	32KByte

⑤ CPU SC3041K12F (IC1) pin signal

Pin No.	Port	Signal name	IN/OUT	H/L	Specifications
1	VCC	VCC			Power (+5V)
2	P60	CVFMPWM	OUT		Fan motor (PWM output) signal
3	PB1	SCL	OUT		Serial clock signal for EEPROM
4	PB2	MMPWM	OUT		Main motor (PWM output) signal
5	PB3	SDA	OUT		Serial data for EEPROM
6	PB4	/MIR-A	OUT	H	Mirror base motor drive signal -A
7	PB5	MIR-A	OUT	H	Mirror base motor drive signal A
8	PB6	/MIR-B	OUT	H	Mirror base motor drive signal -B
9	PB7	MIR-B	OUT	H	Mirror base motor drive signal B
10	/RES0	/RES0	OUT	H	Reset signal for external device (fixed to HIGH)
11	VSS	VSS			Power (GND)
12	P90	DATA	OUT		Operation panel serial data signal
13	P91	TXD	OUT		Option UART input signal
14	P92	HL	OUT	L	Heater lamp control signal (ON at LOW)
15	P93	RXD	IN		Option UART input signal
16	P94	OP-CLK	OUT		Operation panel serial clock input signal
17	P95	OP-LATCH	OUT		Operation panel data latch signal
18	P40	KI0	IN		Key input 0 signal
19	P41	KI1	IN		Key input 1 signal
20	P42	KI2	IN		Key input 2 signal
21	P43	KI3	IN		Key input 3 signal
22	VSS	VSS			Power (GND)
23	P44	S0	IN		Matrix input 0 signal
24	P45	S1	IN		Matrix input 1 signal
25	P46	SINPUT	IN		Matrix input 2 SINPUT (MOI51)
26	P47	MFD	IN	L	Multi manual feed unit sensing signal (Low when the unit is sensed.)
27	P30	D0			Data signal
28	P31	D1			Data signal
29	P32	D2			Data signal
30	P33	D3			Data signal
31	P34	D4			Data signal
32	P35	D5			Data signal
33	P36	D6			Data signal
34	P37	D7			Data signal
35	VCC	VCC			
36	P10	AD0			Address signal
37	P11	AD1			Address signal
38	P12	AD2			Address signal
39	P13	AD3			Address signal
40	P14	AD4			Address signal
41	P15	AD5			Address signal
42	P16	AD6			Address signal
43	P17	AD7			Address signal
44	VSS	VSS			Power (+5V2)
45	P20	AD8			Address signal
46	P21	AD9			Address signal
47	P22	AD10			Address signal
48	P23	AD11			Address signal
49	P24	AD12			Address signal
50	P25	AD13			Address signal
51	P26	AD14			Address signal

Pin No.	Port	Signal name	IN/OUT	H/L	Specifications
52	P27	AD15			Address signal
53	P50	AD16			Address signal
54	P51	LHPS	IN	L	Lens home position signal (LOW at 100%)
55	P52	PPD	IN	H	Transport pass sensor signal (HIGH when paper is sensed.)
56	P53	MCS	IN	H	Drum marking sensor signal
57	VSS	VSS			Power (GND)
58	P60	BACK	IN	H	Back signal (fixed to H)
59	P61	BREQ	IN	H	Break signal (fixed to H)
60	P62	WAIT	IN	H	Wait signal (fixed to H)
61	S-CLK	S-CLK	OUT	H	System clock (Fixed to HIGH)
62	/STBY	/STBY	IN	H	Standby signal (Fixed to HIGH)
63	/RES	/RESET	IN	L	Reset at LOW.
64	NMI	NMI			Non-maskable interruption (Fixed to LOW.)
65	VSS	VSS			Power (GND)
66	EXTAL	EXTAL	IN		Clock (8MHz)
67	XTEL	XTEL	IN		Clock (8MHz)
68	VCC	VCC			Power (+5V2)
69	P63	/AS	OUT	H	Address strobe signal (Fixed to HIGH.)
70	P64	/RD	OUT	L	ROM. I/O data read signal
71	P65	/HWR	OUT	L	I/O data write signal
72	P66	/LWR	OUT	H	Lower write signal (Fixed to HIGH.)
73	MD0	MD0	IN	H	Mode set signal (Fixed to HIGH.)
74	MD1	MD1	IN	L	Mode set signal (Fixed to LOW.)
75	MD2	MD2	IN	H	Mode set signal (Fixed to HIGH.)
76	AVCC	AVCC			A/D, D/A convertor power
77	VREF	VREF			A/D, D/A convertor reference voltage
78	P70	AES	IN		AE sensor signal (Analog input signal)
79	P71	TH	IN		Thermistor signal (Analog input signal)
80	P72	TCS	IN		Toner density sensor signal (Analog input signal)
81	P73	PROCON	IN		Process control signal (Analog input signal)
82	P74	DVC	IN		Developing unit color detection signal (Analog input signal)
83	P75	PD	IN		Original sensor signal (Analog input signal)
84	P76	BLDATA	OUT		Blank lamp data signal (Analog input signal)
85	P77	PCG	OUT		Process control gain signal
86	AVSS	GND			
87	P80	MHPS	IN	H	Mirror home position sensor signal
88	P81	FWS	IN		Zero cross detection signal
89	P82	/CS2	OUT	L	Chip select signal (I/O) (I/O is selected at LOW.)
90	P83	/CS1	OUT	L	Chip select signal (EPROM) (EPROM is selected at LOW.)
91	P84	TFD	IN	H	Waste toner sensor signal (Toner full at HIGH)
92	VSS	GND			Power (GND)
93	PA0	LED0	OUT	H	Original detection LED lighting signal 0 (ON at HIGH)
94	PA1	LED1	OUT		Original detection LED lighting signal 1 (ON at HIGH)
95	PA2	CLPWM	OUT		Copy lamp control signal (PWM signal)
96	PA3	MMRE	IN		Main motor rotary encoder detection signal
97	PA4	GBPWM	OUT		Grid bias control signal (PWM signal)
98	PA5	PFMCLK	OUT		Paper feed motor clock signal
99	PA6	TM0	OUT	H	Toner supply motor drive signal 0 (ON at HIGH)
100	PA7	TM1	OUT	H	Toner supply motor drive signal 1 (ON at HIGH)

(3) Detector circuit of sensor signal

The LS151 selects one signal of D0 ~ D7 according to the combination of SEL A ~ C signals (H, L) and outputs it to Y.
Selection of D0 ~ D7 for SEL A ~ C is made as shown in the table below.

SEL C	SEL B	SEL A	Y
0	0	0	0
0	0	1	1
0	1	0	2
0	1	1	3
1	0	0	4
1	0	1	5
1	1	0	6
1	1	1	7

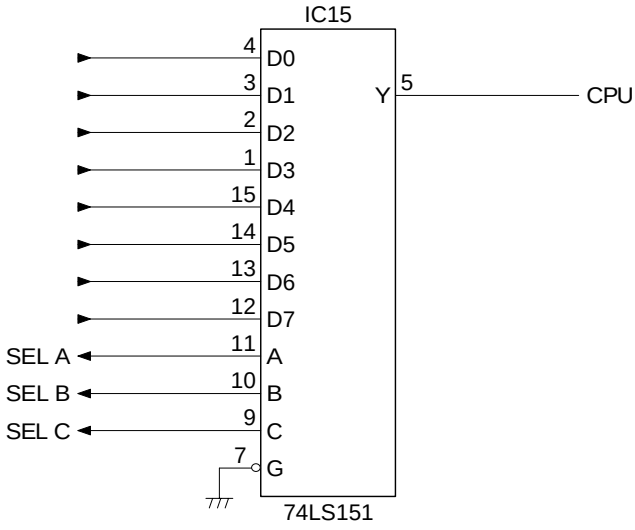

The sensor signal is in the following composition with the matrix of SEL A ~ C and S0 ~ 2.

	S0	S1	S2
SEL A	PED1	—	CSD 0
SEL B	SW A/B	POD	CSD 1
SEL C	PPD1	PNC	CSD 2

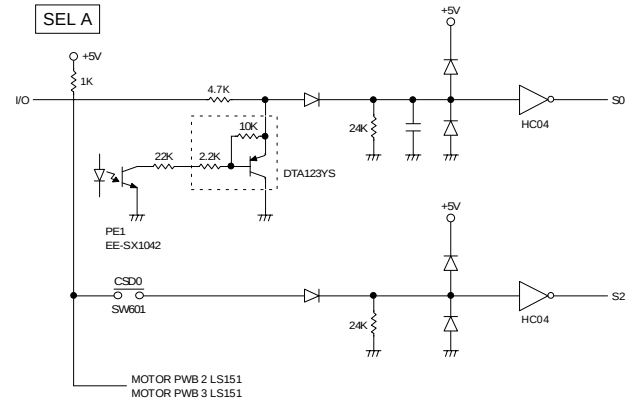

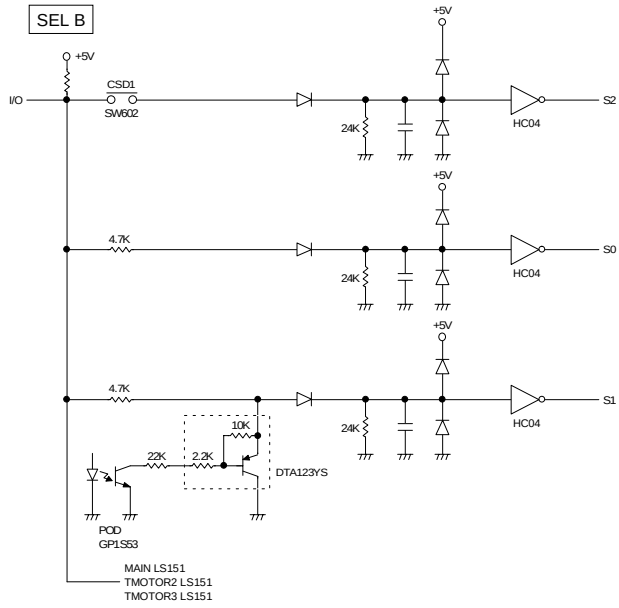

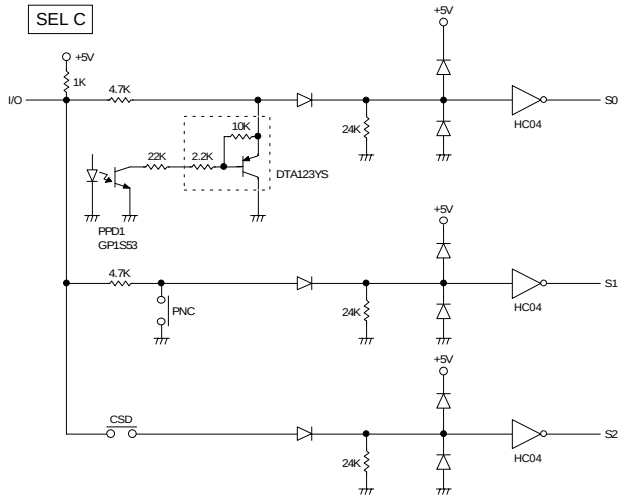

(4) Start/stop control circuit

This circuit detects ON/OFF of the power and controls start/stop of the circuits.
The DC power section provides each power voltage (VH=+32V, +24V, VC=+1-V, VD1=5V, VD2=5V).
When the power voltage reaches the specified level, the operation of each circuit is started. Before the paper voltage falls below the specified level, the operation of each circuit is stopped to prevent against malfunctions.

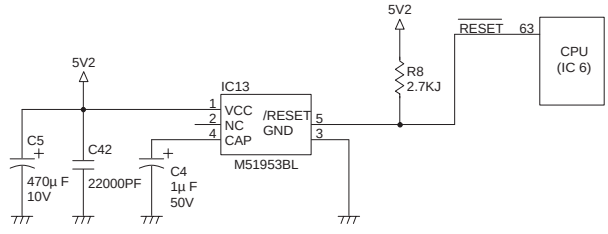

(5) Heater lamp control circuit

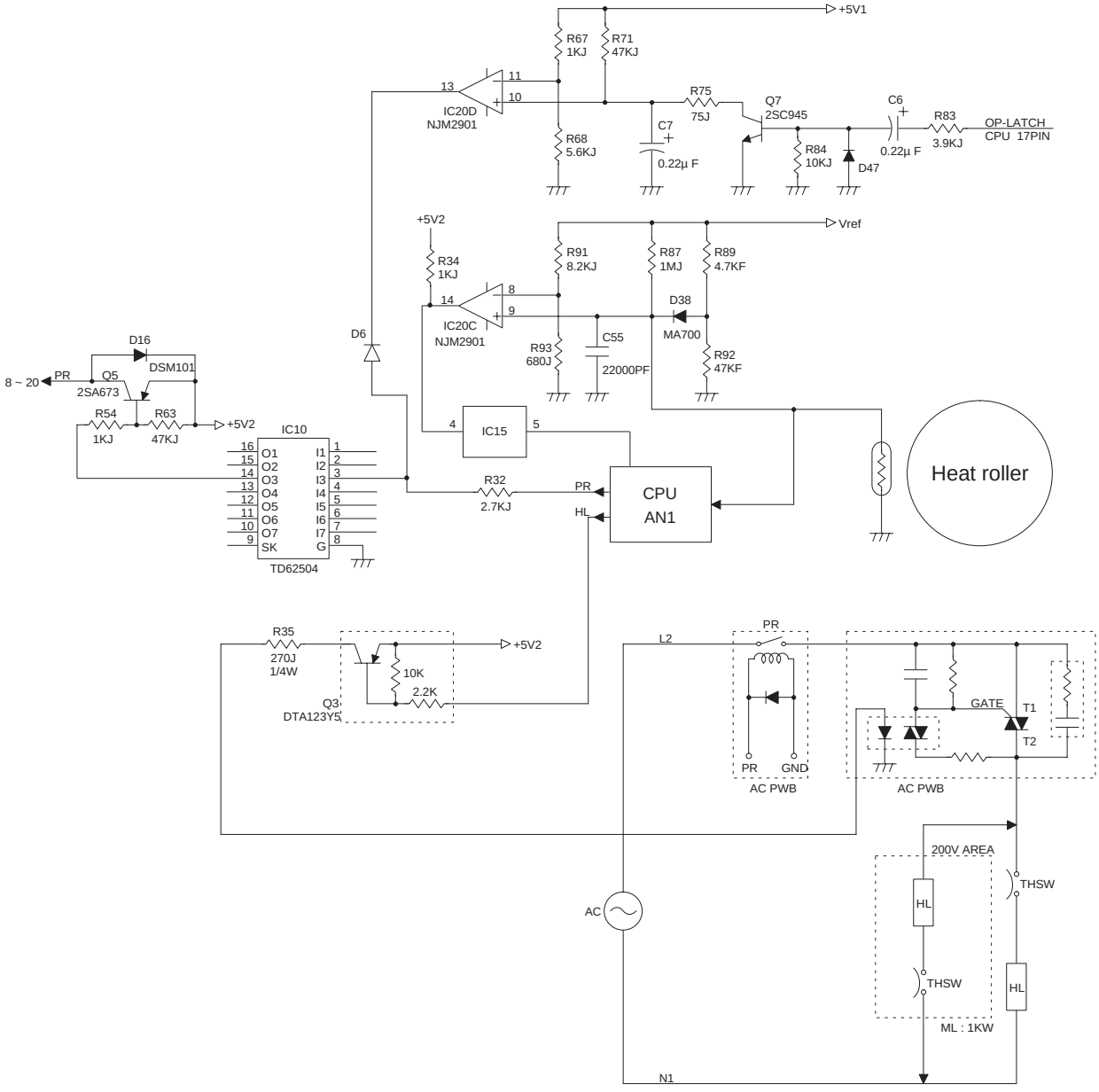

① General

The heater lamp control circuit detects the heat roller surface temperature with the thermistor, converts it into a voltage, and outputs it to the CPU analog input pin.
The CPU converts analog signals into digital signals, compares them with the value set by test commands to turn on/off the heater lamp, maintaining the heat roller surface temperature at a constant level.
The higher the heat roller surface temperature is, the greater the thermistor resistance is, and vice versa.
Therefore, the lower the heat roller surface temperature is, the higher the thermistor pin voltage is. The thermistor pin voltage is inputted to the analog port of CPU, which controls ON/OFF of the heater lamp according to the input voltage level.

[High temperature protect circuit when the CPU is hung up (out of control)]

1) The IC20 8 pin voltage (reference voltage) is divided by R91 and R93. The thermistor pin voltage is inputted to the IC20 9 pin. When the voltage at 9 pin becomes lower than the voltage at 8 pin (the heat roller surface temperature about 240V), the IC20 14 pin is driven to LOW, pulling down the PR signal to the GND level, turning off the AC power of the heater lamp.
2) Since the OP-latch signal is fixed to HIGH or LOW, the collector of Q7 is open. The voltage at IC20 10 pin is higher than the voltage at IC20 11 pin (reference voltage), and IC20 13 pin is driven to LOW.
   With the above operations, IC9 13 pin is opened to turn off Q5, turning off the power relay. As a result, the AC power of the heater and the copy lamp is turned off.

∗ The double protection with 1) and 2) is provided.

[When the heat roller surface temperature is lower than the set temperature]

a. Since the thermistor pin voltage is higher then the set level, the output signal HL from the CPU is driven to LOW.

b. This HL signal is passed through TR Q3 to the solid state relay (SSR).
When, therefore, the HL signal is LOW, the internal triac turns on.

c. When the internal triac turns on, a pulse is applied to the gate of external triac to flow a current from the power through the heater lamp to the triac, lighting the heater lamp.

[When the heat roller surface temperature is higher than the set level]

a. Since the thermistor pin voltage is lower than the set level, the output signal HL from the CPU is driven to HIGH.

b. HL is driven to LOW, SSR turns off, the external triac turns off, and the heater lamp turns off.

[Q3]
Prevents the hater lamp from being lighted always by the trouble in the heater lamp drive signal harness wiring.

(6) Driver circuit (Solenoid, electromagnetic clutch)

① General

The control signals of each load outputted from the CPU and I/O cannot drive the load directly. The output, therefore, is delivered to the load through the driver IC.

② Operation

The drive circuit forms a Darlington circuit with two transistors to obtain a large drive current (load current) from a small input current (I/O output current). When the driver input voltage is HIGh (+5V), the transistor is turned on to flow a current in the arrow direction, operating the load. When the driver is turned on, the driver output pin voltage is 0V.

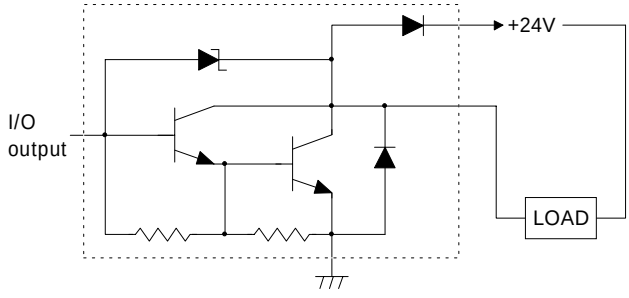

(7) Stepping motor drive circuit

① General

The driver circuit drives the lens drive motor, the mirror base drive motor, the automatic duplex copy tray, the side plate motor, and the rear plate motor.

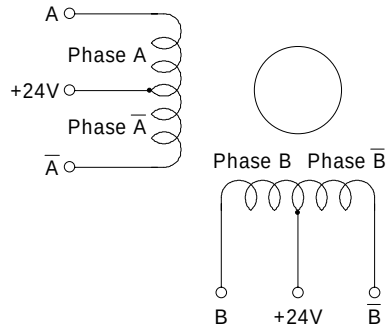

A: Stepping motor phase A coil drive signal
B: Stepping motor phase B coil drive signal
$\overline{A}$: Stepping motor phase A coil drive signal
$\overline{B}$: Stepping motor phase B coil drive signal

∗ Mirror base motor power is Vh.

Stepping motor time chart

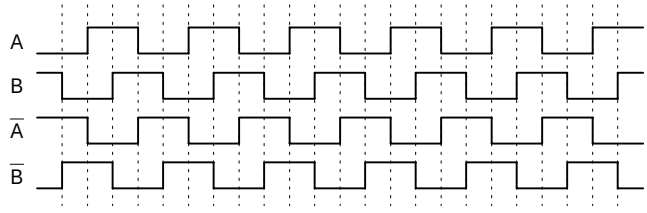

(8) AE (Auto Exposure) sensor circuit

The AE sensor circuit is composed of the AE sensor PWB; which is composed of the photo diode, the I-V convertor circuit, and the amplifier circuit; and the amplifier circuit on the control PWB.

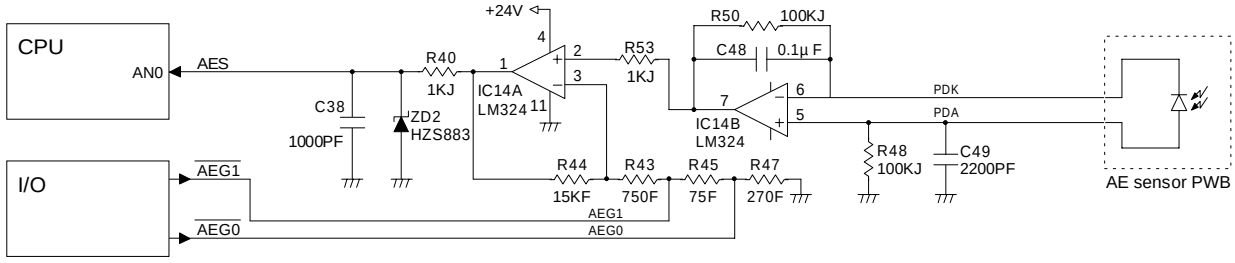

Operation amplifier A performs I-V conversion of the original density level (minute current) from the sensor. Operation amplifiers B and C amplify the output of operation amplifier A to a suitable level for inputting to the CPU.
The amplifying level is automatically set by selecting the AE gain signal (AEG0 ~ AEG2) outputted from the I/O chip when test command SIM 47 is executed.
AE operation is performed by the software in the control PWB. When a reflected ray enters the sensor, a voltage corresponding to the light quantity is inputted to the CPU. The CPU compares the input voltage and the copy lamp application voltage and controls the copy lamp voltage so that the exposure level corresponds to the original density.

(9) Toner supply motor drive circuit

IC104 is the motor control IC which drives the toner supply motor with the pulse signals (TMa, TMb) outputted from the I/O chip.

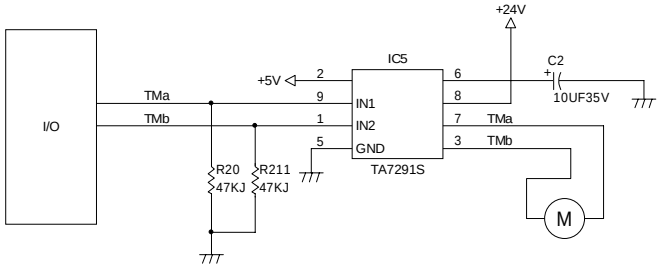

Truth value table

Input		Output		Mode
TMa	TMb	TMa	TMb	
L	L	∞	∞	Stop
H	L	H	L	CW/CCW
L	H	L	H	CCW/CW
H	H	L	L	Break

∞: High impedance

Internal circuit

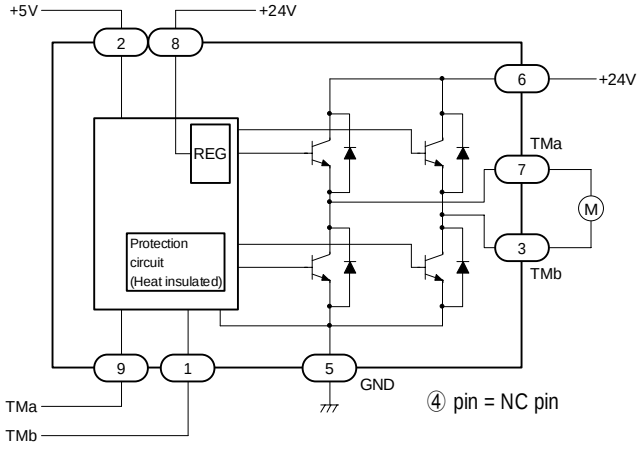

(10) Reset IC (IC13)

① General

The M51953 BL is the semiconductor IC most suitable to detect the power voltage and reset the logic circuit of every type including the CPU.
It is provided with the built-in delay circuit. Delay time is easily obtained by adding external capacity.
Pin connections (Top view)

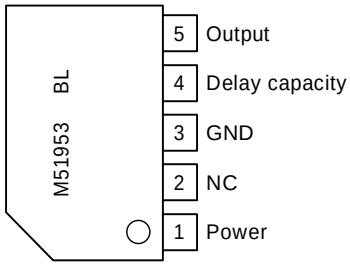

External view 5P5

② Operation

- When "td" (= 30msec) passes after the voltage reaches 4.25V by turning on the power, the output is drive to HIGH.
  "td" is set by the external capacitor (C106).

Block diagram

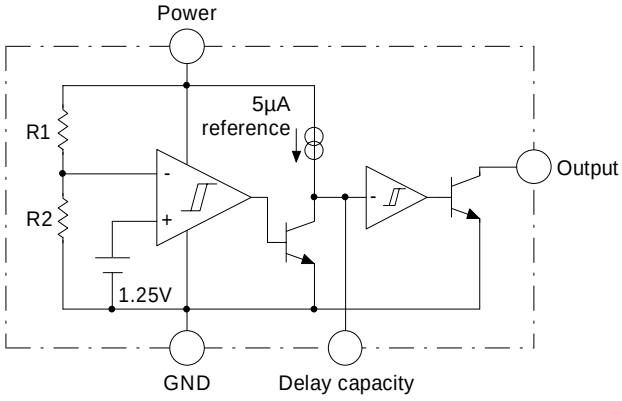

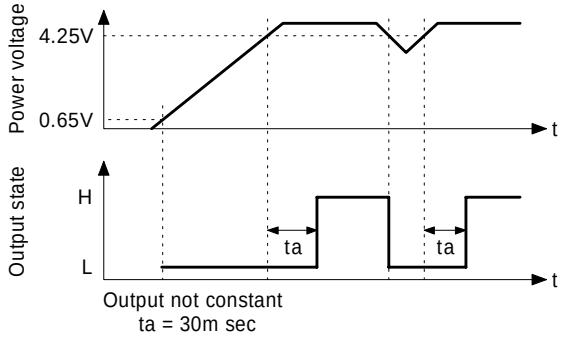

(11) Operation panel

① General

- The operation circuit is composed of the key matrix circuit and the display matrix circuit.
  Key detection: With the signal detected by Q1 ~ Q7 and KI0 ~ KI3 signal matrix at LOW (GND) and Q2 ~ Q7 at HIGH (open), the level of KI 0 ~ KI3 is checked to judge whether key matrix 1, 2, and 3 are HIGH or LOW, judging on/off.
  For Q2 ~ Q7, switching is made every 2msec to judge each of them.

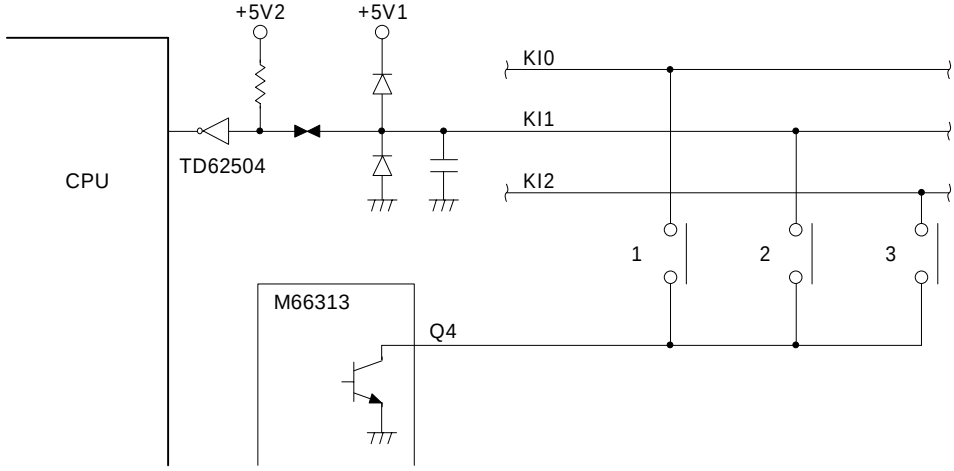

(12) EnergyStar circuit description

The EnergyStar circuit composition saves power consumption when the user leaves the machine with the power ON.

Normally in a copy mode or in the standby mode, the main PWB connector HL signal is HIGH (5V) and the AC PWB relay (TY201) is turned on to supply power to all the power transformers and the optional power source.

When the machine is left un-operated with the power ON, the main PWB connector HL signal level becomes a high impedance to turn off the AC PWV relay (RY201), stopping power supply to the power transformers and the optional power source except for the sub DC PWB PT2 (Ref. t1). As a result, only 5V is supplied to the main PWB and the operation PWB to reduce the power consumption.

To reset from this energy save mode, press an button on the operation PWB.

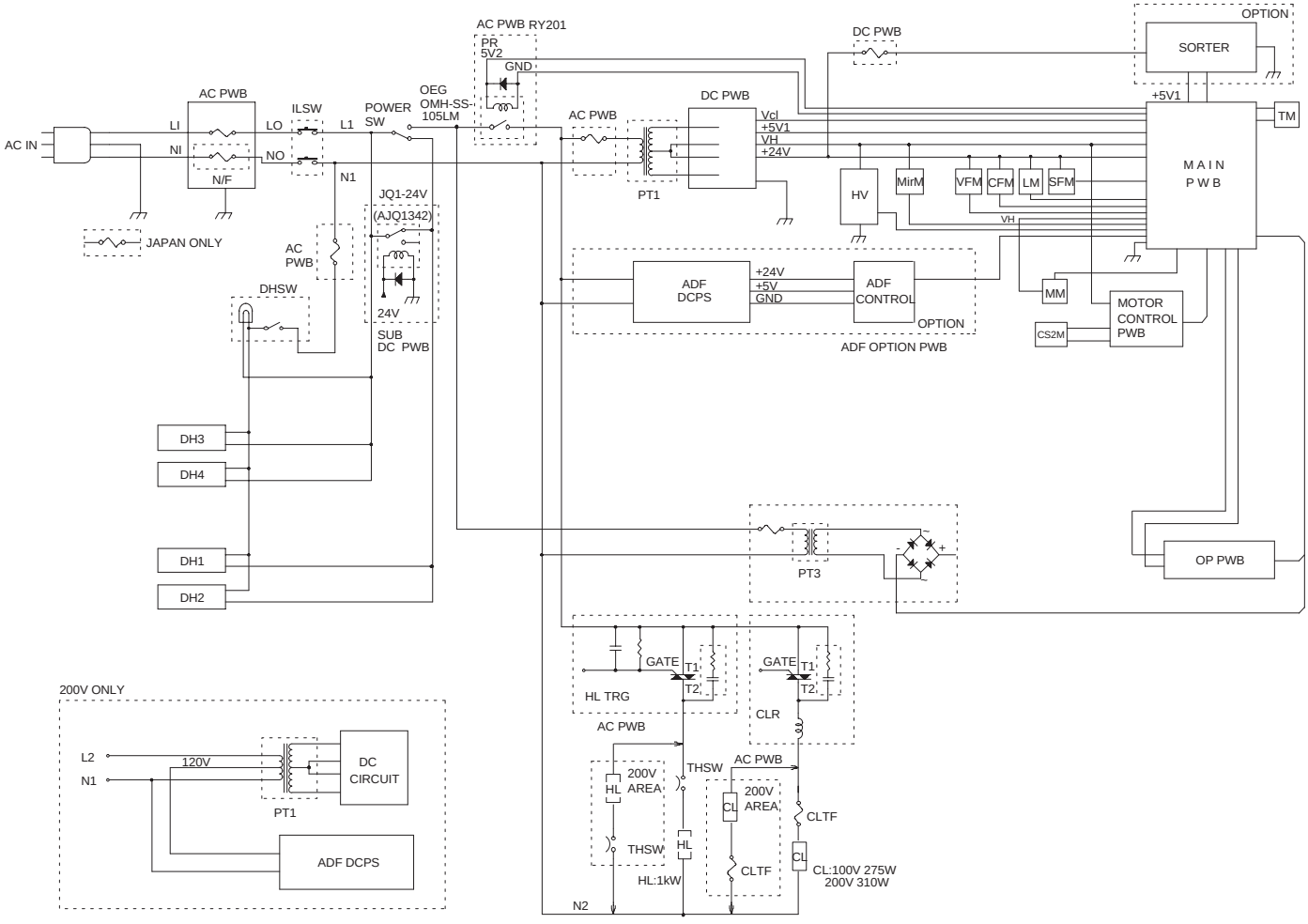

SHARP

COPYRIGHT © 1997 BY SHARP CORPORATION
All rights reserved.
Printed in Japan.
No part of this publication may be reproduced,
stored in a retrieval system, or transmitted.
In any form or by any means,
electronic, mechanical, photocopying, recording, or otherwise,
without prior written permission of the publisher.

SHARP CORPORATION
Printing Reprographic Systems Group
Quality & Reliability Control Center
Yamatokoriyama, Nara 639-11, Japan
1997 December Printed in Japan Ⓢ