SHARP SERVICE MANUAL

CODE: 00ZSF2214SM/E

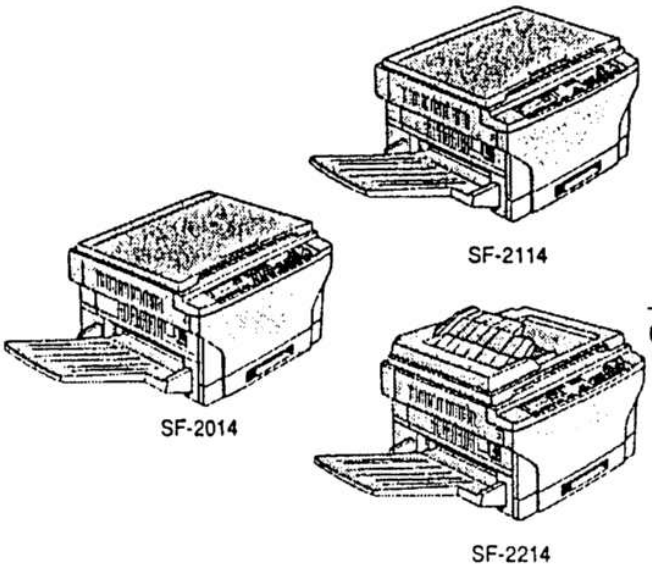

SF-2014
SF-2114
MODEL SF-2214

Options
- **Paper tray (SF-UB14)**
- **Multi paper feed unit (SF-MF14)**
- **Paper feed unit (SF-CM14)**
- **Copier table (SF-720D2)**
- **Personal counter (SF-71A/71B)**

* The SF-2114/2214 are with the optional multi paper feed unit installed.

CONTENTS

[1] GENERAL DESCRIPTION 1-1
[2] PRODUCT SPECIFICATIONS 2-1
[3] EXTERNAL VIEW AND INTERNAL STRUCTURE 3-1
[4] UNPACKING AND INSTALLATION 4-1
[5] GENERAL DESCRIPTIONS OF EACH SECTION 5-1
[6] DISASSEMBLY AND ASSEMBLY 6-1
[7] ADJUSTMENTS 7-1
[8] SIMULATIONS 8-1
[9] SELF DIAGNOSTICS 9-1
[10] SERVICE AT MEMORY TROUBLE AND MAIN CONTROL PWB REPLACEMENT 10-1
[11] MAINTENANCE 11-1
[12] ELECTRICAL SECTION 12-1

Parts marked with "⚠" is important for maintaining the safety of the set. Be sure to replace these parts with specified ones for maintaining the safety and performance of the set.

SHARP CORPORATION

This document has been published to be used for after sales service only.
The contents are subject to change without notice.

CONTENTS

[1] GENERAL DESCRIPTION 1-1
1. Features 1-1
2. Target users 1-1
3. Novel technology 1-1
4. Novel functions 1-1

[2] PRODUCT SPECIFICATIONS 2-1
1. Basic specifications 2-1
2. Details of each section 2-2

[3] EXTERNAL VIEW AND INTERNAL STRUCTURE 3-1
1. External view and internal structure (SF-2214 as the example model) 3-1
2. Operation panel 3-2
3. Cross section (SF-2214 as the example model) 3-3
4. Switches, sensors, detectors (The SF-2214 as the typical example) 3-4
5. Clutches, solenoids (The SF-2214 as the typical example) 3-5
6. Motors (The SF-2214 as the typical example) 3-6
7. PWBs (The SF-2214 as the typical example) 3-7

[4] UNPACKING AND INSTALLATION 4-1
1. Packing drawing 4-1
2. Installation 4-1
(1) Environment 4-1
(2) Space around the machine 4-2
(3) Installing table 4-2
(4) Power source 4-3
(5) Grounding 4-3
3. Installation procedure 4-3
(1) Optical system unlocking 4-3
(2) Cassette setting 4-3
(3) Developer setting 4-4
(4) Toner supply 4-4
(5) Toner density sensor level check 4-5
(6) Accessory attachment 4-5
4. Locking procedure for transit or repacking
(1) No.2/No.3 mirror unit (Mirror base B) lock 4-5
(2) No.4/no.5 mirror unit (Mirror base C) lock 4-6

[5] GENERAL DESCRIPTIONS OF EACH SECTION 5-1
1. Paper feed section 5-1
2. Separation, transport section 5-2
3. Fuser, paper exit section 5-2
4. Developer section 5-2
5. Optical system 1-3
5-1. General descriptions 5-3
(1) Original table 5-3
(2) Copy lamp 5-3
(3) Mirror 5-3
(4) Lens (Fixed focus lens) 5-3
(5) Lens home position sensor (LHPS) 5-3
(6) Lens base 5-3
(7) Lens drive shaft .....
(8) Lens drive wire .....
(9) No. 4/5 mirror base .....
(10) Mirror motor .....
(11) Mirror home position sensor (MHPS) .....
(12) No. 2/3 mirror base .....
(13) Copy lamp unit .....
(14) Thermal fuse .....
(15) Reflector .....
(16) Exposure adjustment plates .....
(17) Mirror base drive wire .....
(18) Lens drive motor .....
(19) AE sensor .....
5-2. Basic operations .....
6. Copy process .....
(1) Photoconductor .....
(2) Process diagram .....
(3) Actual process .....
(4) Transit of photoconductor drum surface potential .....
(5) Process correction system .....
1) Outline of the correction system .....
2) Correction operation .....
7. SPF section (SF-2214 only) .....
1. Outline .....

[6] DISASSEMBLY AND ASSEMBLY .....
1. Paper feed section, paper transport section, power section .....
1-1. Paper feed unit .....
1-2. Paper feed roller ass'y removal .....
1-3. Separation roller .....
1-4. Takeup roller, paper feed roller .....
1-6. Transport belt .....
1-7. Socket holder unit .....
1-8. Lower unit PWB .....
1-9. Cassette paper empty detector (CPED1) .....
1-10. Power unit .....
2. Manual paper feed section .....
2-1. Manual paper feed roller, manual takeup roller .
2-2. Reverse rotation roller ass'y .....
3. Fuser section .....
3-1. Fuser unit removal .....
3-2. Heater lamp replacement .....
3-3. Upper heat roller ass'y removal .....
3-4. Upper separation pawl replacement .....
3-6. Scraper replacement .....
3-7. Thermistor/thermostat removal .....
3-8. Heat roller/heater lamp removal .....
4. Optical system .....
4-1. Copy lamp replacement .....
4-2. Copy lamp unit replacement .....
4-3. Mirror base drive wire replacement .....
4-6. Optical unit removal .....
4-7. Other parts in the optical system .....
4-8. Light adjustment plate/temperature fuse removal .....
5. SPF section .....
5-1. SPF mechanism removal .....

5-2. Paper feed roller/takeup roller replacement 6-14
5-3. Reverse roller (ass'y) replacement 6-14
5-4. SPF control PWB replacement 6-15
5-5. Clutch/solenoid removal 6-15
5-6. Sensor removal 6-15
6. Drum section 6-16
6-1. Drum unit removal 6-16
7. Developer section 6-16
7-1. Developer unit removal 6-16
7-2. Developer cartridge removal 6-16
7-3. Toner motor removal 6-17
7-4. Toner density sensor 6-17
8. Operation panel section/medium cabinet 6-17
9. Major parts in the frame side 6-18
9-1. Ozone filter 6-18
9-2. Optical unit/SPF unit cooling fan removal 6-18
9-3. Ventilation fan motor 6-18
9-4. Transport roller clutch 6-19
9-5. Paper exit sensor 6-19

[7] ADJUSTMENTS 7-1
1. Developer section 7-1
(1) MG roller main pole position adjustment 7-1
(2) Adjustment of clearance between DV doctor and MG roller 7-2
2. Optical section 7-2
A. Adjustments list 7-2
B. Notes 7-3
C. Adjustment contents 7-6
(1) Lens 7-6
(2) Mirror 7-7
(3) Image distortion adjustment 7-8
(4) Copy image center position adjustment 7-12
(5) Focus adjustment (Resolution adjustment) ... 7-13
(6) Copy magnification ratio adjustment 7-14
(7) Uniformity adjustment 7-17
(8) Image loss/void area adjustment 7-18
3. COPY DENSITY ADJUSTMENT 7-24
(1) Copy density adjustment timing 7-24
(2) Note for copy density adjustment 7-24
(3) Necessary items for the copy density adjustment 7-24
(4) Copy density adjustment mode 7-24
(5) Copy density adjustment procedure 7-24
A. Test chart (UK0G-0162FCZZ) setting 7-24
B. Normal copy mode (Non-toner-save mode) copy density adjustment 7-24
C. Normal copy mode (Toner save mode) copy density adjustment 7-25
D. Photo copy mode (Non-toner-save mode) copy density adjustment 7-25
E. Auto copy mode (Non-toner-save mode) copy density adjustment 7-25
F. Auto copy mode (Toner save mode) copy density adjustment 7-26
(6) Copy density adjustment table 7-27
4. Others 7-28
(1) Transfer charger wire installation 7-28
(2) DV bias adjustment 7-28
(3) Separation charger output adjustment 7-28

[8] SIMULATIONS 8-1
1. Outline 8-1
2. Purpose 8-1
3. Operating procedure 8-1
4. Purpose list 8-2
5. Details of simulations 8-3
6. User simulations 8-13

[9] SELF DIAG 9-1
1. Summary/purpose 9-1
2. Operation 9-1
3. Clearing the self diag display 9-1
4. Self diag contents 9-2
5. Conditions for the JAM display 9-7
1) Paper feed section 9-7
2) Transport section 9-7

[10] SERVICING AT MEMORY TROUBLE AND MAIN CONTROL PWB REPLACEMENT 10-1
1. General 10-1
2. Purpose 10-1
3. Remedies 10-1
4. Set value recording sheet 10-4
5. Memory simulation list 10-5

[11] MAINTENANCE 11-1

[12] ELECTRICAL SECTION 12-1
1. System block diagram 12-1
2. System operation at power ON 12-1
3. Main circuit 12-2
(1) Block diagram 12-2
(2) CPU (IC110) M37702 12-2
① Outline 12-2
② Pin arrangement 12-2
③ Block diagram 12-3
④ CPU: M37702 (IC110) pin signals 12-4
(3) Start/stop control circuit 12-5
(4) Heater lamp control circuit 12-6
① General 12-6
(5) Driver circuit (Solenoid, magnetic clutch) 12-7
① General 12-7
② Operation 12-7
(6) Stepping motor drive circuit 12-7
① General 12-7
(7) AE (Auto Exposure) sensor circuit 12-7
(8) Toner supply motor drive circuit 12-8
(9) Reset IC (IC113) 12-8
① Outline 12-8
② Operation 12-8
(10) Copy lamp control section 12-9
4. Operating section 12-11
(1) Outline 12-11
(2) Display circuit 12-12
① Block diagram 12-12
② Operation 12-12
(3) LED display 12-13
5. Power section 12-13
(1) Signal name and output voltage 12-13

[1] GENERAL DESCRIPTION

1. Features

[Small]

- Compact design
- Small area for operation

[Speedy]

- Warm-up time 30 sec or less, the first copy 5.9 sec – the fastest in the class.
- The automatic document feeder (standard provision in the SF-2214 only) increases copy productivity.
- The photoconductor and the peripheral parts are integrated into units. The novel two-component development system eliminates the need for developer replacement. Parts replacement procedures in the fuser section and the paper feed section are simplified to remarkably reduce maintenance time.

[Soft]

- The energy save mode reduces the total power consumption.
- The noise limiting design results in the quietest machine in the industry (46 dB).
- Ozone generation is limited.
- Use of materials which can be recycled.

User simulation

The user can select the desired operating conditions easily. Auto clear time, power save mode time, power save mode warm up time can be set by the user simulation.

2. Target users

Average copy volume of 2,000 – 3,000 sheets/month (max. 10,000 sheets/month)

3. Novel technology

Novel two-component development system

During copy process, developer is substituted little by little to image deterioration. Replacement of developer is not ne developer/toner recycling method is used.

SPF (Single Pass Feeder)

When documents are placed in the feed port and the PRIN pressed, the SPF will feed the documents automatiacly. T enables one set of copies for one set of documents.

4. Novel functions

Power save function
After a set time, has passed since a copy run has finished, save function operates to save energy. There are two kinds save function as shown below. The preferred power save m be selected by the key operator.

1) Pre-heat

- The temperature in the fuser section is lower than that in th state.
- Within 10 sec after completion of pre-heating, the m ne to the ready state.

2) Auto power shut off

- Power supply to the fuser section is shut off.
- The time required to return to the ready state and turn ready lamp after completion of auto power shut off is the warm-up time after turning on the power.

5. System outline

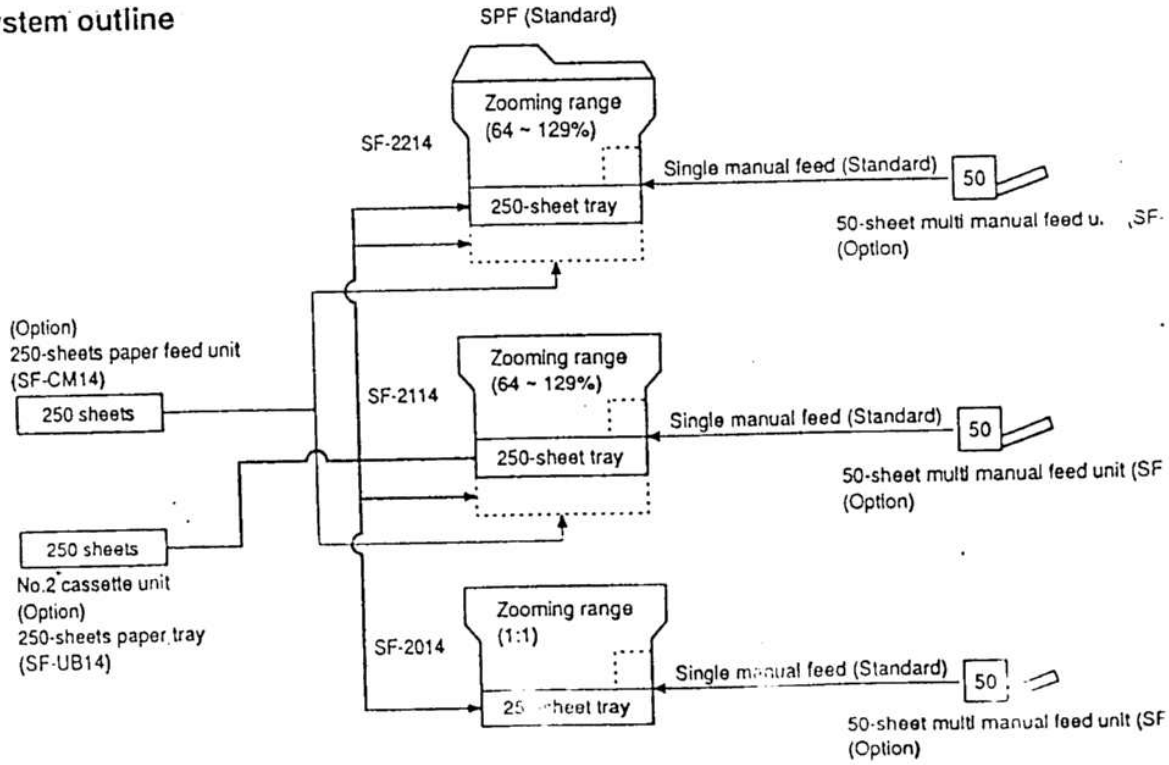

* As the other options for all the models, the desk (SF-720D2) and the personal counter (SF-71AV/71B) are available.

[2] PRODUCT SPECIFICATIONS

1. Basic specifications

(1) Type: Table top

(2) Copy speed

- SF-2014

Paper size	Normal	Enlargement	Reduction
B4	11 sheets/min	—	—
A4 (Landscape)	14 sheets/min	—	—
B5 (Landscape)	14 sheets/min	—	—
10" × 14"	11 sheets/min	—	—
Legal	11 sheets/min	—	—
Letter (Landscape)	14 sheets/min	—	—

- SF-2114/2214

Paper size	Normal	Enlargement	Reduction
B4	11 sheets/min	10 sheets/min	12 sheets/min
A4 (Landscape)	14 sheets/min	10 sheets/min	12 sheets/min
B5 (Landscape)	14 sheets/min	10 sheets/min	12 sheets/min
10" × 14"	11 sheets/min	10 sheets/min	12 sheets/min
Legal	11 sheets/min	10 sheets/min	12 sheets/min
Letter (Landscape)	14 sheets/min	10 sheets/min	12 sheets/min

Note: Copy speeds in the enlargement/reduction copy are the same in all the rates.

(3) Warm-up time

Normal	Max. 30 sec
Pre-heat	Max. 10 sec
Auto power shut off	Max. 30 sec

(4) First copy time: 5.9 sec (Fed from No. 1 cassette)

(5) Jam recovery time: 5 sec (Condition: Jam in a section except for the fuser section, within 6.0 sec from door open, standard condition.)

(6) Multi copy

Max. quantity of multi copy	99 sheets

(7) Document

Max. document size	B4/10"/14"
Document reference position	Left side
Detection	No

(8) Copy magnification ratio (model SF-2114/2214 only)

Fixed magnification ratio	AB series	122, 115, 81, 70%
	Inch series	129, 117, 78, 64%
Zoom range		64 ~ 129% in 66 steps of 1% increment

(9) Exposure

Exposure mode	Auto/Manual/Photo
Manual steps	9 steps

(10) Void width

	Normal	Enlargement	Reduction
Void area	Lead edge 3.0mm or less	Lead edge 3.0mm or less	Lead edge 3.0mm or less
Image loss	Lead edge 3.0mm or less	Lead edge 2.5mm or less	Lead edge 5.0mm or less

(11) Paper exit

Paper exit tray capacity	100 sheets

(12) External demensions

	SF-2014	SF-2114	SF-2214
W × D × H (mm)	500 × 480 × 295		500 × 480 × 364
Occupying width (mm)	500 + 261 (Paper exit tray) + 205 (Option MB)		
Weight	26.2 Kg	26.7 Kg	29.5 Kg

(13) Power source

Power source	100V, 110V, 120V, 127V, 220 ~ 240V, 220V, 240V
Frequency	50/60Hz

(14) Power consumption

Max. power consumption	1.4 kW
Average power consumption when operating	0.48 kW
Power consumption in standby	0.095 kW
Power consumption in pre-heating	0.056 kW
Power consumption in auto power shut off	0.026 kW

Note: Max. value when an option is installed.

2. Details of each section

(1) Paper feed section

Copy size	AB series	B4 ~ A6
	Inch series	10" × 14" ~ 4" × 6"
Paper feed system		1 cassette + manual paper feed
Paper feed capacity		250 × 1 + 1 or 50

- AB series

Paper feed port	Paper feed size	Paper weight	Special paper
Tray	B4 ~ A5 (Landscape)	56 ~ 80g/m^2	Recycled paper
Paper feed unit (OP)	B4 ~ A5 (Landscape)	56 ~ 80g/m^2	Recycled paper
Single manual feed	B4 ~ A6 (Portrait)	52 ~ 130g/m^2	Second original, OHP, label
	A4 ~ A5 (Portrait)	104 ~ 130g/m^2	Postcard, recycled paper
Multi manual feed • Multi paper feed	B4 ~ A5 (Portrait)	52 ~ 130g/m^2	Postcard, recycled paper
• Single paper feed	B4 ~ A6 (Portrait) A4 ~ A5 (Portrait)	52 ~ 130g/m^2 104 ~1130g/m^2	Second original, OHP, label, postcard, recycled paper

- Inch series

Paper feed port	Paper feed size	Paper weight	Special paper
Tray	10" × 14" – invoice	15 – 21 lbs	Recycled paper
Paper feed unit (OP)	10" × 14" – invoice	15 – 21 lbs	Recycled paper
Single manual feed	10" × 24" – 4" × 5"	14 – 34.5 lbs	Second original, OHP, label
	Letter – 4" × 6"	28 – 34.5 lbs	Postcard, recycled paper
Multi manual feed (OP) • Multi paper feed	10" × 14" – 4" × 6"	15 – 21 lbs	Recycled paper
• Single paper feed	10" × 14" – 4" × 6" Letter – 4" × 6"	14 – 34.5 lbs 28 – 34.5 lbs	Second original, OHP, label, postcard, recycled paper

(2) Optical section

Light source	Halogen lamp
Exposure system	Slit exposure by moving the light source
Magnification ratio changing system	By changing the lens position and scan speed.
Lens	Fixed focus lens

(3) Process section

Charging system	(–) DC scorotron system		
Transfer system	(–) DC scorotron system		
Separation system	Discharge plate/separation pawl		
Main charger grid voltage	Copy mode	Simulations No.	Grid voltage
	Standard	8-02	–780V±10V
	Photo	8-03	–480V±10V
	Toner save	8-04	–660V±10V
Charge/Transfer charger applied voltage	–50.0μA ± 4μA		

(4) Developer section

Developing system	Novel two-component developing system (Developer replacement not required)
Toner density detection system	Magnetic sensor system
Toner box capacity	Developer 48g, toner 180g
Developing bias	DC–200V±5V

- Developer

Material	Iron powder carrier
Charging system	Negatively charged by friction

- Toner

Charging system	Positively charged by friction

(5) Fuser section

Fusing system		Heat roller system
Upper heat roller surface temperature		180°C
Standard		170°C
Heater lamp	100V	Halogen lamp 1000 W × 1 pc.
	110V	Halogen lamp 1000 W × 1 pc.
	120V	Halogen lamp 1000 W × 1 pc.
	127V	Halogen lamp 1000 W × 1 pc.
	220V	Halogen lamp 1000 W × 1 pc.
	230V	Halogen lamp 1000 W × 1 pc.
	240V	Halogen lamp 1000 W × 1 pc.

(6) Drive section

Main motor standard	3-phase full wave drive, DC brushless Rating: DC32V, max. 1.32A, 1500 rpm

(7) SPF

Standard/option	Standard only in the SF-2214
Document load capacity	About 20 sheets, max. thickness of 3.0 mm
Document size	A5 – B4, 5 1/2" × 8 1/2" – 10" × 14"
Document replacement speed	14 sheets/min
Document weight	52 – 90 g/m²
Random/mix paper feed	Not available

3. Supplies

USA, Canada

No.	Item	Contents		Life	Model name	Packing unit
1	OPC Drum Cartridge	• OPC Drum Cartridge	x 1	40K	SF-214DR	10
2	OPC Drum Kit	• OPC Drum	x 1	40K	SF-214DK1	10
		• Cleaner Blade	x 1			
3	Black Toner	• Black Toner Cartridge	x 1	4K	SF-214NT1	10
4	Black Developer	• Black Developer Cartridge	x 10		SF-214MD1 (SF-214ND1 x 10)	1
5	Heat Roller Kit	• Upper Heat Roller	x 1	80K	SF-214HR1	5
		• Upper Separation Pawl	x 3			
		• Lower Heat Roller	x 1			
		• Lower Separation Pawl	x 3			

Europe/Australia/Newzealand/Middle Easte/Africa

No.	Item	Contents		Life	Model name	Packing unit
1	OPC Drum Cartridge	• OPC Drum Cartridge	x 1	40K	SF-214DM	10
2	OPC Drum Kit	• OPC Drum	x 1	40K	SF-214DK2	10
		• Cleaner Blade	x 1			
3	Black Toner	• Black Toner Cartridge	x 1	4K	SF-214T1	10
4	Black Developer	• Black Developer Cartridge	x 10		SF-214LD1 (SF-214DV1 x 10)	1
5	Heat Roller Kit	• Upper Heat Roller	x 1	80K	SF-214HR	5
		• Upper Separation Pawl	x 3			
		• Lower Heat Roller	x 1			
		• Lower Separation Pawl	x 3			

* Except for Saudi Arabia

Asia/Central and South America

No.	Item	Contents		Life	Model name	Packing unit
1	OPC Drum Cartridge	• OPC Drum Cartridge	x 1	40K	SF-214DR	10
2	OPC Drum Kit	• OPC Drum	x 1	40K	SF-214DK1	10
		• Cleaner Blade	x 1			
3	Black Toner	• Black Toner Cartridge	x 1	4K	SF-214ST1	10
4	Black Developer	• Black Developer Cartridge	x 10		SF-214CD1	1
5	Heat Roller Kit	• Upper Heat Roller	x 1	80K	SF-214HR	5
		• Upper Separation Pawl	x 3			
		• Lower Heat Roller	x 1			
		• Lower Separation Pawl	x 3			

Saudi Arabia

No.	Item	Contents		Life	Model name	Packing unit
1	OPC Drum Cartridge	• OPC Drum Cartridge	x 1	40K	SF-214DH	10
2	OPC Drum Kit	• OPC Drum	x 1	40K	SF-214DK3	10
		• Cleaner Blade	x 1			
3	Black Toner	• Black Toner Cartridge	x 10	4K x 10	SF-214HT1 (SF-214FT1 x 10)	10
4	Black Developer	• Black Developer Cartridge	x 10		SF-214LD1 (SF-214DV1 x 10)	1
5	Heat Roller Kit	• Upper Heat Roller	x 1	80K	SF-214HR1	5
		• Upper Separation Pawl	x 3			
		• Lower Heat Roller	x 1			
		• Lower Separation Pawl	x 3			

[3] EXTERNAL VIEW AND INTERNAL STRUCTURE

1. External view and internal structure (SF-2214 as the example model)

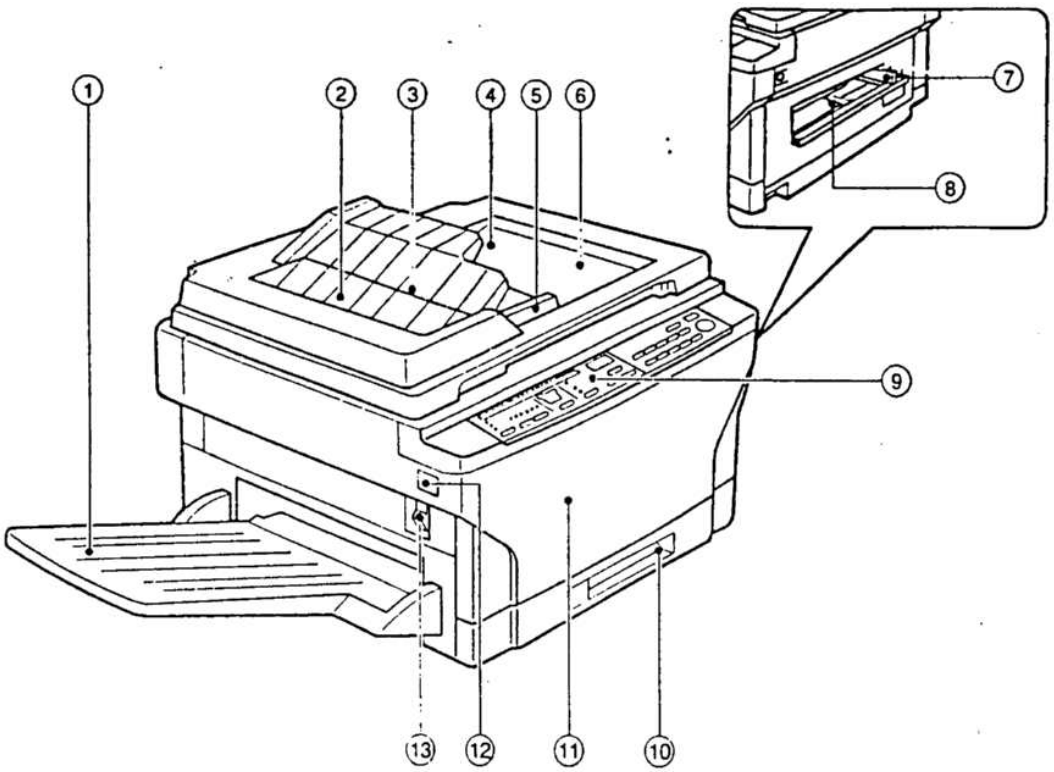

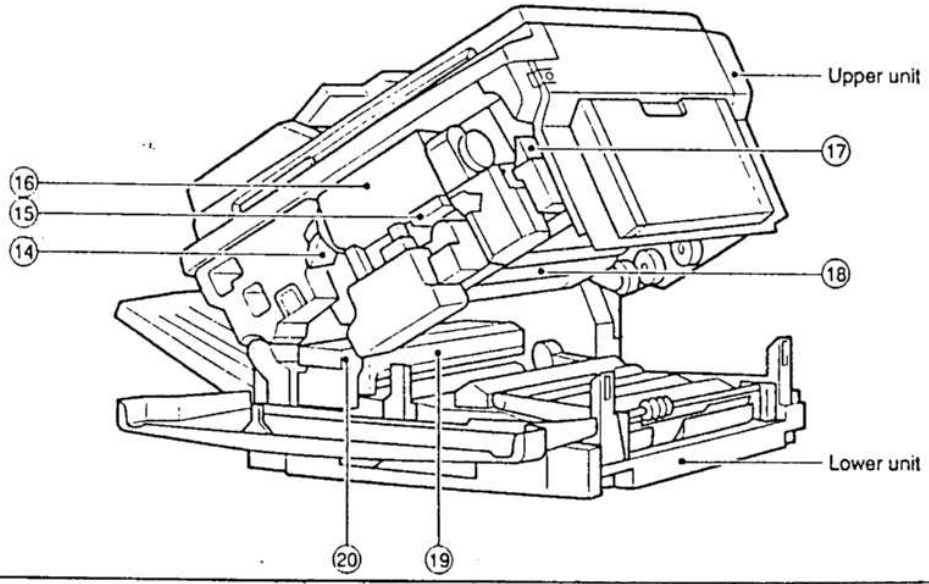

No.	Name	No.	Name	No.	Name
①	Exit tray	②	SPF exit tray	③	SPF tray
④	Document cover	⑤	Original guide	⑥	Document table
⑦	Manual bypass guide	⑧	Manual bypass	⑨	Operation panel
⑩	Paper tray	⑪	Front cover	⑫	Release button
⑬	Power switch	⑭	Toner cartridge release lever	⑮	Handel
⑯	Toner cartridge	⑰	Open/close lever	⑱	Photoconductive drum
⑲	Fusing unit (High temperature)	⑳	Fusing unit lever		

2. Operation panel

SF-2014

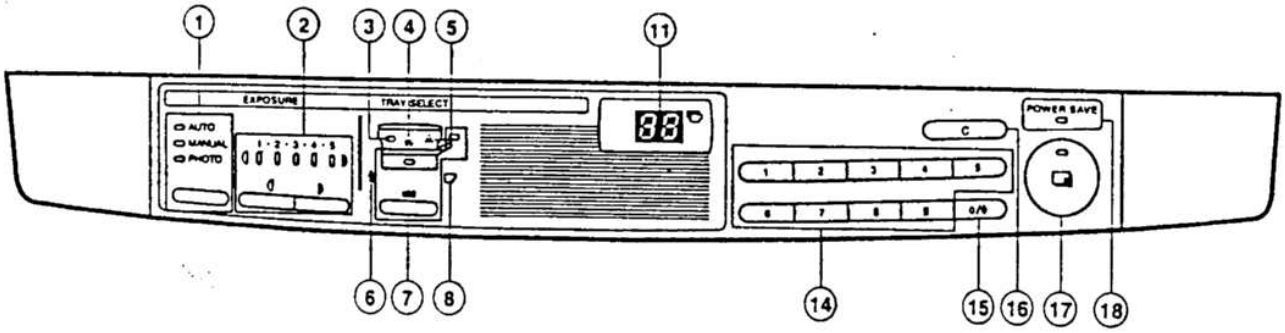

SF-2114

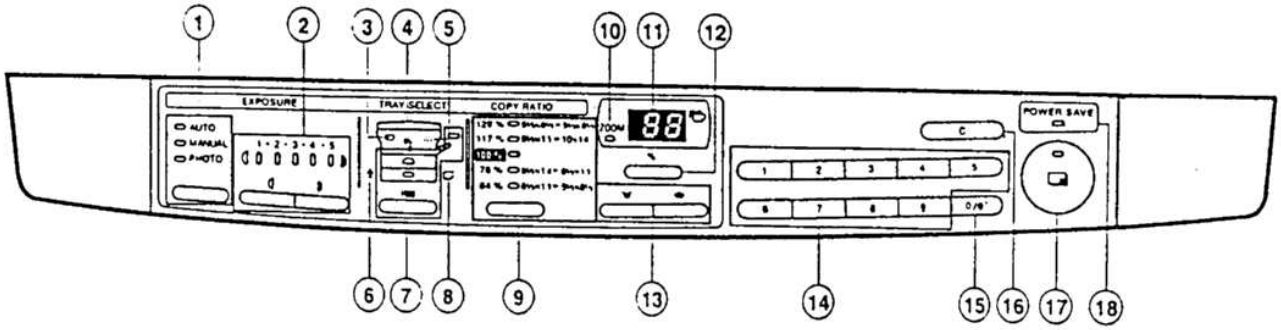

SF-2214

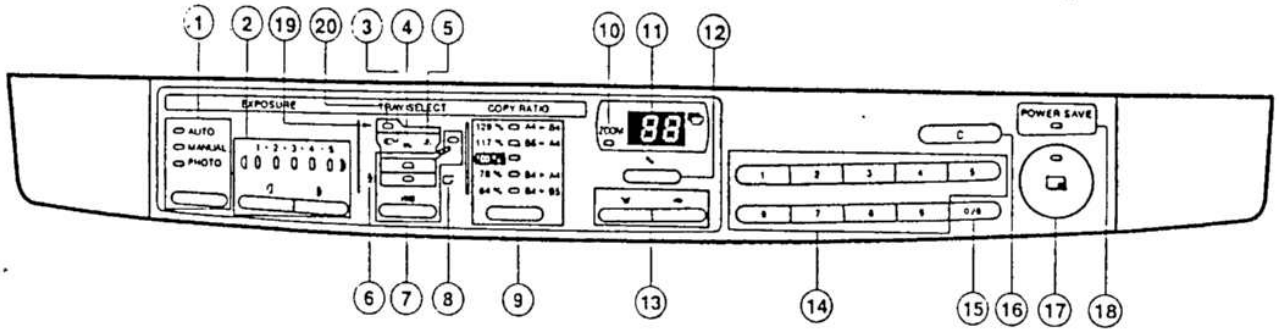

No.	Name	No.	Name	No	Name
①	Auto/manual/photo key and indicators	②	Light and dark keys and exposure indicators	③	Drum replacement required indicator
④	Misfeed indicator	⑤	Toner required indicator	⑥	Maintenance required indicator
⑦	Tray select key and indicators	⑧	Paper required indicator	⑨	Copy ratio selector key and indicators
⑩	Zoom indicator	⑪	Copy quantity display	⑫	Copy ratio display key
⑬	Zoom keys	⑭	10-key pad	⑮	Zero/read-out key
⑯	Clear key	⑰	Print button and ready indicator	⑱	Power save indicator
⑲	SPF misfeed indicator	⑳	SPF indicator		

3. Cross section (SF-2214 as the example model)

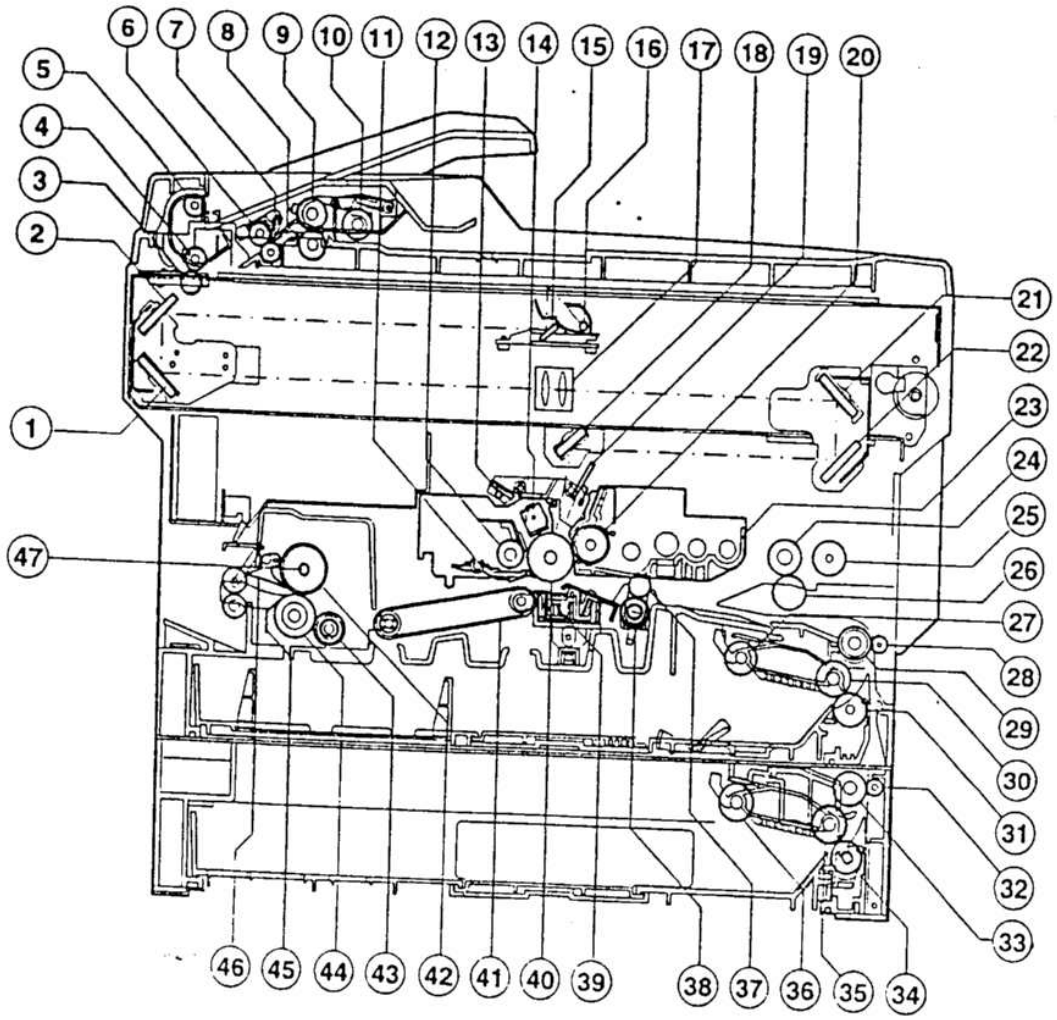

No.	Name	No.	Name	No	Name
①	No.3 mirror	②	No.2 mirror	③	SPF transport follower roller
④	SPF transport roller	⑤	SPF document exit roller	⑥	SPF PS roller upper
⑦	SPF PS roller lower	⑧	SPF document feed reverse roller	⑨	SPF document feed roller
⑩	SPF document takeup roller	⑪	Drum separation pawl	⑫	Cleaner unit
⑬	Discharge lamp	⑭	Main charger unit	⑮	No.1 mirror
⑯	Copy lamp	⑰	Lens unit	⑱	No.6 mirror
⑲	Blank lamp	⑳	Developer magnet roller	㉑	No.4 mirror
㉒	No.5 mirror	㉓	Developer tank	㉔	Manual paper feed roller
㉕	Manual feed take-up roller	㉖	Manual paper feed follower roller	㉗	Tray paper feed takeup roller
㉘	Tray transport follower roller	㉙	Transport roller (Upper)	㉚	Tray paper feed roller
㉛	Tray paper feed reverse roller	㉜	Option tray transport follower roller	㉝	Option tray transport roller
㉞	Option tray paper feed reverse roller	㉟	Option tray paper feed roller	㊱	Option tray paper feed takeup roller
㊲	Resist roller	㊳	Resist roller	㊴	Transfer charger
㊵	Photoconductor drum	㊶	Suction belt	㊷	Upper heat roller
㊸	Lower cleaning roller	㊹	Lower heat roller	㊺	Lower separation pawl
㊻	Upper separation pawl	㊼	Heater lamp		

4. Switches, sensors, detectors (The SF-2214 as the typical example)

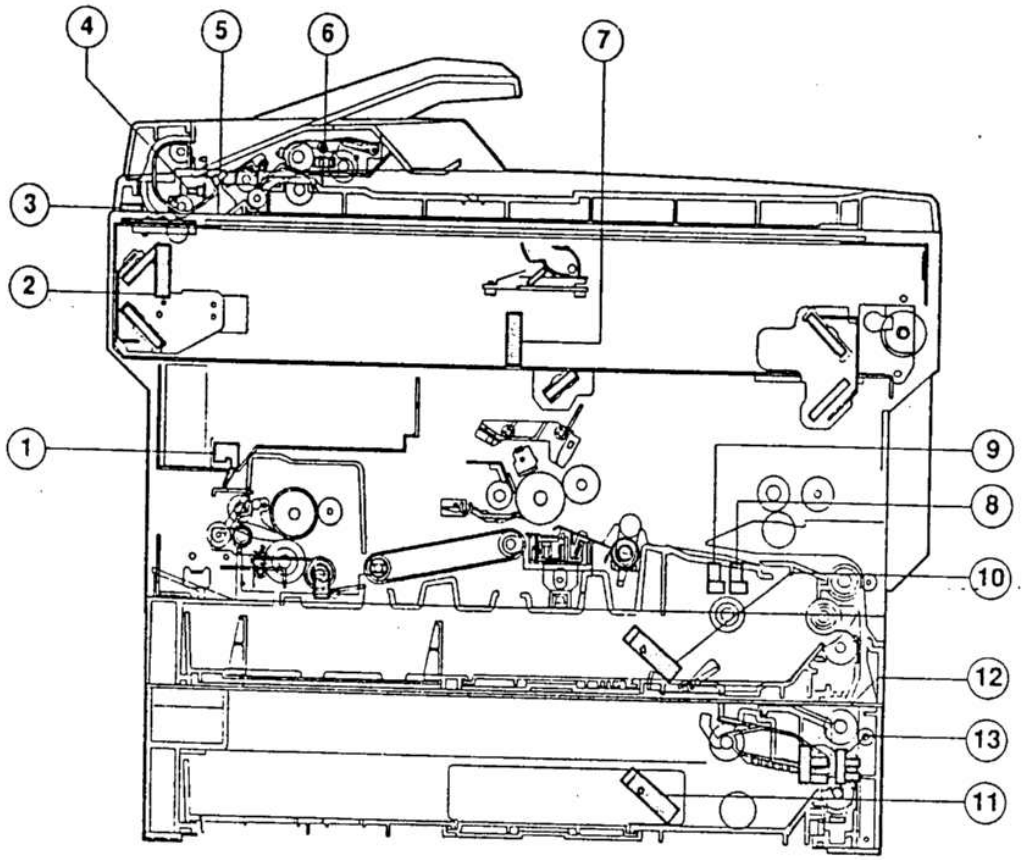

No.	Abbreviation	Function	Type	Operation
①	POD	Paper out sensor	Transmission photo sensor	H when paper is sensed.
②	MHPS	Mirror home position sensor	Transmission photo sensor	H at the home position.
③	SDSW	SPF cover open/close sensor	Lead switch	H when the cover is open.
④	SPOD	SPF document out sensor	Transmission photo sensor	L when paper is sensed.
⑤	SPPD	SPF document transport sensor	Transmission photo sensor	H when paper is sensed.
⑥	SPFD	SPF document set sensor	Transmission photo sensor	L when a document is set.
⑦	LHPD	Lens home position sensor	Transmission photo sensor	H at the home position.
⑧	PWD	Paper size (large/small) sensor	Transmission photo sensor	L with the large size.
⑨	PPD	Paper transport sensor	Transmission photo sensor	L when paper is sensed.
⑩	CPED1	Tray paper empty sensor	Transmission photo sensor	H when paper is present.
⑪	CPED2	Option tray paper empty sensor	Transmission photo sensor	H when paper is present.
⑫	CSPPD	Option tray paper path/empty sensor	Transmission photo sensor	H when paper is sensed.
⑬	CSDSW	Option tray paper feed cover open/close sensor	Transmission photo sensor	L when the cover is open.

5. Clutches, solenoids (The SF-2214 as the typical example)

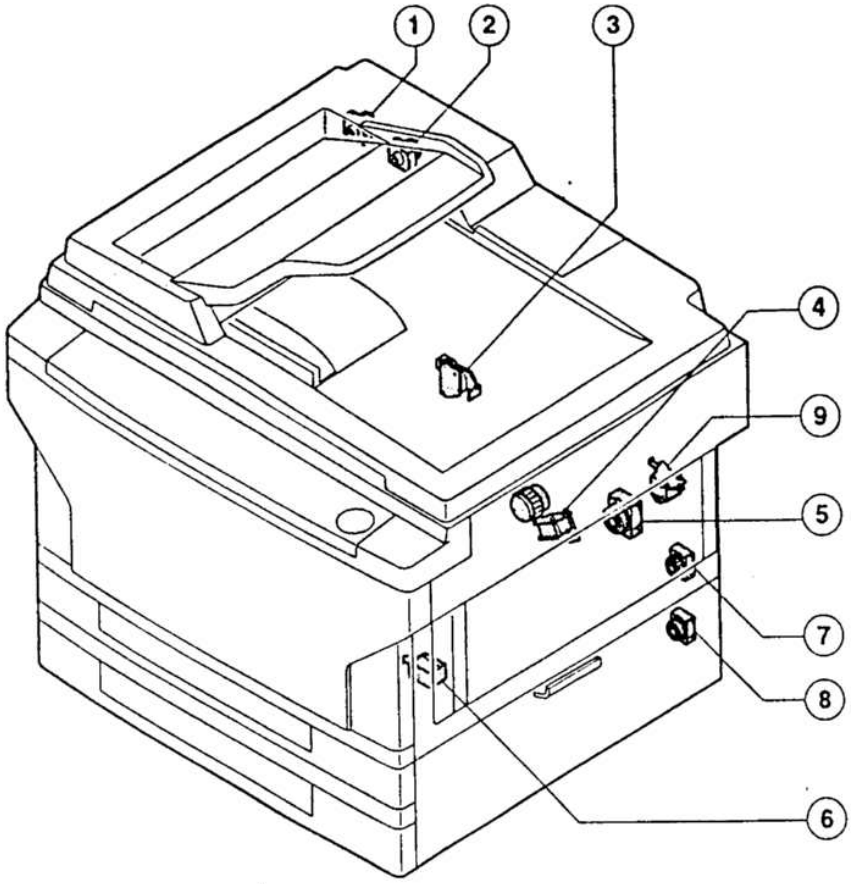

No.	Abbreviation	Name	Function and operation
①	SRRC	SPF resist roller clutch	For SPF resist roller rotation
②	SPFC	SPF document transport clutch	For SPF transport roller rotation
③	PSPS	Paper separation solenoid	For paper separation solenoid drive
④	RRC	Resist roller clutch	For resist roller rotation
⑤	TRC	Transport roller clutch	For transport roller rotation
⑥	MPFS	Manual paper feed solenoid	For takeup roller pressing
⑦	CPFC1	Tray paper feed clutch	For paper feed roller rotation
⑧	CPFC2	Option tray paper feed clutch	For paper feed roller rotation
⑨	MPFC	Multi paper feed clutch	For multi paper feed roller rotation

6. Motors (The SF-2214 as the typical example)

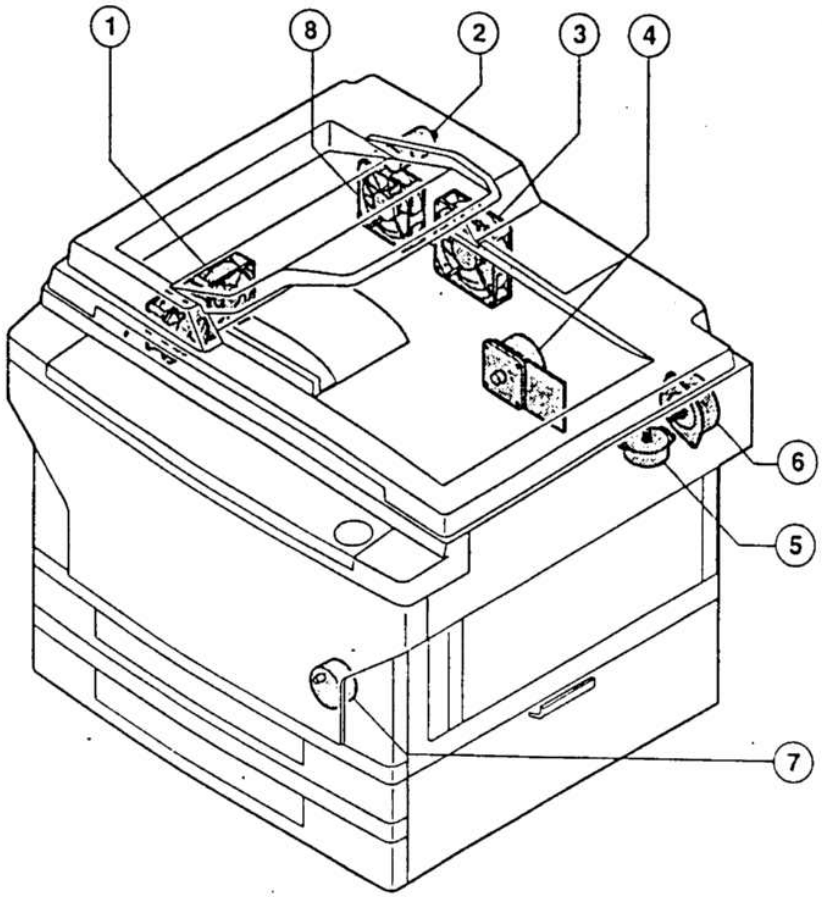

No.	Abbreviation	Name	Function	Type
①	VFM	Paper exit fan motor	For ventilation of the fuser unit. For cooling the machine and removing ozone.	DC brushless
②	SPFM	SPF motor	For SPF drive	DC brushless
③	CFM	Cooling fan motor	For cooling the optical system	DC brushless
④	MM	Main motor	For the main body drive and the option drive	DC brushless
⑤	LM	Lens motor	For the optical lens drive	DC stepping
⑥	MRM	Mirror motor	For the optical mirror base drive	DC brushless
⑦	TM	Toner motor	For toner supply	DC synchronous
⑧	SPFFM	SPF cooling fan motor	For cooling the optical system in the SPF mode	DC brushless

7. PWBs (The SF-2214 as the typical example)

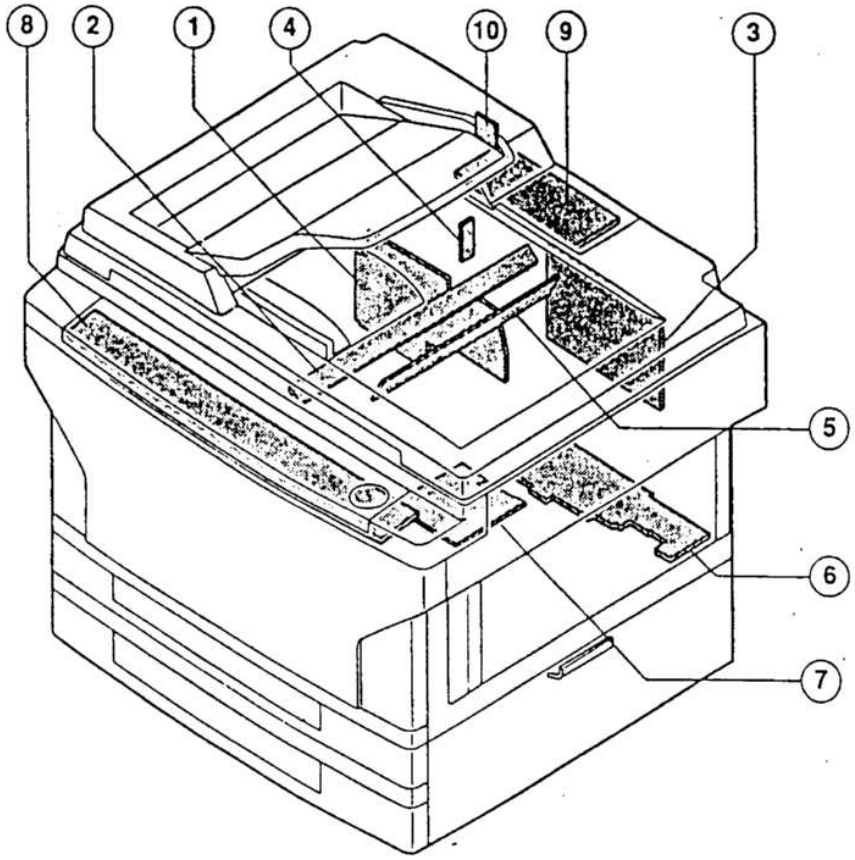

No.	Name	Description
①	AC circuit PWB	AC power input
②	Discharge lamp PWB	Discharge lamp drive
③	Main PWB	Main body control
④	AE PWB	Document density auto exposure detection
⑤	Blank lamp PWB	Blank lamp control
⑥	Lower unit PWB	Lower unit parts control
⑦	High voltage PWB	Supply of the process high voltage and the developer bias voltage.
⑧	Operation PWB	Operation input, display control
⑨	SPF control PWB	SPF control
⑩	RE PWB	Speed detection for SPF motor

[4] UNPACKING AND INSTALLATION

1. Packing drawing

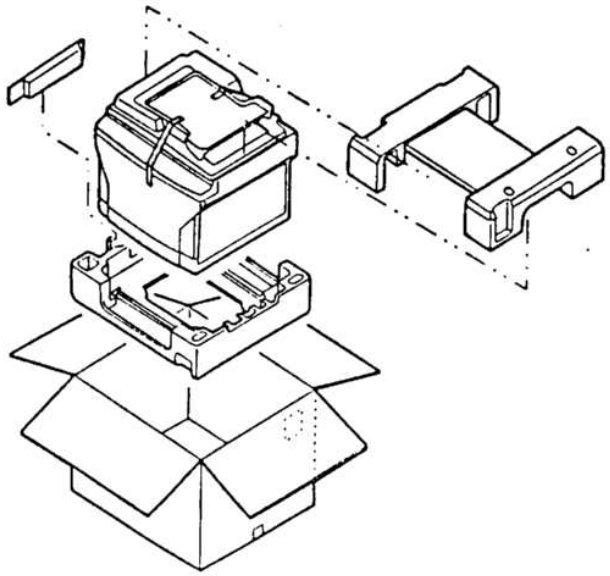

List of packing materials and accessories

	Name	Q'ty
1	Packing case	1
2	SPF tray	1
4	SPF cover protection material	3
5	Body	1
6	Polyethylene bag for paper exit tray	1
7	Vinyl sheet for body	1
8	Bottom case	1
9	Bottom case pad (L)	1
10	Bottom case pad (R)	1
11	AC cord sleeve	1
12	Paper exit tray	1
14	Instruction Manual unit	
	Instruction Manual	1
	Dust cover (For some agents)	1
	Warranty card (For Australia)	1
	Warranty resistration (For U.K.)	1
	Installation report (For Europe except U.K.)	1
15	Consumable parts kit	
	Developer	1
	Toner for installation	1

2. Installation

Installation conditions

The following installing conditions must be satisfied to assure the normal operations of the machine.

(1) Environment

① **Keep the machine away from direct sunlight and avoid installation near a window or in a bright place.**
(Draw the curtain and close the blind shutter completely.)
The plastic parts and the original cover may be deformed by direct sunlight. Avoid installation near a window even with frosted glass.

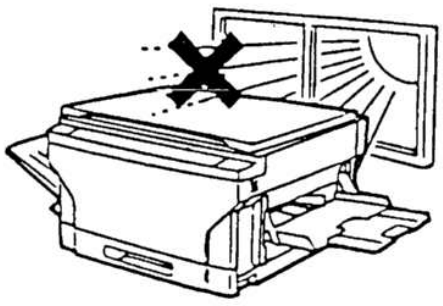

② **Avoid installation in high temperature or high humitity environments. Also, avoid installation where temperature or humidity may change quickly. (e.g., near an air conditioner).**
Otherwise copy papers may be dampened and condensation may be generated in the machine. This may result in paper jams or poor copy quality.

(Ideal conditions): The best suitable conditions for machine operation:
20°C – 25°C: 65 ±5%RH

(Temperature/humidity range): 15°C – 30°C, 20% – 85%
65% for 35°C

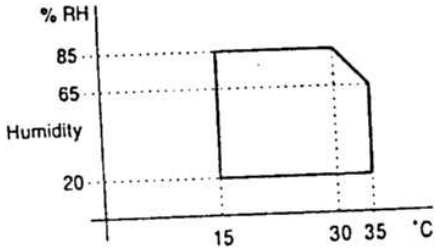

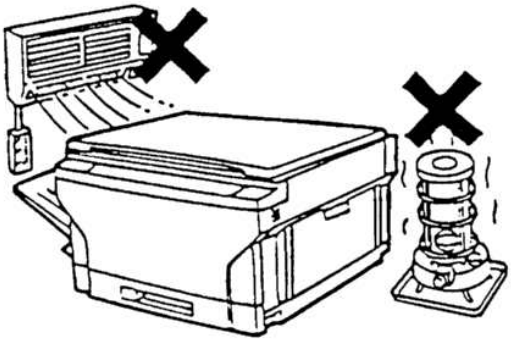

③ **Avoid installation where there is a lot of dust or vibrations.**
If dust enters the machine, it may degrade copy quality and cause malfunctions.

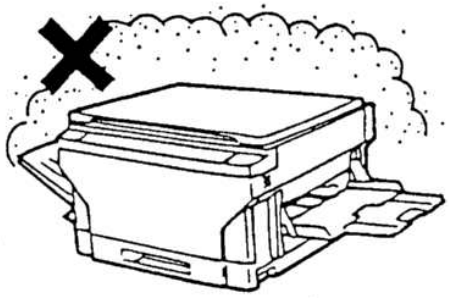

④ **Avoid installation on an unstable surface.**
To assure the proper operations, install on a level surface.

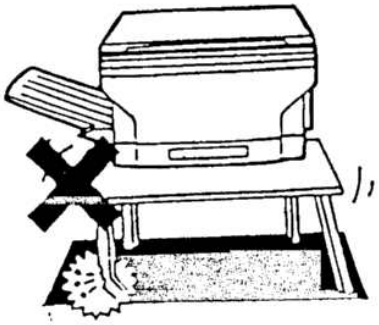

⑤ **Install in a well ventilated place.**

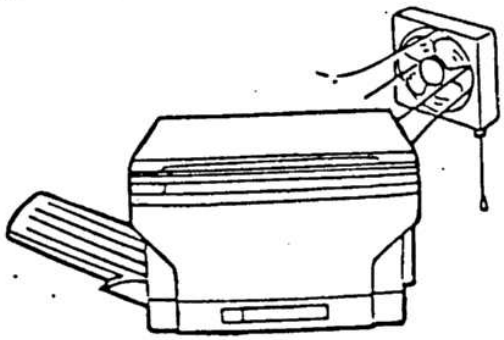

⑥ **Avoid installation where there is inflammable gases or ammonium gases.**
Installation near a diazonium copier may degrade copy quality and cause malfunctions.

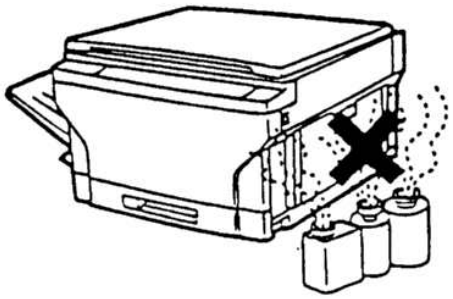

⑦ **Install near a power outlet.**

(2) Space around the machine

Allow a space of about 15 cm (6 inches) between the rear side of the machine and the wall for ventilation of the cooling fan. Also allow sufficient space around the machine for operations.

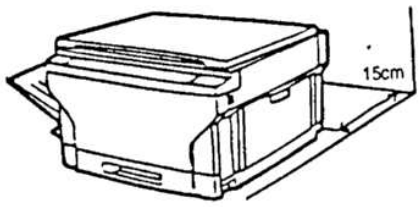

(3) Installing table

Use a level (UKOGM0054CSZZ) to install the machine horizontally.

(Note) If the machine is not installed horizontally, toner density control may not function properly. This may result in poor copy quality.

(4) Power source

① The power source should be the rated voltage ±10% with the capacity corresponding to the max. power consumption.

② Do not use an extension cord, or operate any other equipment from the same wall outlet.

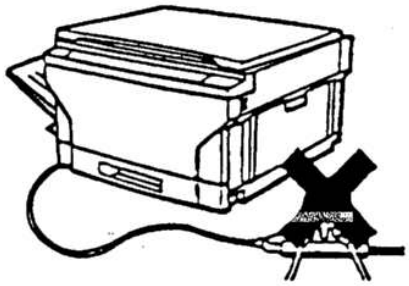

(5) Grounding

To avoid electrical hazard, use the properly grounded wall outlet only.

(Carrying the machine)
When carrying the machine, remove the copy tray and hold the dent portions on the bottom.

3. Installation procedure

(1) Optical system unlocking

① Unlock the No.2/No.3 mirror unit.
Remove the No.2/No.3 mirror unit fixing screw (1 pc.) on the left side of the copier.

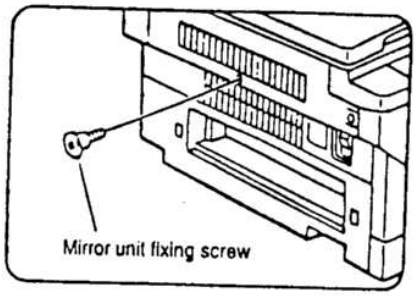

② Unlock the No.4/No.5 mirror unit.

[In the case of SF-2014]
Remove the No.4/No.5 mirror unit fixing screws (2 pcs.) on the right side of the copier.

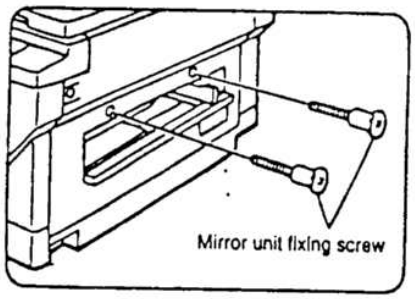

[In the case of SF-2114, SF-2214]
Open the paper feed tray on the right side of the copier.

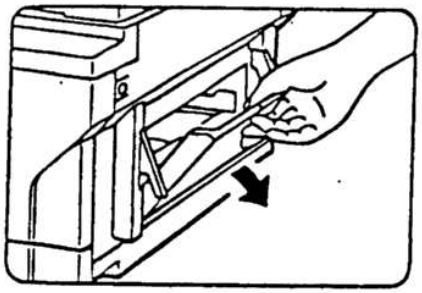

Remove the No.4/No.5 mirror unit fixing screws (2 pcs.), Then close the paper feed tray.

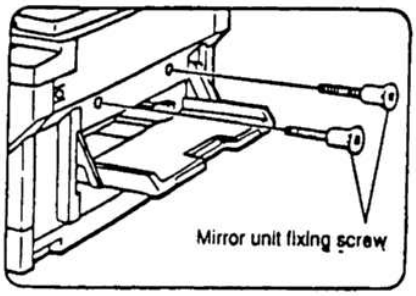

(2) Cassette setting

① Pull out the cassette.
Lift the cassette and slowly pull it out from the copier until it stops

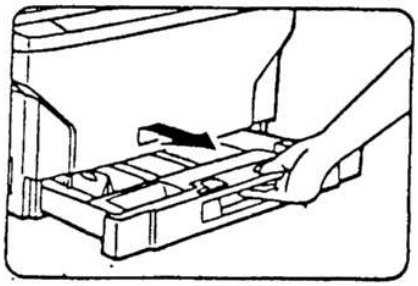

② Loading copy paper.
Set the copy papers in the cassette. Do not exceed the limit lin indicator.

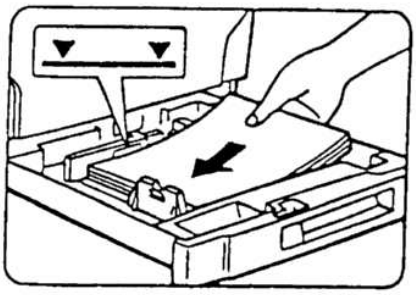

Gently insert the cassette fully into the copier.

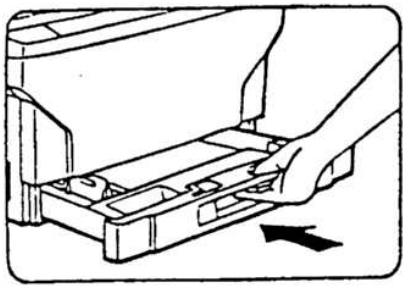

(3) Developer setting

① **Open the front cabinet.**
Press the front cabinet open buttons in the right and the left sides of the copier, and open the front cabinet.

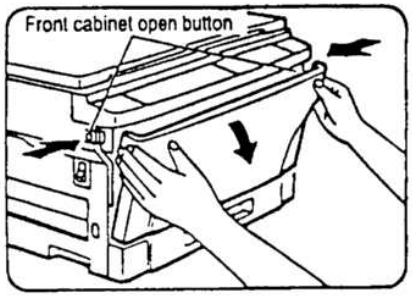

② **Open the toner cartridge.**
While pressing the toner cartridge release lever (B), open the toner cartridge.

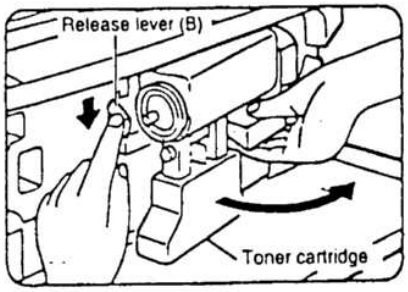

③ **Install the developer cartridge.**
Insert the developer cartridge along the developer guide.
Check to insure that the developer cartridge is securely locked.

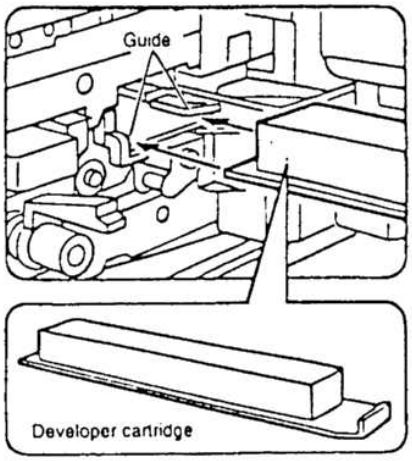

④ **Supply developer.**
Press and hold the developer cartridge in place and remove the developer cartridge sheet by pulling forcefully.
(Developer will be supplied.)

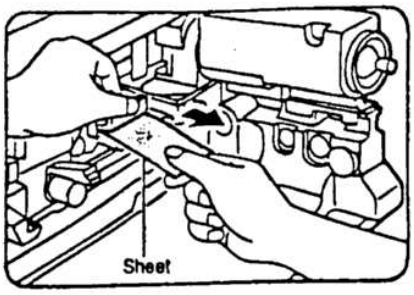

(4) Toner supply

① **Remove the toner cartridge.**
Slowly turn the toner cartridge clockwise and remove it.

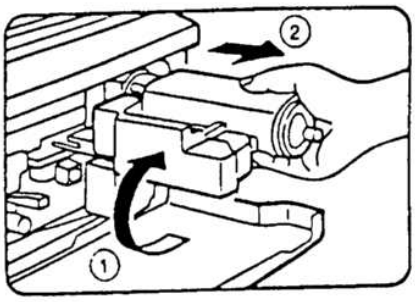

② **Shake the toner cartridge.**
Shake the removed toner cartridge up and down a few times.

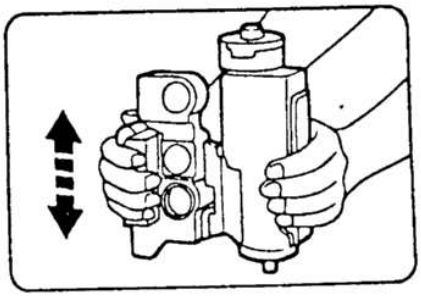

③ **Install the toner cartridge.**
Install the toner cartridge along the guide in the copier.

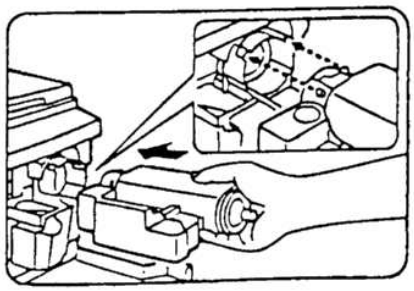

Turn the toner cartridge counterclockwise to lock it in position

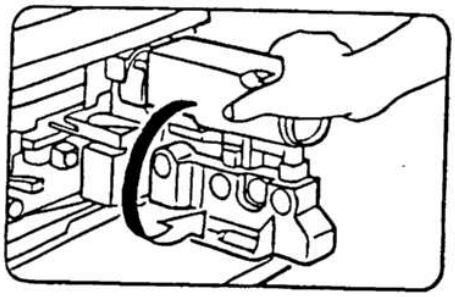

④ **Supply toner.**

Remove the toner cartridge sheet and supply toner.
(Toner will be supplied.)
Return the toner cartridge to the original position and close the front cabinet.

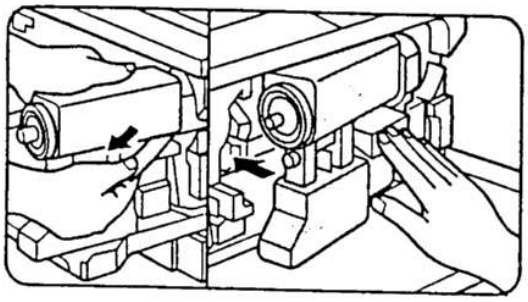

(5) Toner density sensor level check

① **Turn on the power switch of the copier.**

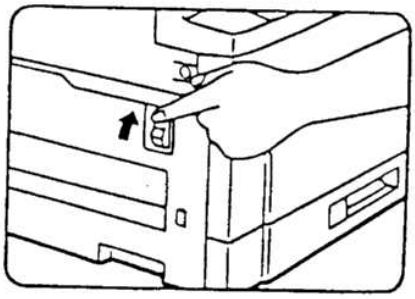

② **Adjust the developer level.**

(a) Perform the key operations of simulation 25 sub 2.

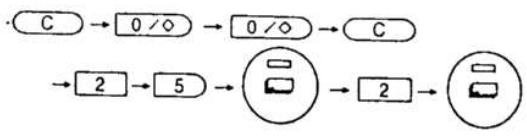

With the above key operations, simulation 25 is performed and the developer is stirred for 3 minutes.

(b) After stirring the developer for 3 minutes, the toner density level is read by the main PWB.
During stirring, the toner density sensor level is displayed on the MULTI COPY display. (Range: 1 ~ 99)
[Note] If the simulation is cancelled during execution, the automatic reading cannot be performed. Do not cancel the simulation during execution.

(c) Press the CLEAR key twice to cancel simulation 25.

C → C

(6) Accessory attachment

① **Attach the copy tray.**

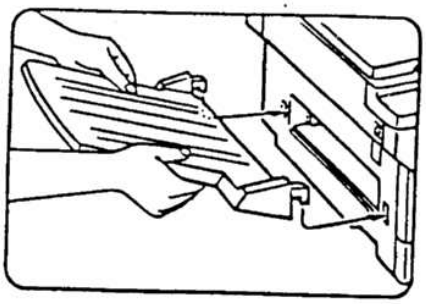

② **Attach the document tray.**

[SF-2214 only]

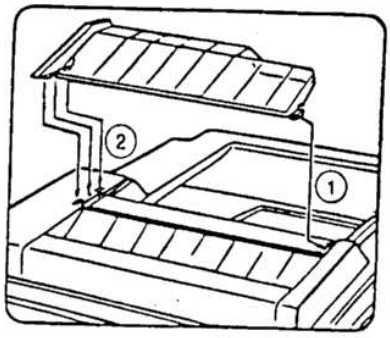

4. Locking procedure for transit or repacking

In general, reverse the procedures in "3. Installation procedure." For the optical system lock, perform the following procedure.

(1) No.2/No.3 mirror unit (Mirror base B) lock

① Perform locking with the unit at its home position (normal copy position) with the power ON and with the mirror stopped and with the external covers installed.

② Lock the unit with the mirror unit fixing screw. (The hole in the left cabinet)

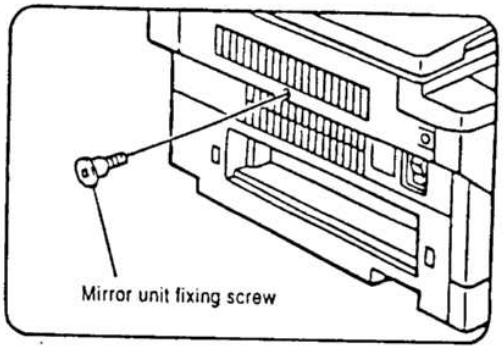

(2) No.4/no.5 mirror unit (Mirror base C) lock

[SF-2014]

① Perform locking with the unit at its home position and with the external fitting installed.

② Lock the unit with two mirror unit fixing screws. (The hole in the right cabinet)

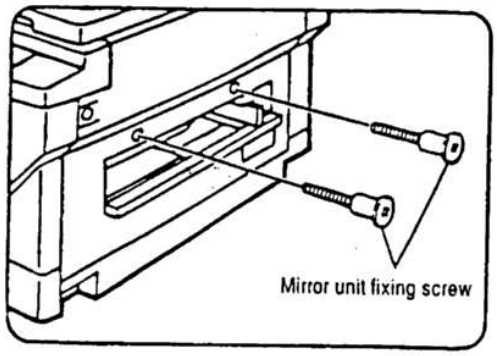

[SF-2114/2214]

① Turn off the power at the 64% position. Perform locking with the external fitting installed.

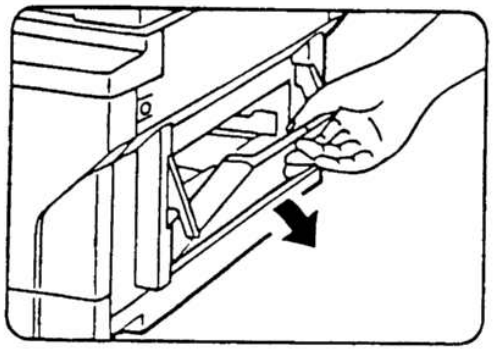

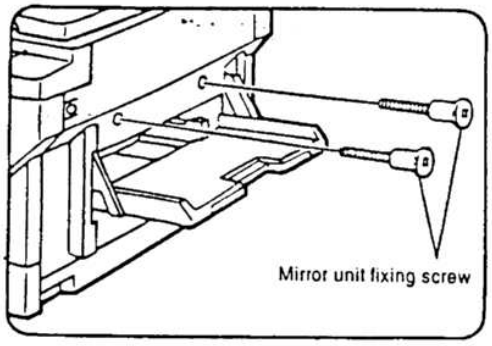

② Open the paper feed tray at the right side of the body, and fix the unit with two fixing screws. (Two holes in the right cabinet)

5. Optional paper feed unit (SF-CM14), Installation Manual

For use with compatible SHARP copies.
See SHARP copier Installation Manual to determine suitability.

Included parts

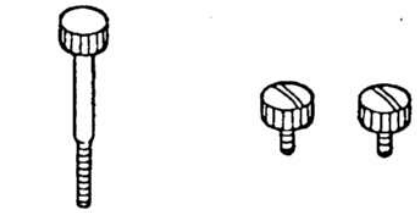

[SF-2114/2214 only]

(1) Set the main copier unit on the paper feed unit.

① Lift the main copier unit by the grips, place it upon the paper feed unit, and slip the positioning holes (3 locations) on the bottom of the main copier unit over the 3 positioning pins on the paper feed unit.

[NOTE] This procedure should always be performed by two people.

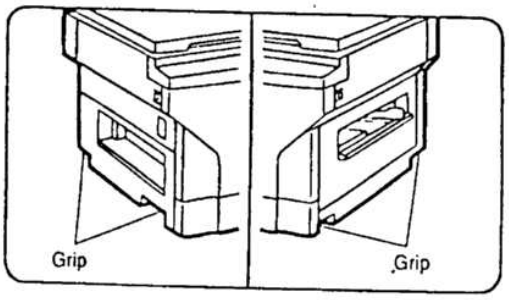

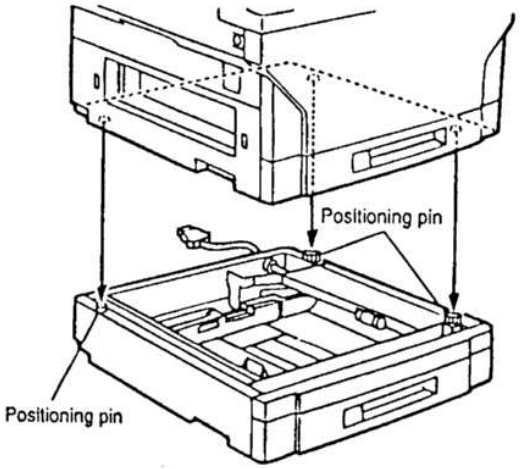

(2) Remove the paper tray from the main copier unit.

① While lifting up slightly, gently pull out on the paper tray until it stops.

② Then, lift up on the paer tray with both hands and remove it.

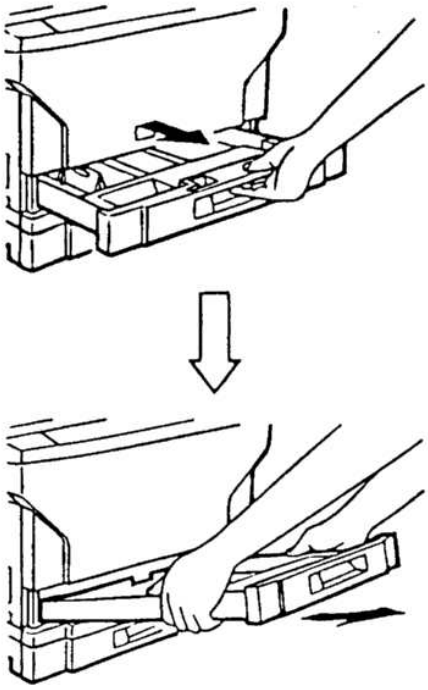

(3) Open the upper unit of the main copier unit.

① Press the release buttons on the left and right sides of the main copier unit's front cover, then open the front cover.

② Push the upper half release lever (green) to the right and down, then gently open the upper unit.

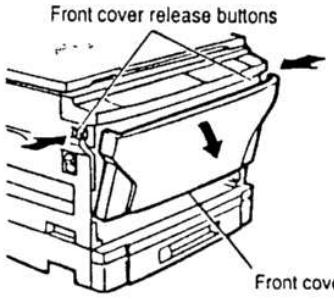

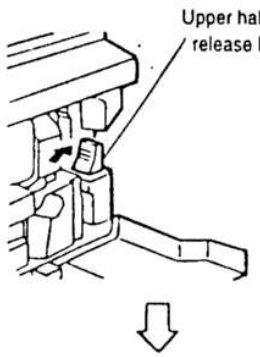

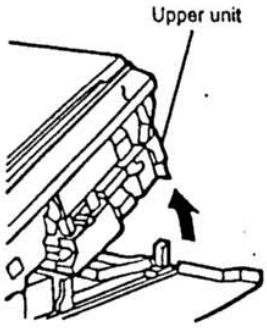

(4) Connect the main copier unit and the paper feed unit.

① Secure mounting screw A (1 pc) in the main copier unit (1 location).

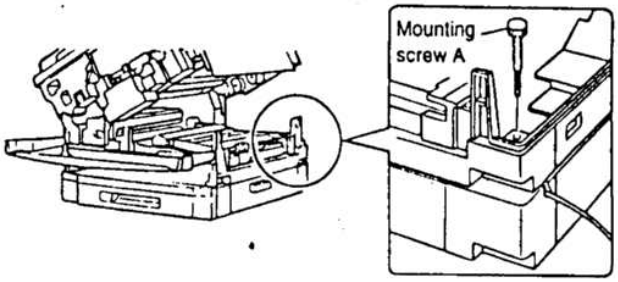

Then, gently close the upper unit and front cover.

② Connect the paper feed unit and the main copier unit by securing mounting screw B (2 pcs) in the mounting holes (2 locations) located in the slot from which the paper tray was removed.

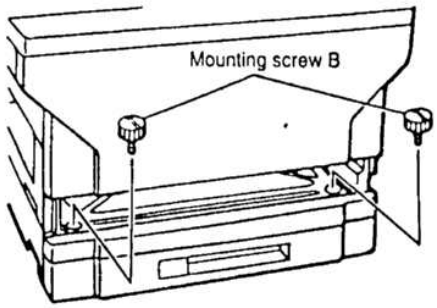

* After these procedures have been completed, reload the paper tray which was removed in step 2.

③ Insert the paper feed unit connector into the jack on the side of the main copier unit.

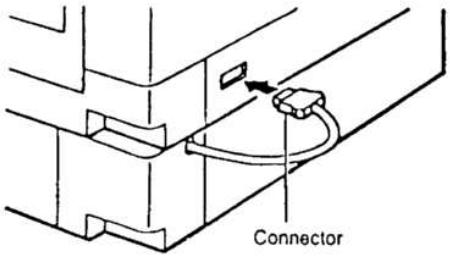

6. Optional multi bypass feeder unit Installation Manual

For use with compatible SHARP copiers.
See SHARP copier Installation Manual to determine suitability.

(1) Open the upper unit of the main copier unit.

① Press the release buttons on the left and right sides of the main copier unit's front cover, then open the front cover.

② Push the upper half release lever (green) to the right and down, then gently open the upper unit.

(2) Release the lock for the manual bypass unit and remove the manual bypass unit.

① Release the manual bypass unit by pressing upward on the rock claws (green; 2 locations) which lock it in place in the main copier unit's upper unit.
The manual bypass unit will come out toward you slighly.

② Pull out upon the manual bypass unit to remove it from the main copier unit.

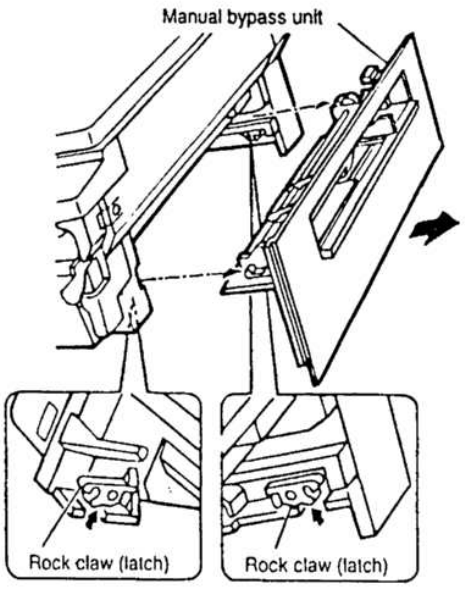

(3) Mount the multi bypass feeder unit onto the main copier unit.

① Slide the positioning pins which project from the multi bypass feeder unit in to the grooves in the main copier unit, then push the multi bypass feeder unit into place to in stall it.
At this time, to be sure that the multi bypass feeder unit is securely installed, push down once more on the fourcorners of the unit. (If it has not been securely installed, "CH" may appear in the COPIES MADE display when the power is turned on.)

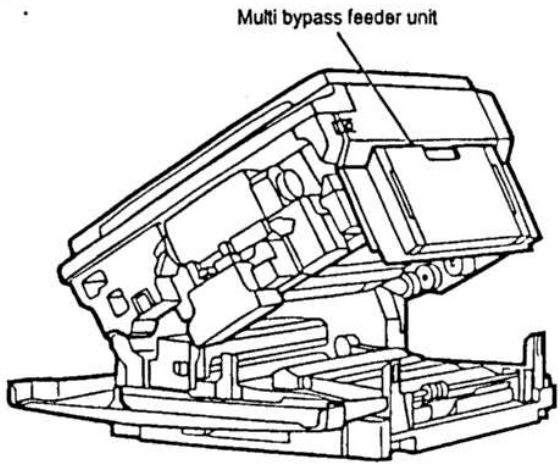

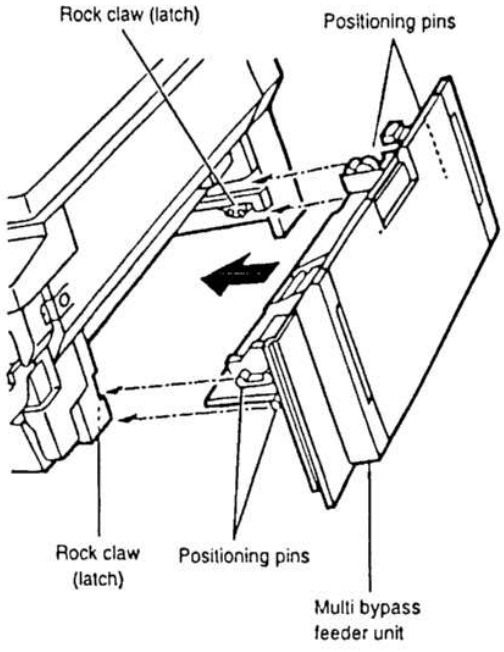

② Close the upper unit of the main copier unit.

[5] GENERAL DESCRIPTIONS OF EACH SECTION

The general descriptions of the following sections are given:

① Paper feed section
② Separation, transport section
③ Fuser, paper exit section
④ Developer section
⑤ Optical system
⑥ Image forming section
⑦ SPF section (SF-2214 only)

Internal structure

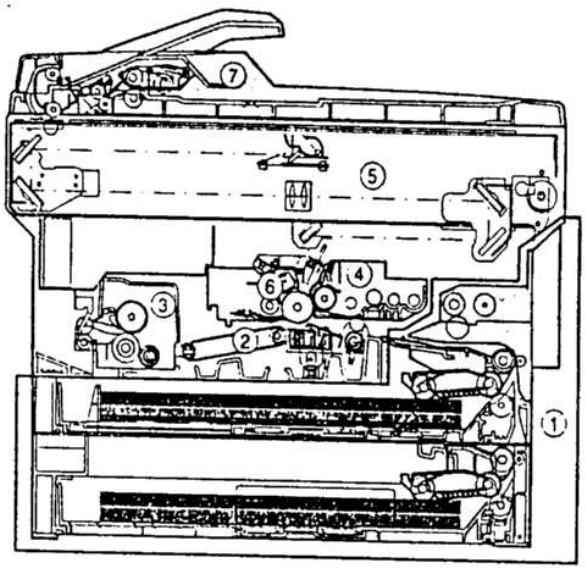

1. Paper feed section

The paper feed system is in two ways: the cassette feed and the manual feed. The cassette is of the universal type and has the capacity of 250 sheets. It is attached and detached at the front cabinet, that is, the front loading system.
The manual paper feed is single. (The multi paper feed unit (SF-MF14) is an option.)
In addition to the standard cassette (250 sheets), the optional cassette module (SF-CM14, 250 sheets) can be added.

(Cassette paper feed operation)
The cassette paper feed clutch (CPFC) turns on, the paper feed roller shaft, the paper feed roller, and the takeup roller rotate. At the same time, the roller release arm is lowered by the limiter spring. As a result, the takeup roller falls by its own weight to reach the paper surface, performing the paper feed operation.

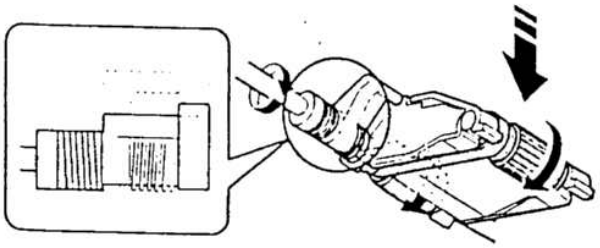

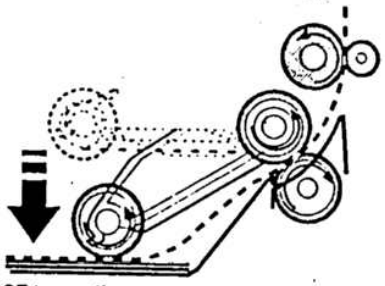

When the CPCF turns off, rotation is stopped, and the takeup roller is pushed up by the roller release arm spring to the position.

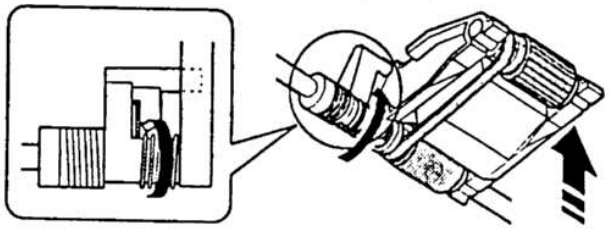

(Manual paper feed operation) Multi
When the solenoid B (MPFS) turns on, the takeup roller falls and the gate rises.
Almost simultaneously the solenoid A (MPFC) turns on and the takeup roller and the paper feed roller turns to perform the paper feed operation.

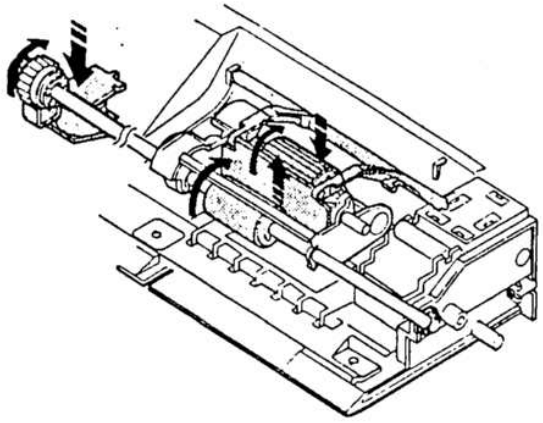

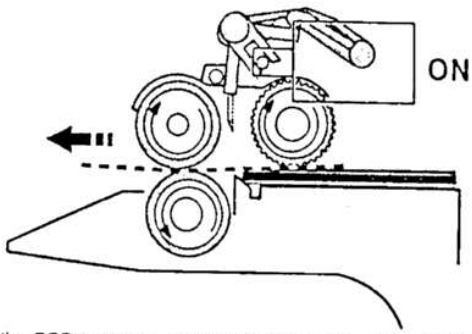

When the PPD turns on, the MPFS turns off and the RRC turns on. Almost simultaneously the MPFC turns off to return the roller and the gate to the initial state.

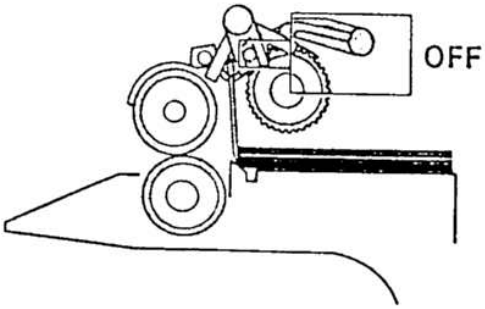

2. Separation, transport section

After passing the resist roller section, the paper is transported to the transfer section. After transfer, the paper is separated from the drum by the separation electrode and the drum separation pawl, then transported to the fuser section by the transport belt.

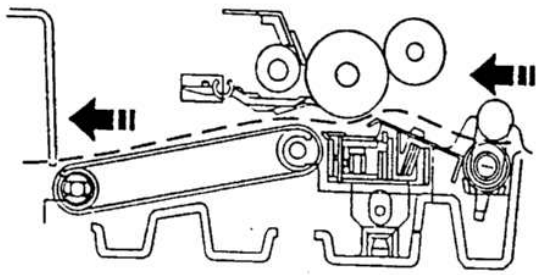

3. Fuser, paper exit section

The toner image transferred on the paper is fused by the heat and pressure of the upper and the lower heat rollers. After fusing, discharge static electricity on the paper with the discharge brush. Then the paper is discharged to the copy tray.

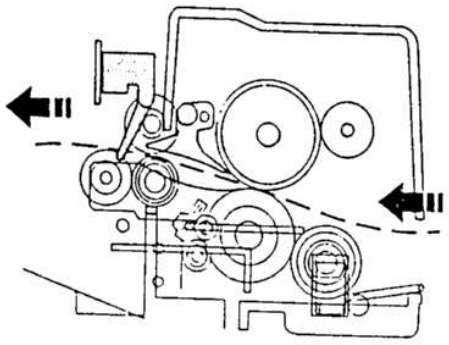

- Temperature control

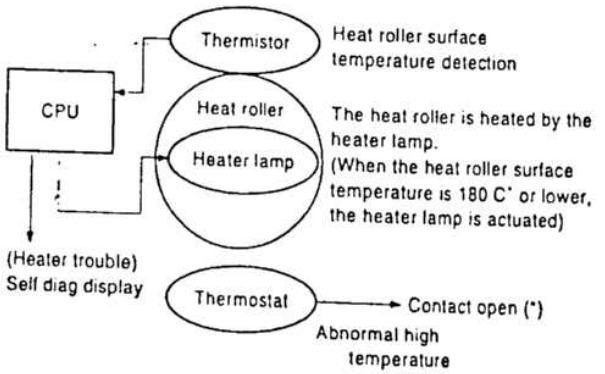

- Abnormally high temperature (H3)
- Abnormally low temperature (H4)
- Thermistor disconnection (H2)

* When the thermostat contact is open, it is required to press the reset button in the upper side of the thermostat. (The contact is not reset automatically.)

4. Developer section

In the developer section, toner is attached to the electrostatic latent image on the drum to change the latent image into a visible image. Toner and carrier are charged by friction caused by the stirring roller in the developer unit. Toner is charged in positive, and carrier is charged in negative charge.

Since the latent image on the drum (area not exposed to light) is negatively charged, it draws toner which is positively charged.

To prevent against excessive copying, a bias voltage of -200V is applied to the MG roller.

This model employs the novel two-component developing system (Developer replacement not required).

When, in the case of the conventional development method, developer (mixture of carrier and toner) is deteriorated, developer itself must be replaced or the whole developer unit must be replaced as in the personal machines.

In the new development system, however, developer is supplied in a certain cycle during development process (developer is mixed with toner and supplied with toner when toner is supplied), and removed (automatically by the overflow system when the rate of deteriorated developer in the developer unit reaches a certain level), preventing against deterioration in image quality and eliminating the need for developer replacement in maintenance.

Therefore, "toner cartridge" supplied as a supply item is developer (mixture of toner and carrier).

Deteriorated developer will overflow from the discharge port of the developer unit automatically and collected by the waste toner collection container together with residual toner on the photoconductor drum.

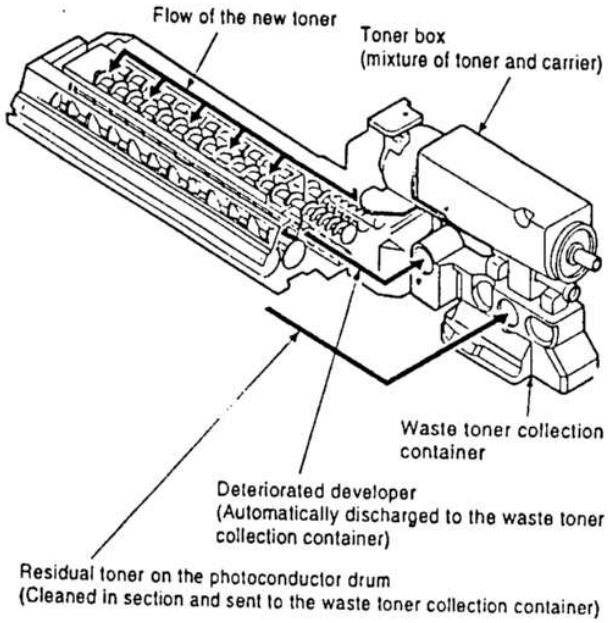

5. Optical system

5-1. General descriptions

- The optical system is composed of the fixed focus lens and six mirrors.
  Since the fixed focus lens is employed, No.4/No. 5 mirror base is moved as well as the lens to change the distance between the document and the drum (OID, Original Image Distance) for reduction and enlargement.
  To move the lens and No.4/No. 5 mirror unit, he stepping motor is driven by the signal from the main control PWB to allow zooming of 0.70 to 1.22 (inch series: 0.64 – 1.29) with 1% increment. (The SF-2014 has no zooming function, and its lens and No.4/No.5 mirror base are fixed.)
- Exposure is adjusted by changing the voltage of the copy lamp. The copy lamp unit is provided with the AE sensor for detection of the original density to adjust the light quantity of the copy lamp according to the original density.
- For exposure, the slit exposure system is employed where the light source is moved. (The original table is fixed.)

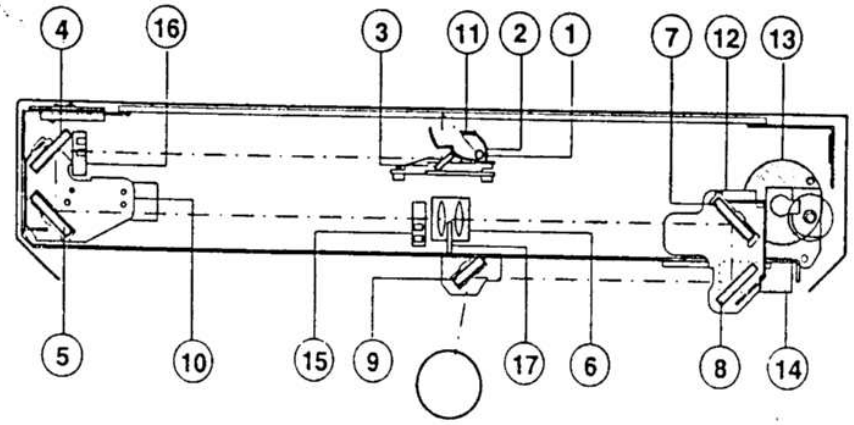

①	Copy lamp	②	Reflector	③	No. 1 mirror
④	No. 2 mirror	⑤	No. 3 mirror	⑥	Lens
⑦	No. 4 mirror	⑧	No. 5 mirror	⑨	No. 6 mirror
⑩	No. 2/No. 3 mirror base unit	⑪	Copy lamp unit	⑫	No. 4/No. 5 mirror base unit
⑬	Mirror motor	⑭	Lens/No. 4/No.5 mirror base drive motor	⑮	Lens home position sensor
⑯	Mirror home position sensor	⑰	Auto exposure sensor		

(1) Original table

The original table is fixed, and originals are set to the left frame side as the reference.

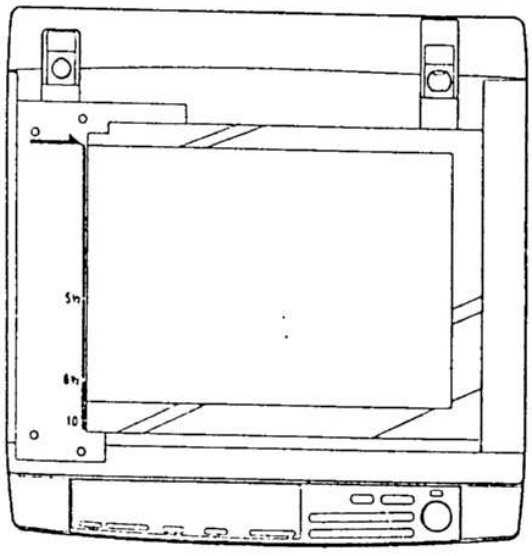

(2) Copy lamp

100V system (285W)
200V system (285W)

(3) Mirror

Six mirrors are used.
No. 1 mirror is provided in the copy lamp, No. 2/3 mirrors at the No.2/3 mirror base, No. 4/5 mirrors at the No. 4/5 mirror base. The No.2/3 mirror base is scanned during copying. The No.4/5 mirror base is moved to change the distance between the original and the photoconductor during zoom copying.

(4) Lens (Fixed focus lens)

- Construction (One group 3 lenses)
- Brightness (F8)
- Focus (175mm)

(5) Lens home position sensor (LHPS)

This sensor is used to sense the lens position. The sensor output signal serves as the basic signal to control the copy magnification ratio.

(6) Lens base

The lens is mounted to this lens base. It is moved in the paper feed direction in reduction copying, and in the paper exit direction in enlargement copying.

(7) Lens drive shaft

This shaft is to control the optical axis of the lens in zoom copying. The lens follows on the slide base shaft.

(8) Lens drive wire

The wire is used to drive the lens base and the 4/5 mirror base.

(9) No. 4/5 mirror base

The No. 4/5 mirror is installed to this base. It is moved in zoom copying in order to fit the distance between the original and the photoconductor.

(10) Mirror motor

The mirror motor is a stepping motor, and used to move the copy lamp unit and the No. 2/3 mirror base in order to obtain the rpm corresponding to each magnification ratio.

(11) Mirror home position sensor (MHPS)

Used to sense the home position of the copy lamp unit. This sensor is a photo transmission type sensor.

(12) No. 2/3 mirror base

The No. 2/3 mirrors are attached to this base. The mirror base is scanned by the mirror motor.

(13) Copy lamp unit

This is composed of No. 1 mirror, the thermal fuse, the copy lamp, the exposure adjustment plate, and the reflector, and is scanned by the mirror motor.

(14) Thermal fuse

The thermal fuse is closely attached to the reflector in order to prevent against abnormal temperature rise in the optical system. In case of abnormal temperature rise, the power for the copy lamp is turned off.

100V system (117°C)
200V system (117°C)

(15) Reflector

Light from the copy lamp is reflected onto the original.

(16) Exposure adjustment plates

Three exposure adjustment plates are attached to the copy lamp unit to adjust the exposure balance in the front and the rear frame direction.

(17) Mirror base drive wire

This wire is used to transmit the drive power of the mirror motor to the copy lamp unit and the No. 2/3 mirror base to scan the mirror base.

(18) Lens drive motor

This is a stepping motor, which is used to move the lens and the No. 4/5 mirror base.

(19) AE sensor

The original density is detected with the intensity of the copy lamp light reflected from the original. The measurement area is the mirror base scan area of about 100mm at the center.
The element is a photo diode.

5-2. Basic operations

(Relationship among the original, the lens and the image in each magnification ratio)

Normal copy: The distance between the surface of original on the table glass and the lens is made equal to the distance between the lens and the exposure surface of the photoconductor to make the original and the image equal to each other.

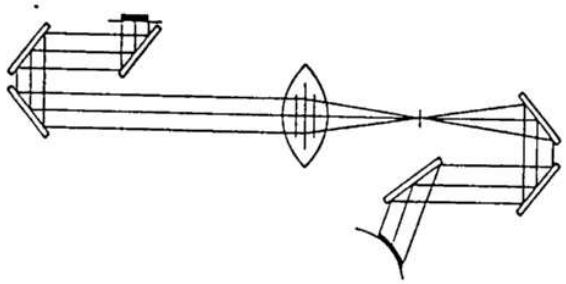

Enlargement copy: The lens is nearer to the original when compared with the normal copy to shorten the distance between the original surface and the lens.
The No. 4/5 mirror base is positioned further away from the lens to increase the distance between the lens and the exposure surface of the photoconductor.
The distance between the original and the exposure surface of the photoconductor is greater than that in the normal copy.

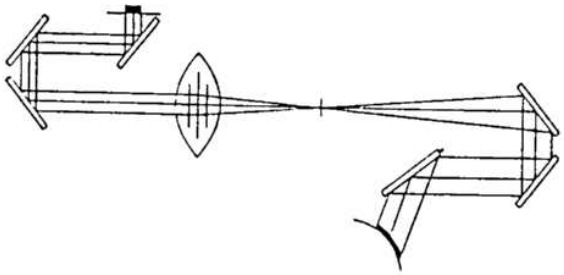

Reduction copy: When compared with the normal copy, the lens comes closer to the photoconductor to increase the distance between the original and the lens. The distance between the lens and the exposure surface of the photoconductor is decreased.
The No. 4/5 mirror base is positioned further away from the lens.
The distance between the original and the exposure surface of the photoconductor is longer than that in the normal copy.

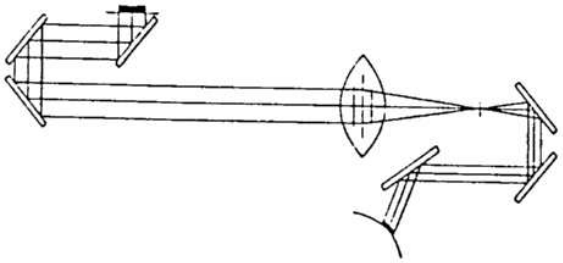

The mirror base scan speed (mirror motor rpm) is changed to zoom.

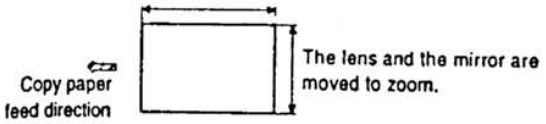

The mirror scan speed is changed to zoom.

Mirror scan speed Drum rotating speed < Mirror scan speed

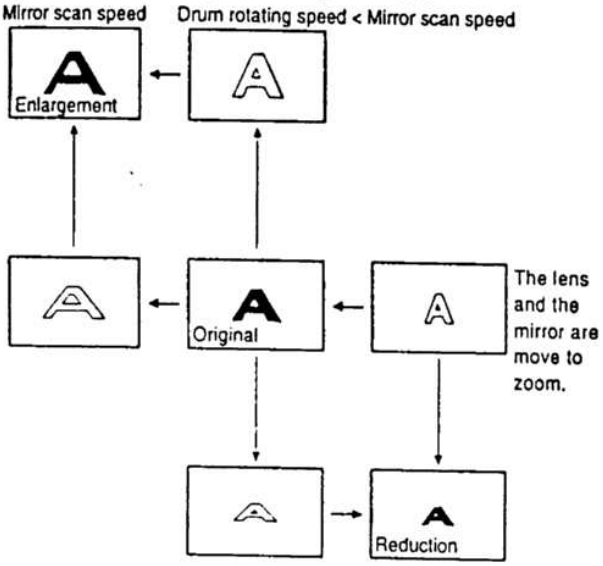

(Copy lamp control in each copy density)

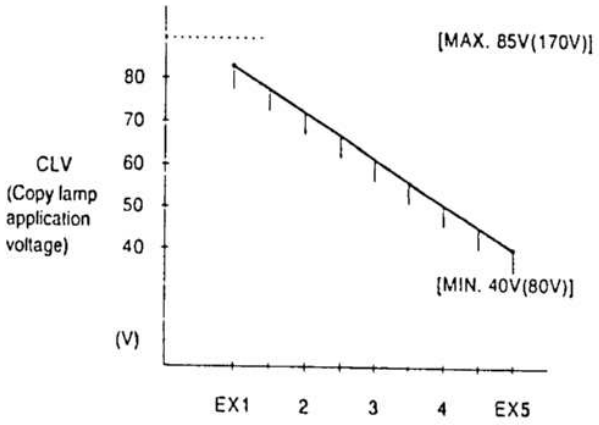

(Optical system dirt correction)

The SF-2014/2114/2214 perform dirt correction by changing the copy lamp intensity according to the dirt degree in the optical system (the copy lamp unit, No. 1 mirror, No.2 mirror, No.3 mirror) to prevent against remarkable degrading of copy quality.

The reference value is the AE sensor output value which is obtained when the reference plate is exposed with the copy lamp voltage of 67.7V (135.4V) at power ON.

This value is checked with sim 44-02.

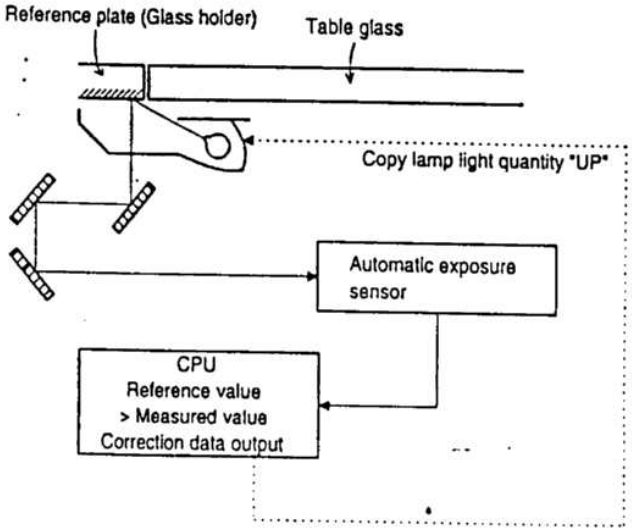

6. Copy process

(1) Photoconductor

- This model uses OPC (organic photoconductor) as photoconductive material.

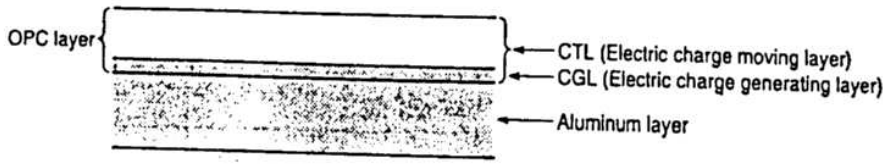

(2) Process diagram

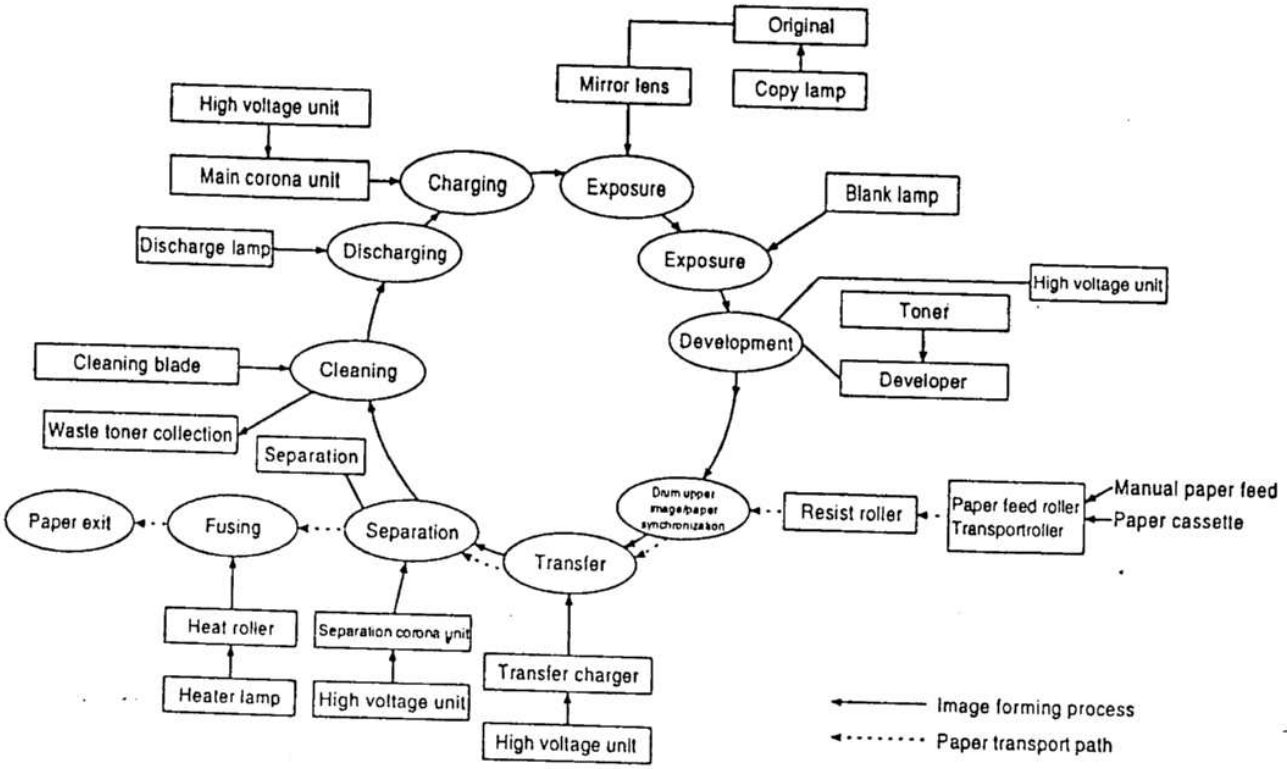

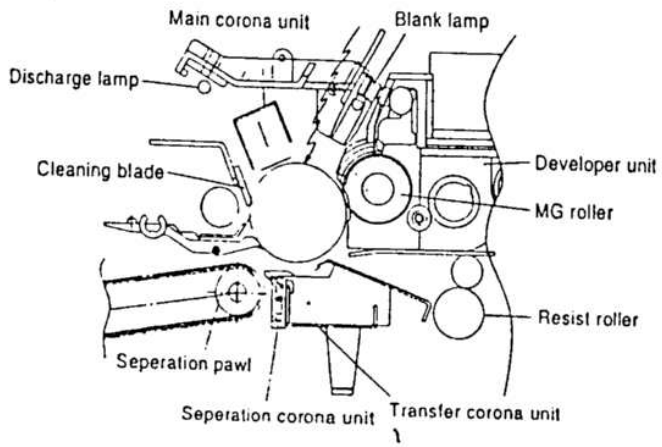

(3) Actual process

Step 1 (charging)

The OPC drum is negativelycharged by corona discharge of the transfer charger . Positive charges are generated in the aluminum layer.

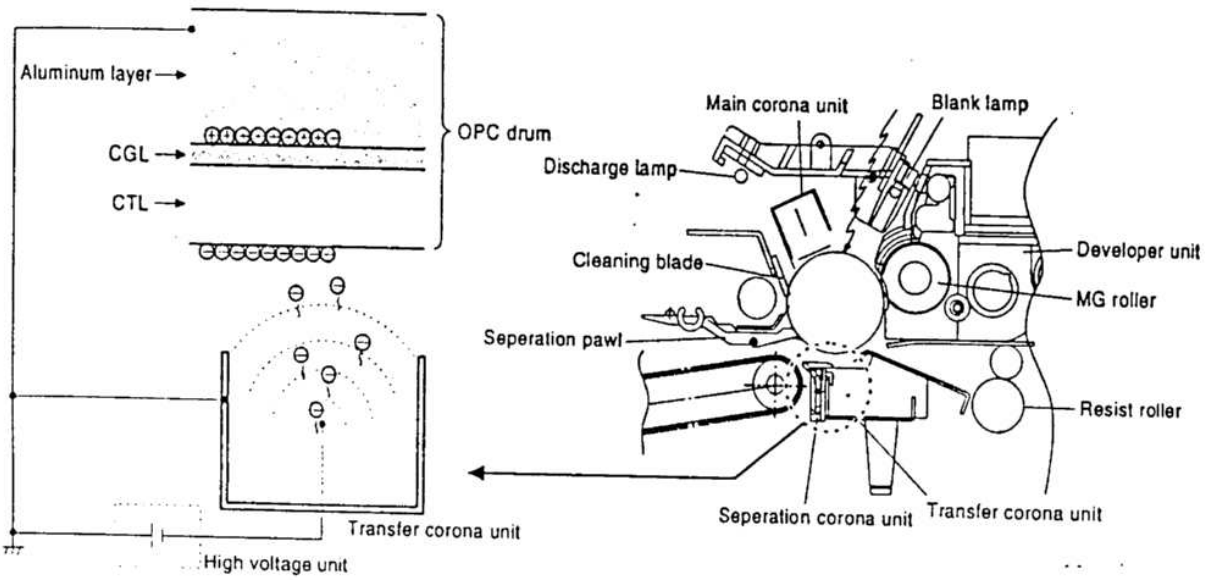

Step 2 (Discharging)

When the OPC drum is exposed to the discharge lamp light, positive and negative charges are generated in the OPC drum CGL. The negative charges move to the positive charges generated in the aluminum layer in step 1, and the positive charges move to the negative charges on the OPC drum surface charged in step 1. The positive charges and the negative charges are neutralized each other in the aluminum layer and on the OPC drum surface. As a result, the OPC drum surface potential becomes 20V ~ 30V.

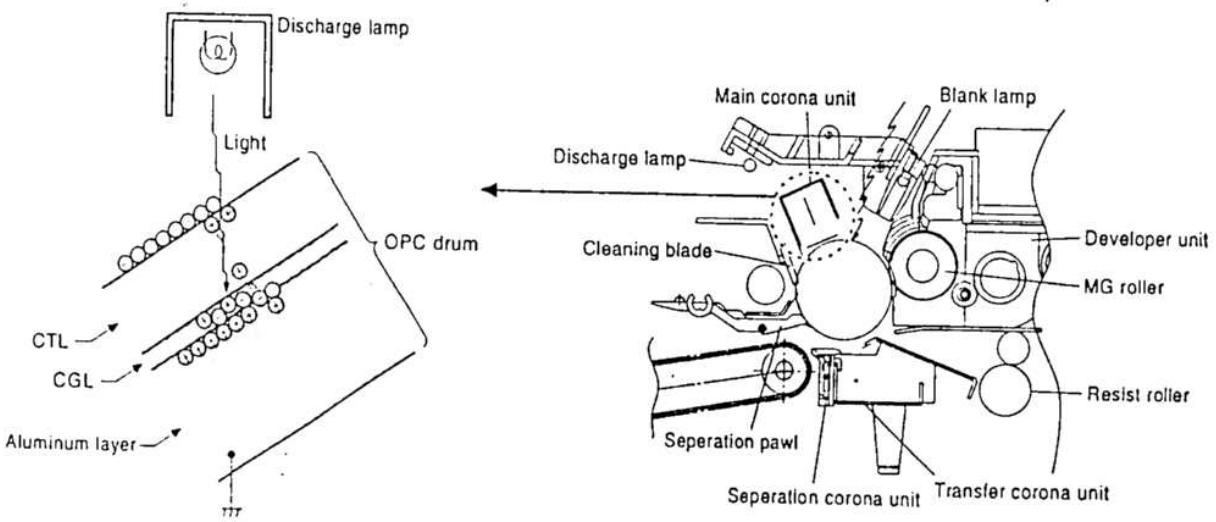

By performing step 1 (Charging) and step 2 (Discharging), the photoconductor itself is initialized to stabilize the drum surface potential.

Step 3 (Main Charging)

By negative discharging of the main charger, uniform negative charges are applied to the OPC drum surface.
The OPC drum surface potential is controlled by the screen grid voltage to maintain the grid voltage at a constant level.

- When the drum surface potential is lower than the grid voltage, electric charges generated by discharging of the charger go through the screen grid to charge the drum surface potential until it becomes equal to the grid voltage.
- When the drum surface potential virtually reaches the grid potential level, electric charges generated by discharging of the charger flows through the electrode of the screen grid to the high voltage unit grid voltage output circuit, thus always maintaining the drum surface potential at a level virtually equal to the grid voltage.
- The main corona unit employs the scorotron system to charge the photoconductor surface to a certain level uniformly.
  In addition, the conventional corona wire is replaced with the corona charging mechanism by saw-teeth plate (stainless steel plate of 0.1 mm thick). In corona discharge, oxygen molecules in the air are ionized to generate ozone (O_3). The mechanism restrict the generation of ozone.

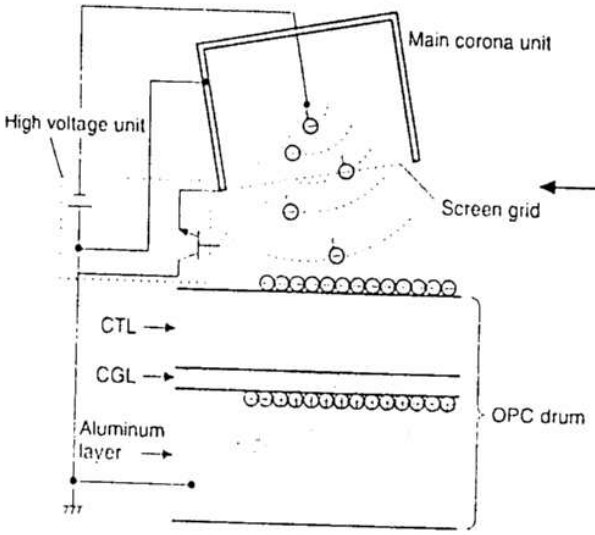

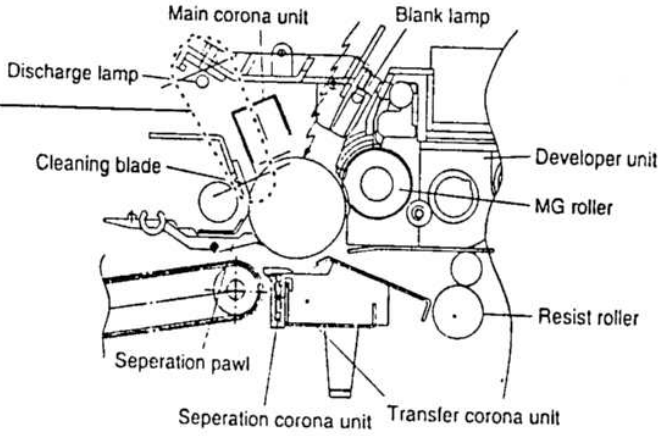

Step 4 (Exposure)

Light from the copy lamp is radiated on the document, and the optical image of the document is reflected by the mirrors and projected through the lens to the OPC drum.
The lighter portion of the document reflects more light (high intensity) to the OPC drum, and the darker portion of the document reflect less light (low intensity) to the OPC drum. Positive or negative charges are generated in the CGL of the OPC drum where lights are radiated.
Negative charges generated in the CGL move towards the positive charges in the aluminum layer generated in step 3. While the positive charges in the CGL move towards the negative charges on the CPU drum surface generated in step 3. Therefore, positive charges and negative charges are neutralized in the aluminum layer and the OPC drum surface at the light radiating position, decreasing the OPC drum surface potential. The CGL electric charge generating amount increases in proportion to the document density, that is, reflected light intensity (the OPC drum surface intensity). Therefore, electric charges are generated less in the CGL layer corresponding to the lighter density of document (higher intensity of the OPC drum surface), and a greater quantity of the negative charges on the OPC drum surface is neutralized, decreasing the OPC drum surface potential more.

On the contrary, electric charges are generated more in the CGL layer corresponding to the darker density of document (lower intensity of the OPC drum surface), and less quantity of the negative charges on the CPU drum surface is neutralized, decreasing the OPC drum surface less. Therefore, the OPC drum surface potential corresponding to the lighter portion of the document is lower, and that corresponding to the darker portion of the document is higher. Latent static-electricity images are formed in the above manner.

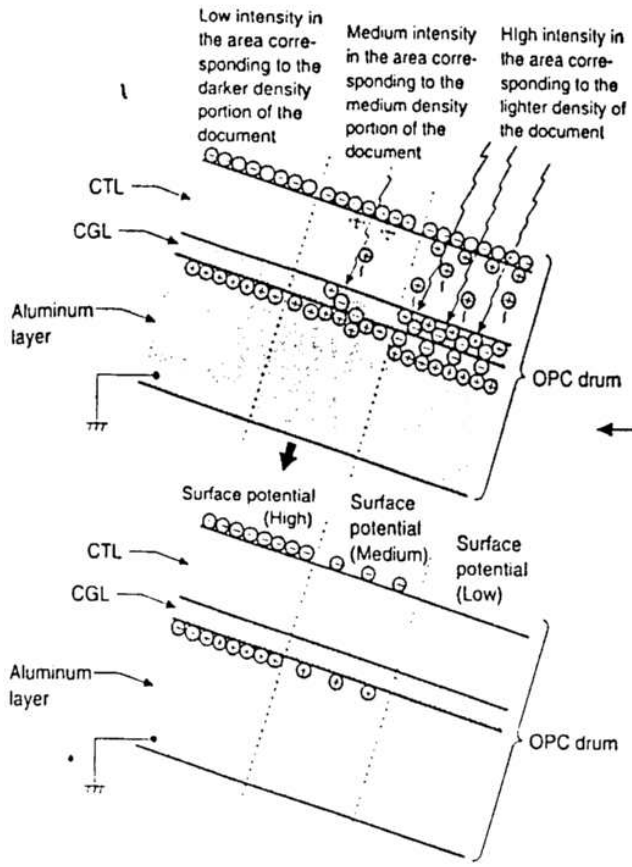

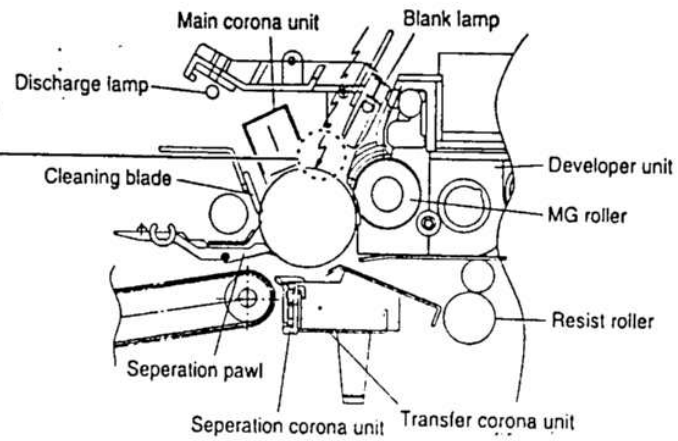

Step 5 (Development)

Toner is attached to the latent static-electricity images on the drum surface to change them to visible images. The two-component magnetic brush development system charges toner positively by friction with carriers, and toner is attached to negative charges on the drum surface. The potential in the darker document projecting area (low intensity) is high (much negative charges) and attracts more toner. The potential in the lighter document projecting portion (high intensity) is low (less negative charges), and attracts less toner.

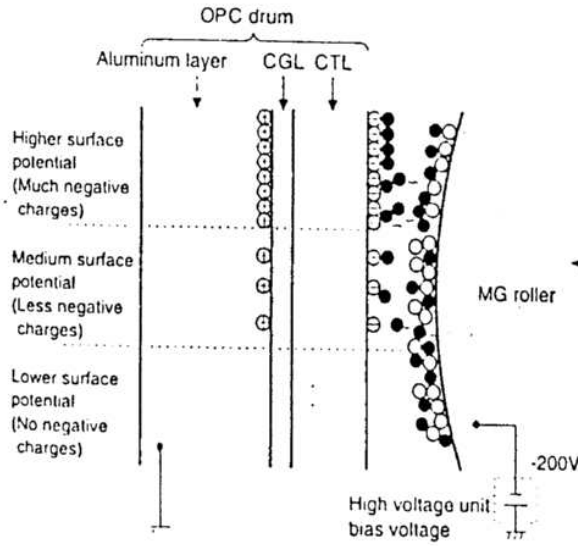

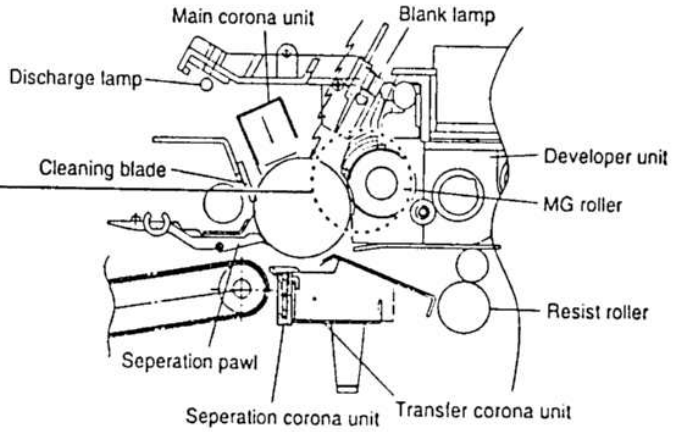

At that time, a bias of −200V is applied to the MG roller (magnet roller), which is provided for preventing toner from being attracted by the residual voltage (about −80V to −100V) in the lighter portion after exposure.

Step 6 (Transfer)

The transfer paper is charged higher than the OPC drum surface potential by strong negative discharge of the transfer charger, making the binding force between the transfer paper and toner stronger than that between the drum and toner, attracting toner to the transfer paper.

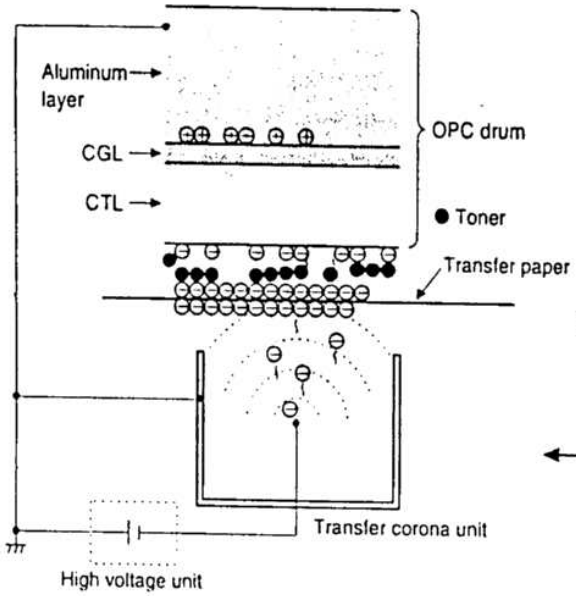

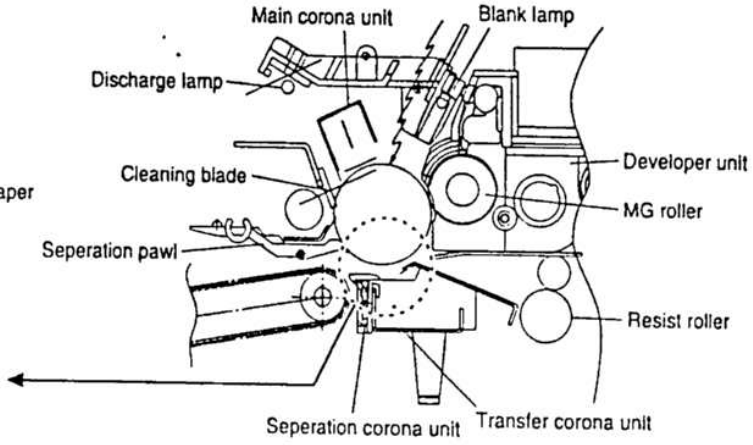

Step 7 (Separation)

After transfer, the copy paper and the drum are negatively charged. Since, however, the negative potential of the copy paper is higher than that of the drum, a attraction force is applied between the drum and the copy paper. To avoid this, AC corona is applied to the copy paper by the separation charger to decrease the copy paper potential to the same level as the drum surface potential. The attraction between the copy paper and the drum is weakened by this, allowing separation of the copy paper by its own extending force. If the copy paper is not separated by the separation charger, it is separated by the separation pawl mechanically.

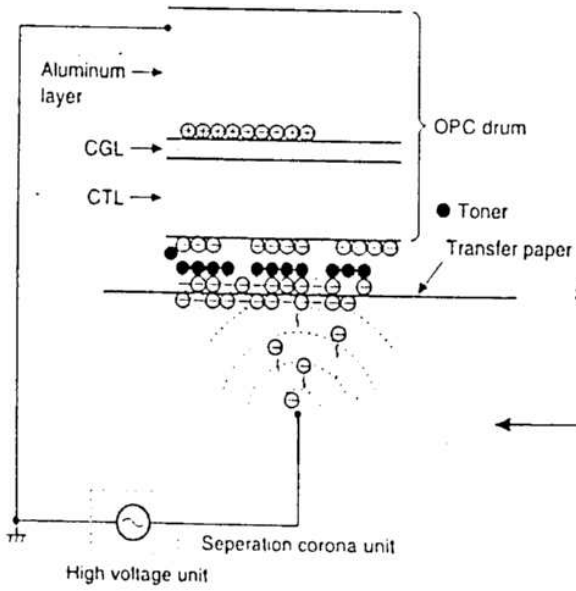

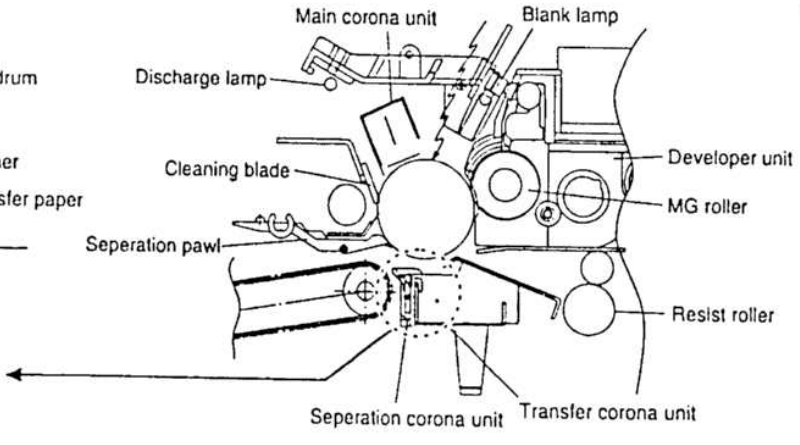

Step 8 (Cleaning)

Residual toner on the drum is removed by the cleaning blade. The removed toner is sent to the waste toner container by the waste toner transport screw.

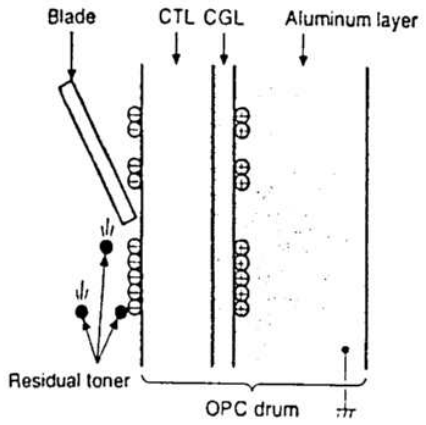

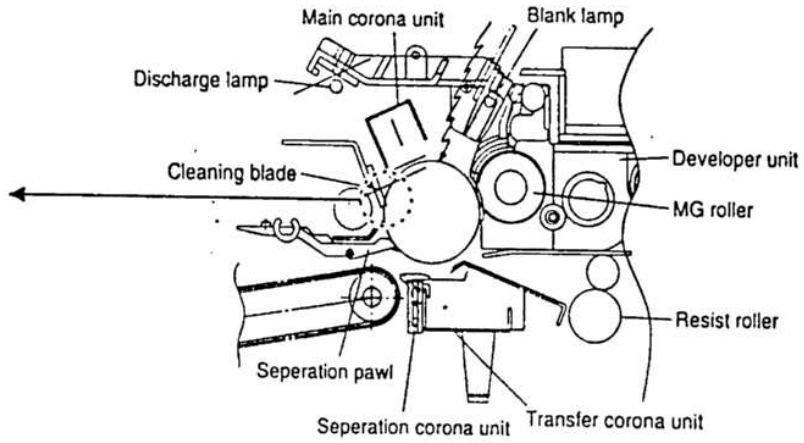

Step 9 (Discharging)

When the OPC drum is exposed to the discharge lamp light, positive and negative charges are generated in the OPC drum CGL. The negative charges generated in the CGL move towards the residual positive charges in the aluminum layer, while the positive charges in the CGL move towards the residual negative charges on the OPC drum surface. Therefore, the positive and the negative charges are neutralized in the aluminum layer and on the OPC drum surface, removing the residual charges on the OPC drum surface. As a result, the OPC drum surface potential becomes 20V ~ 30V.

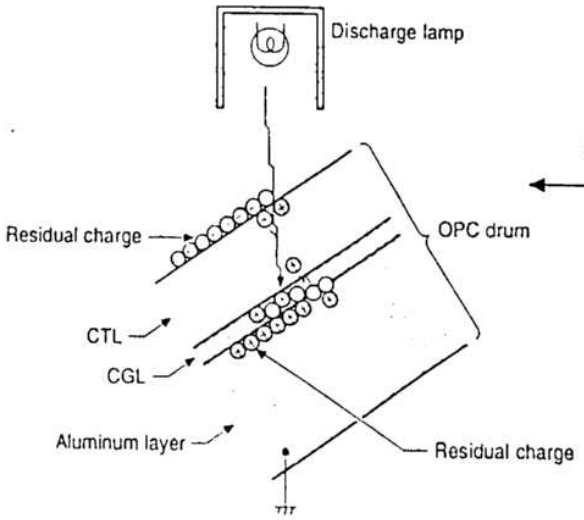

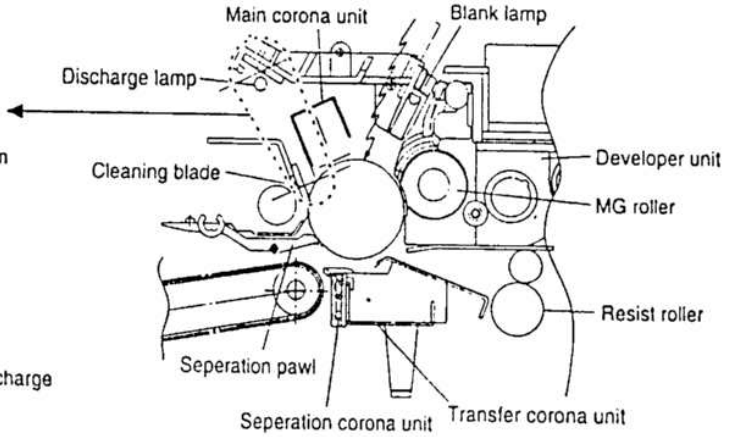

(4) Transit of photoconductor drum surface potential

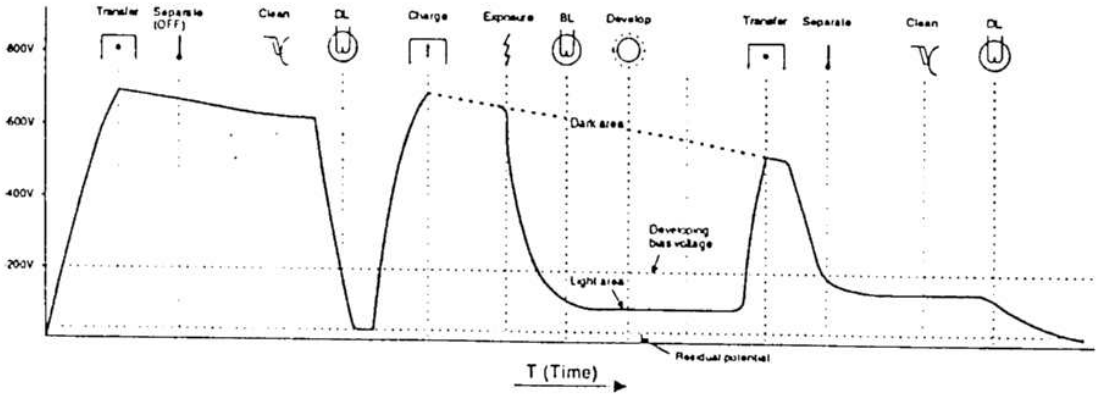

(5) Process correction system

1) Outline of the correction system

This model is provided with the correction system for the optical unit and the photoconductor drum unit. The combination of the two correction systems provides stable clear copy.
These functions are to maintain the copy quality for a long time and to correct the characteristics of the parts, and are controlled by the software and invisible from the outside.

2) Correction operation

1. Photoconductor drum unit correction (Photoconductor drum sensitivity correction)

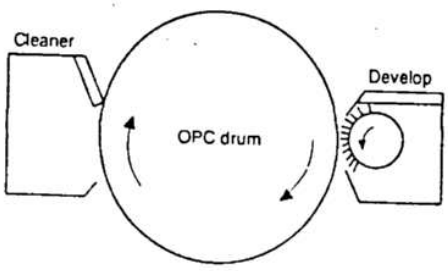

Fig. 1

Change the tickness of the carrier transport layer (CTL).
By the developper.
By the cleaner blade.

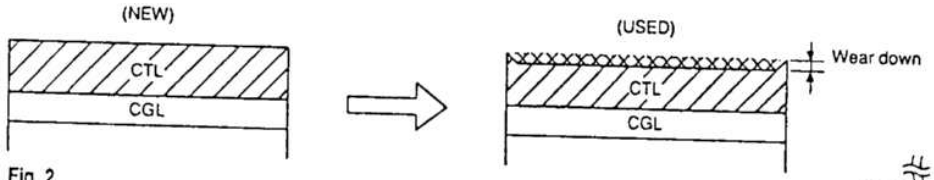

Fig. 2

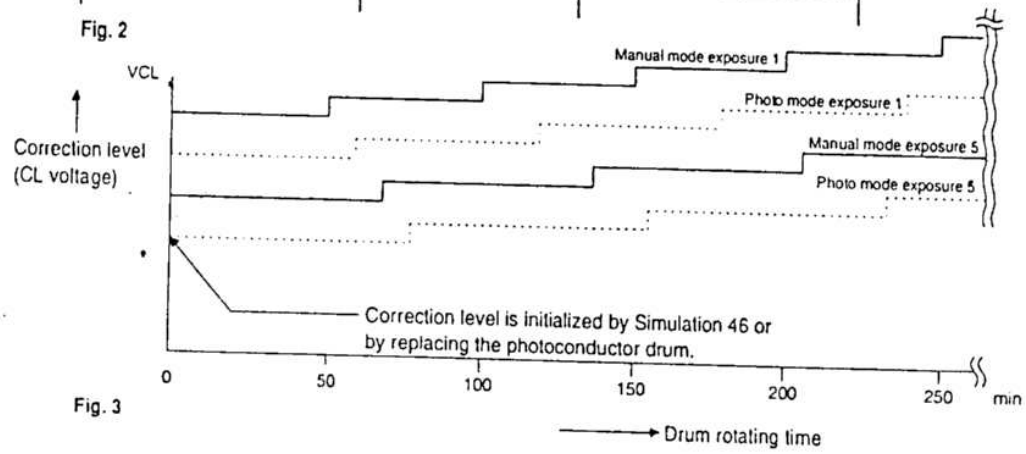

Fig. 3

The photoconductor drum is subject to mechanical stress by the cleaning blade, resulting in wear in the OPC layer. In addition to that, the photoconductor drum receives optical stress from the copy lamp. These stresses reduce the photo sensitivity of the photoconductor drum, producing unnecessary dirt copy. This trouble is removed by adjusting the copy lamp voltage. For this model, however, to reduce the number of service calls, the copy lamp voltage is automatically dropped according to the reduction in the photo sensitivity of the photoconductor drum to correct it.

The drum rotating time from installation of a new photoconductor drum is counted by the timer and the copy lamp voltage is corrected in every mode. (Refer to Fig. 3.)
The correction is performed within the range of the max. supply voltage of the copy lamp. (The rotating time of the photoconductor drum can be checked with Simulation 44-4.)

* The correction level is initialized by Simulation 46 or by replacing the photoconductor drum.

2. Optical unit correction (Dirt correction)

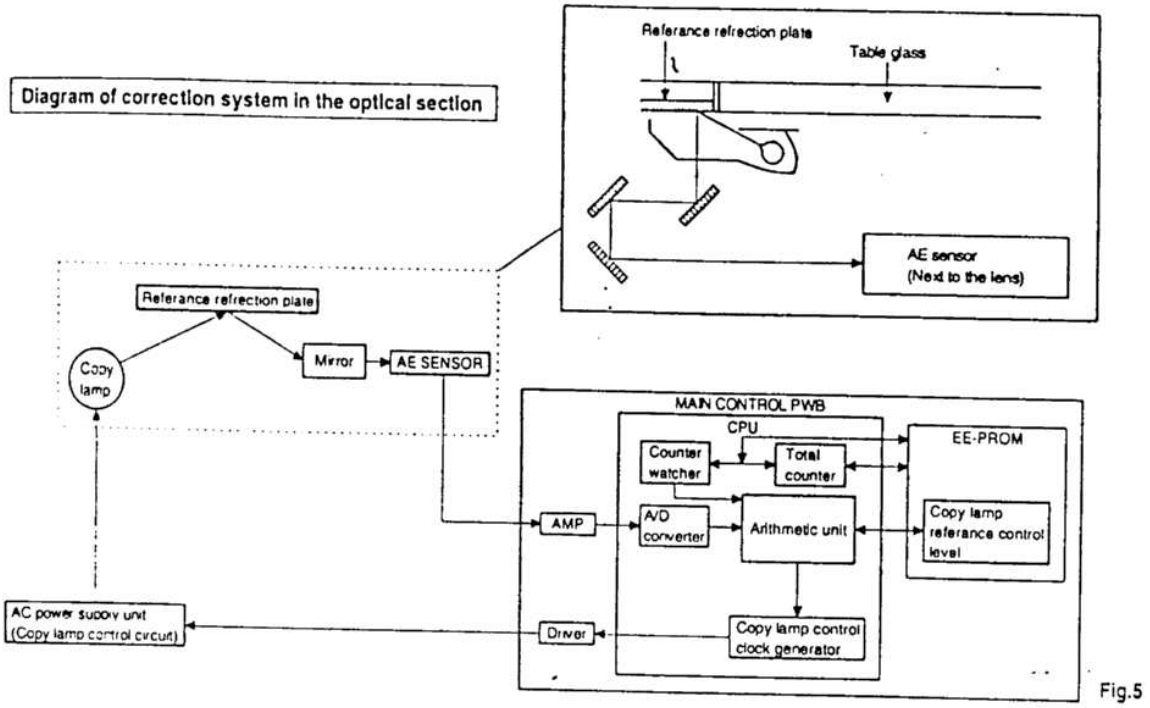

Fig.5

The purpose of this correction is to maintain the copy density even though the optical unit is contaminated and to reduce troublesome cleaning of the optical unit.

When the lamp, the mirror, and the reflector are dirtied with dusts and toner, the light quantity radiated to the photoconductor drum is reduced, increasing the copy density and producing unnecessary background copy.

The above trouble is removed by changing the copy lamp voltage to adjust the copy density. It, however, requires serviceman's operation.

In this model, the AE sensor senses dirt on the copy lamp, the mirror, and the reflector, and the copy lamp light quantity is changed according to the dirt level to reduce the change in the copy density due to the optical unit dirt.

When the optical parts are dirtied, the reflection rate is reduced to reduce the quantity of light which is passed to the optical dirt sensor. In this manner the dirt level is sensed.

[Initial setting]

After execution of Simulation 46, the scanner unit stops at the position of the standard reflection plate on the back of the document stopper to light the copy lamp at a certain level, and the AE sensor output level at that time is recorded as the reference value. (The reference value can be checked with Simulation 44-2.)

[Correction timing]

The correction is performed after the copy cycle after turning on the power, or after the specified time of rotation of the photoconductor drum.

[Correction operation]

The same operation as the initializing is performed to change the copy lamp voltage until the AE sensor output level reaches the same level as the reference value, performing the correction.

The copy lamp voltage is revised to a new value at every correction, and the new value will be used in the next correction.

(The correction voltage value can be checked with Simulation 44-3.)

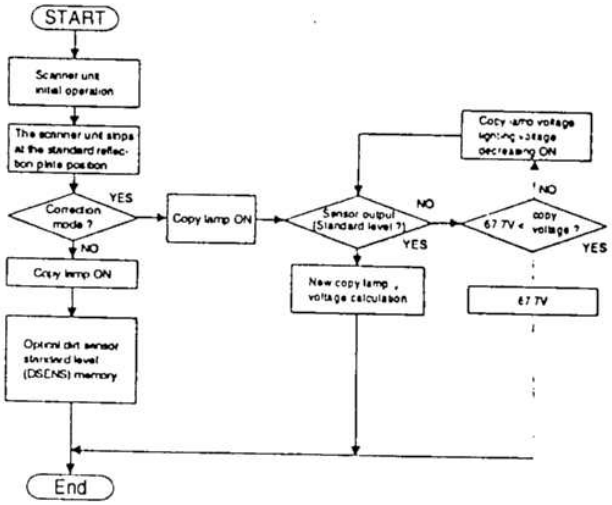

7. SPF section (SF-2214 only)

1. Outline

The SPF (Single pass feeder) is a standard provision of the SF-2214, and allows automatic copying of max. 20-sheet documents (of the same size and max. thickness of 3 mm). (Only one set of copies per run)

Original transport path and the basic composition

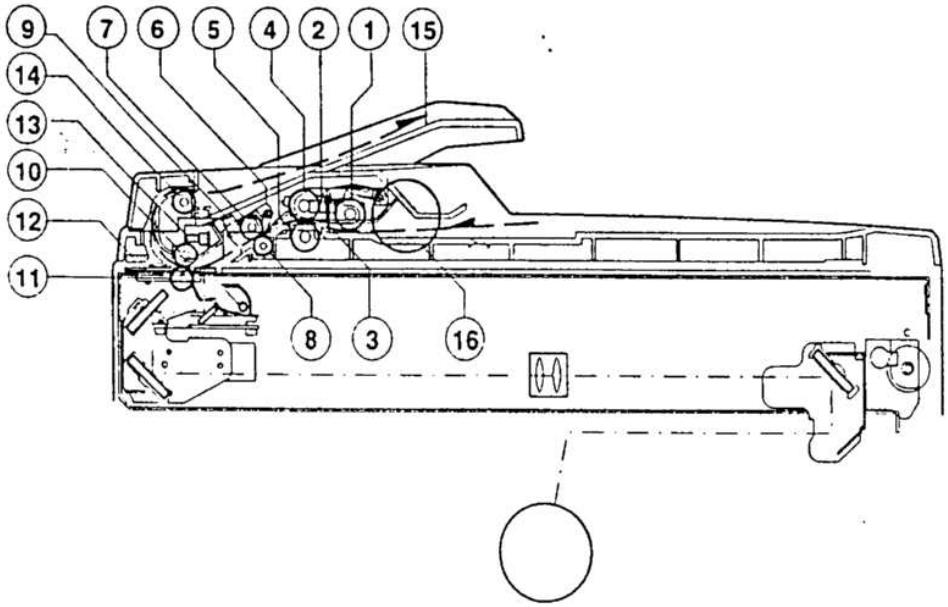

①	Original takeup roller	②	SPFD	③	SPF PS gate
④	Original paper feed roller	⑤	Document feed reverse roller	⑥	SPPD actuator
⑦	SPF PS roller, upper	⑧	SPF PS roller, lower	⑨	SPPD
⑩	SPF transport roller	⑪	CL pulley	⑫	SPF cover open/close sensor
⑬	SPF document exit sensor	⑭	Original exit roller	⑮	SPF paper exit tray
⑯	SPF motor				

(Operational descriptions)

Magnification changes in the paper feed direction is performed by changing the original transport speed.

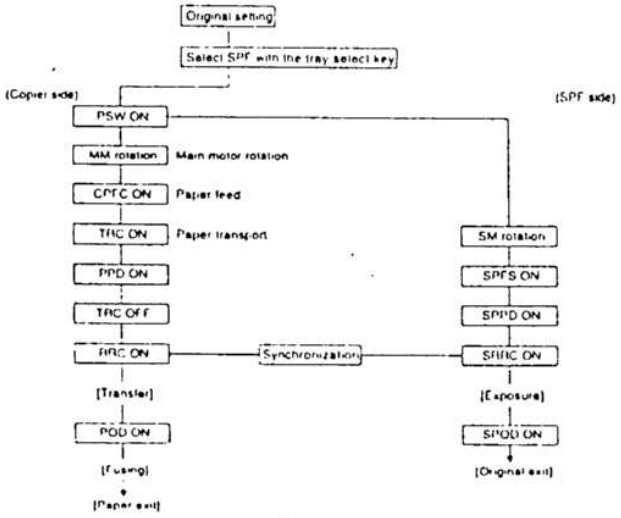

(Timing chart)

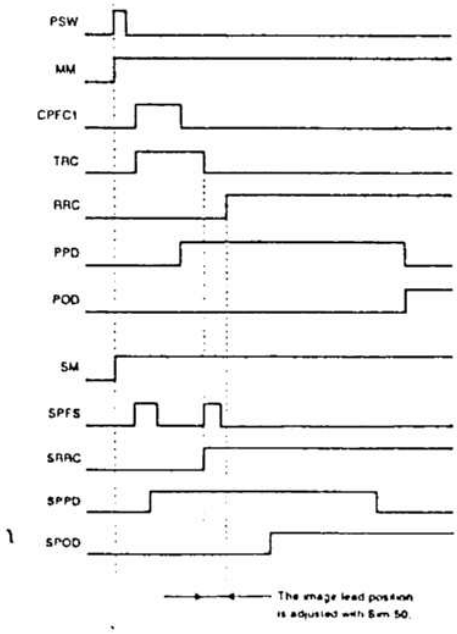

[6] DISASSEMBLY AND ASSEMBLY

The descriptions of this chapter are divided into the following sections:

1. Paper feed section, paper transport section, power section
2. Manual paper feed section
3. Fuser section
4. Optical system
5. SPF section
6. Drum section
7. Developer section
8. Operation panel/medium cabinet
9. Major parts in the frame side

1. Paper feed section, paper transport section, power section

1-1. Paper feed unit

① Open the front cover and open the body. Release the right and the left lock levers and pull out the manual paper feed unit.

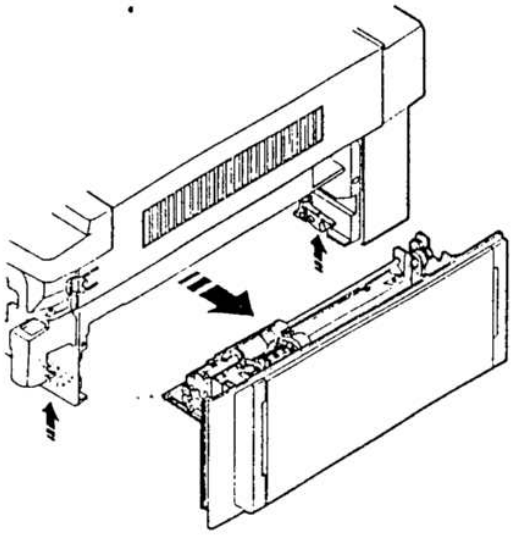

② Disconnect the CN-B connector of the lower PWB, remove the paper feed unit fixing screws (4 pcs.), and lift the paper feed unit to remove.

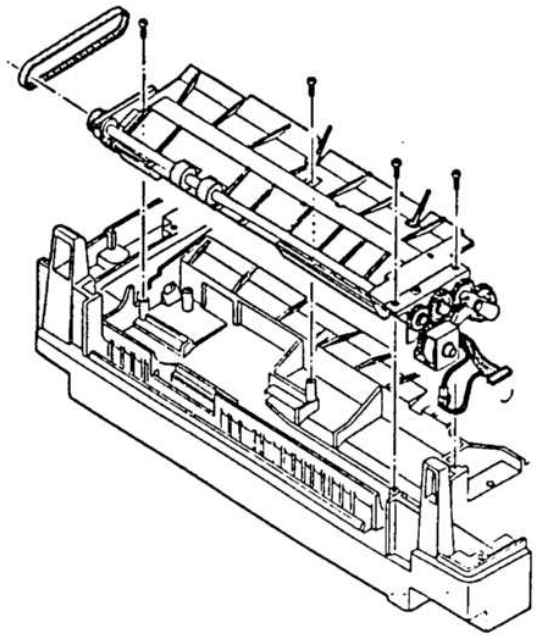

1-2. Paper feed roller ass'y removal

① Disconnect the connector of the magnetic clutch in the rear frame side.

② Remove the hook section of the paper feed roller bearing in the front frame side by using a screwdriver ⊖.

③ Remove the roller release arm spring from the paper feed frame.

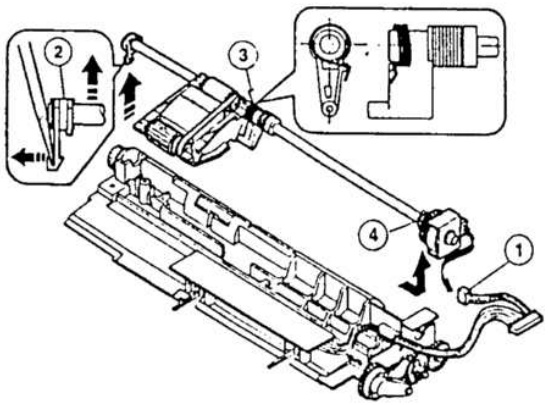

④ Remove the bearing in the rear frame and remove the paper feed roller ass'y.

Note for assembly (1): Hang the roller release arm spring on the spring hook of the roller release arm. Attach the paper feed roller ass'y to the paper feed unit, and hang the spring on the paper feed frame.

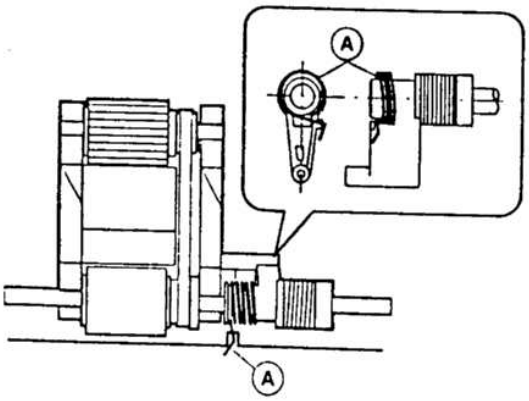

Note for assembly (2): Attach the paper feed roller ass'y so that the paper feed roller clutch faces the lower frame.
When attaching the paper feed unit, insert it in the base unit hole of the copier.

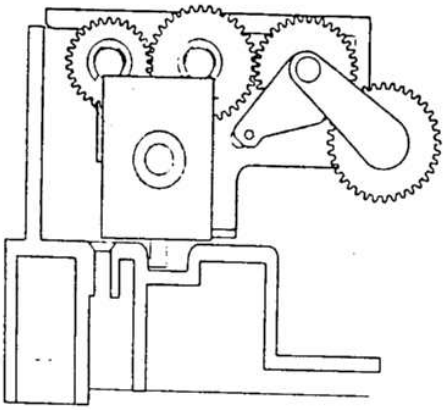

1-3. Separation roller

① Remove the paper feed unit and remove the separation roller.

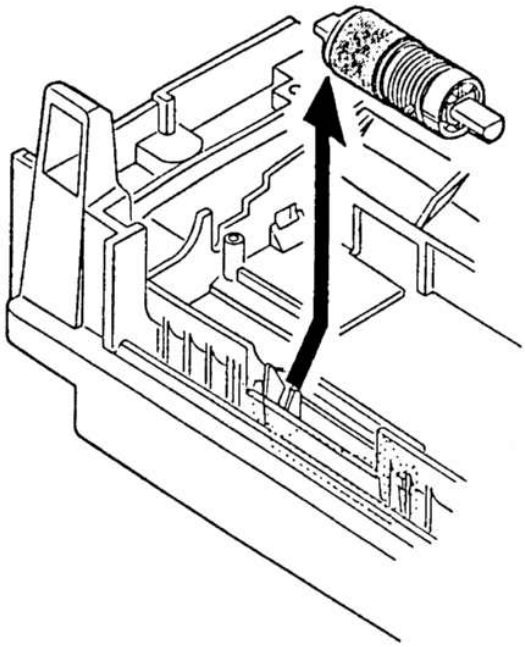

1-4. Takeup roller, paper feed roller

① Remove the paper feed roller ass'y, and remove the takeup roller.

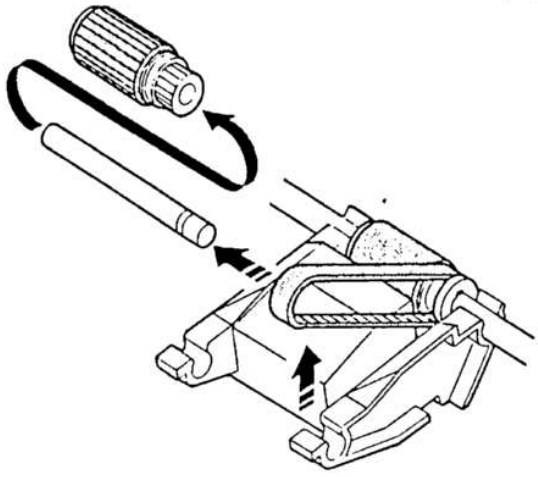

② Remove the roller holder, the stop ring, and the bearing, then remove the paper feed roller.

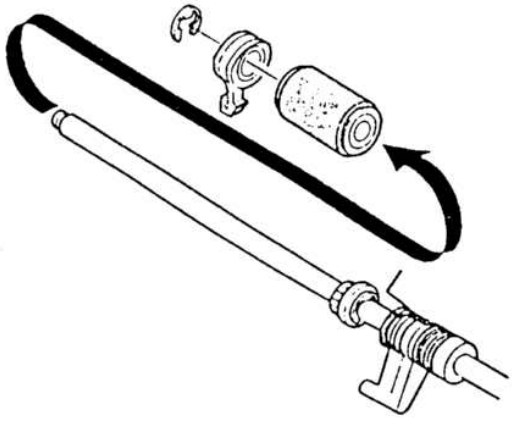

Note for assembly (1): Attach the paper feed roller so that the one-way clutch in the rear frame side. (Be careful to the installing direction.)
Attach the roller holder as shown below:

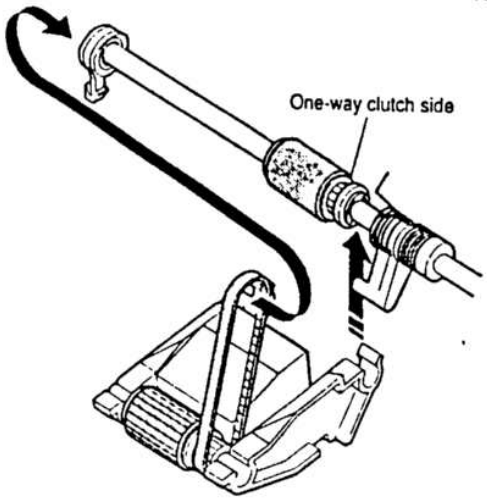

1-5. Resist roller

① Insert a screwdriver into the front frame hole to release the lock pawl, and remove the TC case.

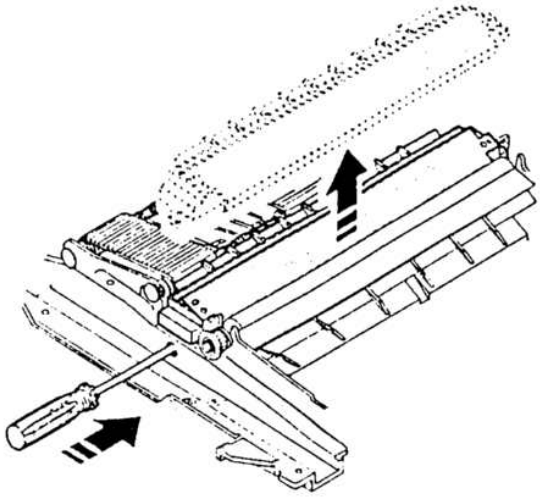

② Disengage the hook section of the bearing in the front frame side, lift it upward and remove towards the upper frame side. Remove the spring in the rear frame side. Disconnect the CN-E connector in the lower frame PWB unit. Slide the resist roller ass'y to the rear frame side and remove it upwards.

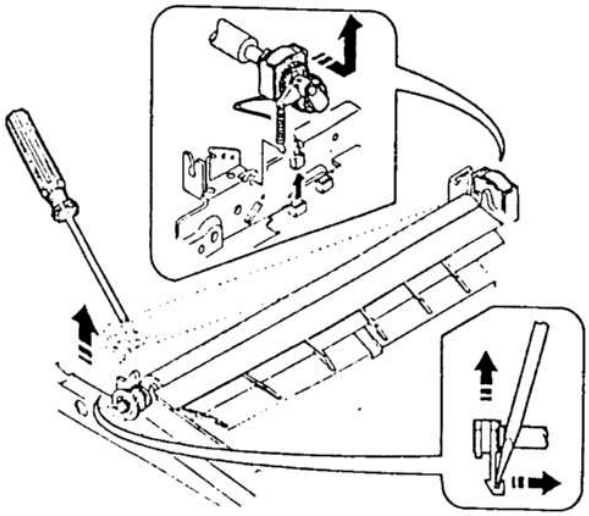

③ Remove the clutch, and the gear as shown below:

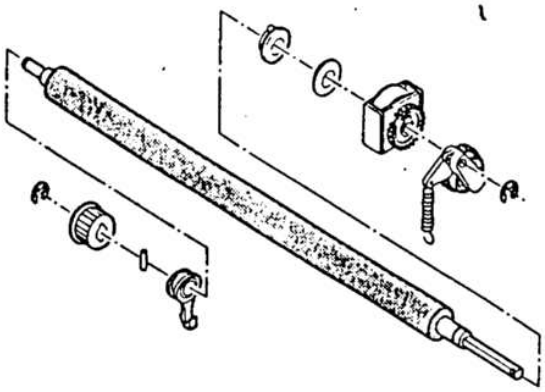

Note for assembly (1): When assembling, attach the positioning pin of the resist roller clutch in the direction of paper exit.

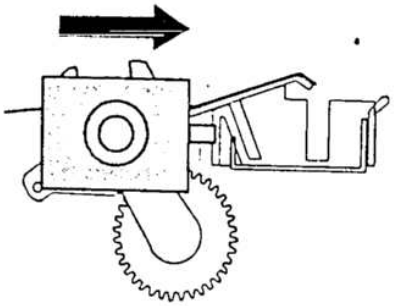

Note for assembly (2): When assembling the resist roller ass'y to the copier, attach it over the PS roller lower mylar and rotate the mylar and return the mylar to the original position. (To prevent deformation of the mylar)

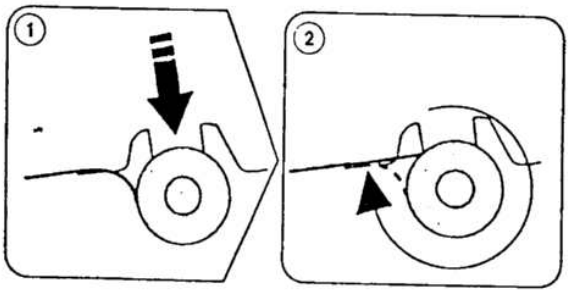

1-6. Transport belt

① Remove the fuser unit.

② Remove the TC case.

③ Remove the transport belt drive shaft in the TC case from the holder, and remove the drive shaft in the paper exit side, and remove the belt.

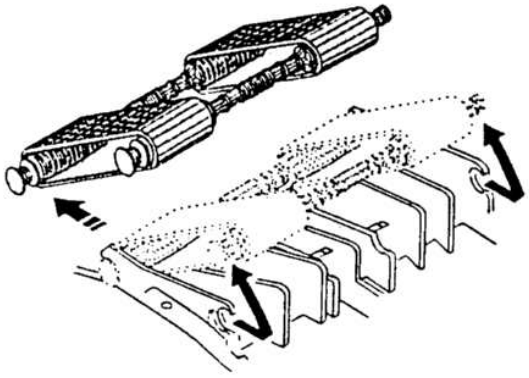

1-7. Socket holder unit

① Remove the CN-C connector of the lower unit PWB, the grounding wire, and the red high voltage lead wire (for separation electrode) which in the socket holder.

② Remove the two fixing screws in the paper feed side, remove the pawl from the positioning hole in the paper exit side, and slide it in the direction of paper feed to remove.

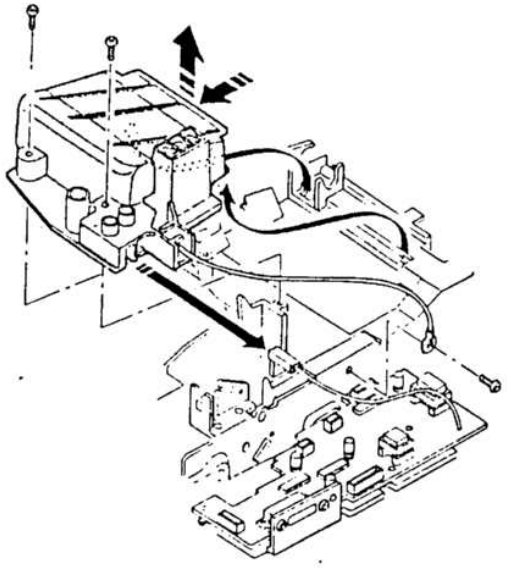

1-8. Lower unit PWB

① Open the body up, and remove the rear lower cabinet.

② Remove the connector, the PWB fixing screw (1 pc.), and the CN-F fixing screws (2 pcs.). Slide the lower unit PWB to the front frame side and remove it upwards.

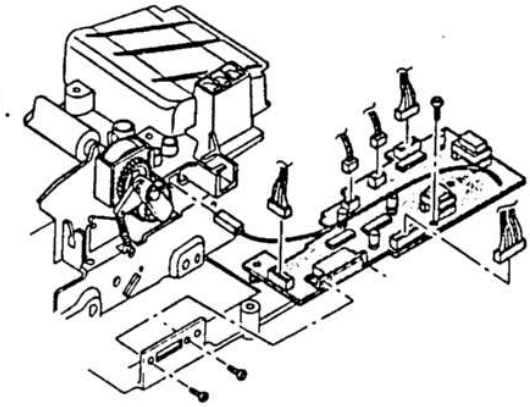

1-9. Cassette paper empty detector (CPED1)

① Remove the rear lower cabinet.

② Remove the fixing screw and the CN-D connector, and remove CPED1.

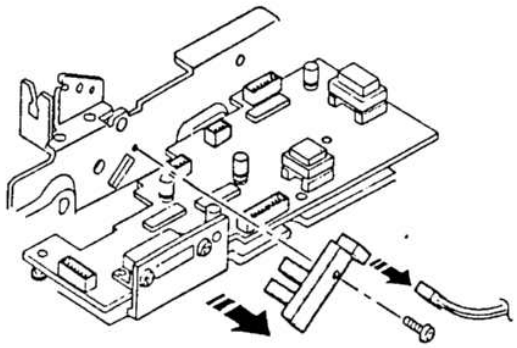

1-10. Power unit

① Remove the upper and the lower cabinets in the rear side.

② Remove 12 connectors, two fixing screws, and the grounding wire. Lift the power unit to remove it upwards.

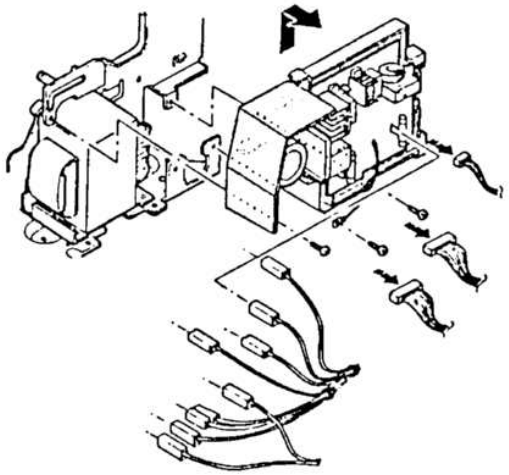

Note for assembly (1): When attaching the harness, be careful to the connector color and the lead wire color. (Carefully refer to the indication on the PWB for connection of the harness.)
Example: YE (WH) → Yellow connector and white lead wire
YE = Yellow, WH = White, BK = Black,
GR = Green, BL = Blue

2. Manual paper feed section

2-1. Manual paper feed roller, manual takeup roller

① Remove the manual paper feed unit from the copier.

② Remove the roller auxiliary spring, the manual solenoid connector, the E-rings in the front and the rear frames, and the bearing. Remove the manual roller ass'y together with the solenoid holder.

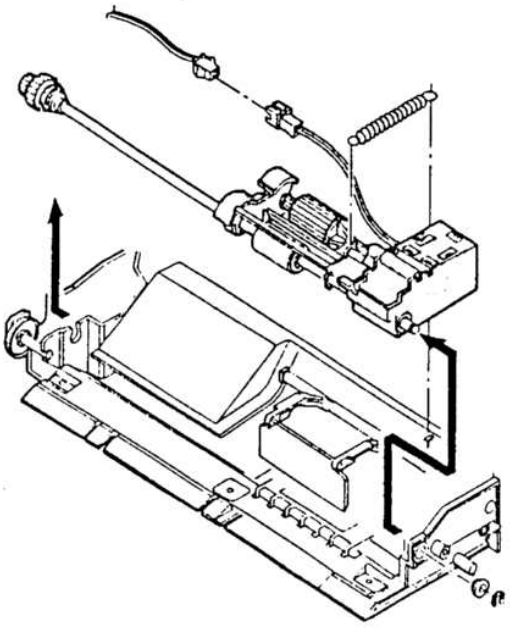

③ Remove the manual feed takeup roller from the manual arm.

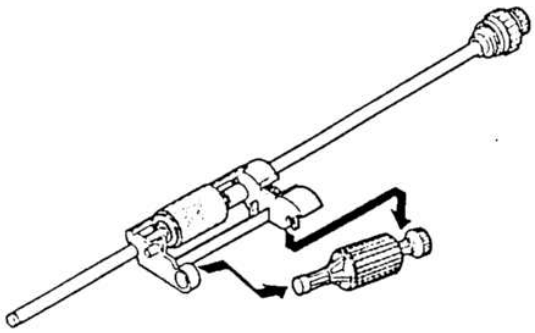

④ Remove the manual arm and the E-ring, and remove the manual paper feed roller.

Note: Gear 20T has a positioning pin. When removing the manual arm, be careful not to miss the positioning pin.

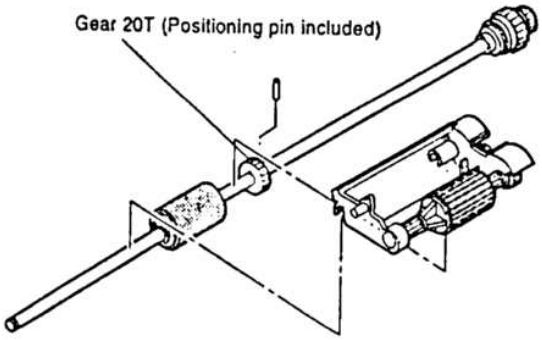

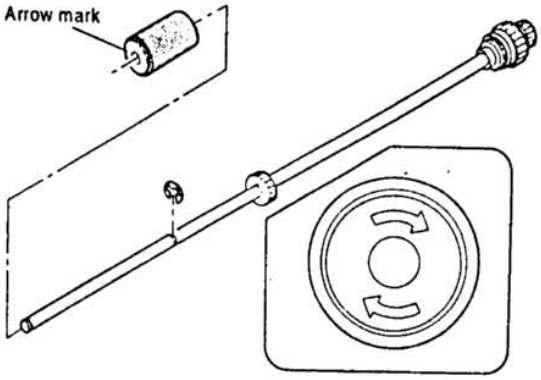

Note for assembly (1): The manual paper feed roller is provided with the one-way clutch. When attaching it, attach so that the arrow mark on the roller is in the E-ring side. (Be careful to the installing direction.)

2-2. Reverse rotation roller ass'y

① Remove the manual feed roller ass'y.

② Remove the reverse roller ass'y from the roller holder.

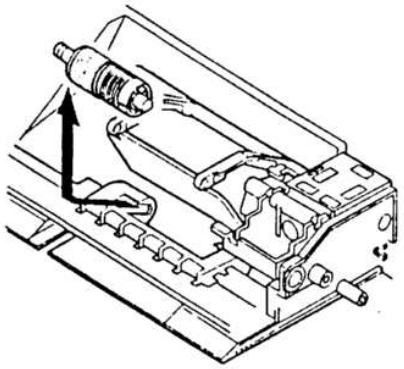

3. Fuser section

3-1. Fuser unit removal

① Open the front panel

② Remove the table glass.

③ Turn the open/close lever to the right and open the upper unit slowly.

④ Remove the connectors (2 pin × 2), slightly lift the right side of the unit and pull it out.

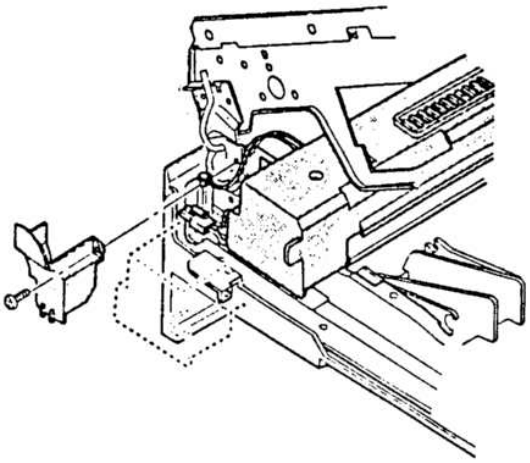

⑤ Move the copy lamp unit to the left of the body (the paper exit side).

⑥ Disconnect the connector (2-pin) of the dehumidifier heater which extends from the dark box cover. Insert a long screwdriver (+) into that port and remove the screw which is fixing the fuser cover.

⑦ Remove the fuser cover in the direction of arrow Ⓐ.

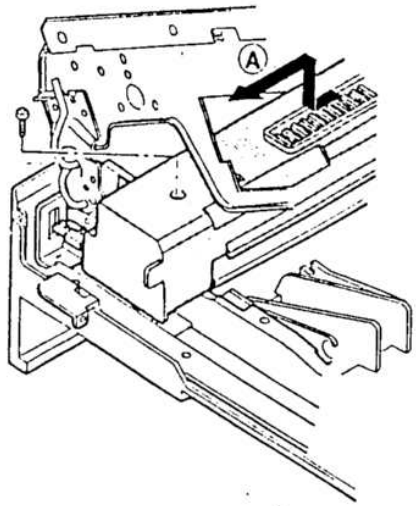

⑧ Remove an E-ring and two connectors.

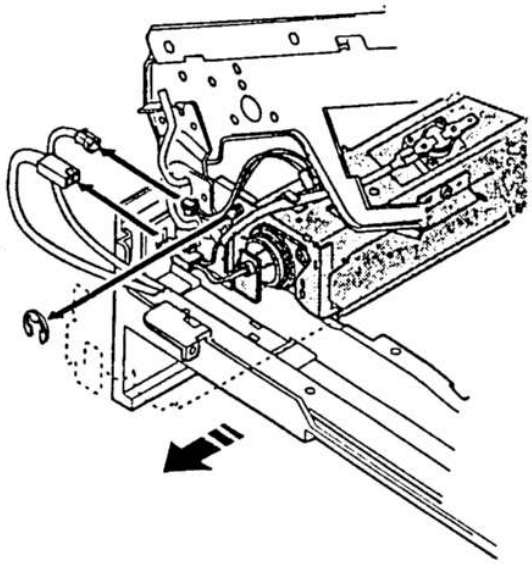

3-2. Heater lamp replacement

① Remove the fuser cover fixing screw (1 pc.), and slide it to the front side, and remove it.

② While pushing the projection of the Faston terminal connected to the thermostat, remove the lead wire from the connected section.

③ Remove the lamp holder fixing screw on the top of the rear frame, and remove the holder.

④ Pull out the heater lamp from the front frame.

For assembly, reverse the disassembly procedures.

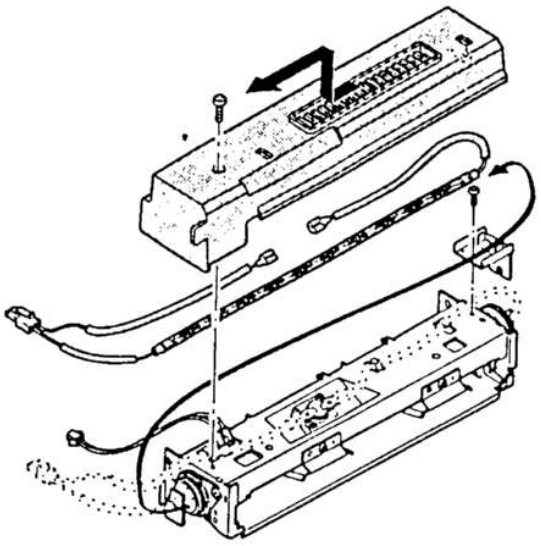

3-3. Upper heat roller ass'y removal

① Remove the bearing fixing screws (2 pcs.) in the front and the rear frames.

② Put the paper guide to the paper exit side and separate the separation pawl from the roller and fix it.

③ Rotate the fixing screw section of the bearing about 45 degrees below and pull it upwards.

For assembly, reverse the disassembly procedures.

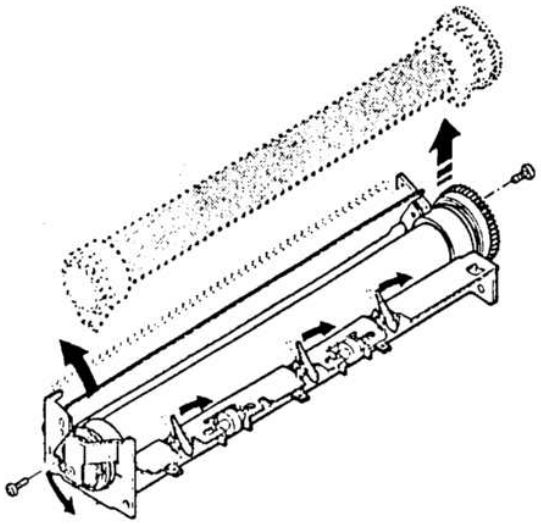

3-4. Upper separation pawl replacement

① Remove the fuser unit and remove the cover.

② Place the fuser unit so that the paper guide is in the lower side. (The separation pawl is in the upper side.)

③ Remove the tension spring, hold the tip of the separation pawl and remove it from the supporting section, and tilt it to remove.

For assembly, reverse the disassembly procedures.

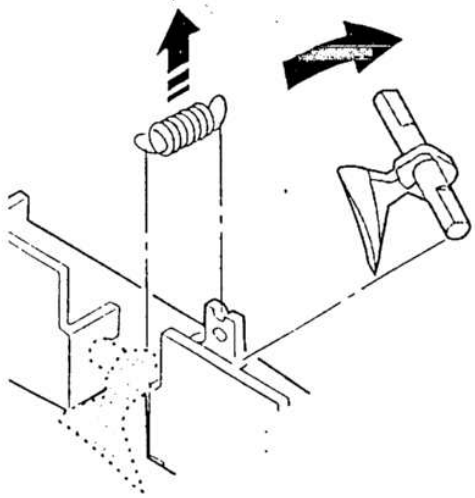

3-5. Lower cleaning roller and lower heat roller replacement

① Remove the fuser unit.

② Remove the CL roller springs (2 pcs.) which is fixing the lower cleaning roller from the hook section.

③ Remove the lower cleaning roller.

④ Lift the paper exit guide, and remove the lower heat roller without making contact between the roller and the scraper.

For assembly. reverse the disassembly procedures.

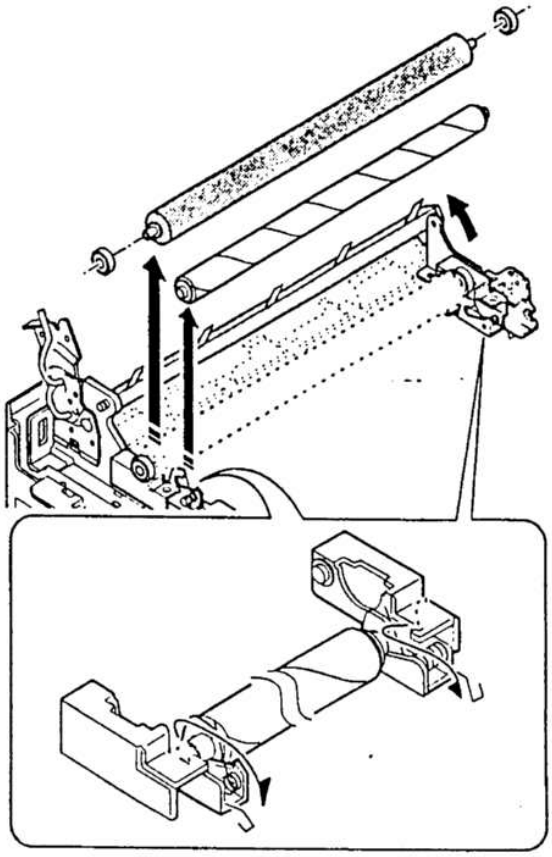

3-6. Scraper replacement

① Remove the upper fuser unit.

② Remove the paper exit paper guide fixing screw (step screw) in the front frame side, and remove the paper exit paper guide.

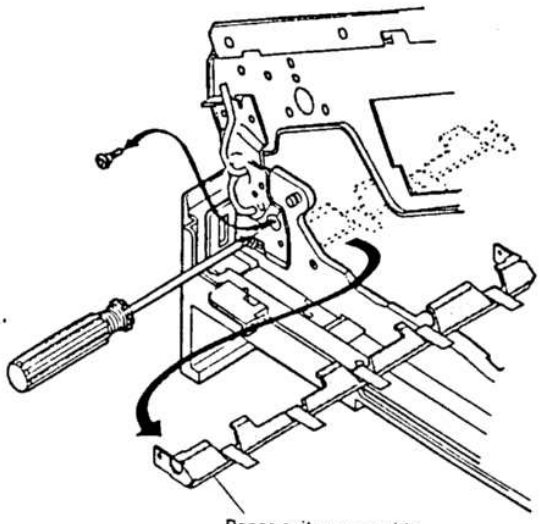

③ Remove the scraper hook section from the paper exit paper guide, and remove the scraper.

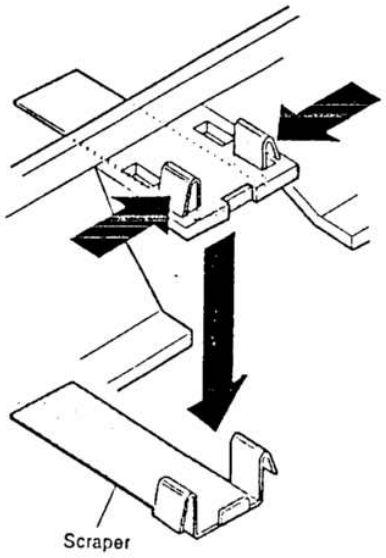

Note: When attaching the scraper, be careful not to deform it. Also be careful to check that the scraper hook section is completely inserted into the paper exit paper guide.

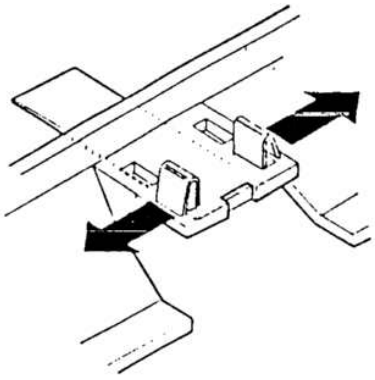

3-7. Thermistor/thermostat removal

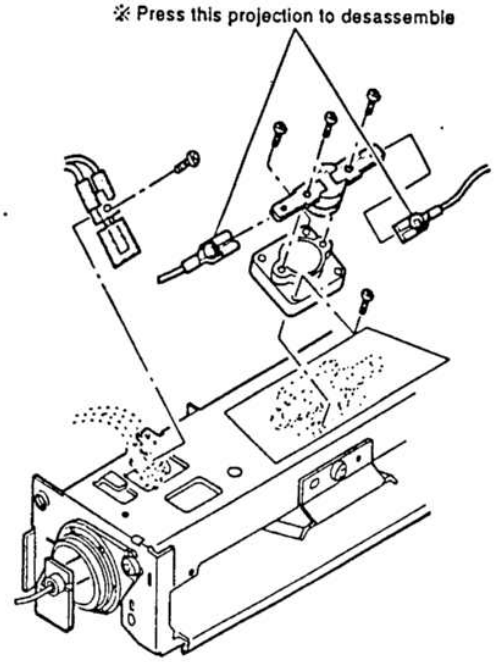

※ Note for assembly

- Be sure to bring the thermistor center into contact with the heat roller.
- Clean and remove foreign materials from the thermistor surface with alcohol.

4. Optical system

4-1. Copy lamp replacement

① Open the body up. Release the lock lever of the manual paper feed unit and remove the manual paper feed unit.

② Remove the fixing screws (2 pcs.) in the right upper cabinet, and remove the right upper cabinet.

③ Remove the fixing screws (4 pcs.) of the glass holder, and remove the glass holder.

④ Remove the table glass.

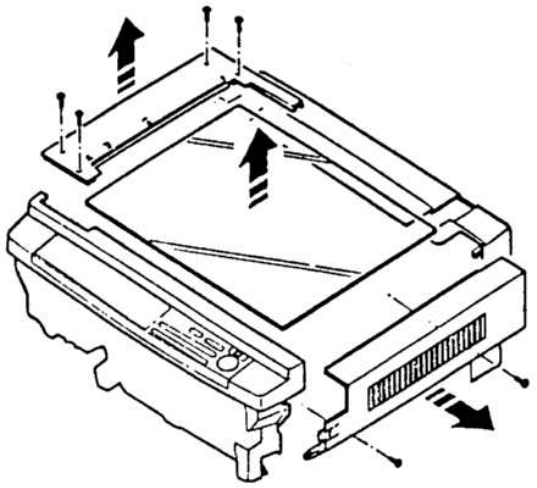

⑤ While pushing the copy lamp electrode in the rear frame, remove the copy lamp.

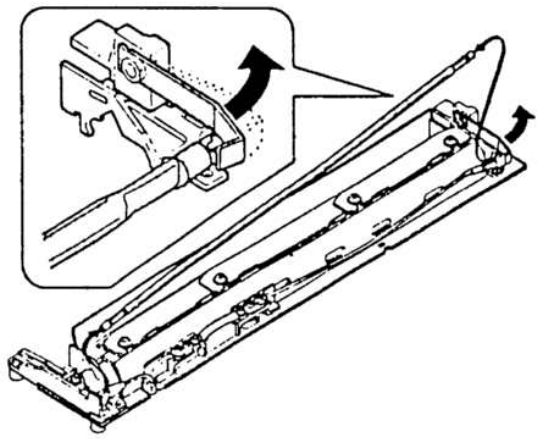

For assembly, reverse the disassembly procedure.

Note: Be careful to the direction of the copy lamp installation. The projection must be in the rear side. Attach as shown in the figure.

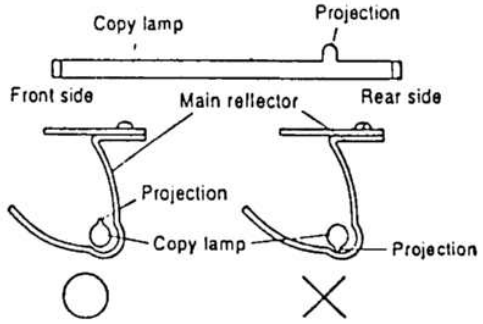

4-2. Copy lamp unit replacement

① Remove the manual paper feed unit, the right upper cabinet, the glass holder, the table glass, and the operation panel.

② Move the copy lamp unit to the frame notch (refer to the figure).

③ Remove the terminal section of the copy lamp lead wire. (One screw and insertion terminal)

④ Loosen the fixing screw of the front and the rear frame wire, fixing plate and remove the wire from the copy lamp unit.

⑤ Slide the whole unit forward, and remove the rear frame side upwards.

For assembly, reverse the disassembly procedures.

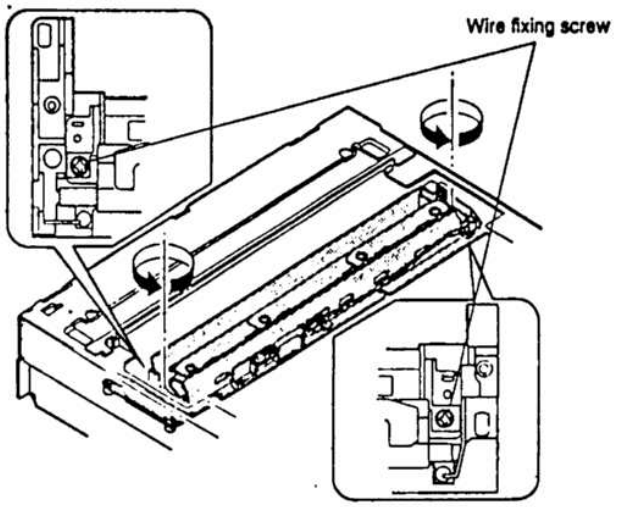

Note: When the copy lamp unit is removed, the position adjustment must be required when attaching again. Refer to the adjustment item for the work.

4-3. Mirror base drive wire replacement

<Removal>

① Remove the manual paper feed unit, the right upper cabinet, the glass holder, the table glass and the operation panel.

② Remove the fixing screws (2 pcs.) of the left upper cabinet, and slide to the rear frame side to remove the cabinet.

③ Loosen the fixing screw of the copy lamp unit wire fixing plate, and remove the wire from the unit.

④ Remove the tension spring (⑦ in the figure) of the mirror base drive wire in the paper exit side from the hook section.

⑤ Slightly shift the mirror base to the paper feed side, and remove the terminal ① of the mirror base drive wire.

⑥ Remove the wire fixing screw of the drive pulley.

<Installation>

① Set the mirror base to the positioning plate position.

② Set the terminal side of the mirror base drive wire on the hook section ①, turn the mirror base pulley ② outside to wind the wire around the drive pulley from the above.

③ Wind the wire 8 turns from the outside to the inside of the drive pulley, and put the 7th turn into the groove, and fix it with a screw temporarily.

④ Pass the wire under the mirror base and wind around the paper exit pulley (the larger one).

⑤ Pass the wire to the inside of the mirror base pulley, and pass through the paper exit pulley (the smaller one), then fix the tension spring to the hook section ⑦.

⑥ Check that the mirror base is in contact with the positioning plate, and tighten the wire fixing screw of the drive pulley.

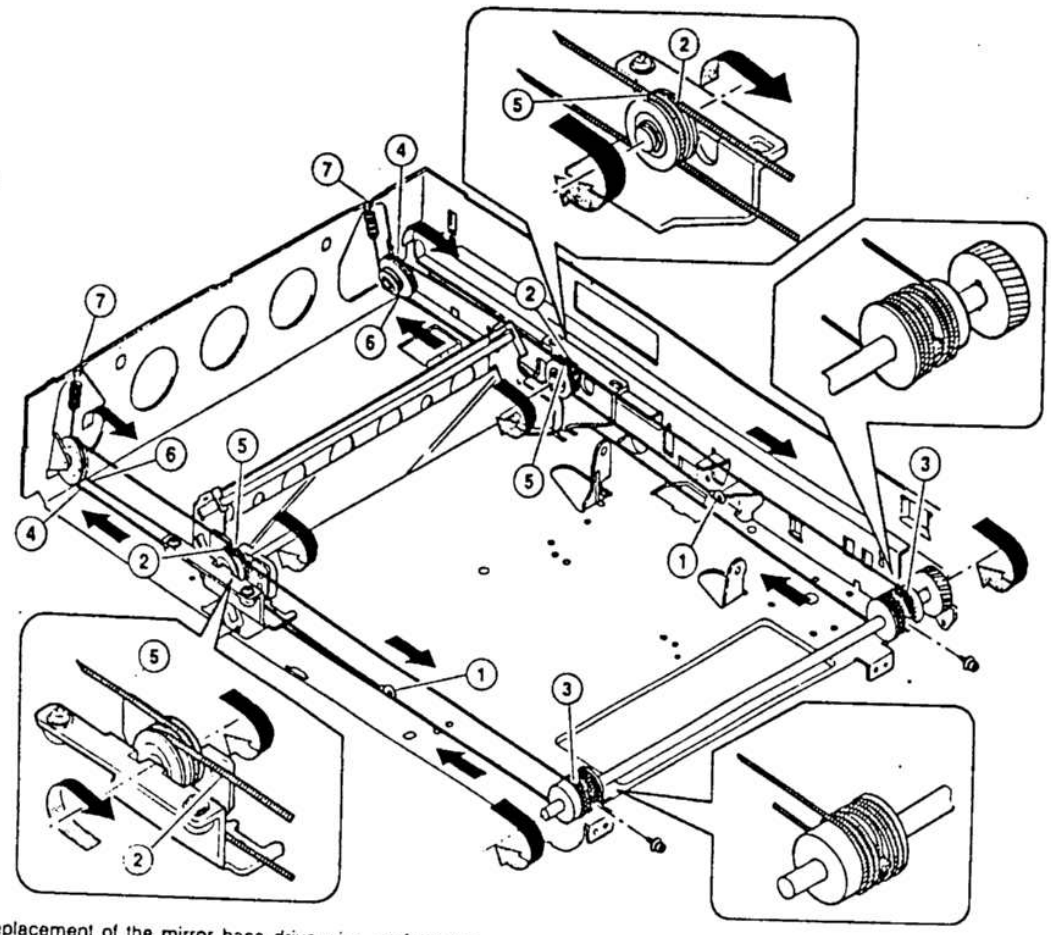

Note: After replacement of the mirror base drive wire, perform the vertical skew copy adjustment, the focus adjustment, and the horizontal skew copy adjustment.

4-4. Lens and lens drive wire replacement (Only the zoom function model)

<Removal>

① Remove the manual paper feed unit, the right upper cabinet, and the table glass.

② Remove the dark box cover fixing screw (1 pc.) and the cover.

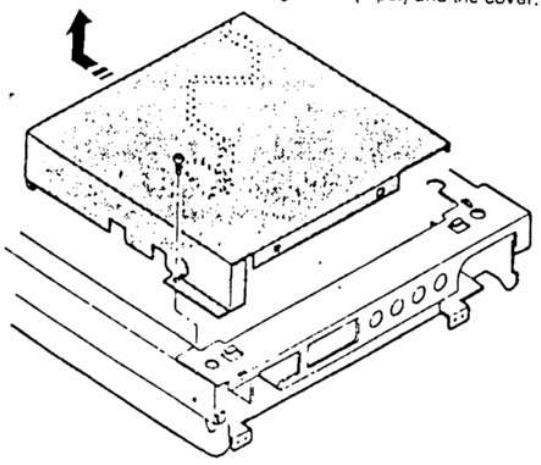

③ Shift the lens carriage unit to the paper feed side.

④ Remove the tension spring of the lens drive wire fr[illegible] hook section, and remove the wire.

⑤ Remove the shaft mounting plate in the paper feed side, and remove the shaft and the carriage unit.

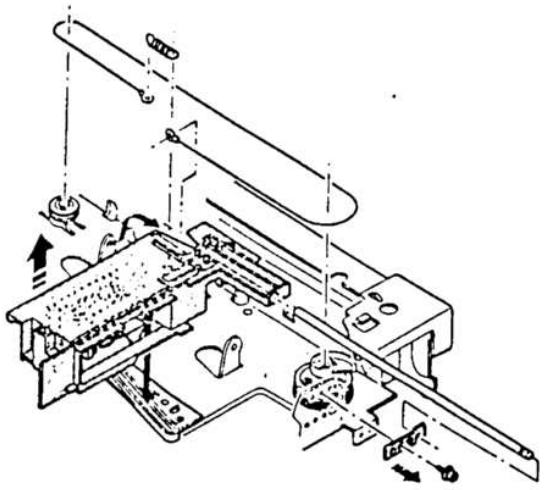

<Installation>

① Pass the lens drive shaft through the carriage unit, and set the shaft to the shaft support section of the base plate.

② Fix the shaft mounting plate in the paper feed side.

③ Store the lens unit projection in the lens guide rail.

④ Set the lens drive wire on the carriage unit.

⑤ Align the No.4/5 mirror zoom cam and the carriage unit to the normal copy position

⑥ Manually hold and fix the carriage unit, and wind the wire around the drive gear.

⑦ Wind the wire around the pulley, pull it slightly and attach the spring to it, and set the spring on the hook section.

Note: When the lens unit is removed, the right angle adjustment, the magnification ratio adjustment, and the focus adjustment are required.

Note: When the lens drive wire is removed, the magnification adjustment and the focus adjustment are required.

4-5. No. 4/5 mirror unit and peripheral parts replacement

① Remove the manual paper fed unit, the right upper cabinet, and the table glass.

② Remove the dark box cover fixing screw (1 pc.) and remove the cover.

③ Remove the mirror holder spring.

④ Remove the shaft mounting plate, pull out the shaft towards the paper feed side, and remove No. 4/5 mirror unit.

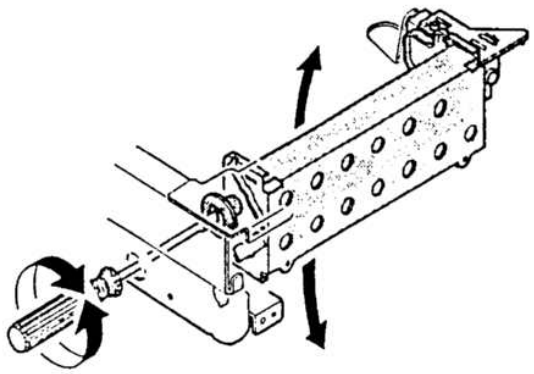

⑤ Remove the fixing screw of the center section of the drive pulley, and remove the pulley.

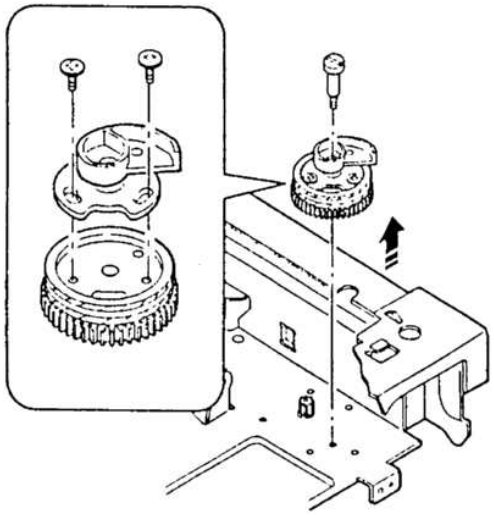

⑥ Remove the CN-E connector of the main PWB, remove the drive motor fixing screws (2 pcs.), and remove the No.4/5 mirror unit from the mounting section (square hole in the base plate).

For assembly, reverse the disassembly procedures.

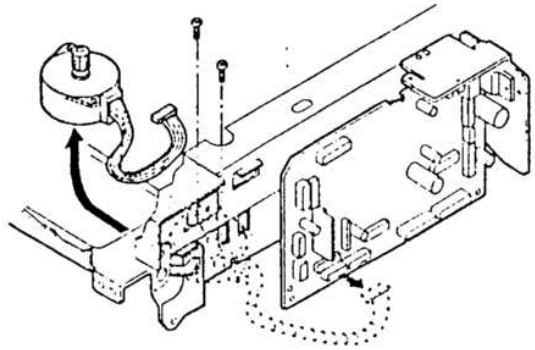

4-6. Optical unit removal

① Remove the drum unit and the developer unit.

② Remove the right cabinet, the left cabinet, the operation panel, the medium cabinet, and the rear cabinet.

③ Remove three connectors Ⓐ from the sensors in the rear as shown in the figure.

④ Remove connector Ⓑ between the mirror motor and the main PWB (CN-C).

⑤ Remove two snap bands Ⓒ which are binding cables of the operation panel.

⑥ Remove the optical unit .

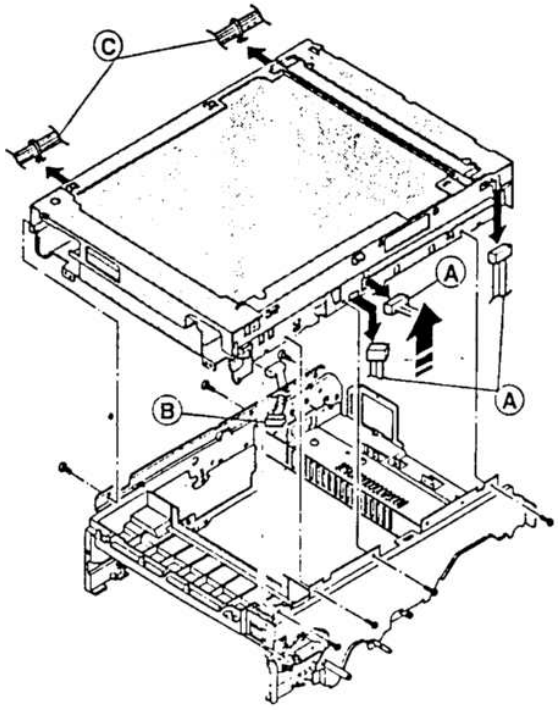

4-7. Other parts in the optical system

① Remove the rear upper cabinet.

② Remove the CN-C connector of the main PWB and the fixing screws (2 pcs.), and pull out the mirror motor towards the rear frame.

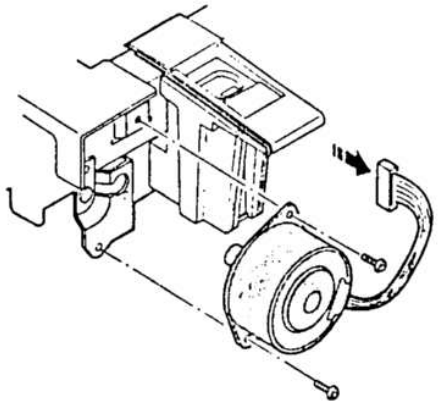

③ Remove the connector and the fixing screw (1 pc.), and remove the mirror home position sensor (MHPS) towards the rear frame.

④ Remove the connector and the fixing screw and pull out the lens home position sensor (LHPS) towards the rear frame.

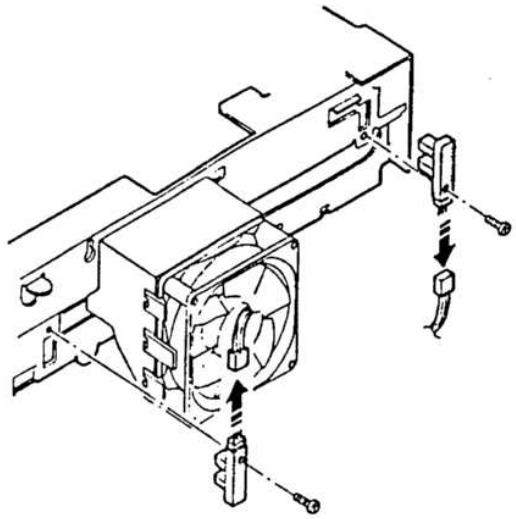

⑤ Remove the fixing screw (1 pc.) of the upper frame and the screw and the connector in the rear frame, then remove the main PWB.

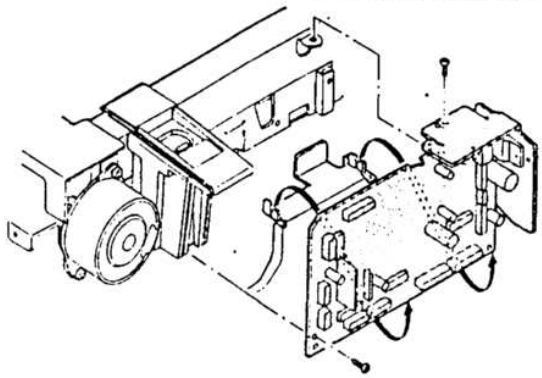

⑥ Remove the connector, the manual paper feed unit, the right upper cabinet, the table glass, and the dark box cover. Remove the fixing screw from the above and remove the AE sensor towards the front frame side.

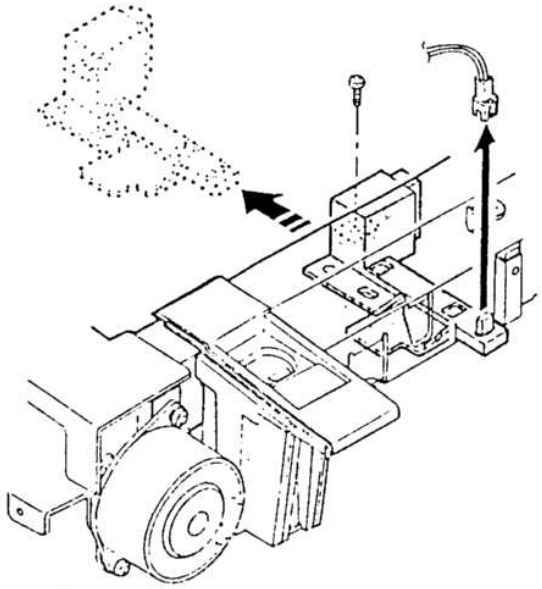

For assembly, reverse the disassembly procedures.

4-8. Light adjustment plate/temperature fuse removal

① Remove the document glass.

② Remove the parts as shown in the figure.

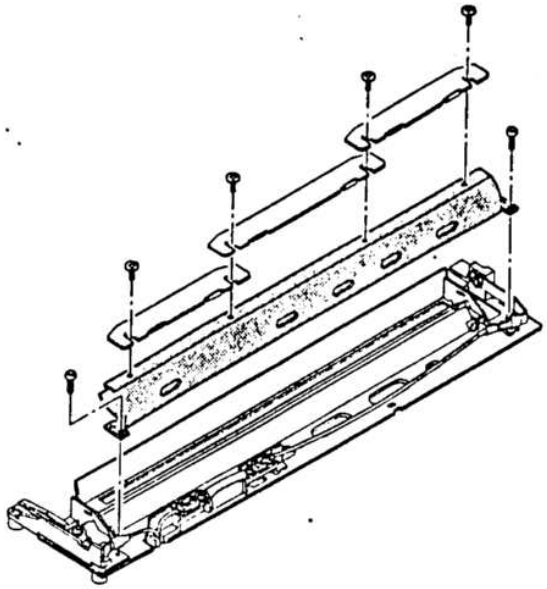

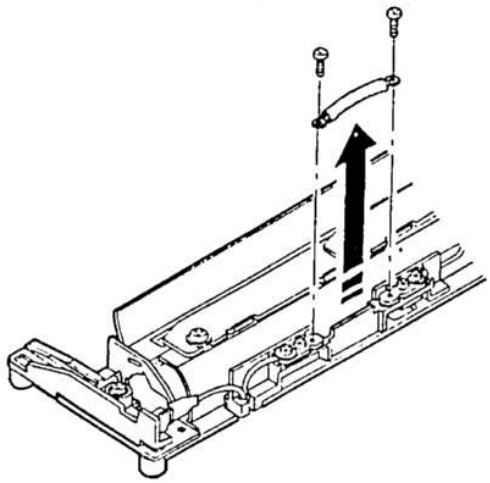

5. SPF section

5-1. SPF mechanism removal

① Open the OC cover, and remove the SPF cover fixing screws (5 pcs.).

② Remove the SPF upper cover.

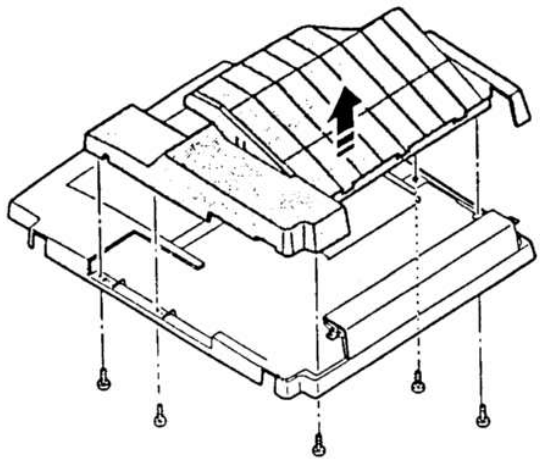

③ Remove two fixing screws of paper exit reverse paper guide.

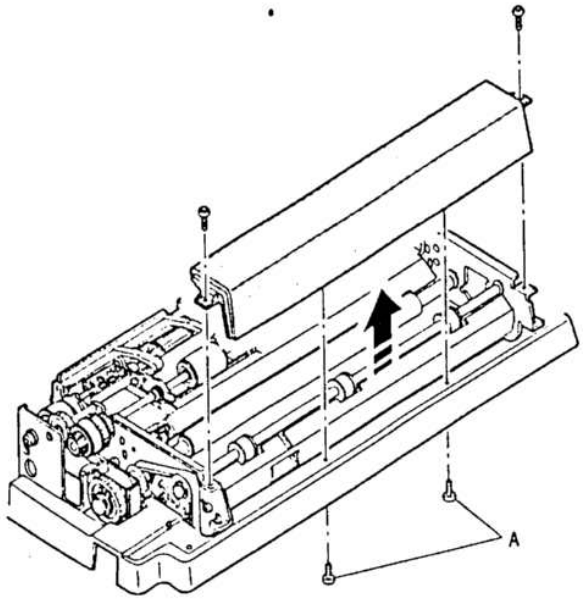

④ Remove the SPF motor ass'y fixing screws (4 pcs.) and the CN-C connector (4 pin) of the SPF control PWB. Then remove the SPF motor ass'y.

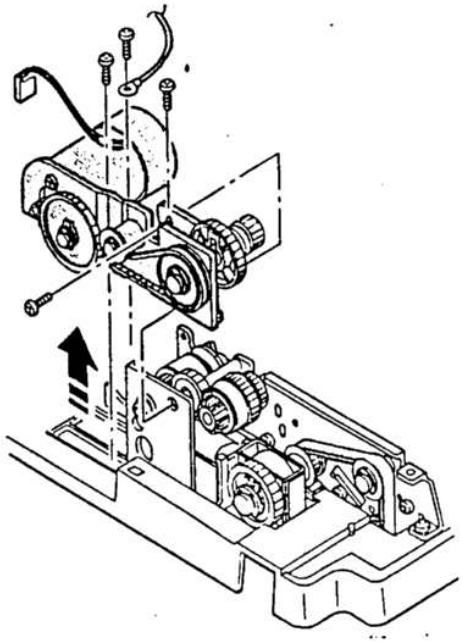

(Reference)
The SPF motor can be removed by removing two screws from the SPF motor ass'y.

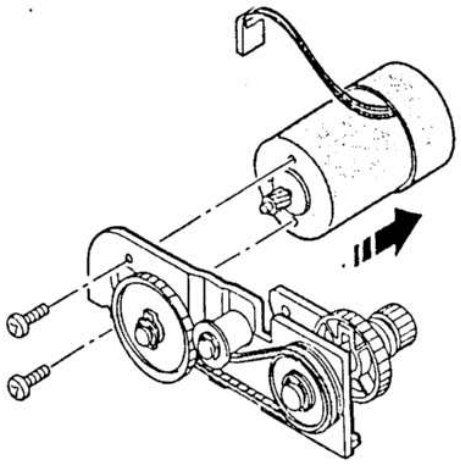

⑤ Remove four screws from the SPF mechanism, the 2-pin connector from the clutch, the 2-pin connector from the SPF cover open/close sensor, the CN-C (16-pin) connector from the SPF control PWB, then remove the SPF mechanism.

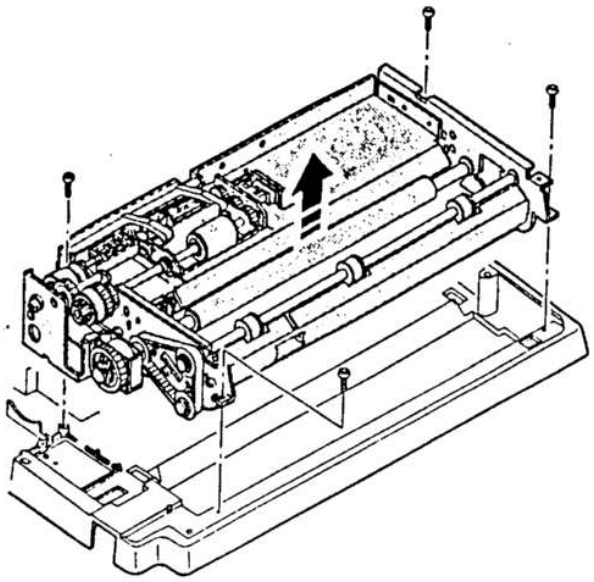

5-2. Paper feed roller/takeup roller replacement

① Remove the SPF upper cover as shown in "5-1-①, ②."

② Remove the E-rings (3 positions) which are fixing the paper feed roller ass'y, slide the bearing, and remove the paper feed roller ass'y.

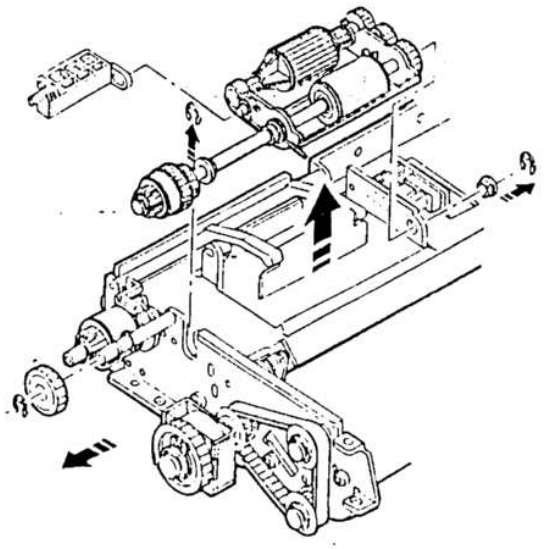

③ Remove the E-rings (3 pcs.), slide the gear to the clutch once, and pull out the pin inside the gear. Then the gear and the paper feed roller can be removed.

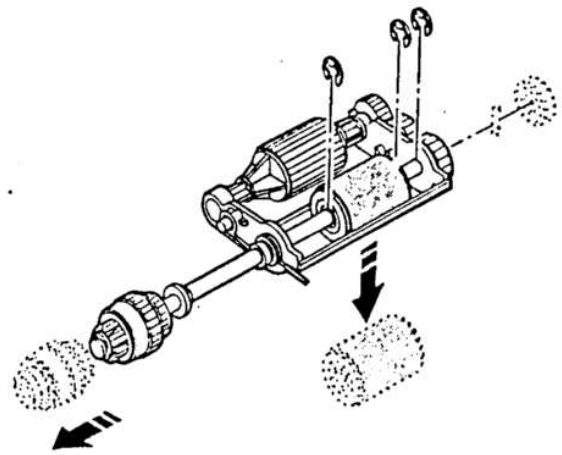

④ Since the takeup roller is of the insertion type, remove it from the grip side.

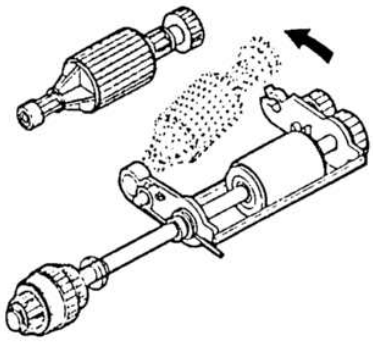

For assembly, reverse the disassembly procedure.

Note: The paper feed roller is provided with the one-way clutch. Be sure to attach so that the one-way clutch is in the front frame side.

5-3. Reverse roller (ass'y) replacement

① For replacement of the reverse roller, the SPF unit must be removed. For that purpose, remove the front frame side fixing screws (2 pcs.) and the connector (one position).

② Remove the rear frame side fixing screws (2 pcs.), and disconnect the CN-B connector of the SPF control PWB. Then put the SPF unit upside down.

③ Open he roller holder and replace the roller.

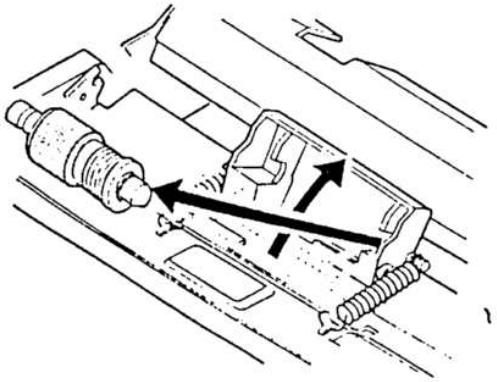

For assembly, reverse the disassembly procedures.

5-4. SPF control PWB replacement

① Remove the SPF upper cover as shown in "5-1-①, ②."

② Remove three connectors and two screws from the SPF control PWB and remove the PWB.

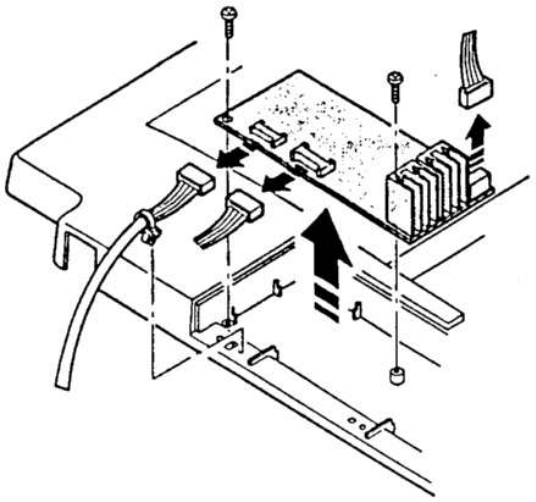

5-5. Clutch/solenoid removal

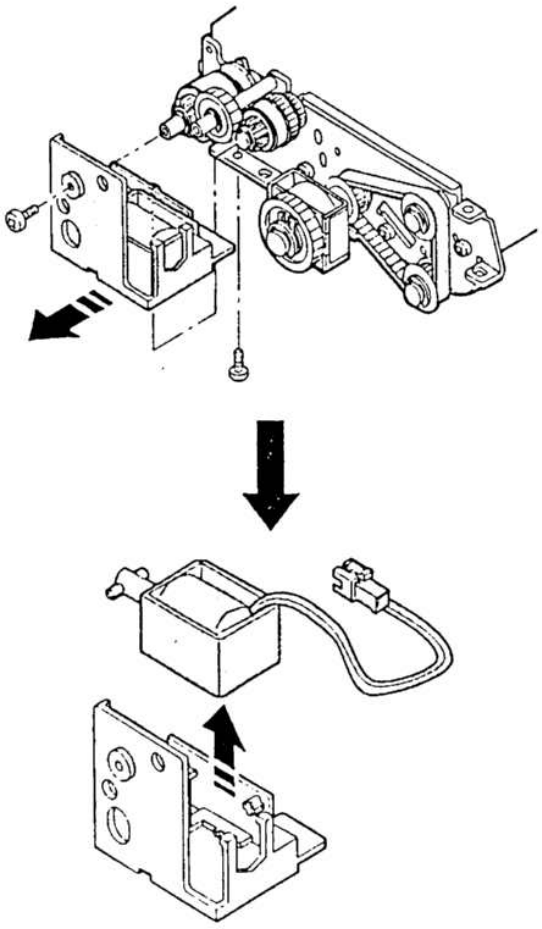

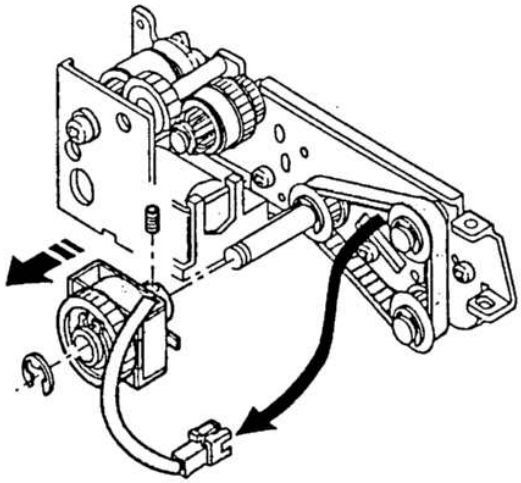

5-6. Sensor removal

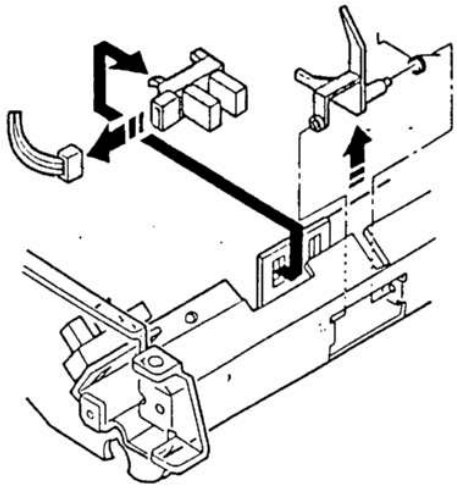

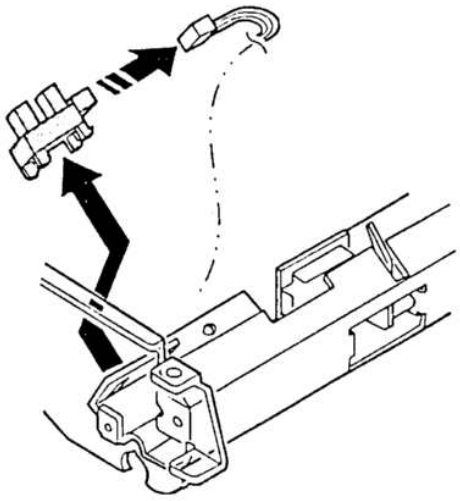

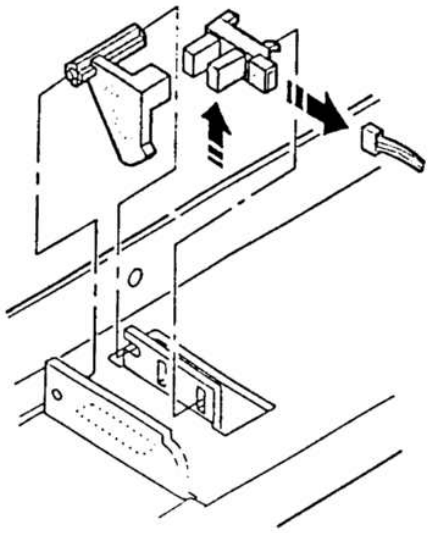

6. Drum section

6-1. Drum unit removal

① Open the front cover.

② While pressing down the release lever Ⓐ, open the toner cartridge slowly. (Arrow Ⓑ)

③ Remove the screw and remove the drum unit.

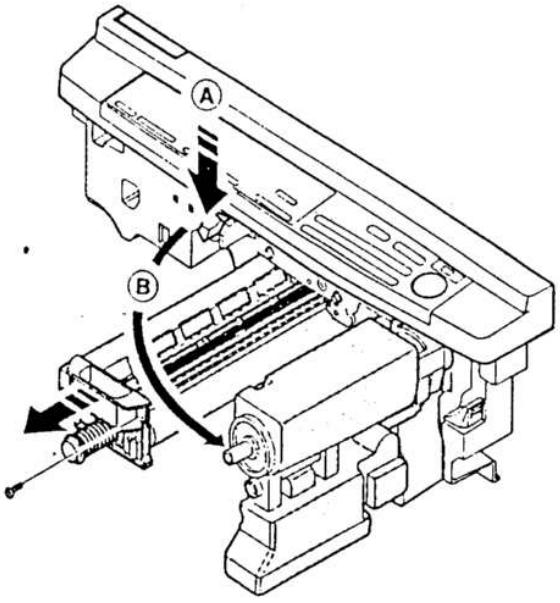

7. Developer section

7-1. Developer unit removal

① Open the front cover.

② While pressing down the release lever, open the toner cartridge slowly and remove it.

③ Loosen the step screw Ⓐ.

④ Pull out the developer unit.

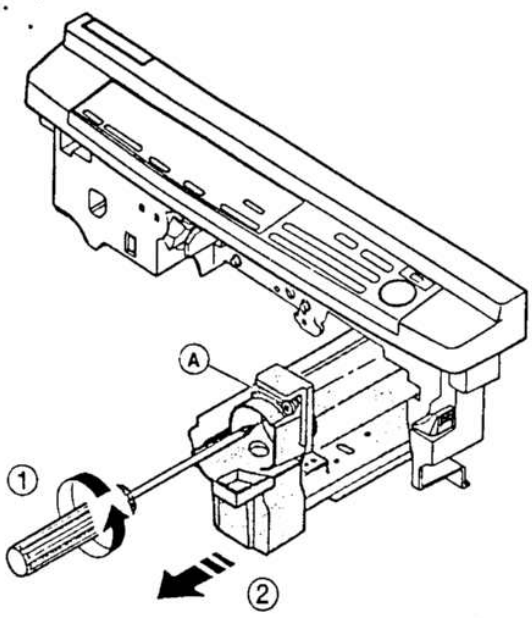

7-2. Developer cartridge removal

① Place the magnet roller of the developer unit on the box to protect it.

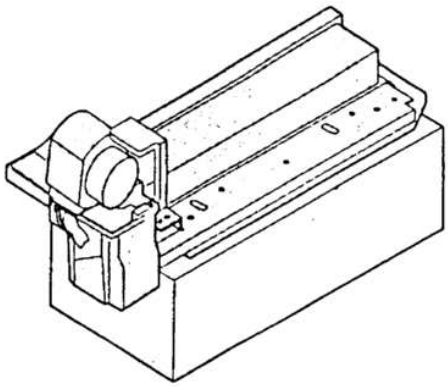

② As shown in the figure below, open the section which is pressing the cartridge pawl with a screwdriver, and pull out the developer cartridge.

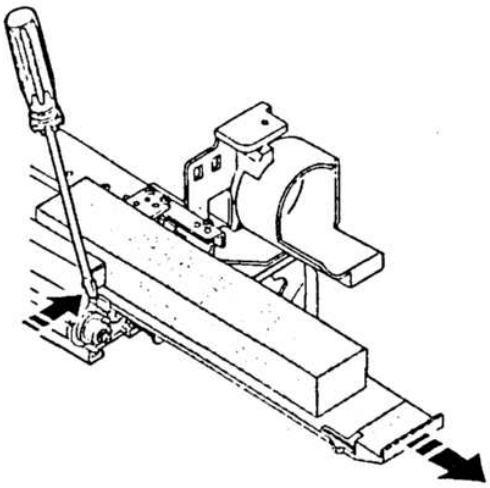

7-3. Toner motor removal

① Remove four short screws Ⓐ and one long screw Ⓑ, and the connector, and separate the toner cartridge section.

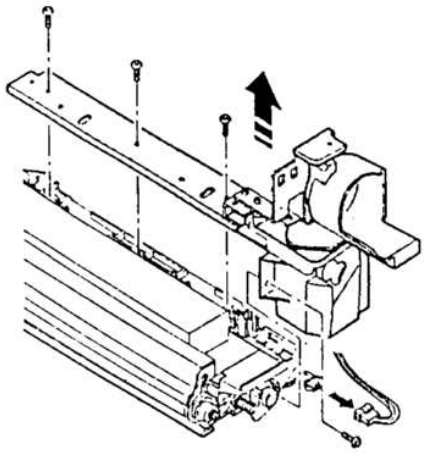

② Remove two screws Ⓒ and remove the motor.

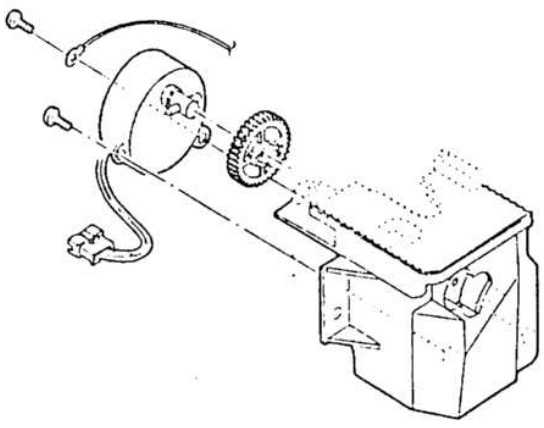

7-4. Toner density sensor

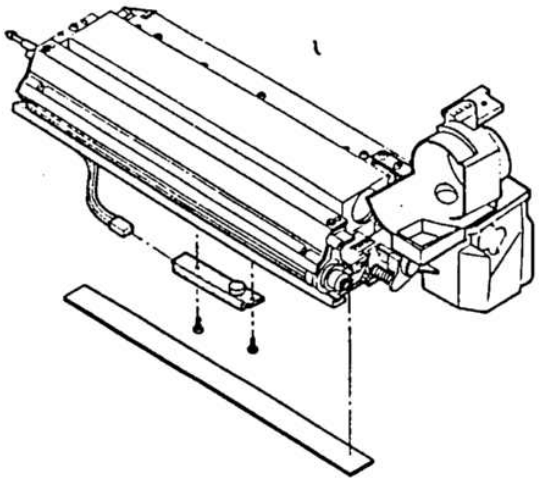

8. Operation panel section/medium cabinet

① Open the front cabinet.

② Remove three screws Ⓐ and two harnesses from the operation panel.

③ Remove the operation panel unit.

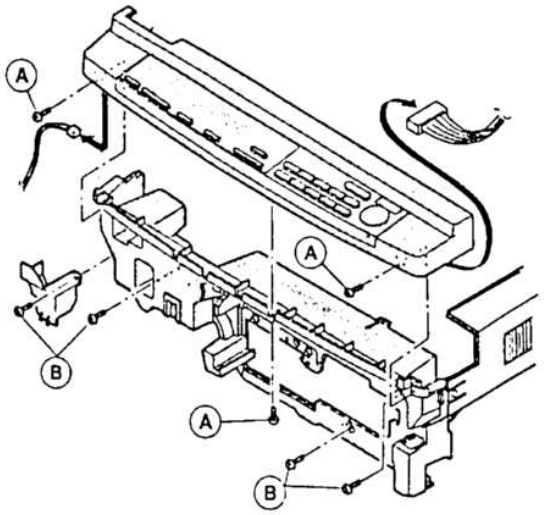

④ When removing the medium cabinet, first remove the process unit and the developer unit then remove four screws Ⓑ and remove the medium cabinet.

9. Major parts in the frame side

9-1. Ozone filter

① Remove the document glass.

② Remove the black sheet and remove the ozone filter.

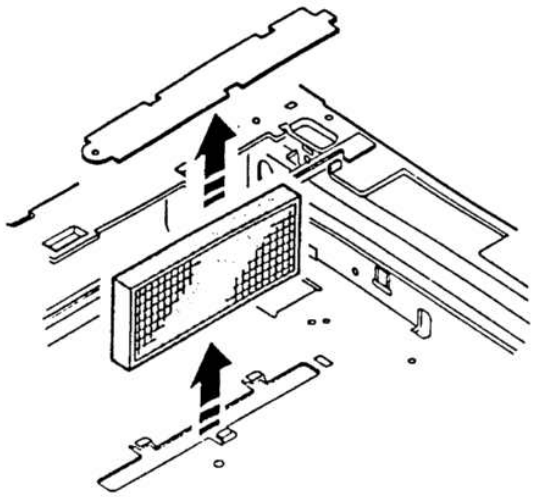

9-2. Optical unit/SPF unit cooling fan removal

① Remove the rear cabinet.

② Remove as shown below.

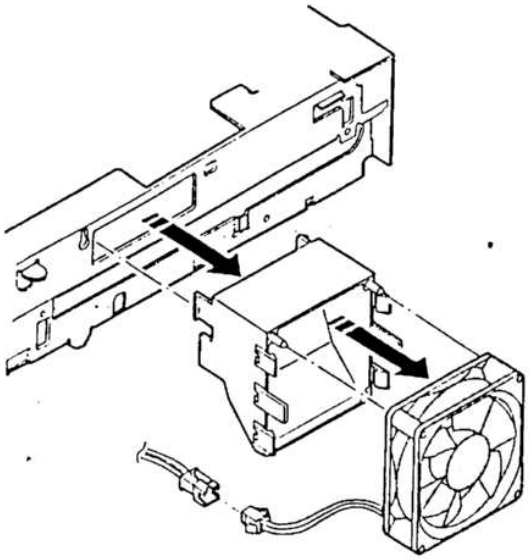

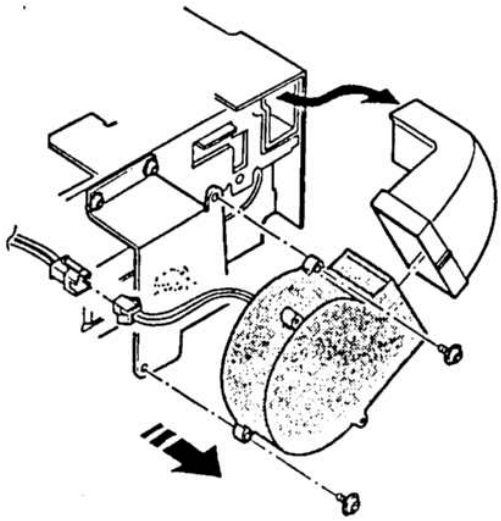

9-3. Ventilation fan motor

① Remove the optical unit. (For details, refer to "4. Optical unit removal.")

② As shown in the figure below, remove the ventilation fan motor.

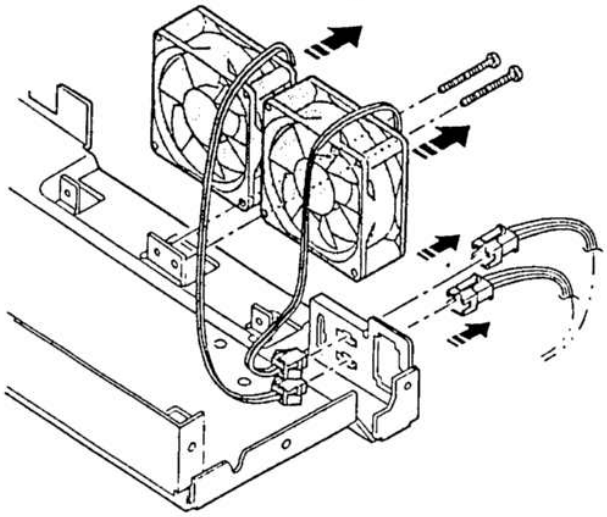

9-4. Transport roller clutch

① Remove the rear cabinet.

② Remove the transport clutch as shown in the figure below.

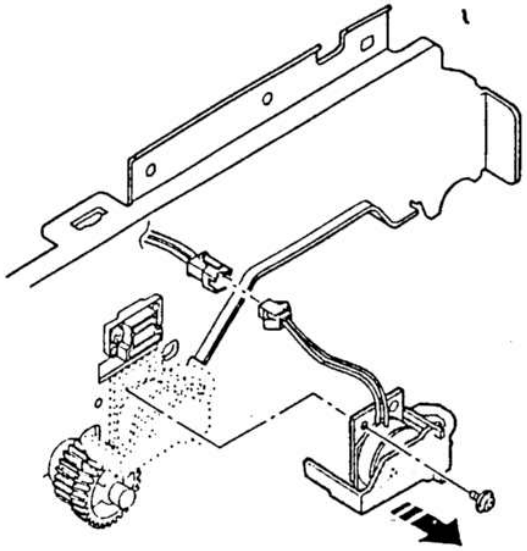

9-5. Paper exit sensor

① Open the front panel.

② Move the open/close lever to the right and open the upper unit slowly.

③ Remove the sensor as shown in the figure below.

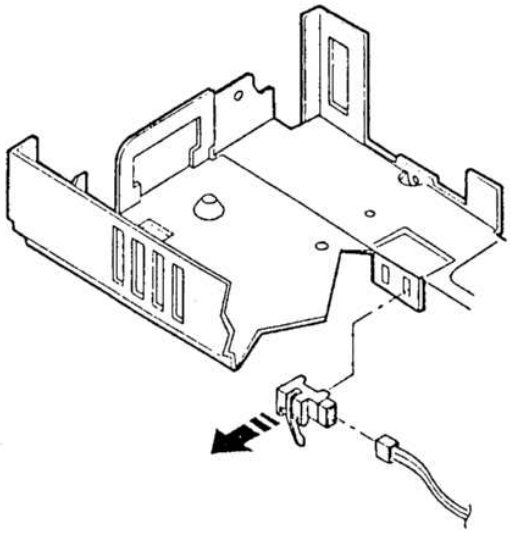

[7] ADJUSTMENTS

The descriptions of this chapter are divided into the following sections:

1. Developer section

(1) MG roller main pole position adjustment

(2) Adjustment of clearance between DV doctor and MG roller

2. Optical section

(1) Lens unit angle adjustment

(2) Mirror unit angle/position adjustment

(3) Image distortion adjustment

(4) Copy image center position adjustment

(5) Focus adjustment

(6) Copy magnification ratio adjustment

(7) Uniformity adjustment

(8) Image loss/void area adjustment

3. Copy density adjustment

(1) Copy Density adjustment timing

(2) Note for copy density adjustment

(3) Necessary thing for copy density adjustment

(4) Copy density adjustment mode

(5) Copy density adjustment procedure

(6) Copy density adjustment table

4. Others

(1) Transfer charger wire installation

(2) DV bias adjustment

(3) Separation charger output adjustment

1. Developer section

(1) MG roller main pole position adjustment

If the MG roller main pole position is improper, the following troubles may occur:

- Insufficient copy density
- Toner splash

① Remove the DV unit from the body and remove the DV cover.

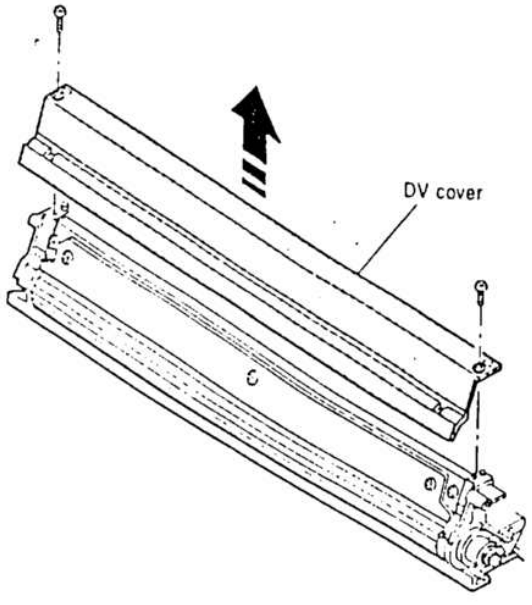

② Tie a string to a needle as shown in the figure below.

③ Hold the string and move the needle to the MG roller.

④ Mark the point where the needle makes contact with the MG roller.

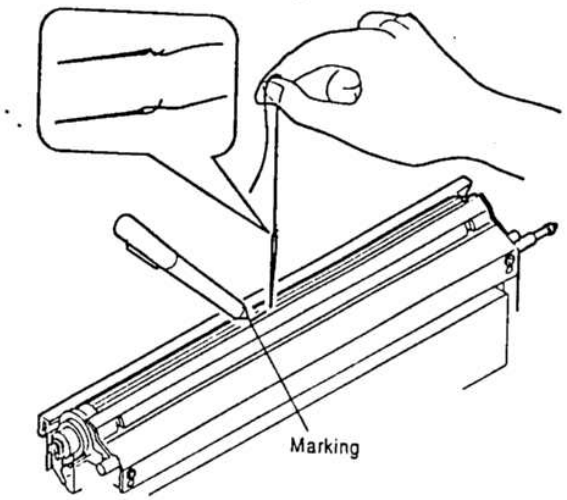

⑤ Measure the distance between the marking and the developer unit bottom Ⓐ and check that the distance is within 15.1mm. If the measured distance is outside the range, loosen the MG adjustment plate fixing screw, and move the adjustment plate in the arrow direction to perform procedures ③ to ⑤ again.

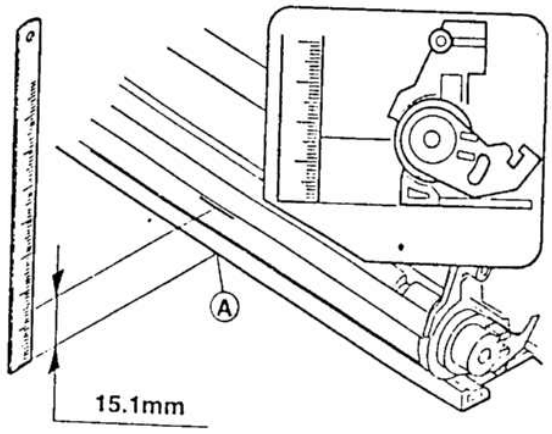

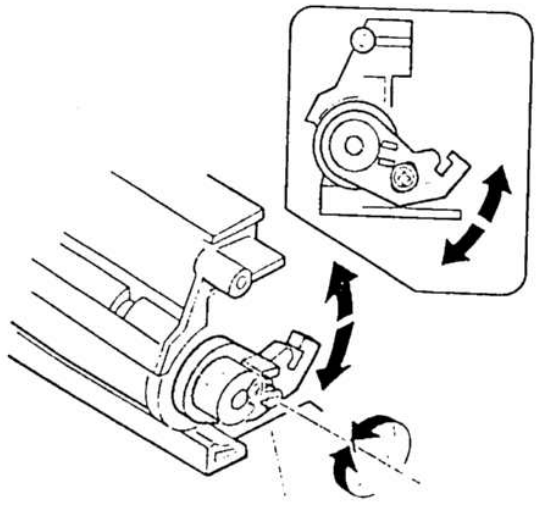

⑥ Tighten the MG adjustment plate fixing screw.

(2) Adjustment of clearance between DV doctor and MG roller

If the clearance between the DV doctor and the MG roller is improper, the following troubles may occur:

- Insufficient copy density
- Copy dirt
- Toner splash

① Remove the DV cover.

② Loosen the DV doctor fixing screw.

③ Insert a 0.6mm thickness gauge into the clearance between the MG roller and the DV doctor in the range of 30mm width under the DV doctor fixing screw.

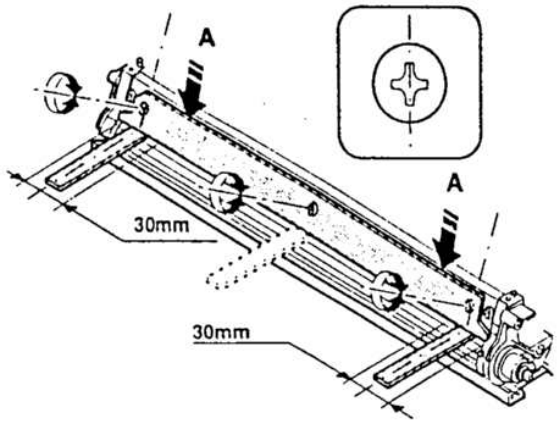

④ Press the DV doctor in the arrow direction and tighten the DV doctor fixing screw.

⑤ Check that the clearance of the DV doctor is 0.6 ±0.03mm in the range of 30mm width under the DV doctor fixing screw.

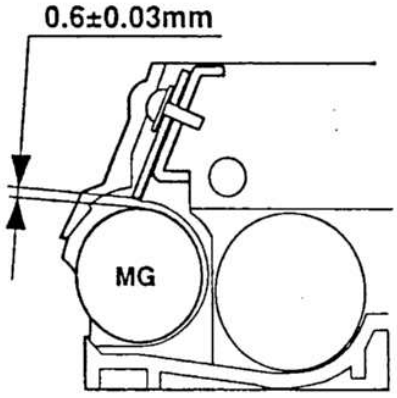

Note: When adjusting, be careful not to scratch the DV doctor.

2. Optical section

A. Adjustments list

Classification	No.	Adjustment content			Adjustment value/Standard value	Necessary special tool	Ref. page
Parts installation position	(1)	Lens	a	Lens unit right angle adjustment	—	—	7-6
	(2)	Mirror	a	No.4/5 mirror unit right angle adjustment	—	—	7-7
			b	No. 4/5 mirror unit drive cam position adjustment	—	—	7-8
Copy picture quality	(3)	Picture image distortion	a	Horizontal image distortion adjustment	—	—	7-11
			b	Vertical image distortion adjustment	—	—	7-12
	(4)	Copy image center position adjustment			0 ±1.5 mm	—	7-13
	(5)	Focus adjustment (Resolution adjustment)			*	—	7-13
	(6)	Copy magnification ratio adjustment	a	Vertical copy magnification ratio adjustment (normal copy)	100 ±0.8%	—	7-14
			b	Vertical copy magnification ratio adjustment (zoom copy)	100 ±0.9%	—	7-15
			c	Horizontal copy magnification ratio adjustment (zoom copy)	100 ±0.8%	—	7-15
	(7)	Uniformity adjustment			—	—	7-17
	(8)	Image loss, void area adjustment	a	Copy image position adjustment (SF-2014/2114)	*	—	7-18
			b	Copy image position adjustment (SF-2214)	*	—	7-20
			c	Void area adjustment	0 3 mm	—	7-21

* For details, refer to the Ref. page.

B. Notes

When performing the adjustment, observe the following notes:

1) Observe the sequence of procedures shown in the flowchart below.
2) Adjustment can be started midway in the flowchart only if all the previous items have been properly adjusted.
3) If the content of an adjustment item in the flowchart is changed, all the following items must be adjusted accordingly.
   Any adjustment item is based on the previous adjustment items and relates to the following adjustment items.
4) "Sim" in the flowchart stands for "Simulation."

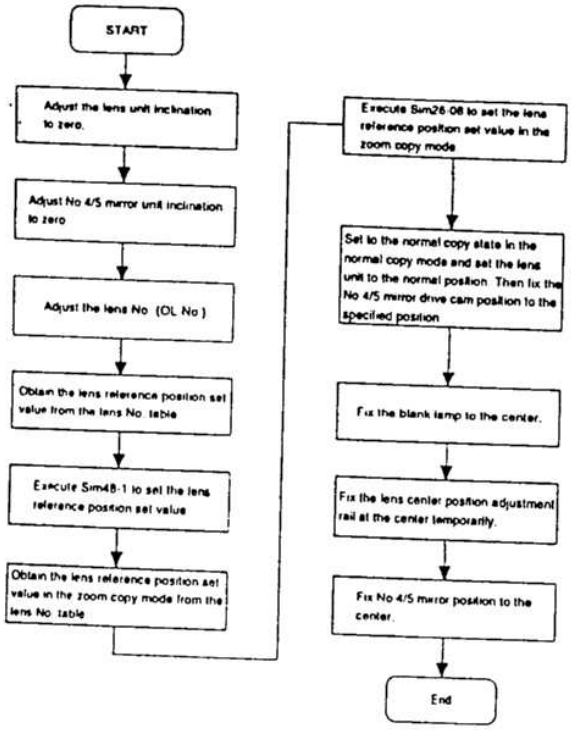

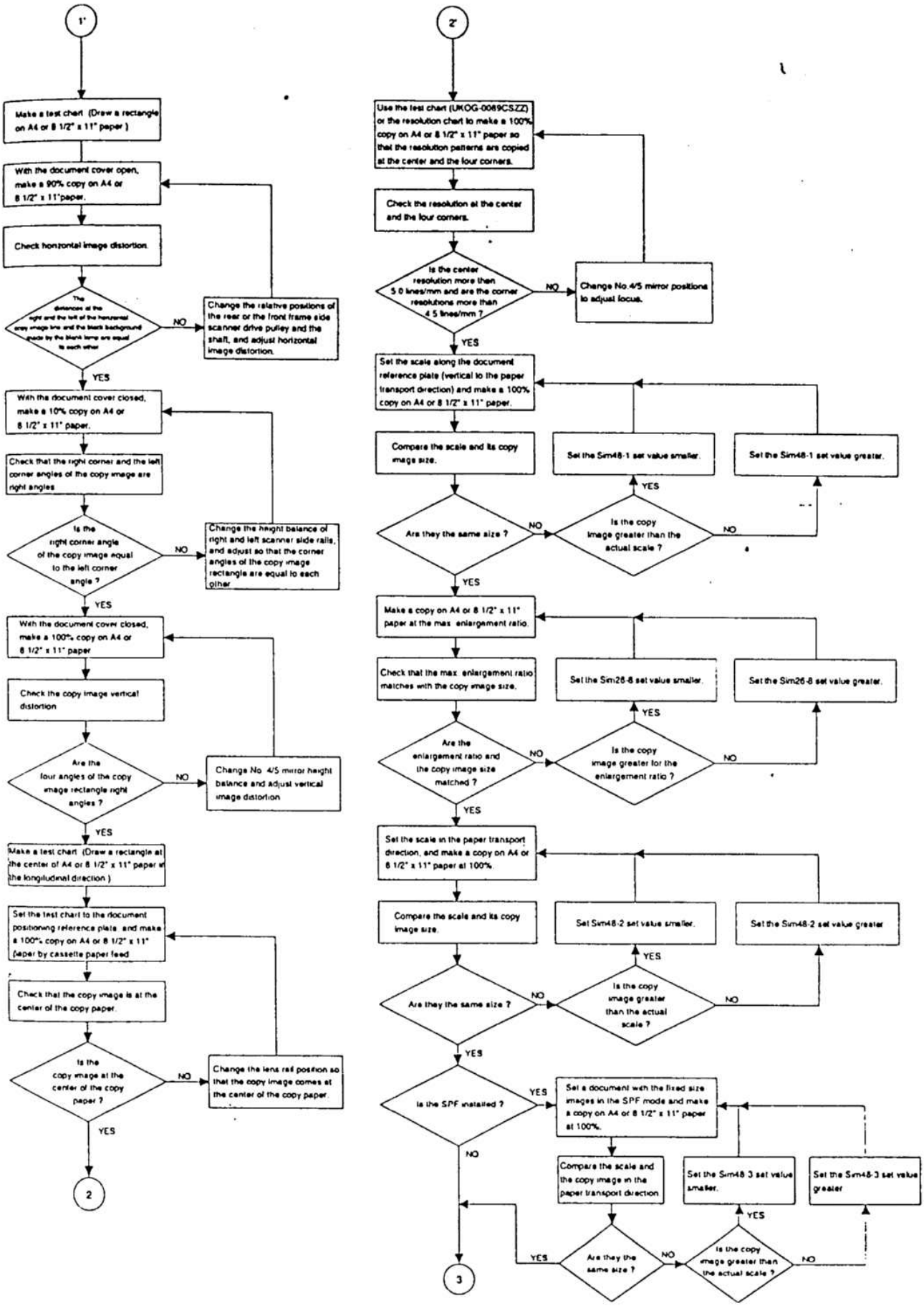
1'
Make a test chart (Draw a rectangle on A4 or 8 1/2" x 11" paper.)
With the document cover open, make a 90% copy on A4 or 8 1/2" x 11" paper.
Check horizontal image distortion.
The distances at the right and the left of the horizontal scan image line and the black background made by the blank lamp are equal to each other
NO
Change the relative positions of the rear or the front frame side scanner drive pulley and the shaft, and adjust horizontal image distortion.
YES
With the document cover closed, make a 10% copy on A4 or 8 1/2" x 11" paper.
Check that the right corner and the left corner angles of the copy image are right angles.
Is the right corner angle of the copy image equal to the left corner angle ?
NO
Change the height balance of right and left scanner slide rails, and adjust so that the corner angles of the copy image rectangle are equal to each other.
YES
With the document cover closed, make a 100% copy on A4 or 8 1/2" x 11" paper.
Check the copy image vertical distortion.
Are the four angles of the copy image rectangle right angles ?
NO
Change No. 4/5 mirror height balance and adjust vertical image distortion.
YES
Make a test chart (Draw a rectangle at the center of A4 or 8 1/2" x 11" paper in the longitudinal direction.)
Set the test chart to the document positioning reference plate, and make a 100% copy on A4 or 8 1/2" x 11" paper by cassette paper feed.
Check that the copy image is at the center of the copy paper.
Is the copy image at the center of the copy paper ?
NO
Change the lens rail position so that the copy image comes at the center of the copy paper.
YES
2
2'
Use the test chart (UKOG-0069CSZZ) or the resolution chart to make a 100% copy on A4 or 8 1/2" x 11" paper so that the resolution patterns are copied at the center and the four corners.
Check the resolution at the center and the four corners.
Is the center resolution more than 5.0 lines/mm and are the corner resolutions more than 4.5 lines/mm ?
NO
Change No.4/5 mirror positions to adjust focus.
YES
Set the scale along the document reference plate (vertical to the paper transport direction) and make a 100% copy on A4 or 8 1/2" x 11" paper.
Compare the scale and its copy image size.
Set the Sim48-1 set value smaller.
Set the Sim48-1 set value greater.
Are they the same size ?
NO
Is the copy image greater than the actual scale ?
NO
YES
YES
Make a copy on A4 or 8 1/2" x 11" paper at the max. enlargement ratio.
Check that the max. enlargement ratio matches with the copy image size.
Set the Sim26-8 set value smaller.
Set the Sim26-8 set value greater.
Are the enlargement ratio and the copy image size matched ?
NO
Is the copy image greater for the enlargement ratio ?
NO
YES
YES
Set the scale in the paper transport direction, and make a copy on A4 or 8 1/2" x 11" paper at 100%.
Compare the scale and its copy image size.
Set Sim48-2 set value smaller.
Set the Sim48-2 set value greater.
Are they the same size ?
NO
Is the copy image greater than the actual scale ?
NO
YES
YES
Is the SPF installed ?
YES
Set a document with the fixed size images in the SPF mode and make a copy on A4 or 8 1/2" x 11" paper at 100%.
NO
Compare the scale and the copy image in the paper transport direction.
Set the Sim48-3 set value smaller.
Set the Sim48-3 set value greater.
YES
Are they the same size ?
NO
Is the copy image greater than the actual scale ?
NO
YES
3

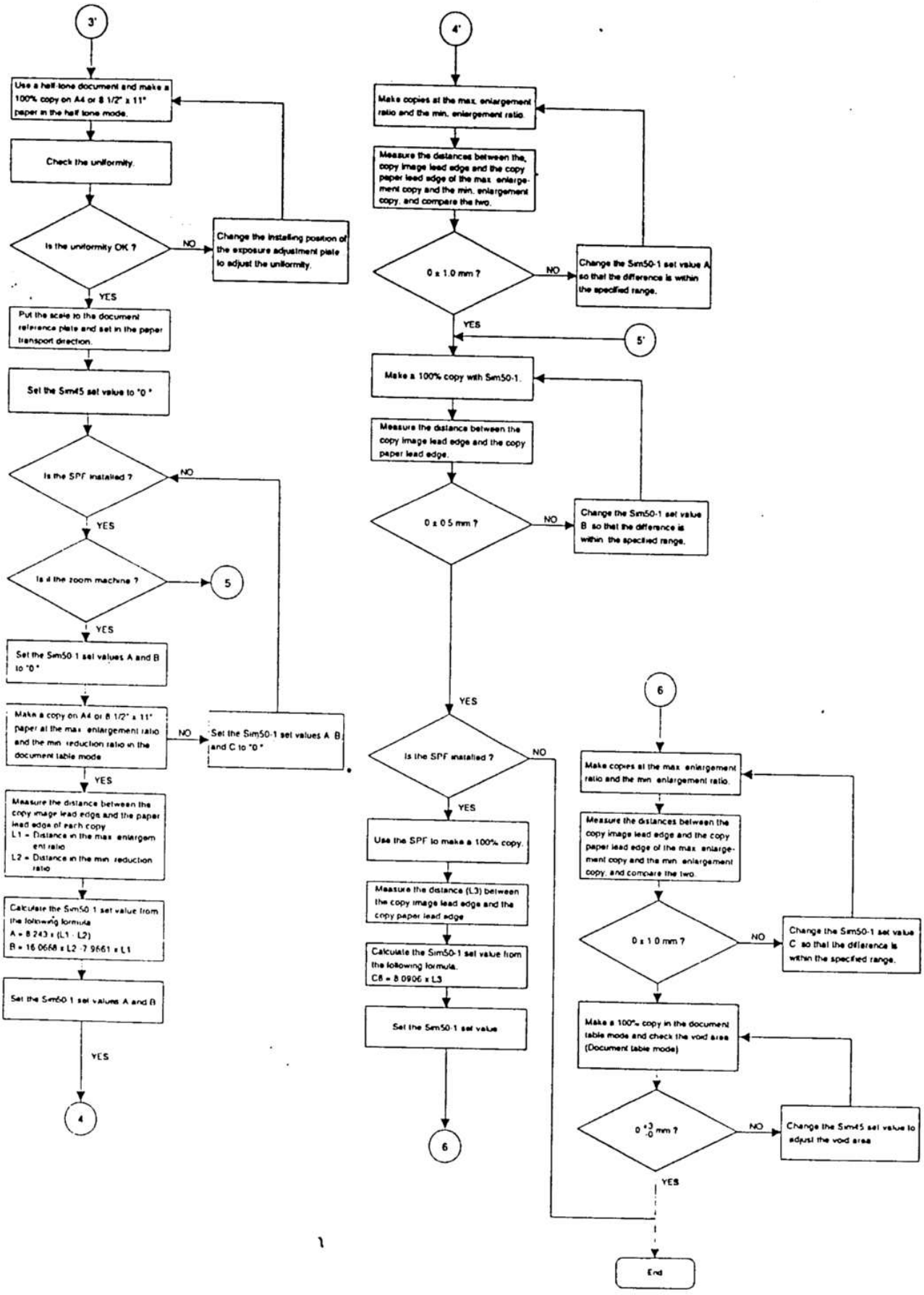
3'
Use a half-tone document and make a 100% copy on A4 or 8 1/2" x 11" paper in the half tone mode.
Check the uniformity.
Is the uniformity OK ?
NO
Change the installing position of the exposure adjustment plate to adjust the uniformity.
YES
Put the scale to the document reference plate and set in the paper transport direction.
Set the Sm45 set value to "0".
Is the SPF installed ?
NO
YES
Is it the zoom machine ?
5
YES
Set the Sm50-1 set values A and B to "0".
Make a copy on A4 or 8 1/2" x 11" paper at the max. enlargement ratio and the min. reduction ratio in the document table mode
NO
Set the Sm50-1 set values A, B and C to "0".
YES
Measure the distance between the copy image lead edge and the paper lead edge of each copy.
L1 = Distance in the max. enlargement ratio
L2 = Distance in the min. reduction ratio
Calculate the Sm50-1 set value from the following formula.
A = 8.243 x (L1 - L2)
B = 16.0668 x L2 - 7.9661 x L1
Set the Sm50-1 set values A and B
YES
4
4'
Make copies at the max. enlargement ratio and the min. enlargement ratio.
Measure the distances between the copy image lead edge and the copy paper lead edge of the max. enlargement copy and the min. enlargement copy, and compare the two.
0 ± 1.0 mm ?
NO
Change the Sm50-1 set value A so that the difference is within the specified range.
YES
5'
Make a 100% copy with Sm50-1.
Measure the distance between the copy image lead edge and the copy paper lead edge.
0 ± 0.5 mm ?
NO
Change the Sm50-1 set value B so that the difference is within the specified range.
YES
Is the SPF installed ?
NO
YES
Use the SPF to make a 100% copy.
Measure the distance (L3) between the copy image lead edge and the copy paper lead edge
Calculate the Sm50-1 set value from the following formula.
C = 8.0906 x L3
Set the Sm50-1 set value
6
6
Make copies at the max. enlargement ratio and the min. enlargement ratio.
Measure the distances between the copy image lead edge and the copy paper lead edge of the max. enlargement copy and the min. enlargement copy, and compare the two.
0 ± 1.0 mm ?
NO
Change the Sm50-1 set value C so that the difference is within the specified range.
Make a 100% copy in the document table mode and check the void area (Document table mode)
0 +3 -0 mm ?
NO
Change the Sm45 set value to adjust the void area
YES
End

C. Adjustment contents

(1) Lens

a. Lens unit right angle adjustment

I. Summary

By setting the optical axis of the copier body and that of the lens in parallel with each other, copy image distortion due to the lens can be reduced.

The horizontal angle of the lens unit slide shaft is changed by changing the position of the lens unit slide shaft fixing plate.

This adjustment is performed not by checking a copy image, but by visual measurement with the mark on the optical unit base as the reference.

The copy image distortion must be adjusted not only in this adjustment but also in the mirror parallelism adjustment.

II. Purpose

The purpose of this adjustment is to reduce copy image distortion due to the lens by setting the optical axis of the copier body and the optical axis of the lens in parallel with each other.

III. Note

The copy image distortion adjustment is completed by making a copy and adjusting parallelism of the mirror.

For that purpose, this adjustment must have been properly performed.

IV. Cases when the adjustment is required

1) When the lens or the lens unit is disassembled or its part is replaced.

2) When the copy image is distorted as follows (because of different copy magnification ratios in different sections):

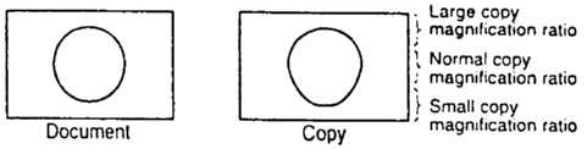

V. Necessary tool

* Screwdriver (+)

VI. Adjustment procedure

1) Remove the right upper side cabinet and the document reference plate.

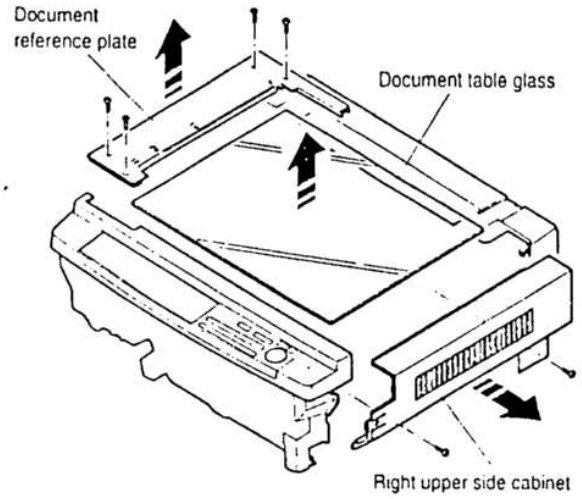

2) Remove the document glass.

3) Remove the optical unit cover.

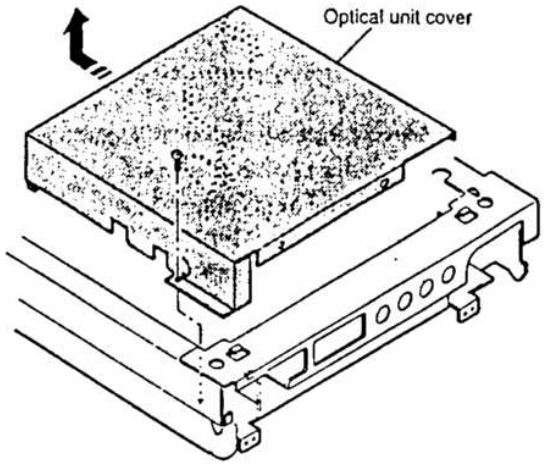

4) Hold section A of the lens unit slide, and move the lens unit side section to the mark on the optical unit base.

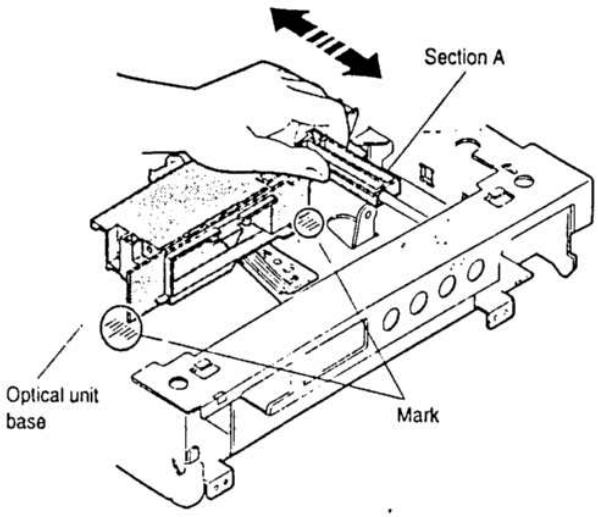

5) Loosen the lens unit slide shaft fixing screw.

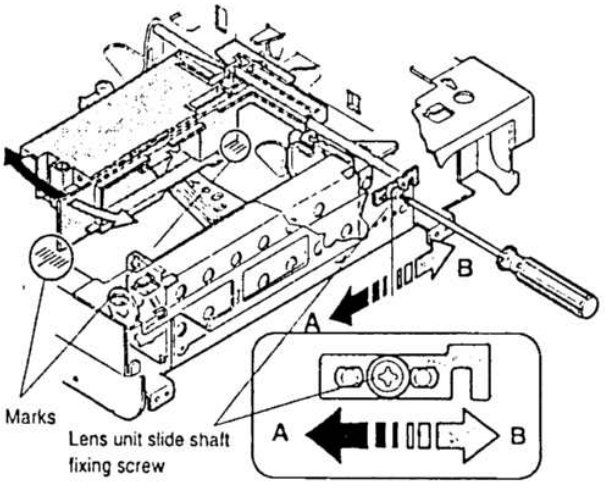

6) Move the lens unit slide shaft fixing plate in directions A and B so that the lens unit side is in parallel with the mark on the optical unit base, and fix it.

For checking parallelism, use the mark on the optical base unit as the reference.

VII. Troubles caused by improper adjustment

(2) Mirror

There are following adjustments of parts installation positions related to the mirror.

- No. 4/5 mirror unit right angle adjustment
- No. 4/5 mirror unit drive cam position adjustment

a. No. 4/5 mirror unit right angle adjustment

I. Summary

Copy image distortion caused by No. 4/5 mirror unit van be reduced by setting the optical axis of the copier and No. 4/5 mirror unit.

The horizontal angle of the lens unit slide shaft is adjusted by changing the position of No. 4/5 mirror nit slide shaft fixing plate.

This adjustment is performed not by checking a copy image but by visual measurement with the optical unit base plate as the reference.

Copy image distortion must be adjusted ont only in this adjustment but also in the No. 1/2 scanner unit parallelism adjustment.

II. Purpose

The purpose of this adjustment is to eliminate copy image distortion by setting the optical axis of the copier and that of the No. 4/5 mirror unit in parallel with each other.

III. Note

The copy image distortion adjustment is completed by making a copy and adjusting the parallelism of No. 1 and No. 2 scanner units.

For that purpose, this adjustment must have been properly performed.

IV. Cases when the adjustment is required

1) When No. 4/5 mirror unit is disassembled or its part is replaced.

2) When the copy image is distorted as follows:

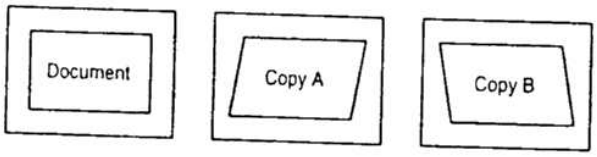

V. Necessary tools:

- Screwdriver (+)
- Scale

VI. Adjustment procedure

1) Remove the right upper side cabinet and the document reference plate.

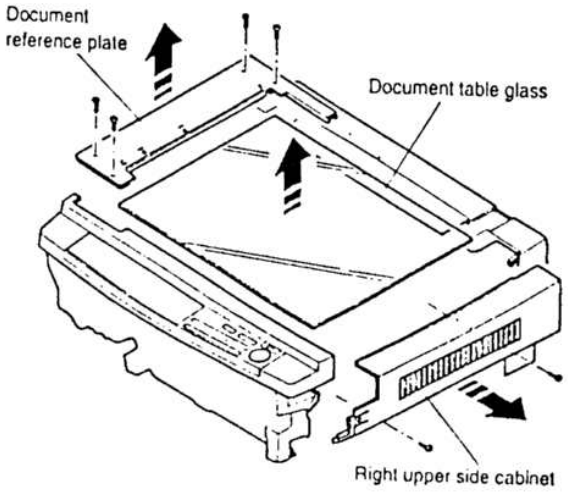

2) Remove the document glass.

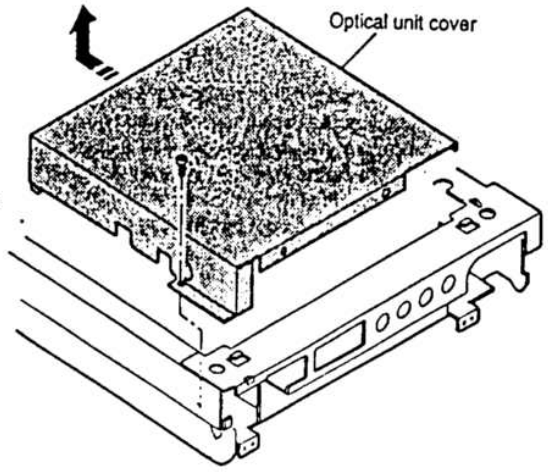

3) Loosen the fixing screw of the No. 4/5 mirror unit slide shaft fixing plate.

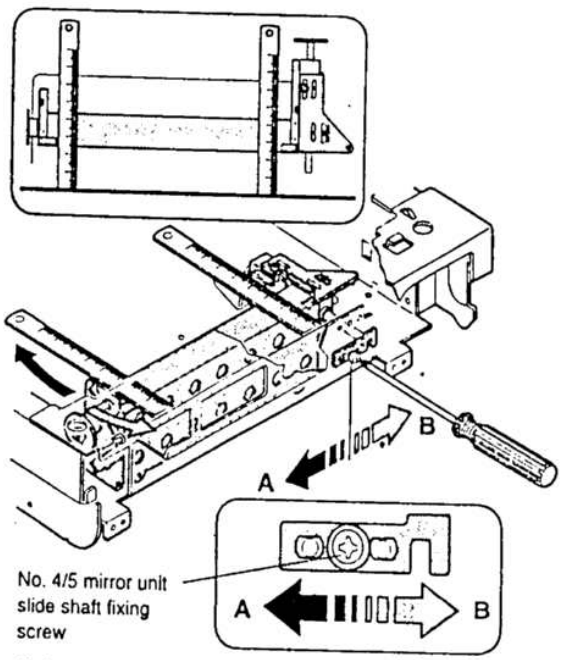

4) Move the No. 4/5 mirror unit slide shaft fixing plate in directions A and B so that the No. 4/5 mirror unit side is in parallel with the optical unit frame side plate, and fix it.
Use a scale to check the parallelism.

VII. Trouble caused by improper adjustment

b. No. 4/5 mirror unit drive cam position adjustment

I. Summary

The copy magnification ratio and focus are properly adjusted by matching the lens unit movement and the No. 4/5 mirror movement.

This adjustment is performed by changing the relative positions of the lens unit drive gear and the No. 4/5 mirror unit drive cam.

II. Purpose

The purpose of this adjustment is to adjust the relative positions of the lens unit drive gear and the No. 4/5 mirror unit drive cam and to adjust the copy magnification ratio and the focus.

III. Note

IV. Cases when the adjustment is required

1) When the lens and the No. 4/5 mirror drive section are disassembled or its part is replaced.
2) When the focus is improper though the copy magnification ratio is proper, or vice versa.

V. Necessary tools

* Screwdriver (+)
* M4 x 20 screw

VI. Adjustment procedure

1) Set the copy magnification ratio to 100%, and set the lens unit to the position for 100% copy magnification ratio.
2) Remove the right side cabinet and the document reference plate.

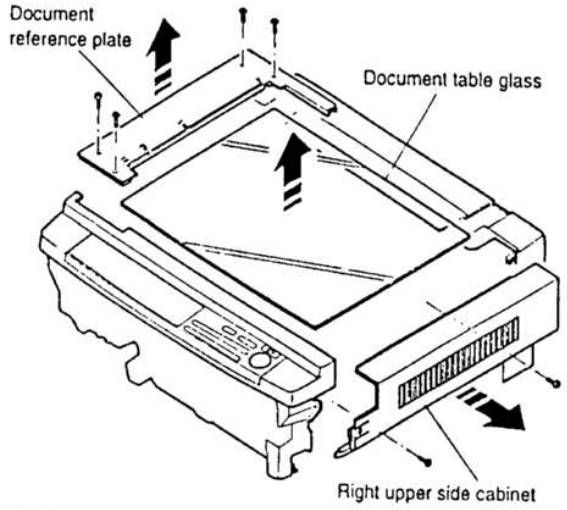

3) Remove the document glass.
4) Remove the optical unit cover.

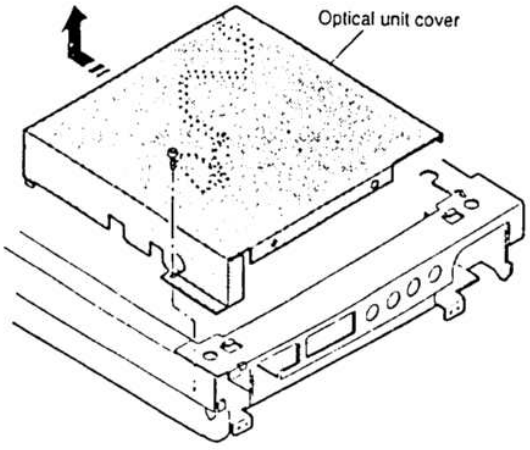

5) Loosen the No. 4/5 mirror unit drive cam fixing screw without moving the lens unit drive gear.

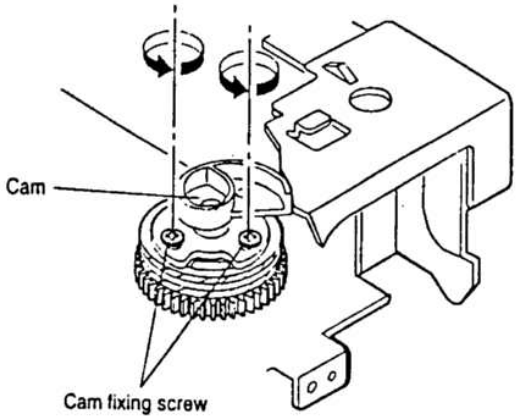

6) Turn the No. 4/5 mirror unit drive cam without moving the lens unit drive gear so that the cam positioning hole is fit with the reference hole in the optical unit frame.

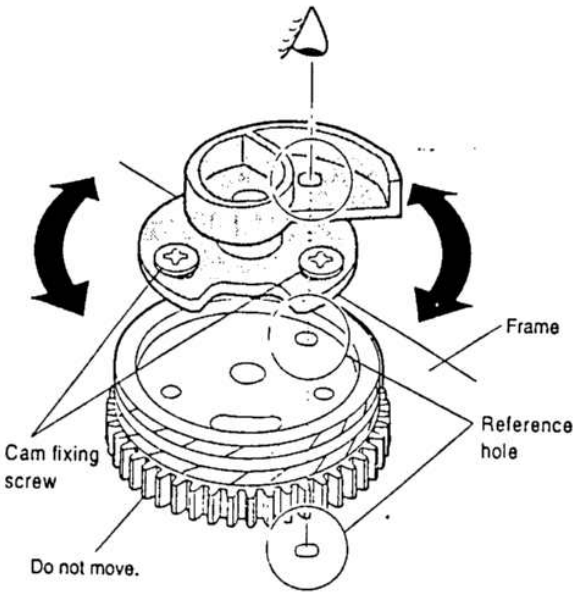

7) Pass the M4 x 20 screw through the No. 4/5 mirror unit drive cam positioning hole and fix the screw to the frame without turning the cam.
8) Tighten the cam fixing screw to fix the No. 4/5 mirror unit drive cam to the lens unit drive gear without moving the lens unit drive gear.
9) Remove the screw which was fixed to the frame in procedure 7).

VII. Troubles caused by improper adjustment

(3) Image distortion adjustment

There are following two types of image distortion.

* Horizontal image distortion
* Vertical image distortion

Image distortion is generated mainly by insufficient parallelism of the mirror and misalignment of the lens optical axis.
In this model, image distortion is adjusted by adjusting parallelism of each mirror.

a. Horizontal image distortion adjustment

I. Summary

This adjustment is to adjust horizontal image distortion by setting the horizontal optical axis of the copier and the horizontal optical axis of each mirror in parallel with each other. The relative posi-

tions of the front frame and the scanner unit drive pulley of the frame are changed to perform the above adjustment.
Install the No. 1 and No. 2 scanner units to the specified positions, adjust the mechanical horizontal parallelism, and perform the final adjustment while making copies.

II. Purpose

The purpose of this adjustment is to reduce horizontal image distortion by setting the horizontal optical axis of the copier and the No. 1 and No. 2 scanner unit horizontal optical axis in parallel with each other.

III. Note

Before starting this adjustment, the following items must have been completed. If not, this adjustment cannot reduce image distortion.

- The lens unit right angle adjustment must have been completed.
- The No. 4/5 mirror unit right angle adjustment must have been completed.

IV. Cases when the adjustment is required

1) When the No. 1 and No. 2 scanner units are disassembled or their part is replaced.
2) When the scanner unit drive section is disassembled or its part is replaced.
3) When the copy image is distorted as shown below:

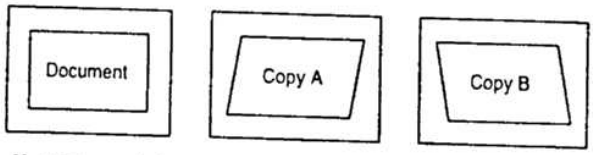

V. Necessary tools

- Screwdriver (+)
- Hex wrench
- Scale
- Test chart for distortion adjustment (Make a chart shown below by yourself.)
  Draw a rectangle on a paper (A4 or 8 1/2" x 11") as shown below.
  Be sure to make four right angles.

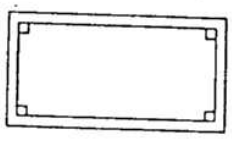

VI. Adjustment procedure

1) Remove the right upper side cabinet and the document reference plate.

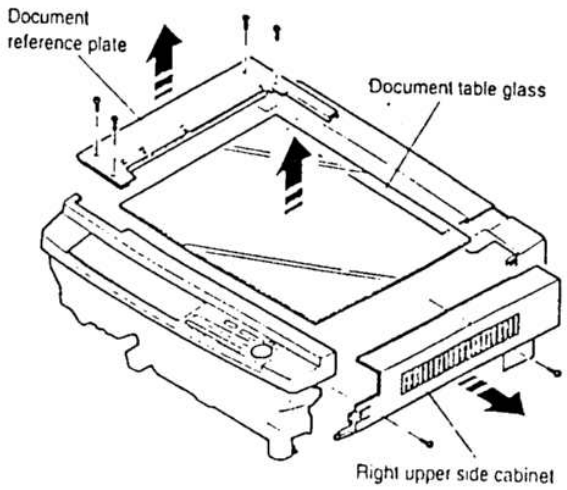

2) Remove the document glass.
3) Loosen the fixing screw of the No. 1 scanner unit wire.

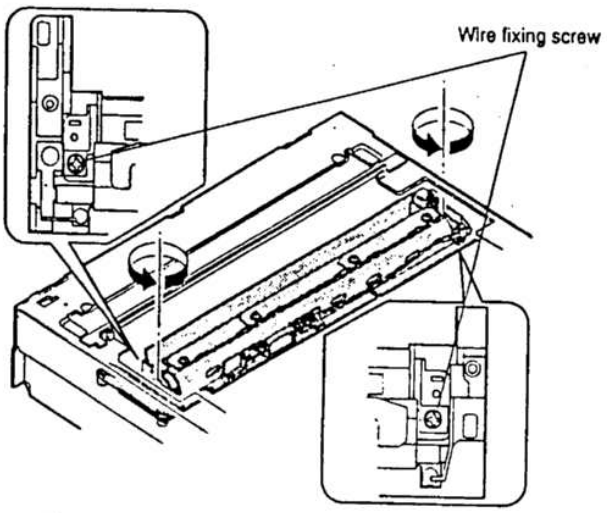

4) Manually turn the scanner unit drive gear to bring No. 2 scanner unit into contact with No. 2 scanner unit positioning plate. When No.2 scanner unit makes contact with No.2 scanner unit positioning plate in the rear frame side simultaneously, the mechanical parallelism of No.2 scanner unit is proper.
   If one side of No.2 scanner unit makes contact with No.2 scanner unit positioning plate and the other side does not, the parallelism is improper.
   If the parallelism is improper, perform the procedure of step 5).

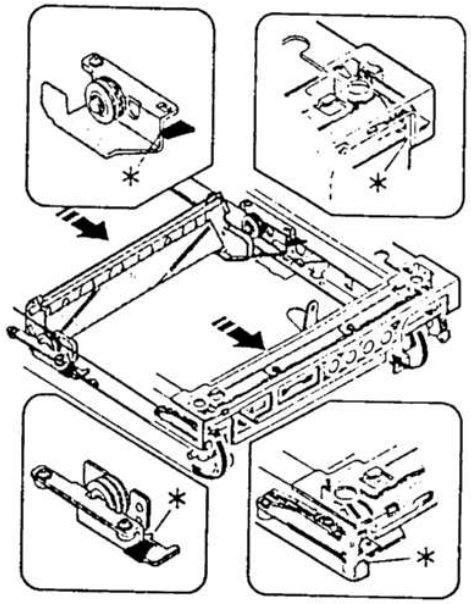

5) Loosen the scanner unit drive pulley setscrew in the side where No.2 scanner unit does not make contact with No.2 scanner unit positioning plate.

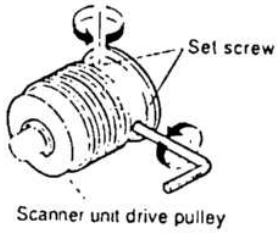

6) Without moving the scanner unit drive pulley shaft, manually turn the scanner nit drive pulley in the same side of the loosened setscrew. When it makes contact with No.2 scanner unit positioning plate, tighten and fix the setscrew.

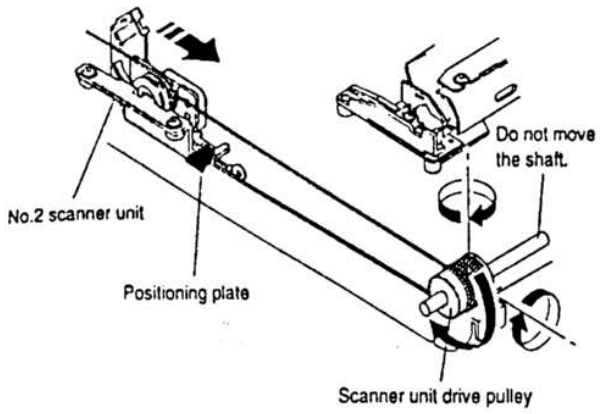

(Note)
Allow a clearance of about 0.5mm between the scanner unit drive pulley and the positioning E-ring.

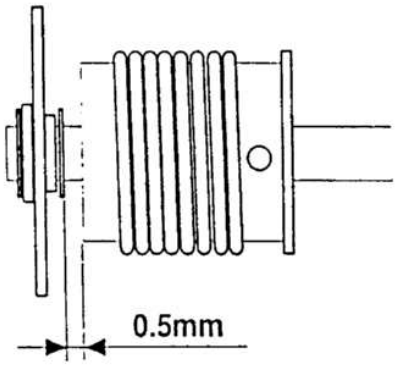

7) Manually turn the scanner unit drive gear to bring No.2 scanner unit into contact with the positioning plate, and perform the procedure of step 4).
Repeat procedures of steps 4) to 7) until the parallelism of No.2 scanner unit is properly set.

8) With No. 2 scanner unit being in contact with No. 2 scanner unit positioning plate, bring No.1 scanner unit into contact with No.1 scanner unit positioning plate, and fix it to the scanner unit drive wire.

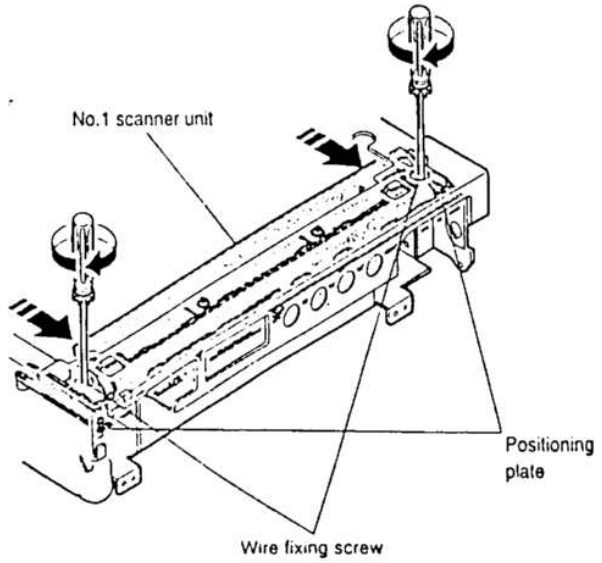

Procedures 1) to 8) are for adjustment of mechanical horizontal parallelism. No.1 scanner unit and No.2 scanner unit are fixed to the specified positions and the mechanical horizontal parallelism of No.2 scanner unit is adjusted. (When No.1 and No.2 scanner units are shifted to the right end, the scanner units are in contact with the four positioning plates.)

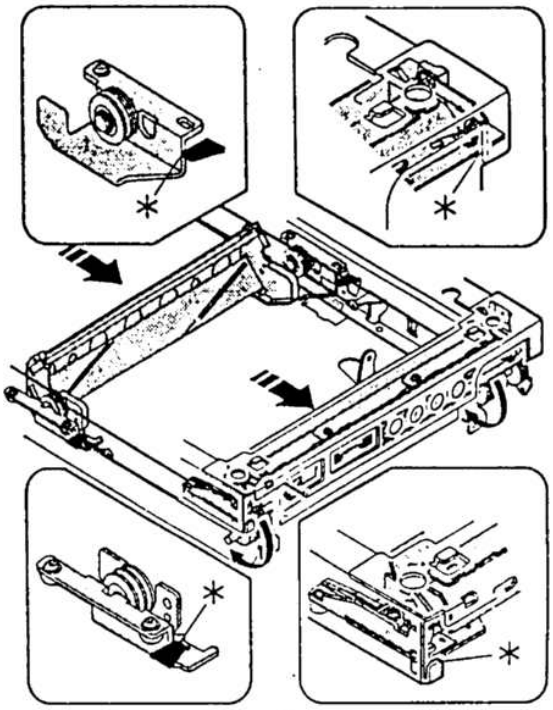

Then the optical horizontal parallelism must be adjusted in the following procedures.

9) Set the image distortion check chart on the document table, and make a reduction copy (90%) on an A3 or 11" x 17" paper with the document cover open.

10) Check the horizontal image distortion.
If LL = LR, there is no horizontal distortion.

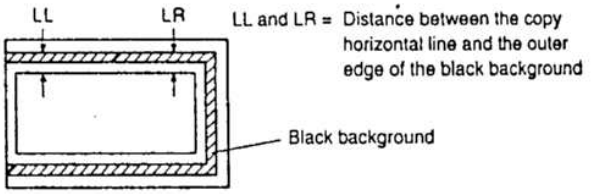

11) If LL is not equal to LR, perform the following procedure.
Loosen the setscrew of the scanner unit drive pulley in the front or the rear frame.

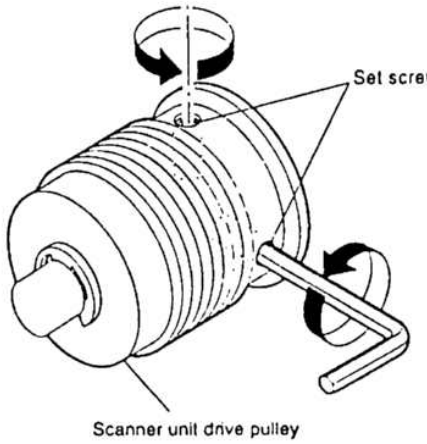

12) Without moving the scanner unit drive pulley shaft, manually turn the scanner unit drive pulley whose setscrew was loosened, and adjust the parallelism of No.1 and No.2 scanner units.

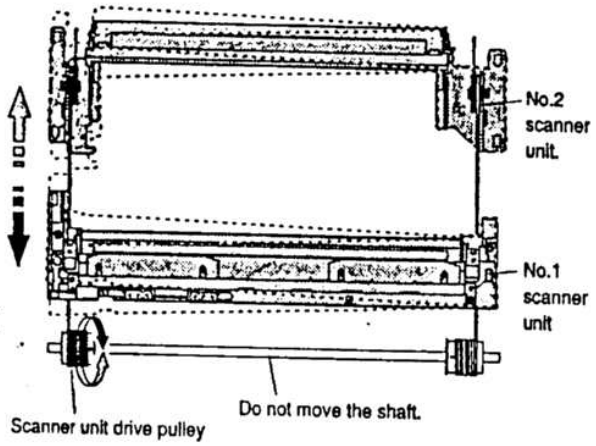

13) Tighten the set screw of the scanner unit drive pulley.

14) Check the image distortion in the same manner as step 10).

Repeat procedures 11) to 14) until horizontal image distortion is eliminated.

VII. Troubles caused by improper adjustment

b. Vertical image distortion adjustment

I. Summary

This adjustment is to adjust parallelism of the vertical optical axis of the copier and that of each mirror to eliminate vertical image distortion.

For adjusting vertical image distortion, the overall adjustment and the right-left balance adjustment must be performed independently.

The overall adjustment is performed by changing the height of No.4/5 mirror unit in the front frame side. The right-left balance adjustment is performed by changing the right-left balance of No.2 scanner unit rail.

The right-left balance adjustment must be performed in advance to the overall adjustment.

II. Purpose

The purpose of this adjustment is to set parallelism of the vertical optical axis of the copier and that of No.4/5 mirror unit and No.2 mirror unit to eliminate vertical image distortion.

III. Note

Before performing this adjustment, the following adjustments must have been completed.

If not, this adjustment cannot be performed properly.

- The lens unit right angle adjustment
- No.4/5 mirror unit right angle adjustment
- Horizontal image distortion adjustment

IV. Cases when the adjustment is required

1) When No.4/5 mirror unit is disassembled or its part is replaced.

2) When the scanner unit drive section is disassembled or its part is replaced.

3) When the copy image is distorted as follows:

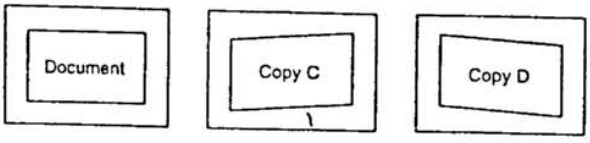

V. Necessary tools

- Screwdriver (+)
- Screwdriver (–)
- Scale

- Test chart for distortion adjustment (Make by yourself.)
  Draw a rectangle on A4 or 8 1/2" x 11" paper as shown below:
  Be sure to make four right angles.

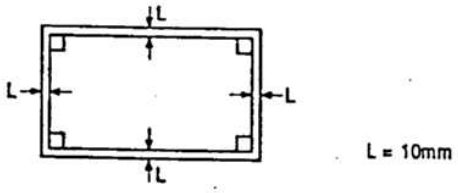

VI. Adjustment procedure

1) Set the test chart for image distortion adjustment on the document glass, and make a normal copy on a paper of A4 or 8 1/2" x 11".

2) Check image distortion in the right and the left sides.
If the both vertical lines are in parallel with each other, the right-left distortion balance is proper. (However, there may be some distortion.)
If all the four angles are right angles, there in no distortio and the following procedures are not required.

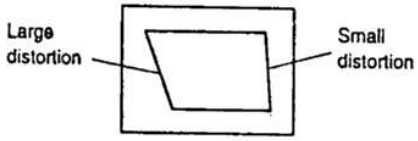

3) If the right-left distortion balance is improper, loosen the fixing screw of No.2 scanner unit rail to change and adjust the right-left balance of No.2 scanner unit rail.
(Note)
This procedure is to have the balance between the right image distortion and the left image distortion, which does not mean to eliminate the image distortion. Change the height of No.2 scanner unit rail in the greater distortion side.
If the distortion in the lead edge side (when viewed in the paper transport direction) is greater, change the height of the left rail of No.2 scanner unit.
If the distortion in the rear edge side (when viewed in the paper transport direction) is greater, change the height of the right rail of No.2 scanner unit.

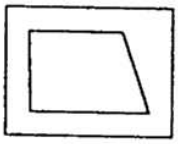
Change the right side height of the rail.

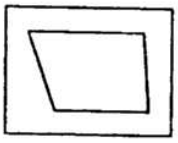
Change the left side height of the rail.

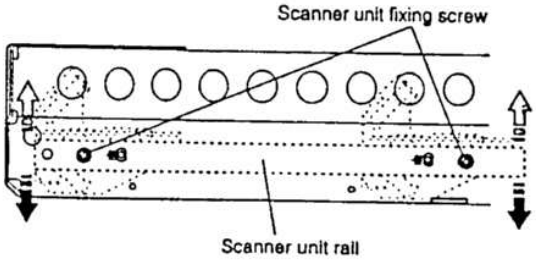

Repeat procedures 2) and 3) until the right-left balance of image distortion is proper.

4) Change the height of the roller in No.4/5 mirror unit front frame side to adjust the vertical image distortion.
If the copy image is tilting as shown in sample (X) below, lower No.4/5 mirror unit. If it is tilting as shown in sample (Y) below, lift No.4/5 mirror unit.

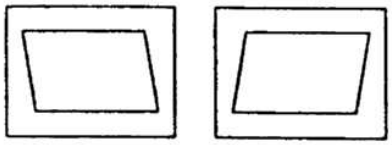

(X) (Y)

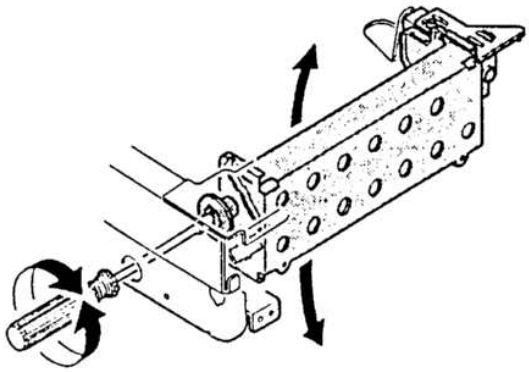

5) Make a copy to check the vertical image distortion.
If the four angles are right angles, the adjustment is completed.

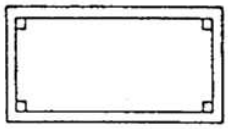

Repeat procedures 4) and 5) until the vertical image distortion is eliminated.
(Note)
If a vertical image distortion is not eliminated with procedure 4), change the overall height of No.2 scanner unit rail. Then repeat procedures 1) to 5).

VII. Troubles caused by improper adjustment

(4) Copy image center position adjustment

I. Summary
The optical axis is changed by changing the lens rail position to optically align the document table and the vertical position of the copy image on the copy paper.
When the lens rail position is changed, the lens position in the front and the rear frame direction is changed to change the optical axis.
As a result, the document table is optically aligned with the copy image on the copy paper.

II. Purpose
The purpose of this adjustment is to set the copy image center at the vertical center of the copy paper.

III. Note
Before performing this adjustment, the following adjustment must have been completed. If not, this adjustment cannot be performed properly.

* Lens unit right angle adjustment
* No.4/5 mirror unit right angle adjustment
* Image distortion adjustment

IV. Cases when the adjustment is required

1) When the lens unit is disassembled or its part is replaced.
2) When the lens rail is disassembled or its part is replaced.
3) When the copy image is shifted from the vertical center of the paper.

V. Necessary tool

* Screwdriver (+)
* Scale
* Test chart for center position adjustment (Make a chart shown below by yourself.)
Draw a line in the paper transport direction at the center of A4 or 8 1/2" x 11" paper.

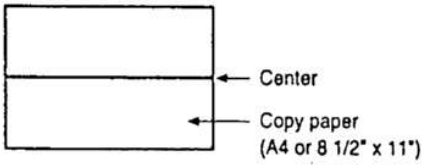

VI. Adjustment procedure

1) Set the test chart for center position adjustment at the document reference position.
2) Make a normal copy (100%) on A4 or 8 1/2" x 11" paper.
3) Check that the image of the line is at the center of the paper. (Standard: 0±1.5mm)

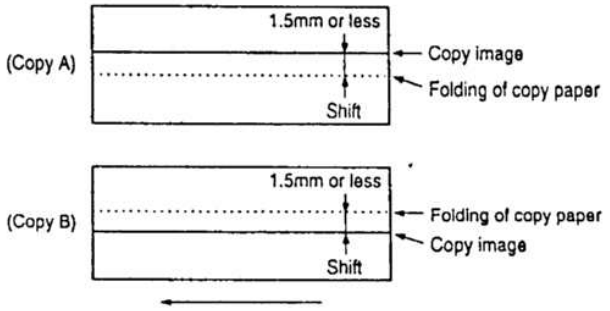

4) If the image of the line is not at the center of the paper, perform the following procedure.
5) Remove the right side cabinet and the document reference plate.

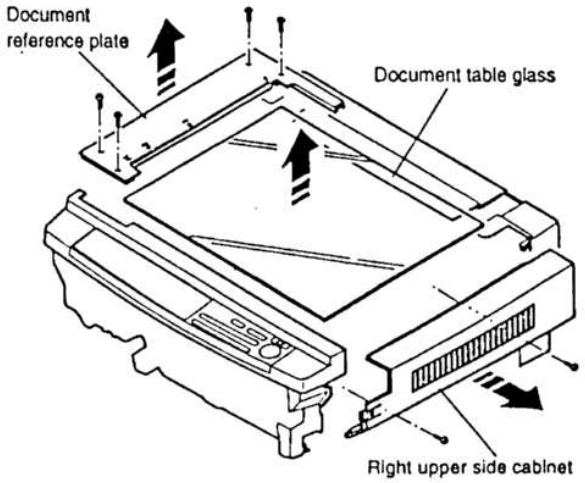

6) Remove the document glass.

7) Remove the optical unit cover.

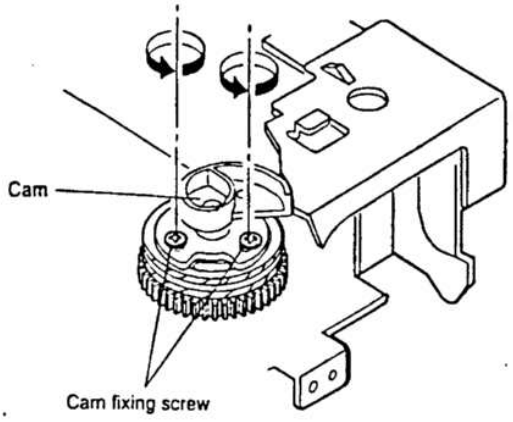

8) Loosen the lens rail fixing screw, and slide the lens rail back and forth.

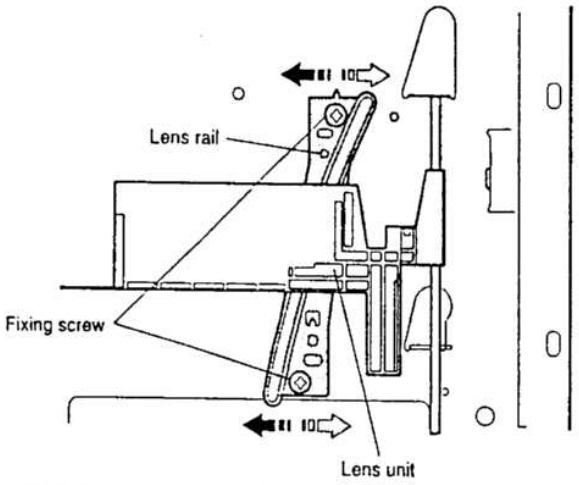

9) Make a copy and check that the image line is at the center of the paper. If not, repeat the procedures 1) to 9) until the image line comes at the center of the paper.

VII. Troubles caused by improper adjustment

(5) Focus adjustment (Resolution adjustment)

I. Summary

The distance between the document and the photoconductor drum is changed by changing No.4/5 mirror unit drive lever position to adjust the focus.

II. Purpose

The purpose of this adjustment is to correct the lens variations and the optical section dimensional variations to have good copy images with a proper focus.

III. Note

Before performing this adjustment, the following adjustment must have been completed. If not, this adjustment cannot be performed properly.

* Image distortion adjustment

IV. Cases when the adjustment is required

1) When the lens or the mirror unit is disassembled or any one of their parts is replaced.

2) When the scanner unit drive section is disassembled or its part is replaced.

3) When a cop image of improper focus is obtained.

V. Necessary tools

* Screwdriver (+)
* Test chart (One with the resolution adjustment chart)

VI. Adjustment procedures

1) Set the test chart on the document table.

2) Make a normal copy (100%) on A4 or 8 1/2" x 11" paper.

3) Check that resolutions at the copy paper center and the four angles are as shown in the table below:

(Standard) (Unit: lines/mm)

	Copy center	Corner
Normal (100%)	5.0	4.5
Enlargement	5.0	4.5
Reduction	4.5	3.6

(Copy)

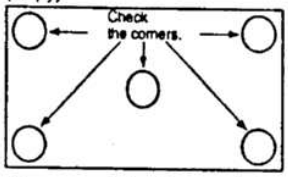

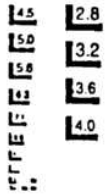

If any resolution is out of the above specifications, perform the following procedures.

4) Remove the right cabinet and the document reference plate.

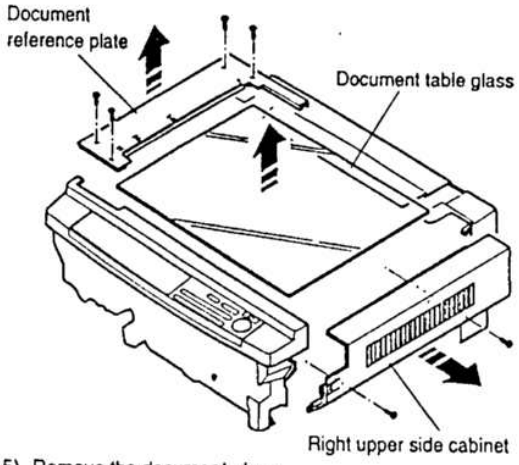

5) Remove the document glass.

6) Remove the optical unit cover.

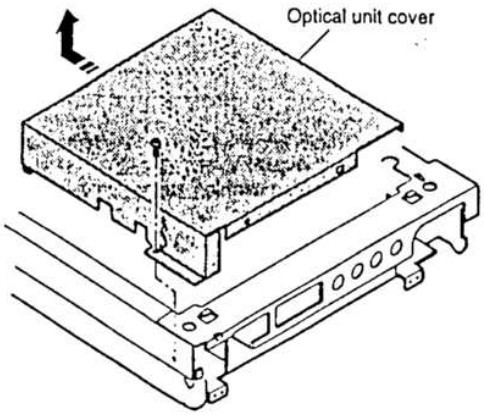

7) Loosen the fixing screw of No.4/5 mirror unit drive lever to change the position of No.4/5 mirror unit drive lever or No.4/5 mirror unit.
In this case, do not shake No.4/5 mirror unit, just change its position.

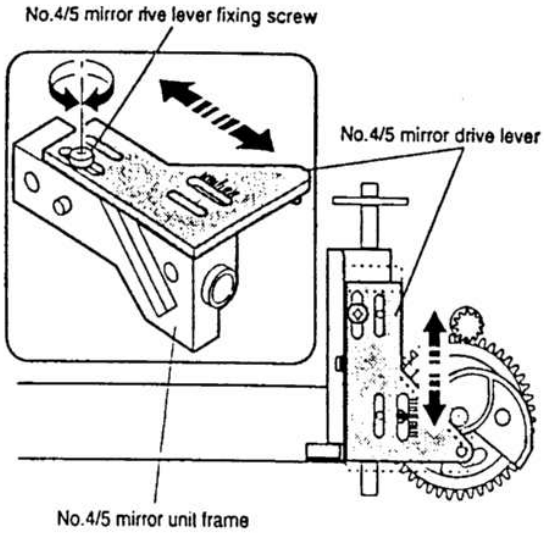

8) Make a copy and check that the resolutions are in the specified range.
If any resolution is out of the specified range, repeat procedures 1) to 8).

VII. Troubles caused by improper adjustment

(6) Copy magnification ratio adjustment

The copy magnification ratio adjustment must be performed in the vertical direction and in the horizontal direction.
In addition, the horizontal copy magnification ratio adjustment must be performed both in the document table mode and in the SPF mode.
Firstly perform the vertical copy magnification ratio adjustment, then perform the horizontal copy magnification ratio adjustment.

a. Vertical copy magnification ratio adjustment (Normal copy)

I. Summary
The vertical copy magnification ratio adjustment must be performed in the normal (100%) copy mode and in the zoom copy mode.
In the normal (100%) copy mode, the lens home position is changed voluntarily with simulations 48-1 to adjust the vertical copy magnification ratio.
In the zoom copy mode, the lens shift ratio is changed with simulations 48-1 according to the lens home position set with simulations 48-1 to adjust the zoom copy magnification ratio.
The vertical copy magnification ratio adjusted in this procedure is used for the horizontal copy magnification ratio adjustment.

II. Purpose
The purpose of this adjustment is to fit the displayed copy magnification ratio with the actual copy image size.

III. Note
Before performing this adjustment, the following adjustments must have been completed. If not, this adjustment cannot be performed properly.
* Image distortion adjustment
* Focus adjustment

Firstly adjust the vertical magnification ratio in the normal (100%) copy mode, then adjust in the zoom copy mode. Never reverse the sequence.
The vertical magnification ratio adjustment in the zoom copy mode must be performed when the vertical magnification ratio in the normal (100%) copy mode is proper but the copy size is not proper in the zoom copy mode.
The vertical magnification ratio adjustment must be performed in advance to the horizontal copy magnification ratio adjustment. Never reverse the sequence. (The horizontal copy magnification ratio is based on the vertical copy magnification ratio.)

IV. Cases when the adjustment is required
1) When the lens and the mirror unit are disassembled or the part is replaced.
2) When the scanner unit drive section is disassembled or the part is replaced.
3) When the main PWB is replaced.
4) When the RAM in the main PWB is replaced.
5) When "U2" trouble occurs.
6) When the position of the lens home position sensor is changed.
7) When the lens home position sensor is replaced.
8) When the copy image distortion adjustment is performed.
9) When the center position of copy image is adjusted.
10) When the focus is adjusted.

V. Necessary tools
* Screwdriver (+)
* Scale

VI. Adjustment procedure
(Normal (100%) copy mode: Vertical copy magnification ratio adjustment)
1) Set the scale vertically on the document table. (Use a long scale for precise adjustment.)

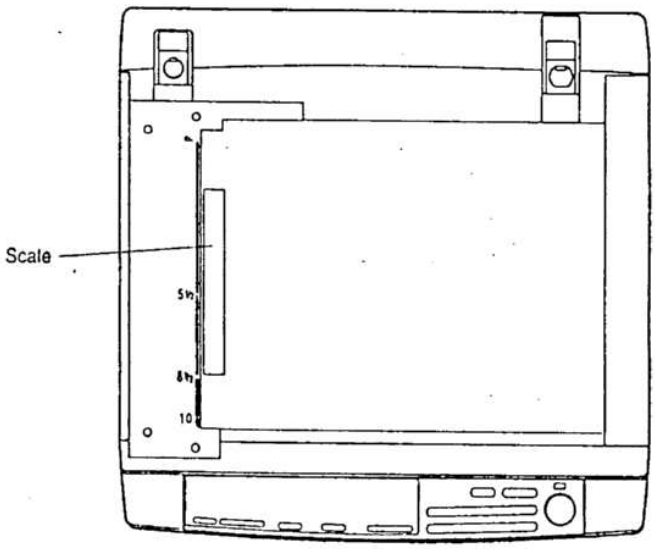

2) Set the copy magnification ratio to 100%.
3) Make a copy on A3 or 11" x 17" paper.
4) Measure the length of the copied scale image.

(When a 100mm scale is used as the original.)

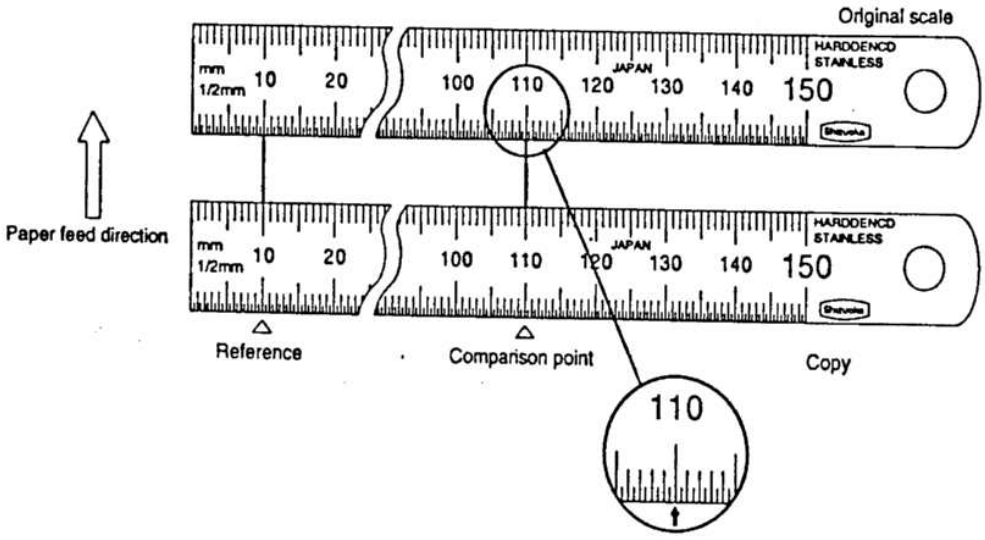

5) Calculate the vertical copy magnification ratio.

Vertical copy magnification ratio = $\frac{\text{Copy image size}}{\text{Original size}}$ x 100 (%)

6) Check that the actual copy magnification ratio is within the specified range (100 ±0.8%).
If it is out of the specified range, perform the following procedures.

7) Execute simulations 48-1. (C → 0 → 0 → C → 48 → CB → 1 → CB)
The set vertical copy magnification ratio will be displayed in the COPIES SELECTED display.

8) Enter a new vertical copy magnification ratio with the numeric key and press PRINT button. The above procedure changes the lens home position and the vertical copy magnification ratio.
When the copy magnification ratio is set to a larger value, the actual copy magnification ratio becomes larger.
When the copy magnification ratio is set to a smaller value, the actual copy magnification ratio becomes smaller.

Repeat procedures 1) to 8) until the vertical copy magnification ratio in the normal (100%) copy mode is within the specified range.

b. Vertical copy magnification ratio adjustment (Zoom copy)

1) Set a scale vertically on the document table as shown below: (Use a long scale for precise adjustment.)

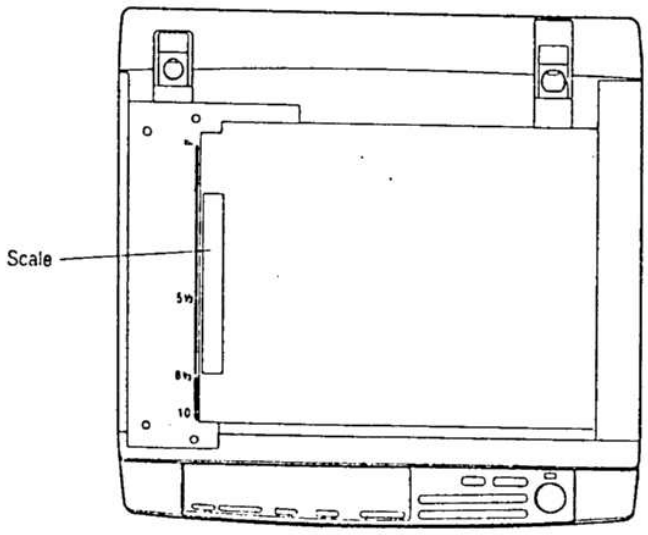

2) Set the copy magnification ratio to the max. level.

3) Make a copy on A4 or 8 1/2" x 11" paper.

4) Measure the length of the copied scale image.

5) Calculate the vertical copy magnification ratio.

Vertical copy magnification ratio = $\frac{\text{Copy image size}}{\text{Original size}}$ x 100 (%)

6) Check that the actual copy magnification ratio is within the specified range (100 ±0.9%).
If it is out of the specified range, perform the following procedures.

7) Execute simulations 26-8. (C → 0 → 0 → C → 26 → CB → 8 → CB)
The set vertical copy magnification ratio in the zoom copy mode will be displayed in the COPIES SELECTED display.

8) Enter a new vertical copy magnification ratio with the numeric key and press PRINT button. The above procedure changes the lens shift ratio and the vertical copy magnification ratio in the zoom copy mode.
When the copy magnification ratio is set to a larger value, the actual copy magnification ratio becomes larger.
When the copy magnification ratio is set to a smaller value, the actual copy magnification ratio becomes smaller.

Repeat procedures 1) to 8) until the vertical copy magnification ratio in the zoom copy mode is within the specified range.

VII. Troubles caused by improper adjustment

c. Horizontal copy magnification ratio adjustment (Zoom copy)

I. Summary

The horizontal copy magnification ratio adjustment must be performed in the document table copy mode and in the SPF copy mode. In the document table copy mode, scanning speed is changed with simulations 48-2 to adjust the horizontal copy magnification ratio.
In the SPF copy mode, document feed speed (SPF motor rotating speed) is changed with simulations 48-3 to adjust the horizontal copy magnification ratio.

II. Purpose

The purpose of this adjustment is to fit the displayed copy magnification ratio with the actual copy magnification ratio.

III. Note

Before performing this adjustment, the following adjustments must have been completed. If not, this adjustment cannot be performed properly.

* Image distortion adjustment
* Focus adjustment
* Vertical copy magnification adjustment

IV. Cases when the adjustment is required

1) When the lens and the mirror unit are disassembled or the part is replaced.
2) When the scanner unit drive section is disassembled or the part is replaced.
3) When the main PWB is replaced.
4) When the RAM in the main PWB is replaced.
5) When "U2" trouble occurs.
6) When the copy image distortion adjustment is performed.
7) When the center position of copy image is adjusted.
8) When the focus is adjusted.

V. Necessary tools

* Screwdriver (+)
* Scale

VI. Adjustment procedure

(Document table copy mode: Vertical copy magnification ratio adjustment)

1) Set the scale horizontally on the document table as shown below. (Use a long scale for precise adjustment.)

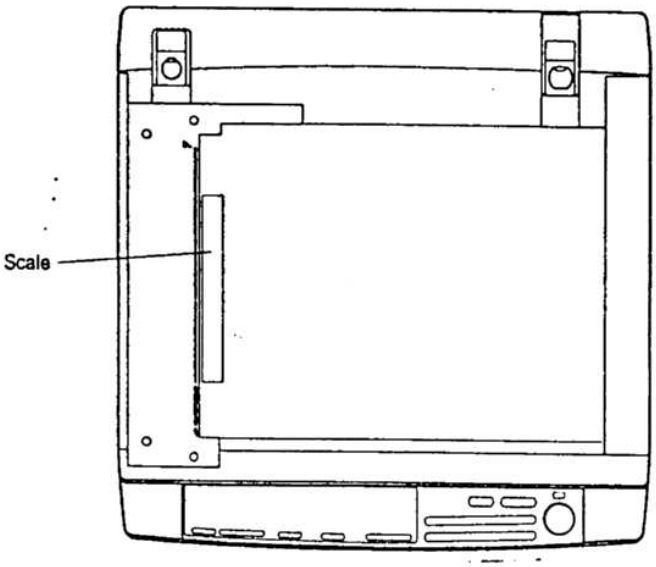

2) Set the copy magnification ratio to 100%.
3) Make a copy on A3 or 11" x 17" paper.
4) Measure the length of the copied scale image.

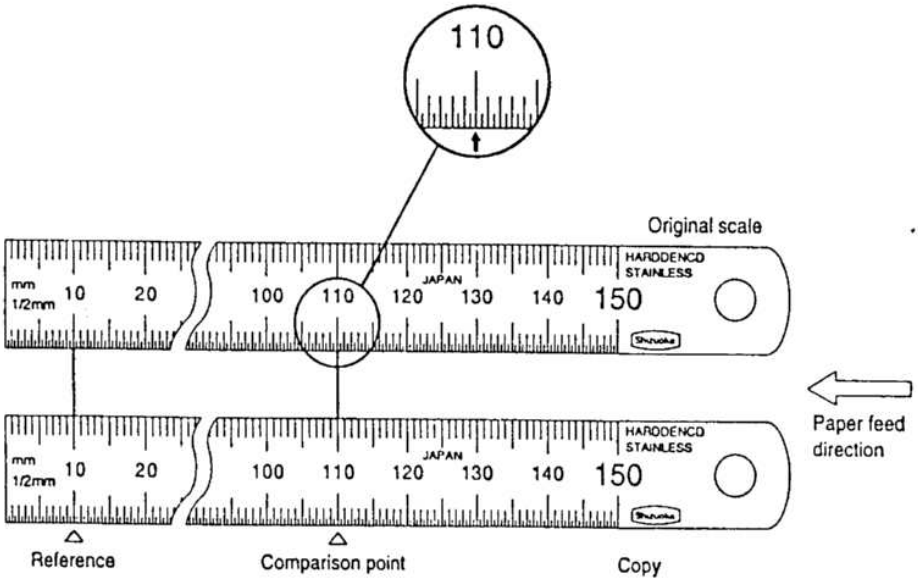

5) Calculate the horizontal copy magnification ratio.

Horizontal copy magnification ratio = $\frac{\text{Copy image size}}{\text{Original size}}$ x 100 (%)

6) Check that the actual copy magnification ratio is within the specified range (100 ±0.8%).
If it is out of the specified range, perform the following procedures.
7) Execute simulations 48-2. (C → 0 → 0 → C → 48 → CB → 2 → CB)
The set horizontal copy magnification ratio will be displayed in the COPIES SELECTED display.
8) Enter a new horizontal copy magnification ratio with the numeric key and press PRINT button. The above procedure changes the lens home position and the horizontal copy magnification ratio.
When the copy magnification ratio is set to a larger value, the actual copy magnification ratio becomes larger.
When the copy magnification ratio is set to a smaller value, the actual copy magnification ratio becomes smaller.

Repeat procedures 1) to 8) until the horizontal copy magnification ratio in the normal (100%) copy mode is within the specified range. (SPF copy mode: Horizontal copy magnification ratio adjustment)

1) Set the copied scale image paper which was made in the horizontal copy magnification ratio adjustment in the document table copy mode so that the scale image is horizontal in the SPF.
   Note that the copy magnification ratio of the copied scale image must be proper.
2) Set the copy magnification ratio to 100%.
3) Make a copy on A4 or 8 1/2" x 11" paper.
4) Measure the length of the copied scale image.

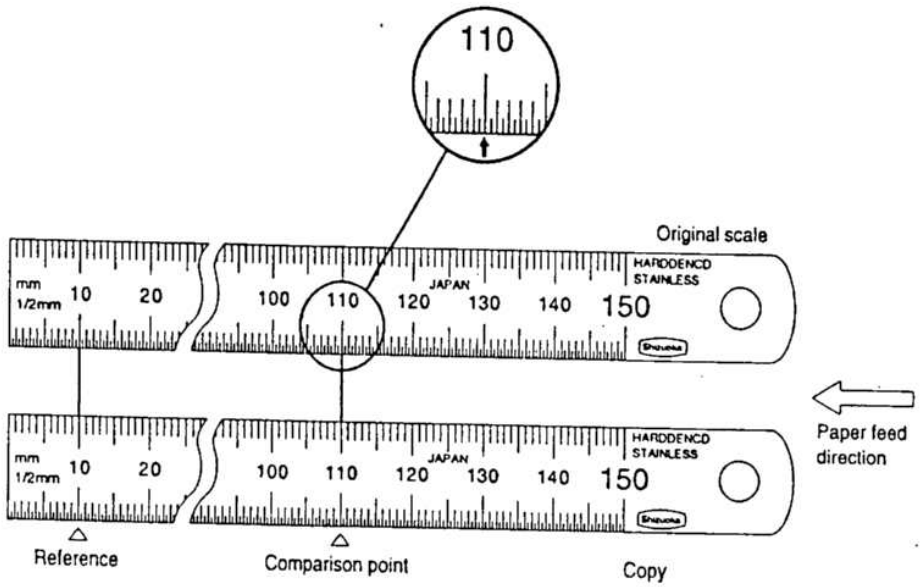

5) Calculate the horizontal copy magnification ratio.
   Horizontal copy magnification ratio = $\frac{\text{Copy image size}}{\text{Original size}}$ x 100 (%)
6) Check that the actual copy magnification ratio is within the specified range (100 ±0.8%).
   If it is out of the specified range, perform the following procedures.
7) Execute simulations 48-2. (C → 0 → 0 → C → 48 → CB → 2 → CB)
   The set horizontal copy magnification ratio in the SPF copy mode will be displayed in the COPIES SELECTED display.
8) Enter a new horizontal copy magnification ratio with the numeric key and press PRINT button. The above procedure changes the document feed speed of the SPF and the horizontal copy magnification ratio.
   When the copy magnification ratio is set to a larger value, the actual copy magnification ratio becomes larger.
   When the copy magnification ratio is set to a smaller value, the actual copy magnification ratio becomes smaller.
   Repeat procedures 1) to 8) until the horizontal copy magnification ratio in the SPF copy mode is within the specified range.

VII. Troubles caused by improper adjustment

(7) Uniformity adjustment

I. Summary
   The uniformity adjustment is performed by changing the exposure plate position attached to No.1 scanner unit.
   The above procedure changes the balance of light quantity radiated onto the document.

II. Purpose
   The purpose of this adjustment is to have uniform copy density.

III. Note
   When this adjustment is performed, the exposure will be changed. Therefore, the copy density adjustment must be performed after this adjustment. Also, this adjustment must be performed always before the copy density adjustment.

IV. Cases when the adjustment is required
   1) When the reflector is replaced.
   2) When the copy lamp is replaced.
   3) When the exposure adjustment plate is disassembled or replaced.
   4) In maintenance

V. Necessary tools
   * Screwdriver (+)
   * A4 or 8 1/2" x 11" paper
   * Half-tone paper of A4 or 8 1/2" x 11" or larger

VI. Adjustment procedure

1) Set a half-tone paper of A4 or 8 1/2" x 11" on the document table.
2) Set the exposure level to the min. level in the photo mode, and make a copy on A4 or 8 1/2" x 11" paper.
3) Check the uniformity. If there is any unevenness, perform the following procedures.
4) Move the exposure adjustment plate of the lighter copy section towards Y or move the exposure adjustment plate of the darker copy section towards X.

(Example)
If a copy shown below is made, move the front frame side of the sub exposure adjustment plate in the direction of X to adjust the exposure balance.

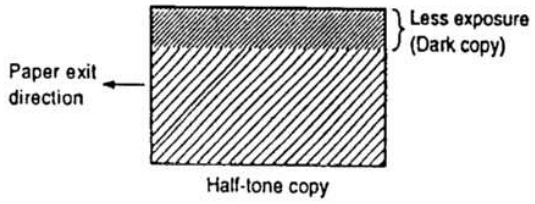

[Fig. 1]

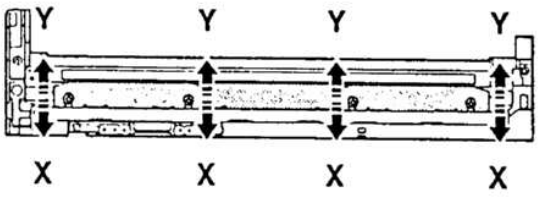

5) Make a copy in the same manner as procedure 2), and check the uniformity.
Repeat procedures 1) to 5) until proper uniformity is obtained.

VII. Troubles caused by improper adjustment

(8) Image loss/void area adjustment

The image loss/void area adjustment is performed by the combination of the copied image position adjustment on the copy paper and the void area adjustment.
Since the image loss and the void area are closely related each other, they must be adjusted simultaneously.
(Definitions of image loss and void area)
Void area: Empty (white) area on a copy paper (without toner on it)
Image loss: The quantity (length) of an image lost on a copy paper.

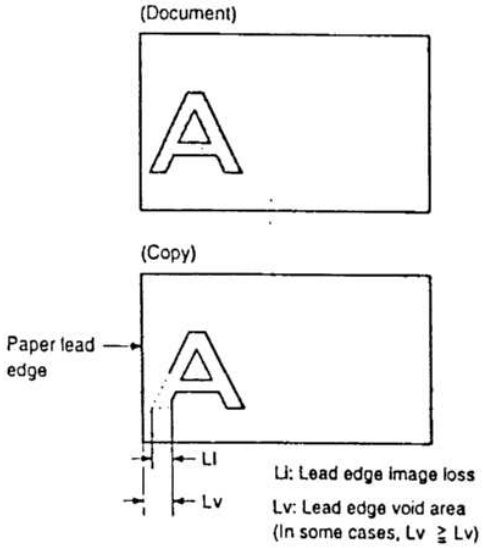

a. Copy image position adjustment (SF-2014/2114)

I. Summary
In order to adjust the copy image position on a copy paper, the lead edge position of an image on the photoconductor for the lead edge position of a document on the document table is changed with simulations 50-1, and the relative position of the paper to the image position on the photoconductor is changed.
In the models which have no zoom copy functions, however, the lead edge position of an image on the photoconductor for the lead edge position of a document on the document table is not changed.
The relative position of the paper is changed at OFF timing of the scanner home position sensor after starting scanning to adjust the copy image position on the paper.
After adjusting the copy image position with the above procedure, the blank lamp OFF timing for the lead edge position of an image on the photoconductor is changed with simulations 45-1 to adjust the void area.

II. Purpose
The purpose od this adjustment is to improve separation in the photoconductor section and in the fuser section and reduce dirt on the fuser section pawl by obtaining the max. effective copy area and the proper void area.

III. Note
If the proper void area is not obtained, the separation ability in the photoconductor section may be degraded and dirt on the fuser section pawl may be increased.
Before performing this adjustment, the following adjustment must have been completed. If not, this adjustment cannot be performed properly.

* Adjustment of paper pressure against the resist roller (Sim 51-2 set value must be properly set.)

IV. Cases when the adjustment is required

1) When the optical section is disassembled or its part is replaced (including the scanner home position sensor).
2) When the main PWB is replaced.
3) When the RAM in the main PWB is replaced.
4) When "U2" trouble occurs.
5) When the resist roller unit is disassembled or replaced.

V. Necessary tools

* Screwdriver
* Scale
* Test chart

VI. Adjustment procedure
(Copy image position adjustment)

1) Execute simulations 45. (C → 0→ 0 → C→ 45 → CB)
Simulations 45 is to adjust the size of the void area in the lead edge of the copy paper.
The set adjustment value is displayed on the COPIES SELECTED display.
2) Set the set value of simulations 45 to "0."
Enter "0" with the numeric key and press PRINT button.
3) Execute simulations 50-1. (C → 0 → 0 → C → 50 → CB → 1 → CB)
This simulations is to adjust the copy image position for the paper. One of the two currently set adjustment values is displayed on the COPIES SELECTED display.

Adjustment value A: Corresponds to the time interval from the scanner unit starting and the scanner home position sensor OFF to reaching at the lead edge of the document. That is, this is the value used to determine the optical document lead edge reference position, and it must be fit with the edge sec-

tion of the document reference plate.
If this value is improper, when the copy magnification ratio is changed, the copy image lead edge position for the copy paper edge will fluctuate. (Does not exist in the models which have no zoom copy functions.)

Adjustment value B: Corresponds to the time interval from the scanner unit starting and the scanner home position sensor OFF to the resist roller ON.
According to this value, the paper feed timing for the image on the photoconductor drum is changed and the copy image position on the copy paper is also changed.
When the set value is changed by "1," the position of the copy image on the copy paper is changed by about 0.123 mm.
When the set value is made greater, the copy image position for the copy paper moves backward. When the set value is made greater, the copy image position for the copy paper moves forward.

Use the paper tray select key to select the display of adjustment value A and adjustment value B and to select the set mode.

Display lamp	Display content/set mode
Copier tray cassette paper feed lamp ON	Adjustment value A
Copier tray cassette paper feed lamp BLINKS	Adjustment value B

4) Set both adjustment value A and adjustment value B to "0." Enter "0" with the numeric key and press PRINT button. Setting of adjustment value B is not required for the models which have no zoom functions.)

5) Press the scale onto the document alignment plate and set it horizontally as shown below:

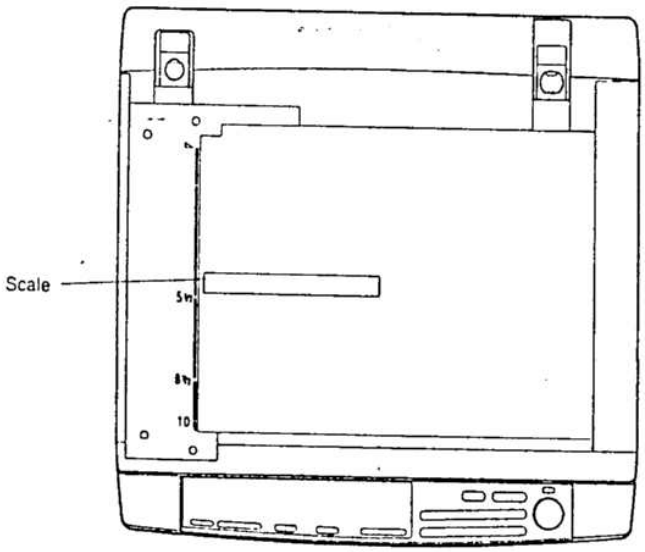

6) Execute simulations 50-1 to make several copies at each of 129% and 64%.
(For the models without zoom functions, make several copies at 100%.)

7) Measure the distance from the paper lead edge to the copy image lead edge of each copied papers, and calculate the average value.
(Not required for the models without zoom functions.)

L1: Average distance (mm) from 129% copied paper lead edge to the copy image lead edge

L2: Average distance (mm) from 64% copied paper lead edge to the copy image lead edge

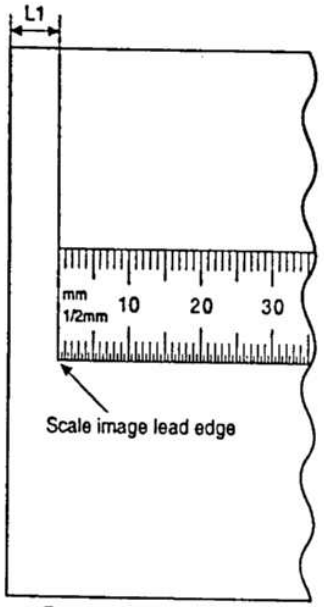

Enlargement copy (x 1.54)

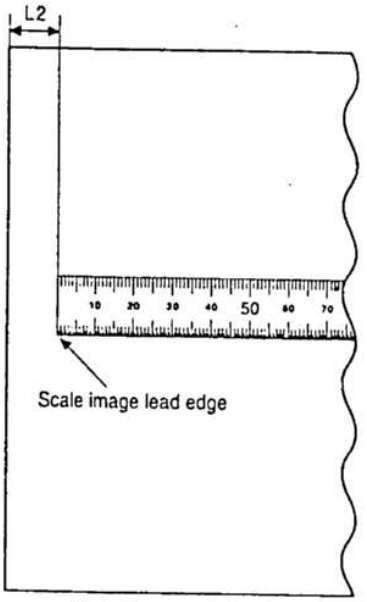

Reduction copy (x 0.64)

8) Enter the measure values in procedure 7) into the formula below to calculate adjustment value A and adjustment value B. (Not required for the models without zoom functions.)
$A = 8.2423 \times (L1 - L2)$
$B = 16.0568 \times L2 - 7.9661 \times L1$

9) Set the adjustment values obtained in procedure 8). (Not required for the models without zoom functions.)

10) Execute simulations 50-1 to make several copies at each of 129% and 64%. (Not required for the models without zoom functions.)

11) Measure the distance from the paper lead edge to the copy image lead edge of each copied papers (129% and 64%), and calculate the average value.
(Not required for the models without zoom functions.)

12) Check that the difference between the distance from the copy paper lead edge to the copy image lead edge of 129% copy and that of 64% copy is in the range of 0 ± 1 mm. (Not required for the models without zoom functions.)
If the difference is out of the above range, change adjustment value A and repeat procedures 10) and 12) until the difference is within the above range.
If adjustment value A is improper, the copy image lead edge position fluctuates in proportion to the copy magnification ratio.

13) Make a 100% copy, and check that the copy image lead edge is in the range of 0 ±1.5 mm from the paper lead edge position reference.
If it is out of the above range, change adjustment value B and repeat procedure 13) until it is within the above range.

VII. Troubles caused by improper adjustment

b. Copy image position adjustment (SF-2214)

I. Summary

In order to adjust the copy image position on a copy paper, the lead edge position of an image on the photoconductor for the lead edge position of a document on the SPF is changed with simulations 50-1.

After adjusting the copy image position with the above procedure, the blank lamp OFF timing for the lead edge position of an image on the photoconductor is changed with simulations 45 to adjust the void area.

II. Purpose

The purpose od this adjustment is to improve separation in the photoconductor section and in the fuser section and reduce dirt on the fuser section pawl by obtaining the max. effective copy area and the proper void area.

III. Note

If the proper void area is not obtained, the separation ability in the photoconductor section may be degraded and dirt on the fuser section pawl may be increased.

Before performing this adjustment, the following adjustments must have been completed. If not, this adjustment cannot be performed properly.

- Adjustment of paper pressure against the SPF resist roller (Sim 51-2 set value must be properly set.)
- Adjustment of the copy image position on the copy paper (Sim 50-1 set value must be properly set.)

IV. Cases when the adjustment is required

1) When the optical section is disassembled or its part is replaced (including the scanner home position sensor).
2) When the SPF unit is disassembled or its part is replaced.
3) When the main PWB is replaced.
4) When the RAM in the main PWB is replaced.
5) When "U2" trouble occurs.
6) When the resist roller unit is disassembled or replaced.
7) When the blank lamp is replaced.

V. Necessary tools

- Screwdriver
- Scale
- Test chart
- Black background document

VI. Adjustment procedure
(Document table mode)

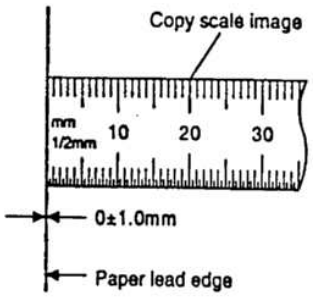

1) Set a scale and A4 or 8 1/2" x 11" paper on the document table as shown below:
2) Execute simulations 45. (C → 0 → 0 → C → 45 F128Å CB)
The set adjustment value is displayed on the COPIES SELECTED display.
3) Set the adjustment value to "99."
Enter "99" with numeric key, and press PRINT button.
4) With the document cover open, make several copies at 100%.
5) Measure the lead edge void area of each copy.

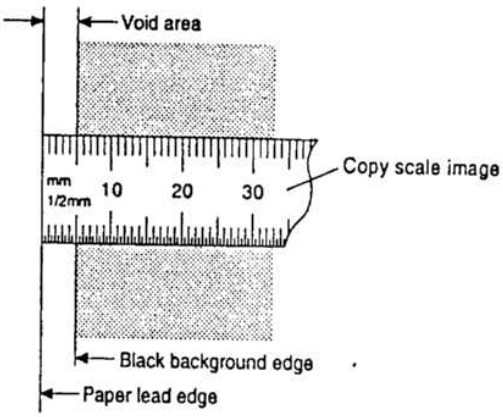

6) Calculate the average void area.
7) Calculate the void area adjustment value from the formula shown below.

$$\text{Current set value (99)} - \frac{\text{current void area (mm)}}{0.123}$$

= Adjustment value (Decimal point rounded)

8) Set the adjustment value obtained in procedure 7). (Decimal point rounded off)
9) With the document cover open, make several copies at 100%.
10) Measure the copy lead edge void area.
11) Measure the distance from the paper lead edge to the copy image lead edge of each copied papers (129% and 64%), and calculate the average value.
(Not required for the models without zoom functions.)

12) Check that the difference between the distance from the copy paper lead edge to the copy image lead edge of 129% copy and that of 64% copy is in the range of 0 ± 1 mm. (Not required for the models without zoom functions.)
If the difference is out of the above range, change adjustment value A and repeat procedures 10) and 12) until the difference is within the above range.

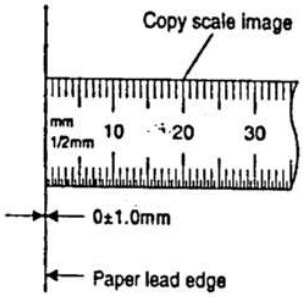

If adjustment value A is improper, the copy image lead edge position fluctuates in proportion to the copy magnification ratio.

13) After completion of procedure 12), make a 100% copy, and check that the copy image lead edge is in the range of 0 ± 1 mm from the paper lead edge position reference.
If it is out of the above range, change adjustment value B and repeat procedure 13) until it is within the above range.

14) Set documents in the SPF, and make several copies at 100% with simulations 50-1.

15) Measure the distance from the paper led edge to the copy image lead edge of each copy paper, and calculate the average value.

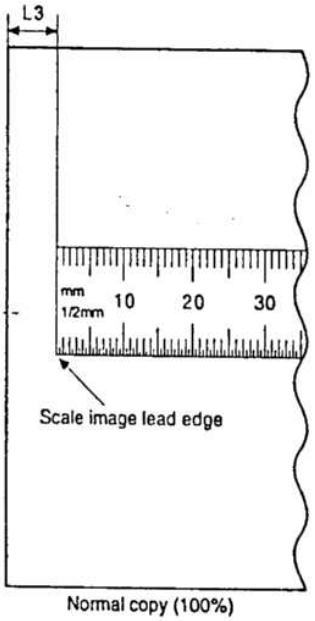

Normal copy (100%)

L3: Average distance (mm) from the copy paper lead edge to the copy image lead edge (Only in the SPF models)

16) Substitute the average value obtained in procedure 15) for L3 in the formula below to obtain adjustment value C.
C = 8.0906 x L3 (Only the SPF models)

17) Set the adjustment value obtained in procedure 16). (Only the SPF models)

18) Set documents in the SPF, make 100% copies, and check that the copy image lead edge is in the range of 0 ± 1mm from the paper lead edge position reference. (Only the SPF models)

If it is out of the above range, change adjustment value C and repeat procedure 18) until it is in the range of the above range.

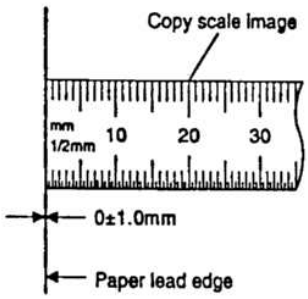

c. Void area adjustment

I. Summary

The copy image position on the copy paper is adjusted with simulations 50-1, then the main corona grid ON timing for the image lead edge on the photoconductor is changed with simulations 45 to adjust the void area.
In concrete, in the case of the document table mode, the adjustment is performed by changing the time interval from the scanner motor ON to the main corona grid ON. In the case of the SPF mode, the adjustment is performed by changing the time interval from the SPF resist roller ON to the main corona grid ON.

II. Purpose

The purpose od this adjustment is to improve separation in the photoconductor section and in the fuser section and reduce dirt on the fuser section pawl by obtaining the max. effective copy area and the proper void area.

III. Note

If the proper void area is not obtained, the separation ability in the photoconductor section may be degraded and dirt on the fuser section pawl may be increased.
Before performing this adjustment, the following adjustment must have been completed. If not, this adjustment cannot be performed properly.

* Adjustment of paper pressure against the resist roller (Sim 51-2 set value must be properly set.)
* Adjustment of paper pressure against the SPF resist roller (Sim 51-2 set value must be properly set.)

IV. Cases when the adjustment is required

1) When the optical section is disassembled or its part is replaced (including the scanner home position sensor).
2) When the SPF unit is disassembled or its part is replaced.
3) When the main PWB is replaced.
4) When the RAM in the main PWB is replaced.
5) When "U2" trouble occurs.
6) When the resist roller unit is disassembled or replaced.

V. Necessary tools

* Screwdriver
* Scale
* Test chart
* Black background document

VI. Adjustment procedure
(Copy image position adjustment)

1) Execute simulations 45. (C → 0 → 0 → C → 45 F128Å CB)
Simulations 45 is to adjust the size of the void area in the lead edge of the copy paper.
The set adjustment value is displayed on the COPIES SELECTED display.

2) Set the set value of simulations 45 to "0."
Enter "0" with the numeric key and press PRINT button.

3) Execute simulations 50-1. (C → 0 → 0 → C → 50 → CB → 1 → CB)
This simulations is to adjust the copy image position for the paper. One of the three currently set adjustment values is displayed on the COPIES SELECTED display.

Adjustment value A: Corresponds to the time interval from the scanner unit starting and the scanner home position sensor ON to reaching at the lead edge of the document. That is, this is the value used to determine the optical document lead edge reference position, and it must be fit with the edge section of the document reference plate.
If this value is improper, when the copy magnification ratio is changed, the copy image lead edge position for the copy paper edge will fluctuate. (Does not exist in the models which have no zoom copy functions.)

Adjustment value B: Corresponds to the time interval from the scanner unit starting and the scanner home position sensor OFF to the resist roller ON.
According to this value, the paper feed timing for the image on the photoconductor drum is changed and the copy image position on the copy paper is also changed.
When the set value is changed by "1," the position of the copy image on the copy paper is changed by about 0.123 mm.
When the set value is made greater, the copy image position for the copy paper moves backward. When the set value is made greater, the copy image position for the copy paper moves forward.

Adjustment value C: Corresponds to the time interval from the SPF resist roller ON to the copier resist roller ON. This value is used to change the paper feed timing for the image on the photoconductor drum and to change the copy image position on the copy paper.
When the set value is changed by "1," the copy image position is changed by about 0.123 mm.
When the set value is made greater, the copy image position for the copy paper moves backward. When the set value is made greater, the copy image position for the copy paper moves forward.

Use the paper tray select key to select the display of adjustment value A, adjustment value B, and adjustment value C, and to select the set mode.

Display lamp	Display content/set mode
Copier tray cassette paper feed lamp ON.	Adjustment value A
Copier tray cassette paper feed lamp BLINKS.	Adjustment value B
Copier tray cassette/option tray cassette paper feed lamps ON.	Adjustment value C

4) Set adjustment value A, adjustment value B, and adjustment value C to "0." (For the model without zoom functions, set adjustment value B only.)
Enter "0" with the numeric key and press PRINT button.

5) Press the scale onto the document alignment plate and set it horizontally as shown below:

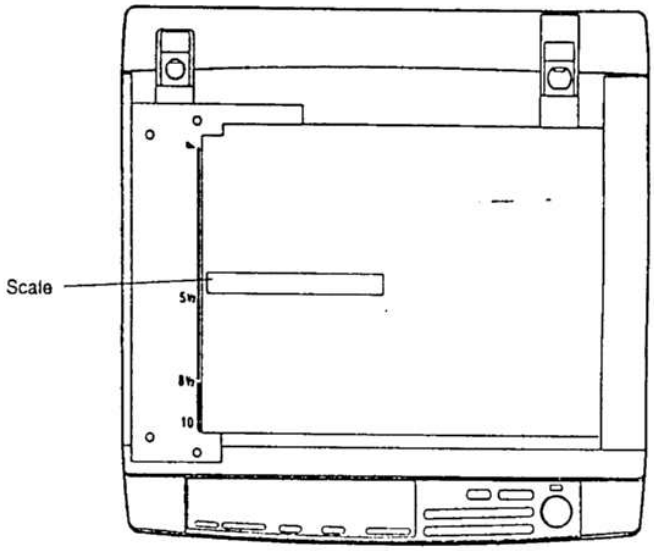

6) Execute simulations 50-1 to make several copies at each of 129% and 64%.
(For the models without zoom functions, make several copies at 100%.)

7) Measure the distance from the paper edge to the copy image lead edge of each copied papers, and calculate the average value.
(Not required for the models without zoom functions.)

L1: Average distance (mm) from 129% copied paper lead edge to the copy image lead edge

L2: Average distance (mm) from 64% copied paper lead edge to the copy image lead edge

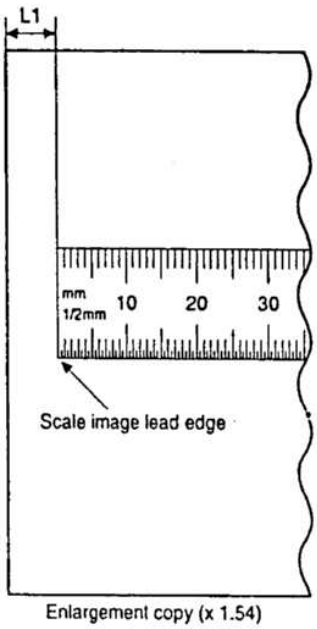

Enlargement copy (x 1.54)

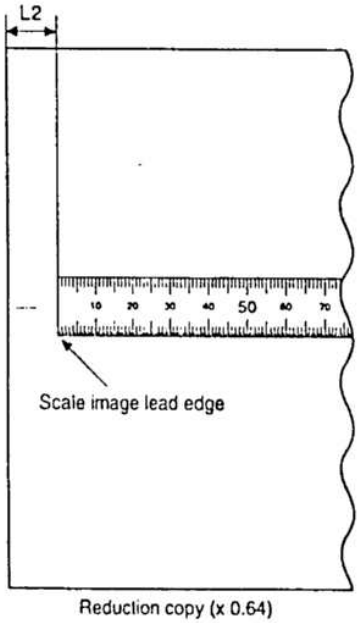

Reduction copy (x 0.64)

8) Enter the measure values in procedure 7) into the formula below to calculate adjustment value A and adjustment value B. (Not required for the models without zoom functions.)
A = 8.2423 x (L1 – L2)
B = 16.0568 x L2 – 7.9661 x L1

9) Set the adjustment values obtained in procedure 8). (Not required for the models without zoom functions.)

10) Execute simulations 50-1 to make several copies at each of 129% and 64%. (Not required for the models without zoom functions.)

11) Calculate the average lead edge void area.

12) Check that the void area is within the specified range.

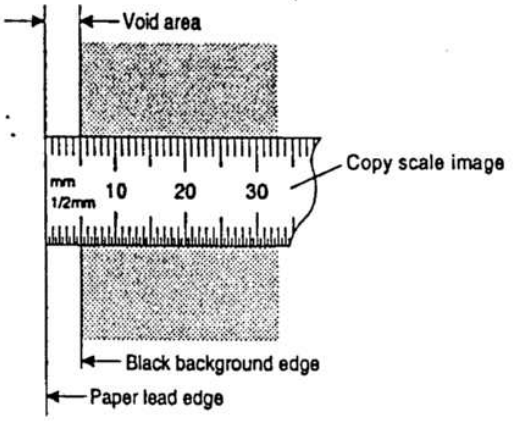

Standard:
0^{+3}_{-0} mm

If the void area is outside the specified range, change the set value of simulations 45 and repeat procedures 9) to 12).
When the set value is changed by "1," the void area is changed by about 0.123 mm.
When the set value is made greater, the void area becomes greater, and vise versa.

13) Make a copy in the SPF mode and check that the void area is within the specified range.

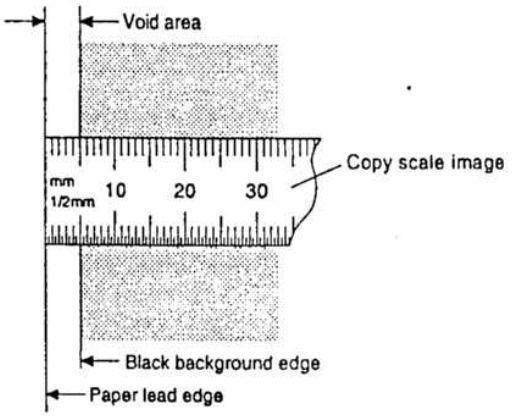

Standard:
0^{+3}_{-0} mm

If the void area is outside the specified range, check adjustment value C of simulations 50-1 or check the SPF unit mechanism section.

3. COPY DENSITY ADJUSTMENT

(1) Copy density adjustment timing

The copy density adjustment must be performed in the following cases:

* When in maintenance.
* When the high voltage unit output current or voltage is adjusted.
* When the developing bias voltage is adjusted.
* When the copy lamp is replaced.
* When the optical section is cleaned.
* When an optical part is replaced.
* When the optical section is disassembled.
* When the photoconductor drum is replaced.
* When the developer is replaced.
* When the AE sensor is replaced.
* When the main control PWB is replaced.
* When the EEPROM on the main control PWB is replaced.
* When the memory trouble (U2) occurs.
* When a part of the copy lamp control circuit is replaced.
* When the AC power source PWB is replaced.

(2) Note for copy density adjustment

1) Necessary procedures before adjustment

* Clean the optical section.
* Clean the AE sensor.
* Clean or replace the charger wire.
* Check that the high voltage section voltage and the developing bias voltage are in the specified range.

2) Note

* The auto mode copy density adjustment must be performed after the normal mode copy density adjustment. Never reverse the sequence.

(3) Necessary items for the copy density adjustment

* Test chart
  (Use one of the following three: UKOG-0162FCZZ, UKOG-0089CSZZ, KODAK GRAY SCALE)
* B4 (14" × 8 1/2") white paper

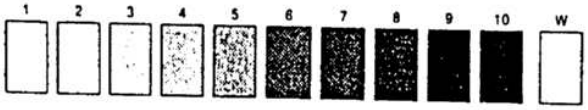

Test chart comparison

UKOG-0162FCZZ DENSITY No.	1	2	3	4	5	6	7	8	9	10	W
UKOG-0089CSZZ DENSITY No.	0.1		0.2		0.3				0.5	1.9	0
KODAK GRAY SCALE		1		2		3		4		19	A

SHARP CORPORATION
MADE IN JAPAN

(4) Copy density adjustment mode

The copy density adjustment must be performed in the following five mode:

Copy density adjustment mode		Exposure level	
Normal mode	Non-toner-save mode	1	5
	Toner save mode	1	5
Photo mode	Non-toner-save mode	1	5
Auto mode	Non-toner-save mode	1	5
	Toner save mode	1	5

(5) Copy density adjustment procedure

The copy density is adjusted by using Simulations 46 to change the exposure level and the copy lamp voltage in each copy mode.
The copy density adjustment must be performed in the five modes. To select each mode, use the copy mode select key.

A. Test chart (UK0G-0162FCZZ) setting

1) Set the test chart and B4 (14" × 8 1/2") white paper on the original table as shown below.
   The sensing area of the AE sensor is about 120 mm wide from the rear frame side edge on the original table glass. Place the white paper on that area, but keep the test chart away from that area.

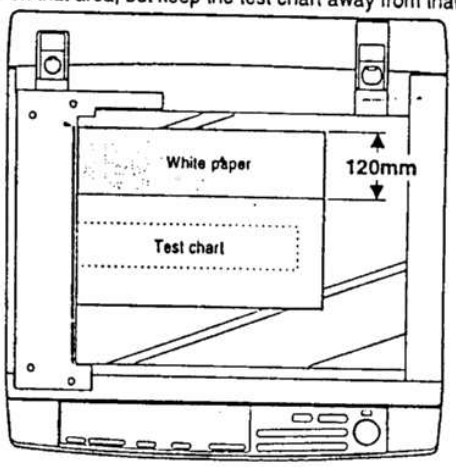

Front side

B. Normal copy mode (Non-toner-save mode) copy density adjustment

1) Enter the simulations 46 mode.
2) Set the adjustment mode to the normal copy mode (Non-toner-save mode).
   (Press the copy mode select key to light the normal copy mode lamp.)

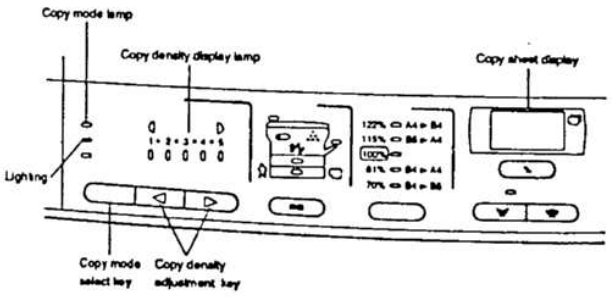

3) Set the density level to "1" with the copy density adjustment key. (The currently set copy lamp voltage level will be displayed on the COPIES SELECTED display.)

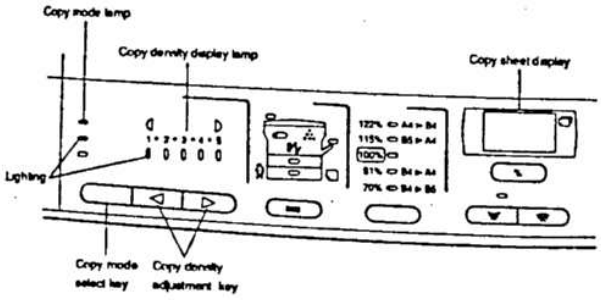

4) Press the print button to make a copy.
Check the gray scale copy to insure that "6" is slightly copied and "5" is not copied.
When the copy density is too dark, increase the copy lamp voltage level.
When the copy density is too light, decrease the copy lamp voltage level.
Enter a new set value of the copy lamp voltage level with the numeric keys and press the print button, then the entered value will be set and the copy density will be adjusted according to the set value.

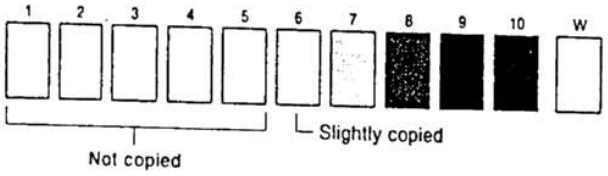

5) Set the copy density level to "5" with the copy density adjustment key.
(The currently set copy lamp voltage level will be displayed on the COPIES SELECTED display.)

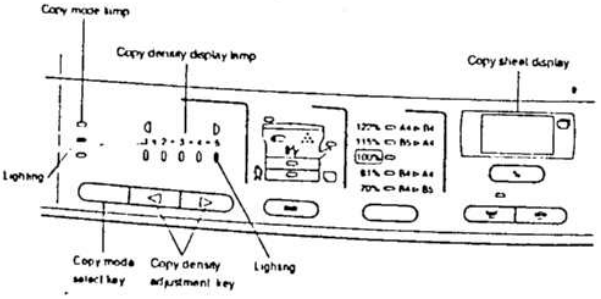

6) Press the print key to make a copy.
Check the gray scale copy to insure that "2" is clearly copied and "1" is not copied.
When the copy density is too dark, increase the copy lamp voltage level.
When the copy density is too light, decrease the copy lamp voltage level.
Enter a new set value of the copy lamp voltage level with the numeric keys and press the print button, then the entered value will be set and the copy density will be adjusted according to the set value.

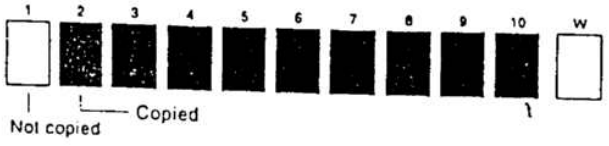

C. Normal copy mode (Toner save mode) copy density adjustment

1) Set the adjustment mode to the normal copy mode (Toner save mode). (Press the copy mode select key to light the normal copy mode lamp and the photo copy mode lamp.)

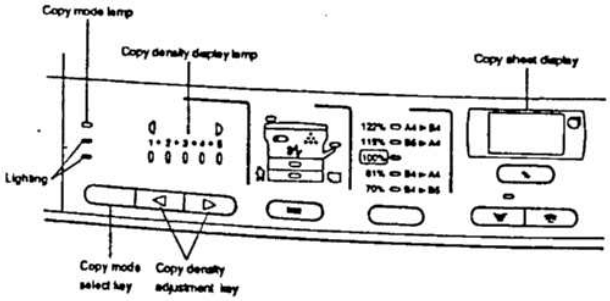

Adjust in the same manner as the above copy density adjustment procedures i the normal mode (Non-toner-save mode).

D. Photo copy mode (Non-toner-save mode) copy density adjustment

There is no toner save mode in the photo copy mode.

1) Set the adjustment mode to the photo copy mode.
(Press the copy mode select key to light the photo copy mode lamp.)

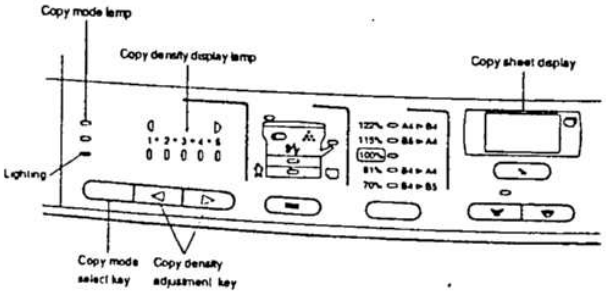

Check the gray scale copy to insure that "7" is slightly copied and "6" is not copied.
When the copy density is too dark, increase the copy lamp voltage level.
When the copy density is too light, decrease the copy lamp voltage level.
Enter a new set value of the copy lamp voltage level with the numeric keys and press the print button, then the entered value will be set and the copy density will be adjusted according to the set value.

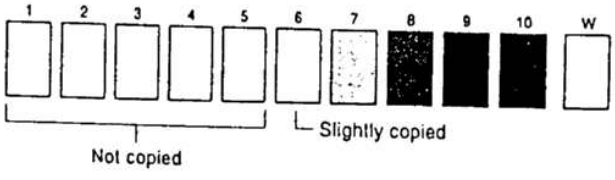

E. Auto copy mode (Non-toner-save mode) copy density adjustment

1) Set the adjustment mode to the auto copy mode (Non-toner-save mode). (Press the copy mode select key to light the auto copy mode lamp.)

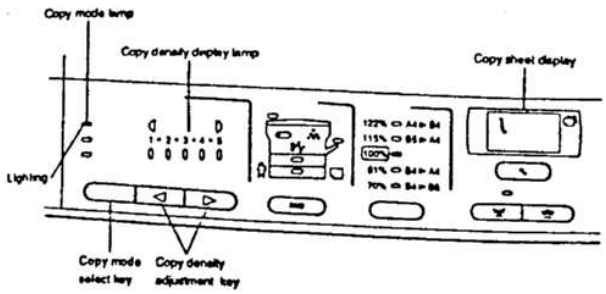

2) Set the density level to "1" with the copy density adjustment key. (The currently set copy lamp voltage level will be displayed on the COPIES SELECTED display.)

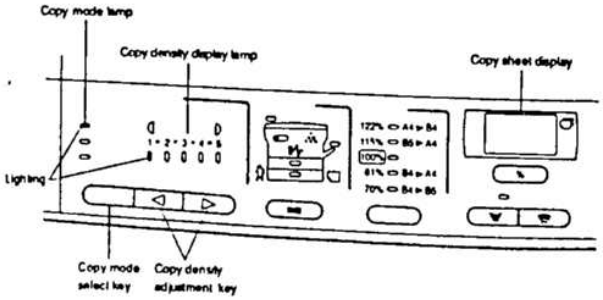

3) Set the copy lamp voltage level set value to "0." •
Enter the new set value with the numeric key and press the print button, then the entered value will be set. (Be sure to set to "0.")

4) Set the copy density level to "5" with the copy density adjustment key.
(The currently set copy lamp voltage level will be displayed on the COPIES SELECTED display.)

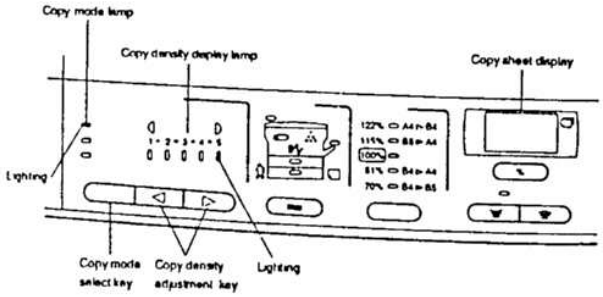

5) Press the print button to make a copy.
Check the gray scale copy to insure that "3" is slightly copied and "1" is not copied.
When the copy density is too dark, increase the copy lamp voltage level.
When the copy density is too light, decrease the copy lamp voltage level.
Enter a new set value of the copy lamp voltage level with the numeric keys and press the print button, then the entered value will be set and the copy density will be adjusted according to the set value.

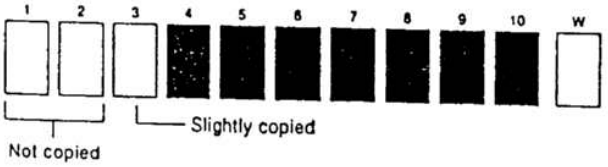

F. Auto copy mode (Toner save mode) copy density adjustment

1) Set the adjustment mode to the auto copy mode (Toner save mode).
(Press the copy mode select key to light the auto copy mode lamp and the photo copy mode lamp.)

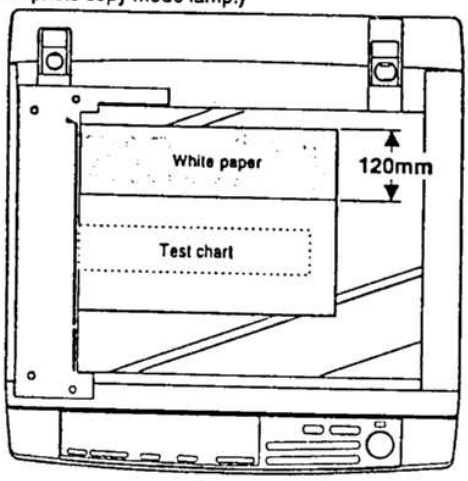

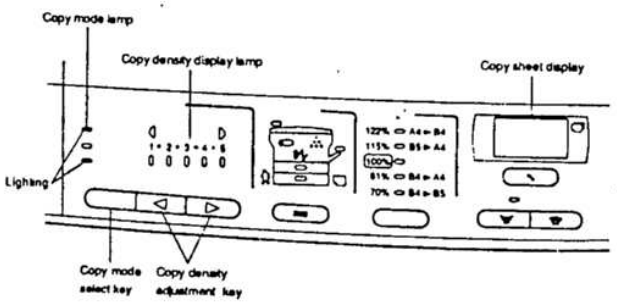

Adjust the copy density in the same manner as the Photo copy mode (Non-toner-save mode) copy density adjustment.

(6) Copy density adjustment table

A : Auto copy mode
P : Photo copy mode
N : Normal copy mode

N.TS : Non-toner-save mode
TS : Toner save mode

Copy mode		Mode display	Density level	Test chart copy density
Normal	N.TS	N	1	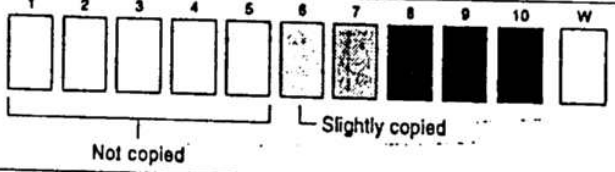
			5	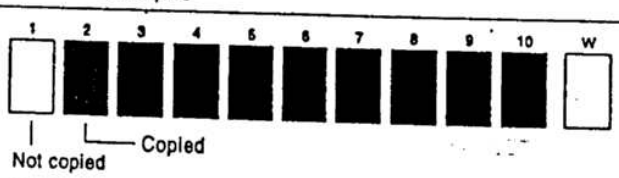
	TS	N & P	1	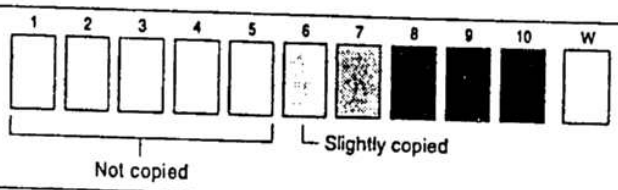
			5	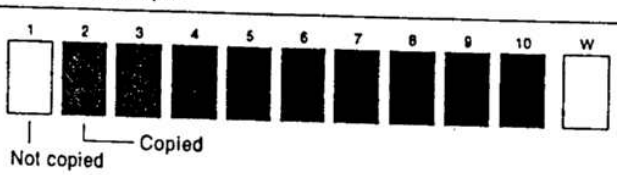
Photo	N.TS	P	1	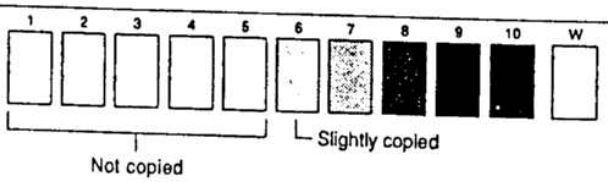
			5	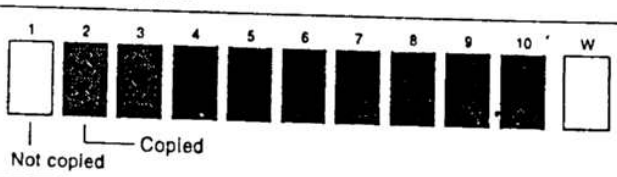
Auto	N.TS	A	1	
			5	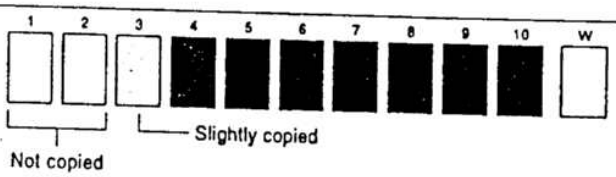
	TS	A & P	1	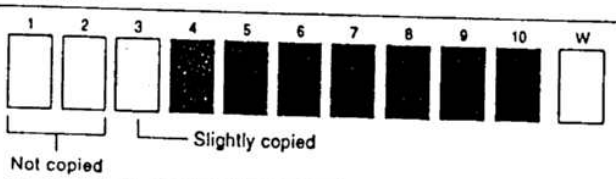
			5	

4. Others

(1) Transfer charger wire installation

Install the transfer charger wire as shown below. (Clean the charger wire at every 40K copies and replace it at every 80K copies.)
Transfer charger unit (TC unit)

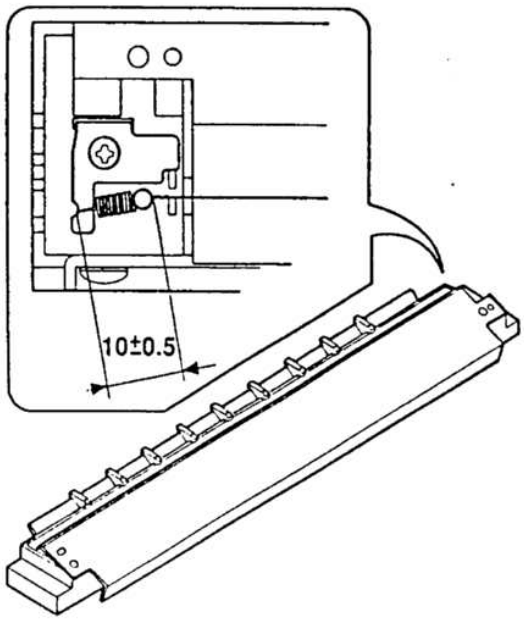

(Note for replacement of the charger wire)

ⓐ Do not twist or deform the charger wire.

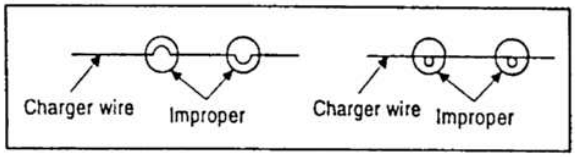

ⓑ After replacement, be sure to clean the charger wire with alcohol. (Be sure to use alcohol only.)

ⓒ After wiping with alcohol, wipe with a dry cloth.

ⓓ Use charger wire of 70μ (DWIR-0466CSZZ).

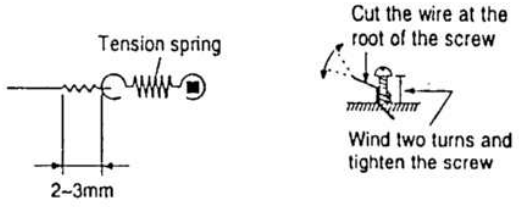

(2) DV bias adjustment

1) Set the digital multi meter range to DCV 300V or more.
2) Put the test rod between the bias output faston tab terminal ((+) side) of the lower unit PWB and the chassis (GND).
3) Execute simulation 8-1. (The DV bias voltage is outputted for 30 sec.)
4) Adjust the DV bias adjustment control (VR2) so that the output voltage is -200V-3V.

(3) Separation charger output adjustment

1) Install the DV unit and the process unit to the copier.
2) Set the digital multi mater range to DCV 100V or more.
3) Connect the high voltage probe to the lower unit PWB separation output terminal ((+) side) and the chassis (GND).
4) Execute simulation 8-9. (The separation voltage is outputted form 30 sec.)
5) Adjust the separation voltage adjustment control (VR1) so that the output voltage is 3.5V ±0.35V.

[8] SIMULATIONS

1. Outline

This model is equipped with the simulations feature which allows the following operations with the keys on the operation panel:

1) Adjustments
2) Setting of specifications and functions
3) Resetting trouble codes
4) Checking operations

2. Purpose

The purpose of the simulations feature is to improve serviceability in repairs and adjustments.
Since the mechanical adjustments can be performed electrically, the above purpose is achieved with low costs.

3. Operating procedure

Simulations operating procedure

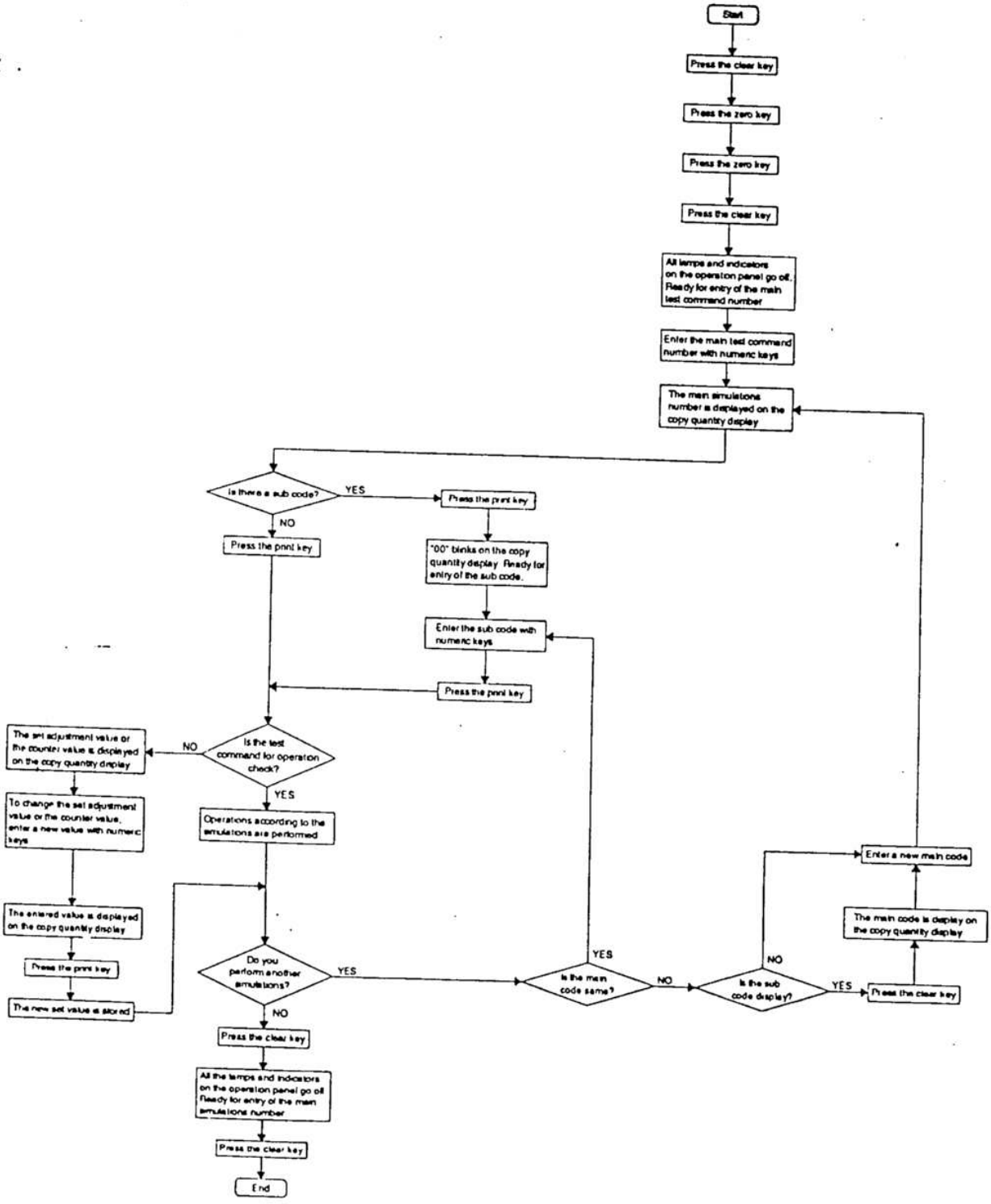

4. Purpose list

Purpose	Section	Main	Sub	Function	Ref. page
Adjustments	Paper feed section	51	2	Resist amount adjustment	8-3
	Optical section	26	8	Copy magnification ratio adjustment (zooming)	
		45	1	Lead edge void amount setting	
		46	1	Copy density (exposure level) adjustment	8-4
		51	6	SPF exposure correction	
		47		AE sensor characteristics value data auto input	8-5
		48	1	Front-rear direction magnification ratio adjustment (Vertical direction)	
			2	Paper transport direction magnification ratio adjustment (Horizontal direction)	
		50	1	Lead edge image position adjustment	
	Developer	8	1	Developing bias voltage check	8-6
		25	2	Auto developer adjustment	
	Process	8	2	MC/TC output check (Normal mode)	8-7
			3	MC/TC output check (Photo mode)	
			4	MC/TC output check (Toner save mode)	
			7	SC output check	
			9	MC/TC/SC output check	
	SPF	48	3	Paper transport direction magnification ratio adjustment (When the SPF is used in the horizontal direction)	8-7
		51	2	Resist quantity adjustment	8-3
Setting	Specifications	26	1	Option setting	8-7
			6	Destination setting	8-8
	Paper feed section	26	12	Manual copy mode setting	
	Fuser section	26	13	Main motor operation mode setting at warming up	
		43	1	Fuser temperature setting	
			2	Fuser temperature setting (in power save)	
	Process	44	1	Correction mode setting	
Counter	Copy count	22	1	Maintenance counter display	8-9
			2	Maintenance preset counter display	
			5	Total counter display	
			12	Drum counter display	
	Maintenance	20	1	Maintenance counter value reset	
		21	1	Maintenance cycle setting	
Operation check	Paper feed section	30	1	Main body sensor operation check	8-10
			2	Option tray sensor operation check	
	Optical section	1	1	Mirror base scan operation check	
			2	Optical system sensor operation check	
			3	Lens operation check	
			4	Lens operation aging	8-11
			5	Copy lamp lighting operation	
	SPF	2	2	SPF sensor operation check	
			3	SPF motor operation check	
			4	SPF paper feed clutch operation check	
			5	SPF resist clutch operation check	
	Operation panel	5	1	LED lighting check	
	Fuser section	5	2	Heater lamp lighting check	
	Process	5	4	Discharge lamp lighting check	
			5	Blank lamp lighting check	
		6	2	Separation pawl auto operation check	
		44	2	Optical system dirt correction reference value display	8-12
			3	Optical system dirt correction voltage correction value display	
			4	Photoconductor drum rotation time display	
	Developer section	10		Toner motor auto operation check	
		25	1	Toner density sensor operation check/toner density monitor	
Trouble cancel		14		Cancel of troubles other than U2	
		16		U2 trouble cancel	

5. Details of simulations

Purpose/kind	Section	Contents			Ref. page
		Main code	Sub code	Description	
Adjustment	Paper feed section	51	2	Used to adjust contact pressure between paper and the main body resist roller or the SPF resist roller. (Amount of paper buckle at the resist roller) Change the set value when the shift between the paper and the image varies. (Operation/procedure) When the simulation key operation is performed, the currently set value is displayed on the COPIES SELECTED display. Enter the set value with the numeral key and press the print button, and the entered set value will be stored in the main PWB RAM. The standard set value is 50. Tray paper feed mode: Tray (upper) paper feed lamp ON Manual paper feed mode: Manual paper feed lamp ON SPF mode: Upper and lower cassette paper feed lamps ON The set value corresponds to the time interval between when the paper detector (PPD) in front of the main body resist roller detects paper and when the transport roller (TRC) turns off. The greater this time interval is, the greater the contact pressure between the paper and the resist roller is. 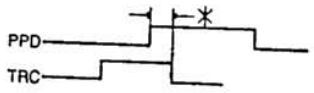 * The time interval can be set. The greater the time interval is, the greater the contact pressure between the paper and the resist roller is. If the contact pressure is too great, a paper jam may occur. If the contact pressure is too small, variations of image position for the copy paper becomes greater. This must be adjusted according to the paper quality.	
	Optical unit	26	8	Used to adjust the copy magnification ratio in zoom copy. The lens shift amount in zoom copy is changed to provide suitable magnification ratio. There is a slight variation in each lens focal distance. If the lenses are shifted in a same amount in zoom copy, suitable magnification ratio may not be obtained. To correct this, therefore, each lens is shifted according to its focal distance. The lens must be shifted in accordance with its focal distance in zoom copy. (Operation/Procedure) When the simulation key operation is performed, the currently set lens number is displayed. Enter the lens number with the ready lamp ON and press the print button, and the entered number will be stored in the main PWB RAM. The lens number is in proportion to the lens focal distance.	7-16
		45	1	Used to adjust the copy paper lead edge void and the rear edge void amount. (Operation/procedure) When the simulation key operation is performed, warming-up operation is performed. After completion of warming up, the currently set void amount is displayed on the COPIES MADE display. Use the tray select key to select between the lead edge void amount adjustment and the rear edge void amount adjustment mode. The upper tray lamp will change as shown in the table below. Mode: Lead edge void amount adjustment mode — Upper tray lamp: Light Mode: Read edge void amount adjustment mode — Upper tray lamp: Blink Enter the set value with the numeral keys and press the PRINT button, and the set value will be stored. The standard set value is 50. The void area increases 0.123mm for an increase of the set value by 1.	7-19 7-22 7-24

<table>
<tr><th rowspan="2">Purpose/kind</th><th rowspan="2">Section</th><th colspan="3">Contents</th><th rowspan="2">Ref. page</th></tr>
<tr><th>Main code</th><th>Sub code</th><th>Description</th></tr>
<tr><td>Adjustment</td><td>Optical unit</td><td>46</td><td>1</td><td>Used to adjust the copy density (exposure level) and the copy density gradient (exposure gradient) in each copy mode.
The exposure level is changed by changing the copy lamp applying voltage.
The adjustment points are exposure levels "1" and "5" in each copy mode.
The copy density (exposure level) and the copy density gradient (exposure gradient) can be adjusted arbitrarily.

(Operation/procedure)
When the simulation key operation is performed, the currently set exposure level will be displayed on the COPIES SELECTED display.
Select exposure level "1" or "5" with the copy density adjustment key, and enter the set value with the numeral keys and press the print button. Then the set value is stored.
To select each copy mode, use the copy mode key.

<table>
<tr><th colspan="2">Copy mode</th><th colspan="2">Copy density level (exposure level)</th></tr>
<tr><td rowspan="2">Manual copy mode</td><td>Non-toner-save mode</td><td>1</td><td>5</td></tr>
<tr><td>Toner save mode</td><td>1</td><td>5</td></tr>
<tr><td rowspan="2">Auto copy mode</td><td>Non-toner-save mode</td><td>1</td><td>5</td></tr>
<tr><td>Toner save mode</td><td>1</td><td>5</td></tr>
<tr><td>Photo copy mode</td><td>Non-toner-save mode</td><td>1</td><td>5</td></tr>
</table>
Copy density level (exposure level (copy lamp applying voltage) to operation panel density display level)

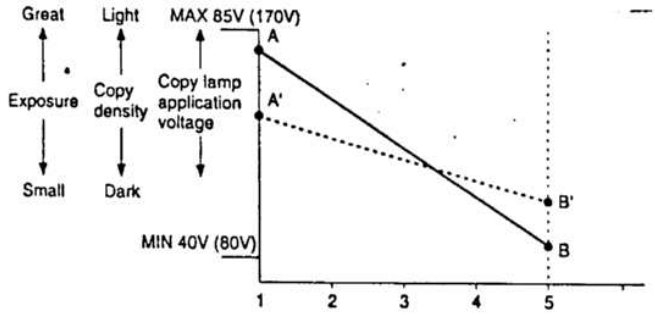

( ): 200V system Density display level in the operation panel

In the manual copy mode and the photo copy mode
Set point A (exposure level (copy lamp applying voltage) at copy density level "1") and point B (exposure level (copy lamp applying voltage) at copy density level "5"), and the exposure gradient (copy density gradient) and the exposure level (copy density level) will be set.
A – B characteristic: A great exposure gradient (copy density gradient).
A' – B' characteristic: A small exposure gradient (copy density gradient).
Point A and point B can be set arbitrarily.</td><td>5-5
7-25</td></tr>
<tr><td></td><td></td><td>51</td><td>6</td><td>Used to set the correction value of the copy lamp voltage when the SPF is used.
In copying with the SPF, the exposure level varies more than in the normal copying. To compensate this, the copy lamp voltage is corrected by this simulation.
(Operation/procedure)
When the simulation key operation is performed, the currently set correction value will be displayed on the COPIES SELECTED display.</td><td></td></tr>
</table>

Purpose/kind	Section	Contents			Ref. page
		Main code	Sub code	Description	
Adjustment	Optical unit	47		Used to store the characteristics of the AE sensor and the optical section for the change in the copy lamp applying voltage. The exposure level in the auto copy mode is automatically determined by the stored data and the document density. This simulation is used to correct the output characteristics of the AE sensor output characteristics, which differ in different machines. 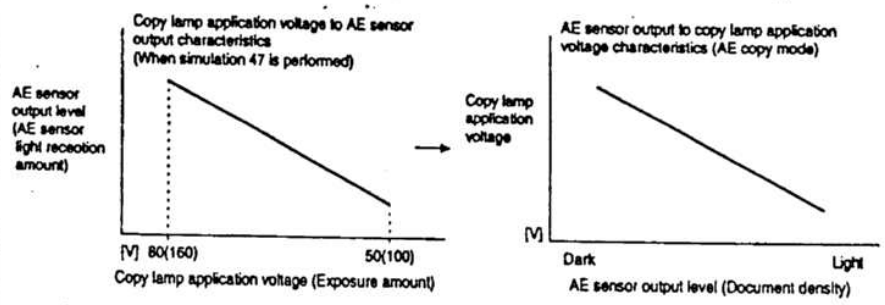 (Operation/procedure) When the simulation key operation is performed, the scanner unit performs initializing and feeds about 10cm and stops. When the print button is pressed again, the copy lamp applying voltage changes from 80V (160V) to 50V (100V) by the increment of 5V. The AE sensor output characteristics at that time are stored in the main PWB RAM. At that time, the AE sensor gain is automatically adjusted. This operation must be performed before the copy density adjustment in the auto copy mode.	
		48	1	Used to adjust the vertical (Machine front to rear) copy magnification ratio. The adjustment is performed by changing the lens home position arbitrarily. (Operation/procedure) When the simulation key operation is performed, the currently set value is displayed on the COPIES SELECTED display. Enter the adjustment value with the numeric key and press the print button, and the value will be stored in the main PWB RAM. It is required to make a copy and adjust. However, the rough input value can be obtained from the following formula: Input value = Current set value + Magnification ratio correction rate x 10	7-14
			2	Used to adjust the horizontal magnification ratio.(Lead to Trail) The adjustment is performed by changing the scanning speed of the scanner (mirror motor). (Operation/procedure) When the simulation key operation is performed, the currently set value is displayed on the COPIES SELECTED display. Enter the adjustment value with the numeric key and press the print button, and the value will be stored in the main PWB RAM. It is required to make a copy and adjust. However, the rough input value can be obtained from the following formula: Input value = Currently set value + copy magnification ratio x 10 Copy magnification ratio = (Document length – Copy image length) + Document length x 100 [%]	7-18

<table>
<tr><th rowspan="2">Purpose/kind</th><th rowspan="2">Section</th><th colspan="3">Contents</th><th rowspan="2">Ref. page</th></tr>
<tr><th>Main code</th><th>Sub code</th><th>Description</th></tr>
<tr><td>Adjustment</td><td>Optical unit</td><td>50</td><td>1</td><td>Used to adjust the copy image position on the copy paper. (Zoom, SPF machine)

(Operation/procedure)
The adjustment is performed by changing the three set values A, B, and C.
The zoom machine has two set values, the SPF machine three, but the normal machine only one.
When the simulation key operation is performed, warming-up is performed and the ready lamp is lighted. Then the currently set value is displayed on the COPIES SELECTED display. In the case of the zoom machine, there are three set values. Every time when the tray select key is pressed, set values A, B, and C is displayed in turn. In this case, the pause lamp status allows monitoring the three set values.

<table><tr><th>Display lamp</th><th>Set value</th></tr><tr><td>Copier tray cassette paper feed lamp BLINKS.</td><td>B (Only in the zoom machine).</td></tr><tr><td>Tray cassette paper feed lamp ON</td><td>A</td></tr><tr><td>Copier tray cassette/option tray cassette paper feed lamps ON</td><td>C (Only in the SPF machine)</td></tr></table>
Set all three set values A, B, and C to "0", make copies at 64% and 129% and measure the shift between the copy paper lead edge and the copy image. Put the measure values into the following formulas to obtain the rough values of A and B.
L1 = Shift between 129% copy paper lead edge and copy image (mm)
L2 = Shift between 64% copy paper lead edge and copy image (mm)
L3 = Shift between SPF mode 10% copy paper lead edge and copy image (mm)
A = 8.2423 x (L1 – L2)
※ The above is only for the zoom machines.
It corresponds to the time required for the scanner to reach the document lead edge image position from starting scanning.
It is, in other word, the value used to determine the optical position of the document lead edge reference position of the document table, and must be fitted to the edge section of the document reference plate.
If this value is not proper, the distance between the copy image lead edge and the purpose edge is varied when the copy magnification ration is varied.
B = 16.0568 x L2 – 7.9661 x L1
It corresponds to the timer required for the resist roller (RRC) to turn on from when the scanner started scanning and reached the optical document lead edge reference position.
This set value is used to determine the paper feed timing for the image position on the OPC drum, and the relationship between the paper and the image is changed.
C = 8.0906 x L3 (timer value) (Only in the SPF machines)
This set value is used to change the paper feed timing for the scanning start timing (the image position on the OPC drum), and to change the relationship between the paper and the image position.

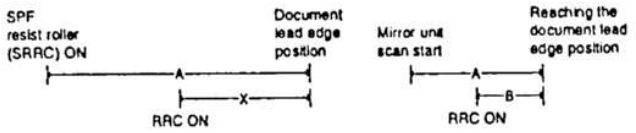
</td><td>7-19</td></tr>
<tr><td></td><td>Developer unit</td><td>8</td><td>1</td><td>Used to check the developing bias voltage.
(Operation/procedure)
The developing bias voltage is outputted for 30 sec.</td><td></td></tr>
<tr><td></td><td></td><td>25</td><td>2</td><td>Used for initial setting of toner density when replacing developer.</td><td>4-5</td></tr>
</table>

Purpose/kind	Section	Contents			Ref. page
		Main code	Sub code	Description	
Adjustment	Developer unit	25	2	(Operation/procedure) After 3 minutes from start of stirring of the DV unit after the main motor rotation, toner density is sampled 16 times during 8 sec, and the average value is stored as the toner density reference value in the RAM. With this reference value as the threshold value, the toner density is controlled. 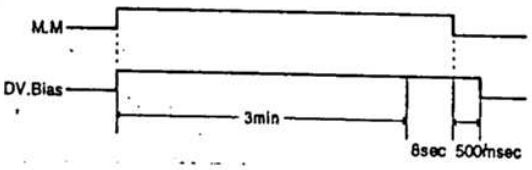 (Note) Do not perform this simulation except for when replacing the developer with a new one. If this simulation is performed in the other case, overtoning or undertoning may occur, resulting in a poor copy quality.	
	Process	8	2	Used to check the voltage of the main charger and the transfer charger. (Operation/procedure) The main charger and the transfer charger unit are turned on for 30 sec in the manual copy mode.	
			3	Used to check the voltage of the main charger and the transfer charger. (Operation/procedure) The main charger and the transfer charger unit are turned on for 30 sec in the photo copy mode.	
			4	Used to check the voltage of the main charger and the transfer charger. (Operation/procedure) The main charger and the transfer charger unit are turned on for 30 sec in the toner save mode.	
			7	Used to check the separation charger voltage. (Operation/procedure) The separation charger unit is turned on for 30 sec.	
			9	Used to check the voltage of the main charger, the transfer charger, and the separation charger. (Operation/procedure) The main charger unit, the transfer charger unit, and the separation charger unit are turned ON for 30 sec.	
	SPF unit	48	3	Used to adjust the horizontal magnification ratio. (When the SPF is used.) The adjustment is performed by changing the SPF scan speed (SPF motor). (Operation/procedure) When the simulation key operation is performed, the currently set value is displayed on the COPIES SELECTED display. Enter the adjustment value with the numeric key and press the print button, and the value will be stored in the main PWB RAM. It is required to make a copy and adjust. However, the rough input value can be obtained from the following formula: Input value = Currently set value + Copy magnification ratio x 10 Copy magnification correction rate = (Document length – Copy image length) + Document length x 100 [%]	7-17
Setting	Specifications	26	1	Used to set options. (Operation/procedure) When the simulation key operation is performed, the currently set machine number is displayed on the COPIES SELECTED display. Enter the code number corresponding to the machine conditions and press the print button, and the value will be set. SF2014/2114: 250-sheet tray: 00 SF2214: 250-sheet tray: 01 The code corresponding to the above is set. (Note) Enter the code corresponding to the installed option. If a wrong code is entered, a trouble may occur. (Refer to the self diag.)	

<table>
<tr><th rowspan="2">Purpose/kind</th><th rowspan="2">Section</th><th colspan="3">Contents</th><th rowspan="2">Ref. page</th></tr>
<tr><th>Main code</th><th>Sub code</th><th>Description</th></tr>
<tr><td rowspan="8">Setting</td><td rowspan="2">Specifications</td><td rowspan="2">26</td><td>6</td><td>Used to set the destination.

(Operation/procedure)
When the simulation key operation is performed, the code number of the currently set destination is displayed.
Enter the code number corresponding to the desired destination and press the print button, and the specifications for the destination will be set.

<table><tr><th colspan="2">Code number</th><th rowspan="2">Destination</th></tr><tr><th>Normal machine</th><th>Zoom machine</th></tr><tr><td>4</td><td>14</td><td>Japan</td></tr><tr><td>1</td><td>11</td><td>U.K.</td></tr><tr><td>5</td><td>15</td><td>AB series other than U.K.</td></tr><tr><td>6</td><td>16</td><td>USA</td></tr><tr><td>7</td><td>17</td><td>Inch series other than USA</td></tr><tr><td>25</td><td>35</td><td>Indonesia</td></tr></table></td><td></td></tr>
<tr><td>12</td><td>Used to set the manual paper feed mode.
There are two operation modes: auto and manual. Either of the two can be set.

(Operation/procedure)
When the simulation key operation is performed, the code number of the currently set operation mode is displayed.
Enter the code number corresponding to the desired operation mode and press the print button, and the operation mode will be set.

<table><tr><th>Code number</th><th>Operation mode</th><th>Operation</th></tr><tr><td>1</td><td>Manual</td><td>When the print button is pressed, copying is started.</td></tr><tr><td>0</td><td>Auto</td><td>When copy paper is set, coping is automatically started.</td></tr></table></td><td></td></tr>
<tr><td rowspan="3">Fuser unit</td><td rowspan="2">26</td><td>13</td><td>Used to set the operation mode of the main motor in warming up.
There are two operation modes: auto and manual. Either of the two can be set.

(Operation/procedure)
When the simulation key operation is performed, the code number of the currently set operation mode is displayed.
Enter the code number corresponding to the desired operation mode and press the print button, and the operation mode will be set.

<table><tr><th>Code number</th><th>Operation mode</th><th>Operation</th></tr><tr><td>0</td><td>Normal mode</td><td>The main motor rotates until the process cleaning is completed.</td></tr><tr><td>1</td><td>Long mode</td><td>The main motor keeps rotating until completion of warming up.</td></tr></table></td><td></td></tr>
<tr><td>43</td><td>1</td><td>Used to set the fusing temperature.

(Operation/procedure)
When the simulation key operation is performed, the lower two digits of the currently set temperature is displayed on the COPIES SELECTED display.
(Example: 75 ——— 175 °C)
Pressing the paper select key under that state allows selection of fusing temperature by the increment of 5 °C. To set the temperature, press the print button. (Standard set value: 85 ——— 185°C)</td><td></td></tr>
<tr><td></td><td>2</td><td>Used to set the fusing temperature in the power save mode.

(Operation/procedure)
When the simulation key operation is performed, the lower two digits of the currently set temperature is displayed on the COPIES SELECTED display.
Pressing the paper select key under that state allows selection of fusing temperature by the increment of 5 °C. To set the temperature, press the print button.
*00 → 05 → 10 → 85 → 90 → 95 *: Standard set value</td><td></td></tr>
</table>

<table>
<tr><th rowspan="2">Purpose/kind</th><th rowspan="2">Section</th><th colspan="3">Contents</th><th rowspan="2">Ref. page</th></tr>
<tr><th>Main code</th><th>Sub code</th><th>Description</th></tr>
<tr><td>Setting</td><td>Process</td><td>44</td><td>1</td><td>Used to set the correction modes.
(Operation/procedure)
When the simulation key operation is performed, the code number of the currently set mode is displayed on the COPIES SELECTED display. Enter the code number corresponding to the desired correction mode and press the print button, and the mode will be set.
<table><tr><th>Code</th><th>Correction mode</th></tr><tr><td>1</td><td>Charging potential selection enable</td></tr><tr><td>2</td><td>Optical system dirt correction enable</td></tr><tr><td>4</td><td>Photoconductor drum membrane wear correction enable</td></tr></table>Set the total of codes of above modes.
Factory setting is "6."</td><td>5-12</td></tr>
<tr><td>Counter</td><td>Copy count</td><td>22</td><td>1</td><td>Used to check the maintenance count value.
(The count value of the installed DV unit is displayed.)
(Operation/procedure)
The maintenance count value is displayed dividedly by two digits three times on the COPIES SELECTED display.
There is a pause between any two displays. After the longest pause, the top two digits are displayed.</td><td></td></tr>
<tr><td></td><td></td><td></td><td>2</td><td>Used to check the set maintenance cycle (maintenance preset counter).
(Operation/procedure)
The currently set maintenance cycle value is displayed dividedly by 2 digits three times on the COPIES SELECTED display.
There is a pause between any two displays. After the longest pause, the top two digits are displayed.</td><td></td></tr>
<tr><td></td><td></td><td></td><td>5</td><td>Used to check the total count value.
(Operation/procedure)
The total count value is displayed dividedly by 2 digits three times on the COPIES SELECTED display.
There is a pause between any two displays. After the longest pause, the top two digits are displayed.</td><td></td></tr>
<tr><td></td><td></td><td></td><td>12</td><td>Used to check the drum counter value inside the installed OPC drum unit.</td><td></td></tr>
<tr><td></td><td>Maintenance</td><td>20</td><td>1</td><td>Used to reset the maintenance counter.</td><td></td></tr>
<tr><td></td><td></td><td>21</td><td>1</td><td>Used to set the maintenance cycle.
(Operation/procedure)
After performing the simulation key operation, enter the code number corresponding to the desired maintenance cycle listed below.
<table><tr><th>Code No.</th><th>Maintenance lamp ON cycle</th><th>Photoconductor lamp ON cycle</th></tr><tr><td>1</td><td>Every 10,000 copies</td><td>Every 40,000 copies</td></tr><tr><td>2</td><td>Every 20,000 copies</td><td>Every 40,000 copies</td></tr><tr><td>3</td><td>Every 40,000 copies</td><td>Every 40,000 copies</td></tr><tr><td>4</td><td>Lamp not ON</td><td>Lamp not ON</td></tr></table>Set to "2" when shipping.</td><td></td></tr>
</table>

<table>
<tr><th rowspan="2">Purpose/kind</th><th rowspan="2">Section</th><th colspan="3">Contents</th><th rowspan="2">Ref. page</th></tr>
<tr><th>Main code</th><th>Sub code</th><th>Description</th></tr>
<tr><td rowspan="5">Operation check</td><td rowspan="4">Paper feed unit</td><td rowspan="4">30</td><td>1</td><td>Used to check the operations of the sensors and detectors in the paper feed section, and their related circuits.
The operations of the sensors and the detector in the paper feed section can be monitored by the lamps on the operation panel.
(Operation/procedure)
ON/OFF of the sensors and detectors in the paper feed section can be monitored with the lamps on the operation panel.
<table><tr><th>Sensor name</th><th>Display lamp</th></tr><tr><td>Paper size detector (PWD)</td><td>Toner empty lamp</td></tr><tr><td>Resist detector (PPD)</td><td>Jam lamp</td></tr><tr><td>Paper exit detector (POD)</td><td>OPC drum lamp</td></tr><tr><td>Tray open/close detector (PED1)</td><td>No.1 paper feed cassette lamp</td></tr><tr><td>Manual paper feed detector (PID)</td><td>Manual paper feed lamp</td></tr></table></td><td>3-4</td></tr>
<tr><td>2</td><td>Used to check the operations of the sensors and detectors in the option tray and their related circuits.
The operations of the sensors and detectors in the option tray can be monitored with the display lamps on the operation panel.
(Operation/procedure)
ON/OFF of the sensors and detectors in the option tray can be monitored with the lamps on the operation panel.
The operations of the sensors and detectors in the option tray can be monitored with the lamps on the operation panel. Used to check the operations of the sensors.
<table><tr><th>Sensor name</th><th>Display lamp</th></tr><tr><td>Option tray cover open/close detector (CSDSW)</td><td>Toner empty lamp</td></tr><tr><td>Option tray paper feed sensor (CSPPD)</td><td>Jam lamp</td></tr><tr><td>Option tray open/close detector (CPED2)</td><td>Upper tray lamp</td></tr><tr><td>Option tray detector (OCSA)</td><td>Lower tray lamp</td></tr></table></td><td></td></tr>
<tr><td rowspan="3">Optical unit</td><td rowspan="3">1</td><td>1</td><td>Used to check the operation of the scanner unit and its control circuit.
(Operation/procedure)
When the print button is pressed, scanning is performed at the speed corresponding to the currently set copy magnification ratio.
The copy magnification ratio can be set arbitrarily.</td><td></td></tr>
<tr><td>2</td><td>Used to check the operations of the sensors and detectors in the optical unit and their related circuits.
(Operation/procedure)
ON/OFF of the sensors and detectors in the optical unit can be monitored with the lamps on the operation panel.
<table><tr><th>Sensor name</th><th>Display lamp</th></tr><tr><td>Mirror home position sensor (MHPS)</td><td>OPC drum lamp</td></tr><tr><td>Lens home position sensor (LHPS)</td><td>Toner empty lamp</td></tr></table></td><td>3-4</td></tr>
<tr><td>3</td><td>Used to check the operation of the lens unit and its control circuit.
(Operation/procedure)
The lens unit moves to each position of the following copy magnification ratios continuously, and stops at each position for about 0.5 sec.
The copy magnification ratio corresponding to each stop position of the lens is displayed on the operation panel.
10% → Reduction 1 → Reduction 2 → Enlargement 1 → Enlargement 2 → 100%</td><td></td></tr>
</table>

Purpose/kind	Section	Contents			Ref. page
		Main code	Sub code	Description	
Operation check	Optical unit	1	4	Used to check the operation of the optical unit and its control circuit.	
				(Operation/procedure) The operation of simulation 1-3 is repeatedly performed.	
		5	3	Used to check the operation of the copy lamp and its control circuit.	
				(Operation/procedure) The copy lamp lights up for first one sec at full power, and lights for 4 sec at the currently set exposer level (copy density). 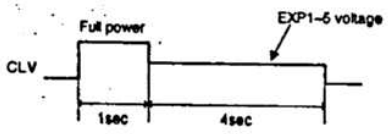 	
	SPF unit	2	2	Used to check the operation of the sensors and detectors in the SPF unit.	3-4
				(Operation/procedure) ON/OFF of the sensors and detectors in the SPF unit can be monitored with the lamps on the operation panel.	
			3	Used to check the operation of the SPF drive motor and its control circuit.	
				(Operation/procedure) The SPF drive motor rotates for 10 sec at the speed corresponding to the currently set copy magnification ratio.	
			4	Used to check the operation of the SPF paper feed clutch and its control circuit.	
				(Operation/procedure) The SPF paper feed clutch turns on for 10 sec.	
			5	Used to check the operation of the SPF resist clutch and its control circuit.	
				(Operation/procedure) The SPF resist clutch turns on for 10 sec.	
	Operation unit	5	1	Used to check the operations of the lamps on the operations panel and their control circuits.	
				(Operation/procedure) All display lamps on the operation panel turns on for 5 sec.	
	Fuser unit	5	2	Used to check the operation of the heater lamp and its control circuit.	
				(Operation/procedure) The heater lamp turns on for 500ms, and off for 500ms five times repeatedly.	
	Process	5	4	Used to check the operation of the discharge lamp and its control circuit.	
				(Operation/procedure) The discharge lamp lights up for 30 sec.	
			5	Used to check the operation of the blank lamp and its control circuit.	
				(Operation/procedure) The blank lamps lights up sequentially from the rear frame side to the front frame side, and all the lamps light up for 10 sec.	
	Operation check	6	2	Used to check the operation of the OPC separation pawl solenoid and its control circuit.	
				(Operation/procedure) The OPC separation pawl solenoid repeats 0.5 sec ON and 0.5 sec OFF twenty times.	

Sensor name	Display lamp
Document detector (SPFD)	Toner empty lamp
SPF resist sensor (SPPD)	Jam lamp
Document exit sensor (SPOD)	OPC drum lamp
SPF open/close detector (SDSW)	SPF jam lamp

Purpose/kind	Section	Contents			Ref. page
		Main code	Sub code	Description	
Operation check	Process	44	2	Used to display the reference value of the optical system dirt correction. This value affects the process correction system. For details, refer to the descriptions on the process correction system.	5-5 5-13
			3	Used to display the reference value of the optical system dirt correction.	5-13
				(Operation/procedure) When the simulation key operation is performed, the current correction amount is displayed in hexadecimal number on the COPIES SELECTED display. The decimal number converted from the hexadecimal number shows the actually corrected copy lamp voltage. Example --- 1d] : 2.9V correction	
			4	Used to display rotating time of the photoconductor drum. This value affects the process correction system. For details, refer to the descriptions on the process correction system.	5-12
				(Operation/procedure) When the simulation key operation is performed, the current rotating time of the photoconductor drum is displayed in the unit of minute on the COPIES SELECTED display.	
	Developer unit	10		Used to check the operation of the toner motor and its control circuit.	
				(Operation/procedure) The toner motor turns on for 30 sec.	
		25	1	Used to check the operation of the sections other than the optical unit and to check the operation of the toner density sensor.	
				(Operation/procedure) The main motor rotates and the units connected to the main motor operate accordingly. The output level of the toner density sensor is displayed on the COPIES SELECTED display.	
Trouble code resets		14		Used to cancel troubles other than self diag U2 trouble code.	
				(Operation/procedure) After cancellation of the trouble code, the simulation is also automatically cancelled.	
		16		Used to cancel the self diag U2 trouble code.	
				(Operation/procedure) After cancellation of the trouble code, the simulation is also automatically cancelled.	

6. User simulation

User simulation allows the user to change or cancel the factory settings easily according to his or her desirable operating environment on the following functions.

(1) Functions which can be reset or canceled by User simulation.

Auto clear function: Time for returnign to the standard state can be changed or canceled. (Standard state: copy quantity "0," 100% AE mode)

Pre-heating function (Power saving): Time to enter the pre-heat mode and the auto power shut-off mode can be changed or canceled. (Refer to [1]-4 New functions, page 1-1.)

Stream feeding mode: When set to this mode, the document feed lamp blinks for about 5 sec after copying with the SPF. If a document is set again, copying is started automatically.

(2) User simulation prcedure

Simulation procedure	State	Paper jam/ photoconductor/ toner supply warning LED	Copy quantity display	Print LED
1. Press the paper feed section select key for more than 5 sec.	User simulation input allowed.	Blink	☼ –	OFF
2. Enter a code number with 10 key.	Simulation code selection.	Blink	☼1☼ –	ON
3. Press the COPY button.	Simulation code determined.	Blink	1 ☼1☼	ON
4. Enter the selection code with 10 key.	Simulation code menu selection.	Blink	1 ☼2☼	ON
5. Press the COPY button.	Simulation code menu determined.	Blink	1 2	OFF
6. Press the paper feed section select key.	Escape from user simulation.	OFF	Returns to copy quantity display.	—
※ Press the clear key.	• When this key is pressed during user simulation selection, the mode returns to state 1 (user simulation input allowed.) (Use this key to correct mistyping of input.) • After completion of program setting, when this key is pressed, the mode the following program input can be made.	Blink		OFF

(☼ : Blink)

(3) User simulation code table

Program	Sim code	Selection code: setting content	Factory setting
Auto clear time setting	[1]	[0] OFF [1] 30 sec. [2] 60 sec. [3] 90 sec. [4] 120 sec.	O
Pre-heat mode setting and time setting	[2]	[0] OFF [1] 30 sec. [2] 60 sec. [3] 90 sec. [4] 120 sec.	O

Program	Sim code	Selection code: setting content	Factory setting
Auto shut-off mode setting and time setting	[3]	[0] OFF [1] 2 min. [2] 3 min. [3] 5 min. [4] 10 min. [5] 15 min.	O
Stream feeding mode setting and time setting (※ Machines with SPF installed only.)	[4]	[0] ON [1] OFF	O

[9] SELF DIAG

1. Summary/purpose

This model has the self diag function for the following purposes:

1) When a trouble occurs in the machine, the machine detects the trouble and displays the trouble content on the copy quantity display to alert the customer and the serviceman.
2) When any abnormality is detected, the power supply line is cut off immediately for safety and to protect the machine from damage.

2. Operation

The self diag content is displayed in the following procedure.

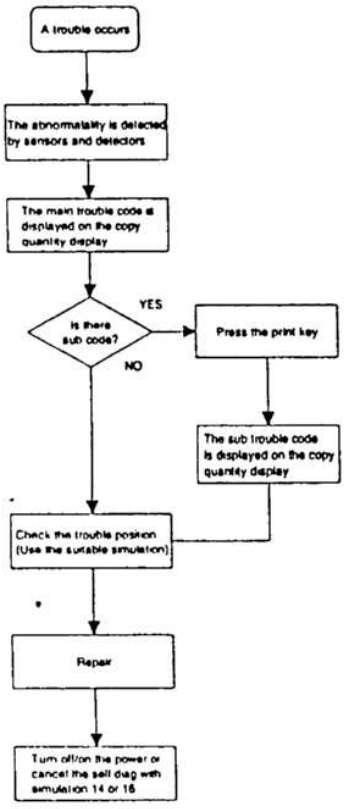

3. Clearing the self diag display

After repairing the trouble section, clear the self diag display according to the table below:
Clearing the self diag display

Self diag display	Display clearing procedure
L1, L3, L4, L5, L8	Turn off/on the power.
H3, H4	Execute simulation 14.
U2	Execute simulation 16.
CH, PC	When the trouble is cancelled,, the display is cleared.

4. Self diag contents

Error code		Item	Description	Ref. page
Main	Sub			
L1	0	Content	Scanner feed trouble	8-10
		Detail	1) 86 pulses (45 mm) of the scanner motor drive pulse have been outputted after the scanner unit started scanning, but the scanner home position sensor (MHPS) does not turn off. 2) The scanner unit is not at its home position (MHPS does not turn on) when the scanner unit starts scanning. 3) The scanner home position sensor (MHPS) does not turn on when the scanner performs the initial operation.	
		Cause	1) Scanner motor trouble 2) Scanner motor control circuit trouble 3) Scanner motor rotation sensor and its control circuit trouble 4) Scanner home position sensor (MHPS)and its input circuit trouble (main control circuit trouble) 5) Scanner unit drive mechanism trouble 6) An overload to the drive section	
		Remedy	Use test command 1-1 and 1-2 to check the following: A. Check the mirror motor control circuit and its peripheral sections. 1) The scanner unit operates normally. 2) The scanner home position sensor ((MHPS) operates normally and its output signal is inputted to the main control PWB. 3) The scanner motor drive signal is outputted. 4) The scanner motor rotation sensor signal is inputted to the control circuit. B. Check the scanner unit drive mechanism. 1) Drive wire 2) Pulley 3) Gear After repair, turn off/on the power switch.	
L3	0	Content	Scanner return trouble	8-10
		Detail	1) The scanner motor drive pulses required for the scanner unit to return are shifted more than 50 pulses for the drive pulses required for feeding. (The corresponding distance is 10mm or more.) 2) The scanner motor drive pulses required for the scanner unit to return are within 50 pulses for the drive pulses required to feed. 3) The scanner unit does not return. Or through it returns, the scanner unit does not return to its home position (the MHPS does not turn on). (Though the scanner motor drive pulses required to return are 50 pulses greater than the drive pulses required for the scanner unit to feed, the scanner unit is not in the home position (the MHPS does not turn on). 4) After the scanner unit returns, the MHPS does not turn on.	
		Cause	1) Scanner motor trouble 2) Scanner motor control circuit trouble 3) Scanner motor rotation sensor and its peripheral sections trouble 4) Scanner home position sensor (MHPS) and its input circuit trouble 5) Scanner unit drive mechanism trouble 6) Overload at the scanner motor drive section	
		Remedy	Use simulation 1-1 and 1-2 to check the following: A. Check the mirror motor control circuit and its peripheral. 1) The scanner unit operates normally. 2) The scanner home position sensor (MHPS) operates normally and its output signal is inputted to the main control circuit. 3) The scanner motor drive signal is inputted. 4) The scanner motor rotation sensor signal is inputted to the control circuit. B. Check the scanner unit drive mechanism. 1) Drive wire 2) Pulley 3) Gear After repair, turn off/on the power switch.	
L4	1	Content	Main motor lock trouble	

Error code Main	Error code Sub	Item	Description	Ref. page
L4	1	Detail	The rotary encoder signal cannot be detected for more than 50ms during delivery of the main motor On signal output.	
		Cause	1) Main moor trouble 2) Main control circuit trouble 3) Main motor rotation sensor and its input circuit (main control circuit) trouble 4) Main motor drive mechanism trouble 5) An overload on the main motor drive section	
		Remedy	Check the following items: A. Check the main motor control circuit and its peripheral sections. 1) Main motor drive signal is inputted. 2) The main motor rotation sensor signal is inputted to the control circuit. B. Check the main motor drive mechanism. 1) Drive wire 2) Pulley 3) Gear After repair, turn off/on the power switch.	
	2	Content	Lens drive motor trouble	8-10 8-11
		Detail	1) During the initial operation, the lens does not move from the reduction copy position to the enlarged copy position. Or the lens home position sensor (LHPS) does not turn on even though the lens moves (130mm/lens motor drive pulse output). 2) During the initial operation, the lens does not move to the enlargement copy position. Or the lens moves (70mm/ 50 pulses of lens motor drive puise are outputted) but the lens home position sensor (LHPS) does not turn off. 3) When the lens moves from the reduction coy position to the enlargement copy position, the specified number of pulses required for the lens home position sensor (LHPS) to move from ON position to OFF position is shifted by 20 pulses (4mm) or more. 4) AT the completion of lens movement, the lens home position sensor is not ON when in enlargement copying, or not OFF when in reduction copying.	
		Cause	1) Lens motor trouble 2) Main control circuit trouble 3) Lens motor rotation sensor and its input circuit (main control PWB) trouble 4) Lens motor drive mechanism trouble 5) An overload on lens motor drive mechanism	
		Remedy	Use simulations 1-3 or 1-4 to check the following items: A. Check the lens motor control circuit and its peripheral sections. 1) The lens motor drive signal is outputted. 2) Lens motor rotation sensor signal is inputted to the control circuit. B. Check the lens motor drive mechanism. 1) Drive wire 2) Pulley 3) Gear After repair, turn off/on the power switch.	
L8	1	Content	Power frequency abnormality	
		Detail	The power frequency is shifted from the specified level by 5% or more for 10 cycles or more, or the FW signal cannot be detected for more than 5 sec.	
		Cause	1) FW is not outputted or the output waveform is abnormal. 2) Power circuit trouble (AC power unit/DC power unit) 3) FW input circuit trouble (main control circuit) 4) AC power trouble (waveform/voltage)	
		Remedy	Check the waveforms of the following units with an oscilloscope. 1) FW signal waveform in the DC power unit 2) FW signal waveform in the main control circuit 3) AC power line After repair, turn OFF/ON the power switch.	
	3	Content	During execution of simulation 47, the AE sensor output does not change according to change in the copy lamp voltage.	8-5
		Detail	AE sensor trouble	
		Cause	1) AE sensor or its input circuit (main control PWB) trouble 2) Copy lamp control circuit trouble (copy lamp control signal abnormality) 3) A white paper is not set on the document table or the document table or the document cover is dirty.	

Error code		Item	Description	Ref. page
Main	Sub			
L8	3	Remedy	Check the following items: 1) AE sensor or its input circuit 2) Copy lamp control circuit (copy lamp control signal) After repair, turn off/on the power switch.	
H2	0	Content	Fuser section thermistor trouble	
		Detail	The voltage across the thermistor input circuit remains 4.6V or more for 1500 ms or more.	
		Cause	1) Thermistor and its input circuit (main control PWB) trouble (disconnection)	
		Remedy	Check the thermistor and its input circuit (main control circuit) for disconnection. AFter repair, used test command 14 to cancel the self diag.	
H3	0	Content	Abnormally high temperature in the fuse section	8-11
		Detail	The voltage across the thermistor input circuit remains 1.39V or less for 1500 ms or more. (A high temperature above 241 C is detected.)	
		CAuse	1) Thermistor and its input circuit (main control PWB) trouble (disconnection) 2) Heater lamp control signal and its control circuit trouble (The heater lamp remains ON.)	
		Remedy	Check the following items: 1) Thermistor and its input circuit (main control PWB) disconnection 2) Heater lamp control signal and its control circuit After repair, use test command 14 to cancel the self diag.	
H4	0	Content	An abnormally high temperature in the fuse section	8-11
		Detail	1) The voltage across the thermistor input circuit remain 3.39V or more for 1500ms. (A temperature below 148°C is detected.) 2) The temperature does not reach the specified temperature within 60 sec after starting warming up.	
		Cause	1) Thermistor and its input circuit (main control circuit) trouble (disconnection) 2) Heater lamp trouble 3) Heater lamp control signal and its control circuit trouble (The heater lamp remains ON.)	
		Remedy	Check the following items: 1) Check the thermistor and its input circuit (main control PWB) for disconnection or shot. 2) Heater lamp control signal and its control circuit 3) Heater lamp After repair, use test command 14 to cancel the self diag.	
U2	1	Content	In the main PWB EEPROM data sum check, the data do not correspond to the CPU data.	
		Cause	1) Main PWB EEPROM trouble 2) Main control circuit trouble 3) Communication line trouble between the main PWB EEPROM and the CPU 4) CPU trouble 5) Data bus line trouble	
		Remedy	Check the following items: 1) main PWB EEPROM 2) Memory control circuit 3) Communication line between main PWB EEPROM and CPU 4) CPU 5) Data bus line After repair, use test command 16 to cancel the self diag. When the power is turned on, data in the main PWB EEPROM are transferred to the CPU to perform sum check. The operation can be checked at that time.	
	4	Content	memory line communication trouble	
		Detail	1) In access to the main PWB EEPROM, the respond command ACK is not inputted to the CPU. 2) When writing data into the main PWB EEPROM, the write enable signal is not inputted to the CPU for 11ms or more.	
		Cause	1) Main EEPROM RAM trouble 2) Memory control circuit trouble 3) Communication line trouble between main PWB and CPU 4) CPU trouble 5) Data bus line trouble	

Error code		Item	Description	Ref. page
Main	Sub			
U2	4	Remedy	Check the following items: 1) Main PWB EEPROM 2) Memory control circuit 3) Communication line between main PWB EEPROM and CPU 4) CPU 5) Data bus line After repair, use simulation 16 to cancel the self diag When the power is turned on, data communication is performed with the main PWB EEPROM and the CPU. The operation can be checked at that time.	
EE	EU	Content	Toner density initial setting trouble (undertoner)	8-6
		Detail	When setting the toner density initial level with simulation 25-2, the toner density sensor output is below the specified voltage (1.53V).	
		Cause	1) Toner sensor trouble 2) Toner sensor input circuit trouble (main control PWB)	
		Remedy	Use test command 25-2 to check the following items: 1) Toner sensor 2) Toner sensor input circuit After repair, use test command 14 to cancel the self diag.	
	EL	Content	Toner density initial setting trouble (overtoner)	8-6
		Detail	When setting the toner density initial level with simulation 25-2, the toner density sensor output is above the specified voltage (3.49V).	
		Cause	1) Toner sensor trouble 2) Toner sensor input circuit trouble (main control circuit) 3) Toner motor and its control circuit trouble	
		Remedy	Use test command 25-2 to check the following items: 1) Toner sensor 2) Toner sensor input circuit 3) Toner motor and its control circuit After repair, use test command 14 to cancel the self diag.	
CH	Light	Content	Paper feed section cover open	8-10
		Detail	1) The paper feed section cover open/close detector (CSDSD) and its input circuit remains Low (0V).	
		Cause	1) Paper feed section cover open/close mechanism trouble 2) Paper feed section cover open/close detector signal (CSDSW) and its control circuit trouble 3) Paper feed section cover open/close detector (CSDSW) trouble	
		Remedy	check the following items: 1) Paper feed section cover open/close mechanism 2) Paper feed section cover open/close detector signal (CSDSW) and its input circuit 3) Paper feed section cover open/close detector (CSDSW)	
	Light	Content	Manual paper feed unit installation trouble (MFD0, MFD1)	
		Detail	1) The manual paper feed unit signal (CSDSW) and its control circuit remains MFD0 level and MFD1 level.	
		Cause	1) The manual paper feed unit signal (MFD1) line is not connected or disconnection in the line. (The manual paper feed unit is not installed.)	
		Remedy	Check the following item: 1) Manual paper feed unit signal (MFD1) line	
	Blink	Content	Developer detection trouble	8-6
		Detail	1) The toner density sensor input (main PWB) voltage is below 0.5V.	
		Cause	1) Toner density sensor and its input circuit (main PWB) trouble 2) Developer seal is not removed.	
		Remedy	Use simulation 25-2 to check the following items: 1) Toner density sensor and its control circuit (main PWB) 2) Developer seal	
PC		Content	Personal counter installation trouble	
		Detail	The personal counter is not installed in the personal counter mode. The input circuit of the personal counter installation detect signal does not turn HIGH level.	
		Cause	1) Personal counter trouble 2) Personal counter installation detecting signal input circuit (main PWB) trouble 3) Personal counter wiring	

Error code		Item	Description	Ref. page
Main	Sub			
PC		Remedy	Check the following items: 1) Personal counter 2) Personal counter installation detecting signal input circuit (main PWB) 3) Personal counter wiring	
Paper empty		Content	Paper tray open/no copy paper	8-10
		Detail	1) The selected paper tray is removed. 2) There is no paper in the selected paper tray.	
		Cause	1) The selected paper tray is removed. 2) There is no paper in the selected paper tray. 3) The selected paper tray detector (CPED1, CPED2) and its input circuit (main PWB) trouble 4) The selected paper tray paper empty detector (CPED1/CPED2) and its input circuit (main PWB)	
		Remedy	Check the following items: 1) The selected paper tray paper empty detector (CPED1/CPED2) and its input circuit (main PWB)	
Toner empty	Light	Content	Toner supply trouble	8-6
		Detail	1) No toner in the toner box 2) Toner supply trouble	
		Cause	1) No toner in the toner box 2) Toner motor and its control circuit (main PWB) trouble 3) Toner supply section clogging 4) Toner sensor and its input circuit (main PWB) trouble	
		Remedy	Use simulation 25-2 to check the following items: 1) Toner box 2) Toner motor and its control circuit (main PWB) 3) Toner supply section 4) Toner sensor and its control circuit (main PWB)	
Toner empty	Blin	Content	Toner density fall	8-12
		Detail	1) No toner in the toner box 2) Toner density falls below the specified level.	
		Cause	1) No toner in the toner box 2) Toner motor and its control circuit (main PWB) trouble 3) Toner supply section clogging 4) Toner sensor and its input circuit (main PWB) trouble	
		Remedy	Check the following items: 1) Toner box 2) Toner motor nd its control circuit (main PWB) 3) Toner supply section 4) Toner sensor and its input circuit (main PWB)	
JAM		Content	Copy paper misfeed trouble	8-3
		Detail	1) Misfeed of copy paper occurs in the copy paper feed section, the transfer section, the transport section, or the fuse section.	
		Cause	1) The copy paper detector in each section remains ON or OFF. 2) The copy paper detector in each section and its input circuit (main PWB) trouble 3) The copy paper feed and transport clutches in each section and its control circuit (main PWB) trouble 4) Paper feed roller and transport roller trouble 5) Copy paper fed and transport drive mechanism trouble (motor, gear, etc.) 6) Insufficient or excessive contact pressure between copy paper and the resist roller because of improper setting with simulation 51-2.	
		Remedy	Check the following items: 1) Copy paper detector in each section 2) Copy paper detector and its input circuit (main PWB) in each section 3) Copy paper feed and transport clutches and their control circuit (main PWB) trouble 4) Paper feed roller, transport roller 5) Copy paper feed and transport drive mechanisms trouble (motor, gear, etc.) 6) Set value of simulation 51-2	

Error code		Item	Description	Ref. page
Main	Sub			
OPC drum replacement	Light	Content	OPC drum replacement timing alarm	8-9
		Detail	OPC drum replacement after copying 2,000 sheets.	
	Blink	Content	OPC drum replacement	
		Detail	OPC drum replacement timing is reached.	
		Cause	The OPC drum unit counter exceeds the specified copy quantity (40K). (Note) The OPC drum counters are in the main PWB RAM and in the OPC drum. The two counters normally coincide each other. If there is any discrepancy between them, the data in the EEPROM in the OPC drum takes priority.	
		Remedy	Replace the OPC drum unit.	
SPFJAM		Content	Document misfeed trouble	8-11
		Detail	1) When the document is in the SPF section, a misfeed of copy paper occurs.	
		Cause	1) The document detector in he SPF section remains ON or OFF. 2) The document detector in the SPF section and its input circuit (main PWB) trouble 3) The paper feed and transport clutches in the SPF section and its control circuit (main PWB) trouble 4) SPF section paper feed roller and transport roller trouble 5) Document paper feed section and its transport drive system trouble (motor, gear, etc.) 6) Insufficient or excessive contact pressure between the SPF resist roller and the document because of improper setting with simulation 51-7	
		Remedy	Use simulation 2 to check the following items: 1) SPF section document detector 2) SPF section document detector and its input circuit (main PWB) 3) SPF section paper feed and transport clutches and their control circuit (main PWB) 4) SPF section paper feed roller, transport roller 5) Document paper feed and transport drive system (motor, gear, etc.) 6) Set value of simulation 51-7	

5. Conditions for the JAM display

1) Paper feed section

(1) The JAM lamp lights up if ⑨ PPD does not turn on within about 1.5 sec after ⑳ CPFC1 ON.

(2) The JAM lamp lights up if ⑫ CSPPD does not turn on within about 1.1 sec after ㉑ CPFC2 ON.

(3) The JAM lamp lights up if ⑨ PPD does not turn on within about 1 sec after ⑫ CSPPD ON.

(4) The Jam lamp lights up if ⑨ PPD does not turn on within about 1.0 sec after ㉒ MPFC ON.

2) Transport section

(1) The JAM lamp lights up if ⑨ PPD does not turn off within about 3.2 sec after ⑰ RRC ON.

(2) The JAM lamp lights up if ① POD does not turn off within about 2.8 sec after ⑨ PPD ON.

(3) The JAM lamp lights up if ① POD does not turn on within about 2.4 sec after ⑰ RRC ON.

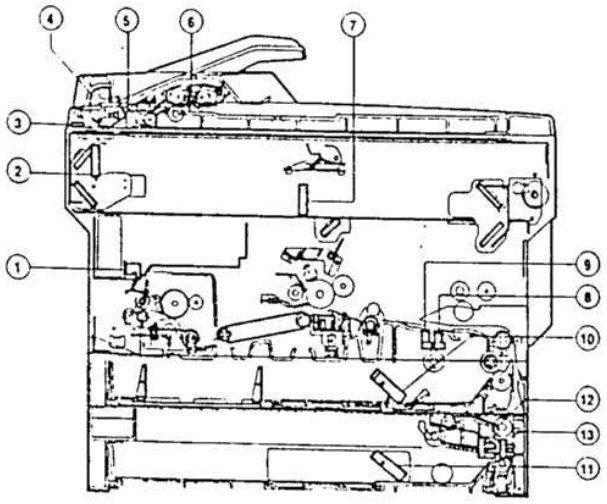

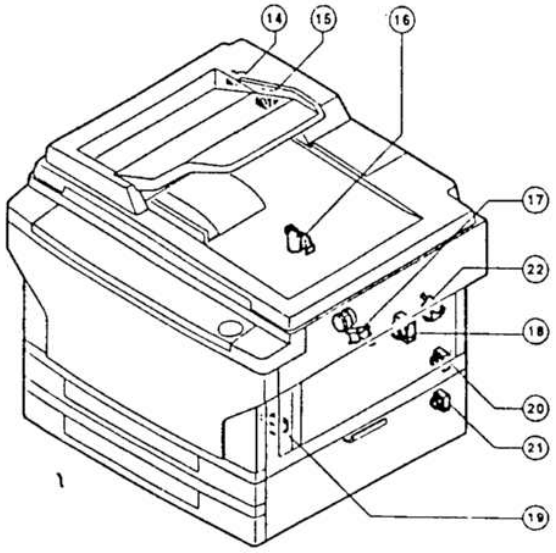

[10] SERVICING AT MEMORY TROUBLE AND MAIN CONTROL PWB REPLACEMENT

1. General

The EEPROM in the control PWB and the EEPROM in the OPC drum unit are storing various set values, adjustment values, and counter values.
These data are very important and used for operating the machine properly and for service control.
In the following cases, therefore, various set values, adjustment values and counter values must be set again.

※ When a memory trouble (U2) occurs.

※ When the EEPROM in the main control PWB is replaced.

※ When the EEPROM in the OPC drum unit is replaced.

※ When the main control PWB is replaced.

When "U2" trouble occurs, the data cannot be relied upon, and they must be set properly.

2. Purpose

The purpose is to reset the memory data to operate the machine properly.
Use the attached service memory data recording sheet to memorize the newest data when servicing in order to cope with the above situations. This improves efficiency in servicing and realizes quick recovery.

3. Remedies

Perform the procedures according to the following flowcharts.
"Sim" in the flowchart means "Simulation."

Memory trouble

Procedures for memory trouble, main control PWB replacement, and main control PWB EEPROM replacement

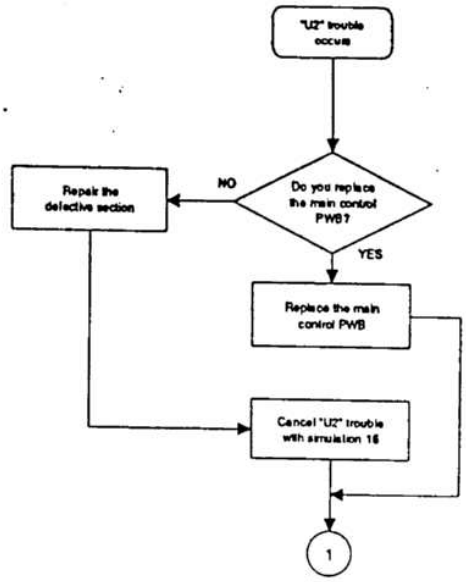

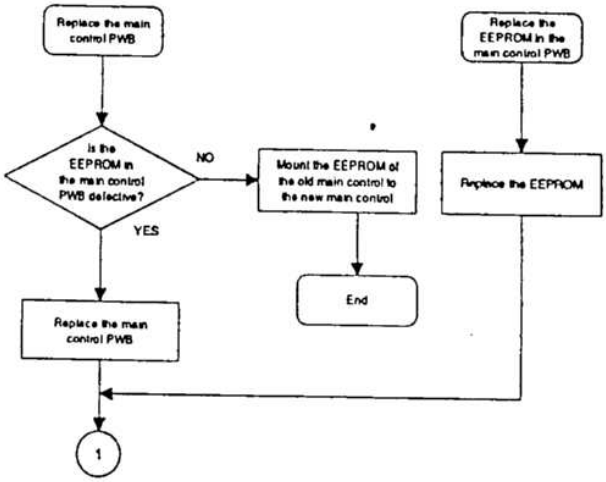

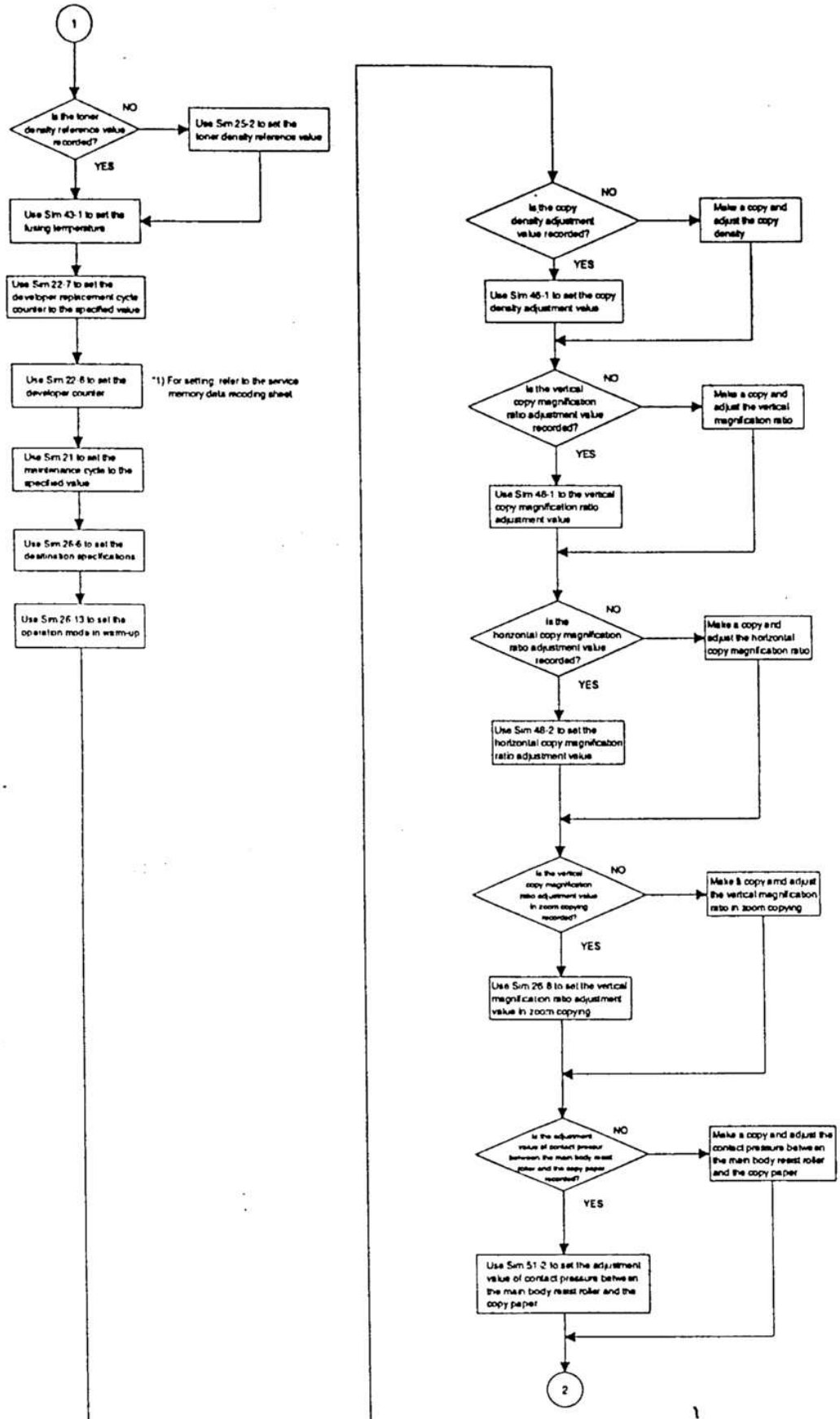
1
Is the toner density reference value recorded?
NO
YES
Use Sim 25-2 to set the toner density reference value
Use Sim 43-1 to set the fusing temperature
Use Sim 22-7 to set the developer replacement cycle counter to the specified value
Use Sim 22-8 to set the developer counter
*1) For setting, refer to the service memory data recoding sheet
Use Sim 21 to set the maintenance cycle to the specified value
Use Sim 26-6 to set the destination specifications
Use Sim 26-13 to set the operation mode in warm-up
Is the copy density adjustment value recorded?
NO
YES
Make a copy and adjust the copy density
Use Sim 46-1 to set the copy density adjustment value
Is the vertical copy magnification ratio adjustment value recorded?
NO
YES
Make a copy and adjust the vertical magnification ratio
Use Sim 46-1 to the vertical copy magnification ratio adjustment value
Is the horizontal copy magnification ratio adjustment value recorded?
NO
YES
Make a copy and adjust the horizontal copy magnification ratio
Use Sim 46-2 to set the horizontal copy magnification ratio adjustment value
Is the vertical copy magnification ratio adjustment value in zoom copying recorded?
NO
YES
Make a copy and adjust the vertical magnification ratio in zoom copying
Use Sim 26-8 to set the vertical magnification ratio adjustment value in zoom copying
Is the adjustment value of contact pressur between the main body resist roller and the copy paper recorded?
NO
YES
Make a copy and adjust the contact pressure betwe en the main body resist roller and the copy paper
Use Sim 51-2 to set the adjustment value of contact pressure betwe en the main body resist roller and the copy paper
2

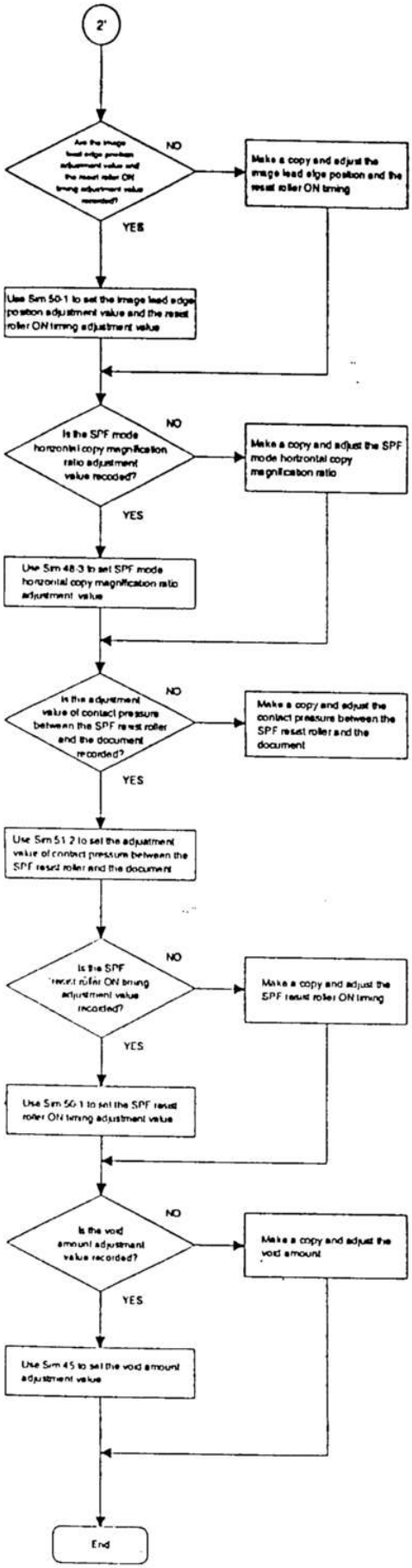
2'
Are the image lead edge position adjustment value and the resist roller ON timing adjustment value recorded?
NO
Make a copy and adjust the image lead edge position and the resist roller ON timing
YES
Use Sim 50-1 to set the image lead edge position adjustment value and the resist roller ON timing adjustment value
Is the SPF mode horizontal copy magnification ratio adjustment value recorded?
NO
Make a copy and adjust the SPF mode horizontal copy magnification ratio
YES
Use Sim 48-3 to set SPF mode horizontal copy magnification ratio adjustment value
Is the adjustment value of contact pressure between the SPF resist roller and the document recorded?
NO
Make a copy and adjust the contact pressure between the SPF resist roller and the document
YES
Use Sim 51-2 to set the adjustment value of contact pressure between the SPF resist roller and the document
Is the SPF resist roller ON timing adjustment value recorded?
NO
Make a copy and adjust the SPF resist roller ON timing
YES
Use Sim 50-1 to set the SPF resist roller ON timing adjustment value
Is the void amount adjustment value recorded?
NO
Make a copy and adjust the void amount
YES
Use Sim 45 to set the void amount adjustment value
End

4. Set value recording sheet

Purpose/kind	Section	Contents			
		Main code	Sub code	Set value	Description
Adjustment	Paper feed section	51	2		Adjustment value of contact pressure of the paper on the main body resist roller
	Optical unit	26	8		Adjustment value (lens shift amount adjustment value) of copy magnification ratio in zoom copying
		45			Adjustment value of copy paper lead edge void amount
		46	1		Adjustment value of copy density (exposure level) in each copy mode and of copy density gradient (exposure gradient)
					Manual copy mode density level 1 (Not toner save mode)
					Manual copy mode density level 5 (Not toner save mode)
					Manual copy mode density level 1 (Toner save mode)
					Manual copy mode density level 5 (Toner save mode)
					Auto copy mode density level 1 (Not toner save mode)
					Auto copy mode density level 5 (Not toner save mode)
					Auto copy mode density level 1 (Toner save mode)
					Auto copy mode density level 5 (Toner save mode)
					Photo copy mode density level 1 (Not toner save mode)
					Photo copy mode density level 5 (Not toner save mode)
		47			The AE sensor and the optical section characteristics memory data for the change in the copy lamp application voltage
		48	1		The vertical copy magnification ratio adjustment value
			2		The horizontal copy magnification ratio adjustment value (when the document table is used)
		50	1		The adjustment value of copy image position on the copy paper
					SEt value A
					Set value B
					Set value C
	SPF unit	48	3		The horizontal copy magnification ratio adjustment value (When the SPF is used)
		51	7		The adjustment value of the contact pressure between the SPF resist roller and the document
Setting	Specifications	26	6		Destination specifications
	Fuser unit	26	13		Setting of the main motor operation mode in warming up
		43	1		The set value of fusing temperature
	Maintenance counter	21	1		Setting of the maintenance cycle
	Others	21	3		Setting of the color kit replacement cycle

Memorize set values in the column of "Set value" for efficient servicing when the memory trouble occurs and the EEPROm is replaced.
Make a copy of this sheet and use with the service sheet.

5. Memory simulation list

Purpose/kind	Section	Contents				Ref. page
		Main code	Sub code	Default value	Description	
Adjustment	Paper feed section	51	2	50	Adjustment value of contact pressure of the paper on the main body resist roller	
	Optical unit	26	8	11	Adjustment value (lens shift amount adjustment value) of copy magnification ratio in zoom copying	
		45		50	Adjustment value of copy paper lead edge void amount	
		46	1		Adjustment value of copy density (exposure level) in each copy mode and of copy density gradient (exposure gradient)	
					Manual copy mode density level 1 (Not toner save mode)	
					Manual copy mode density level 5 (Not toner save mode)	
					Manual copy mode density level 1 (Toner save mode)	
					Manual copy mode density level 5 (Toner save mode)	
					Auto copy mode density level 1 (Not toner save mode)	
					Auto copy mode density level 5 (Not toner save mode)	
					Auto copy mode density level 1 (Toner save mode)	
					Auto copy mode density level 5 (Toner save mode)	
					Photo copy mode density level 1 (Not toner save mode)	
					Photo copy mode density level 5 (Not toner save mode)	
		47			The AE sensor and the optical section characteristics memory data for the change in the copy lamp application voltage	
		48	1	50	The vertical copy magnification ratio adjustment value	
			2	50	The horizontal copy magnification ratio adjustment value (when the document table is used)	
		50	1		The adjustment value of copy image position on the copy paper	
				50	Set value A	
				50	Set value B	
				50	Set value C	
	Developer unit	25	2		Toner density initial set value	
	SPF unit	48	3	50	The horizontal copy magnification ratio adjustment value (when the document table is used)	
		51	7	50	The adjustment value of contact pressure between the SPF resist roller and the document	
Setting	Specifications	26	6		Specifications setting by destination	
	Fuser unit	26	13	0	Setting of the main motor operation mode in warming up.	
		43	1	185°C	Fusing temperature set value	
Counter	Developer unit	22	6		Used to confirm the developer counter value of the installed developer unit.	
			7		Used to confirm the developer replacement cycle of the installed developer unit.	

Specifications setting by destination

Code No.		Destination
Normal machine	Zoom machine	
4	14	Japan
1	11	U.K.
5	15	AB series other than U.K.
6	16	U.S.A.
7	17	Inch series other than U.S.A.
25	35	Indonesia

Setting of the main motor operation mode in warming up.

Code No.	Operation mode	Operation
0	Normal mode	When the fusing temperature reaches the specified level, the main motor stops.
1	Long mode	The main motor keeps rotating until the completion of the warming up.

Purpose/kind	Section	Contents				Ref. page
		Main code	Sub code	Default value	Description	
Counter	OPC drum unit	22	10		Used to confirm the drum counter value in the installed OPC drum unit.	
			11		Used to confirm the drum replacement cycle in the installed OPC drum unit.	
	Total counter	22	5		Used to confirm the total counter value.	
		20			Used to reset the maintehance counter.	
		21	1	0	Used to set the maintenance cycle.	
		22	1		Used to confirm the maintenance count value.	
			2		Used to confirm the set maintenance cycle (maintenance preset counter).	
	Others	21	3	0	Used to set the color kit replacement cycle.	
Trouble cancel		14			Used to cancel troubles other than self diag "U2". After cancellation of the trouble, the simulation is also cancelled automatically.	
		16			Used to cancel self diag "U2" trouble. After cancellation of the trouble, the simulation is also cancelled automatically.	

[11] MAINTENANCE

▲ Replacement/Installation O Cleaning ★ Lubrication
× Check (Clean, replace, or adjust as required.)

Content		SRU specifications					
		40K	80K	120K	160K	200K	240K
Developer	Developer (New two-component developing system)		Replace at the same time as toner supply by small quantity. (No periodic replacement)				
	Toner supply				Replacement at every 4K by the user		
	DV seal	×	×	×	×	×	×
Drum	Drum	▲	▲	▲	▲	▲	▲
	main charger (Case, saw teeth)	O	▲	O	▲	O	▲
	Screen grid	O	▲	O	▲	O	▲
	Drum separation pawl	O	▲	O	▲	O	▲
	Cleaning blade	▲	▲	▲	▲	▲	▲
	Toner reception seal	×	×	×	×	×	×
Transfer	Transfer charger wire	O	▲	O	▲	O	▲
	Separation plate (Half-etching)	▲	▲	▲	▲	▲	▲
	Transfer charger case	O	O	O	O	O	O
ng	Fuser lower CL roller	▲	▲	▲	▲	▲	▲
	Fuser upper heat roller	O	▲	O	▲	O	▲
	Fuser bearing	O	▲	O	▲	O	▲
	Fuser gears	O	▲	O	▲	O	▲
	Fuser lower heat roller	O	▲	O	▲	O	▲
	Thermistor	O	O	O	O	O	O
	Fuser upper separation pawl	O	▲	O	▲	O	▲
	Fuser lower separation pawl	O	▲	O	▲	O	▲
Optical	Mirror, lens, reflector	O	O	O	O	O	O
	Sensors	O	O	O	O	O	O
	Drive wire, pulley	×	×	×	×	×	×
	Mirror base rail	★	★	★	★	★	★
	Glass, OC matt	O	O	O	O	O	O
Transport	Manual paper feed section roller	O	O	O	O	O	O
	Cassette paper feed section roller	O	O	O	O	O	O
	Paper transport roller in each section	O	O	O	O	O	O
	Suction belt (Only for the specified destination)	O	O	O	O	O	O
	Paper transport section paper guide	O	O	O	O	O	O
SPF	Paper feed roller	O	O	O	O	O	O
	Paper transport roller	O	O	O	O	O	O
	Original transport guide	O	O	O	O	O	O
	OC matt	O	O	O	O	O	O
Other	Gear section (Drving)	★	★	★	★	★	★
	Blank lamp, descharge lamp	✦	✦	✦	✦	✦	✦
	Ozone filter		✦		✦		✦
	Picture quality	×	×	×	×	×	×

[12] ELECTRICAL SECTION

1. System block diagram

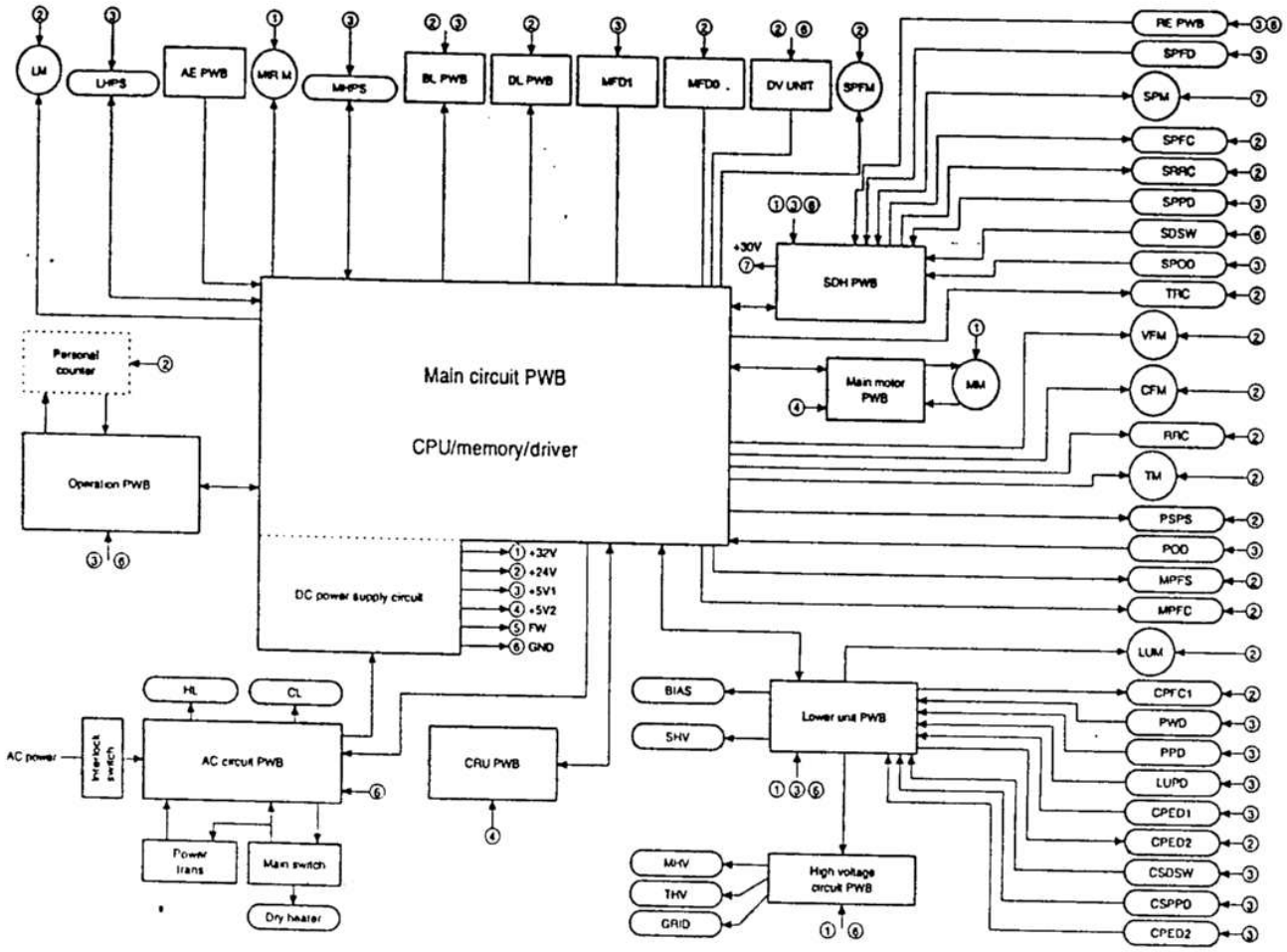

2. System operation at power ON

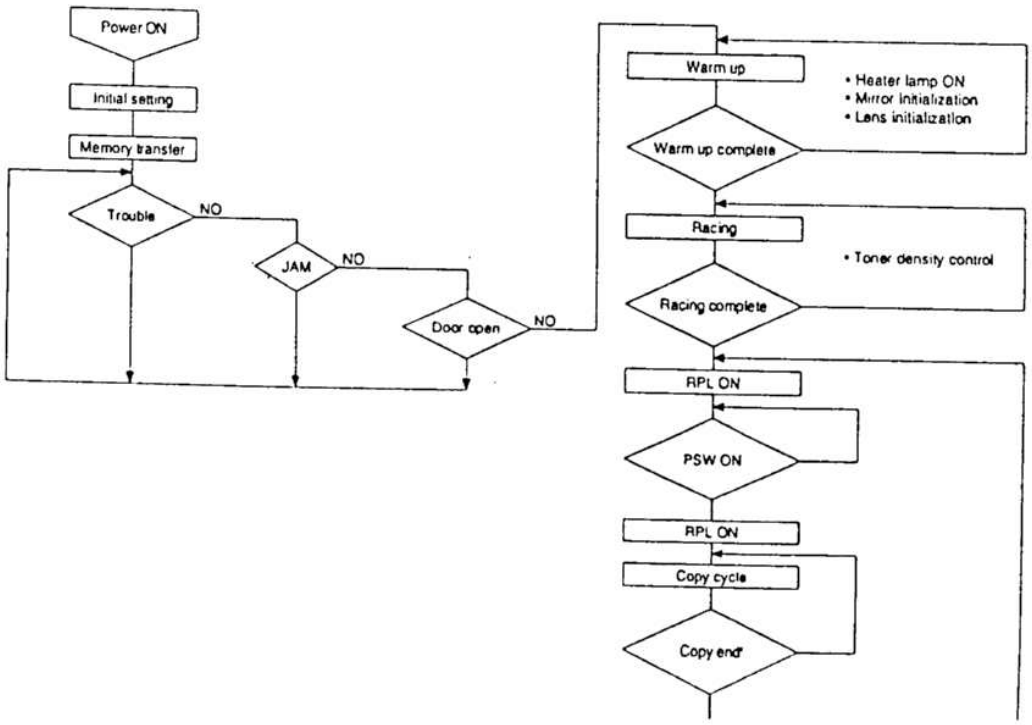

3. Main circuit

(1) Block diagram

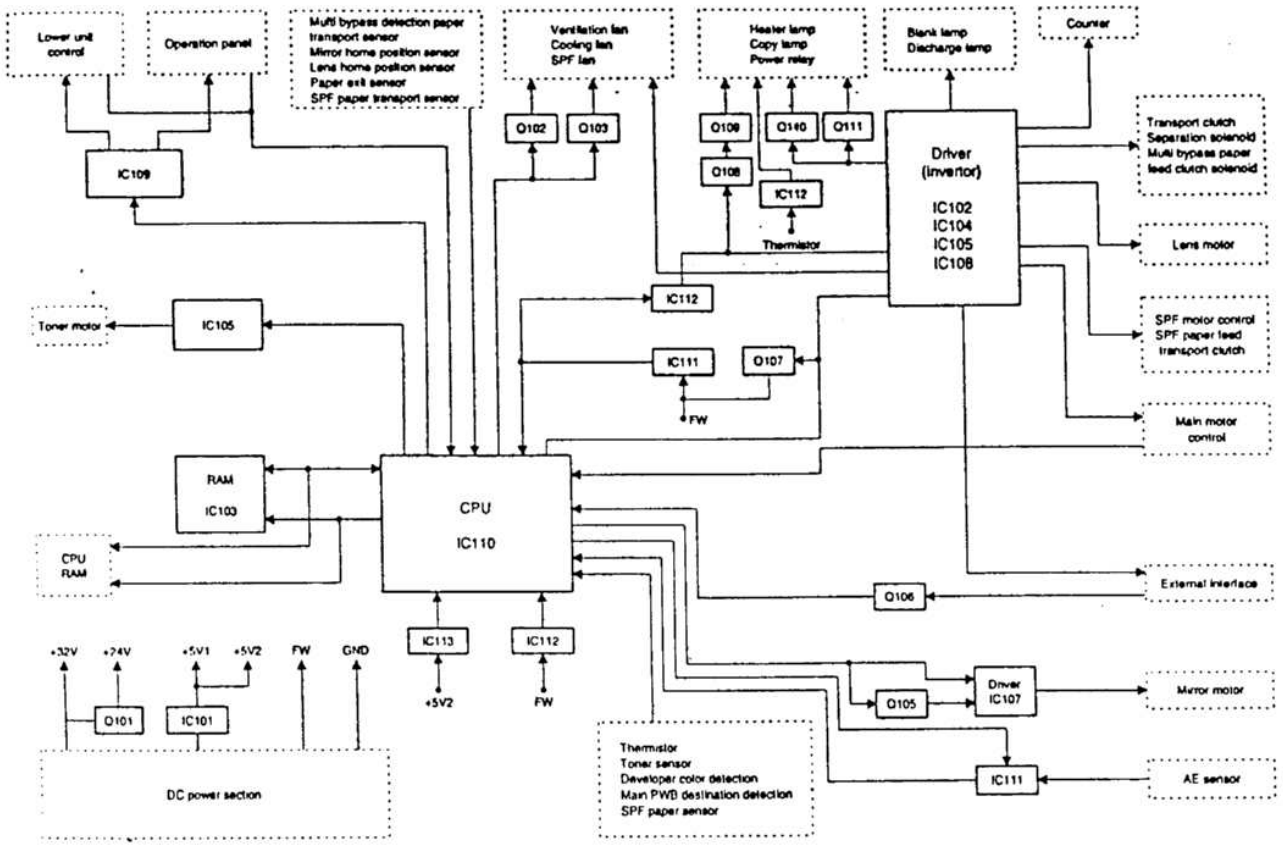

(2) CPU (IC110) M37702

① Outline

The M37702M2-XXXFP is a 16-bit, single-chip microprocessor which employs the high performance silicon gate CMOS process, and it is packed in 80-pin plastic mold flat package. The single chip m rocessor is equipped with a big address space of 16MB, the command cue buffer to execute commands at high speeds, and the data buffer. The CPU is of 16 bit parallel process, and allows selection of 8 bit parallel process mode if necessary.

② Pin arrangement

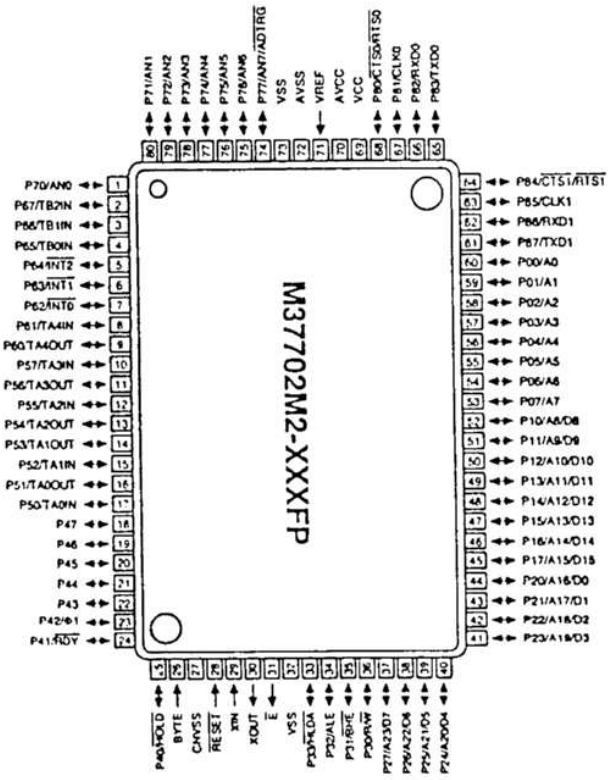

③ Block diagram

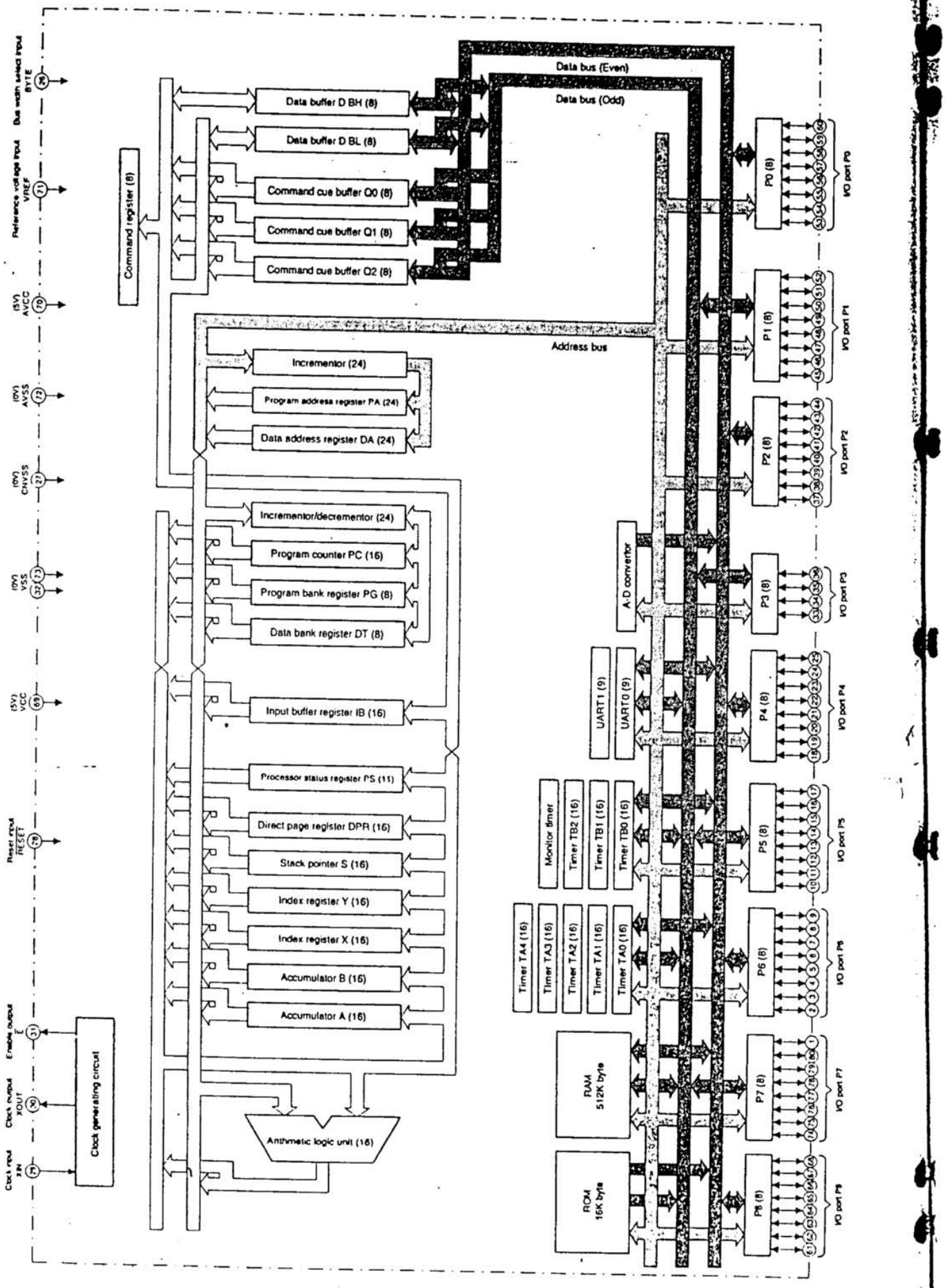

④ CPU: M37702 (IC110) pin signals

Pin No.	Port	Signal name	IN/OUT	H/L	Description
1	P70	AES	IN		Analog input signal (AE sensor)
2	P67	IN1	IN		Lower unit serial parallel IC input 2 port
3	P66	IN0	IN		Lower unit serial parallel IC input 2 port
4	P65	MMRE	IN		Main motor timer input
5	P64	FWS	IN		Power zero cross pulse detection signal
6	P63	MHPS	IN	H	Mirror home position detecting signal ("HIGH at Home position)
7	P62	AEG2	OUT		AE gain select signal
8	P61	AEG1	IN/OUT		AE gain select signal
9	P60	SMPWM	IN/OUT	H	Transport motor timer output clock
10	P57	AEG0	OUT		AE gain select signal
11	P56	CLPWM	OUT	H	Copy lamp control signal
12	P55	HL	OUT	H	Heater lamp control signal
13	P54	MMPWM	OUT	H	Main motor timer output clock
14	P53	PR	OUT	H	Power relay control signal
15	P52	BLPWM	OUT		Blank lamp control signal
16	P51	PSPS	OUT	H	Paper separation solenoid control signal
17	P50	DL	OUT	H	Discharge lamp control signal
18	P47	SCLK	OUT		Data output clock signal to EEPROM
19	P46	SDAT	IN/OUT	—	Serial data I/O to EEPROM
20	P45	LHPS	IN	H	Lens home position detecting signal (HIGH at home position)
21	P44	IMP	IN	—	NC
22	P43	SPFM	OUT	H	SDH cooling fan motor control signal
23	P42	VFM	OUT	H	Ventilation fan motor control signal
24	P41	CFM	OUT	H	Optical system cooling fan motor control signal
25	P40	POD	OUT	H	Paper exit detecting sinal
26	BYTE	BYTE	IN		External data bus select signal ("L" = 16 bit, "H" = 8 bit)
27	CNVss	CNVss	IN	H	Processor mode selection
28	$\overline{\text{RESET}}$	$\overline{\text{RESET}}$	IN	L	Reset signal (Reset at "L")
29	XIN	XIN	IN		Clock IN
30	XOUT	XOUT	OUT		Clock OUT
31	$\overline{E}$	$\overline{E}$	OUT		Enable output
32	Vss	Vss	OUT		Power (GND)
33	P33	PNC	OUT		Personal counter clock
34	P32	TRC	OUT	H	Transport roller clutch
35	P31	DVCUT	OUT	H	Developer fuse cut
36	P30	DVF	IN	L	Developer fuse (Not use)
37	P27	TMb	OUT	H	Toner supply motor drive signal
38	P26	TMa	OUT	H	Toner supply motor drive signal
39	P25	LEMT0	OUT	H	Lens motor drive signal A
40	P24	LEMT1	OUT	H	Lens motor drive signal B
41	P23	LEMT2	OUT	H	Lens motor drive signal –A
42	P22	LEMT3	OUT	H	Lens motor drive signal –B
43	P21	MPFC	OUT	H	Multi paper feed clutch control signal
44	P20	MPFS	OUT	H	Multi paper feed solenoid control signal
45	P17	MFD1	IN		Single/multi input 1 L / H; Not set; Single paper present L / L; Multi H / H; Single paper exhaust
46	P16	MFD0	IN		Single/multi input 2 H / L
47	P15	MRPS	OUT	H	
48	P14	MRMT0	OUT	H	Mirror motor drive signal $\overline{A}$
49	P13	MRMT1	OUT	H	Mirror motor drive signal $\overline{B}$
50	P12	MRMT2	OUT	H	Mirror motor drive signal –A
51	P11	MRMT3	OUT	H	Mirror motor drive signal –B
52	P10	SRPL	OUT	H	SDF lamp
53	P07	SRRC	OUT	H	Resist roller clutch drive signal
54	P06	SPFC	OUT	H	Paper feed roller clutch drive signal
55	P05	SME	OUT		Transport motor ON/OFF control signal

Pin No.	Port	Signal name	IN/OUT	H/L	Description
56	P04	SMG	OUT	H	Transport motor gain signal
57	P03	SPPD	IN	H	Paper entry detecting signal
58	P02	KEY3	IN	L	Operation PWB key input signal
59	P01	KEY1	IN	L	Operation PWB key input signal
60	P00	KEY0	IN	L	Operation PWB key input signal
61	P87	OP-DATA	OUT		Serial data output to operation PWB
62	P86	NC	—	—	(NC)
63	P85	OP-CLK	OUT		Data output clock signal to operation PWB
64	P84	OP-LATCH	OUT		Data latch signal to operation PWB
65	P83	UN-DATA	OUT		Serial data output to lower unit PWB
66	P82	NC	—	—	(NC)
67	P81	UN-CLK	OUT		Data output clock signal to lower unit PWB
68	P80	UN-LATCH	OUT		Data latch signal to lower unit PWB
69	Vcc	Vcc			Power (5V)
70	AVcc	AVcc			Analog/Digital convertor reference power voltage
71	VREF	VREF			Analog/Digital convertor reference voltage input
72	AVss	AVss			Analog/Digital convertor ground pin
73	Vss	Vss			Power (GND)
74	P77	ANS	IN		Analog input signal (SPF sensor input)
75	P76	MBT	IN		Analog input signal (Main PWB destination setting)
76	P75	CLV	IN		Analog input signal (Copy lamp control)
77	P74	RTH	IN		Analog input signal (Fusing thermistor)
78	P73	CRUT	IN		Analog input signal (CPU destination setting)
79	P72	DVC	IN		Analog input signal (Developer color detection)
80	P71	TCSA	IN		Analog input signal (Toner density sensor)

(3) Start/stop control circuit

1 General

The circuit senses ON/OFF state of the power source to control start/stop of the circuits.

The DC power section supplies power voltages (V_H=+32V, VB=+24V, VC=+10V, VD1=5V, VD2=5V).

After the power voltage reaches the specified level, the circuit operation is started. Before the power voltage falls below the specified level, the circuit operation is stopped, preventing against malfunctions.

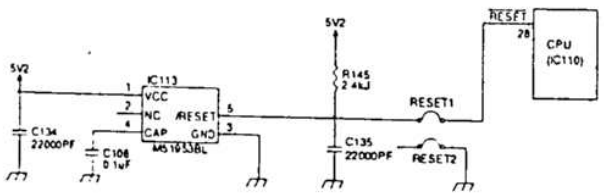

(4) Heater lamp control circuit

① General

The heater lamp control circuit detects the heat roller surface temperature with the thermistor, converts it into voltage level, and outputs it to the CPU analog input pin.
The CPU converts the analog voltage into digital signal level, compares it with the value set by test commands, turns on/off the heater lamp according to the level, and maintain the heat roller surface temperature at a constant level.

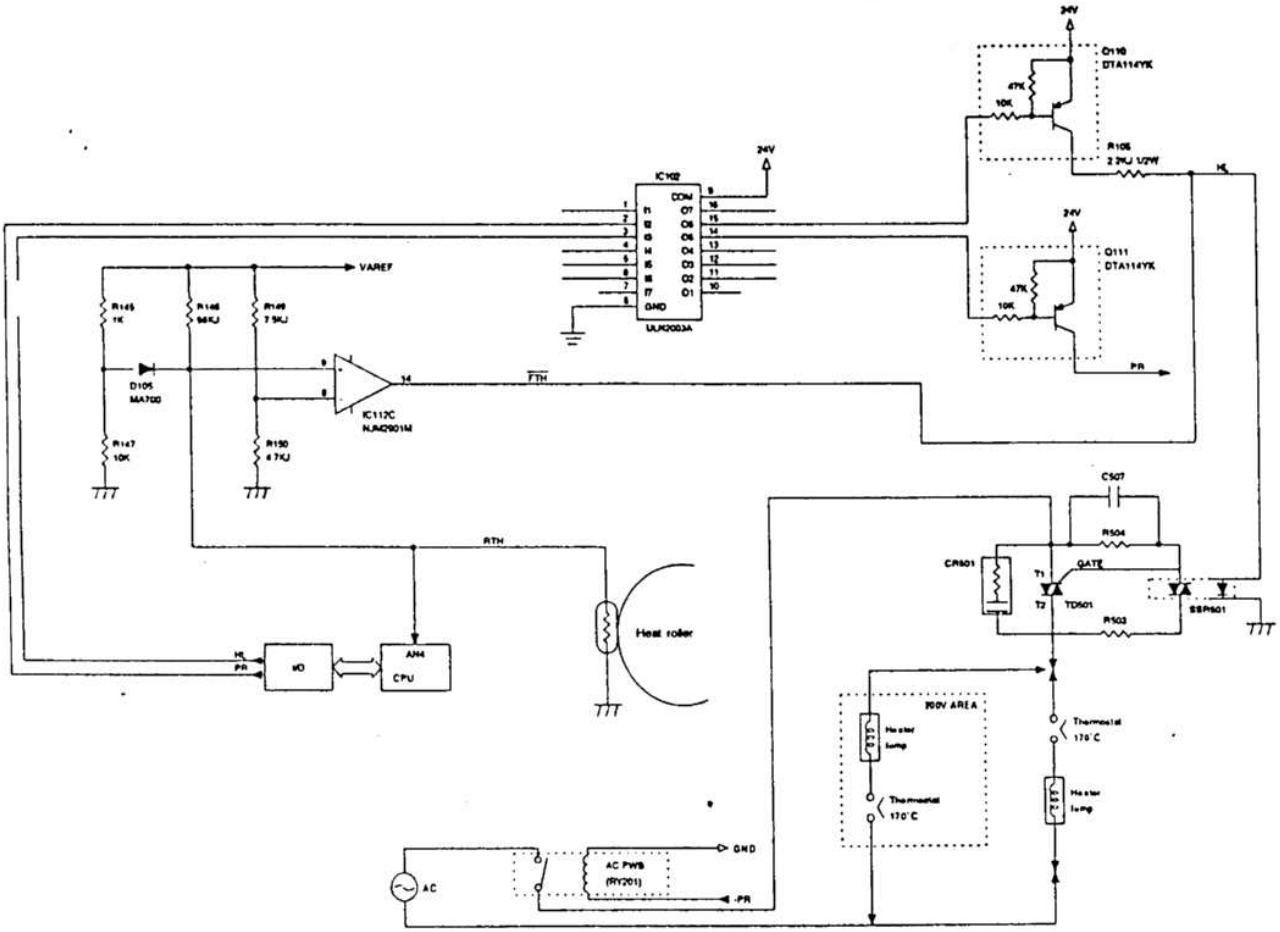

When the heat roller surface temperature is low, the thermistor resistance increases. When the surface temperature is high, the resistance decreases. The thermistor terminal voltage, therefore, increases when the heat roller surface temperature is low, and decreases when the temperature is high. The thermistor terminal voltage is inputted to the CPU analog port, and the CPU controls on/off of the heater lamp with the input voltage level.

[High temperature protecting circuit in hung up of the CPU]

The voltage at IC133 3 pin (reference voltage) is divided by R149 and R150, and the thermistor terminal voltage is applied to IC112 9 pin.
When 9 pin voltage is lower than 8 pin voltage (the heat roller surface temperature: about 230 degree C), IC112 14 pin becomes LOW. As a result, HL signal is pulled to the GND level and the heater lamp lighting signal is not generated. (IC112 output 14 pin is normally HIGH (Open state).)

[When the heat roller surface temperature is lower than the set temperature]

a. Since the thermistor pin voltage is higher than the set level, output signal HL from the CPU becomes HIGH.

b. HL signal is passed through IC102, TR, and Q110 to the solid state relay.
When, therefore, HL signal is LOW, the internal triac turns on.

c. When the internal traic turns on, a pulse is applied to the gate of the external triac to allow a current to flow from the power source through the heater lamp to the triac, thus lighting the heater lamp.

[When the heat roller surface temperature is higher than the set temperature]

a. Since the thermistor pin voltage is lower than the set level, output signal HL from the CPU becomes low.

b. HL becomes low, SSR is turned off, the external triac is turned off, and the heater lamp is turned off.

[Q110]

Q110 protects the heater lamp from lighting due to trouble in the harness of the heater lamp drive signal.

(5) Driver circuit (Solenoid, magnetic clutch)

① General

The control signals of each load outputted from the CPU and I/O cannot drive the load directly. The output, therefore, is delivered to the load through the driver IC.

② Operation

The driver circuit forms a Darlington circuit with two transistors to obtain a large drive current (load current) from a small input current (I/O output current). When the driver input voltage is HIGH (+5V), the transistor is turned on to flow a current in the arrow direction, operating the load. When the driver is turned on, the driver output pin voltage is 0V.

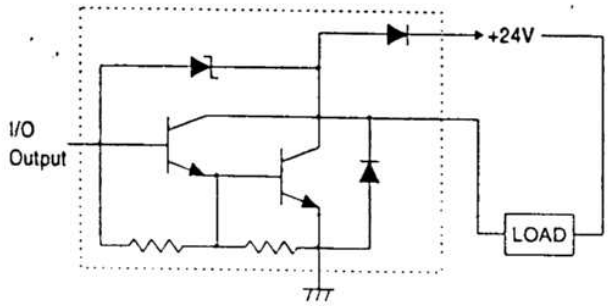

(6) Stepping motor drive circuit

① General

The driver circuit drives the lens drive motor.

A: Stepping motor phase A coil drive signal
B: Stepping motor phase B coil drive signal
A: Stepping motor phase A coil drive signal
B: Stepping motor phase B coil drive signal

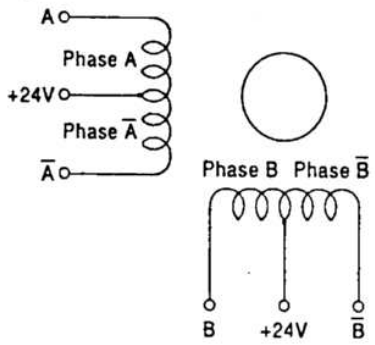

Stepping motor time chart

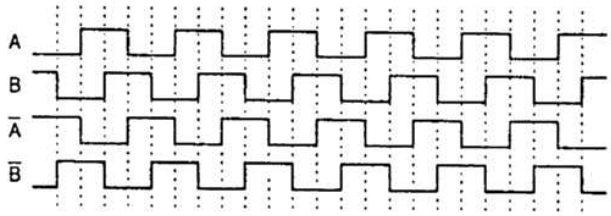

Drive signal	Lens drive
A	LEMT0
B	LEMT1
C	LEMT2
B	LEMT3

(7) AE (Auto Exposure) sensor circuit

The AE circuit is composed of the AE sensor PWB which is composed of the photo diode, and the I-V convertor circuit, and the amplifier circuit on the control PWB.

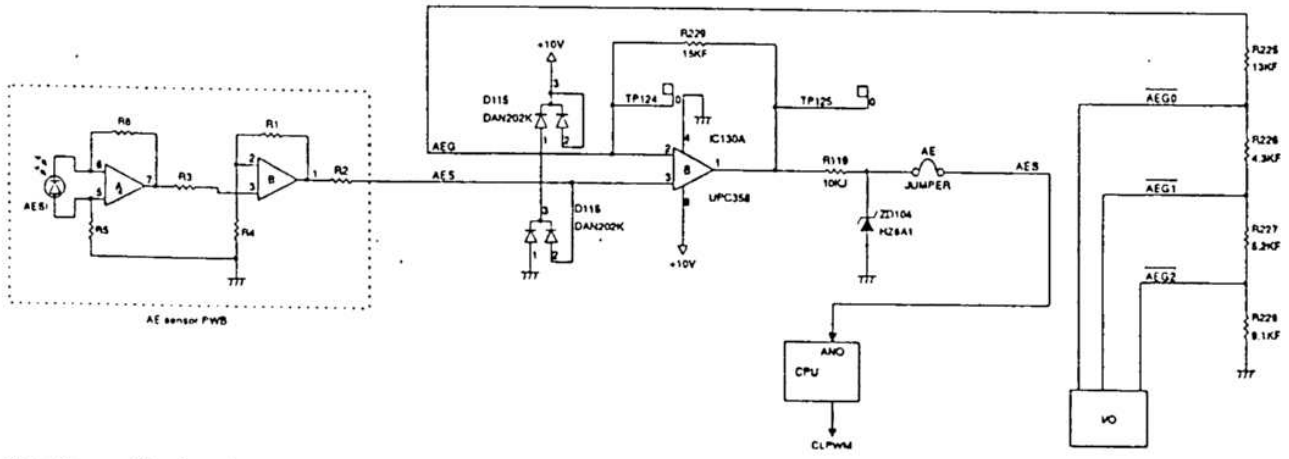

Operation amplifier A performs I-V conversion of the original density level (minute current) from the sensor. Operation amplifier B amplifies the output of operation amplifier A to a suitable level for inputting to the CPU.

The amplifying level is automatically set by selecting the AE gain signal ($\overline{AEG0}$ ~ $\overline{AEG2}$) outputted from the CPU when test command SIM 47 is executed.

AE operation is performed by the software in the control PWB. When a reflected ray enters the sensor, a voltage corresponding to the light quantity is inputted to the CPU. The CPU compares the input voltage and the copy lamp application voltage and controls the copy lamp voltage so that the exposure level corresponds to the original density.

(8) Toner supply motor drive circuit

IC104 is the motor control IC which drives the toner supply motor with the pulse signals (TMa, TMb) outputted from the I/O chip.

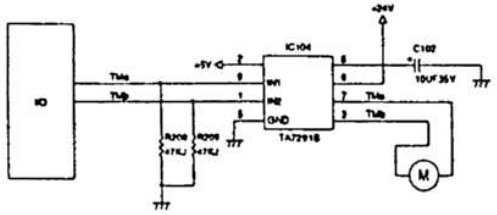

Internal circuit

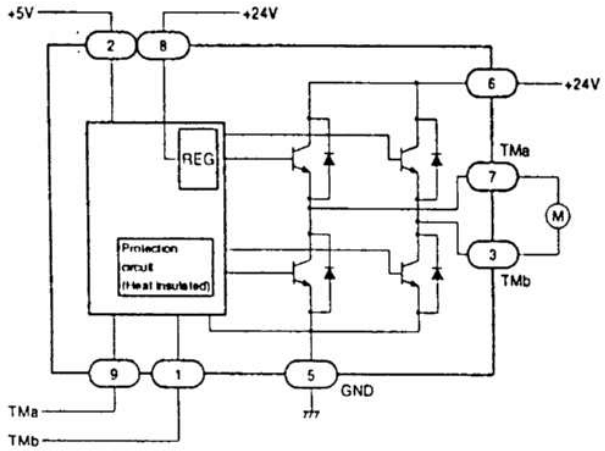

Truth value table

Input		Output		Mode
TMa	TMb	TMa	TMb	
L	L	∞	∞	Stop
H	L	H	L	CW/CCW
L	H	L	H	CCW/CW
H	H	L	L	Brake

∞: High impedance

(9) Reset IC (IC113)

① Outline

The M51953 BL is the most suitable semiconductor IC for detecting the power voltage to reset the CPU and every type of logic circuit. It is equipped with the delay circuit to provide delay time just by adding an external capacitor.

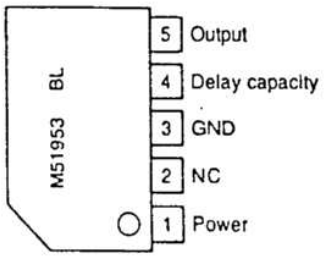

External view 5P5

② Operation

After td (= 30msec) from when the voltage exceeds 4.25V after power rising, the output becomes HIGH.
"td" is set by the external capacitor.

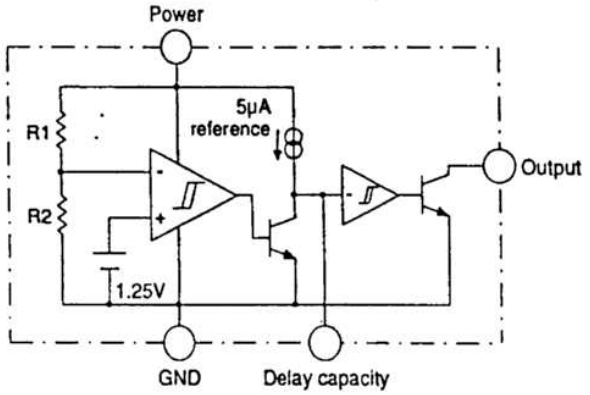

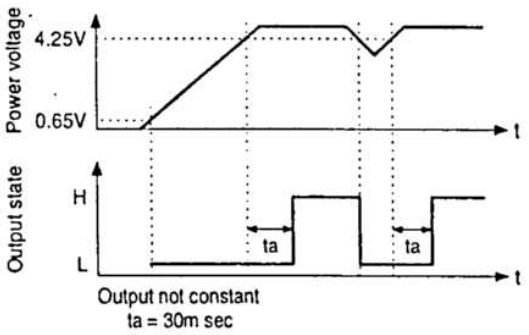

Output not constant
ta = 30m sec

(10) Copy lamp control section

The change in the copy lamp exposure level is adjusted by changing the ON period duty of the output pulse (CLPUM) from the CPU and controlling the copy lamp voltage. Fig. 1 and Fig. 2 show the circuit diagram and the waveform.

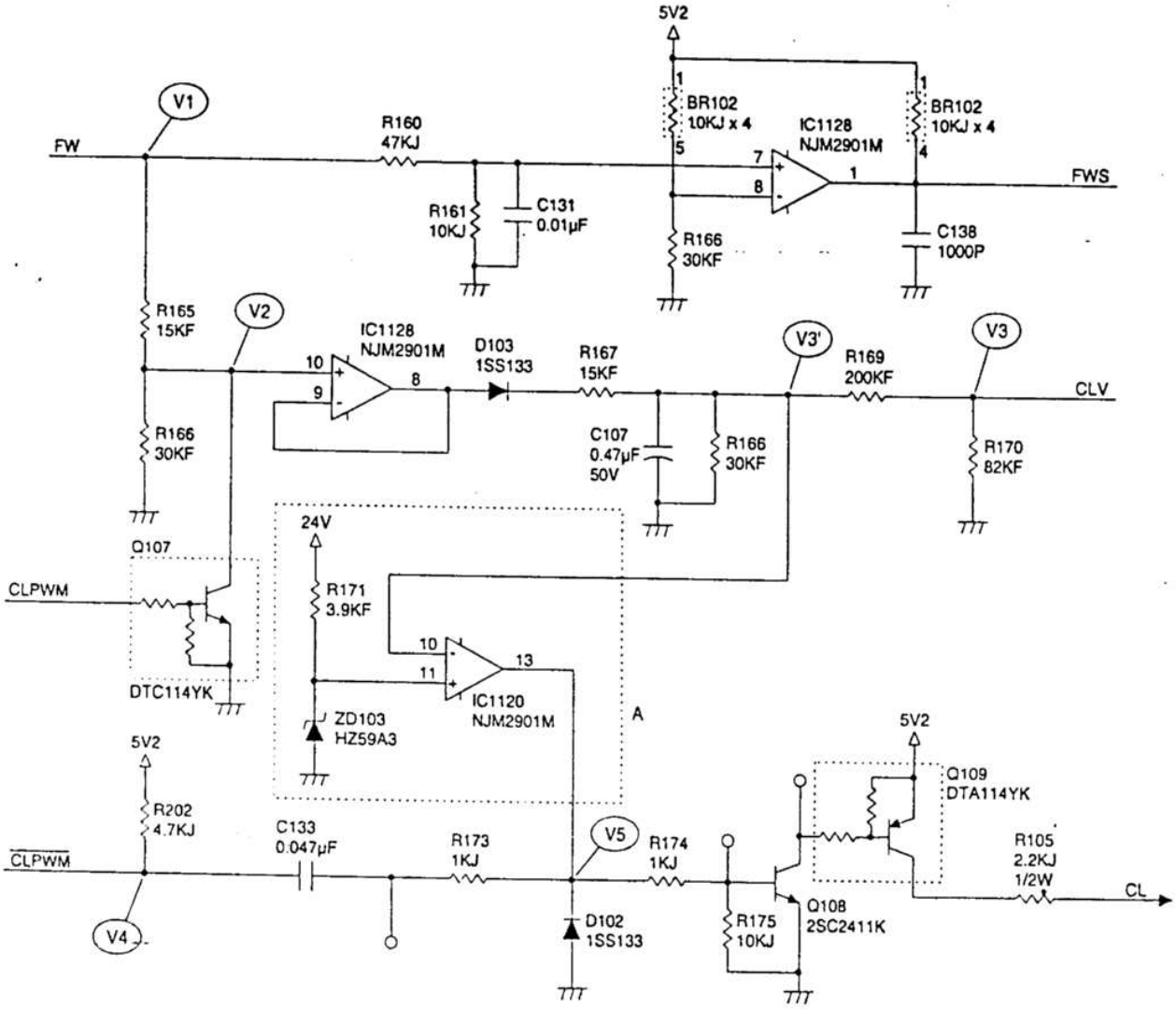

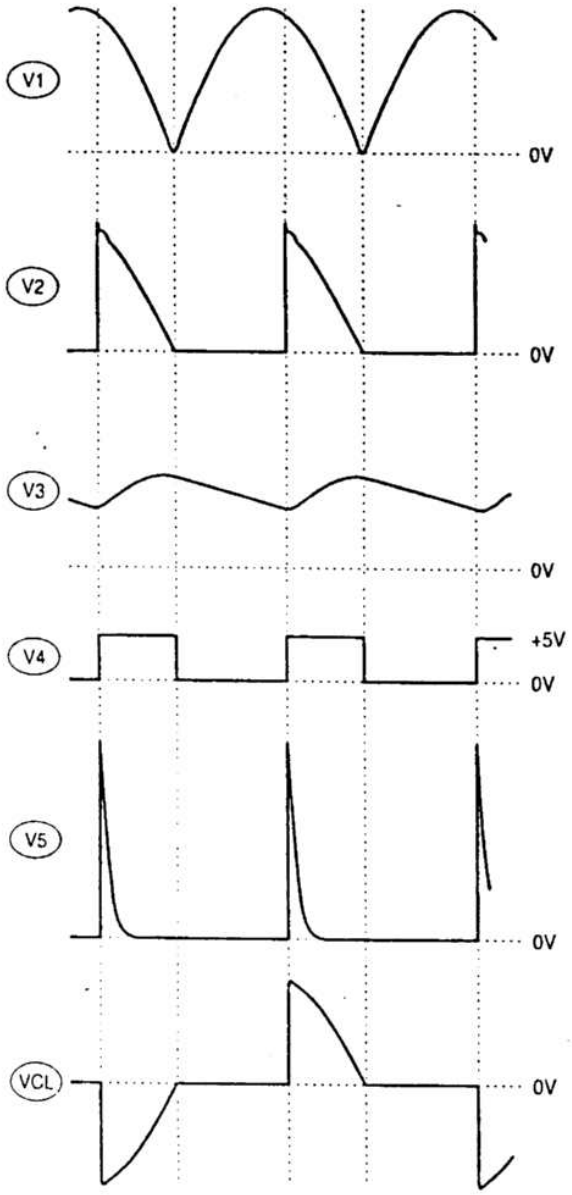

The copy lamp is switched by the triac. At the rising of CLPWM signal (V4), the trigger signal CL is sent to the triac to light the lamp. The lamp will goes off later at the zero cross point of V1 waveform.
The CPU reads the control voltage level (CLV) corresponding to the change in the copy lamp voltage, and compares it with the reference level to change the ON period of the output pulse.
The CLV forms the same waveform as the copy lamp voltage waveform where the Ac input's full rectified waveform (FW) is disabled for ON periods of the pulse. It is converted into a DC level by the low pass filter composed of C107 and R168, and is inputted to the CPU.

The relationship between the CLV and the pulse ON period is as shown in the figure below:

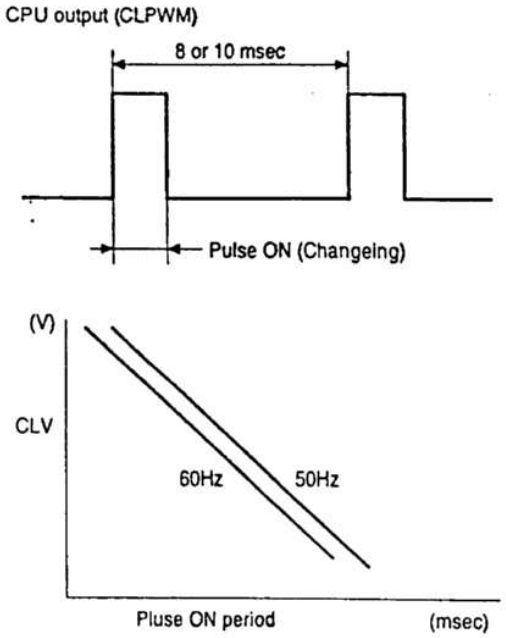

- When the pulse ON period is shorter, the CLV becomes higher, and vice versa.
- The pulse ON period rises at he AC zero cross timing and is driven by the duty.
- The copy lamp lighting signal generates positive pulses with C133 at falling of the CPU output, and inputs the pulses through the two-stage transistor to the photo triac.
- Section A in the figure shows the circuit which prevents against application of an overvoltage to the copy lamp.
  When the pulse on period is abnormally short, the DC level applied to the IC112 10 pin becomes higher than the reference voltage of 11 pin, driving the 13 pin output to the GND level.
  Therefore the lighting signal is not transmitted to R174 and later section and the lamp is not lighted.
  By setting the reference voltage to a level not exceeding the rated voltage, an abnormal lighting is avoided.

① When the AC input voltage becomes low (with the copy lamp control voltage at constant):
The FW peak at point (V1) becomes lower to decrease the CLU voltage at (V3).

Then the CPU shortens the output pulse ON period until the CLV reaches the reference level, increasing the power applied to the coy lamp.

② When the Ac input voltage becomes higher (with the copy lamp control voltage at constant):
The reversed operations of ① are performed to lengthen the output pulse ON period, decreasing the current flowing through the copy lamp.

③ When the copy lamp control voltage is decreased:
The CLV reference level in the CPU is lowered. The output pulse ON period is lengthen until the CLV reaches the level, decreasing the power supplied to the copy lamp.

④ When the copy lamp control voltage is increased:
The reversed operations of ③ are performed, to shorten the output pulse ON period, increasing the power applied to the coy lamp.

4. Operating section

(1) Outline

The operating circuit is composed of the key matrix circuit and the display matrix circuit.
Key detection: Keys are detected with signal matrix of W0 (Q25) – W7 (Q32) and KEY0 – KEY2.
With W0 signal at LOW (GND) and W1 – W7 at HIGH (open), the level of KEY0 – KEY2 is checked and "H" or "L" state of 4K, 2K and 3K in the key matrix is judged to judge ON/OFF.
For W1 – W7, switching is made every 2 msec for judgement.

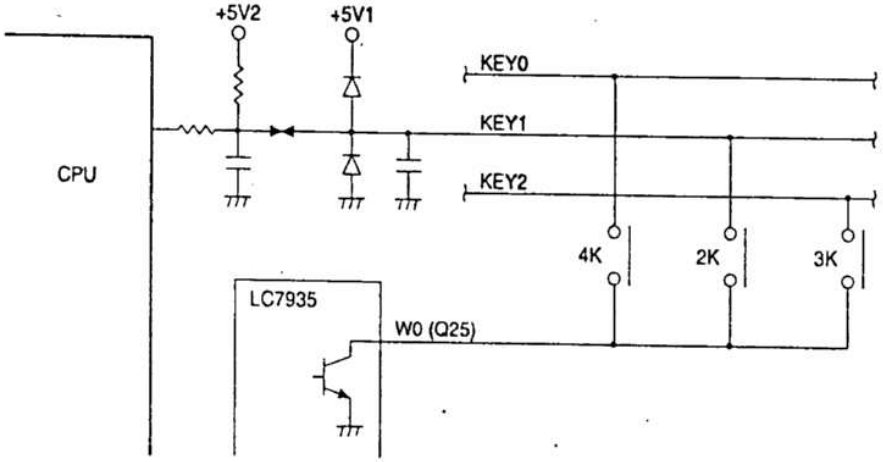

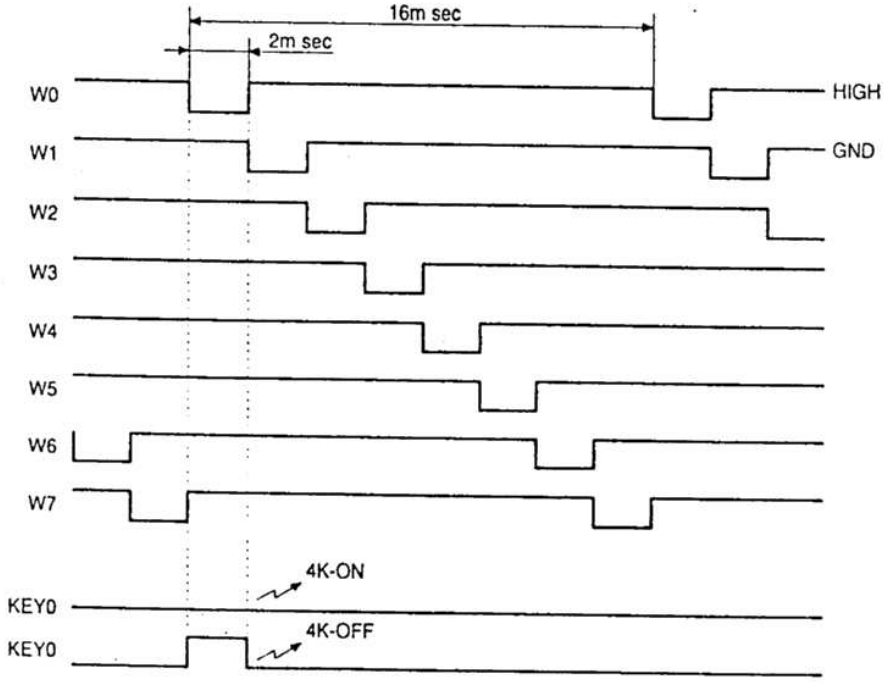

(2) Display circuit

Control is performed with the data signal and the control signal from the control circuit.

① Block diagram

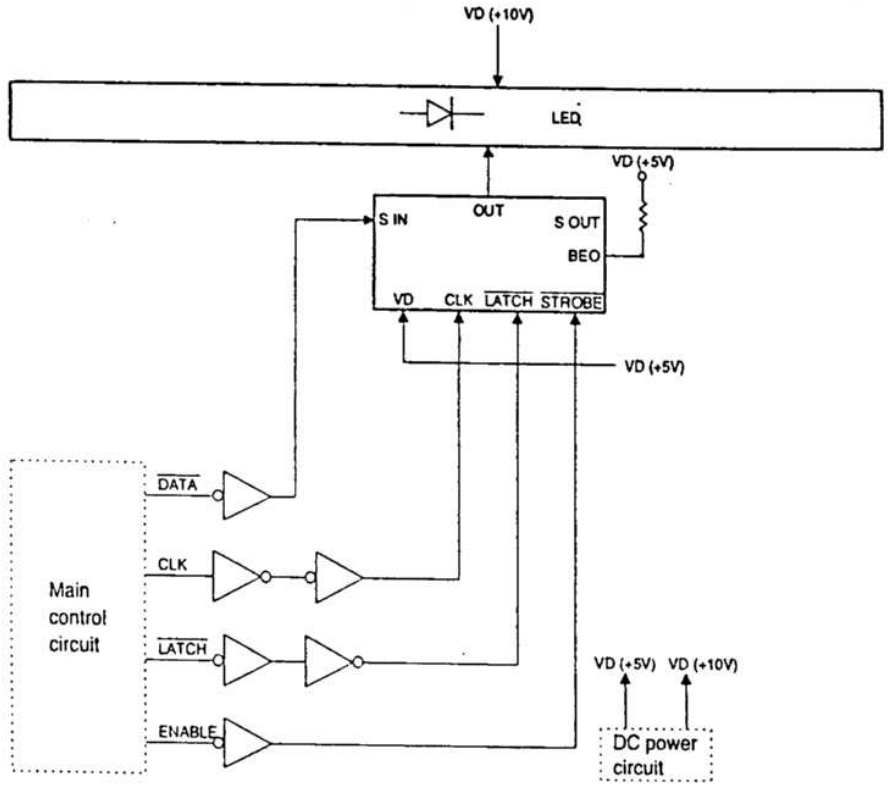

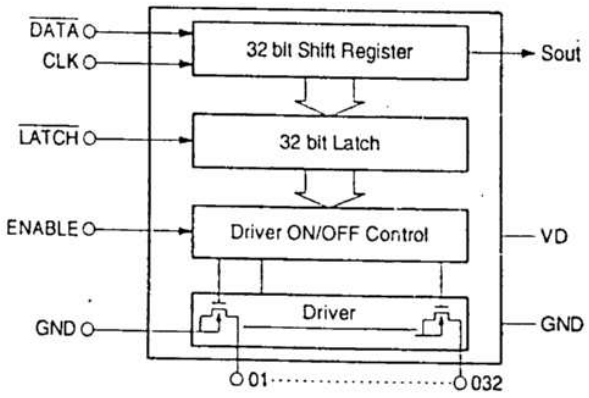

② Operation

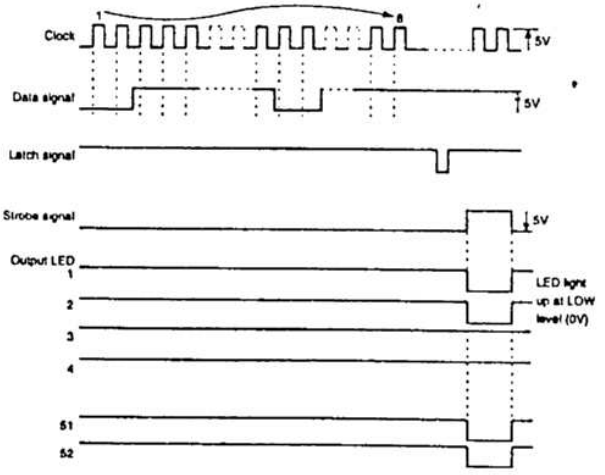

DAta signal (8 bit) sent from the main control PWB is shifted at the rising timing of the clock and retained at the rising timing of the latch signal.
The retained data is outputted when STROBE signal becomes HIGH (5V).

(3) LED display

The LED is lighted up by the signal matrix of MDL0 (Q1) – MDL1 (Q2) and F0 (Q3) – F20 (Q23).
By turning on/off ports F0 – F20 with the timing of MDL0 and MDL1, the LED at the matrix cross point is lighted up.

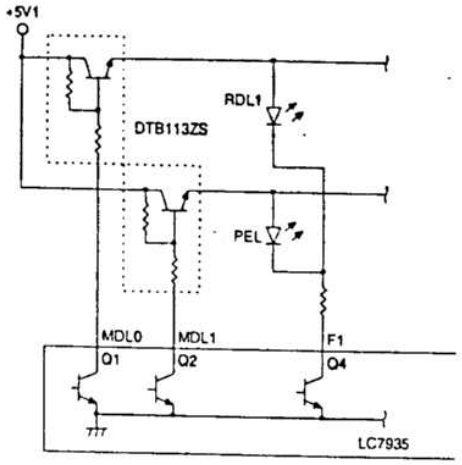

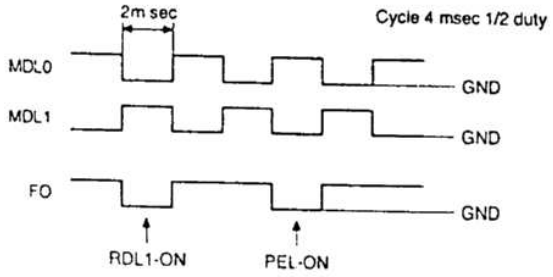

5. Power section

Each AC voltage generated by the power trans in the AC PWB unit is full-wave rectified and smoothed to stabilize each voltage (UH, UB, VD) in the main PWB side, and is supplied to loads.

(1) Signal name and output voltage

GND: 0V
VH: +30 – 44V (Separated into 24V and 32V supply in the main PWB.)
VD: +24V – 35V (Forms 5V supply in the main PWB.)
FW: Full-wave rectification



• AC PWB unit

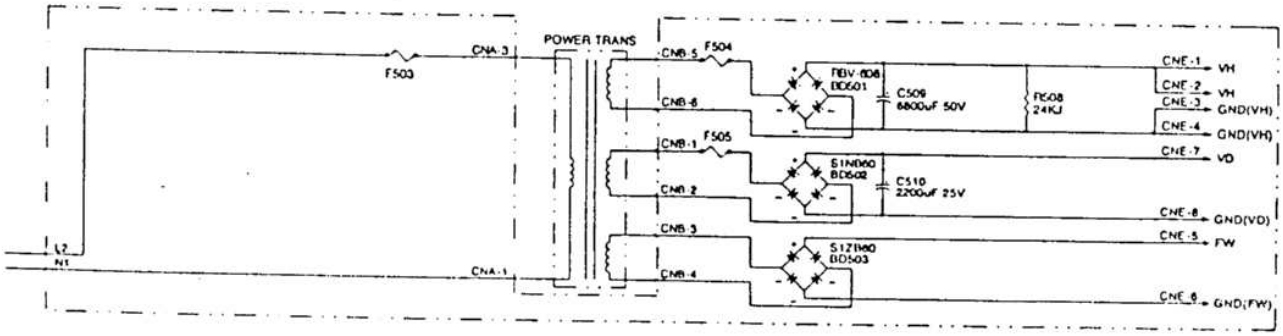

- In the main PWB unit

