SF-2020
SF-2120

SHARP SERVICE MANUAL

CODE: 00ZSF2120SM/E

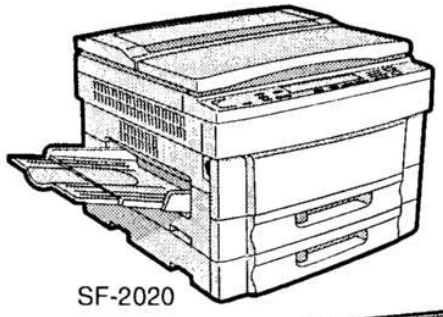

SF-2020

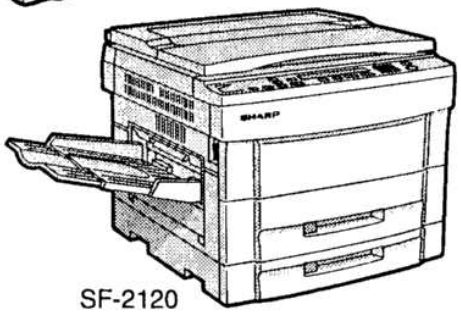

SF-2120

SF-2020
MODEL SF-2120

Option
- Paper tray (SF-UB15)
- Two-step paper feed unit (SF-CM15)
- One-step paper feed unit (SF-CM16)
- Personal counter (SF-71A/71B)
- 10-bin sorter (SF-S17) ※
- 10-bin staple sorter (SF-S54) ※
- Auto document feeder (SF-A18) ※
- Reverse automatic document feeder (SF-A57) ※

※ For the options, refer to their service manuals.

CONTENTS

[1] PRODUCT OUTLINE ..... 1 – 1
[2] PRODUCT SPECIFICATIONS ..... 2 – 1
[3] PRODUCT VIEWS ..... 3 – 1
[4] UNPACKING AND INSTALLATION ..... 4 – 1
[5] DESCRIPTION ON EACH SECTION ..... 5 – 1
[6] DISASSEMBLY AND ASSEMBLY ..... 6 – 1
[7] ADJUSTMENT ..... 7 – 1
[8] SIMULATIONS ..... 8 – 1
[9] SELF DIAGNOSTICS ..... 9 – 1
[10] MEMORY TROUBLES, FLOWCHART FOR REPLACEMENT OF MAIN CONTROL PWB ..... 10 – 1
[11] MAINTENANCE ..... 11 – 1
[12] ELECTRICAL SECTION ..... 12 – 1

Parts marked with "⚠" is important for maintaining the safety of the set. Be sure to replace these parts with specified ones for maintaining the safety and performance of the set.

SHARP CORPORATION

This document has been published to be used for after sales service only.
The contents are subject to change without notice.

Contents

[1] PRODUCT OUTLINE 1-1

1. Product features 1-1
2. System configuration (options) 1-1

[2] PRODUCT SPECIFICATIONS 2-1

1. Basic specifications 2-1
2. Description of each section 2-2
3. Supply parts 2-3
4. Optional specifications 2-5
   (1) Automatic document feeder (ADF) 2-5
   (2) Reverse automatic document feeder (RADF) 2-5
   (3) 10-bin sorter 2-5
   (4) 10-bin staple sorter (10-bin SS) 2-6
   (5) Two-step paper feed unit 2-6
   (6) 1-step paper feed unit 2-6
   (7) Exclusive-use desk 2-6

[3] PRODUCT VIEWS 3-1

1. External view and internal structure 3-1
2. Operation panel 3-2
3. Clutches, solenoids, and motors (Explained with the SF-2120 and the SF-CM15) 3-4
4. PWB (Explained with the SF-2120 and the SF-CM15) 3-5
5. Sensors and switches (Explained with the SF-2120 and the SF-CM15) 3-6
6. Rollers, mirrors, etc. 3-7

[4] UNPACKING AND INSTALLATION 4-1

1. Unpacking 4-1
2. Installation 4-1
   (1) Environment 4-1
   (2) Space around the machine 4-2
   (3) Installation base 4-2
   (4) Power source 4-2
   (5) Grounding wire connection 4-2
3. Optical system lock release 4-3
   A. No. 2/3 mirror unit lock release 4-3
   B. Lens and No. 4/5 mirror unit lock release . 4-3
4. Charger cleaning 4-3
   A. Main charger unit electrode cleaning 4-3
5. Developing unit setting 4-4
   A. Developing unit setting 4-4
6. Toner density sensor level adjustment 4-5
   A. Developing unit level adjustment 4-5
7. Accessory installation 4-5
   A. Copier tray installation 4-5
8. Toner supply 4-5
9. Center shift adjustment 4-7
10. Label attachment 4-7
    A. Label attachment 4-7
11. Optional two-step paper feed unit (SF-CM15) installation 4-8
12. Optional one-step paper feed unit (SF-CM16) 4-9
13. Tray paper size selection 4-11

[5] DESCRIPTIONS OF EACH SECTION .. 5-1

(1) Paper feed section 5-1
   1) General descriptions 5-1
   2) Basic operations 5-1
(2) Developing section 5-2
   1) General descriptions 5-2
   2) Basic composition 5-2
   3) Basic operations 5-3
(3) Optical section 5-3
   1. General description 5-3
   2. Basic operations 5-6
(4) Copy process 5-8
   (1) Photoconductor 5-8
   (2) Process diagram 5-9
   (3) Details of image forming process 5-10
   (4) Transition of photoconductor surface potential 5-14
   (5) Photoconductor drum sensitivity correction 5-14
   (6) Process control function 5-14
(5) TRANSPORT/FUSING SECTION 5-16
   1) General 5-16
   2) Basic composition and functions 5-16
(6) Fusing paper exit section 5-16
(7) High voltage section 5-17
   1) General 5-17
   2) Basic composition 5-17
(8) ADU unit (SF-2120 only) 5-17

[6] DISASSEMBLY AND ASSEMBLY 6-1

1. Paper feed unit 6-1
   1-1. Paper feed unit 6-1
   1-2. Paper feed roller ass'y removal 6-1
   1-3. PS front roller ass'y 6-2
   1-4. Separation roller 6-2
   1-5. Paper feed roller, take-up roller 6-2
   1-6. Lower paper feed unit 6-3
   1-7. Lower separation roller 6-3

1-8. Transport roller 6-3
1-9. Lower paper feed roller/take-up roller ... 6-3
2. Transport unit 6-3
2-1. Resist roller, transfer roller 6-3
2-2. Transport belt 6-4
3. Fusing section 6-5
3-1. Fusing unit removal 6-5
3-2. Heater lamp replacement 6-5
3-3. Upper heat roller ass'y removal 6-5
3-4. Upper separation pawl replacement 6-6
3-5. Lower heat roller replacement 6-6
3-6. Lower separation pawl replacement 6-6
3-7. Thermistor/thermostat removal 6-7
4. Optical system 6-7
1) Copy lamp replacement 6-7
2) Mirror base wire replacement and adjustment 6-7
3) No. 2/3 mirror unit (mirror base B) installation (Mirror base B positioning) .. 6-10
4) Copy lamp unit installation (Mirror base A positioning) 6-11
5) No. 4/5 mirror unit (mirror base C) replacement 6-11
6) Lens wire replacement 6-13
7) Lens unit replacement 6-15
5. High voltage section 6-16
5-1. Main charger (MC) unit 6-16
5-2. Transfer/separation charger (TC/SC) unit 6-17
6. Process section 6-17
6-1. Process unit 6-17
6-2. Waste toner bottle replacement (required when waste toner full detection/ maintenance) 6-18
6-3. Drum (Replace every 50K copies) 6-19
6-4. Blank lamp unit (Clean every 50K copies.) 6-19
6-5. Discharge lamp unit (Clean every 50K copies.) 6-19
6-6. Cleaner blade (Replace every 50K copies.) 6-20
6-7. Drum separation pawl (Replace every 50K copies.) 6-20
6-8. Process control PWB (Clean the sensor section every 50K copies.) 6-20
6-9. Drum mark sensor PWB (Clean the sensor section every 50K copies.) 6-20
6-10. Toner reception seal (Replace every 50K copies.) 6-20
7. Developing section 6-20
A. DV side seals F/R replacement (Replace every 120K copies.) 6-20
B. DB blade replacement (Replace every 120K copies.) 6-21
C. V ring attachment 6-21
D. Note for toner hopper drive gear (31T) and stirring shaft attachment 6-21
G. Developing unit color identification 6-22
8. Operation panel/intermediate cabinet 6-22
9. Frame major parts 6-22
9-1. Cooling fan motor replacement 6-22
9-2. Power unit 6-23
9-3. Tray size detecting PWB 6-23
9-4. Main PWB unit 6-24
9-5. AC power PWB 6-24
9-6. Ozone filter (Check every 50K copies, and clean every 100K copies.) 6-24
10. Multi paper feed unit (SF-MF15: option) 6-25
10-1. Separation roller 6-25
10-2. Take-up roller/paper feed roller 6-25
11. ADU (SF-2120 only) 6-26
12. Paper feed unit (SF-CM15, SF-CM16, option) 6-27

[7] ADJUSTMENTS 7-1

1. Developing section 7-1
1-1. Developing doctor clearance adjustment 7-1
1-2. Developing magnet roller main pole position adjustment 7-1
2. Optical system 7-2
2-1. Adjustment items 7-2
2-2. Note for adjustments 7-3
2-3. Adjustment of each section 7-4
A. Lens reference position adjustment 7-4
B. No.4/5 mirror reference position adjustment 7-4
C. Vertical copy magnification ratio adjustment 7-5
D. Resolution adjustment (Focus adjustment) 7-6
E. Horizontal copy magnification ratio adjustment 7-8
F. Comparison table of lens values and simulation input values 7-9
G. Vertical skew adjsutment 7-10
H. Horizontal skew adjustment 7-10
I. Center shift adjustment 7-12
J. Exposure balance adjustment 7-12
K. Copy lead edge adjustment 7-13
2-4. Original detecting section 7-15
A. Original detecting arm unit adjustment .. 7-15
B. Original detecting level adjustment 7-16
2-5. Copy density adjustment 7-17

2-6. Process section adjustment 7-21

[8] SIMULATION 8-1

1. Outline 8-1
2. Purpose 8-1
3. Operating procedure 8-1
4. List of simulations 8-2
5. Details of simulations 8-4
6. User simulation 8-20
   (1) Functions which can be set and canceled by the user simulation 8-20
   (2) User simulation 8-21
   (3) User simulation code table 8-21
   (4) Department counter setting content (Set with user program P10 ~ P15) 8-21

[9] SELF DIAGNOSTICS 9-1

1. Summary/purpose 9-1
2. Operation 9-1
3. Clearing the self diag display 9-1

[10] SERVICING AT MEMORY TROUBLE AND MAIN CONTROL PWB REPLACEMENT 10-1

1. General 10-1
2. Purpose 10-1
3. Remedies 10-1
4. Set value recording sheet 10-3
5. Memory simulation list 10-4

[11] MAINTENANCE 11-1

1. Maintenance cycle and maintenance items .. 11-1

[12] ELECTRICAL SECTION 12-1

1. System block diagram 12-1
2. Main circuit 12-3
   (1) Block diagram 12-3
   (2) CPU (IC6) SC3041K12F 12-4
   (3) I/O (IC8) CXD1095Q 12-8
   (4) Detector circuit of sensor signal 12-11
   (5) Start/stop control circuit 12-11
   (6) Heater lamp control circuit 12-12
   (7) Driver circuit (Solenoid, electromagnetic clutch) 12-13
   (8) Stepping motor drive circuit 12-13
   (9) AE (Auto Exposure) sensor circuit 12-14
   (10) Toner supply motor drive circuit 12-14
   (11) Reset IC (IC13) 12-14
   (12) Operation panel 12-15
   (13) EnergyStar circuit description 12-16
   (14) ADU circuit description 12-17

[1] PRODUCT OUTLINE

1. Product features

(1) Compact body

- Compact body size
  The body width of 600mm is the smallest in the class.
- The employment of the front loading tray and the folding-type multi manual paper feed cassette realizes the small occupying area. (Option)

(2) Clean copy gentle to the environment

- Silent design,
- Low level of ozone, use of recyclable materials
- The energy-saving mode reduces the power consumption.

(3) High capacity of copying

- Warm-up time is less than 35 sec. The first copy of 5.3 sec (SF-2020) or 5.8 sec (SF-2120).

(4) Fully expandable system. (Refer to "2. System configuration.")

2. System configuration (options)

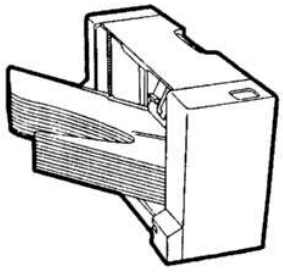

10-bin sorter SF-S17

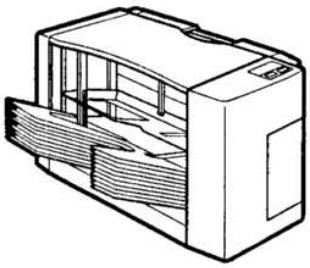

10-bin staple sorter SF-S54

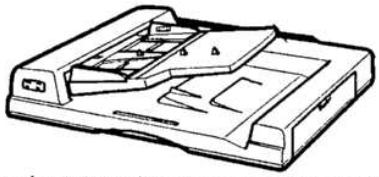

Reversing automatic document feeder SF-A57
(SF-2120 only)

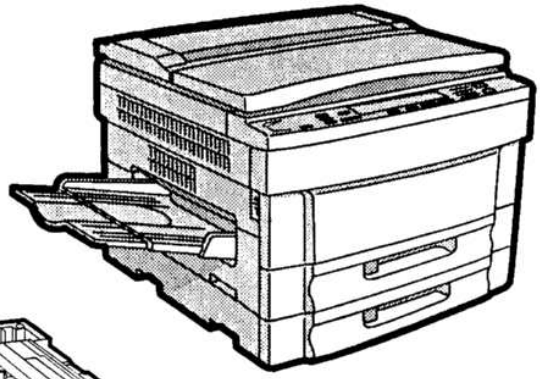

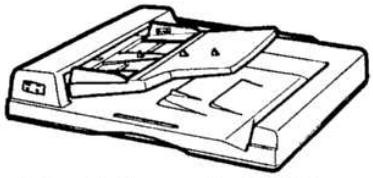

Automatic document feeder SF-A18

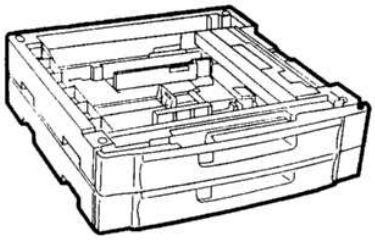

Two-step paper feed unit SF-CM15

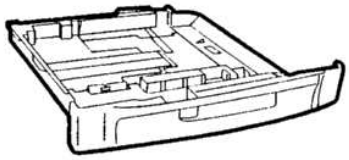

Tray (reserve) SF-UB15

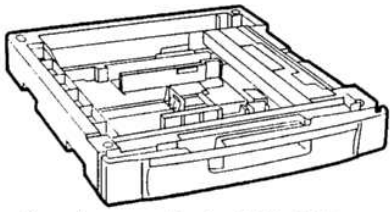

One-step paper feed unit SF-CM16

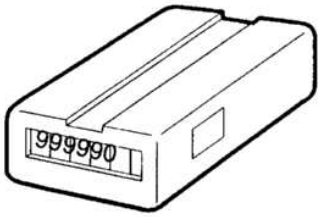

Personal counter

Exclusive-use desk
SF-DS17
SF-DS18

[2] PRODUCT SPECIFICATIONS

1. Basic specifications

(1) Type: Table top

(2) Copy speed:

<SF-2020/2120>

	Normal	Enlargement (Magnification)	Reduction (Magnification)
A3	11 sheets/min	10 sheets/min (200%)	10 sheets/min (50%)
B4	13 sheets/min	12 sheets/min	12 sheets/min
A4 (Portrait)	20 sheets/min	15 sheets/min	15 sheets/min
A4 (Landscape)	15 sheets/min	14 sheets/min	14 sheets/min
B5 (Portrait)	20 sheets/min	15 sheets/min	15 sheets/min
B5 (Landscape)	15 sheets/min	14 sheets/min	14 sheets/min
W letter	11 sheets/min	10 sheets/min	10 sheets/min
Legal	13 sheets/min	12 sheets/min	12 sheets/min
Letter (Portrait)	20 sheets/min	15 sheets/min	15 sheets/min
Letter (Landscape)	15 sheets/min	14 sheets/min	14 sheets/min

(Note) The copy speeds for enlargement and reduction are the lowest ones.

(3) Warm up time: 45 sec or less

(4) First copy time: SF-2020
5.3 sec (Paper feed port: Upper tray)
SF-2120
5.8 sec (Paper feed port – from copier paper tray)

First copy time from each paper feed port (A4 landscape)

Paper feed port	SF-2020	Paper feed port	SF-2120
Body tray upper stage	5.3 sec	ADU	5.8 sec from copier paper tray
Body tray lower stage	5.8 sec	Body 1st step	
Option paper feed unit first step	6.1 sec	Option paper feed unit 1st step	6.5 sec
Option paper feed unit second step	6.4 sec	Option paper feed unit 2nd step	6.8 sec

(5) Jam recovery time: 8 sec (Conditions: After leaving the door open for 60 sec, the standard conditions)

(6) Multi copy Max. 99 sheets

(7) Original

	SF-2020	SF-2120
Max. original size	A3/W letter	
Reference original size	Left side/Center	
Original sensing	YES (Japan only)	
Sensing size	A3 ~ B5R	

(8) Copy magnification ratio

Fixed magnification: 200, 141, 122, 115, 100, 86, 81, 70, 50% (9 steps)

Zoom range: 50% ~ 200% (151 steps by the increment of 1%)

(9) Exposure

Exposure mode: Auto/Manual/Photo

No. of manual steps: 9 steps

(10) Void width

Void area: Lead edge/rear edge: 3mm or less

Image loss Normal: 4mm or less

(11) Paper exit/finishing

Paper exit tray capacity: 250 sheets

Finishing: option 10-bin sorter, 10-bin staple sorter

(12) Additional functions

	Function		Remark
	SF-2020	SF-2120	
Auto Paper Selection	○		8 × 13: only the specified area, original size input
Auto Magnification ratio Selection	○		
Shift	○		
1-set 2-copy	○		Enlargement is impossible.
Edge erase	○		
Trimming	×		
Masking	×		
Centering	×		
Move image	×		
Covers/inserts	×		
Overlay	×		
Job memory	×		
Monochrome	○		(Red, Blue)

(13) External dimensions

	SF-2020	SF-2120
W x D x H mm	600 × 585 × 460	600 × 585 × 510
Occupying area (W x D)	850 × 595	900 × 595
Weight	43.5Kg	49.5Kg

(14) Power source

Voltage: 100V 50/60Hz

Frequency: 50/60Hz common

(15) Power consumption

Max. power consumption	1.5kw	(Note) Max. when the option is installed
Stand-by power consumption	18W (Heater lamp OFF) 20% greater for H version 1kW (Heater lamp ON)	
Average power consumption during operation	1320W	
Preheating	60W	
Auto power shut off	4.8W	

2. Description of each section

(1) Paper feed section

	SF-2020	SF-2120
Copying size	A3 ~ A6/W letter ~ Invoice	
Paper feed system	2 trays + multi manual feed	1 tray + multi manual feed
Paper feed capacity	250 sheets × 2	250 sheets × 1

Cassette		Paper size	Paper weight	Paper kind	Remark
Body tray upper stage		AB series: A3 ~ A5	56 ~ 80g/m^2	Standard paper, recycled paper	SF-2120: copier paper feed tray
		Inch series: W letter ~ Invoice	15 ~ 20 lbs		
Body tray lower stage		AB series: A3 ~ A5	56 ~ 80g/m^2	Standard paper, recycled paper	
		Inch series: W letter ~ Invoice	15 ~ 20 lbs		
Paper feed unit (option)		AB series: A3 ~ A5	56 ~ 80g/m^2	Standard paper, recycled paper	SF-CM15 (2-step) SF-CM16 (1-step)
		Inch series: W letter ~ Invoice	15 ~ 20 lbs		
Multi manual paper feed	Multi	AB series: A3 ~ A6R Inch series: W letter ~ Invoice	56 ~ 80g/m^2	Standard paper, specified paper, special paper, OHP film, Second original paper, postcards (without folding)	
			15 ~ 20 lbs		
	Single	AB series: A3 ~ A6R Inch series: W letter ~ Invoice	52 ~ 128g/m^2		
			14 ~ 34 lbs		

(2) Optical section

Light source	Halogen lamp
Exposure system	Slit exposure by moving the light source
Zooming system	By changing the lens positions and the scan speed.
Lens	Fixed focus lens

(3) Process

Charging system	(–) DC saw teeth electrode system
Transfer system	(–) tungsten system
Separation system	(AC) separation tungsten system

(4) Developing section

Developing system	Dry, two-component magnetic brush development (developer replacement)
Developing bias voltage	DC–200V ±5V

(5) Fusing section

Fusing system	Heat roller system
Upper heat roller surface temperature	190 degrees C
Heater lamp	Halogen lamp 1000W × 1

(6) ADU section

Paper kind	Normal paper, 56g/m^2 ~ 80g/m^2
Capacity	50 sheets
Paper size	B4, A4, B5
Copy void width	Lead edge, 3mm or less Rear edge, 3mm or less

3. Supply parts

U.S.A., Canada

	Name		Content		Life	Product name
1	Photoconductor kit		Photoconductor drum Cleaner blade Drum separation pawl	x 1 x 1 x 2	50K	SF-216DR
2	Black developer	Black	Black developer (530g)	x 10	50K x 10	SF-216MD1
3	Color developer	Red	Color developer (550g)	x 10	10K x 10	SF-780MD2
		Blue				SF-780MD3
4	Black toner	Black	Black toner cartridge (210g)	x 10	5K x 10	SF-216MT1
5	Color toner	Red	Color toner cartridge (210g)	x 10	5K x 10	SF-216MT2
		Blue				SF-216MT3
6	Color developing unit kit	Red	Developing unit	x 1		SF-216NK2
		Blue	Color developer (550g) Color toner cartridge (210g) Storage case	x 1 x 1 x 1		SF-216NK3
7	Upper heat roller kit		Upper heat roller Upper fusing separation pawl Fusing bearing (F)	x 1 x 4 x 1	100K	SF-216UH
8	Lower heat roller kit		Lower heat roller Lower fusing separation pawl	x 1 x 2	50K	SF-216LH
9	Staple cartridge	—	Staple cartridge (SF-SC12)	x 3	5000 times x 3	SF-LS12

Europe/U.K.

	Name		Content		Life	Product name
1	Photoconductor kit		Photoconductor drum Cleaner blade Drum separation pawl	x 1 x 1 x 2	50K	SF-216DM
2	Black developer	Black	Black developer (530g)	x 10	50K x 10	SF-216LD1
3	Color developer	Red	Color developer (550g)	x 1	10K	SF-780DV2
		Blue				SF-780DV3
4	Black toner	Black	Black toner cartridge (210g)	x 10	5K x 10	SF-216LT1
5	Color toner	Red	Color toner cartridge (210g)	x 1	5K	SF-216T2
		Blue				SF-216T3
6	Color developing unit kit	Red	Developing unit	x 1		SF-216K2
		Blue	Color developer (550g) Color toner cartridge (210g) Storage case	x 1 x 1 x 1		SF-216K3
7	Upper heat roller kit		Upper heat roller Upper fusing separation pawl Fusing bearing (F)	x 1 x 4 x 1	100K	SF-216UH
8	Lower heat roller kit		Lower heat roller Lower fusing separation pawl	x 1 x 2	50K	SF-216LH
9	Staple cartridge	—	Staple cartridge (SF-SC12)	x 3	5000 times x 3	SF-LS12

Australia/New Zealand

	Name		Content		Life	Product name
1	Photoconductor kit		Photoconductor drum Cleaner blade Drum separation pawl	x 1 x 1 x 2	50K	SF-216DM
2	Black developer	Black	Black developer (530g)	x 10	50K x 10	SF-216LD1
3	Color developer	Red	Color developer (550g)	x 10	10K x 10	SF-780LD2
		Blue				SF-780LD3
4	Black toner	Black	Black toner cartridge (210g)	x 10	5K x 10	SF-216LT1
5	Color toner	Red	Color toner cartridge (210g)	x 10	5K x 10	SF-216LT2
		Blue				SF-216LT3
6	Color developing unit kit	Red	Developing unit	x 1		SF-216K2
		Blue	Color developer (550g) Color toner cartridge (210g) Storage case	x 1 x 1 x 1		SF-216K3
7	Upper heat roller kit		Upper heat roller Upper fusing separation pawl Fusing bearing (F)	x 1 x 4 x 1	100K	SF-216UH
8	Lower heat roller kit		Lower heat roller Lower fusing separation pawl	x 1 x 2	50K	SF-216LH
9	Staple cartridge	—	Staple cartridge (SF-SC12)	x 3	5000 times x 3	SF-LS12

Middle and South America/Asia

	Name		Content		Life	Product name
1	Photoconductor kit		Photoconductor drum Cleaner blade Drum separation pawl	x 1 x 1 x 2	50K	SF-216DR
2	Black developer	Black	Black developer (530g)	x 10	50K x 10	SF-216CD1
3	Color developer	Red	Color developer (550g)	x 10	10K x 10	SF-780LD2
		Blue				SF-780LD3
4	Black toner	Black	Black toner cartridge (210g)	x 10	5K x 10	SF-216CT1
5	Color toner	Red	Color toner cartridge (210g)	x 10	5K x 10	SF-216CT2
		Blue				SF-216CT3
6	Color developing unit kit	Red	Developing unit Color developer (550g) Color toner cartridge (210g) Storage case	x 1 x 1 x 1 x 1		SF-216SK2
		Blue				SF-216SK3
7	Upper heat roller kit		Upper heat roller Upper fusing separation pawl Fusing bearing (F)	x 1 x 4 x 1	100K	SF-216UH
8	Lower heat roller kit		Lower heat roller Lower fusing separation pawl	x 1 x 2	50K	SF-216LH
9	Staple cartridge	—	Staple cartridge (SF-SC12)	x 3	5000 times x 3	SF-LS12

Middle East/Africa (excluding Russia)

	Name		Content		Life	Product name
1	Photoconductor kit		Photoconductor drum Cleaner bladex 1 Drum separation pawl	x 1 x 2	50K	SF-216DM
2	Black developer	Black	Black developer	x 10	50K x 10	SF-216LD1
3	Black toner	Black	Black toner bottle (250g)	x 10	6K x 10	SF-116LT
4	Upper heat roller kit		Upper heat roller Upper fusing separation pawl Fusing bearing (F)	x 1 x 4 x 1	100K	SF-216UH
5	Lower heat roller kit		Lower heat roller Lower fusing separation pawl	x 1 x 2	50K	SF-216LH
6	Staple cartridge	—	Staple cartridge (SF-SC12)	x 3	5000 times x 3	SF-LS12

Asia (Excluding Taiwan(AURORA)/Hong Kong (SRH))

	Name		Content		Life	Product name
1	Photoconductor kit		Photoconductor drum Cleaner bladex 1 Drum separation pawl	x 1 x 2	50K	SF-216DR
2	Black developer	Black	Black developer	x 10	50K x 10	SF-216CD1
3	Black toner	Black	Black toner bottle (250g)	x 10	6K x 10	SF-116CT
4	Upper heat roller kit		Upper heat roller Upper fusing separation pawl Fusing bearing (F)	x 1 x 4 x 1	100K	SF-216UH
5	Lower heat roller kit		Lower heat roller Lower fusing separation pawl	x 1 x 2	50K	SF-216LH
6	Staple cartridge	—	Staple cartridge (SF-SC12)	x 3	5000 times x 3	SF-LS12

4. Optional specifications

(1) Automatic document feeder (ADF)

<Model name: SF-A18>

Original set direction	Face up
Original set position	Center reference
Original transport system	Belt (half size) system
Original feed sequence	Bottom taking (Face up exit)
Original size	A3 ~ A5/11" x 17" ~ 8 1/2" x 5 1/2"
Original change speed (S → S)	20 sheets/min
Original weight	35 ~ 128g/m^2 (50 ~ 128g/m^2 for EX)
Original set quantity	50 sheets, 35 ~ 80 g/cm^2, 80 ~ 128 g/m^2 thickness max. 6.5 mm
Original stop system	Position control system
Dimensions	571 (W) x 521 (D) x 110 (H) (mm) (Height: excluding the tray)
Weight	About 11.5kg
Power source	Supplied from the copier's power section.
Power consumption	65W

Functions

Original sensing on the tray	YES (Scanning read for uncertain size originals.)
Sensing size	Inch series: 11" x 17", 8 1/2" x 14", 8 1/2" x 11", 8 1/2" x 11"R, 8 1/2" x 5 1/2" AB series: A3, B4, A4, A4R, A5
Original mixture	Allowed (However, no linkage with the AMS)
Original reverse	NO

(2) Reverse automatic document feeder (RADF)

<Model name: SF-A57>

Original set direction	Face up
Original set position	Center reference
Original transport system	Belt system
Original feed sequence	Bottom taking (Face up exit)
Original size	A3 ~ A5, 11" x 17" ~ 8 1/2" x 5 1/2"
Original replacement speed (S → S)	20 sheets/min
Original weight	35 ~ 128g/m^2 (50 ~ 128g/m^2 for EX)
Original set capacity	50 sheets, 35 ~ 80g/m^2 80 ~ 128g/m^2: thickness Max. 6.5mm
Original stop system	Position control
Dimensions	592 (W) x 521 (D) x 110 (H) mm (Height; excluding the tray)
Weight	About 12.5kg
Power source	Supplied from the copier (equipped with the power source).
Power consumption	73W

Functions

Original detection on the tray	Available (For originals of indefinite sizes, scanning is made.)
Detection size	Japan: A3, B4, A4, A4R, B6, B6R Inch series: 11" x 17", 8 1/2" x 14", 8 1/2" x 11", 8 1/2" x 11"R, 8 1/2" x 5 1/2" EX AB series: A3, B4, A4, A4R, A5
Original mixture	Allowed (However, no linkage with the AMS)
Original reverse	Allowed

Display section

① Original feed display	The ADF shows the operation allowable state. When an original is set, the display lights up.
② Original remaining display	When the automatic document feeder is used as the original cover, the LED lights up simultaneously when the last exposure is completed. When the transport cover is opened, the LED goes off.
SDF mode	Selection between the SDF mode and the ADF mode is possible. (Selected by the user program.)

(3) 10-bin sorter

<Model name: SF-S17N>

Type		Copier installation type/Hanging type
Distribution system		Bin shift by lead screw
No. of bins		10 bins (The top bin is used also for non-sort.)
Capacity		30 sheets/bin (L4/letter size), 100 sheets for the top bin only.
Sorting		30 sheets (A4/letter)
		15 sheets (B4/legal)
		15 sheets (A3/W letter)
Grouping		20 sheets (A4/letter)
		15 sheets (B4/legal)
		15 sheets (A3/W letter)
Paper size	(Non-sort)	A3 ~ A6 (Postcard)R/11" x 17" ~ 8 1/2" x 5 1/2"
	(Sort/group)	A3 ~ A5/11" x 17" ~ 8 1/2" x 11"
Process capacity		20 sheets/min
Paper transport		Center reference
Paper reception		Face up
Paper weight	(Non-sort)	52 ~ 128g/m^2 (14 ~ 34lbs)
	(Sort/group)	56 ~ 80g/m^2 (15 ~ 21lbs)
Dimensions		335 (W) x 493 (D) x 298 (H) (Width: Including the tray.)
Weight		7kg
Power source		Supplied from the copier. DC24V (1.2A)
Power consumption		Max. 30W

(4) 10-bin staple sorter (10-bin SS)

<Model name: SF-S54>

Type	Copier installation type/hanging type
Distribution system	Bin shift system by lead screw
No. of bins	10 bins (The top bin is commonly used for non-sort.
Capacity	30 sheets for each bin (A4, 8 1/2" × 11", 80g/m^2) 100 sheets for the top bin
Sort	30 sheets (A4, 8 1/2" × 11") 15 sheets (B4, 8 1/2" × 14", 8 1/2" × 13") 15 sheets (A3, 11" × 17") 80g/m^2
Grouping	20 sheets (A4, 8 1/2" × 11") 15 sheets (B4, 8 1/2" × 14") 15 sheets (A3, 11" × 17"), 80g/m^2
Staple sort	30 sheets (A4, 8 1/2" × 11") 15 SHEETS (B4, 8 1/2" × 14") 15 sheets (A3, 11" × 17") 80g/m^2

Paper size	Non-sort	A3 ~ A6R 11" × 17" ~ 8 1/2" × 5 1/2"
	Sort/group/staple sort	A3 ~ A5 11" × 17" ~ 8 1/2" × 5 1/2"

Alignment (Sorting)	Max. shift 2mm (Alignment operation)
Process capacity	20 sheets/min
Paper transport	Center reference
Paper loading	Face up

Paper weight	Non-sort	49 ~ 128g/m^2
	Sort/group/staple sort	56 ~ 80g/m^2

Dimensions	390(W) × 542(D) × 400(H)mm
Weight	About 11.5kg, 15kg (including the installation kit)
Power source	DC24V (1.5A) supplied from the copier.
Power consumption	Max. 36W

Staple section

Type	Copier stapler
Stapling time	
No. of stapled sheets	30 sheets (80g/m^2)
Binding reference	Front reference
Staple supply	Cartridge (5,000 pcs.)
Staple	SF-SC12
No staple/no cartridge/no stapler detection	Available
Staple jam detection	Available
Manual staple mode	Available (excluding manual stapling)

(5) Two-step paper feed unit

<Model name: SF-CM15>

Paper size	A3 ~ A5
Paper feed capacity	250 sheets x 2 steps
Paper weight	56 ~ 80g/m^2 (15 ~ 21 lbs)
Paper kind	Standard paper, recycled paper
Size selection	Tray replacement/user handling
Power source	Supplied from the copier.
Dimensions (W x D x H)	570 (W) x 570 (D) x 208mm (H)
Weight	About 14kg

(6) 1-step paper feed unit

<SF-CM16>

Paper size	A3 ~ A5
Paper feed capacity	250 sheets × 1 step
Paper weight	56 ~ 80g/m^2, 15 ~ 21 lbs
Paper kinds	Standard paper, recycled paper
Size selection	Tray replacement, user operation
Power source	Supplied from the copier.
Dimensions	570(W) × 570(D) × 103(H)mm
Weight	About 8.5kg

(7) Exclusive-use desk

1. SF-DS17
   (Desk without 2-step paper feed unit SF-CM15)

Dimensions	570(W) × 523(D) × 520(H)mm	
Weight	About 19.5kg	
Functions	Caster	Provided
	Adjuster	None
	Door	None

2. SF-DS18
   (Desk with two-step paper feed unit SF-GM15 installed)

Dimensions	570(W) × 550(D) × 350(H)	
Weight	About 14.0kg	
Functions	Caster	Provided
	Adjuster	None
	Door	None

[3] PRODUCT VIEWS

1. External view and internal structure

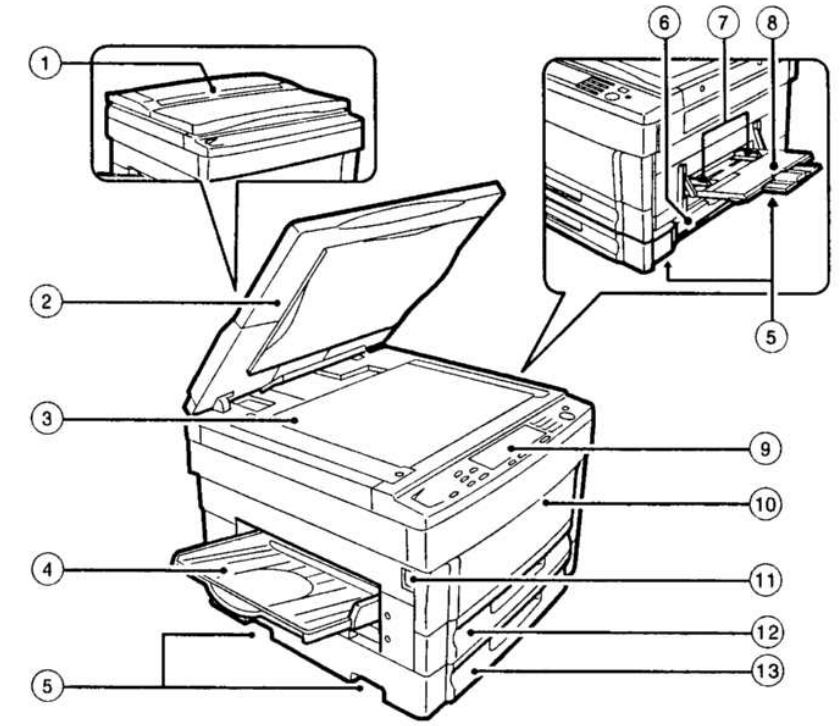

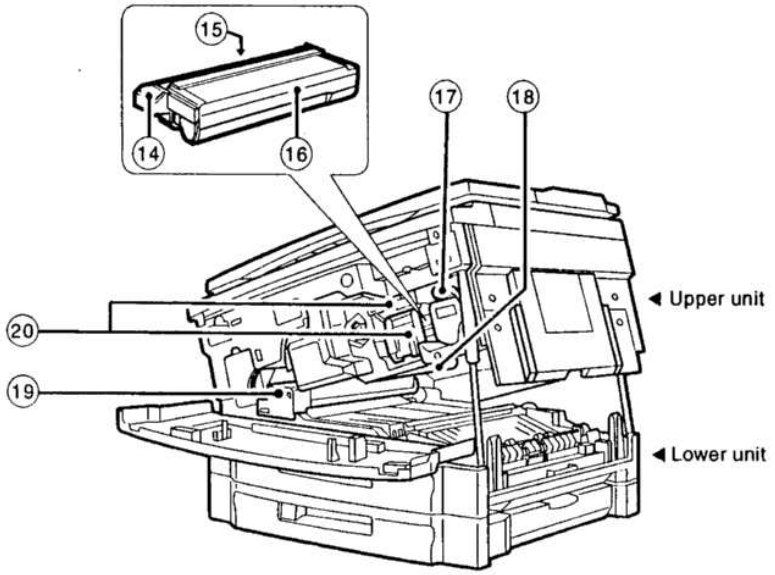

No.	Name	No.	Name	No.	Name
①	Original stocker	②	Original cover	③	Original table
④	Paper exit tray	⑤	Grip	⑥	Manual feed unit
⑦	Manual feed original guide	⑧	Manual feed tray	⑨	Operation panel
⑩	Front cover	⑪	Power switch	⑫	Paper tray (SF-2020), Duplex tray (SF-2120)
⑬	Paper tray	⑭	Developing unit grip	⑮	Developing unit strap
⑯	Toner hopper	⑰	Developing unit lock lever	⑱	Release lever
⑲	Fusing unit	⑳	Drum		

2. Operation panel

SF-2020

(AB series)

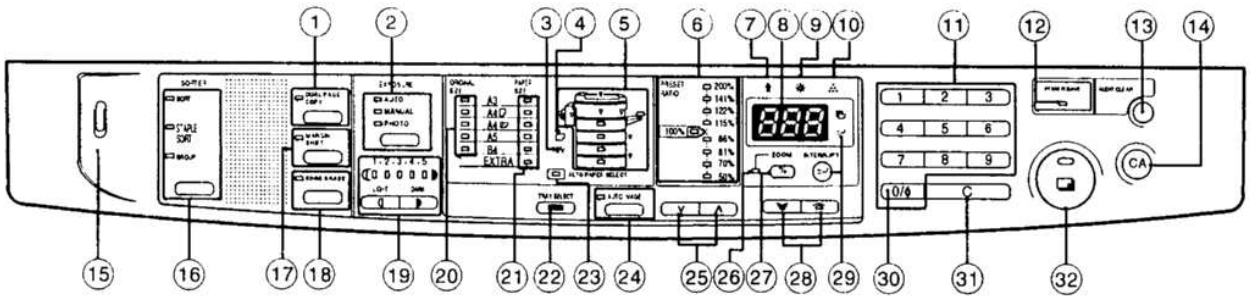

(AB series)

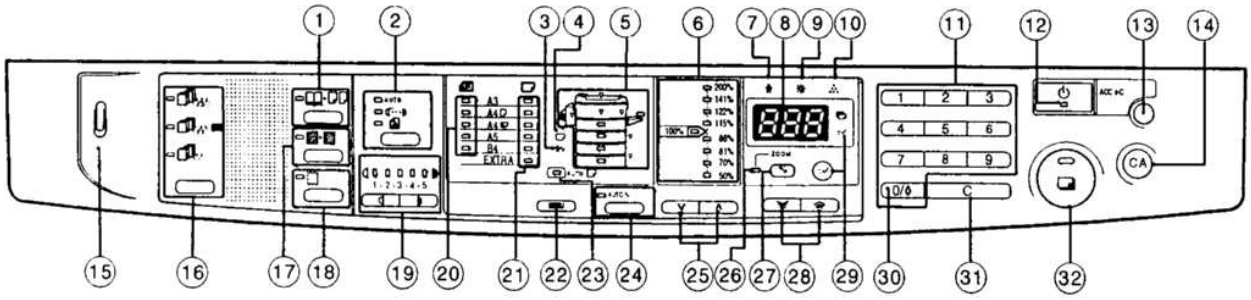

(Inch series)

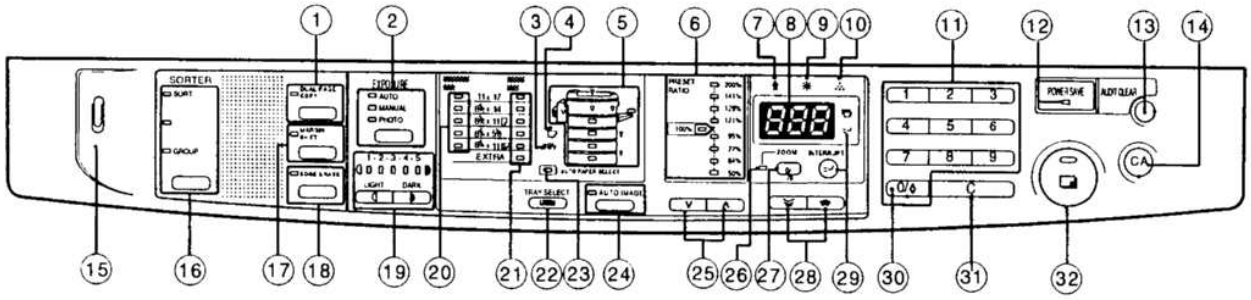

No.	Name	No.	Name	No.	Name
①	1-set 2-copy key/Display lamp	②	Density selection key/Display lamp	③	Paper jam lamp
④	Paper supply lamp	⑤	Tray position/Paper jam position lamp	⑥	Magnification ration lamp
⑦	Maintenance lamp	⑧	Copy quantity display	⑨	Mini maintenance lamp
⑩	Toner supply lamp	⑪	10-key pad	⑫	Pre-heat lamp
⑬	Department count end key	⑭	All clear key	⑮	Clip tray
⑯	Sorter key/Display lamp	⑰	Binding margin key/display lamp	⑱	Edge erase key/Edge erase lamp
⑲	Density adjustment key/Display lamp	⑳	Original size display lamp	㉑	Paper size display lamp
㉒	Tray selection key	㉓	Paper auto selection display lamp	㉔	Auto magnification ratio selection key/Display lamp
㉕	Magnification ratio selection key	㉖	Zoom lamp	㉗	% key
㉘	Zoom key	㉙	Interruption key/Display lamp	㉚	Zero-Read-out key
㉛	Erase key	㉜	PRINT button		

SF-2120

(AB series)

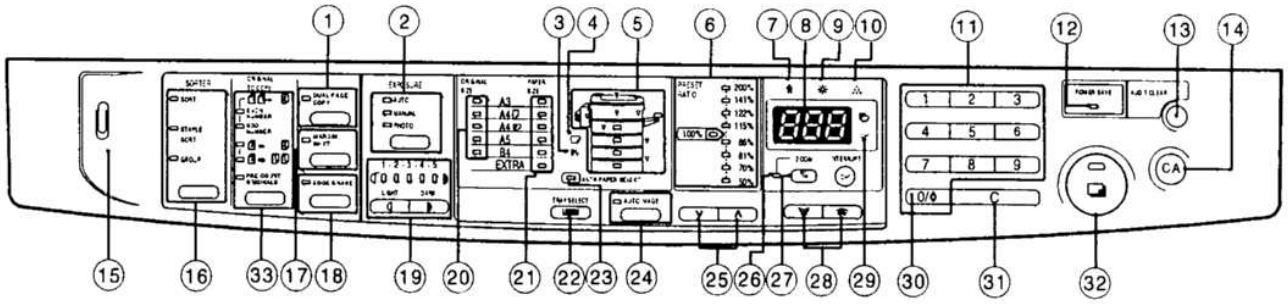

(AB series)

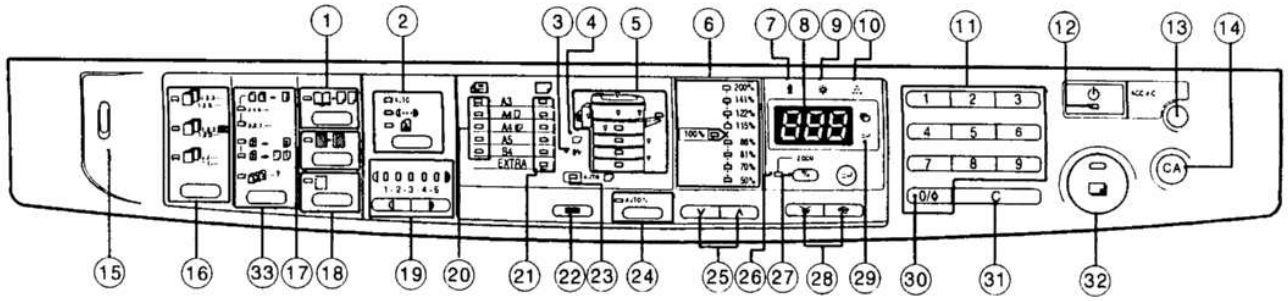

(Inch series)

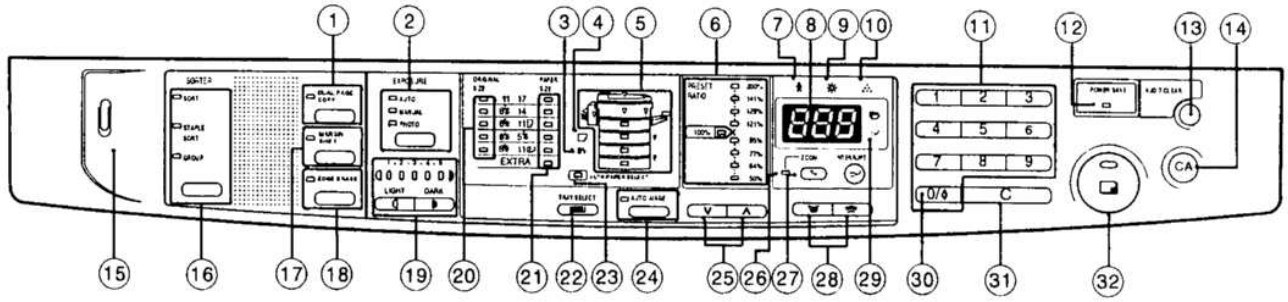

No.	Name	No.	Name	No.	Name
①	1-set 2-copy key/Display lamp	②	Density selection key/Display lamp	③	Paper jam lamp
④	Paper supply lamp	⑤	Tray position/Paper jam position lamp	⑥	Magnification ration lamp
⑦	Maintenance lamp	⑧	Copy quantity display	⑨	Mini maintenance lamp
⑩	Toner supply lamp	⑪	10-key pad	⑫	Pre-heat lamp
⑬	Department count end key	⑭	All clear key	⑮	Clip tray
⑯	Sorter key/Display lamp	⑰	Binding margin key/display lamp	⑱	Edge erase key/Edge erase lamp
⑲	Density adjustment key/Display lamp	⑳	Original size display lamp	㉑	Paper size display lamp
㉒	Tray selection key	㉓	Paper auto selection display lamp	㉔	Auto magnification ratio selection key/Display lamp
㉕	Magnification ratio selection key	㉖	Zoom lamp	㉗	% key
㉘	Zoom key	㉙	Interruption key/Display lamp	㉚	Zero-Read-out key
㉛	Erase key	㉜	PRINT button	㉝	Duplex key/Display lamp (SF-2120 only)

3. Clutches, solenoids, and motors (Explained with the SF-2120 and the SF-CM15)

Clutches and solenoids

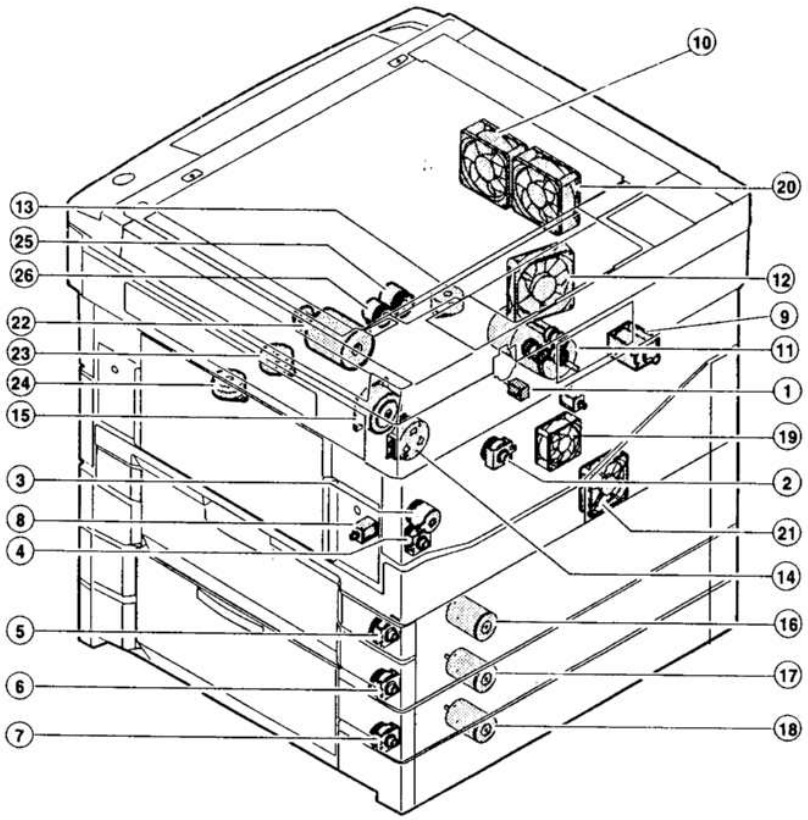

No.	Signal name	Name	Functions, operations
①	PSPS	Paper separation solenoid	Paper separation solenoid drive
②	RRC	Resist roller clutch	For resist roller rotation
③	TRC	Transport roller clutch	For transport roller rotation
④	CPFC1	Tray paper feed clutch (Paper is fed from the ADU in the SF-2120)	For paper feed roller rotation
⑤	CPFC2	Tray paper feed clutch	For paper feed roller rotation
⑥	CPFC3	Option tray paper feed clutch (SF-CM15, SF-CM16)	For paper feed roller rotation
⑦	CPFC4	Option tray paper feed clutch (SF-CM15 only)	For paper feed roller rotation
⑧	MPFS	Manual paper feed solenoid	For pressing take-up roller
⑨	GS	Gate solenoid (SF-2120 only)	For selection of the gate
㉕	DPFC	Take-up roller clutch (SF-2120 only)	For ADU take-up roller rotation
㉖	DRRC	Transport roller clutch (SF-2120 only)	For ADU transport roller rotation

Motors

No.	Signal name	Name	Functions, operations	Type
⑩	VFM	Ventilation fan motor	Used to ventilate around the fusing section, cools down the machine, and remove ozone.	DC brushless
⑪	MM	Main motor	Used to drive the body.	DC brush
⑫	CFM	Optical system cooling fan	Used to cool and ventilate the optical system.	DC brushless
⑬	LM	Lens motor	Used to move the optical lens.	DC stepping
⑭	TM	Toner motor	Used to stir toner.	DC synchronous
⑮	MRM	Mirror motor	Used to move the mirror base.	DC stepping
⑯	CS2M	Paper feed motor (SF-CM15, CM16)	Used to drive the paper feed roller.	DC brush
⑰	CS3M	Option paper feed motor	Used to drive the option paper feed roller.	DC brush
⑱	CS4M	Option paper feed motor (SF-CM15 only)	Used to drive the option paper feed roller.	DC brush
⑲	SMF	Suction fan motor	Used to ventilate the suction section.	DC brushless
⑳	VFM2	Exhaust fan motor	Used to ventilate the fusing section, cool the machine, and exhaust ozone.	DC brushless
㉑	DFM	Duplex copy fan motor (SF-2120 only)	Used to ventilate and cool the ADU section.	DC brushless
㉒	DDM	ADU motor (SF-2120 only)	Used to drive the ADU section	DC brush
㉓	PAM1	Matching motor (SF-2120 only)	Used to drive the ADU matching disk	Stepping
㉔	PAM2	Matching motor (SF-2120 only)	Used to drive the ADU matching disk	Stepping

4. PWB (Explained with the SF-2120 and the SF-CM15)

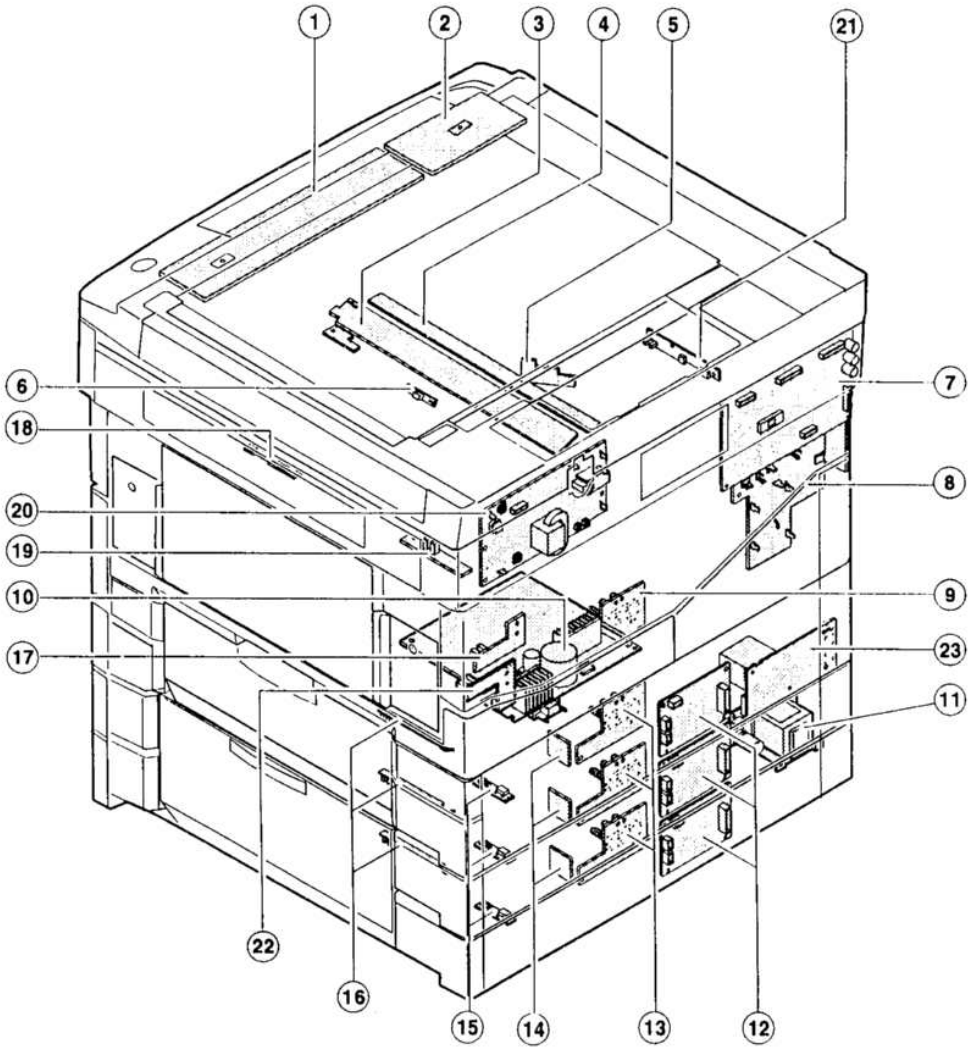

No	Name	Description	No	Name	Description
①	Operation PWB A	Operation input, display control	②	Operation PWB B	Operation input, display control
③	Blank lamp PWB	Used to control the blank lamp.	④	DL PWB	Used to drive the discharge lamp.
⑤	Optical PWB	AE sensor and lens motor interface	⑥	Process control PWB	Used to sense the toner density.
⑦	Main PWB	Used to control the body.	⑧	AC circuit PWB	AC power input
⑨	CSD PWB	Used to sense the body cassette size.	⑩	DC circuit PWB	DC power input
⑪	Paper feed power PWB (SF-CM15)	Used to supply power to drive the paper feed unit.	⑫	Motor control PWB	Used to drive and control the paper feed motor and the transport motor.
⑬	CSD B PWB	Used to sense the cassette size of 2nd ~ 4th tray.	⑭	Motor sensor PWB	Encoder for 2nd ~ 4th paper feed motor
⑮	Tray module PWB	Vertical transport of 2nd ~ 4th cassette, JAM detection, paper feed clutch interface	⑯	DPPD PWB	Vertical transport of 2nd ~ 4th tray, JAM detection and cover open detection
⑰	ADU PWB	ADU control	⑱	PID PWB	Manual paper entry detection
⑲	PPD PWB	Body PR roller JAM detection	⑳	High voltage PWB	Process high voltage, developing bias voltage supply
㉑	PDD PWB	Body paper exit section JAM detection, ventilation fan motor interface	㉒	Paper feed I/F PWB	I/F of copier paper detection and the paper feed clutch.
㉓	Sub DC power PWB	Used to supply power in the power save mode. (5V is supplied to the main PWB and the operation PWB.)			

5. Sensors and switches (Explained with the SF-2120 and the SF-CM15)

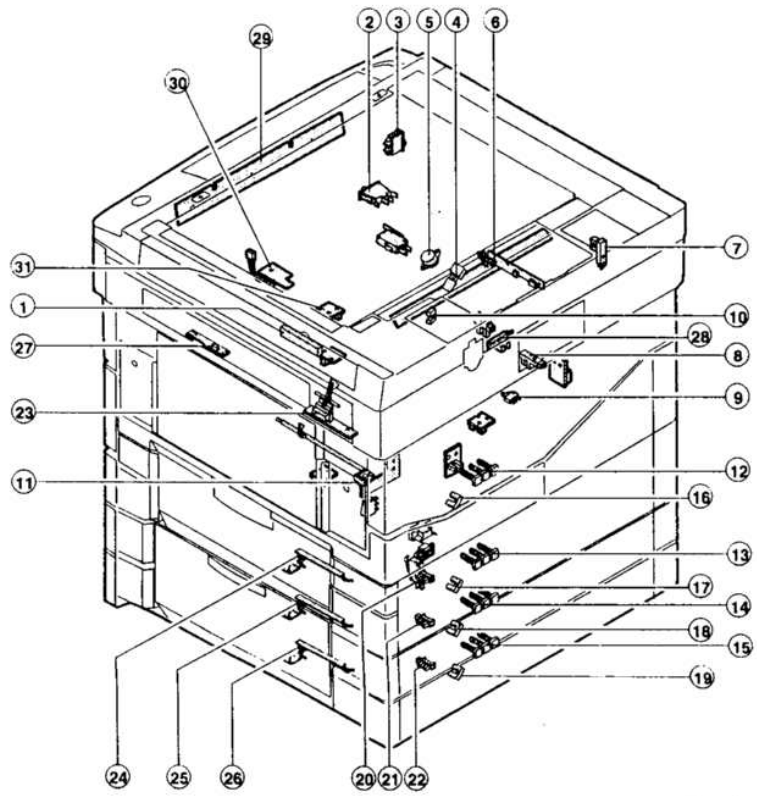

For the ADU sensor, refer to page 5-18.

No.	Signal name	Name	Type	Operation, function
①	TCS	Toner density control sensor	Transmission sensor	HIGH when toner density falls.
②	ILSW	Front cabinet open/close switch	Interlock switch	ON when closed.
③	MSW	Power switch	Seesaw switch	
④	TH	Fusing heater thermistor	Thermistor	Greater resistance at low temperature
⑤	TS	Fusing heater thermostat	Thermostat	Contact open at abnormally high temperature
⑥	POD	Paper exit paper sensor	Transmission photo sensor	LOW when paper is present.
⑦	MHPS	Mirror home position sensor	Transmission photo sensor	HIGH when paper is sensed.
⑧	MMRE	Main motor encoder	Transmission photo sensor	Rotation pulse output
⑨	TFD	Waste toner full switch	Lead switch	HIGH when sensed.
⑩	LHPS	Lens home position sensor	Transmission photo sensor	LOW when reduction.
⑪	PPD	Paper transport sensor	Transmission photo sensor	LOW when paper is present.
⑫	1 CSD0 ~ 2	Body upper tray paper size detection (SF-2020 only)	Tact switch	Shorted when the switch is turned on.
⑬	2 CSD0 ~ 2	Body lower tray paper size detection	Tact switch	Shorted when the switch is turned on.
⑭	3 CSD0 ~ 2	Option upper tray paper size detection ※1	Tact switch	Shorted when the switch is turned on.
⑮	4 CSD0 ~ 2	Option lower tray paper size detection ※2	Tact switch	Shorted when the switch is turned on.
⑯	PED1	Body upper tray paper presence detection (SF-2020 only)	Transmission photo sensor	HIGH when paper is present.
⑰	PED2	Body lower tray paper presence detection	Transmission photo sensor	HIGH when paper is present.
⑱	PED3	Option upper tray paper presence detection ※1	Transmission photo sensor	HIGH when paper is present.
⑲	PED4	Option lower tray paper presence detection ※2	Transmission photo sensor	HIGH when paper is present.
⑳	Motor sensor 2	Body lower stage paper feed motor encoder sensor	Transmission photo sensor	Rotation pulse output
㉑	Motor sensor 3	Option upper paper feed motor encoder sensor ※1	Transmission photo sensor	Rotation pulse output
㉒	Motor sensor 4	Option lower paper feed motor encoder sensor ※2	Transmission photo sensor	Rotation pulse output
㉓	DPPD1	Body upper tray paper transport sensor	Transmission photo sensor	LOW when paper is present.
㉔	DPPD2	Body lower tray paper transport sensor	Transmission photo sensor	LOW when the side door is open and paper is present.
㉕	DPPD3	Option upper tray paper transport sensor	Transmission photo sensor	LOW when the option door is open and paper is present.
㉖	DPPD4	Option lower tray paper transport sensor	Transmission photo sensor	LOW when the option door is open and paper is present.
㉗	PID	Single manual feed paper entry sensor	Transmission photo sensor	HIGH when paper is present.
㉘	OCSW	OC cover open/close sensor	Transmission photo sensor	OC cover open/close detection
㉙	ORS	Original size sensor	Photo transistor	Original size detection
㉚	DMS	Drum mark sensor	Reflection sensor	Drum mark detection
㉛	IDS	Toner patch density sensor	Reflection sensor	Toner patch density detection

※1: SF-CM15, SF-CM16 ※2: SF-CM15 only

6. Rollers, mirrors, etc.

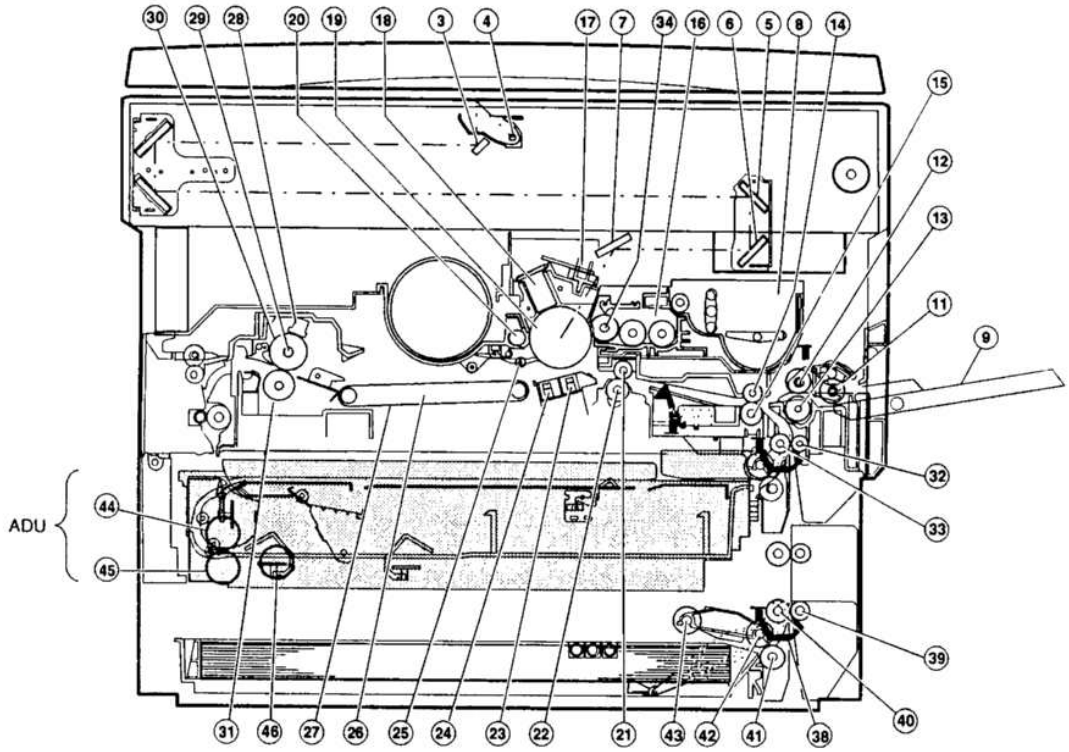

No.	Name	No.	Name	No.	Name
①	No. 3 mirror	②	No. 2 mirror	③	No. 1 mirror
④	Copy lamp	⑤	No. 4 mirror	⑥	No. 5 mirror
⑦	No. 6 mirror	⑧	Developing unit toner box	⑨	Manual tray
⑩	—	⑪	Take-up roller	⑫	Paper feed roller
⑬	Reverse roller	⑭	PS front roller follower roll	⑮	PS front roller
⑯	Developing unit	⑰	Blank lamp	⑱	Main charger unit
⑲	Photoconductor drum	⑳	Cleaner unit	㉑	Resist roller follower roll
㉒	Resist roller	㉓	Transfer charger	㉔	Separation charger
㉕	Drum separation pawl	㉖	Suction unit	㉗	Suction belt
㉘	Fusing thermistor	㉙	Heater lamp	㉚	Upper heat roller
㉛	Lower heat roller	㉞	Developing magnet roller	㉟	Tray paper feed roller
㊱	Tray paper feed reverse roller	㊲	Tray paper feed take-up roller	㊳	PE actuator
㊴	Transport roller (lower) follower roller	㊵	Transport roller (lower)	㊶	Tray paper feed reverse roller
㊷	Tray paper feed roller	㊸	Tray paper feed take-up roller	㊹	Reverse roller
㊺	Paper feed roller	㊻	Take-up roller		

※ Since ㉜, ㉝, ㉟ ~ ㊸ are the same as in the SF-CM15 (option), they are omitted.

[4] UNPACKING AND INSTALLATION

1. Unpacking

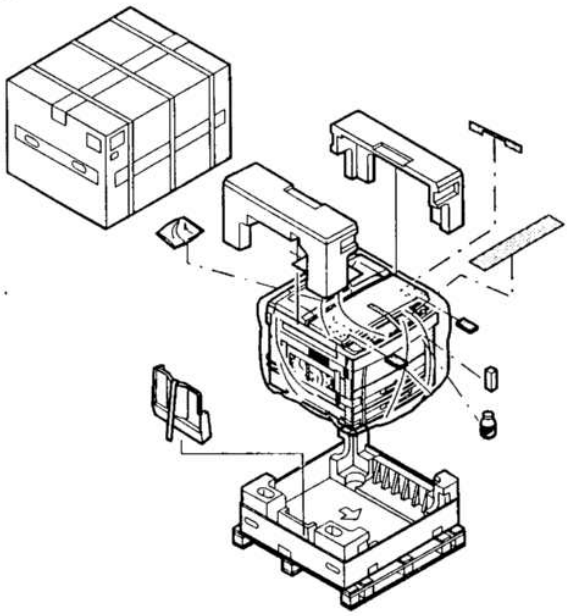

Packing material/accessory list

	Name	Q'ty
1	Paper exit tray	1
2	Instruction manual	1
3	Maintenance card	1
4	Dust cover	1
5	Service contract	1
6	Installation manual	1
7	Magnification ratio select label	1

2. Installation

Installing conditions

The surrounding conditions of the machine affect the machine performance greatly. Use great care for the following items.

(1) Environment

① Avoid direct sunlight, and avoid installation near the window. (Curtains or blinds must be shut completely.)
If not, the plastic parts and the original cover may be deformed. Even if the window is of frosted glass, there is no difference.

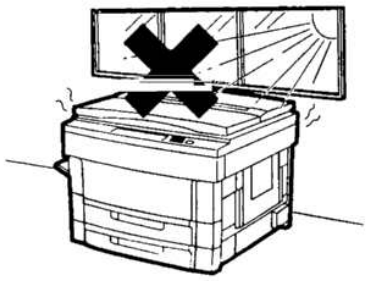

② Avoid high temperature and high humidity, and avoid sudden temperature change. (Avoid installation near a cooler or a heater.)
If not, paper absorbs moisture and dew forms in the machine, causing paper jam or degraded image quality.

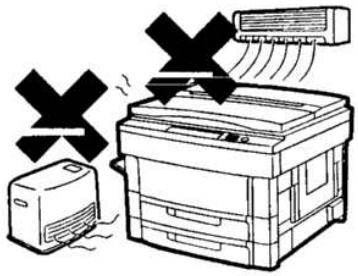

(Standard condition): The best condition to use the machine.
20 ~ 25°C: 65±5%RH
(Temperature and humidity): 15 ~ 30°C
20% ~ 85% RH
35°C for 65%

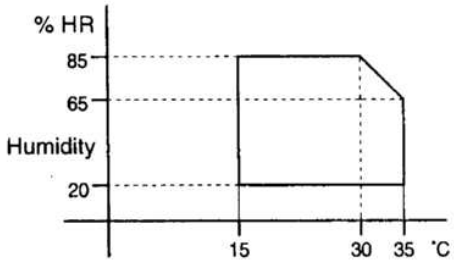

③ Avoid dust and vibrations.
If dust enters the machine, malfunctions may occur.



(4) Avoid installation to an unstable place.
Keep the machine in horizontal state to maintain the performances.



⑤ Avoid installation to a poorly ventilated place.



⑥ Avoid installation to a place where there are flammable materials or ammonia gas, etc. If the machine is installed near a diazo copier, the picture quality may be degraded and malfunctions may occur.



⑦ Install near a power outlet.

(2) Space around the machine

Install the machine with its rear side about 10cm apart from the wall in order to allow space to ventilation by the cooling fan.
Also allow enough space around the machine for proper operation.

(3) Installation base

Set the machine in horizontal position in the following procedure.
Be sure to use a leveling instrument (UKOGM0054CSZZ) to install the machine on a flat, horizontal place.

(Note) If the machine is not in horizontal position, the toner density control function may not work normally, resulting in degraded picture quality.

(4) Power source

① Use the power source of the rated capacity.

② Avoid complicated wiring. If not, the breaker or the fuse may be overloaded.



(5) Grounding wire connection

① Connect the grounding wire to prevent against a danger.

② When connecting the grounding wire, connect only to the grounding object (the grounding terminal of the power outlet, etc.) and never connect to a gas pipe.

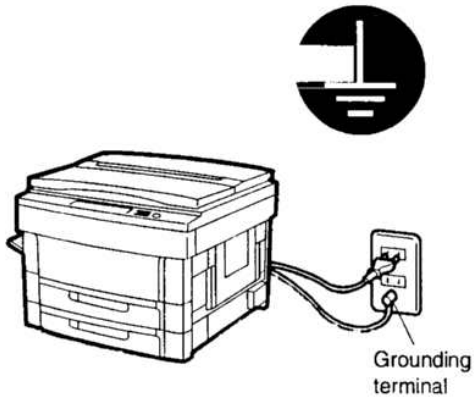

3. Optical system lock release

A. No. 2/3 mirror unit lock release

Remove the one fixing screw of the No. 2/3 mirror unit on the left side of the copier.

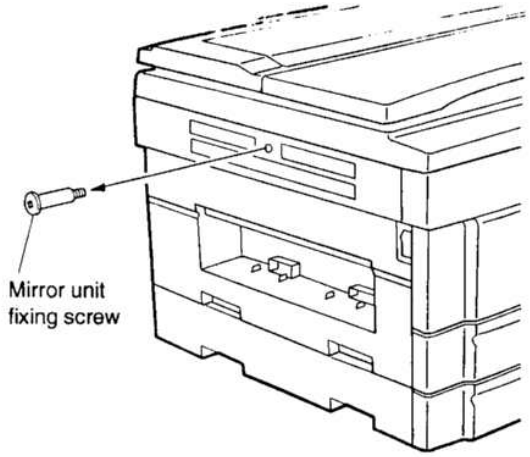

B. Lens and No. 4/5 mirror unit lock release

Remove two fixing screws of the No. 4/5 mirror unit on the right inside of the copier.
Open the front cabinet and remove one fixing screw of the lens on the lower side of the operation panel.

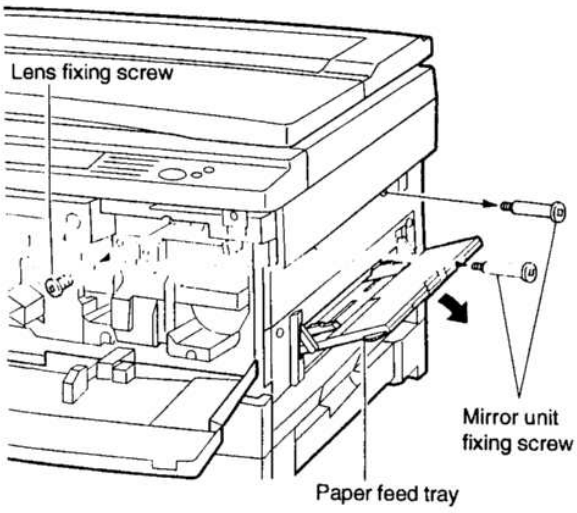

4. Charger cleaning

A. Main charger unit electrode cleaning

① Press the hook section of the main charger unit to release lock, and pull out and remove the main charger unit from the copier.

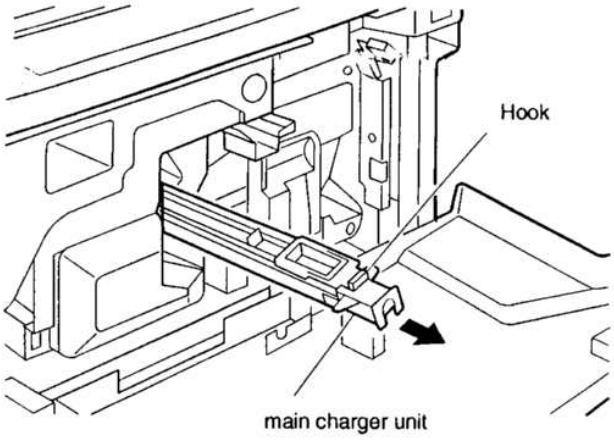

② Remove one fixing screw of the main charger unit (on the back side).

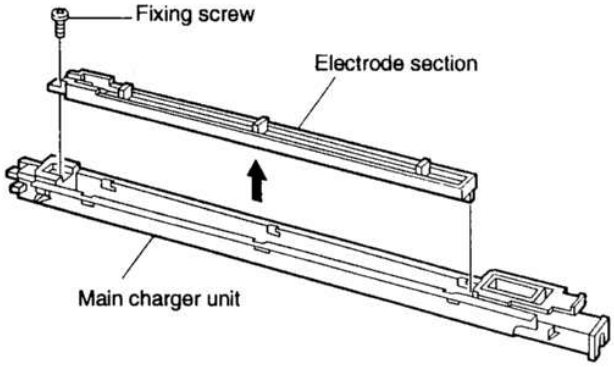

③ Press the electrode cleaner onto the tips of the electrode so that the tips are inserted into the cleaner a few times to clean.

(Note)

- Do not move the cleaner back and forth with the electrode tips inserted into it.
- When cleaning, clean thoroughly at one time. Avoid partial cleaning.

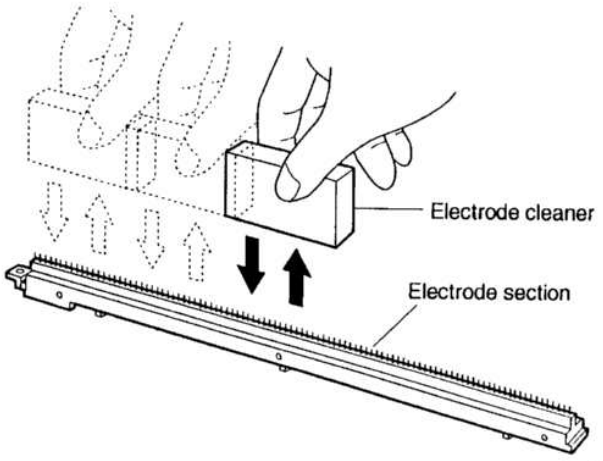

④ Return the electrode section to the original position and fix it with a screw.

⑤ Insert the main charger unit along the guide groove in the copier fully to the bottom.

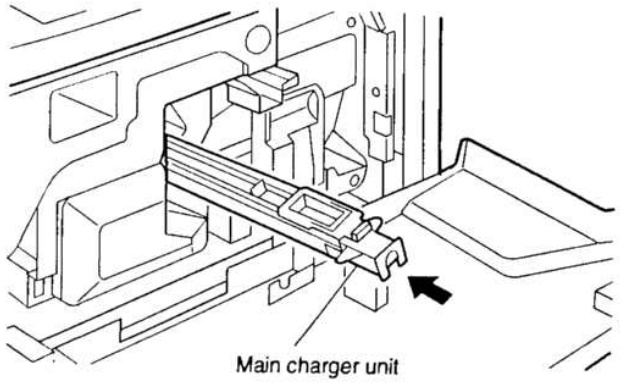

5. Developing unit setting

A. Developing unit setting

① Open the front cabinet, remove the installation toner fixed to the developing unit level with tape, and pull the developing unit lever toward you.

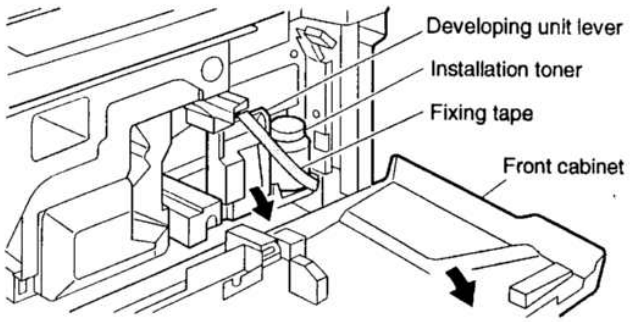

② Hold the grip of the developing unit, and slowly pull out the developing unit until it stops.

Then hold the hand carry strap and press the developing lever, and remove the developing unit.

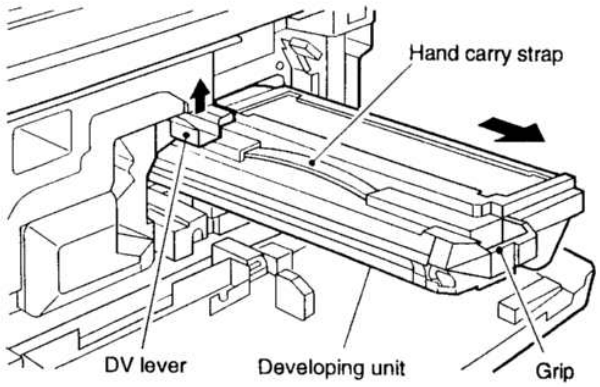

③ Remove three fixing screws of the toner hopper of the developing unit, and remove the toner hopper.

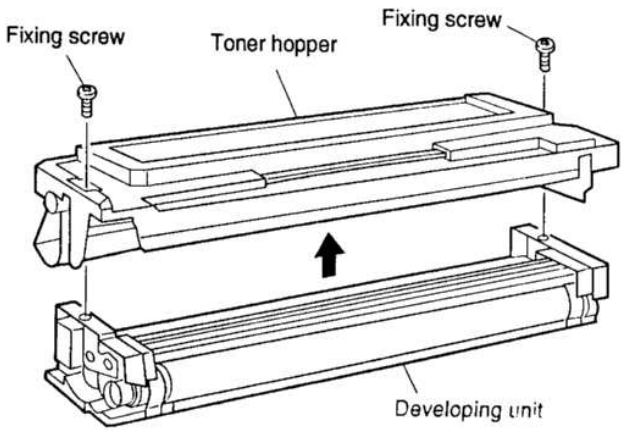

④ While supplying developer from the developer supply port of the developing unit, turn the MG gear clockwise with a screwdriver or a scale to supply fully in the developing unit.

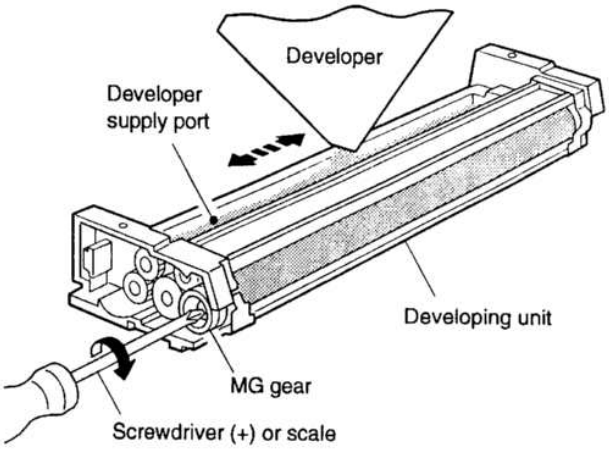

⑤ Install the toner hopper to the developing unit and fix it with two screws.

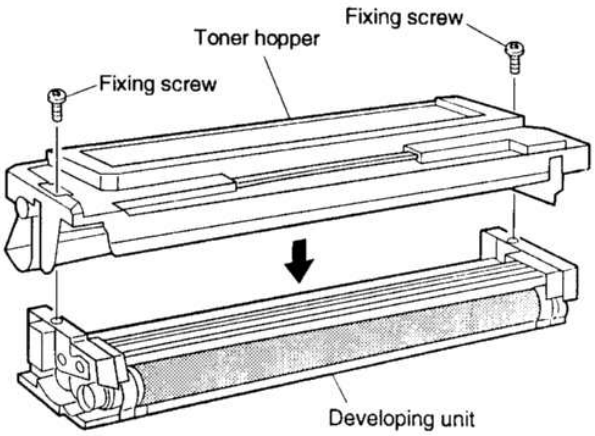

⑥ Hold the hand carry strap of the developing unit and insert it into the copier fully to the bottom.

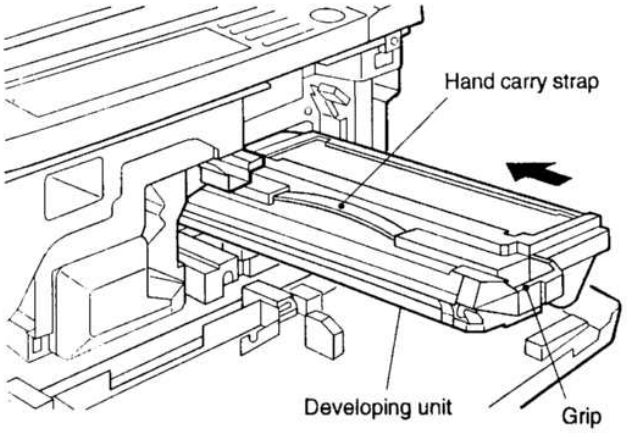

⑦ Close the developing unit lever and close the front cabinet.

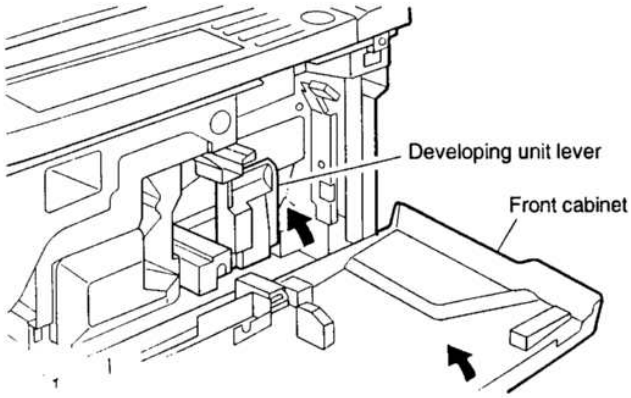

With the above procedure, setting of the developing unit is completed.

6. Toner density sensor level adjustment

Turn on the copier power switch.

A. Developing unit level adjustment

① Execute simulation 25.

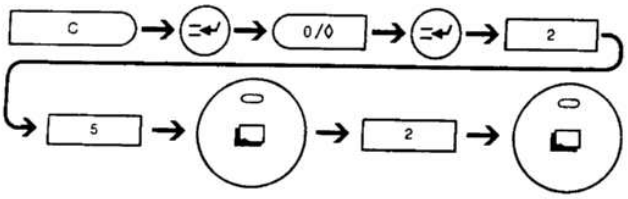

② After 3 minutes, simulation 25 is completed.

(Note) If the simulation is terminated halfway, automatic reading is not performed. Do not terminate it halfway.

③ Cancel simulation 25 with the (CA) key.

7. Accessory installation

A. Copier tray installation

Install the copy tray to the paper exit section on the left side of the copier.

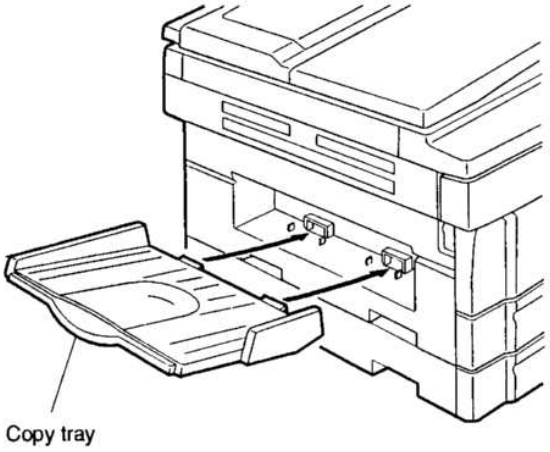

8. Toner supply

① Shake the toner cartridge right and left several times with the toner cartridge sheet surface facing up.

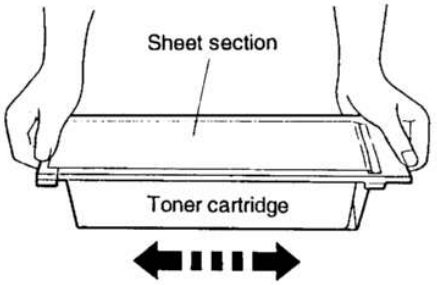

② Install the toner hopper of the developing unit, and slide it toward you until it clicks.

At that time, be careful to distribute toner evenly in the toner cartridge.

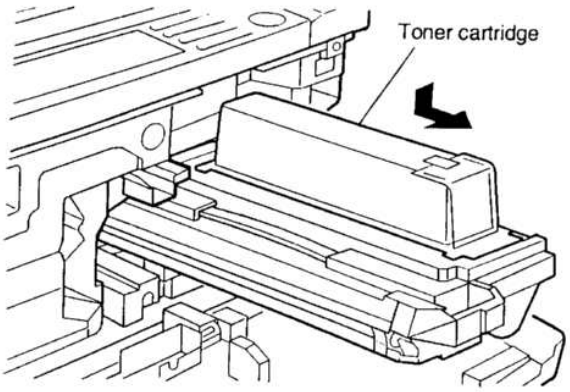

③ Hold the grip of the toner hopper shutter, and slowly pull out the shutter fully toward you.

If the shutter won't move, the procedure in ② may have not performed properly. In that case, slide the toner cartridge again toward you until it clicks.

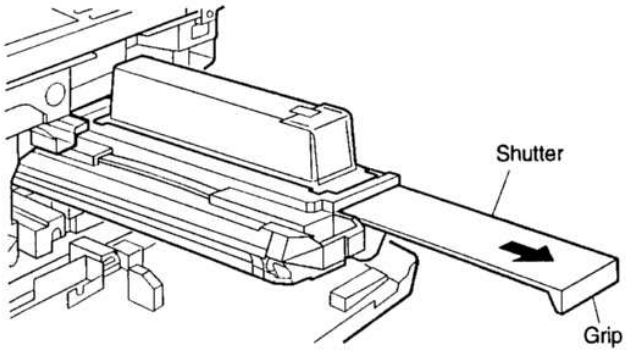

④ While pressing the toner cartridge securely, strongly pull the toner cartridge sheet toward you. This will supply toner into the toner hopper. The toner cartridge sheet must be removed completely.

Then tap the top of the toner cartridge several times to feed toner.

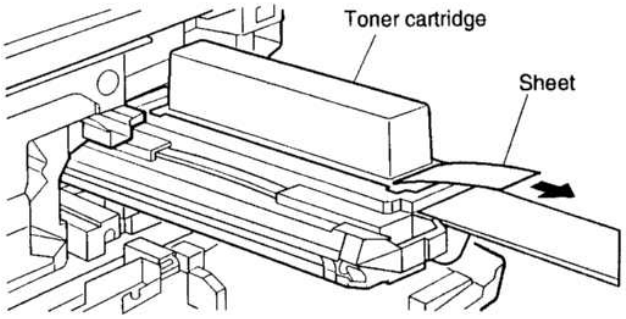

⑤ Hold the grip of the toner hopper shutter and slowly push the shutter completely to the bottom.

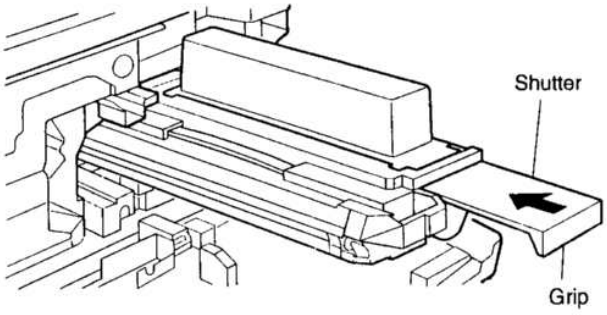

⑥ Slide the toner cartridge to the bottom and remove it slowly.

If the shutter have not been pushed completely in procedure (5), the toner cartridge cannot be slid. In that case, push the shutter completely and slide and remove the cartridge.

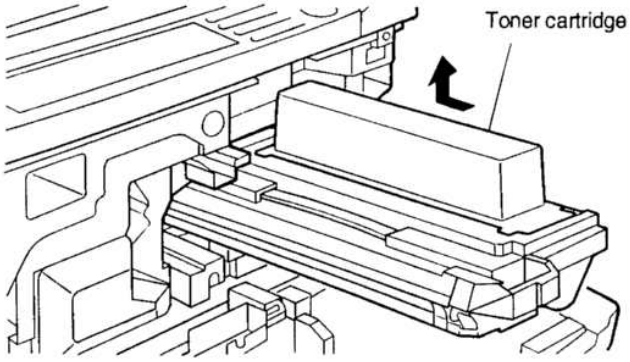

⑦ Hold the grip of the developing unit, and insert the developing unit slowly to the bottom.

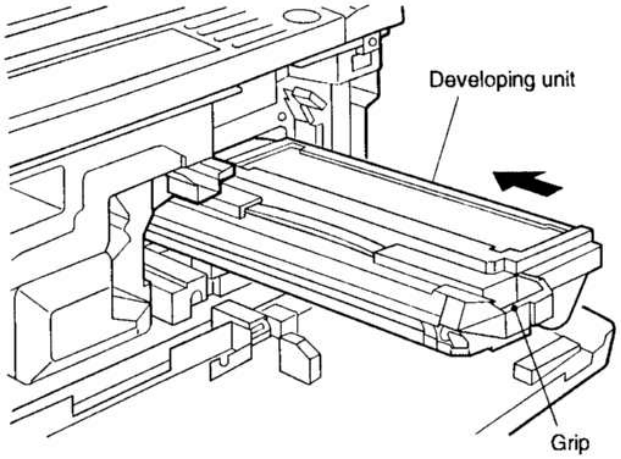

⑧ Close the developing unit lever, and close the front cabinet.

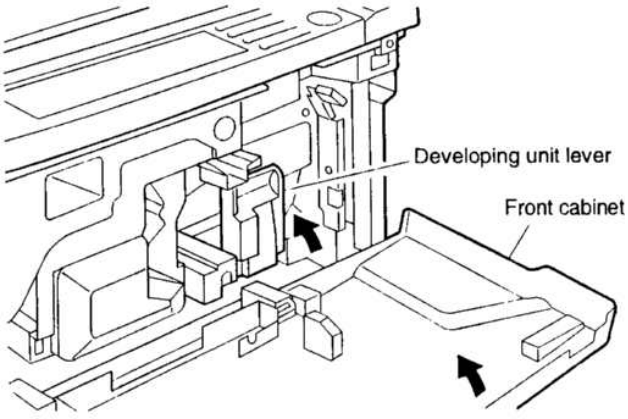

With the above procedures, toner supply is completed.

9. Center shift adjustment

There is basically no need to perform the center shift adjustment because it is made when shipping. If the center should be shifted, adjust in the following procedures.
Make a copy. If the center is shifted as shown in Fig. 1 or Fig. 2, loosen the four screws which are fixing the cassette grip cabinet.

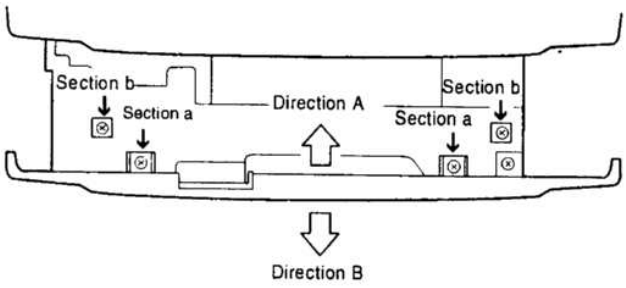

(Note) When fixing the cassette cabinet, the fixing screws and the cabinet clearance a and b are in symmetry.

[Reference figure]

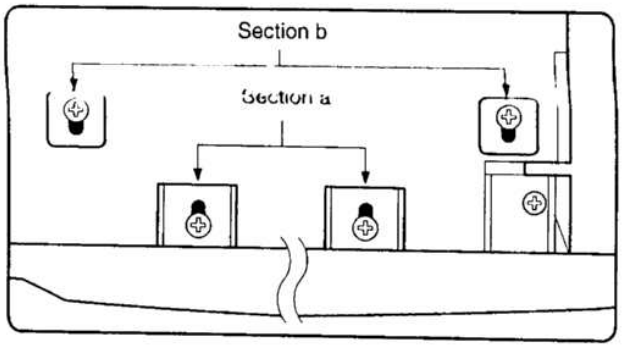

(1) Fig. 1

Move the cassette grip cabinet in direction A, tighten two fixing screws (a) and tow fixing screws (b) in this sequence. Make a copy again and check the center.

[Fig.1]

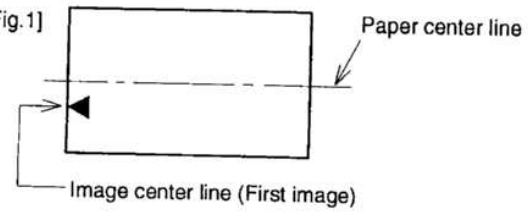

(2) Fig. 2

Move the cassette grip cabinet in direction B, tighten two fixing screws (a) and tow fixing screws (b) in this sequence. Make a copy again and check the center.

[Fig.2]

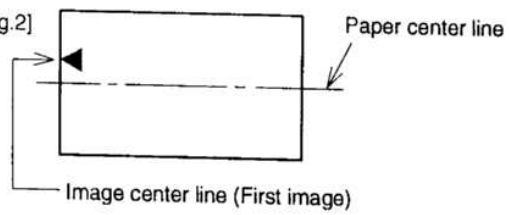

10. Label attachment

A. Label attachment

Attach the magnification ratio select label packed together with the Operation manual to the position shown in the figure below.

- When attaching the label to the copier with the original cover.

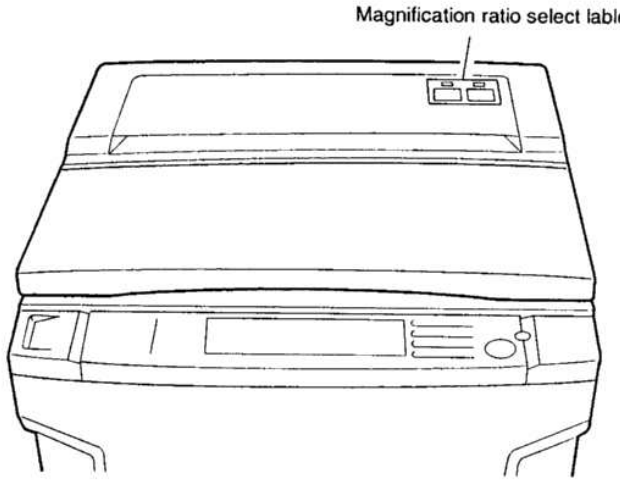

- When attaching the label to the optional automatic original feeder (SF-A15)

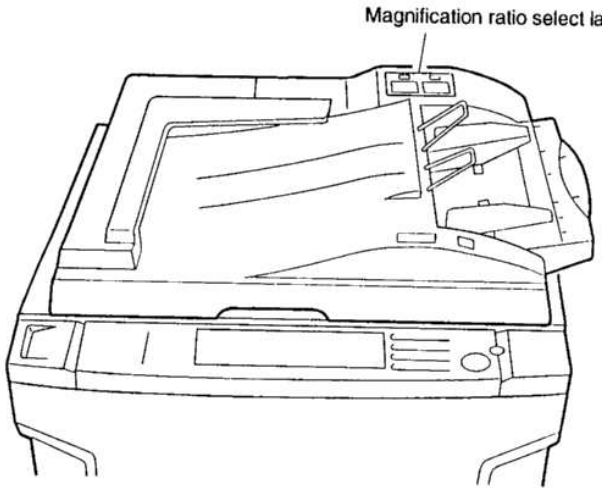

11. *Optional two-step paper feed unit (SF-CM15) installation*

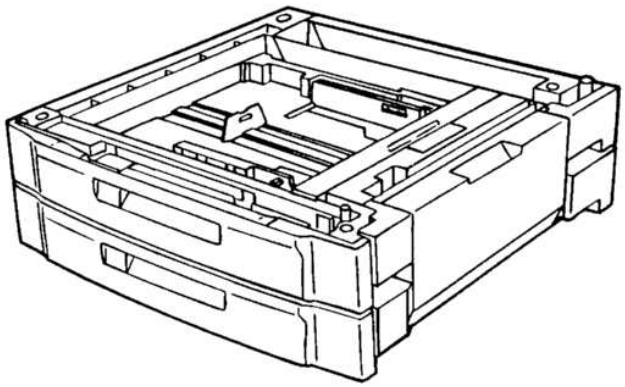

Parts packed together



Connection adjustment plate	Connection screw A	Connection screw B	Connection screw C
x 1 pc.	x 2 pcs.	x 1 pc.	x 2 pcs.

Disconnect the power plug of the copier and perform the following procedures.

① Remove two screws which are fixing the rear cabinet on the lower stage of the copier, and remove the rear cabinet.

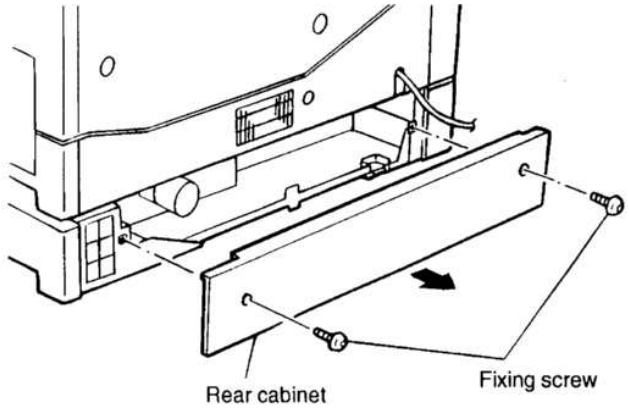

② Remove the notched section of the lower stage of the copier.

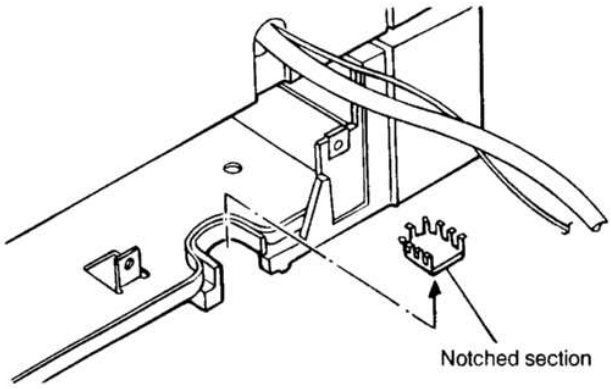

③ The following procedure must be performed by two persons.

Hold the grips of the copier, and insert the positioning bosses (2 positions) of the two-stage paper feed unit into the positioning holes (2 positions) on the bottom of the copier. Then put the four legs of the copier on the two-stage paper feed unit.

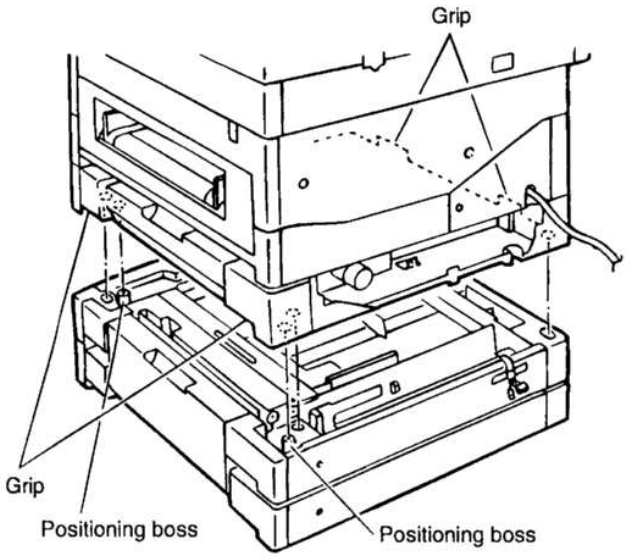

④ While lifting the lower stage tray slightly, pull it out until it stops. Then hold the both sides of the tray and lift and remove it.

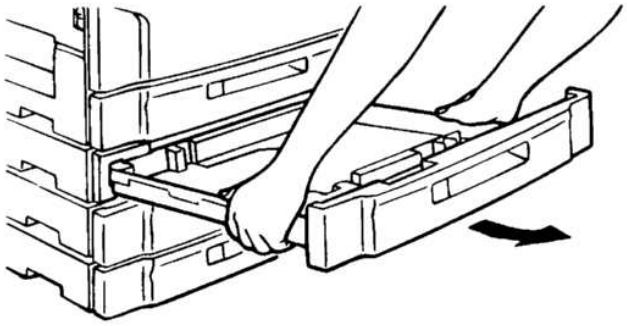

⑤ Attach the connection adjustment plate as shown in the figure and fix it with two screws A. Then fix the left side with screw B.
Install the paper tray which was removed in procedure 4 to the copier.

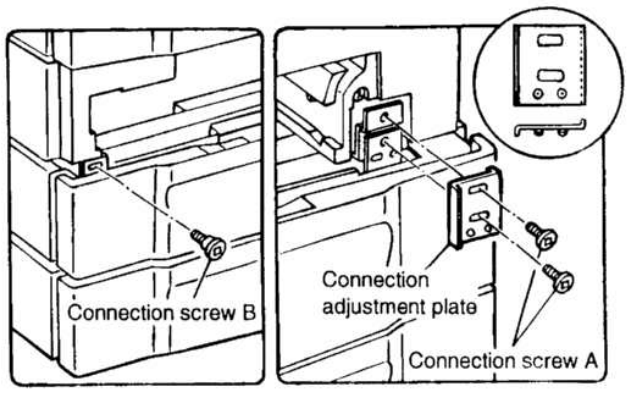

Connect the rear side of the copier with two connection screws C.

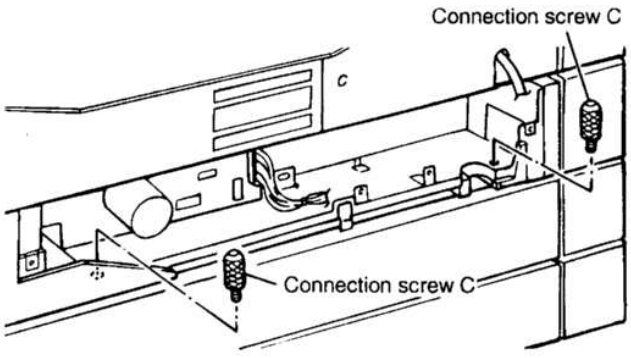

⑥ Remove the connecter which is fixed to the rear cabinet of the two-stage paper feed unit with tape. Connect the 4P connector and 10P connector with the 4P connector and 16P connector of the copier.

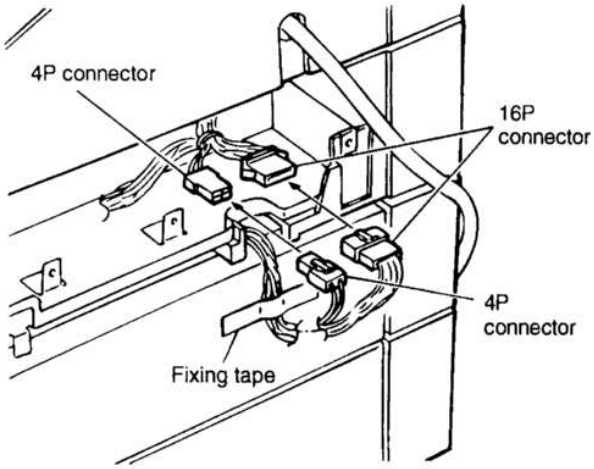

⑦ Install the rear cabinet which was removed in procedure 1 to the original postilion, and fix it with two screws.

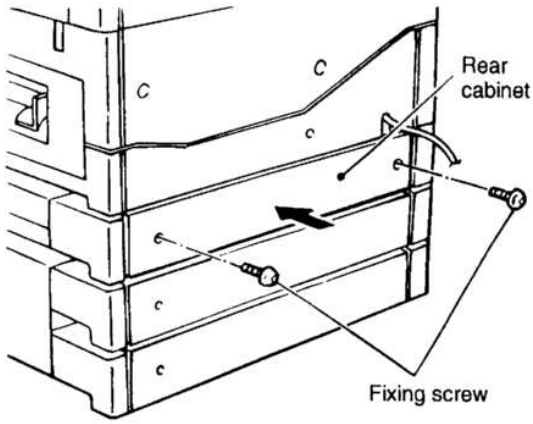

⑧ Adjust according to "9. Center shift adjustment" in [4] UNPACKING AND INSTALLATION.

12. Optional one-step paper feed unit (SF-CM16)

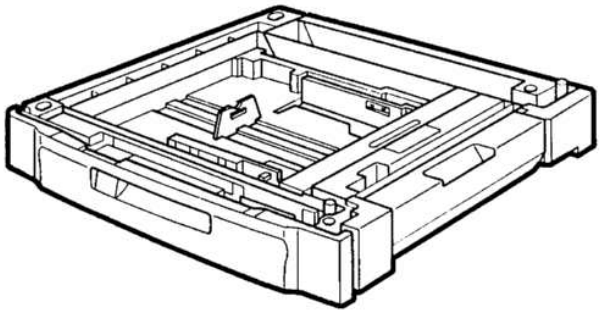

Included parts

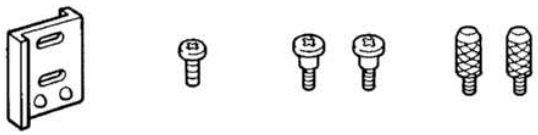

Securing fixture (1pc)	Mounting screws "A" (2pc)	Mounting screws "B" (1pcs)	Mounting screws "C" (2pcs)

Disconnect the plug to the main copier unit before performing the following procedures.

1. Removing the rear cover to the main copier unit's lower tray

Remove the two securing screws which hold in place the cover to the main copier unit's lower tray, then remove the rear cover.

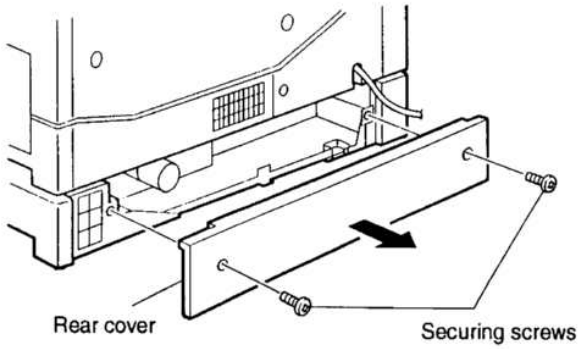

2. Removing the cut-out from the lower tray of the main copier unit

Remove the cut-out from the bottom of the main copier unit.

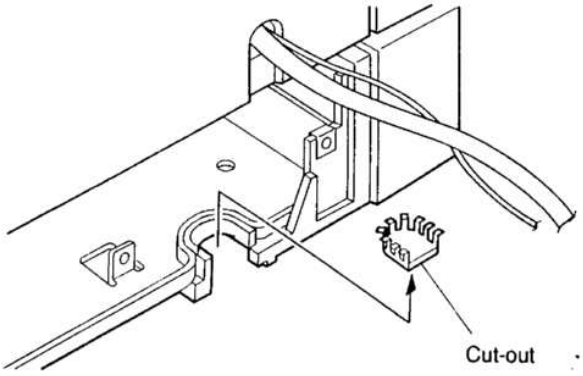

3. Placing the main copier unit over the paper feed unit

[Note]

- The following procedure should always be performed by two persons.

Lift the main copier unit by the grips and slip the two positioning holes on the bottom of the main copier unit over the two positioning bosses on the paper feed unit, then set the four feet on the main copier unit in their proper places on the paper feed unit.

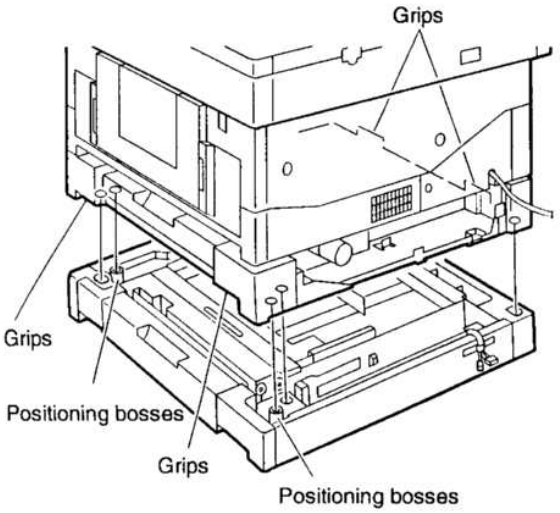

4. Removing the lower tray from the main copier unit

While lifting up slightly on the main copier unit's lower tray, pull it out gently as far as it will go.

Then lift up on it a little bit with both hands to remove it from the copier.

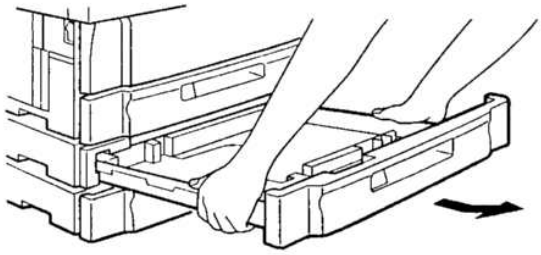

5. Attaching the main copier unit and paper feed unit

Orient the protrusions on the securing fixture (one of the included parts) toward yourself as shown in the illustration and attach it with the two mounting screws "A".

Then attach the left side with the mounting screw "B".

Finally, reinsert in the main copier unit the tray that was remove in step 4.

Attach the rear side of the main copier unit to the paper feed unit using the two securing screws "C".

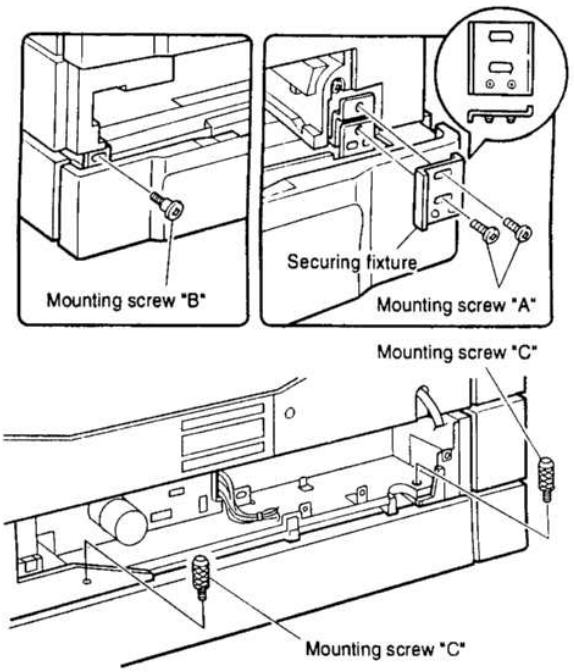

6. Plugging in the relay harness

Remove the tape holding the connector to the rear cover of the paper feed unit, then plug the 4P and 16P connectors into the corresponding connectors on the main copier unit.

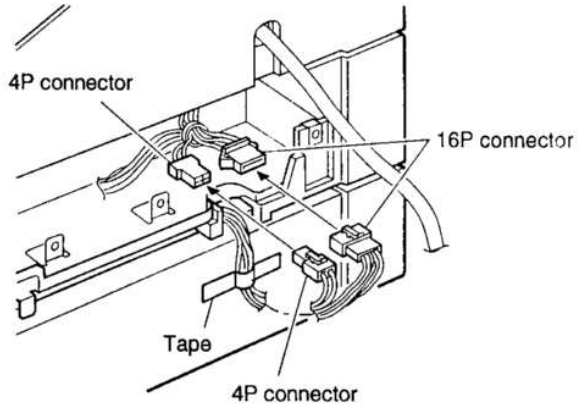

7. Mounting the rear cover to the main copier unit's lower tray

Put the rear cover, which was removed in step 1, back where it came from and secure it with its two securing screws.

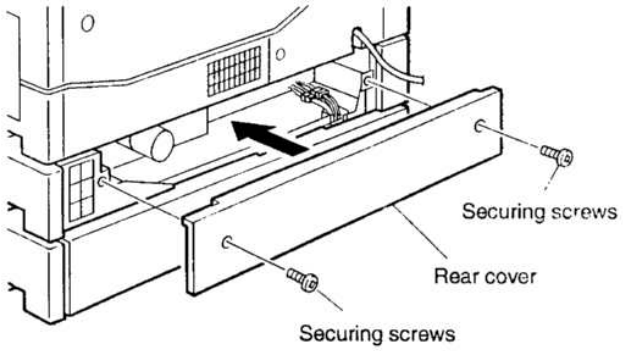

8. Set the mode.

Plug the copier into a grounded outlet and turn the power switch on.

- Operate the keys on the copier to set the mode.

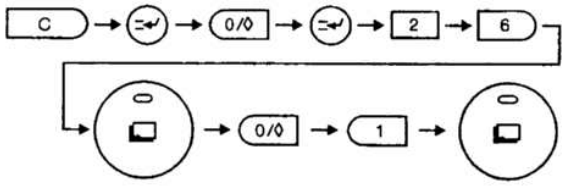

The above key operation will display the currently set mode.

- Immediately after the above key operation, operate the keys as follows:

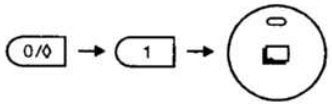

9. Centering the paper

The paper trays are adjusted at the factory, so there should be no need to center the copy paper yourself. If such an adjustment is necessary, however, follow the procedures described below.
Make a copy. If it comes out off center as shown in either figure 1 or figure 2 below, loosen the four screws which hold the front part of the tray in place.

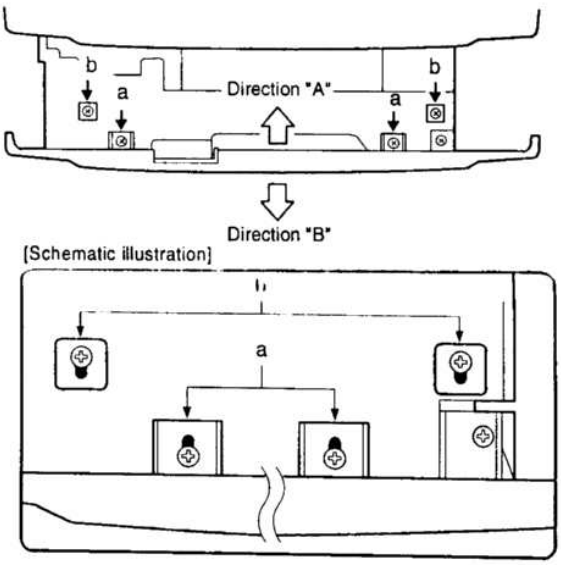

[Note] When tightening down the front part of the tray, the two "b" securing screws must be the same distance from the front part of the tray. This requirement also applies to the two "a" securing screws.

- When copies come out off center as shown in figure 1
  Move the front part of the tray in direction A, tighten first the two "a" securing screws then the two "b" securing screws, then make another copy to check whether the copies come out properly centered.

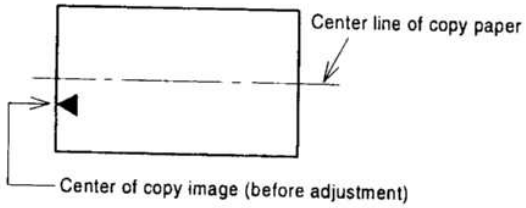

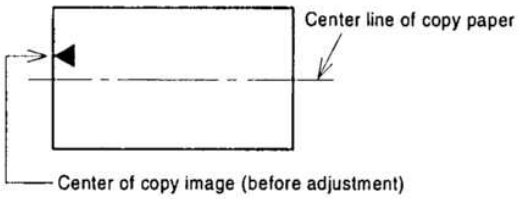

- When copies come out off center as shown in figure 2
  Move the front part of the tray in direction B, tighten first the two "a" securing screws then the two "b" securing screws, then make another copy to check whether the copies come out properly centered.

13. Tray paper size selection (Described with the SF-2020)

Select the necessary size according to the following procedures.
(A5 size paper is treated as a special size. When shipping, the size is set to A3.)

1. Fit the partition plates in the tray according to the paper size (horizontal and vertical).

Be sure to fit with the paper scale position.
Partition plate Ⓐ can be slid. Hold the fixing grip and slide it to the proper paper size position.
Partition plate Ⓑ is of insert-type. Remove it and insert to the suitable paper size position.

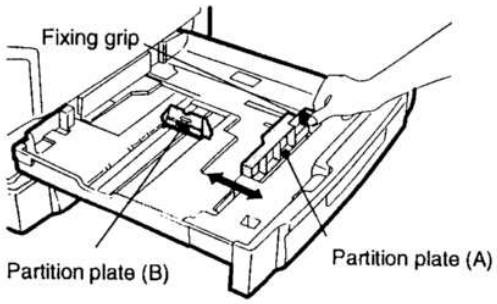

2. Remove the tray.

Pull out the tray completely toward you and tilt upward and remove.

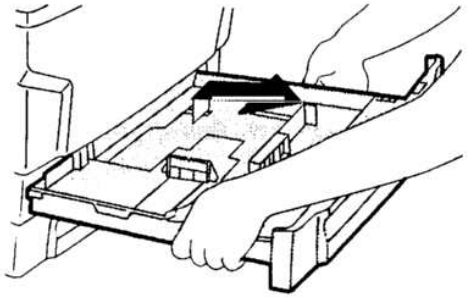

3. Remove the size block upward, and fit to the suitable paper size.

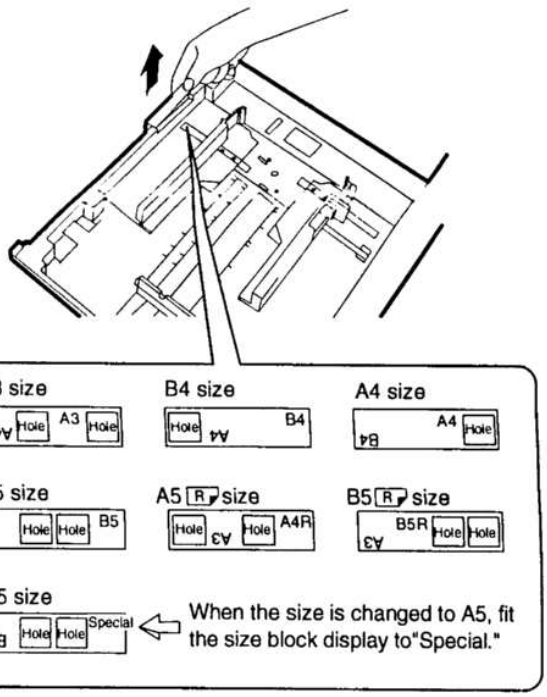

Caution

- When the tray paper size is changed, be sure to change the size block.
  If not, the paper size display lamp keeps indicating the previous size.

4. Attach the tray.

Reverse the removing procedure of the tray. (Tilt upward and insert the tray then push it into the machine.

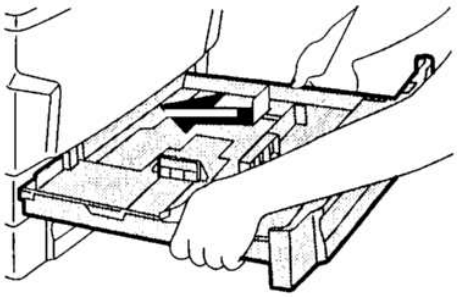

5. Set paper, and change the paper size display.

Remove the paper size display plate, and insert it so that the selected paper size is visible from the paper size display slit.
When A5 size is selected, set to "Special."

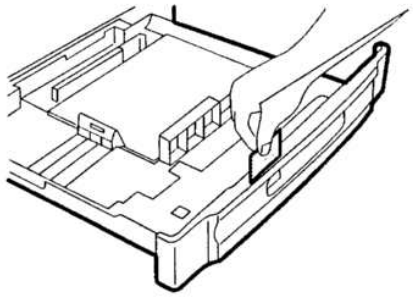

[5] DESCRIPTIONS OF EACH SECTION

Descriptions are made on the following sections:

① Paper feed section
② Developing section
③ Optical section
④ Process section
⑤ Separation/transport section
⑥ Fusing/paper exit section
⑦ High voltage section
⑧ ADU section (SF-2120 only)

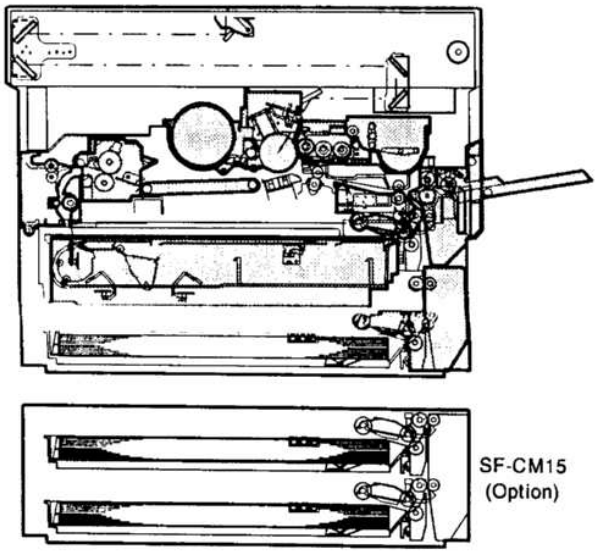

1. Paper feed section

1) General descriptions

To realize the compact design, the front loading system and the foldable multi paper feed unit are employed.
Use of the optional two-stage paper feed unit for the SF-CM15 (one-stage paper feed unit for the SF-CM16) and the spare tray allows a variety of system configurations.
(System configuration) Example with the SF-2020:

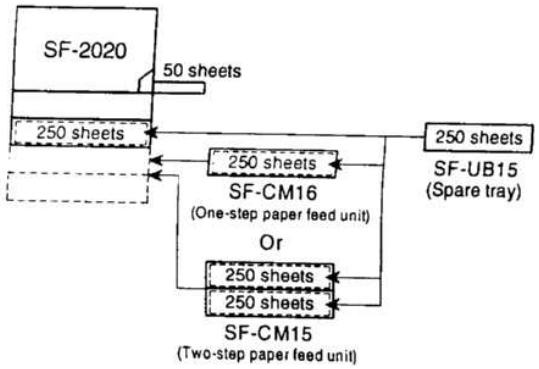

In the case of SF-2020:
The SF-2020 is provided with the three-way paper feed system. The tray is of the universal type and has capacity of 250 sheets. The front loading system allows the tray to be loaded from the lower side of the front cabinet.
(The SF-2120 has the two-way paper feed system with one 250-sheet tray and manual feed.)
The tray has the capacity of 500 sheets (250 sheets for the SF-2120). In addition to that, the optional paper feed unit allows loading of 500 sheets more for the SF-CM15 (250 sheets for the SF-CM16).

2) Basic operations

(Tray paper feed operation)
When the CPFC (Cassette paper feed clutch) turn on, the paper feed roller shaft, the paper feed roller, and the take-up roller rotate in the direction of A. At the same time, the limiter spring moves down the roller release arm. As a result, the take-up roller falls by its own weight onto the paper surface, starting paper feed.

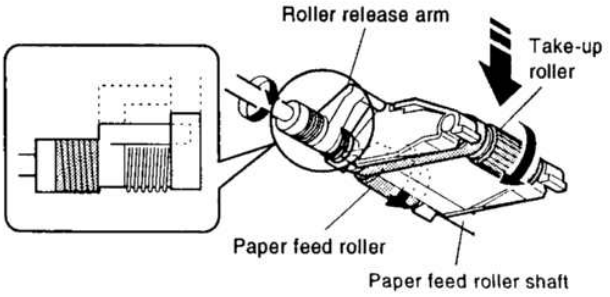

When the CPFC turns off, rotation stops and the take-up roller is pushed up to the original position by the roller release arm spring.

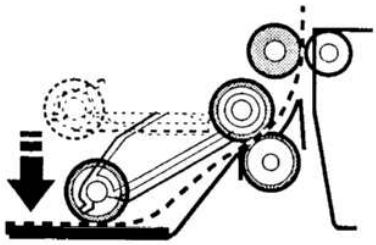

(Multi manual paper feed operation)
When the MPFS (multi paper feed solenoid) turns on, the spring clutch rotates to press the take-up roller on the paper, feeding the paper.

2. Developing section

1) General descriptions

(1) Two-component developer

The developer is composed of toner and carrier.
Carrier serves as a medium for attaching toner onto the electrostatic image on the photoconductor drum.
By stirring toner and carrier, they are rubbed to be charged positive (+) and negative (–) respectively.
Since developer will deteriorate to degrade copy quality, it should be replaced regularly.

(2) Two-component magnetic brush development

The rotatable non-magnetic sleeve is provided over the magnet roller and is rotated.
Carrier forms a magnetic brush on the sleeve surface by magnetic force to attach toner onto the electrostatic image on the photoconductor drum.

(3) Developing bias

When the photoconductor is charged and exposed to light (exposure), the surface potential (voltage) of the photoconductor will not be lost completely. (The residual potential remains.)
Toner is attracted to the photoconductor by this residual potential, dirtying the photoconductor. As a result, a dirty copy of white background is generated.
To prevent against this, a voltage of the same polarity and higher than the residual potential is applied to the MG roller, preventing toner from being attached to the photoconductor surface.

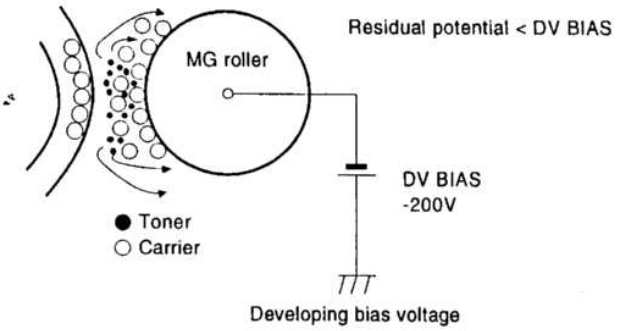

(4) DV harness

The toner density sensor, the developing bias, and the developing unit identification resistance harness.
(For details, refer to [6] DISASSEMBLY AND ASSEMBLY.)

(Viewed from the rear of develoing unit)

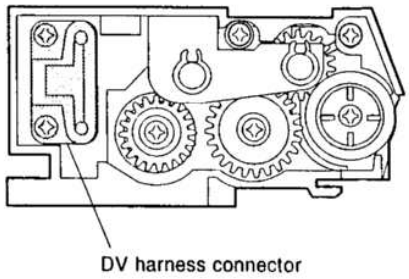

(Details of DV harness connector)

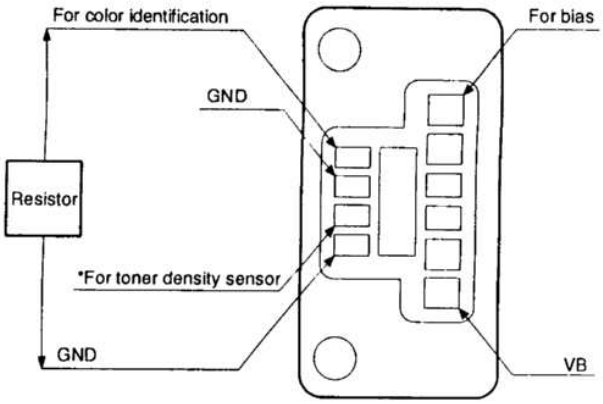

*Resistance value is identified by color

2) Basic composition

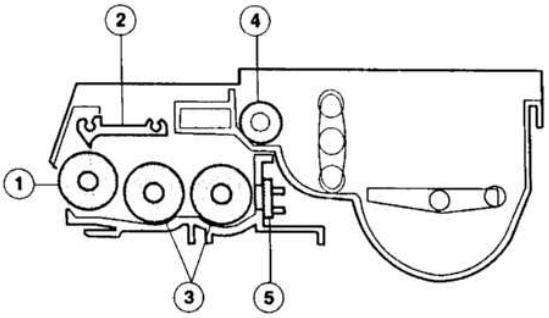

No.	Name	
①	Magnet roller	Forms a magnetic brush of carrier by magnetic force.
②	Developing doctor blade	Limits the height of the magnetic brush.
③	Developing MIX roller	Stirs carrier in the developing unit and distributes toner evenly.
④	Toner transport roller	Transport toner sent from the toner hopper unit to the stirring section.
⑤	Toner density sensor	Senses toner density in developer.

3) Basic operations

(Cassette paper feed)

When the CPFC (cassette paper feed clutch) is turned on, the paper feed roller shaft, the paper feed roller, and the take-up roller rotates in the direction of A, and the roller release arm is moved downward by the limiter spring. As a result, the take-up roller falls by its weight to reach the paper surface, feeding the paper. When the CPFC is turned off, the take-up roller is pushed up to the position by the roller release arm spring.

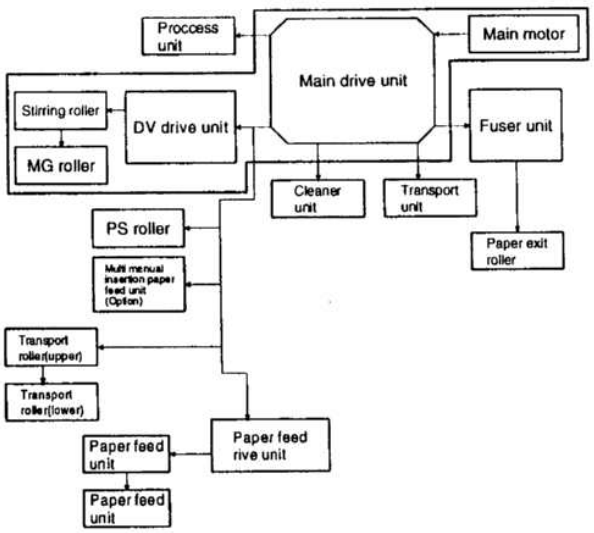

(3) Optical section

1. General description

- The optical section of this model is composed of the fixed focus lens and six mirrors. Since the fixed focus lens is used, No. 4/5 mirror base is shifted according to the shift of the lens to change the distance between the original and the drum (OID, Original Image Distance) in reduction or enlargement copy.
  The lens and No. 4/5 mirror unit are shifted by driving the stepping motor with the signals from the main control PWB, allowing zooming of 151 steps in 1% increment in the range of 0.50 to 2.00.
- Exposure is adjusted by changing the copy lamp voltage. The AE sensor is provided in the zoom base to sense the density of the original.
  The copy lamp light is reflected by the original to the AE sensor, which senses the density of the original and adjust the copy lamp light quantity according to the density.
- The exposure system is the slit exposure system by moving light source.

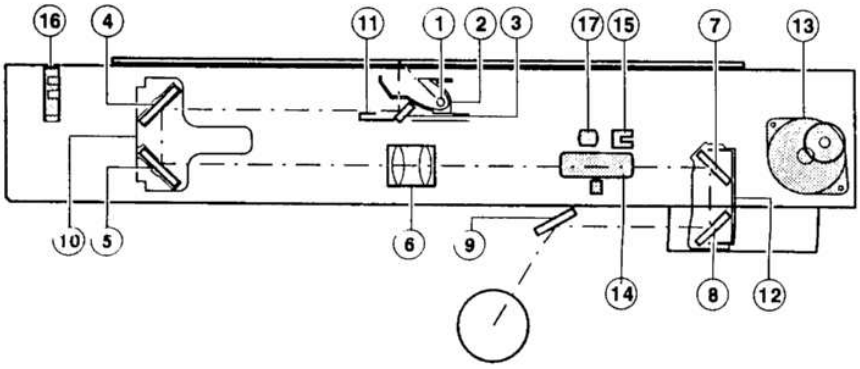

①	Copy lamp	②	Reflector	③	No. 1 mirror
④	No. 2 mirror	⑤	No. 3 mirror	⑥	Lens
⑦	No. 4 mirror	⑧	No. 5 mirror	⑨	No. 6 mirror
⑩	No. 2/3 mirror base unit	⑪	Copy lamp unit	⑫	No. 4/5 mirror base unit
⑬	Mirror motor	⑭	Lens/No. 4/5 mirror base drive motor	⑮	Lens home position sensor
⑯	Mirror home position sensor	⑰	Automatic exposure (AE) sensor/ Optical system dirt sensor		

(1) Original table

The original table is fixed. The original is set in the left center position.

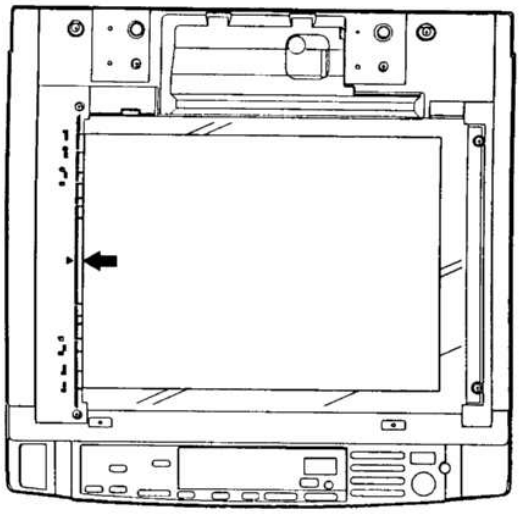

(2) Copy lamp

100V series: 85V, 275W
200V series: 170V, 310W

(3) Mirror

This model uses six mirrors.
No. 1 mirror is attached to the copy lamp unit, No. 2/3 mirrors are attached to No. 2/3 mirror base, No. 4/5 mirrors are attached to No. 4/5 mirror base.
The copy lamp unit and the No. 2/3 mirror base unit are scanned in copying. The No. 4/5 mirror base is shifted in zoom copying to change the distance between ten original and the drum.

(4) Lens (fixed focus lens)

- Construction (1 group 3 lenses)
- Brightness (F8.5)
- Focus: (195mm ±1%)

(5) Lens home position sensor (LHPS)

This sensor senses the lens home position. The output signal of this sensor is the basic signal to control the copy magnification ratio.

(6) Lens base

The lens is mounted to the lens base, which is shifted toward the paper feed direction in reduction copy or toward the paper exit direction in enlargement copy by the lens drive motor.

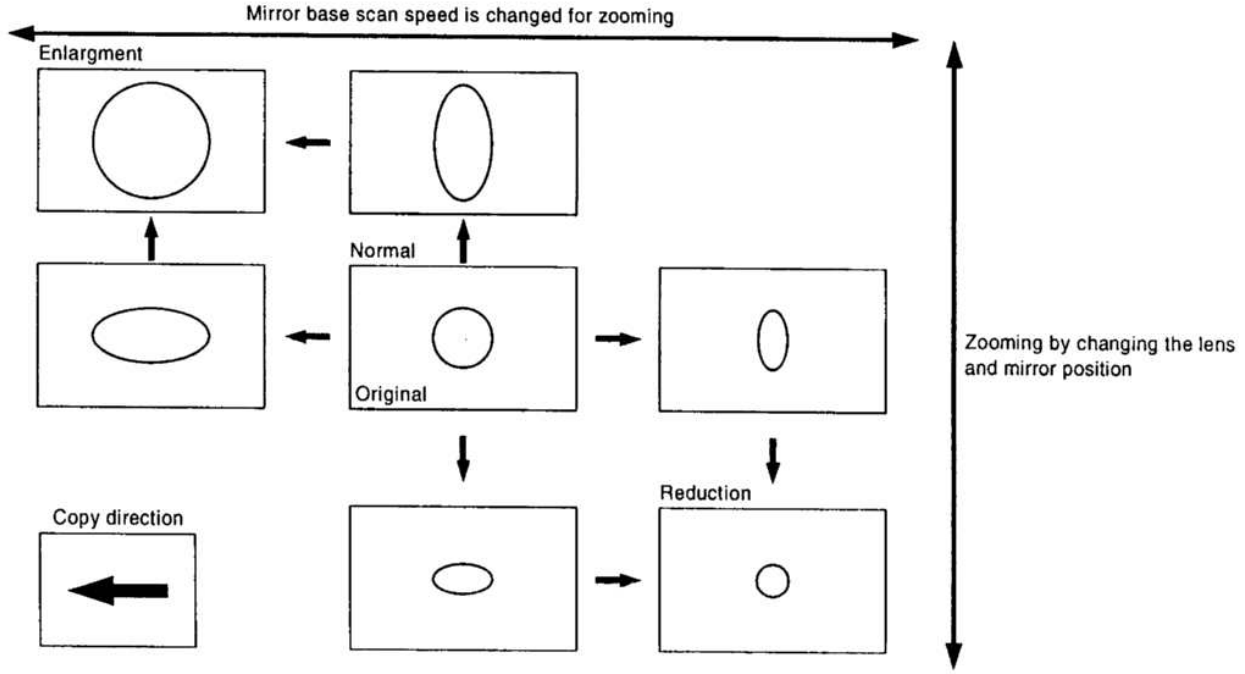

Parts identification and functions

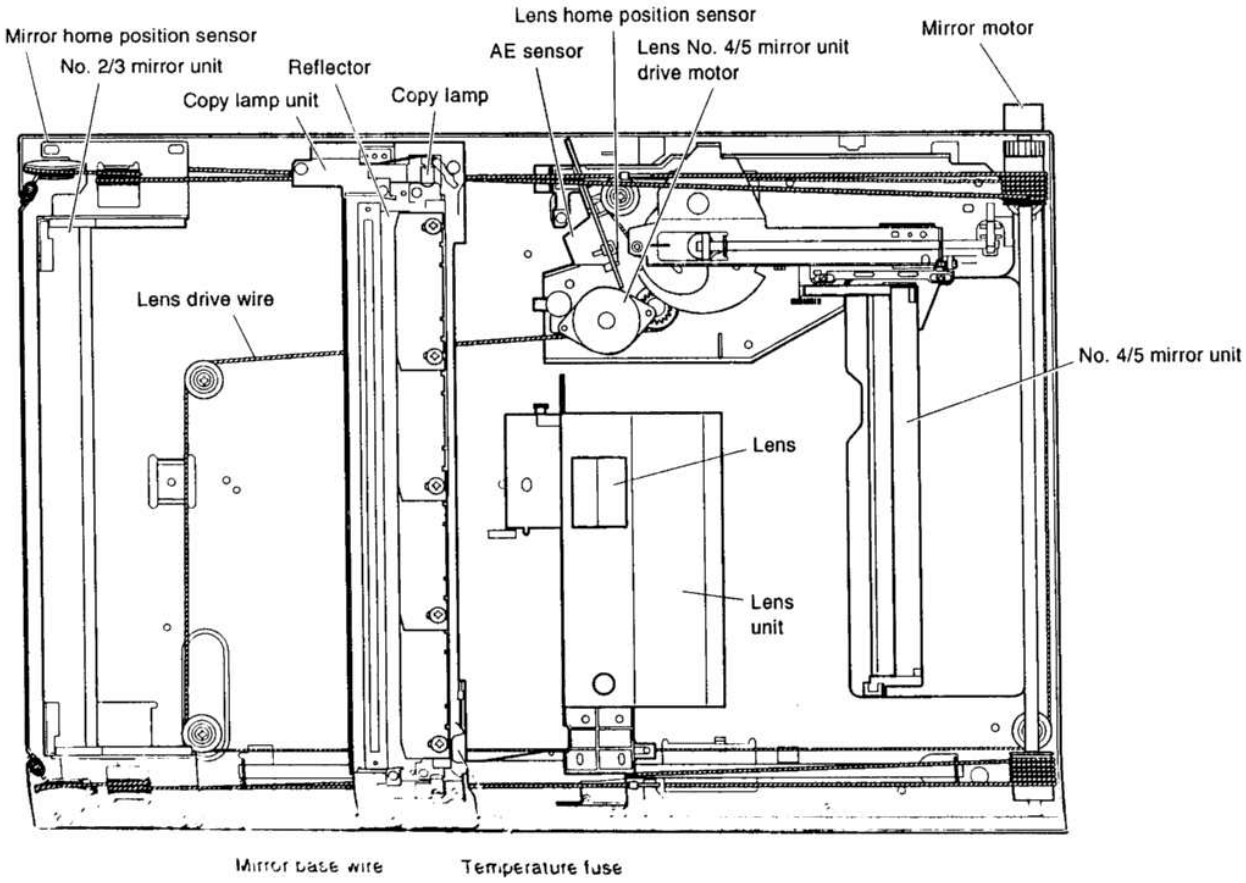

(7) Lens drive shaft

This shaft controls the optical axis of the lens in zoom copy. The lens follows along the slide base shaft.

(8) Lens drive wire

This is to shift the lens unit and the No. 4/5 mirror base.

(9) No. 4/5 mirror unit

No. 4/5 mirrors are attached to this unit. It is shifted by the lens drive motor to change the distance between the original and the drum according to the zooming ratio.

(10) Mirror motor

This stepping motor shifts the copy lamp unit and the No. 2/3 mirror base. It is rotated at the rpm according to each zooming ratio.

(11) Mirror home position sensor (MHPS)

This sensor senses the home position of the copy lamp unit. It is of light transmission type.

(12) No. 2/3 mirror unit

No. 2/3 mirrors are attached to this unit. It is scanned by the mirror motor.

(13) Copy lamp unit

This is composed of No. 1 mirror, the temperature fuse, the copy lamp, the exposure adjustment plate, and the reflector, and scanned by the mirror motor.

(14) Temperature fuse

This is attached closely to the reflector to prevent against abnormal temperature rise in the optical system. If the temperature rises abnormally, it turns off the copy lamp power directly.
100V series (117°C)
200V series (117°C)

(15) Reflector

Light from the copy lamp is reflected by the reflector to the original.

(16) Exposure adjustment plate

Four exposure adjustment plates are attached to the copy lamp unit to adjust exposure balance in back and forth direction of the frame.

(17) Mirror base drive wire

This wire transmits the mirror motor power to the copy lamp unit and the No. 2/3 mirror base to scan the mirror base.

(18) Lens drive motor

This stepping motor drives the lens and the No. 4/5 mirror base.

(19) AE sensor

This AE sensor senses the original density by the light emitted from the copy lamp and reflected by the original, controlling the developing bias. The photometric area is about 100m width at the center and in the mirror base scanning direction.
The element is photo diodes.

(20) Original size sensing

The original size is sensed by the original interruption system.
The LED in the rear frame side emits light to the table glass surface.
The original interrupts this light, and its size is detected.

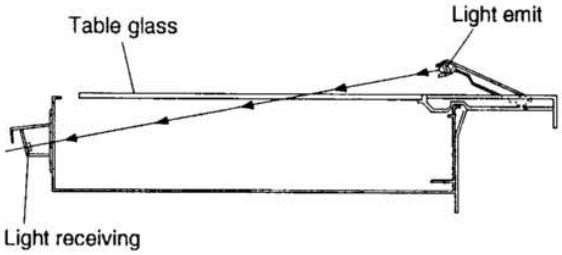

2. Basic operations

(Positions of the original, the lens, and the image in each magnification ratio)

Normal: The distance between the original set on the table glass and the lens is equal to the distance between the lens and the drum, resulting in the equal size of the original and the image.

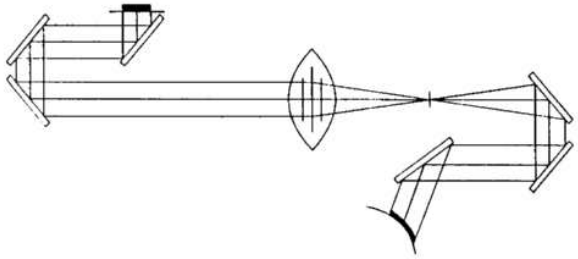

Enlargement: Compared to the normal copy, the lens is nearer to the original and the distance between the original and the lens is shorter.
The distance between the No. 4/5 mirror unit and the lens is greater, and the distance between the lens and the drum is also greater.
The distance between the original and the exposure surface of the drum is greater than that in the normal copy.

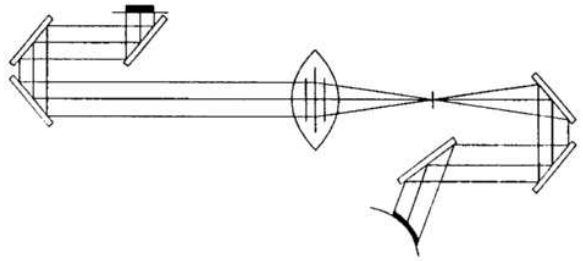

Reduction: Compared to the normal copy, the lens is nearer to the drum, and the distance between the original surface and the lens is longer.
The distance between the lens and the exposure surface of the drum is shorter.
The distance between the No. 4/5 mirror unit and the lens is greater.
The distance between the original and the exposure surface of the drum is greater than that in the normal copy.

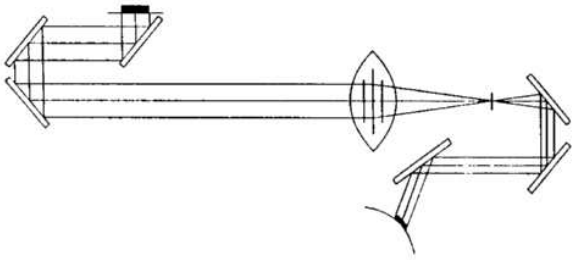

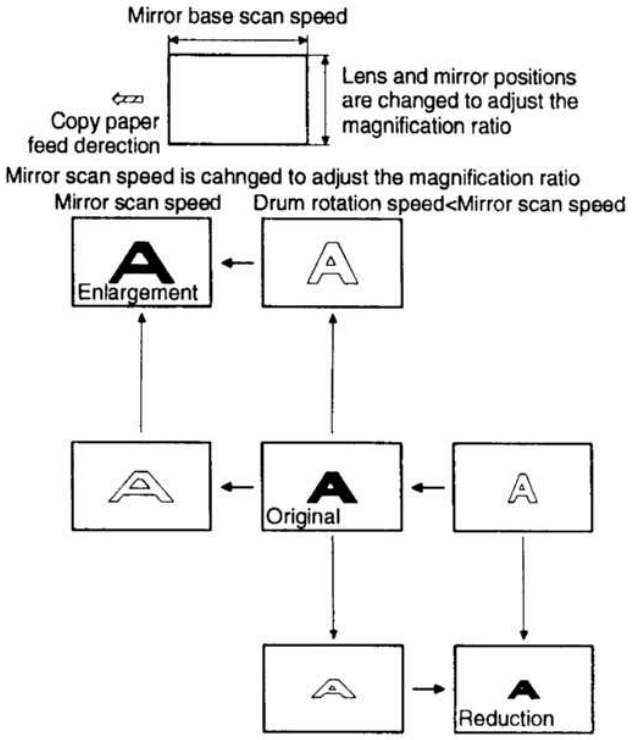

(Copy lamp control in each copy density)

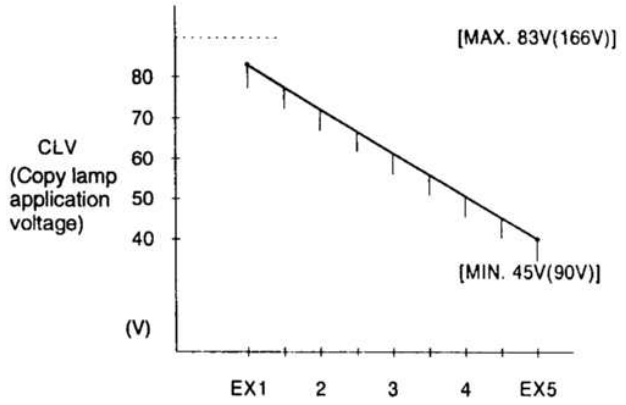

Execute Sim 46-01 to determine the copy lamp application voltage (CLV) in EX1 and EX5.
Then divide the difference between the voltages of EX1.0 and EX5.0 into nine.
The application voltage of the copy lamp in each exposure level is determined by varying the ON timer duty of the copy lamp ON control signal.

- Photo density copy mode
  Make the same control procedures as the manual density copy mode.
  The image density is controlled by lowering the grid bias voltage of the charging charger. To maintain the reproduction quality in half tone, the ON time duty of the copy lamp ON signal is made shorter than in the manual density copy mode. (The application voltage is lower.)

(Optical system dirt correction)

This model perform dirt correction by changing the copy lamp intensity according to the dirt degree in the optical system (the copy lamp unit, No. 1 mirror, No.2 mirror, No.3 mirror) to prevent against remarkable degrading of copy quality.

The reference value is the AE sensor output value which is obtained when the reference plate is exposed with the copy lamp voltage of 67.0V (134.0V) at power ON.

This value is checked with sim 44-08, 09.

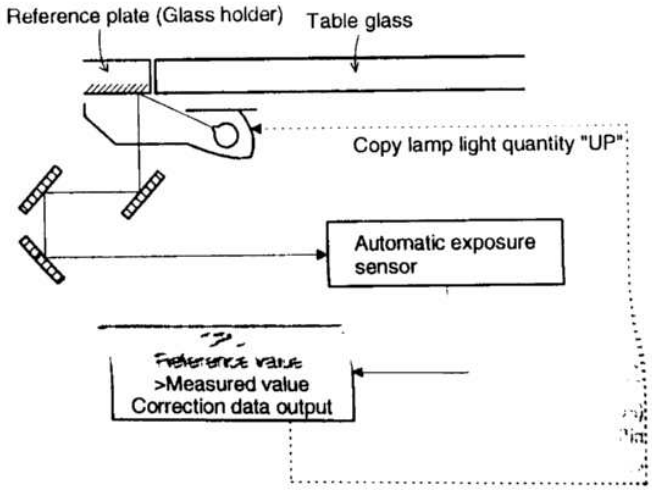

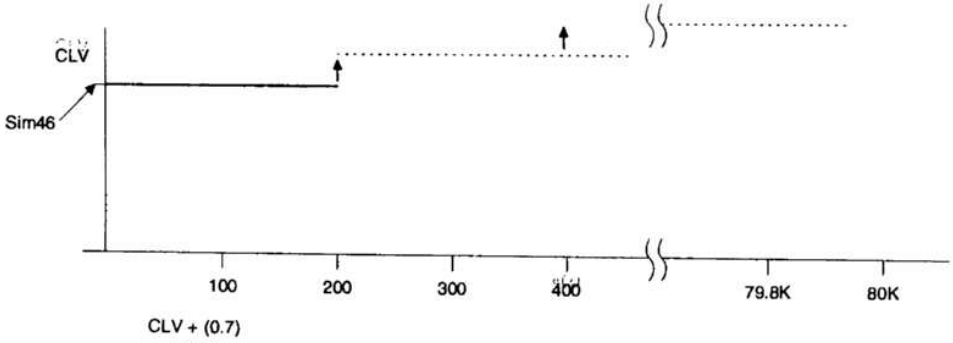

(1) Setting the reference value for optical system correction.

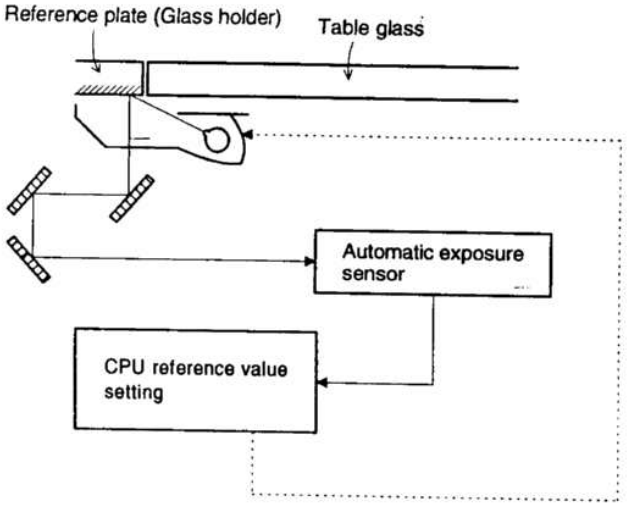

① Clean the optical system at every maintenance.

② Perform Simulation 46-1.
(The previous data are cleared.)

③ After completion of Simulation 46-1, when performing the first mirror initialization, measure light quantity of the copy lamp.
Obtain the average value from the four measurement values and use the average value as the reference value for correction.

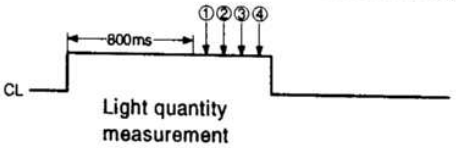

Obtain the average value of four AE sensor values, and store it.

(2) Dirt correction

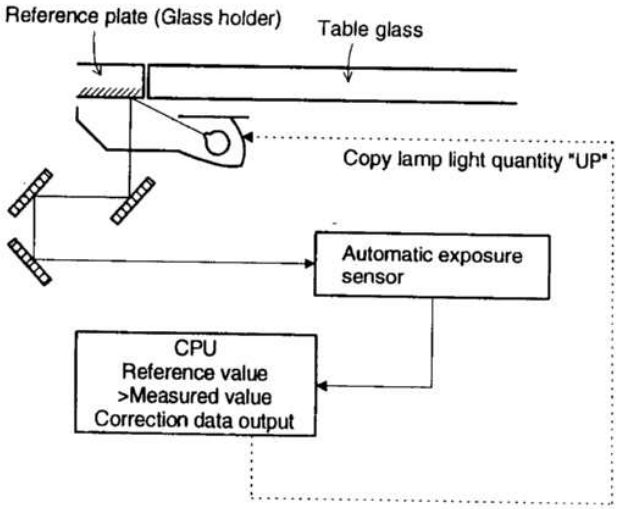

① Measure light quantity when performing mirror initialization.

② Store the correction data into memory.

③ Reset the register inside the CPU.

(4) Copy process

This model basic process and structure

- The Scorotron method is used to evenly charge the photoconductor surface to the given potential in the charge process. The corona wire regularly used is now replaced with a new corona charge mechanism that employs the 0.1mm thick stainless steel saw teeth plate, in order to suppress ozone generated when the oxide molecule in air is ionized.
- Considering the service efficiency, the process separation mechanism is adopted.
- To prevent high voltage leakage by the loose corona charge unit, a one-touch stopper mechanism is adopted.

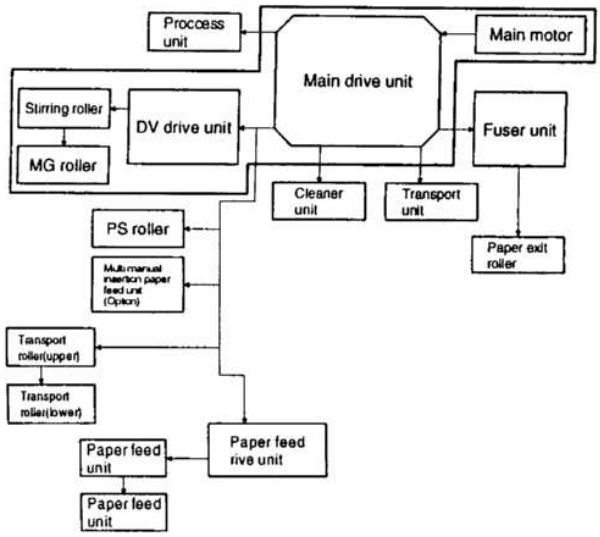

(1) Photoconductor

- This model uses OPC (organic photoconductor) as photoconductive material. (ϕ50 mm)

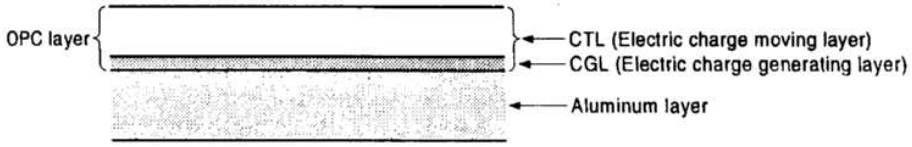

(2) Process diagram

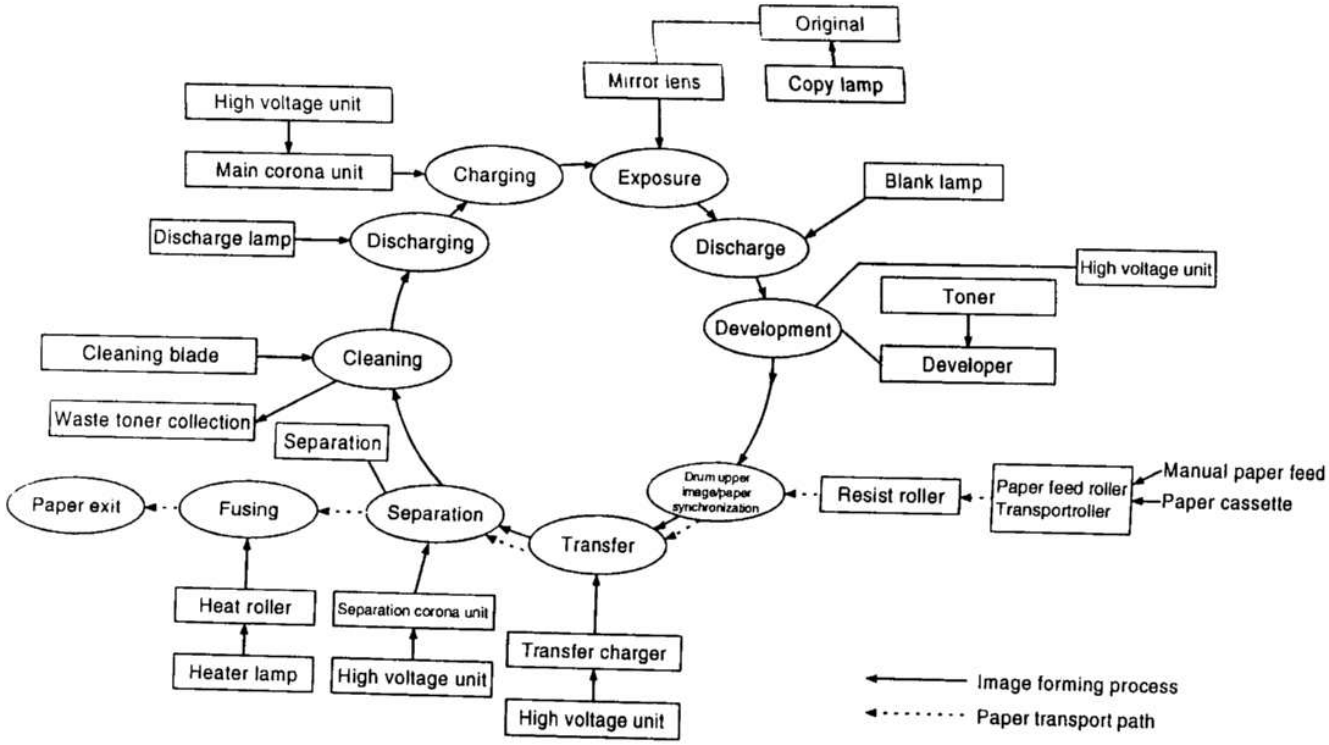

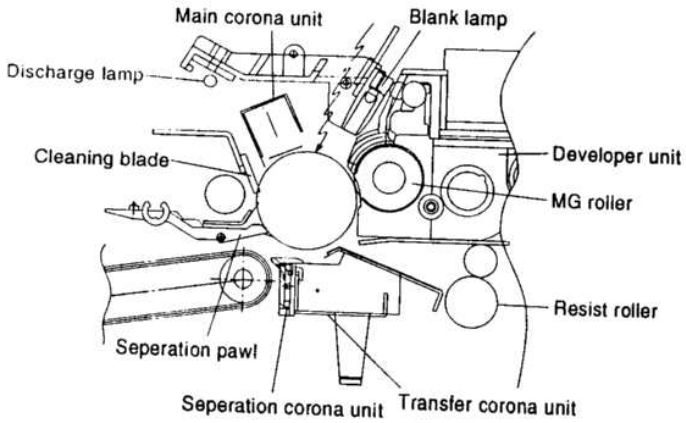

(3) Details of image forming process

Step 1 (Main Charging)

By negative discharging of the main charger, uniform negative charges are applied to the OPC drum surface.
The OPC drum surface potential is controlled by the screen grid voltage to maintain the grid voltage at a constant level.

- When the drum surface potential is lower than the grid voltage, electric charges generated by discharging of the charger go through the screen grid to charge the drum surface potential until it becomes equal to the grid voltage.
- When the drum surface potential virtually reaches the grid potential level, electric charges generated by discharging of the charger flows through the electrode of the screen grid to the high voltage unit grid voltage output circuit, thus always maintaining the drum surface potential at a level virtually equal to the grid voltage.
- The main corona unit employs the scorotron system to charge the photoconductor surface to a certain level uniformly.
  In addition, the conventional corona wire is replaced with the corona charging mechanism by saw-teeth plate (stainless steel plate of 0.1 mm thick). In corona discharge, oxygen molecules in the air are ionized to generate ozone (O_3). The mechanism restrict the generation of ozone.

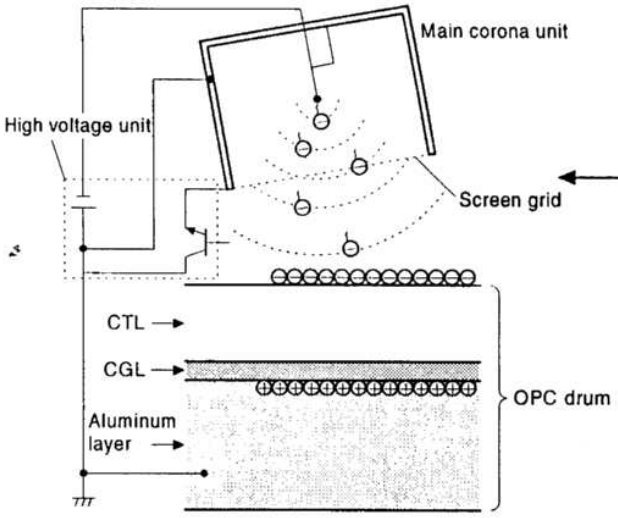

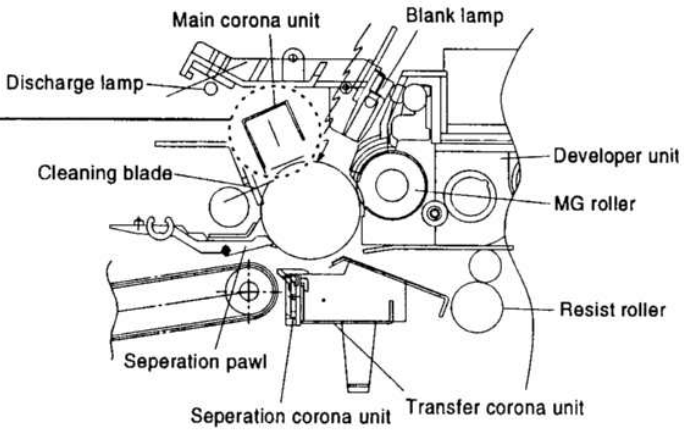

Step 2 (Exposure)

Light from the copy lamp is radiated on the document, and the optical image of the document is reflected by the mirrors and projected through the lens to the OPC drum.
The lighter portion of the document reflects more light (high intensity) to the OPC drum, and the darker portion of the document reflect less light (low intensity) to the OPC drum. Positive or negative charges are generated in the CGL of the OPC drum where lights are radiated.
Negative charges generated in the CGL move towards the positive charges in the aluminum layer generated in step 3. While the positive charges in the CGL move towards the negative charges on the CPU drum surface generated in step 3. Therefore, positive charges and negative charges are neutralized in the aluminum layer and the OPC drum surface at the light radiating position, decreasing the OPC drum surface potential. The CGL electric charge generating amount increases in proportion to the document density, that is, reflected light intensity (the OPC drum surface intensity). Therefore, electric charges are generated less in the CGL layer corresponding to the lighter density of document (higher intensity of the OPC drum surface), and a greater quantity of the negative charges on the OPC drum surface is neutralized, decreasing the OPC drum surface potential more.

On the contrary, electric charges are generated more in the CGL layer corresponding to the darker density of document (lower intensity of the OPC drum surface), and less quantity of the negative charges on the CPU drum surface is neutralized, decreasing the OPC drum surface less. Therefore, the OPC drum surface potential corresponding to the lighter portion of the document is lower, and that corresponding to the darker portion of the document is higher. Latent static-electricity images are formed in the above manner.

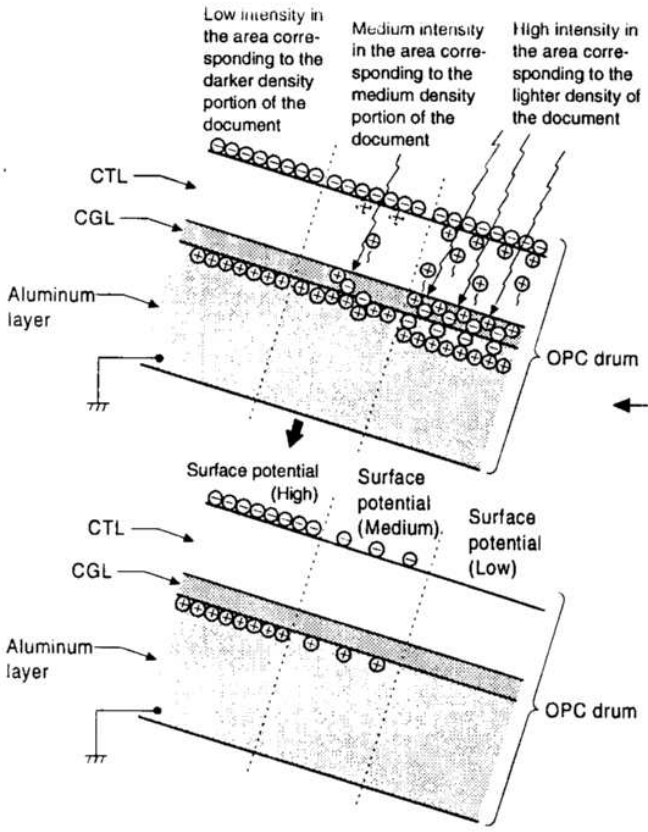

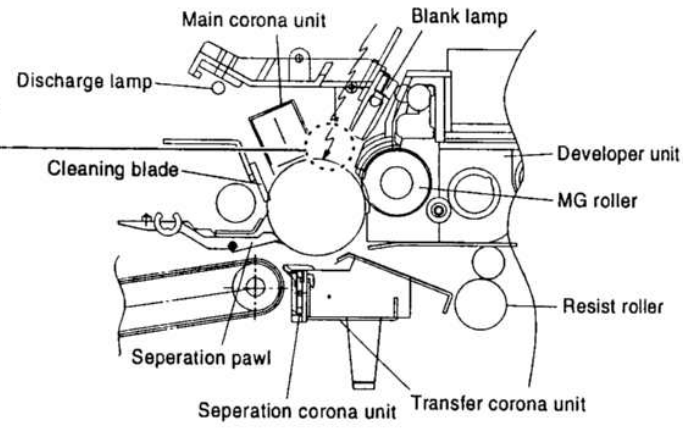

Step 3 (Development)

Toner is attached to the latent static-electricity images on the drum surface to change them to visible images. The two-component magnetic brush development system charges toner positively by friction with carriers, and toner is attached to negative charges on the drum surface. The potential in the darker document projecting area (low intensity) is high (much negative charges) and attracts more toner. The potential in the lighter document projecting portion (high intensity) is low (less negative charges), and attracts less toner.

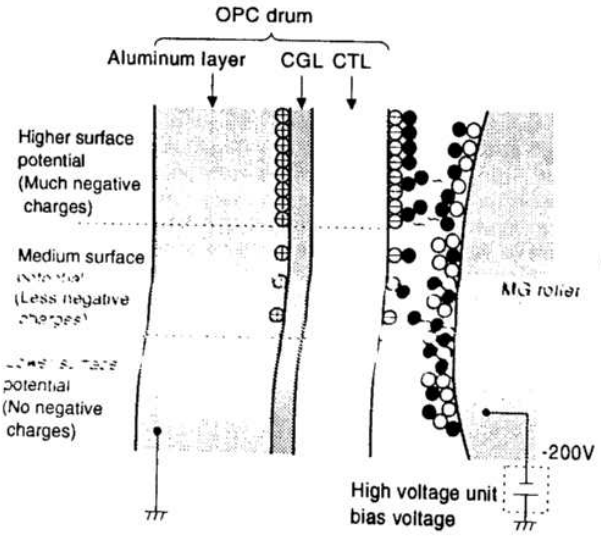

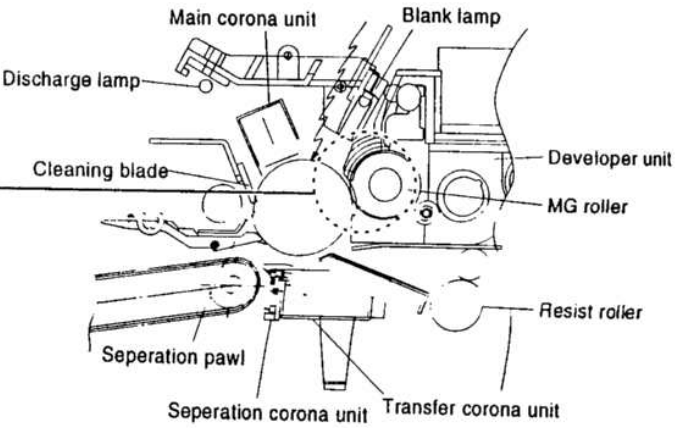

At that time, a bias of –200V is applied to the MG roller (magnet roller), which is provided for preventing toner from being attracted by the residual voltage (about –80V to –100V) in the lighter portion after exposure.

Step 4 (Transfer)

The transfer paper is charged higher than the OPC drum surface potential by strong negative discharge of the transfer charger, making the binding force between the transfer paper and toner stronger than that between the drum and toner, attracting toner to the transfer paper.

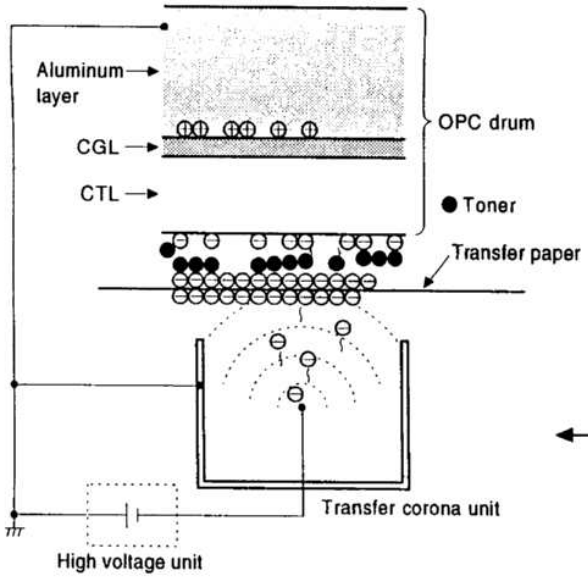

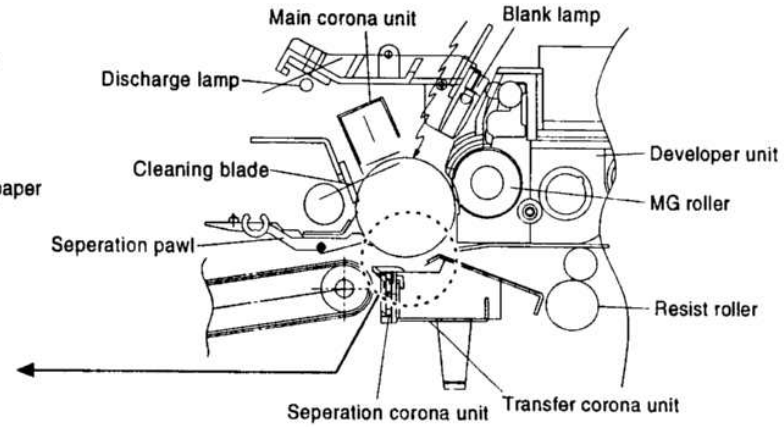

Step 5 (Separation)

After transfer, the copy paper and the drum are negatively charged. Since, however, the negative potential of the copy paper is higher than that of the drum, a attraction force is applied between the drum and the copy paper. To avoid this, AC corona is applied to the copy paper by the separation charger to decrease the copy paper potential to the same level as the drum surface potential. The attraction between the copy paper and the drum is weakened by this, allowing separation of the copy paper by its own extending force. If the copy paper is not separated by the separation charger, it is separated by the separation pawl mechanically.

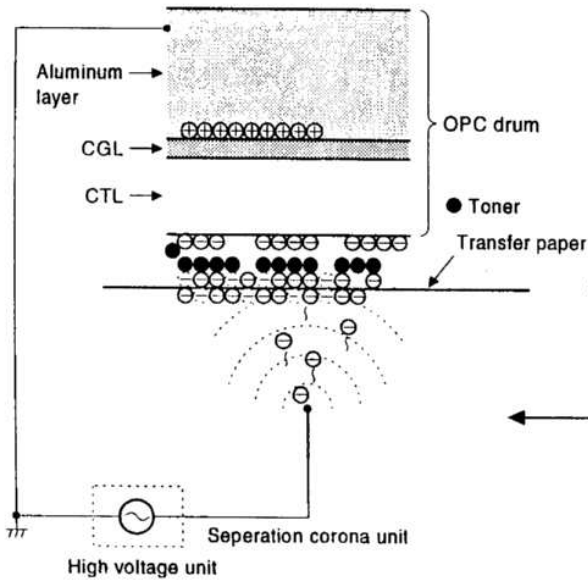

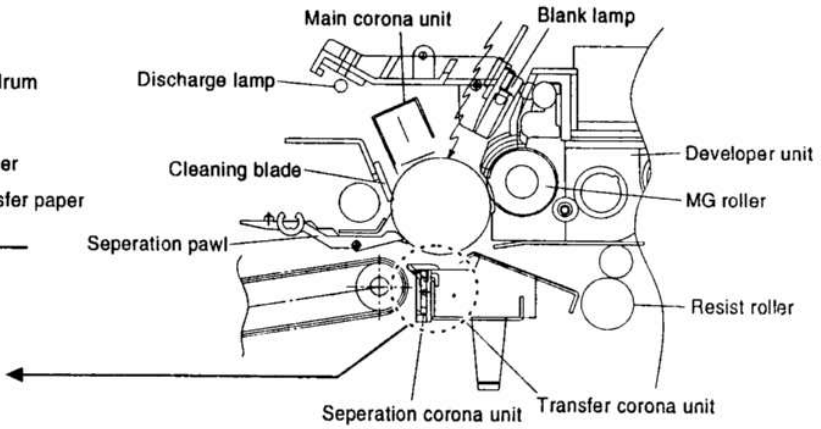

Step 6 (Cleaning)

Residual toner on the drum is removed by the cleaning blade. The removed toner is sent to the waste toner container by the waste toner transport screw.

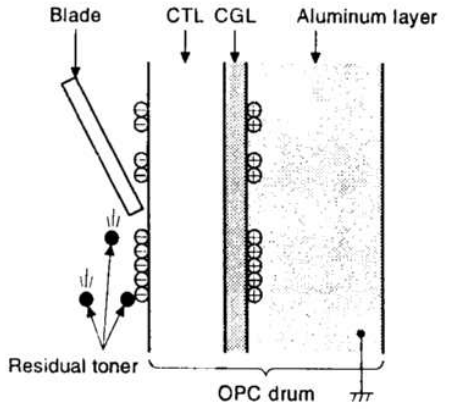

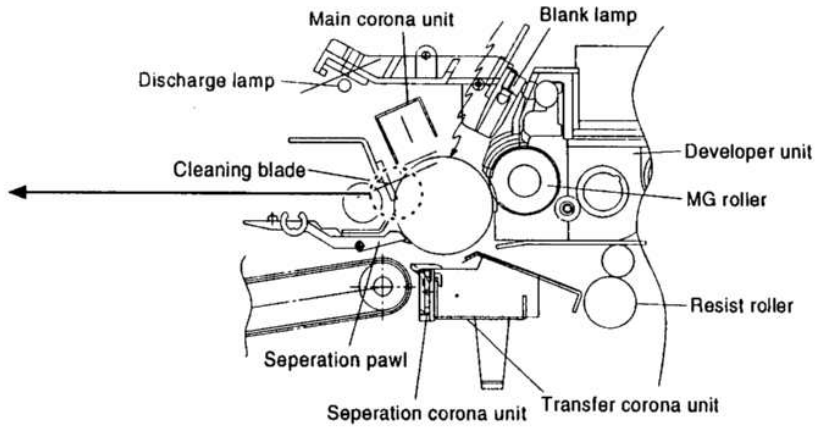

Step 7 (Discharging)

When the OPC drum is exposed to the discharge lamp light, positive and negative charges are generated in the OPC drum CGL. The negative charges generated in the CGL move towards the residual positive charges in the aluminum layer, while the positive charges in the CGL move towards the residual negative charges on the OPC drum surface. Therefore, the positive and the negative charges are neutralized in the aluminum layer and on the OPC drum surface, removing the residual charges on the OPC drum surface. As a result, the OPC drum surface potential becomes 20V ~ 30V.

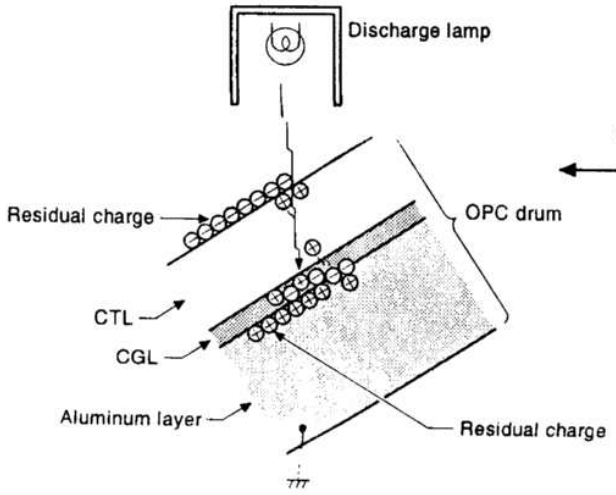

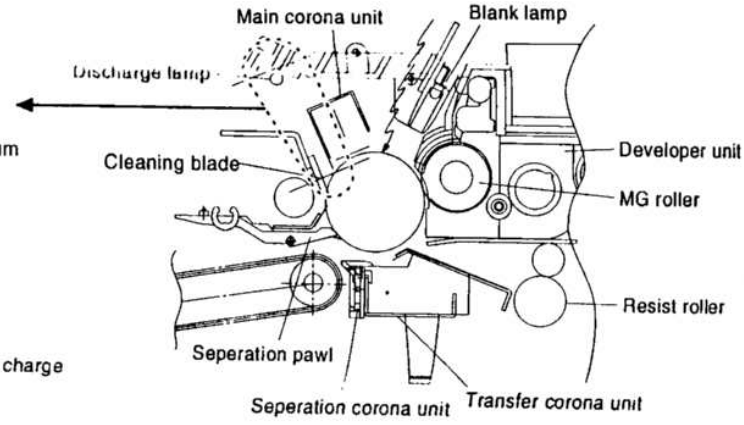

(4) Transition of photoconductor surface potential

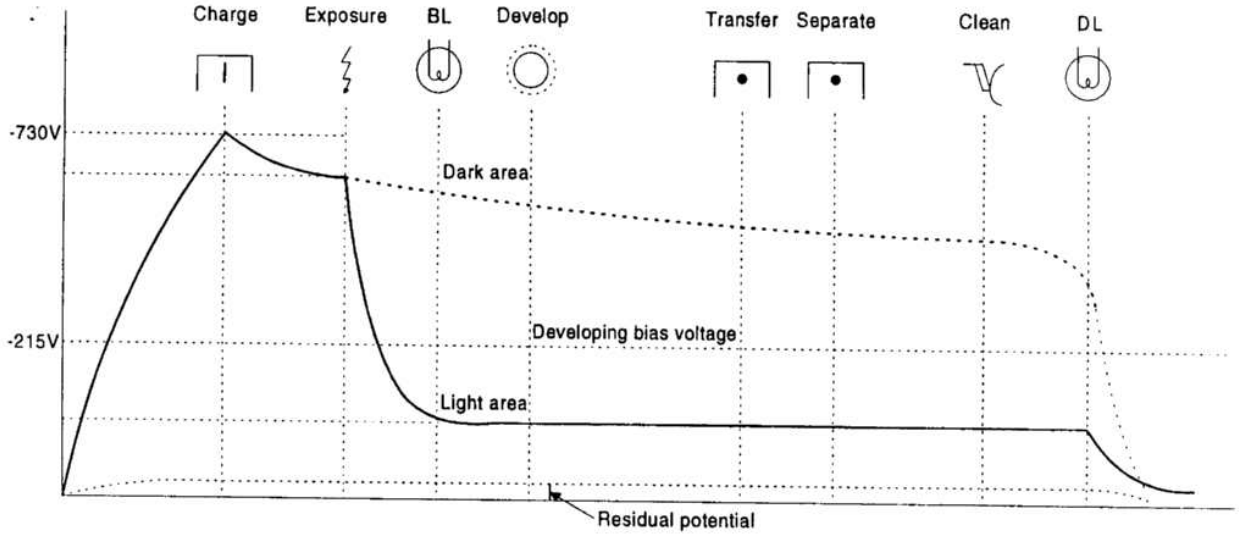

(5) Photoconductor drum sensitivity correction

In this model, fall in sensitivity due to long use of the photoconductor drum is corrected by the copy lamp light intensity to prevent against considerable change in copy quality.
The photoconductor drum sensitivity fall correction is performed as follows:

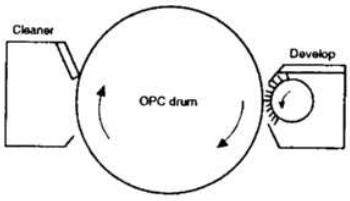

Change the tickness of the carrier transport layer (CTL).
By the developper.
By the cleaner blade.

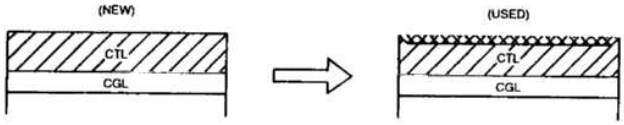

CLV + 2 counts ⟹ CL(V) + (0.33V x 2)
(Sim46)

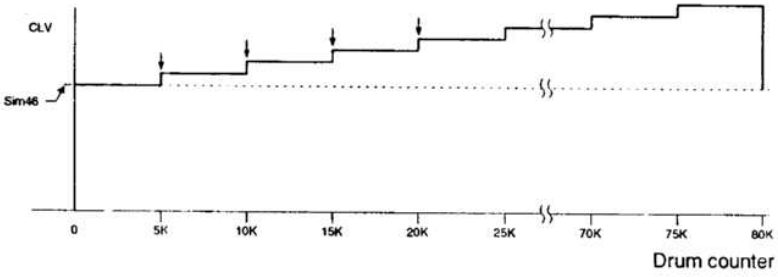

(6) Process control function

[Summary]

The process control function detects the density of the standard toner image formed on the photoconductor, the density of the initial image and controls the charging grid voltage so that the same level as the initial image density is provided.
That is, the process conditions are established and the high voltage output and exposure level are controlled to stabilize the toner density.
In this model, the density sensing level is automatically set.

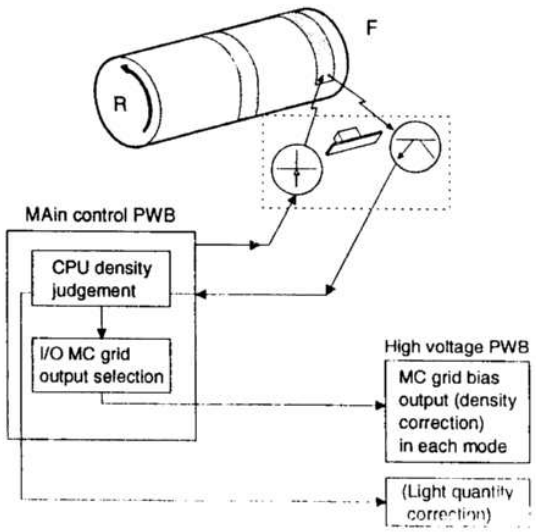

Process control

① Toner patch images are formed on the photoconductor surface under the three process conditions (MC grid bias voltage).
At the first process control, a toner parch image is formed with the reference grid voltage –410V as the center and ±30V. At the second or later process control, the MC grid bias voltage determined at the former process control is used as the center, and a toner patch is formed under the process condition of ±32V to the center value.

② Measure the three toner patch images formed in the above and the drum surface with the process density sensor to obtain the relations.

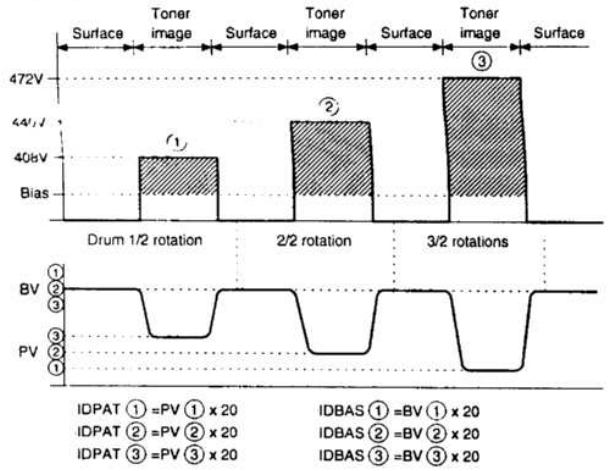

BVS: Sensor detection level on the photoconductor drum surface
PVS: Sensor detection level with the toner patch image

Obtain the above two levels from the calculation formula and record them as the reference values.

A. STD BA: Reference level when detecting the drum surface
→ STD BA = BTS x 20

B. STD PA: Reference level when detecting the toner patch image
→ STD PA = PTS x 20
In the density correction, the process conditions are determined so that the ratio of the reference levels $\left(\frac{\text{STD PA}}{\text{STD BA}}\right)$ set in the above may be maintained at constant.

③ Obtain the MC grid bias voltage from the reference level ratio.

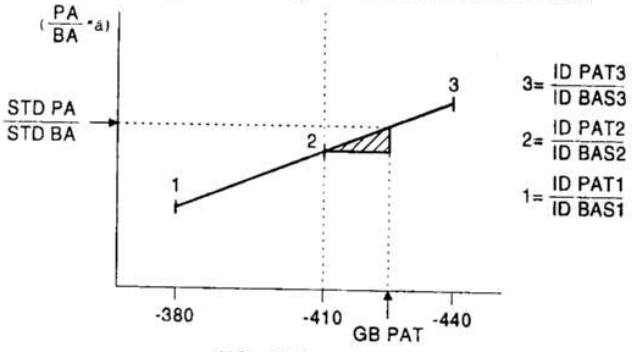

In the SF-2214/2118, the absolute value of the output of the density sensor is not directly used for control calculation, but the ratio of the sensor output value (BA) on the drum surface and the sensor output (PA) of the toner patch image is used for control calculation.

* The grid bias value is obtained so that the ratio of the drum surface level and the sensor level when forming patch level and the sensor level when forming patch images is 200:40.

Though, therefore the light quantity of the reflection type sensor is varied by dirt or deterioration, the ratio (PA/PB) will not be affected by change in light quantity to provide stable control.

The grid voltage value where the same density level as the reference level is obtained is displayed by Sim. 44-9 "a". This value is displayed with 50 as the center in the range of 0 ~ 99 in integer numbers. The correction for 50 is 0V (–410V), and the correction for 58 is +30V (–442V).

④ When the MC grid bias voltage is corrected by the process control, the corresponding light quantity is calculated to control the copy lamp.
To correct the MC grid voltage, the delta value of the sensitivity level when the initially recorded reference grid voltage is –440V and the MC grid voltage where the same density is obtained in process control is fed back to the MC grid voltage of each mode.

Process control timing

In the SF-2035, the process control is performed in the following timing:

① When the main switch is turned on and the first copy is made:

② At every specified copy quantity (First copy after 1,000 copies)
Judged by the total counter.
The correction is reset by Simulation 25-2.

③ After the specified time after turning on the main switch. (First copy after 44, 60, 120, 180 min)

Drum marking

In this model, a toner patch image is formed in the same position on the photoconductor drum surface to improve the accuracy of the process control.
A marking is provided on the drum and the marking is sensed before forming a toner patch image. If the marking level is not sensed, the developing lamp blinks and the trouble code (F2-32) is displayed.

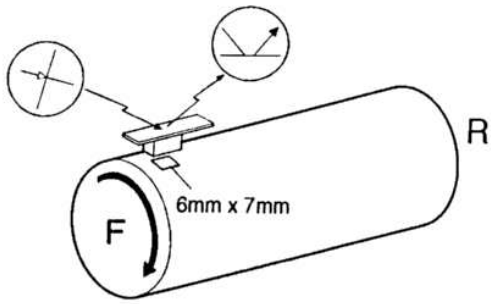

Basic structure

Photoconductor drum:	The 65mmϕ ground plate of the OPC drum is on the rear frame side of the drum unit so that it contacts the drum locator pin.
Blank lamp:	The non-image area is exposed by the light from the blank lamp to erase the positive potential outside the drum CTL. Use of the latchet simplifies the lamp position adjustment.
Discharge lamp:	Eight bulbs cast light over the drum surface to erase the positive potential in CTL. Ventilation hole provided in the drum frame releases heat from bulbs.
Cleaning mechanism:	The cleaning blade removes the toner remaining on the drum surface. The blade always rests on the drum surface.
Main corona:	The saw teeth corona charge method is used. Use of the screen grid maintains the even charge potential over the photoconductor surface.
Enforced separation mechanism:	Using two pieces of separation pawl, the copy paper stuck over the drum surface is forced to separate from the drum surface.

Waste toner transport mechanism:

The waste toner is passed through waste toner transport screw ① and waste toner pipe ② to waste toner bottle ③.
Waste toner bottle ③ is rotated by the main drive gear via gear ④ to transport toner evenly.
When the waste toner bottle is full of waste toner, the rotation torque of gear ④ is increased to escape gear ⑤ in the arrow direction Ⓐ, and switch ⑥ is turned on at the same time to light the waste toner replacement lamp.

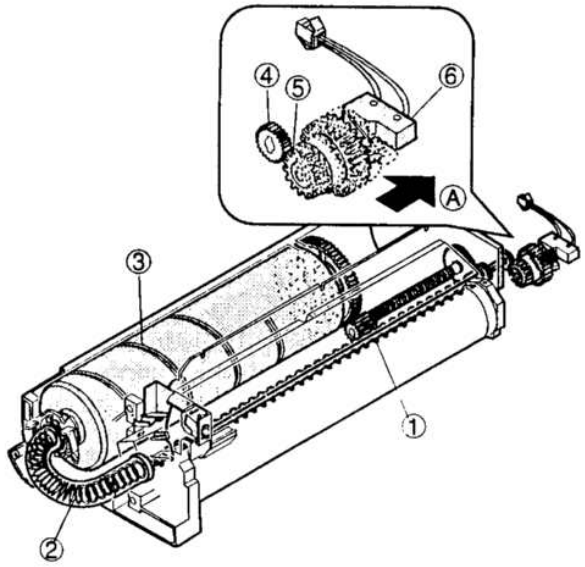

(5) TRANSPORT/FUSING SECTION

1) General

The SF-2116/2118 allows transport of paper of max. A3 (11" x 17") and min. A5 (8 1/2" x 5 1/2").
After images are transferred on the paper, the paper is separated from the drum by the separation pawl and transported to the fuser section by rotations of the resist roller and the transport belt.
The drum separation pawl is provided under the process unit. It is made by turning on (separating) the solenoid inside the main drive unit.

2) Basic composition and functions

① Transport belts (2pcs)
The transport belts are provided with notches to hold paper rear ends.

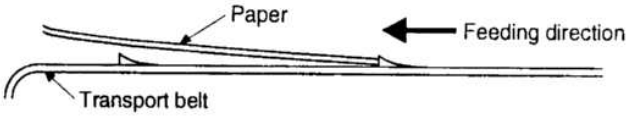

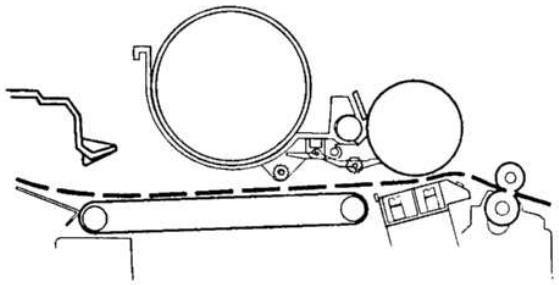

(6) Fusing paper exit section

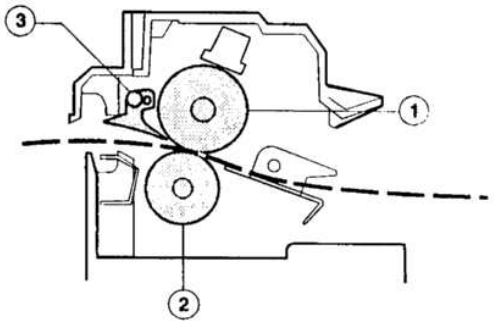

① Upper heat roller
The upper heat roller is teflon-coated.

② Lower heat roller
A silicone rubber roller is used.

③ Separation pawl
The upper heat roller is equipped with four pawls which are teflon coated to reduce friction.
the lower heat roller is equipped with two pawls.

④ Upper/lower separation function
The upper and lower heat roller sections are separated by rotating operations with the transport roller as a fulcrum, providing better serviceability.

⑤ Drive system division

The fuser unit is rotated by the main drive unit. In case of manual rotation of the fuser unit to remove paper jam, however, excessive loads may be applied to the gears. To prevent against this, the pressure of the upper/lower heat rollers is reduced when the machine clamshells are opened. In addition, the fusing gear is so constructed that the drive is not transferred to the drive system.

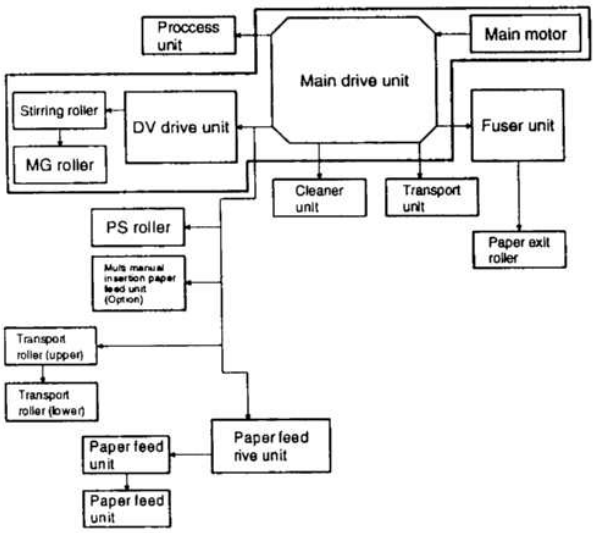

(Heater control)

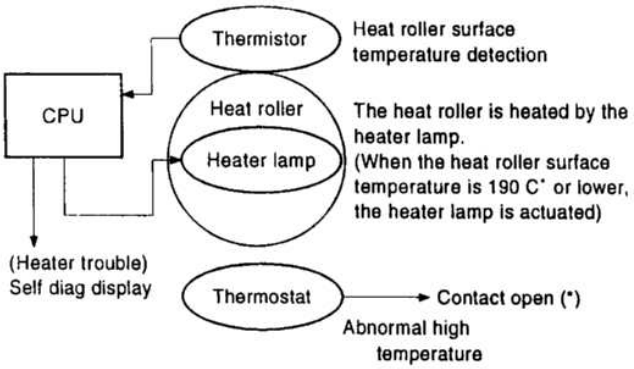

- Abnormally high temperature (H3) 240°C or upper
- Abnormally low temperature (H4)
- Thermistor disconnection (H2)

※ When the thermostat contact is open, it is required to press the reset button in the upper side of the thermostat. (The contact is not reset automatically.)

(7) High voltage section

1) General

There are three kinds of coronas; the main corona, the transfer corona, and the separation corona. The main corona employs the scorotron system, where the drum surface is evenly charged with negative charges controlled by the screen grid between the corona and the drum. The transfer corona is used to transfer toner images on the drum to the copy paper. A high, negative voltage is applied to the rear side of the paper. The separation corona applies AC corona to the copy paper to eliminate potential difference with the drum to allow separation of the paper.

The output voltage of the main charger and the transfer charger is supplied by transformer 1. The feedback current from the transfer charger is controlled to be constant and outputted to the main charger.

2) Basic composition

① Main (charging) corona – High voltage transformer (MHVG)

	Grid voltage	Developing bias voltage
Standard mode	–750V	–200V
Photo mode	–500V	
TSM mode	–650V	

② Main transfer corona – High voltage transformer (THVG)

–41μA (Electrode sheet front-rear balance difference: max. 7.0μA)

③ Separation corona – High voltage transformer (SHVG)

AC4KV ±0.1KV

(8) ADU unit (SF-2120 only)

1) Basic operation

The ADU unit is stored above the paper cassette in the lower side of the copier. In the duplex copy mode, the copy paper is passed from the fusing unit through the reverse roller to the ADU, where it is aligned by the alignment plate. Then it is pressed onto the take-up roller by the paper holding plate, and only one sheet is transported by the paper feed and reverse roller. It is transported from through the transport roller to the copier, where duplex copy is made.

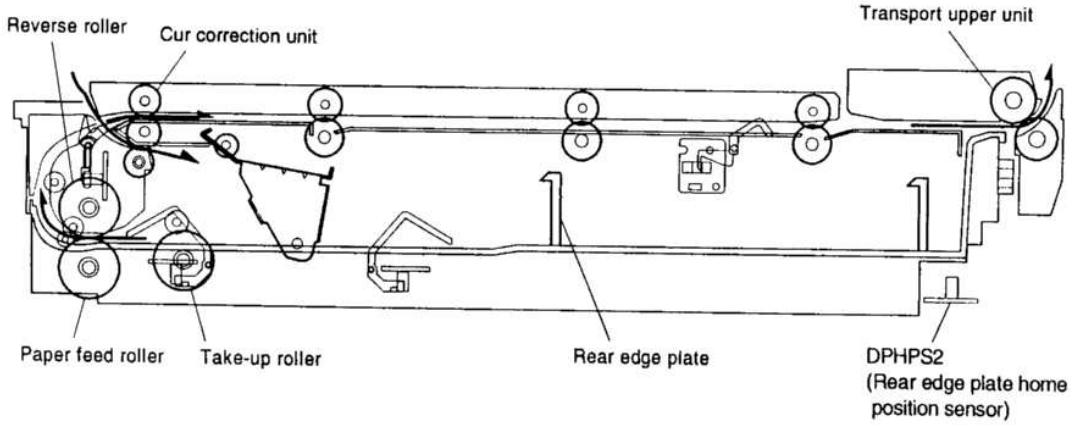

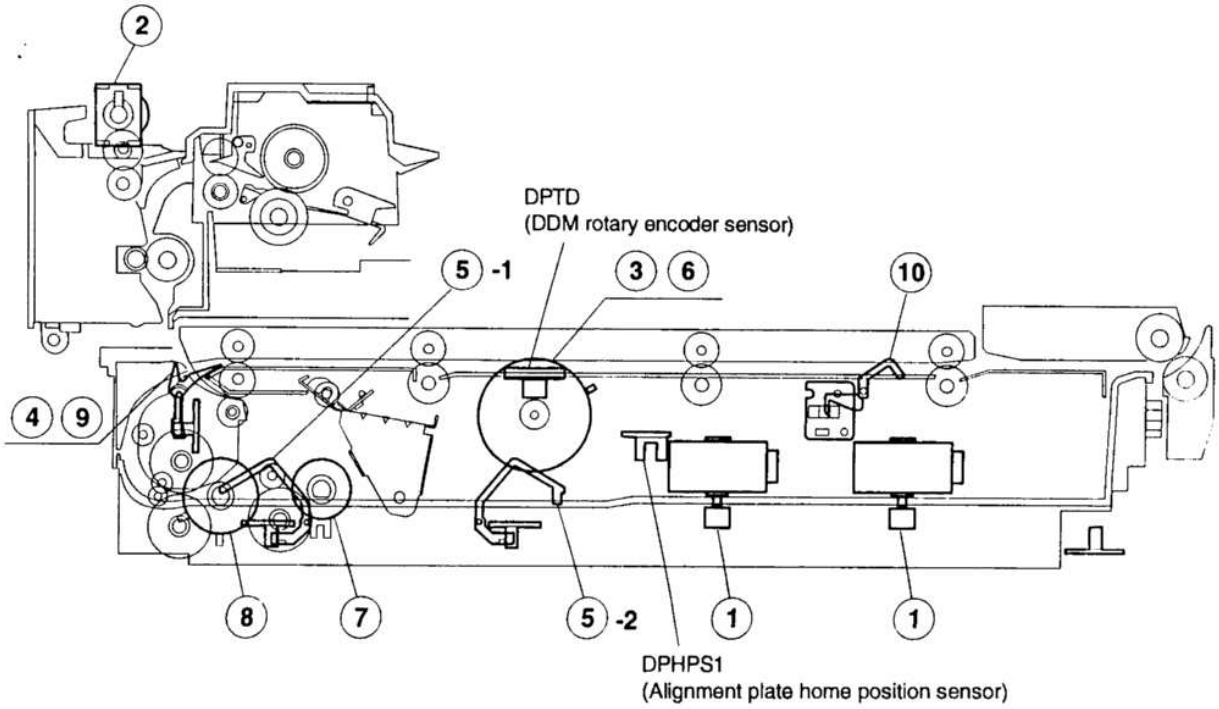

2) Details of operation

① The alignment plate and the rear edge plate detect the home positions, and moves to the paper size position. (ADU motor 1, 2, ON)

② Paper exit, reverse unit operation (ADU gate solenoid ON)

③ Rollers in the ADU rotate in the direction of paper entry. (ADU drive motor ON)

④ ADU paper entry detection (ADU paper entry/exit sensors 1, 2 ON)

⑤ ADU paper presence detection (ADU paper sensors 1, 2 ON) (⑤-1 is used only in the AB series.)

⑥ Rollers in the ADU rotate in the direction of paper exit. (ADU drive motor ON)

⑦ Holding plate operation (Take-up clutch ON)

⑧ Take-up roller. paper feed roller rotation (Paper feed clutch ON)

⑨ ADU paper feed detection (ADU paper entry, exit sensor ON)

⑩ ADU paper transport detection (ADU transport sensor ON)

ADU sensor list

Signal name	Name	Type	Operation, function
DPHPS1	Alignment plate home position sensor	Transmission sensor	LOW at home position
DPHPS2	Rear edge plate home position sensor	Transmission sensor	LOW at home position
DPED1	Paper sensor 1	Transmission sensor	HIGH with paper present
DPPD1	Paper entry sensor	Transmission sensor	HIGH with paper present
DPED2	Paper sensor 2	Transmission sensor	HIGH with paper present
DPOD	Paper exit sensor	Transmission sensor	HIGH with paper present
DPTD	DDM rotary encoder sensor	Transmission sensor	Motor rotation detection

[6] DISASSEMBLY AND ASSEMBLY

The descriptions are divided into the following sections.

1. Paper feed section
2. Transport section and power section
3. Fusing section
4. Optical system
5. SPF section
6. Drum section
7. Developing section
8. Operation panel section and intermediate cabinet
9. Major parts on the frame side
10. Manual multi paper feed unit (SF-MF15, option)
11. Paper feed unit (SF-CM15, SF-CM16, option)

1. Paper feed section

1-1. Paper feed unit

① Open the front cover and lift up the upper clamshell. Remove two fixing screws of the manual paper feed section, and remove the manual paper feed section.

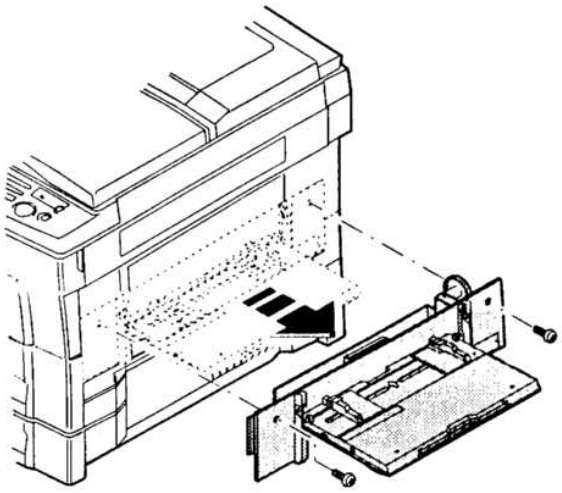

② Remove the four fixing screws (M4 x 10 x 1pcs, step screw x 1 pc) of the paper feed unit, and lift the rear frame side of the paper feed unit and remove it. (Since there is the 8-pin connector on the back of the rear frame side, it requires some force to remove. Carefully pull it out straight.)

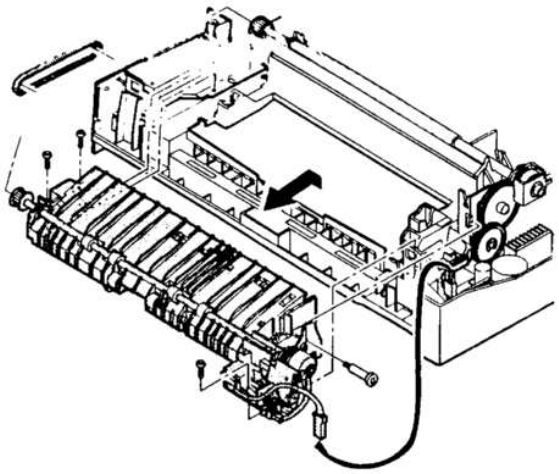

(Note for assembly)

1) There is the 8-pin connector on the back of the rear frame side. When assembling it, carefully insert.
2) The belt must be on the paper feed unit gear and the resist roller gear.

1-2. Paper feed roller ass'y removal

1) Remove the rear frame side electromagnetic clutch connector.
2) Remove the front frame side stopper and the bearing.
3) Remove the roller release arm spring from the paper feed frame.

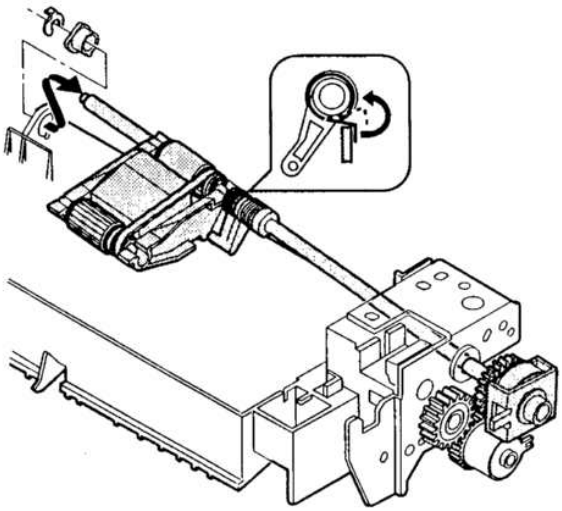

4) Remove the rear frame bearing, and one side of the paper feed roller ass'y will be disengaged. To remove the ass'y completely, remove the E-ring.

(Note for assembly 1)

With roller release arm spring A hooked on the spring notch, attach the paper feed roller ass'y to the paper feed unit, and hook the spring on the paper feed frame.

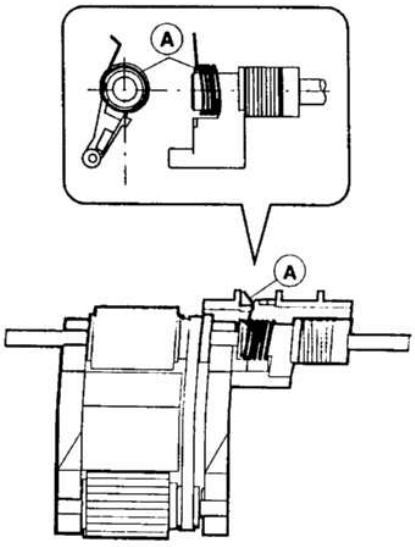

(Note for assembly 2)

When attaching the paper feed section roller ass'y, adjust so that the paper feed roller clutch and the PS front roller ass'y clutch projection face toward the paper feed side.

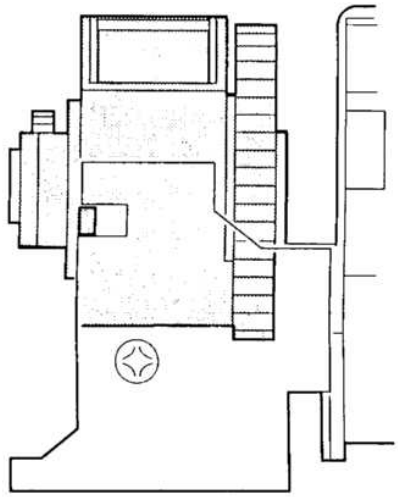

1-3. PS front roller ass'y

① Remove the paper feed unit. (For the details, refer to the 1-1.)

② Disengage the hook section of the front frame side bearing, remove the connector on the rear frame side, and remove the PS front roller ass'y from the paper feed frame.

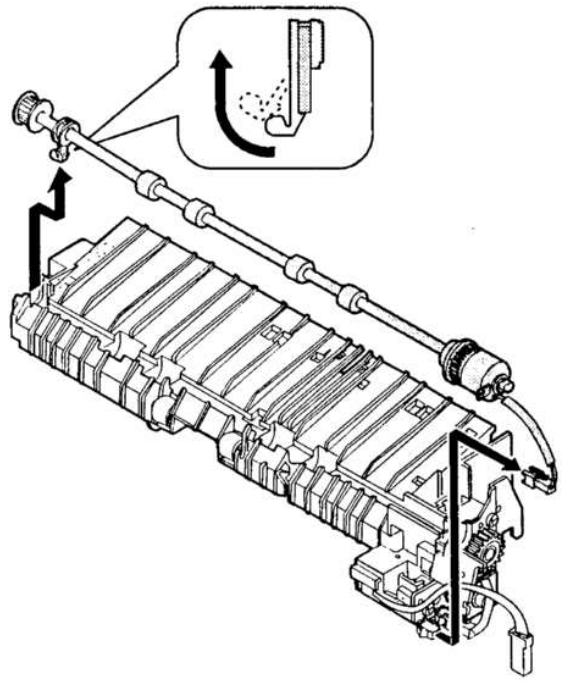

1-4. Separation roller

① Remove the paper feed unit and remove the separation roller.

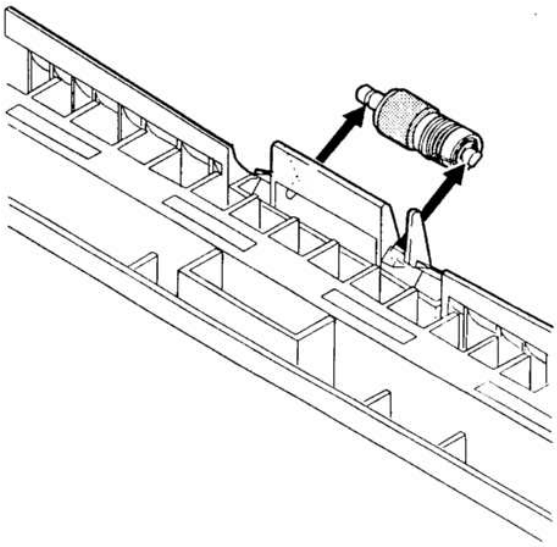

1-5. Paper feed roller, take-up roller

① Remove the paper feed roller, and remove the take-up roller.

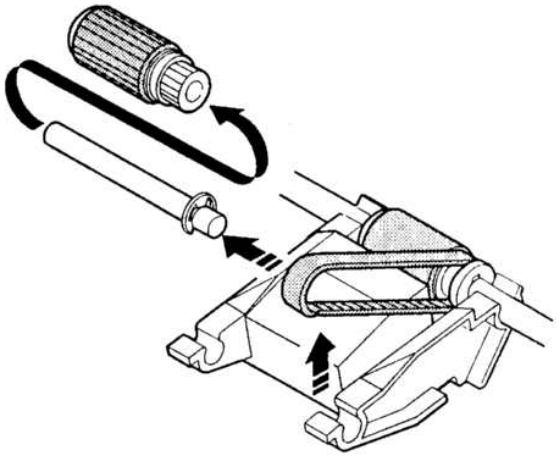

② Remove the roller holder, the stop ring, the bearing, and the paper feed roller.

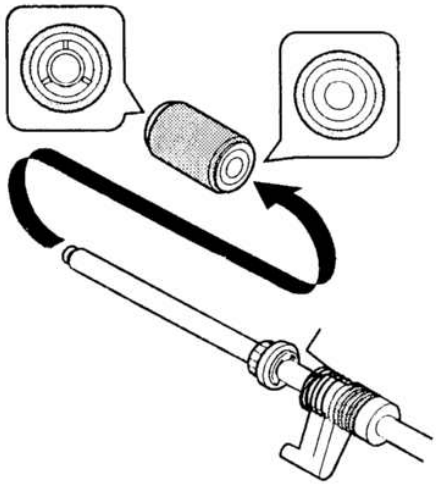

(Note for assembly)

Attach the paper feed roller so that the one-way clutch is on the rear frame side. (Be careful of the direction.)
Attach the roller holder as shown below.

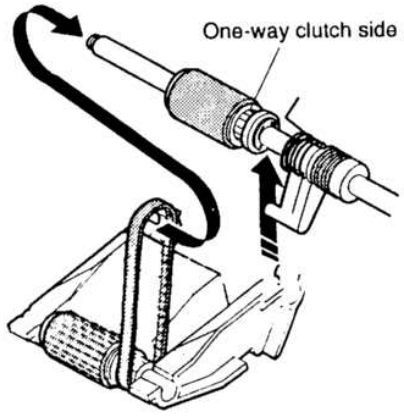

1-6. Lower paper feed unit

(SF-2118 only): Perform similarly for the optional two-stage paper feed unit.

Remove two screws and remove the lower paper feed unit.

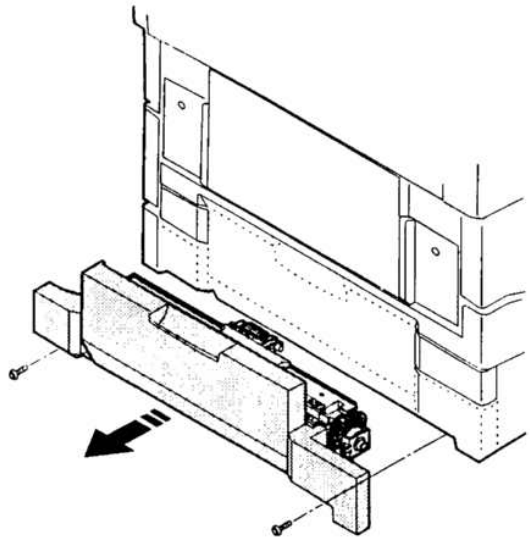

1-7. Lower separation roller

(SF-2118 only): Perform similarly for the optional two-stage paper feed unit.

① Remove the lower paper feed unit. Refer to 1-6.)
② Remove the paper feed frame. (4 screws, 2 connector)
③ Remove the separation roller.

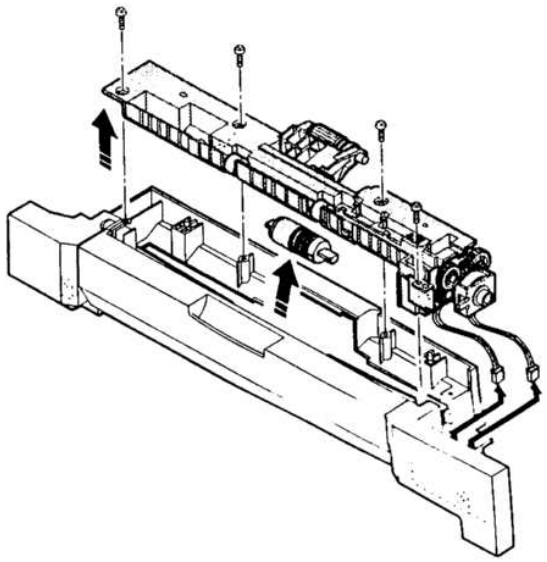

1-8. Transport roller

Perform similarly for the optional paper feed unit.

① Remove the lower paper feed unit. (Refer to 1-6.)
② Remove the stopper, slide the bearing, and remove the transport roller.

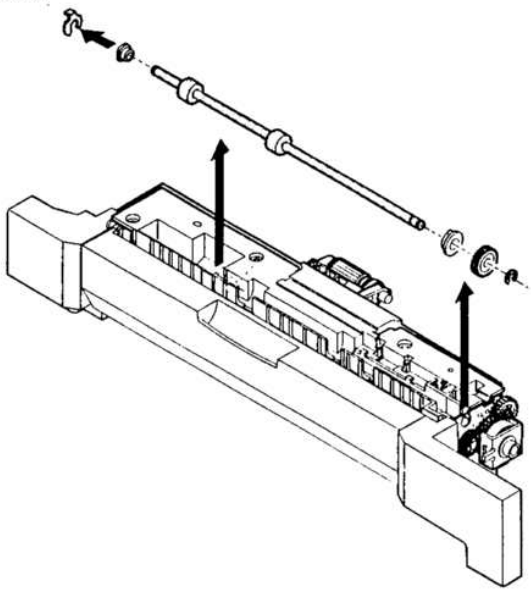

1-9. Lower paper feed roller/take-up roller

For removal of these rolls, refer to 1-2 (Paper feed roller ass'y) and 1-5 (Paper feed roller, take-up roller).)

2. Transport unit

2-1. Resist roller, transfer roller

① Open the front cover.
② Release two lock pawls of the TC case, and lift the front side of the TC case to remove.

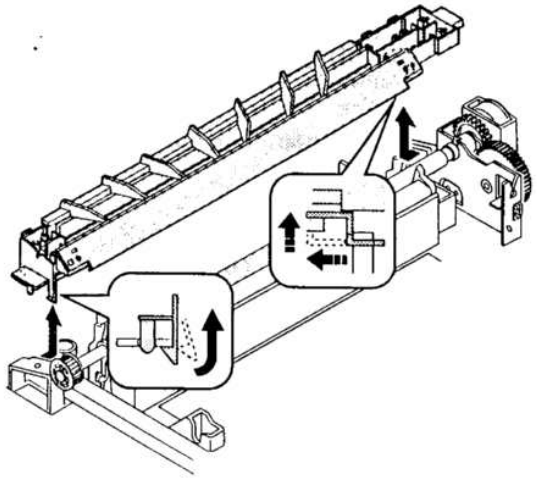

③ Remove the hook of the front frame side bearing, and lift it up to remove it toward the upper frame side. Remove the rear frame side connector, and slide and remove the resist roller ass'y toward the rear frame side.

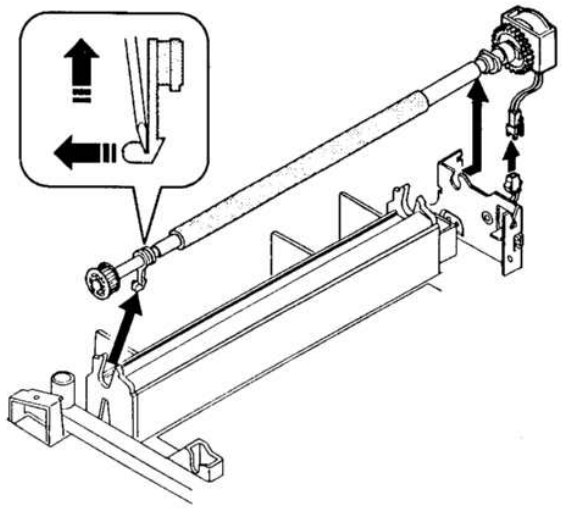

④ Remove the clutch and the gears as shown below.

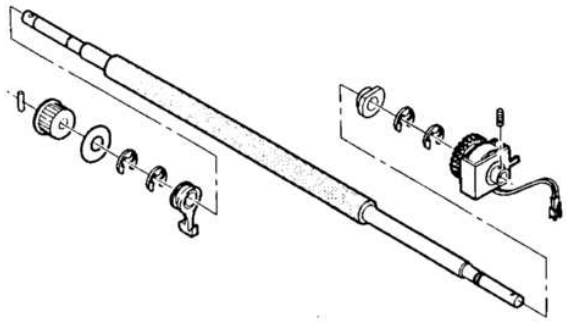

(Note for assembly)

1) Attach so that the resist roller clutch projection is on the paper exit side as shown in the figure below.
2) Arrange the cable and the power grounding wire from the resist roller clutch as shown in the figure below.
3) Hook the hook section of the TC case as shown below.

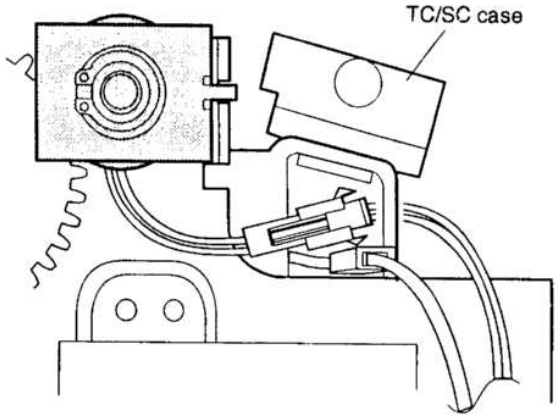

4) When attaching the resist roller ass'y to the copier, attach over the upper side of the PS roller lower mylar, then rotate the roller to set the mylar to the normal position. (If the mylar is deformed, it may cause paper jam. Replace it if deformed.)

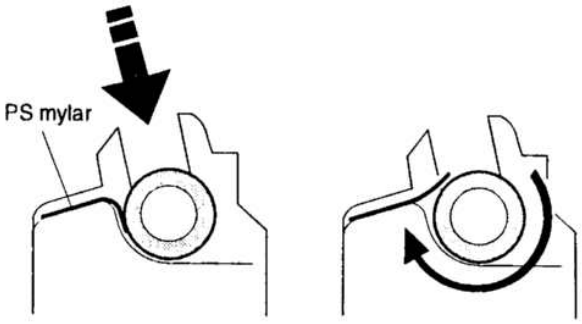

2-2. Transport belt

① Remove the fusing unit.

② Remove the TC case.

③ Disengage the transport belt drive shaft holder on the TC case side, then disengage the drive shaft on the paper exit side and remove the belt.

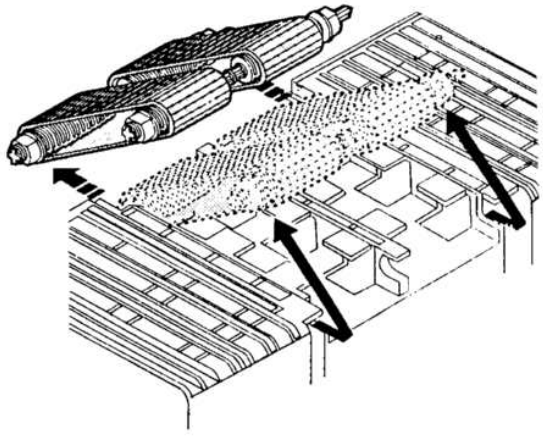

(Note for assembly)

① There is a mark (⬅) on the transport belt. Set so that the tip of the mark faces toward the paper exit direction.

② Be careful of the installing direction of the transport belt drive shaft.

3. Fusing section

3-1. Fusing unit removal

① Open the front cover.

② Push the open/close lever down to the right side, and slowly open the upper unit.

③ Remove the fixing screw of the fusing connector cover and remove the cover.

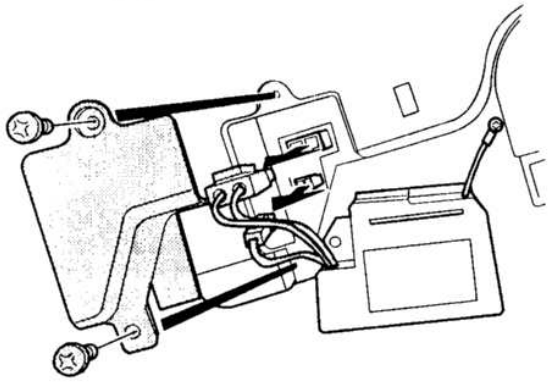

④ Remove the fusing unit hanging wire from the copier frame and remove two connectors from the unit.

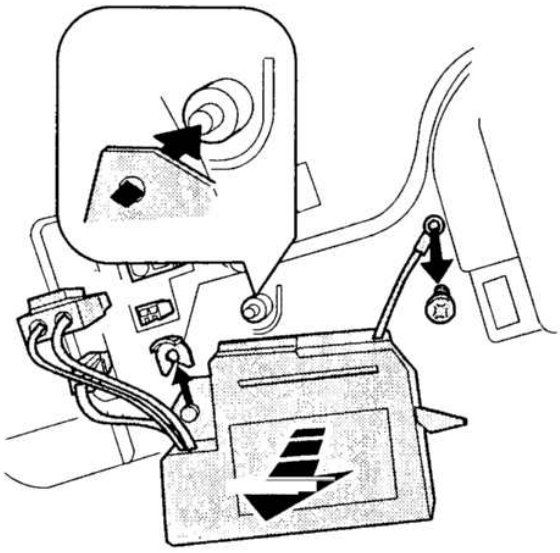

⑤ Remove the stop ring and remove the unit.

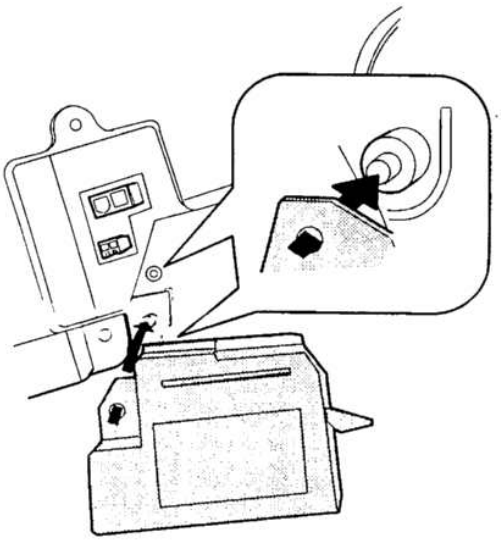

(Note for assembly)

When removing the unit from the copier, ba careful not to scratch the photoconductor drum and the lower heat roller. Be careful not to break the actuator of the paper exit sensor (POD).

3-2. Heater lamp replacement

① Remove the fusing cover fixing screw (1 pc.), and slide the cover to the front side to remove.

② While pressing the Fasten terminal projection connected to the thermostat, remove the lead wire from the connection section.

③ Remove the fixing screw of the lamp holder on the upper side of the rear frame, and remove the holder.

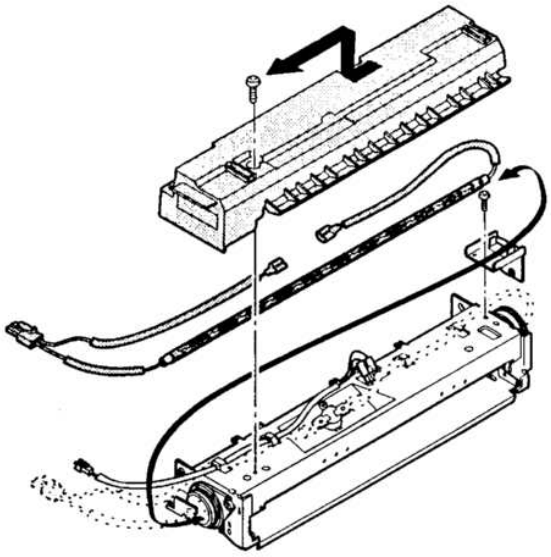

④ Pull out the heater lamp from the front frame side.

For assembly, reverse the disassembly procedures.

3-3. Upper heat roller ass'y removal

① Remove two fixing screws of bearings of the front and the rear frames.

② Push the paper guide down to the paper exit side and separate the separation pawl from the roller and fix it.

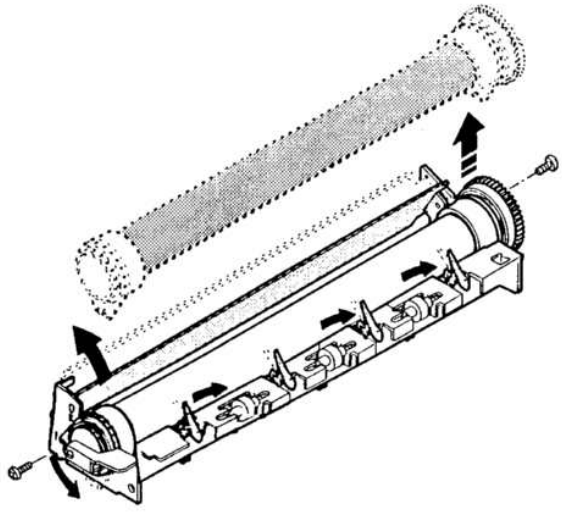

③ Rotate the bearing fixing screws about 45 degrees downward and remove the ass'y.

For assembly, reverse the disassembly procedures.

3-4. Upper separation pawl replacement

① Remove the fusing unit, and remove the cover.

② Put the fusing unit so that the paper guide is on the lower side of the fusing unit (the separation pawl is on the upper side).

③ Remove the tension spring, hold the separation pawl tip and remove it from the supporting section, and remove it from the unit by tilting.

For assembly, reverse the disassembly procedures.

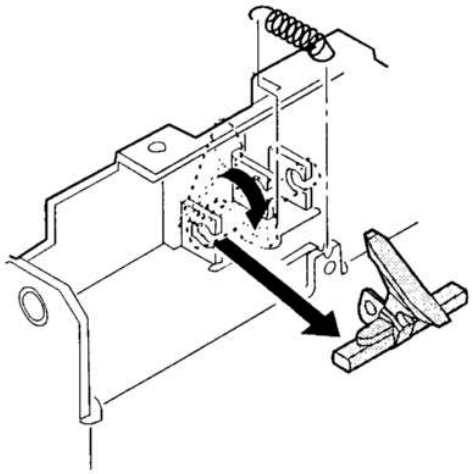

3-5. Lower heat roller replacement

① Remove the fusing unit.

② With the lower separation pawl upright, slide it to the rear frame side and keep the lower separation pawl upright.

③ Remove the lower heat roller together with the bearing.

For assembly, reverse the disassembly procedures.

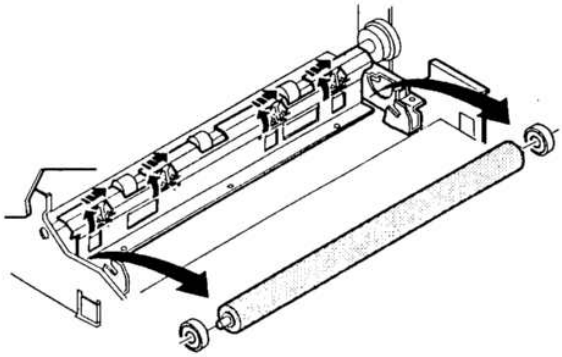

(Note for assembly)

Assemble so that the lower separation pawl is on the upper side of the lower heat roller. (At that time, return the separation pawl which was set upright in procedure (2).)

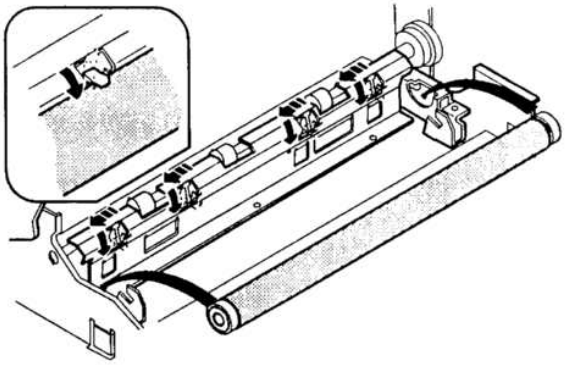

3-6. Lower separation pawl replacement

① Remove the fusing unit.

② Remove the lower heat roller.

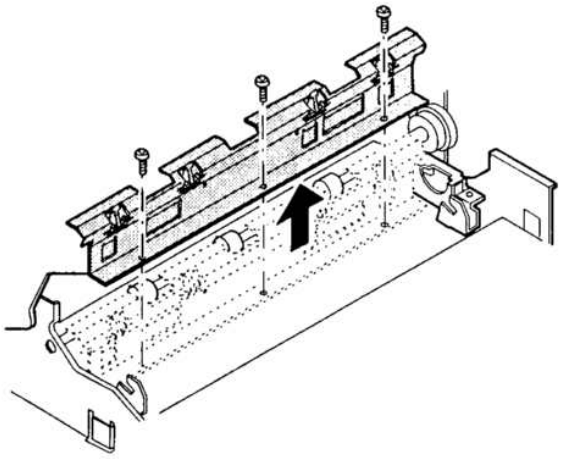

③ Remove three screws and remove the lower separation pawl unit.

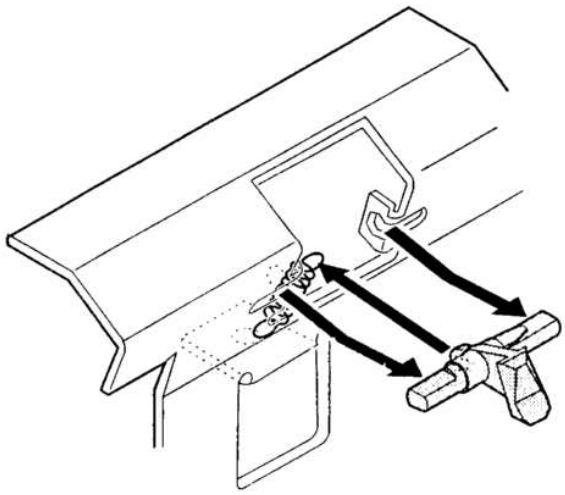

⑤ Remove the tension spring, hold the separation pawl tip to remove it from the supporting section, and remove it by tilting.

3-7. Thermistor/thermostat removal

① Remove the fusing unit.

② Remove the fusing cover, and remove the thermistor/thermostat.

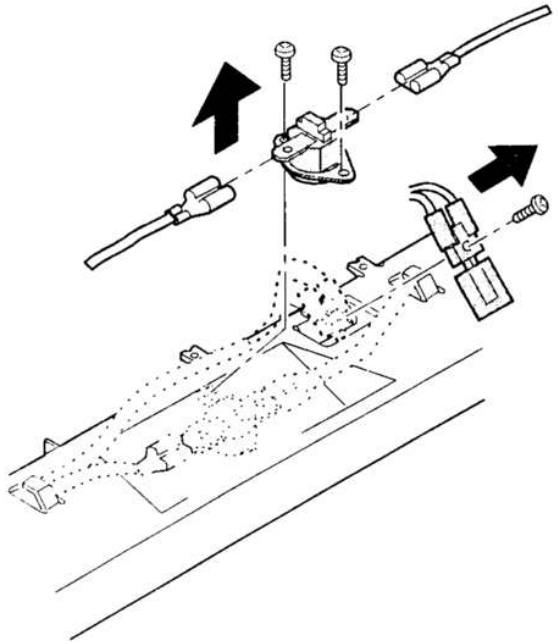

*** Note for assembly**

- Check that the thermistor center is in contact with the heat roller.
- Clean the thermistor surface with alcohol to remove foreign materials.

4. Optical system

The optical system is an integrated finish product delivered by the maker as stated in the previous section. The replacement procedures for the major parts in the optical system are described here.

1) Copy lamp replacement

① Remove the OR guide, and remove the table glass. (2 screws)

② Slide the copy lamp unit to the notch at the rear of the upper cabinet. Push the copy lamp electrode (section A) in the arrow direction B, and remove the lamp.
Do not move the optical adjustment plate. (If it is moved, the light balance will go wrong.)

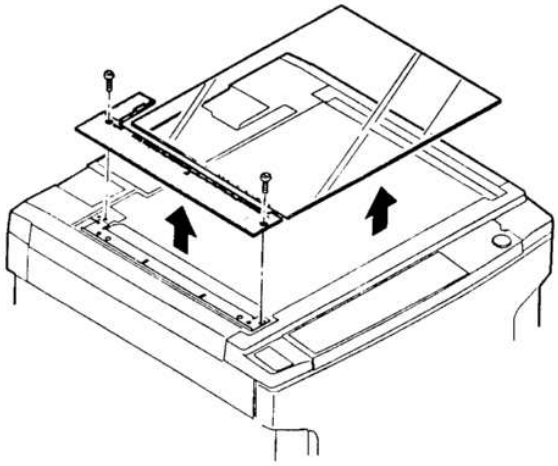

Note: Be careful of the installing direction of the copy lamp.

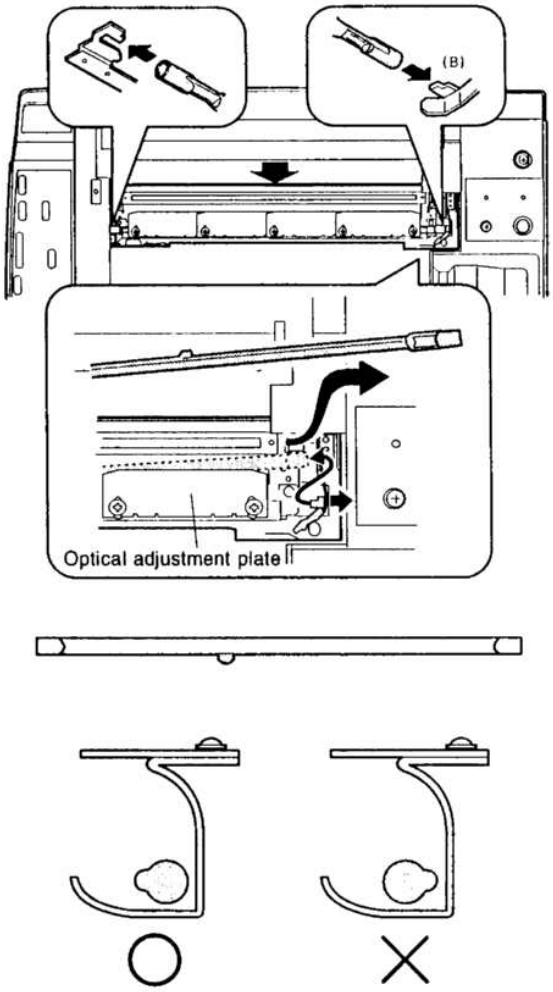

Install so that the projected portion of the copy lamp is near the rear side as shown above.

2) Mirror base wire replacement and adjustment

A. Copy lamp unit removal

① Remove OR guides R/L, and remove the table glass.

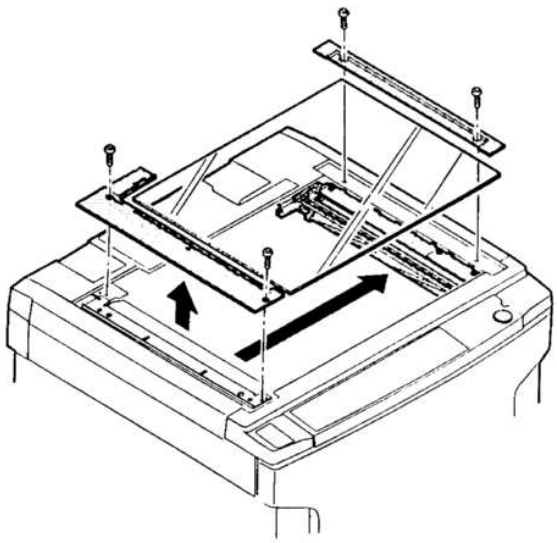

② Remove the operation panel, the upper cabinet R, and the right cabinet.

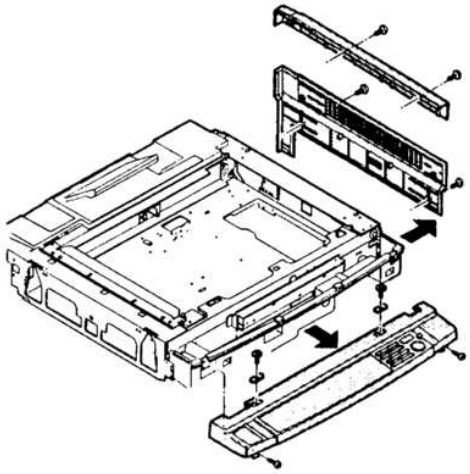

③ Remove the dark box cover upper.

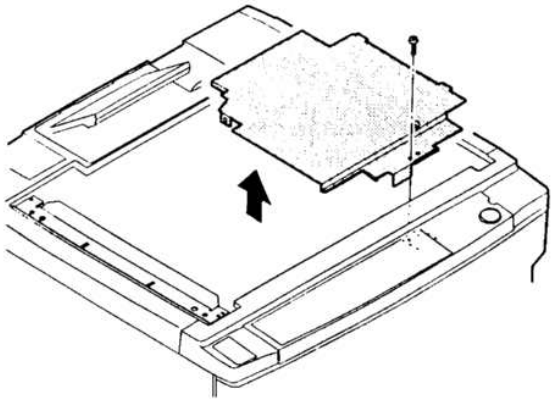

④ Manually move mirror base B. (Within the range where the wire fixing plate fixing screw can be removed.)

⑤ Remove the wire fixing plate in the front/rear frame side of the copy lamp unit, and remove the wire from the side plates F/R.

⑥ Remove the harness from the copy lamp unit.

⑦ Rotate the copy lamp unit counterclockwise to remove.

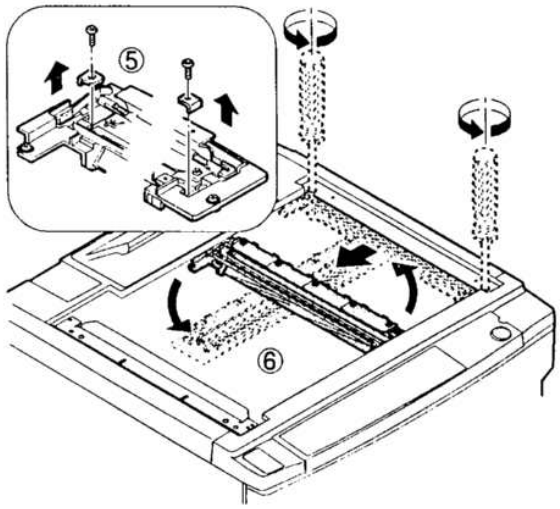

B. Mirror base wire removal

① Remove the upper cabinet L, and the left cabinet.

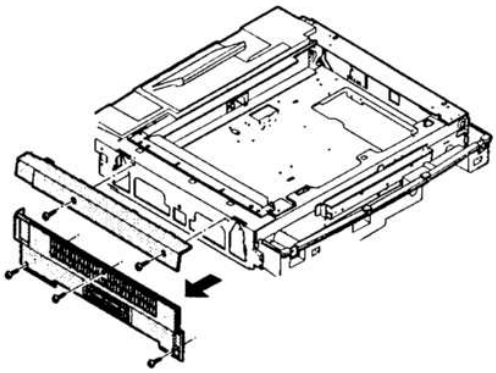

② Remove the mirror wire spring from the groove on the left side of the optical base plate.

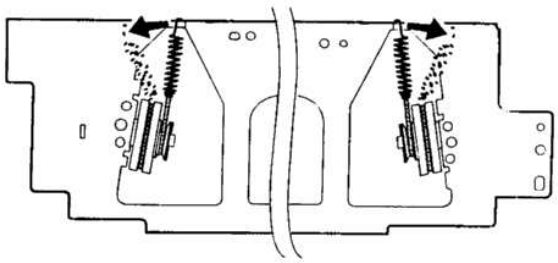

③ Remove the mirror base wire from the winding pulley. (Remove he wire fixing screw.)

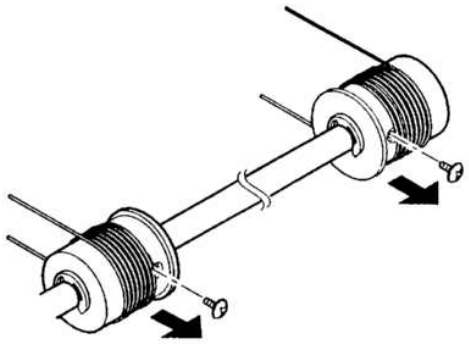

C. No. 2/3 mirror unit (mirror base B) removal

① Move the mirror base B to the center between the positioning and the optical base plate left surface.

② Lift the front side of mirror base B and separate it from the rail. (The front side only)

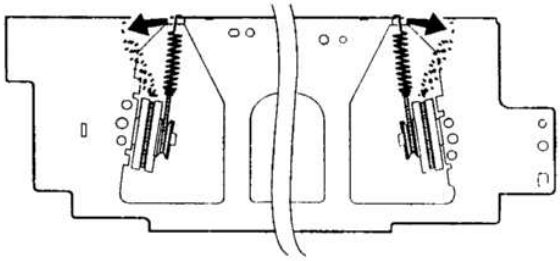

③ Rotate the mirror base B counterclockwise to remove.

④ Disconnect the connector from the copy lamp unit on the rear frame side and from the No. 2/3 mirror unit.

⑤ Rotate the No. 2/3 mirror unit counterclockwise and remove.

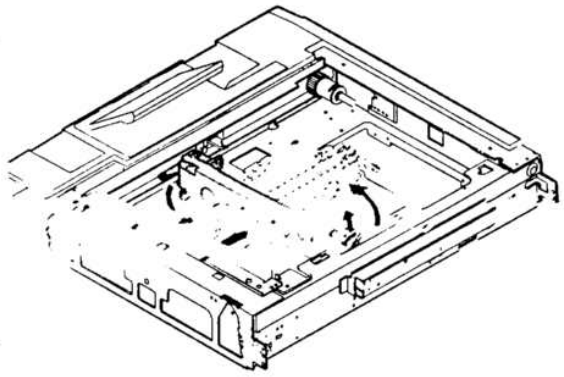

D. No. 2/3 mirror unit (mirror base B) assembly

Reverse the above procedures.

E. Mirror base wire stretching

Check that the wire groove in the front winding pulley is aligned with the wire groove in the rear winding pulley.
(If there is too much a shift in the circumference, loosen two pulley fixing screws, and visually fit the positions and fix.

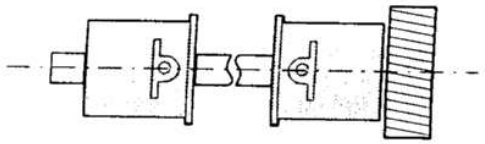

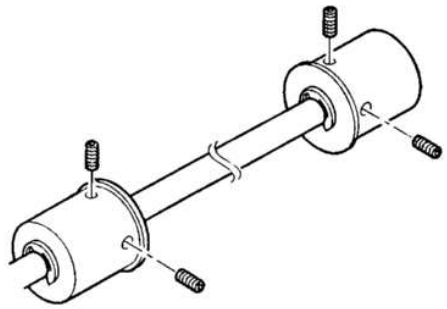

① Hook the metal fixture of the mirror base wire on the optical base plate hook.

② Pass the mirror base wire along the groove outside the double pulley.

<Note> At the time, put the No. 2/3 mirror unit on the mirror base positioning plate.
Hold it so that the winding pulley groove is on the upper side, and wind the wire.

④ Pass it under the moving pulley supporting plate and wind it around the fixed pulley.

⑤ Pass it along the groove inside the double pulley.

⑥ Pass it through the L pulley.

⑦ Cross the mirror base wire spring at the groove at the left of the optical base plate.
(Same in the front and the rear side.)

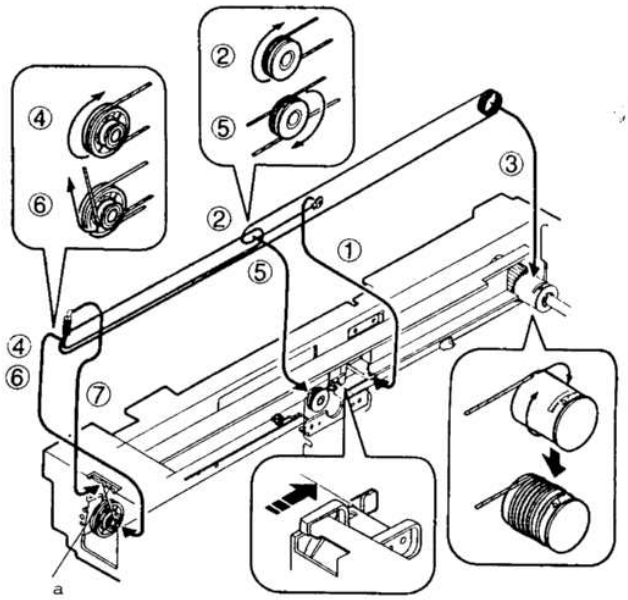

F. Mirror base wire fixing

① Manually turn the mirror base drive pulley to bring the mirror base B into contact with the mirror base positioning plate.

② Shift the 9th winding tip of the mirror base wire from the pulley screw hole section.

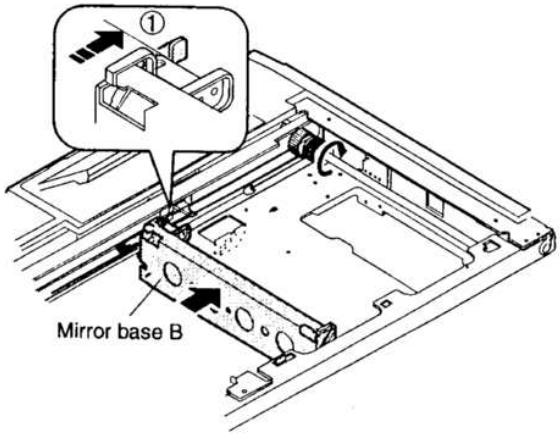

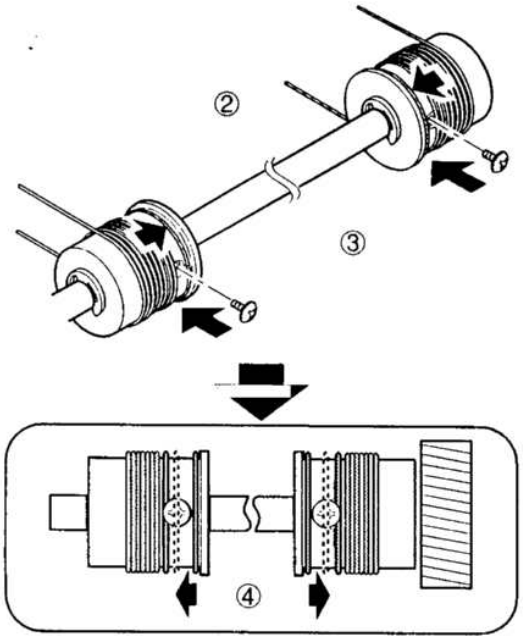

③ Fix the mirror base wire to the pulley with the mirror base wire fixing screw.

④ Return the 9th winding tip of the mirror base wire to the original position. (Perform the same procedure for the front frame side and the rear frame side.)

(Note) After replacing the mirror base drive wire, perform the vertical skew adjustment, the focus adjustment, and the horizontal skew adjustment.

3) No. 2/3 mirror unit (mirror base B) installation (Mirror base B positioning)

This is to adjust the parallelism of mirror base B and the drum surface and the original surface.
This adjustment must be performed in the following cases:

- When the mirror base drive wire is replaced.
- When mirror base A or mirror base B is replaced.

① Manually turn the mirror base drive pulley to bring the mirror base B in contact with the mirror base positioning plate. If the front side and the rear side of the mirror base B make contact with the mirror base positioning plate simultaneously, the parallelism of the mirror base B is proper, and there is no further adjustment.

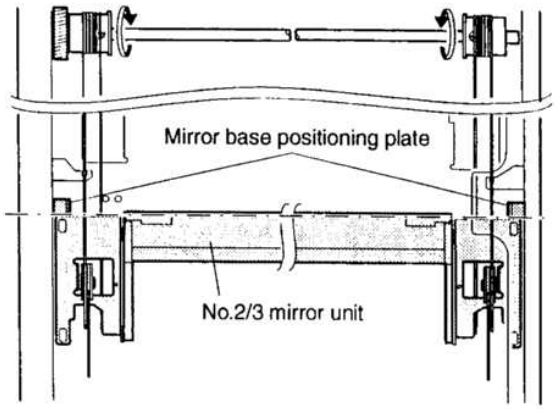

② If the parallelism of the mirror base B is improper as shown in the figure below (one side of the mirror base B is in contact with the positioning plate and the other side is not in contact), perform the following procedure.

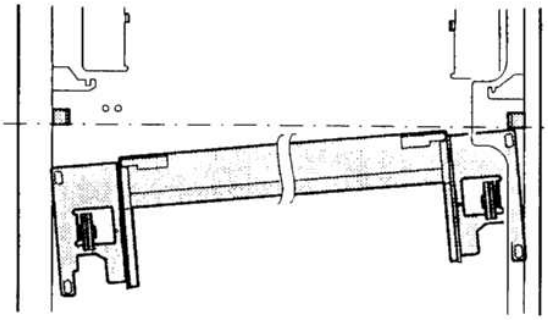

③ Loosen the mirror base drive pulley fixing screw on the side where the mirror base B is not in contact with the positioning plate.

④ Manually rotate the mirror base drive pulley on the side where the mirror base B is not in contact with the positioning plate to bring the mirror base B into contact with the positioning plate.

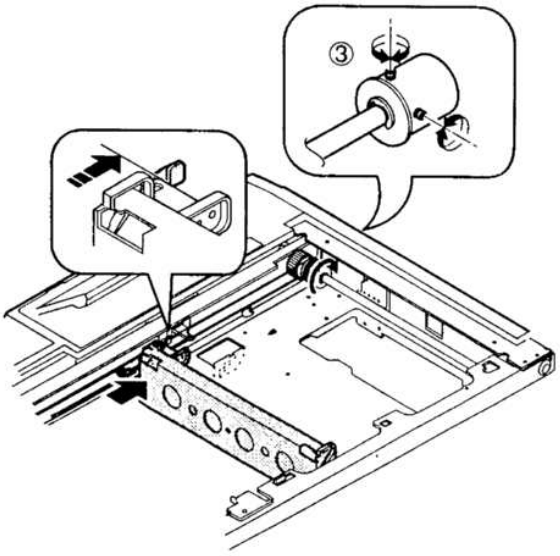

⑤ Tighten the mirror base drive pulley fixing screw.

⑥ Manually rotate the mirror base drive pulley to separate the mirror base B from the mirror base positioning plate once, then bring it into contact with the positioning plate.
Check that the front side and the rear side of the mirror base B make contact with the positioning plate simultaneously.

⑦ If the condition of ⑥ is not satisfied, repeat procedures ③ through ⑥ until the condition is satisfied.

4) Copy lamp unit installation (Mirror base A positioning)

This adjustment must be performed in the following cases:

- When the mirror base drive wire is replaced.
- When the mirror base A or B is replaced.
- When any part in the dark box is replaced.

When installing the mirror base, reverse the removal procedure of (2)-A.

① Put the mirror base A in the copier. Pass the mirror base drive wires in the front frame side and the rear frame side through the clearance between the mirror base A and the mirror base wire fixing plate. Do not tighten the mirror base A wire fixing screw at that time.

② Bring the mirror base B into contact with the positioning plate, put a flat jig (such as a scale edge) onto the right surface of the optical base plate (paper feed side), press the projection of the copy lamp unit onto the jig and fix it with two screws.

(Note) When tightening the copy lamp unit fixing screws, be sure to press the projection onto the scale.

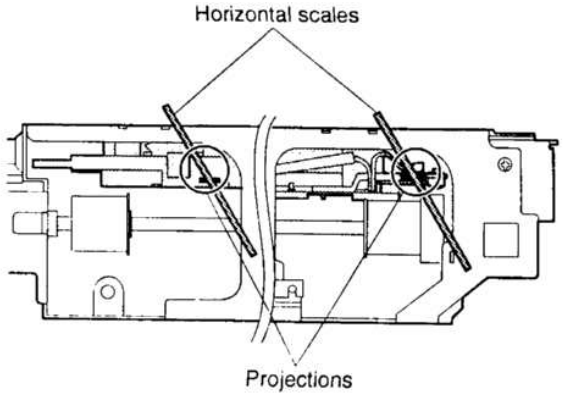

5) No. 4/5 mirror unit (mirror base C) replacement

A. No. 4/5 mirror removal

① Remove the OR guide L and R, the remove the table glass.

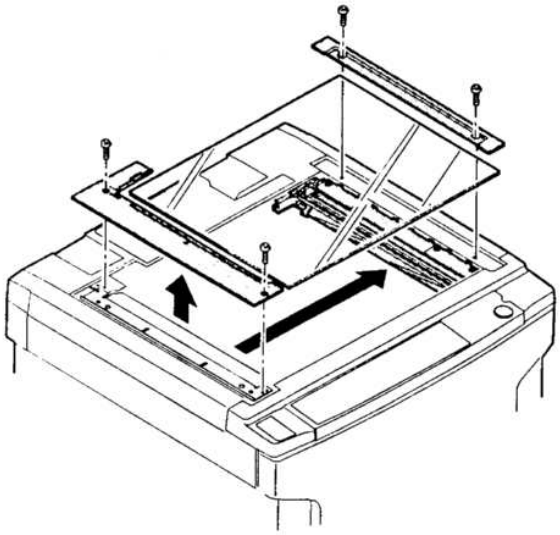

② Remove the dark box cover upper.

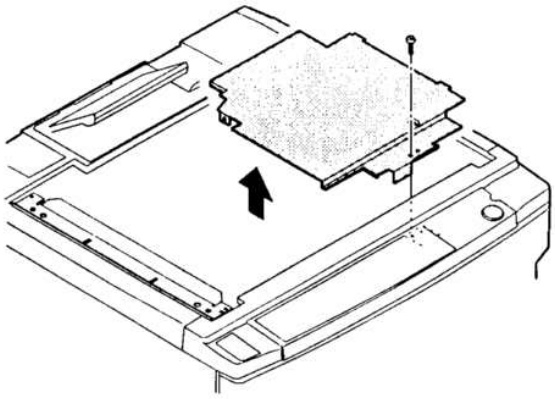

③ Remove the right cabinet.

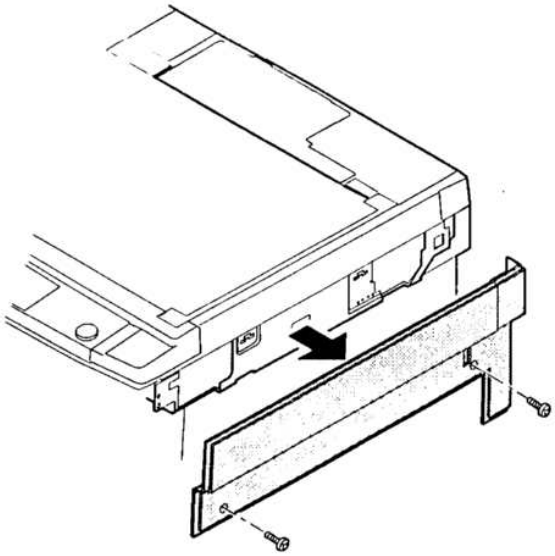

④ Remember the positions of the lens drive shaft attachment plate (in the directions of A and B) (Inscribe a line).

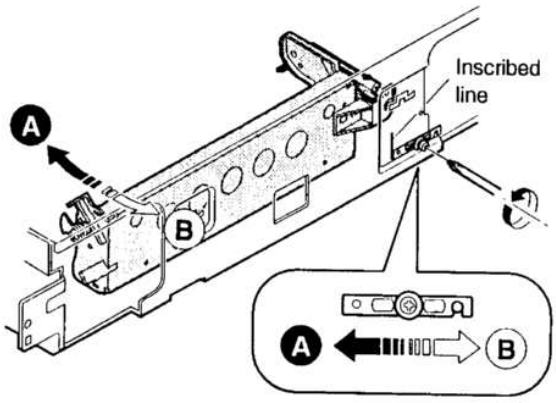

* (IMPORTANT) This is to prevent against defective focusing. (Measurable with a scale.)

⑤ Remove the drive springs 4 and 5.

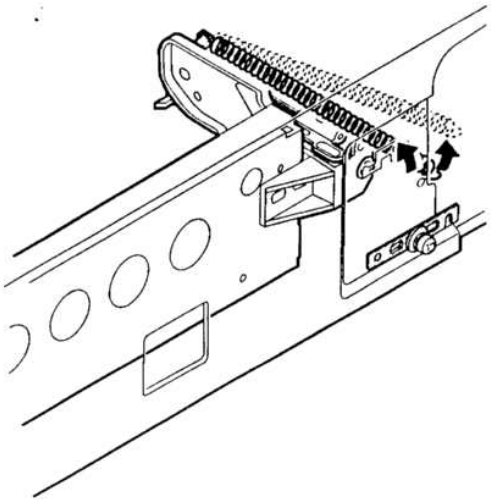

⑥ Remove the zooming rack of the roll holder unit.

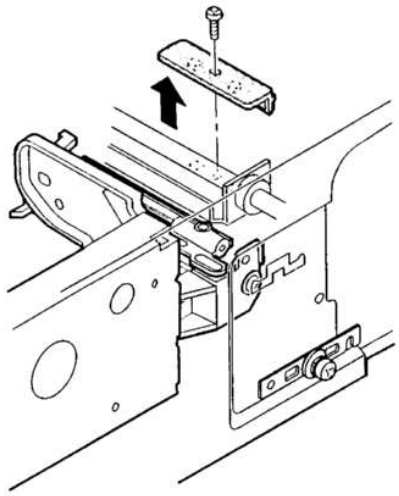

⑦ Remove the lens drive shaft attachment plate.

⑧ Remove the drive shafts 4 and 5.

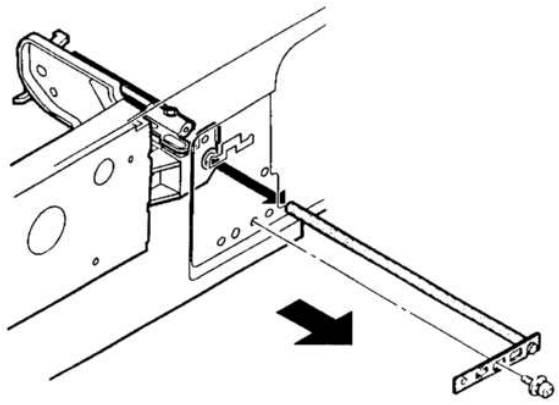

* When removing the No. 4/5 mirror unit, remember the positions (scales) of the arrow marks of the drive holder 4 and 5.

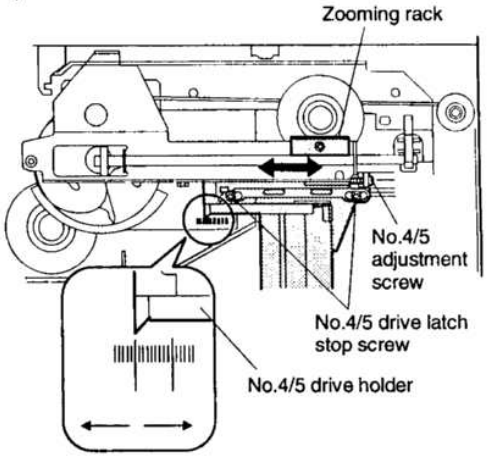

B. No. 4/5 mirror unit assembly

Reverse the above procedures.

<Note>
When attaching the lens drive shaft attachment plate, attach it to position 5 in the above description.
Fit the arrow positions of the drive holder 4 and 5 as the previous state.

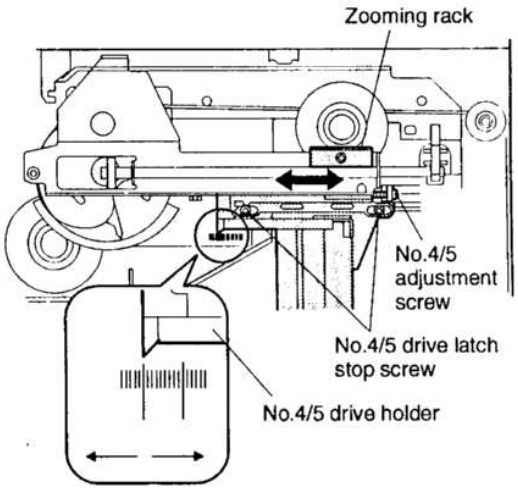

* When the arrow positions cannot be fit:

① Loosen the zooming rack screw and slide it to adjust.

② Loosen the two screws which are fixing the driver holder 4 and 5 and the drive latch 4 and 5. Adjust with the drive holder 4 and 5. After completion of adjustment, tighten the two screws.

6) Lens wire replacement

A. Lens wire removal

① Remove the OR guide L and R, and remove the table glass.

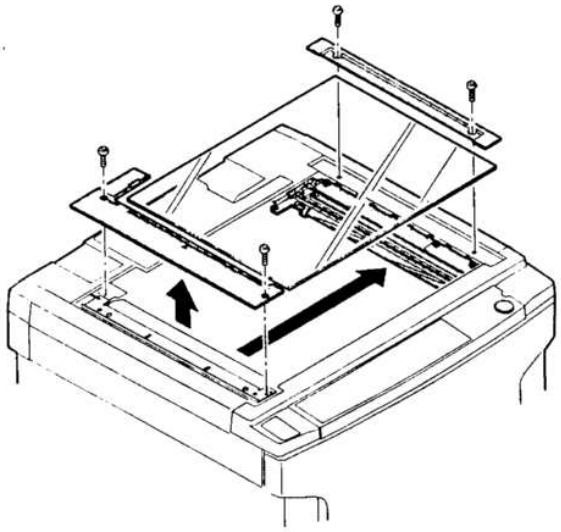

② Remove the dark box cover upper.

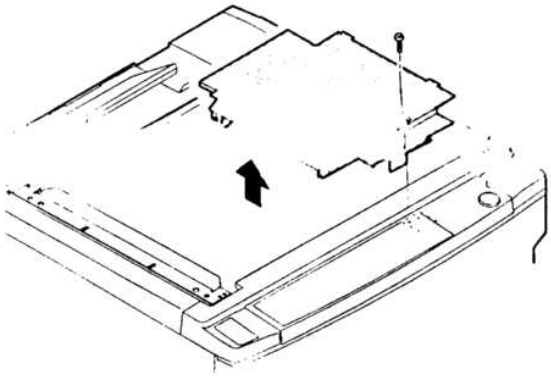

③ Remove the lens motor.

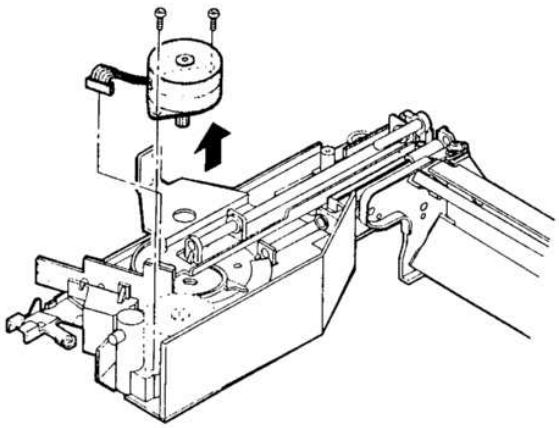

④ Remove drive spring 4 and 5.

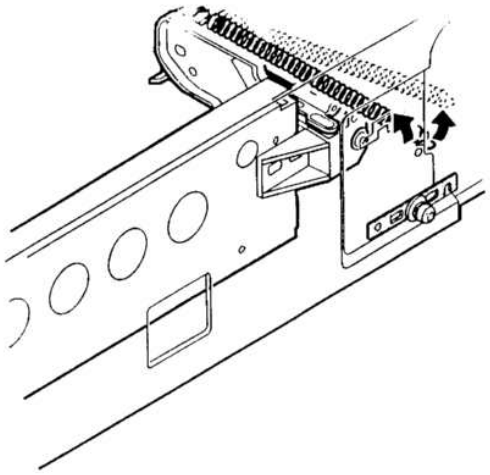

⑤ Remove the E-ring which is fixing the roll holder drive shaft, and remove the roll holder unit.

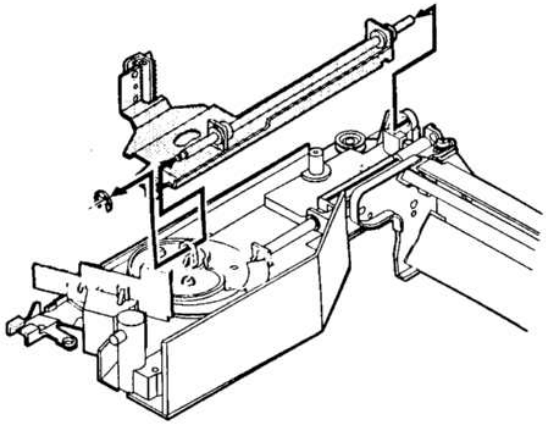

⑥ Remove the zooming cam and the zooming cam drive gear (which are fixed with screws).

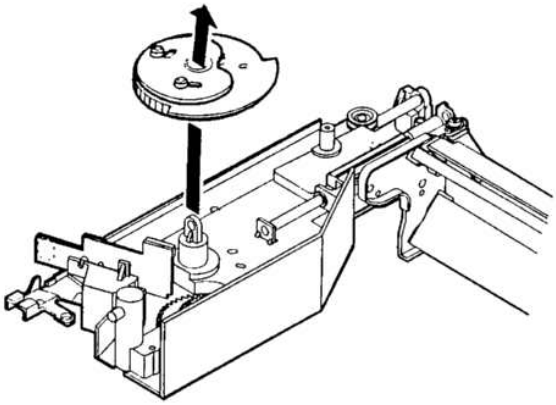

⑦ Remove the drive wire spring and the wire hook from the lens carriage boss.

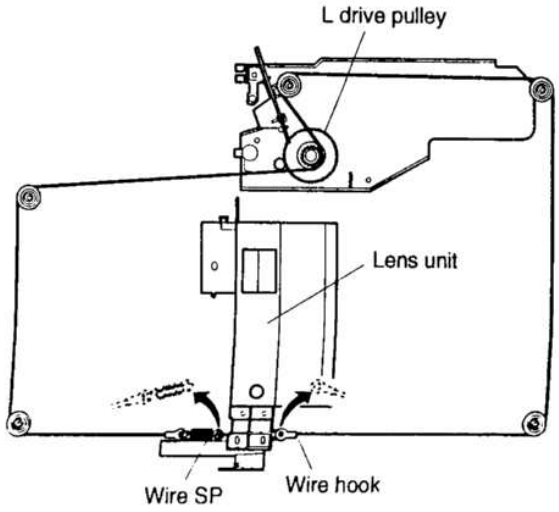

⑧ Remove the L pulley and the L drive pulley from the lens wire.

B. Lens wire stretching

1. This procedure is performed in the following case.

(1) When the lens unit is removed.

(2) When No. 4/5 mirror drive unit is disassembled.

(3) When the copy is out of focus because relative position of the lens unit and No. 4/5 mirror unit is shifted by moving the lens unit itself back and forth without turning the L drive pulley.

* In order to move the lens unit of this machine back and forth in servicing, be sure to turn the L drive pulley. (If the lens unit itself is moved, the wire may slip at the L drive pulley and the relative position of the lens unit and No. 4/5 mirror unit is shifted, resulting in improper focusing.)

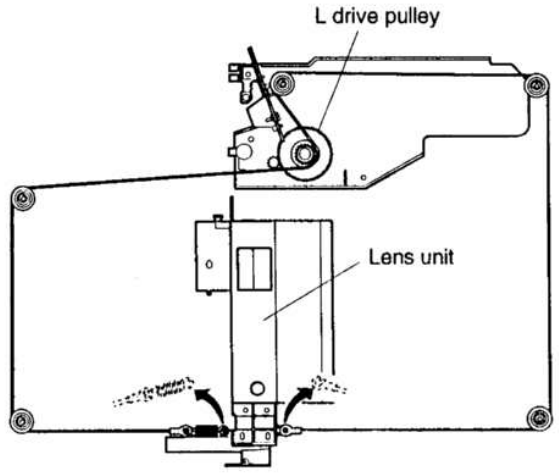

2. Procedures

① Manually move the lens carriage unit to fit the lens carriage hole with the optical unit frame hole (which is not the home position hole but the reduction side hole). Insert a pin into the holes, fix the lens unit, and stretch the wire.

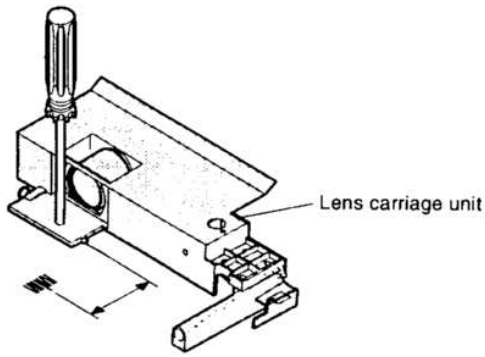

② Under the above state, fit the zooming cam drive gear hole with the No. 4/5 drive unit base hole A (by inserting a pin, etc.), and insert the zooming can drive gear into the shaft.

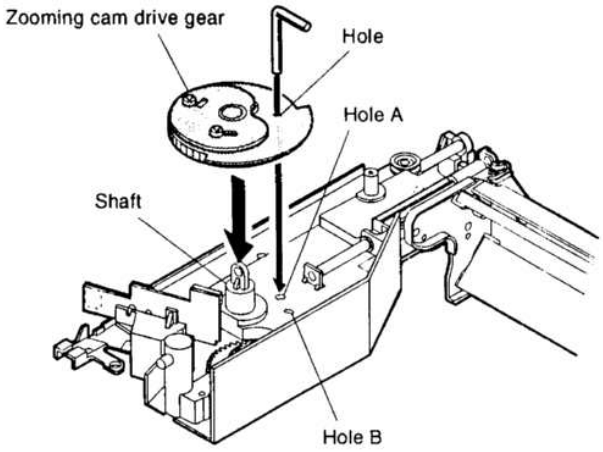

③ Remove the pin which fixes the lens unit and the zooming cam.

④ Manually turn the zooming can drive gear to fit the zooming cam drive gear hole and No. 4/5 mirror drive unit base hole B.

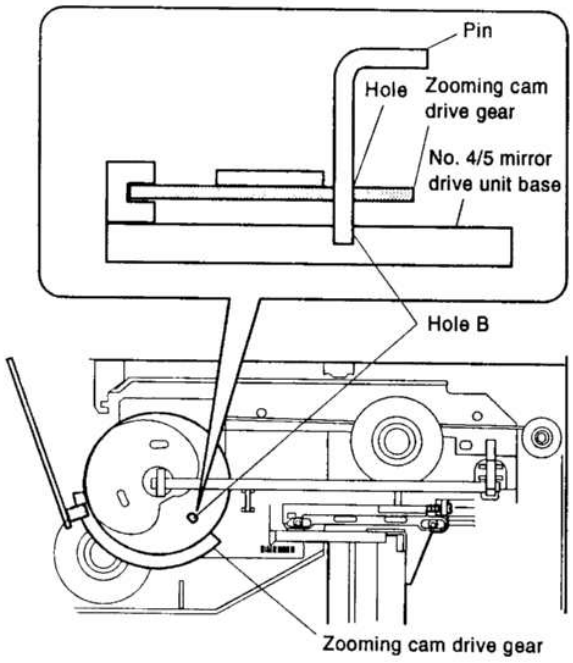

⑤ Install No. 4/5 mirror drive shaft unit and the rack.

* When installing the rack, be sure to fit No. 4/5 mirror unit projection with No. 4/5 mirror drive shaft unit hole.

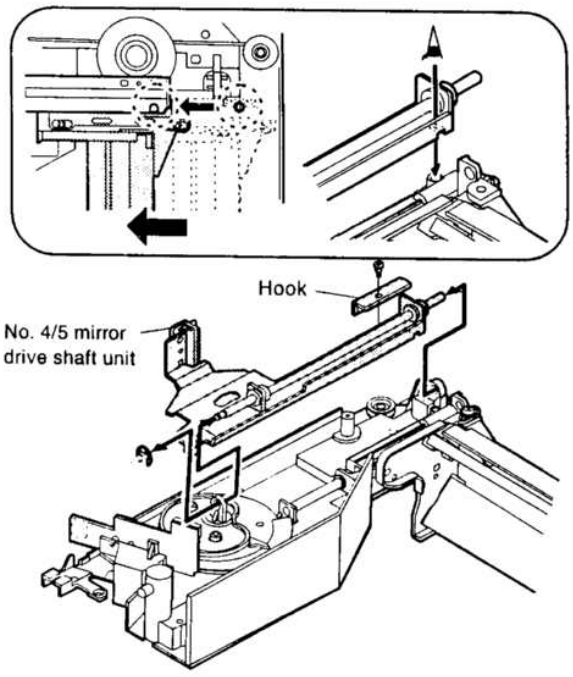

⑥ Loosen the zooming cam screw, and fit the mark of zooming cam drive gear with the mark of No. 4/5 drive shaft.

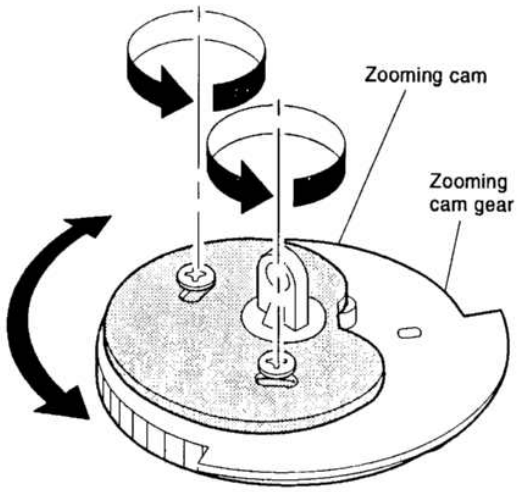

*Do not move the zooming cam gear at this time.

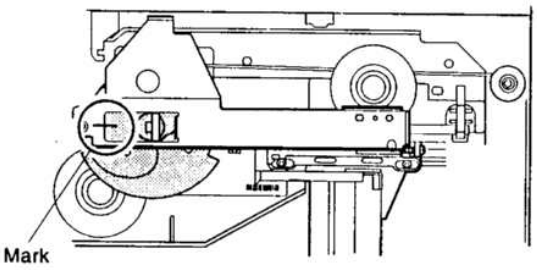

* After this procedure, be sure to perform the optical system adjustments (focus adjustment, etc.). (Refer to [7] ADJUSTMENTS.)

7) Lens unit replacement

A. Lens removal

① Remove the lens wire. (Refer to the procedure of "A. Lens wire removal" in 16) Lens wire replacement.)

② Hold the lens drive shaft with radio nippers and remove it.

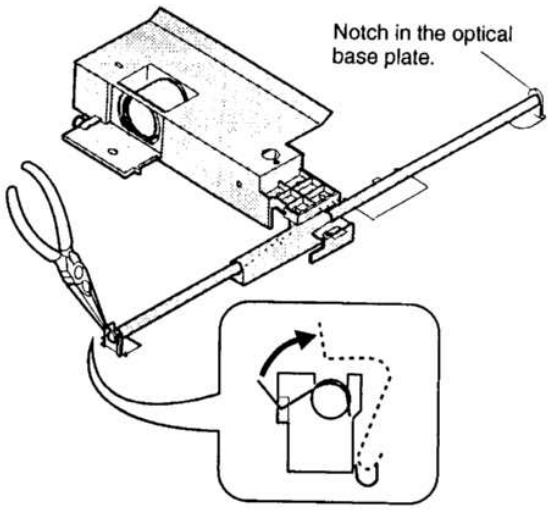

③ Remove the lens drive shaft from the notch in the optical base plate. The lens unit is removed at that moment.

B. Lens unit installation

Reverse the disassembly procedures. (Refer to (6)-B. Lens wire stretching.)

5. High voltage section

Clean the MC case, and the TC/SC case every 50K copies. Clean the screen grid, the charging plate (saw teeth), and the TC/SC wire every 50K copies, and replace them every 100K copies.

5-1. Main charger (MC) unit

① Open the front cover.

② Hold the MC unit lock section, and pull out the MC unit.

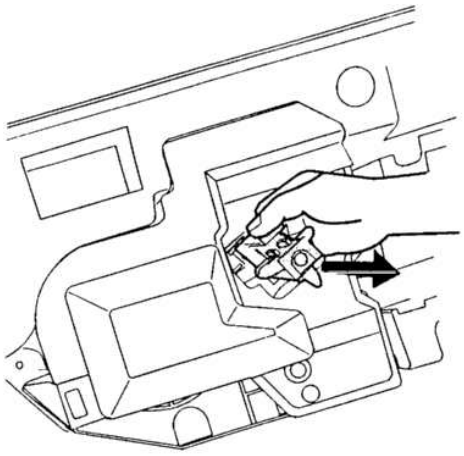

③ Loosen screws Ⓐ and Ⓑ, and remove screen grid Ⓔ.
(When attaching the screen grid, tighten screw Ⓑ until the marking position Ⓕ of grid holder Ⓒ in the above figure is aligned with marking position Ⓕ of MC holder Ⓓ, and tighten screw Ⓐ.)

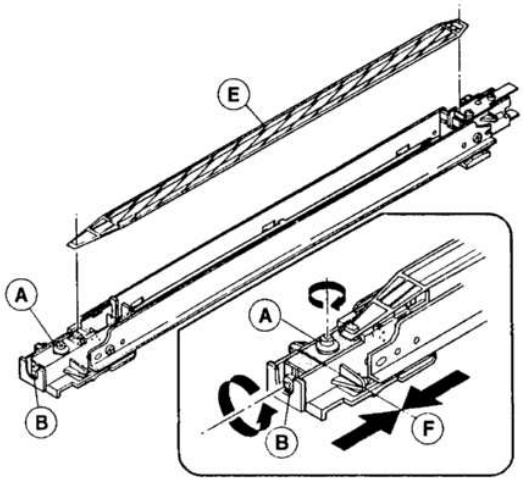

④ Remove the screw and remove the charging plate (saw teeth) ass'y.

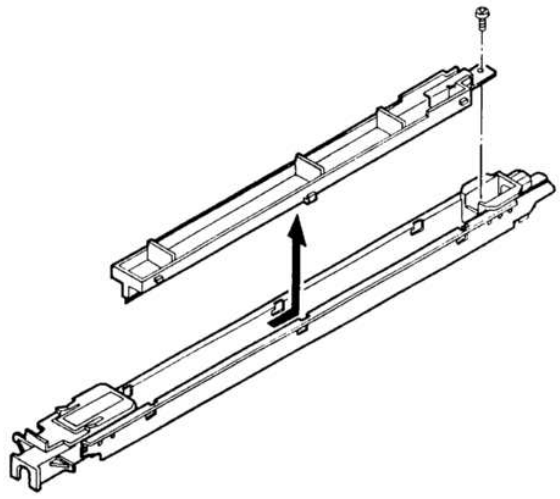

(Cleaning/replacement and note)

① When attaching the screen grid, be careful not to deform and dirt the screen grid. Check that the screen grid is securely in position.

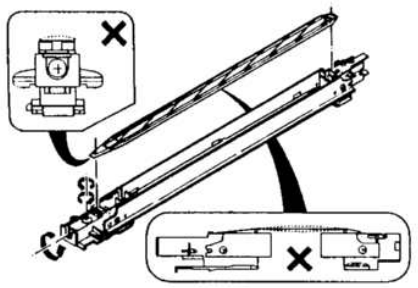

② Be careful not to deform the saw teeth edge of the saw teeth ass'y.

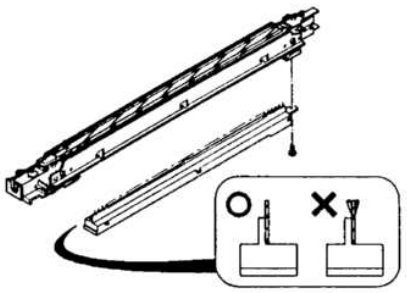

③ Do not touch the inside (saw teeth ass'y) of the MC case, the screen grid, and the saw teeth.

④ To clean the MC saw teeth, push styrene foam onto the saw teeth at right angles and remove dirt.

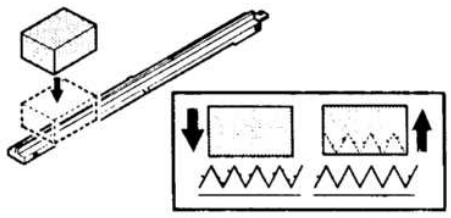

5-2. Transfer/separation charger (TC/SC) unit

① Open the font cover, open the body up.

② Push TC/SC unit pawl sections Ⓐ (2 positions) and lift the front side and pull it out.

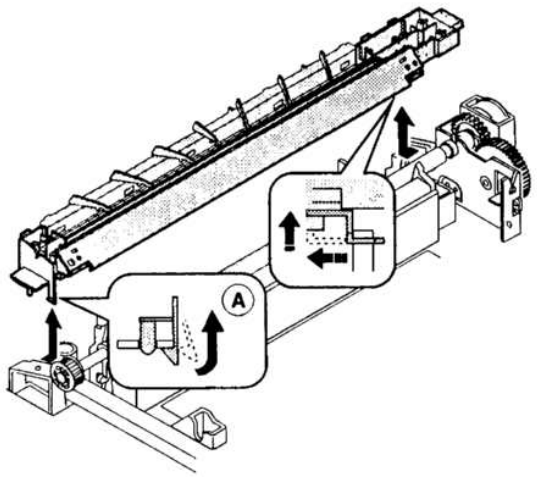

(Cleaning/replacement and precautions)

① Set the charger SP length to 17 ±1.0mm.

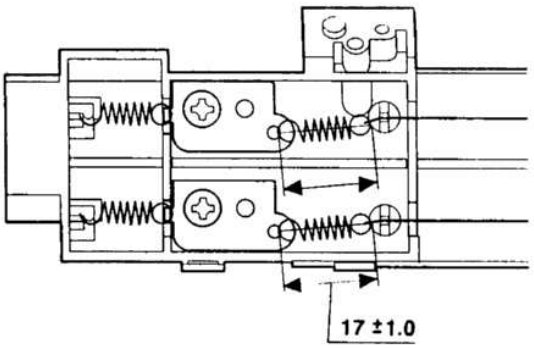

② The charger wire must be free from distortion and deformation, and must be in the wire positioning groove of each holder.

③ The charger case must be free from oil, dirt or adhesion of foreign material.

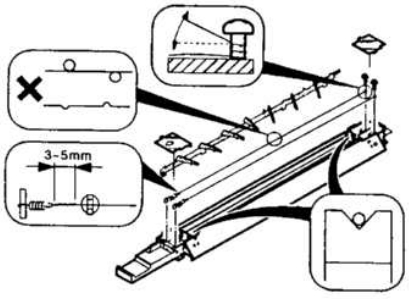

④ Clean the wire with alcohol.

⑤ When installing the unit to the body, check that the grounding spring is in contact with the TC/SC case (metal section) on the rear and the front sides. (Visually check, and push the center of the TC/SC unit to check that it can be moved up and down.)

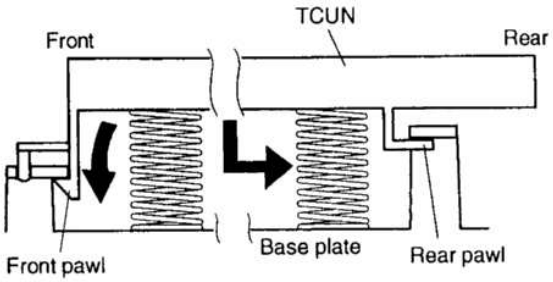

⑥ Transfer mylar lower

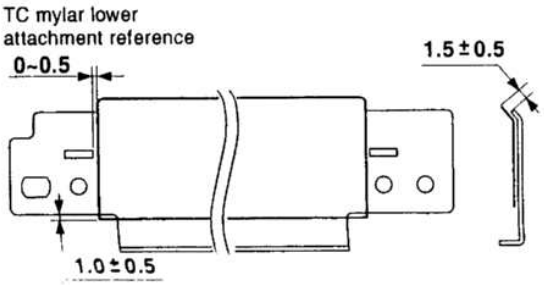

6. Process section

6-1. Process unit

① Open the front cover, remove the developing unit, and open the clamshell.

② Remove process cover Ⓐ. (Loosen the screw to remove.)

③ Loosen two blue screws which are fixing the unit. Remove one screw, disconnect one connector, and remove unit Ⓑ. (Do not hold the toner transport pipe.)

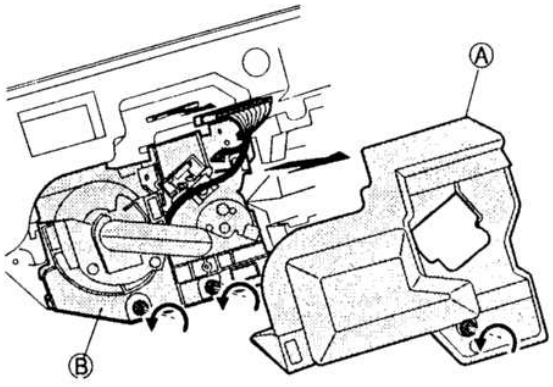

6-2. Waste toner bottle replacement (required when waste toner full detection/maintenance)

① Take out the process unit as shown above,

<Note> If the unit is removed by holding the toner transport pipe, toner is spilled. Avoid this.

② Remove the bottle cover. (2 screws)

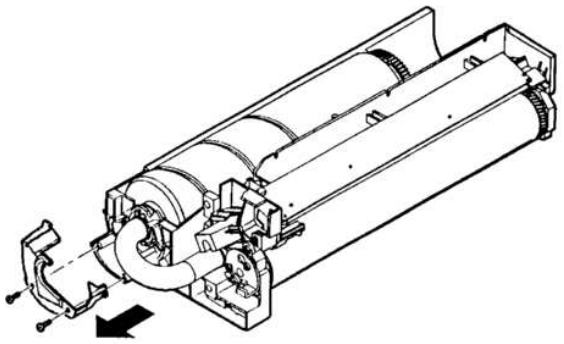

③ Rotate waste toner bearing 1 Ⓐ 90 degrees counterclockwise. Hole the base of toner transport pipe Ⓑ and pull it out. (At this time, toner may be spilled. Put a sheet under the pipe.

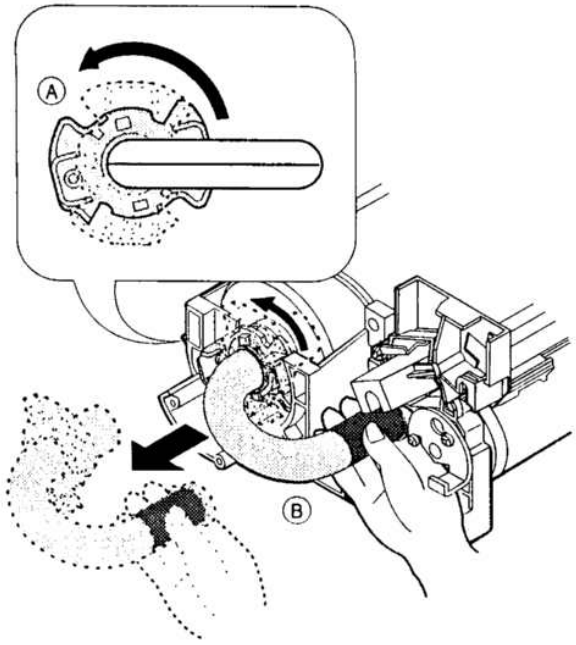

④ While pushing waste toner bottle in the direction of Ⓐ and lift it and remove.

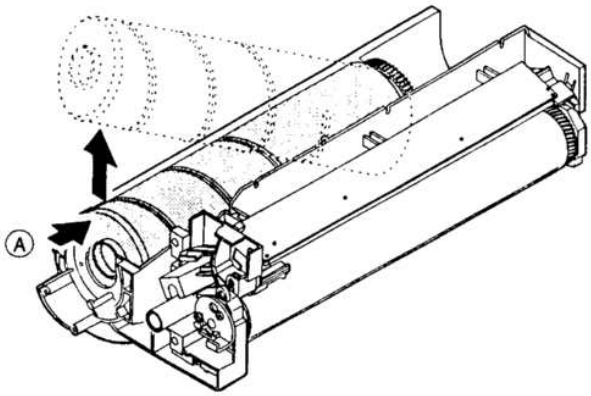

(Note for assembly/maintenance)

① As shown in the figure below, attach so that two projections of gear 19T ㊸ are on the rear frame side (on the screws supporting plate ㊷ side).

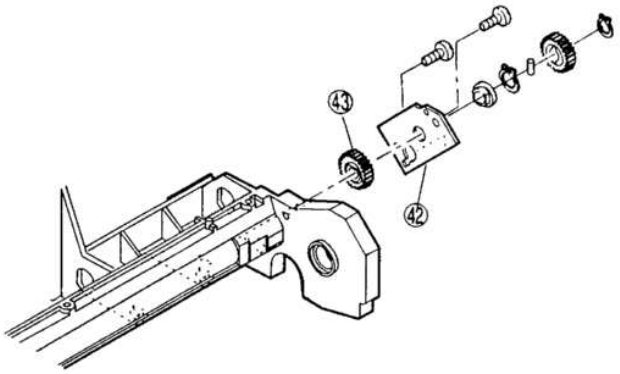

② Replace the waste toner bottle when waste toner full is detected or at 50K maintenance. At this time, clean and remove the waste toner from waste toner pipe Ⓐ.

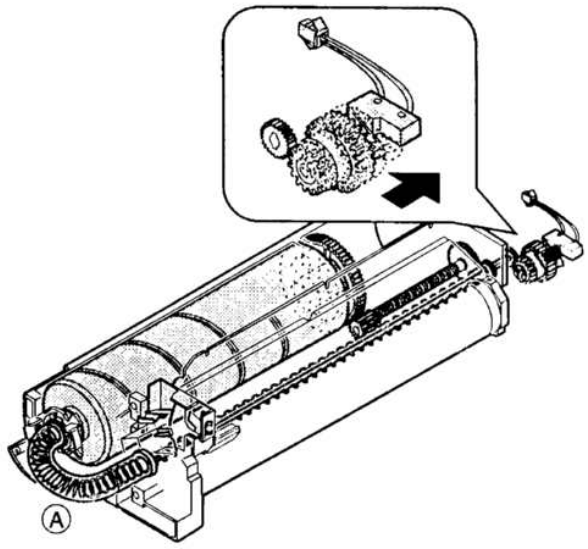

6-3. Drum (Replace every 50K copies)

① Remove the process unit from the copier. (Refer to 6-1.)

② Loosen two blue screws which are fixing the drum, rotate the plate slightly to the right and pull it out.

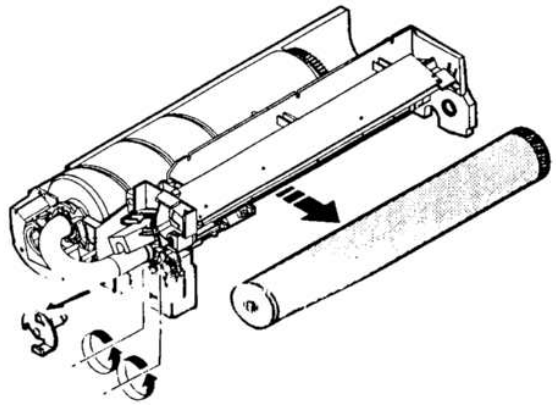

6-4. Blank lamp unit (Clean every 50K copies.)

① Remove three blue screws which are fixing the process unit holder, slide the holder and remove it.

② Tighten the blank lamp unit position adjustment screw completely, and remove the unit rear side, then loosen the screw.

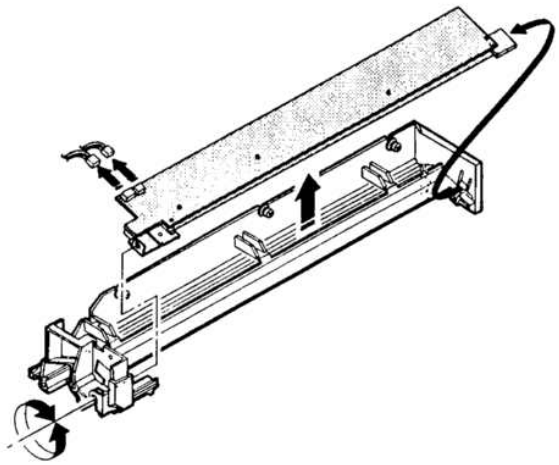

③ Remove two connectors of the blank lamp PWB, and remove the blank lamp unit.

<Note> When the unit is installed or replaced, adjust according to "Blank lamp position adjustment" in [7] ADJUSTMENTS.

6-5. Discharge lamp unit (Clean every 50K copies.)

① Remove three blue screws which are fixing the process unit holder, slide the holder and remove it.

② Remove the discharge lamp unit. (one screw, one connector)

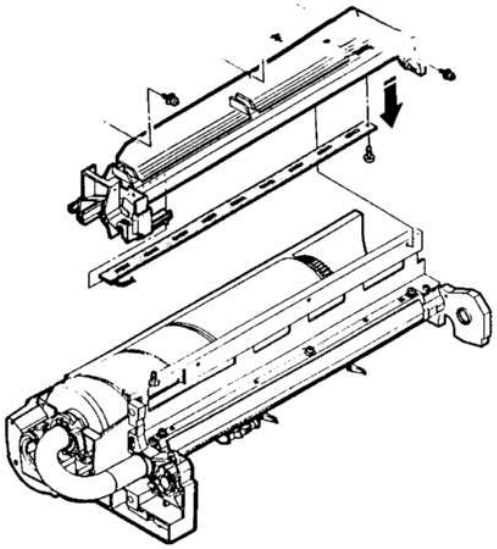

6-6. Cleaner blade (Replace every 50K copies.)

① Remove the holder from the process unit. (3 blue screws)

② Remove the cleaning blade. (3 blue screws)

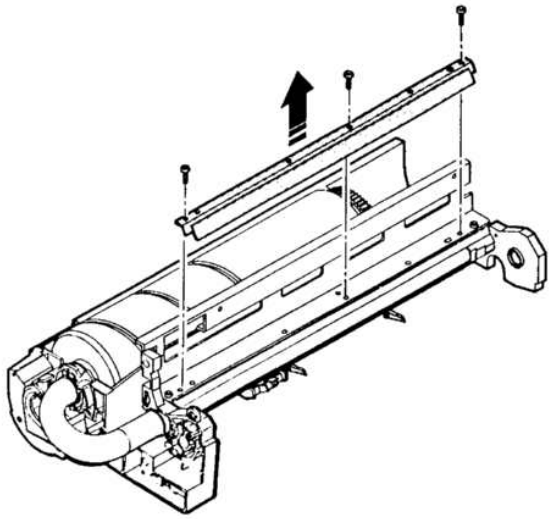

6-7. Drum separation pawl (Replace every 50K copies.)

Slide and remove the blue pin to remove the separation pawl. Replace the star-shape washer with a new one if it is worn down.

6-8. Process control PWB (Clean the sensor section every 50K copies.)

① Remove the holder from the process unit (3 blue screws), and remove the connector of the process control PWB.

② Remove the holder of the process control PWB (2 screws), and remove the PWB (2 screws).

6-9. Drum mark sensor PWB (Clean the sensor section every 50K copies.)

Remove the holder from the process unit (3 blue screws), and remove the marking sensor PWB. (1 screw).

6-10. Toner reception seal (Replace every 50K copies.)

Remove the drum and remove two screws to remove the seal.

7. Developing section

A. DV side seals F/R replacement (Replace every 120K copies.)

① Remove two screws which are connecting the hopper section and the developing unit, and separate them each other.

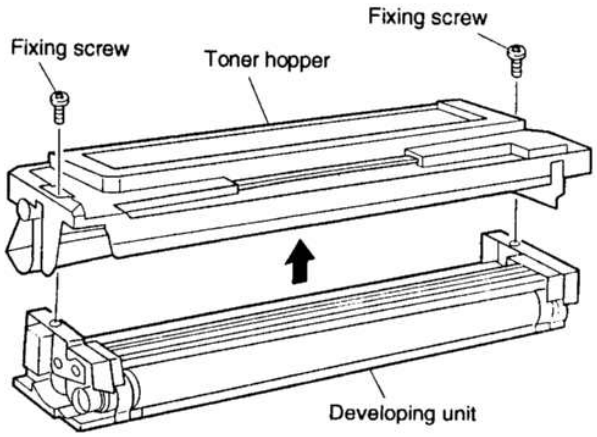

② Replace the developing unit side seals F/R as shown below.

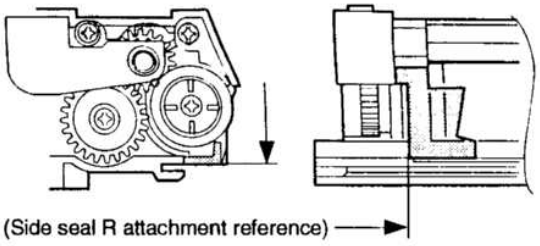

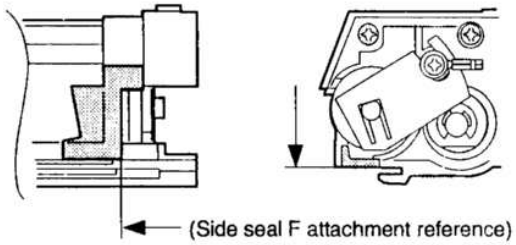

Note: Since the developing side seals are in the vicinity of the drum, be careful of peeling off and defective attachment.

B. DB blade replacement (Replace every 120K copies.)

① Remove the old DV blade from the DV cover. (Remove the duplex tape.)

② Attach the new DV blade with the pasteboard as shown below. (Attach the DV blade to the reference of A and the inscribed line (凸0.2). Do not allow extrusion from the edge. Do not allow covering the inscribed line. The allowable reference shift is within 0.5mm from the inscribed line. Attach the sheet without being wavy.

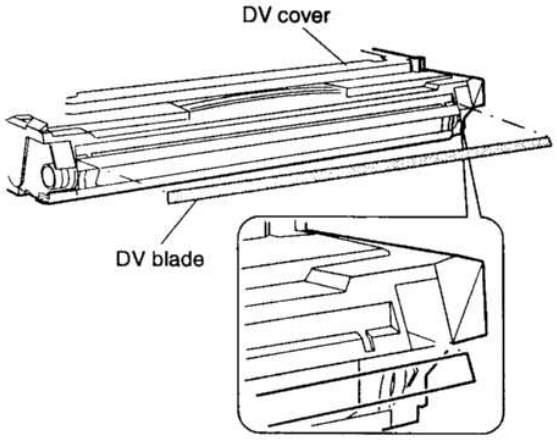

③ Remove the base pasteboard from the DV blade.

Note: If the pasteboard is not removed, the drum is scratched.

C. V ring attachment

Be careful of the direction of the V ring when attaching it to the MG roller and the MX roller.

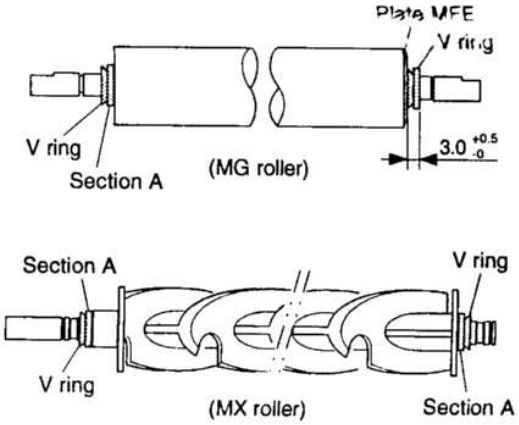

① As shown above, be careful of the direction of the V ring.

② Do not allow clearance at section (A) between the V ring and each roller.

③ Attach the MG roller and the right V ring as shown in the figure. (3.0 +0.5 -0)

※ Note: When replacing the MG roller, attach the plate MFE.

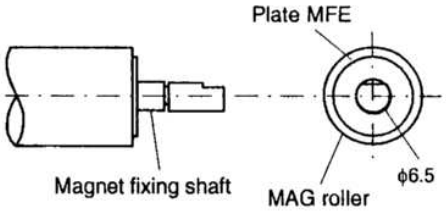

Do not allow contact between ϕ 6.5 hole in the plate MFE and the magnet fixing shaft.
Remove oil and dirt from the attachment section.

※ Note: When attaching the MG roller, put the milled surface up.

D. Note for toner hopper drive gear (31T) and stirring shaft attachment

- Be careful of the stirring shafts A and B attachment positions.

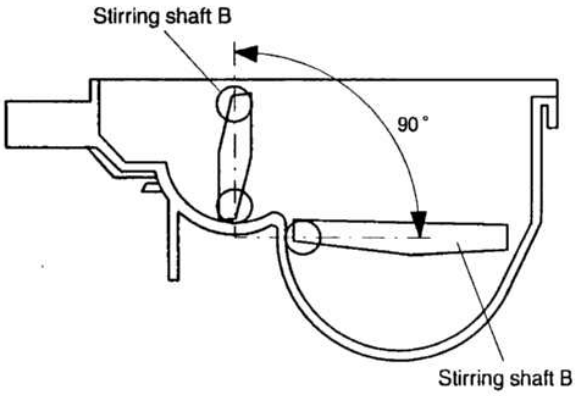

Attach so that the angle between stirring shaft A and B is 90 degrees.

- When attaching the toner hopper drive gear (31T), be careful of the E-ring stop position as shown below. (If the E ring is on the milled surface, it is apt to disengage.)

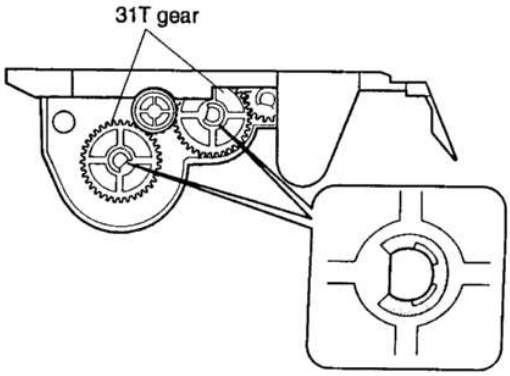

G. Developing unit color identification

Color identification is made for different resistances of the developing unit.

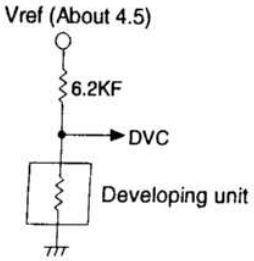

Color	Resistance (KΩ)	Identification signal voltage (DVC) [V]
Black	0	0
Red	6.2	2.25
Blue	12.0	2.97

8.Operation panel/intermediate cabinet

① Open the front cabinet.

② Remove two screws Ⓐ, two screws Ⓑ, and two harnesses connected to the operation panel unit.

② Remove the operation panel unit.

③ Remove the process cover unit, remove six screws Ⓒ and two connectors, and remove the intermediate cabinet.

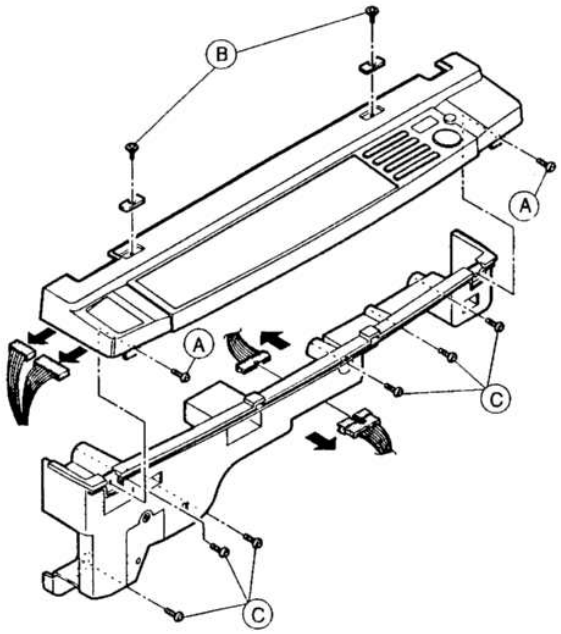

9. Frame major parts

9-1. Cooling fan motor replacement

A. Cooling fan motor removal

① Remove the original cover, the original guide, the upper cabinet left, and the upper cabinet right.

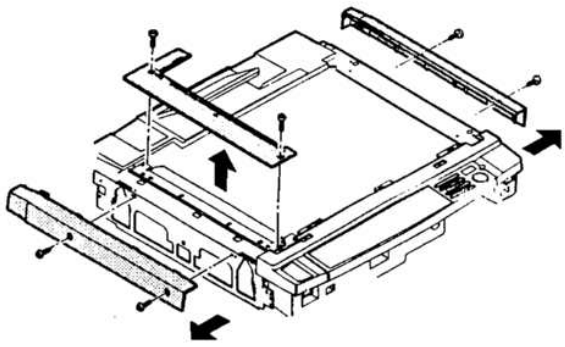

② Remove the upper cabinet and the rear cabinet.

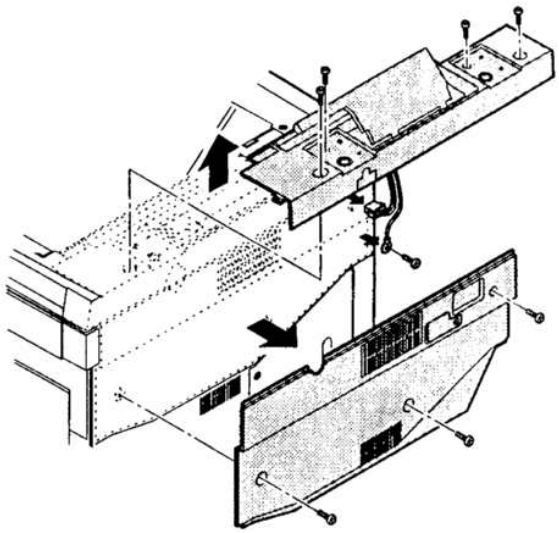

③ Remove the cooling fan from the CFM duct. (2 screws, 1 connector)

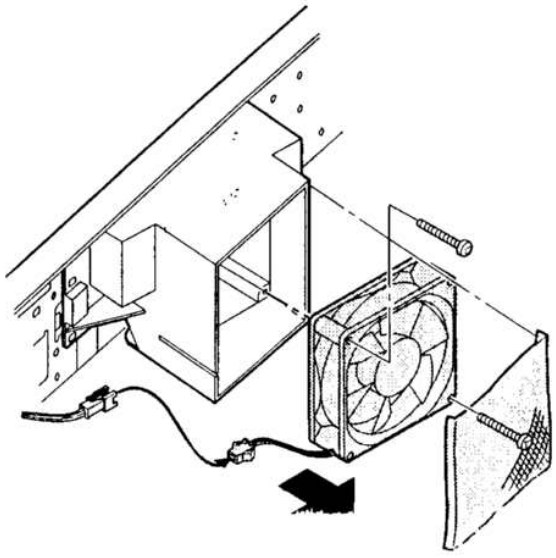

B. Cooling fan motor

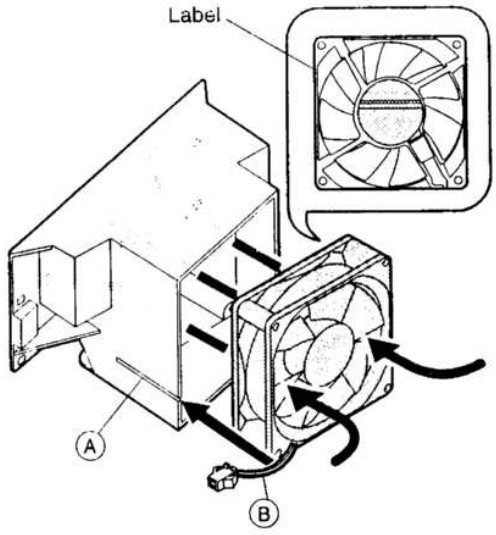

Reverse the removal procedures.

<Note> When attaching the cooling fan motor, put the harness section Ⓑ and the CFm duct groove section Ⓐ in the same direction, and pass the harness in the groove.
Check that the fan center label is on the back when viewed from the rear of the machine.
Check that air blows in the arrow direction (toward the machine).

9-2. Power unit

① Remove the rear upper and lower cabinets.

② Remove two connectors, hold the PWB fixing bush with radio nippers and slide it toward the paper exit side to remove.

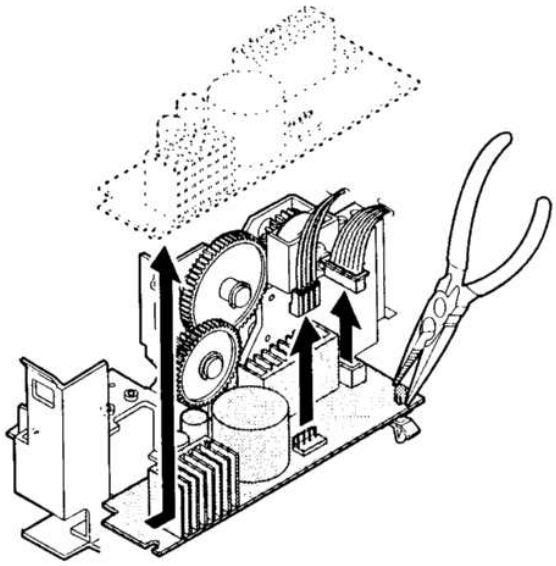

9-3. Tray size detecting PWB

① Remove the rear upper/lower cabinets.

② Remove the power unit.

③ Remove one fixing screw, one connector, and remove the tray size detection PWB.

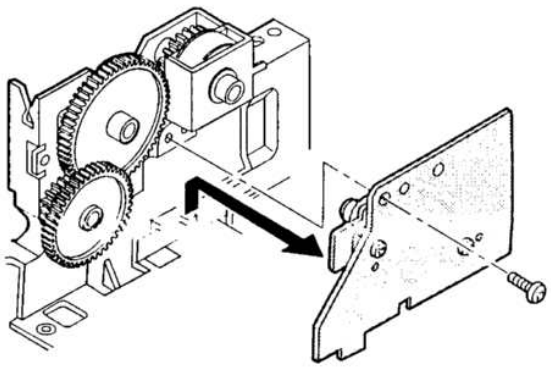

9-4. Main PWB unit

① Remove the rear cabinet upper.

② Disconnect all the connectors (6 connectors) connected to the main PWB.

③ Remove the main PWB plate (one screw).

④ Remove the main PWB from the plate. (2 screws)

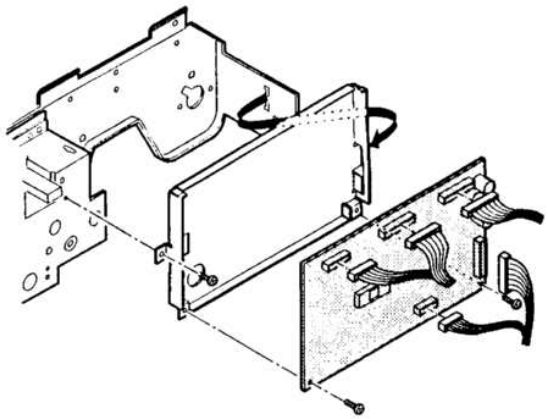

9-5. AC power PWB

① Remove the main PWB unit. (Refer to 9-3.)

② Remove the rear cabinet lower.

③ Remove all the connectors (11 connectors) of the AC power PWB and remove one grounding wire connected between the AC power PWB and the copier chassis.

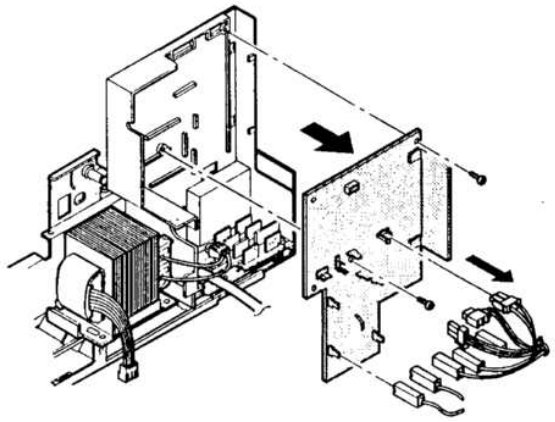

④ Remove two screws which are fixing the AC power PWB, and remove the PWB.

9-6. Ozone filter (Check every 50K copies, and clean every 100K copies.)

① Remove the upper cabinet left, and the left cabinet. (5 screws)

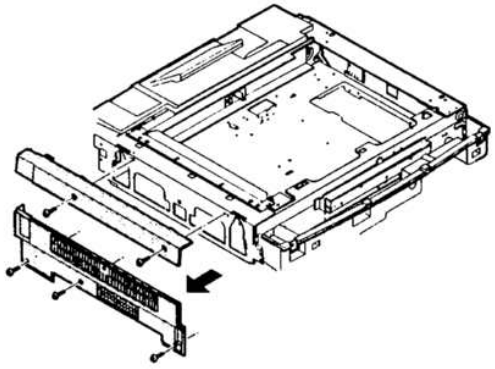

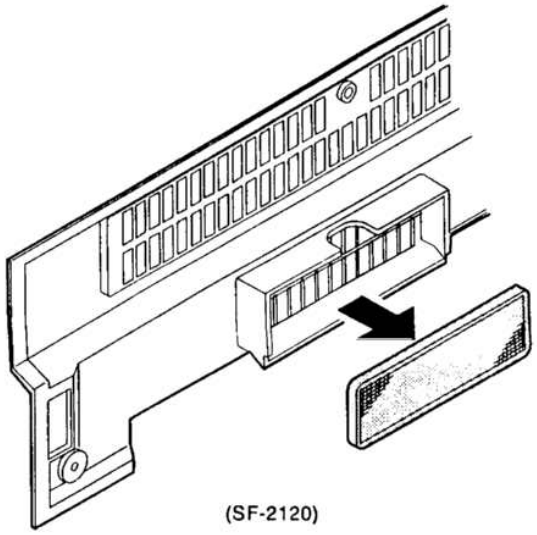

(SF-2120)

② Remove the ventilation fan motor (2 screws). (SF-2020)

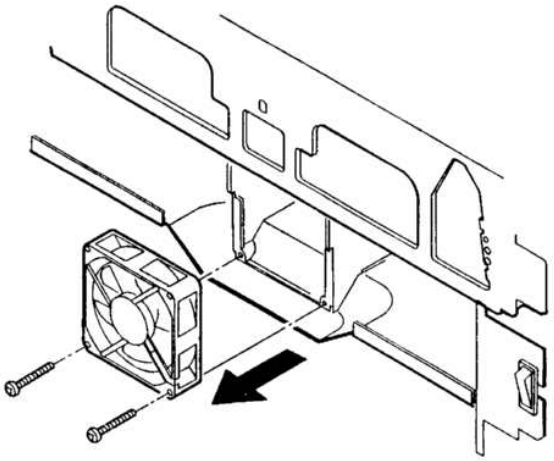

③ Remove the process unit. Insert a screwdriver from the process unit position into the copier to push out the oZone filter. (SF-2020)

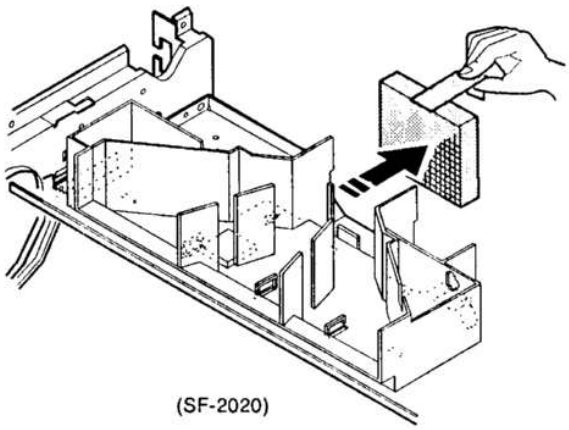

(SF-2020)

10. Multi paper feed unit (SF-MF15: option)

10-1. Separation roller

① Remove three screws and remove the paper feed/take-up roller ass'y.

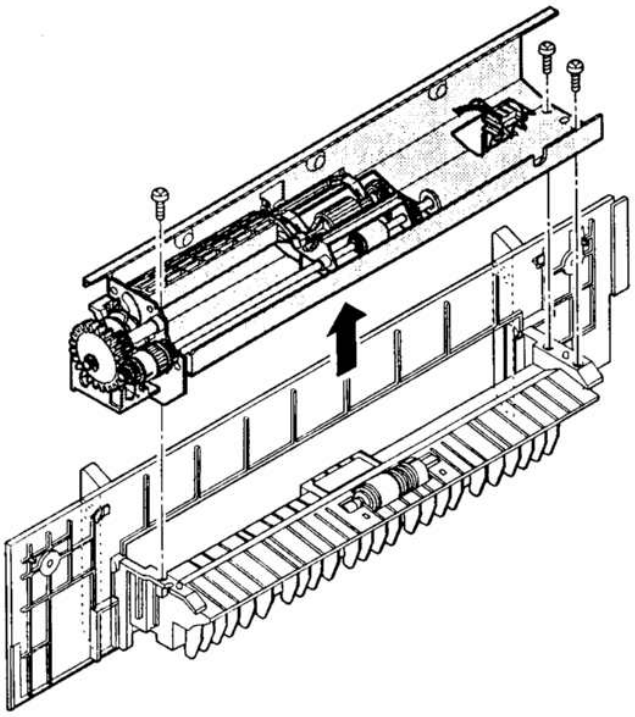

② Remove the separation roller.

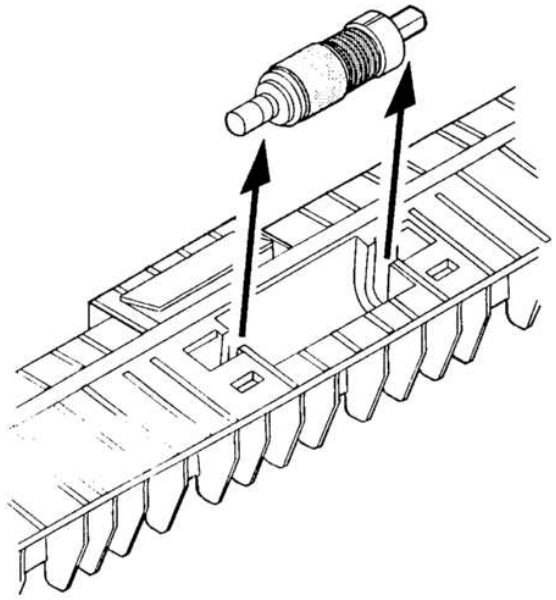

※ When attaching the roller, engage the D-cut section with the groove.

10-2. Take-up roller/paper feed roller

① Remove the manual feed arm spring, the bearing stopper, and the E-ring. (At this time, slide the bearing from the guide section in advance.)

② Lift the manual feed stopper, and remove the manual feed shaft ass'y.

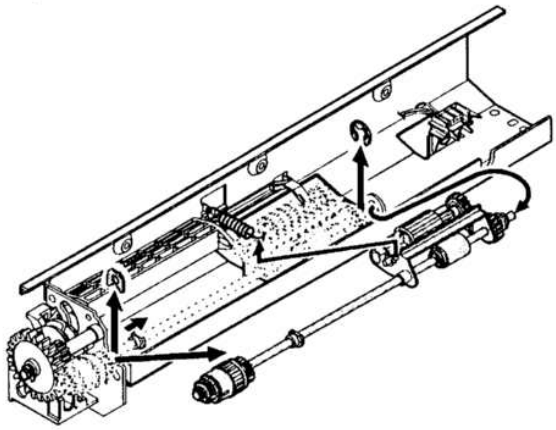

③ Remove the take-up roller.

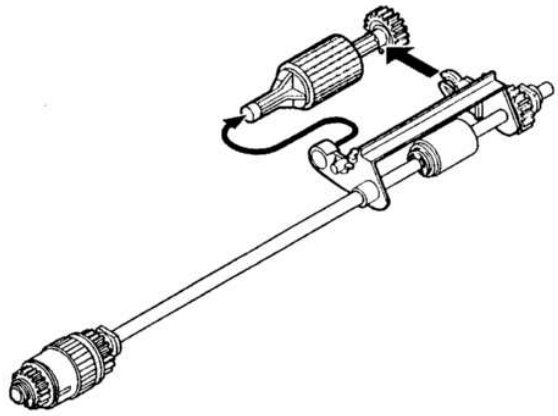

④ Remove three E-rings, and remove the manual feed shaft. then the paper feed roller will come off.

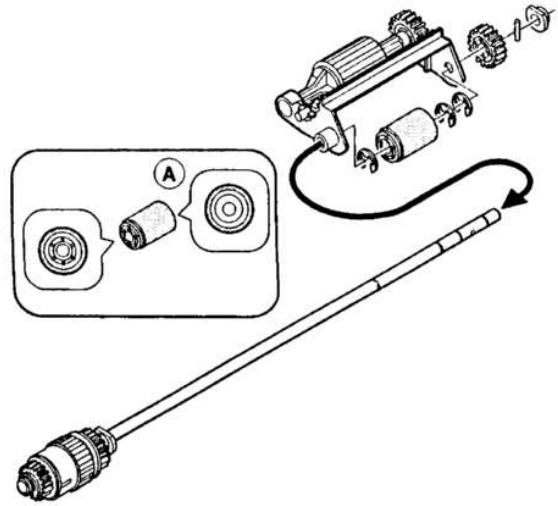

(Note for assembly)
The paper feed roller is provided with the one-way clutch, which must be installed in the proper direction. Attach so that the side where there is the one-way clutch (specified with "LOCK") is on the front frame side.

11. ADU

<Reverse roller>

① Remove the extension stopper, and remove the ADU from the copier.

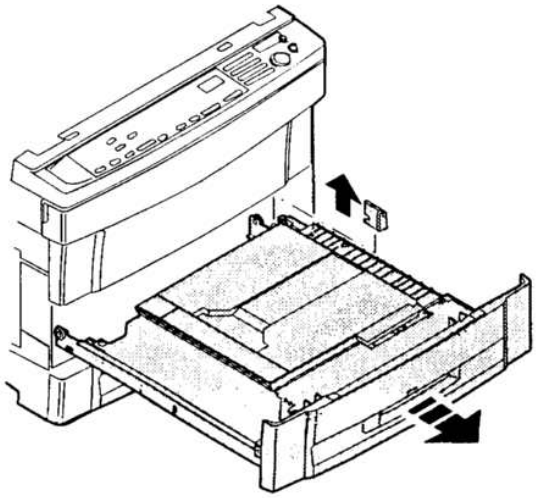

② Remove the four fixing screws (M4 × 8) of the ADU cover, and remove the ADU cover.

③ Remove the six fixing screws (M4 × 10 = 4 pcs., M4 xc 8 = 1 pc.) of the transport frame lower unit, and remove the unit from the ADU unit.
At that time, slightly lift the transport frame lower unit to disconnect the paper entry/exit sensor connector.

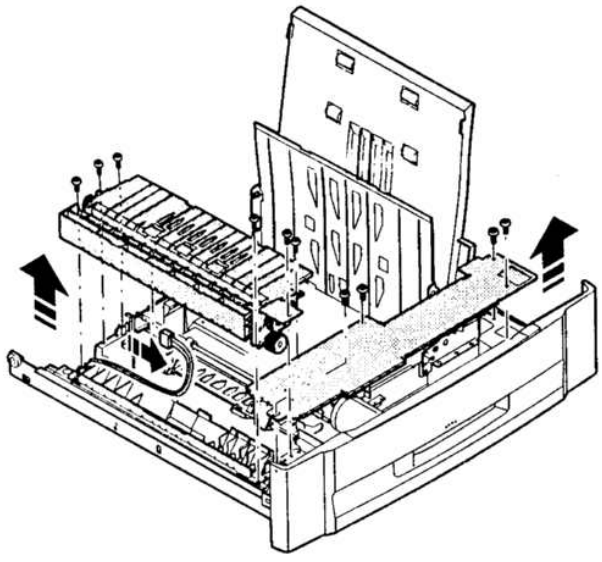

④ Remove the E-ring of the reverse roller, and remove the pressure spring.

⑤ Remove the reverse shaft fulcrum lever ass'y and slide the reverse roller shaft in the arrow direction to remove.

⑥ Remove the reverse roller.

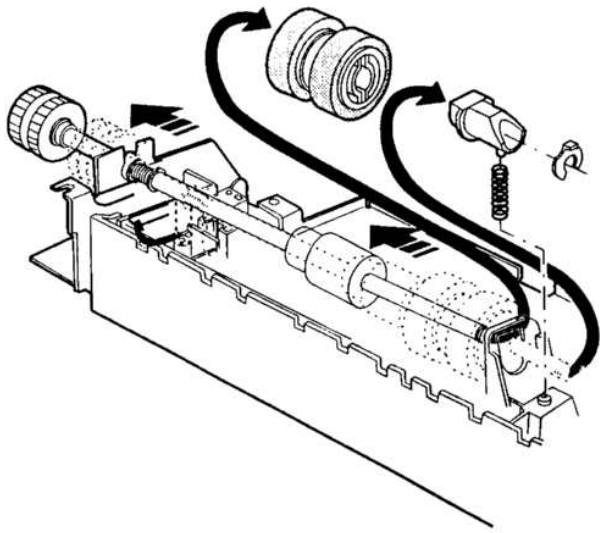

<Paper feed roller>

(Perform the same procedures for the take-up roller.)

① Remove the extension stopper, and remove the ADU unit from the copier.

② Put the ADU unit up side down. (The lower side facing up.)

③ Remove two plastic E-rings.

④ Slide the bearing in the arrow direction (inward).

⑤ Remove the paper feed roller shaft from the ADU unit.

⑥ Remove the plastic E-ring, and pull out the paper feed roller in the arrow direction.

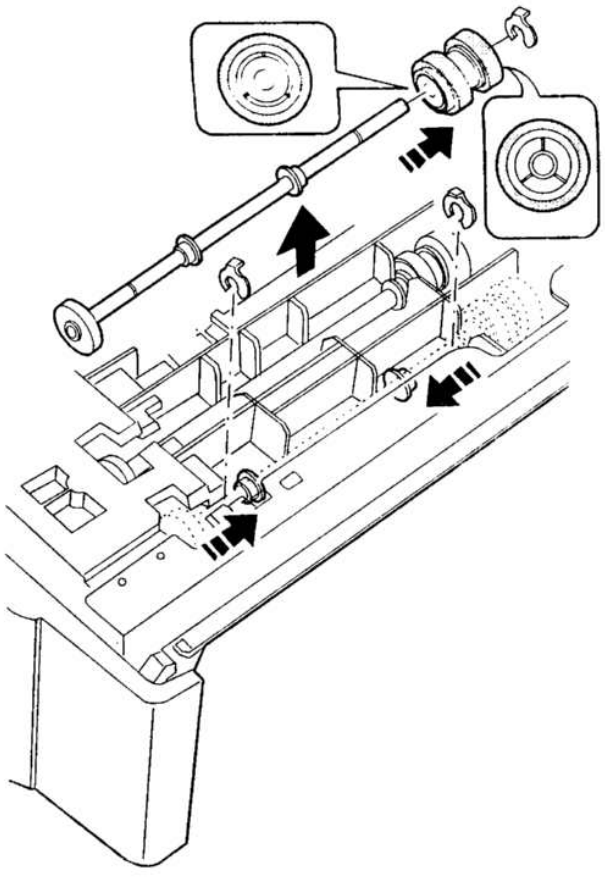

SF-2020
SF-2120

<Reverse roller>

① Remove three fixing screws (M4 × 10) of the left cabinet, and remove the left cabinet. Remove the plastic E-ring which is fixing the paper exit cabinet unit, and slide the paper exit cabinet unit in the arrow direction and remove it from the copier.

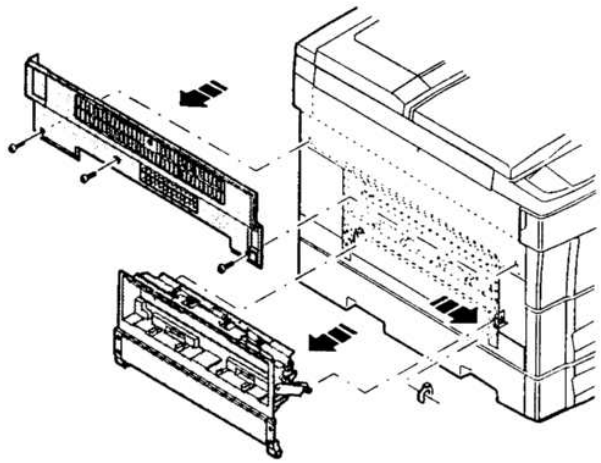

② Remove two fixing screws (M4, flat) of the paper exit cabinet unit and one fixing screw (M3 × 6) of the paper exit plate spring.

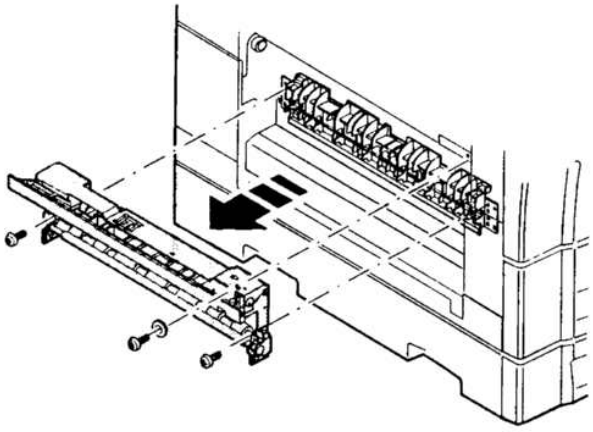

③ Remove two E-rings (7E) at the both ends of the reverse roller.

④ Remove the gear and the parallel pin (???3 × 10) from the reverse roller.

⑤ Remove two E-rings (E7) inside of the gear.

⑥ Remove two bearings at the both ends of the reverse roller.

⑦ Slide the reverse roller in the direction of Q.

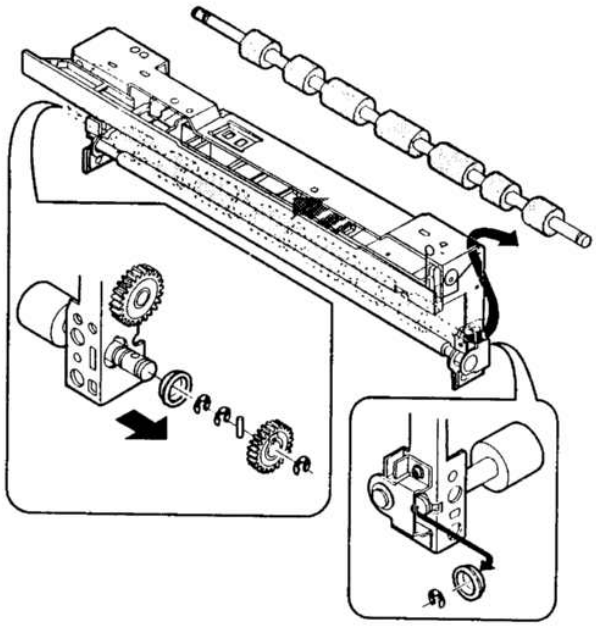

12. Paper feed unit (SF-CM15, SF-CM16, option)

This unit had two stages of paper feed section of the SF-2020 (one stage for the SF-CM16). For disassembly and assembly, refer to [5]-(1) Paper feed section.

[7] ADJUSTMENTS

1. Developing section

1-1. Developing doctor clearance adjustment

a. If the clearance between the developing doctor and the MAG roller is improper, the following trouble may occur.

- Insufficient coy density
- Background copy
- Toner splash

<Adjustment procedure>

(1) Remove the developing unit from the copier.

(2) Loosen four screws (A) which hold plate D fixed.

(3) Insert two clearance gauges of 0.6mm into the clearance between plate D and the MAG roller.

<Note> For insertion of the clearance gauges, refer to the figure below.

(4) With two clearance gauges inserted, gently press plate D and tighten four screws (A).

(5) Check that the clearances at two points 50 – 80 mm from the both ends of the developing doctor are within the specified range (0.6 ± 0.03mm).

<Note 1> When inserting the clearance gauges, be careful not to scratch the plate D and the MAG roller.

<Note 2> When adjusting or checking, be careful not to allow foreign materials (oil, etc.) to attach to the MAG roller sleeve.

(6) After adjustment, apply screw lock to the four screws (A).

* For color developing unit, use the specified value of 0.7±0.03mm for adjustment.

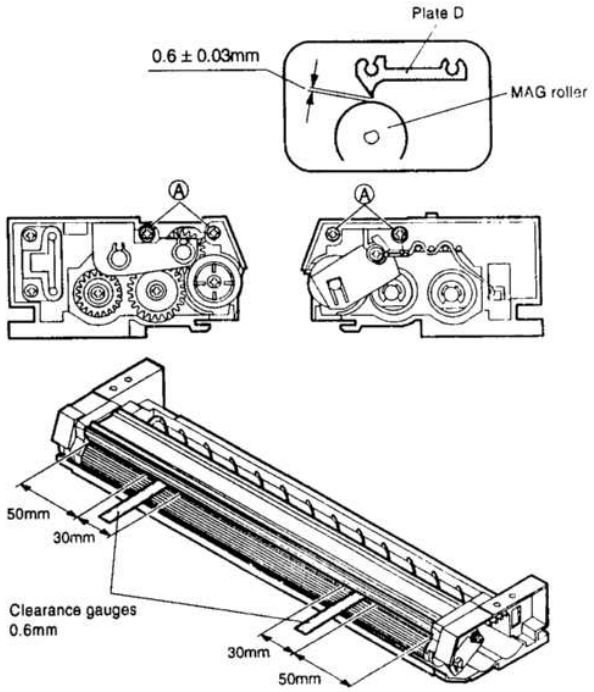

1-2. Developing magnet roller main pole position adjustment

a. If the MAG roller main pole position is improper, the following troubles may occur.

- Insufficient copy density
- Toner splash

<Adjustment procedure>

(1) Remove the developing unit from the copier.

(2) Tie a thread to a needle as shown below.

(3) Hold the thread and bring the needle close to the MAG roller.

(4) Mark the contact point of the thread on the MAG roller sleeve surface.

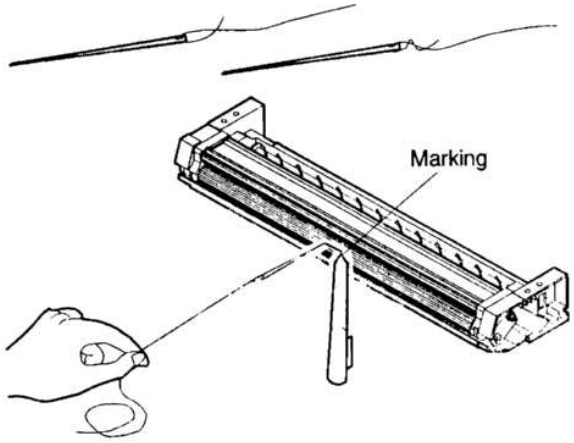

(5) Measure the distance from the marking position to the bottom (A) of the developing unit and check that the distance is 17.6mm. If the distance is not as specified above, loosen the MG adjustment plate fixing screw, move the adjustment plate in the arrow directions and perform procedures (3) to (5) again.

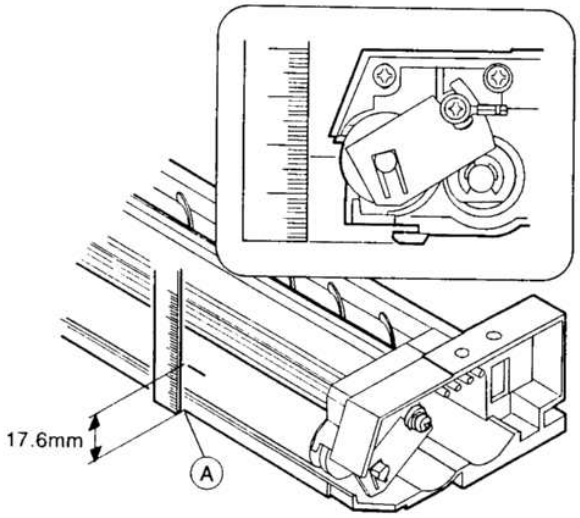

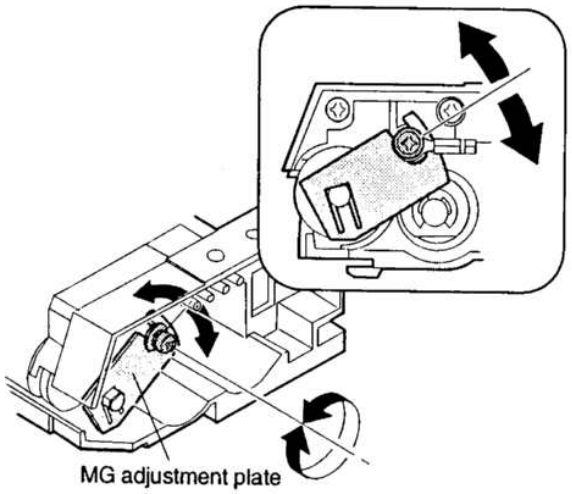

(6) After completion of adjustment, tighten the MG adjustment plate fixing screw. When tightening, check that the bias terminal is as shown below. After tightening the screw, apply screw lock to it.

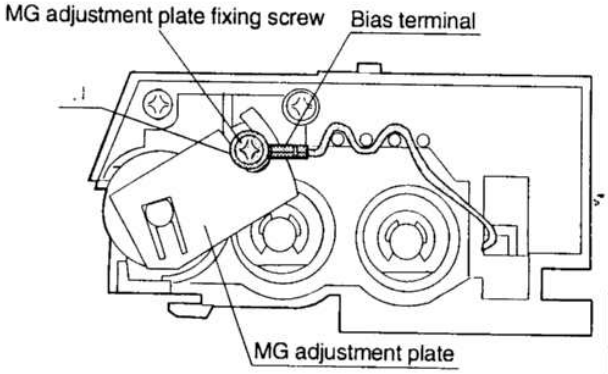

2. Optical system

2-1. Adjustment items

1. Lens reference position adjustment
2. No. 4/5 mirror reference position adjustment
3. Vertical copy magnification ratio adjustment
4. Resolution adjustment
5. Horizontal copy magnification ratio adjustment
6. Comparison table of lens values and simulation input values
7. Vertical skew adjustment
8. Horizontal skew adjustment
9. Center shift adjustment
10. Exposure balance adjustment
11. Copy lead edge adjustment

2-2. Note for adjustments

1. Only the exposure balance adjustment, the blank lamp adjustment, and the copy lead edge adjustment can be performed individually.
   For the other adjustments, follow the flowchart below.

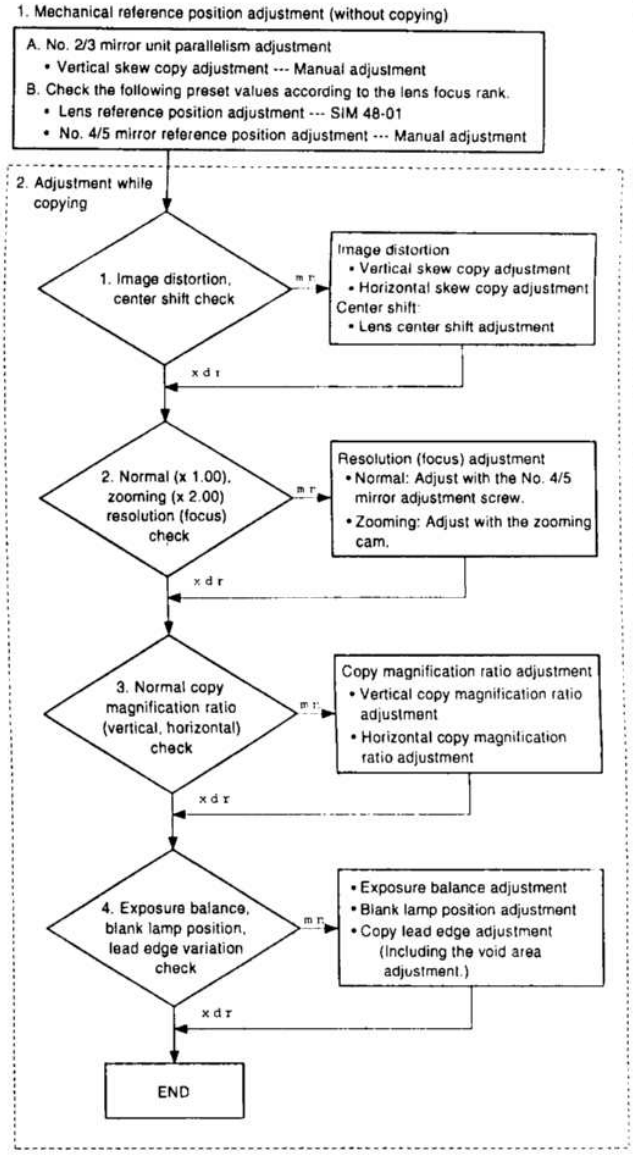

2-3. Adjustment of each section

A. Lens reference position adjustment

In this model, the reference value according to each lens characteristics must be entered. With this value, the lens home position is determined.

<Procedure>

(1) Execute simulation 48-01

- Perform the following key operation.

[C] — (=/✓) — [0/◇] — (=/✓) — [4] — [8] — [PSW] — [1] — [PSW]

"A" is dispiayed on the third digit of the copy quantity display, and the previously set value or 50 is displayed on the second and the first digits.

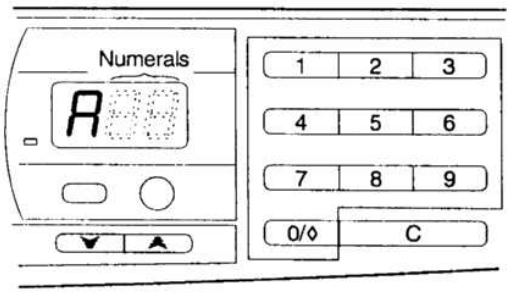

- Substitute the "O – L" value (variation in the distance between the original and the lens) on the lens value label attached to position B shown in the figure below into the following formula, and input the obtained value.

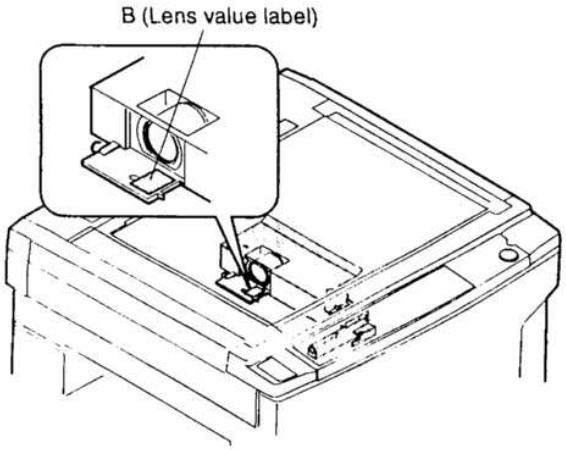

50 – {(O – L value) × 5} = Correction reference value

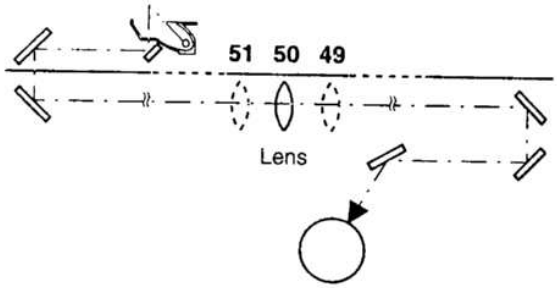

<Example> When the lens value is +1.2;
50 – (1.2 ×5) = 44 (Correction reference value = input value)

<Check after adjustment>

Be sure to check that the magnification ratio cam is at the home position as shown in the figure below.

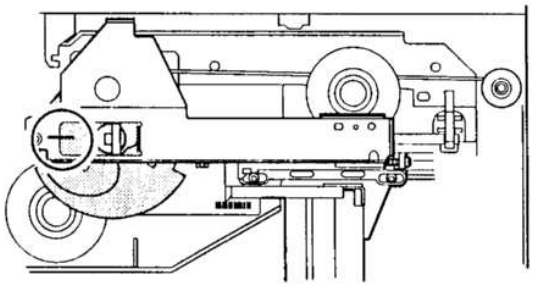

B. No. 4/5 mirror reference position adjustment

<Procedure>

(1) Remove the external fittings.

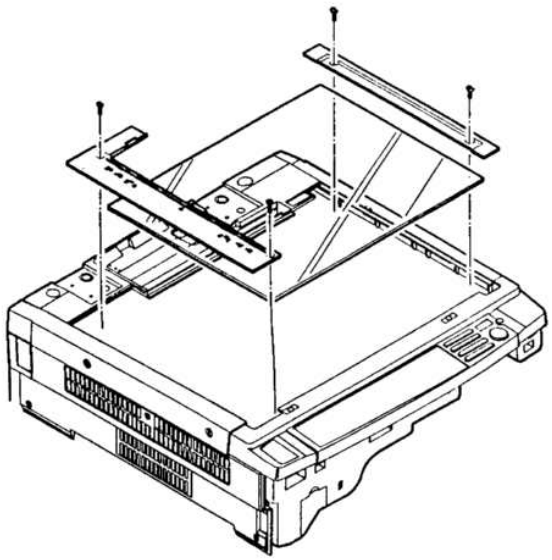

(2) Loosen two screws (A) which are fixing the No. 4/5 mirror and the No. 4/5 mirror drive holder to the No. 4/5 mirror holder.

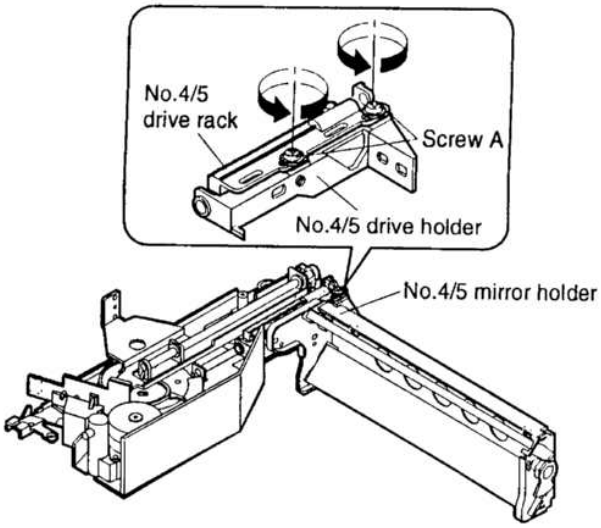

(3) Check to confirm the lens value specified on the lens value label.

(4) Insert a screwdriver into hole (P) in the right rear side (paper feed side) of the optical base plate, and adjust the adjustment screw. The scale on the zoom base at section Q in the figure below determines the position of the No. 4/5 mirror corresponding to the lens value.

<Example> When the lens value is +1.2, loosen the adjustment screw and adjust so that the arrow section of the No. 4/5 mirror drive holder points to the zoom base scale at +1.2.
Turning the adjustment screw clockwise moves the No. 4/5 mirror drive holer arrow section in the (–) direction, and turning it counterclockwise moves the arrow section in the (+) direction.

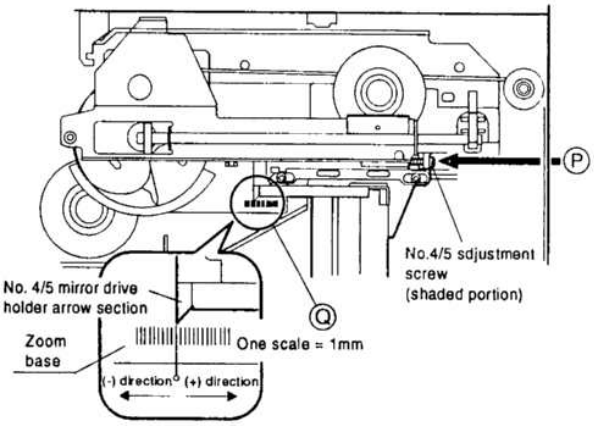

C. Vertical copy magnification ratio adjustment

Be sure to check that mirror bases A, B and C are in parallel and that the focus is proper before executing this adjustment.
This adjustment must be performed in the following cases.

- When the lens home position sensor (LHPS) is replaced or its installation position is changed.
- When the lens is replaced.
- When the mirror base is replaced or its installing position is changed.
- When the main PWB is replaced.
- When the EEPROM inside the main PWB is replaced.

<Procedure>

(1) Put a scale on the original table as shown in the figure below.

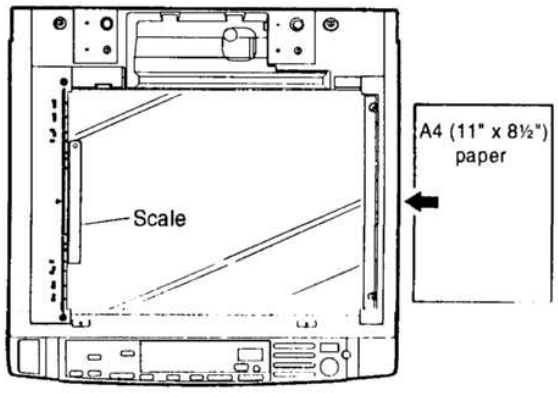

(2) Make a normal copy (100%) on an A4 (11" ×8½") paper.

(3) Compare the scale image length and the scale length.

(When a 100mm scale is used as the original.)

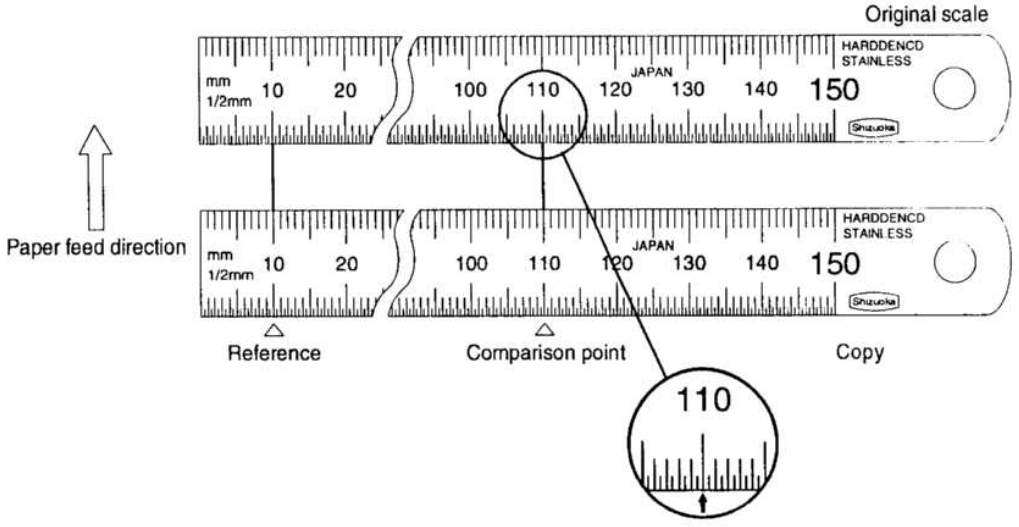

(4) Calculate the copy magnification ratio.

$$\text{Copy magnification ratio} = \frac{\text{Copy image size}}{\text{Original size} \times 100\%}$$

(5) Check that the obtained copy magnification ratio is within the specified range (100 ± 0.8%). If it is within the specified range, go to procedure (7). If not, execute simulation 48-1.

- Perform the following key operation.

[C] — [=] — [0/◇] — [=] — [4] — [8] — [PSW] — [1] — [PSW]

"A" is displayed on the third digit of the copy quantity display, and the previously set value or 50 is displayed on the second and the first digits. (Refer to "D-1. Lens reference position adjustment.")

(6) Perform the magnification ratio adjustment according to the flowchart below.

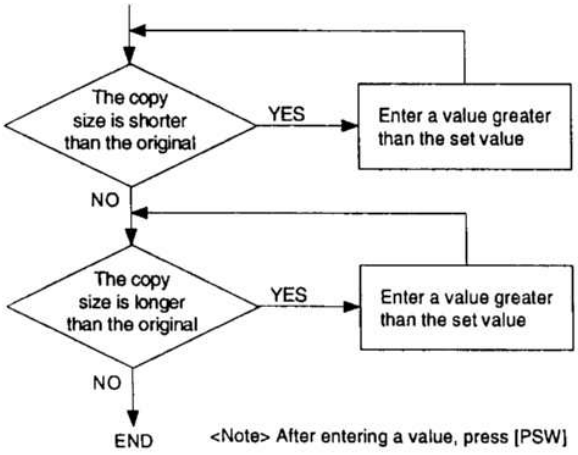

(7) Copy the scale at 200%.

(8) Check that the copy magnification ratio is within the specified range (100 ±0.9%). If it is within the specified range, go to procedure (9). If not, enter [%] key in simulation 48-1 as follows:

- Perform the following key operation.

[C] — [=] — [0/◇] — [=] — [4] — [8] — [PSW] — [1] — [PSW]

"B" is displayed on the third digit of the copy quantity display, and the previously set value of 50 is displayed on the second and the first digits.

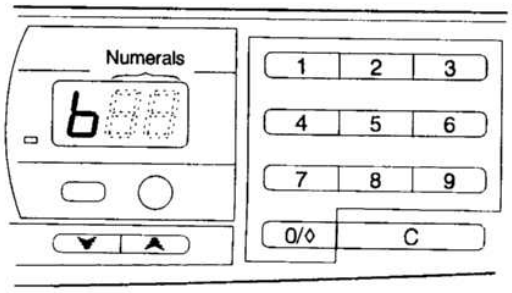

(9) Adjust the copy magnification ratio according to the flowchart shown in (6).

(10) Make a copy at 50%.

(11) Check that the copy magnification ratio is within the specified range (100 ±0.9%). If it is in the specified range, the vertical copy magnification ratio is completed. If not, enter [%] in simulation 48-1 as follows:

- Perform the following key operation.

[C] — [=] — [0/◇] — [=] — [4] — [8] — [PSW] — [1] — [PSW]

"C" is displayed on the third digit of the copy quantity display, and the previously set value or 50 is displayed on the second and the first digits.

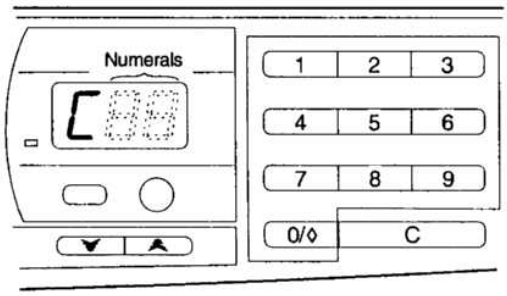

(12) Adjust the copy magnification ratio according to the flowchart shown in (6).

D. Resolution adjustment (Focus adjustment)

① Normal copy ratio focus adjustment

(1) Check the "O.L value" on the lens value label of the lens unit, and fit the reference position of No. 4/5 mirror. (Use the No. 4/5 mirror adjustment screw for positioning. Loosen screw A at this time.)

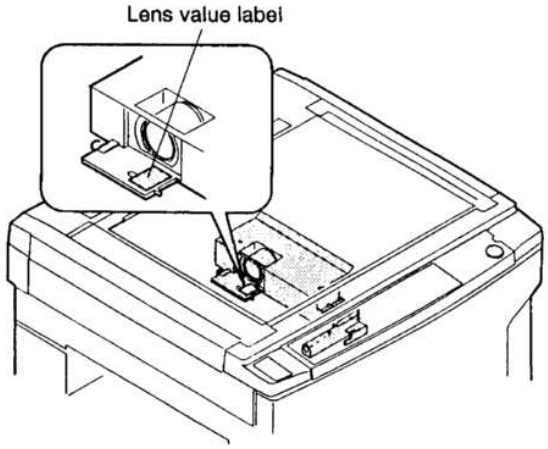

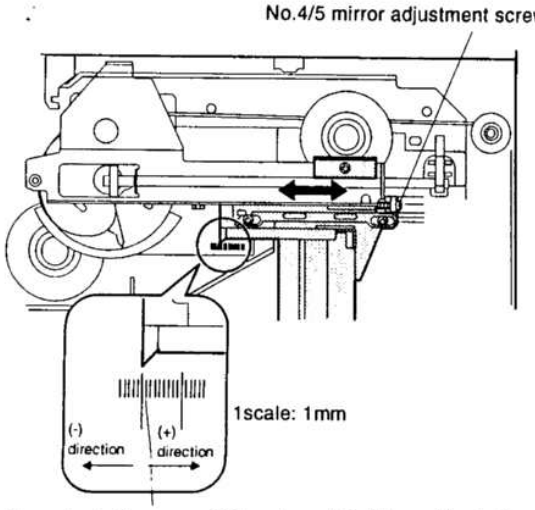

Example: In the case of O.L value +1.0, this position is the reference position.

(2) Turn off/on the power to initialize the lens and No. 4/5 mirror unit. Check the focus in the normal ratio.

(3) If the focus is improper, perform the focus adjustment of the normal ratio as follows:

(3)-1 Make a copy of the test chart on an A4 or 8 1/2″ × 11″ paper.

(3)-2 Check the resolution at the four corners and the center of the copy image. If the resolutions are within the specified range, the adjustment is completed. If not, adjust No. 4/5 mirror adjustment screw. (Loosen screw A at that time.)

(3)-3 If the resolutions are not within the specified range, use the No. 4/5 adjustment screw to adjust. (Loosen screw A at this time.)

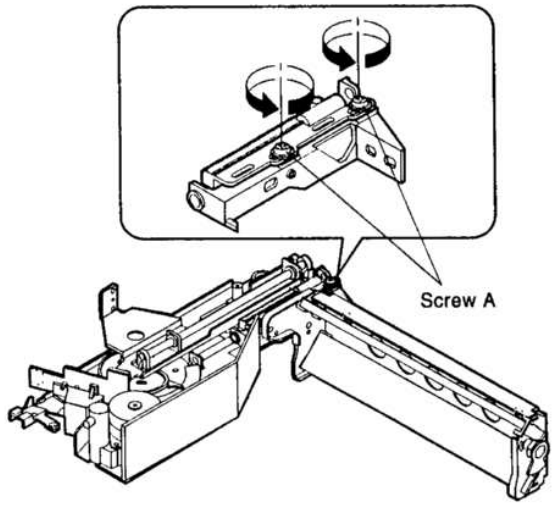

(4) Turn off/on the power to initialize the lens and No. 4/5 mirror unit. Check the focus in the normal ratio again.

Resolution standards (Unit: lines/mm)

	Copy center	Corners
Normal (100%)	5.0	4.5
Enlargement (200%)	5.0	4.5
Reduction (50%)	3.2	2.8

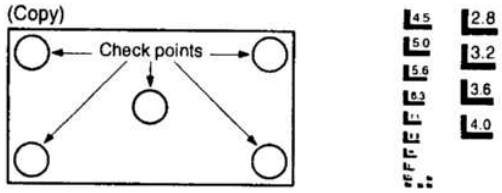

② Perform the focus adjustment in the enlargement mode (200%).

(1) Make a copy of the test chart on an A4 or 8 1/2″ × 11″ paper.

(2) Check the resolution at the four corners and the center of the copy image. If the resolutions are within the specified range, the adjustment is completed. If not, adjust by shifting the relative position of the zooming can to the drive cam.

(3) Turn off/on the power to initialize the lens and No. 4/5 mirror unit. Check the focus in the enlargement mode again.

Resolution standards (Unit: lines/mm)

	Copy center	Corners
Normal (100%)	5.0	4.5
Enlargement (200%)	5.0	4.5
Reduction (50%)	3.2	2.8

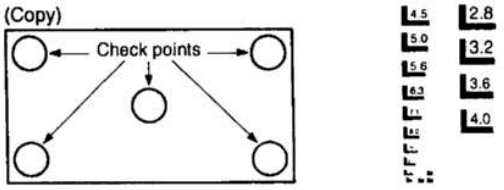

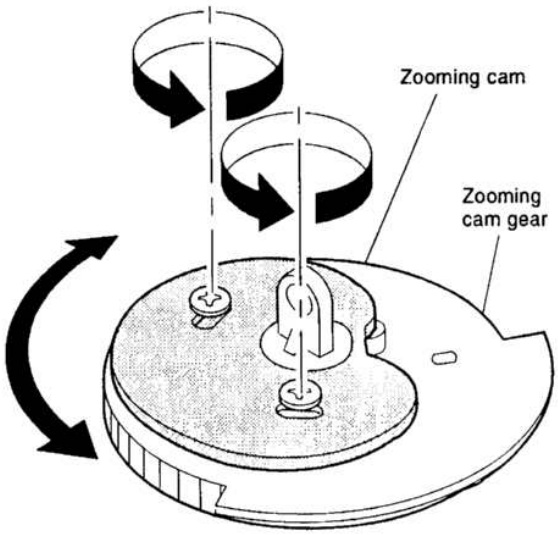

*Do not move the zooming cam gear at this time.

③ When the zooming can position is changed in ②, check the focus in the normal mode again. If the resolutions are out of the specified range, perform the focus adjustment in the normal mode again.

* Repeat ② and ③ until the proper focus is obtained in the normal mode and the enlargement mode (200%).

E. Horizontal copy magnification ratio adjustment

a. This adjustment is performed to meet the displayed magnification ratio with the actual one.

b. This adjustment must be performed in the following cases:

- When the main PWB is replaced.
- When the EEPROM in the main PWB is replaced.
- When the mirror motor is replaced.
- When self diag. U2 occurs.

The scanning speed of the mirror base is changed to adjust the horizontal (paper transport direction) copy magnification ratio.

<Adjustment procedure>

(1) Put a scale on the original table as shown in the figure below, and execute simulation 48-02. The machine starts warming up and the ready lamp lights up. At the same time, the previously set value (1 ~ 99) is displayed. Under this state, make a normal copy and calculate the copy magnification ratio.

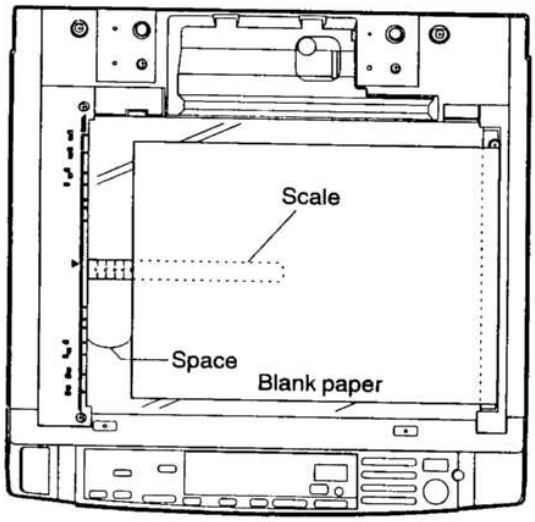

(2) Replace the displayed value with the copy magnification ratio correction rate obtained in (1).
(Input value) = (Previously set value) / (Copy magnification ratio correction rate [%]) ×10

(Example) When the previously set value is 25, the input values of examples 1 and 2 are as follows:

- Example 1: 35 = 25 + (1 × 10)
- Example 2: 15 = 25 + (−1 × 10)

Enter the input value and press the print switch. The value is stored and the ready lamp lights up.

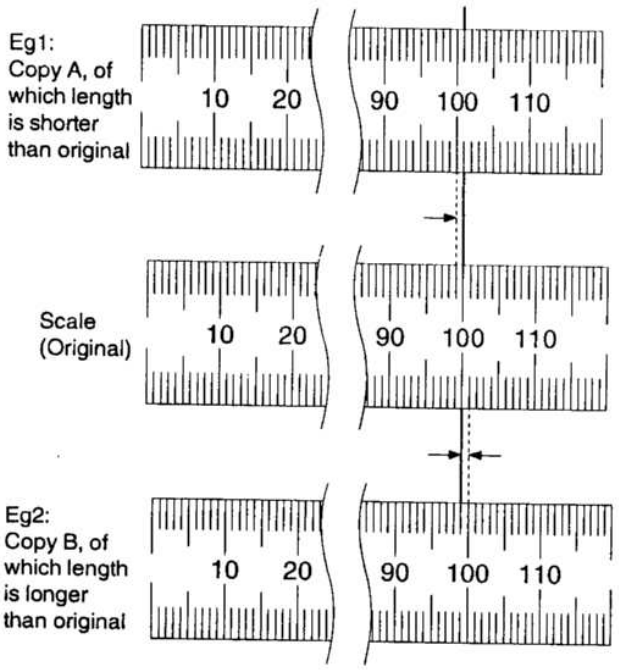

(3) Cancel simulation 48-02.

Note: Input correction can be made in the range of 1 – 99 (simulation set range).

F. Comparison table of lens values and simulation input values

Lens display value	Sim 48-01	Zoom correction (Enlargement) Sim 48-01 — [%]	Zoom correction (Reduction) Sim 48-01 — [%] — [%]
+4.0	30	70	70
+3.9	31	69	69
+3.8	31	69	69
+3.7	32	68	68
+3.6	32	68	68
+3.5	33	67	67
+3.4	33	67	67
+3.3	34	66	66
+3.2	34	66	66
+3.1	35	65	65
+3.0	35	65	65
+2.9	36	64	64
+2.8	36	64	64
+2.7	37	63	63
+2.6	37	63	63
+2.5	38	62	62
+2.4	38	62	62
+2.3	39	61	61
+2.2	39	61	61
+2.1	40	60	60
+2.0	40	60	60
+1.9	41	59	59
+1.8	41	59	59
+1.7	42	58	58
+1.6	42	58	58
+1.5	43	57	57
+1.4	43	57	57
+1.3	44	56	56
+1.2	44	56	56
+1.1	45	55	55
+1.0	45	55	55
+0.9	46	54	54
+0.8	46	54	54
+0.7	47	53	53
+0.6	47	53	53
+0.5	43	52	52
+0.4	48	52	52
+0.3	49	51	51
+0.2	49	51	51
+0.1	50	50	50
0	50	50	50
−0.1	50	50	50
−0.2	51	49	49
−0.3	51	49	49
−0.4	52	48	48
−0.5	52	48	48
−0.6	53	47	47
−0.7	53	47	47

Lens display value	Sim 48-01	Zoom correction (Enlargement) Sim 48-01 — [%]	Zoom correction (Reduction) Sim 48-01 — [%] — [%]
−0.8	54	46	46
−0.9	54	46	46
−1.0	55	45	45
−1.1	55	45	45
−1.2	56	44	44
−1.3	56	44	44
−1.4	57	43	43
−1.5	57	43	43
−1.6	58	42	42
−1.7	58	42	42
−1.8	59	41	41
−1.9	59	41	41
−2.0	60	40	40
−2.1	60	40	40
−2.2	61	39	39
−2.3	61	39	39
−2.4	62	38	38
−2.5	62	38	38
−2.6	63	37	37
−2.7	63	37	37
−2.8	64	36	36
−2.9	64	36	36
−3.0	65	35	35
−3.1	65	35	35
−3.2	66	34	34
−3.3	66	34	34
−3.4	67	33	33
−3.5	67	33	33
−3.6	68	32	32
−3.7	68	32	32
−3.8	69	31	31
−3.9	69	31	31
−4.0	70	30	30

G. Vertical skew adjustment

a. This adjustment is performed when a skew copy is made as shown below or when a part of the mirror base drive wire or the No. 1/2 mirror base is replaced.

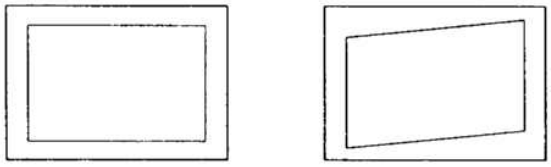

<Adjustment procedure>

(1) Put an A3 (11" ×17") white paper on the original glass neatly to the glass holding plate and the front frame side as shown below.

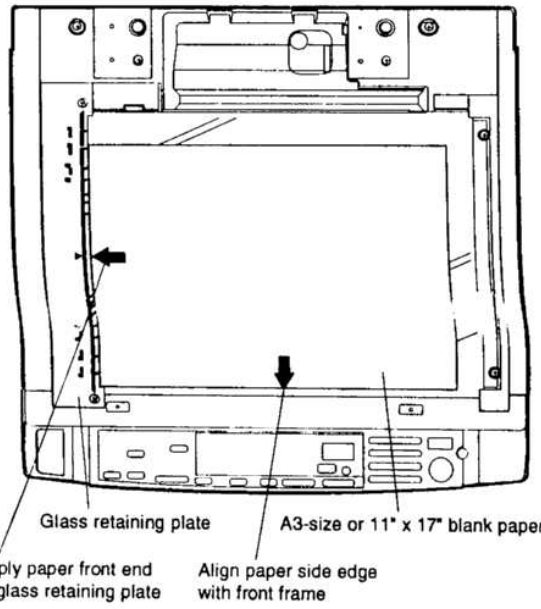

(2) With the original cover open, make a normal (100%) copy on an A3 (11" ×17") white paper.

(3) Measure the width of the black background at the front side and the rear side.

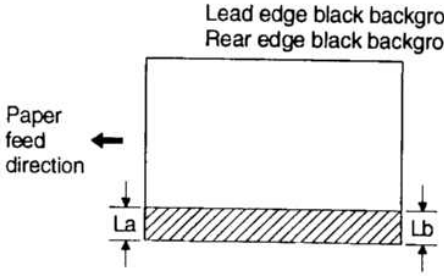

(4) Loosen the fixing screw of the rear frame side mirror base drive pulley.
When La > Lb, rotate the rear frame side mirror base drive pulley in the arrow direction A. (Do not move the flange and the mirror base drive pulley shaft.)
When La < Lb, rotate the rear frame side mirror base drive pulley in the arrow direction B. (Do not move the flange and the mirror base drive pulley shaft.)

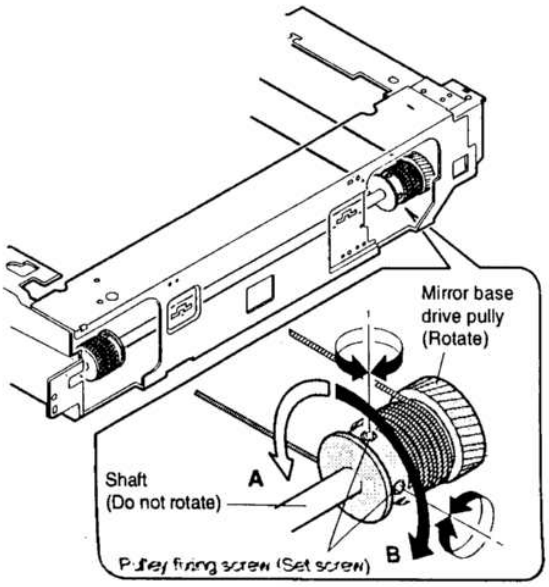

(5) Tighten the fixing screw of the mirror base drive pulley.

(6) Perform procedures (1) ~ (3).

(7) If La=Lb is not satisfied, perform procedures (4) and (5). (If La=Lb, the adjustment is completed.)
Repeat procedures (1) ~ (6) until La=Lb is satisfied.

H. Horizontal skew adjustment

a. This adjustment is performed in the following cases:

- When a horizontal skew is made.
- When the mirror base drive wire is replaced or its installing position is changed.
- When the No. 1/2 mirror base is replaced or its installing position is changed.
- When the No. 2/3 mirror base rail is replaced or its installing position is changed.

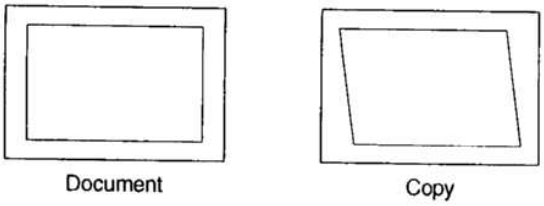

<Adjustment procedure>

(1) Make an original for adjustment.
Draw parallel lines at 10cm from the both edges of an A3 or 11" × 17" white paper. (Be careful to draw precisely parallel lines.)

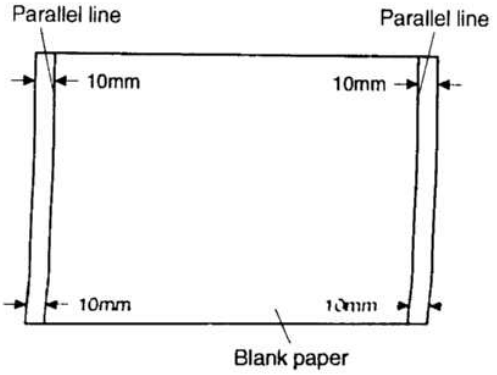

(2) Set the adjustment original made in (1) as shown below.

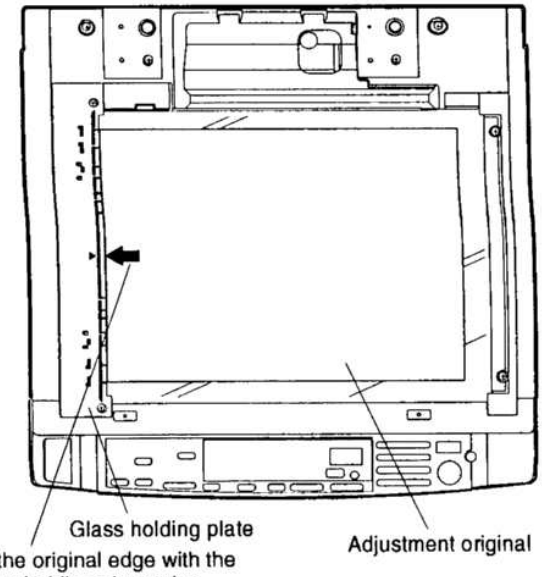

(3) Make a normal (100%) copy on an A3 or 11" × 17" white paper.

(4) Measure the distances at four points as shown below:

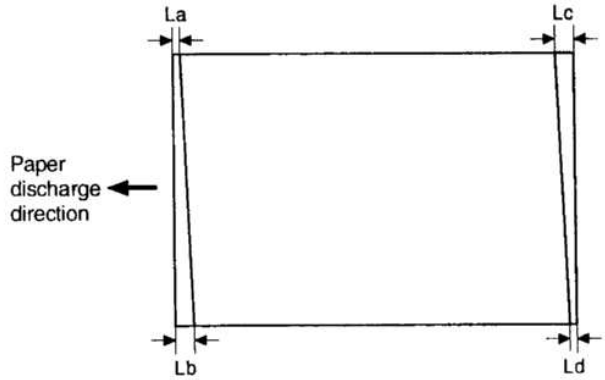

Adjustment procedure (1)

When La>Lb (Lc<Ld): Rotate to increase the height of the front frame side of the No. 4/5 mirror base unit.

When La<Lb (Lc>Ld): Rotate to decrease the height of the front frame side of the No. 4/5 mirror base unit.
Open the front cabinet, insert a screwdriver as shown below, and turn the eccentric screw to adjust the height of the No. 4/5 mirror base.

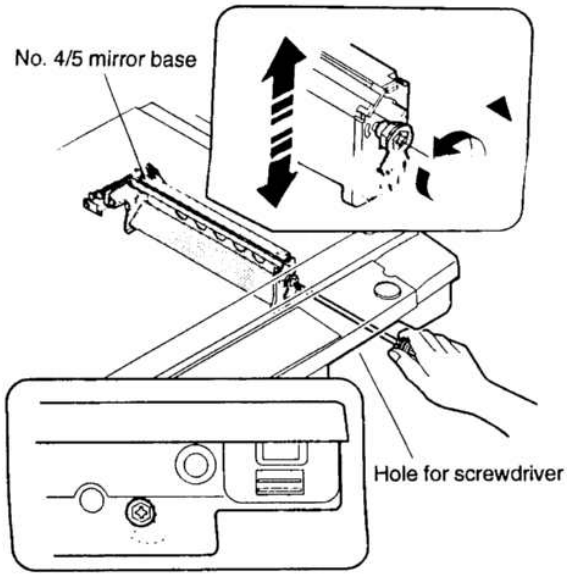

<Note> When turning the eccentric screw, remember how much it is rotated from the original position. When the eccentric screw is turned 36 degrees, the height of the front frame side of the No. 4/5 mirror base is increased or decreased by 2mm and the difference (La – Lb) is varied by 4mm.

If the above adjustment is not effective, then follow the Adjustment procedure (2) .

Adjustment procedure (2)

① Move the mirror base rail B up and down in the arrow directions to adjust.

- When La > Lb, shift the mirror base B rail upward by half of the difference of La – Lb.
- When La < Lb, shift the mirror base B rail downward by half of the difference of La – Lb.

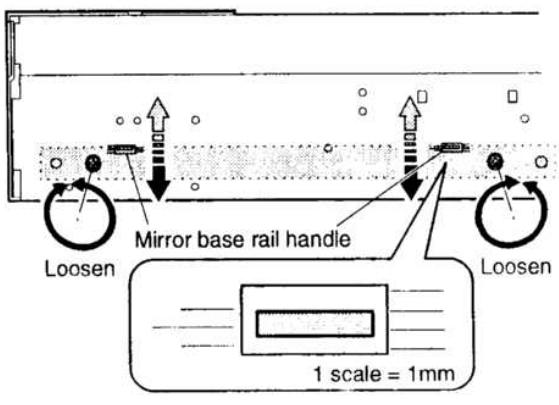

(Example) When La=12mm and Lb=9mm, shift the paper exit side mirror base B rail upward by 1.5mm.

- When Lc > Ld, shift the mirror base B rail downward by half of the difference of Lc – Ld.
- When Lc < Ld, shift the mirror base B rail upward by half of the difference of Lc – Ld.

(When moving the mirror base rail, hold the mirror base rail handle.)

② Adjust according to procedure (1) so that La=Lb and Lc=Ld are satisfied.

③ After completion of the adjustment, turn the mirror base drive pulley manually to full scan mirror base A and mirror base B, and check that the mirror bases are not brought into contact with each other.

(Note) When the mirror bases are moved extremely, they may be brought into contact. Carefully avoid it.

I. Center shift adjustment

a. This adjustment must be performed in the following cases:

- The copy (100%) center is shifted from the original center more than 2mm.
- When any part of the lens rail or the lens unit is replaced.

<Adjustment procedure>

(1) make a test chart for center position adjustment. (Refer to the figure below.)

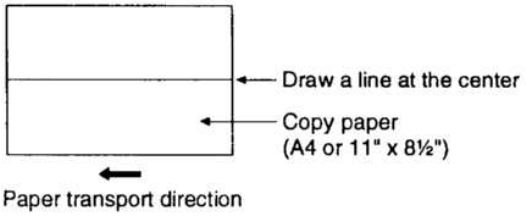

(2) Set the test chart for the center position adjustment to the document reference line, and make a normal (100%) copy with an A4 or 11" × 8½" paper.

(3) Check that the copied image line is at the center of the copy paper.

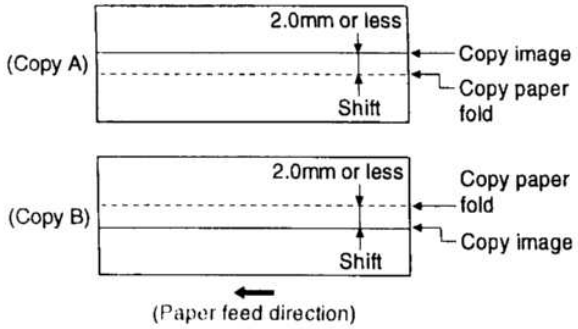

(4) If the error of the copy image line is within the specified range (0±2.0mm), the adjustment is not required. If not, perform the following procedures.

(5) Remove the document reference plate and the right upper side cabinet, and remove the document table glass.

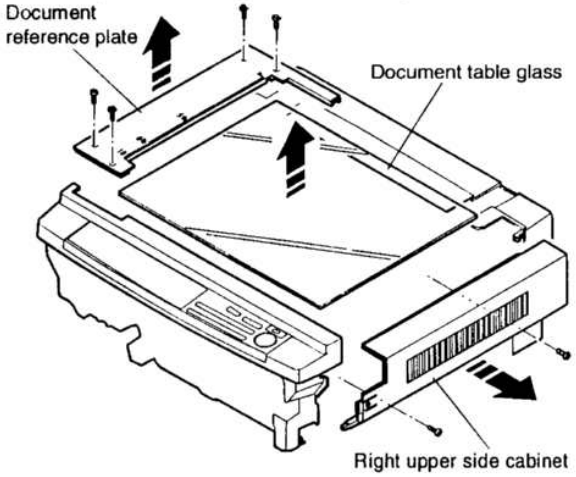

(6) Loosen the three fixing screws of the optical system unit and slide the optical system unit to adjust the center position.

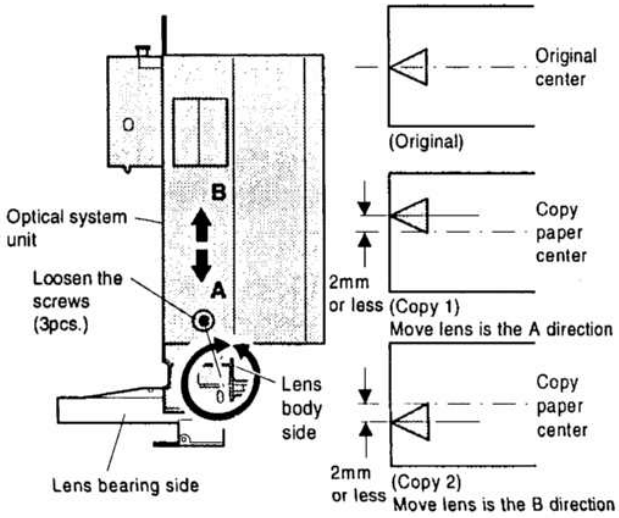

(7) After adjustment, set the removed parts in the reversed sequence. make a copy of the test chart to check that the center shift is within the specified range (0 ±2.0mm). If the center shift is within the specified range, the adjustment is completed. If not, repeat procedures (2) – (7) until it is within the specified range.

J. Exposure balance adjustment

a. This adjustment is to provide uniform exposure, and must be performed in the following cases:

- When the reflector is replaced.
- When the copy lamp is replaced.
- When the exposure adjustment plate is replaced.

<Adjustment procedure>

(1) Set a half tone paper on the original table and make a half tone copy at 100%.

(2) If the exposure of the half tone copy is uniform, the adjustment is not required. If it is varied as shown below, perform the following procedures.

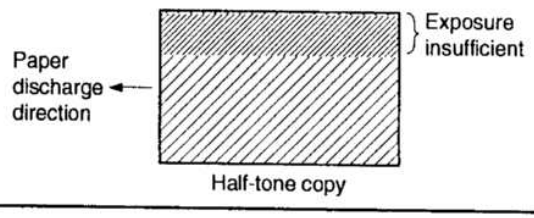

(3) Remove the original reference plate and the right upper side cabinet, and remove the original table glass.

(4) Move the exposure plates a, b, c, and d in arrows directions A and B to adjust exposure. Moving the plates in the direction of arrow A makes the copy darker, and moving in the direction of arrow B makes the copy lighter.

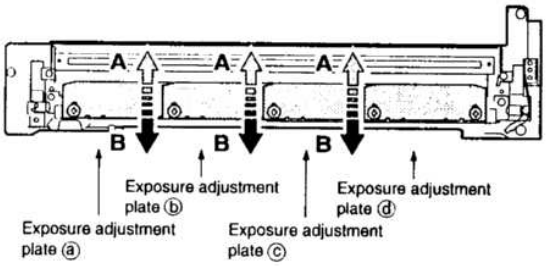

(Example) If the half tone copy is as shown below, move the exposure adjustment plate a in the direction of arrow B to balance exposure.

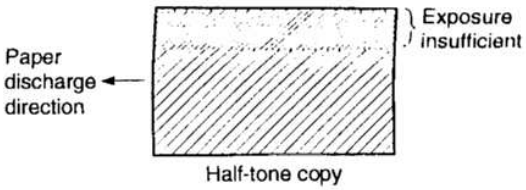

(5) After adjustment, set the original table glass. Make a copy to check uniformity of copy density. If the copy exposure is not uniform, repeat procedures (1) – (5).

K. Copy lead edge adjustment

a. This adjustment is performed to provide the maximum effective copy size and the proper void area, improving separation in the photoconductor section and the fusing section and reducing dirt in the fusing section pawls.

b. This adjustment must be performed in the following cases.

- When the mirror home position sensor (MHPS) is replaced or its installing position is changed.
- When the mirror base is replaced.
- When the resist roller and the resist roller clutch are replaced.
- When the main control PWB is replaced.
- When the ADF is installed or disassembled.

<Adjustment procedure>

* The copy lead edge adjustment is performed with simulation 50-01 and 50-02.

When the copy lead edge adjustment is made with simulation 50-01:

In this simulation, the following keys and the display section have special functions.

Reduction key: Makes the magnification ratio 50%.
Enlargement key: Makes the magnification ratio 200%.

- % key:
  Pressing the % key changes A → b → d → A → sequentially, and the set value corresponding to the display is displayed on the copy quantity display.
  A: RRC-A set value
  b: RRC-B set value
  C: Lead edge void amount set value
  d: Rear edge void amount set value

(The value displayed before pressing the % key is stored in the memory by pressing the zoom up key.)

Display section:
During execution of the simulation, the RRC-A value is displayed on the copy quantity display.

Top digit: Displays A, b, C, d.

Lower two digits: Displays RRC-A value, RRC-B value, or void area value.

<Adjustment procedure>

(1) Put a scale on the original table.

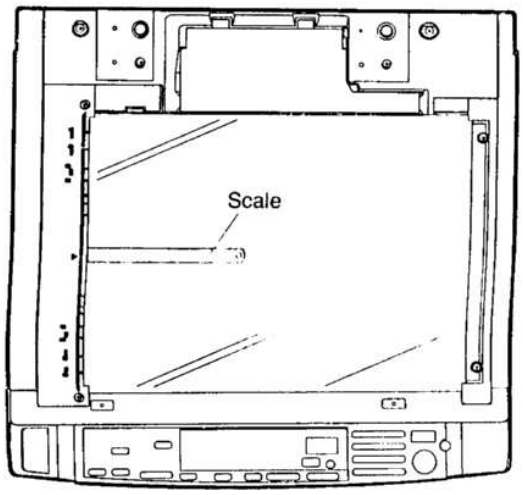

(2) Press keys as follows:

[C] → [=✓] → [0/◊] → [=✓] → [5] →
[0/◊] → [PSW] → [1] → [PSW]

Simulation 50-01 is executed and the ready lamp lights up. The previously set value (1 – 99) is displayed. (RRC-A content)

(3) Set values A and B to zero, and make copies at 100% and 200%.

- [0/◊] → [0/◊] → [% key] →
  [0/◊] → [0/◊] → [PSW] (A copy at 100% is made.)
- [Enlargement key] → (Lens shift, ready) → [PSW] (A copy at 200% is made.)

(4) Measure the distance between the copy paper lead edge and the copy image lead edge in each copy. Obtain RRC-A and RRC-B values from the following formulas.

If the RRC-A preset value is not proper, the lead edge position varies in each magnification ratio. The RRC-B is to adjust the RRC ON timing for fitting the drum image lead edge and the transfer paper lead edge.

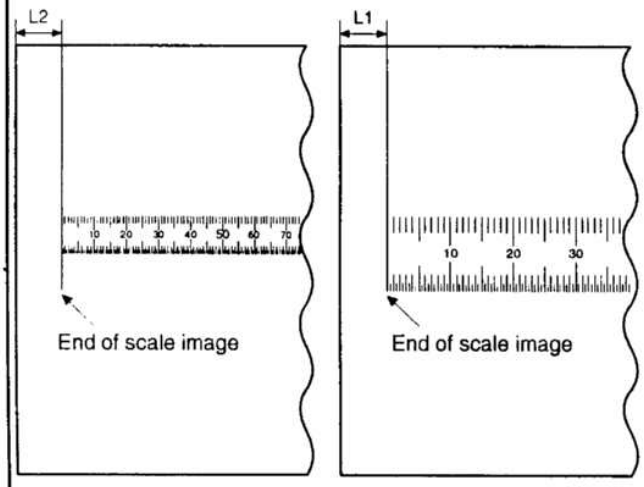

Full-size(100%) copy Enlarged(200%) copy

- La: Led edge shift at 200% (mm)
- L2: Lead edge shift at 1005 (mm)
- RRC-A = 6.151 × (L1 – L2)
- RRC-B = 15.385 × L2 – 7.692 × L1

(5) Enter the RRC-A and RRC-B values obtained from the above formulas with the 10 digit key pad in the same manner as procedure (3).

(6) Make copies at 200%, 100%, and 50%, and check variations in the magnification ratios. (About 1.0mm)
If there is a considerable variation, repeat from procedure (3).

(7) Make a normal copy and check that the lead edge image loss is within the range of 0 ~ 4mm. If the image loss is outside the above range, change the RRC-B value and adjust again until the image loss is within the above range.

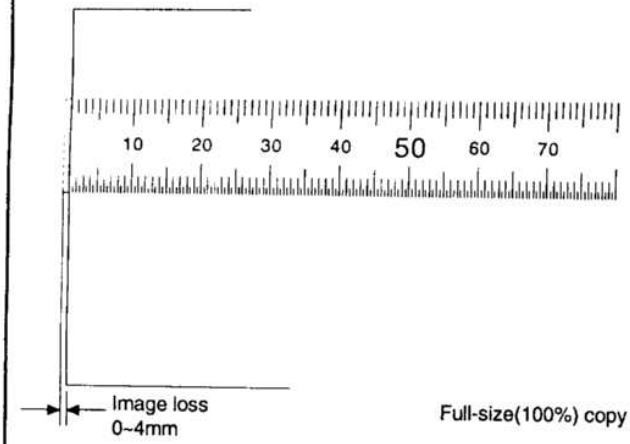

Full-size(100%) copy

Note: The above image loss range is effective only for simulation 50-01, and is not the final one.

(8) Put a scale and an A3 (11" × 17") white paper on the original table as shown below.

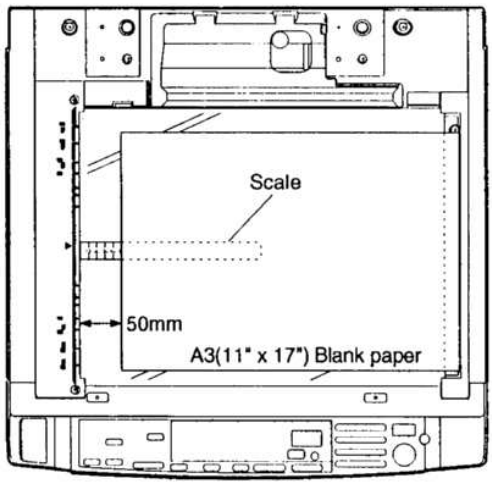

(9) Press the zoom key to display "C" in the lowest digit of the magnification ratio display. (Void amount adjustment mode)

(10) Make a copy and enter the normal copy lead edge void area adjustment set value so that the black background edge comes to the scale 1 – 3mm of the copy image scale.

□ → □ → PSW

With the above key operation, a copy is made and the adjustment value is inputted. When the adjustment value is changed by 1, the void area is changed by about 0.13mm. The greater the adjustment value is, the greater the void amount is.

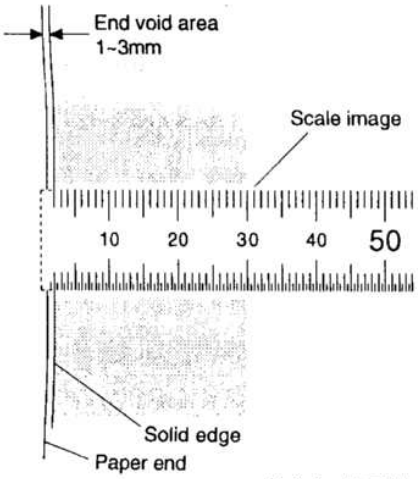

Full-size(100%) copy

(11) Make a normal copy and check that the image loss and the void amount are within the specified range.
(Specified range)

- Image loss: 0 ~ 4mm
- Void amount: 1 ~ 3mm

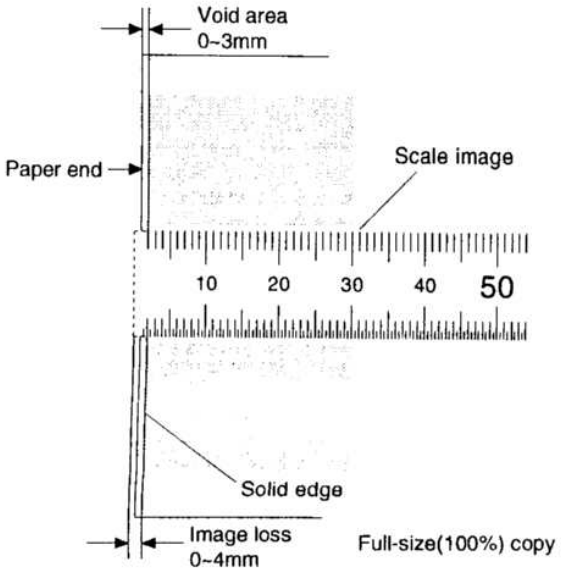

(12) Press the clear key and cancel simulation 50-01.

Note: When the RRC-A and RRC-B values are changed in simulation 50-01, be sure to adjust the copy lead edge void area.

When adjustment is made with simulation 50-02:

<Note> The keys and display functions are the same as simulation 50-01. In simulation 50-02, L1 and L2 values can be directly set. It is easy and simple. The void area adjustment is also the same as simulation 50-01.

[Adjustment procedure]

(1) Put a scale on the original table.

(2) [C] → [P] → [0/0] → [P] → [5] → [0/0] → [PSW] → [2] → [PSW]

With the above key operation, simulation50-02 is performed and the machine starts warming up.

(3) The lower two digits of L1 value is displayed on the copy quantity display. The top digit is for data identification.

- L1 : Lead edge shift at 200% (OOOmm, 3 digits)
- L2 : Lead edge shift at 100% (XXXmm, 3 digits)

Example of display

- For 42.5mm, the display is [2] [5].

(4) Use the % key and the 10 digit key pad to set A and b values to zero. Make copies at 100% and 200%.

- [0/0] → [0/0] → [0/0] → [% key] → [0/0] → [0/0] → [0/0] → [PSW] (A copy at 100% is made.)
- [Enlargement key] → (Lens shift, ready) → [PSW] (A copy at 200% is made.)

(5) Measure the distance between the copy paper lead edge and the copy image lead edge in each copy. Enter L1 and L2 values with the zoom key and the 10 digit key pad. With this operation, RRC-A and RRC-B values in simulation 50-01 are automatically calculated and stored.
Input procedure

(Example)
When L1 = 24.5 mm and L2 = 15.0mm:
Check that the lowest digit of the magnification ratio display is "A," and perform the following key operation.

[2] → [4] → [5] ("45" is displayed on the copy quantity display.) → [% key] → [1] → [5] → [0] ("50" is displayed.) → [PSW]

(6) After this, check shift and image loss, and void amount in each copy similarly to simulation 50-01.

2-4. Original detecting section

A. Original detecting arm unit adjustment

① OC switch ON timing adjustment

Execute simulation 40-01. (C → P → 0 → P → 4 → PSW → 1 → PSW)

- Slowly tilt down the original detecting arm unit and loosen the original cover switch actuator adjustment screw so that the auto paper selection display lamp turns off when the height from the table glass to the arm unit top is 36.5 ±0.5mm. Then slide the actuator to adjust. (If the original cover ON timing is shifted, the original detecting function may malfunction.)

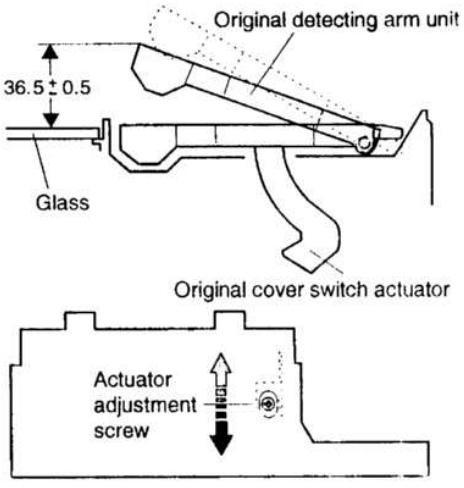

B. Original detecting level adjustment

(Original detecting judgement level input)

This adjustment is to set the reference value for judgement of presence or absence of an original and to monitor the sensor status.

① [C]→[=✓]→[0]→[=✓]→[4]→[1]→
[PSW]→[2]→[PSW]

At that time, the ready lamp lights up and "1" is displayed on the copy quantity display.

② With the original cover open without original, press the PRINT button. (The sensor level without original is read.) The copy quantity display is shifted from 1 to 2.

③ Place a transfer paper of A3 (11″ × 17″) on the original table, and press the PRINT switch with the original cover open. (The sensor level with an original is read and the judgement level of original presence or absence is stored.)

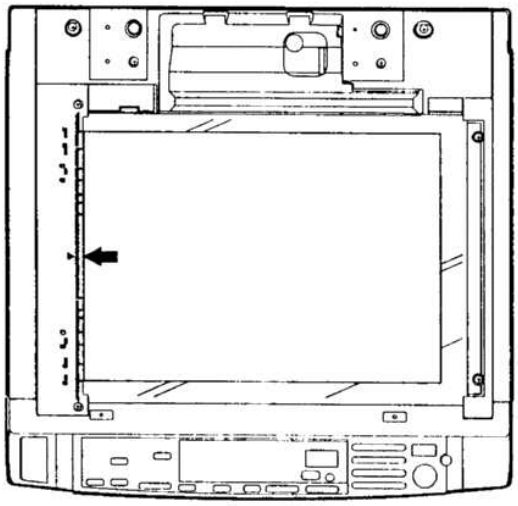

<Reference> Detection level setting principle

The sensor level with an original and that without original are read and the average level (the center value) is stored as the judgement level.

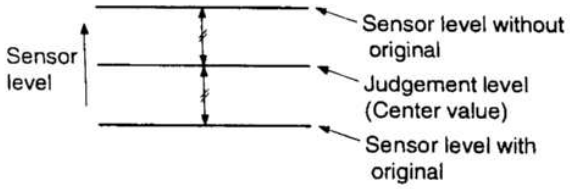

<Sensor check mode>

The photo sensor detection check is made by SIM 41-01. (After inputting the original detecting level, the mode is automatically changed to the check mode.)

Photo sensor check procedure

Key operation [C] → [=✓] → [0] → [=✓] → [4] → [1] → PSW → 1 → PSW

At that time, all the original size display lamps and the manual tray selection lamps are lighted. By interrupting the light emitting section of the original size detection LED, the original size lamps are turned off.

* The photo sensors are arranged as follows:

Reception shaft	Japan AB series	EX AB series	EX inch series
1	—	—	—
2	B5	—	—
3	A4	A4	LT
4	B5R	—	—
5	A4R	A4R	LTR
6	B4	B4	LG
7	A3	A3	17″

The manual paper feed tray selection lamp is used to check open/close of the original cover. It lights up when the original cover is open, and goes off when closed.

When the original cover close is detected, all the original size display lamps go off.

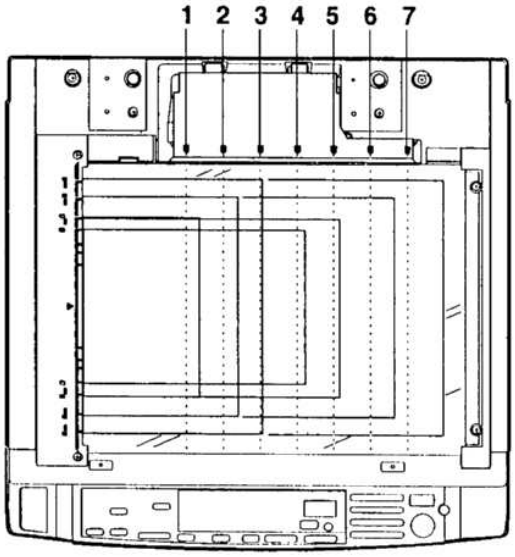

(Light reception level and judgement level check)

① Light reception level display mode
[C]→[=✓]→[0]→[=✓]→[4]→[1]→
[PSW]→[3]→[PSW]

- The light reception level during execution of the simulation is displayed on the copy quantity display.
- After execution of the simulation, enter the number corresponding to each sensor with the 10-key pad. The original size display lamp lights up to allow to check the light reception level of the sensor.
- The manual paper feed tray selection lamp is used to check the original cover open/close. The lamp lights up when the original cover is open, and goes off when closed.
  In the case of 1, when the original cover is closed, the sensor level is fixed to the previous value.

② Setting level display mode
[C]→[=✓]→[0]→[=✓]→[4]→[1]→
[PSW]→[3]→[PSW]→ *Magnification ratio auto select key*

- *With the above key operation, the pause lamp lights up.*
- Each sensor level set with SIM 41-02 is displayed on the copy quantity display.
- After execution of this simulation, enter the number corresponding to each sensor with the 10-key pad. The original size display lamp lights up to allow to check the light reception level of the sensor.

2-5. *Copy density adjustment*

A. When the copy density adjustment is required:

The copy density adjustment must be performed in the following cases:

- When maintenance is performed.
- When the output current of the main charger and the transfer charger, the separation charger bias voltage, or the grid voltage is adjusted. (When the charger unit or the high voltage unit is replaced.)
- When the developing bias is adjusted.
- When any part of the AC PWB unit is replaced.
- When the AE sensor is replaced.
- When the copy lamp is replaced.
- When the optical unit is replaced.
- When the optical unit is disassembled, repaired, or adjusted.
- When exposure adjustment plate is moved.
- When the drum is replaced.
- When the main PWB is replaced.

B. Note for copy density adjustment

- The charger output and the developing bias voltage are properly adjusted in advance.
- The half-tone uniformity is within the limit sample range.
- Sim. 44-01 is set to "7."

C. Copy density adjustment procedure

(1) Set the automatic exposure level to "3."

(When the mode select key is pressed for 5 sec in the photo mode, the mode is switched to the automatic exposure mode. In this mode, press the exposure select key to set the exposure level to "3.")

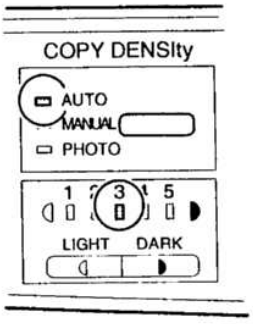

(2) Drum sensitivity setting

(1) Execute Sim. 26-07, and check that the top digit of the 9 digit drum number printed on the flange in front of the drum is displayed on the copy quantity display.

(2) If the displayed number is different from the drum number, change the setting with the 10 digit key pad.

(Note) When the 10 digit key pad is used to enter a number, the display shows only in the range of 1 – 3.

(3) AE sensor level adjustment

(1) Execute Sim. 47.
(The mirror base starts scanning and stops at the AE sensor level measurement position.)

(2) Put several sheets of A3 (11" x 17") paper on the original table.

(3) Press the PSW again, and the copy lamp will light up and the sensor output will be displayed on the copy quantity display. This output level is stored.

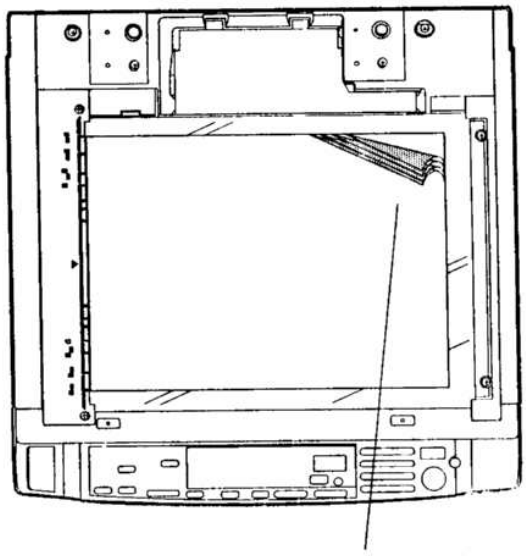

(4) Test chart setting

(1) Put several sheets of white paper (Sharp specified paper) of about 120mm wide and about 420mm long to the center reference.

(2) Put the test chart (UKOG-0162FCZZ) as shown below:

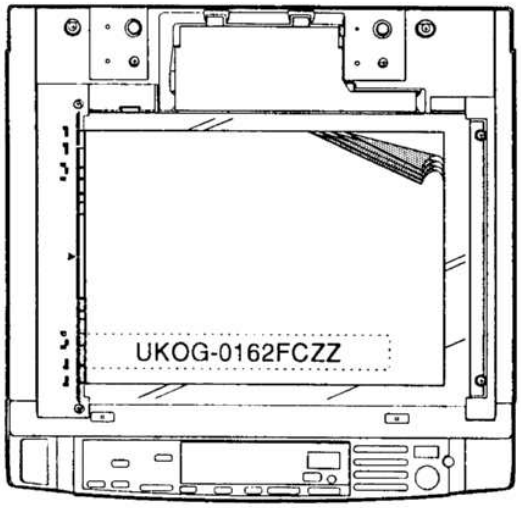



Test chart comparison table

UKOG-0162FCZZ DENSITY No.	1	2	3	4	5	6	7	8	9	10	W
UKOG-0089CSZZ DENSITY No.	0.1		0.2		0.3				0.5	1.9	0
KODAK GRAY SCALE		1		2		3		4		19	A

SHARP CORPORATION
MODE IN JAPAN

(5) Manual exposure (ME) mode adjustment

1) Normal mode exposure adjustment

(1) Execute Sim. 46-01.
Exposure "1" in the manual exposure mode is displayed on the exposure display.
"0" of value A is first displayed on the coy quantity display. After sensing the drum mark, the two-digit number corresponding to the sensed mark number is displayed.

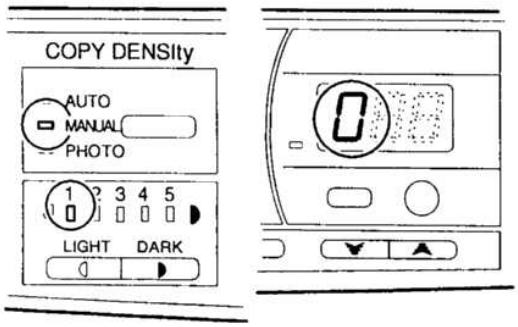

(2) Make a copy.
Check that "6" of the test chart is slightly displayed.

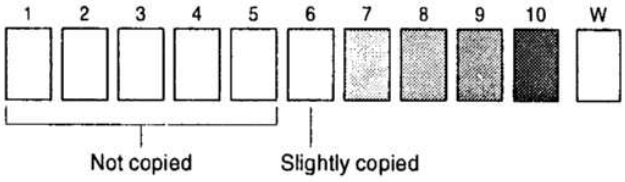

<When too light> Make the value displayed on the copy quantity display smaller.

<When too dark> Make the value displayed on the copy quantity display greater.

* The range of set values is 1 ~ 99.
* Entry number "1" corresponds to a change of about 0.33V in the copy lamp voltage.

(3) Make a copy.
When the copy exposure is within the exposure limit sample range, press the DARK exposure key to set to exposure "5." ("b" is displayed on the copy quantity display.)

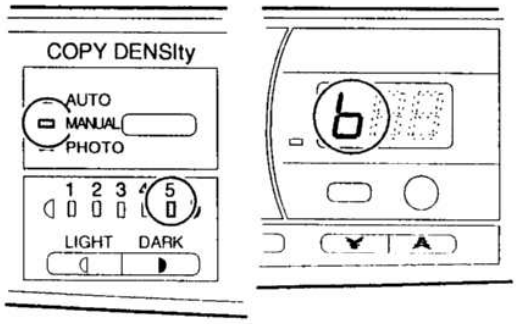

(4) Make a copy.
Check that "2" of the test chart is clearly copied.

<When too light> Make the value displayed on the copy quantity display smaller.

<When too dark> Make the value displayed on the copy quantity display greater.

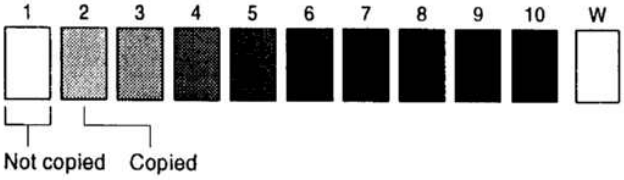

2) Toner save mode adjustment

(1) Press the exposure select key to set to the toner save mode.
The manual mode lamp and the photo mode lamp are simultaneously lighted and exposure "1" is displayed on the exposure display section. "C" is displayed on the copy quantity display.

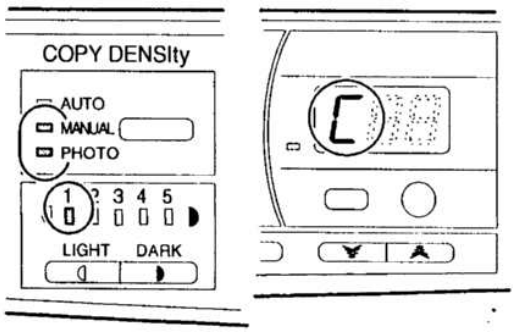

(2) Perform the same procedures of (2) through (4) in "1) Normal mode exposure adjustment."

3) Photo mode exposure adjustment

(1) Press the exposure select key to set to the photo mode.
The photo mode lamp is lighted and exposure "1" is displayed on the exposure display section. "E" is displayed on the copy quantity display.

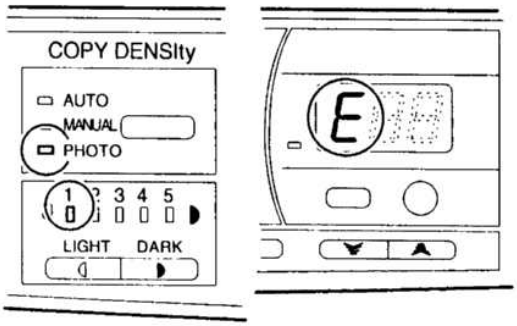

(2) Perform the same procedures of (2) through (4) in "1) Normal mode exposure adjustment."

(6) Automatic exposure mode adjustment

1) Automatic exposure (normal mode) adjustment

(1) Press the exposure select key to set to the automatic exposure mode (normal mode).
The automatic exposure mode lamp is lit and exposure "1" is displayed on the exposure display section. "C" is displayed on the copy quantity display.

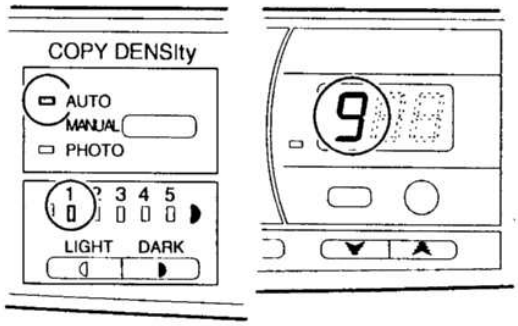

(2) Check that "0" is displayed on the copy quantity display.

(3) Press the DARK exposure key to set to exposure "5." ("H" is displayed on the copy quantity display.)

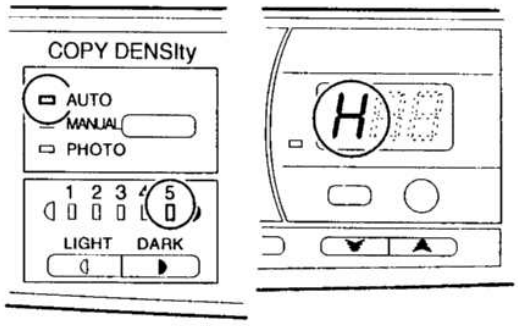

(4) Make a copy.
Check that "3" of the test chart is slightly copied.

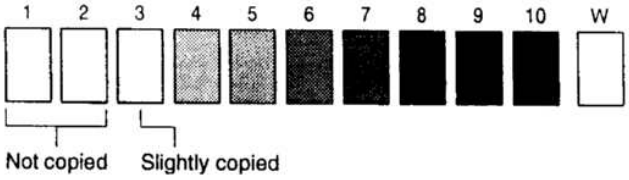

<When too light> Make the value displayed on the copy quantity display smaller.

<When too dark> Make the value displayed on the copy quantity display greater.

2) Automatic exposure (toner save mode) adjustment

(1) Press the exposure select key to set to the automatic exposure mode (toner save mode).
The automatic exposure mode lamp and the photo mode lamp are lit and exposure "1" is displayed on the exposure display section. "1" is displayed on the copy quantity display.

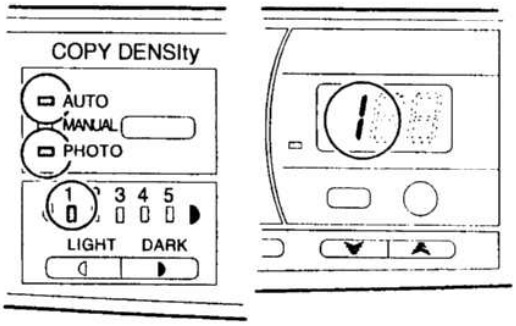

(2) Perform the same procedures of (2) through (4) in "1) Normal mode exposure adjustment."

Copy density adjustment

Item	Content
Automatic exposure level initial setting	3 (Standard level)
TSM mode initial setting	5 (Standard mode)
AE sensor level adjustment	Execution of Sim. 47
Drum sensitivity setting	Execution of Sim. 26-07
Test chart setting	Test chart comparison table

UKOG-0162FCZZ DENSITY No.	1	2	3	4	5	6	7	8	9	10		W
UKOG-0089CSZZ DENSITY No.	0.1		0.2		0.3				0.5	1.9		0
KODAK GRAY SCALE		1		2		3		4		19		A

SHARP CORPORATION
MADE IN JAPAN

Copy density adjustment

- Developing bias output voltage adjustment: 200V (Manual exposure 1) Execution of Sim. 8-01
- Manual exposure copy density adjustment: Execution of Sim. 46-01
  - ME1

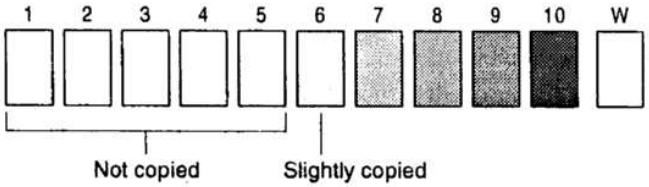

  - ME5

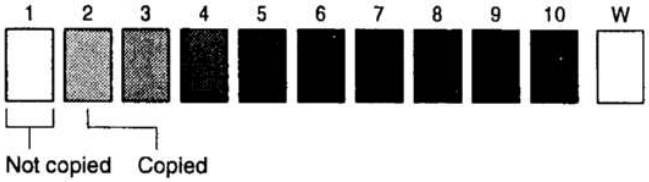

- TSM mode copy density adjustment
  - TS1

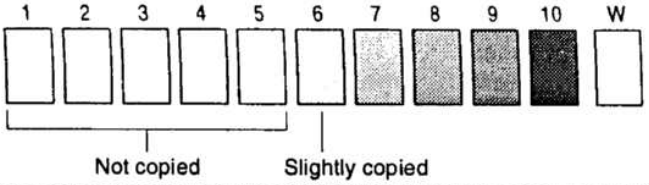

  - TS5

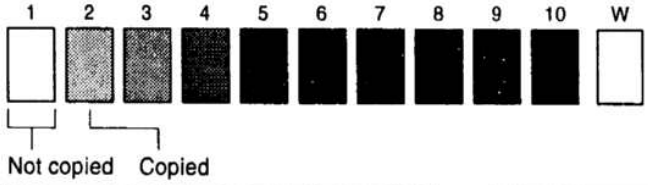

- Photo mode copy density adjustment
  - PE1

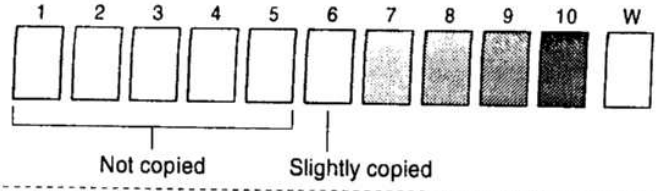

  - PE5

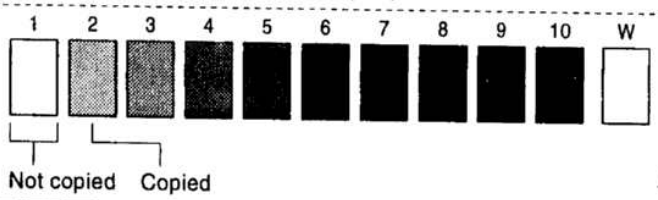

Item			Content
	Automatic exposure copy density adjustment		Enter "0" with the 10 digit key pad.
		Normal mode AE1	
		AE5	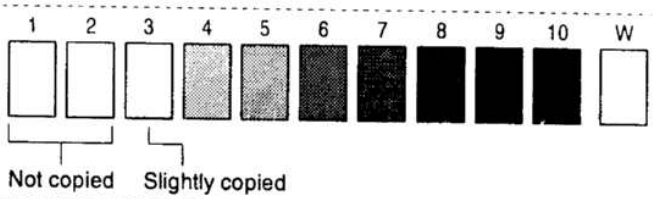
		TSM mode AE1 (TS)	Enter "0" with the 10 digit key pad.
		AE5 (TS)	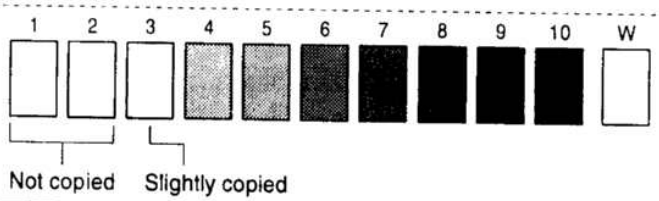

2-6. Process section adjustment

A. Blank lamp (BL) position adjustment

① Check that the center shift is within 0.2mm. (If the center shift exceeds 0.2mm, adjust the center shift.)

② Set a white original of A3 (11" x 17"), and make a reduction copy (x 0.64) on an A3 paper (11" x 17") with the original cover open.

③ Measure the black background sizes on both ends, and slide the blank lamp unit back and forth to adjust so that the size difference is within 1 mm.

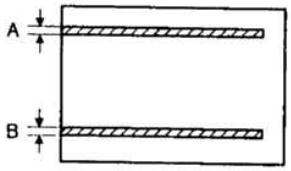

$|A-B| \leqq 1mm$

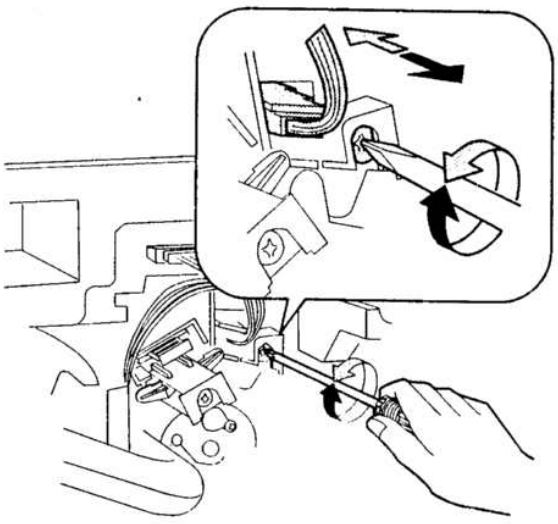

B. High voltage output balance adjustment

This model employs the one transformer system where the output power is common to the charging charger (MC) and the transfer charger (TC). The feedback current from the transfer charger (TC) is constant-current controlled and outputted for charging.
For the output adjustment of each high voltage, follow the procedures below.

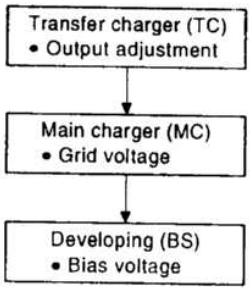

A. Use of special measurement tools

- Tool: UKOGE0043CS01 (Digital multi meter)
- Electrode sheet (UKOG-0110FCZZ)

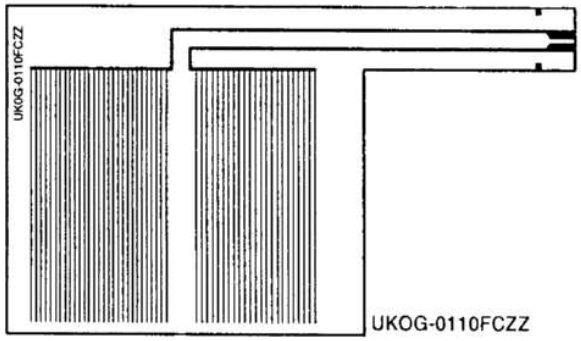

Adjustment output	Sim	Adjustment range	F/R difference	Tester range
TC current	08-02	–41.0 ±4.0 µA	7.0 µA	DC1000 µA
MC grid voltage	44-11	Standard (A) –750 ±5V Photo (b) –500 ±5V TS (c) –650 ±5V	—	DC1000V
DV bias voltage	08-01	–200±5V	—	DC1000V

Electrode sheet harness (DHAI-0304FCZZ)

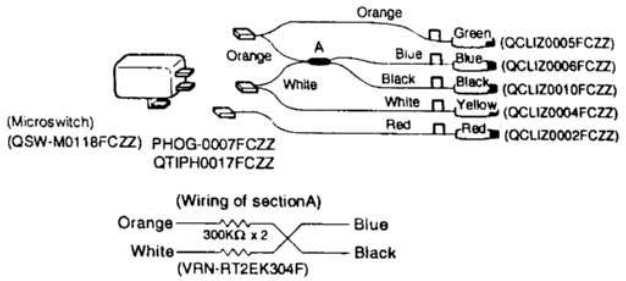

C. Transfer charger output check

1) Transfer charger current adjustment

① Remove the developing unit, the transfer/separation charger unit, and the main charger unit from the copier.

② Remove the process unit from the copier.
When removing (attaching) the process unit from (to) the copier, do not hold the toner transport pipe.

③ Remove the photoconductor drum from the process unit, and attach the electrode sheet by using rubber ring and tape.

④ Attach the photoconductor drum with the electrode sheet attached to it to the process unit.

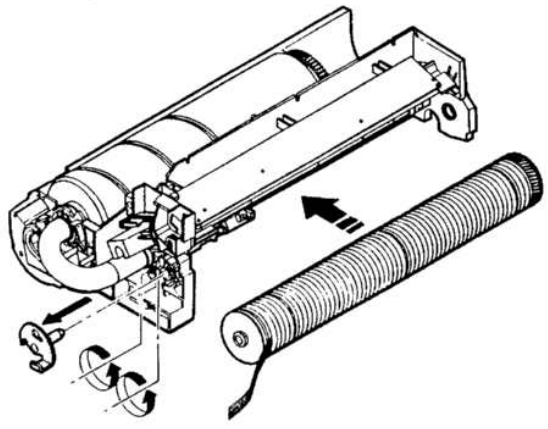

⑤ Attach the process unit to the copier. (Attach so that the electrode sheet lead wire extends from the developing unit side.)

⑥ Clean the transfer charger wire, and attach the transfer/separation charger unit to the copier.
(Do not install the main charger unit.)

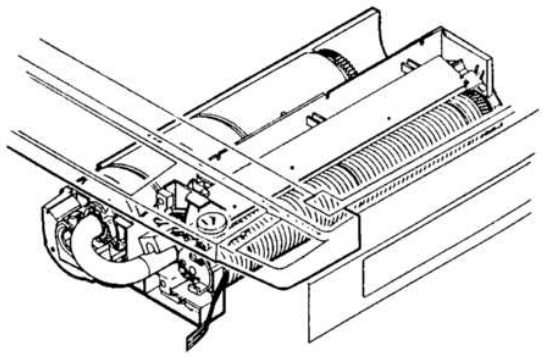

⑦ Connect the electrode sheet and the digital multi meter (or an ammeter). Manually turn on the door switch.

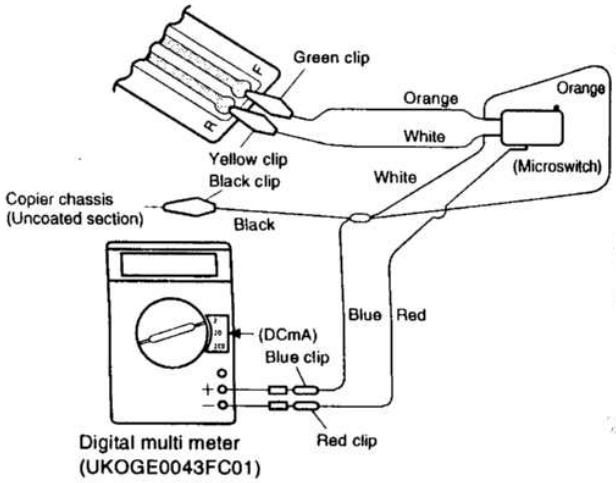

(Note) Check that the black clip is firmly grounded to the chassis.
When the UKOGE0043CS01 is used:
Control 1: Set to "2" of DCmA.
Red clip: Connect to ⊕.
Blue clip: Connect to ⊖.
When a DC ammeter is used:
Red clip: Connect to ⊖ of the DC ammeter.
Blue clip: Connect to ⊕ of the DC ammeter.

⑧ Transfer charger output current check and adjustment

a. Turn on the main switch and execute simulation 8-02. (MTHV is turned on for 30 sec.)

b. Adjust VR102 (MTHV output adjustment control) so that the output current of MTHV is –41 ±4.0 µA.

⑨ Check the drum current in the front frame side and the rear frame side. Difference between the front frame side current and the rear frame side current must be within 7.0 uA.

a. Turn on the main switch and execute simulation 8-02. (MTHV is turned on for about 30 sec.)

b. Measure the drum current in the front frame side and in the rear frame side.

- When the microswitch is OFF: The drum current in the front frame side is displayed.
- When the microswitch is ON: The drum current in the rear frame side is displayed.



c. Check that the difference between the front frame current and the rear frame current is within 7.0 μA. If the difference exceeds 7.0 μA, the charger unit is abnormal. Replace the charger unit in that case.

2) Charging grid voltage adjustment

Before this adjustment, check that the photoconductor drum, and developing unit, and the charger (MC/TC) units are attached.
(Measurement and adjustment at the high voltage PWB check point)

① Remove the rear cabinet.

② Set the digital multi meter range to DCV, and connect to the grid voltage output check pin (GB).

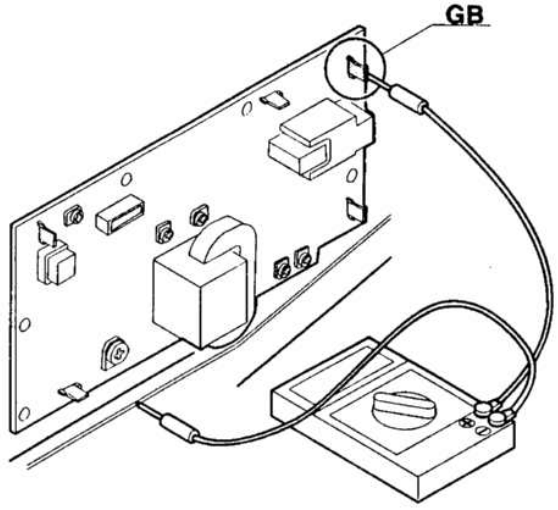

③ Turn on the copier power and execute simulation 44-11.

④ Select the standard mode (A) with the magnification ratio display key on the operation panel. (The mode is displayed on the copy quantity display.)

Execution of simulation 44-11

Select the standard mode (A) with the magnification ratio select key.

(Reference)

Display	Mode	
A	Standard	−750 ±5V
b	Photo	−500 ±5V
C	TS	−650 ±5V
d	GB patch	−410V

→ GB is not adjustable.

⑤ Use the 10-key pad to adjust so that the measurement value by the tester in the standard mode (A) is −750 ±5V. (Input value 1 corresponds to 5V.)

* For the voltage check, enter the value with the 10-key pad and press the PRINT button to store it, and press the PRINT button again and measure the voltage with the tester while copying.

⑥ Adjust similarly in the photo mode (b), and in the toner save mode (C).

Check the GP patch (d) after adjustment of standard (A), photo (b) and TS (c).

- Grid voltage adjustment
  (Sim 44-11)

Display	Mode	Grid	Input value (Standard)
A	Standard	−750±5V	48
b	Photo	−500±5V	46
C	TS	−650±5V	46
d	GB patch	−410V	41

* ① (Input value 1 corresponds to 5V.)
② d (GB) is fixed.

- Grid voltage check

Sim No.	Mode	Grid voltage * Drum marking number: 1	* Drum marking number: 2
8-2	Standard	−740	−770
8-3	Photo	−480	−480
8-4	TS	−630	−650

* Drum marking number 1 = SHARP
  Drum marking number 2 = Mitsubishi

* This model performs the process correction according to the number of drum mark(s). With Sim 8, the grid voltage after correction can be checked.

3) Developing bias (BS) voltage adjustment

The developing bias voltage is measured and adjusted with the check pin (DV BIAS) on the high voltage PWB and the control knob (VR301).
In advance to this adjustment, check that the photoconductor drum, the developing unit, and the charger (MC/TC) units are installed.

① Remove the rear cover.

② Set the digital multi meter range to DCV, and connect it to the developing bias output check pin (DV BIAS).

③ Turn on the copier power, and execute simulation 8-01.

④ During execution of the simulation, check that the developing bias output monitor voltage is −200 ±5V. If the voltage is outside the range, adjust with the control knob (VR301).

[8] SIMULATION

1. Outline

This model is equipped with the simulations feature which allows the following operations with the keys on the operation panel:

1) Adjustments
2) Setting of specifications and functions
3) Resetting trouble codes
4) Checking operations

2. Purpose

The purpose of the simulations feature is to improve serviceability in repairs and adjustments.
Since the mechanical adjustments can be performed electrically, the above purpose is achieved with low costs.

3. Operating procedure

Simulations operating procedure

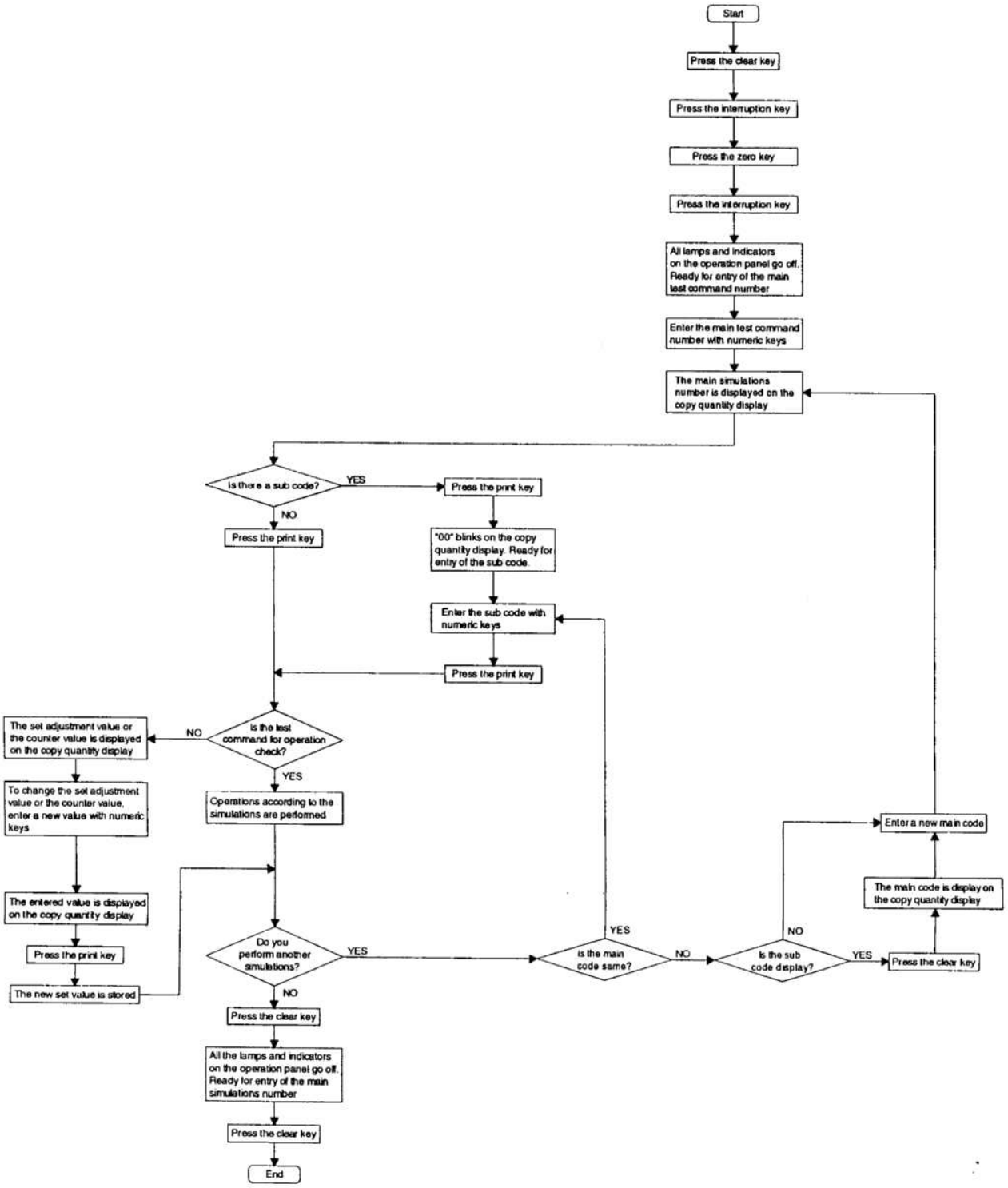

4. List of simulations

Main code	Sub code	Content
1	01	Mirror scanning
	02	Optical system sensor check
	03	Lens operation check
	04	Lens operation aging
2	01	ADF aging
	02	ADF sensor check
	03	ADF individual load operation check (Paper feed motor forward rotation)
	04	ADF individual load operation check (Paper feed motor reverse rotation)
	05	ADF individual load operation check (Transport motor forward rotation)
	06	ADF individual load operation check (Transport motor reverse rotation)
	07	ADF individual load operation check (Original stopper solenoid ON)
3	02	Sorter sensor check
	03	Sorter individual load operation check (Transport motor)
	04	Sorter individual load operation check (Bin motor)
	05	Sorter individual load operation check (Buzzer)
5	01	Operation panel display check
	02	Heater lamp check
	03	Copy lamp check
	04	DL lighting check
	05	BL lighting check
6	01	Transport system load operation (Clutch/ solenoid)
	02	Paper feed motor operation check (SF-2118 only)
7	01	Warm-up time display and aging
	04	Warm-up omitting
	06	Intermittent aging
	08	Warm-up time display
8	01	Developing bias output
	02	Main/transfer charger output/grid check (ME)
	03	Main/transfer charger output/grid check (PE)
	04	Main/transfer charger output/grid check (T/S)
	07	Separation charger output
9	02	ADU sensor check
	03	ADU rear end plate aging
	04	ADU matching disc aging
	05	Gate solenoid operation check
	06	ADU individual load operation (Transport motor paper feed rotation)
	07	ADU individual load operation (Transport motor paper feed rotation + pick-up clutch)
	08	ADU individual load operation (Transport motor paper feed rotation + paper feed clutch)
10	—	Toner motor aging
14	—	Trouble cancel (Excluding U2 trouble)
15	—	Waste toner full (blinking) cancel
16	—	U2 trouble cancel
20	—	Maintenance counter clear
21	01	Maintenance cycle setting

Main code	Sub code	Content
22	01	Maintenance counter display
	02	Maintenance preset counter display
	03	JAM memory display
	04	Total JAM counter display
	05	Total counter display
	06	DV counter display
	07	DV preset counter display
	08	ADF counter display
24	01	JAM memory/total JAM counter clear
	04	ADF counter clear
25	01	Drive system check
	02	Automatic developer adjustment
26	01	Option setting (ADF shadow erase setting)
	05	Counter mode setting
	06	Destination setting
	07	Drum sensitivity setting
	10	AE document density setting
	13	Warm-up mode setting
	20	Rear edge void setting
30	01	Copier sensor check (paper sense)
	02	Tray size switch state display
42	—	Developer
43	01	Fusing temperature setting
44	01	Process control operation setting
	05	Grid voltage correction test
	06	Grid voltage correction compulsive execution
	07	Image density/drum mark sensor operation test
	08	Process control data display
	09	Process control data display (Latest value)
	10	Grid voltage correction (Drum surface/patch) data display
	11	Initial grid bias setting
46	01	Exposure adjustment
47	—	AE sensor characteristics measurement (AE sensor gain automatic adjustment)
48	01	Front/rear magnification ratio adjustment
	02	Paper transport direction magnification ratio adjustment (Mirror speed correction)
50	01	Copy lead edge adjustment
	02	Lead edge adjustment (Simple type)
51	02	Resist amount adjustment
53	01	ADF stop position adjustment value (normal paper) setting
	03	ADF stop position adjustment value (thin paper) setting
	04	ADF resist sensor, width sensor adjustment
	05	ADF paper exit sensor adjustment
54	03	Take-out buzzer setting

∗1 (Simulation 26-6 Destination setting)

Set value	Model (Destination)	Set value	Model (Destination)
0	Japan	6	EX inch series
1	SEC	7	EX AB series
2	SECL	8	EX inch series (for FC)
3	SEEG	9	EX AB series (for FC)
4	SUK	10	Taiwan/China
5	SCA		

Cassette size switch table

SW2	SW1	SW0	Inch series	AB series	Inch series (For FC)	AB series (For FC)	Taiwan/China
×	×	×	No cassette	No cassette	No cassette	No cassette	No cassette
×	×	○	WLT	A3	WLT	A3	A3
×	○	×	LG	B4	LG	B4	B4
×	○	○	LT	A4	LT	A4	A4
○	○	×	(extra)	B5	8.5" × 13"	8.5" × 13"	B5
○	○	○	INV	A5	INV	A5	(extra)
○	○	×	LTR	A4R	LTR	A4R	A4R
○	○	○	(extra)	B5R	(extra)	(extra)	B5

○: Switch ON
×: Switch OFF

5. Details of simulations

Simulation input procedure: C → =✓ → 0 → =✓

<table>
<tr><th>Main code</th><th>Sub code</th><th>Content</th></tr>
<tr><td>01</td><td>01</td><td>Mirror operation check
When the print button is pressed, the mirror is scanned at a speed corresponding to the currently set copy magnification ratio.
The copy magnification ratio can be arbitrarily set.</td></tr>
<tr><td></td><td>02</td><td>Optical system sensors (MHPS, LHPS) state display
ON/OFF state of the optical system sensor can be monitored by the LED on the operation panel.
<table>
<tr><th>Sensor name</th><th>Operation panel LED</th></tr>
<tr><td>MHPS</td><td>Paper empty lamp (▭)</td></tr>
<tr><td>LHPS</td><td>JAM lamp (⚠)</td></tr>
</table></td></tr>
<tr><td></td><td>03</td><td>Lens operation check
The lens unit moves to the following positions of the magnification ratios continuously.
AB series: 100% → 115% → 122% → 141% → 200% → 86% → 81% → 70% → 50% → 100%
Inch series: 100% → 121% → 129% → 141% → 200% → 95% → 77% → 64% → 50% → 100%</td></tr>
<tr><td></td><td>04</td><td>Lens aging
The operation of SIM 1-3 is repeated continuously.</td></tr>
<tr><td>02</td><td>01</td><td>ADF aging
The ADF original transport operation is performed.</td></tr>
<tr><td></td><td>02</td><td>ADF sensors states display
The ADF sensors ON/OFF states can be monitored with the LED on the operation panel.
When the third digit of the multi display is "A," the following display is made.
<table>
<tr><th>Sensor name</th><th>Operation panel LED</th></tr>
<tr><td>Original set sensor</td><td>JAM lamp (⚠)</td></tr>
<tr><td>Resist sensor</td><td>Paper empty sensor (▭)</td></tr>
<tr><td>Timing sensor</td><td>Drum position jam lamp (▼)</td></tr>
<tr><td>Repulsion sensor</td><td>Resist position jam lamp (▼)</td></tr>
<tr><td>ADF open/close sensor</td><td>ADF position jam lamp (▼)</td></tr>
<tr><td>Paper feed cover sensor</td><td>Paper exit position jam lamp (▼)</td></tr>
<tr><td>Reversing section cover sensor</td><td>Manual paper feed selection lamp</td></tr>
</table>
If, at that time, the magnification ratio display key is pressed, the third digit of the multi display is changed to "B" and the following display is made.
<table>
<tr><th>Sensor name</th><th>Operation panel LED</th></tr>
<tr><td>Tray width sensor (297mm, 11")</td><td>First step cassette lamp</td></tr>
<tr><td>Tray width sensor (257mm)</td><td>Second step cassette lamp</td></tr>
<tr><td>Tray width sensor (210mm, 8.5")</td><td>Third step cassette lamp</td></tr>
<tr><td>Tray width sensor (182mm)</td><td>Fourth step cassette lamp</td></tr>
<tr><td>Tray vertical sensor (240mm)</td><td>Resist position jam lamp (▼)</td></tr>
<tr><td>Tray vertical sensor (300mm)</td><td>Paper exit position jam lamp (▼)</td></tr>
<tr><td>Original width size sensor</td><td>Manual feed selection lamp</td></tr>
</table></td></tr>
<tr><td></td><td>03</td><td>ADF individual load operation check (paper feed motor forward rotation)</td></tr>
<tr><td></td><td>04</td><td>ADF individual load operation check (paper feed motor reverse rotation)</td></tr>
<tr><td></td><td>05</td><td>ADF individual load operation check (transport motor forward rotation)</td></tr>
<tr><td></td><td>06</td><td>ADF individual load operation check (transport motor reverse rotation)</td></tr>
<tr><td></td><td>07</td><td>ADF individual load operation check (Repulsion motor forward rotation) A57 only</td></tr>
<tr><td></td><td>08</td><td>ADF individual load operation check (Paper feed solenoid)</td></tr>
<tr><td></td><td>09</td><td>ADF individual load operation check (Reverse rotation solenoid) A57 only</td></tr>
</table>

<table>
<tr><th>Main code</th><th>Sub code</th><th>Content</th></tr>
<tr><td>02</td><td>10</td><td>ADF individual load operation check (paper feed motor + paper feed solenoid)</td></tr>
<tr><td></td><td>11</td><td>ADF individual load operation check (transport motor forward rotation + repulsion motor forward rotation) A57 only</td></tr>
<tr><td>03</td><td>02</td><td>Sorer sensor state display
The ADF sensor ON/OFF states can be monitored with the LED on the operation panel.
When the third digit of the multi display is "A," the following display is made.
<table>
<tr><th>Sensor name</th><th>Operation panel LED</th></tr>
<tr><td>Entrance sensor</td><td>Jam lamp (🖐)</td></tr>
<tr><td>Tray paper presence/empty sensor</td><td>Paper empty sensor (▭)</td></tr>
<tr><td>Upper limit sensor</td><td>Manual feed selection lamp</td></tr>
<tr><td>Lower limit sensor</td><td>Resist position jam lamp (▼)</td></tr>
<tr><td>Bin home position sensor</td><td>Drum position jam lamp (▼)</td></tr>
<tr><td>Take-out sensor</td><td>Paper exit jam lamp (▼)</td></tr>
<tr><td>Alignment bar home sensor</td><td>ADF section jam lamp (▼) S54 only</td></tr>
</table>
If, at that time, the magnification ratio display key is pressed, the third digit of the multi display is changed to "B" and the following display is made.
<table>
<tr><th>Sensor name</th><th>Operation panel LED</th></tr>
<tr><td>Pinch (hold) home sensor</td><td>Jam lamp (🖐) S54 only</td></tr>
<tr><td>Stapler home sensor</td><td>Paper exit position jam lamp (▼) S54 only</td></tr>
<tr><td>Stapler paper sensor</td><td>Paper empty jam lamp (▭) S54 only</td></tr>
<tr><td>Stapler near end sensor</td><td>Resist position jam lamp (▼) S54 only</td></tr>
</table></td></tr>
<tr><td></td><td>03</td><td>Sorter individual load operation check (Transport motor)</td></tr>
<tr><td></td><td>04</td><td>Sorter individual load operation check (Bin motor)</td></tr>
<tr><td></td><td>05</td><td>Sorter individual load operation check (Buzzer)</td></tr>
<tr><td></td><td>06</td><td>Sorter individual load operation check (Alignment motor)</td></tr>
<tr><td></td><td>07</td><td>Sorter individual load operation check (Pinch hold motor)</td></tr>
<tr><td>05</td><td>01</td><td>Operation panel display check
All the LED's on the operation panel are lighted for 5 sec.
When the automatic original feed unit is installed, the original feed lamp and the original remaining lamp are also lighted for 5 sec.</td></tr>
<tr><td></td><td>02</td><td>Heater lamp lighting check
The heater lamp is turned of/off in the following sequence.
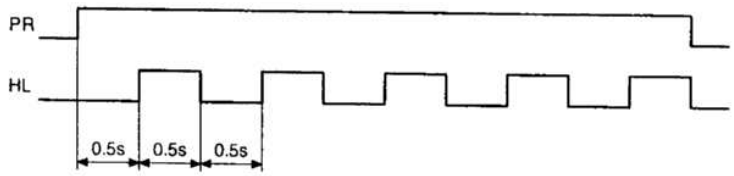
</td></tr>
<tr><td></td><td>03</td><td>Copy lamp lighting check
The copy lamp is turned on/off in the following sequence.
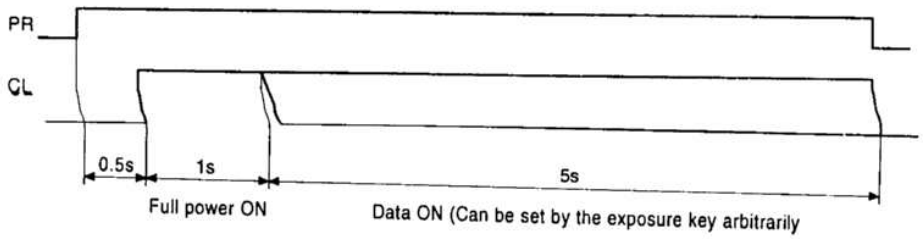
</td></tr>
</table>

<table>
<tr><th>Main code</th><th>Sub code</th><th>Content</th></tr>
<tr><td>05</td><td>04</td><td>DL lamp lighting check
The discharge lamp is lighted for 30 sec.</td></tr>
<tr><td></td><td>05</td><td>BL lamp lighting check
The blank lamp is turned on/off every 0.5 sec.</td></tr>
<tr><td>06</td><td>01</td><td>PSPS operation check
The separation pawl is turned on/off 30 times in the following sequence.
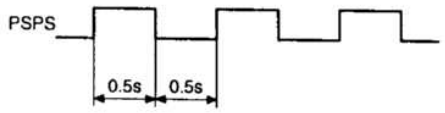
</td></tr>
<tr><td></td><td>02</td><td>Paper feed motor operation check
The paper feed motor in the second step of the main body is activated. When the PFU is installed, the paper feed motors in the first and the second steps of the PFU are activated.</td></tr>
<tr><td>07</td><td>01</td><td>Warm-up time display and aging
After execution of the simulation, warm-up is started, and the swarm-up time is displayed every second on the copy quantity display. When warm-up is completed (RPL ON), count adding of the display is stopped.
Press the CA key to clear warm-up time display, set the copy quantity and press the PRINT button to make the set number of copies repeatedly.</td></tr>
<tr><td></td><td>04</td><td>Warm-up omitting
After completion of the simulation, the machine goes to the ready state. (RPL ON)</td></tr>
<tr><td></td><td>06</td><td>Intermittent aging
After execution of the simulation, the machine starts warm-up. After completion of warm-up, press the CA key to clear warm-up time display, set the copy quantity and press the PRINT button to make the set number of copies repeatedly.
After the interval time (2 min) from completion of making the set number of copies, the machine resumes copying.</td></tr>
<tr><td></td><td>08</td><td>Warm-up time display
Aging function is deleted from SIM 7-1.</td></tr>
<tr><td>08</td><td>01</td><td>DVBIAS check
The developing bias is turned on for 30 sec.</td></tr>
<tr><td></td><td>02</td><td>MTHV (main, transfer), grid check (ME)
The main/transfer charger is turned on for 30 sec.
For the grid bias, the ME value is outputted.</td></tr>
<tr><td></td><td>03</td><td>MTHV (main, transfer), grid check (PE)
The main/transfer charger is turned on for 30 sec.
For the grid bias, the PE value is outputted.</td></tr>
<tr><td></td><td>04</td><td>MTHV (main, transfer), grid check (T/S)
The main/transfer charger is turned on for 30 sec.
For the grid bias, the T/S value is outputted.</td></tr>
<tr><td></td><td>07</td><td>SHV (separation) check
The separation charger is turned on for 30 sec.</td></tr>
<tr><td>09</td><td>02</td><td>ADU sensor state display (SF-2120 only)
On/off states of the sensors in the ADU are monitored with the LED on the operation panel.
<table>
<tr><th>Sensor name</th><th>Operation panel LED</th></tr>
<tr><td>ADU open/close sensor</td><td>First step cassette lamp</td></tr>
<tr><td>Tray paper sensor</td><td>Paper empty lamp (▭)</td></tr>
<tr><td>ADU paper entry sensor</td><td>Manual paper feed selection lamp</td></tr>
<tr><td>ADU paper transport sensor</td><td>Resist position jam lamp (▼)</td></tr>
<tr><td>Alignment plate home sensor</td><td>Drum position jam lamp (▼)</td></tr>
<tr><td>Rear edge plate home sensor</td><td>Paper exit position jam lamp (▼)</td></tr>
</table></td></tr>
</table>

[9] Maintenance and Miscellaneous

1. Maintenance Schedule

SF-2022 and 2027 : every 80,000 sheets of paper
<Remarks>
★ = lubrication ○ = cleaning △ = adjustment ▲ = replacement/mounting □ = repositioning × = check(cleaning, replacement and/or adjustment, if necessary)

* The maintenance schedule of the multi-cassette paper feed unit is based on the value indicated by the machine counter.

Section	Part	Timing						Notes
		Installation	Service call	80K	160K	240K	320K	
Developing section	Developer (black)	▲		▲	▲	▲	▲	
	Toner cartridge	▲						
	Developer(mono-color)							
	Toner cartridge							
	DV seal				▲		▲	
Around the drum	Drum	(▲)		▲	▲	▲	▲	
	Blade			▲	▲	▲	▲	
	Toner receiving seal			×	▲	×	▲	
	Separating claw			▲	▲	▲	▲	
	Electrostatic charge plate unit			▲	▲	▲	▲	
	MC case		○	○	○	○	○	
	Screen grid		○ (×)	▲	▲	▲	▲	
	TC wire		○ (×)	▲	▲	▲	▲	
	TC case		○	○	○	○	○	
	BL/DL lamp		○	○	○	○	○	
	Run-down toner bottle							
Suction section	Suction belt		○ (×)	○	○	○	○	
	Ozone filter			▲	▲	▲	▲	
Fusing section	Upper heat roller			○	▲	○	▲	
	Gear for upper heat roller			★	▲	★	▲	
	Lower heat roller			○	▲	○	▲	
	Upper separating claw			▲	▲	▲	▲	
	Lower separating claw			▲	▲	▲	▲	
	Upper cleaning roller	▲		▲	▲	▲	▲	
	Thermistor			○	○	○	○	
	Various gearing			★	★	★	★	
Optical section	Mirror/lens/reflector/filter		○	○	○	○	○	
	Driving wire			×	×	×	×	
	Optical rail			★	★	★	★	
	Sensing devices		○	○	○	○	○	
	Original glass plate/original cover	○	○	○	○	○		
Paper feeding section	Various rollers (hand feed, 500-sheet cassette, ADU)		○	○	○	○	○	
	Torque limiter (hand feed, 500-sheet cassette, ADU)		×	×	×	×	×	
	500-Sheet cassette brake spring (paper feed unit)		○	○	○	○	○	

2. Counters and Simulations Related to Maintenance

(1) List of counters and simulations related to maintenance

<table>
<tr><th rowspan="2">Function</th><th colspan="2">Simulation</th><th rowspan="2">Description</th></tr>
<tr><th>Main code</th><th>Sub code</th></tr>
<tr><td>Clear the maintenance counter</td><td>20</td><td>*</td><td>The contents of the preset counter are cleared to zero.</td></tr>
<tr><td>Set the maintenance cycle</td><td rowspan="3">21</td><td>1</td><td>Code Maintenance cycle
0 ..... 80,000 sheets
1 5,000
2 10,000
3 20,000
4 ..... 40,000 sheets
5 ..... free</td></tr>
<tr><td>Set the mini-maintenance (Japan only)</td><td>2</td><td>• For black copy kit
Code Maintenance cycle
0 ..... 80,000 sheets
1 ..... 5,000 sheets
2 ..... 10,000 sheets</td></tr>
<tr><td></td><td>3</td><td>• For color copy kit
Code Maintenance cycle
0 ..... 10,000 sheets
1 ..... 5,000 sheets</td></tr>
<tr><td>Display the maintenance count</td><td rowspan="9">22</td><td>1</td><td>The copy quantity stored in the maintenance counter is displayed.</td></tr>
<tr><td>Display the maintenance preset count</td><td>2</td><td>The contents of the preset counter are displayed.</td></tr>
<tr><td>Display the jam map</td><td>3</td><td></td></tr>
<tr><td>Display the total jam count</td><td>4</td><td></td></tr>
<tr><td>Display the total count</td><td>5</td><td>The total copy quantity is displayed.</td></tr>
<tr><td>Display the developer count</td><td>6</td><td>The number of sheets copied using the currently mounted developing unit is displayed.
Color | TNFL | DVPL | MENTEL
black | ○ | × | ×
red | × | ○ | ×
blue | ○ | ○ | ×
○: ON
×: OFF</td></tr>
<tr><td>Display the developer preset count</td><td>7</td><td>The contents of the developer exchange quantity preset counter are displayed.</td></tr>
<tr><td>Display the ADF/RADF count</td><td>8</td><td>Used number of ADF/RADF is displayed.</td></tr>
<tr><td>Display the duplex count</td><td>9</td><td>The quantity used by the duplex unit is displayed.</td></tr>
<tr><td>Clear the jam memory and total jam counter</td><td rowspan="3">24</td><td>1</td><td>The contents of the jam memory and total jam counter are cleared to zero.</td></tr>
<tr><td>Clear the ADF/RADF count</td><td>3</td><td>The contents of the ADF/RADF copy quantity counter are cleared to zero.</td></tr>
<tr><td>Clear the duplex count</td><td>4</td><td>The contents of the duplex unit copy counter are cleared to zero.</td></tr>
<tr><td>Clear the developer count</td><td>42</td><td>*</td><td>The contents of the developer counter are cleared to zero.</td></tr>
</table>

(2) Maintenance Indication

1	Toner empty	When the color toner indication is OFF, the empty status of the black toner is detected. When the color toner indication is ON, the empty status of the color toner is detected.
2	Developer	When the color toner indication is OFF, the status of the consumed black developer is indicated. When the color toner indication is ON, the status of the consumed color developer is indicated.
3	Waste toner bottle full	No space in the waste toner bottle is indicated.
4	Maintenance	According to the cycle specified in Simulation, required maintenance is indicated.
5	Color toner	In the color toner mode, required maintenance is indicated.

(3) Setting the copy counter mode

Simulation		Setting code	Auto-clear available	Maintenance counter	Total counter
Main	Sub				
26	03	0	○	double count	double count
		1	○	double count	single count
		2	○	single count	double count
		3	○	single count	single count
		40	×	double count	double count
		41	×	double count	single count
		42	×	single count	double count
		43	×	single count	single count

*1 The double/single count is limited to apply to A3-size paper.
*2 Code other than those given in the above table is invalid or may cause operation error.

3. Replacing the Ozone Filter

The purpose of the ozone filter is to suppress emitting ozone from the machine, which is generated during corona discharge in the charger units. In order to maintain this effect, the ozone filter requires to be replaced every 80,000 sheets of copy paper.

(1) Replacing the suction ozone filter

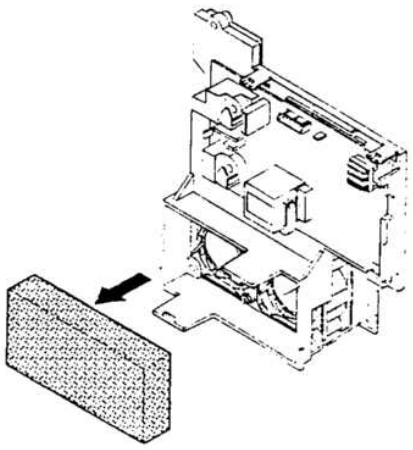

4. Oil/Grease Points

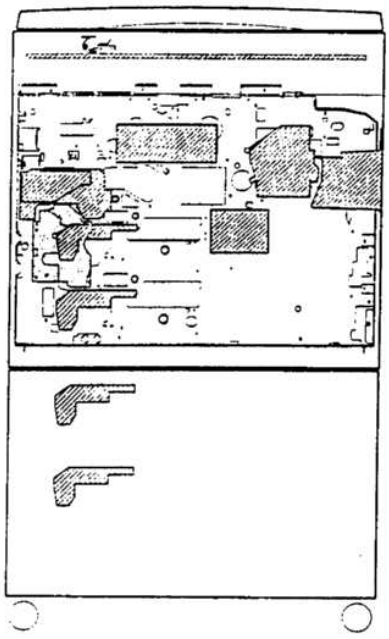

(1) Gear of main driving unit

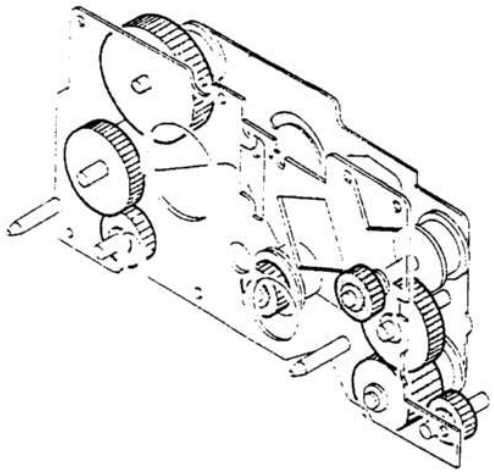

(2) Gear of variable-speed paper-feed unit

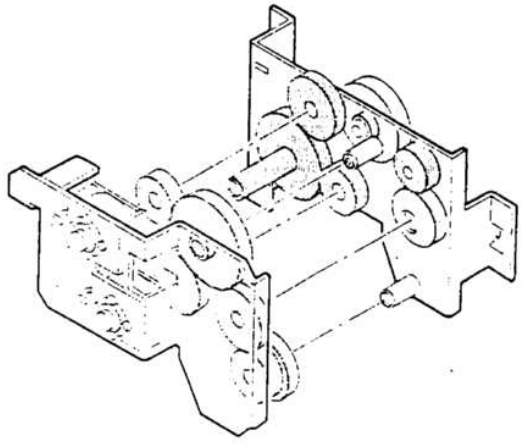

(3) Gear of paper-feed driving unit

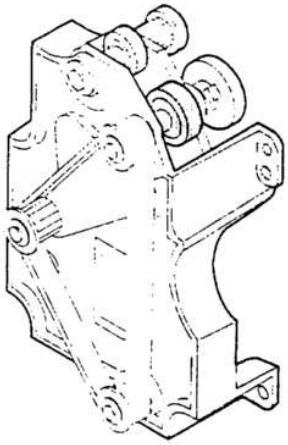

(4) Fusing unit driving gear

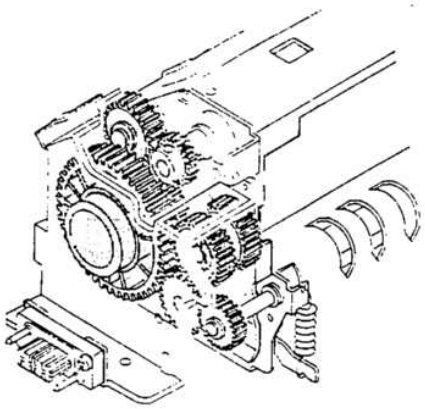

(5) Paper exit roller driving gear

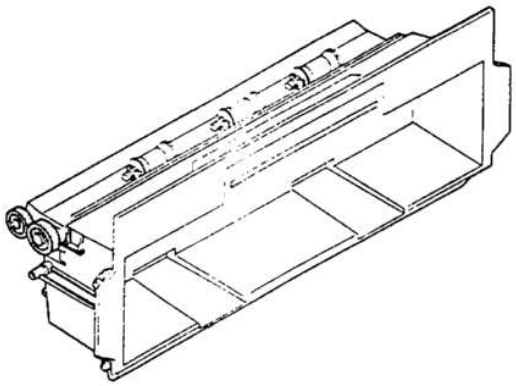

(6) Paper-feed torque limiter
500-sheet cassette brake spring

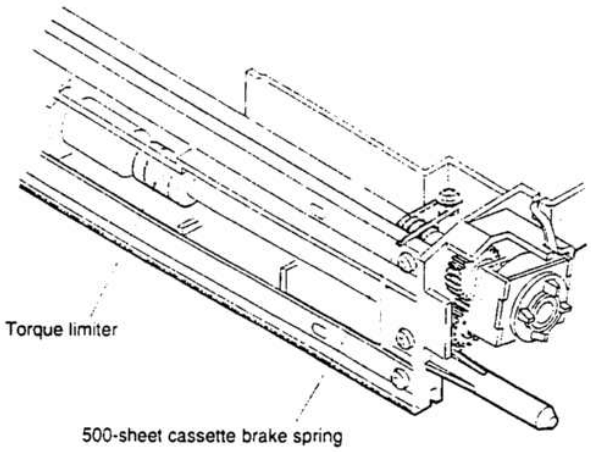

(7) Optical rail

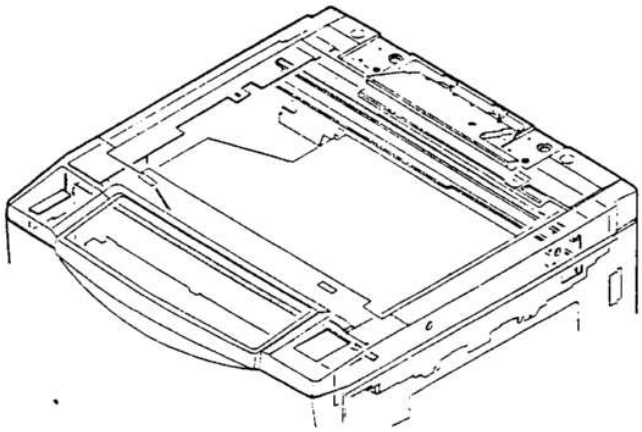

Note 1: Grease (Molycoat(UKOG-0062FCZZ) or White Molycoat(UKOG-0158FCZZ)) must be applied to the correct grease points of each gear. Do not use too much grease.

Note 2: No grease shall be applied inside the gear of the magnetic clutch.

5. Maintenance Schedule of Options

Maintenance of options must be done during that of the machine.
Maintenance of SF-D20/D21/SF-DM11 is as follows:

- Duplex unit: Perform Simulation 22-9 to read out data in the duplex counter, and conduct maintenance on the basis of the data.
- Desk: every 80,000 sheets of copy paper.

Maintenance of RADF/ADF is as follows:
Perform Simulation 22-08 to check the contents of the RADF/ADF copy counter, and then conduct maintenance every 80,000 sheets of copy paper.
★ = lubrication ○ = cleaning △ = adjustment ▲ = replacing/mounting × = check(cleaning, replacing and/or adjustment, if necessary), □= repositioning

5 Perform Simulation 48-01 [=].
[C] → [=] → [0] → [=] → [4] → [8] → [PSW] → [1] → [PSW] → [=] causes a preset value of longitudinal magnification to be indicated.

6 Determine a preset value of longitudinal magnification according to the following expression:
Preset value of longitudinal magnification = [previous preset value(indicated at step 5)) + correction factor for longitudinal magnification] x 10
Eg.: Preset value = [25 + 1] x 10 = 35

7 Type the preset value of longitudinal magnification:
[ ] → [ ] → [PSW]
Changing the preset by "1" provides the magnification change of 0.1 %.

8 Take a full-size copy of the scale and compare the image length with the scale length.

9 The image length must be the same as the scale length. Otherwise, repeat the above steps 1 to 8 until this requirement is met.

10 Press the clear all key to clear Simulation 48.

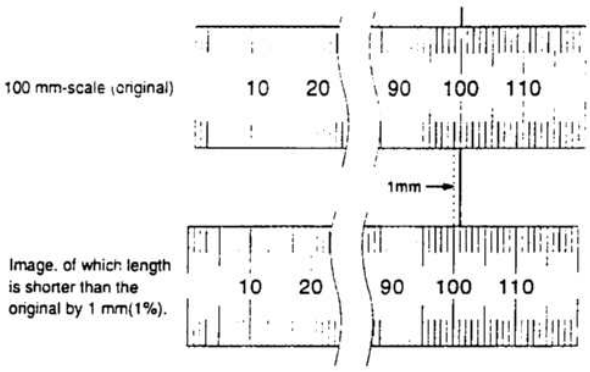

(4) Adjusting the Resolution

Applied Material: UKOG-0089CSZZ (Test chart)

1 Perform Simulation 48-01 to check that a preset value corresponds to a focal length of lens used:
[C] → [0] → [0] → [=] → [4] → [8] → [PSW] → [1] → [PSW].
When the ready lamp is lit, a preset value (ranging from 1 to 99) is indicated.

2 If no preset value exists, set a reference value according to (2)"Adjusting the reference position of 4. and 5. mirror". Then take a copy of "UKOG-0089CSZZ" and check the resolution.

3 When changing a preset value:
[ ] → [ ] → [PSW].

Checking Procedure
After adjusting the reference position of 4. and 5. mirror, check as follows:

1 Set the test chart UKOG-0089CSZZ or a resolution test chart on the original table.

2 Take a full-size copy.

3 Check if the center and corners of the copy paper is in focus.

4 The resolution must be at least 5.0 lines/mm in the center and 4.5 lines/mm in the corners. Otherwise, repeat the steps 2 to 4 of (2) while changing the preset value by 1 at a time, until this requirement is met.

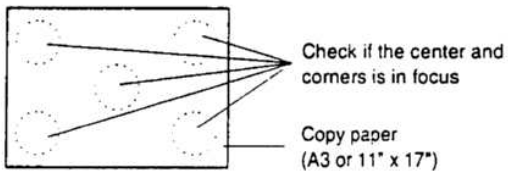

(5) Adjusting the Lateral Magnification

① Set a scale on the original table as shown in the figure and perform Simulation 48-02.
The machine starts the warm-up cycle and the ready lamp is lit. At the same time a preset value (ranging from 15 to 35) is indicated.
Now take a full-size copy of the scale and determine the correction factor for lateral magnification according to the following expression:
Correction factor for lateral magnification = [(original size – copy size)/original size] x 100 (%)

② Use the correction factor to change the indicated value:
Value to be input = (preset value) + (correction factor for lateral magnification(%)) x 10
- Eg.1: 35 = 25 + 1 x 10
- Eg.2: 15 = 25 + (–1 x 10)

When a new value is typed and the print switch is turned on, the new value is stored in memory and the ready lamp goes off.

③ Clear Simulation 48-02.

Note: In Simulation 48-02 the correctable range of the preset value is limited from15 to 35.

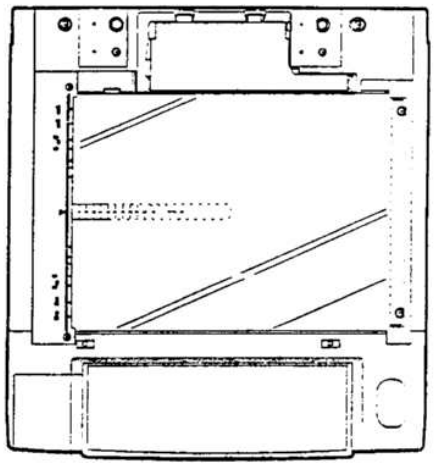

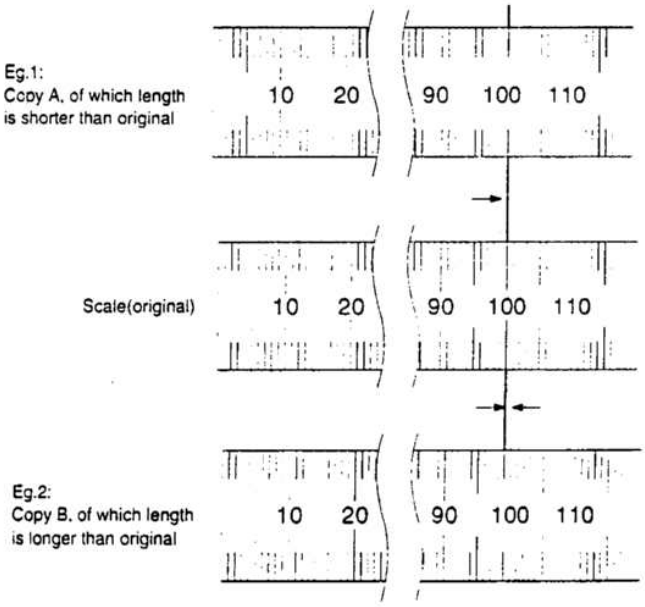

(6) Inputting the Lens Travel Correction Value

(Simulation 26-08, 26-09)

<Inputting the lens characteristics>

The lens varies in focal length for each machine. The lens travel is required to correspond to the focal length of the lens. If the lens travels at a magnification would be constant among the machines in spite of the focal length irregularity, the magnification could vary depending on this irregularity.
To avoid this problem, we have prepared the table showing focal length ranks of lens and correction data (see the next page) which can be stored in memory at the time of Simulations described below. In order to copy properly at a magnification, the lens travel corresponding to its focal length is calculated on the basis of the stored data.

<When lens is replaced>

① Set correction data according to the "focal length ranks of lens and correction data" table at following Simulation:
C → =⌟ → 0/⌟ → =⌟ → 2 → 6 → PSW → 9 → PSW to perform Simulation 26-09.

When the ready lamp is lit, a preset value (ranging from 1 to 21) is indicated.

② Input a new preset value.
Eg.: When a value shown on lens is +1.2, a correction value to be input is 14 according to the table.
C → =⌟ → 0/⌟ → =_ → 2 → 6 → PSW → 8 → PSW to perform Simulation 26-08.

Value shown on the label	Test command 48-01	Test command 48-01 =L	Test command 26-09 Zoom correction (No.4/5 mirror)	Test command 26-08 Zoom correction (lens)
+4.0	10	20	21	21
3.9	11	21		
3.8	12	22		
3.7	13	22	20	20
3.6	14	22		
3.5	15	23		
3.4	16	23		
3.3	17	24	19	19
3.2	18	24		
3.1	19	25		
3.0	20	25		
2.9	21	26	18	18
2.8	22	26		
2.7	23	27		
2.6	24	27		
2.5	25	28	17	17
2.4	26	28		
2.3	27	29		
2.2	28	29		
2.1	29	30	16	16
2.0	30	30		
1.9	31	31		
1.8	32	31		
1.7	33	32	15	15
1.6	34	32		
1.5	35	33		
1.4	36	33		
1.3	37	34	14	14
1.2	38	34		
1.1	39	35		
1.0	40	35		
0.9	41	36	13	13
0.8	42	36		
0.7	43	37		
0.6	44	37		
0.5	45	38	12	12
0.4	46	38		
0.3	47	39		
0.2	48	39		
+0.1	49	40	11	11
0	50	40		
−0.1	51	40		
0.2	52	41	10	10
0.3	53	41		
0.4	54	42		
0.5	55	42		
0.6	56	43	9	9
0.7	57	43		
0.8	58	44		
0.9	59	44		
1.0	60	45	8	8
1.1	61	45		
1.2	62	46		
1.3	63	46		
1.4	64	47	7	7
1.5	65	47		
1.6	66	48		
1.7	67	48		

(Lens value input vs. test command input)

Value shown on the label	Test command 48-01	Test command 48-01 [=⌟]	Test command 26-09 Zoom correction (No.4/5 mirror)	Test command 26-08 Zoom correction (lens)
1.4	64	47	7	7
1.5	65	47		
1.6	66	48		
1.7	67	48		
1.8	68	49	6	6
1.9	69	49		
2.0	70	50		
2.1	71	50		
2.2	72	51	5	5
2.3	73	51		
2.4	74	52		
2.5	75	52		
2.6	76	53	4	4
2.7	77	53		
2.8	78	54		
2.9	79	54		
3.0	80	55	3	3
3.1	81	55		
3.2	82	56		
3.3	83	56		
3.4	84	57	2	2
3.5	85	57		
3.6	86	58		
3.7	87	58		
3.8	88	59	1	1
3.9	89	59		
4.0	90	60		

(Lens value input vs. test command input)

(7) Correcting the Longitudinal Distortion

Use this procedure when replacing the mirror base driving wire.

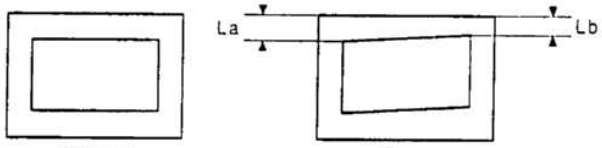

Original Copy

1. Set an A3-size or 11" x 17" blank paper on the original table while applying the paper end to the glass retaining plate and aligning the paper side edge with the front frame. as shown in the right figure.
2. Use an A3-size or 11" x 17" copy paper to take a full-size copy with the original cover opened.
3. Measure the width of solid at front and rear ends of the copy paper.

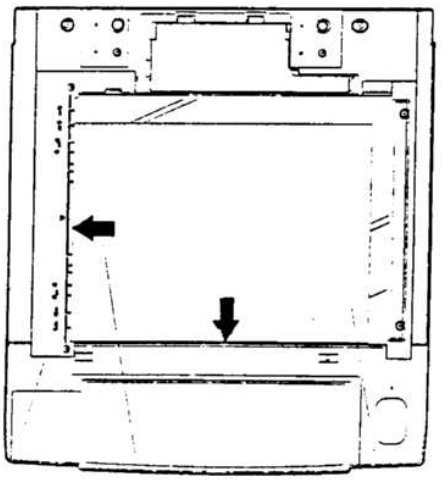

A3-size or 11" x 17" blank paper

Glass retaining plate

Apply paper front end to glass retaining plate

Align paper side edge with front frame

If the width of the front end solid (La) is equal to that of the rear end solid (Lb), no adjustment is required.
Otherwise, follow the steps 4 to 7 described below:

4 Loosen screws securing the mirror base driving pulley on the rear frame side.
If La is bigger than Lb, rotate the mirror base driving pulley on **the rear frame side in the A direction. (Do not rotate the flange** and the shaft of the mirror base driving pulley).
If La is smaller than Lb, rotate the mirror base driving pulley on the rear frame side in the B direction. (Do not rotate the flange and the shaft of the mirror base driving pulley).

5 Tighten the screws securing the mirror base driving pulley.

6 Repeat steps 1 to 3.

7 If La is not equal to Lb, repeat steps 4 and 5 until La=Lb.

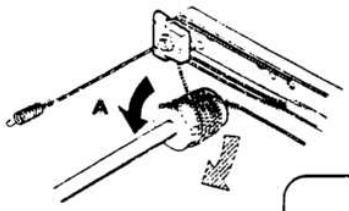

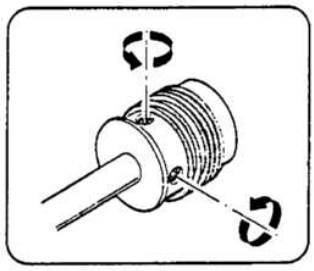

(8) Correcting the Lateral Distortion

If the lateral distortion occurs without the longitudinal distortion(distortion in the mirror base scanning direction), the lateral distortion can be corrected by adjusting the height of 2. and 3. mirror base **and/or the eccentric roller of 4. and 5. mirror base.**
The correction procedure is as follows:

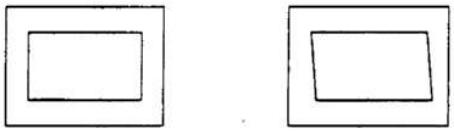

Original Copy

1 Preparing the reference original:
On an A3-size or 11" x 17" blank paper, draw 2 parallel lines at the positions 10 mm away from the both ends.

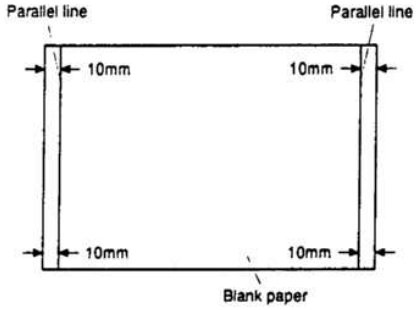

2 Take a full-size copy of the paper using an A3-size or 11" x 17" paper.

3 Measure and the distance between the paper end and the line at 4 positions (La, Lb, Lc and Ld).

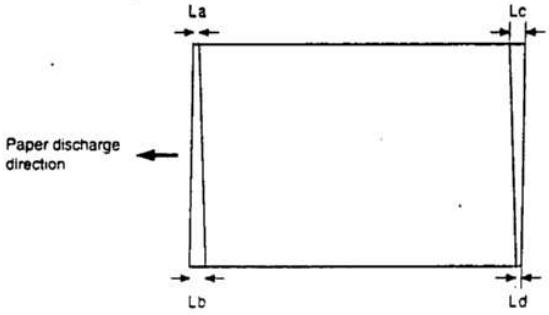

If La=Lb and Lc=Ld, no adjustment is required.
If La>Lb(Lc<Ld), rotate the eccentric roller in one direction to raise the front frame side of the 4. and 5. mirror base unit.
If La<Lb(Lc>Ld), rotate the eccentric roller in the other direction to lower the front frame side of the 4. and 5. mirror base unit.
Note: Remember how much the roller is rotated.
(One rotation of the roller causes the height of the front frame side to change by 2 mm and the difference between La and Lb to change by 4 mm).

* After opening the front cabinet, the adjustment described above can be made through the access hole.

If the above procedure does not provide sufficient adjustment, follow the steps shown below:

1. Move the B rail of the mirror base upward or downward (in the arrow direction).
   If La>Lb, raise the mirror base B rail on the paper discharge side by one-half of (La-Lb).
   If La<Lb, lower the mirror base B rail on the paper discharge side by one-half of (Lb-La).
   ex.:
   When La=12 mm and Lb=9 mm, raise the mirror base B rail on the paper discharge side by 1.5 mm.

   If Lc>Ld, lower the mirror base B rail on the paper discharge side by one-half of (Lc-Ld).
   If Lc<Ld, raise the mirror base B rail on the paper discharge side by one-half of (Ld-Lc).
   (Grasping the grip of the mirror base rail, move the mirror base rail).
2. Adjust the eccentric roller as described in 1) until La=Lb and Lc=Ld.
3. After adjustment, manually rotate the mirror base driving pulley to check that the mirror base A and B do not come into contact with each other during full-scanning motion.
   Note: If the mirror base rail is moved excessively, the mirror bases may contact with each other.

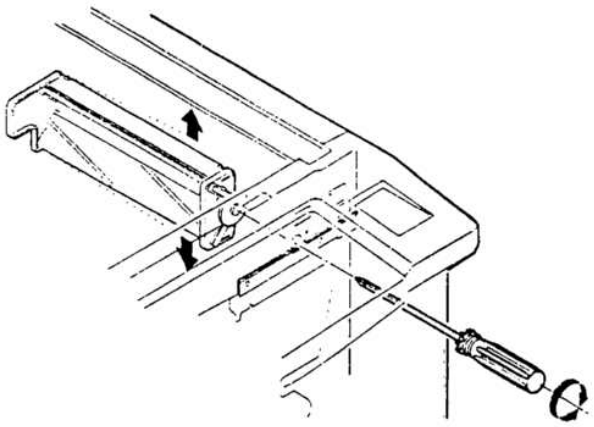

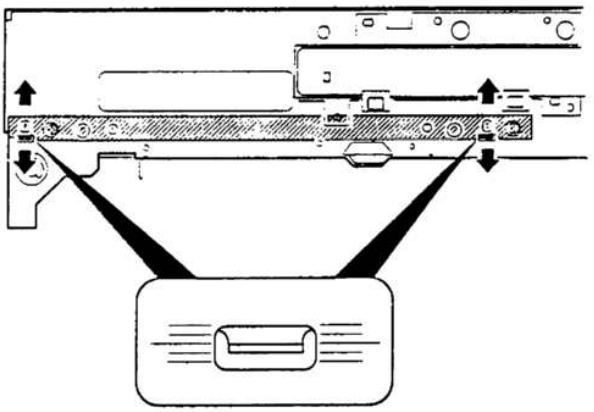

(9) Adjusting the Center Deviation

Take a full-size copy and compare the copy with the original.
If the deviation of the copy center from the original center, move the lens in the arrow direction so that the deviation is 2 mm or less.
Note: After moving the lens, adjust the position of the blank lamp because a change of the reference center position results in a change of the blank lamp position.

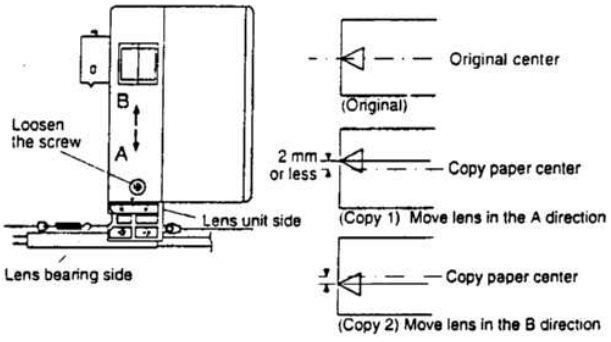

(10) Adjusting the Exposure Balance

Take a half-tone copy, and move the exposure control plate a, b and c to adjust the exposure balance. Movement of the plate in the A direction provides less exposure and the B direction more exposure.

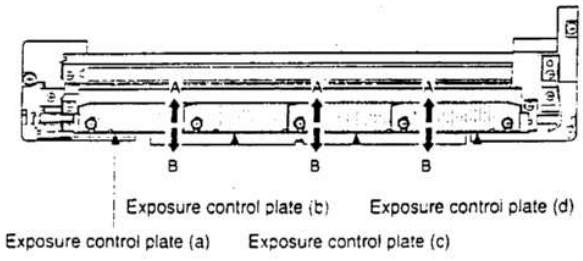

Eg. If the copy is as shown in the figure, move the exposure control plate in the B direction to achieve the exposure balance.

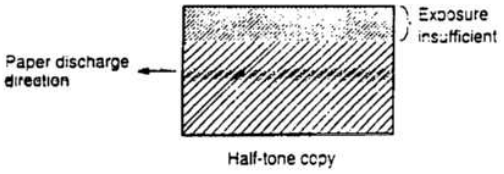

Half-tone copy

(11) Adjusting the Copy

Simulation 50-01 or 50-02 allows the copy adjustment.
(Full-size copy)
Image loss 0 ~ 3 mm (Registration)
Void area 1 ~ 3 mm

(When using Simulation 50-01)

In this simulation, the following keys have special functions:

REDUCE key: This key is used to set the magnification to 50%.

ENLARGE key: This key is used to set the magnification to 200%.

ZOOM-UP key: For each operation of this key, A → b → C → A → are indicated in this order and the copy quantity indicator shows a preset value as follows:

A: Preset value of RRC-A
b: Preset value of RRC-B
C: Preset value of void

(When pressing the zoom-up key, a preset value currently shown on the copy quantity indicator is stored in memory).

ZOOM-DOWN key:

For each operation of this key, A → C → b → C → A → are indicated in this order and the copy quantity indicator shows a preset value corresponding to a current indication. Other details are the same as those of the zoom-up key.

Display:

During execution of Simulation 50, the copy quantity indicator shows a value of RRC-A and the magnification indicator shows "10A". Upper 2 digits of the value shown on the magnification indicator means a magnification and lower 1 digit "A" means that a value of RRC-A is shown on the copy quantity indicator.

Adjusting Procedure

1. Set a scale on the original table.
2. C → ... → 0 → ... → 5 → 0 → PSW → 1 → PSW to perform Simulation 50. When the ready lamp goes on, a preset value (ranging from 1 to 99) is indicated. Content of RRC-A.
3. Set values of both A and B to 0 and take a copy of the scale at magnification of 100% and 200% respectively.
   - A full-size(100%) copy can be taken by typing
   - 0 → 0 → ZOOM-UP → 0 → 0 → PSW .
   - A enlarged(200%) copy can be taken by typing ENLARGE → (After the lens moves, ready lamp ON) → PSW .
4. Measure a distance from the paper end to the image (scale) end of each copy, and calculate the values of RRC-A and RRC-B with the following expressions:

If the preset value of RRC-A is not appropriate, the images at the both magnifications differs in end position. RRC-B is a preset value used to control the RRC ON-timing so that the end of the drum image is aligned with the end of a copy paper.

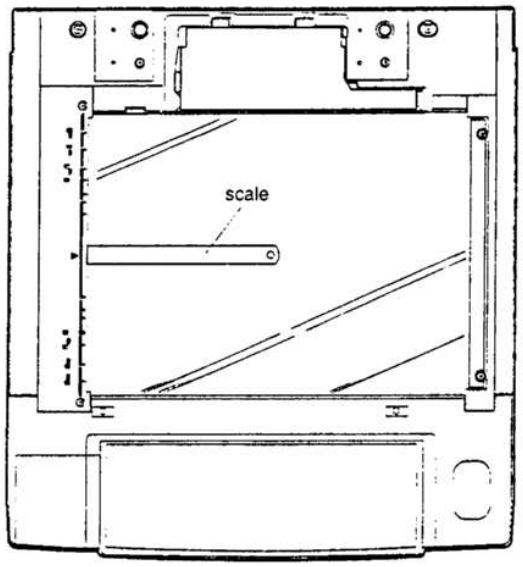

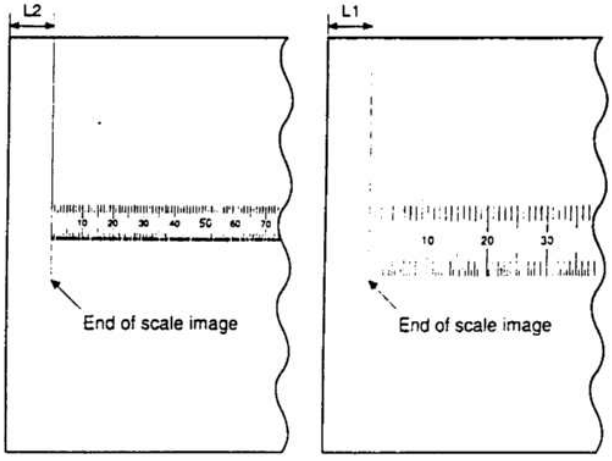

full-size(100%) copy Enlarged(200%) copy

- L1: End deviation at 200% magnification
- L2: End deviation at 100% magnification
- RRC-A = 4.093 x (L1 – L2)
- RRC-B = 10.526 x L2 – 5.263 x L1

⑤ Using ten keys, input the values of RRC-A and RRC-B given by the expressions shown above. For input procedure see 3).

⑥ Take copies at 200%, 100% and 50% magnification and check the deviation difference at each magnification is less than approx. 1 mm.
If the difference is larger than 1 mm, repeat step ③ to ⑥.

⑦ Take a 100% copy to check the image loss for 3 mm or less. If the image loss is larger than 3 mm, change the content of RRC-B so that the range of the image loss is 3 mm or less.

Note: The image loss value adjusted as described above is the image loss value adjusted in Simulation 50-01, and not the final value.

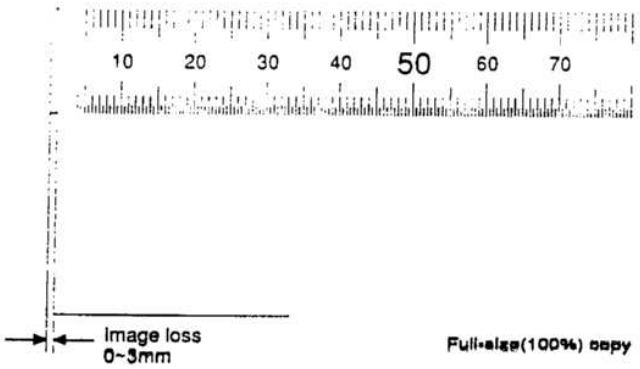

⑧ Set a scale and an A3-size(11" x 17") blank paper on the original table as shown in the figure.

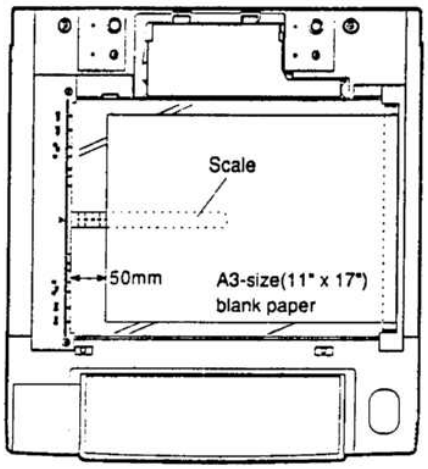

⑨ Operate the zoom key so that the lower 1 digit of the magnification indicator is "C". (Void adjusting mode)

⑩ Take a copy. Type a value for adjusting the end void area of the full-size copy so that, measured with the scale image, the solid edge is 1 ~ 3 mm away from the paper end.
The key operation [ ] → [ ] → [PSW] provide a copy and sets the input value. The input value of "1" corresponds to 0.2 mm in void area. Larger input value provides larger void area.

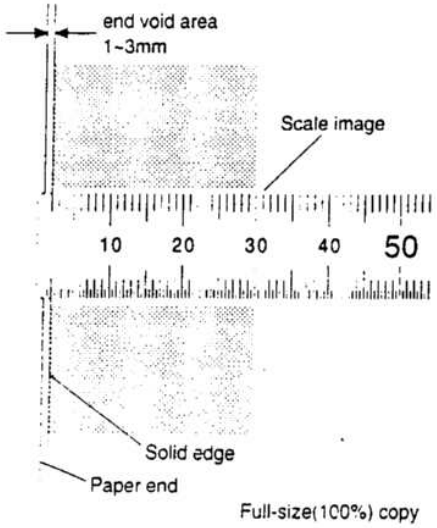

⑤ Take a full-size copy and check if the image loss and the void area meet the following standards:
(Standard value)
Image loss: 0 ~ 3 mm
Void area: 1 ~ 3 mm

⑧ Press the clear key to clear Simulation 50-01.

Note: After changing the RRC-A and RRC-B settings, always adjust the void area of copy end.

(When using Simulation 50-02)

The key and indicator functions in Simulation 50-02 are the same as those in Simulation 50-01.
Simulation 50-02 permits the values of L1 and L2 to be directly input and the end adjustment to be easily performed.

Adjusting Procedure

① Set a scale on the original table.

② [C] → [=/-] → [0/◊] → [=/-] → [5] → [0/0] → [PSW] → [2] → [PSW] to enter the Simulation 50-02 mode.
The machine starts warm-up operation.

③ The copy quantity indicator shows upper 2 digits of 3-digit L1 value and the magnification indicator shows "10A". The upper 2 digits on the magnification indicator means the magnification(100%) and the lower 1 digit "A" means that the value of L1 is indicated on the copy quantity indicator.

- L1: End deviation at 200% magnification (OOO mm: 3-digit)
- L2: End deviation at 100% magnification (XXX mm: 3-digit)

Indication example of copy quantity indicator
42.5 mm → [4] [2] [5] — indicated as [2] [5]

④ Using the zoom key and ten keys, set both A and b values to 0 and take a copy at magnification 100% and 200% respectively.

- An 100% copy can be taken by typing [0/0] → [0/0] → [0/0] → [ZOOM-UP] → [0/◊] → [0/0] → [0/0] → [PSW].
- A 200% copy can be taken by typing [ENLARGE] → (After the lens moves, ready lamp ON) → [PSW].

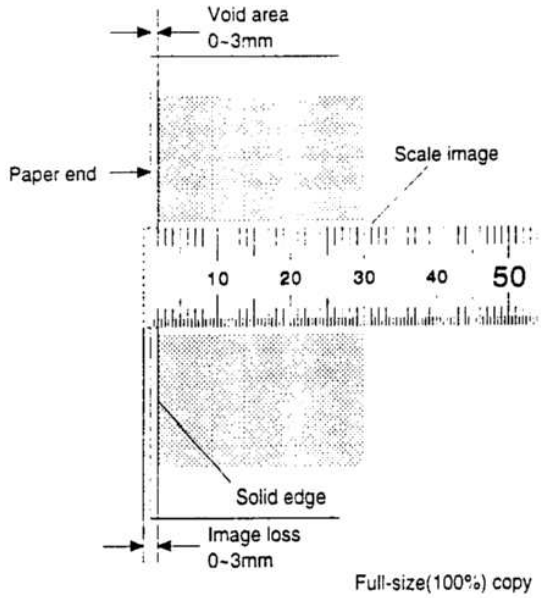

Full-size(100%) copy

⑤ Measure the distance from the paper end to image(scale) end of the 200% and 100% copy, and using the zoom key and ten keys, type the L1 and L2 values.
The RRC-A and RRC-B values of Simulation 50-01 are automatically calculated and stored in memory.
Input Procedure
Assuming the L1 is 25.4 mm and L2 is 15.0 mm:
After checking that the lower 1 digit of the magnification indicator is A, [2] → [5] → [4] ("54" indicated on the copy quantity indicator) → [ZOOM-UP] → [1] → [5] → [0] ("50" indicated) → [PSW].

⑥ Adjust and check the deviation, image loss and void area in the same manner as in case of Simulation 50-01.

4. Adjustment of Original Detecting Mechanism

(1) Adjusting the Original Detecting Arm Unit

1 Adjusting the timing when the original cover switch is turned on (This adjustment should be made by the fabricator).
[C] → [P] → [0] → [P] → [4] → [1] → [PSW] → [1] → [PSW] to perform Simulation 41-01.

- Loosen the screw for adjusting the original cover switch actuator. Adjust the actuator position so that, when bringing down the original detecting arm unit slowly, the automatic paper-selection lamp goes on at the instant when the distance from the surface of the original glass plate to the top of the arm unit reaches 36.5±0.5 mm.
(Error in timing when the original cover switch is turn on may causes a fault in operation of the original detecting mechanism).

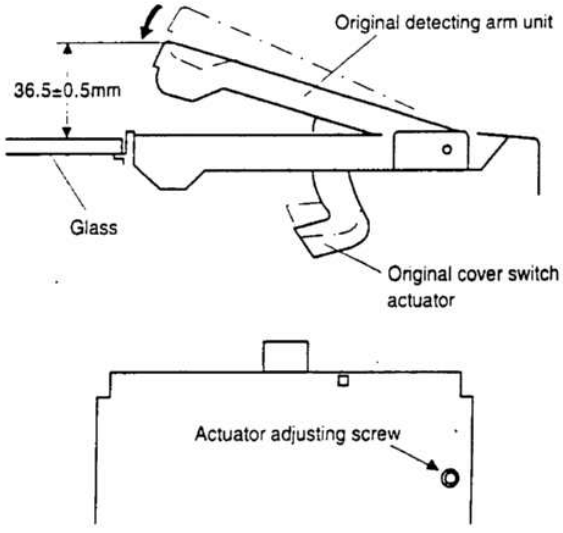

(2) Adjusting the Original Detection Level

(Input of Original Detection Level)

The original detection level is a reference level used to decide whether a original exists on the original table or not and to monitor the status of the individual detection sensor.

Input Procedure

① C → =J → 0 → =J → 4 → 1 → PSW → 2 → PSW .

The ready lamp(RPW) and the automatic magnification select lamp go on.

② With the original cover opened, turn on the print switch(PSW) with no original on the original table.

The ready lamp goes off momentarily, and the moment it goes on again, the pause lamp goes on. (The sensor level in the absence of original is read in memory).

③ Set an A3-size(11" x 17") copy paper on the original table, and with the original cover opened, turn on the print switch. (The sensor level in the presence of original is read in memory). The machine stores the sensor level for deciding the absence/presence of original in memory.

* (The sensor level can be viewed using Simulation 41-03).

<Remarks> Principle of Detection Level Setting

The machine averages the sensor levels in the presence and absence of original and stores the result (medium value) in memory.

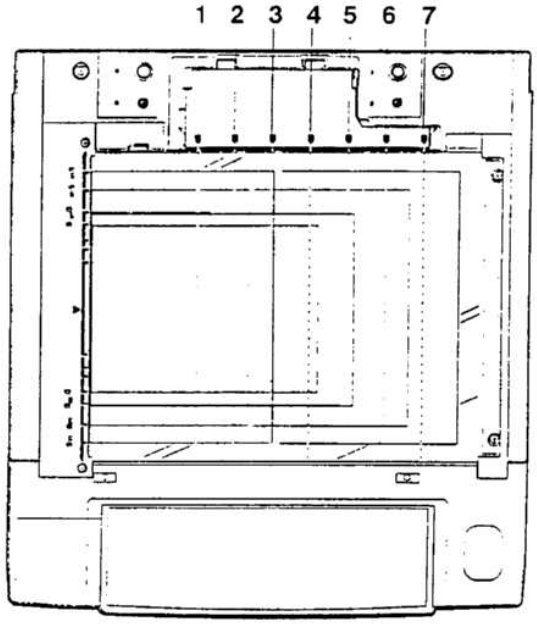

(Sensor Check Mode)

The detection levels of the photosensors can be viewed using Simulation 41-01. (After the original detection levels are input, the machine enters the check mode automatically).

Procedure for checking the photosensor

- C → =J → 0 → =J → 4 → 1 → PSW → 1 → PSW . All the original size indication lamp and automatic paper select lamp go on. When the light emitter of the original size detection LED is blocked, the original size lamp goes off.

* The arrangement of photosensors is as follows:

Bearing	Internal AB system	External AB system	External Inch system
1	—	A5	8-1/2 x 5-1/2"
2	B5	A4	8-1/2 x 11"
3	A4	—	—
4	B5R	–A4R	8-1/2 x 11"(R)
5	A4R	—	—
6	B4	B4	8-1/2 x 14"
7	A3	A3	17"

The automatic original select lamp goes on when the original cover is opened, and goes off when the original cover is closed.

When detecting that the original cover is closed, the original size indication lamp goes off.

(Checking the Light Receiving Level and Decision Level)

The light receiving level and decision level can be viewed using Simulation 41-03.

① Light receiving level indication mode

C → =J → 0 → =J → 4 → 1 → PSW → 3 → PSW .

- During Simulation 41-03, the light receiving level is shown on the copy quantity indicator.
- When using ten keys to input a value corresponding to each sensor after Simulation 41-03, a corresponding original size indication lamp goes on, thus permitting the light receiving level of each sensor to be checked.
- The automatic paper select lamp goes on when the original cover is opened, and goes off when the original cover is closed.

② Level setting indication mode

C → =J → 0 → =J → 4 → 1 → PSW → 3 → PSW → AUTO IMAGE SELECT.

- The pause lamp goes on by the above operation.
- The level of each sensor specified in Simulation 41-02 is shown on the copy quantity indicator.
- When using ten keys to input a value corresponding to each sensor after Simulation 41-03, a corresponding original size indication lamp goes on, thus permitting the specified level of each sensor to be checked.

5. Adjustment of Copy Density

1. When must the copy density be adjusted ?

- When doing maintenance;
- After adjusting the output current of the main charger and transfer charger, the bias voltage of the separation charger and the grid voltage (After replacing the charger unit and/or the high voltage unit);
- After adjusting the developing bias;
- After replacing parts in the AC PWB unit;
- After replacing the automatic exposure sensor;
- After replacing the copy lamp;
- After replacing the optical unit;
- After disassembling, repairing and/or adjusting the optical unit;
- After moving the exposure control plate;
- After replacing the drum;
- After replacing the main substrate

2. Notes on adjustment of copy density

Before adjusting the copy density, do the followings:

1. Clean the optical system(original glass plate, lens, mirror, copy lamp, reflector).
2. Clean the automatic exposure sensor (clean the surface of the photosensor with waste soaked with alcohol or water).
   (Note: The use of dry waste will cause dust adhesion on the surface of the sensor due to static electricity).
3. Clean the (main, transfer and separation) charger wire and the screen grid.
4. Clean the blank lamp and the separation lamp around the drum holder unit.
5. Clean the drum cleaning blade. (After cleaning, always apply powder on the blade).

Note: Perform the manual-exposure density adjustment first, and then perform the auto-exposure density adjustment.

Note:
- **This machine automatically performs the correction to the optical system dirt.**
  When Simulation 46-01 is performed, each mode correction is initialized. When performing Simulation 46-01, perform the adjustments of all modes.
- **This machine automatically performs the correction to the sensitivity degrading due to aging of the photo conductor.**
  When Simulation 20 is performed, the correction state is initialized. Simulation 20 should be performed always before Simulation 46-01.

3. Procedure for copy density adjustment

(1) Initial setting of auto-exposure density level (User adjustment)

Enter the auto-exposure copy (AUTO) mode, open the front door and press down the mode exchange key for at least 3 sec. The density level LED is lit. Then set the density to "3" with [LIGHT] and [DARK] keys.

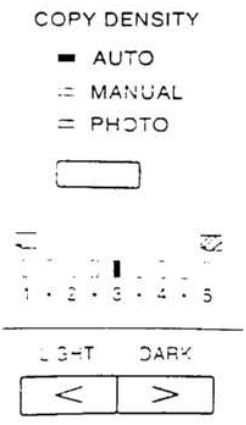

(2) Initial setting of TSM mode (User adjustment)

Enter the PHOTO copy mode, open the front door and press down the mode exchange key for at least 3 sec. The density level LED is lit. Then initial-set the density to the normal mode with [LIGHT] and [DARK] keys.

Density level indicated "3": Normal mode
"1": TSM mode

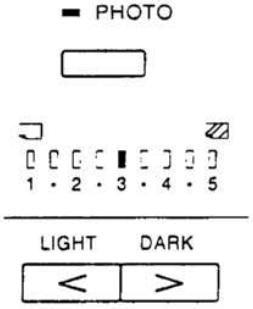

(3) Adjustment of AE sensor level

1. Perform Simulation 47. (The mirror base makes scanning motion and stops at AE sensor level measuring position).
2. Place four or five A3-size (or 11" x 17") papers one upon another on the original table.
3. Press the print switch again. The copy quantity indicator shows the AE sensor output level for blank paper, which is stored in memory.

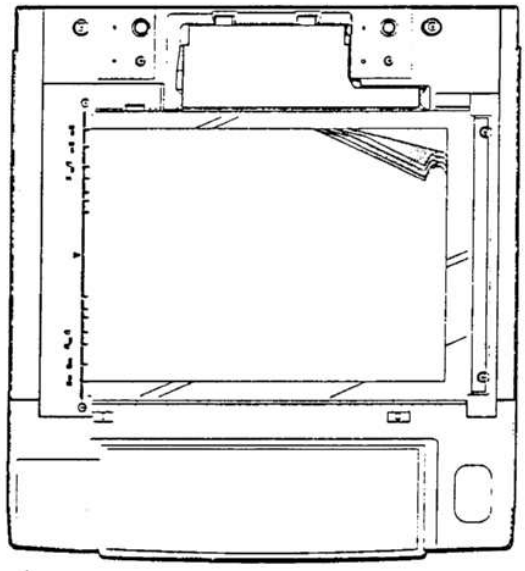

(4) Setting of drum sensitivity

1 Perform Simulation 26-07 and check that the first digit of the 4-digit drum number printed on the front-frame sided drum flange is shown on the copy quantity indicator.

2 If the indicated number differs from the drum number, press the copy quantity key to change the setting.

Note: If the setting is done with the copy quantity key, the indicated number is limited to 1, 2 or 3.

(5) Setting of test chart

1 Align four or five papers with at least 120 mm in width and approx.420 mm in length one upon another.

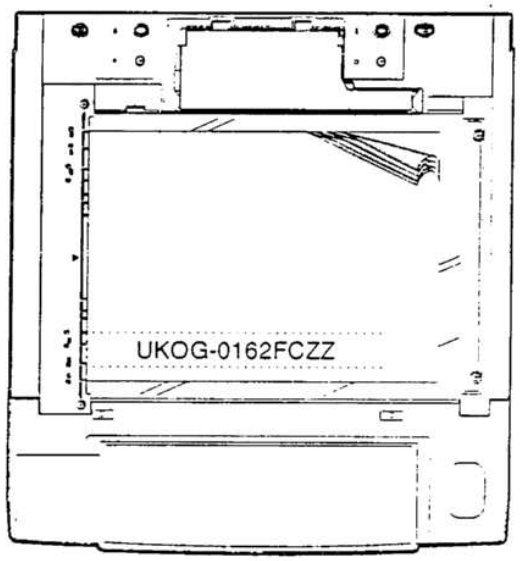

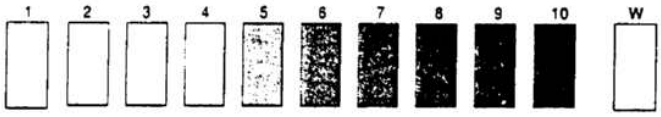

2 Set the test chart (UKOG-0162FCZZ) on this side of the papers.

UKOG-0162FCZZ DENSITY No.	1	2	3	4	5	6	7	8	9	10	W
UKOG-0089CCZZ DENSITY No.	0.1		0.2		0.3				0.5	1.9	0
KODAK GRAY SCALE		1		2		3		4		19	A

SHARP CORPORATION
MADE IN JAPAN

(6) Adjustment of copy density

A. Checking the developing bias output
Check that the output value is -215 V when the exposure is set to "1" in the manual exposure mode. Perform Simulation 8-01 for checking the developing bias.

B. Adjusting the density in manual exposure

1 Perform Simulation 46-01 for adjusting the copy density.
The exposure indicator of the operation panel shows "1" of the manual copy mode.

2 Take a copy.
Check that the "6" of UKOG-0162FCZZ (or 0.5 of UGOG-0089CSZZ) has slightly copied and "5"(0.3) no copied.

<When light> Decrease the value shown on the copy quantity indicator.
<When dark> Increase the value shown on the copy quantity indicator.
* available values : 1-99

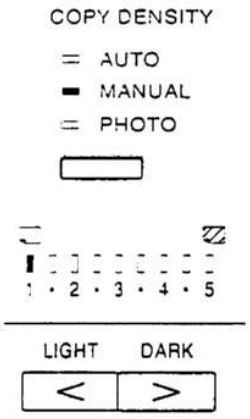

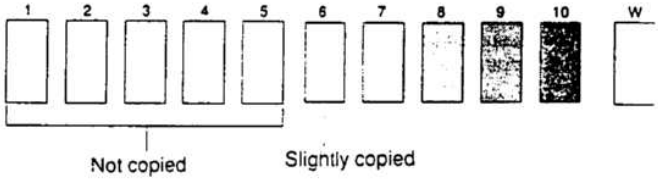

3 When the copy density meets the above requirement, press the exposure key [DARK] so that "5" is shown on the density indicator.

4 Make a copy.
Check that the "2" of UKOG-0162FCZZ (or 0.2 of UGOG-0089CSZZ) has slightly copied and "1"(0.1) no copied.

<When light or dark> See 2).

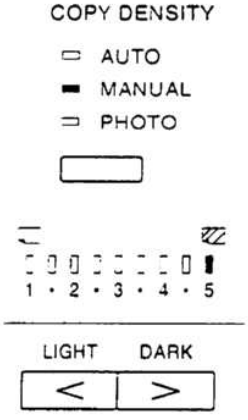

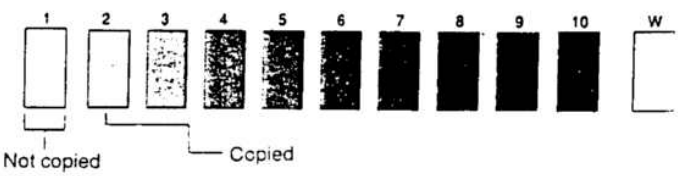

C. Adjusting the TSM mode

① Press the exposure mode exchange key to enter the TSM mode.
On the exposure indicator of the operation panel, MANUAL and PHOTO is simultaneously lit and "1" is shown.

2 Use the same procedures as those of B. ② to ④ to adjust the exposure "1" and "5".

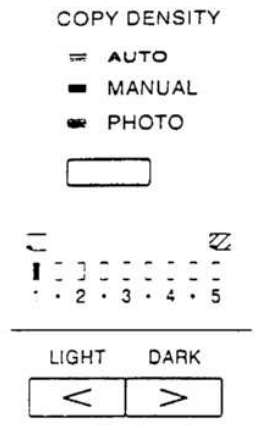

D. Adjusting the photo mode

① Press the exposure mode exchange key to enter the photo mode.
The exposure indicator of the operation panel shows "1" of the photo mode.

② Use the same procedures as those of B. ② to ④ to adjust the exposure "1" and "5".

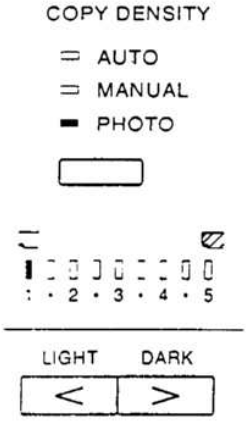

E. Adjusting the auto(normal) mode

1 Press the exposure mode exchange key to enter the auto(normal) mode.
The exposure indicator of the operation panel shows "5" of the auto mode.

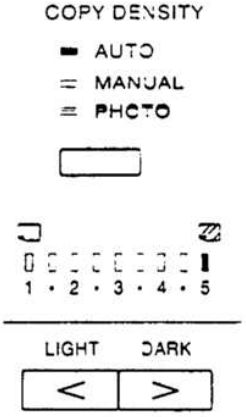

② Press [LIGHT] key until "1" is indicated.

③ Replace "1" with "10".

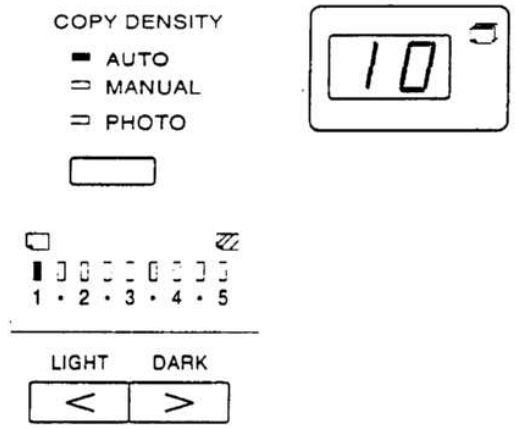

④ Press [DARK] key until "5" is indicated.

⑤ Make a copy.
Check that the "3" of UKOG-0162FCZZ (or 0.2 of UGOG-0089CSZZ) has slightly copied.
If the above condition is not met, readjust as follows:

<When light> Decrease the value shown on the copy quantity indicator.

<When dark> Increase the value shown on the copy quantity indicator.



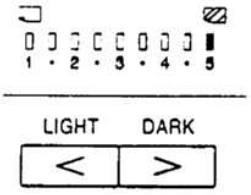

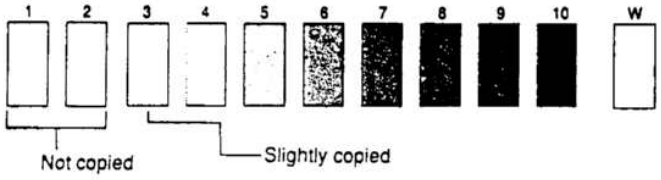

(2) Adjusting the auto (toner save) mode

① Press the mode exchange key to enter the auto (toner save) mode.
On the exposure indicator of the operation panel, AUTO and PHOTO is simultaneously lit and "5" is indicated.

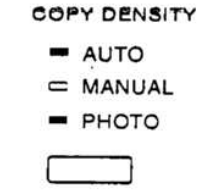

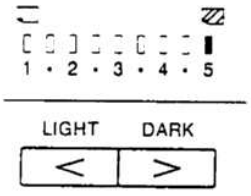

② Press [LIGHT] key until "1" is indicated.

③ Replace "1" with "10".

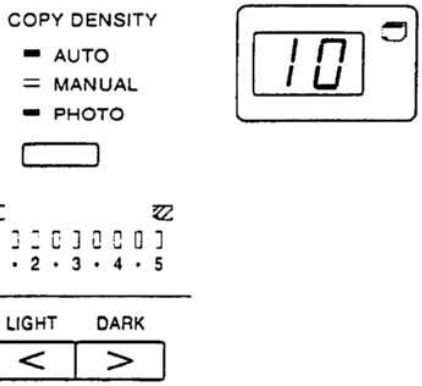

④ Press [DARK] key until "5" is indicated.

⑤ Use the same procedures as those of E. ⑤ to adjust the density.

Procedures for Adjusting the Copy Density

Item	Description
(1) Auto-exposure density level	3 (exposure indication)
(1')Initial setting of TSM mode	3 (normal mode)
(2) Setting of AE sensor characteristics	Perform Simulation 47
(3) Setting of drum sensitivity	Perform Simulation 26-07
(4) Setting of test chart	Test chart comparison table

UKOG-0162FCZZ DENSITY No.	1	2	3	4	5	6	7	8	9	10	W
UKOG-0089CSZZ DENSITY No.	0.1		0.2		0.3				0.5	1.9	0
KODAK GRAY SCALE		1		2		3		4		19	A

SHARP CORPORATION
MADE IN JAPAN

(5) Adjustment of copy density

A. Adjusting the developing bias output
–215 V (manual exposure 1)
Perform Simulation 8-01

B. Adjusting the manual-exposure copy density
Perform Simulation 46-01

Manual exposure 1

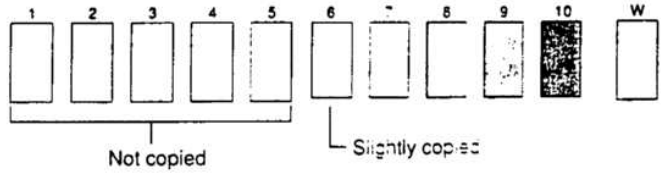

Manual exposure 5

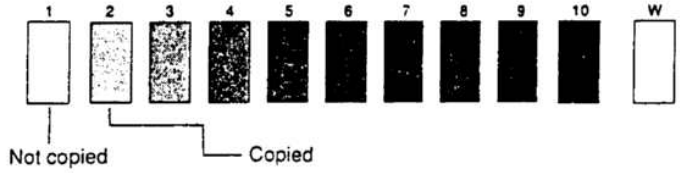

C. Adjusting the TSM mode
Perform Simulation 46-01 → EXPOSURE.MODE.CHANGE key

Manual/photo exposure 1

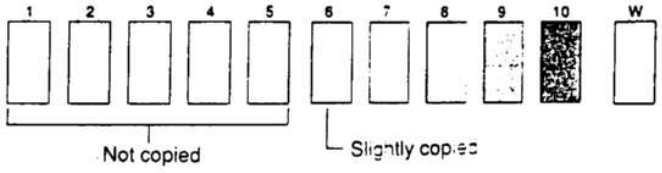

Manual/photo exposure 5



D. Adjusting the copy density in photo mode
Perform Simulation 46-01 → EXPOSURE.MODE.CHANGE key

Photo exposure 1

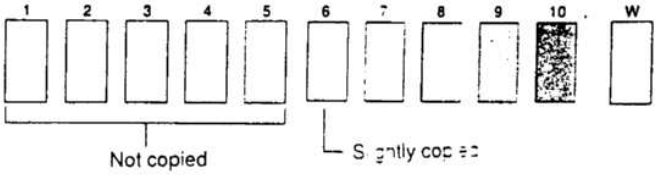

Item	Description
Photo exposure 5	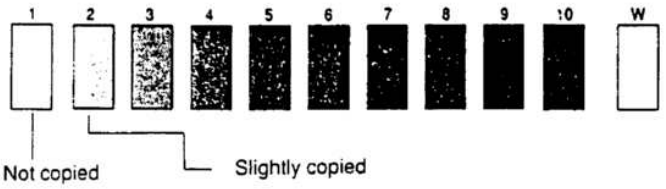
E. Adjusting the auto-exposure copy density (1) Normal mode Auto exposure 1	Perform Simulation 46-01 → EXPOSURE.MODE.CHANGE key Press LIGHT until "1" is indicated, and replace it with "10"
Auto exposure 5	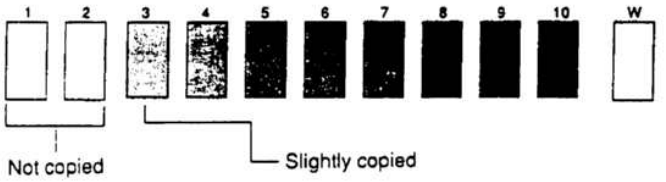
(2) TSM mode Auto/photo exposure 1	Press LIGHT until "1" is indicated, and replace it with "10"
Auto/photo exposure 2	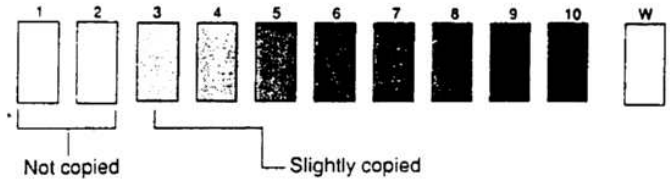

[8] Test commands and diagnostics

1. Test command

(1) Introduction

The following can be done with test command.

- Used to operate any functional block independently to check its function.
- Used to adjust the machine.
- Used to set up functions.

(2) Purpose

It allows to help repairing and adjusting the machine using test command.
When the PAUSE key is pressed in a course of test command being executed, the test command is interrupted with the copy number window turned off and becomes ready to accept entry of a test command number.

*1: If the PAUSE key was pressed for more than five minutes, it may not go into the test command mode.

*2: Further operation may be needed depending on the kind of test command.

*3: One of the next methods is required to cancel the test command as it varies according to the test command. The machine then starts from the state immediately after power on.

— Other than test command 7
The test command is canceled when the CLEAR ALL key is pressed.

— Test command 7
One of the following operation cancels the test command execution.

1. Power switch off.
2. Press the CLEAR → PAUSE → 0 → PAUSE → CLEAR ALL keys.

— Test command 14
The test command 14 is used to clear the memory contents (H2, H3, H4) that has been stored in it. After the test command 14 has been executed, the diagnostic is automatically terminates.

— Special keys
CLEAR ALL key: Test command mode → normal mode.

PAUSE key: Execution of test command is interrupted. Returns to ⑤, if ⑨ when the subsequent is on display.

CLEAR key: Clears the copy number window.

— The diagnostic is automatically terminates after the doorswitch operation "ON → OFF → ON", except "H", "U2" code.

3) Test command execution procedure

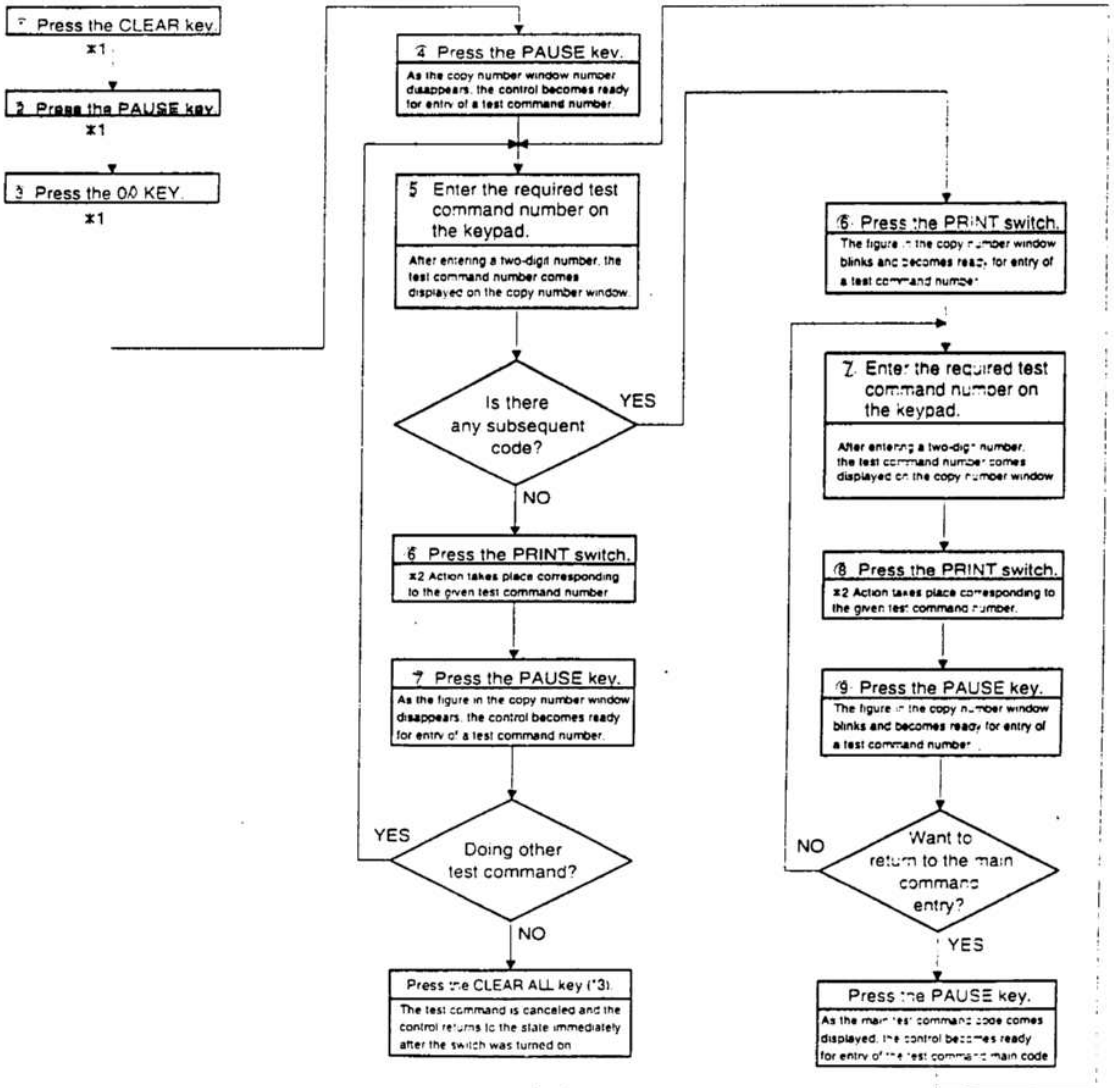

<table>
<tr><th>Main code</th><th>Sub code</th><th>Description</th><th>Ref. Page</th></tr>
<tr><td>1</td><td>01</td><td>This is the test command used to test the optical system. The mirror base automatically starts to scan.
(1) With depression of the PAUSE key, the control moves from the test command mode to be ready to execute it. The READY pilot lamp (RPL) comes active with the zoom ratio at 100%. It is possible to change the zoom mode using the ZOOM key.
(2) When the PRINT key is pressed while the RPL is active, the status lamp turns off and the test command starts to execute. The mirror base moves to scan in the zoom ratio at that time.
(3) If the door is opened while the operation is in process, the operation is interrupted with status "CH" prompted. Closing the door will start the operation all over again from its initial step.</td><td></td></tr>
<tr><td></td><td>02</td><td>This is the test command used to test the optical system sensors. When the test command starts, it starts to test the on/off action of a optical system sensor shown by one of the following lamps.
<table>
<tr><th></th><th>Active status lamp</th></tr>
<tr><td>MENTEL (maintenance lamp)</td><td>Mirror rotary encoder pulse (RE) input</td></tr>
<tr><td>DVPL (developer maintenance lamp)</td><td>Mirror home position input</td></tr>
<tr><td>TNFL (full waste toner lamp)</td><td>Lens home position sensor</td></tr>
<tr><td>TPL (toner empty lamp)</td><td>No.4/5 mirror home position sensor</td></tr>
</table></td><td></td></tr>
<tr><td></td><td>03</td><td>Used to test the zoom lens movement.
• The zoom ratio is displayed on the zoom ratio window.
AB series machine 100% → 50% → 70% → 81% → 86% → 115% → 122% → 141% → 200%
Inch series machine 100% → 50% → 64% → 77% → 95% → 121% → 129% → 141% → 200%</td><td></td></tr>
<tr><td></td><td>04</td><td>• Used to test the zoom lens in the aging test mode.
• Test command 1 to 3 are repeated to test.</td><td></td></tr>
<tr><td>2</td><td>01</td><td>Used to test the action of the ADF and RADF. The aging test starts when the document presence sensor is manually turned on.</td><td></td></tr>
<tr><td></td><td>02</td><td>This is the test command used to test ADF/RADF sensors. On/off state of sensor can be manually tested.
The sensor to be tested can be selected using the keypad.
<table>
<tr><th>Position \ Keypad</th><th>0</th><th>1</th><th>2</th></tr>
<tr><td>TPL (toner empty lamp)</td><td>Sensing presence of document
DSD</td><td>Sensing DF block open/close
AUOD</td><td>Sensing document width
DWS1</td></tr>
<tr><td>TNFL (full waste toner lamp)</td><td>Sensing pre-fed document
DFD</td><td>Sensing paper feed block open/close
FGOD</td><td>Sensing document width
DWS2</td></tr>
<tr><td>DVPL (developer maintenance lamp)</td><td>Sensing document release</td><td>Sensing paper inversion block open/close
TGOD</td><td>Sensing document width
DSW3</td></tr>
<tr><td>MENTEL (maintenance lamp)</td><td></td><td></td><td>Sensing document width
DSW4</td></tr>
<tr><td>JPL (misfeed lamp)</td><td>Sensing document width
DWS</td><td></td><td>Sensing document length
DLS1</td></tr>
<tr><td>PPL (paper empty lamp)</td><td></td><td></td><td>Sensing document length
DLS2</td></tr>
</table>
Lamp on: paper found/door open Lamp off: no paper found/door close</td><td></td></tr>
<tr><td></td><td>03 - 10
03</td><td>Used to test the action of ADF and RADF (individual load check)
Motor A forward rotation</td><td></td></tr>
<tr><td></td><td>04</td><td>Motor A revere rotation</td><td></td></tr>
<tr><td></td><td>05</td><td>Motor B forward rotation</td><td></td></tr>
<tr><td></td><td>06</td><td>Motor B revere rotation</td><td></td></tr>
<tr><td></td><td>07</td><td>Belt clutch (RADF only)</td><td></td></tr>
<tr><td></td><td>08</td><td>Paper feed solenoid (RADF only)</td><td></td></tr>
<tr><td></td><td>09</td><td>Inversion solenoid (RADF only)</td><td></td></tr>
<tr><td></td><td>10</td><td>Stopper solenoid</td><td></td></tr>
</table>

<table>
<tr><th>Main code</th><th>Sub code</th><th>Description</th><th>Ref. Page</th></tr>
<tr><td>3</td><td>02</td><td>This is the test command used to test a sensor of the sorter.
On/off state of sensor can be manually tested.
The sensor to test can be selected using the keypad.

<table>
<tr><th>Keypad / Position</th><th>0</th><th>1</th><th>2</th></tr>
<tr><td>TPL (toner empty lamp)</td><td>Sensing paper registration
PES</td><td>Sensing indexer upper limit
IULS</td><td>Sending sorter setup
SJS</td></tr>
<tr><td>TNFL (full waste toner lamp)</td><td>Sensing paper release
PWB-L'S</td><td>Index lower limit sense (ILLS) or Jogger (SF-S52) home sense (JHPS)
(ILLS)</td><td>Sending top cover open/close
UCSW</td></tr>
<tr><td>DVPL (developer maintenance lamp)</td><td>Sensing paper on tray
(TPS)</td><td>Sensing indexer at home position
IHS</td><td>Sensing blower cover open/close</td></tr>
<tr><td>MENTEL (maintenance lamp)</td><td>Sensing paper on stapler (SPS)</td><td>Bin home position sense
(BPSW)</td><td>—</td></tr>
<tr><td>JPL (misfeed lamp)</td><td>—</td><td>—</td><td>Stapler home position sense (SHPS)</td></tr>
<tr><td>PPL (paper empty lamp)</td><td>Paper edge sense
(PEGS)</td><td>—</td><td>Sending needle presence (NES)</td></tr>
</table>
Lamp on: paper found/door opened/ON
Lamp off: no paper found/door closed/OFF</td><td></td></tr>
<tr><td></td><td>03 ~ 08</td><td>Used to test the action of the sorter (individual load check).
Following action can be tested.
03 Transport motor rotation</td><td></td></tr>
<tr><td></td><td>04</td><td>Indexer motor rotation (returns to the home position at first, then stops at each bin location Bin 1 to Bin 21, moving up and down.</td><td></td></tr>
<tr><td></td><td>05</td><td>Fan motor rotation in the case of (SF-S15), Jogger motor (in the case of SF-S52)</td><td></td></tr>
<tr><td></td><td>06</td><td>Gate solenoid in the case of (SF-S15), Paper hold solenoid (in the case of SF-S52)</td><td></td></tr>
<tr><td></td><td>07</td><td>Offset solenoid (in the case of SF-S52)</td><td></td></tr>
<tr><td></td><td>08</td><td>Stapler motor rotation (the paper is stapled when there is a paper in the stapler tray).</td><td></td></tr>
<tr><td>4</td><td>02</td><td>This is the test command used to test sensor of the desk. On/off state of sensor can be manually tested.
The sensor to be tested can be selected using the keypad.

<table>
<tr><th>Keypad / Position</th><th>0</th><th>1</th><th>2</th></tr>
<tr><td>TPL (toner empty lamp)</td><td>Sensing paper fed from the upper cassette
DPOD</td><td>Upper cassette lift upper limit sensor
DLUD1</td><td>Sensing paper presence on the upper cassette
DPE1</td></tr>
<tr><td>TNFL (full waste toner lamp)</td><td>Sensing paper fed from the middle cassette
DPOD2</td><td>Middle cassette lift upper limit sensor
DLUS2</td><td>Sensing paper presence on the middle cassette
DPE2</td></tr>
<tr><td>DVPL (developer maintenance lamp)</td><td>Sensing paper fed from the bottom cassette
DPOD3</td><td>Bottom cassette lift upper limit sensor
DLUD3</td><td>Sensing paper presence on the bottom cassette
DPE3</td></tr>
<tr><td>MENTEL (maintenance lamp)</td><td>—</td><td>—</td><td>—</td></tr>
<tr><td>JPL (misfeed lamp)</td><td>—</td><td>—</td><td>—</td></tr>
<tr><td>PPL (paper empty lamp)</td><td>Sensing door close/open
DPOP</td><td>—</td><td>—</td></tr>
</table>
Lamp on: paper found/door opened/ON
Lamp off: no paper found/door closed/OFF</td><td></td></tr>
<tr><td></td><td>03</td><td>Used to test the on/off state of the first cassette size switch of the desk.

<table>
<tr><th>Cassette / Position</th><th>Cassette size switch</th></tr>
<tr><td>TPL (toner empty lamp)</td><td>CSSW1</td></tr>
<tr><td>TNFL (full waste toner lamp)</td><td>CSSW2</td></tr>
<tr><td>DVPL (developer maintenance lamp)</td><td>CSSW3</td></tr>
<tr><td>MENTEL (maintenance lamp)</td><td>CSSW4</td></tr>
<tr><td>JPL (misfeed lamp)</td><td>—</td></tr>
<tr><td>PPL (paper empty lamp)</td><td>—</td></tr>
</table></td><td></td></tr>
</table>

Main code	Sub code	Description	Ref. Page
4	03	(Cassette size board) 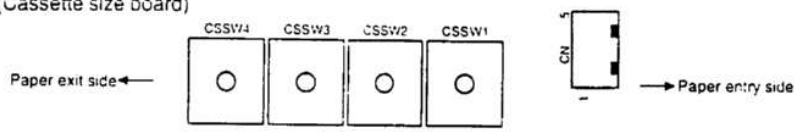	
	04	Used to test the on/off state of the second cassette size switch of the desk. Function is identical to the test command 04-03.	
	05	Used to test the on/off state of the third cassette size switch of the desk. Function is identical to the test command 04-03.	
	06	Transport motor rotation of the desk	
	07	Off when detected the upper limit of the first cassette lift up motor of the desk.	
	08	Off when detected the upper limit of the second cassette lift up motor of the desk.	
	09	Off when detected the upper limit of the third cassette lift up motor of the desk.	
	10	Activate transport clutch of the desk	
	11	Activate first cassette paper feed solenoid of the desk	
	12	Activate paper feed clutch of the first cassette of the desk	
	13	Activate second cassette paper feed solenoid of the desk	
	14	Activate paper feed clutch of the second cassette of the desk	
	15	Activate third cassette paper feed solenoid of the desk	
	16	Activate paper feed clutch of the third cassette of the desk	
5	01	All LED's on the operation panel are turned on for five seconds.	
	02	This is the test command used to test the heater lamp. Heater lamp turned on and off five times. 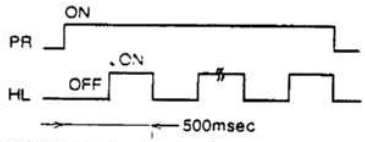 The heater turns on and off in the order shown above.	
	03	This is the test command used to test the copy lamp. Copy lamp turned on in the following order. When the test command starts, the copy lamp turns full power for one second with the manual exposure setting 3.0 shown, and the copy lamp intensity can be changed to the power set on the exposure setup key for a period of 6.25 seconds. 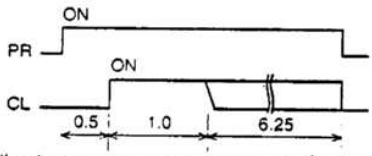 * Refrain from repeating this test command without waiting for lamp and glass to cool.	
	04	This is the test command used to check activation of the discharge lamp (DL) and the blank lamps (BL). • The discharge lamp (DL) turns on for 30 seconds. • Each blank lamp starts to turn on from the front frame side to the rear frame side. Finally, all blank lamps turn on.	
6	02	Activation of the separation solenoid • Used to test the action of the drum separator pawl.	
7	01	○ Aging test with alert for paper misfeed 1. Used to check the warmup time. 2. Executes the continuing aging test for the given number of copies. When the test command is executed, the machine performs its normal action and the warmup time starts to count from zero and increase count every 2 second. The count is displayed on the copy lamp window. When the RPL is turned on, the addition of the copy number is interrupted with the copy number remaining on display as it is. When the CLEAR key is pressed, the copy number must be entered on the keypad, and with depression of the PRINT switch, the given number of copies repeated to produce. In this case, the paper misfeed function comes alive.	
	02	○ Aging test without alert for paper misfeed Aging test is done without feeding paper. This test command is similar to 7-1. But, it does not alert paper misfeed occurrence. The warmup time check is similar as the test command 21.	
	03	○ Aging test without misfeed and fusing This test command is similar to 7-1. But, it does not count the warmup time and disregards the heater and paper feed troubles, without activating the heater lamp.	

Main code	Sub code	Description	Ref. Page
7	04	= Warmup disabled Machine action is checked disregarding the warmup time. When the test command is executed, the RPL immediately turns on. Although the machine action may be tested, it may show the trouble status H4 depending on the case if low heater temperature is found.	
	06	= Intermittent aging test	
	07	= Intermittent aging test without alert for paper misfeed	
8	01	Developing bias voltage output This is the test command used to check the developing bias voltage. The developing bias voltage is turned on for 30 seconds. Standard developing bias setting is -215VDC.	[7]-1(3)
	02	Main (charge) corona output Standard manual exposure mode main corona grid voltage is -730±15V. This is the test command used to check the main corona variance between the front and rear sides. The corona output continues for 30 seconds. • The main corona variance must be within 8μA between the front and the rear.	[7]-4-(3)
	03	Main corona output Standard photographic mode main corona grid voltage is -450±15V.	[7]-2-(3)
	04	Main corona output Standard TSM main corona grid voltage is -610V±15V.	[7]-2-(3)
	06	Transfer corona output This is the test command used to check the transfer corona output (THV). The transfer corona output continues for 30 seconds. 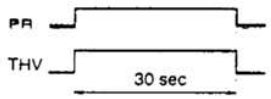 Standard transfer corona output is -31±5μA with variance between the front and rear at 8μA, maximum.	[7]-2-(3)
	07	Separation corona output This is the test command used to check the separation corona output (SHV). The separation corona output continues for 30 seconds. 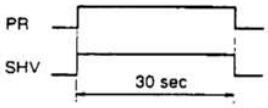 Standard separation corona output is -10 to 10 Vdc (Japan).	[7]-2-(3)
9	02	ADU sensor check test command	

Position	Sensor
TPL (toner empty lamp)	DPPD1
TNFL (full waste toner lamp)	DPPD2
DVPL (developer maintenance lamp)	DTPID
MENTEL (maintenance lamp)	PFD
JPL (misfeed lamp)	APHPS1
PPL (paper empty lamp)	APHPS2

	03	ADU rear plate drive motor rotation • Used to check the rear end plate movement (AB series) HP.A3 → B4 → A4R → B5R → A4 → B5 → A5 → HP.A3 (Inch series) HP.11" x 17" → 11" x 14" → 8½" x 11"(R) → 8½" x 11" → HP.11" x 17"
	04	ADU alignment plate drive motor rotation • Used check the alignment plate movement (AB series) HP.A3 → B4 → A4R → B5R → A4 → B5 → A5 → HP.A3 (Inch series) HP.11" x 17" → 11" x 14" → 8½" x 11"(R) → 8½" x 11" → HP.11" x 17"

Main code	Sub code	Description	Ref. Page
9	05	Gate solenoid activation Used to check the gate solenoid movement	
10	—	Toner motor activation Used to check the toner motor activation.	
14	—	Trouble cancellation This is the test command used to cancel other than the "U2" trouble (H2, H3, H4). After the trouble has been removed, the test command terminates.	
16	—	U2 trouble cancellation This is the test command used to cancel the "U2" trouble. After the trouble has been removed, the test command terminates.	
20	—	Maintenance counter clear Used to reset the maintenance preset counter to zero after the maintenance is completed. It is mandatory to clear the counter after the maintenance is over.	
21	01	○ Maintenance cycle setting Used to set the maintenance cycle. Code — Maintenance cycle 0 ····· 80,000 sheets 1 ····· 5,000 sheets 2 ····· 10,000 sheets 3 ····· 20,000 sheets 4 ····· 40,000 sheets 5 ····· None The default is 0.	
	02	○ Maintenance setup (Japan only) • Mini-maintenance setup for the black copy kit The following procedure is required. As the PAUSE lamp comes active and the number already set (1 or 2) is displayed. In this occasion, enter the required mini-maintenance cycle on the keypad and press the PRINT switch. Code — Maintenance cycle 0 ····· 80,000 sheets 1 ····· 5,000 sheets 2 ····· 10,000 sheets Default is set to 5,000 sheets ("1") of the black copy.	
	03	○ Mini-maintenance setup (Japan only) • Mini-maintenance setup for color copy kit The COPY and the COLOR TONER lamps come active with the presently set figure (1) displayed. Enter the required mini-maintenance cycle on the keypad and press the PRINT switch. Code — Mini-maintenance cycle 0 ····· 10,000 sheets 1 ····· 5,000 sheets ※ The code "1" needs to be entered because the color copy kit is a 5,000 sheets kit. Default is set to 5,000 sheet ("1") of the color copy.	
22	01	○ Maintenance counter display Copy number of the maintenance counter is displayed. The contents of the counter is displayed on the copy number window in three segments, each segment consisting of a two-digit number. □□ → Blank → □□ → Blank → □□ → A long Blank	
	02	○ Maintenance preset counter display This test command is used to check the contents of the maintenance preset counter. It is displayed in the same way as the test command 22-1.	
	03	○ Paper misfeed map display	
	04	○ Total misfeed counter display	
	05	○ Total counter display This counter is used to show the total copy number of the machine. • It is displayed in the same way as the test command 22-1.	

Main code	Sub code	Description	Ref. Page
22	06	◦ Developer counter display The contents of the copy number counter of the installed developing unit is displayed. • It is displayed in the same way as the test command 22-1. • The color of the developing unit is displayed by a combination of the maintenance lamp (MENTEL), full waste toner lamp (TNFL), and the developer maintenance lamp (DVPL), while the developing unit is operating.	
		Color / TNFL / DVPL / MENTEL Black: ○ / × / × Red: × / ○ / × Blue: ○ / ○ / × ○ ··· ON × ··· OFF	
	07	◦ Developer preset counter display Number of developer replacements and the reset counter contents of the installed developing unit are displayed. • It is displayed in the same way as the test command 22-1. • Color of the installed developing unit is the same as the test command 22-6.	
	08	◦ ADF/RADF counter display Used to check the number of originals fed through the ADF or RADF. It is displayed in the same way as the test command 22-1.	
	09	◦ Duplex counter display Used to check the number of sheets fed through the duplex unit. It is displayed in the same way as the test command 22-1.	
24	01	◦ Misfeed mac memory and total misfeed counter clear	
	03	◦ ADF/RADF counter clear The contents of the copy number counter is reset for the ADF/RADF. It is mandatory to clear the memory contents after the maintenance is over.	
	04	◦ Duplex counter clear The contents of the copy number counter is reset to the duplex unit. **It is mandatory to clear the memory contents after the maintenance is over.**	
25	01	Main motor activation • Used to check malfunction in the main motor drive train. • Also, monitors the toner density sensor. (Procedure) Monitors the toner sensor of the black developing unit. (To check the sensor) C → =J → 0 → =J → 2 → 5 → PSW → 1 → PSW	
	02	Automatic developer referance setting • This is the test command used to monitor the toner sensor and to automatically adjust the developer. • For the automatic developer adjustment, the developing tank is stirred and the toner sensor output is monitored. The sensor is monitored for 16 times in 2 minutes after the stirring started and their mean value is stored in the memory as the toner density adjust value. (See the area marked with an asterisk in the figure below.) (Afterwards, referance changes as copies are made to maintain density.)	
		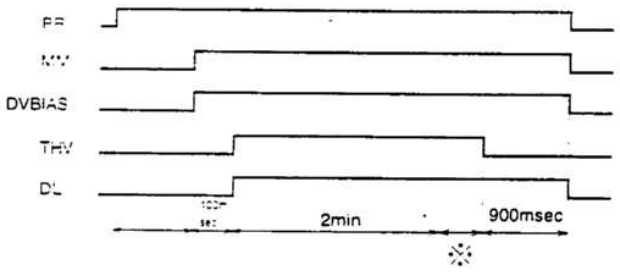	
		(Procedure) C → =J → 0 → =J → 2 → 5 → PSW → 2 → PSW	

Main code	Sub code	Description	Ref. Page
26	01	Option unit setup • Used to set up option unit. 1 When the test command is executed, the presently stored machine setup code is displayed with the READY lamp turned on. 2 After the READY lamp has turned on, enter an appropriate setup code on the keypad and press the PRINT switch. Then, the date is stored in the memory and the READY lamp turns off.	

Option	Code	
RADF/ADF	1	(Automatic setup)
ADU	(2)	
Desk	4	
Sorter (three types)	10	

○ Used to set the code that corresponds to an option unit.
(EX): To set the RADF together with ADU, enter "5" (1+4=5). "7" is on display.
NOTES:
(1) Be sure to enter the code that corresponds to the installed option unit.
(2) If an option unit not corresponding may result in a trouble. See the trouble code chart.

03 — Timer auto clear (yes/no) and counter mode setup

1 When the test command is executed, the code of the presently stored mode is displayed with the READY lamp turned on.
2 After the READY lamp has turned on, enter an appropriate setup code on the keypad and press the PRINT switch. Then, the code is stored in the memory and the READY lamp turns off.

Setup code	Timer auto clear	Total counter (single/double count)	Maintenance counter (single/double count)
0	○	Double count	Double count
1	○	Single count	Double count
2	○	Double count	Single count
3	○	Single count	Single count
40	×	Double count	Double count
41	×	Single count	Double count
42	×	Double count	Single count
43	×	Single count	Single count

06 — Destination setup

Used to set the model number and destination.

1 When the test command is executed, the presently stored model number and the destination code are displayed (see table below) and the READY lamp turns on.
2 After the READY lamp has turned on, enter the model number and the destination code on the keypad and press the PRINT switch to store the setting in the memory. The READY lamp then turns off.

Destination / Model	Japan	U.K. (SUK)	Export AB series machine except U.K.	U.S.A. (SEC)	Inch series machine except U.S.A.
SF-2027	4	1	5	6	7
SF-2022	14	11	15	16	17

If 20 is added to the destination code, loading of a developing unit other than black is disregarded and "CH" displayed.

Automatic paper selection function setup

Automatic paper selection/manual selection (only for the export version SF-2022 equipped with ADF/RADF)

	Initial selection	When in timeout CA	When document presents in RADF/ADF	
SF-2022 (export version)	Mode-1 (APS mode)	MAN	APS	APS only when ADF/RADF used
	Mode-2 (Man mode)	MAN	MAN	
SF-2022 (Japan) and SF-2027	Mode-1 (APS mode)	APS	APS	
	Mode-2 (Man mode)	MAN	MAN	

It can be switched to the mode-2 when 40 is added to the given destination code.

Main code	Sub code	Description	Ref. Page
26	07	Drum sensitivity setup 1 When the test command is executed, the number stored in the memory is recalled and the READY lamp turns on. 2 A number 1 to 3 may be entered on the keypad while the RPL is active. 3 Press the PRINT switch after the number has been entered. With this, the READY lamp turns off and the test command number is displayed. Now, this is all needed for the setup. • Drum Keypad entry: 1 2 3 / Sensitivity: 1 2 3 Input of the zoom position shift correction value (26-08, 26-09)	
	08	Lens characteristics entry (at a time of lens replacement) For each lens has a variance in its focal distance, the lens moving distance in any zoom mode must correspond with the focal distance of the lens. The zoom ratio varies proportionate to the variance of the lens focal distance. To avoid problem, the class of the lens focal distance refer to chart next) is stored in the memory using the test command. In a variable zoom mode, the lens moving distance that corresponds to the lens focal distance is obtained on the basis of the data so as to produce the accurate zoom copy. Setup method (26-08) 1 When the test command is executed, the presently stored preset code is displayed and the READY lamp turns on. 2 After the READY lamp turned on, enter the lens number shown on the lens upper area and press the PRINT switch to store the preset value in the memory. The READY lamp now turns off. C → =J → 0/0 → =J → 2 → 6 → PSW → 8 → PSW → 1 → 4 → PSW (Setting)	[7]-3-(6)
	09	4/5 mirror characteristics entry (at a time of lens replacement) (Setup method (26-09) 1 Set the correction value for lens marked value based on "lens value vs. test command input." Press C → =J → 0/0 → =J → 2 → 6 → PSW → 9 → PSW keys to execute the test command 26-09. As the READY lamp turns on, the previously set value 1 to 21) is shown. 2 Enter the new value on the keypad. EX: If the value shown on the lens is +1, 2, pick up "14." Press the 1 → 4 → PSW keys. A figure 0 to L is shown on the lens value label.	[7]-3-(6)

(Label)

82525
No. 114191
O-L
+1.2

Value shown on the label	Test command 48-01	Test command 48-01 =J	Test command 26-09 Zoom correction (No.4/5 mirror)	Test command 26-08 Zoom correction (lens)
+4.0	10	20	21	21
3.9	11	21		
3.8	12	22		
3.7	13	22	20	20
3.6	14	22		
3.5	15	23		
3.4	16	23		
3.3	17	24	19	19
3.2	18	24		
3.1	19	25		
3.0	20	25		

Main code	Sub code	Description	Ref. Page
26	09		

Value shown on the label	Test command 48-01	Test command 48-01 =↵	Test command 26-09 Zoom correction (No.4/5 mirror)	Test command 26-08 Zoom correction (lens)
2.9	21	26	18	18
2.8	22	26		
2.7	23	27		
2.6	24	27		
2.5	25	28	17	17
2.4	26	28		
2.3	27	29		
2.2	28	29		
2.1	29	30	16	16
2.0	30	30		
1.9	31	31		
1.8	32	31		
1.7	33	32	15	15
1.6	34	32		
1.5	35	33		
1.4	36	33		
1.3	37	34	14	14
1.2	38	34		
1.1	39	35		
1.0	40	35		
0.9	41	36	13	13
0.8	42	36		
0.7	43	37		
0.6	44	37		
0.5	45	38	12	12
0.4	46	38		
0.3	47	39		
0.2	48	39		
+0.1	49	40	11	11
0	50	40		
−0.1	51	40		
0.2	52	41	10	10
0.3	53	41		
0.4	54	42		
0.5	55	42		
0.6	56	43	9	9
0.7	57	43		
0.8	58	44		
0.9	59	44		
1.0	60	45	8	8
1.1	61	45		
1.2	62	46		
1.3	63	46		
1.4	64	47	7	7
1.5	65	47		
1.6	66	48		
1.7	67	48		
1.8	68	49	6	6
1.9	69	49		
2.0	70	50		
2.1	71	50		

Main code	Sub code	Description	Ref. Page

Value shown on the label	Test command 48-01	Test command 48-01 =J	Test command 26-09 Zoom correction (No.4/5 mirror)	Test command 26-08 Zoom correction (lens)
2.2	72	51	5	5
2.3	73	51		
2.4	74	52		
2.5	75	52		
2.6	76	53	4	4
2.7	77	53		
2.8	78	54		
2.9	79	54		
3.0	80	55	3	3
3.1	81	55		
3.2	82	56		
3.3	83	56		
3.4	84	57	2	2
3.5	85	57		
3.6	86	58		
3.7	87	58		
3.8	88	59	1	1
3.9	89	59		
–4.0	90	60		

(Lens value input vs. test command input)

26	11	Time out clear period setup Possible to set between 1 and 99 seconds (default at 60 seconds).	
30	01	Monitoring main unit paper sensor Used to check the on/off state of paper sensor within the copier using the misfeed lamp and the paper feed location lamp.	

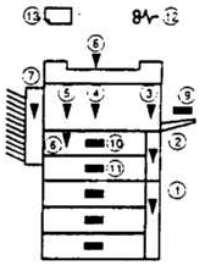

Location Marking	Sensor
①JL1	PID
②JL2	PPD1
③JL3	PPD2
④JL4	PSD
⑤JL5	POD
⑥JL6	—
⑦JL7	—
⑧JL8	—
⑨CSL1	PED1
⑩CSL2	PED2
⑪CSL3	PED3
⑫JPL	LUD1
⑬PPL	LUD2

	02	Monitoring paper cassette size Used to check the on/off state of paper cassette size.

Position \ Cassette	Cassette feed
TPL (toner empty lamp)	CSSW1
TNFL (full waste toner lamp)	CSSW2
DVPL (developer maintenance lamp)	CSSW3
MENTEL (maintenance lamp)	CSSW4
JPL (misfeed lamp)	—
PPL (paper empty lamp)	—

<table>
<tr><th>Main code</th><th>Sub code</th><th>Description</th><th>Ref. Page</th></tr>
<tr><td>41</td><td>01</td><td>Document size photosensor check
The length of the document is sensed by way of the sensor beam interrupt method. All document size lamps and automatic paper selection lamps turn on. When the beam from the sensor LED PWB is interrupted, the corresponding document size lamp turns off.
* See the chart below for the location of photosensor.
<table><tr><th>Axis</th><th>Japan AB series</th><th>Export AB series</th><th>Export inch series</th></tr><tr><td>1</td><td>—</td><td>A5</td><td>INV</td></tr><tr><td>2</td><td>B5</td><td>A4</td><td>LT</td></tr><tr><td>3</td><td>A4</td><td>—</td><td>—</td></tr><tr><td>4</td><td>B5R</td><td>A4R</td><td>11" x 8½" (R)</td></tr><tr><td>5</td><td>AR4</td><td>—</td><td>—</td></tr><tr><td>6</td><td>B4</td><td>B4</td><td>11" x 14"</td></tr><tr><td>7</td><td>A3</td><td>A3</td><td>11" x 17"</td></tr></table></td><td>[7]-4-(1)</td></tr>
<tr><td>41</td><td>01</td><td>• The automatic paper selection lamp turns on when the original cover is open and turns off when the cover is closed.
• When closing of the original cover is sensed, all document size lamps turn off.
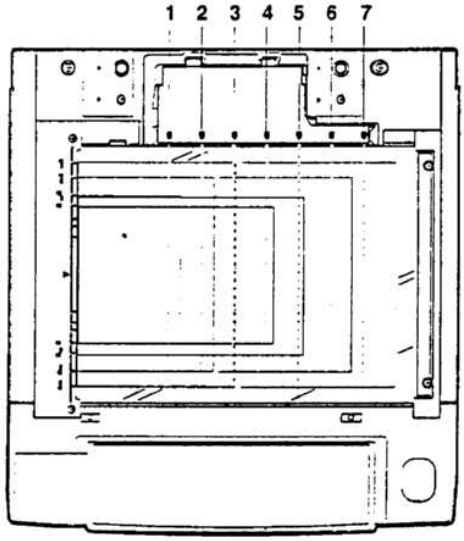</td><td>[7]-4-(1)</td></tr>
<tr><td></td><td>02</td><td>Document size photosensor setup</td><td>[7]-4-(2)</td></tr>
<tr><td></td><td>03</td><td>○ Document sensor beam receiving level and setup level
Used to check the document sensor level.
1. Receiving level display mode
• The receiving level when the test command is in execution is displayed on the copy number window.
• As the number corresponding to a sensor is entered on the keypad after the execution of the test command, the respective document size lamp turns on to show the sensor beam receiving level.
• The automatic paper selection lamp is employed to check open/close of the original cover; ON when open, and OFF when closed.
In the case of 1 above, the sensor level is fixed to the previous setting, when the original cover is closed.
• Setup level display mode
[C] → [=⌟] → [0] → [=⌟] → [2] → [5] → [PSW] → [1] → [PSW] → [Auto image select key]
With the above operation, the PAUSE lamp turns on.
• Level of each sensor set by way of the test command 41-2 is displayed on the copy number window.
• As a figure corresponding to a sensor is entered on the keypad after the test command has been executed, the respective document size lamp turns off to show the level set for the sensor.</td><td>[7]-4-(2)</td></tr>
<tr><td>42</td><td>*</td><td>○ Developer counter clear
Reset the contents of the copy number counter of the installed developing unit.
• The counter contents displayed in the same manner as the test command 22-1.
• The color of the installed developing unit is similar as the test command 22-6.
NOTE: It is effective for the developer color installed. If the developing unit has not been installed, the test command would not operate.</td><td></td></tr>
</table>

Main code	Sub code	Description	Ref. Page
43	*	○ Fuser temperature setup Used to set the fuser temperature. When the test command is executed, the low two digits of the currently programmed fuser temperature is shown (ex: 75=175C). When the zoom select key is pressed here, the fuser temperature setting can be changed in increments of 5C. Press the PRINT switch to set. (Japan) 80 → 60 → 65 → 70 → 75 → 85 → 90 (Except SEC) 90 → 85 → 95 → 00 → 05 (SEC) 90 → 75 → 80 → 85 → 95 → 00 → 05	
46	01	○ Exposure level adjustment Used to adjust the copy density and the copy density select level.	[7]-5-(5)
47	*	○ AE sensor characteristics measurement AE sensor output characteristics memory (1) AE sensor output characteristics input Press the [C] → [=J] → [0] → [=J] → [4] → [7] → [PSW] keys. The mirror base is initialized, scans about 10cm, then stops. The READY lamp turns on now and becomes ready to measure. Press the PRINT switch. The copy lamp driving voltage changes in increments of 5V (10V) each from 80V (160V) to 55V (110V), and the AE sensor output characteristics is stored in the memory against copy intensity variation for the original. NOTE: Shown in parenthesis is for the 200V series machine.	[7]-5-(2)
48	01	Front/rear direction zoom ratio adjustment (refer to the test command 26-9 for the lens type value. Used to set the No.4/5 mirror home position (focal adjustment) and to adjust the zoom ratio of the copy in the vertical direction (from front to rear). There are two kinds of test command 48 of which procedure are described as follows. 1-1. **Vertical copy zoom ratio standard value input method (at a time the lens or main PWB replacement0** Press the [C] → [=J] → [0] → [=J] → [4] → [8] → [PSW] → [=J] keys. The already set value or "40" is displayed on the copy number window. Substitute the value of "O.L" shown on the label attached to the lens with the next formula to obtain the value. 40 – [(value of O.L.(x 5] = standard value of correction Ex: 40 – (+1.2 x 5) = 34 1-2. Use this test command to adjust the horizontal zoom ratio. Change the value entered in "1-1" to change. 2-1. No.4/4 mirror home position standard value input (at a time of lens or main PWB replacement). Press the [C] → [=J] → [0] → [=J] → [4] → [8] → [PSW] [1] → [PSW] keys. The already stored value or "50" is displayed. Substitute the value of "O.L" shown on the label attached to the lens with the next formula to obtain the value. 50 – [(O.L value) x 10] = standard value of correction Ex: 50 – (+1.2 x 10) = 38 2-2. To adjust the resolution, change the value entered at "2-1" using this test command. (Label) 82525 No. 114191 O-L +1.2	[7]-3-(1) -(3) [7]-3-(2) -(4)
	02	○ Paper moving direction zoom adjustment Used to adjust the zoom ratio in the landscape mode. Varying the mirror base moving speed adjusts the zoom factor in the landscape direction of the copy (paper moving direction). Adjusting method ① Place a scale over the original table in the direction the paper moves. Make a copy in the 100% zoom mode and obtain the copy zoom ratio correction factor. Copy zoom correction factor = (original size) – $\frac{\text{(copy image size)}}{\text{(original size)}} \times 100\%$ ② Do the test command 49. As the READY lamp turns on, the previously set figure between 5 and 35 is displayed. Change it with the copy zoom factor correction factor obtained in ①. (Input value) = (previously stored value) + copy zoom ratio correction factor [%] x 10 Press the PRINT switch after entering the input value. With this, the input value is stored in the memory and the READY lamp turns off.	[7]-3-(5)

Main code	Sub code	Description	Ref. Page
50	1	Used to adjust the copy lead edge image loss and void areas. For more information, refer to the optical system copy lead edge adjustment procedure.	[7]-3-(11)
	2	The function of this test command is similar to the test command 50-01. The test command 50-02 allows easier lead edge adjustment using the values of L1 and L2. For more information, refer to the optical system copy lead edge adjustment procedure.	[7]-3-(11)
51	02	◦ Resist roller adjustments Used to set the on timing of the paper feed roller (rate of buckle in the paper caused by the resist roller). When the test command is executed, the manual feed mode is automatically established. Change the manual feed mode resisting rate, cassette paper feed resist rate, and ADU paper feed resist rate. 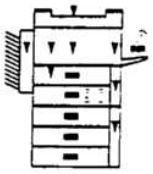 Press the [C] → [▬] → [0/)] → [▬] → [5] → [1] → [PSW] → [2] → [PSW] → keys. The manual feed lamp turns on → 1 Enter number → press the cassette key (main unit bottom cassette and pause lamp turn on) → 2 enter number → press the cassette key (main unit bottom cassette lamp turns on) → 3 enter number → press the cassette key. 1 : Manual feed paper resist rate adjustment 2 : Cassette paper resist rate adjustment 3 : ADU paper resist rate adjustment	[7]-2-(2)
	05	◦ Frame delete rate adjustment (copy moving direction only) Used to set the frame delete rate. • When the test command is executed, the READY lamp turns on, and the figure previously stored is displayed on the copy number window. Now, it becomes ready to accept a number between 1 and 19 on the keypad. When the PRINT switch is pressed after the entry, the number is stored in the memory and the READY lamp turns off. A single rate deletes the frame of about 1.0mm. The standard value has been set to "6."	[7]-2-(2)
52	01	◦ ADU alignment plate adjust value setup Used to adjust the home position of the ADU alignment plate. When the test command is executed, the READY lamp turns on. Enter a new value as the previously set value came displayed, and press the PRINT switch to stored it in the memory. It can be adjustable from 0 to 15. The default is 7. Setting a smaller value increases the width of the alignment plate and vice versa.	
	02	◦ ADU rear plate adjust value setup Used to adjust the home position of the ADU rear plate. When the test command is executed, the READY lamp turns on. Enter a new value as the previously set value came displayed, and press the PRINT switch to stored it in the memory. It can be adjustable from 0 to 99. Setting a smaller value increases the width of the rear plate and vice versa.	
	03	ADU drive clutch off time setup Can be set to any number between 0 and 10 in increments of 10ms each (default: 4). 0 = 30ms 1 = 0ms ····· 4 = 30ms ····· 10 = 90ms Setting a smaller value shortens the ADU clutch off timings and decreases the enforced curling rate of paper.	
53	01	◦ RADF and ADF stop position adjustment value setup (plain paper copied on one side) Used to adjust the RADF stop position for the single side copy of plain paper. When the test command is executed, the READY lamp turns on. Enter a new value as the previously set value came displayed, and press the PRINT switch to stored it in the memory. It can be adjustable from 0 to 15.	
	02	◦ RADF stop position adjustment setup (for double side copy on plain paper) Used to adjust the RADF stop position in the double side copy of plain paper. When the test command is executed, the READY lamp turns on. Enter a new value as the previously set value came displayed, and press the PRINT switch to stored it in the memory. It can be adjustable from 0 to 15.	
	03	◦ RADF and ADF stop position adjustment setup (light paper) Used to adjust the RADF stop position for light paper. When the test command is executed, the READY lamp turns on. Enter a new value as the previously set value came displayed, and press the PRINT switch to stored it in the memory. It can be adjustable from 0 to 15.	
	04	◦ RADF and ADF resist sensor adjustment Used to adjust the RADF resist sensor. (For ADF, adjust the lens sensor and the passing width sensor.) When the test command is executed, the RADF resist sensor is adjusted and its value is displayed.	
	05	◦ RADF and ADF eject sensor adjustment Used to adjust the RADF eject sensor. When the test command is executed, the RADF eject sensor is adjusted and its value is displayed.	

Trouble status display

Trouble status code	Subordinate code	Description
U3	20	Mirror motor lock detection
	21	Mirror motor MHPS error detection
L4	01	Main lock detection
L5	03	No.4/5 mirror motor error detection
	04	No.4/5 mirror motor MHPS error detection
	05	Lens motor error detection
	06	Lens motor LHPS error detection
L8	01	Power supply line frequency error detection
H2		Open thermistor
H3		Heat roller high temperature detection
H4		Heat roller low temperature detection
U2		Counter sumcheck error detection
U4	02	ADU alignment plate malfunction detected
	04	ADU rear plate malfunction detected
U5	00	ADF communication trouble detected
	01	A motor malfunction detected
	02	B motor malfunction detected
	03	Resist sensor malfunction detected
	04	Eject sensor malfunction detected
EE	EL	Auto developer adjustment (overtoned)
	EU	Auto developer adjustment (undertoned)
F3	12	Main unit upper cassette liftup motor trouble detected
	22	Main unit bottom cassette liftup motor trouble detected
U6	00	Desk communication trouble detected
	01	Desk-1 cassette liftup motor trouble detected
	02	Desk-2 cassette liftup motor trouble detected
	03	Desk-3 cassette liftup motor trouble detected
	08	Desk 24V line error detected
	09	LCC motor overcurrent detected
	10	Desk transport motor trouble detected
F1	00	Sorter communication trouble detected
	01	Paper jog malfunction detected
	02	Transport motor malfunction detected
	04	Indexer lower limit detected
	05	Indexer upper limit detected
	06	Shift motor malfunction detected
F2	02	Toner motor malfunction detected