SF-2022
SF-2027

SHARP SERVICE MANUAL

CODE: 00ZSF2022FM/E

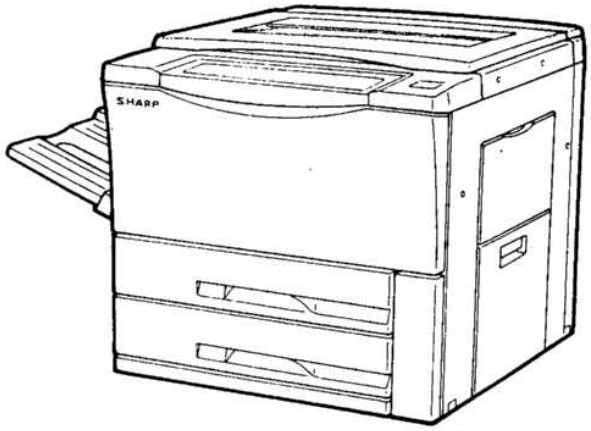

No.1

SF-2022
SF-2027
SF-D20
SF-D21
MODEL SF-DM11

CONTENTS

[1] PRODUCT OUTLINE 1-1
[2] PRODUCT SPECIFICATIONS 2-1
[3] OPTIONS SPECIFICATIONS 3-1
[4] COMPONENT IDENTIFICATION 4-1
[5] INSTALLATION 5-1
[6] DISASSEMBLY AND REASSEMBLY 6-1
[7] ADJUSTMENTS 7-1
[8] TEST COMMANDS AND DIAGNOSTICS 8-1
[9] MAINTENANCE AND MISCELLANEOUS 9-1

Parts marked with "⚠" is important for maintaining the safety of the set. Be sure to replace these parts with specified ones for maintaining the safety and performance of the set.

SHARP CORPORATION

This document has been published to be used for after sales service only.
The contents are subject to change without notice.

CONTENTS

[1] PRODUCT OUTLINE 1-1

1. The SF-2022 and SF-2027 are medium class copiers that produce 20 to 30 copies per minute. The SF-2022 and SF-2027 have all the standard features of medium class copiers as well as having system expansion capability similar to high end copiers. 1-1
2. Target users 1-1
3. Features 1-1
   (1) Compact body 1-1
   (2) Clean copy production without contaminating environments 1-1
   (3) High copy performance 1-1
   (4) Adoption of modular structure 1-1
   (5) Service, maintenance, and installation enhancement 1-1
4. System outline (options) 1-1

[2] PRODUCT SPECIFICATIONS 2-1

1. Basic specification 2-1
   (1) Type 2-1
   (2) Copy method 2-1
   (3) Kinds of originals 2-1
   (4) Copy speed 2-1
   (6) Warmup time 2-1
   (7) Multicopy 2-1
   (8) Magnification ratio 2-2
   (9) Exposure 2-2
   (10) Paper feed 2-2
   (11) Developing method 2-3
   (12) Charge method 2-3
   (13) Transfer method 2-3
   (14) Separation method 2-3
   (15) Fusing method 2-3
   (16) Cleaning method 2-3
   (17) Light source 2-3
   (18) Blanking areas 2-3
   (19) Automatic duplex 2-4
   (20) Paper eject and finishing 2-4
   (21) Additional features 2-4
   (21) Power supply 2-4
   (22) Power consumption 2-4
   (23) Appearance 2-4
   (24) Accessories 2-4
2. Consumables 2-5
   SF-2022/2027 consumables and option units list (SEC) 2-5
   SF-2022/2027 Supply Options (SECL) 2-6
   SF-2022/2027 Supply Options (SEEG, SUK) 2-7
   SF-2022.2027 Supply Options (SCA, SCNZ, Middle East, Africa) 2-8
   SF-2022/2027 Supply Options (Asia, Middle/South America) 2-9
3. Environmental requirements 2-10

[3] OPTIONS SPECIFICATIONS 3-1
1. SF-A14 3-1
2. SF-A54 3-1
3. SF-S14 3-1
4. SF-S15 3-1
5. SF-S52 3-2
6. SF-D20 3-2
7. SF-D21 3-2

[4] COMPONENT IDENTIFICATION 4-1
1. External view 4-1
2. Operation panel 4-3
3. Internal view 4-5
4. Clutches, solenoids 4-6
5. SF-2022/2027 sensors 4-7
6. Motors 4-8
7. Board list 4-9
8. Duplex copy tray 4-10
9. Desk unit (SF-D20) 4-11
10. Desk unit (SF-D21) 4-12

[5] INSTALLATION 5-1
1. Installing conditions 5-1
(1) Machine environment 5-1
(2) Space around the copier 5-1
(3) Machine table 5-1
(4) Power source 5-1
(5) Ground connection 5-1
2. Installation space 5-2
3. Installation procedure 5-3
(1) SF-2022/SF-2027 5-3
1. Releasing optical locks
A Removing the #2/3 mirror unit lock 5-3
B Releasing the lens and #4/5 mirror unit from lock 5-3
2. Fuser unit set up 5-3
A Removing the fuser unit 5-3
B Tensioning the heat roller 5-3
C Installing the cleaning roller 5-4
3. Cleaning corona unit 5-5
A Clean the main corona unit 5-5
B Clean the transfer/separation corona wires 5-5
4. Installing accessories 5-6
A Install the copy receive tray 5-6
5. Setting up the upper paper cassette 5-6
A Remove the packing screw of the cassette. 5-6
B Removing the cassette 5-6
C Change the size using the side plates F and R. 5-6
D Insert the rear plate 5-7
E Set the size detect spacer 5-7

F Change the paper size indication plate 5-7
G Set the cassette 5-7
H Load paper 5-7
6. Set up the lower paper cassette 5-8
A Remove the packing screw of the cassette. 5-8
B Change the size using the side plates F and R.
(It had been set to the A3 position when the machine left the factory.) 5-8
C Change the size of the rear plate. 5-8
D Set the size detect spacer 5-8
E Change the paper size indication plate 5-8
F Load paper 5-8
7. Setting developing unit 5-9
A Remove the developing unit 5-9
B Load developer 5-9
C Set the developing unit to the copier 5-9
8. Adjust the toner density referance level 5-10
A Adjust the toner density referance level of the developing tank 5-10
9. Loading toner 5-10
A Loading toner 5-10
10. Attaching zoom select label 5-11
A Bond the label 5-11
(2) SF-IC11 5-12
Before performing the following procedure, be sure to remove the power plug of the copier main unit. 5-12
1 To remove the stopper for the packaging cassette unit. 5-12
2 To change the size setting of side plate F and side plate R. 5-12
3 To change the size position of the rear end plate. 5-13
4 To set the size detection spacer. 5-13
5 To stick the cassette size labels. 5-13
6 To change the paper size indication plate. 5-13
7 To install the cassette main unit on the paper tray. 5-13
8 To set paper on the cassette. 5-14
(3) SF-CM11 5-15
Be sure to unplug the copier and install the unit as follows: 5-15
1 Remove the rear cabinet panel from the desk. 5-15
2 Install the lift-up unit. 5-15
3 Remount the rear cabinet panel onto the desk. 5-16
4 Remove the right cabinet panel from the desk. 5-16
5 Remove the cover. 5-16
6 Install the paper feed unit. 5-16
7 Remove the packing screw from the paper cassette. 5-16
8 Change the positions of the front and rear side plates. 5-17
9 Position the rear edge plate. 5-17
10 Set the paper size detection spacer. 5-17
11 Change the paper size indicator. 5-17
12 Fit the paper cassette guides into the guide rails. 5-18
13 Mount the right stopper. 5-18
14 Install the paper cassette. 5-18
15 Place the paper. 5-18
16 Remount the right cabinet panel onto the desk. 5-18

17 Adjust any center misalignment. 5-19
(4) SF-DM11 5-20
Before performing the following procedure. be sure to remove the power plug of the copier main unit. 5-20
1 To remove the rear cabinet of the copier main unit. 5-20
2 To install the ADU drive unit. 5-20
3 To install the rear cabinet of the copier main unit. 5-20
4 To remove the toner collecting container. 5-21
5 To remove the cover plate. 5-21
6 To install the ADU unit. 5-21
7 To install the right stopper. 5-21
8 To install the toner collecting container. 5-21
9 To check and adjust the matching guide. 5-22
10 To adjust the center dislocation. 5-22
(5) SF-A54 5-23
Unplug the copier and follow the procedure below. 5-23
1 Remove the document cover. 5-23
2 Mount the ADF onto the copier. 5-23
3 Adjust the angle of ADF. 5-24
4 Remove the rear cabinet panel from the copier and cut out the notch in the cabinet panel. 5-24
5 Connect the ADF connectors. 5-24
6 Reattach the rear cabinet panel. 5-24
7 Connect the ADF tray connector. 5-24
8 Affach the tray. 5-24
9 Set the mode. 5-25
10 Adjust the center of the copy. 5-25
(6) SF-S15 (20-Bin Sorter) 5-26
Unplug the copier and follow the procedure below. 5-26
1 Install the support guide. 5-26
2 Mount the sorter seat to the desk. 5-26
3 Remove the front panel of the sorter. 5-26
4 Place the sorter on the sorter seat. 5-27
5 Remove the rear cabinet panel from the copier and cut out the notch in the cabinet panel. 5-27
6 Connect the sorter connectors. 5-27
7 Reattach the rear cabinet panel. 5-27
8 Reattach the front panel of the sorter. 5-27
9 Adjust the clearance between the sorter and the copier. 5-28
10 Attach the label. 5-28
11 Set the mode. 5-28
(7) SF-D20/SF-D21 5-29
Before installation, remove all of the screws, tape, and shipping material as shown below. 5-29
Be sure to unplug the copier before carrying out the following procedures. 5-30
1 Place the copier on the desk. 5-30
2 Secure the copier to the desk. 5-30
3 Remove the rear cabinet panel from the copier. 5-30
4 Connect the desk relay harness. 5-30
5 Remount the rear cabinet panel onto the copier. 5-30
6 Move the copier to the desired installation location. 5-31
7 Lock the casters. 5-31
8 Lower the adjuster to secure the desk in place. 5-31

9 Pull out the paper cassette. 5-31
10 Adjust the positions of the front and rear side plates. 5-31
11 Adjust the position of the rear edge plate. 5-31
12 Set the paper size detection spacer. 5-32
13 Change the paper size indicator. 5-32
14 Re-insert the paper cassette. 5-32
15 Place the paper in the cassette. 5-32
16 Set the mode. 5-33
17 **Pull out the large-capacity paper cassette.** 5-33
18 Adjust the positions of the front and rear paper guides. 5-33
19 Adjust the position of the rear edge paper guide. 5-33
20 Set the paper size detection spacer. 5-34
21 Change the paper size indicator. 5-34
22 Re-insert the large-capacity paper cassette. 5-34
23 Place the paper in the cassette. 5-34
24 Set the mode. 5-35

[6] DISASSEMBLY AND REASSEMBLY 6-2

1. Process unit 6-1
2. Manual feed multicopy unit 6-3
3. Paper feed unit 6-5
4. Transport baseplate unit 6-7
5. Fuser unit 6-9
6. Duplex copy unit 6-11
7. Rear frame side major components 6-13
8. Operation panel unit and document size sensor board (light receive side) 6-16
9. Optical unit 6-17

[7] ADJUSTMENTS 7-1

1. Developing Unit 7-1
   (1) Clearance Adjustment of Developing Doctor Blade 7-1
   (2) Position Adjustment of Developing Magnet Roller Main Pole 7-1
   (3) Developing Bias Adjustment 7-2
   (4) Notes on installing various rollers of the developing unit 7-2
   (5) Notes on applying the developing side seals (front and rear) 7-2
2. Processing Unit 7-3
   (1) Adjustment of Blank Lamp Position 7-3
   (2) Adjustment of Solid Width of Both Ends 7-3
   (3) Adjustment of High-Voltage Output Balance 7-3
      A. Applying the Special Measuring Tool 7-3
      B. Adjusting the Transfer Charger Current 7-4
      C. Checking the Electrostatic Main Charger Current 7-5
      D. Adjusting the Electrostatic Main Charger Grid Voltage 7-5
      E. Adjusting the Separation Charger Output 7-6
   (4) Notes on maintenance for high-voltage units 7-6
      A. Electrostatic Charger Unit 7-6
      B. Transfer/Separation Charger Unit 7-6
3. Adjustment of Optical System 7-7
   (1) Adjusting the Reference Position of Lens 7-8

(2) Adjusting the Reference Position of 4. and 5. Mirror 7-8
(3) Adjusting the Longitudinal Magnification 7-8
(4) Adjusting the Resolution 7-9
(5) Adjusting the Lateral Magnification 7-10
(6) Inputting the Lens Travel Correction Value 7-10
(7) Correcting the Longitudinal Distortion 7-12
(8) Correcting the Lateral Distortion 7-13
(9) Adjusting the Center Deviation 7-14
(10) Adjusting the Exposure Balance 7-14
(11) Adjusting the Copy 7-15

4. Adjustment of Original Detecting Mechanism 7-17
(1) Adjusting the Original Detecting Arm Unit 7-17
(2) Adjusting the Original Detection Level 7-18

5. Adjustment of Copy Density 7-19
1. When must the copy density be adjusted ? 7-19
2. Notes on adjustment of copy density 7-19
3. Procedure for copy density adjustment 7-19
(1) Initial setting of auto-exposure density level (User adjustment) 7-19
(2) Initial setting of TSM mode (User adjustment) 7-19
(3) Adjustment of AE sensor level 7-19
(4) Setting of drum sensitivity 7-20
(5) Setting of test chart 7-20
(6) Adjustment of copy density 7-20

[8] Test commands and diagnostics 8-1

1. Test command 8-1
(1) Introduction 8-1
(2) Purpose 8-1
(3) Test command execution procedure 8-1

[9] Maintenance and Miscellaneous 9-1

1. Maintenance Schedule 9-1

2. Counters and Simulations Related to Maintenance 9-2
(1) List of counters and simulations related to maintenance 9-2
(2) Maintenance Indication 9-3
(3) Setting the copy counter mode 9-3

3. Replacing the Ozone Filter 9-3
(1) Replacing the suction ozone filter 9-3

4. Oil/Grease Points 9-3
(1) Gear of main driving unit 9-3
(2) Gear of variable-speed paper-feed unit 9-3
(3) Gear of paper-feed driving unit 9-4
(4) Fusing unit driving gear 9-4
(5) Paper exit roller driving gear 9-4
(6) Paper-feed torque limiter 500-sheet cassette brake spring 9-4
(7) Optical rail 9-4

5. Maintenance Schedule of Options 9-4

[1] PRODUCT OUTLINE

1. The SF-2022 and SF-2027 are medium class copiers that produce 20 to 30 copies per minute. The SF-2022 and SF-2027 have all the standard features of medium class copiers as well as having system expansion capability similar to high end copiers.

2. Target users

Average copy volume: 3,000 to 8,000 copies/month
Usage: 1,000 to 10,000 copies/month

3. Features

(1) Compact body

1. Small body size
   The width of the body is 600mm that is the smallest in this class.
2. Use of a front loading paper cassette and the folding multiple manual paper feed table eliminate the protrusion on the right side of the machine.
3. Use of a space reduced RADF and the front loading drawers save space even after upgrades.

(2) Clean copy production without contaminating environments

1. Consideration was given during design in order to avoid contamination against ozone and dust. Considerations were also made for recycle paper, packaging, and recycling of machine elements after the use.
2. Low level of machine noise.

(3) High copy performance

1. The fastest first copy time in this class.
2. High job efficiency.

(4) Adoption of modular structure

1. Offers a variety of paper feed systems by the use of a modular desk

   2 module slots
   Up to two units of 500-sheet cassette modules can be installed at the same time.

   LCC desk unit
   Besides, a 1000-sheet LCC, a 500-sheet cassette module can be added in the LCC desk.

2. **Upper cassette module that allows the machine specification to be chosen according to the usage.**

   Cassette modules.
   500-sheet cassette module.
   Automatic Duplex Unit (ADU) in the modular design.

(5) Service, maintenance, and installation enhancement

1. Upgraded paper feed performance
2. Adoption of the paper feed roller
3. Easy installation and reduced maintenance time
4. Internal power supply for option units
5. Easier replacement of consumable
6. Adoption of the paper feed drawer system
7. Provision of the communication feature
8. Universal power supply for 50/60Hz source frequency

4. System outline (options)

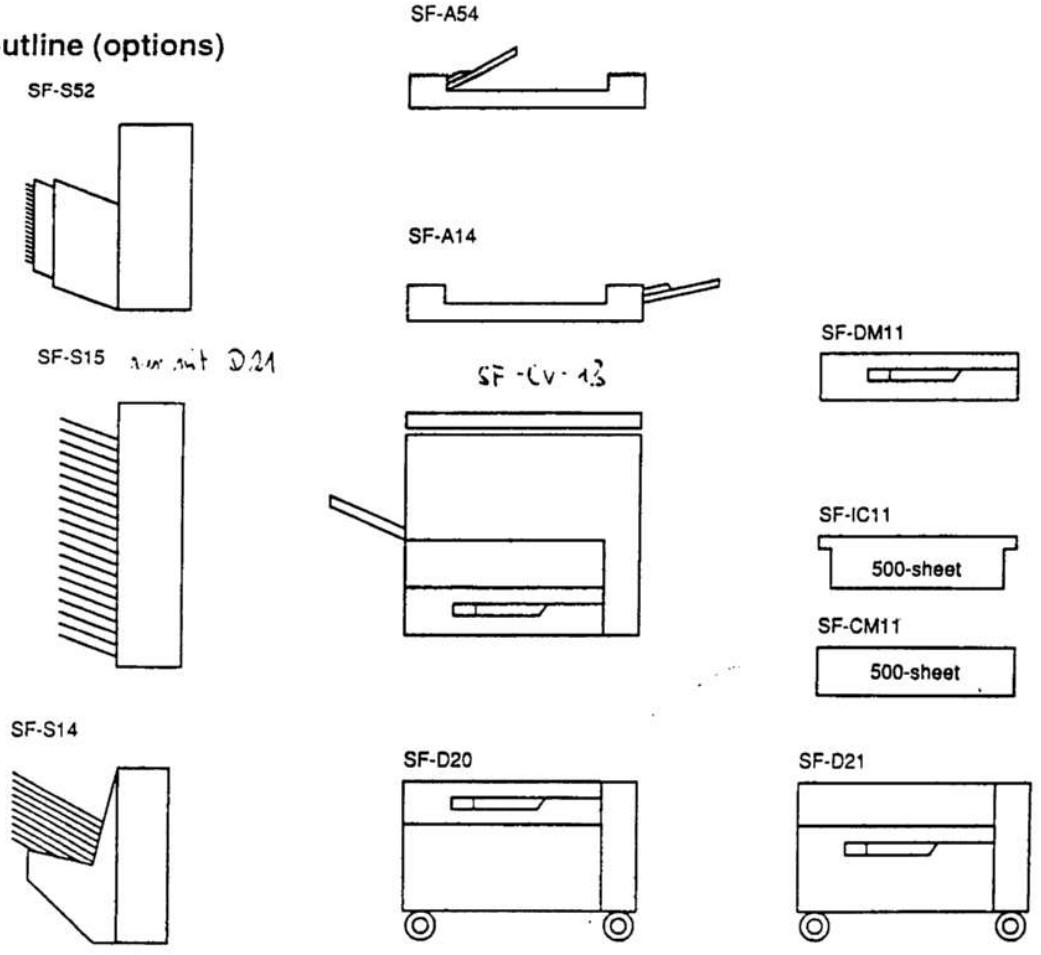

SF-2022
SF-2027

[2] PRODUCT SPECIFICATIONS

1. Basic specification

(1) Type

Desktop

(2) Copy method

Dry static copier

(3) Kinds of originals

Sheet, book, three dimensional object		
Thickness of original:		Maximum 30mm in level with the original cover in use.
Weight of original:		Maximum 1.8 kg
Maximum original size:		A3, 11" x 17"
Original alignment:		Center and left
Use of an original sensor:		
SF-2027	AB series:	A3, B4, A4, A4R, A5
	Inch series:	11" x 17", 8½" x 14", 8½" x 11", 8½" x 11" (R), 8½" x 5½"

Option:	RADF, ADF
Original loading capacity:	50 sheets
Original size:	A3 to A5, 11" x 17" to 8½" x 5½"
Original replace speed:	22 sheets per minute (27 sheets per minute for SF-2027)
Weight of original:	50 to 128 g/m²
Random or mixed paper feed mode:	Possible

(4) Copy speed

	Actual (1:1)	Enlage (ratio)	Reduce (ratio)
A3	12/15 sheets per minute	9/10 sheets per minute (200%)	10/12 sheets per minute (50%)
B4	14/17 sheets per minute	9/10 sheets per minute (200%)	11/14 sheets per minute (50%)
A4 (portrait)	22/27 sheets per minute	11/13 sheets per minute (200%)	18/21 sheets per minute (50%)
A4 (landscape)	17/21 sheets per minute	10/11 sheets per minute (200%)	14/17 sheets per minute (50%)
B5 (portrait)	22/27 sheets per minute	11/13 sheets per minute (200%)	18/21 sheets per minute (50%)
B5 (landscape)	17/21 sheets per minute	10/11 sheets per minute (200%)	14/17 sheets per minute (50%)
Double letter	12/15 sheets per minute	9/10 sheets per minute (200%)	10/12 sheets per minute (50%)
Legal	14/17 sheets per minute	9/10 sheets per minute (200%)	11/14 sheets per minute (50%)
Letter (portrait)	22/27 sheets per minute	11/13 sheets per minute (200%)	18/21 sheets per minute (50%)
Letter (landscape)	17/21 sheets per minute	10/11 sheets per minute (200%)	14/17 sheets per minute (50%)

NOTE: Copy speeds indicated in Enlargement and Reduction modes are the slowest speeds in the respective mode.

(6) Warmup time

About 90 seconds
(Without pre-heat feature)
Misfeed recovery time: 8 seconds, provided that it is in the standard condition in 60 seconds after leaving the door open.

(7) Multicopy

Maximum multicopy number: 99 sheets

(8) Magnification ratio

Fixed ratio	AB series: 4R+4E: 200, 141, 122, 115, 100, 86, 81, 70, 50%
	Inch series: 4R+4E: 200, 141, 129, 121, 100, 95, 77, 64, 50%
Zooming range:	50 to 200% (1% increments)

(9) Exposure

Exposure mode:	Auto, manual, photo
Exposure system:	Slit exposure and moving optical system (fixed original table)

(10) Paper feed

Copy size (maximum ~ minimum)	AB series:	A3 to A6R
	Inch series:	11" x 17" to 8½" x 5½"
Method	One cassette + multi-manual feed	
Capacity	500 + 50 sheets	

AB series

Paper entry	Paper size	Paper weight	Size selection	Side, front
Upper cassette	B5/B5R A4/A4R/B4/A3	56 ~ 80g/m² 15 ~ 21 lbs.	Selection by way of guide replacement or by the service engineer	Front, drawer in the same body ADU compatibility available
Lower cassette	A5/B5/B5R A4/A4R/B4	56 ~ 80g/m² 15 ~ 21 lbs.	Selection by way of guide replacement or by the service engineer	By way of front, inner cassette
	A3: * With the option inner cassette used			

Inch series

Paper entry	Paper feed size	Paper weight	Size selection	Side, front
Upper cassette	8½ x 11", 8½" x 11" (R), 8½" x 14", 11" x 17"	56 ~ 80g/m² 15 ~ 21 lbs.	Selection by way of guide replacement or by the service engineer	Front, drawer in the same body ADU compatibility available
Lower cassette	8½ x 11", 8½" x 11" (R), 8½" x 14", 11" x 17", 8½" x 5½"	56 ~ 80g/m² 15 ~ 21 lbs.	Selection by way of guide replacement or by the service engineer	By way of front, inner cassette
	* With the option inner cassette used			

Manual feed

Paper size:	AB series: Inch series:	A3 to A6R 11" x 17" to 8½" x 5½"
Paper weight:	Multifeed mode: Single feed mode:	56 to 80 g/m² (15 to 21 lbs) 52 to 128 g/m² (14 to 34 lbs) (A4 size or under, if above 105 g/m²) (or 28 lbs)
Kind of paper:		Standard, Sharp designated paper, OHP

1. Single paper feed desk

<<Model name: SF-D20>>

(Outlook)

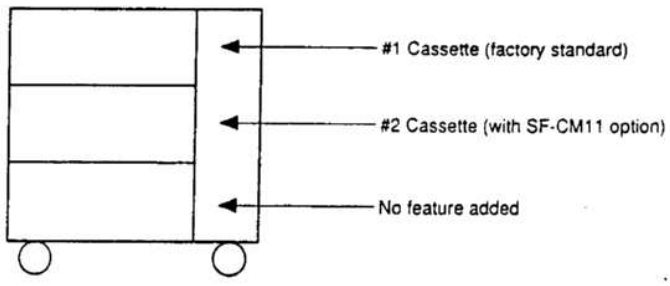

Number of paper feed sources:	Single (two sources if expanded)

Paper feed capacity:	500 sheets
Expanded:	1000 sheets 500-sheet cassette x 2 sources (with SF-CM11 in use). * 500 sheets of 80 g/m² must be in each cassette.

Paper size:	AB series Inch series	A3, B4, A4, A4R, B5, B5R 11" x 17", 8½" x 14", 8½ x 11", 8½ x 11" (R)
Paper weight:	50 to 80 g/m² (15 to 21 pounds)	
Size selection:	Selection by way of guide replacement or by the service engineer	
Power supply:	From the copier	
Physical dimentions (mm):	600(W) x 625(D) x 451(H)	
Weight:	27.2Kg (59.8 lbs).	

8. Large capacity paper feed desk

<<Model name: SF-D21>>

(Outlook)

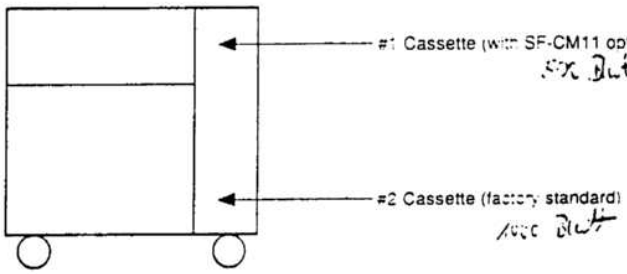

Number of paper feed sources:	Single (two sources if expanded)

Paper feed capacity:	1000 sheets
Expanded:	1500 sheets 1000-sheet cassette + 500-sheet cassette sources (with SF-CM11 in use). * Given number of sheets of 80 g/m² must be in each cassette.

<<1000-sheet drawer (#2 cassette)>>

Paper size:	AB series: Inch series:	B4, A4, A4R, B5, B5R 8½" x 14", 8½ x 11", 8½ x 11" (R)

<<#1 cassette option>>

Paper size:	AB series: Inch series:	A3, B4, A4, A4R, B5, B5R 11" x 17", 8½" x 14", 8½ x 11", 8½ x 11" (R)
Paper weight:	50 to 80 g/m² (15 to 21 punds)	
Size selection:	Selection by the service engineer	
Power supply:	From the copier	
Physical dimentions (mm):	600(W) x 625(D) x 451(H)	
Weight:	33.2Kg.	(73.0 lbs)

(11) Developing method	Dry, two components magnetic brush method
(12) Charge method	(–) DC saw-teeth electrode method
(13) Transfer method	(–) DC Corotron method
(14) Separation method	AC Corotron method
(15) Fusing method	Heat roller method
(16) Cleaning method	Blade method
(17) Light source	Halogen lamp
(18) Blanking areas	Void area: 3mm from the lead edge Image loss: 3mm at maximum during the actual (1:1) copy mode

(19) Automatic duplex

Option (module)		
Location		Copier upper module slot
Size	AB series:	A3, B4, A4, A4R, B5, B5R, A5
	Inch series:	11" X 17", 8½" x 14", 8½ x 11", 8½ x 11" (R)
Capacity		50 sheets (below A4 or letter sizes) or 30 sheets (above B4 or 8½" x 14" size)
Paper weight		56 to 80 g/m² (15 to 21 lbs)

(20) Paper eject and finishing

Capacity of paper receive tray		250 sheets	
Finishing (with option in use)			
Finisher function	Sorted bin capacity	Non-sorted bin capacity	
20-bin sorter	50 sheets	100 sheets	Fixed bins
10-bin sorter	50 sheets (A4 size or Less)	100 sheets	Movable bins
20-bin stapler sorter	35 sheets (25 sheets, if stapler used) (A4 or Less)	100 sheets	Movable bins

(21) Additional features

	Availability of feature	
APS	No/Yes	Yes if the ADF used
AMS	Yes	
Margin shift	Yes	10mm shift (S → S)
DPCM	Yes	Enlarge not permitted
Edge erase	Yes	7 to 12mm wide
Monochrome	Yes	(Red, blue)

APS: Auto paper selection
AMS: Auto magnification ratio selection
DPCM: Dual page copy mode

Supplement

Binding margin

Width	AB series	Inch series
Single sides to single sided	10mm	1/4"
Double sided to single sided	5mm	1/4"
Single sided to double sided (front)	0	0
(reverse)	5mm	1/4"
Double sided to double sided (front)	10mm	1/4"
(revrse)	10mm	1/4"

DPCM
Enlarge not possible

Frame delete

AB series		Inch series	
Size	Deleted width (mm)	Size	Deleted width (mm)
A3	11.5±3	11" x 17"	11.5±3
B4	9.5±3	8½" x 14"	7 ±3
A4	11.5±3	8½" x 11"	11.5±3
A4R	10 ±3	8½" x 11" (R)	7 ±3
B5	9.5±3	8½" x 5½"	7 ±3
B5R	8 ±3		

(21) Power supply

Voltage: 100V, 50/60Hz; 110V, 50/60Hz; 120V, 60Hz; 127V, 60Hz; 220V, 50/60Hz; 240V, 50Hz
Frequency: 50 60Hz, universal

(22) Power consumption

Maximum power consumption: 1.35KW, maximum, with options used
Standby power consumption: 0.05KW with the heater lamp inactive; 0.85KW with the heater lamp active.

(23) Appearance

WxDxH (mm): 600 x 650 x 567 (at the top of the table glass)
600x 650 x 607 (at the top of the original cover)
Occupied area (W x D in mm): 1172 x 650 (with the paper receive tray and manual feed bypass open
Weight: Main body: About 66Kg (145lbs)
Paper feed module: 4.8Kg (10.6 lbs)
Original cover: 1.5Kg (3.3 lbs)

(24) Accessories

Original cover, paper receive tray, waste toner collect containers (x 4) with one container installed at the factory, instruction manual, dust cover, quick magnification ratio reference chart, key sheet

Other printed materia.
Installation report (SEEG), SCA warranty card, warranty registration card (SUK)

Different accessories and standard equipment may vary depending on the product destination.

2. Consumables

SF-2022/2027 consumables and option units list (SEC)

No.	Name	Contents of items	Life	Product name	Contents per pack	Size (W × D × H)(mm), weight (Kg)	Note
1	Drum	OPC drum ×1	80K	SF-222DR	1	442 × 188 × 421/4.9	
2	Developer, black	Developer (850g) × 10	80K (×10)	SF-222MD1	10	281 × 200 × 230/9.5	(SF-222ND1) × 10 = SF-222MD1
3	Toner, black	Toner cartridge (320g) × 10	8K (×10)	SF-222MT1	10	712 × 390 × 163/6.2	(SF-222NT1) × 10 = SF-222MT1
4	Color developer (red) (blue)	Developer (850g) × 10	10K (×10)	SF-222MD2 SF-222MD3	10	438 × 183 × 180/9.6	(SF-222ND2) × 10 = SF-222MD2 (SF-222ND3) × 10 = SF-222MD3
5	Color toner (red) (blue)	Toner cartridge (250g) × 10	6K (×10)	SF-222MT2 SF-222MT3	10	712 × 390 × 163/5.5	(SF-222NT2) × 10 = SF-222MT2 (SF-222NT3) × 10 = SF-222MT3
6	Color developer kit (red) (blue)	Developer (850g) × 1 Toner cartrige (250g) × 1 Developing unit × 1 Storage case × 1		SF-222NK2 SF-222NK3	1	780 × 259 × 210/4.55	
7	Upper heat roller kit	Upper heat roller × 1 Fuser separation pawl, lower × 4	160K	SF-222UH	5	439 × 347 × 119/3.26	Service parts item must be used when replacing the fuser separation pawl (80K) at every 80,000 copies
8	Lower heat roller kit	Lower heat roller × 1 Fuser separation pawl, lower × 2	160K	SF-222LH	5	357 × 341 × 124/5.0	Service parts item must be used when replacing the fuser separation pawl (80K) at every 80,000 copies (Use shared with those of SF-8570 and SF-8870)
9	80K maintenance kit	Cleaner blade × 1 Upper cleaning roller × 1 Main corona charging plate unit × 1 Drum separation pawl unit × 1	80K	SF-222KA1	5	482 × 408 × 122/3.0	
10	Cleaner blade	Cleaner blade × 10	80K (× 10)	SF-222CB	10	416 × 197 × 208/2.7	
11	Upper cleaning roller	Upper cleaning roller × 10	80K (× 10)	SF-222CR	10	400 × 166 × 85/2.1	
12	Stapler cartridge	Staple cartridge (3pcs) × 10		SF-LS51	10	250 × 96 × 154/6.2	Use of the stapler shared with the SF-LS51 stapler/sorter (SF-SC50) × 10 = SF-LS51

* Use the service parts for the waste toner container (4 bottles/80K), screen grid (80K), ozone filter (80K), toner receive seal (160K), and DV seal (160K). The main corona charging plate unit (80K) and the drum separation pawl unit (80K) are also available as service parts.

SF-2022/2027 Supply Options (SECL)

No.	Name	Content		Life	Model name	Packing	Dimensions (W × D × H)/Weight mm/kg	Remark
1	Drum	OPC drum	×1	80K	SF-222DR	1	442 × 188 × 421/4.9	
2	Developer (Black)	Developer	(850g) ×10	80K (×10)	SF-222MD1	10	281 × 200 × 230/9.5	(SF-222ND1) × 10 = SF-222MD1
3	Toner (Black)	Toner cartridge	(320g) ×10	8K (×10)	SF-222MT1	10	712 × 390 × 163/6.2	(SF-222NT1) × 10 = SF-222MT1
4	Color developer (Red) (Blue)	Developer	(850g) ×10	10K (×10)	 SF-222MD2 SF-222MD3	10	438 × 183 × 180/9.6	 (SF-222ND2) × 10 = SF-222MD2 (SF-222ND3) × 10 = SF-222MD3
5	Color toner (Red) (Blue)	Toner cartridge	(250g) ×10	6K (×10)	 SF-222MT2 SF-222MT3	10	712 × 390 × 163/5.5	 (SF-222NT2) × 10 = SF-222MT2 (SF-222NT3) × 10 = SF-222MT3
6	Color developer kit (Red) (Blue)	Developer Toner cartridge Developing unit Storage case	(850g) ×1 (250g) ×1 ×1 ×1		 SF-222NK2 SF-222NK3	1	780 × 259 × 210/4.55	
7	80K maintenance kit	Upper cleaning roller Cleaner blade Toner collection container Fuser separation pawl (Upper) Fuser separation pawl (Lower) Screen grid Charging plate unit Drum separation pawl unit	×1 ×1 ×4 ×4 ×2 ×1 ×1 ×1	80K	SF-222KA	1	478 × 243 × 112/1.5	
8	160K maintenance kit	Upper heat roller Lower heat roller Toner reception seal DV seal Heat roller gear	×1 ×1 ×1 ×1 ×1	160K	SF-222KB	1	450 × 190 × 95/1.61	
9	Staple cartridge	Staple cartridge (3 pcs)	×1		SF-SC51	10	250 × 96 × 154/6.2	Staple sorter (Common to the SF-S51)

SF-2022/2027 Supply Options (SEEG, SUK)

No.	Name	Content		Life	Model name	Packing	Dimensions (W × D × H)/Weight mm/kg	Remark
1	Drum	OPC drum	×1	80K	SF-222DM	1	442 × 188 × 421/4.9	
2	Developer (Black)	Developer	(850g) ×10	80K (×10)	SF-222LD1	10	281 × 200 × 230/9.5	(SF-222DV1) × 10 = SF-222LD1
3	Toner (Black)	Toner cartridge	(320g) ×10	8K (×10)	SF-222LT1	10	712 × 390 × 163/6.2	(SF-222T1) × 10 = SF-222LT1
4	Color developer (Red) (Blue)	Developer	(850g) ×1	10K	 SF-222DV2 SF-222DV3	10	438 × 183 × 180/9.5	Ordering unit: 10 pcs
5	Color toner (Red) (Blue)	Toner cartridge	(250g) ×1	6K	 SF-222T2 SF-222T3	10	712 × 390 × 163/5.5	Ordering unit: 10 pcs
6	Color developer kit (Red) (Blue)	Developer Toner cartridge Developing unit Storage case	(850g) ×1 (250g) ×1 ×1 ×1		 SF-222K2 SF-222K3	1	780 × 259 × 210/4.55	
7	80K maintenance kit	Upper cleaning roller Cleaner blade Toner collection container Fuser separation pawl (Upper) Fuser separation pawl (Lower) Screen grid Charging plate unit Drum separation pawl unit	×1 ×1 ×4 ×4 ×2 ×1 ×1 ×1	80K	SF-222KA	1	478 × 243 × 112/1.5	Make distinction with A3SF222KAL due to compliance with European code.
8	160K maintenance kit	Upper heat roller Lower heat roller Toner reception seal DV seal Heat roller gear	×1 ×1 ×1 ×1 ×1	160K	SF-222KB	1	450 × 190 × 95/1.61	Make distinction with A3SF222KBL due to compliance with European code.
9	Staple cartridge	Staple cartridge (3 pcs)	×1		SF-SC51	10	250 × 96 × 154/6.2	Staple sorter (Common to the SF-S51)

SF-2022.2027 Supply Options (SCA, SCNZ, Middle East, Africa)

No.	Name	Content		Life	Model name	Packing	Dimensions (W × D × H)/Weight mm/kg	Remark
1	Drum	OPC drum	×1	80K	SF-222DM	1	442 × 188 × 421/4.9	
2	Developer (Black)	Developer	(850g) ×10	80K (×10)	SF-222LD1	10	281 × 200 × 230/9.5	(SF-222DV1) × 10 = SF-222LD1
3	Toner (Black)	Toner cartridge	(320g) ×10	8K (×10)	SF-222LT1	10	712 × 390 × 163/6.2	(SF-222T1) × 10 = SF-222LT1
4	Color developer	Developer	(850g) ×10	10K (×10)		10	438 × 183 × 180/9.6	
	(Red)				SF-222LD2			(SF-222DV2) × 10 = SF-222LD2
	(Blue)				SF-222LD3			(SF-222DV3) × 10 = SF-222LD3
5	Color toner	Toner cartridge	(250g) ×10	6K (×10)		10	712 × 390 × 163/5.5	
	(Red)				SF-222LT2			(SF-222T2) ×10 = SF-222LT2
	(Blue)				SF-222LT3			(SF-222T3) × 10 = SF-222LT3
6	Color developer kit	Developer	(850g) ×1			1	780 × 259 × 210/4.55	
	(Red)	Toner cartridge	(250g) ×1		SF-222K2			
	(Blue)	Developing unit	×1		SF-222K3			
		Storage case	×1					
7	80K maintenance kit	Upper cleaning roller	×1	80K	SF-222KA	1	478 × 243 × 112/1.5	Make distinction with A3SF222KAL due to compliance with European code.
		Cleaner blade	×1					
		Toner collection container	×4					
		Fuser separation pawl (Upper)	×4					
		Fuser separation pawl (Lower)	×2					
		Screen grid	×1					
		Charging plate unit	×1					
		Drum separation pawl unit	×1					
8	160K maintenance kit	Upper heat roller	×1	160K	SF-222KB	1	450 × 190 × 95/1.61	Make distinction with A3SF222KBL due to compliance with European code.
		Lower heat roller	×1					
		Toner reception seal	×1					
		DV seal	×1					
		Heat roller gear	×1					
9	Staple cartridge	Staple cartridge (3 pcs)	×1		SF-SC51	10	250 × 96 × 154/6.2	Staple sorter (Common to the SF-S51)

SF-2022/2027 Supply Options (Asia, Middle/South America)

No.	Name	Content		Life	Model name	Packing	Dimensions (W × D × H)/Weight mm/kg	Remark
1	Drum	OPC drum	×1	80K	SF-222DR	1	442 × 188 × 421/4.9	
2	Developer (Black)	Developer	(850g) ×10	80K (×10)	SF-222CD1	10	281 × 200 × 230/9.5	(SF-222SD1) × 10 = SF-222CD1
3	Toner (Black)	Toner cartridge	(320g) ×10	8K (×10)	SF-222CT1	10	712 × 390 × 163/6.2	(SF-222ST1) × 10 = SF-222CT1
4	Color developer	Developer	(850g) ×10	10K (×10)		10	438 × 183 × 180/9.6	
	(Red)				SF-222CD2			(SF-222SD2) × 10 = SF-222CD2
	(Blue)				SF-222CD3			(SF-222SD3) × 10 = SF-222CD3
5	Color toner	Toner cartridge	(250g) ×10	6K (×10)		10	712 × 390 × 163/5.5	
	(Red)				SF-222CT2			(SF-222ST2) × 10 = SF-222CT2
	(Blue)				SF-222CT3			(SF-222ST3) × 10 = SF-222CT3
6	Color developer kit	Developer	(850g) ×1			1	780 × 259 × 210/4.55	
	(Red)	Toner cartridge	(250g) ×1		SF-222SK2			
	(Blue)	Developing unit	×1		SF-222SK3			
		Storage case	×1					
7	80K maintenance kit	Upper cleaning roller	×1	80K	SF-222KA	1	478 × 243 × 112/1.5	
		Cleaner blade	×1					
		Toner collection container	×4					
		Fuser separation pawl (Upper)	×4					
		Fuser separation pawl (Lower)	×2					
		Screen grid	×1					
		Charging plate unit	×1					
		Drum separation pawl unit	×1					
8	160K maintenance kit	Upper heat roller	×1	160K	SF-222KB	1	450 × 190 × 95/1.61	
		Lower heat roller	×1					
		Toner reception seal	×1					
		DV seal	×1					
		Heat roller gear	×1					
9	Staple cartridge	Staple cartridge (3 pcs)	×1		SF-SC51	10	250 × 96 × 154/6.2	Staple sorter (Common to the SF-S51)

3. Environmental requirements

Conditions required for proper operation of the machine, as well as assurance of copy quality, the following are requested.

① Standard conditions
Recommended temperature range at 20 to 25 Centigrade (68 to 77 degrees F) and humidity range at 65 ± 5%RH.

② Operating conditions

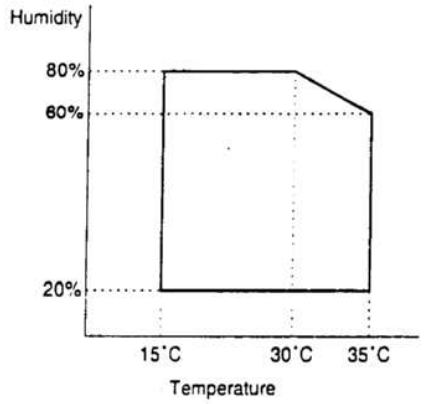

③ Shipping conditions

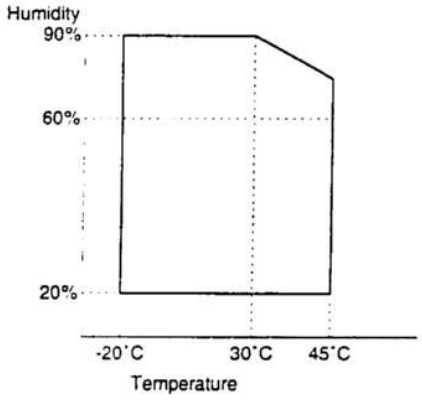

④ Consumables storage conditions

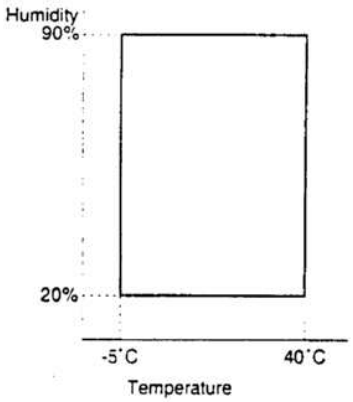

[3] OPTIONS SPECIFICATIONS

1. SF-A14

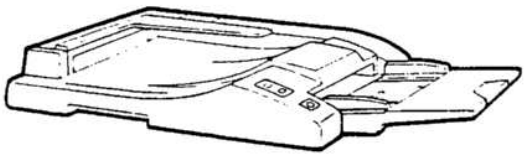

Acceptable originals	Weight:	14 to 34 lbs. 35 to 128 g/m^2.
	Size:	8½" × 5½" to 11" × 17", A5 to A3
	Number of sheets:	Up to 50 sheets 8½" × 5½", 8½" × 11", 8½" × 14", 11" × 17" A5, A4, B4, A3 Provided the total aggregate thickness does not exceed ¼" (14 to 20 lbs.) or 3/16" (21 lbs. to 34 lbs.) 6.5 mm (35 to 80 g/m^2) or 5 mm (81 to 128 g/m^2)
Power supply:	Drawn from the copier	

2. SF-A54

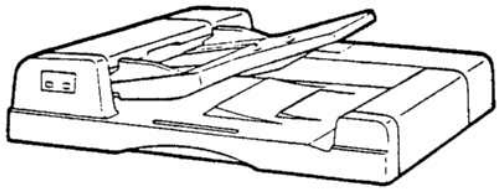

Acceptable originals	Weight:	(Single-sided original) 14 to 34 lbs. 35 to 128 g/m^2. (Two-sided original) 14 to 34 lbs. for 8½" × 5½" and 8½" × 11" 14 to 29 lbs. for 8½" × 14" and 11" × 17" 55 to 128 g/m^2.
	Size:	8½" × 5½" to 11" × 17", A5 to A3.
	Number of sheets:	Up to 50 sheets 8½" × 5½", 8½" × 11", 8½" × 14" A5, A4, B4 Provided the total aggregate thickness does not exceed ¼" (14 to 20 lbs.) or 3/16" (21 to 34 lbs.) 6.5 mm (35 to 80 g/m^2) or 5 mm (81 to 128 g/m^2) Up to 30 sheets 11" × 17", A3
Power supply:	Drawn from the copier	

3. SF-S14

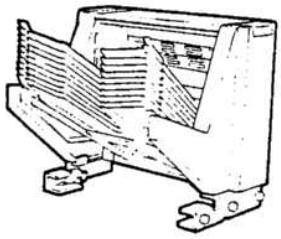

No. of bins	10	
Bin capacity	NON-SORT:	100 sheets (top bin)
	SORT:	50 sheets (8½" × 11") (A4) 40 sheets (8½" × 14") (B4) 30 sheets (11" × 17") (A3)
	GROUP:	35 sheets (8½" × 11") (A4) 25 sheets (8½" × 14") (B4) 20 sheets (11" × 17") (A3)
Paper size:	Top bin:	Max. 11" × 17", A3 Min. 8½" × 5½", A5
	Sort bins:	Max. 11" × 17", A3 Min. 8½" × 5½", A5
Power supply	Drawn from the copier.	

4. SF-S15

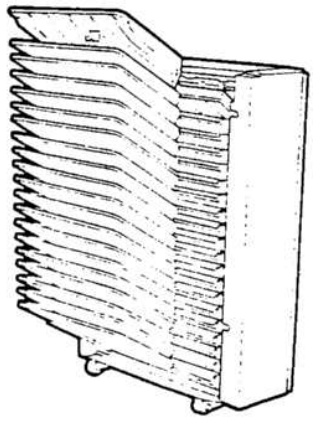

No. of bins	20	
Bin capacity	NON-SORT:	100 sheets (top bin)
	SORT:	50 sheets
	GROUP:	30 sheets
Paper size:	Top bin:	Max. 11" × 17", A3 Min. 8½" × 5½", A5
	Sort bin:	Max. 11" × 17", A3 Min. 8½" × 5½", A5
Power supply	Drawn from the copier.	

5. SF-S52

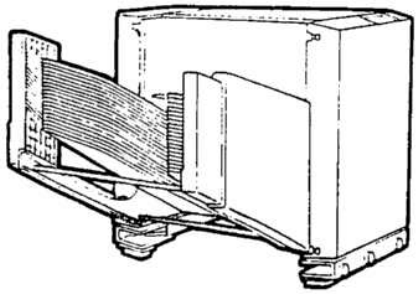

No. of bins	20	
Bin capacity	NON-SORT:	100 sheets for top bin
	SORT:	35 sheets (8½" × 11") (A4) 25 sheets (8½" × 14") (B4) 15 sheets (11" × 17") (A3)
	GROUP:	25 sheets (8½" × 11") (A4) 15 sheets (8½" × 14") (B4) 10 sheets (11" × 17") (A3)
	STAPLE SORT:	**25 sheets (8½" × 11") (A4)** **15 sheets (8½" × 14", 11" × 17") (B4, A3)**
Paper size	Top bin:	Max. 11" × 17", A3 Min. 8½" × 5½", A5
	Sort bins:	Max. 11" × 17", A3 Min. 8½" × 5½", A5
Stapling capacity	25 sheets (20 lbs.) (80 g/m^2)	
Power supply	Drawn from the copier.	

6. SF-D20

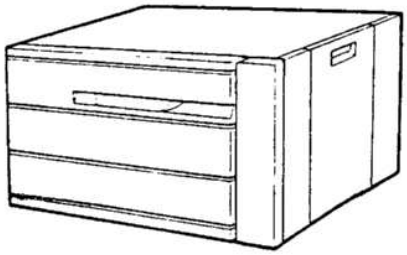

Paper size	8½" × 11" to 11" × 17", B5 to A3
Paper capacity	500 sheets of 20 lb. bond paper, 50 to 80 g/m^2 Total of 1,000 sheets of 20 lb. bond paper with an optional 500-sheet paper drawer installed.

7. SF-D21

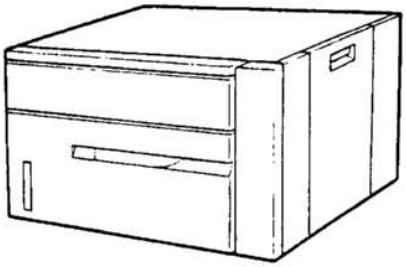

Paper size	8½" × 11" to 8½" × 14", B4 to B5
Paper capacity	1,000 sheets of 20 lb. bond paper, 50 to 80 g/m^2 Total of 1,500 sheets of 20 lb. bond paper with an optional 500-sheet paper drawer installed.

[4] COMPONENT IDENTIFICATION

1. External view

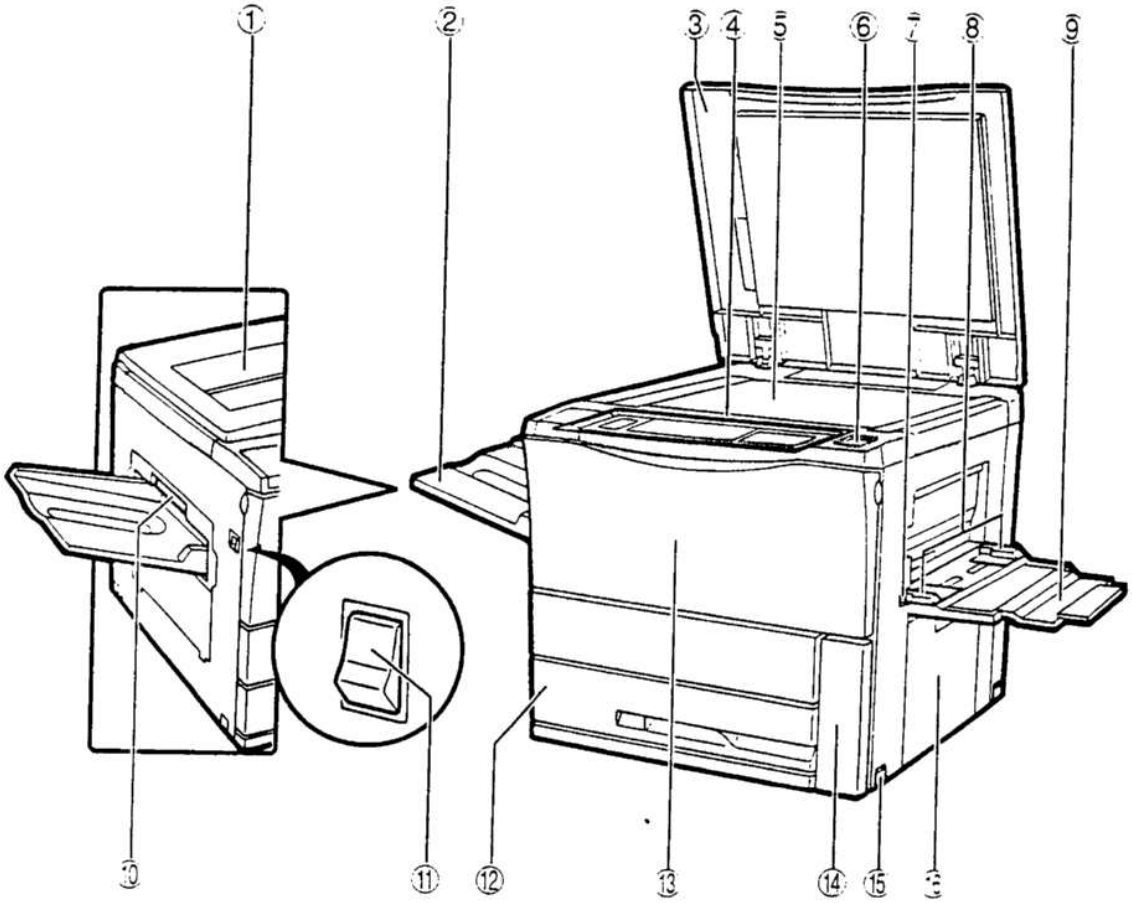

①	Original cover storage compartment	②	Copy receive tray	③	Original cover
④	Operation panel	⑤	Original glass	⑥	Paper clip tray
⑦	Paper feed tension release button	⑧	Paper feed guide	⑨	Manual paper feed tray
⑩	Exit panel release handle	⑪	Power switch	⑫	Paper feed cassette(module slots)
⑬	Front panel	⑭	Waste toner container access cover	⑮	Copier lift handle
⑯	Side panel				

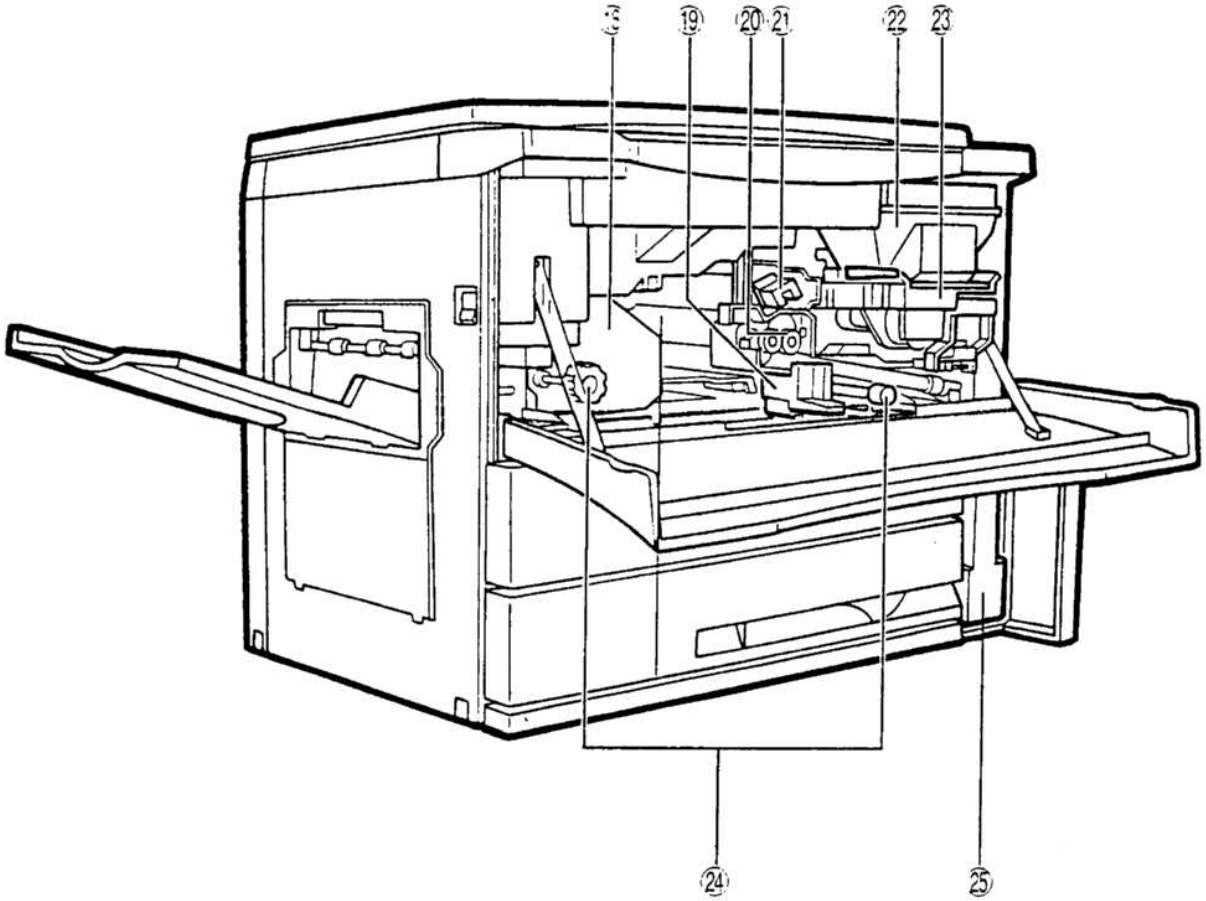

⑱	Fuser	⑲	Paper transport block accessing lever	⑳	Drum unit
㉑	Corona unit	㉒	Toner cartridge and lock lever	㉓	Developing unit and lock lever
㉔	Feed roller knobs	㉕	Toner collect container		

2. Operation panel

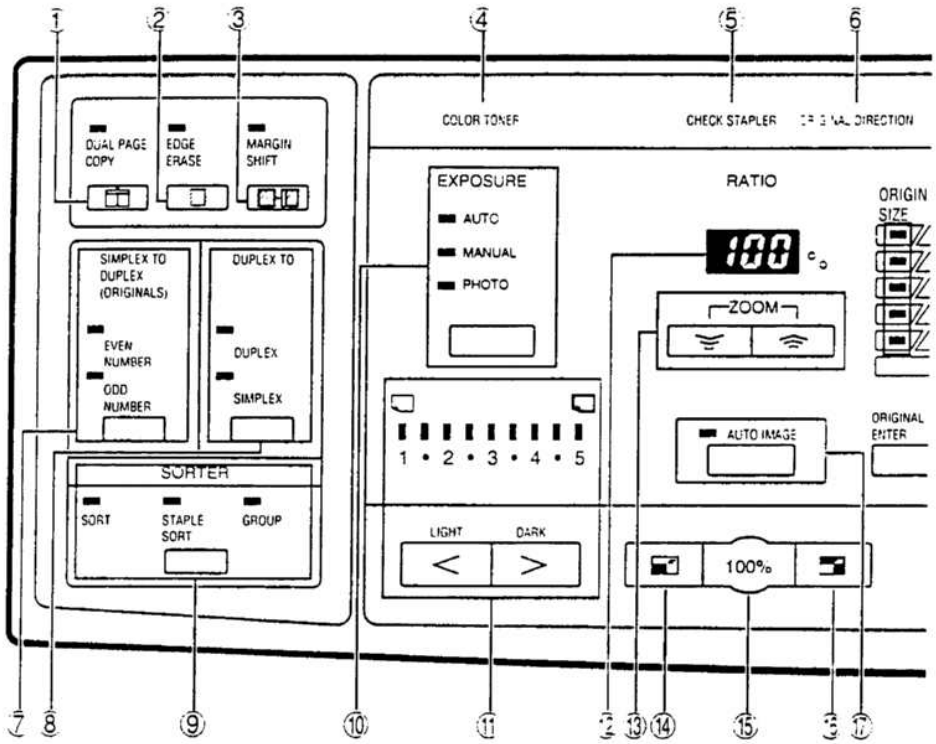

①	Dual page copy key/status lamp	②	Edge erase key/lamp	③	Margin shift key/status lamp
④	Color toner indicator lamp	⑤	Stapler status lamp	⑥	Original direction status lamp
⑦	Simplex to duplex copy key	⑧	Duplex original copy key	⑨	Sorter key/status lamp
⑩	Copy density select key/status lamp	⑪	Manual density control key/status lamp	⑫	Zoom ratio display
⑬	Zoom key	⑭	Reduce key	⑮	Normal ratio key 1:1
⑯	Enlarge key	⑰	Automatic zoom select key/status lamp		

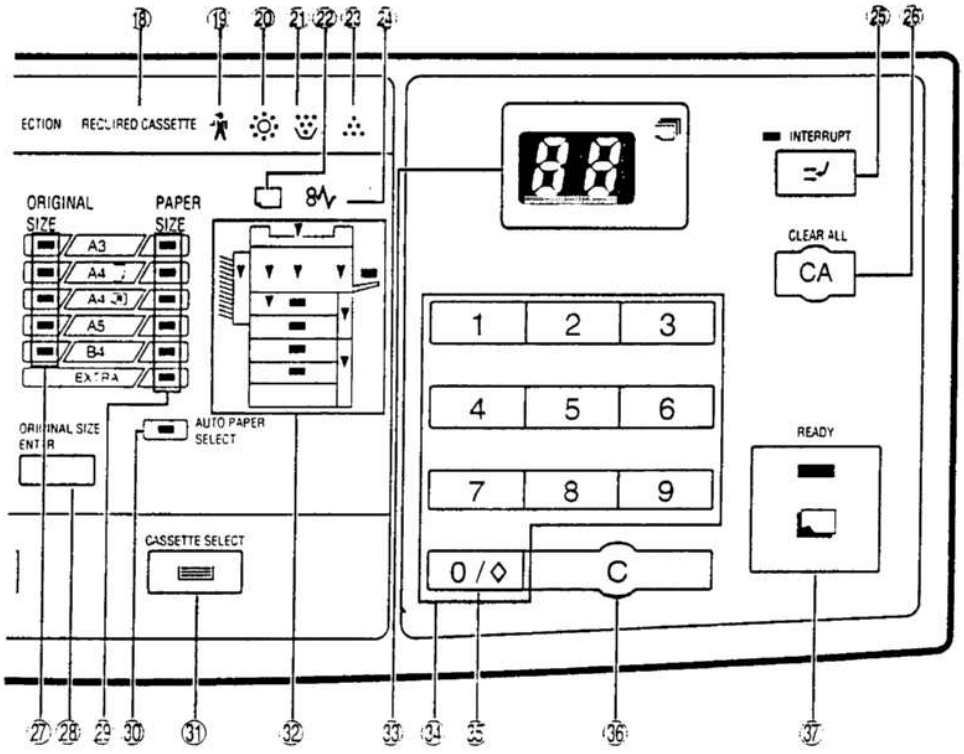

⑱	Copy paper size status lamp	⑲	Maintenance lamp	⑳	Developer replacement lamp
㉑	Toner collect lamp	㉒	Paper refill lamp	㉓	Toner refill lamp
㉔	Paper misfeed lamp	㉕	Pause key/status lamp	㉖	Clear all key
㉗	Original size display lamp	㉘	Paper size display lamp	㉙	Automatic paper select display lamp
㉚	Cassette select key	㉛	Paper location/misfeed lamp	㉜	Copy number window
㉝	Copy number entry key	㉞	Zero read key	㉟	Cancel key
㊱	Print switch				

3. Internal view

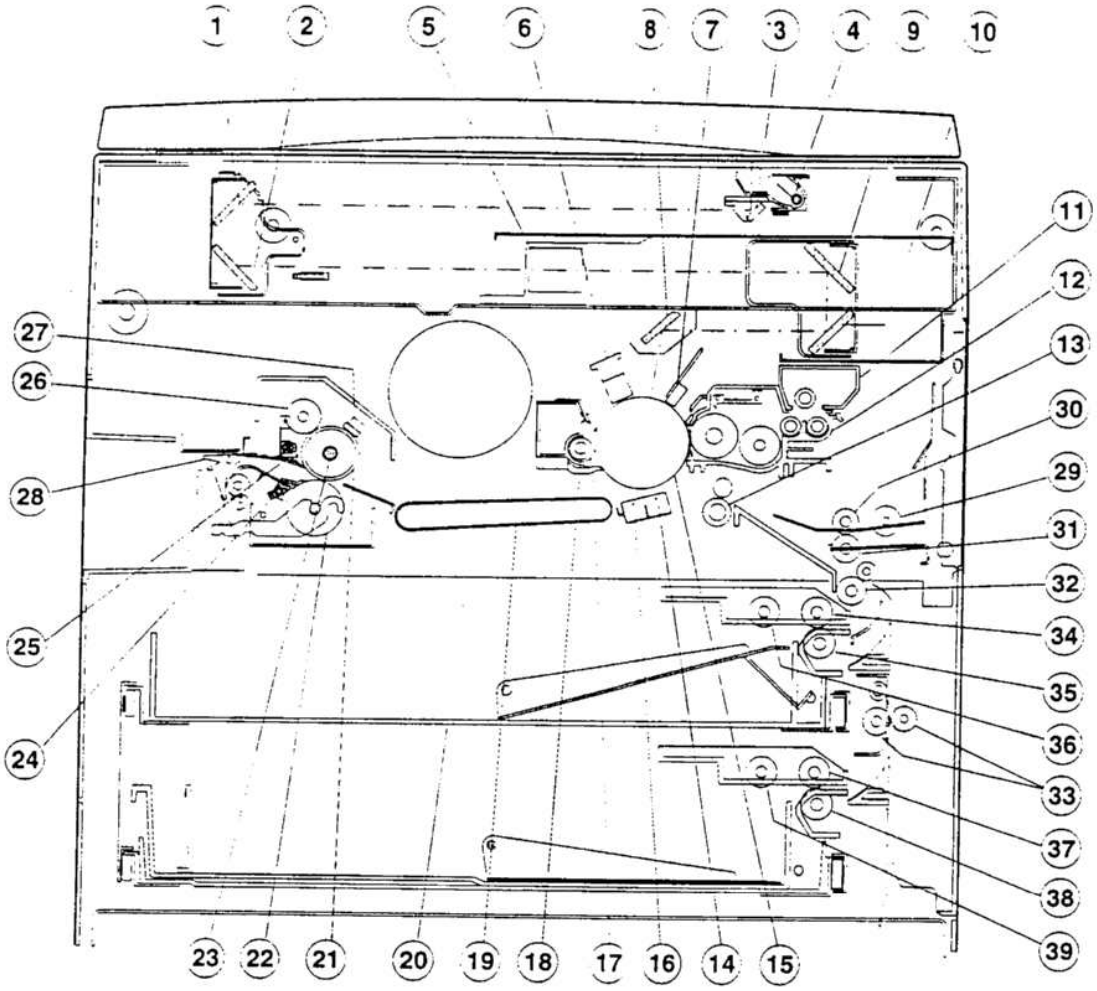

①	#2 mirror	②	#3 mirror	③	#1 mirror
④	Copy lamp	⑤	Lens unit	⑥	Main corona unit
⑦	Blank lamp	⑧	#6 mirror	⑨	#4 mirror
⑩	#5 mirror	⑪	Developing tank toner box	⑫	Developing tank
⑬	Resist roller	⑭	Transfer corona	⑮	Drum
⑯	Separation corona	⑰	Drum separator pawl	⑱	Cleaner unit
⑲	Suction unit	⑳	Suction belt	㉑	Upper heat roller
㉒	Lower heat roller	㉓	Heater lamp	㉔	Lower separator pawl
㉕	Upper separator pawl	㉖	Upper cleaning roller	㉗	Fuser thermistor
㉘	Delivery roller	㉙	Manual feed takeup roller	㉚	Manual feed paper feed roller
㉛	Counter manual feed roller	㉜	Transport roller (upper)	㉝	Transport roller (lower)
㉞	Upper paper feed roller	㉟	Retard roller	㊱	Upper paper takeup roller
㊲	Lower paper feed roller	㊳	Retard roller	㊴	Lower paper takeup roller

4. Clutches, solenoids

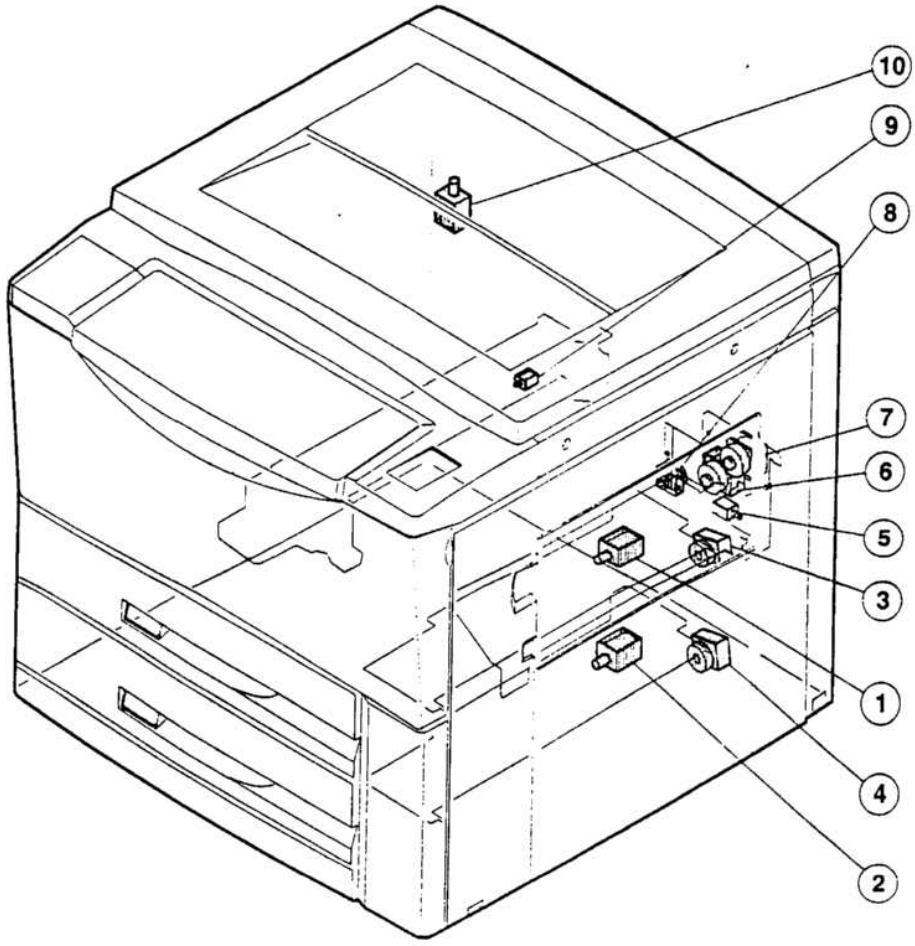

	Signal name	Name	Function
①	CPFS1	Upper cassette paper feed solenoid	For tensioning takeup roller
②	CPFS2	Lower cassette paper feed solenoid	For tensioning takeup roller
③	CPFC1	Upper cassette paper feed clutch	For actuating paper feed roller
④	CPFC2	Lower cassette paper feed clutch	For actuating paper feed roller
⑤	MPFS	Manual paper feed solenoid	For tensioning takeup roller
⑥	TRCL	Transport roller clutch (slow)	For actuating transport roller (slow)
⑦	TRCH	Transport roller clutch (fast)	For actuating transport roller (fast)
⑧	RRC	Resist roller clutch	For actuating resist roller
⑨	PSPS	Paper separation solenoid	For actuating paper separation solenoid
⑩	DGS	Double side gate solenoid	For actuating double side gate

5. SF-2022/2027 sensors

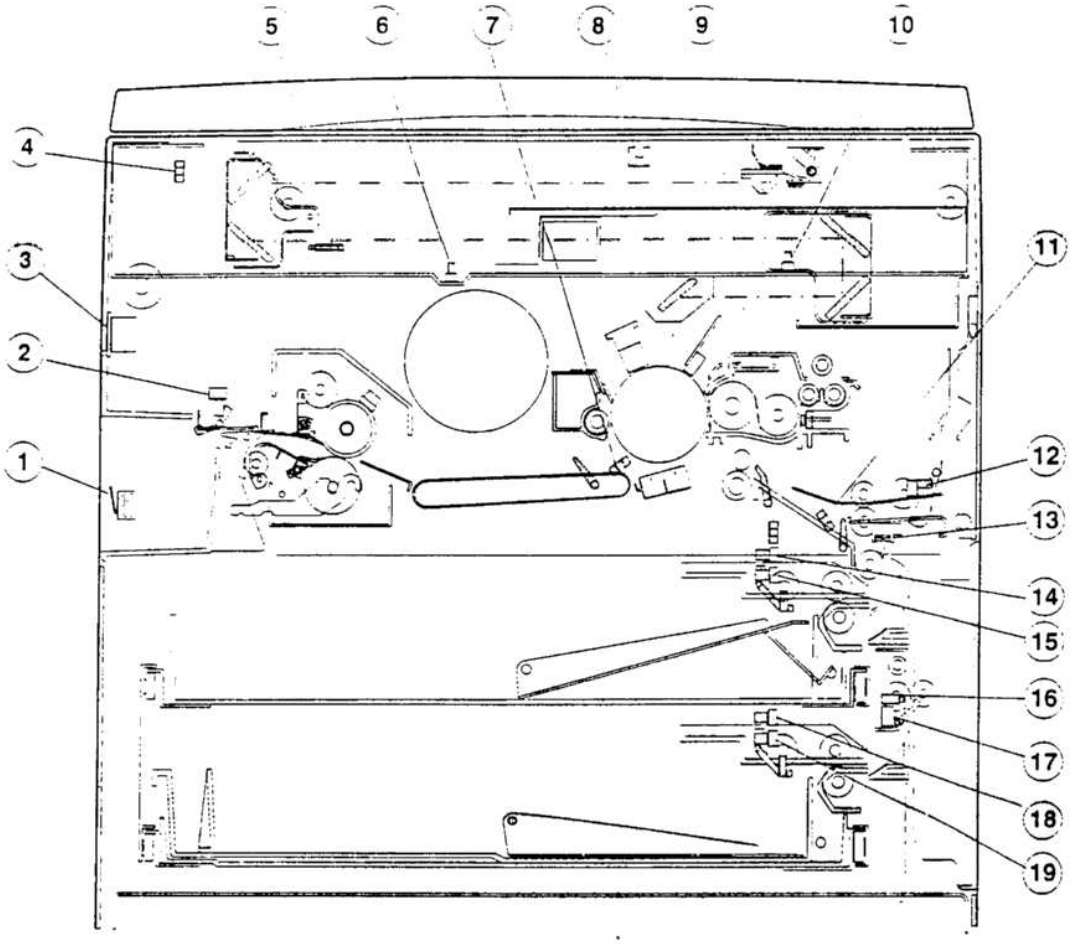

	Name	Type	Function	Output
①	CSWL	Microswitch	Cover switch, (left)	On when closed
②	POD	Transmissive photosensor	Paper exit sensor	Low when paper passes over
③	P-SW	See-saw switch	AC power switch	—
④	MHPS	Transimissive photosensor	Mirror home position sensor	High when scanner at home postion
⑤	CSWF	Microswitch	Cover switch, (front)	On when closed
⑥	LHPS	Transimissive photosensor	Lens home position sensor	Low when lens at home postion
⑦	PSD	Transimissive photosensor	Paper separation sensor	High when paper passes over
⑧	OCSW	Transimissive photosensor	Original cover switch	Low when cover is open
⑨	PPD2	Transimissive photosensor	Paper transport sensor	Low when paper passes over
⑩	MBHPS	Transimissive photosensor	Mirror home position sensor	Low when mirror at home position
⑪	PPD1	Transimissive photosensor	Paper transport sensor-1	Low when paper passes over
⑫	PED1	Transimissive photosensor	Manual feed paper sensor	Low when paper passes over
⑬	TFD	Transimissive photosensor	Full waste toner sensor	Low when full waste toner detected
⑭	LUD1	Transimissive photosensor	Upper cassette liftup sensor	Low when lift plate detected
⑮	PED2	Transimissive photosensor	Upper cassette paper sensor	Low when paper detected
⑯	CSWR	Microswitch	Doorswitch (right)	On when closed
⑰	PID	Transimissive photosensor	Paper transport sensor	High when paper passes over
⑱	LUD2	Transimissive photosensor	Lower cassette liftup sensor	Low when lift plate detected
⑲	PED3	Transimissive photosensor	Lower cassette paper sensor	Low when paper detected

6. Motors

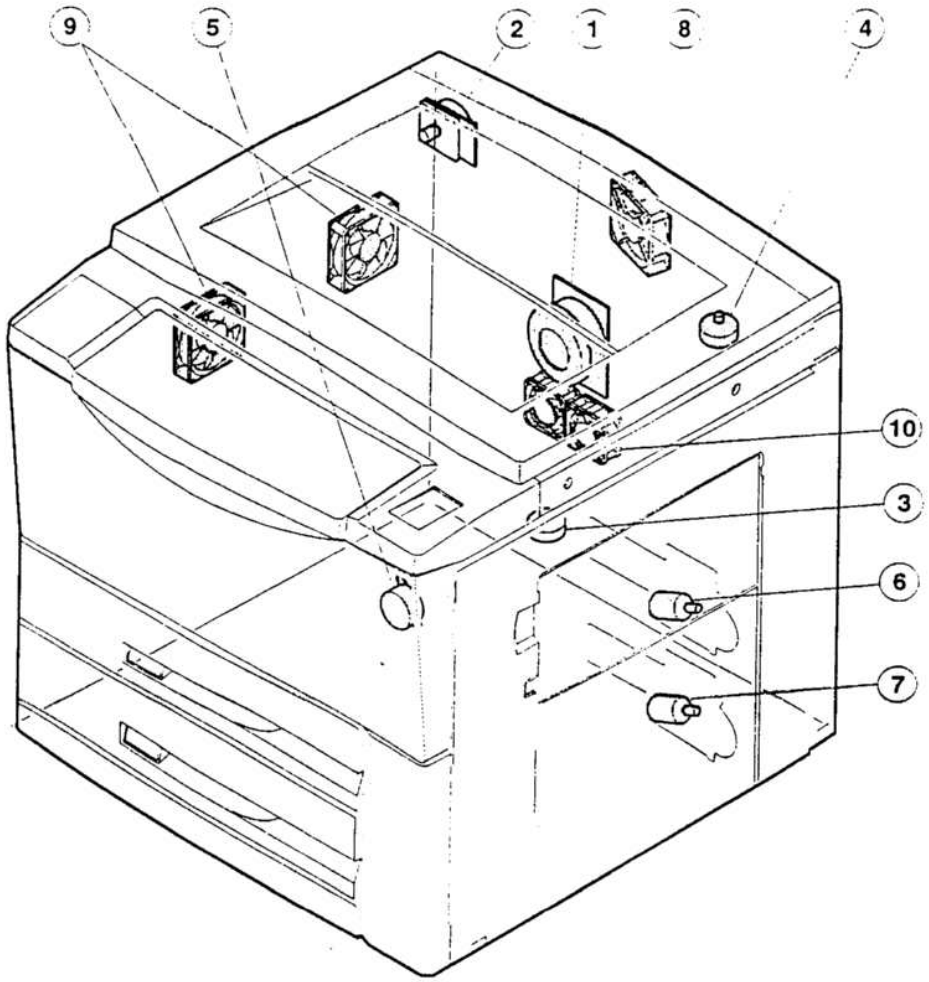

	Signal name	Name	Type	Function
①	MM	Main motor	DC, brushless	Driving copier and ADU option
②	SM	Mirror motor	DC, brushless	Driving optical system mirror bases A and B
③	LEM	Lens motor	DC, stepping	Driving optical lens
④	MBM	#4/5 mirror base motor	DC, stepping	Driving optical mirror base C
⑤	TM	Toner motor	DC, synchronous	Supplying toner
⑥	LUM1	Upper cassette liftup motor	DC, brush	Lifting upper paper feed cassette baseplate
⑦	LUM2	Lower cassette liftup motor	DC, brush	Lifting lower paper feed cassette baseplate
⑧	CFM	Cooling fan motor	DC, brushless	Cooling optical system
⑨	VFM	Ventilation fan motor	DC, brushless	Ventilating fuser area
⑩	SFM	Suction fan motor	DC, brushless	Ventilating process unit area

7. Board list

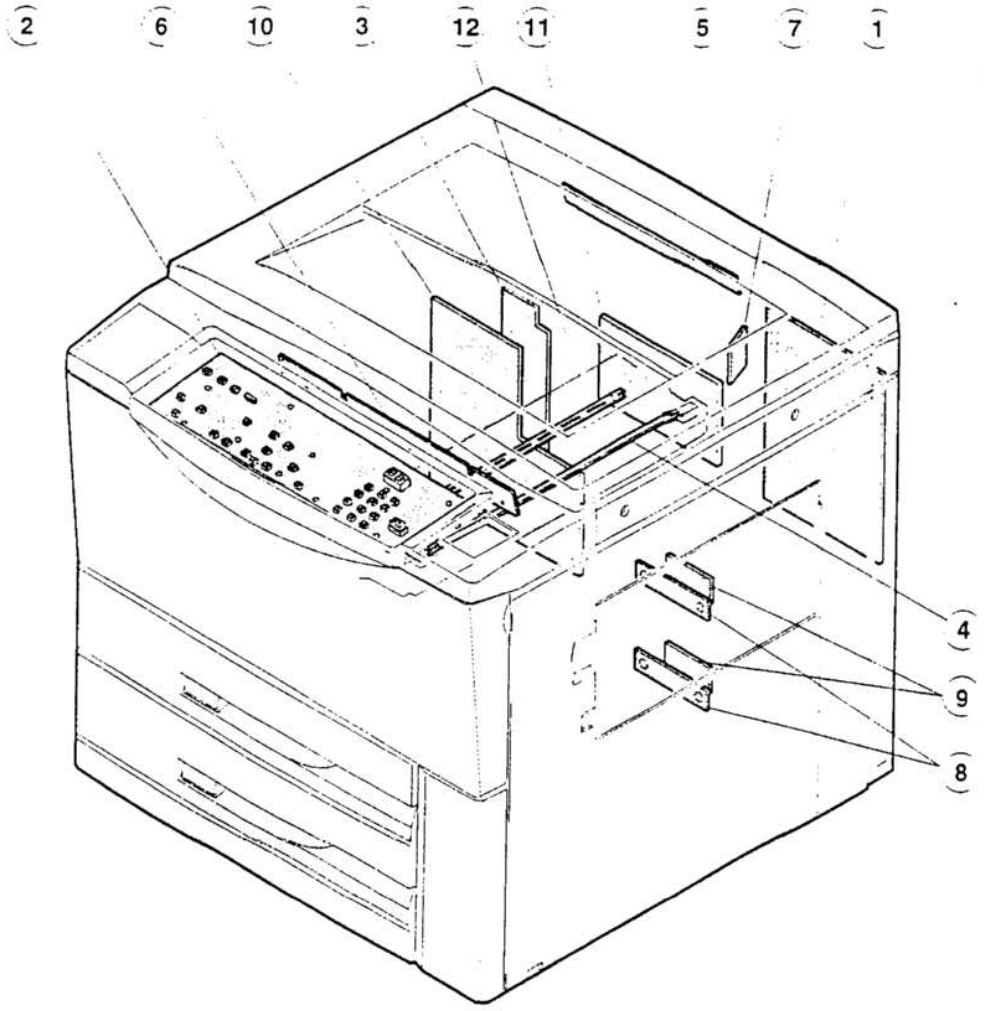

	Name	Type	Note
①	Main PWB	Common	Controlling mains
②	Operation PWB	Common to Japan models, export 2022, 2027	Controlling operator input, display
③	AC PWB	Common to Japan models, export 100V, 200V	Supplying AC power
④	Blank lamp PWB	Common	Controlling blank lamps
⑤	Original sensing light emitting PWB	Common to Japan models, export 2027	Sensing original size
⑥	Original sensor light receive PWB	Common to Japan models, export 2027	Sensing original size
⑦	AE PWB	Common	Automatic exposure sensor
⑧	Cassette paper size PWB	Common	Sensing cassette paper size
⑨	Liftup motor PWB	Common	Driving paper cassette bottom plate liftup
⑩	DC power supply unit	100V/200V series	Supplying DC power
⑪	High voltage transformer	Common	Supplying process unit high voltage and developing bias voltage
⑫	Discharge lamp	Common	Driving discharge lamps

8. Duplex copy tray

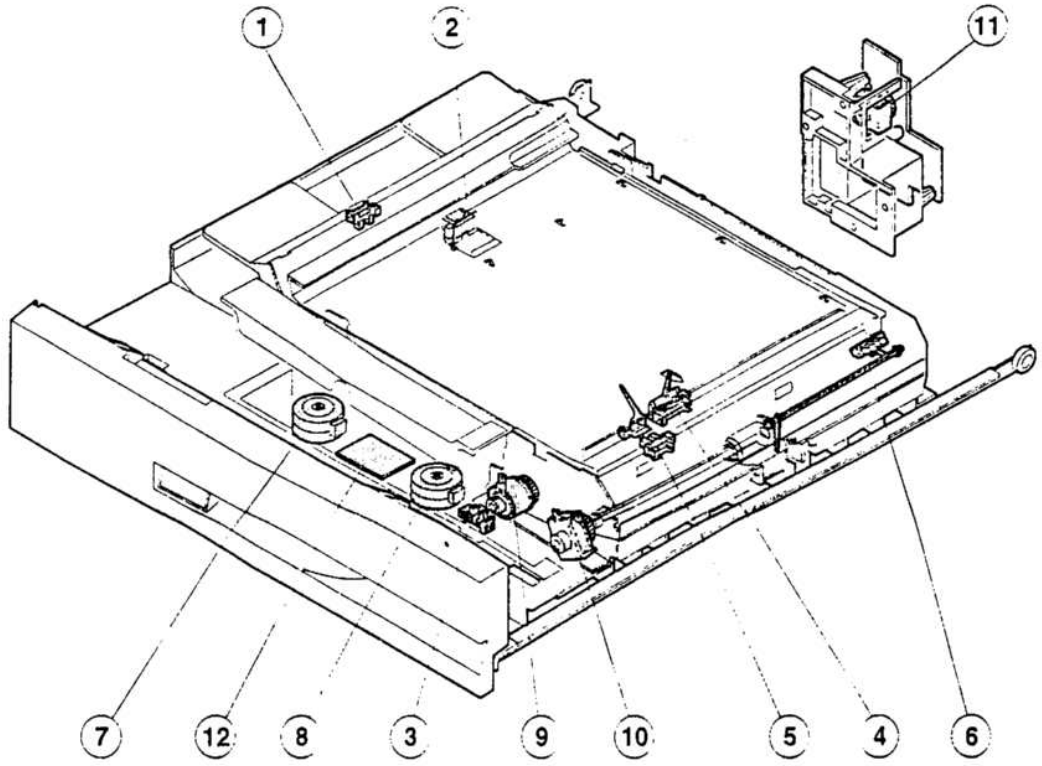

	Signal name	Type	Name	Output
①	APHPS2	Transimissive photosensor	ADU rear plate home position sensor	Low when at home position
②	DPPD1	Transimissive photosensor	ADU paper transport sensor-1	High when paper passes over
③	APHPS1	Transimissive photosensor	ADU alignment plate home position sensor	Low when over home position
④	DPP2	Transimissive photosensor	ADU paper transport sensor-2	High when paper detected
⑤	DTPID	Transimissive photosensor	ADU tray sensor	High when paper detected
⑥	DPFD	Transimissive photosensor	ADU paper entry sensor	High when paper detected
⑦	PAM2	DC stepping motor	ADU rear plate motor	
⑧	PAM1	DC stepping motor	ADU alignment plate motor	
⑨	DPFC	Magnetic clutch	ADU paper feed clutch	
⑩	DRRC	Magnetic clutch	ADU counter roller clutch	
⑪	DDC	Magnetic clutch	ADU clutch	
⑫	ADUPWB	Duplex copy tray load driving	Diode PWB	

9. Desk unit (SF-D20)

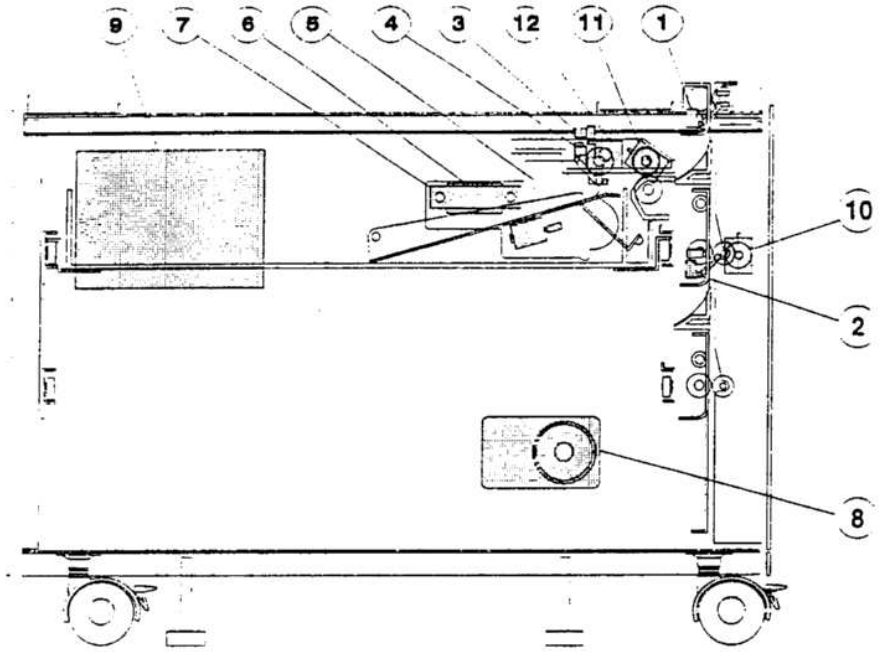

	Signal name	Name	Function
①	DPOD1	Desk paper exit sensor	Paper exit sensor (High when paper passes over)
②	DPOD2	Desk paper exit sensor	Paper exit sensor (High when paper passes over)
③	DLUD1	Desk cassette liftup sensor	Cassette liftup sensor (Low when lift plate detected)
④	DPED1	Desk cassette paper sensor	Cassette paper sensor (Low when paper detected)
⑤	DLUM1	Desk cassette liftup motor	Cassette liftup drive motor
⑥	—	Liftup motor PWB	—
⑦	—	Cassette paper size PWB	—
⑧	DM	Desk drive motor	Desk main motor
⑨	—	Desk main PWB	—
⑩	DTRC	Desk transport roller clutch	Transport roller drive
⑪	DPFC1	Desk paper feed clutch	Paper feed roller drive
⑫	DPFS1	Desk paper feed solenoid	Paper takeup roller drive

9. Desk unit (SF-D20)

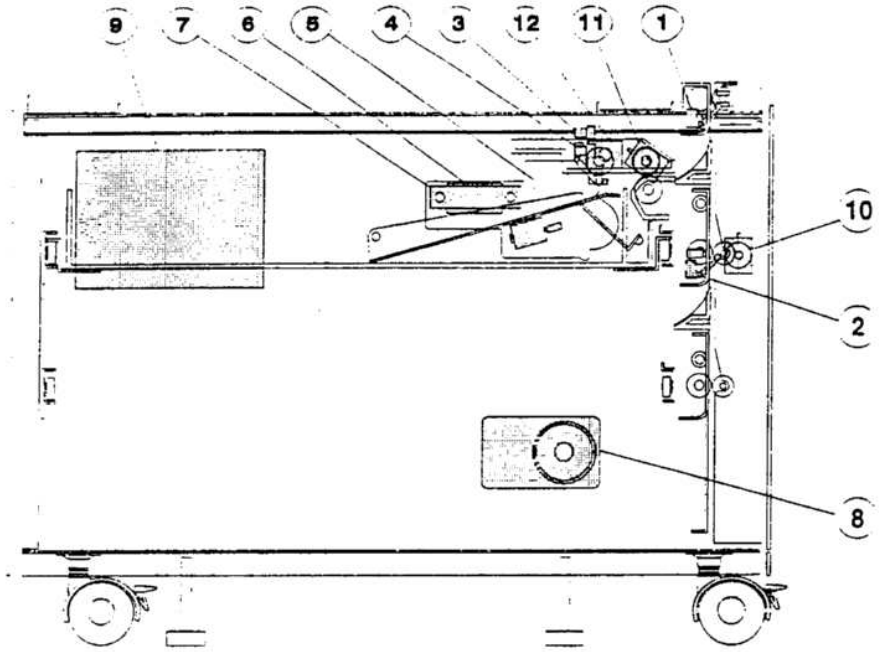

	Signal name	Name	Function
①	DPOD1	Desk paper exit sensor	Paper exit sensor (High when paper passes over)
②	DPOD2	Desk paper exit sensor	Paper exit sensor (High when paper passes over)
③	DLUD1	Desk cassette liftup sensor	Cassette liftup sensor (Low when lift plate detected)
④	DPED1	Desk cassette paper sensor	Cassette paper sensor (Low when paper detected)
⑤	DLUM1	Desk cassette liftup motor	Cassette liftup drive motor
⑥	—	Liftup motor PWB	—
⑦	—	Cassette paper size PWB	—
⑧	DM	Desk drive motor	Desk main motor
⑨	—	Desk main PWB	—
⑩	DTRC	Desk transport roller clutch	Transport roller drive
⑪	DPFC1	Desk paper feed clutch	Paper feed roller drive
⑫	DPFS1	Desk paper feed solenoid	Paper takeup roller drive

[5] INSTALLATION

1. Installing conditions

(1) Machine environment

① Avoid Installation in direct sunlight or bright locations near a window.
Direct sunlight may cause damage to components and the original cover deformation. Frosted glass may also produce the same effect.

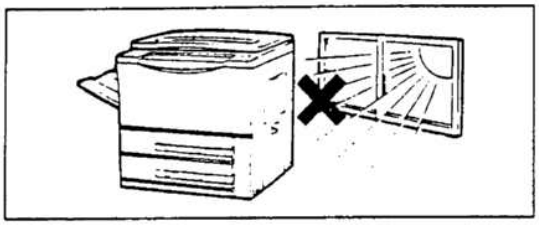

② Avoid installation in a hot or damp area, or where rapid changes in humidity occur. (For example: near an air conditioner.)
This may cause paper to dampen, or frost to form inside the copier, and may lead to a misfeed and deterioration in copy quality.

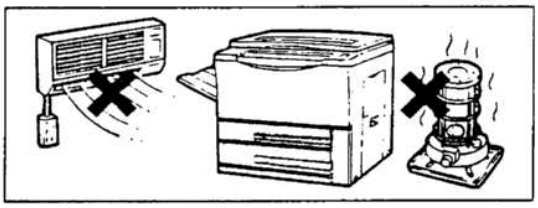

The recommended environmental conditions are:
20 to 25 degrees Centigrade (68 to 77 F) and 60 to 70%RH.

The nominal environmental conditions are:
15 to 30 degrees Centigrade and 25 to 85%RH.
If the temperature is 35 degrees C and the humidity should be 85%RH.

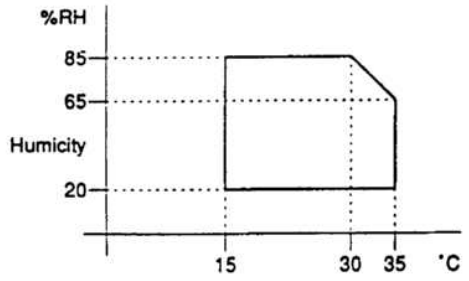

③ Avoid installation in a place where dust or vibration is encountered.
Dust deposit inside the copier may lead to a deterioration of copy quality or machine trouble.

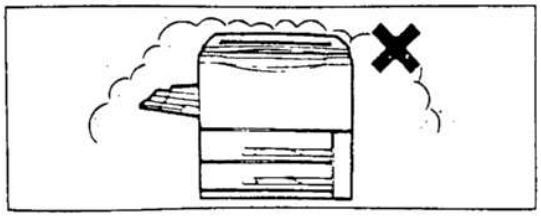

④ Do not install the copier on an unstable or uneven floor. This copier must be placed on a level surface to permit proper functioning.

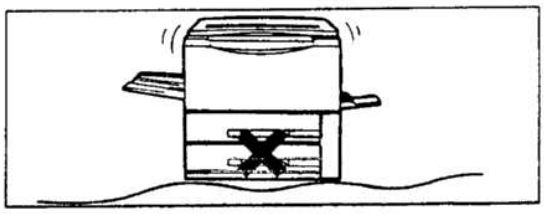

⑤ Avoid installation in a place where the ventilation or air circulation is poor.

⑥ Never install the copier near inflammable materials or in the presence of ammonia fumes.
Installation near a diazo copy machine may lead to a deterioration of copy quality or machine malfunction.

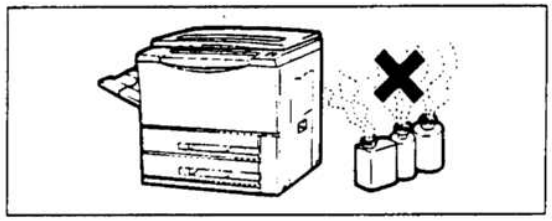

⑦ Install the copier near a wall outlet.

(2) Space around the copier

The copier must be installed at least 10cm away from the wall in order to permit fan ventilation and to allow proper machine operation.

(3) Machine table

Install the copier on a level surface using the water level (UKOGM0054CSZZ).

IMPORTANT: Installing the copier on an unlevel surface may effect copy quality an machine performance.

(4) Power source

① The power supply line should have a capacity of more than 15A, capable of supplying more than 90% of the rated voltage at full load.

② Do not use an extension cord, or operate any other equipment from the same wall outlet.

(5) Ground connection

To avoid electrical hazard, use the properly grounded wall outlet only.

2. Installation space

A sufficient space must be reserved for proper ventilation by the cooling fan and for proper functioning of the machine. In addition, the machine service (preventive maintenance) space is required.

(1) Copier and desk

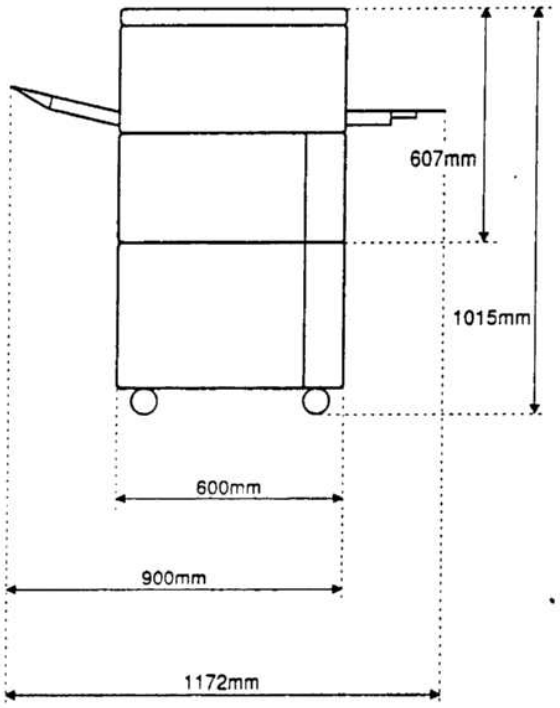

(2) Copier, desk, and option unit

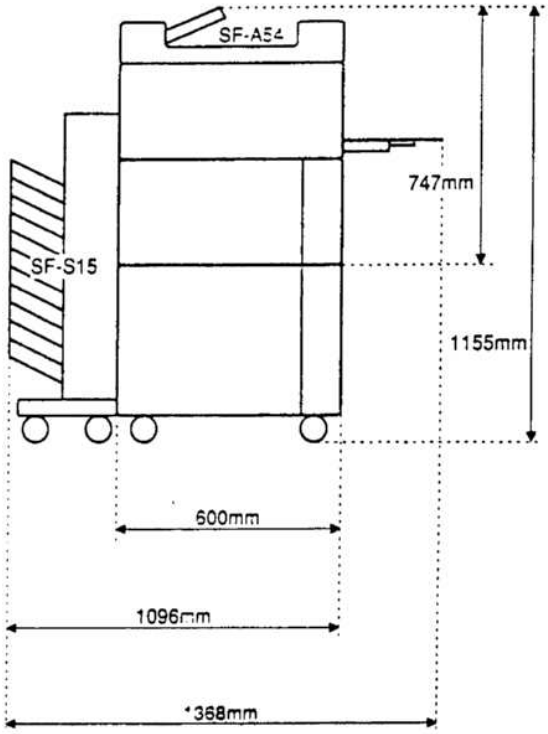

(3) At least a space of 300mm is needed for both sides of the machine for servicing.
Installation of the machine largely affects the machine performance, the following must be well noted.

3. Installation procedure

(1) SF-2022/SF-2027

1. Releasing optical locks

A Removing the #2/3 mirror unit lock

Unfasten the screw that holds the #2/3 mirror unit on the left side of the machine.

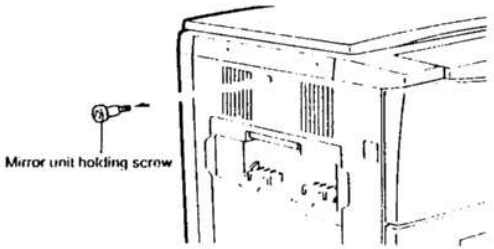

B Releasing the lens and #4/5 mirror unit from lock

Open the paper feed tray and remove two screws that hold the #4/5 mirror unit.
Open the front panel and remove one screw that holds the lens under the operation panel.

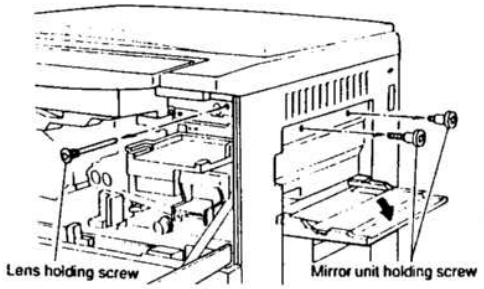

2. Fuser unit set up

A Removing the fuser unit

(1) While holding up the paper exit handle, open the paper exit cover.
Remove the front panel band on the left side of the front panel in a manner shown in the figure.

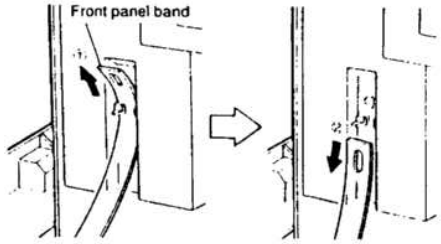

(2) Remove the fuser unit holding two screws.

(3) Hold the fuser unit rotating knob. Push on the front panel and gently remove the fuser unit. Do not let the locatot pins undr the fuser unit hit the ribs on the front cover.
Hold the fuser unit hand carry strap and remove the fuser unit.

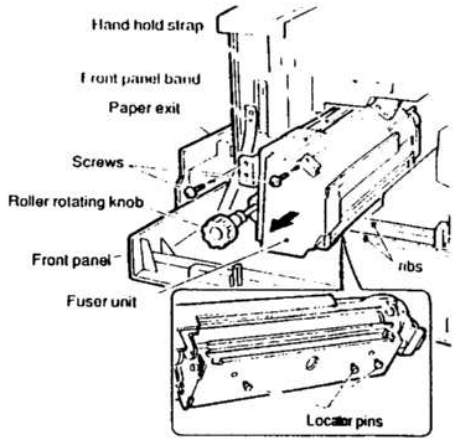

B Tensioning the heat roller

Move the tension levers on both sides of the fuser unit to the position shown in the figure. With this, tension is applied to the upper and lower heat rollers.

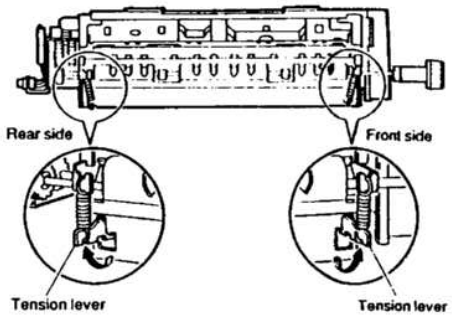

C Installing the cleaning roller

(1) Remove two screws that hold the fuser cover, and slide the fuser cover to front then lift.

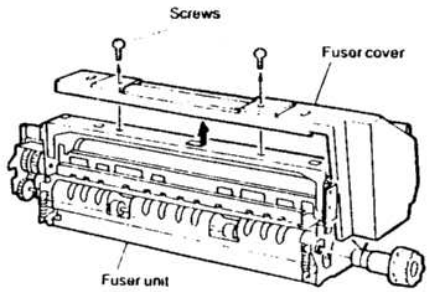

2. Remove the spring secured to the front side of the fuser unit.
Remove holding bracket securing screw on the rear side of the fuser unit, and remove holding bracket.

Keep the holding bracket and screw for later use.

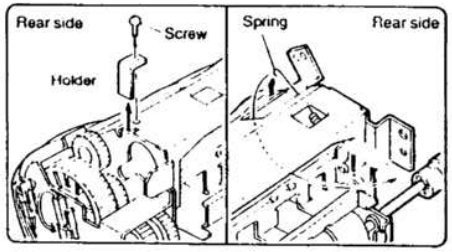

(3) Route the cleaning roller gearwheel through the round hole in the rear side of the fuser unit and insert the cleaning roller into the round hole on the front side. Note the bushings at both ends of the cleaning roller. Fit the bushings into the appropriate slots in the fuser unit frame.

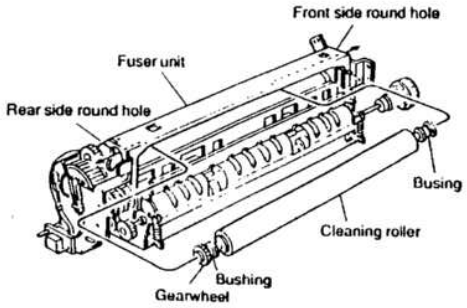

(4) Hook the spring to its previous position, replace the holding bracket to its position, then secure it with the one screw.
Ensure the spring and holding bracket are as shown in the figure; holding the bushing.

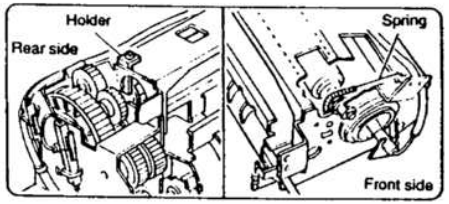

(5) Replace the fuser cover removed in Step 1, and fasten it with two screws.

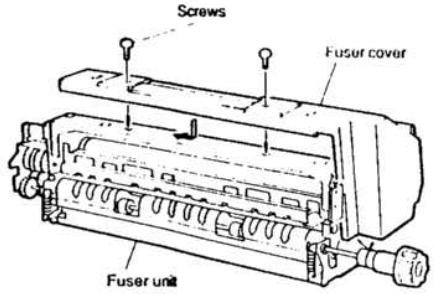

(6) Insert the locator pin under the fuser unit into slot. Gently push fuser unit all the way in.
Make sure now that the locator pins of the copier are firmly engaged into two locator holes of the fuser unit mounting bracket.
Secure fuser unit with two screw removed in (2) of **A**, and close the paper exit.
Replace the front panel band that removed in (1) of **A**.
Close the paper exit cover.

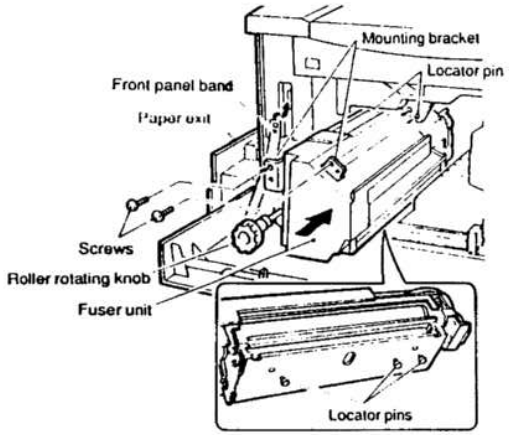

3. Cleaning corona unit

A Clean the main corona unit

(1) Push down the hook of the main corona unit while removing the main corona unit from the copier.

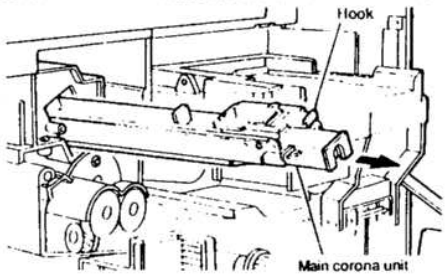

(2) Unfasten the one screw holding the electrode on the back of the main corona unit and remove the electrode.

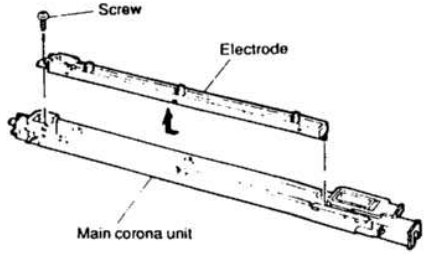

(3) Very carefully clean the top of the electrode using the electrode cleaner. Repeat this procedure a few times.

NOTES:

- Never move the cleaner in any direction except up and down when the cleaner is in contact with the electrode..
- Be sure to clean away the whole area evenly. Never clean only a portion of the electrode.

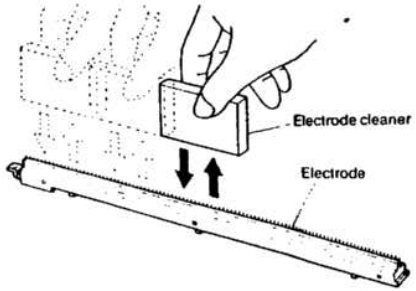

(4) Install the electrode and secure it with the one screw.

(5) Insert the main corona unit all the way into machine. Guides must be inserted into proper slots.

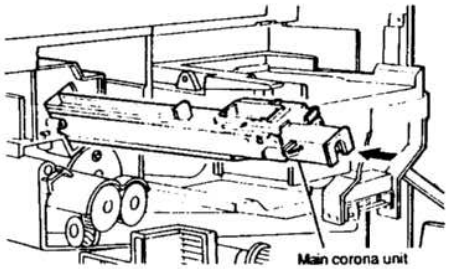

B Clean the transfer/separation corona wires

(1) Tilt the paper transport block accessing lever to left. Rotate the transfer corona lock plate clockwise using the scale or flat tip screwdriver to release it from the lock. Remove the transfer/separation corona unit from the copier.

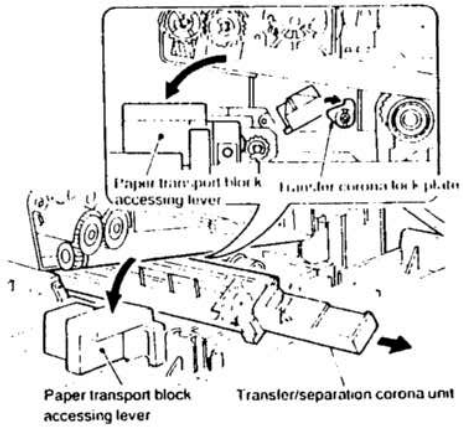

(2) Unhook the section A of the separation corona guide, slide the separation corona in the direction of the arrow, and remove the separation corona guide from the corona housing.

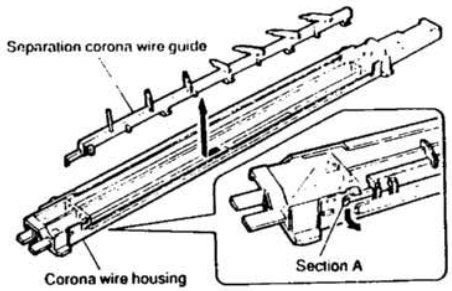

(3) Squeeze the transfer/corona wire with the corona wire cleaner. Move the cleaner in the direction of the arrow to clean the wire.

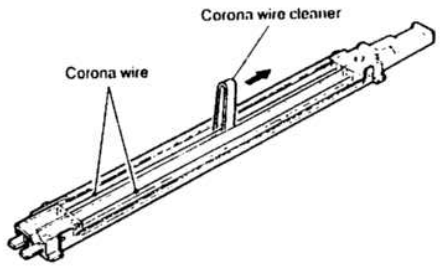

'4 Install the separation corona guide to the corona housing. Insert the corona assembly along the guide of the transfer/separation corona unit. Rotate the transfer corona lock plate counterclockwise, return the paper transport block accessing lever clockwise, and close the front panel.

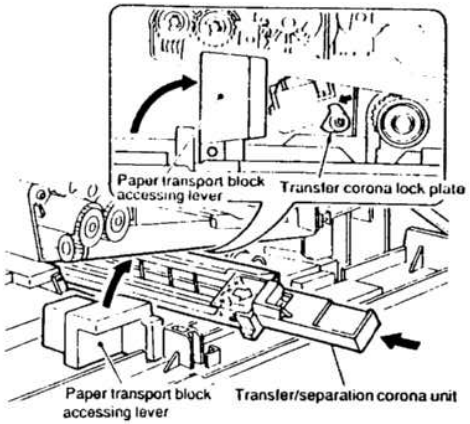

4. Installing accessories

A Install the copy receive tray

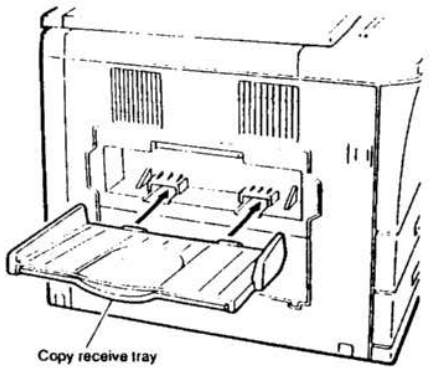

5. Setting up the upper paper cassette

A Remove the packing screw of the cassette.

Pull out the cassette drawer by lifting while pulling out drawer.
Remove the one packing screw that secures the paper tension plate of the cassette.

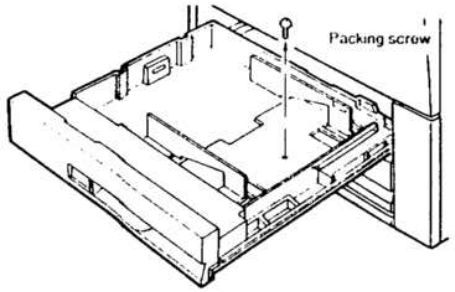

In the case of the B5R cassette, it has been set at the factory.

B Removing the cassette

Hold up the cassette grasping the both sides of the cassette and pull it all the way out.

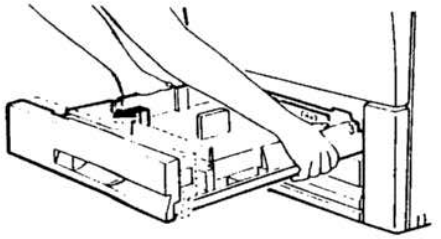

C Change the size using the side plates F and R.

Remove two screws that hold the side plates F and R. Set the plates into their position shown with notches, and secure with the two screws.

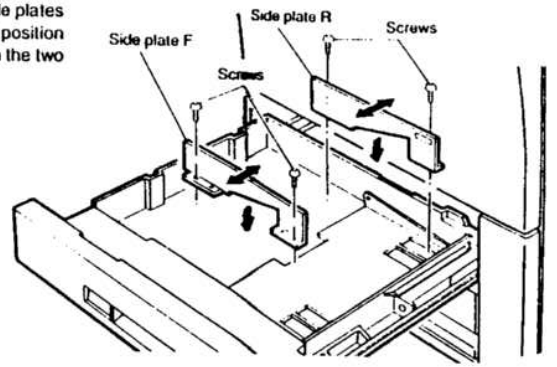

D Insert the rear plate

Remove the rear plate and set the plate into the position indicated for the desired paper sixe.

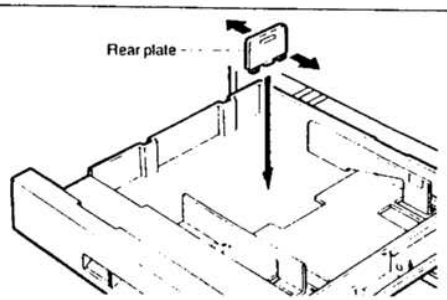

E Set the size detect spacer

Change the position of the size detect spacer. Move the spacer to the appropriate positions.

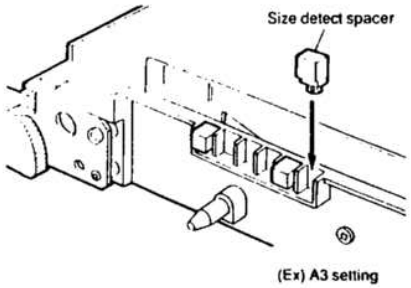

(Ex) A3 setting

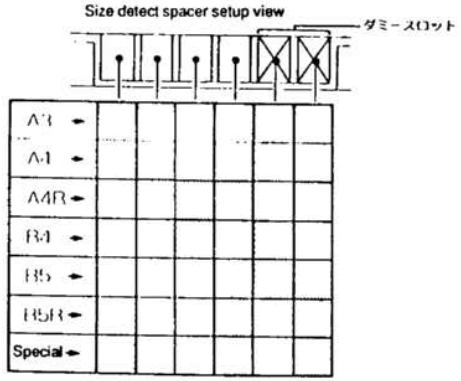

F Change the paper size indication plate

Remove the paper size indication plate. Install the plate so the size of the paper can be seen from the window.

Paper sizes are printed on the front and the back of the paper size indicator plate.

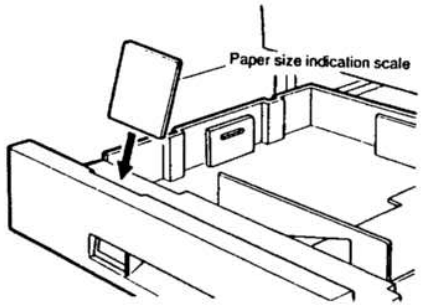

G Set the cassette

Hold up both sides of the cassette from back and insert it along the guide rails. Ensure the cassette moves in and out smoothly.

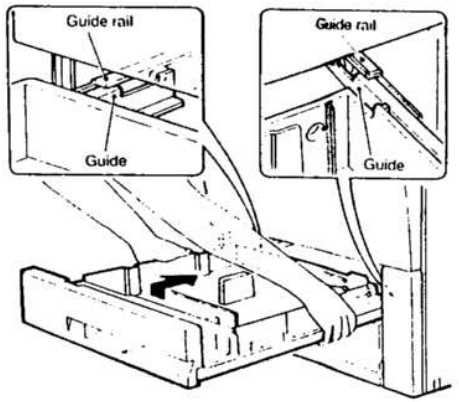

H Load paper

Load paper in the cassette, but not above the maximum line.
Insert the cassette all the way into the machine.

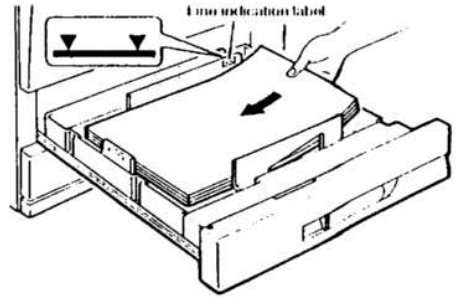

6. Set up the lower paper cassette

A Remove the packing screw of the cassette.

Remove the two packing screw that hold the paper tension plate of the cassette.

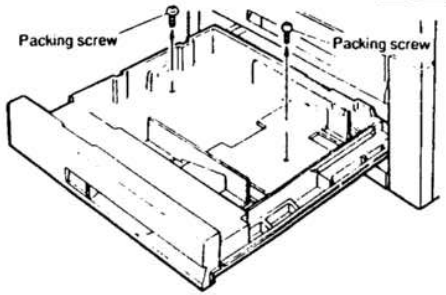

B Change the size using the side plates F and R. (set to A3 position at the factory.)

Set the plates into the appropriate positions and secure wach plate with two screws.

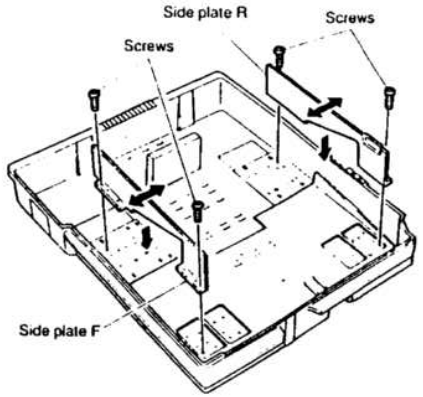

C Change the size of the rear plate.

Remove the rear plate. Set the plate into the position indicated for the desired paper size.

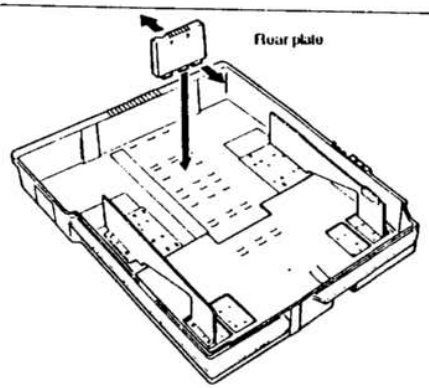

D Set the size detect spacer

Change the position of the size detect spacer. Move the size detect spacers to the appropriate positions.

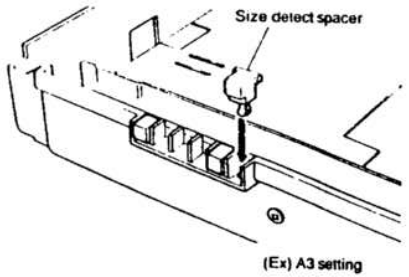

Size detect spacer setup view

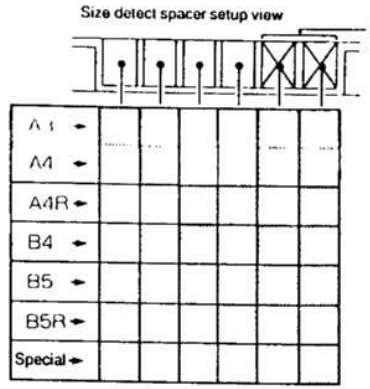

E Change the paper size indication plate

Remove the paper size indication plate. Install the plates so the size of the paper can be seen from the window.
Paper sizes are printed on the front and the back of the paper size indicator plate.

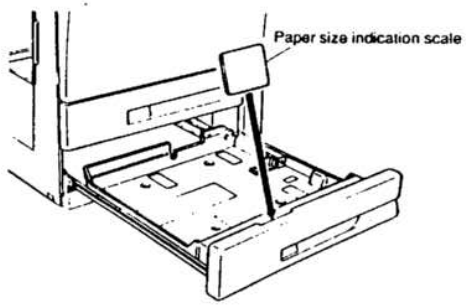

F Load paper

Load paper in the cassette, but not above the maximum line.
Insert the cassette all the way into the machine.

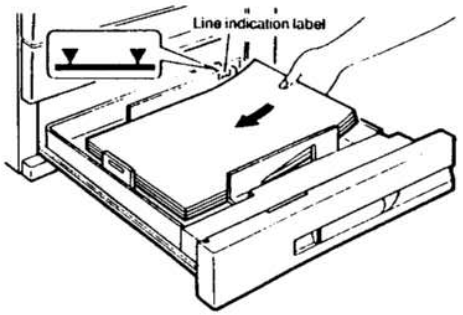

7. Setting developing unit

A Remove the developing unit

(1) Open the front panel and pull the developing unit lever forward.

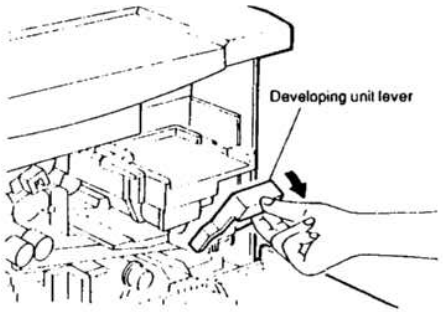

(2) Hold the handle of the developing unit and gently pull the developer unit out until it stops. Lift the carrying strap of the developing unit and remove it.

Be sure to lift the developing unit carrying strap, otherwise, the unit may not come out since a locking mechanism is utlzed.

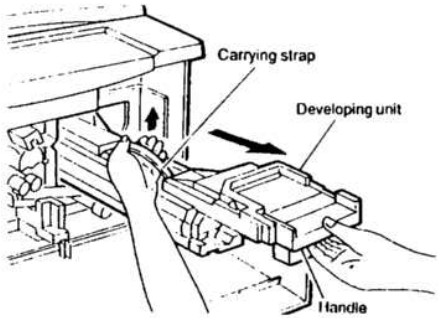

B Load developer

(1) Unfasten the 5P connector that connect the toner hopper with the developing unit. Remove four screws that hold the toner hopper on the developing unit, then remove the toner hopper.

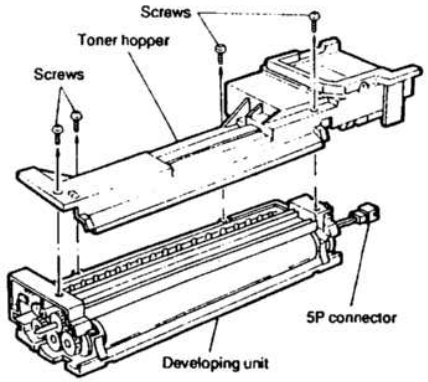

(2) Pour in the developer in the developer loading port of the developing unit, while rotating the MG gear clockwise with the Phillips screwdriver. Pour in one bag of developer into the developing unit.

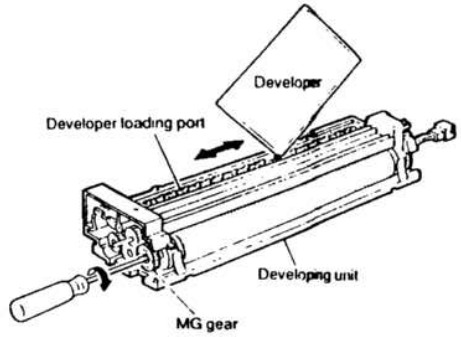

(3) Install the toner hopper using the four screws that hold the toner hopper to the developing unit and connect the 5P connector between the toner hopper and the developing unit. Note, the harness of the 5P connector must be inserted into the harness clamp.

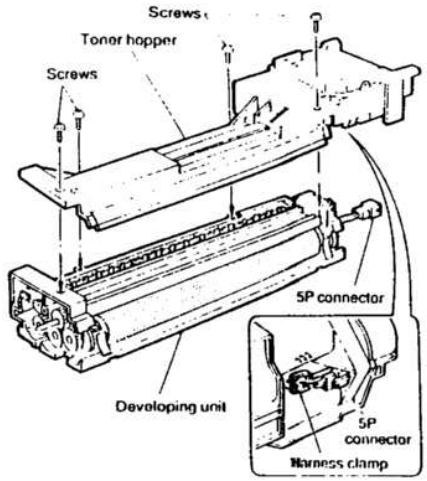

C Set the developing unit to the copier

Place the developing unit in the copier. Insert the developer unit all the way in, close the developing unit lever and the front panel.

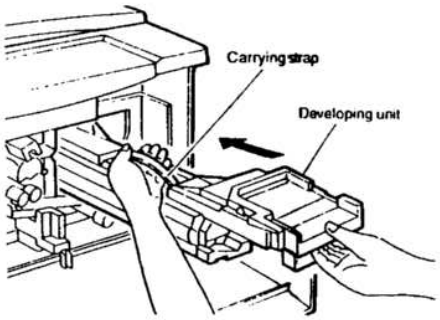

8. Adjust the toner density referance level

-- Turn the copier power on.

A Adjust the toner density referance level of the developing tank

(1) Execute the test command 25 sub 2.

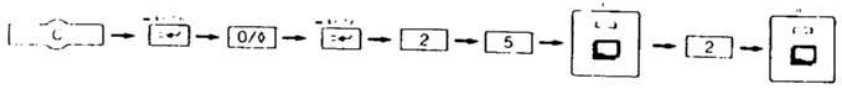

(2) In two minutes, the test will complete.

NOTE: Never try to cancel this test command execution. Otherwise, the automatic developer referance adjustment can not be acheived.

(3) Exit test command mode.

9. Loading toner

A Loading toner

(1) Open the front panel.

(2) Shake the toner cartridge left to right and up and down a few times.

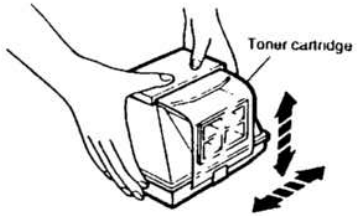

Install the toner cartridge along the toner hopper (arrow direction).

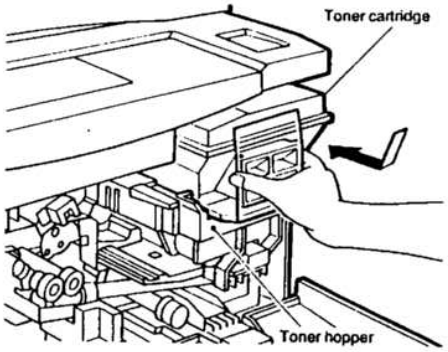

(3) Firmly hold the toner cartridge in place, and pull the toner cartridge sheet out. The toner cartridge sheet needs to be completely removed.

Close the front panel.

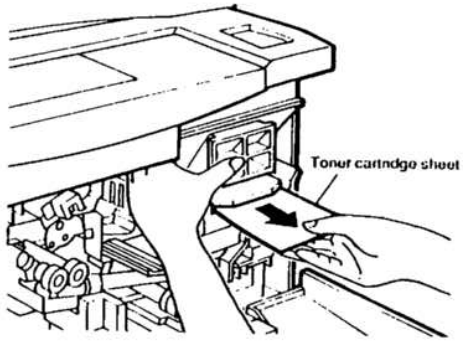

10. Attaching zoom select label

A Bond the label

The zoom select label that comes with Instruction Manual can be installed as shown

●To attach the label on the copier with the original cover

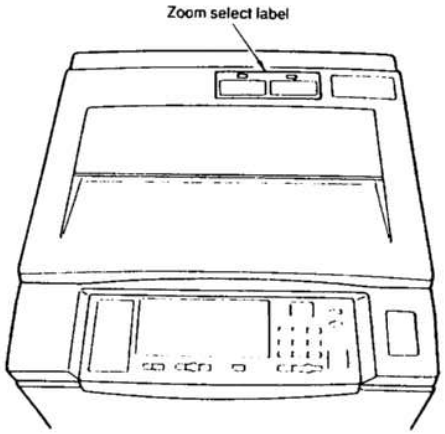

●To attach the label on the automatic document feeder.

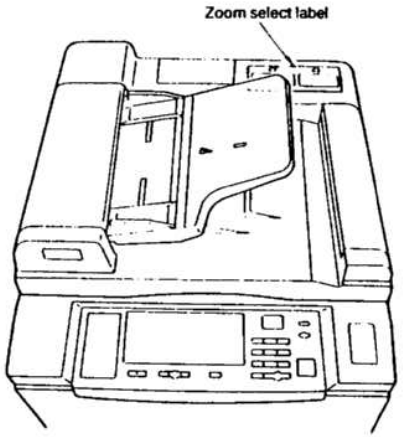

(2) SF-IC11

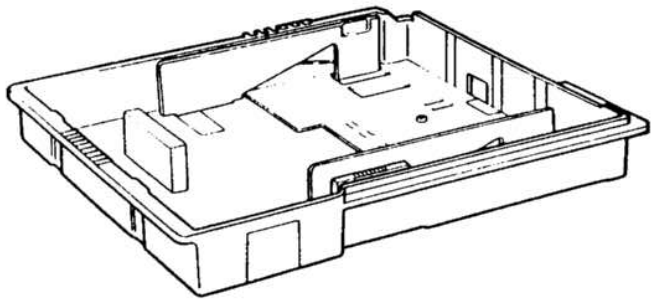

SF-IC11

Cassette main unit

Parts included

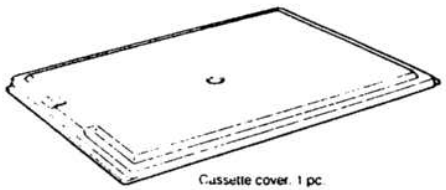

Cassette cover: 1 pc.

Size label for indication plate

AB system

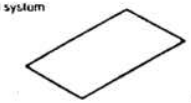

A5 1 sheet

Inch system

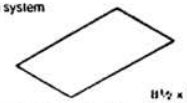

8½ x 5½ 1 sheet

Cassette size label

AB system

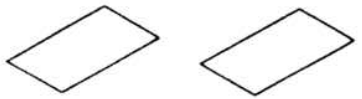

A3 A4 A4R A5 B4 two sheets each

Inch system

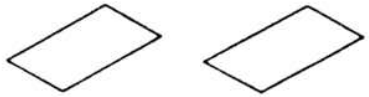

8½ x 11 · 8½ x 11R
8½ x 14 · 8½ x 5½
11 x 17

two sheets each

* Be sure to store any parts with care that are not used because they are necessary for changing the papersize.

Before performing the following procedure, be sure to remove the power plug of the copier main unit.

1 To remove the stopper for the packaging cassette unit.

Remove the stopper for the packaging the paper pressure plate in the cassette unit.

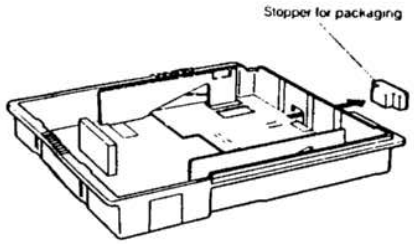

When using default setting:

* Skip to step 7 and perform the following steps.
Initial set paper size is A3 or 11 x 17.

When using after changing paper size:

2 To change the size setting of side plate F and side plate R.

Insert side plate F and side plate R into the cassette main unit and align them on the marking for the desired size, and secure the side plates with fixing screws (2 pcs. each)

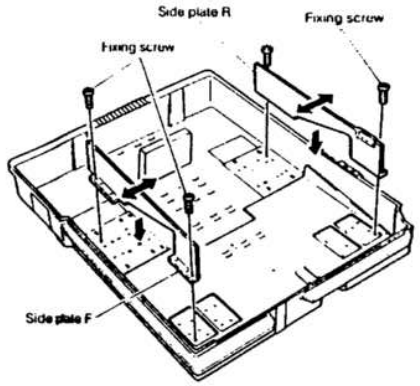

3 To change the size position of the rear end plate.

Remove the rear end plate from its rear storage place, and insert this into the cassette main unit for the desired size
When you switch the size to A5 or 8½ x 5½, fix this plate to the rotary plate by using the screw that is attached to the rear end plate

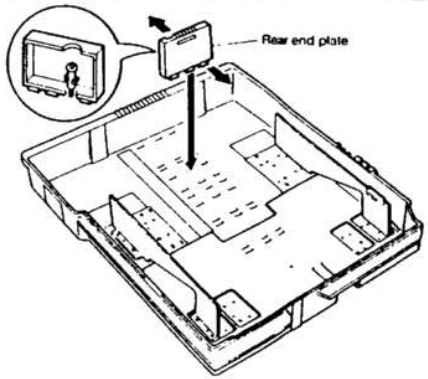

4 To set the size detection spacer.

Reposition the size detection spacer for the desired paper size

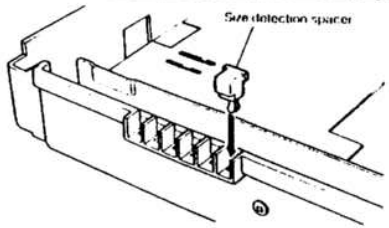

Setting diagram for size detection spacer

(AB system)

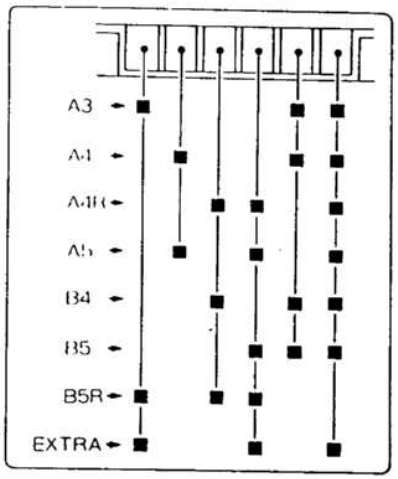

(Inch system)

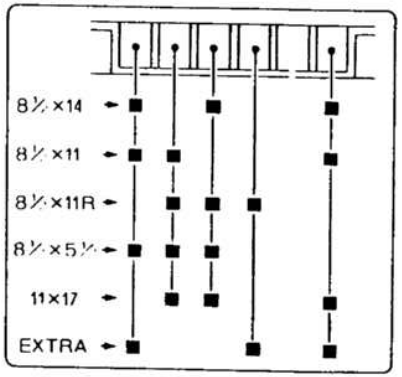

5 To stick the cassette size labels.

Stick the cassette size labels that indicate and correspond to the desired size on the marked positions for sticking (2 positions). If you change the size to A5 or 8-1/2 x 5-1/2, take out the paper size indication plateand stick the size label on the indication plate and align the sticking line as shown in the figure.

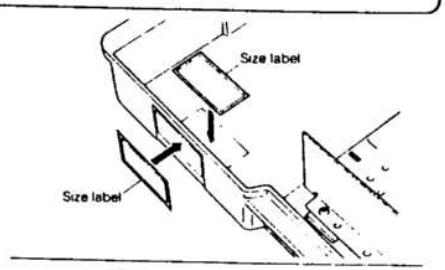

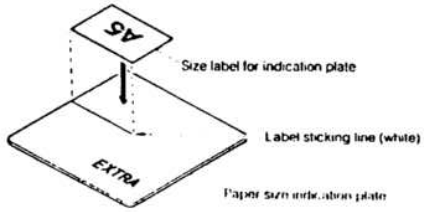

6 To change the paper size indication plate.

Take out the paper size indication plate and insert it so that the name of set paper size can be seen through the paper size indication window.
The paper size is written on both front and rear faces of the paper size indication plate

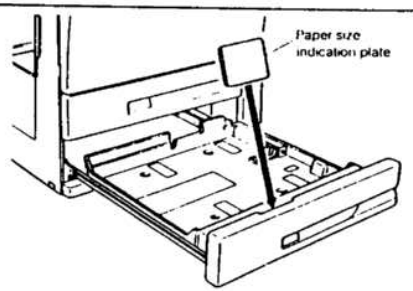

7 To install the cassette main unit on the paper tray.

Install the cassette main unit by putting the four projections into the corresponding holes of the paper tray.

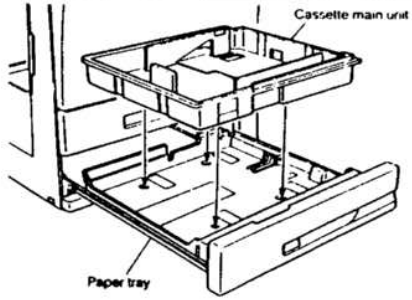

8 To set paper on the cassette.

Set paper on the cassette.
Do not set too many sheets that exceed the maximum height of the indication line.
Then insert the cassette securely into the innermost recess of the desk main unit.

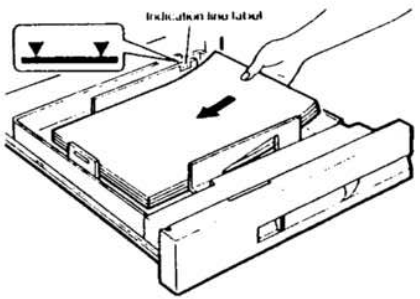

(3) SF-CM11

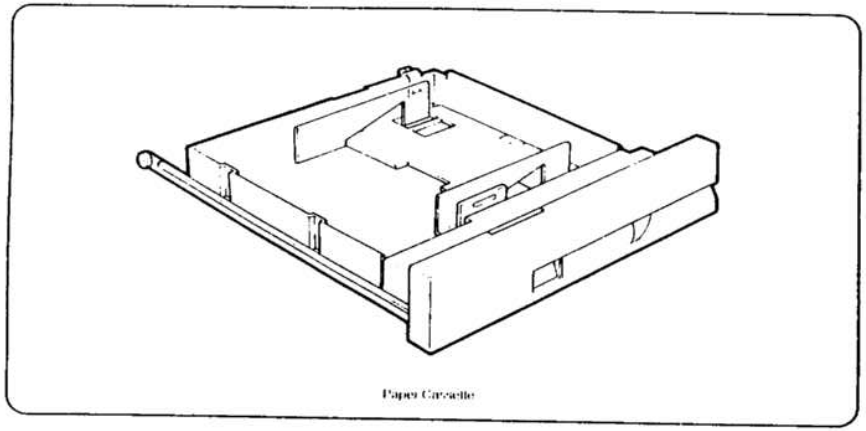

Included parts

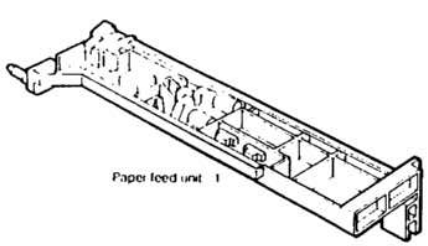

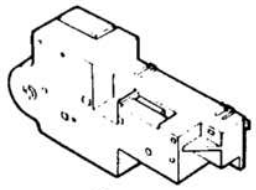


Right stopper 1


Mounting screws A (M4 × 30) 2


Mounting screws B (M4 × 10) 2

Be sure to unplug the copier and install the unit as follows:

★ Procedures for installation on the SF-D20 or SF-D21

1 Remove the rear cabinet panel from the desk.

Remove the rear cabinet panel by removing the four screws which secure it to the desk.

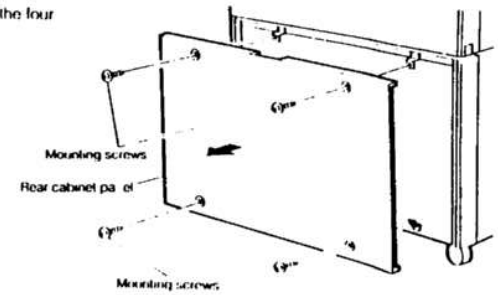

2 Install the lift-up unit.

Connect the connector (black colored) from the desk to the connector of the lift up unit.
Next, hook the prongs on the lift up unit into the rear frame of the desk, fit the lift up unit into the positioning bosses (two locations), and secure it with the mounting screws A (2) and B (1).

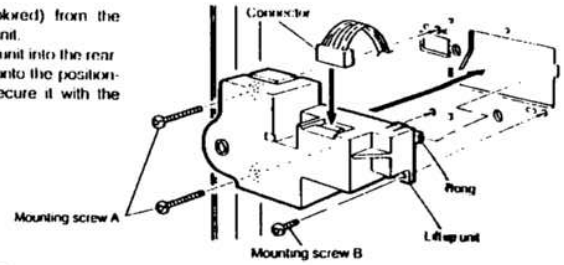

Lift-up unit installation position

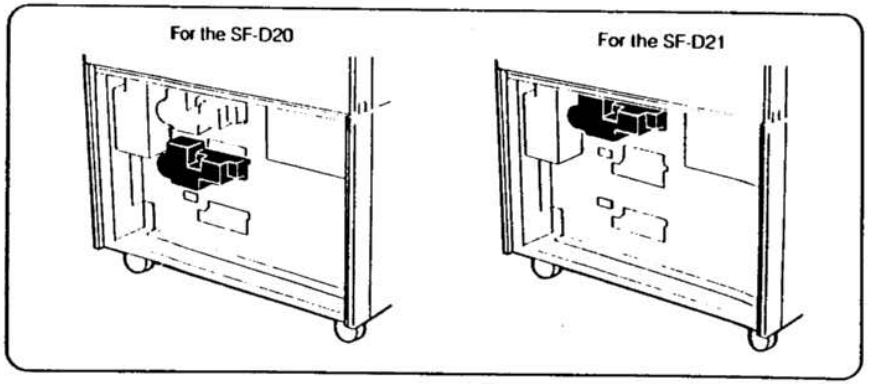

3 Remount the rear cabinet panel onto the desk.

Remount the rear cabinet panel which was removed in step 1 back in its original position and secure it with the four mounting screws.

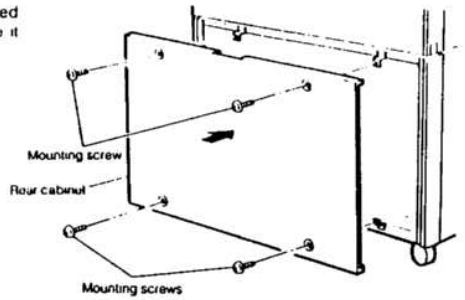

4 Remove the right cabinet panel from the desk.

Remove the two mounting screws on the right cabinet panel and remove the right cabinet panel as shown.

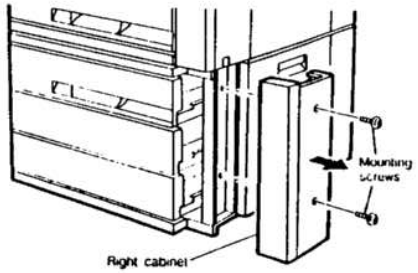

5 Remove the cover.

Remove the cover by removing the screw which secures it.

For the SF-D20

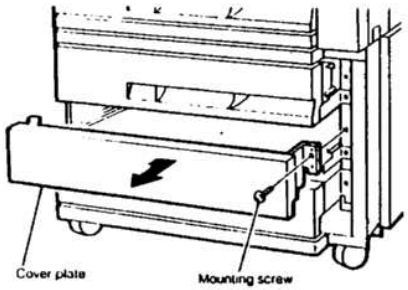

For the SF-D21

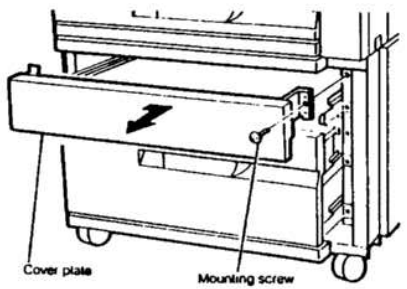

6 Install the paper feed unit.

Fit the groove in the paper feed unit into the guide rail, and then, while lifting the paper feed unit at an angle of approximately 30°, slide it all the way back as far as it will go.
Fit the paper feed unit into the positioning bosses (two locations) on the desk frame, and secure it with one mounting screw B.

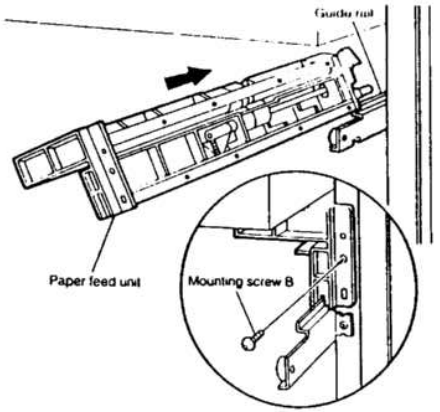

7 Remove the packing screw from the paper cassette.

Remove the packing screw which secures the paper pressure plate inside the paper cassette.

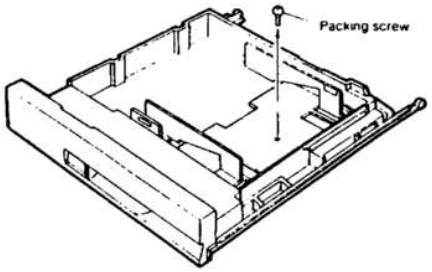

The paper size is set to A4 for AB system and 8½" x 14" for inch system at the factory

8 Change the positions of the front and rear side plates.

Remove the mounting screws (2 each) which secure the front and rear side plates. fit the front and rear side plates into the appropriate locations marked on the cassette to set the desired paper size, and then secure the side plates once again with the mounting screws (2 each)

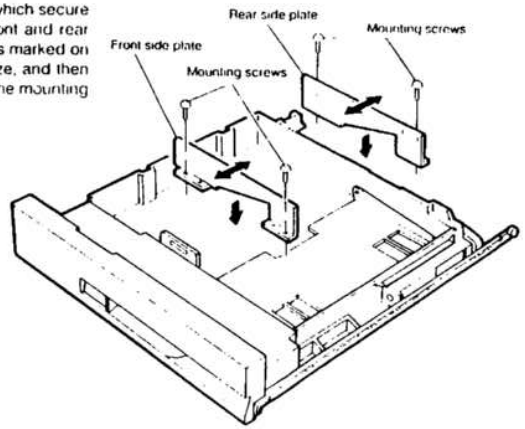

9 Position the rear edge plate.

Remove the rear edge plate from its storage slot and fit it into the cassette to set the desired paper size.
The rear edge plate is not needed to set the paper size to 11" x 17" (double letter size)

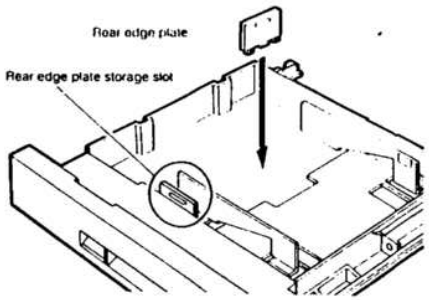

10 Set the paper size detection spacer.

Change the position of the paper size detection spacer to match the desired paper size

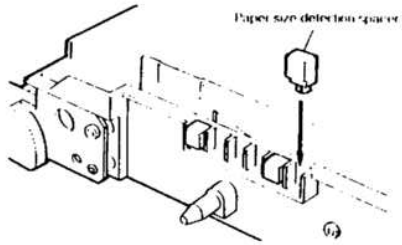

Paper size detection spacer position diagram

AB system

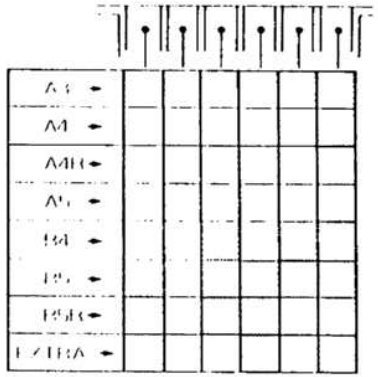

Inch system

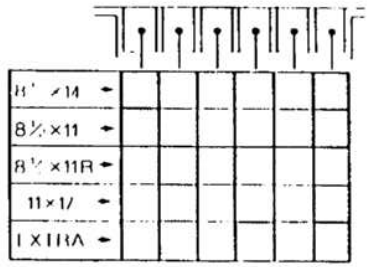

11 Change the paper size indicator.

Remove the paper size indicator and reinsert it to show the paper size for which the cassette has been set in the paper size indicator window.
Note that paper sizes are printed on both sides of the paper size indicator.

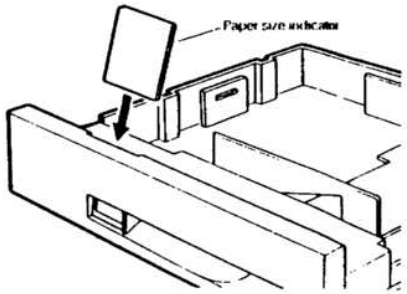

12 Fit the paper cassette guides into the guide rails.

Insert the paper cassette by fitting the guides of the paper cassette into the guide rails.
When doing this, insert the paper cassette all the way in so that the cassette's left guide roller goes past the stopper on the guide rail.

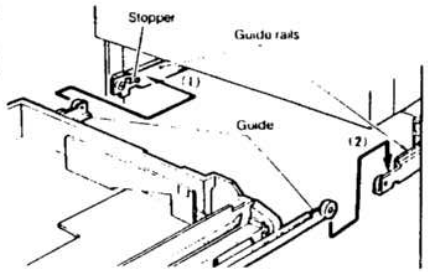

13 Mount the right stopper.

Fit the right stopper into the notch in front of the paper cassette's right guide roller as shown in the figure.
When doing this, confirm that the right side of the paper cassette is locked.

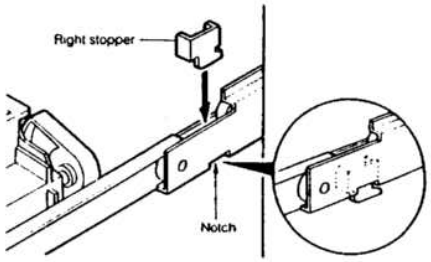

14 Install the paper cassette.

Lift the rear sides of the paper cassette and insert the right side of guide into the Copier by fitting it to the guide rail as shown in the figure. Make sure that the paper cassette slides smoothly.

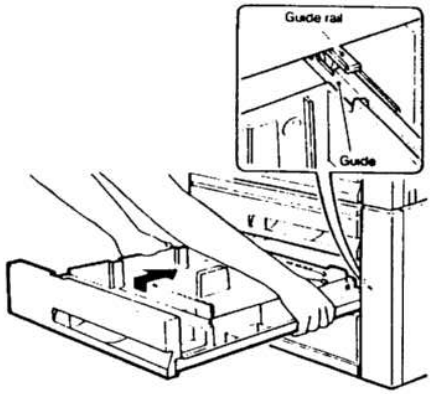

15 Place the paper.

Place the paper in the cassette.
Do not stack the paper higher than the maximum height line.
Next, push the cassette all the way into the desk.

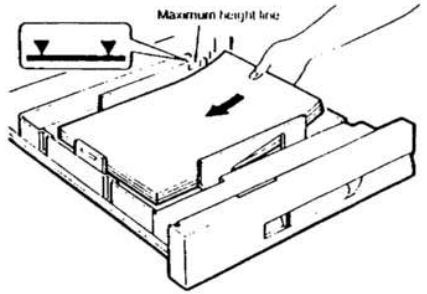

16 Remount the rigth cabinet panel onto the desk.

Remount the rigth cabinet panel which was removed in step 4 back in its original position and secure it with the two mounting screws.

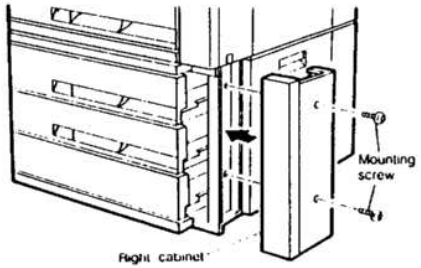

17 Adjust any center misalignment.

Make a copy, and if there is any center misalignment such as that shown in Fig. 1 or Fig. 2, loosen the four screws (indicated by the arrows) which secure the front cabinet panel.

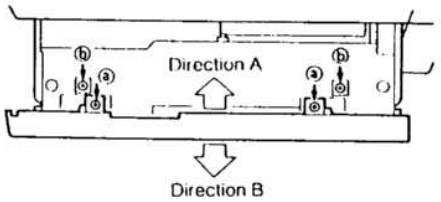

NOTE:
The mounting screws ⓐ and ⓑ will be in the symmetrical positions when they are tightened, as ahown rigth.

(Reference figure)

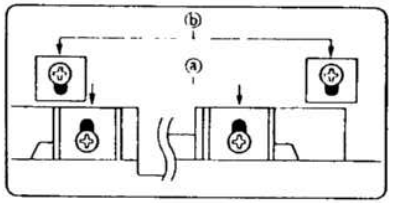

★ If misaligned as shown in Fig. 1
Move the front cabinet panel in direction A and retighten the two mounting screws ⓐ and then the other two screws ⓑ. Make another copy to confirm that the center is no longer misaligned.

Fig. 1

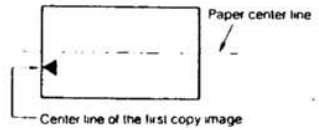

★ If misaligned as shown in Fig. 2
Move the front cabinet panel in direction B and retighten the two mounting screws ⓐ and then the other two screws ⓑ. Make another copy to confirm that the center is no longer misaligned.

Fig. 2

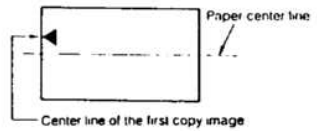

(4) SF-DM11 paßt nur in den Kopierer

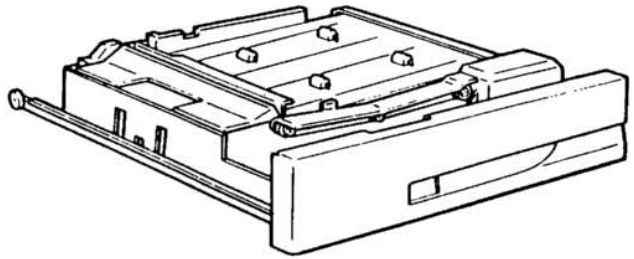

Parts included

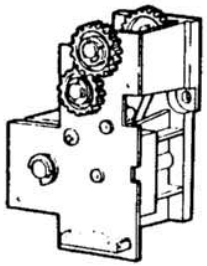

ADU drive unit: 1 pc



Right stopper: 1 pc



Fixing screw (M4 x 8): 2 pcs.

Before performing the following procedure, be sure to remove the power plug of the copier main unit.

1 To remove the rear cabinet of the copier main unit.

Remove the four screws that fix the rear cabinet of the copier main unit and remove the rear cabinet.

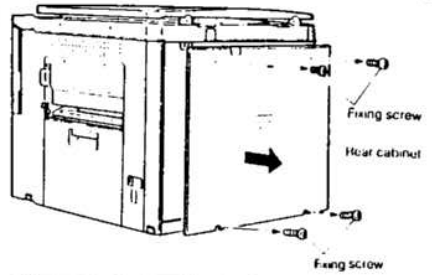

2 To install the ADU drive unit.

Remove the connector, that has been inserted temporarily to the connector near the copier main unit for connecting with ADU drive unit.
+ The removed temporary connector, it will not be used.
Install the ADU drive unit to the two positioning bosses on the rear frame of the copier main unit, and secure this with two fixing screws.
Then, connect the connector near the copier main unit, to that of the ADU drive unit.

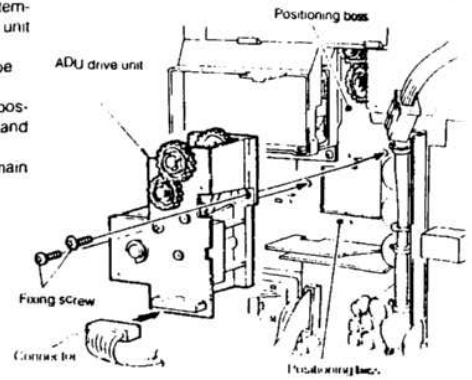

3 To install the rear cabinet of the copier main unit.

Reinstall the rear cabinet that has been removed in step 1 with four fixing screws.

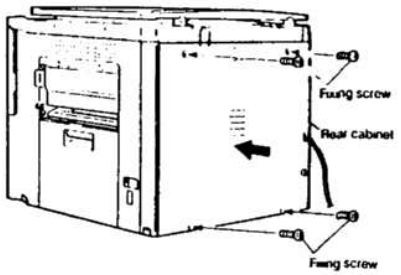

4 To remove the toner collecting container.

Open the storage cover for the toner collecting container, pull the container fixing lever to your side and remove the container.

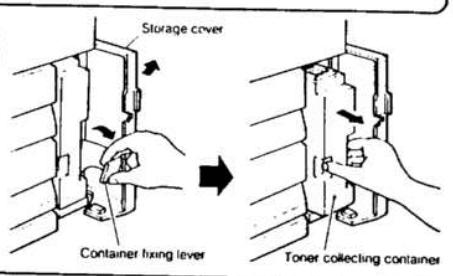

5 To remove the cover plate.

Remove the screw that fixes the cover plate and remove the cover plate.

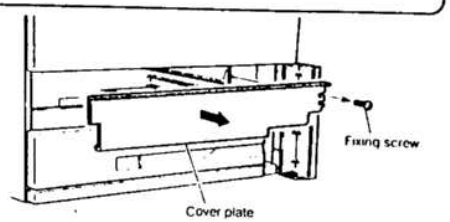

6 To install the ADU unit.

Install the ADU unit by inserting the guides to the guide rails.
At this time, the wheel for the left guide of the ADU unit should be behind the stopper on the left guide rail.

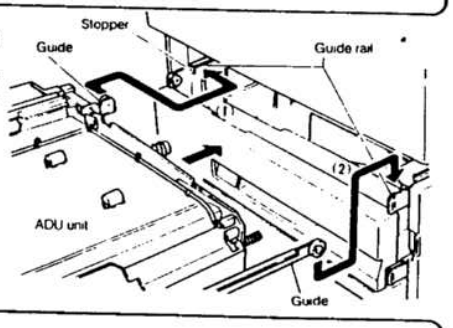

7 To install the right stopper.

Insert the right stopper into the notch before the wheel for the right guide of the ADU unit as shown in the figure.
At this time, ensure that the right side of the ADU unit is locked.
Then push the ADU unit to the innermost recess of the copier main unit.

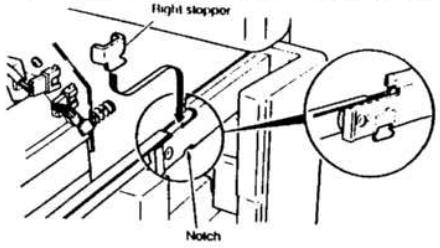

8 To install the toner collecting container.

Reinstall the toner collecting container that has been removed in step 4, restore the container fixing lever, and close the storage cover for the toner collecting container.

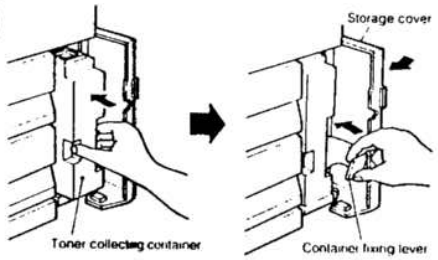

9 To check and adjust the matching guide.

1. Mark a duplex copy.
2. Remove the duplex unit from the copier main unit and open the paper guide.
3. Set the copy that has been made in step 1 or a sheet of the same size on the duplex tray. Align the paper to either alignment guide F, or R, to check the gap. Check to see if the gap between either of the alignment guides and the paper is from 0 to 0.5 mm.

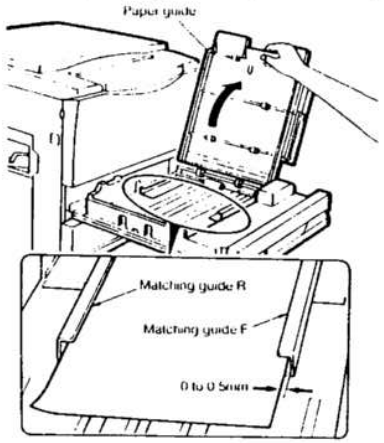

When the matching guide is aligned properly, perform step 10 in the Installation Procedure.

When the matching guide is not aligned properly, perform the following Procedure to adjust the matching guide.

A. Set the mode using the following key operation on the copier main unit:

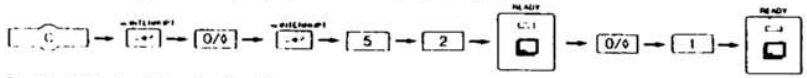

Then current set value is displayed.

B. To set the adjustment mode, input the set value as shown below after the operation above.

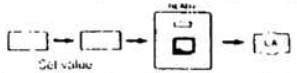

The mode is then set.

(Example) To set a value (5) with one digit, perform the following operation:

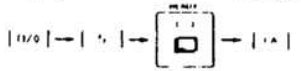

(Example) To set a value (15) with two digit, perform the following operation:

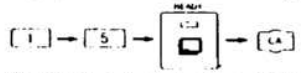

Changing the set value by (1) causes the matching guide width to move 0.5mm to 0.6mm.

÷ Criterion for changing set value 1 ←— Factory setting value —→ 99

(Guide width becomes larger) (Guide width becomes smaller)

C. Perform the steps (1) to (3) again to check the width.

10 To adjust the center dislocation.

When copy result shows center dislocation as shown in Fig. 1 and Fig. 2, loosen the four screws (indicated by ⓐ) that fix the front cabinet.

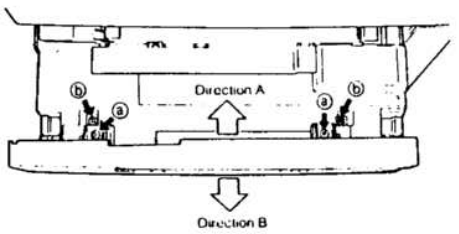

Caution

When you fix the front cabinet, the gap between a fixing screw and the cabinet is symmetrical for the fixing screw sections ⓐ, ⓑ.

(Reference drawing)

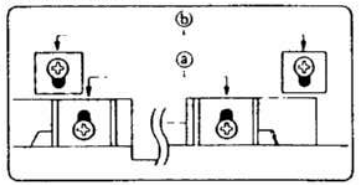

★ In case of Fig. 1

Move the front cabinet to the direction A, tighten the fixing screws ⓐ (2 pcs.) and ⓑ (2 pcs.) in this order, and make a copy again to check that there is no center dislocation.

Fig. 1

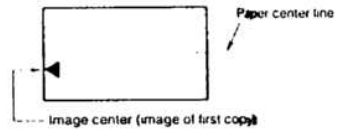

★ In case of Fig. 2

Move the front cabinet to the direction B, tighten the fixing screws ⓐ (2 pcs.) and ⓑ (2 pcs.) in this order, and make a copy again to check that there is no center dislocation.

Fig. 2

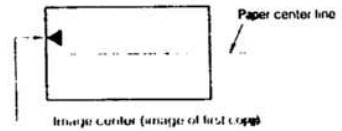

(5) SF-A54

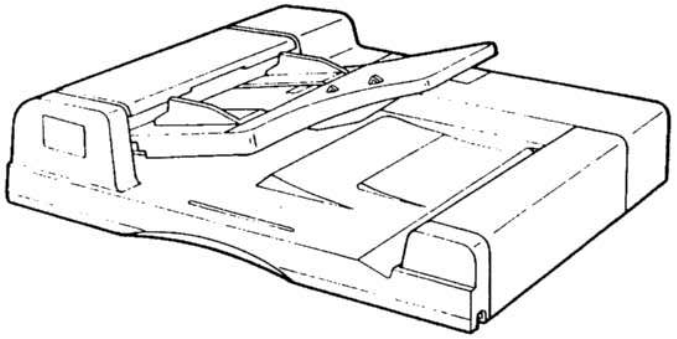

SF-A54

Parts list

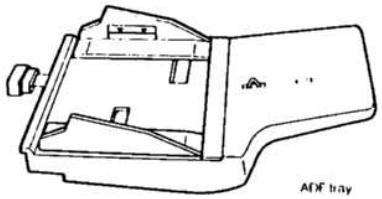

ADF tray

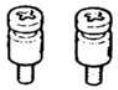

ADF mounting screws (2 pcs.)



ADF securing screws (2 pcs.)



Bracket mounting screw (1 pc.)

Unplug the copier and follow the procedure below.

1 Remove the document cover.

Raise the document cover from the copier and remove it upward while pressing it toward the rear. Also remove the left and right covers attached to the document cover and place them into the holes from which the document cover was removed.

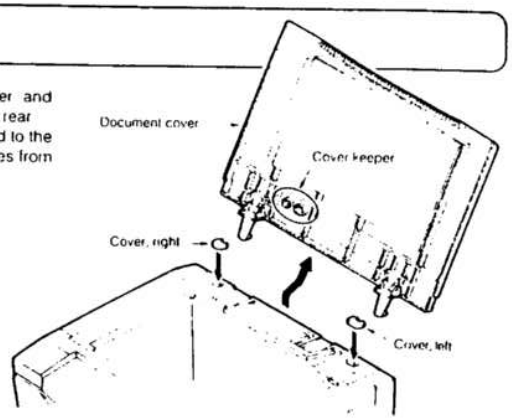

2 Mount the ADF onto the copier.

Remove the caps from the upper cabinet panel of the copier.

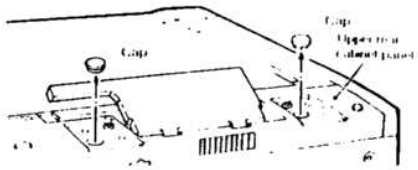

Install the two ADF mounting screws.

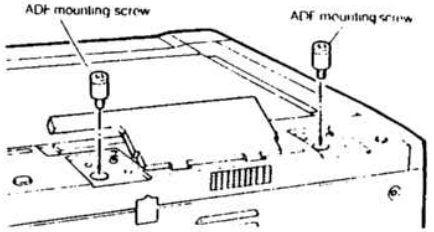

Fit the holes in the hinges of the ADF onto the ADF mounting screws and secure the ADF with the two ADF securing screws.

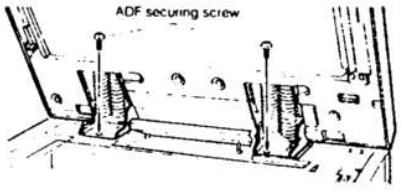

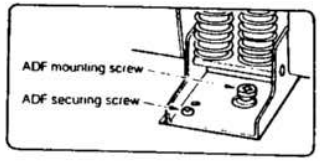

3 Adjust the angle of ADF.

Loosen the two fixed screws for the angle adjusting panel which locate on the hinge angle and then fasten the loosened screws while raising the angle adjusting panel completely

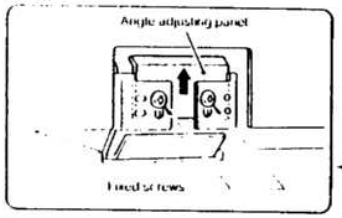

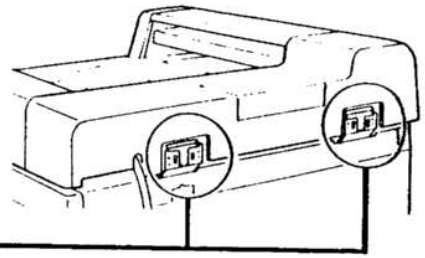

4 Remove the rear cabinet panel from the copier and cut out the notch in the cabinet panel.

Remove the four screws which secure the rear cabinet panel of the copier to remove the rear cabinet panel
Cut out the notch (one location) in the upper rear cabinet panel

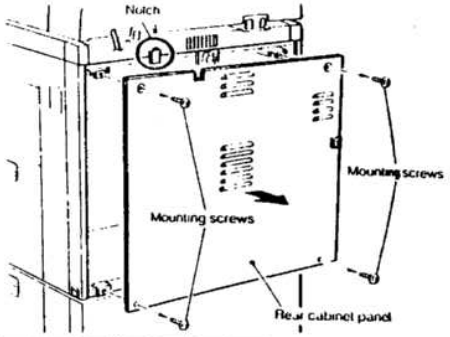

5 Connect the ADF connectors.

Use the bracket mounting screw to secure the bracket attached to the ADF harness to the frame of the copier, and connect the 6-pin and 7-pin ADF connectors to the copier

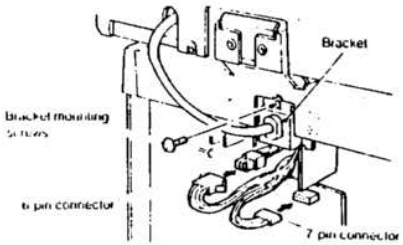

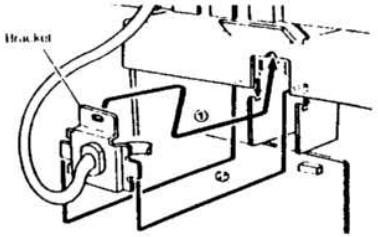

6 Reattach the rear cabinet panel.

Use the four mounting screws to reattach the rear cabinet panel removed in step (4) in its original position

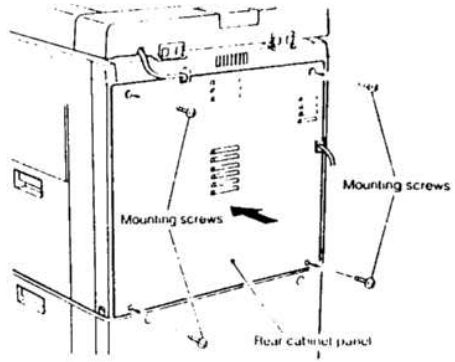

7 Connect the ADF tray connector.

Open the ADF cover and connect the ADF connector to the tray connector

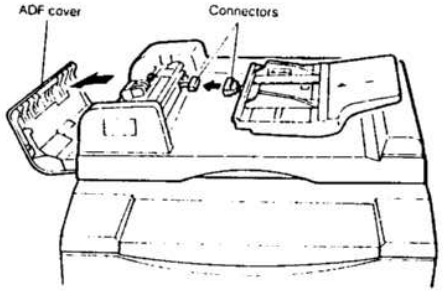

8 Affach the tray.

Loosen the two mounting screws and secure the tray with the screws as shown in the figure
Close the ADF cover

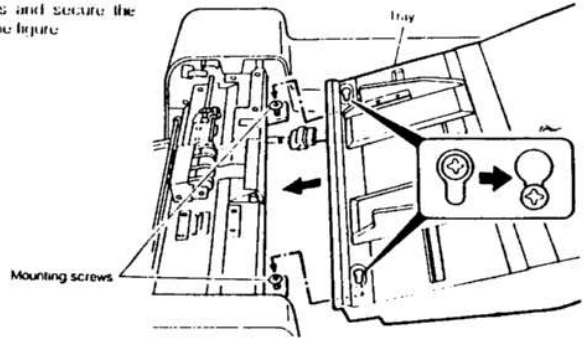

10 Adjust the center of the copy.

Set the original on the tray and make a copy. When the copy slips out of the center as Fig. 1 or Fig. 2, open the ADF cover, loosen the two mounting screws and adjust the tray to correct position.

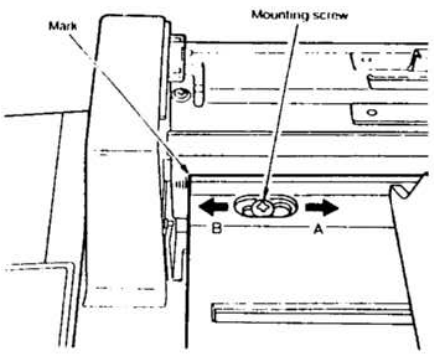

★ Fig. 1
Move the tray in the direction A and secure it with the two mounting screws. Make sure that it is centered properly.

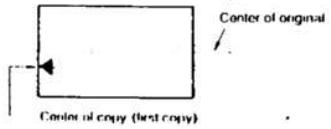

★ Fig. 2
Move the tray in the direction B and secure it with the two mounting screws. Make sure that it is centered properly.

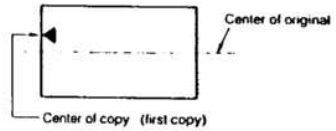

9 Set the mode.

Operate the keys on the copier to set the mode.

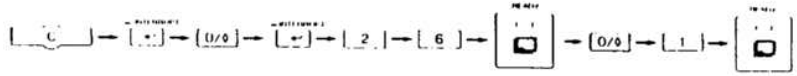

The above key operation will display the currently set mode.

If only the SF-A54 is to be set, immediately after the above key operation, operate the keys as follows.

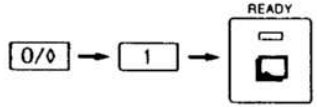

If the mode is to be set for a combination with other options, add up the total of the setting values for all the peripheral devices to be set from the table shown below, and set that total value.
For example, if the SF-A54 and SF-14 are to be set, the total setting value is 1 + 10 = 11. Operate the keys as follows.

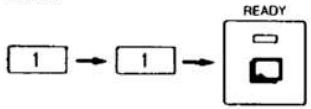

	SF-A54	1		SF-D20	4		SF-S14	10
+	SF-A14	1		SF-D21	4		SF-S15	10
						+	SF-S52	10

+ SF-A14, SF-S52 will be available soon.

Duplex = 2, wird automatisch gesetzt

(6) SF-S15 (20-Bin Sorter) nur mit D 21

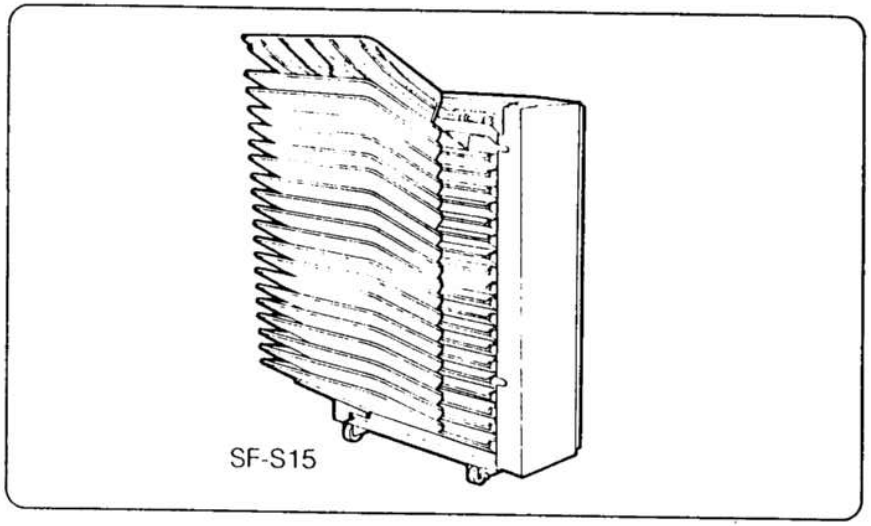

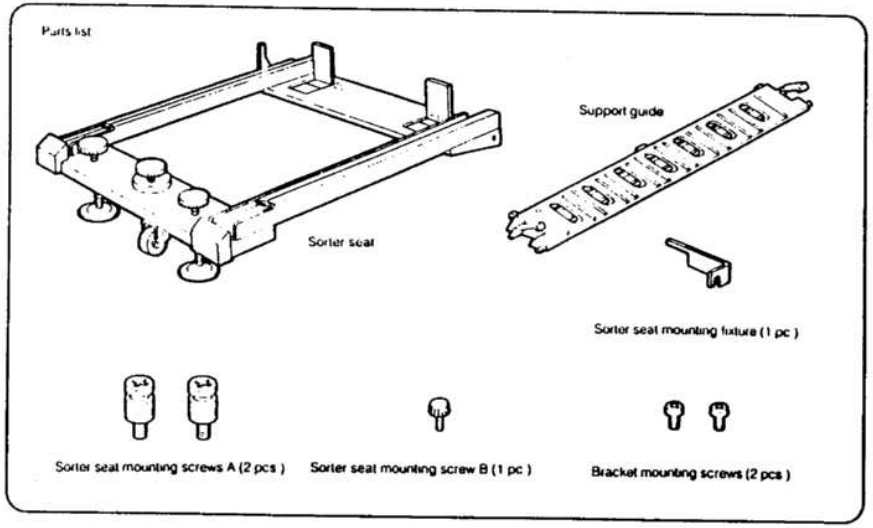

Unplug the copier and follow the procedure below.

1 Install the support guide.

Hook the pawls (two locations) of the support guide to the inside of the copier paper exit end to install the guide as shown in Fig

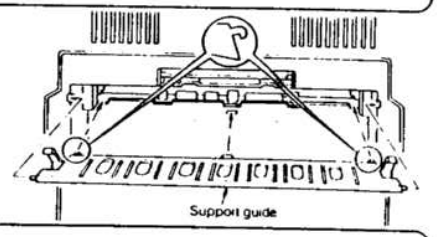

2 Mount the sorter seat to the desk.

Remove the two cut-outs in the cabinet panel on the left side of the desk.
Secure the two sorter seat mounting screws A to the desk.
Next, hook the sorter seat onto the two sorter seat mounting screws A which were secured to the desk, and then use the one sorter seat mounting screw B to secure the sorter seat mounting fixture as shown

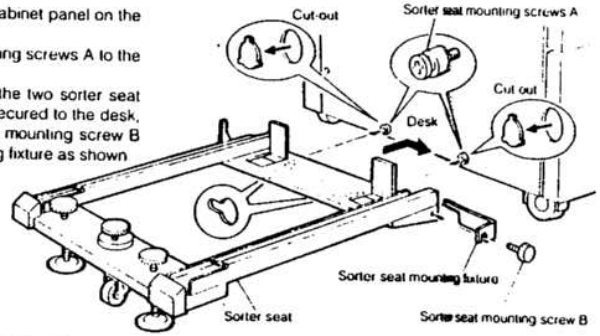

3 Remove the front panel of the sorter.

Loosen the four mounting screws in the front panel of the sorter and remove the panel.

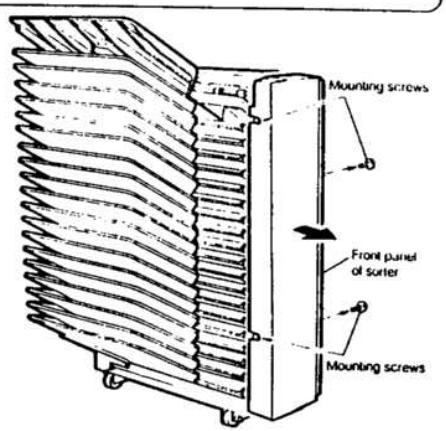

4 Place the sorter on the sorter seat.

While holding the handle, place the sorter on the sorter seat's guide rails and push it gently as far back as it will go.
When doing this, confirm that the rollers at the front of the sorter are correctly seated on the sorter seat.

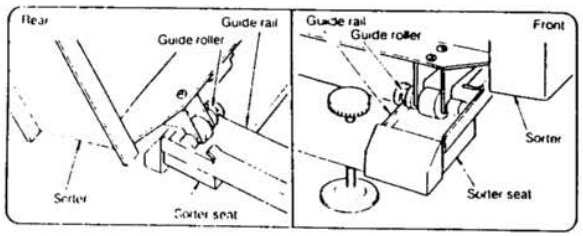

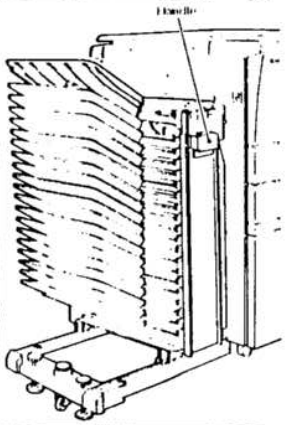

5 Remove the rear cabinet panel from the copier and cut out the notch in the cabinet panel.

Remove the four screws which secure the rear cabinet panel of the copier to remove the rear cabinet panel.
Cut out the notch (one location) in the cabinet panel.

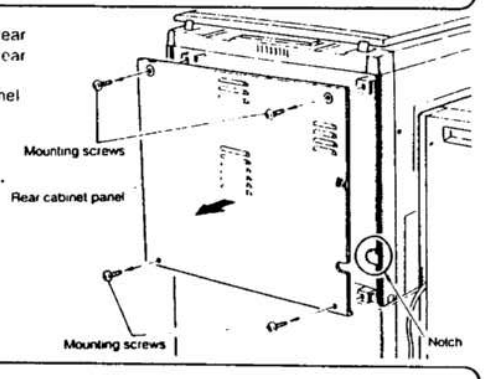

6 Connect the sorter connectors.

Use the two bracket mounting screws to secure the bracket attached to the sorter harness to the frame of the copier. Connect the 6-pin and 10-pin sorter connectors to the 6-pin and 10 pin connectors of the copier and insert the tie band into the hole under the board installation part.

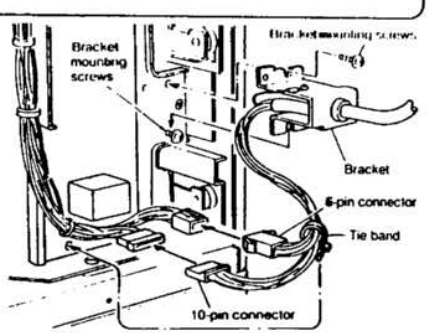

7 Reattach the rear cabinet panel.

Use the four mounting screws to reattach the rear cabinet panel removed in step (4) in its original position.

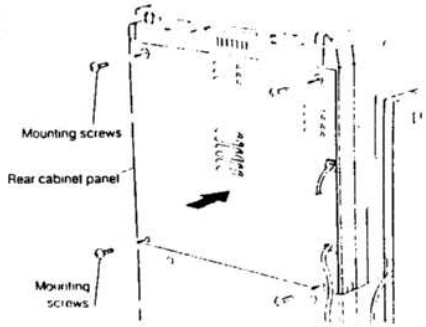

8 Reattach the front panel of the sorter.

Use the four mounting screws to reattach the front panel of the sorter removed in step (3) in its original position.

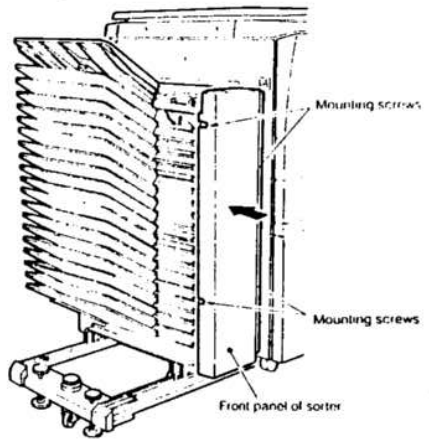

9 Adjust the clearance between the sorter and the copier.

Push the sorter gently against the copier's left cabinet panel. The clearance spacers attached to the back of the sorter will determine the standard clearance between the sorter and the copier. Turn the adjustment knobs on the sorter seat to adjust the clearance so that the spacers are touching the copier.
After adjusting the clearance, remove the clearance spacers.

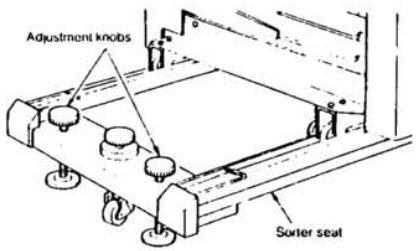

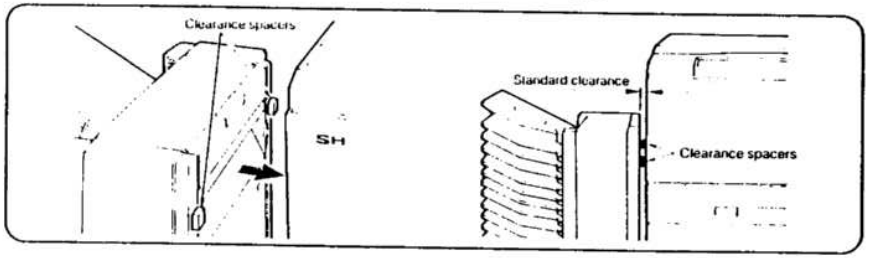

10 Attach the label.

Attach the green label supplied with the installation manual onto the exit area handle.

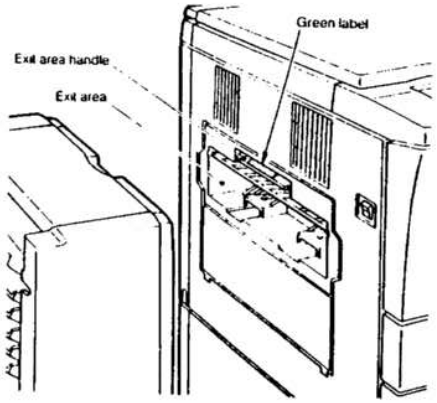

11 Set the mode.

Operate the keys on the copier to set the mode.

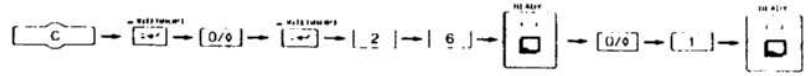

The above key operation will display the currently set mode.

If only the SF-S15 is to be set, immediately after the above key operation, operate the keys as follows.

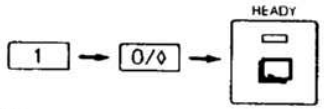

If the mode is to be set for a combination with other options, add up the total of the setting values for all the peripheral devices to be set from the table shown below, and set that total value.
For example, if the SF-S15 and SF-A54 are to be set, the total setting value is 10 + 1 = 11. Operate the keys as follows.

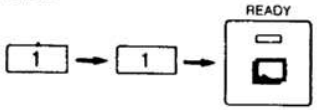

	SF-A54	1
*	SF-A14	1

SF-D20	4
SF-D21	4

	SF-S14	10
	SF-S15	10
*	SF-S52	10

* SF-A14 SF-S52 will be available soon.

(7) SF-D20/SF-D21

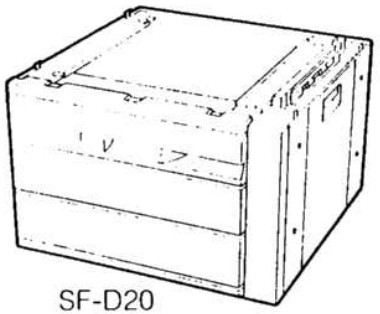

SF-D20

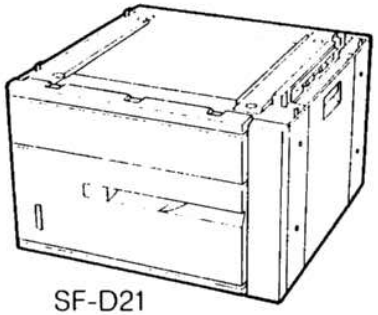

SF-D21

★ For installation of SF-D20: pages 1 ~ 7

★ For installation of SF-D21: pages 1 ~ 3 and 8 ~ 11

Included parts



Mounting screws: 4

Before installation, remove all of the screws, tape, and shipping material as shown below.

D20

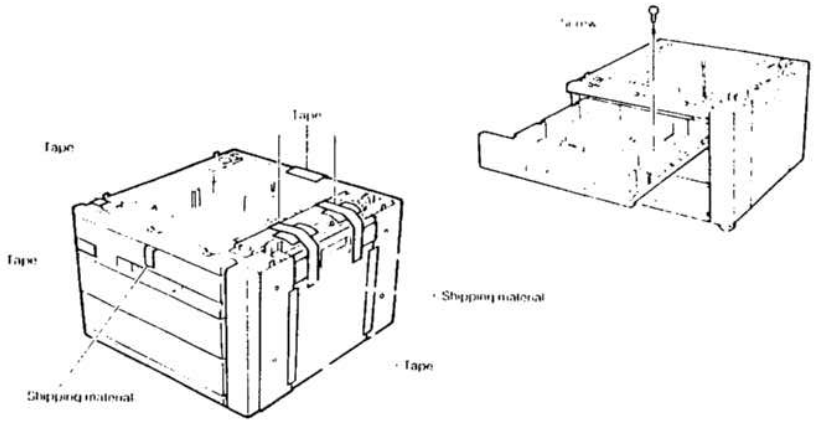

D21

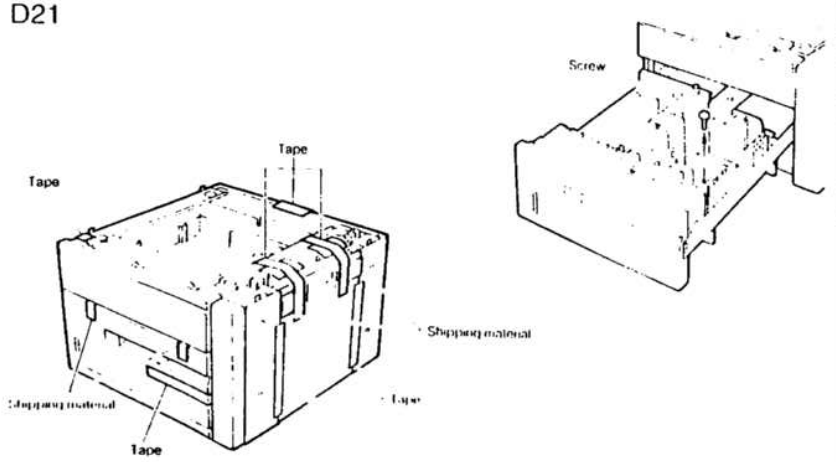

Be sure to unplug the copier before carrying out the following procedures.

1 Place the copier on the desk.

Place the copier on the desk so that the feet of the copier fit into the corresponding holes in the desk. When doing this, be careful that the copier does not come to rest on the paper guide or other parts of the desk that might be damaged by the weight of the copier.

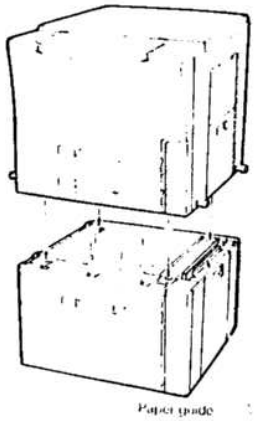

2 Secure the copier to the desk.

Use the included four mounting screws to secure the copier to the desk.
In addition to securing the copier to the desk, these screws also function to electrically ground the desk, so be sure to tighten all four mounting screws securely.

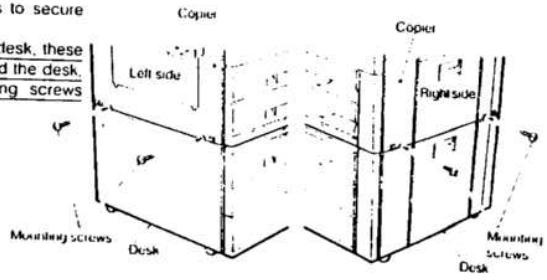

3 Remove the rear cabinet panel from the copier.

Remove the rear cabinet panel by removing the four screws which secure it to the copier.

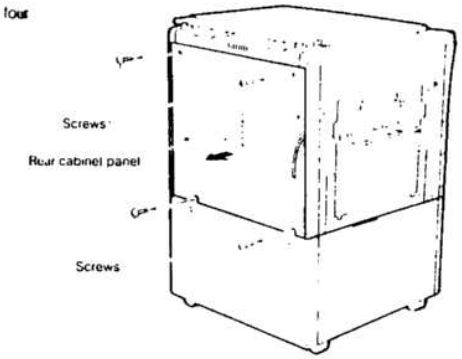

4 Connect the desk relay harness.

Remove the screw which secures the cover of the connector access hole in order to remove the cover. Next, remove the temporary connector which is attached to the 14 pin connector of the desk relay harness, and connect the 14 pin connector to the connector on the desk.

+ Note that the temporary connector will no longer be used.

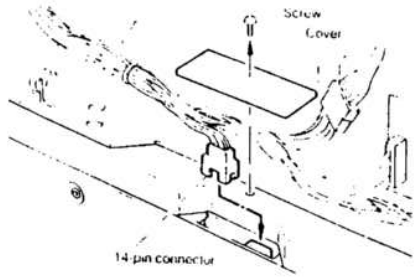

5 Remount the rear cabinet panel onto the copier.

Remount the rear cabinet panel which was removed in Step 3 in its original position and secure it with the four screws.

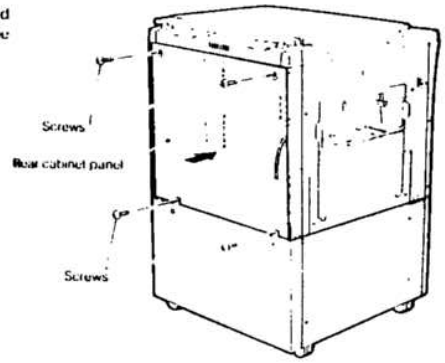

6 Move the copier to the desired installation location.

7 Lock the casters.

Move the lock levers of the two casters (one each left and right) at the front side of the desk downward in the direction indicated by the arrow in order to lock the casters.

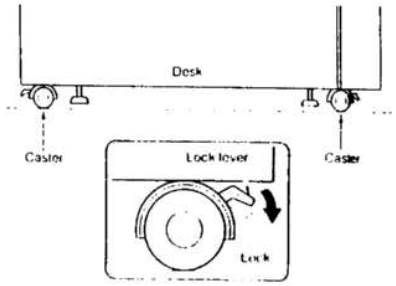

8 Lower the adjuster to secure the desk in place.

Use pliers or a wrench to loosen the lock nut of the adjuster, and then turn the adjuster to lower it to the floor in order to secure the desk in place.
After lowering the adjuster, re tighten the lock nut all the way up as far as it will go in order to lock the adjuster.

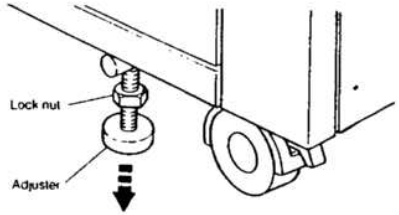

★ For the SF-D20

(The initial paper size setting is A4R for the AB system and 8 1/2 x 11R for the inch system.)

9 Pull out the paper cassette.

Lift up on the handle on the paper cassette and pull the cassette out from the desk until it stops, and then lift up on both sides of the back of the cassette in order to pull it all the way out of the desk.

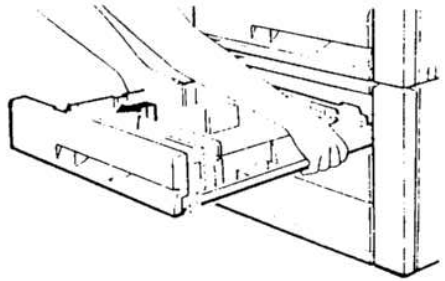

10 Adjust the positions of the front and rear side plates.

Remove the mounting screws (two each) which secure the front and rear side plates, fit the two side plates into the appropriate positions marked on the cassette corresponding to the desired paper size, and then secure the side plates once again with the mounting screws (two each).

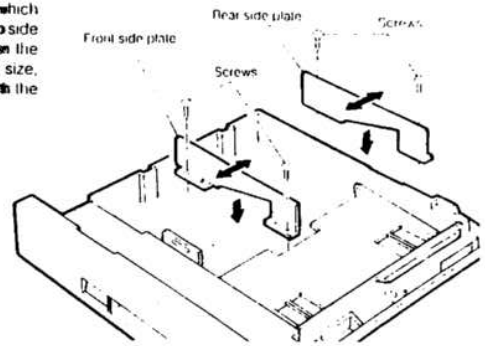

11 Adjust the position of the rear edge plate.

Remove the rear edge plate and fit it into the cassette at the position corresponding to the desired paper size.

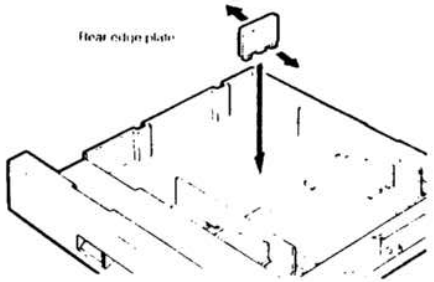

12 Set the paper size detection spacer.

Change the position of the paper size detection spacer to the position corresponding to the desired paper size.

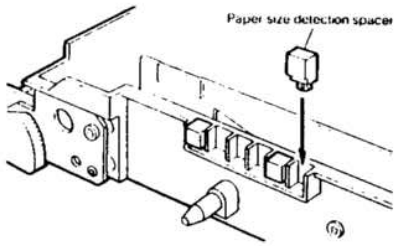

(Example: Position for A3 size paper)

Paper size detection spacer position diagram

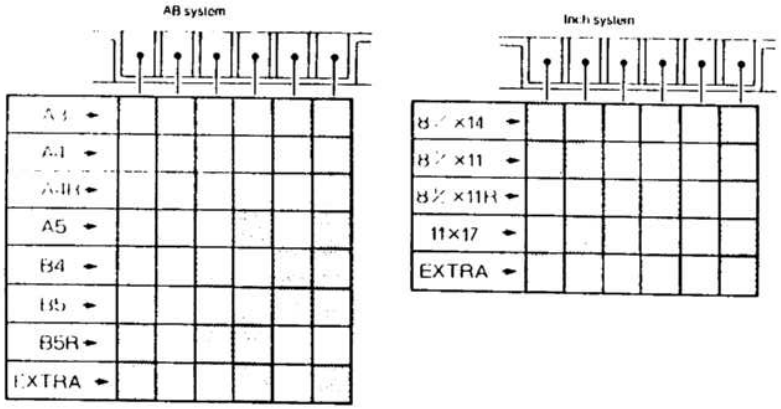

13 Change the paper size indicator.

Remove the paper size indicator and re-insert it so that the paper size for which the cassette has been set is visible in the paper size indication window.

Note that paper size indications are printed on both sides of the paper size indicator.

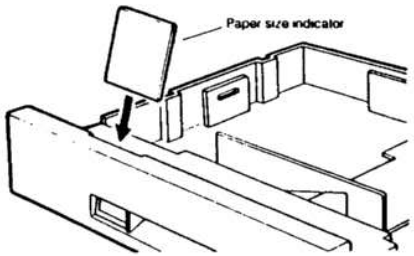

14 Re-insert the paper cassette.

Lift up on both sides of the back of the paper cassette and, while aligning the right guide on the cassette with the guide rail as shown in the figure, push the cassette into the desk along the guide rails.
After doing this, confirm that the cassette moves in and out smoothly.

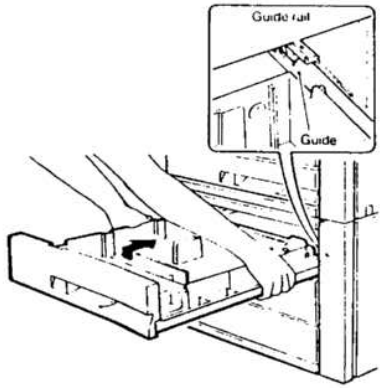

15 Place the paper in the cassette.

Place the paper in the paper cassette.
When doing this, do not stack the paper higher than the maximum height line indicated on the cassette.
Next, push the cassette all the way into the desk as far as it will go.

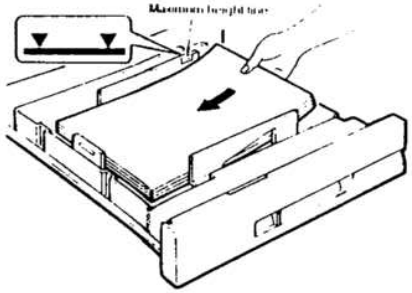

16 Set the mode.

- Operate the keys on the copier to set the mode.

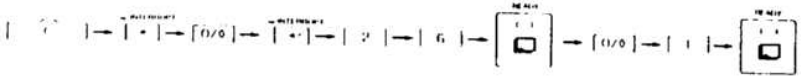

The above sequence of key operations will display the current setting value.

- If only the SF-D20 is being set, immediately after the above key operation sequence, perform the following key operation sequence to set the mode.

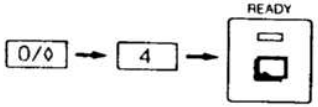

- If the mode is to be set for a combination of optional equipment, add together the setting values shown in the table below for each peripheral device, and set the mode to the total setting value.

For example, to set the mode for a combination of the SF-D20 and the SF-S14, the total setting value is 4 + 10 = 14, so the key operation sequence is as follows.

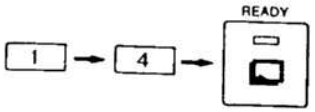

SF-A54	1	
+ SF-A14	1	

SF-D20	4
SF-D21	4

SF-S14	10
SF-S15	10
+ SF-S52	10

+ SF-A14 and SF-S52 are scheduled for market release in the near future

★ For the SF-D21

(The initial paper size setting is A4 for the AB system and 8 1/2 x 11 for the inch system.)

17 Pull out the large-capacity paper cassette.

Lift up on the handle on the paper cassette and pull the cassette out from the desk until it stops (the paper loading position), and then lift up on the cassette handle once again and pull the cassette all the way out of the desk.

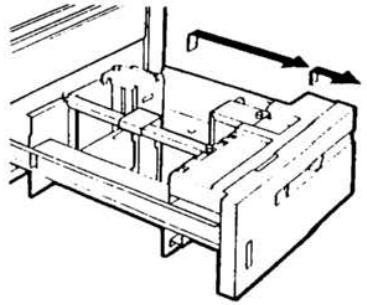

18 Adjust the positions of the front and rear paper guides.

Remove the mounting screws which secure the front and rear paper guides, fit the two paper guides into the appropriate positions corresponding to the desired paper size, and then also secure the mounting screws into the holes corresponding to the desired paper size.

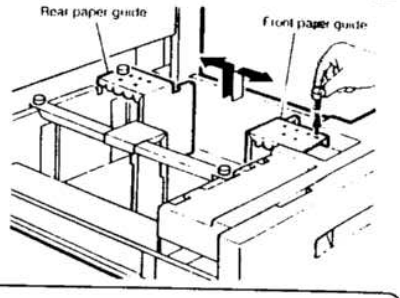

19 Adjust the position of the rear edge paper guide.

Loosen the two screws which secure the rear edge paper guide until it becomes possible to move the paper guide.
Next, fit the rear edge paper guide into the appropriate position corresponding to the desired paper size, and then also secure the two mounting screws into the holes corresponding to the desired paper size.

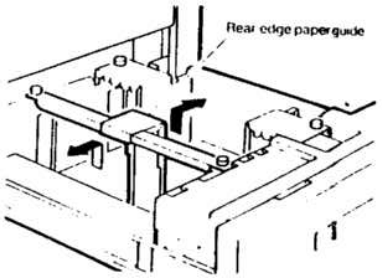

20 Set the paper size detection spacer.

Change the position of the paper size detection spacer to the position corresponding to the desired paper size.

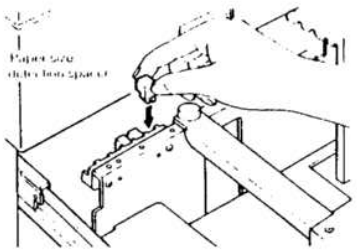

(Example: Position for A3 size paper)

Paper size detection spacer position diagrams

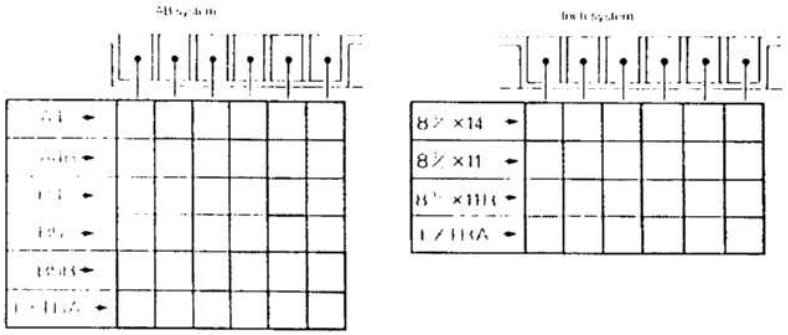

21 Change the paper size indicator.

Remove the paper size indicator and re-insert it so that the paper size for which the cassette has been set is visible in the paper size indication window.
Note that paper size indications are printed on both sides of the paper size indicator.

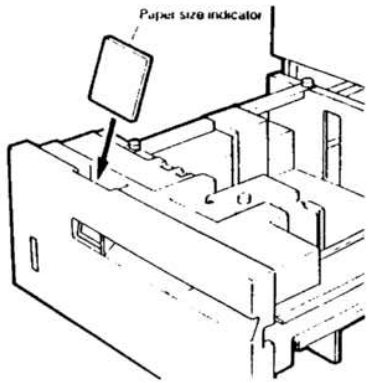

22 Re-insert the large-capacity paper cassette.

Lift up on the handle of the large capacity paper cassette and re-insert it so as to open the paper loading position.

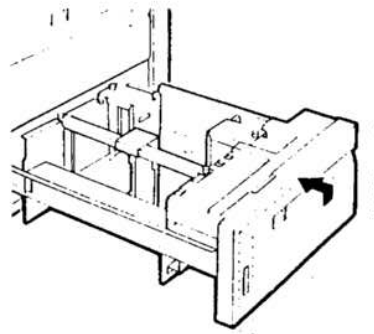

23 Place the paper in the cassette.

Place the paper in the paper cassette.
When doing this, do not stack the paper higher than the maximum height line indicated on the cassette.
Next, push the cassette all the way into the desk as far as it will go.

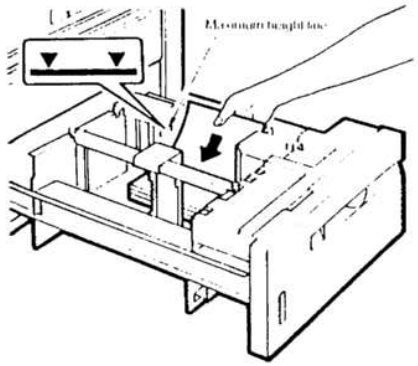

24 Set the mode.

- Operate the keys on the copier to set the mode

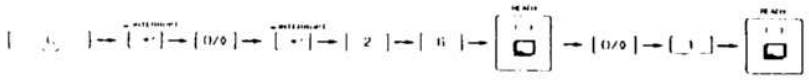

The above sequence of key operations will display the current setting value.

- If only the SF-D21 is being set, immediately after the above key operation sequence, perform the following key operation sequence to set the mode

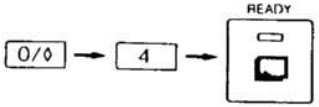

- If the mode is to be set for a combination of optional equipment, add together the setting values shown in the table below for each peripheral device, and set the mode to the total setting value.

For example, to set the mode for a combination of the SF-D21 and the SF-S14, the total setting value is 4 + 10 = 14, so the key operation sequence is as follows.

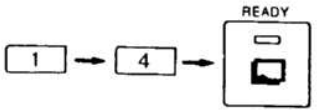

	SF-A54	1		SF-D20	4		SF-S14	10
+	SF-A14	1		SF-D21	4		SF-S15	10
						+	SF-S52	10

+ SF-A14 and SF-S52 are scheduled for market release in the near future.

[6] DISASSEMBLY AND REASSEMBLY

1. Process unit

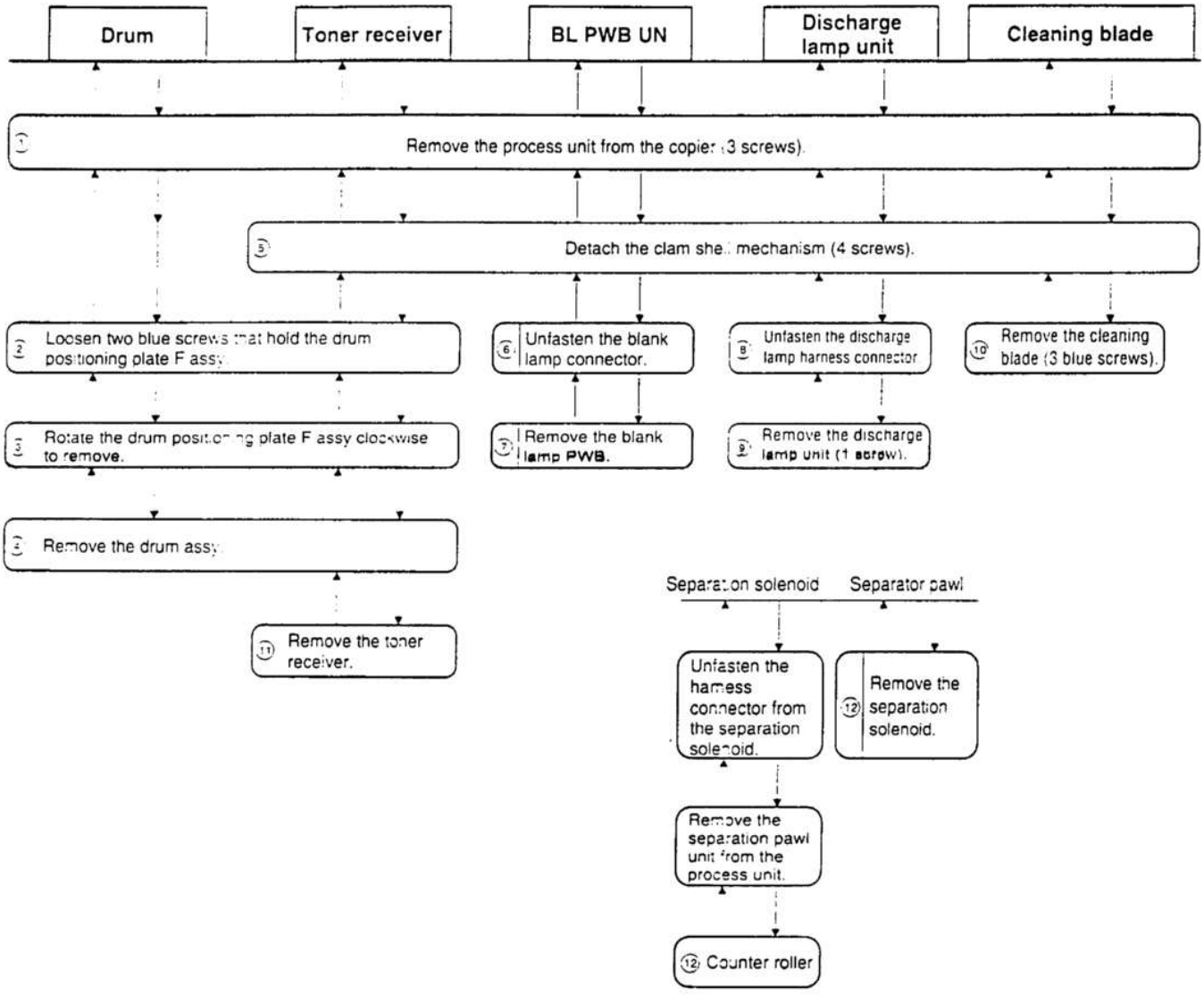

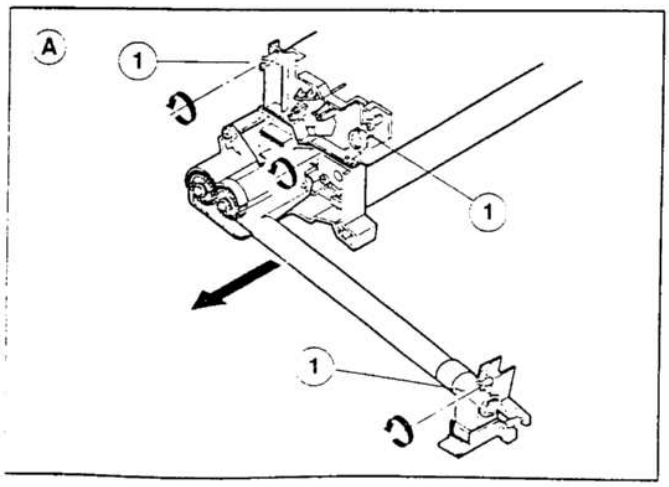

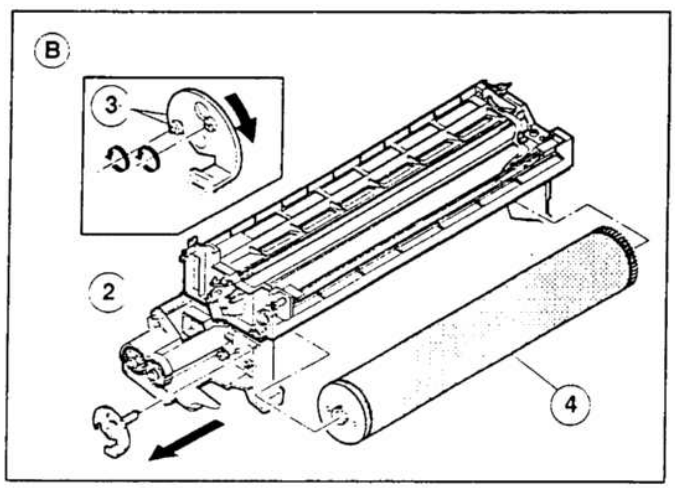

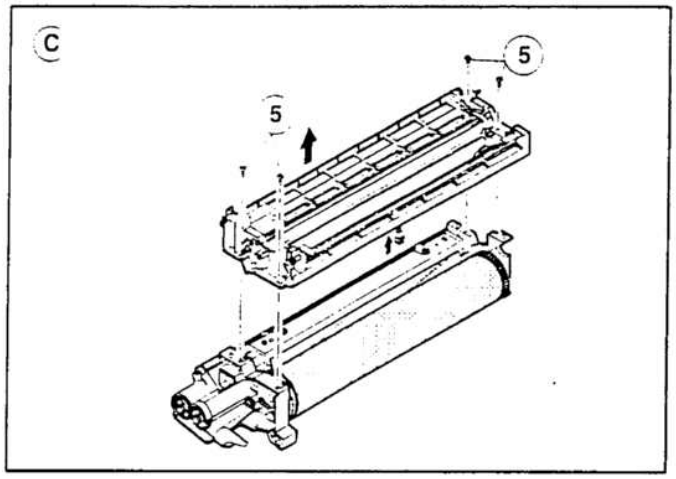
C
5
5

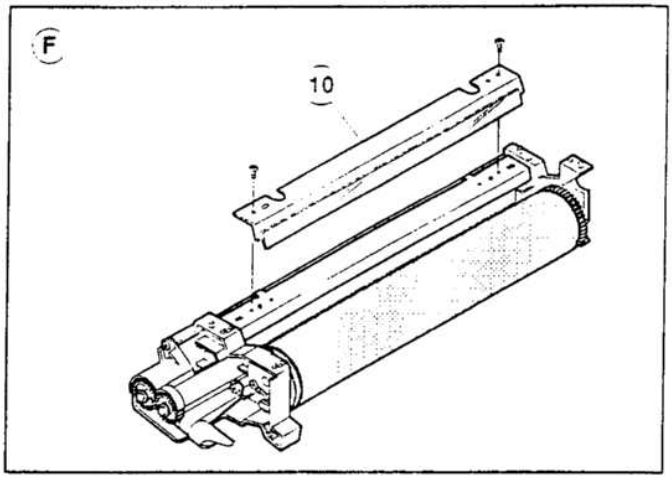
F
10

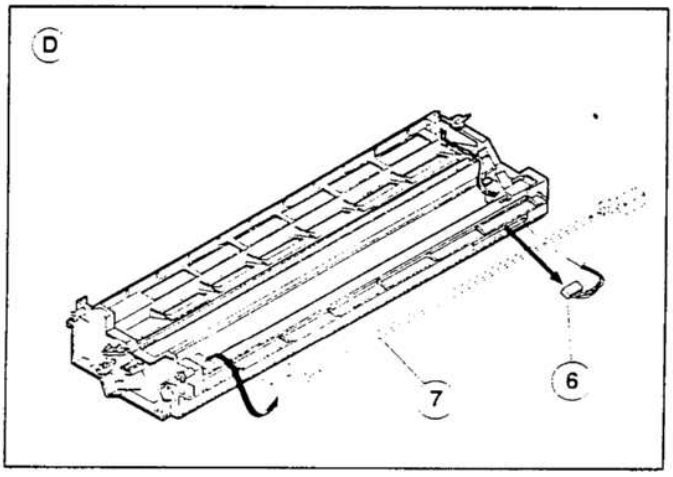
D
7
6

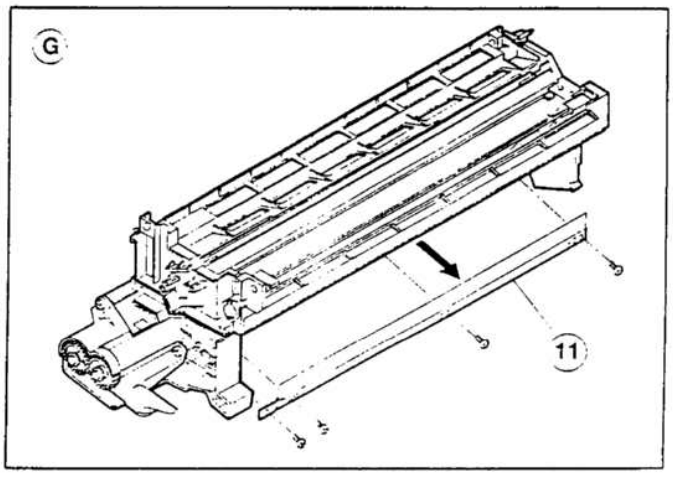
G
11

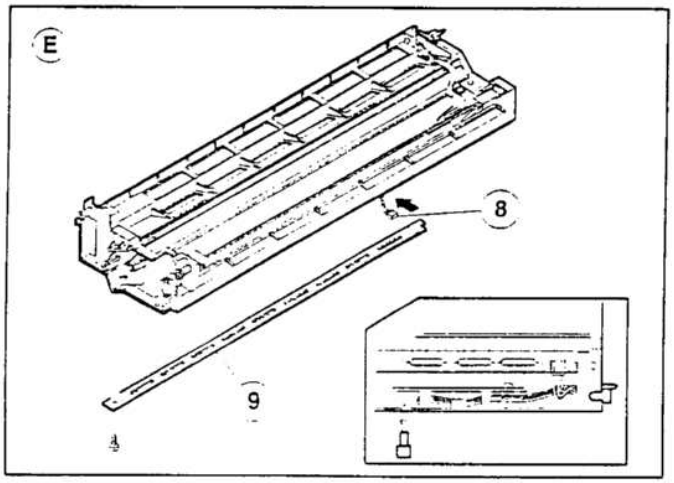
E
8
9

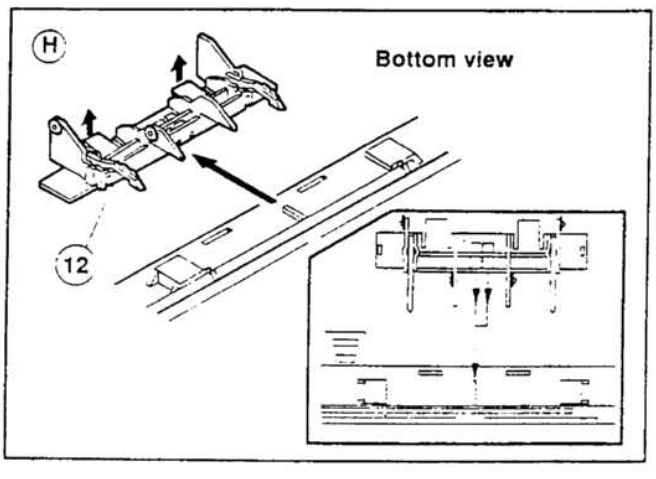
H
Bottom view
12

2. Manual feed multicopy unit

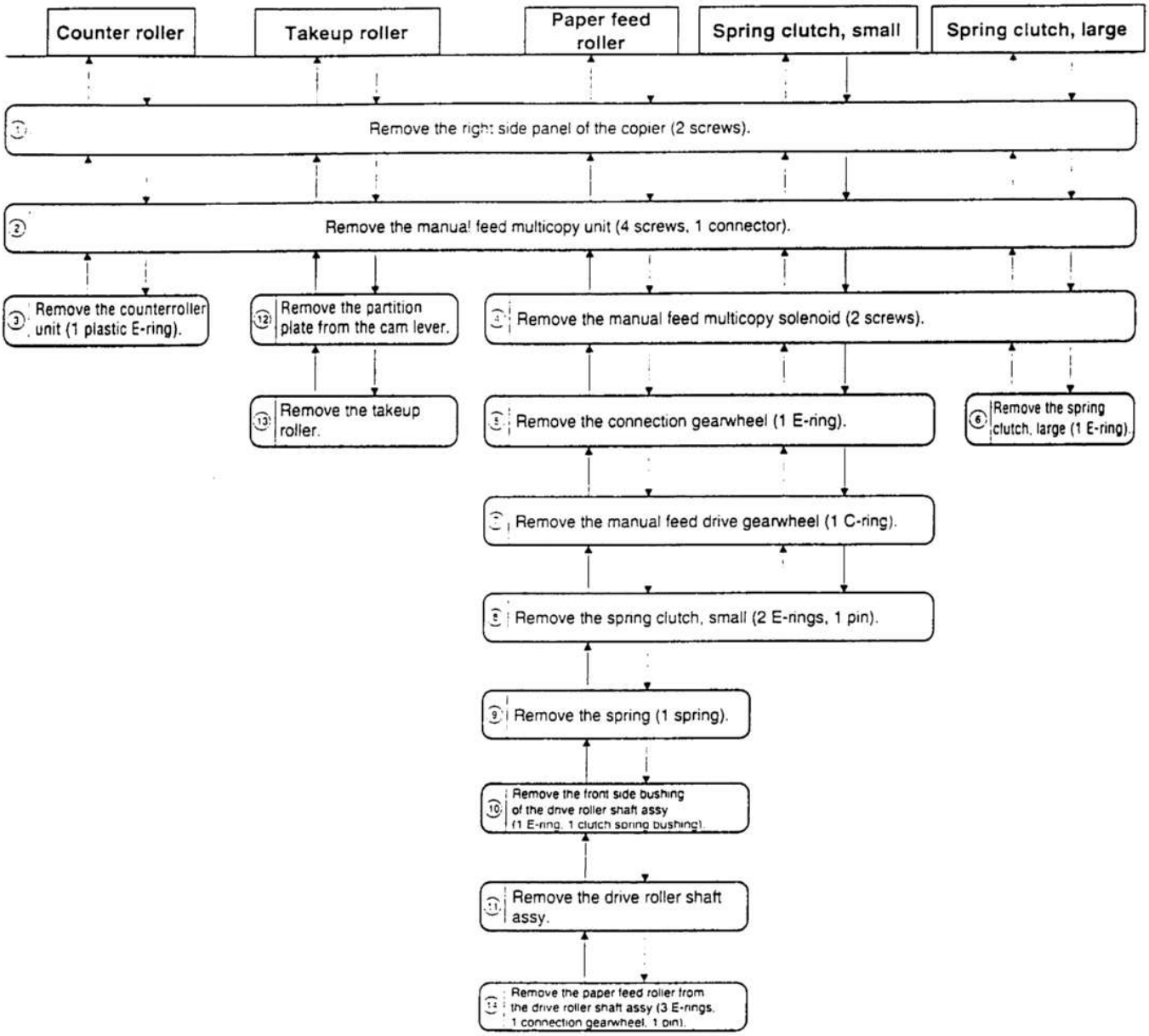

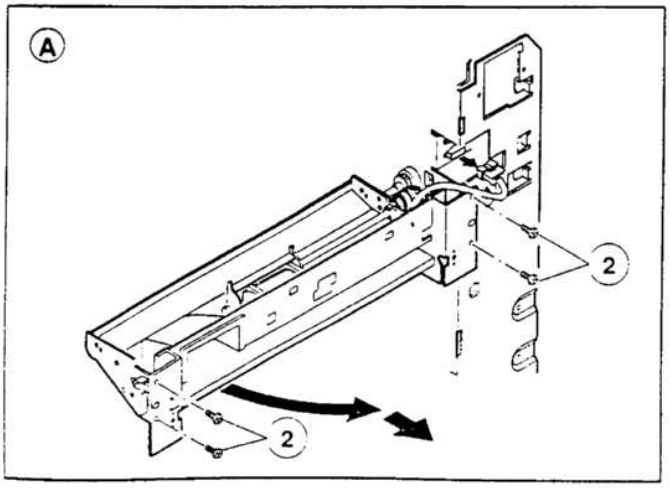

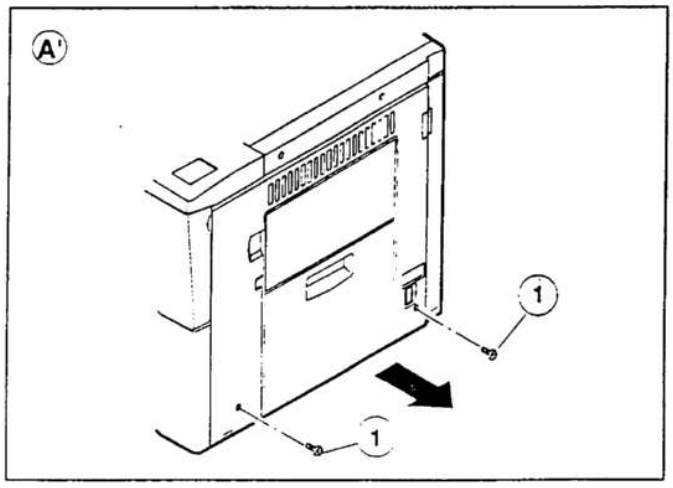

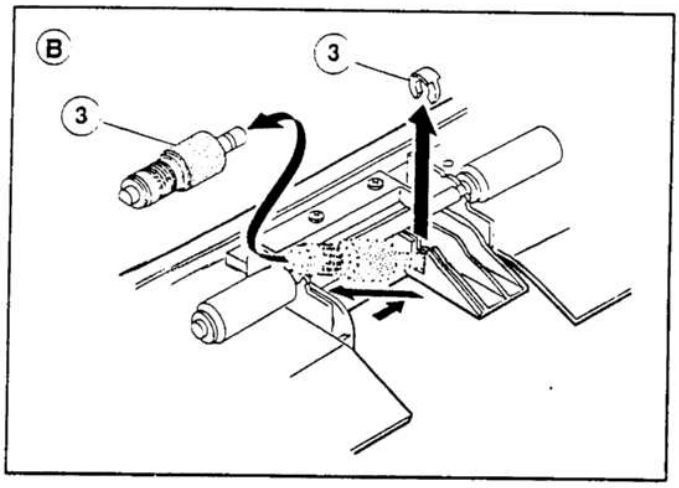
B
3
3

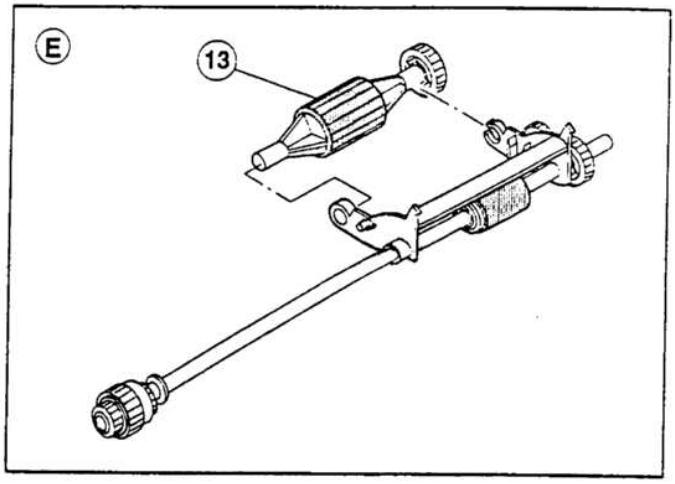
E
13

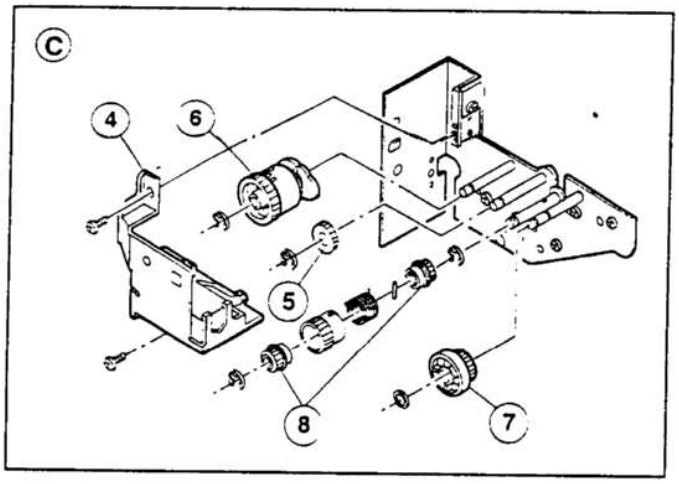
C
4
6
5
8
7

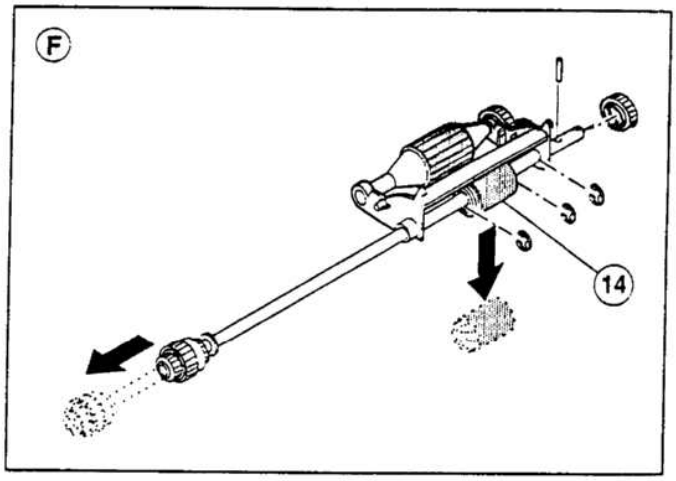
F
14

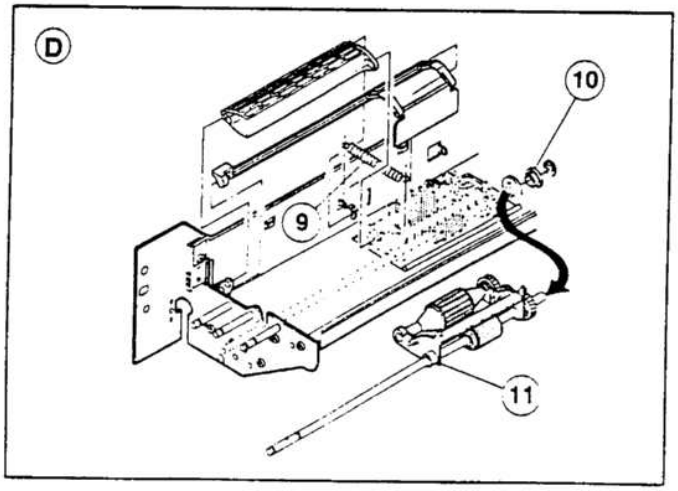
D
10
9
11

3. Paper feed unit

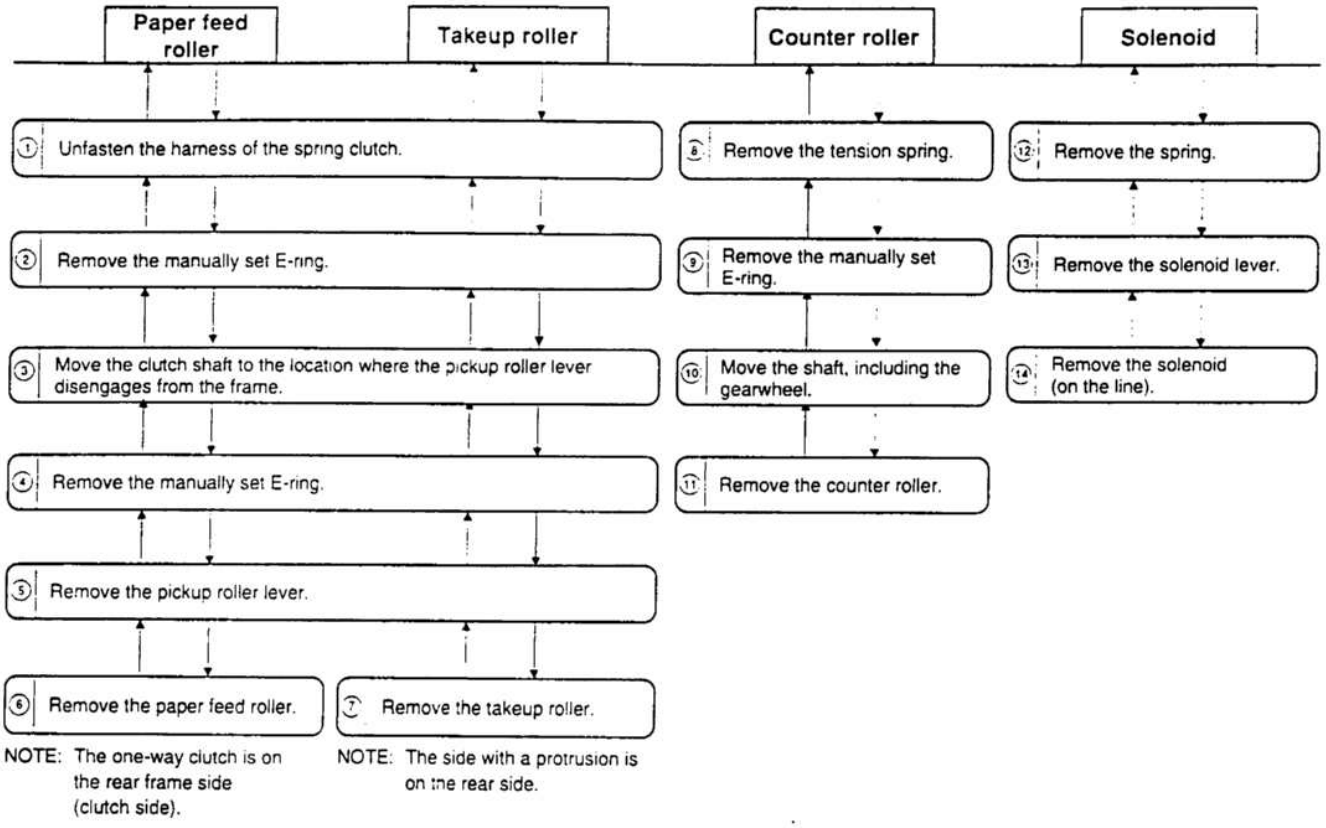

NOTE: The one-way clutch is on the rear frame side (clutch side).

NOTE: The side with a protrusion is on the rear side.

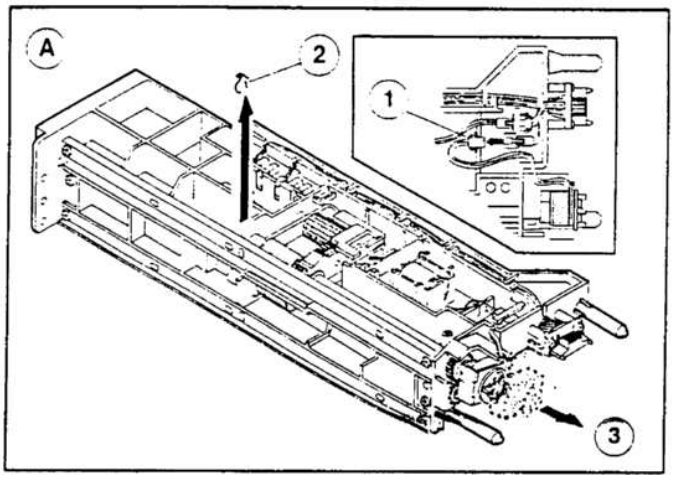
A
1
2
3

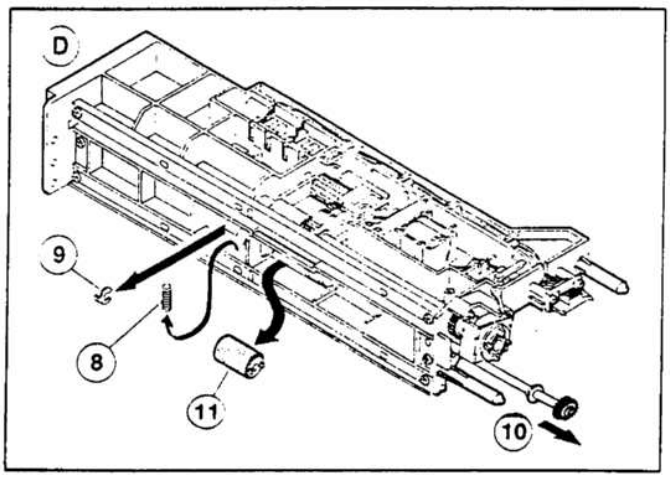
D
8
9
10
11

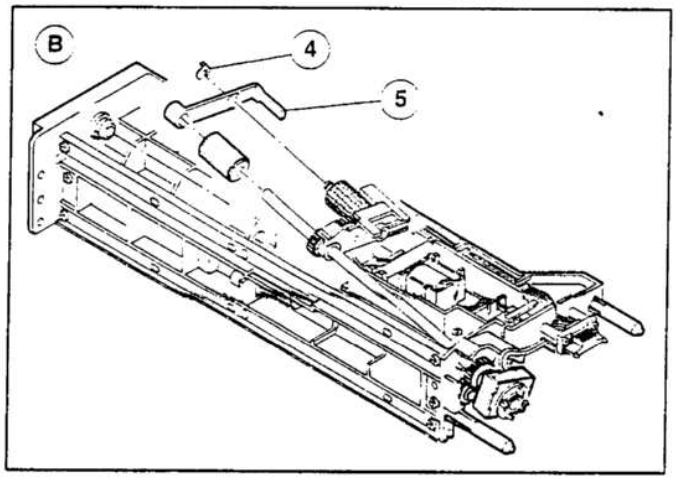
B
4
5

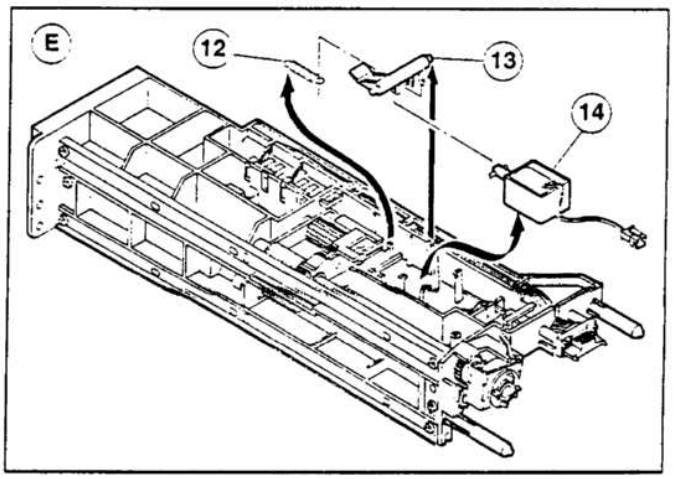
E
12
13
14

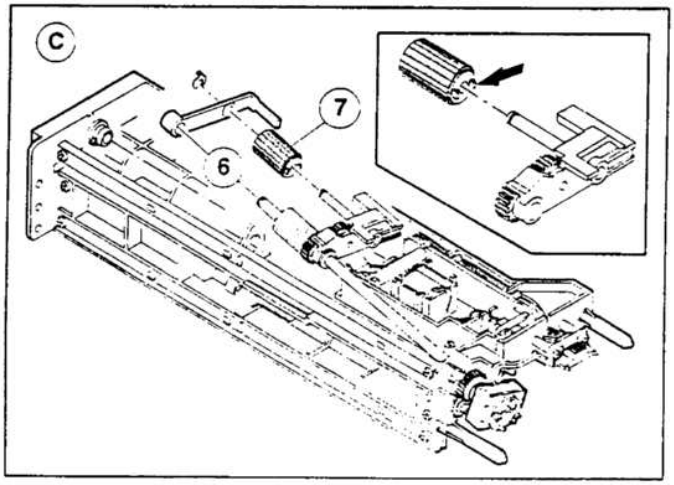
C
6
7

4. Transport baseplate unit

Suction unit transfer belt | **Paper stop roller** | **Paper stop clutch**

① Remove the transport baseplate from the machine (4 screw on front, 2 on rear, 2 connectors).

② Pull the paper entry side rolle towards the paper exit side, then remove it.

③ Move the suction transfer belt to the front side, then remove it.

NOTE: Note the arrowhead that shown on the suction unit transfer belt.

④ Remove the DV guide (6 screws).

⑤ Remove the spring and the auxiliary roller.

⑥ Remove the paper stop clutch (1 screw, and loosen 1 setscrew).

⑦ Remove the front side gearwheel (one each of E-ring, pin, washer, spring).

⑧ Remove the bearing (one each on front and rear).

⑨ Remove the paper stop roller.

⑩ Remove the connecting plate ⑤ in Fig. Ⓕ. (2 screws)

⑪ Remove the stopper and the 22T gear.

⑫ Remove the P.S clutch

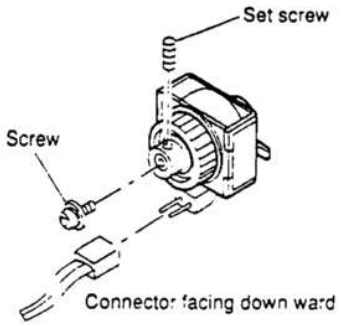

NOTE: H specificafions mode remove the demoisture heater lamp in the suction section. (Remove heater connector ⓑ in Fig. Ⓑ.)

Suction lift lever

Loosen screw ⓐ in Fig. Ⓐ and shift the suction lift lever to R side. and the heater unit will be remove

※ When removeing the transport plate unit, remove the DV tank, the front cabinet, the process unit, the upper cassette (ADU unit) in advance.
For removing the upper cassette, it is advisable to remove the paper feed unit in advance.
Since the fuser unit will serve as the guide rail for removing and assembiing the transport bace plate, do not remove it.
Open the right cabinet.

※ When installing the transport base plate unit

① Fit the arrow mark in the DV guide with the groove in the left side of the rail transport base plate in the malti paper feed section of the main body and the mark in the fusing unit cover.

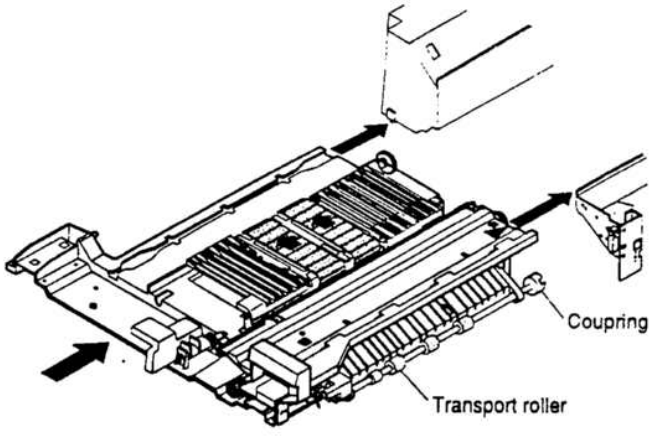

② Securely engage the transport roller coupring with the main body coupring. If not, the unit cannot be inserted to the end.
Check that the roller can be turned manually. (If the couprings are not securely engaged, the roller cannot be turned manually.)

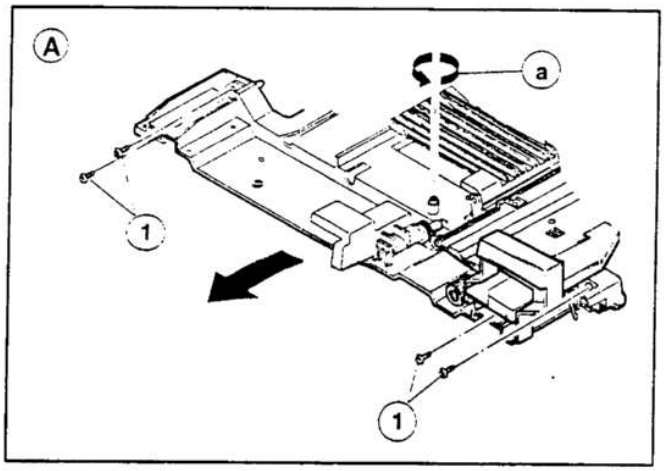
A
a
1
1

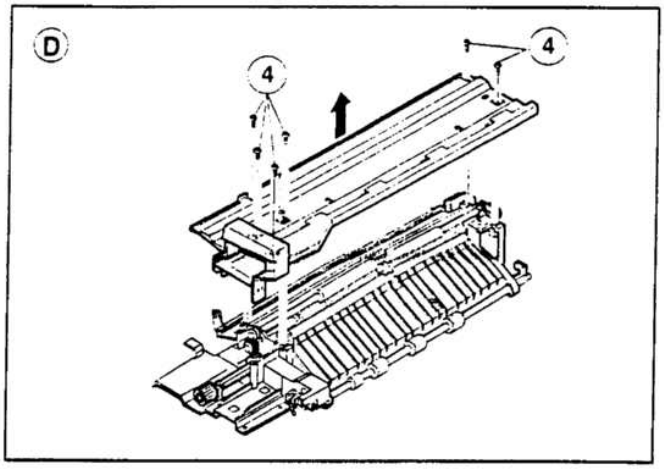
D
4
4

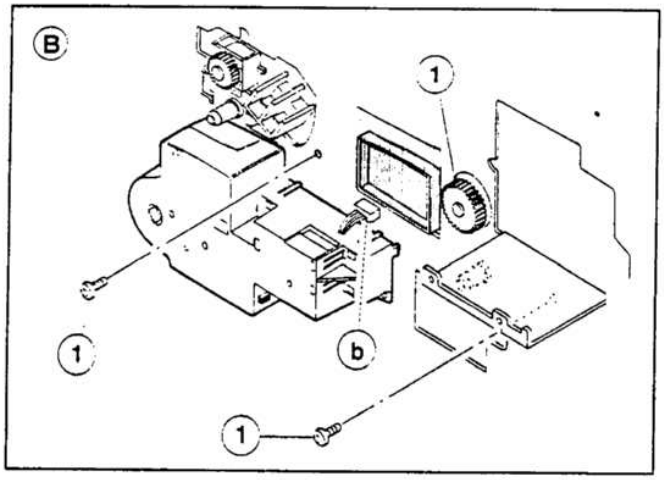
B
1
1
b
1

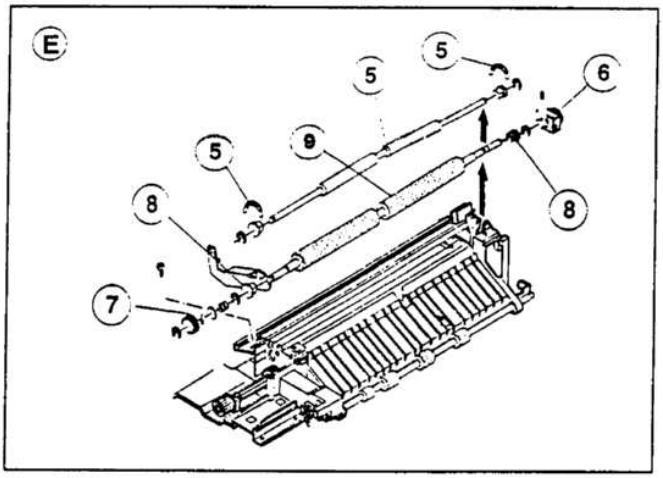
E
5
5
6
5
9
8
8
7

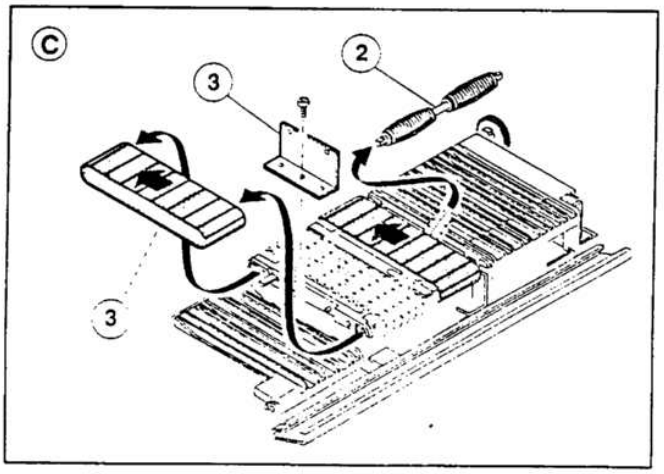
C
3
2
3

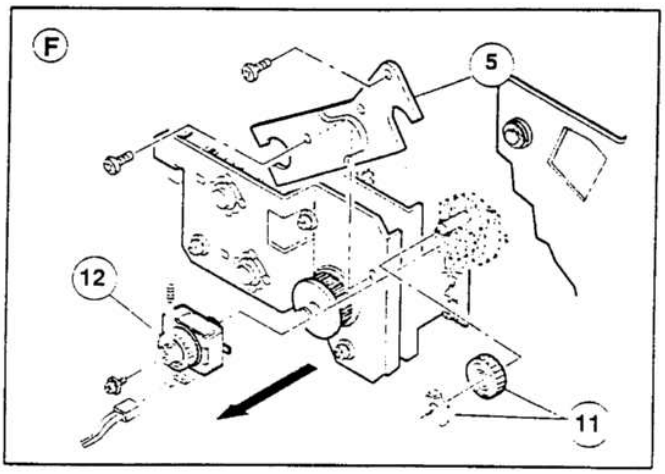
F
5
12
11

5. Fuser unit

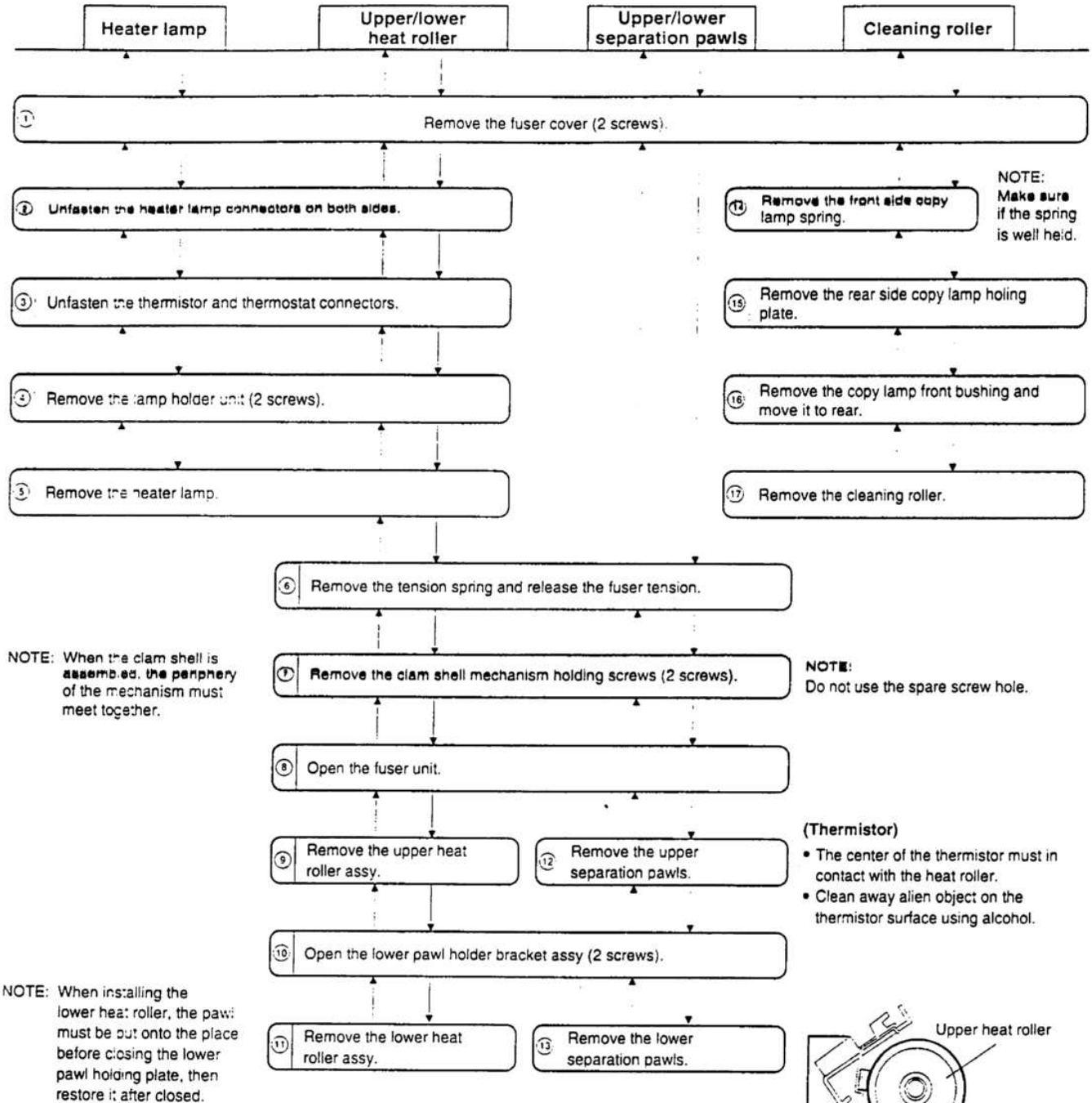
Heater lamp
Upper/lower heat roller
Upper/lower separation pawls
Cleaning roller
① Remove the fuser cover (2 screws).
② Unfasten the heater lamp connectors on both sides.
③ Unfasten the thermistor and thermostat connectors.
④ Remove the lamp holder unit (2 screws).
⑤ Remove the heater lamp.
⑫ Remove the front side copy lamp spring.
NOTE: Make sure if the spring is well held.
⑮ Remove the rear side copy lamp holing plate.
⑯ Remove the copy lamp front bushing and move it to rear.
⑰ Remove the cleaning roller.
⑥ Remove the tension spring and release the fuser tension.
NOTE: When the clam shell is assembled, the periphery of the mechanism must meet together.
⑦ Remove the clam shell mechanism holding screws (2 screws).
NOTE: Do not use the spare screw hole.
⑧ Open the fuser unit.
⑨ Remove the upper heat roller assy.
⑫ Remove the upper separation pawls.
(Thermistor)
• The center of the thermistor must in contact with the heat roller.
• Clean away alien object on the thermistor surface using alcohol.
⑩ Open the lower pawl holder bracket assy (2 screws).
NOTE: When installing the lower heat roller, the pawl must be put onto the place before closing the lower pawl holding plate, then restore it after closed.
⑪ Remove the lower heat roller assy.
⑬ Remove the lower separation pawls.
Upper heat roller
Thermistor
Discharge brush
The discharge brush must in contact with the upper heat roller.
Thermistor

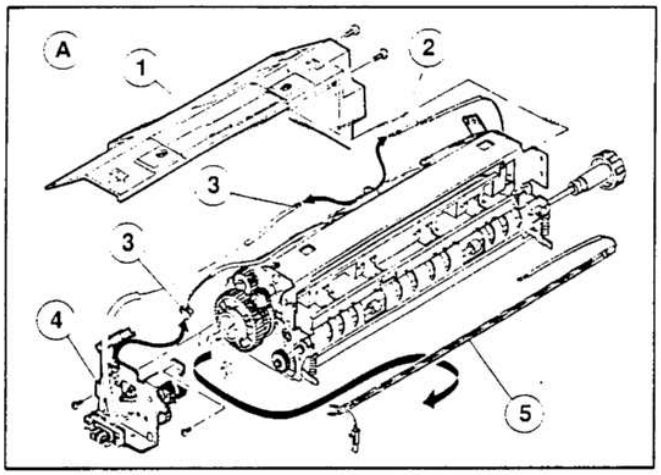
A
1
2
3
3
4
5

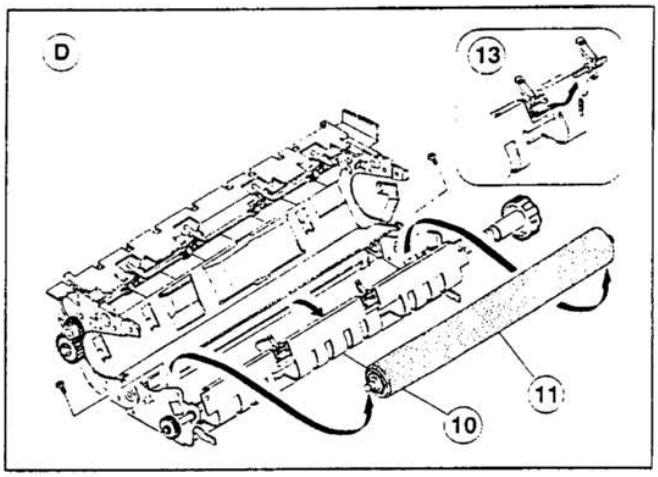
D
13
10
11

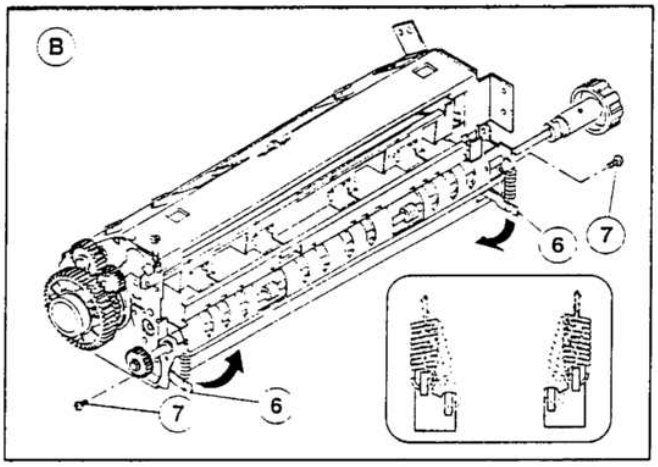
B
6
7
7
6

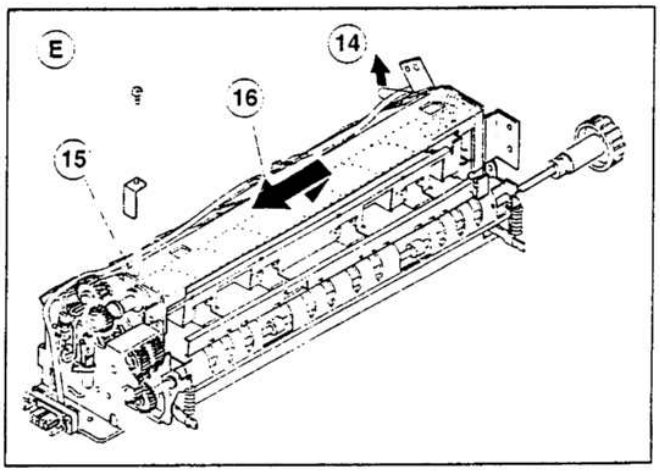
E
14
16
15

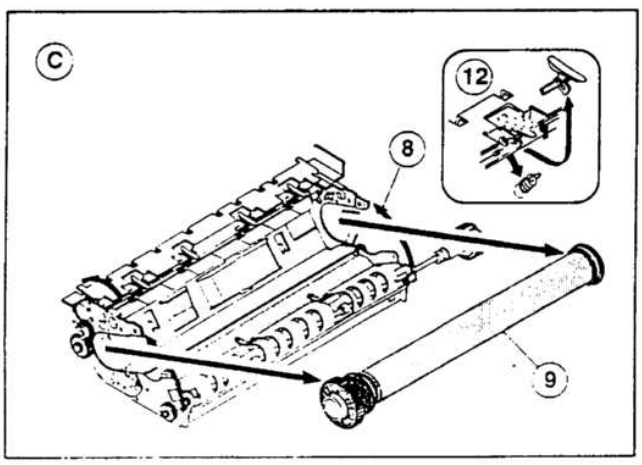
C
12
8
9

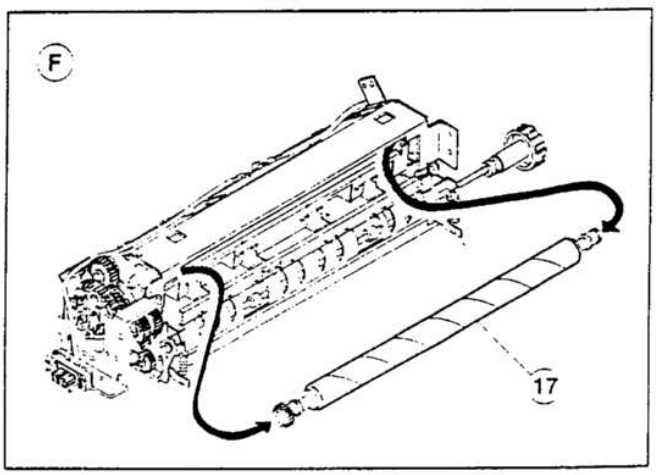
F
17

6. Duplex copy unit

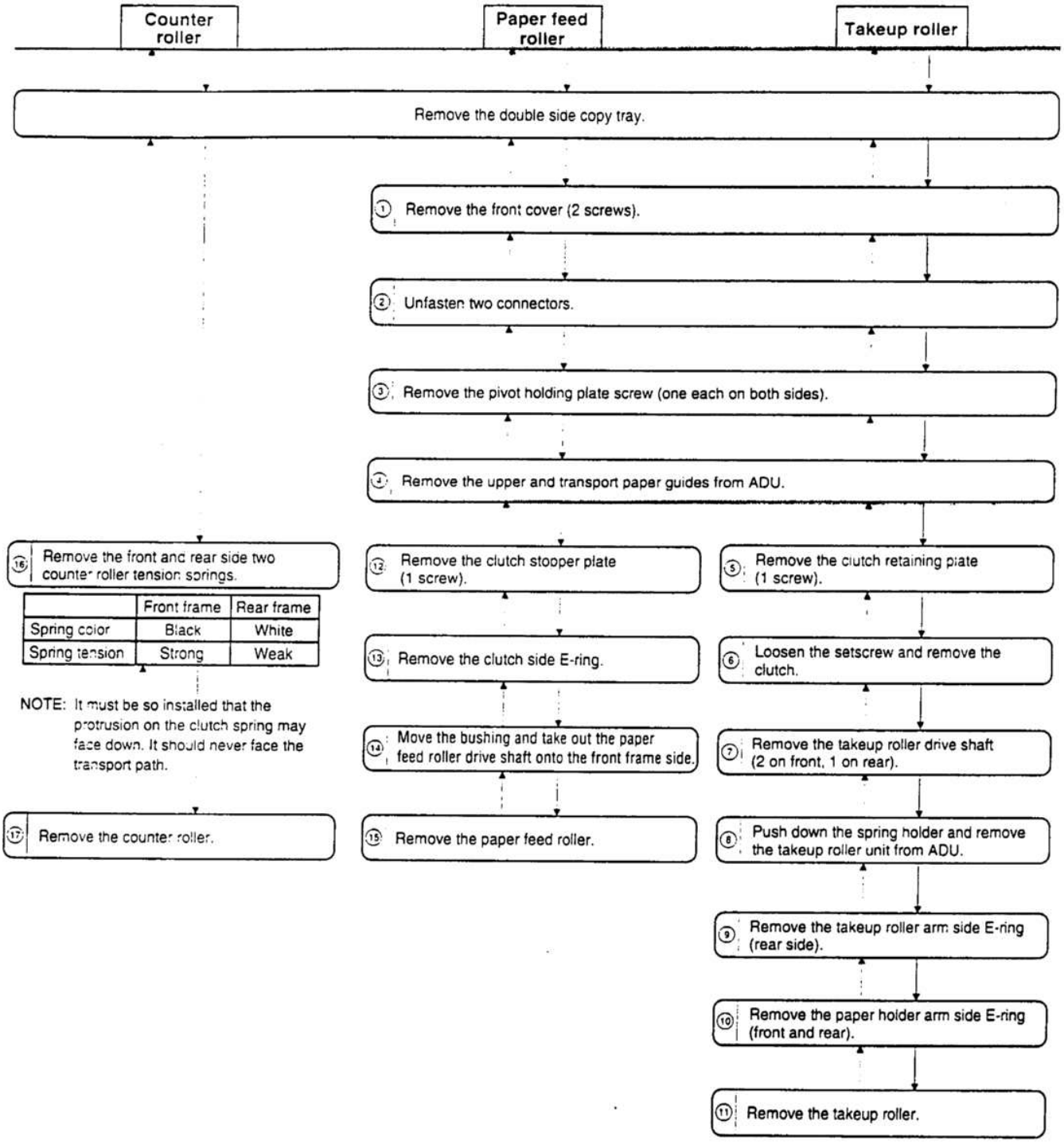

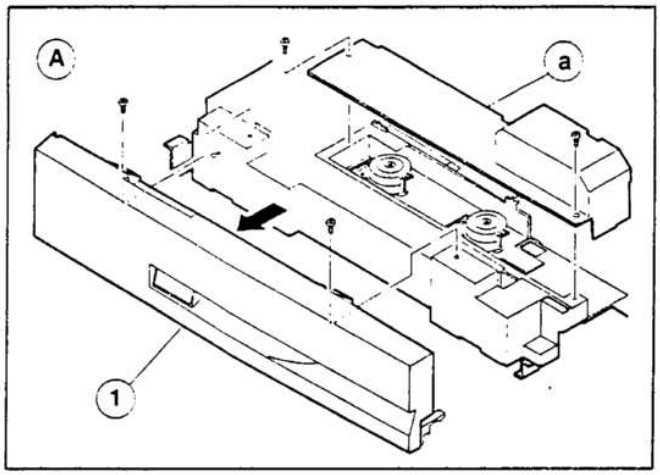
A
a
1

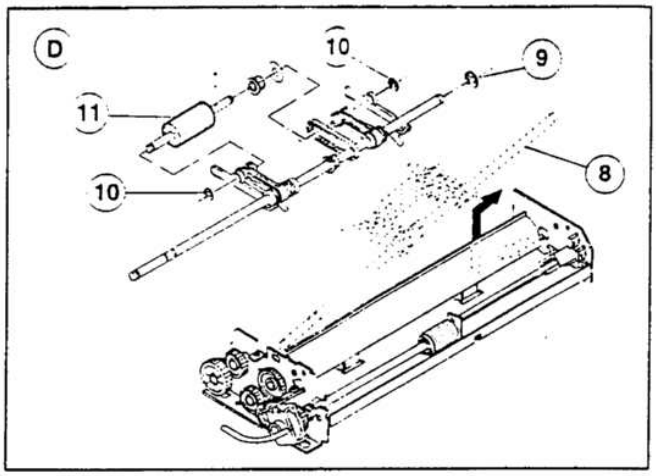
D
10
9
11
8
10

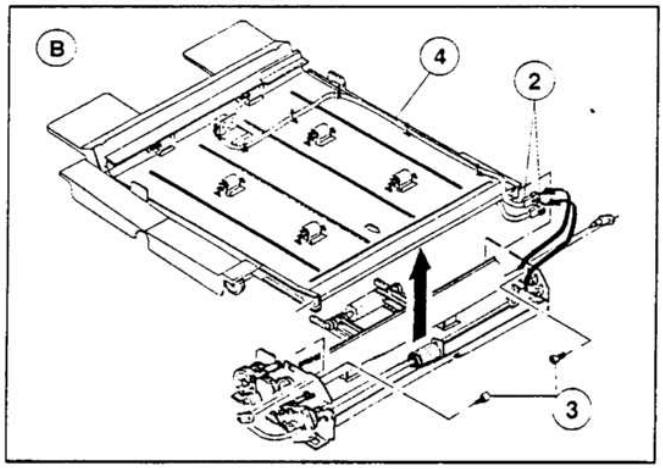
B
4
2
3

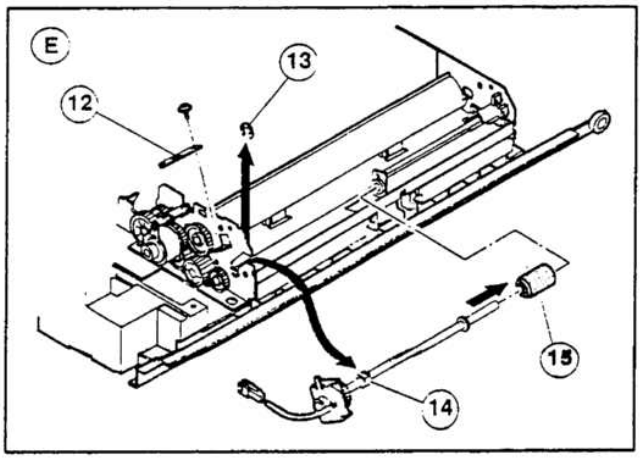
E
13
12
15
14

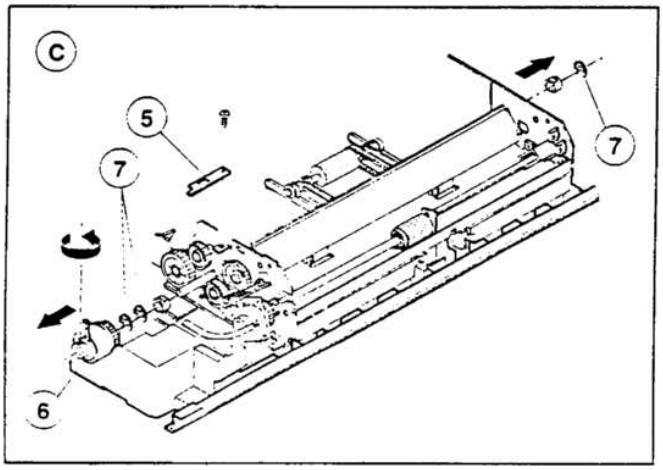
C
5
7
7
6

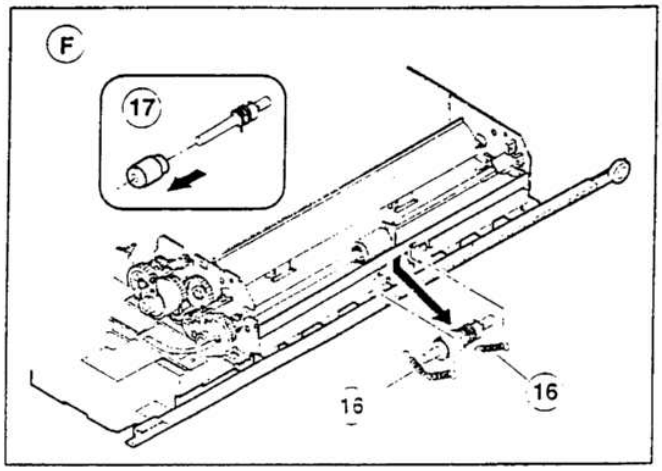
F
17
16
16

7. Rear frame side major components

Paper feed drive unit | **Variable paper speed unit** | **Main drive unit (belt)**

1. Remove the rear panel (4 screws).
2. Remove the main PWB connectors (11 connectors).
3. Remove the main PWB unit from the copier (1 screw).
4. Remove the paper feed drive unit (4 screws).
5. Remove the joint plate (2 screws).
6. Remove the main drive side pulley holding E-ring, then remove the drive belt.
7. Remove the variable paper feed speed unit (4 screws).
8. Remove the variable speed clutch unit.
9. Unfasten the high voltage unit connectors (6 connectors), and remove the ground harness from the copier chassis (1 screw each).
10. Remove the high voltage PWB from the suction duct unit.
11. Remove the suction unit (6 screws).
12. Remove the main drive unit.
13. Remove the main drive belt.

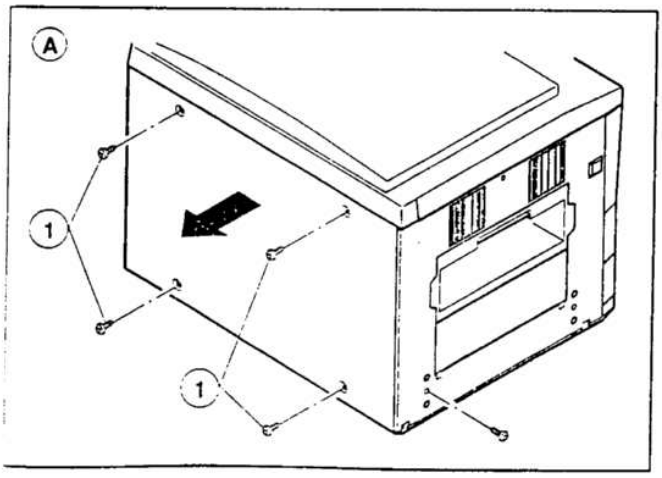

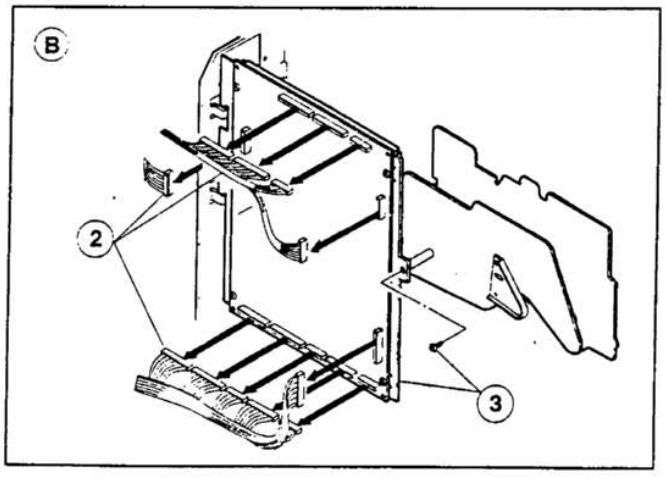

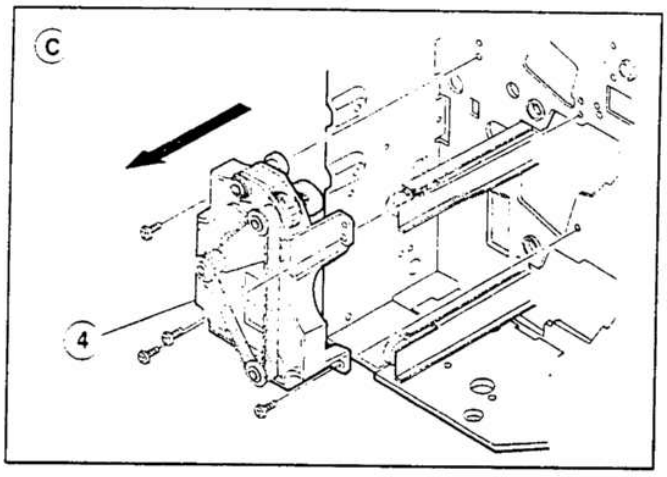
C
4

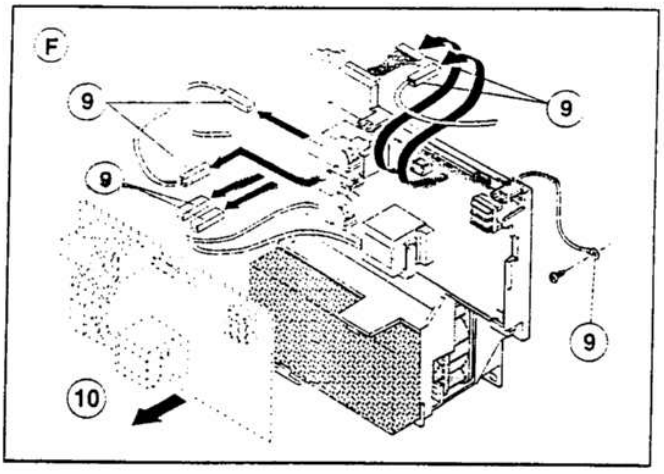
F
9
9
9
9
10

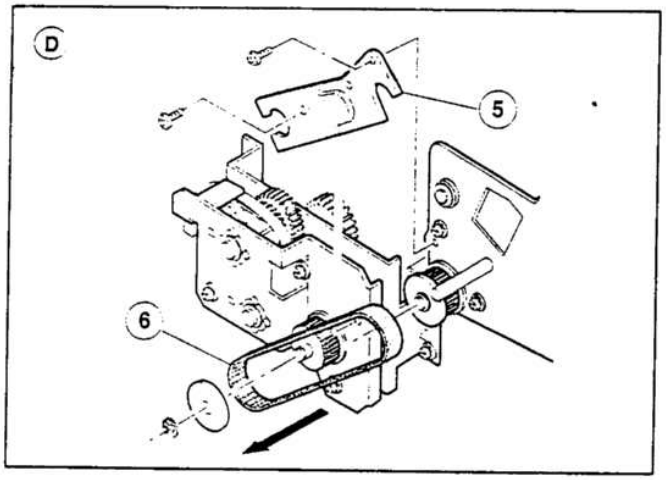
D
5
6

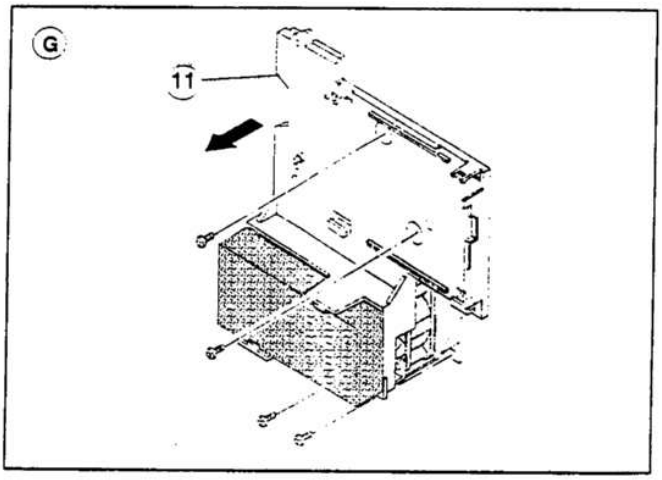
G
11

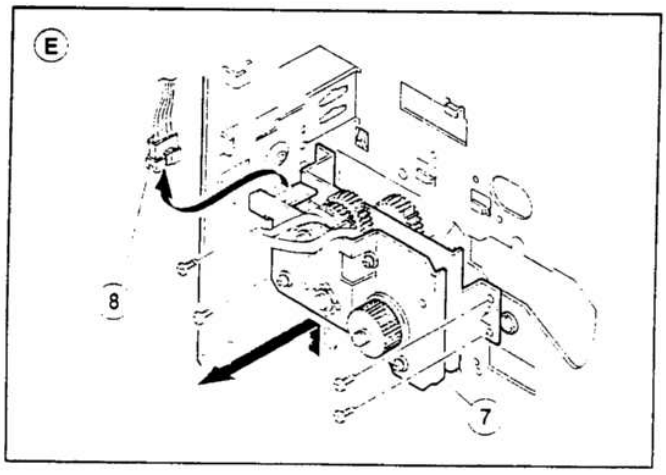
E
8
7

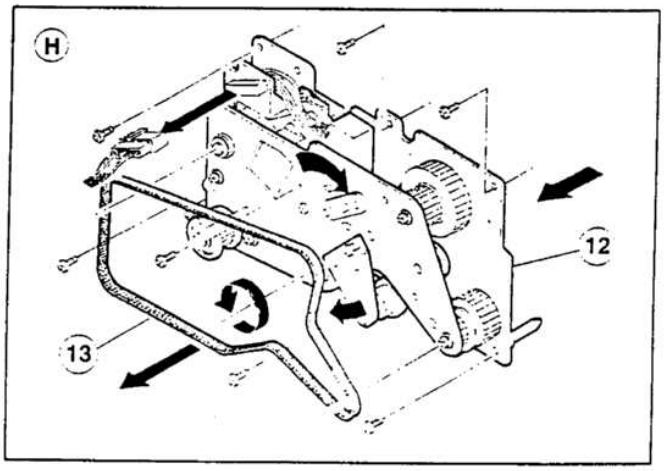
H
12
13

AC power supply PWB | **DC power supply PWB** | **Paper exit gate solenoid**

① Remove the rear panel of the copier (4 screws).

② Remove the rear side screw of the left side panel (1 screw).

③ Remove the AC power supply board (5 screws, 6 connectors).

④ Remove the DC power supply PWB (5 screws, 1 connector).

※ DC power PWB identification

100V system	200V system
White label	Red label

⑤ Remove the paper exit gate solenoid (2 screws, 2 connectors).

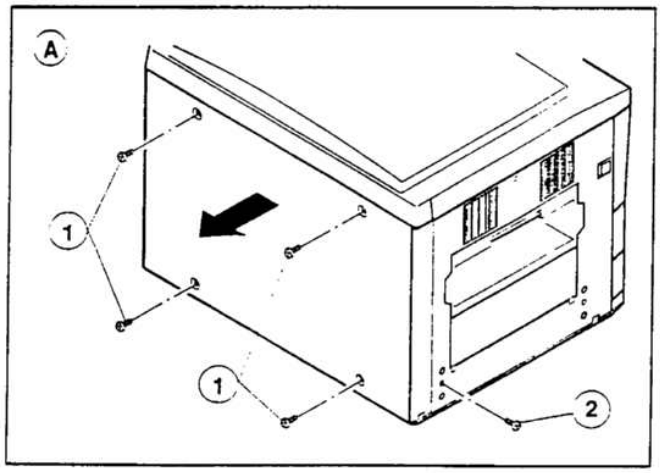

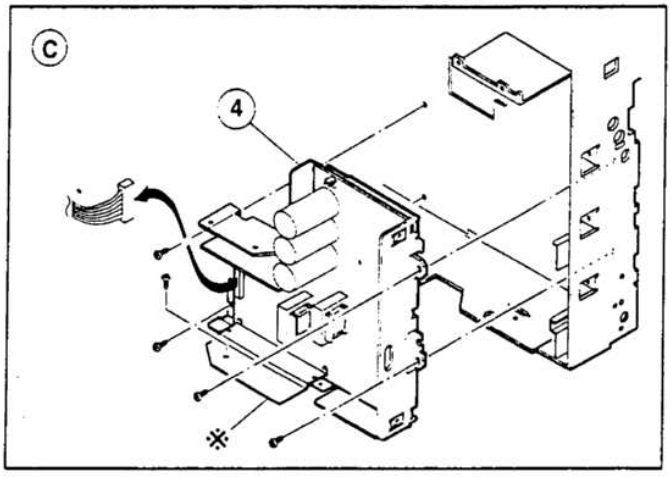

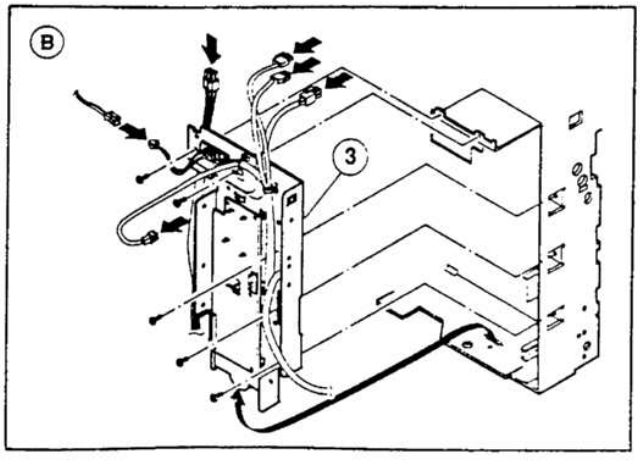

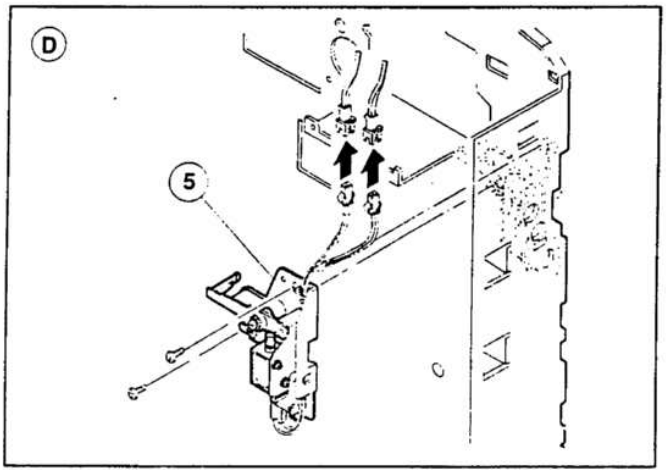

8. Operation panel unit and document size sensor board (light receive side)

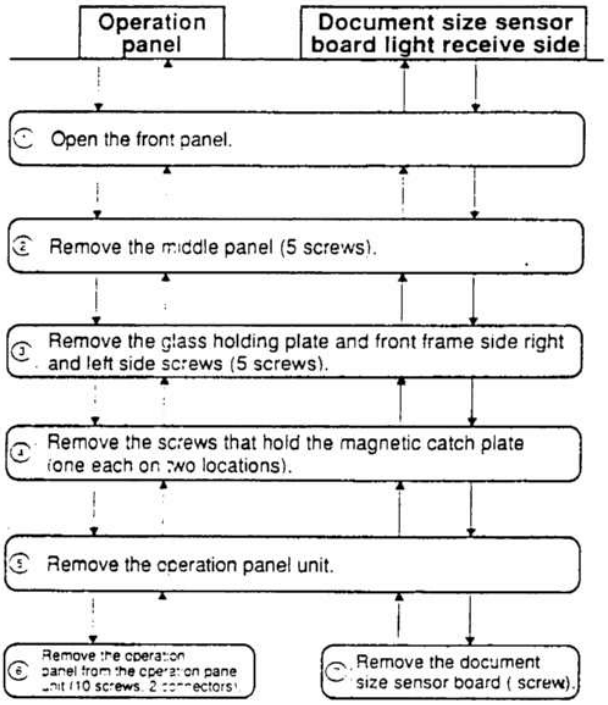

Note: Tighten the PWB screw to fix the operation panel (Left) spacer.

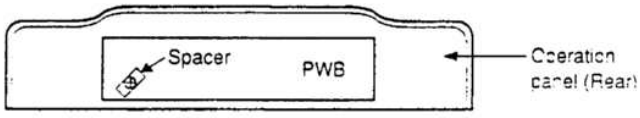

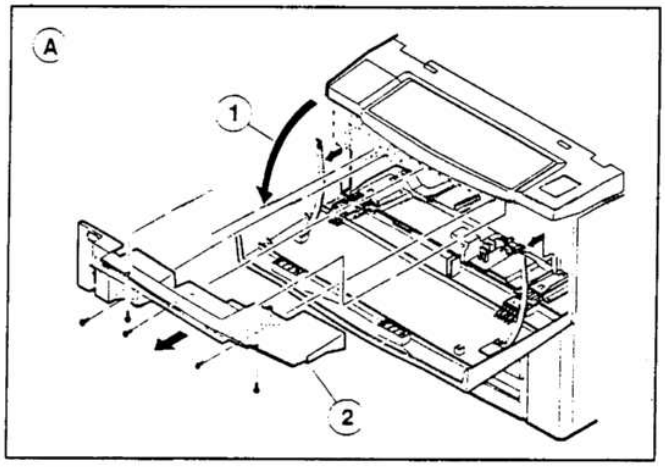

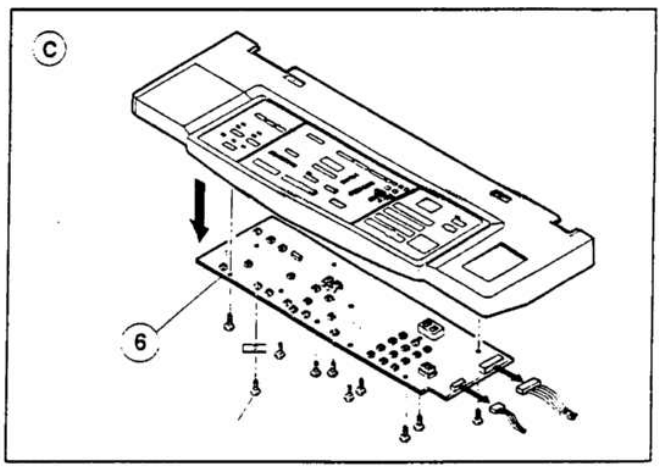

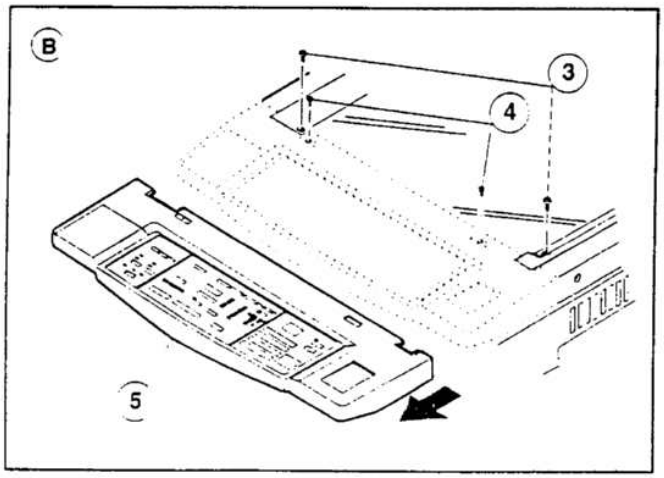

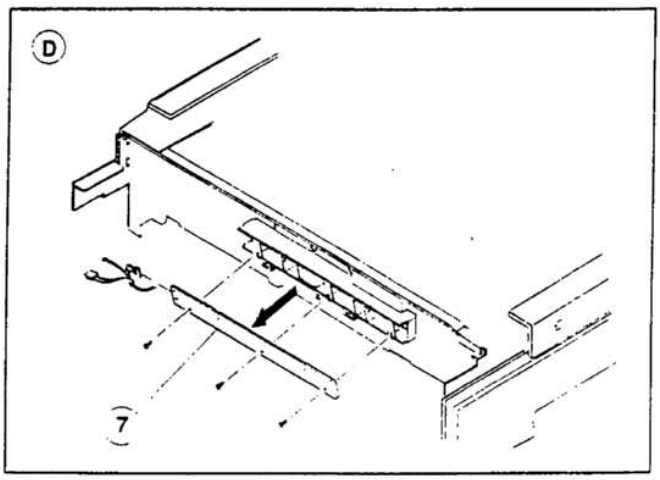

9. Optical unit

Copy lamp	Copy lamp unit	#2/3 mirror base unit	#4/5 mirror base unit

① Remove the original guides (L, R) and remove the table glass (two each screws).

② Move the copy lamp unit to the cut in the rear of the top cabinet and remove the rear frame side copy lamp electrode holding screw.

③ Remove the copy lamp.

NOTE: Note the direction of the copy lamp.

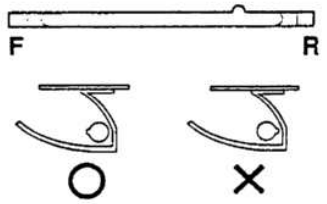

It must be installed with the bulge of the copy lamp near the rear side, as shown in the figure.

④ Remove the operation panel.
Remove the top cabinet, left.
Remove the left cabinet.

⑤ Remove the upper dark box cover (screw).

⑥ Remove the wire holding plates found on both frame sides of the copy lamp unit, then remove wires from the side plates (F, R).

⑦ Rotate the copy lamp unit to remove.

⑧ Remove the mirror base wire from the #2/3 mirror base unit.

⑨ Move the #2/3 mirror base unit to the square hole (a) on the front side of the optical baseplate, then rotate it to remove.

⑩ Remove the rear panel (4 screw).

⑪ Measure the size of "P."

⑫ Remove the #4/5 mirror motor holding bracket (6 screw).

⑬ Remove the optical harness connectors.
Remove the lens motor connectors.
Remove the lens home position sensor connector.
Unfasten the document sensor light receive board connector. Remove the front cabinet switch junction harness.

⑭ Remove the mirror base unit together with the #4/5 mirror motor holding bracket assy.

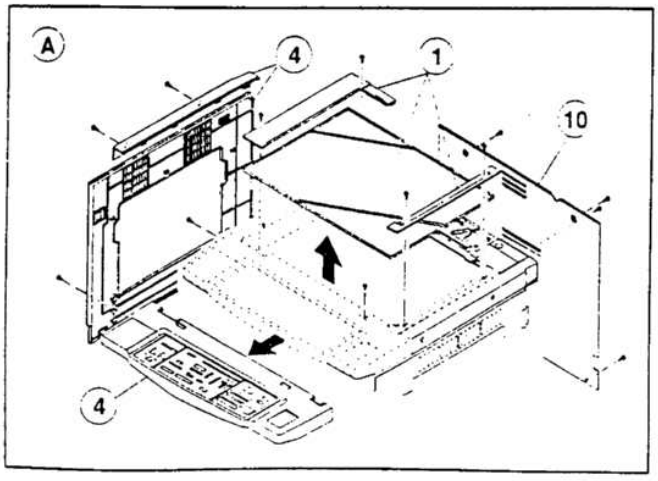

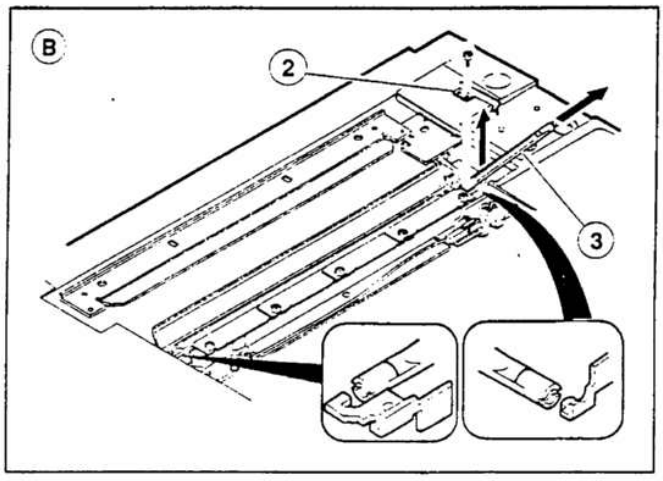

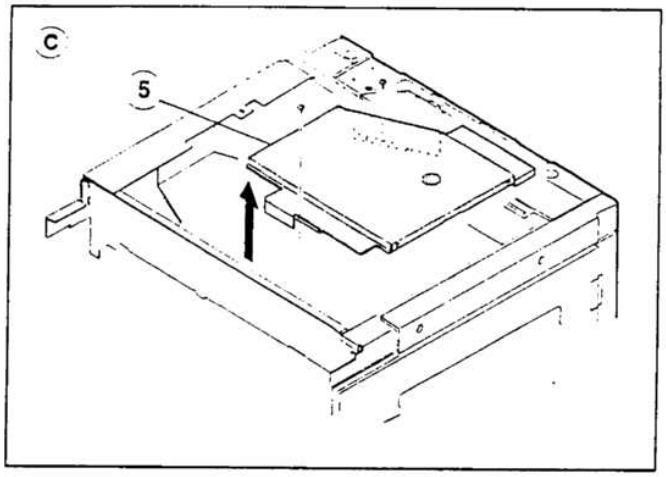
C
5

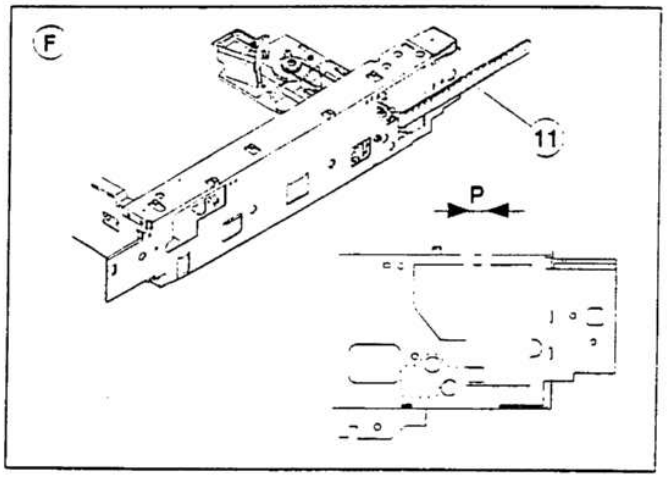
F
11
P

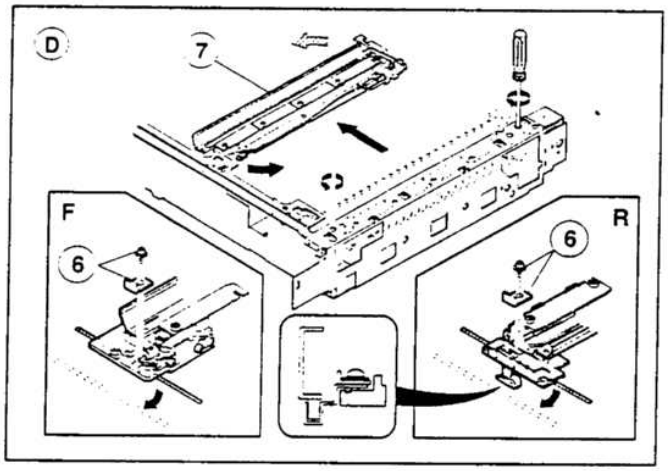
D
7
F
6
R
6

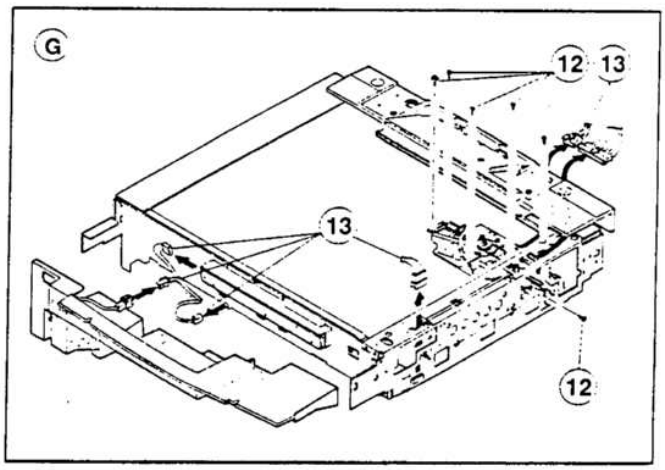
G
12
13
13
12

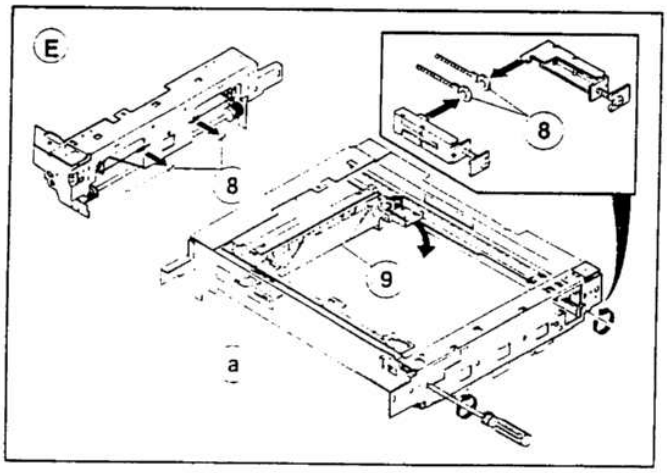
E
8
8
9
a

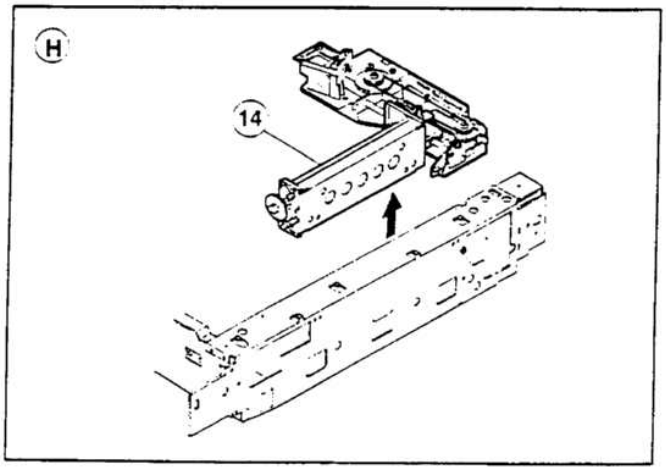
H
14

[7] ADJUSTMENTS

1. Developing Unit

(1) Clearance Adjustment of Developing Doctor Blade

Tool: UKOGM0075CSZZ (Feeler gauge)

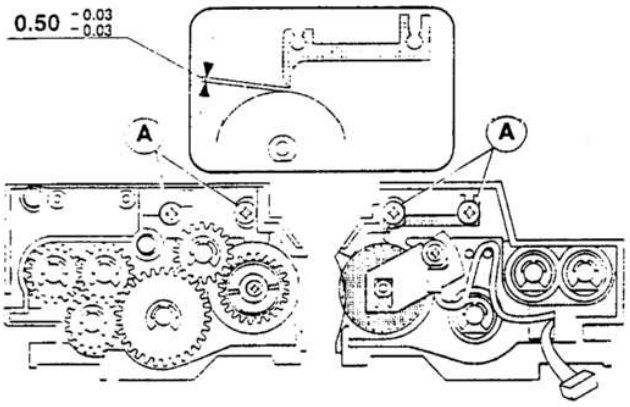

1. Remove 4 screws and the 5-pin connector which connect the developer tank to the toner hopper, and pull out the developer tank.
2. Loosen 4 setscrews A of the developing doctor blade. (2 setscrews on the rear frame side and 2 on the front frame side).
3. Insert the 0.50mm-feeler gauges into the clearance between the developing doctor blade and the magnet roller at the points 50-80 mm away from their both ends.
4. While pressing down the developing doctor in the arrow direction, tighten the 4 setscrews to secure the developing doctor.
5. Check that the clearance between the developing doctor and the magnet roller is $0.50^{+0.03}_{-0.03}$mm at the points 50-80 mm away from the doctor ends.

   Caution: Do not damage the developing doctor blade and the magnet roller during insertion of the feeler gauge.

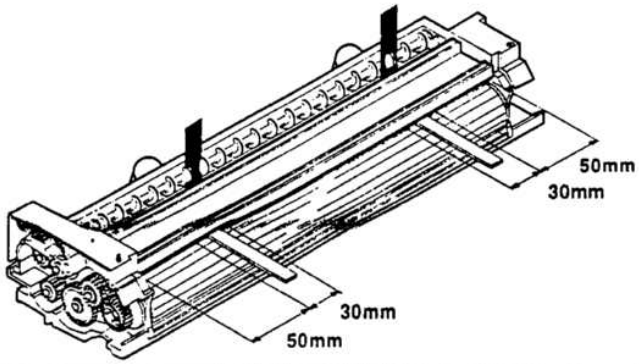

(2) Position Adjustment of Developing Magnet Roller Main Pole



1. Remove 4 screws and the 5-pin connector which connect the developer tank to the toner hopper, pull out the developer tank and put it on a flate surface.
2. Thread a needle or pin as shown in the figure on the right.
3. While holding the thread, bring the needle near the magnet roller. (Do not use a clip because it will not provide an accurate position of the main pole).
4. Use a pen to put a mark on the point of the magnet roller surface to which the needle is attracted.
5. Measure the distance from the mark to the reference plane on which the developer tank is placed.
   This distance must be 31.5 mm.
   If not so, loosen setscrews A of the main pole adjusting plate and move the adjusting plate in the arrow direction to obtain the proper distance.

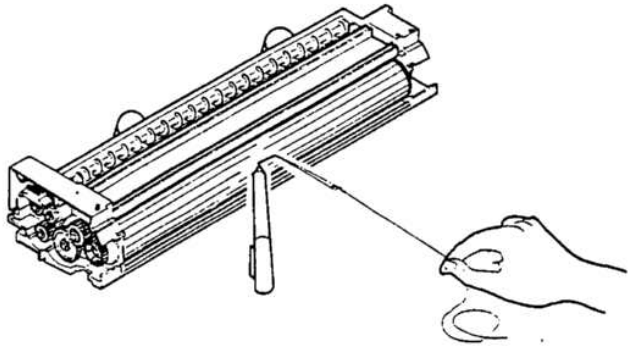

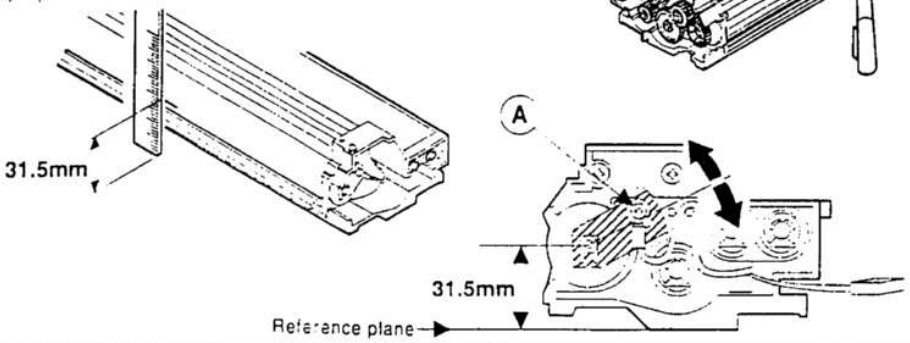

(3) Developing Bias Adjustment

1. Set the measuring range of the digital multimeter to 300 Vdc or more.
2. Apply the probes to the developing bias output check pin and the chassis(GND) of the high voltage unit.
3. Perform Simulation 8-1. (The developing bias voltage is output for 30 seconds.
4. Adjust the developing bias control for –215 Vdc output voltage.

Tool: UKOGE0043CS01 (Digital multimeter)

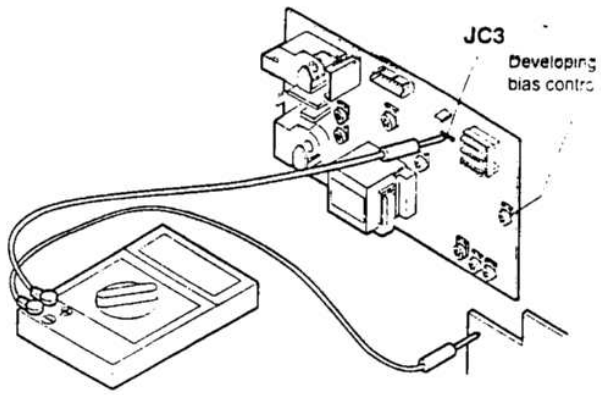

(4) Notes on installing various rollers of the developing unit

(1) V-rings must be attached in the correct direction.
(2) No gap must exist at ÷ between the V-ring and the roller.
(3) When attaching ϕ8-ring PRNGP0013FCZZ, ϕ8-ring PRNGP0022FCZZ and ϕ6-ring PRNGP0015FCZZ to the developing magnet roller,
   1) the direction of the V-ring must be as shown in the upper figure, and
   2) no gap must exist at ÷ between the V-ring and the roller.

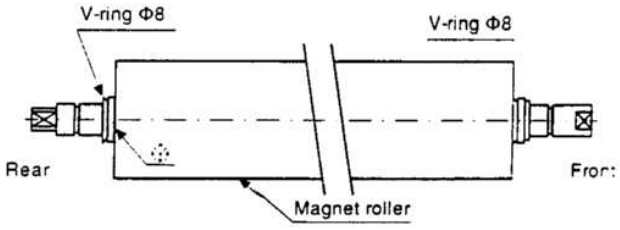

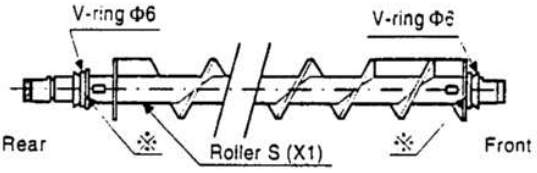

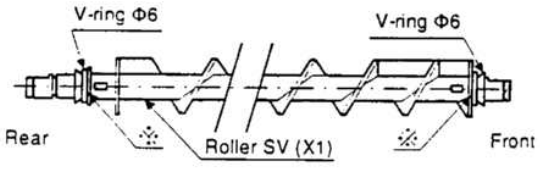

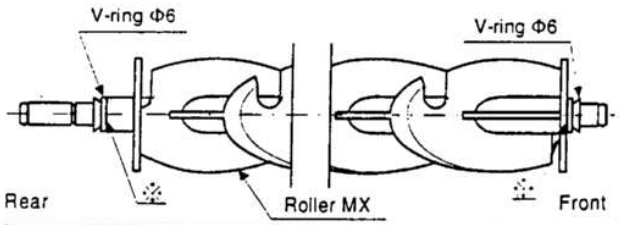

(5) Notes on applying the developing side seals (front and rear)

(1) The side seal must be applied on the surface free of oil, grease and foreign matter.
(2) The side seal must be securely attached to prevent it from coming off.

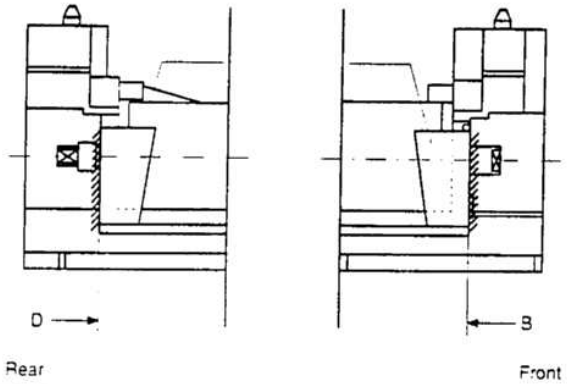

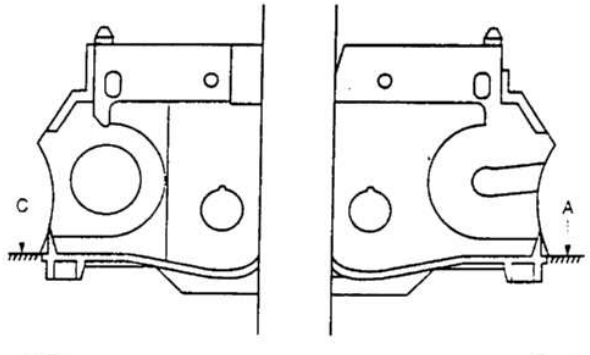

2. Processing Unit

(1) Adjustment of Blank Lamp Position

1 Check that the center deviation is 2.0mm or less. (If the center deviation is more than 2.0 mm, correct it).
2 Set an A3(11x17)-size blank original on the original table, and with the original cover opened, make a reduced (x 0.64) copy using an A3 (11 x 17) paper.
3 Measure the width of solid areas. If the width is more than 1 mm, adjust the blank lamp unit position so that the width of the solid areas is 1 mm or less.

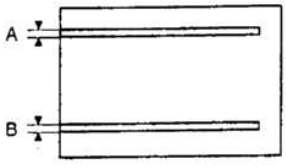

IA-BI ≦ 1mm

1 notch of the adjusting cam : lamp movement 0.5 mm
Half notch of the adjusting cam : lamp movement 0.25 mm

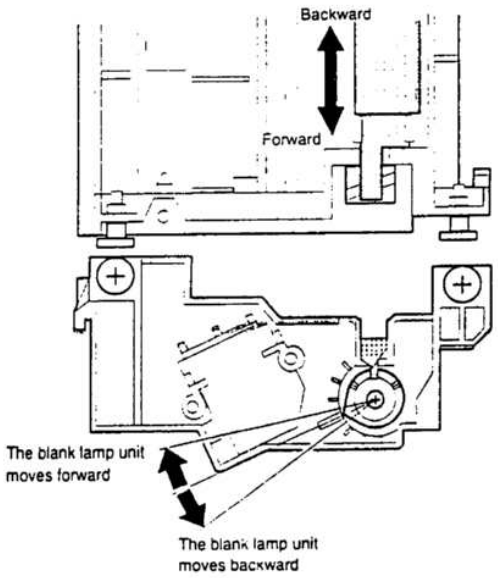

(2) Adjustment of Solid Width of Both Ends

1 Perform Simulation 51-05.
The ready lamp goes on and the copy quantity indicator shows a preset value. Now you can use ten keys to input a value ranging from "1" to "19". Turning on the print switch after value input causes the value to be stored in memory and the ready lamp to go off. Input value of 1 provides approx. 1.0 mm reduction of the solid width. The factory-set value is 6.

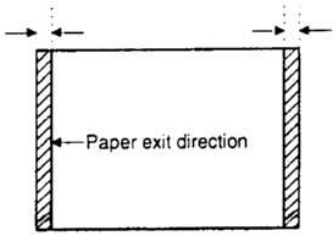

(3) Adjustment of High-Voltage Output Balance

A. Applying the Special Measuring Tool

Electrode sheet (UKOG-0110FCZZ)

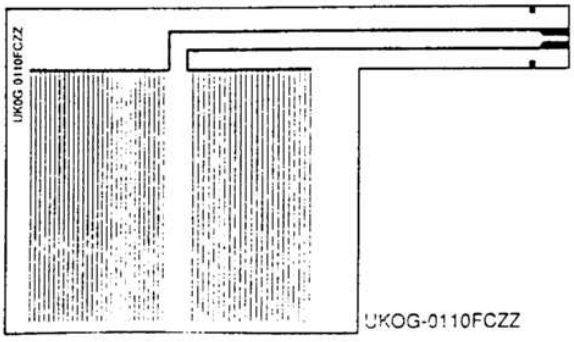

UKOG-0110FCZZ

Electrode sheet harness (DHAI-0304FCZZ)

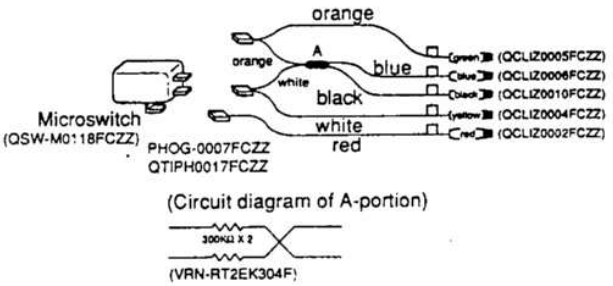

(Circuit diagram of A-portion)

(VRN-RT2EK304F)

Digital multimeter (or ampere meter)
Note: use a multimeter with measuring range of 0 to 100 µA and error of ±1% or less.

B. Adjusting the Transfer Charger Current

1 Remove the developing unit, transfer/separation charger unit, main charger unit and waste toner bottle from the machine.
2 Remove the processing unit from the machine.
When removing (attaching) the processing unit, do not grasp the toner feed pipe.
3 Remove the photoreceptor drum from the processing unit and mount the electrode sheet on the drum using adhesive tape.
4 Install the photoreceptor drum into the processing unit and attach the processing unit to the machine.
5 Attach the drum holder unit to the machine in the manner which allows drawing the lead of the electrode sheet from the developer tank side.

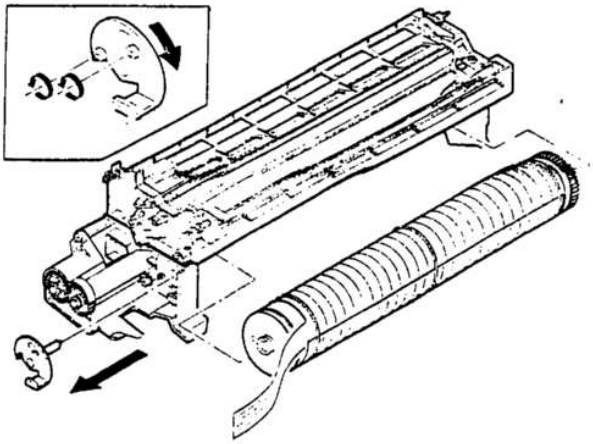

6 After cleaning the transfer charger wire, attach the transfer/separation charger unit to the machine. (Do not attach the main charger unit).

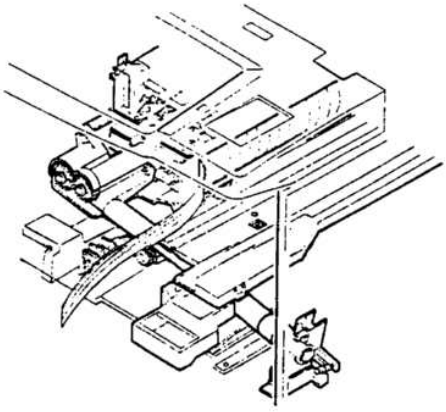

7 Connect the electrode sheet to the digital multimeter (or an ampere meter).
Manually turn on the door switch.
8 Measure the drum current on the sides of front and rear frame. The difference in current between the front and rear frame must be 8.0 µA or less.
a. Turn on the main switch and perform Simulation "8-06". (THVG will be ON for approx. 30 seconds)
b. Measure the drum current on the front and rear frame side.
- If the microswitch is OFF, the drum current on the side of front frame is indicated.
- If the microswitch if ON, the drum current on the side of rear frame is indicated.

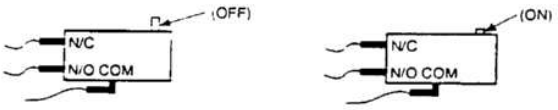

c. Check that the difference in current between both sides is 8.0 µA or less. If the difference is more than 8 µA, replace the charger unit.
9 Adjust the THVG output voltage:
a. Turn on the main switch and perform Simulation "8-06". (THVG will be ON for approx. 30 seconds)
b. Use the THVG output control to adjust the THVG output voltage until it becomes −31±5 µA.

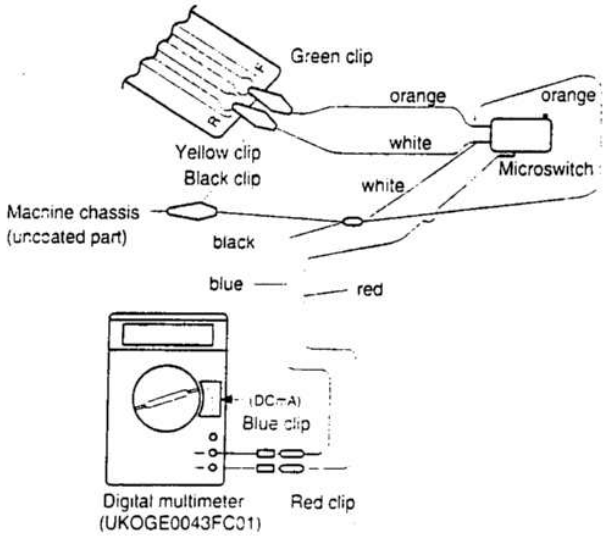

Note: Make sure the black clip is grounded at the machine chassis.
When using UKOGE0043CS01:
Control 1: set to DCmA
Control 2: set to 2
Red clip : connected to ⊖
Blue clip: connected to ⊕
When using a d.c. ampere meter:
Red clip : connected to ⊖ of d.c. ampere meter
Blue clip: connected to ⊕ of d.c. ampere meter

C. Checking the Electrostatic Main Charger Current

The drum current difference(balance) between the sides of front and rear frame is checked.

1 Perform steps (3)-B-1 to 5.
2 Clean the saw-tooth plate of the main charger and attach the main charger to the machine.
(Do not attach the transfer/separation charger).
Manually turn on the door switch.
3 Measure the drum current on the sides of front and rear frame. The difference in current between the front and rear frame must be 8.0 µA or less.
   a. Turn on the main switch and perform Simulation "8-02". (MGVG will be ON for approx. 30 seconds.)
   b. Measure the drum current on the front and rear frame side.
      - If the microswitch is OFF, the drum current on the side of front frame is indicated.
      - If the microswitch if ON, the drum current on the side of rear frame is indicated.



   c. Check that the difference in current between both sides is 8.0 µA or less. If the difference is more than 8 µA, replace the charger unit.

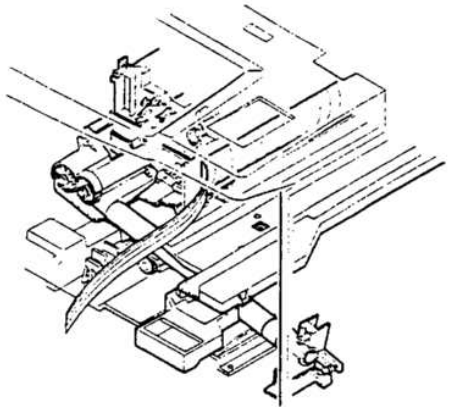

D. Adjusting the Electrostatic Main Charger Grid Voltage

1 Turn off machine. Attach the developing unit and the drum holder unit to the machine.
(Do not use the electrode sheet).
2 Attach the main charger unit to the machine. The machine should have all the charger units installed.
3 Remove the rear cover.
4 Connect the digital multimeter to the grid voltage check pin(JC1).
5 Set the measuring range of the digital multimeter to DCV.
(Use the digital multimeter with measuring range of up to 1000 Vdc).
6 Turn on the front cover switch manually.
7 Turn on the main switch, and adjust the output adjusting control so that output voltage values in Simulation "8-02"(normal mode), "8-03"(photo mode) and "8-04"(TSM mode) are as follows:

TEST POINT JC.1	Output Voltage
Normal mode	−730±15 Vdc
Photo mode	−610±15 Vdc
TMS mode	−490±15 Vdc

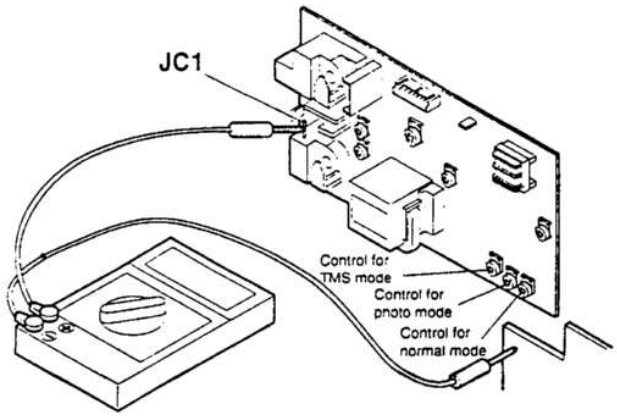

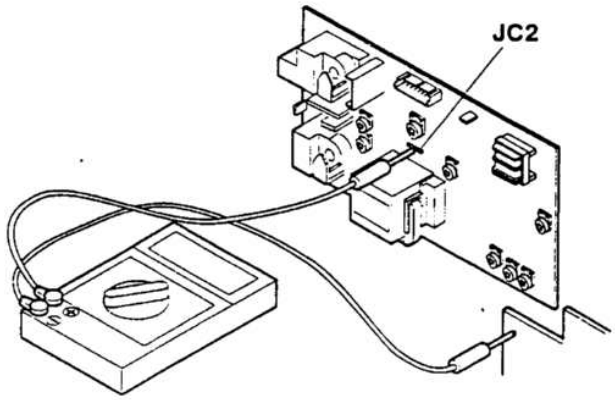

E. Adjusting the Separation Charger Output

1. Attach the developing unit and the drum holder unit to the machine and turn on the machine. (Do not use the electrode sheet).
2. Attach the separation charger unit and drum holder unit to the machine. The machine should have all the charger units installed.
3. Remove the rear cover.
4. Connect the digital multimeter to the SHVG output check pin(JC2).
5. Set the measuring range of the digital multimeter to DCV.
6. Turn on the door switch manually.
7. Perform Simulation "8-07". (The SHVG will goes on for approx. 30 seconds).
8. **During the simulation, adjust the SHVG output control so that** the output monitoring voltage (bias) JC2 of the separation charger is 0±10 Vdc.

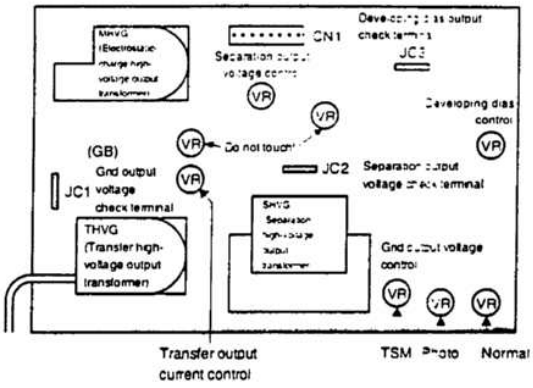

(4) Notes on maintenance for high-voltage units

A. Electrostatic Charger Unit

1. Do not distort nor stain the screen grid during handling. Be sure that the screen grid is secured in place.

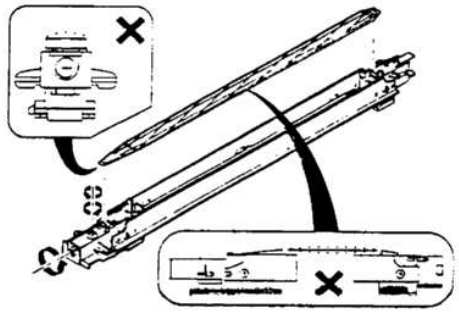

2. The teeth of the saw-tooth assembly must be free of distortion.

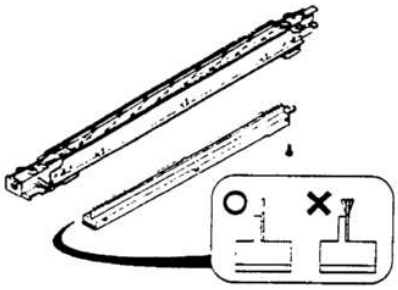

3. Do not touch the inside of the MC case(saw-tooth assembly side), the screen grid, and the saw-teeth.
4. The saw-teeth should be cleaned with foam polystyrene as shown in the figure.

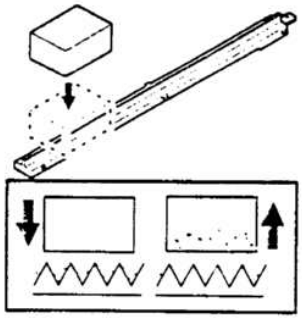

B. Transfer/Separation Charger Unit

1. The charger spring must be 11±0.5 mm in length.

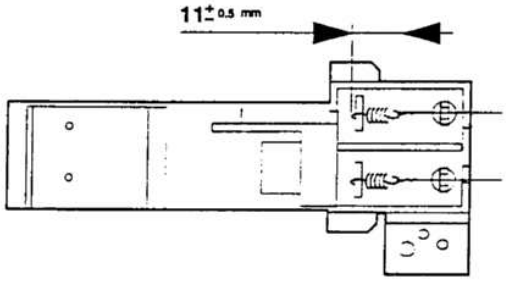

2. The charger wire must be free of distortion and fitted in the holder groove.

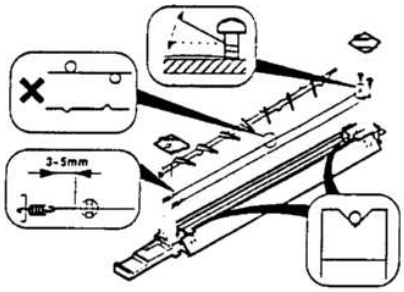

3. The charger case must be free of oil, grease and foreign matter.
4. The wire must be cleaned with alcohol.

3. Adjustment of Optical System

The optical system must be adjusted according to the following flowchart:

Check the following preset values depending on the focal length of lens (lens number):
- Reference position of 4. and 5. mirror Reference position of lens. ..... Simulation 48-01, Pause key
- Reference position of 4. and 5. mirror ..... Simulation 48-01
- Lateral magnification ..... Simulation 48-02
- Lens characteristics ..... Simulation 26-09, 26-08

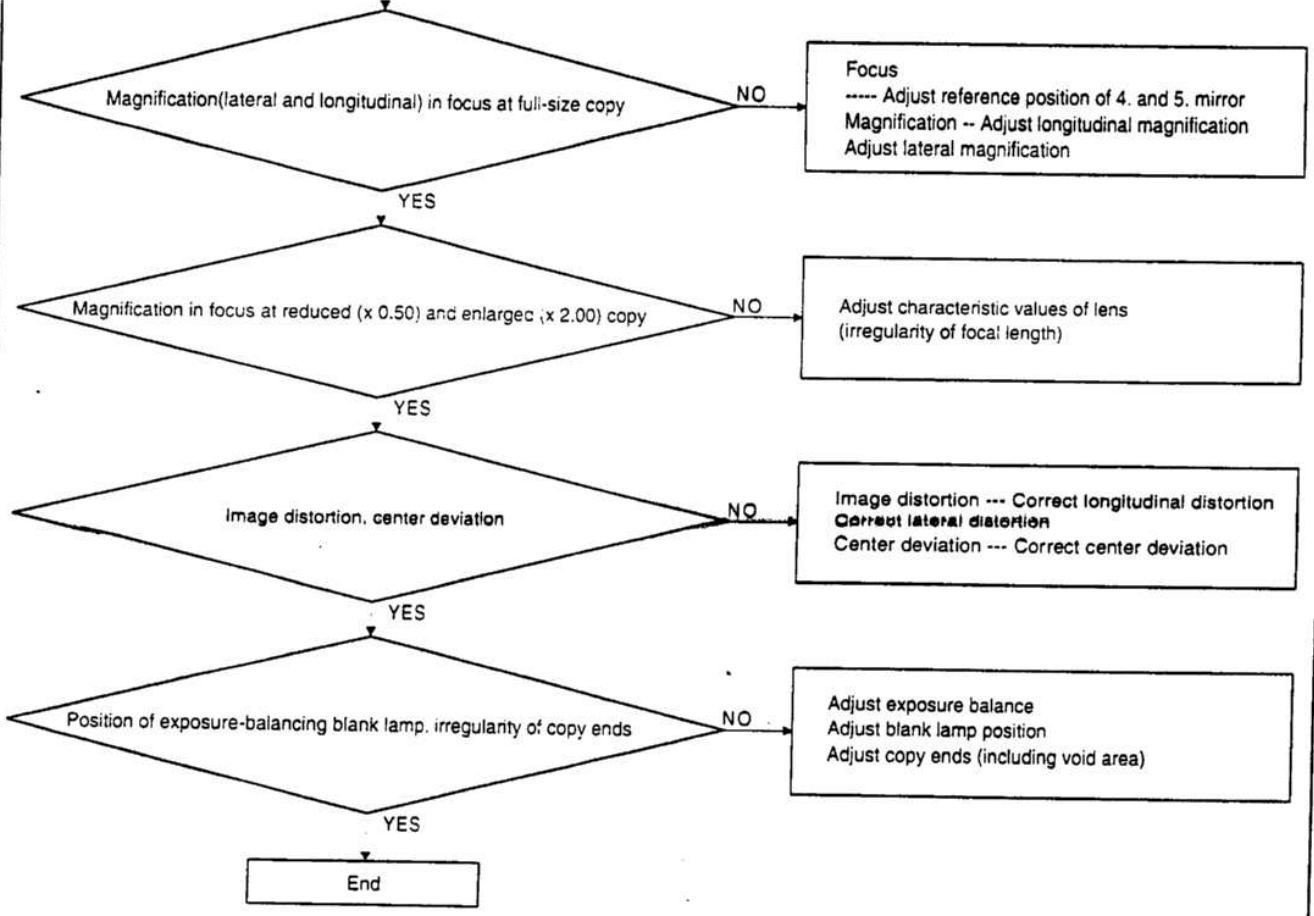

* The exposure balance, blank lamp position and copy ends can be separately adjusted. But items other than these must be adjusted according to the steps shown in the above flowchart.

(1) Adjusting the Reference Position of Lens

A reference value depending on lens characteristics must be input for adjusting the reference position of lens.
(This value determines the home position of lens).
(Procedure)
Perform Simulation 48-01 [=J] .
[C] → [=J] → [0] → [=J] → [4] → [8] → [PSW] → [1] → [PSW] → [=J] causes a preset value or "40" to → be shown on the copy quantity indicator.

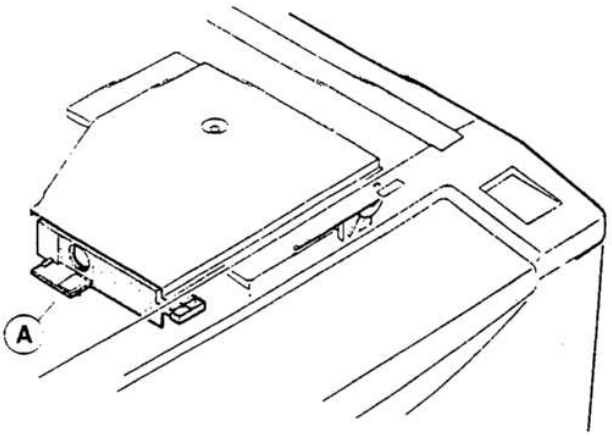

Substitute the value (irregularity of distance between original and lens ⇒ −3.9 to +3.9) on the label applied on A shown in the right figure, for "0-L" of the expression "O-L" is the value on label.
40 − [(0 − L) x 5] = reference value for correction
and type the result.
Eg.: If the result (reference value for correction) is 1.2 ;
40 − (1.2 x 5)= 34 value to be input

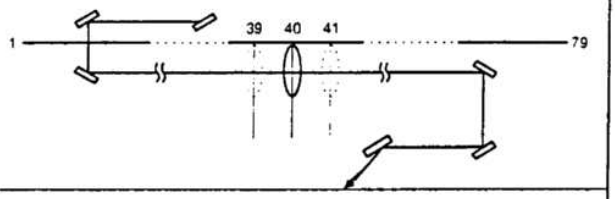

(2) Adjusting the Reference Position of 4. and 5. Mirror

A reference value corresponding on lens characteristics must be input also for adjusting the reference position of 4. and 5. mirror.
(This value determines the home position of 4. and 5. mirror base).
(Procedure)
Perform Simulation 48-01 [=J] .
[C] → [=J] → [0] → [=J] → [4] [8] → [PSW] → [1] → [PSW] causes a preset value or "50" to be shown on the copy quantity indicator.
Substitute the value described above for "0-L" of the expression
50 x [(0 − L) x 10]= reference value for correction and type the result.
Eg.: If the result (reference value for correction) is 1.2 ;
50 − (1.2 x 10) = 38 value to be input
If the preset reference value is larger than the mid value "50", the 4. and 5. mirrors are set further away from lens.
If the preset reference value is smaller than mid value "50", the mirrors are set closer to lens.

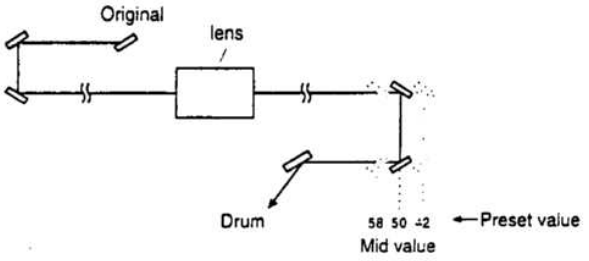

(3) Adjusting the Longitudinal Magnification

This adjustment must be done while the mirror bases A, B and C are in parallel with each other and the lens is focalized.
1. Set a scale on the original table as shown in the right figure.
2. Take a full-size copy of the scale using an A4-size(11" x 8.5") paper.
3. Compare the image on the paper with the scale.
4. Determine the correction factor for longitudinal magnification according to the following expression:
Correction factor for longitudinal magnification
$= \frac{\text{original size} - \text{copy size}}{\text{original size}} \times 100\ (\%)$
Eg.: Correction factor for longitudinal magnification
$= \frac{100 - 99}{100} \times 100 = 1$

