SHARP SERVICE MANUAL

CODE: 00ZSF2030FM/E

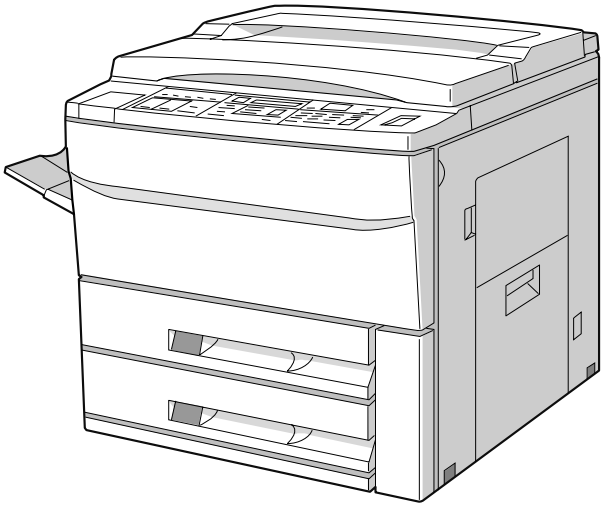

No.1

SF-2030
SF-D20/21
MODEL SF-DM11

CONTENTS

[1] PRODUCT OUTLINE 1-1

[2] PRODUCT SPECIFICATIONS 2-1

[3] OPTIONS SPECIFICATIONS 3-1

[4] COMPONENT IDENTIFICATION 4-1

[5] INSTALLATION 5-1

[6] DISASSEMBLY AND REASSEMBLY 6-1

[7] ADJUSTMENTS 7-1

[8] SIMULATION AND DIAGNOSTICS 8-1

[9] MAINTENANCE AND OTHERS 9-1

SHARP CORPORATION

This document has been published to be used for after sales service only.
The contents are subject to change without notice.

CONTENTS

[1] PRODUCT OUTLINE 1-1

1. General description 1-1
2. Target users 1-1
3. Major featurs 1-1
   (1) Compact body 1-1
   (2) Serviceability and fanctionality 1-1
   (3) High copy performance 1-1
   (4) Options 1-1
4. System outline 1-1

[2] PRODUCT SPECIFICATIONS 2-1

1. Basic specification 2-1
   (1) Type 2-1
   (2) Copy method 2-1
   (3) Kinds of originals 2-1
   (4) Copy speed 2-1
   (5) First copy time 2-1
   (6) Warmup time 2-1
   (7) Multicopy 2-1
   (8) Magnification ratio 2-2
   (9) Exposure 2-2
   (10) Paper feed 2-2
   (11) Developing method 2-3
   (12) Charge method 2-3
   (13) Transfer method 2-3
   (14) Separation method 2-3
   (15) Fusing method 2-3
   (16) Cleaning method 2-3
   (17) Light source 2-3
   (18) Blanking areas 2-3
   (19) Automatic duplex 2-3
   (20) Paper receiving tray and finishing 2-3
   (21) Additional features 2-4
   (22) Power supply 2-4
   (23) Power consumption 2-4
   (24) Appearance 2-4
   (25) Accessories 2-5
2. Consumables 2-5
3. Environmental requirements 2-8

[3] OPTIONS SPECIFICATIONS 3-1
1. SF-A56/17 3-1
2. SF-S15 3-1
3. SF-S53 3-1
4. SF-S18 3-1
5. SF-D20/D21 3-2
6. Others 3-2

[4] COMPONENT IDENTIFICATION 4-1
1. External view 4-1
2. Operation panel 4-3
3. Internal view 4-4
4. Clutches, solenoids 4-5
5. Sensors 4-6
6. Motors 4-7
7. Board list 4-8
8. Duplex copy tray 4-9
9. Desk unit (SF-D20/D21) 4-10

[5] INSTALLATION 5-1
A. Installing conditions 5-1
B. Installation procedure 5-2
(1) SF-2030 5-2
1. Releasing optical locks
A Removing the #2/3 mirror unit lock 5-2
B Releasing the lens and #4/5 mirror unit lock 5-2
2. Fuser unit set up 5-2
A Removing the fuser unit 5-2
B Tensioning the heat roller 5-2
C Installing the cleaning roller 5-2
3. Cleaning corona units 5-3
A Clean the main corona unit 5-3
B Clean the transfer/separation corona wires 5-4
4. Installing accessories 5-4
A Install the copy receive tray 5-4
5. Setting up the upper paper cassette 5-5
A Remove the packing screw of the cassette. 5-5
B Removing the cassette 5-5
C Change the size using the side plates F and R. 5-5
D Insert the rear plate 5-5
E Set the size detect spacer 5-5
F Change the paper size indication plate 5-5
G Set the cassette 5-6
H Load paper 5-6
6. Set up the lower paper cassette 5-6
A Remove the packing screw of the cassette. 5-6
B Change the size using the side plates F and R.
(It had been set to the A3 position when the machine left the factory.) 5-6
C Change the size of the rear plate. 5-6

D Set the size detect spacer 5-6
E Change the paper size indication plate 5-7
7. Lens lock release 5-7
A Removing the lens and releasing the lens lock 5-7
8. Setting the developing unit 5-8
A Supplying developer 5-8
9. Toner density sensor level adjustment 5-8
A Developing unit level adjustment 5-8
10. Toner supply 5-8
A Toner supply 5-8
11. Label attachment 5-9
A Label attachment 5-9
(2) SF-A17/A56 5-10
1 Remove the document cover. 5-10
2 Mount the ADF onto the copier. 5-10
3 Adjust the angle of ADF. 5-11
4 Connect the ADF connectors. 5-11
5 Connect the ADF tray connector. 5-11
6 Attach the tray. 5-11
7 Set the mode. 5-12
8 Adjust the center of the copy. 5-12
9 Adjust the position of the leading edge of original 5-12
(3) SF-S53 5-13
A Mounting of the staple sorter onto the copier 5-15
B Staple sorter operation check 5-17
(4) SF-S52 5-19
(5) SF-S18 5-24
1 Mount the lock plate. 5-24
2 Mount the support guide. 5-24
3 Remove the cut-outs. 5-25
4 Insert the spacers. 5-25
5 Mount the sorter seat. 5-25
6 Mount the sorter seat cover. 5-25
7 Mount the sorter. 5-25
8 Mount the stopper. 5-26
9 Remove the sorter’s front cabinet panel. 5-26
10 Attach the sorter to the sorter seat. 5-26
11 Mount the sorter’s front cabinet panel. 5-26
12 Connect the sorter connector. 5-27
13 Set the mode. 5-27
(6) SF-S15 (20-Bin Sorter) 5-27
1 Install the support guide. 5-27
2 Mount the sorter seat to the desk. 5-28
3 Remove the front panel of the sorter. 5-28
4 Place the sorter on the sorter seat. 5-28
5 Remove the rear cabinet panel from the copier and cut out the notch in the cabinet panel. 5-28
6 Connect the sorter connectors. 5-29
7 Reattach the rear cabinet panel. 5-29
8 Reattach the front panel of the sorter. 5-29
9 Adjust the clearance between the sorter and the copier. 5-29

10 Set the mode. 5-29
(7) SF-D20/SF-D21 5-30
1 Place the copier on the desk. 5-30
2 Secure the copier to the desk. 5-30
3 Remove the rear cabinet panel from the copier. 5-31
4 Connect the desk relay harness. 5-31
5 Remount the rear cabinet panel onto the copier. 5-31
6 Move the copier to the desired installation location. 5-31
7 Lock the casters. 5-31
8 Lower the adjuster to secure the desk in place. 5-31
9 Pull out the paper cassette. 5-31
10 Adjust the positions of the front and rear side plates. 5-32
11 Adjust the position of the rear edge plate. 5-32
12 Set the paper size detection spacer. 5-32
13 Change the paper size indicator. 5-32
14 Re-insert the paper cassette. 5-33
15 Place the paper in the cassette. 5-33
16 Set the mode. 5-33
17 Pull out the large-capacity paper cassette. 5-33
18 Adjust the positions of the front and rear paper guides. 5-33
19 Adjust the position of the rear edge paper guide. 5-34
20 Set the paper size detection spacer. 5-34
21 Change the paper size indicator. 5-34
22 Re-insert the large-capacity paper cassette. 5-34
23 Place the paper in the cassette. 5-34
24 Set the mode. 5-35
(8) SF-IC11 5-35
1 To remove the stopper for the cassette unit. 5-35
2 To change the size setting of side plate F and side plate R. 5-36
3 To change the size position of the rear end plate. 5-36
4 To set the size detection spacer. 5-36
5 To place the cassette size labels. 5-37
6 To change the paper size indication plate. 5-37
7 To install the cassette main unit on the paper tray. 5-37
(9) SF-DM11 5-37
1 To remove the rear cabinet of the copier main unit. 5-37
2 To install the ADU drive unit. 5-38
3 To install the rear cabinet of the copier main unit. 5-38
4 To remove the toner collecting container. 5-38
5 To remove the cover plate. 5-38
6 To install the ADU unit. 5-38
7 To install the right stopper. 5-38
8 To install the toner collecting container. 5-38
9 To check and adjust the matching guide. 5-38
10 To adjust the center dislocation. 5-38
(10) SF-CM11 5-40
1 Remove the rear cabinet panel from the copier 5-40
2 Install the lift-up unit. 5-40
3 Remount the rear cabinet panel onto the desk. 5-40
4 Remove the toner collecting plate. 5-41

5 Remove the cover plate. . . . 5-41
6 Install the paper feed unit. . . . 5-41
7 Remove the packing screw from the paper cassette. . . . 5-41
8 Change the positions of the front and rear side plates. . . . 5-41
9 Position the rear edge plate. . . . 5-41
10 Set the paper size detection spacer. . . . 5-42
11 Change the paper size indicator. . . . 5-42
12 Fit the paper cassette guides into the guide rails. . . . 5-42
13 Mount the right stopper. . . . 5-42
14 Install the paper cassette. . . . 5-42
15 Place the paper. . . . 5-42
16 Remount the right cabinet panel onto the desk. . . . 5-42
17 Adjust any center misalignment 5-43

[6] DISASSEMBLY AND REASSEMB17 6-1

1. Process unit 6-1
2. Manual feed multicopy unit 6-3
3. Paper feed unit 6-5
4. Transport baseplate unit 6-7
5. Fuser unit 6-9
6. Duplex copy unit 6-11
7. Rear frame side major components 6-13
8. Operation panel unit and document size sensor board 6-16
9. Optical unit 6-18

[7] ADJUSTMENT 7-1

1. Developing Unit 7-1
   (1) Clearance Adjustment of Developing Doctor Blade 7-1
   (2) Position Adjustment of Developing Magnet Roller Main Pole 7-1
   (3) Developing Bias Adjustment 7-2
   (4) Notes on installing various rollers of the developing unit 7-2
   (5) Notes on applying the developing side seals (front and rear) 7-2
2. Processing Unit 7-3
   (1) Adjustment of Blank Lamp Position 7-3
   (2) Adjustment of High-Voltage Output Balance 7-3
      A. Applying the Special Measuring Tool 7-3
      B. Adjusting the Transfer Charger Current 7-4
      C. Checking the Electrostatic Main Charger Current 7-5
      D. Adjusting the Electrostatic Main Charger Grid Voltage 7-5
      E. Adjusting the Separation Charger Output 7-6
   (3) Notes on maintenance for high-voltage units 7-6
      A. Electrostatic Charger Unit 7-6
      B. Transfer/Separation Charger Unit 7-6
3. Optical System 7-7
   (1) Adjusting the Reference Position of Lens 7-8
   (2) Adjusting the Reference Position of 4. and 5. Mirror 7-8
   (3) Adjusting the Longitudinal Magnification 7-8
   (4) Adjusting the Resolution 7-9
   (5) Adjusting the Lateral Magnification 7-10

(6) Inputting the Lens Travel Correction Value . . . 7-10
(7) Correcting the Longitudinal Distortion . . . 7-12
(8) Correcting the Lateral Distortion . . . 7-13
(9) Adjusting the Center Deviation . . . 7-14
(10) Adjusting the Exposure Balance . . . 7-14
(11) Adjusting the Copy . . . 7-15

4. Adjustment of Copy Density . . . 7-17
1. When must the copy density be adjusted ? . . . 7-17
2. Notes on adjustment of copy density . . . 7-17
3. Procedure for copy density adjustment . . . 7-17
(1) Initial setting of auto-exposure density level (User adjustment) . . . 7-17
(2) Initial setting of TSM mode (User adjustment) . . . 7-17
(3) Adjustment of AE sensor level . . . 7-18
(4) Setting of drum sensitivity . . . 7-18
(5) Setting of test chart . . . 7-18
(6) Adjustment of copy density . . . 7-18

5. Adjustments relating to Process Control . . . 7-21

[8] Simulation and diagnostics . . . 8-1

1. Simulation . . . 8-1
(1) Introduction . . . 8-1
(2) Purpose . . . 8-1
(3) Simulation execution procedure . . . 8-1

[9] Maintenance and Others . . . 9-1

1. Maintenance Schedule . . . 9-1

2. Counters and Simulations Related to Maintenance . . . 9-2
(1) List of counters and simulations related to maintenance . . . 9-2
(2) Maintenance Indication . . . 9-3
(3) Setting the copy counter mode . . . 9-5

3. Replacing the Ozone Filter . . . 9-5
(1) Replacing the suction ozone filter . . . 9-5

4. Oil/Grease Points . . . 9-6
(1) Gear of main driving unit . . . 9-6
(2) Gear of variable-speed paper-feed unit . . . 9-6
(3) Gear of paper-feed driving unit . . . 9-6
(4) Fusing unit driving gear . . . 9-6
(5) Paper exit roller driving gear . . . 9-6
(6) Paper-feed torque limiter 500-sheet cassette brake spring . . . 9-7
(7) Optical rail . . . 9-7

5. Maintenance Schedule of Options . . . 9-7

[1] PRODUCT OUTLINE

1. General description

The SF-2030 is medium class copier that produces 30 copies per minute. The SF-2040 has all the standard features of medium class copiers to provide high productivity in offices with improved versatility for users.

2. Target users

Average copy volume: 8,000 ~ 12,000 copies/month

3. Major features

(1) Compact body

Use of a front loading paper cassette.

(2) Serviceability and functionality

① Use of a liquid crystal display.

② Department control counter (standard provision, max. 50 departments).

③ Use of key operator codes.

(3) High copy performance

① First copy time: 4.1sec

② Job speed
S → S: 100%, D → D: 70%

(4) Options

Refer to the system outline below.

4. System outline

10-bin sorter (SF-S18)

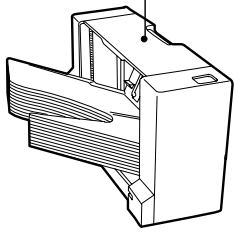

20-bin sorter (SF-S15)

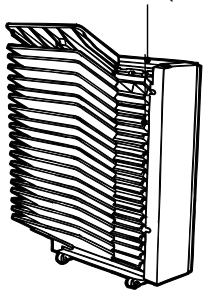

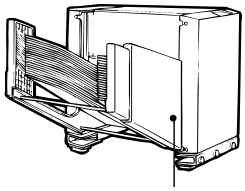

10-bin staple sorter (SF-S52)

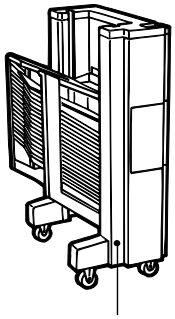

20-bin staple sorter (SF-S53)

Automatic document feeder
(SF-A17)

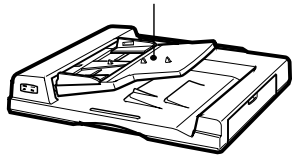

Reversing automatic document feeder
(SF-A56)

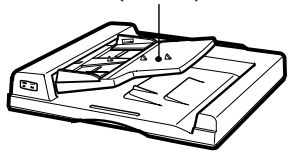

Document cover (SF-CV13)

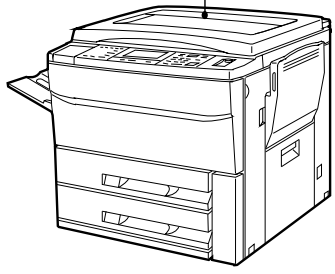

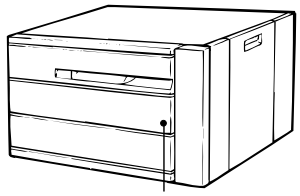

Stand/500-sheet paper drawer (SF-D20)
(not sold in some areas)

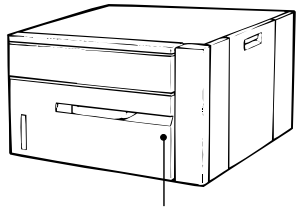

Stand/1000-sheet paper drawer
(SF-D21)

Duplex module (SF-DM11)

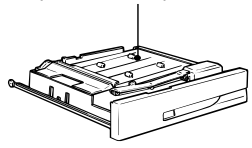

Cassette (SF-IC11)

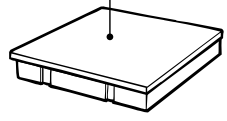

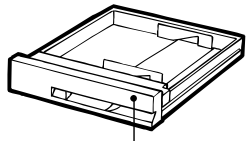

Cassette (for replacement)
(SF-CM11)

[2] PRODUCT SPECIFICATIONS

1. Basic specification

(1) Type

Desktop

(2) Copy method

Dry electrostatic copier

(3) Kinds of originals

Sheet, book, three dimensional object		
Thickness of original:		Maximum 30mm in level with the original cover in use.
Weight of original:		Maximum 1.8 kg (4 pounds)
Maximum original size:		A3 (11" x 17"), Ledger
Original alignment:		Center and left
Original sensor:		Not used. (Provided in RADF/ADF.)
Sensing size	AB series;	A3, B4, A4, A4R, A5
	Inch series:	Ledger, Legal, Letter, Letter R, Invoice

Option:	RADF
Original loading capacity:	50 sheets
Original size:	A3 to A5, Ledger ~ Invoice
Original replace speed:	30 sheets per minute
Weight of original:	35 to 128 g/m^2 (14 to 34 lbs)
Mixed paper feed mode:	Possible (same width)

(4) Copy speed

	Actual (1:1)	Enlarge (ratio)	Reduce (ratio)
A3	16 sheets per minute	11 sheets per minute (200%)	12 sheets per minute (50%)
B4	18 sheets per minute	11 sheets per minute (200%)	14 sheets per minute (50%)
A4 (portrait)	30 sheets per minute	14 sheets per minute (200%)	23 sheets per minute (50%)
A4 (landscape)	23 sheets per minute	12 sheets per minute (200%)	17 sheets per minute (50%)
B5 (portrait)	30 sheets per minute	14 sheets per minute (200%)	23 sheets per minute (50%)
B5 (landscape)	23 sheets per minute	12 sheets per minute (200%)	17 sheets per minute (50%)
Ledger	16 sheets per minute	11 sheets per minute (200%)	12 sheets per minute (50%)
Legal	18 sheets per minute	11 sheets per minute (200%)	14 sheets per minute (50%)
Letter (portrait)	30 sheets per minute	14 sheets per minute (200%)	23 sheets per minute (50%)
Letter (landscape)	23 sheets per minute	12 sheets per minute (200%)	17 sheets per minute (50%)

NOTE: Copy speeds indicated in Enlargement and Reduction modes are the slowest speeds in the respective mode.

(5) First copy time

About 4.1 seconds from upper cassette

(6) Warmup time

About 60 seconds
(With pre-heat feature)
Misfeed recovery time: 8 seconds, provided the machine is in the standard condition in 60 seconds after opening the door.

(7) Multicopy

Maximum multicopy number: 999 sheets

(8) Magnification ratio

Fixed ratio	AB series: 4R+4E; 200, 141, 122, 115, 100, 86, 81, 70, 50%
	Inch series: 4R+4E; 200, 141, 129, 121, 100, 95, 77, 64, 50%
Zooming range:	50 to 200% (1% increments)

(9) Exposure system

Slit exposure and moving optical system (fixed original table)

(10) Paper feed

Copy size (maximum ~ minimum)	AB series:	A3 to A6R
	Inch series:	Ledger ~ Invoice
Method	One tray + multi-manual feed	
Capacity	500 + 50 sheets	

AB series

Paper entry	Paper size	Paper weight	Size selection	Side, front
Upper cassette (Option)	B5/B5R A4/A4R/B4/A3	56 ~ 80g/m^2 15 ~ 21 lbs.	Selection by way of guide replacement by the service engineer	Front, drawer in the same body (ADU compatibility available)
Lower cassette	A5/B5/B5R A4/A4R/B4/A3 A5: ✳ With the option inner cassette used	56 ~ 80g/m^2 15 ~ 21 lbs.	Selection by way of guide replacement by the service engineer	By way of front, inner cassette

Inch series

Paper entry	Paper feed size	Paper weight	Size selection	Side, front
Upper cassette (Option)	Letter/Letter R/ Legal/Ledger	56 ~ 80g/m^2 15 ~ 21 lbs.	Selection by way of guide replacement by the service engineer	Front, drawer in the same body (ADU compatibility available)
Lower cassette	Letter/Letter R/ Legal/Ledger/ Invoice ✳ With the option inner cassette used	56 ~ 80g/m^2 15 ~ 21 lbs.	Selection by way of guide replacement by the service engineer	By way of front, inner cassette

Initial setting

	Japan	Outside Japan (Inch)	Outside Japan (AB)	Remark
Copier upper stage	✳ B5R	—	—	✳ When shipping, the domestic (Japan/Taiwan) paper feed module is attached.
Copier lower stage	A3	Ledger	A3	
Option cassette module	A4	Legal	A4	SF-CM11
Multi-stage desk (1st stage) Multi-stage desk (2nd stage) Multi-stage desk (3rd stage)	B4 A3	Letter R — —	A4R — —	SF-D19 (Japan only) SF-D20 (Outside Japan only)
LCD desk (1st stage) LCD desk (2nd stage)	— —	— Letter	— A4	SF-D21 (Outside Japan only)
Inner cassette	A3	Ledger	A3	SF-IC11

Manual feed

Paper size:	AB series: Inch series:	A3 to A6R Ledger ~ Invoice (Min. width: 100mm, Min. length: 139.7mm)
Paper weight:	Multifeed mode: Single feed mode:	56 to 80 g/m^2 (15 to 21 lbs) 52 to 128 g/m^2 (14 to 34 lbs) (A4 size or under, if above 105 g/m^2 or 28 lbs)
Kind of paper:		Standard, Sharp designated paper, OHP
Detection size	Inch series: AB series:	Available: Ledger, Legal, Letter, Letter (R), invoice Available: A3, B4, A4, A4R, A5

(11) Developing method Dry, two components magnetic brush method

(12) Charge method (–) DC saw-tooth electrode method

(13) Transfer method (–) DC Corotron method

(14) Separation method AC Corotron method

(15) Fusing method Heat roller method

(16) Cleaning method Blade method

(17) Light source Halogen lamp

(18) Blanking areas

Void area:	3mm from the lead edge
Image loss:	3mm at maximum during the actual (1:1) copy mode

(19) Automatic duplex

Option (SF-DM11)		
Location		Copier upper module slot
Size	AB series:	A3, B4, A4, A4R, A5 (B5 and B5R only JAPAN)
	Inch series:	Ledger, Legal, Letter, Letter R
Capacity		50 sheets (below A4 or letter sizes) or 30 sheets (above B4 or 8½" x 14" size)
Paper weight		56 to 80 g/m^2 (15 to 21 lbs)

(20) Paper receive tray and finishing

Paper receive tray capacity		250 sheets	
Finishing (Standard/Option)		Option	
Finisher function	Sorted bin capacity	Non-sorted bin capacity	
10-bin sorter	30 sheets (A4)	100 sheets	Shifting bins (SF-S18)
20-bin sorter	50 sheets (All sizes)	100 sheets	Fixed bins (SF-S15)
20-bin staple sorter	50 sheets (A4)	250 sheets	Shifting bins (SF-S53)
20-bin staple sorter	35 sheets (25 sheets if stapler used)	100 sheets	Shifting bins (SF-S52)

(21) Additional features

	Availability of feature	
APS	○	Overseas: Available when RADF/ADF is used
AMS	○	Inhibited when mixed paper feed/ Available when RADF/ADF is used
Margin shift	○	9mm shift (S → S), with adjustment function
DPCM	○	Enlarge not permitted. Combination with the duplex function allowed.
Edge erase	○	7 to 12mm wide depending on the size. Equivalent to SF-2022/2027.
Cover insertion	○	Selection of cover/rear or cover/both
Job memory	○	Recordable up to 9 jobs
Auditor	○	Allowes up to 50 departments.
Message display	○	
Key operator program	○	
Communication	○	Bi-directional. Option I/F PWB (available from service parts.)
Process control	○	
Auto start	○	From the energy save mode.
Auto tray switching	○	
Priority selection of tray	×	
Vendor	○	

APS: Auto paper selection
AMS: Auto magnification ratio selection
DPCM: Dual page copy mode

Binding margin shift

Width	AB series	Inch series
Single sides to single sided	9mm	1/4"
Double sided to single sided	9mm	1/4"
Single sided to double sided (front)	9mm	1/4"
(reverse)	9mm	1/4"
Double sided to double sided (front)	9mm	1/4"
(reverse)	9mm	1/4"

Frame edge erase

AB series		Inch series	
Size	Deleted width (mm)	Size	Deleted width (mm)
A3	11.5±3	Ledger	11.5±3
B4	9.5±3	Legal	7 ±3
A4	11.5±3	Letter	11.5±3
A4R	10 ±3	Letter R	7 ±3
B5	9.5±3	Invoice	7 ±3
B5R	8 ±3		

(22) Power supply

Voltage: 100V, 110V, 120V, 127V, 220 ~ 230V, 240V
Frequency: 50/60Hz, universal

(23) Power consumption

Maximum power consumption: 1.5KW, maximum, with options used

(24) Appearance

WxDxH (mm) 633 x 650 x 567 (at the top of the table glass)
633x 650 x 607 (at the top of the original cover)
Occupied area (W x D in mm) 1205 x 650 (with the paper receive tray and manual feed bypass open
Weight: Main body About 62Kg
Paper feed module: 3.9Kg
Original cover: 1.5Kg

(25) Accessories

Destination	Japan	SEC	SECL	SEEG	SUK	SCA	AB agent	Inch agent
Drum	Installed when shipping.	Installed when shipping.	Installed when shipping.	Separately packed.	Separately packed.	Installed when shipping.	Partly packed.	Partly packed.
Developer (Black)	○	×	×	×	×	×	×	×
Toner cartridge	○	×	×	×	×	×	×	×
Original cover	Standard provision	Option	Option	Option	Option	Option	Standard provision	
Paper exit tray 1 [*1]	○							
Original table	×	○					×	
Toner collection container	○ (4 pcs.) One is installed when shipping.							
Operation manual	Japanese	Exclusive English	English/French	GG: German BG: None	Exclusive English	English	English/French/ Arabic Typical example	English/ Spanish Typical example
Dust cover	○	×					○ (Part)	
Zooming ratio table	○							
ROM language	Japanese	English	English	GG: German BG: None	English	English	English/French/Spanish depending on the destination.	
Key sheet	Japanese	English	English/French	GG: German BG: None	English	English	English, partly Spanish	English, partly Spanish
	SEL = English/French packed together. SEEG (BG) = Treated in a kit.							
Other printed matters: Delivery/installation report (Japan/SEEG), SCA warranty, Warranty registration (SUK), Maintenance card, Counter contract × 2 (Japan)								

[*1]: Retractable (Japan), Fixed (Outside Japan)

2. Consumables

SEC

No.	Name	Content		Life	Product name	Package	Remark
1	Drum	OPC drum	× 1	80K	SF-230DR	10	
2	Developer (Black)	Developer	(850g) × 10	80K (× 10)	SF-230MD1	1	(SF-230ND1) × 10 = SF-230MD1
3	Toner (Black)	Toner cartridge	(600g) × 10	15K (× 10)	SF-230MT1	1	(SF-230NT1) × 10 = SF-230MT1
4	Upper heat roller kit	Upper heat roller Fusing separation pawl (Upper) Fusing gear	× 1 × 4 × 1	160K	SF-230UH	5	For replacement of the fusing separation pawl (80K life) at every 80K, use the service part.
5	Lower heat roller kit	Lower heat roller Fusing separation pawl (Lower)	× 1 × 2	160K	SF-240LH	5	For replacement of the fusing separation pawl (80K life) at every 80K, use the service part.
6	80K maintenance kit	Cleaner blade Charging blade unit Drum separation pawl unit	× 1 × 1 × 1	80K	SF-235KA1	5	
7	Cleaner blade	Cleaner blade	× 10	80K (× 10)	SF-222CB	1	
8	Upper cleaning roller	Upper cleaning roller	× 10	80K (× 10)	SF-240UR	1	(SF-240RU) × 10 = SF-240UR
9	Lower cleaning roller	Lower cleaning roller	× 10	80K (× 10)	SF-235CR2	1	
10	Staple cartridge	Staple cartridge (3 pcs. pack)	× 10		SF-LS51	1	Common to the one for the staple sorter (SF-S51). (SF-S51) x 10 = SF-LS51
11	Staple cartridge	Staple cartridge	× 5	5,000 times × 5	SD-LS20	10	Common to the one for the staple sorter (SF-S53). (SD-SC20) x 5 = SD-LS20

✳ For Toner collection container (4 pcs./80K)/Screen grid (80K)/Charger wire (80K)/Ozone filter (80K)/Toner reception seal (160K)/DV seal (160K), use service parts. The charging plate nit (80K) and drum separation pawl unit (80K) are also available as service parts.

SECL

No.	Name	Content	Life	Product name	Package	Remark
1	Drum	OPC drum × 1	80K	SF-2300R	10	
2	Developer (Black)	Developer (850g) × 10	80K (× 10)	SF-230MD1	1	(SF-230ND1) × 10 = SF-230MD1
3	Toner (Black)	Toner cartridge (600g) × 10	15K (× 10)	SF-230MT1	1	(SF-230NT1) × 10 = SF-230MT1
4	80K maintenance kit	Upper cleaning roller × 1 Lower cleaning roller × 1 Cleaner blade × 1 Toner collection container × 4 Fusing separation pawl (Upper) × 4 Fusing separation pawl (Lower) × 2 Screen grid × 1 Charging plate unit × 1 Drum separation pawl unit × 1	80K	SF-240KA	1	
5	160K maintenance kit	Upper heat roller × 1 Lower heat roller × 1 Toner reception seal × 1 DV seal × 1 Low speed gear × 1	160K	SF-230KB	1	
6	Staple cartridge	Staple cartridge (3 pcs. pack) × 1		SF-SC51	10	Common to the one for the staple sorter (SF-S51)
7	Staple cartridge	Staple cartridge × 5	5,000 times × 5	SD-LS20	10	Common to the one for the staple sorter (SF-S53) (SD-SC20) x 5 = SD-LS20

SEEG, SUK

No.	Name	Content	Life	Product name	Package	Remark
1	Drum	OPC drum × 1	80K	SF-230DM	10	
2	Developer (Black)	Developer (850g) × 10	80K (× 10)	SF-230LD1	1	(SF-230DV1) × 10 = SF-230LD1
3	Toner (Black)	Toner cartridge (600g) × 10	15K (× 10)	SF-230LT1	1	(SF-230T1) × 10 = SF-230LT1
4	80K maintenance kit	Upper cleaning roller × 1 Lower cleaning roller × 1 Cleaner blade × 1 Toner collection container × 4 Fusing separation pawl (Upper) × 4 Fusing separation pawl (Lower) × 2 Screen grid × 1 Charging plate unit × 1 Drum separation pawl unit × 1	80K	SF-240KA	1	Distinguished from A3SF240KF to cope with EAN code.
5	160K maintenance kit	Upper heat roller × 1 Lower heat roller × 1 Toner reception seal × 1 DV seal × 1 Fusing gear × 1	160K	SF-230KB	1	Distinguished from A3SF230KB to cope with EAN code.
6	Staple cartridge	Staple cartridge (3 pcs. pack) × 1		SF-SC51	10	Common to the one for the staple sorter (SF-S51).
7	Staple cartridge	Staple cartridge × 5	5,000 times × 5	SF-LS20	10	Common to the one for the staple sorter (SF-S53). (SD-SC20) x 5 = SD-LS20

SCA, SCNZ, Middle East, Africa

No.	Name	Content		Life	Product name	Package	Remark
1	Drum	OPC drum	× 1	80K	SF-230DM	10	
2	Developer (Black)	Developer	(850g)× 1	80K (× 10)	SF-230LD1	1	(SF-230DV1) × 10 = SF-230LD1
3	Toner (Black)	Toner cartridge	(600g)× 1	15K (× 10)	SF-230LT1	1	(SF-230T1) × 10 = SF-230LT1
4	80K maintenance kit	Upper cleaning roller	× 1	80K	SF-240KA	1	
		Lower cleaning roller	× 1				
		Cleaner blade	× 1				
		Toner collection container	× 4				
		Fusing separation pawl (Upper)	× 4				
		Fusing separation pawl (Lower)	× 2				
		Screen grid	× 1				
		Charging plate unit	× 1				
		Drum separation pawl unit	× 1				
5	160K maintenance kit	Upper heat roller	× 1	160K	SF-230KB	1	
		Lower heat roller	× 1				
		Toner reception seal	× 1				
		DV seal	× 1				
		Fusing gear	× 1				
6	Staple cartridge	Staple cartridge (3 pcs. pack)	× 1		SF-SC51	10	Common to the one for the staple sorter (SF-S51)
7	Staple cartridge	Staple cartridge	× 5	5,000 times × 5	SD-LS20	10	Common to the one for the staple sorter (SF-S53) (SD-SC20) x 5 = SD-LS20

Asia, Middle/South America

No.	Name	Content		Life	Product name	Package	Remark
1	Drum	OPC drum	× 1	80K	SF-230DR	10	
2	Developer (Black)	Developer	(850g)× 10	80K (× 10)	SF-230CD1	1	(SF-230SD1) × 10 = SF-230CD1
3	Toner (Black)	Toner cartridge	(600g)× 10	15K (× 10)	SF-230CT1	1	(SF-230ST1) × 10 = SF-230CT1
4	80K maintenance kit	Upper cleaning roller	× 1	80K	SF-240KA	1	
		Lower cleaning roller	× 1				
		Cleaner blade	× 1				
		Toner collection container	× 4				
		Fusing separation pawl (Upper)	× 4				
		Fusing separation pawl (Lower)	× 2				
		Screen grid	× 1				
		Charging plate unit	× 1				
		Drum separation pawl unit	× 1				
5	160K maintenance kit	Upper heat roller	× 1	160K	SF-230KB	1	
		Lower heat roller	× 1				
		Toner reception seal	× 1				
		DV seal	× 1				
		Fusing gear	× 1				
6	Staple cartridge	Staple cartridge (3 pcs. pack)	× 1		SD-SC51	10	Common to the one for the staple sorter (SF-S51)
7	Staple cartridge	Staple cartridge	× 5	5,000 times × 5	SD-LS20	10	Common to the one for the staple sorter (SF-S53) (SD-SC20) x 5 = SD-LS20

3. Environmental requirements

Conditions required for proper operation of the machine, as well as assurance of copy quality, the following are requested.

① Standard conditions
Recommended temperature range at 20 to 25 Centigrade (68 to 77 degrees F) and humidity range at 65 ± 5%RH.

② Operating conditions

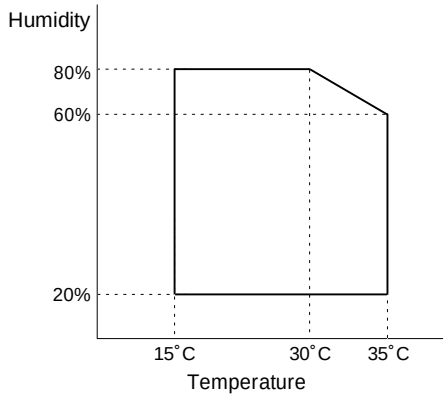

③ Shipping conditions

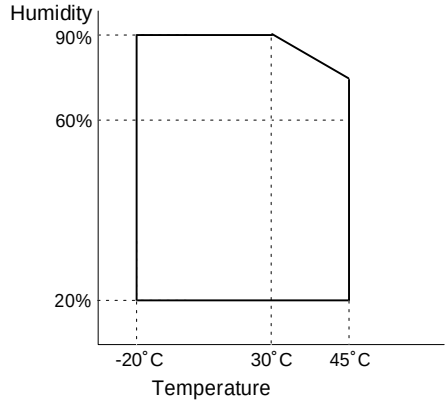

④ Consumables storage conditions

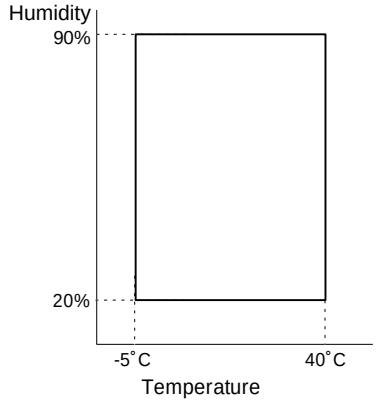

[3] OPTIONS SPECIFICATIONS

1. SF-A17/A56

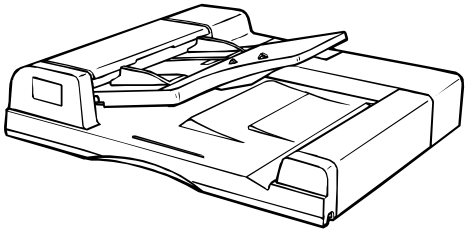

Acceptable originals	Weight:	Single-sided originals: 14 to 34 lbs. Two-sided originals (SF-A56 only): 14 to 34 lbs. for 5-1/2″ × 8-1/2″ and 8-1/2″ × 11″ originals. 14 to 29 lbs. for 8-1/2″ × 14″ and 11″ × 17″ originals.
	Size:	5-1/2″ × 8-1/2″ to 11″ × 17″
	Capacity:	Up to 50 sheets for 5-1/2″ × 8-1/2″, 8-1/2″ × 11″ , and 8-1/2″ × 14″ originals provided the total aggregate thickness does not exceed 1/4″ or 6.5 mm (14 to 20 lbs.) or 3/16″ or 5 mm (21 to 34 lbs.) Up to 30 sheets for 11″ × 17″ originals.
Power supply		Drawn from the copier
Weight		SF-A17: Approx. 22.1 lbs. (10 kg) SF-A56: Approx. 24.3 lbs. (11 kg)
Dimensions	SF-A17:	22-31/64″ (W) × 20-33/64″ (D) × 4-11/32″ (H) (571 mm (W) × 521 mm (D) × 110 mm (H))
	SF-A56:	23-5/16″ (W) × 20-33/64″ (D) × 4-11/32″ (H) (592 mm (W) × 521 mm (D) × 110 mm (H))

2. SF-S15

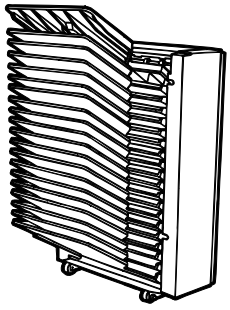

Name	20-bin sorter
No. of bins	20 bins
Paper collection	Copy face up
Capacity per bin	Max. 50 sheets (100 sheets: Top bin)
Allowable paper size/weight for collating	Max. A3, Min.: B5 (Min. A6 for non-sort) Non-sort: 52 ~ 128g/m^2, Sort/Grouping: 56 ~ 80g/m^2
Power source	Supplied from the copier.
Dimensions	500mm (W) × 520mm (D) × 957mm (H)
Weight	About 13kg

3. SF-S53

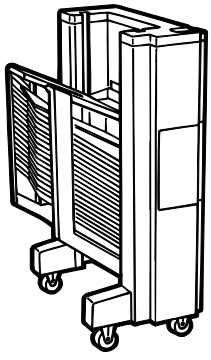

Name	Staple sorter
No. of bins	20 bins
Paper collection	Copy face up
Capacity per bin	Max. 50 sheets (250 sheets: Top bin)
Allowable paper size/weight for collating	Max.: A3, Min.: B5 (Non-sort: Min. A5), Non-sort: 52 ~ 128g/m^2, Sort/staple sort/grouping: 56 ~ 89g/m^2
No. of sheets for stapling	50 sheets (80g/m^2)
Power source	Supplied from the copier.
Dimensions	475mm (W) × 597mm (D) × 995mm (H)
Weight	About 42.1kg

4. SF-S18

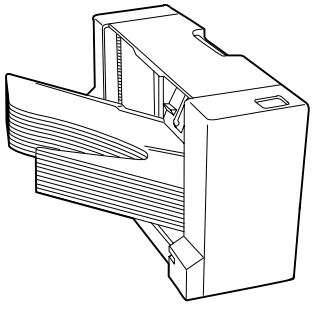

Name	10-bin sorter
No. of bins	10 bins
Reception method	Copy face up
Capacity per bin	Max. 30 sheets (Top bin: 100 sheets)
Collatable paper size/weight	Max. A3, Min. A5 (Non-sort, Min. A6) Non-sort: 52 ~ 128g/m^2, Sort/group: 56 ~ 80g/m^2
Power source	Supplied from the copier.
Dimensions	335mm(W) × 493mm(D) × 298mm(H)
Weight	About 7kg

5. SF-D20/D21

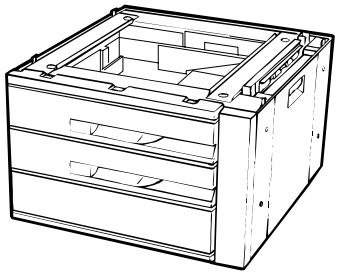

Name	2-cassette paper feed desk
Paper size and capacity	550 sheets of A3, B4, A4, or B5 for each cassette
Paper weight	56 ~ 80g/m^2
Paper transport system	Roller transport (center reference)
Power source	Supplied from the copier.
Dimensions	600mm (W) × 625mm (D) × 451mm (H)
Weight	About 32kg

6. SF-DM11

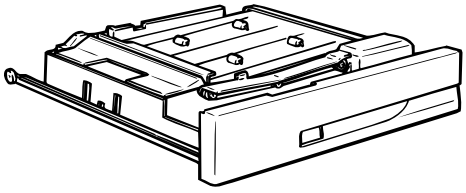

Name	Duplex module
Paper size	A3 ~ B5
Paper weight	56 ~ 80g/m^2
Capacity	A3/B4: 30 sheets, A4/B5: 50 sheets
Power source	Supplied from the copier.
Weight	About 6kg

7. SF-CM11

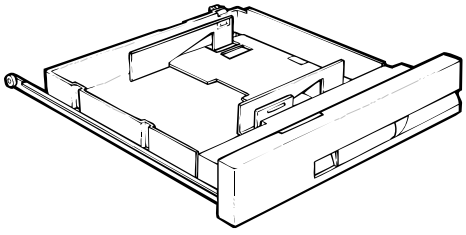

Cassette module

- Equivalent to the upper cassette of the copier body. The optional 2-cassette paper feed desk can be attached.

8. SF-IC11

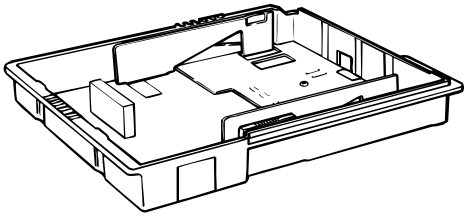

Inner cassette

- Paper cassette for replacement of the lower cassette.

9. SF-71A (counter), SF-71B (socket)

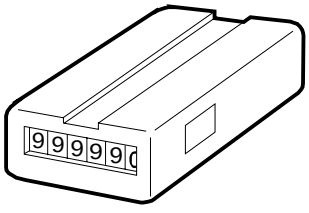

- Personal counter

10. Other counters

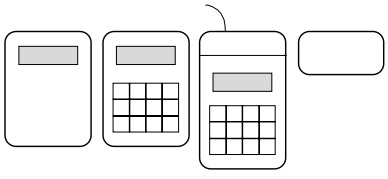

Card-type department counter (SF-EA11)
Password-system department counter (SF-EA12)
Counter commander (SF-EA13)

11. Desk SF-DS15

[4] COMPONENT IDENTIFICATION

1. External view

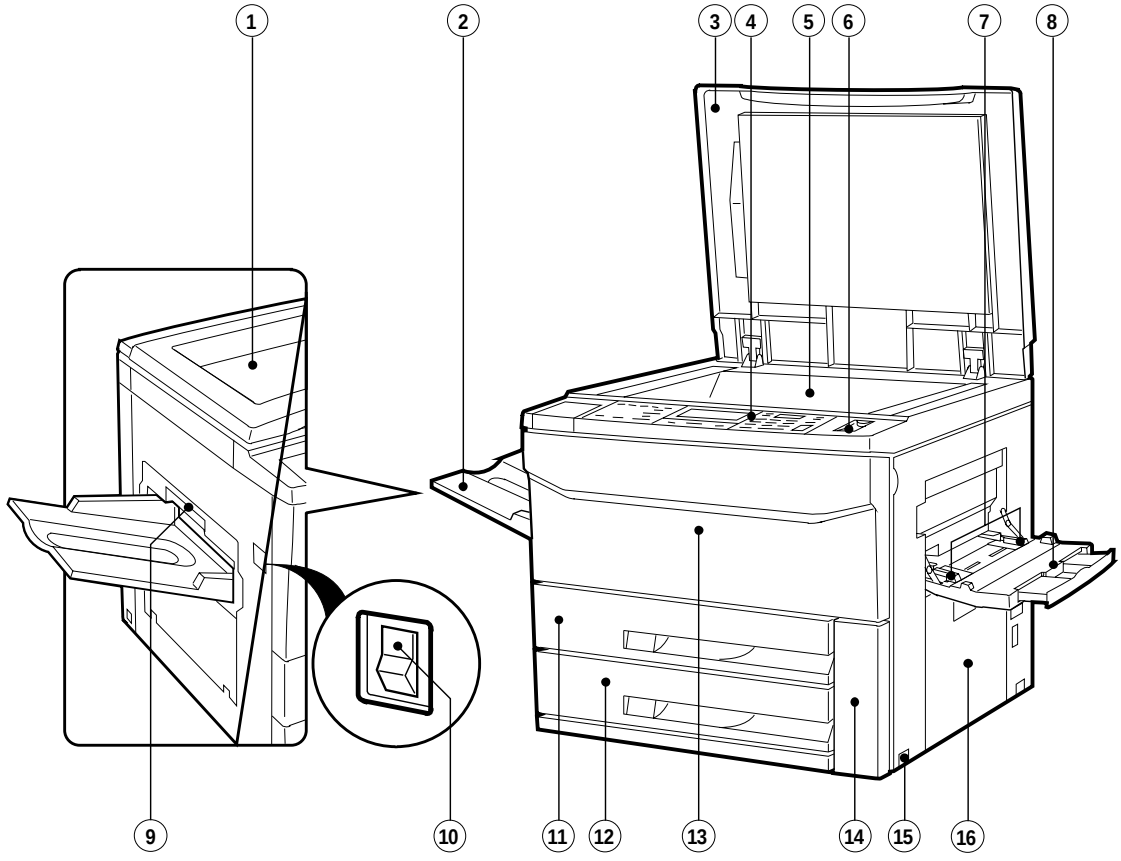

①	Document holder	②	Exit tray	③	Document cover (optional)
④	Operation panel	⑤	Document glass	⑥	Paper clip tray
⑦	Manual feed tray paper guides	⑧	Manual feed tray	⑨	Exit area cover
⑩	Power switch	⑪	Duplex module or 500-sheet paper drawer (optional)	⑫	Lower paper tray
⑬	Front cover	⑭	Toner collecting container cover	⑮	Handles
⑯	Side cover				

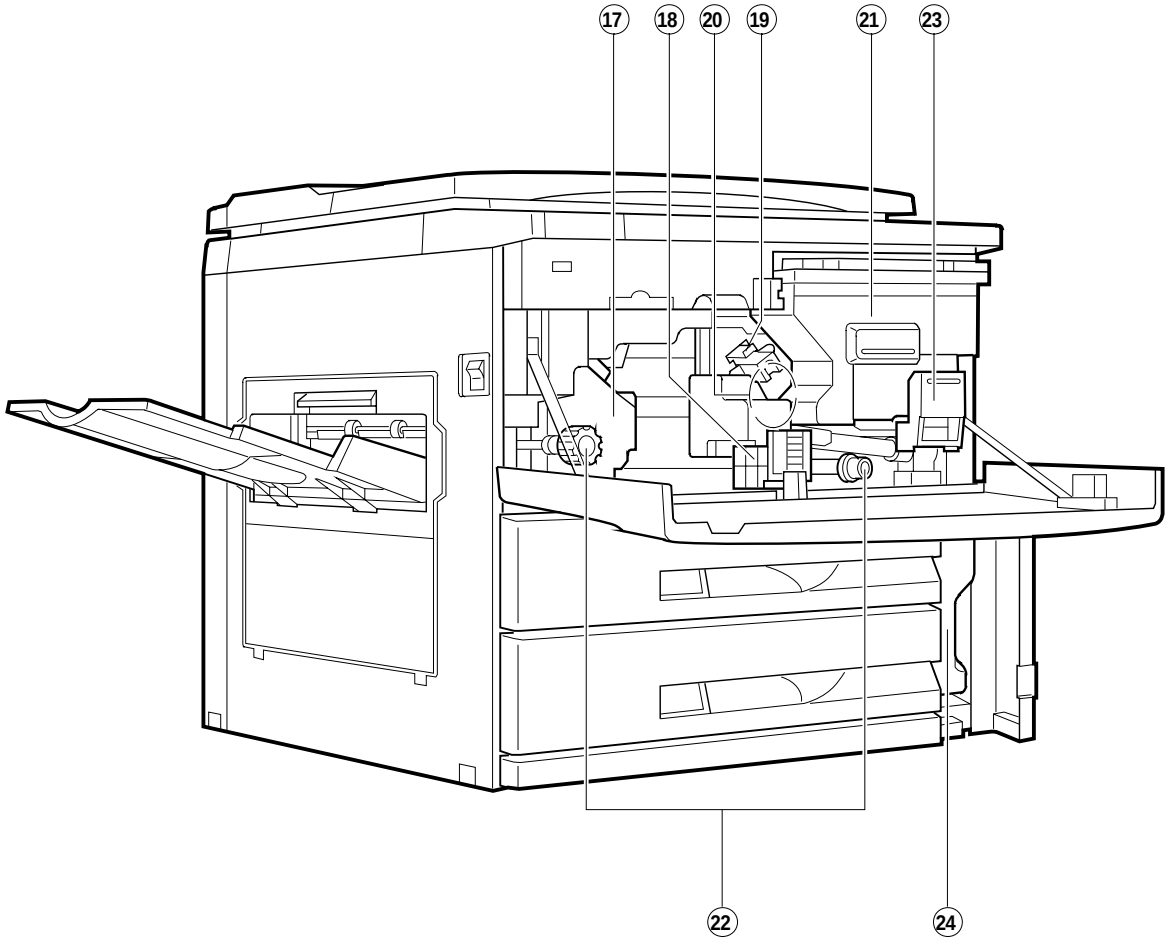

⑰	Fusing unit	⑱	Transport lever	⑲	Corona unit
⑳	Photoconductive drum	㉑	Toner hopper	㉒	Roller rotating knobs
㉓	Toner hopper lock lever	㉔	Toner collection container		

2. Operation panel

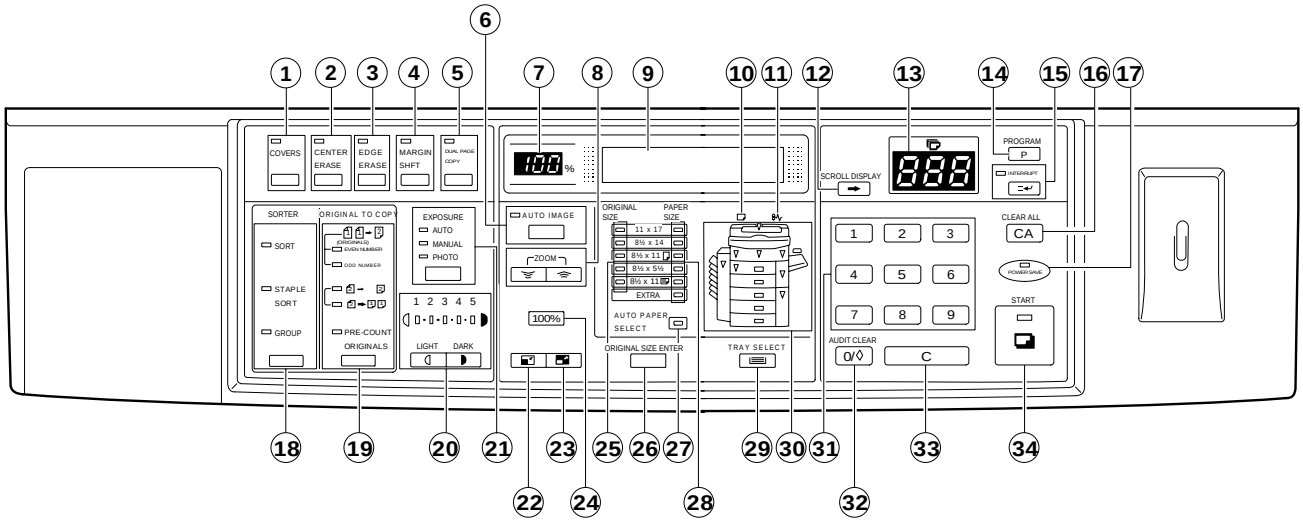

①	COVERS key and indicator	②	CENTER ERASE key and indicator	③	EDGE ERASE key and indicator
④	MARGIN SHIFT key and indicator	⑤	DUAL PAGE COPY key and indicator	⑥	AUTO IMAGE key
⑦	COPY RATIO display	⑧	ZOOM keys	⑨	Message display
⑩	Paper required indicator	⑪	Misfeed indicator	⑫	SCROLL DISPLAY key
⑬	Copy quantity display	⑭	PROGRAM (P) key	⑮	INTERRUPT key and indicator
⑯	CLEAR ALL (CA) key	⑰	POWER SAVE indicator	⑱	SORTER key and indicators
⑲	ORIGINAL TO COPY key and indicators	⑳	LIGHT and DARK keys and indicators	㉑	EXPOSURE key and indicators
㉒	Reduction ( ) key	㉓	Enlargement ( ) key	㉔	100% key
㉕	ORIGINAL SIZE indicators	㉖	ORIGINAL SIZE ENTER key	㉗	AUTO PAPER SELECT indicator
㉘	PAPER SIZE indicators	㉙	TRAY SELECT key	㉚	Paper feed location/misfeed location indicators
㉛	10-key pad	㉜	AUDIT CLEAR (0/◊) key	㉝	Clear (C) key
㉞	START key and indicator				

3. Internal view

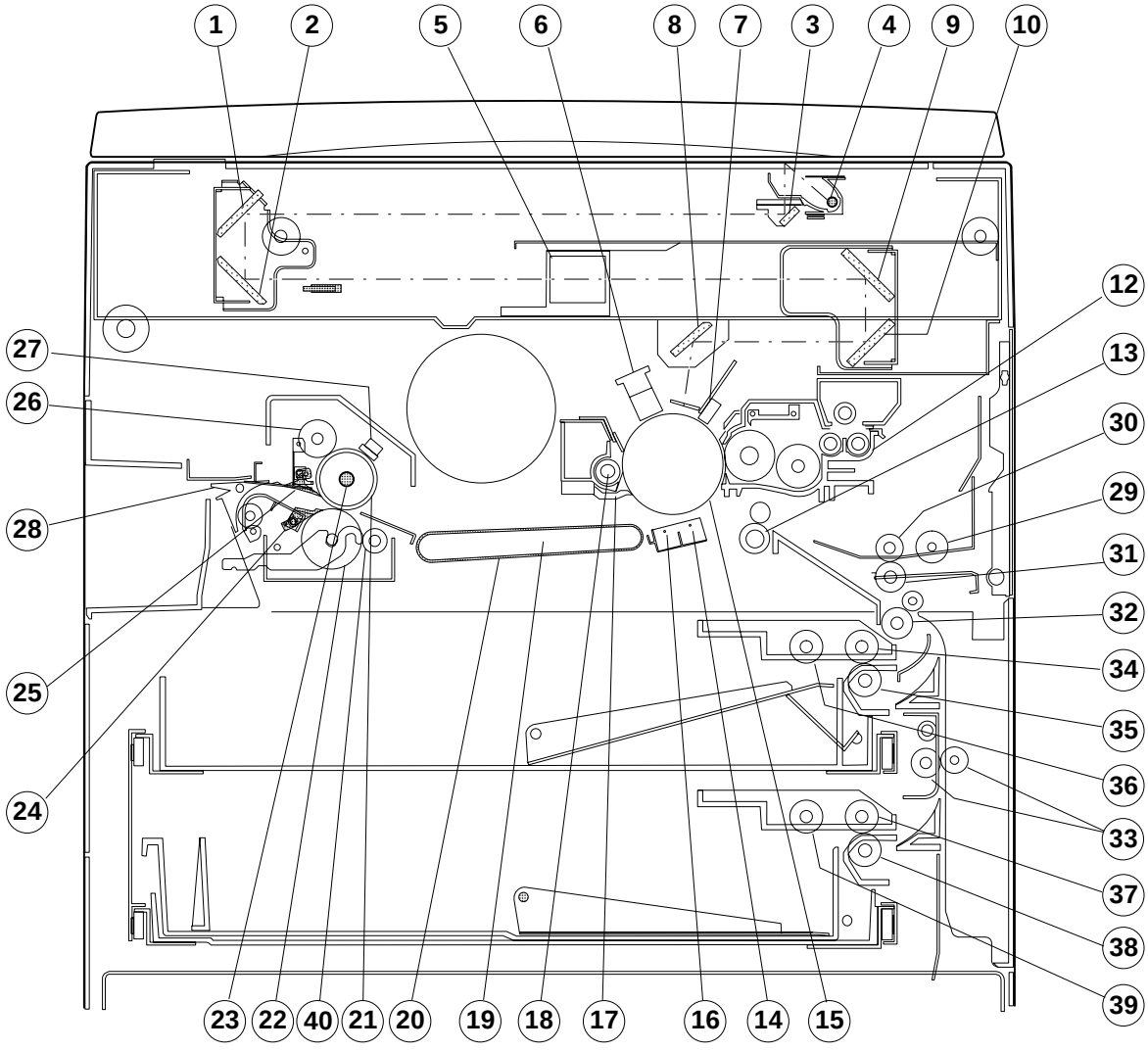

①	#2 mirror	②	#3 mirror	③	#1 mirror
④	Copy lamp	⑤	Lens unit	⑥	Main corona unit
⑦	Blank lamps	⑧	#6 mirror	⑨	#4 mirror
⑩	#5 mirror	⑪	—	⑫	Developing tank
⑬	Resist roller	⑭	Transfer corona	⑮	Drum
⑯	Separation corona	⑰	Drum separator pawl	⑱	Cleaner unit
⑲	Suction unit	⑳	Suction belts	㉑	Upper heat roller
㉒	Lower heat roller	㉓	Heater lamp	㉔	Lower separator pawl
㉕	Upper separator pawl	㉖	Upper cleaning roller	㉗	Fuser thermistor
㉘	Delivery select gate	㉙	Manual feed takeup roller	㉚	Manual feed paper feed roller
㉛	Counter manual feed roller	㉜	Transport roller (upper)	㉝	Transport roller (lower)
㉞	Upper paper feed roller	㉟	Upper paper feed reverse roller	㊱	Upper paper takeup roller
㊲	Lower paper feed roller	㊳	Lower paper feed reverse roller	㊴	Lower paper takeup roller
㊵	Lower cleaning roller				

4. Clutches, solenoids

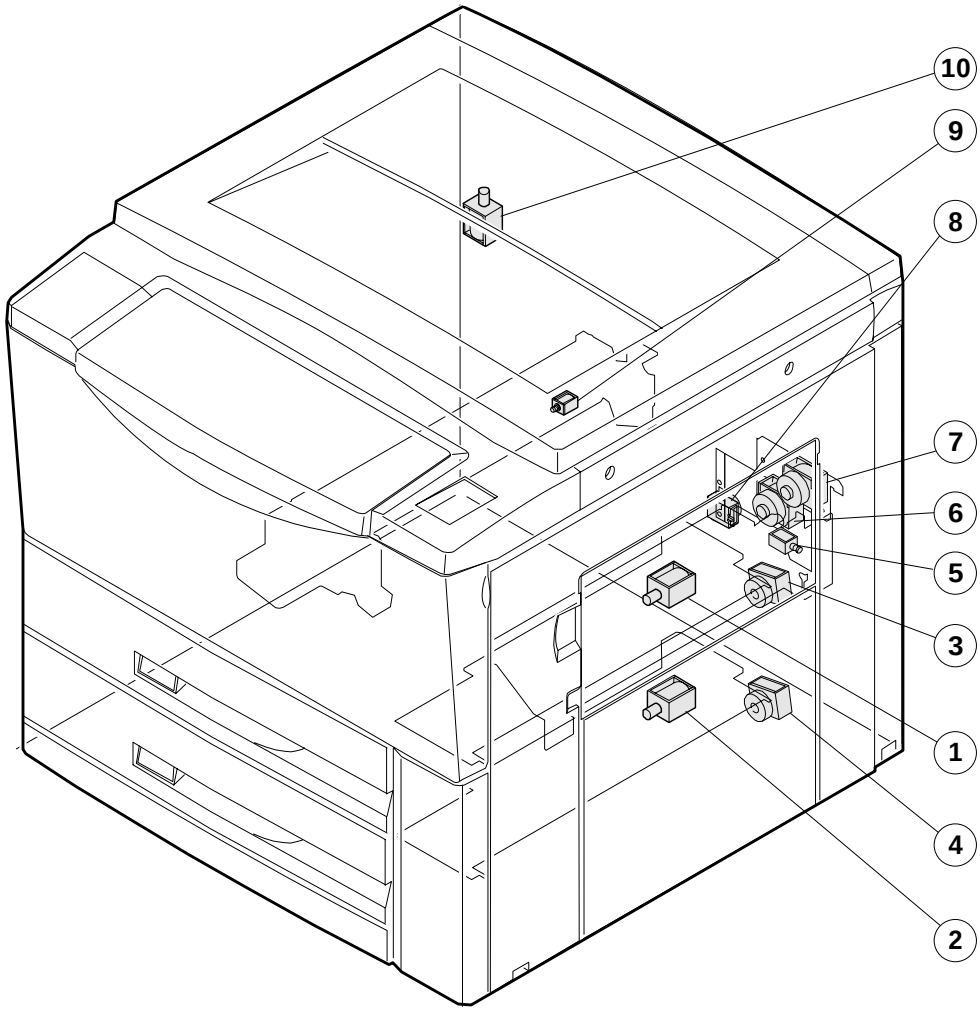

	Signal name	Name	Function
①	CPFS1	Upper cassette paper feed solenoid	For tensioning takeup roller
②	CPFS2	Lower cassette paper feed solenoid	For tensioning takeup roller
③	CPFC1	Upper cassette paper feed clutch	For actuating paper feed roller
④	CPFC2	Lower cassette paper feed clutch	For actuating paper feed roller
⑤	MPFS	Manual paper feed solenoid	For tensioning takeup roller
⑥	TRCL	Transport roller clutch (low)	For actuating transport roller (low)
⑦	TRCH	Transport roller clutch (fast)	For actuating transport roller (fast)
⑧	RRC	Resist roller clutch	For actuating resist roller
⑨	PSPS	Paper separation solenoid	For actuating paper separation solenoid
⑩	DGS	Duplex copy gate solenoid	For actuating duplex copy gate

5. Sensors

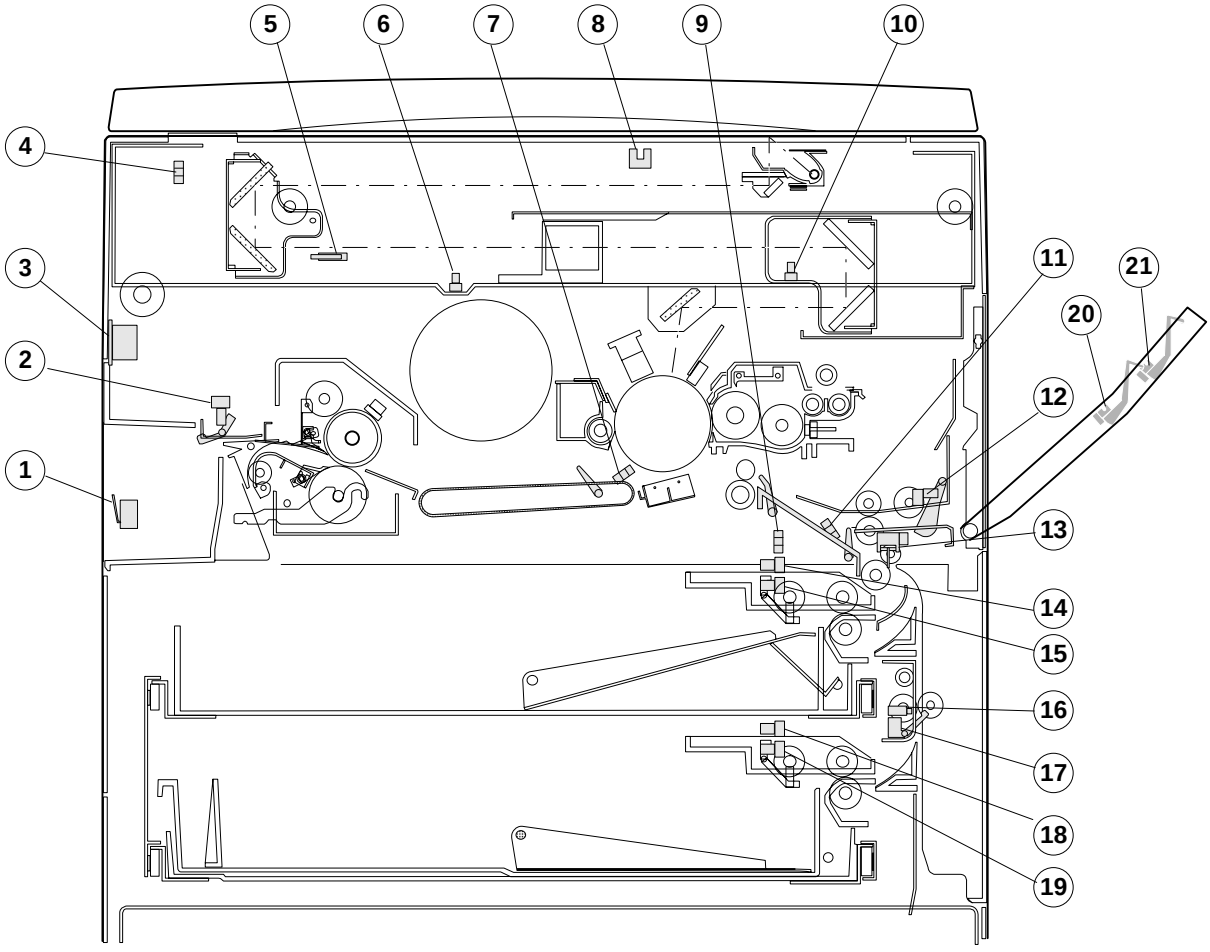

	Signal name	Type	Name	Output
①	CSWL	Microswitch	Cover switch, (left)	On when closed
②	POD	Transmssive photosensor	Paper exit sensor	Low when paper passes over
③	P-SW	See-saw switch	AC power switch	—
④	MHPS	Transmissive photosensor	Mirror home position sensor	High when scanner at home postion
⑤	CSWF	Microswitch	Cover switch, (front)	On when closed
⑥	LHPS	Transmissive photosensor	Lens home position sensor	Low when lens at home postion
⑦	PSD	Transmissive photosensor	Paper separation sensor	High when paper passes over
⑧	OCSW	Transmissive photosensor	Original cover switch	Low when cover is open
⑨	PPD2	Transmissive photosensor	Paper transport sensor	Low when paper passes over
⑩	MBHPS	Transmissive photosensor	Mirror home position sensor	Low when mirror at home position
⑪	PPD1	Transmissive photosensor	Paper transport sensor-1	Low when paper passes over
⑫	PED1	Transmissive photosensor	Manual feed paper sensor	Low when paper passes over
⑬	TFD	Transmissive photosensor	Full waste toner sensor	Low when full waste toner detected
⑭	LUD1	Transmissive photosensor	Upper cassette liftup sensor	Low when lift plate detected
⑮	PED2	Transmissive photosensor	Upper cassette paper sensor	Low when paper detected
⑯	CSWR	Microswitch	Doorswitch (right)	On when closed
⑰	PID	Transmissive photosensor	Paper transport sensor	High when paper passes over
⑱	LUD2	Transmissive photosensor	Lower cassette liftup sensor	Low when lift plate detected
⑲	PED3	Transmissive photosensor	Lower cassette paper sensor	Low when paper detected
⑳	PLS1	Transmissive photosensor	Manual tray paper length sensor	Low when detected
㉑	PLS2	Transmissive photosensor	Manual tray paper length sensor (Inch series only)	Low when detected

6. Motors

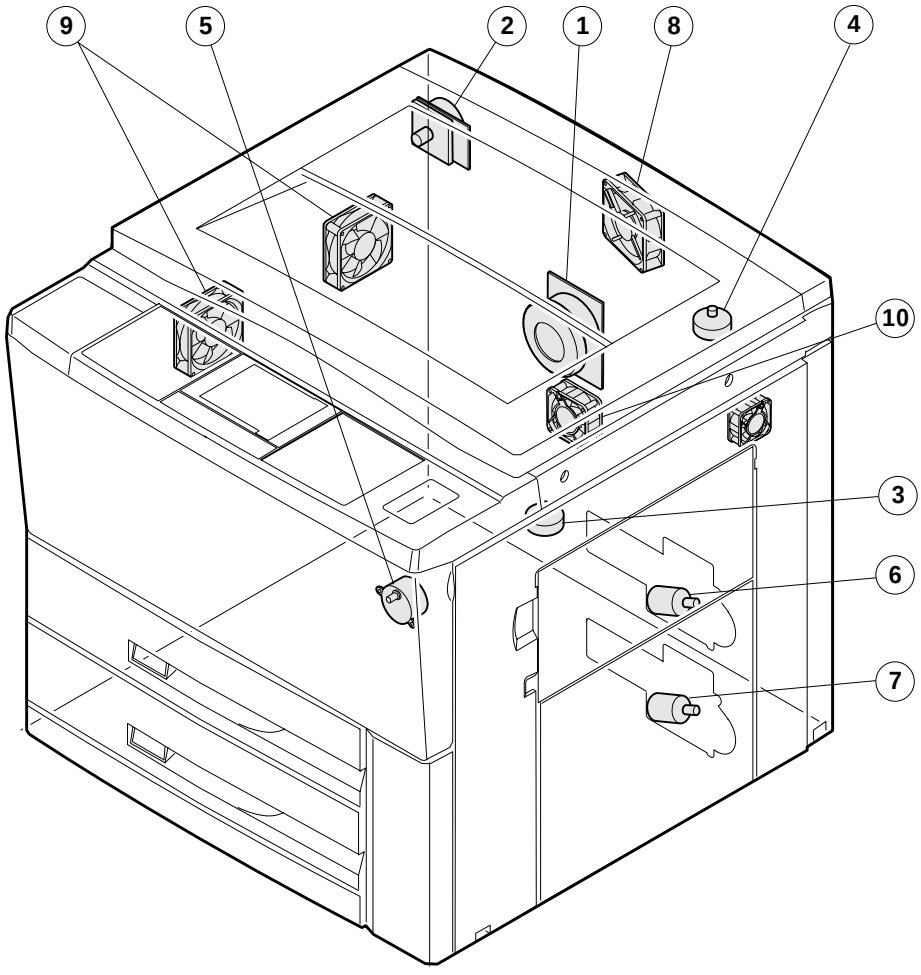

	Signal name	Name	Type	Function
①	MM	Main motor	DC, brushless	Driving copier and ADU option
②	SM	Mirror motor	DC, brushless	Driving optical system mirror bases A and B
③	LEM	Lens motor	DC, stepping	Driving optical lens
④	MBM	#4/5 mirror base motor	DC, stepping	Driving optical mirror base C
⑤	TM	Toner motor	DC, synchronous	Supplying toner
⑥	LUM1	Upper cassette liftup motor	DC, brush	Lifting upper paper feed cassette baseplate
⑦	LUM2	Lower cassette liftup motor	DC, brush	Lifting lower paper feed cassette baseplate
⑧	CFM	Cooling fan motor	DC, brushless	Cooling optical system
⑨	VFM	Ventilation fan motor	DC, brushless	Ventilating fuser area
⑩	SFM	Suction fan motor	DC, brushless	Ventilating process unit area aid in paper transport

7. Board list

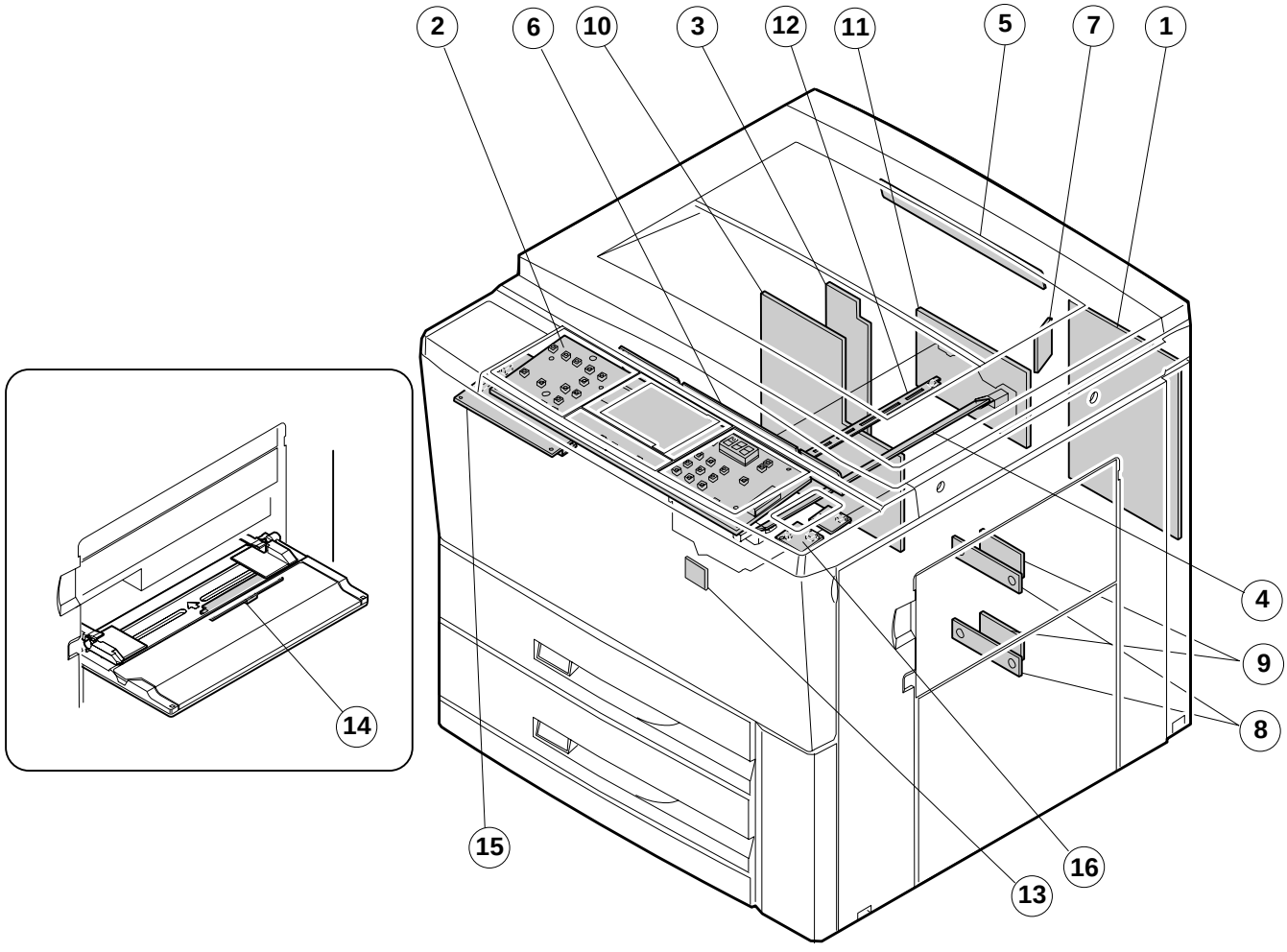

	Name	Type	Function
①	Main PWB	Japan/Export	Primary control of copier functions
②	Operation PWB	Common	Display
③	AC PWB	Japan/Export, 100V/200V	Supplying AC power
④	Blank lamp PWB	Common	Controlling blank lamps
⑤	Original sensing light emitting PWB	Japan	Sensing original size
⑥	Original sensor light receive PWB	Japan	Sensing original size
⑦	AE PWB	Common	Automatic exposure sensor
⑧	Cassette paper size PWB	Common	Sensing cassette paper size
⑨	Liftup motor PWB	Common	Driving paper cassette bottom plate liftup
⑩	DC power supply unit	100V/200V series	Supplying DC power
⑪	High voltage transformer	Common	Supplying process unit high voltage and developing bias voltage
⑫	Discharge lamp	Common	Driving discharge lamps
⑬	Process control VR PWB	Common	Process sensor sensitivity adjustment
⑭	Manual feed paper size sensor PWB	Japan/Export	Paper size detection (Japan, portrait only)
⑮	LCD control PWB	Japan/Export	LCD display drive/control
⑯	LCD invertor PWB	Common	LCD power invertor circuit

8. Duplex copy tray

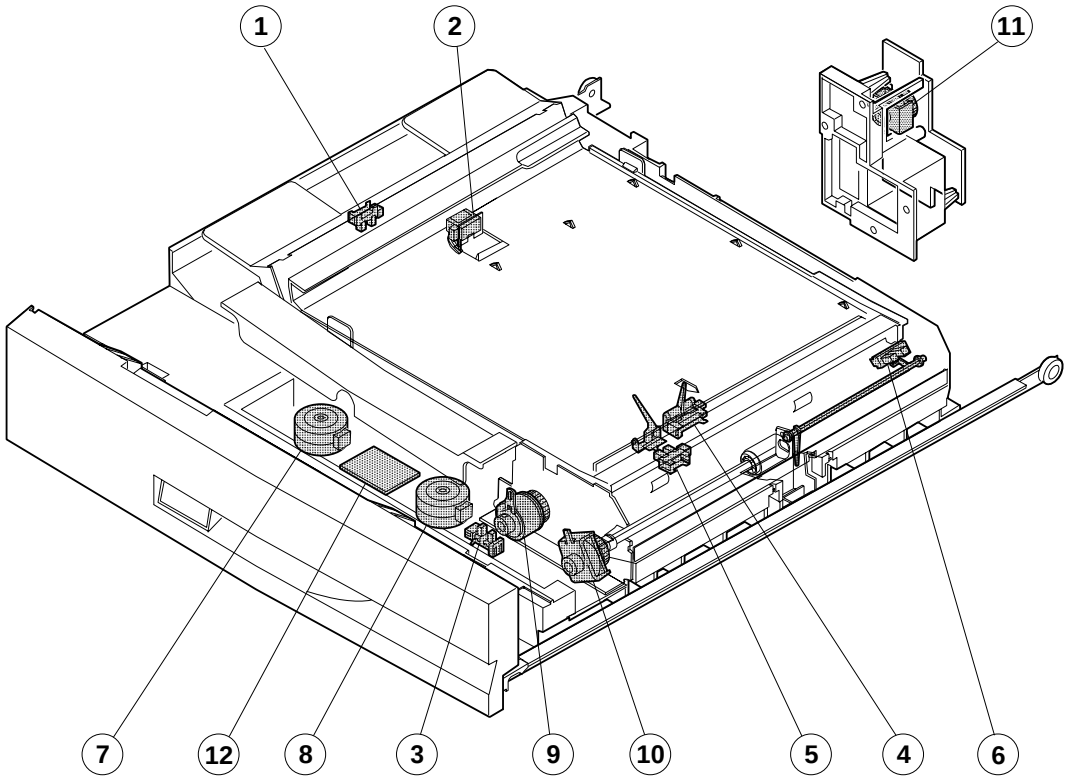

	Signal name	Type	Name	Output
①	APHPS2	Transimissive photosensor	ADU rear plate home position sensor	Low when at home position
②	DPPD1	Transimissive photosensor	ADU paper transport sensor-1	High when paper passes over
③	APHPS1	Transimissive photosensor	ADU alignment plate home position sensor	Low when over home position
④	DPPD2	Transimissive photosensor	ADU paper transport sensor-2	High when paper detected
⑤	DTPID	Transimissive photosensor	ADU tray sensor	High when paper detected
⑥	DPFD	Transimissive photosensor	ADU paper entry sensor	High when paper detected
⑦	PAM2	DC stepping motor	ADU rear plate motor	
⑧	PAM1	DC stepping motor	ADU alignment plate motor	
⑨	DPFC	Magnetic clutch	ADU paper feed clutch	
⑩	DRRC	Magnetic clutch	ADU counter roller clutch	
⑪	DDC	Magnetic clutch	ADU clutch	
⑫	ADUPWB	Duplex copy tray load driving	Diode PWB	

9. Desk unit (SF-D20)

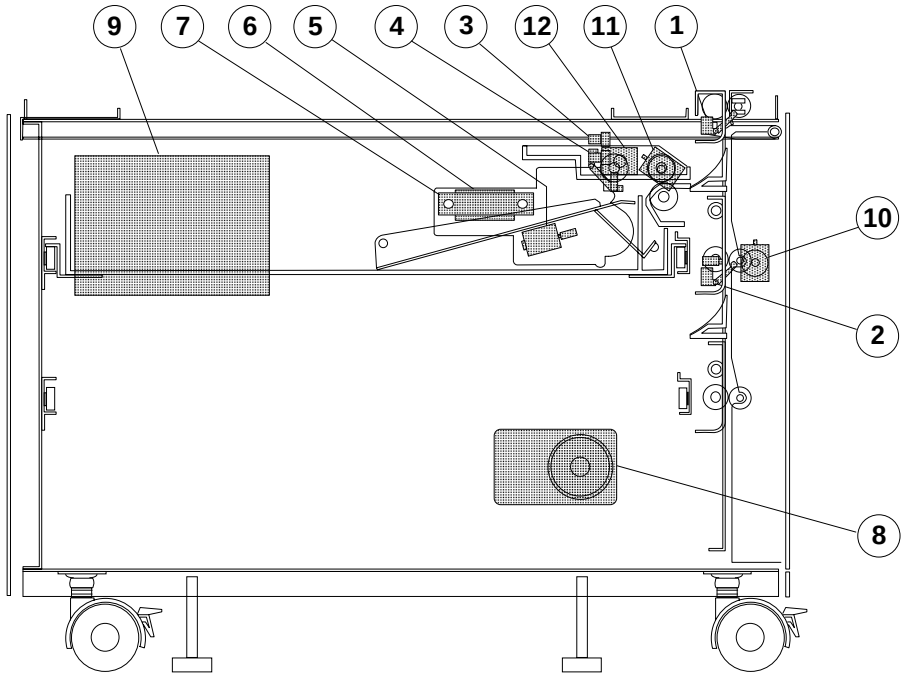

	Signal name	Name	Function
①	DPOD1	Desk paper exit sensor	Paper exit sensor (High when paper passes over)
②	DPOD2	Desk paper exit sensor	Paper exit sensor (High when paper passes over)
③	DLUD1	Desk cassette liftup sensor	Cassette liftup sensor (Low when lift plate detected)
④	DPED1	Desk cassette paper sensor	Cassette paper sensor (Low when paper detected)
⑤	DLUM1	Desk cassette liftup motor	Cassette liftup drive motor
⑥	—	Liftup motor PWB	—
⑦	—	Cassette paper size PWB	—
⑧	DM	Desk drive motor	Desk main motor
⑨	—	Desk main PWB	—
⑩	DTRC	Desk transport roller clutch	Transport roller drive
⑪	DPFC1	Desk paper feed clutch	Paper feed roller drive
⑫	DPFS1	Desk paper feed solenoid	Paper takeup roller drive

10. Desk unit (SF-D21)

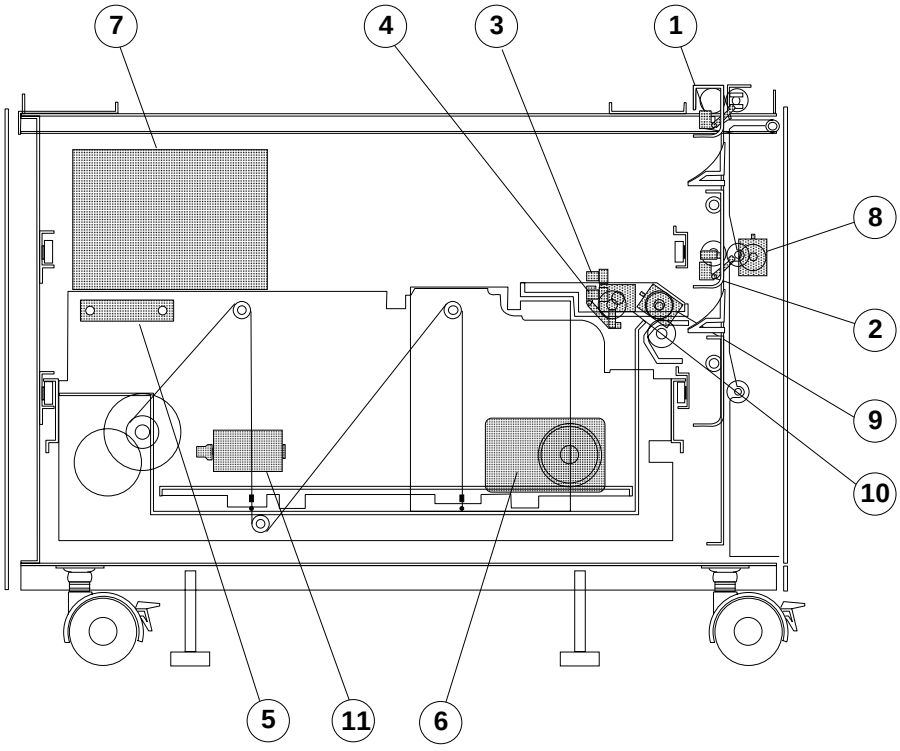

	Signal name	Name	Function
①	DPOD1	Desk paper exit sensor	Paper exit sensor (High when paper passes over)
②	DPOD2	Desk paper exit sensor	Paper exit sensor (High when paper passes over)
③	DLUD2	Desk cassette liftup sensor	Cassette liftup sensor (Low when lift plate detected)
④	DPED2	Desk cassette paper sensor	Cassette paper sensor (Low when paper detected)
⑤	—	Cassette paper size PWB	—
⑥	DM	Desk drive motor	Desk main motor
⑦	—	Desk main PWB	—
⑧	DTRC	Desk transport roller clutch	Transport roller drive
⑨	DPFC2	Desk paper feed clutch	Paper feed roller drive
⑩	DPFS2	Desk paper feed solenoid	Paper takeup roller drive
⑪	LCCM	Large capacity cassette motor	Cassette tray liftup drive motor

[5] INSTALLATION

A. Installing conditions

To ensure safety and proper machine performance, please note the following before initial installation and whenever the machine is to be relocated.

1. The copier should be installed near an accessible power outlet for easy connection.
2. Be sure to connect the power cord only to a power outlet that meets the specified voltage and current requirements.
   Also make certain the outlet is properly grounded.
3. Do not install the machine where it is:
   - damp or humid,
   - exposed to direct sunlight,

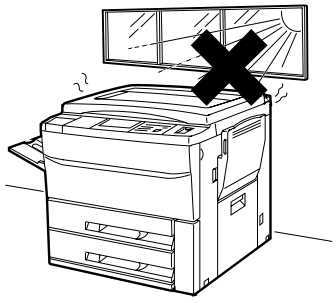

   - extremely dusty,
   - poorly ventilated,
   - subject to extreme temperature or humidity changes (e.g., near an air conditioner or heater).

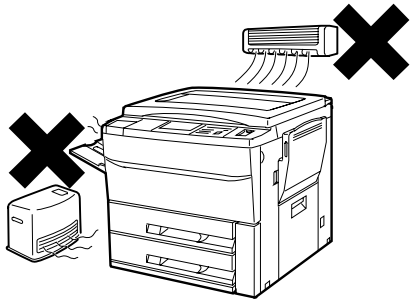

4. Ensure that the area chosen for the machine location is level.

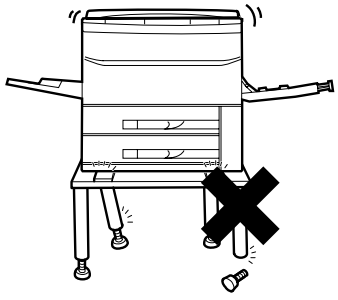

5. Be sure to allow the required space around the machine for servicing and proper ventilation.

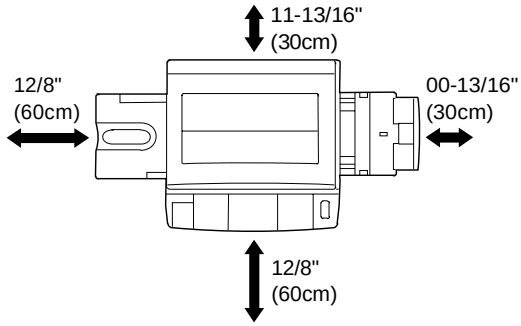

A small amount of ozone is produced within the copier during operation.
The emission level is insufficient to cause any health hazard.
NOTE:
The present recommended long term exposure limit for ozone is 0.1 ppm (0.2 mg/m^3) calculated as an 8 hr. time-weighted average concentration.
However, since the small amount that is emitted may have an objectionable odor, it is advisable to place the copier in a ventilated area.

B. Installation procedure

(1) SF-2030

1. Releasing optical locks

A. Removing the #2/3 mirror unit lock

Unfasten the screw that holds the #2/3 mirror unit on the left side of the machine.

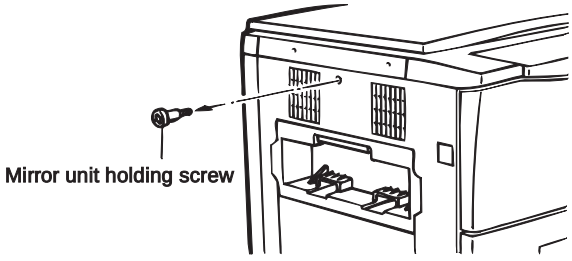

B. Releasing the lens and #4/5 mirror unit from lock

Open the paper feed tray and remove two screws that hold the #4/5 mirror unit.

Close the manual tray.

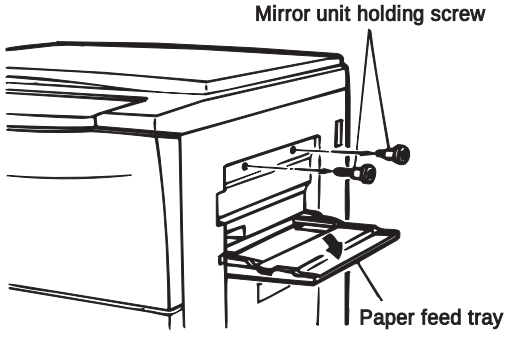

2. Fuser unit set up

A. Removing the fuser unit

① While holding up the paper exit handle, open the paper exit cover.

② Remove the front panel band on the left side of the front panel in a manner shown in the figure.

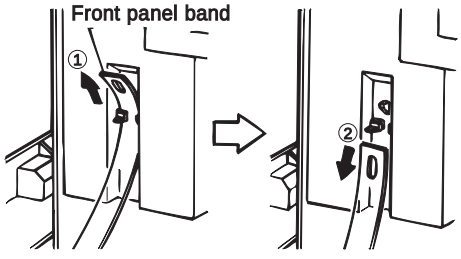

③ Remove the fuser unit holding two screws.

④ Hold the fuser unit rotating knob. Push on the front panel and gently remove the fuser unit.

Do not let the locator pins under the fuser unit hit the ribs on the front cover.

⑤ Hold the fuser unit hand carry strap and remove the fuser unit.

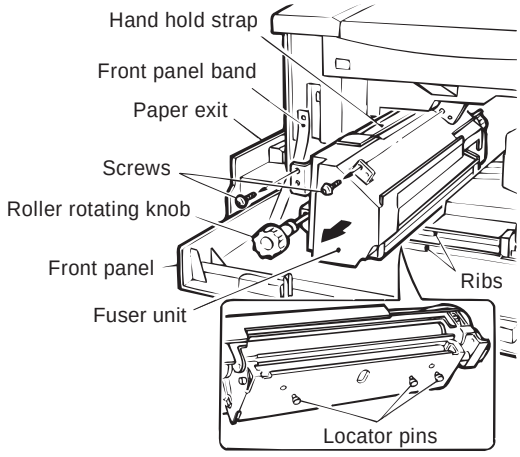

B. Tensioning the heat roller

Move the tension levers on both sides of the fuser unit to the position shown in the figure. With this, tension is applied to the upper and lower heat rollers.

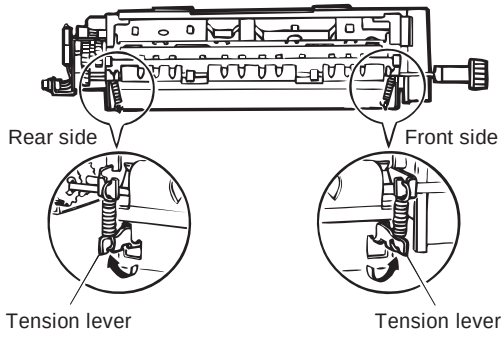

C. Installing the cleaning roller

① Remove the fusing cover fixing screws (2 pcs.), slide the fusing cover towards you, and remove it.

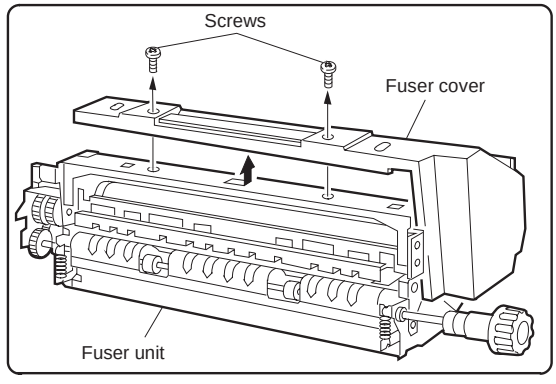

② Remove the CL springs which are fixed to the front and the rear side of the fusing unit with adhesive tape.

[Note] Slowly and surely remove the adhesive tape.

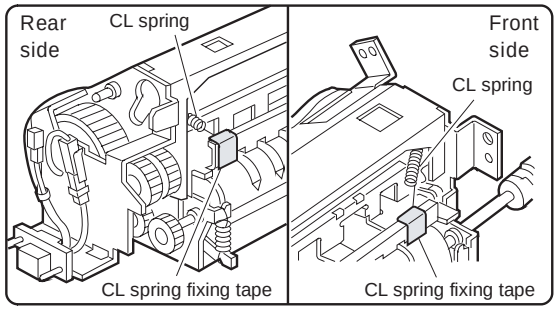

③ Pass the cleaning roller through the round hole at the back of the fusing unit, then insert the cleaning roller into the round hole at the front.

Then position the bearings at the front and the back of the cleaning roller.

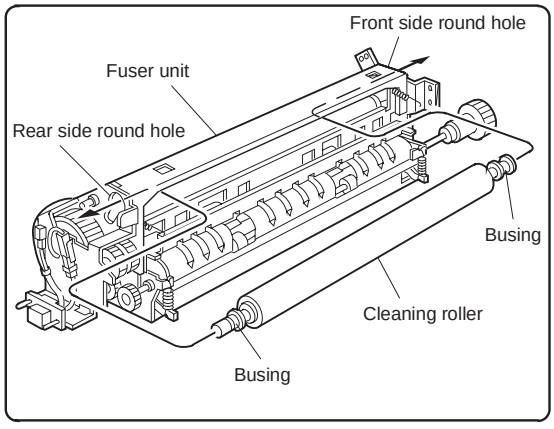

④ Hang the Cl springs on the front and the rear frames of the fusing unit. (Shown with arrow ←.)

Be sure to check that the CL springs are pressing the bearings as shown in the figure.

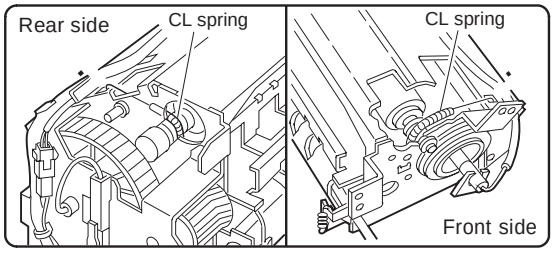

⑤ Replace the fuser cover removed in Step 1, and fasten it with two screws.

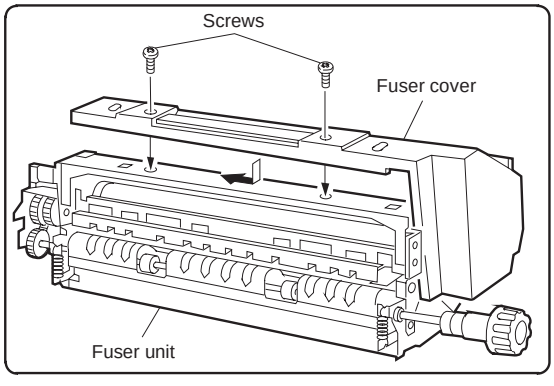

D. Installing the fusing unit

Insert the locator pin under the fuser unit into slot. Gently push fuser unit all the way in.

Make sure now that the locator pins of the copier are firmly engaged into two locator holes of the fuser unit mounting bracket.

Secure fuser unit with two screw removed in ② of **A**, and close the paper exit.

Replace the front panel band that removed in ① of **A**.

Close the paper exit cover.

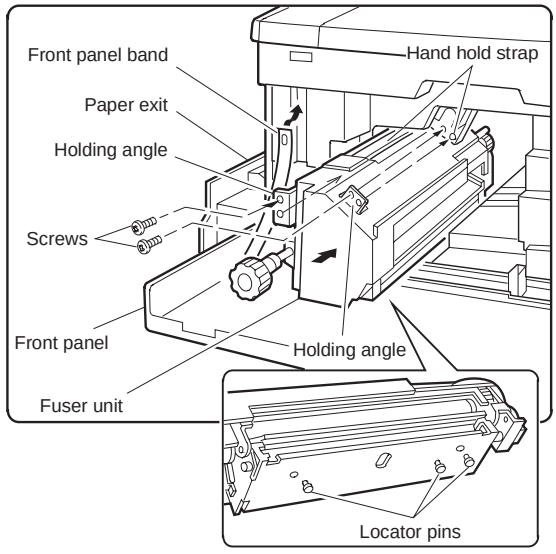

3. Cleaning corona units

A. Clean the main corona unit

① Push down the hook of the main corona unit while removing the main corona unit from the copier.

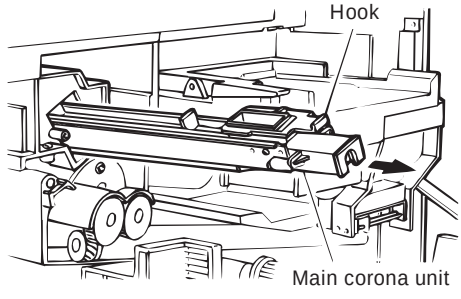

② Unfasten the one screw holding the electrode on the back of the main corona unit and remove the electrode.

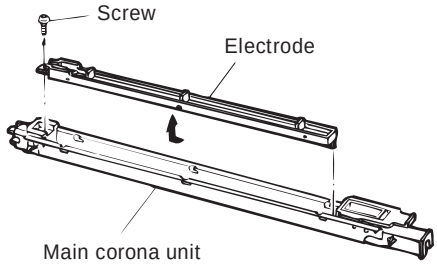

③ Very carefully clean the top of the electrode using the repeat this procedure a few times.

NOTES:

- Never move the cleaner in any direction except up and down when the cleaner is in contact with the electrode.
- Be sure to clean away the whole area evenly. Never clean only a portion of the electrode.

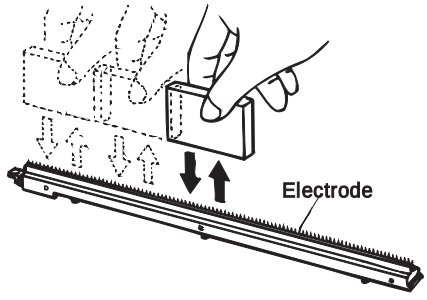

④ Install the electrode and secure it with the one screw.

⑤ Insert the main corona unit all the way into machine. Guides must be inserted into proper slots.

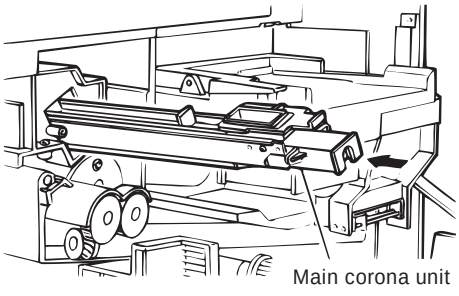

B. Clean the transfer/separation corona wires

① Tilt the paper transport block accessing lever to left. Rotate the transfer corona lock plate clockwise using the scale or flat tip screwdriver to release it from the lock. Remove the transfer/separation corona unit from the copier.

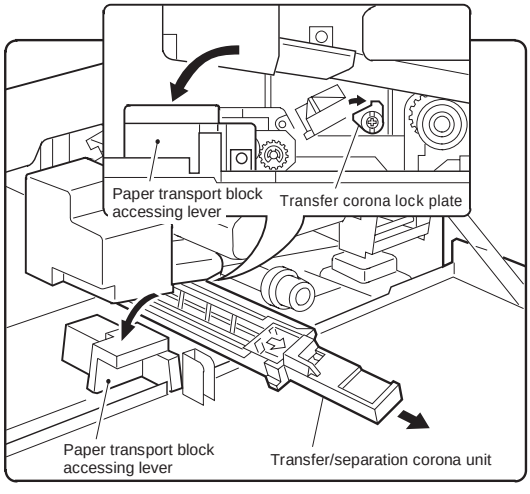

② Unhook the section A of the separation corona guide, slide the separation corona in the direction of the arrow, and remove the separation corona guide from the corona housing.

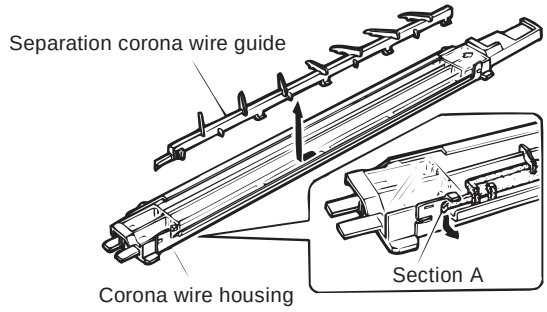

③ Squeeze the transfer/corona wire with the corona wire cleaner. Move the cleaner in the direction of the arrow to clean the wire.

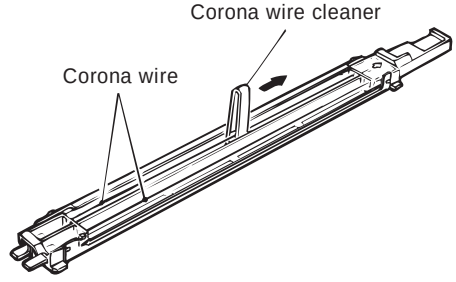

④ Install the separation corona guide to the corona housing. Insert the corona assembly along the guide of the transfer/separation corona unit.

Rotate the transfer corona lock plate counterclockwise, return the paper transport block accessing lever clockwise, and close the front panel.

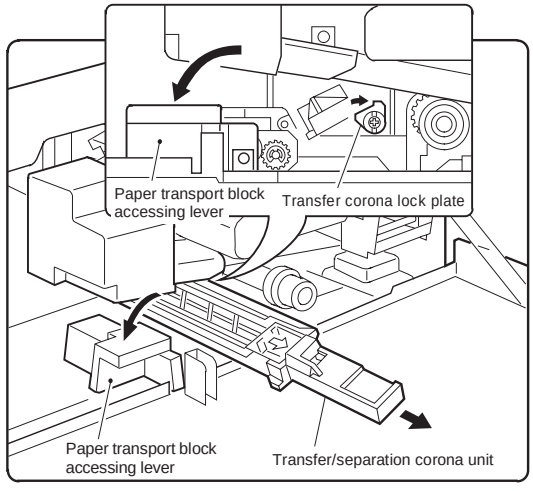

4. Installing accessories

A. Install the copy receive tray

5. Setting up the upper paper cassette

A. Remove the packing screw of the cassette.

Pull out the cassette drawer by lifting while pulling out drawer.

Remove the one packing screw that secures the paper tension plate of the cassette.

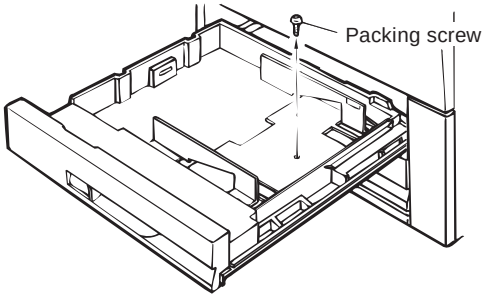

In the case of the B5R cassette, it has been set at the factory.

B. Removing the cassette

Hold up the cassette grasping the both sides of the cassette and pull it all the way out.

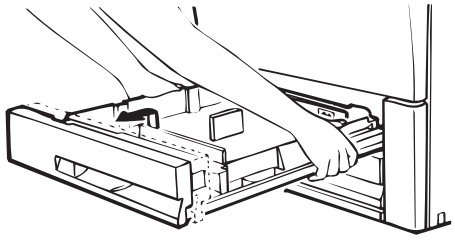

C. Change the size using the side plates F and R.

Remove two screws that hold the side plates F and R. Set the plates into their position shown with notches, and secure with the two screws.

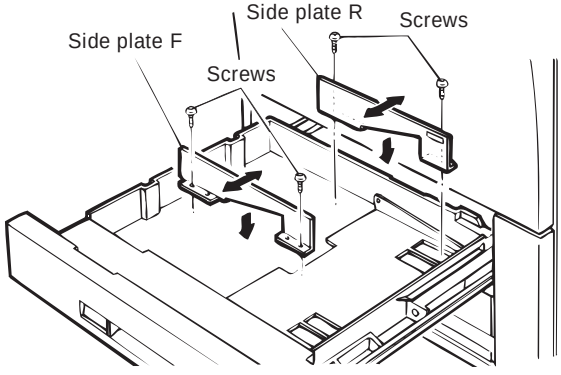

D. Insert the rear plate

Remove the rear plate and set the plate into the position indicated for the desired paper sixe.

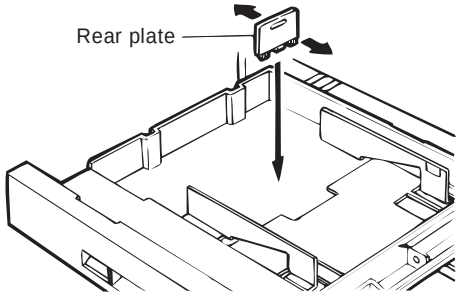

E. Set the size detect spacer

Change the position of the size detect spacer. Move the spacer to the appropriate positions.

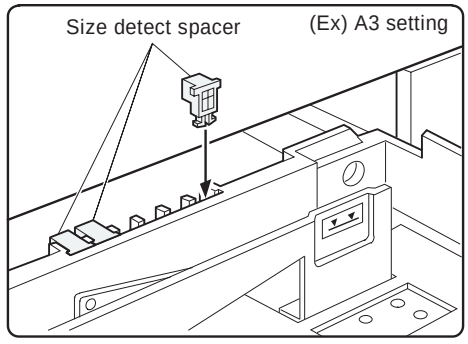

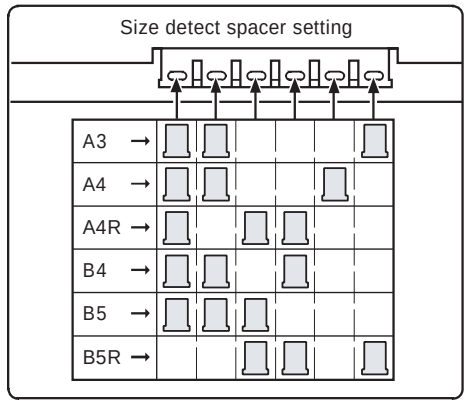

F. Change the paper size indication plate

Remove the paper size indication plate. Install the plate so the size of the paper can be seen from the window.

Paper sizes are printed on the front and the back of the paper size indicator plate.

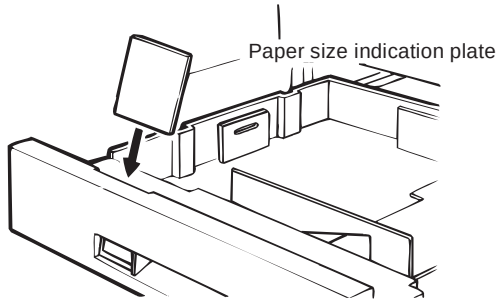

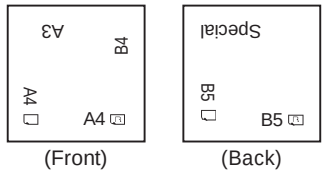

G. Set the cassette

Hold up both sides of the cassette from back and insert it along the guide rails.

Ensure the cassette moves in and out smoothly.

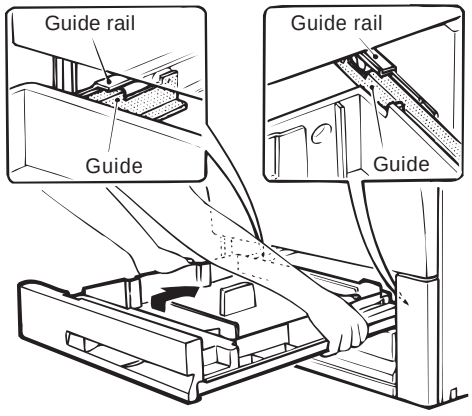

H. Load paper

Load paper in the cassette, but not above the maximum line.

Insert the cassette all the way into the machine.

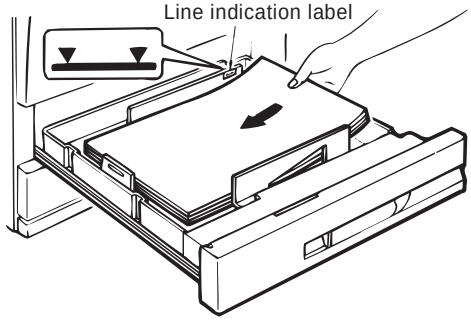

6. Set up the lower paper cassette

A. Remove the packing screw of the cassette.

Remove the two packing screw that hold the paper tension plate of the cassette.

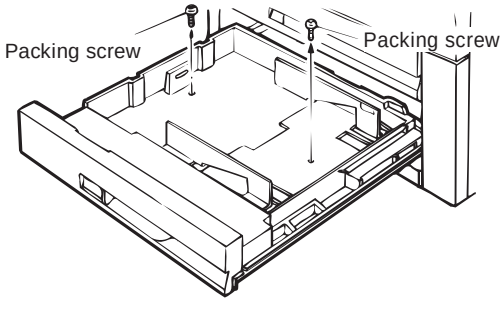

B. Change the size using the side plates F and R. (set to A3 position at the factory.)

Set the plates into the appropriate positions and secure wach plate with two screws.

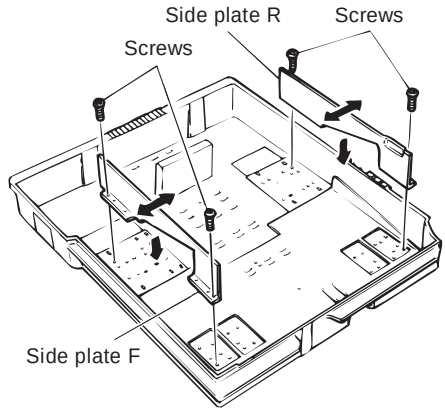

C. Change the size of the rear plate.

Remove the rear plate. Set the plate into the position indicated for the desired paper size.

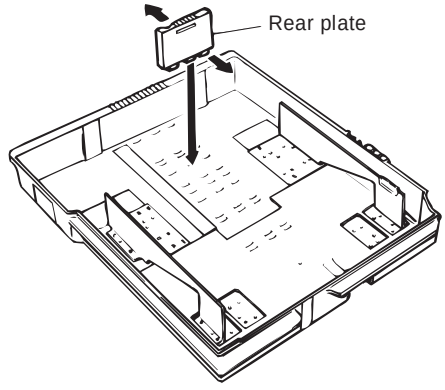

D. Set the size detect spacer

Change the position of the size detect spacer. Move the size detect spacers to the appropriate positions.

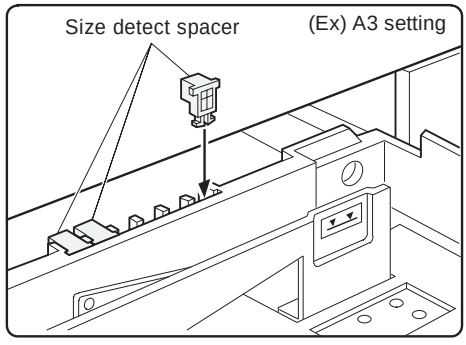

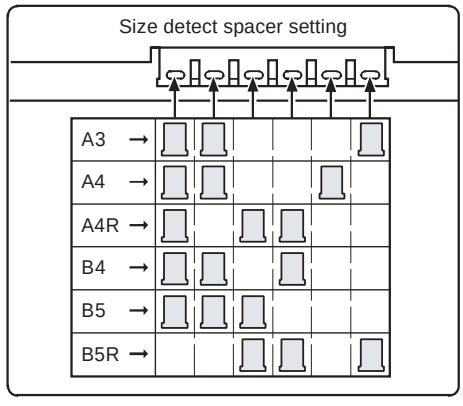

E. Change the paper size indication plate

Remove the paper size indication plate. Install the plates so the size of the paper can be seen from the window.

Paper sizes are printed on the front and the back of the paper size indicator plate.

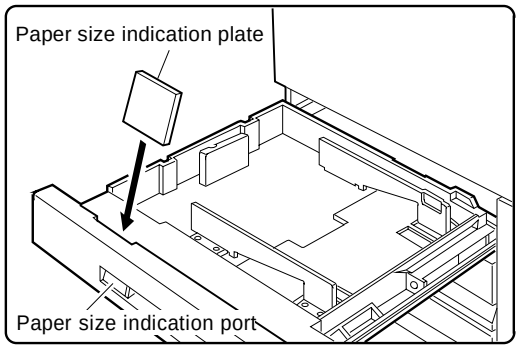

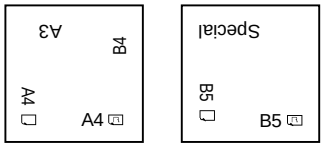

(Front) (Back)

F. Setting paper

Set paper on the cassette. Do not load so much paper that exceeds the indication line.

Insert the cassette completely into the copier body.

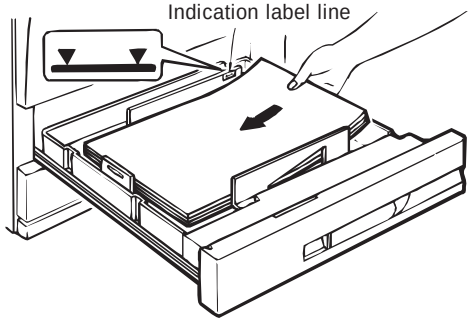

7. Lens lock release

A. Removing the lens and releasing the lens lock

① Open the front cabinet.

② Tilt down the toner box lever and pull out the toner box until it stops.

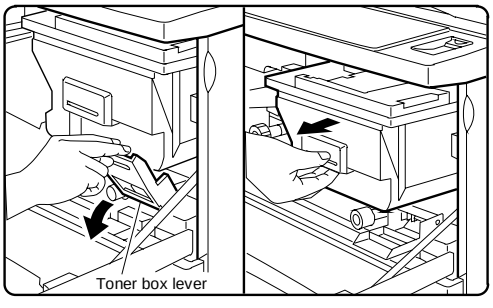

③ Slide the developing unit lock lever in the arrow direction to release lock, and hold the toner box lever and pull out the developing unit until it stops.

[Note]

- When lock is released and the developing unit becomes free to move, let go of the developing unit lock lever.

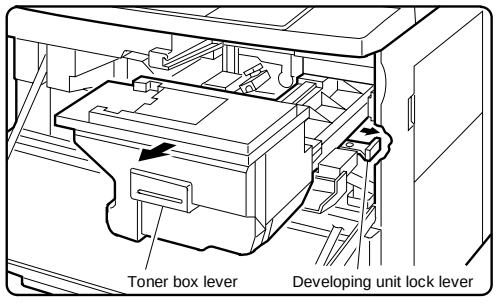

④ Hold the carry strap of the developing unit and slide the developing unit lock lever in the arrow direction to release lock. Then remove the developing unit.

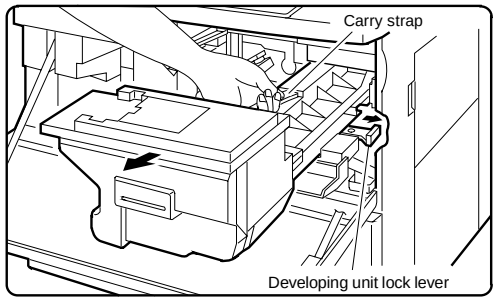

⑤ Remove the lens fixing screw (1 pc.) under the operation panel.

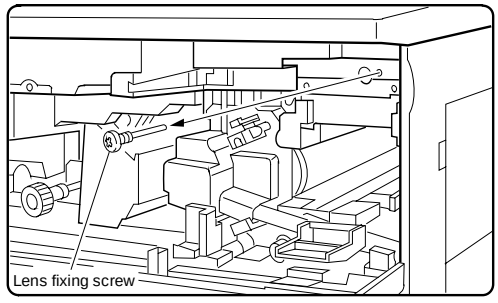

8. Setting the developing unit

A. Supplying developer

① Remove the 5P connector which is connecting the toner hopper and the developing unit.

Remove the five toner hopper fixing screws (silver 3 pcs., blue 2 pcs.) of the developing unit, and remove the toner hopper.

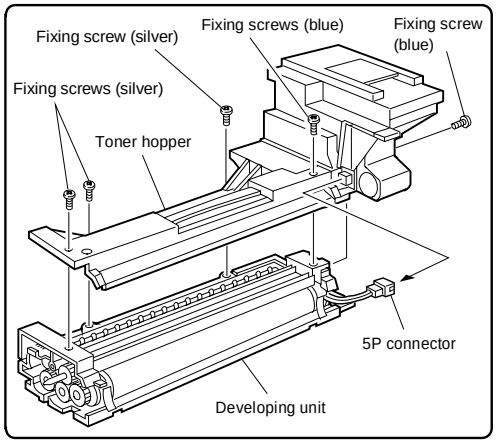

② While supplying developer from the developer supply port of the developing unit, turn the MG gear clockwise with a screwdriver (+) or a scale to completely supply developer into the developing unit.

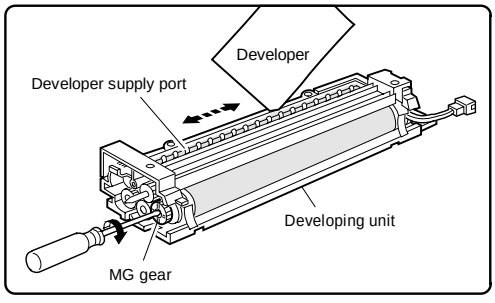

③ Install the toner hopper to the developing unit, and fix it with the five screws (silver 3pcs., blue 2 pcs.). Connect the 5P connecter of the developing unit with the toner hopper.

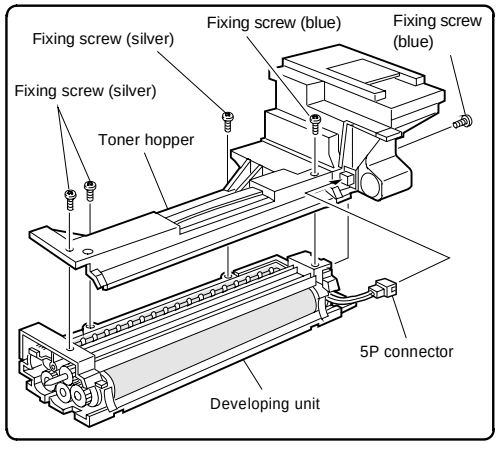

9. Toner density sensor level adjustment

Turn on the power switch of the copier body.

A. Developing unit level adjustment

① Perform the key operations of simulation 25.

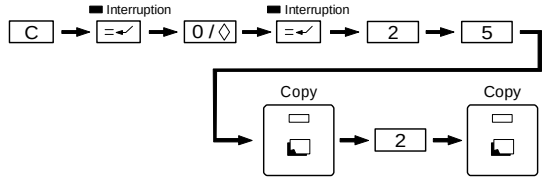

② Simulation 25 will be completed in 3 minutes.

(Note) If the simulation is cancelled halfway, auto scanning cannot be performed. Do not cancel it halfway.

③ Cancel simulation 25 with the [CA] key.

10. Toner supply

A. Toner supply

① Open the front cabinet.

② Tilt down the toner box lever towards you and pull out the toner box until it stops.

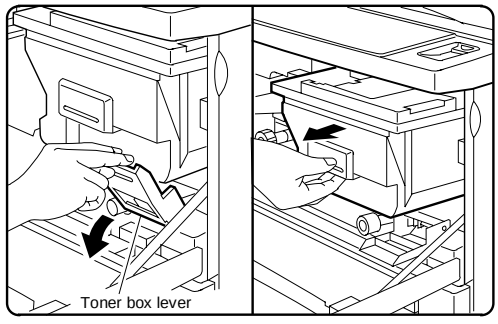

③ Shake the toner cartridge up and down about 20 times.

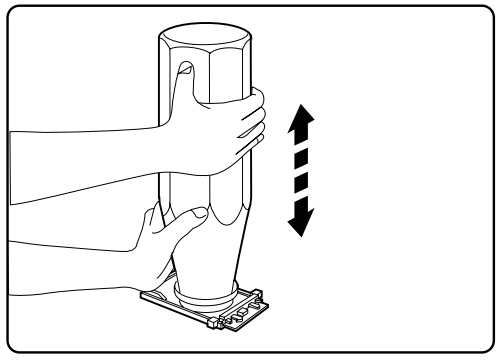

④ Install the toner cartridge to the toner box as shown in the figure below.

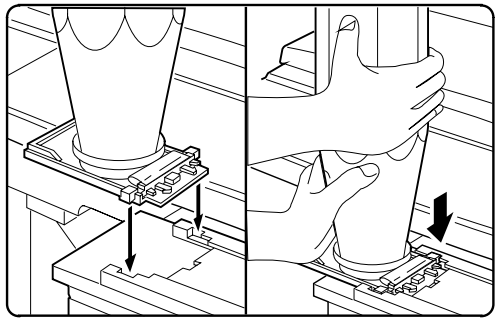

⑤ Move the toner cartridge in the arrow direction until it stops.

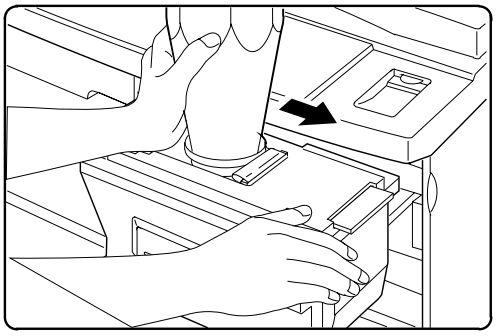

⑥ While holding the toner cartridge, pull the seal to supply toner.

[Note]

- It takes about 30 minutes to finish supplying toner.

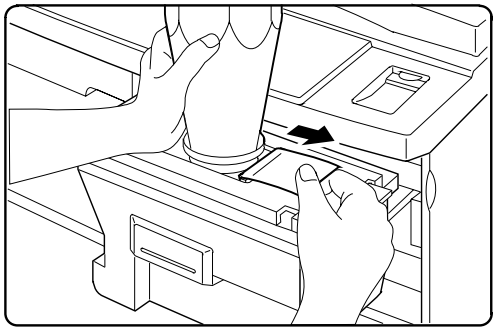

⑦ Tap the top of the toner cartridge to put down toner attached inside the toner cartridge.

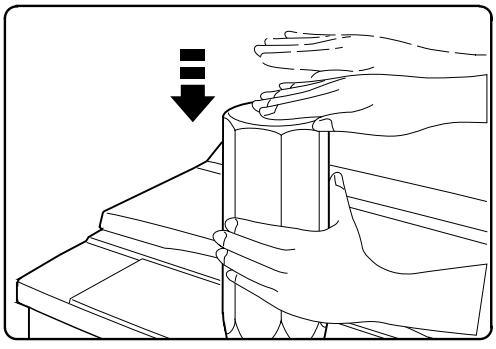

⑧ Move the empty toner cartridge in the arrow direction to remove.

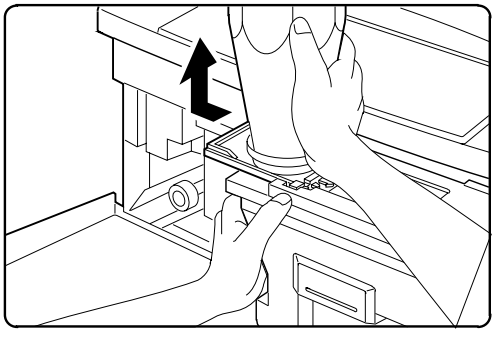

⑨ Push the toner box slowly to the original position, and lift the toner box lever.

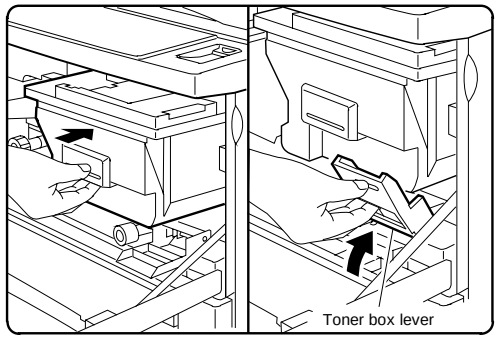

Toner supply is completed with the above procedure. Close the front cabinet.

11. Label attachment

A. Label attachment

Attach the magnification ratio select label packed together with the Operation Manual to the position shown below.

- When attaching to the copier with the original cover:

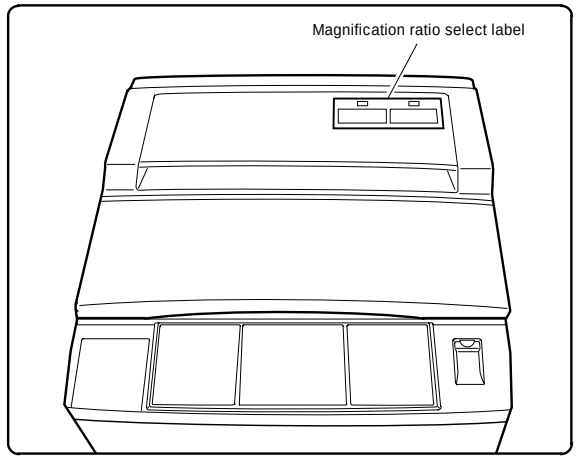

- When attaching to the auto document feeder:

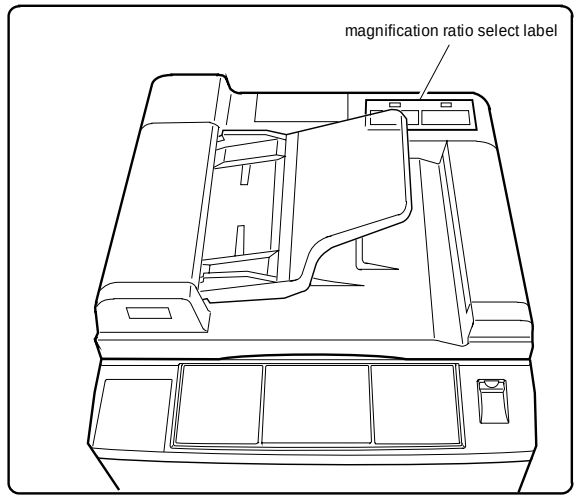

(2) SF-A17/56

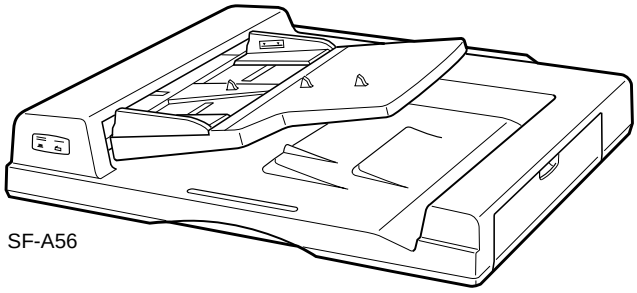

SF-A56

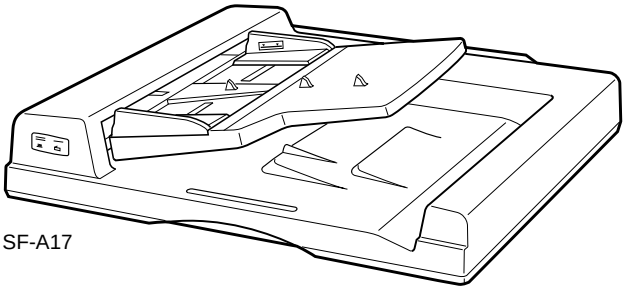

SF-A17

Included parts

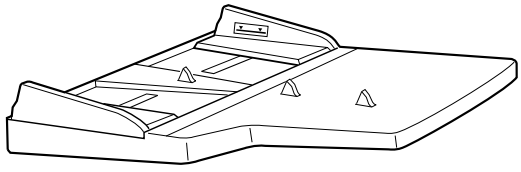

ADF tray

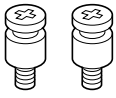

ADF mounting screws
(2 pcs.)



ADF securing screws
(2 pcs.)

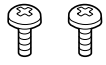

Tray securing screws
(2 pcs.)



Right cover
(1 pc.)



Left cover
(1 pc.)

Unplug the copier and follow the procedure below.

1. Remove the document cover.

Open the document cover and lift it at a slight backward angle to remove it.
Insert the left and right covers (included parts) into the holes from which the document cover has been removed.

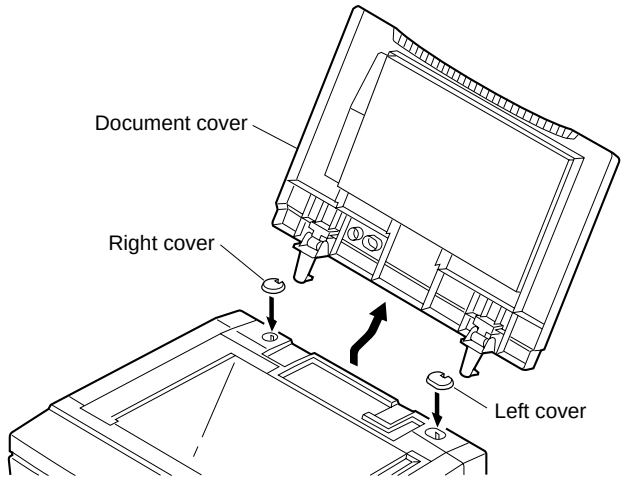

2. Mount the ADF onto the copier.

Remove the two cut-outs from the rear part of the upper cover of the copier.

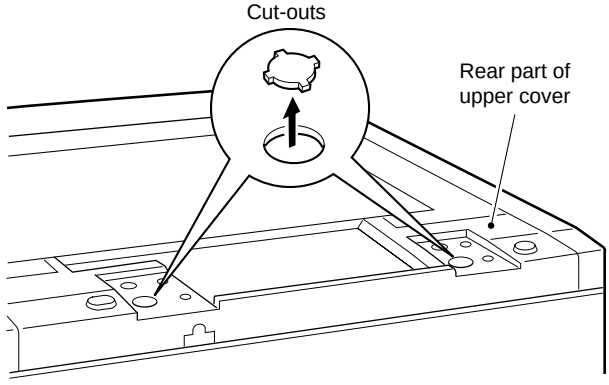

Install the two ADF mounting screws.

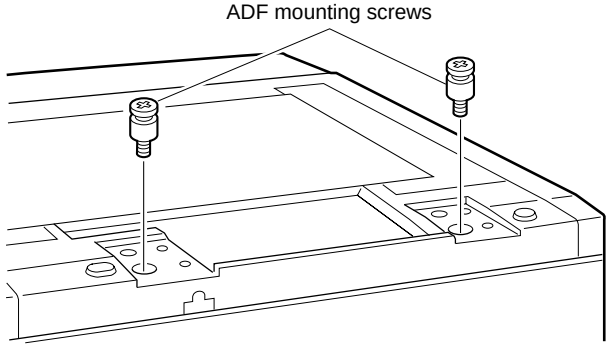

Fit the ADF mounting screws into the holes in the hinges of the ADF and secure the ADF with the two ADF securing screws.

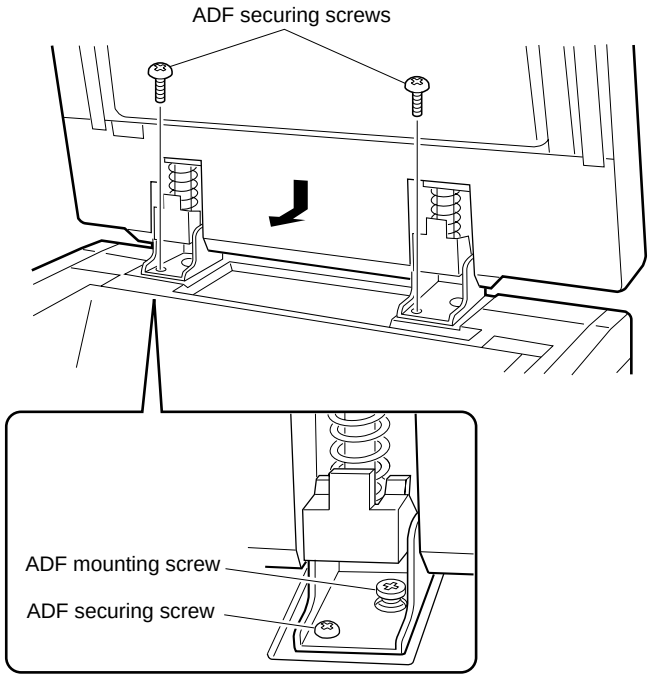

3. Adjust the angle of ADF.

Loosen the two securing screws for the angle adjusting panel attached to the hinge angle and then fasten the loosened screws while raising the angle adjusting panel completely.

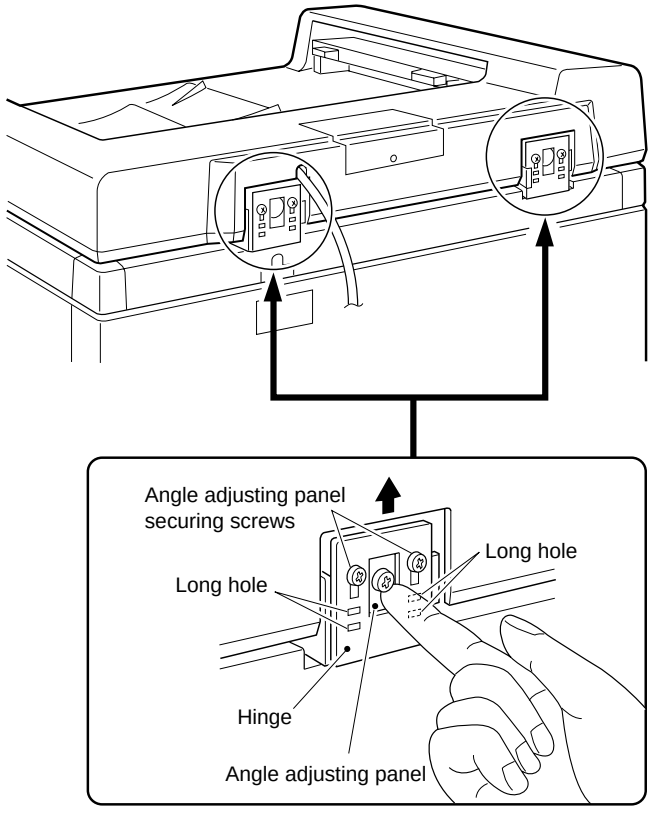

NOTE: Be sure to check that the protrusion of the angle adjusting panel is securely inserted into the long hole of the hinge.

4. Connect the ADF connector.

Remove the connector cover from the copier's rear cover.
Next, connect the ADF connector to the connector on the copier.

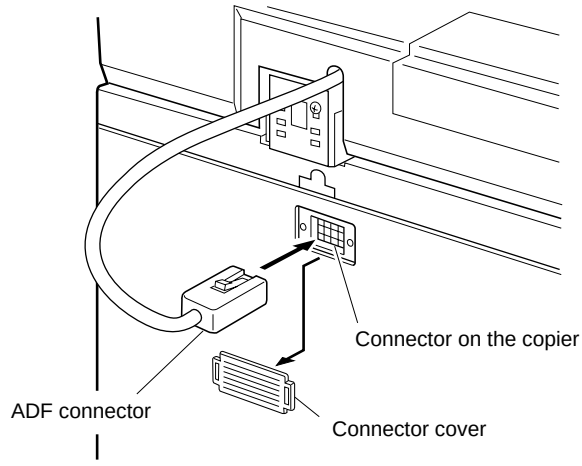

5. Connect the ADF tray connector.

Thread the M4 x 8 tray securing screws (includedparts) partway into their holes, then connect thetray connector.

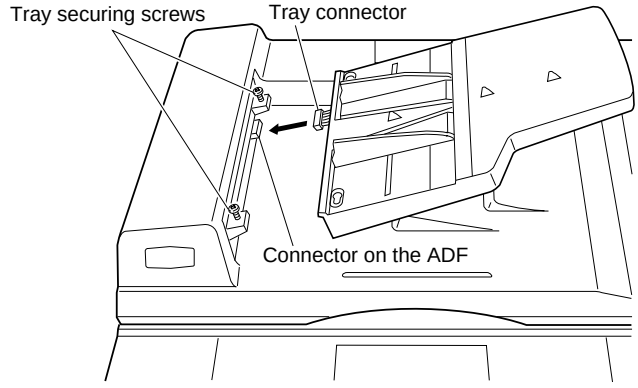

6. Attach the ADF tray.

Loosen the two ADF tray securing screws, install the tray as shown in the figure, and fasten the tray securing screws.

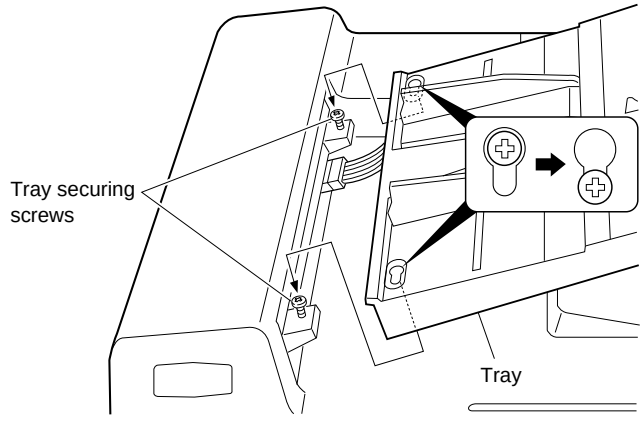

Plug the copier into a grounded outlet and turn the power switch on. Then, follow the procedure below.

7. Set the mode.

- Operate the copier keys to set the mode.

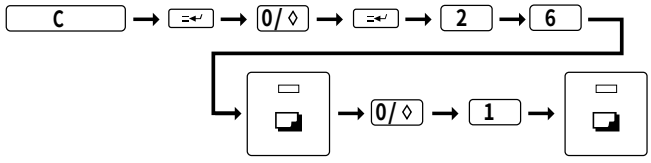

The above key operation will display the currently set mode.

- When only the SF-A56 is to be set, immediately after the above key operation, operate the keys as follows:

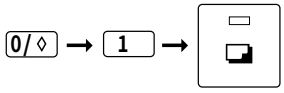

- If the mode is to be set in combination with other options, use the table shown below to add up the total of the setting values for all the peripheral devices to be set, and set that total value.

  For example, if the SF-A56 and sorter are to be set, the total setting value is 1 + 10 = 11. Operate the keys as follows:

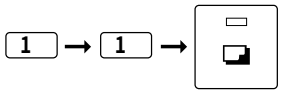

SF-A17	1
SF-A56	1

Stand/paper drawer	4

Sorter	10
Staple sorter	10

8. Adjust the center of the copy.

Set an original in the ADF tray and make a copy.
When the copy is off center as shown in Fig. 1 or Fig. 2, loosen the two tray securing screws and adjust the tray by moving it in direction A orB as shown in the figure.

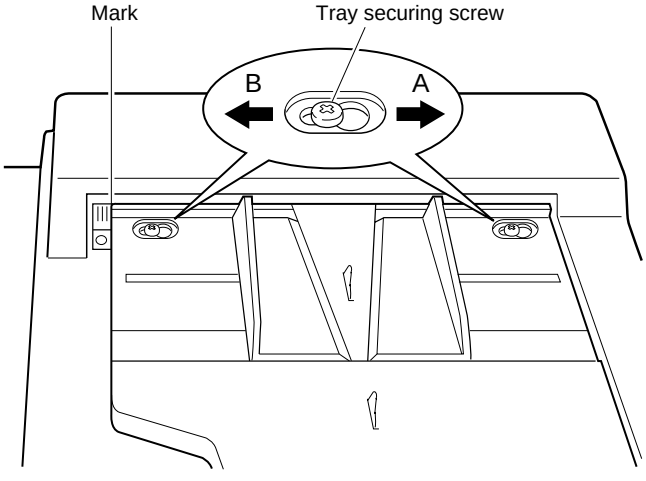

★ **When off center as shown in fig. 1**
Move the tray in direction A and secure it with the two mounting screws. Make a copy to check whether it is centered properly.

Fig. 1

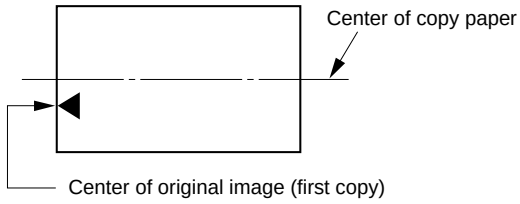

★ **When off center as shown in fig. 2**
Move the tray in direction B and secure it with the two mounting screws. Make a copy to check whether it is centered properly.

Fig. 2

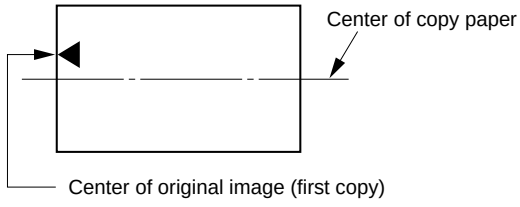

9. Adjust the position of the leading edge of originals

- The position of the leading edge of originals fed from the ADF can be determined using test command 53 .
- Although the leading edge has been factory set to stop at location (8), it may need to be adjusted depending on the type of originals. The leading edge position can be adjusted within a range of 8 mm (8 steps) on the stopper side and 7 mm (7 steps) on the glass side in 1 mm increments. Adjustment can be done separately for the one-sided, two-sided, and thin paper modes.

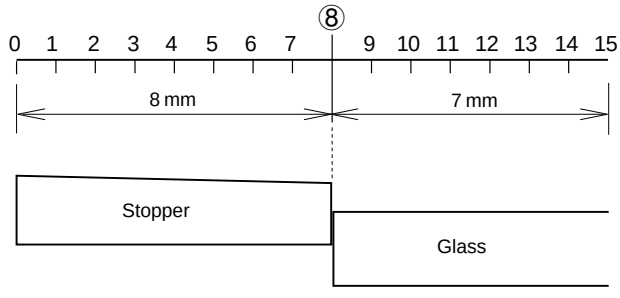

View from the operator side

Setup example

(1) If the leading edge of the original was not fed all the way to the stopper, enter value which will move the original toward the stopper side.
7, 6, 5, 4...

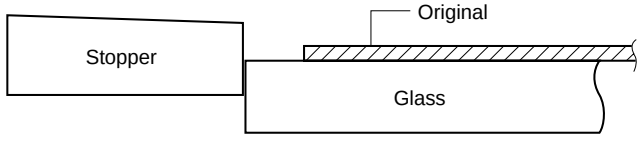

(2) If the copy image at the leading edge was distorted, enter value which will move the original toward the glass side.
9, 10, 11...

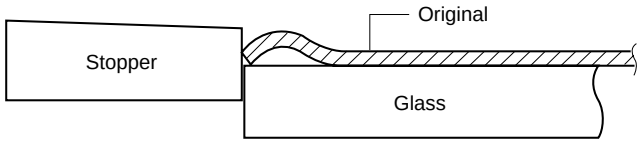

(3) If the original overrode the stopper, enter value which will move the original toward the glass side.
9, 10, 11, 12 ...

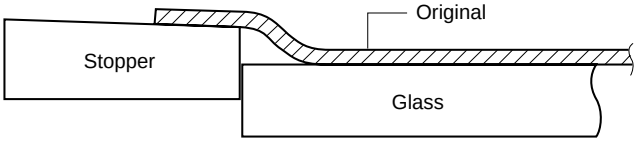

- After selecting test command 53 , enter a selected set value between 0 and 15 using the copier keys.

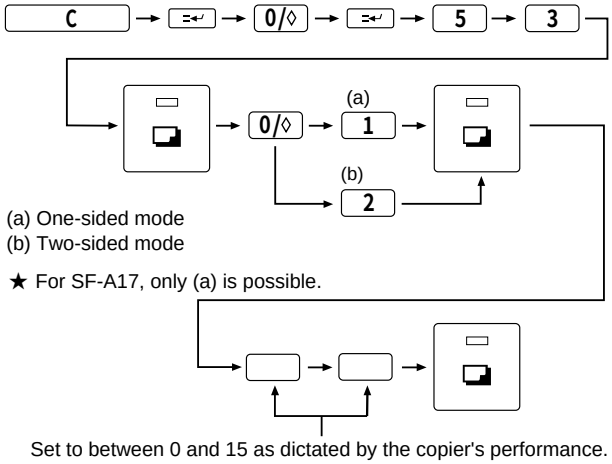

(a) One-sided mode
(b) Two-sided mode

★ For SF-A17, only (a) is possible.

Set to between 0 and 15 as dictated by the copier's performance.
The factory setting is "8".

(3) SF-S53

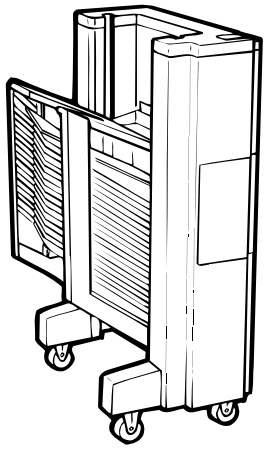

Included parts

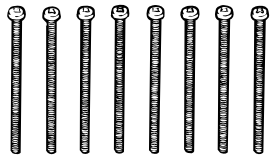

Caster screws
(M4 x 50): 8



Rail screws A
(M4 x 6): 2



Rail screws B
(M4 x 6): 1



Sorter mounting plate screws
(M4 x 12): 2



Rail mounting plate screws
(M4 x 14): 2



Bracket screws
(M4 x 10): 2

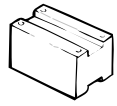

Caster spacers: 4

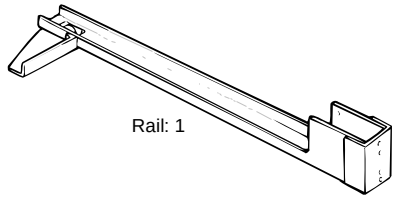

Rail: 1

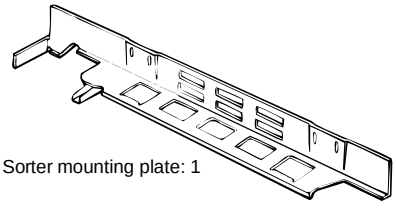

Sorter mounting plate: 1

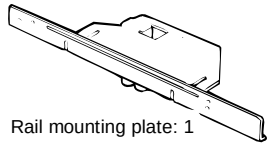

Rail mounting plate: 1

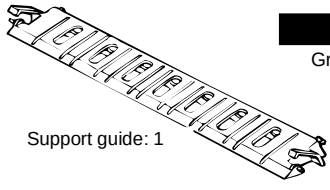

Green label: 1

Support guide: 1

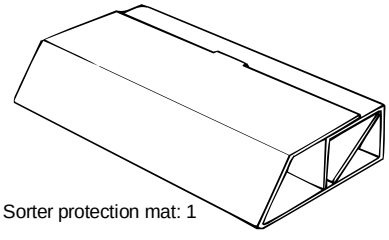

Sorter protection mat: 1

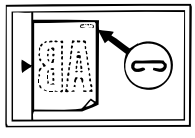

Stapling location label A: 1

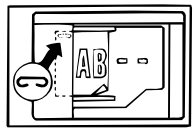

Stapling location label D: 1

Before installing

Be sure that you have plenty of room around the copier for work space.

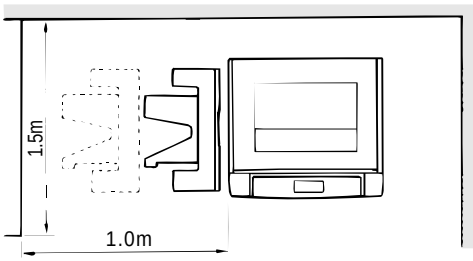

Remove the securing fixtures and attach the caster spacers.

★ **When performed on the skid.**

Remove the securing fixtures (2).

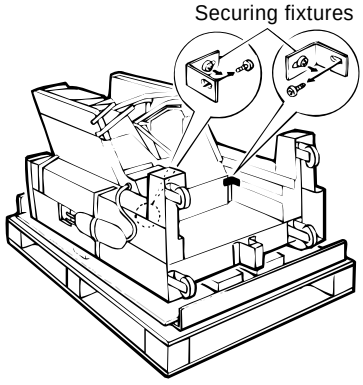

Remove the caster screws (2 per caster) and take off the 4 casters.

Next, attach the casters and caster spacers using 2 screws each (M4 x 50) as shown in the figure.

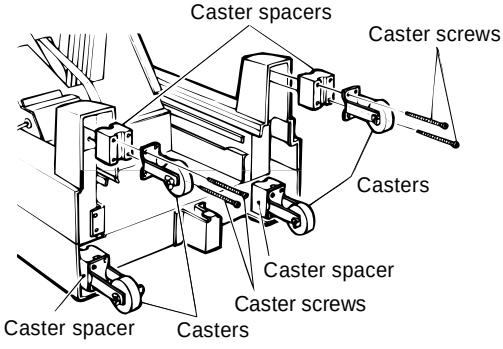

★ **When not performed on the skid**

Open the sorter protection mat, as shown in the figure, and position it against the sorter's casters. Lay the sorter down on the protection mat.

Next, remove the securing fixtures (2).

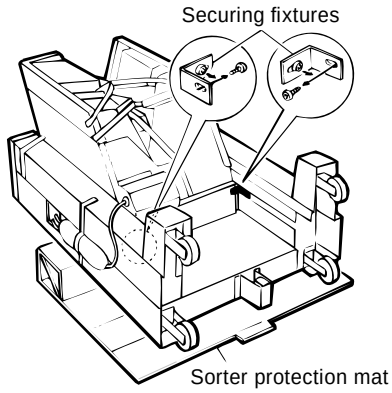

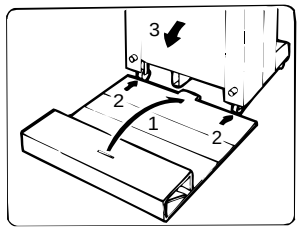

Remove the caster screws (2 per caster) and take off the 4 casters.

Next, attach the casters and caster spacers using 2 screws each (M4 x 50) as shown in the figure.

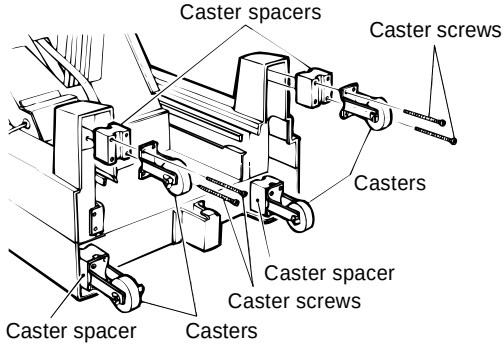

Remove all the securing tape (▨) and securing materials (▭) shown in the figures below.

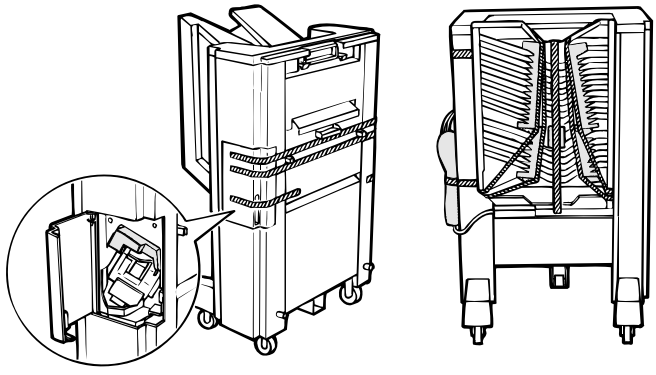

Unplug the copier's power cord before carrying out the following procedure.

A. Mounting of the staple sorter onto the copier.

1. Attach the sorter mounting plate.

Remove the screws (2) from the copier's upper left cabinet panel. Attach the sorter mounting plate with the 2 sorter mounting plate screws (M4 x 12).

The sorter mounting plate screw holes are elongated; tighten the screws so that the sorter mounting plate hangs down in its lowest position.

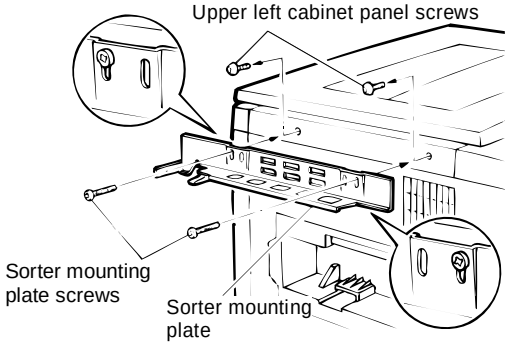

2. Attach the support guide.

Attach the support guide by attaching its pawls (2 locations) to the inside of the copier's paper output section.

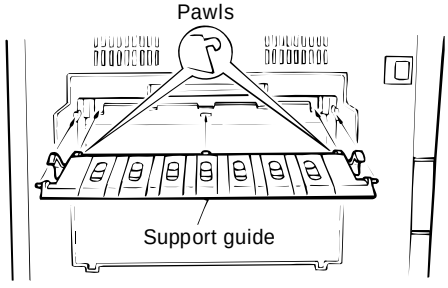

3. Cut off the cut portions of the desk's left cabinet panel.

Cut off the 2 cut portions of the desk's left cabinet panel.

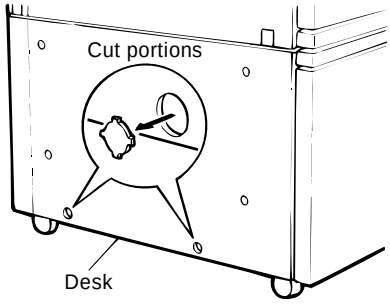

4. Attach the rail to the sorter.

Insert the rail into the rail mounting anchor, on the bottom of the sorter, and attach them with the 2 rail screws A (M4 x 6) and 1 rail screw B (M4 x 6).

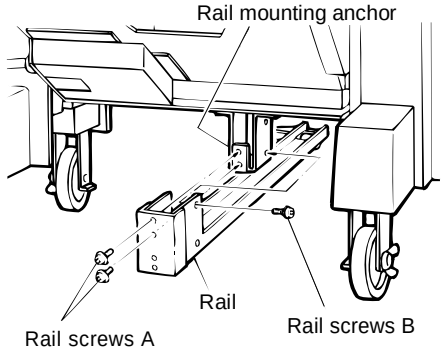

5. Fit the rail mounting plate onto the rail.

Insert the rail between the rollers on the rail mounting plate as shown in the figure.

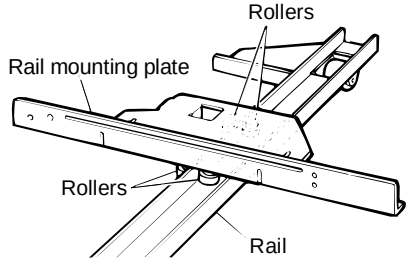

6. Attach the rail mounting plate to the copier desk.

Slide the rail, which was just attached to the sorter, under the copier as shown in the figure. Attach the rail mounting plate to the copier with the 2 rail mounting plate screws (M4 x 14).

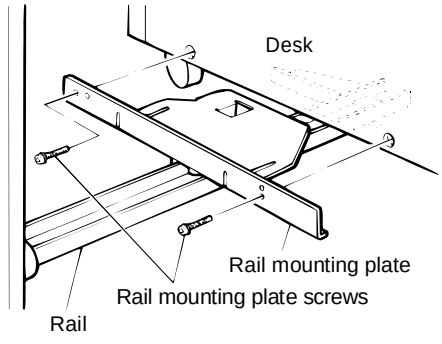

7. Confirm that the staple sorter can be attached and detached correctly.

① Latch and unlatch the staple sorter from the copier to confirm that it moves smoothly.

② Confirm that the staple sorter locks into place beside the copier.

If not, adjust the height of the sorter mounting plate until the staple sorter locks securely into place.

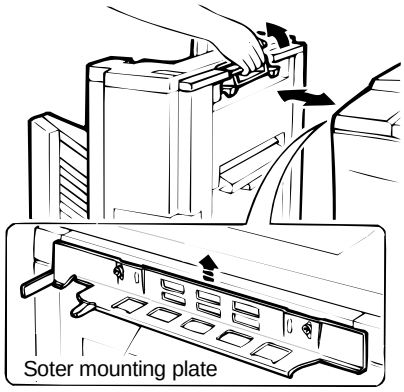

8. Remove the copier's rear cabinet panel and cut off the cut portion of the left cabinet.

Remove the 4 screws securing the copier's rear cabinet panel and take the panel off.

Next, cut off the cut portion (1 location) of the left cabinet panel.

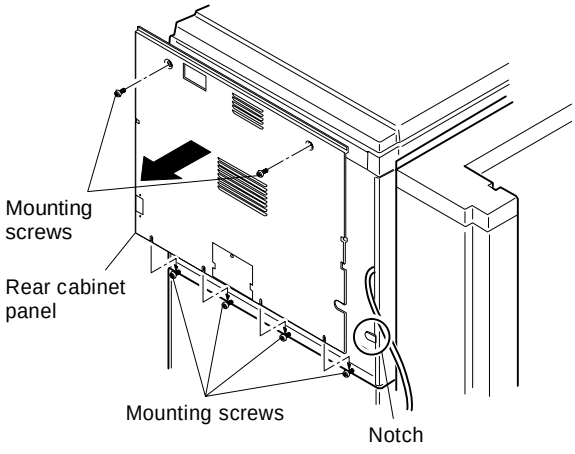

9. Attach the sorter connectors.

Loosely screw in 1 of the 2 supplied bracket screws as shown in the figure. Hook the bracket in place over this screw, then insert the remaining bracket screw and tighten both screws securely.

Next, connect the sorter's 6-pin and 10-pin connectors to the copier's 6-pin and 10-pin connectors. Then insert the clasp of the tie band into the hole on the bottom of the installation board.

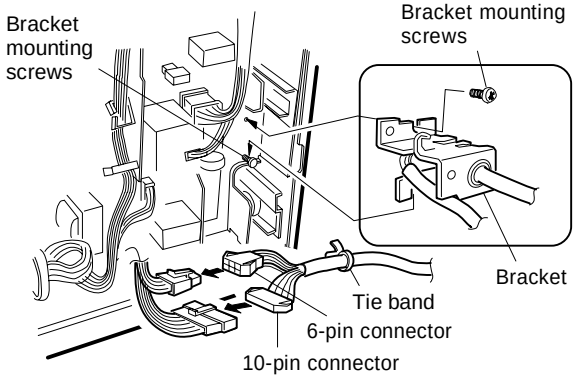

10. Reattach the rear cabinet panel.

Reattach the rear cabinet panel in its original position with the 4 mounting screws.

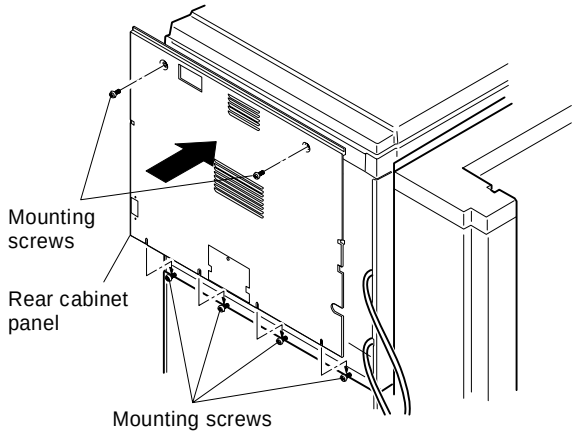

11. Affix the stapling location labels.

Affix the stapling location labels to the copier and RADF (SF-A54) as shown in the figure.

★ Copier

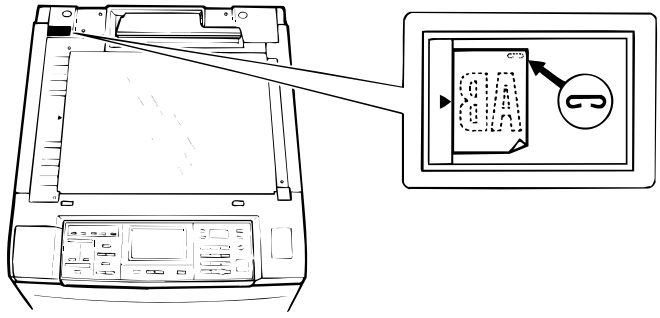

★ RADF (SF-A17/56)

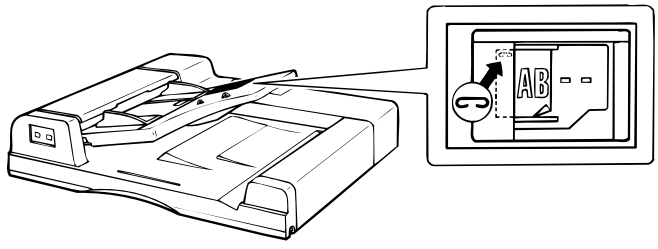

12. Affix the green label.

Lifting up on the staple sorter's release lever, separate the sorter from the copier.

Next, affix the green label to the paper output section handle as shown in the figure.

Holding the staple sorter's release lever, return the sorter to its original position. At this time, confirm that the staple sorter locks securely into place beside the copier.

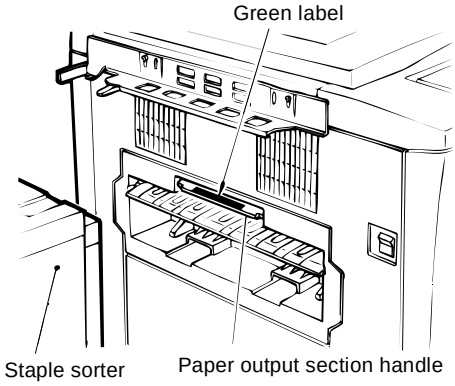

Plug the copier's power cord into an electric outlet, switch on the power, and then perform the following procedure.

13. Set the mode.

- Perform the following key operations on the copier to set the mode.

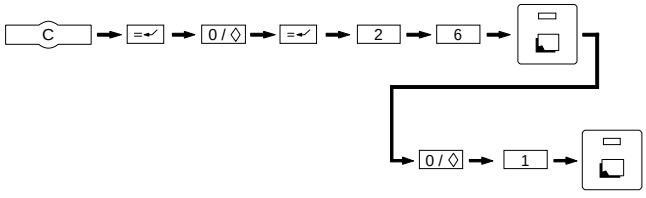

  Performing the above operation will cause the current setting to be displayed.

- If only the SF-S53 is being set, continue by performing the following key operation to complete the mode setting.

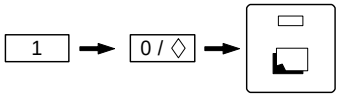

- If the mode is being set for a combination of options, add up the numerical values of the options to be set (see the table below) and input the total sum.

  Example: When setting SF-S53 and SF-A17/56, the total sum of their values is 11 (1 + 10). Therefore, perform the following key operations.

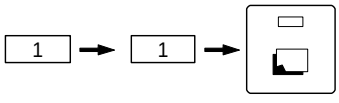

SF-A17/56	1

SF-D20	4
SF-D21H	4

Sorter	10

B. Staple sorter operation check

1. Check the sort mode.

Make 20 copies in the sort mode and confirm that the copies are distributed to the sort bins with no abnormal noises from the sorter.

2. Check the non-sort mode.

Make copies in the non-sort mode and confirm that they are sent to the non-sort bin.

3. Use the ADF (automatic document feeder) and check the staple sort mode.

Place 2 or more sheets in the ADF and make copies in the staple sort mode. Confirm that the copies are distributed to the sort bins, that the staple guide bar arranges the copies and that the stapler functions properly.

If at this time the copies have not been stapled or the stapler is jammed, adjust the staples by performing one of the following procedures.

If copies have not been stapled

1. Remove the staple cartridge.

Open the stapler cover, lift up on the staple cartridge and remove it by pulling in the direction of the arrow.

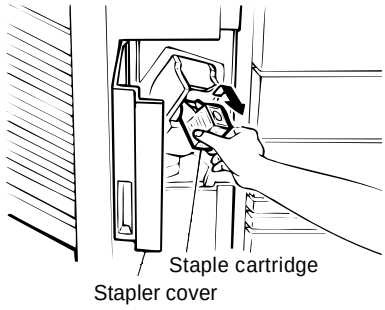

2. Check the staple cartridge.

Confirm that the sheets of staples in the cartridge are properly stacked.

If not, slide the staples back in the direction of the arrow while pressing in gently on the bottom of the cartridge.

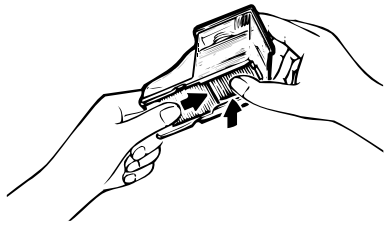

3. Reinsert the staple cartridge.

Push the staple cartridge in horizontally until it clicks securely into place.

Then close the stapler cover.

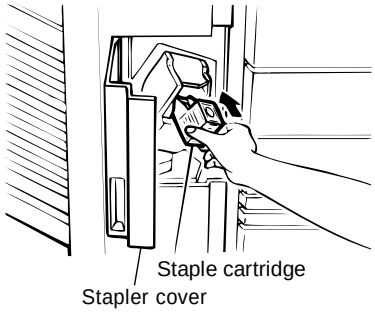

4. Confirm that papers are stapled correctly.

Place a set of papers in the 2nd bin (below the non-sort bin), check the stapling location, and then press the manual staple key when it lights up.

Next, remove the papers that were placed in the 2nd bin and confirm that they have been stapled correctly.

At this time, if the papers still have not been stapled, repeat this procedure once again.

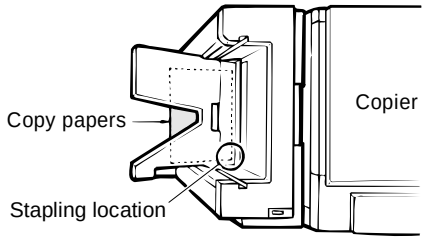

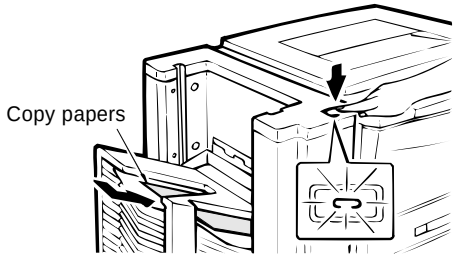

This completes the staple sorter installation.

If staples have become jammed.

1. Remove the stapler unit.

Open the stapler cover and remove the mounting screw securing the unit in place.

Next, remove the staple unit.

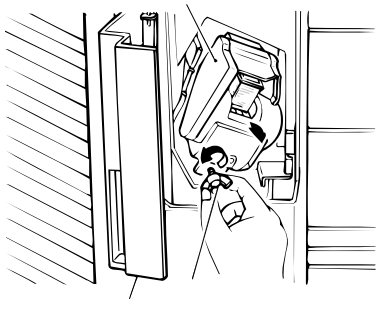

2. Open the stapling section.

Open the stapling section by pushing up on the stapling plate while pressing on the stapling section release lever.

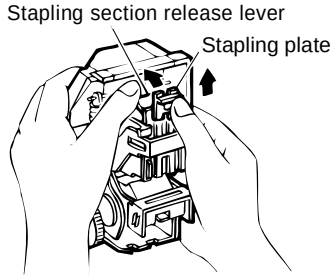

3. Remove the jammed staples.

Remove the jammed staples with the supplied tool as shown in the figure.

✳ This tool can be found on the inside of the staple unit cover.

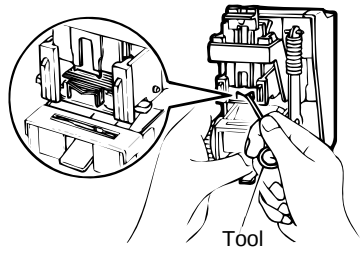

4. Close the stapling section.

Press down on the stapling plate and return it to its original position.

Next, return the stapling section release lever to its original position.

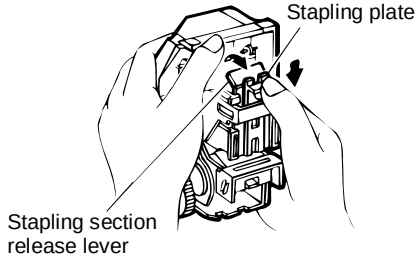

5. Reinstall the staple unit.

Reinstall the staple unit in its original location using the mounting screw to secure it in place.

Then close the stapler cover.

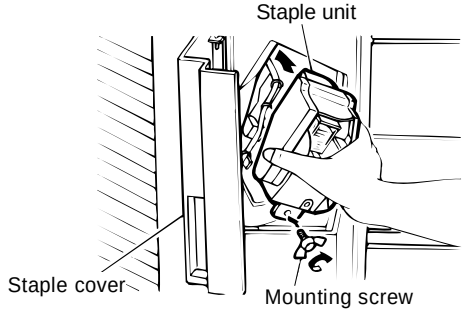

6. Confirm that papers are stapled correctly.

Place a set of papers in the 2nd bin (below the non-sort bin), check the stapling location, and then press the manual staple key when it lights up.

Next, remove the papers that were placed in the 2nd bin and confirm that they have been stapled correctly.

At this time, if the papers still have not been stapled, repeat this procedure once again.

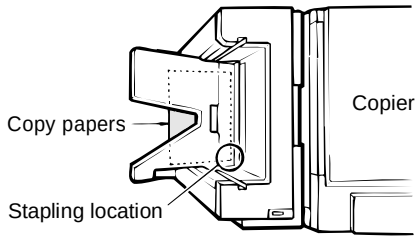

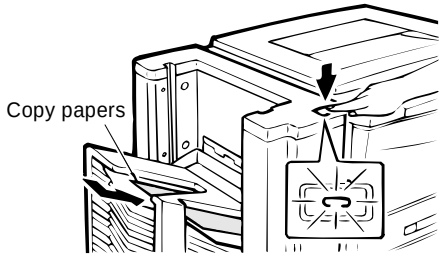

This completes the staple sorter installation.

(4) SF-S52

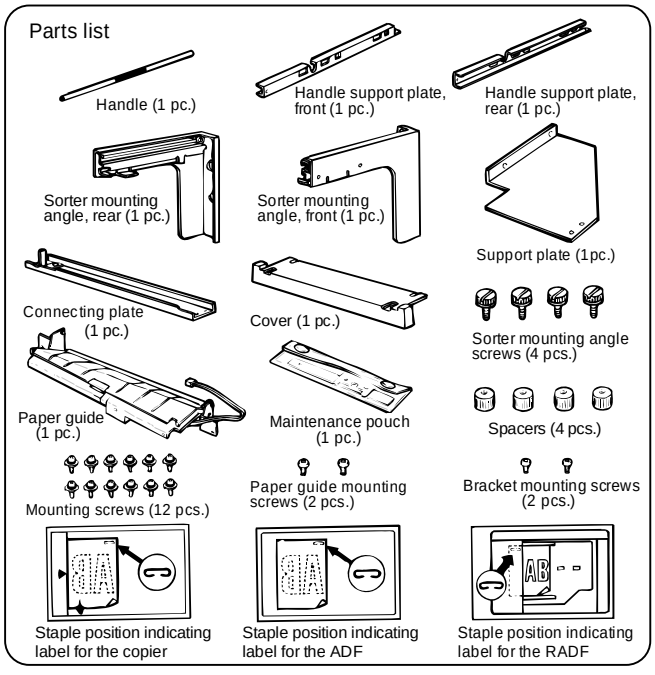

a. After unpacking, check that all the parts are provided as follows:

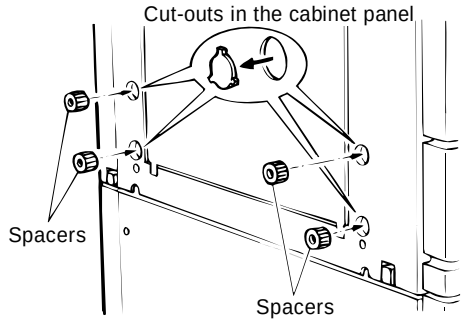

b. Disconnect the power plug of the copier body.

c. Remove the cut-outs in the cabinet panel at the spacer holes on the left side of the copier and fit the sorter mounting angle spacers into the holes.

d. Attach the sorter mounting angle screws (4 pcs). Allow a space of 2 - 3 mm between the screws and the spacers.

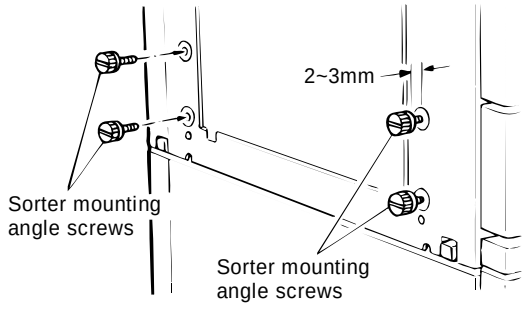

e. Attach the sorter mounting angle and the connecting plate.

- Hook the front and rear sorter mounting angles into the spaces between the sorter mounting angle screws and the spacers, and tighten the four sorter mounting angle screws.
- Next, use the four connecting plate mounting screws to secure the connecting plate to the front and rear sorter mounting angles.

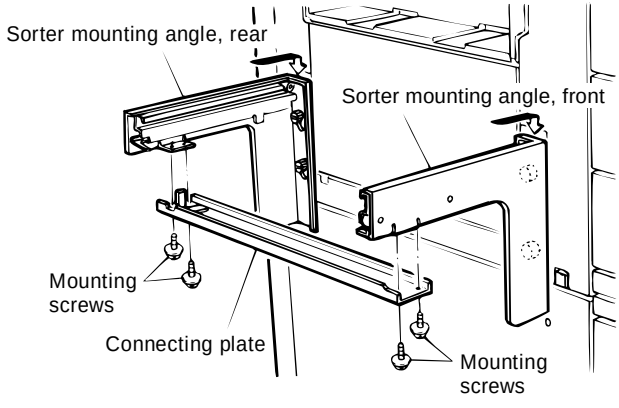

- Attach the support plate to the sorter mounting angle R and the connecting plate, and fix it with four fixing screws.

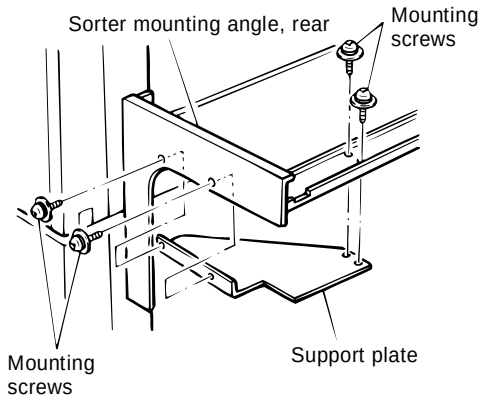

f. Remove the rear cabinet panel from the sorter.
Loosen the 4 screws securing the rear cabinet panel to the sorter, then remove the rear cabinet panel.

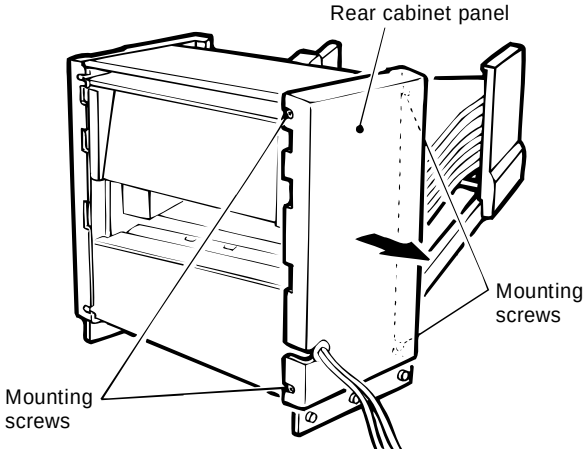

g. Mount the paper guide.

① Insert the paper guide harness through the hole, and use the 2 mounting screws to attach the paper guide.

② Connect the 3-pin connector of the paper guide harness to the 3-pin connector of the sorter control base.

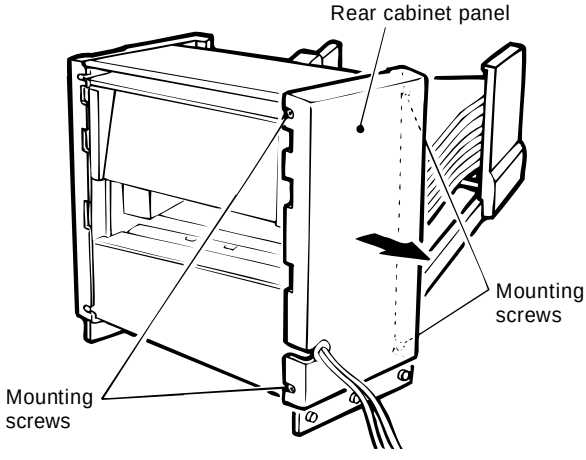

h. Install the rear cabinet panel to the sorter.
Tighten the 4 mounting screws to install the rear cabinet panel.

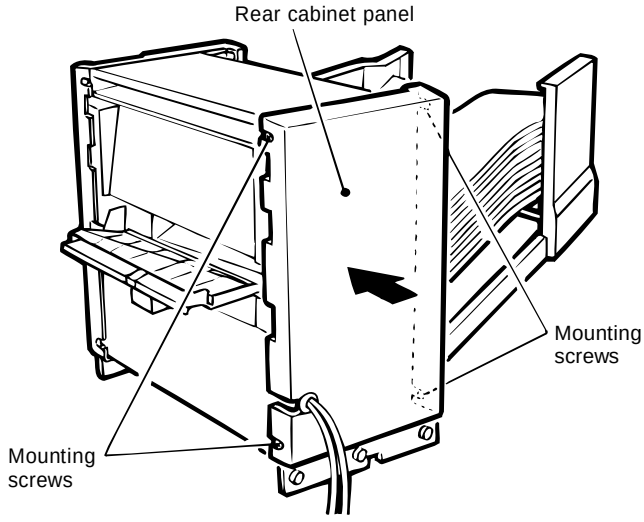

i. Mount the sorter onto the copier.

- Fit the guide plate on the sorter body into the guides on the front and rear sorter mounting angles.

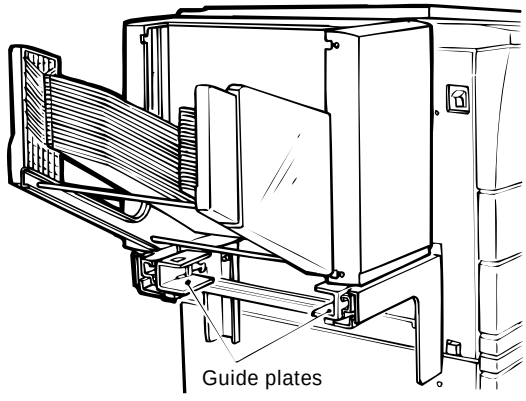

j. Attach the handle to the sorter.
Attach the handle mounting plates F and R to the sorter shaft as shown in the figure, and fix it with two fixing screws.
Then attach the handle to the handle mounting plates F and R and fix it with two fixing screws.

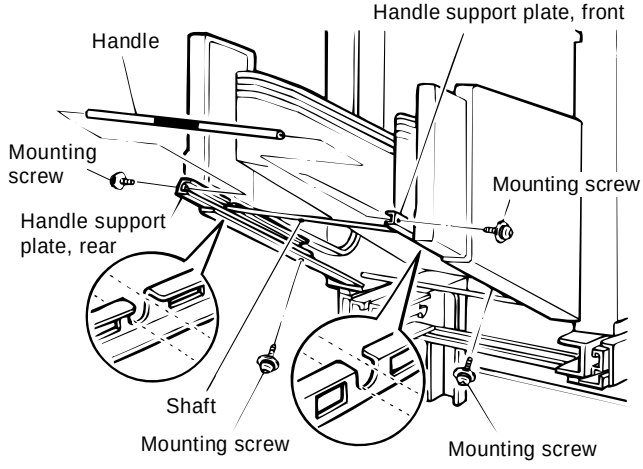

k. Lock the sorter body.

① Pull out the sorter body slowly until the black screw on the guide plate can be seen.

② Loosen the black screws (one in the front, one in the rear) fixing the stopper plates (one in the front, one in the rear), and lower the stopper plates all the way, then tighten the black screws.

③ Insert the pawls in the cover into the square holes in the guide plates, and attach the cover.

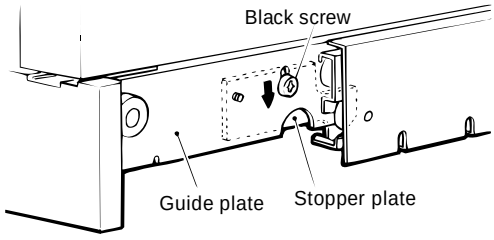

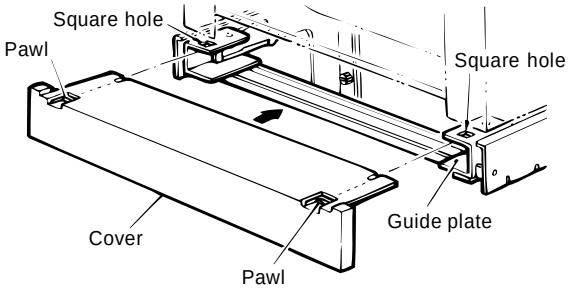

l. Remove the rear cabinet panel from the copier and cut out the notch in the cabinet panel.

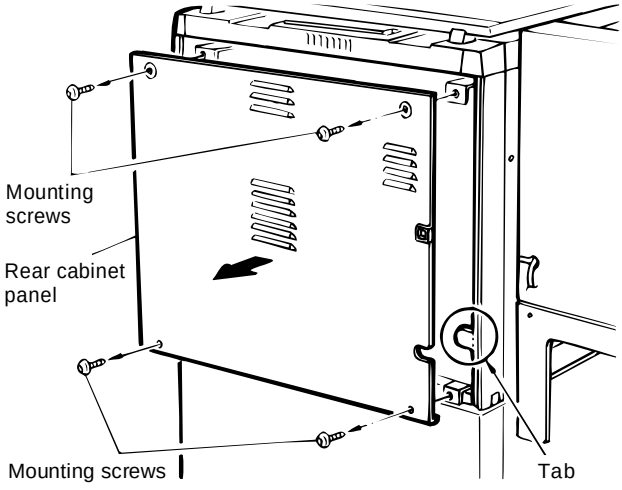

m. Connect the sorter connector.

① Use the two bracket mounting screws to secure the bracket.

② Connect the 6-pin connector and the 10-pin connector of the sorter to the 6-pin connector and the 10-pin connector of the copier.

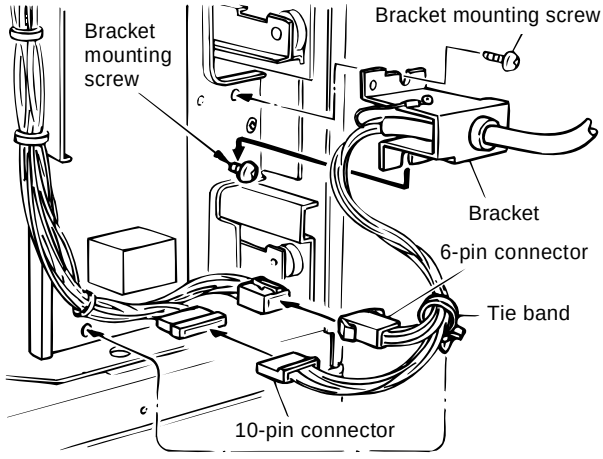

n. Attach the rear cabinet panel with four screws.

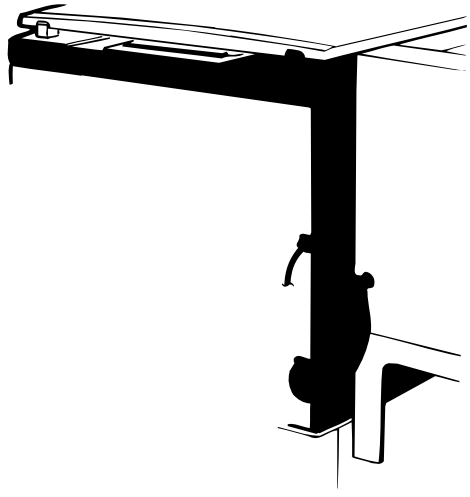

o. Set the mode.

① The following key operation will display the current set value.

② If only the SF-S52 is to be set, immediately after the above key operation, operate the keys as follows:

③ If the mode is to be set for a combination with other options, add up the total of the setting values for all the peripheral devices to be set from the table shown below, and set the total value.

<Example> If the SF-S52 and the SF-A17/A56 are to be set, the total setting value is 10 + 1 = 11. Operate the keys as follows:

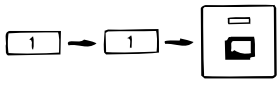

Set values of peripheral devices

SF-A17/A56	1

SF-D20	4
SD-D21	4

Sorter	10

p. Affix the staple position indicating label to the copier and the ADF (SF-A17) or the RADF (SF-A56) as shown in the figure.

- Copier

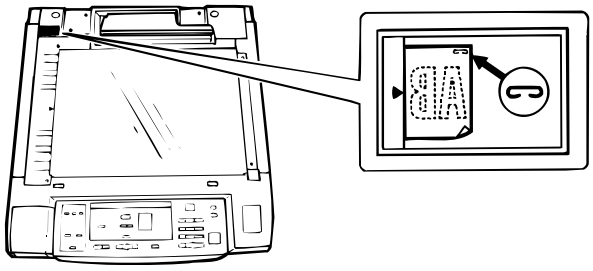

- ADF (SF-A17)
- RADF (SF-A56)

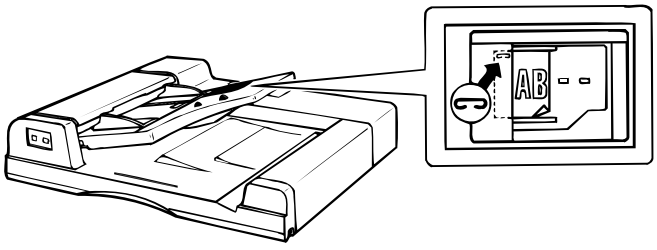

q. Attach the maintenance pouch.

- Open the sorter top cover and attach the enclosed maintenance pouch containing tool A and tool B onto the frame of the staple sorter.

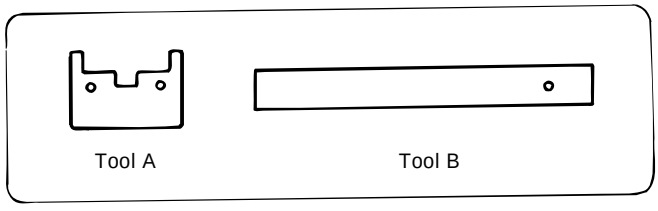

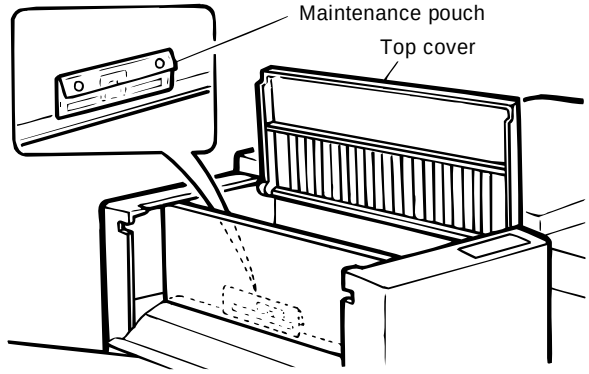

Check the staple sorter.

a. SORT mode
Make 20 copies in the SORT mode. Make sure all copies are properly sorted to the sort bins and also check for any unusual operating noises.

b. NON-SORT mode
Make copies in the NON-SORT mode. Make sure that all copies go to the top bin.

c. STAPLE SORT mode
Set more than 2 originals in the ADF and make copies in the STAPLE SORT mode. Make sure all copy papers are properly sorted to the bins and are properly stapled.

Note: When copies are not stapled or when a staple jam occurs, refer to "d. When copies are not stapled" or "e. When a staple jam occurs."

d. When copies are not stapled:

① Open the sorter top cover, raise the stapler handle up and pull out the stapler.

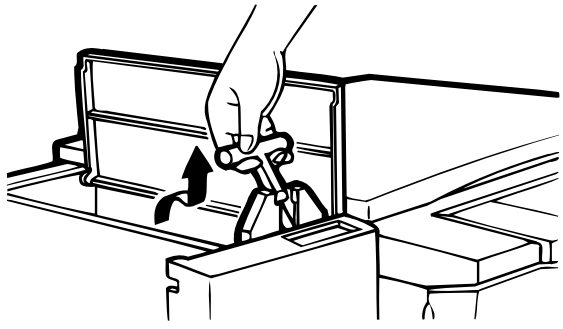

② Raise the retaining lever and remove the staple cartridge from the stapler.

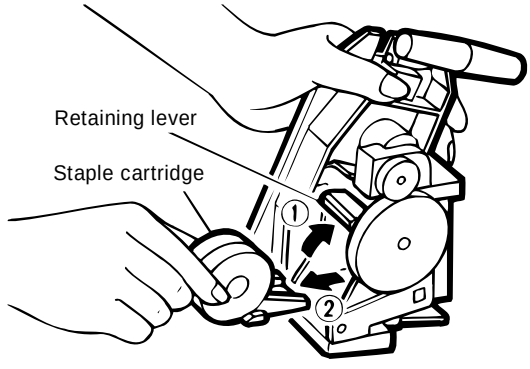

③ Check that the first staple in the staple cartridge is at the indication line. If not, pull it to the indication line. If any staples are protruding past the indication line, tear them off at the indication line.

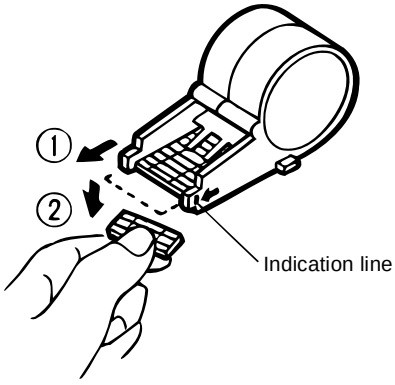

④ Install the staple cartridge in place. Lower the retaining lever to secure the staple cartridge.

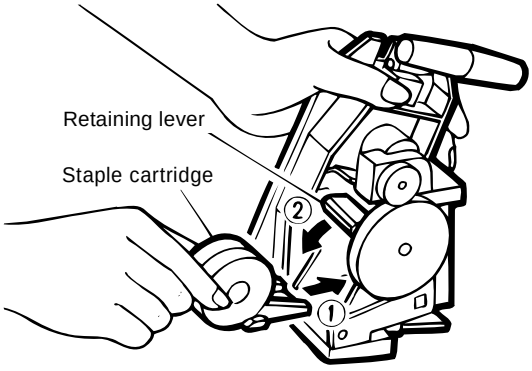

⑤ Align the stapler with the groove and position it in place.
Lower the stapler handle back down as shown.
Close the sorter top cover.

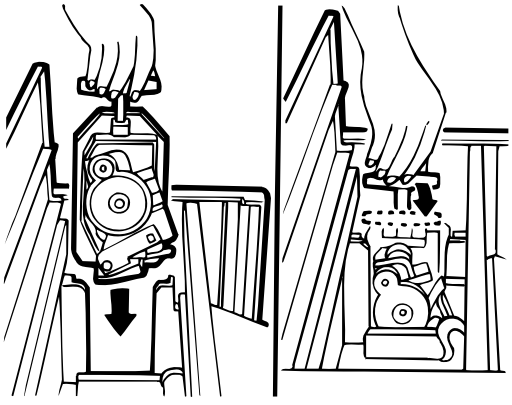

e. When a staple jam occurs:

① Open the top cover, raise the stapler handle up and pull out the stapler.
If the stapler is difficult to remove because of misfed paper, insert tool A in the maintenance pouch into the wheel of the stapler, then turn in either direction to ease stapler removal.

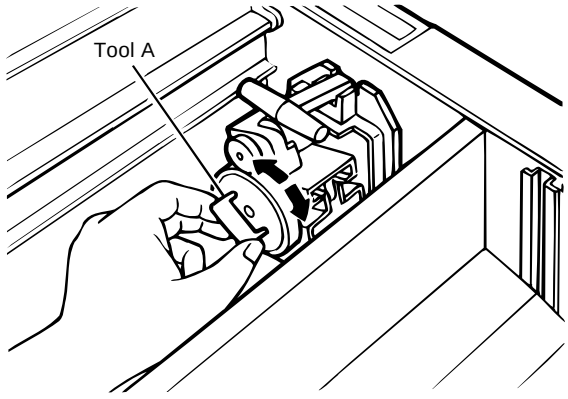

② Raise the retaining lever and remove the staple cartridge from the stapler.

③ Using tool B in the maintenance pouch, remove the retaining clip at the stapling position, remove the block at the tip, then remove the jammed staple.

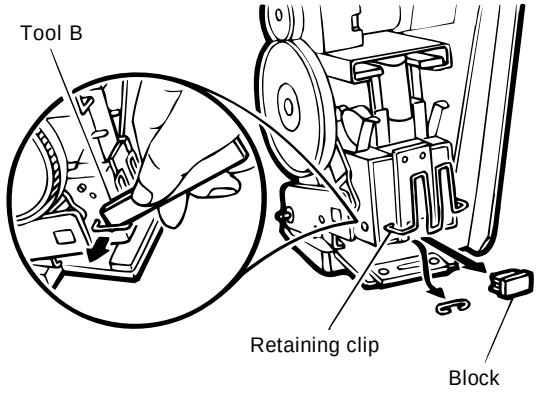

④ Replace the block and the retaining clip to their original positions.

⑤ Place the staple cartridge back into position.
Lower the retaining lever to secure the staple cartridge.

⑥ Align the stapler with the groove and position it in place.
Lower the stapler handle back down as shown.
Close the top cover.

f. Make sure the copies are stapled.

① Place a set of copies on the top bin and make sure of the correct staple position. Press the manual staple key.

② Remove the copies from the top bin and check to be sure the stapler works properly.
Note: If they are not stapled, repeat this procedure.

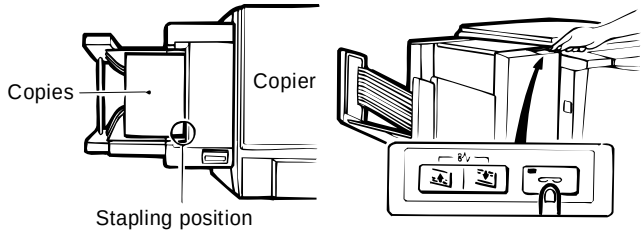

(5) SF-S18

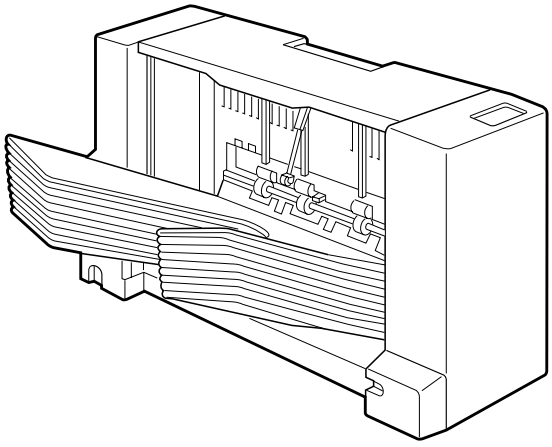

Included parts

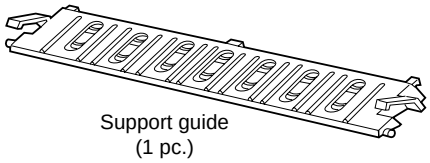

Support guide
(1 pc.)

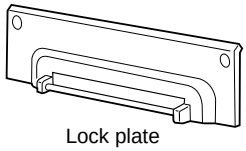

Lock plate
(1 pc.)

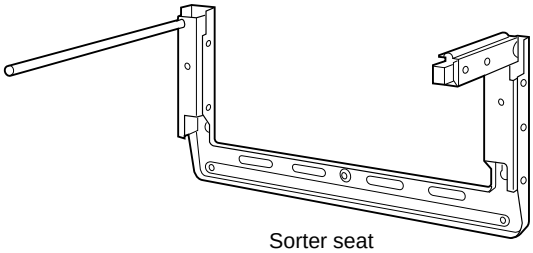

Sorter seat
(1 pc.)

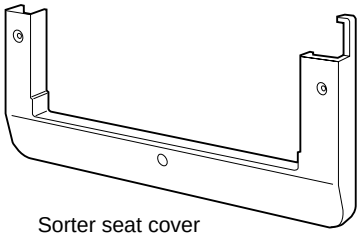

Sorter seat cover
(1 pc.)



Sorter seat cover securing screws
(3 pcs.)



Lockplate screws (M4 x 8)
(2 pcs.)

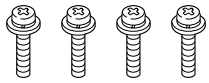

Sorter seat securing screws
(4 pcs.)

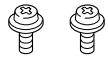

Sorter securing screws (M4 x 8)
(2 pcs.)

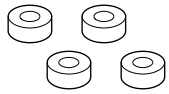

Spacers
(4 pcs.)



Stopper screw
(1 pc.)



Felt washer
(1 pc.)

Unplug the copier and follow the procedure below.

1. Mount the lock plate.

Remove the screws (2) from the upper side of the copier's left cabinet panel.

Mount the lock plate to the upper side of the copier's left cabinet panel and secure it with the M4 x 8 lockplate screws (2).

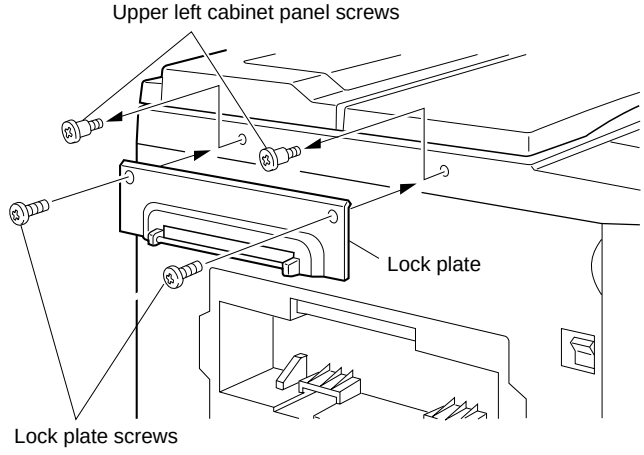

2. Mount the support guide.

Hang the two hooks of the support guide on the exit area of the copier to mount the support guide.

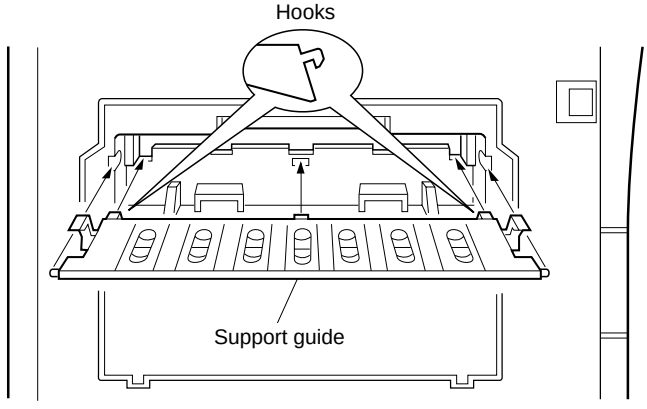

3. Remove the cut-outs.

Remove the four cut-outs from the left cabinet panel of the copier.

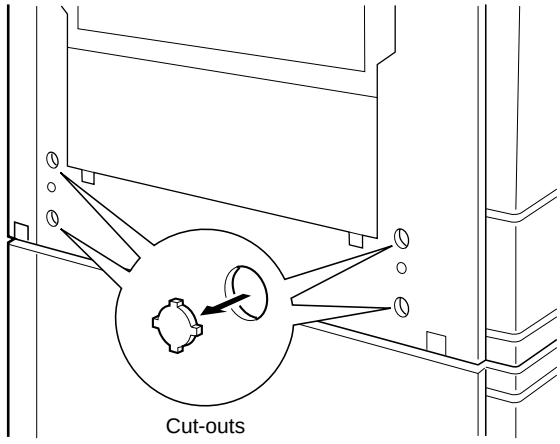

4. Insert the spacers.

Insert the four spacers into the holes which have been made by removing the cut-outs in step 3.

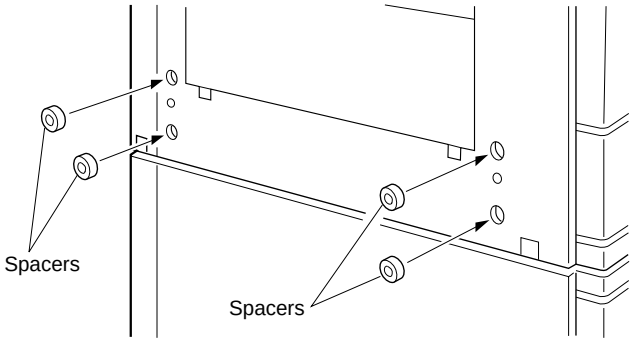

5. Mount the sorter seat.

Temporarily secure the sorter seat securing screws to the two upper spacers which have been mounted in step 4.

Insert these two sorter seat securing screws into the two upper holes of the sorter seat as shown in the figure.

Secure the lower part of the sorter seat by inserting the two sorter seat securing screws into the lower two holes of the sorter seat and tighten the temporarily secured upper screws to secure the sorter seat.

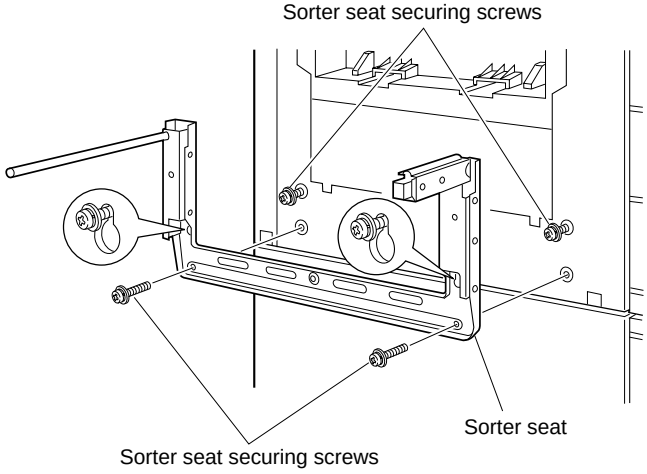

6. Mount the sorter seat cover.

Mount the sorter seat cover to the sorter seat and secure it using three sorter seat cover securing screws.

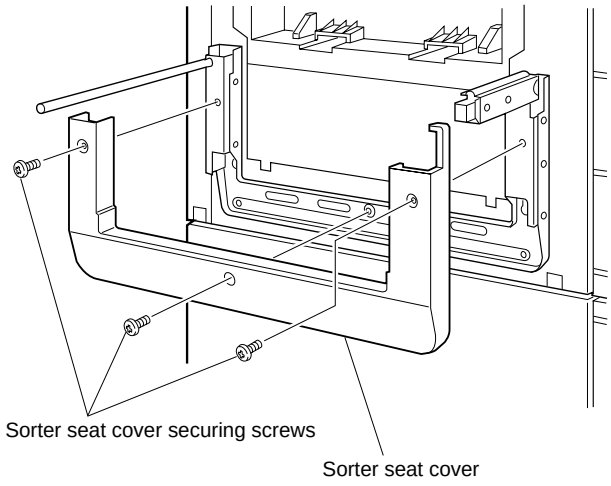

7. Mount the sorter.

Insert the shaft on the back of the sorter seat between the rollers at the back of the sorter.

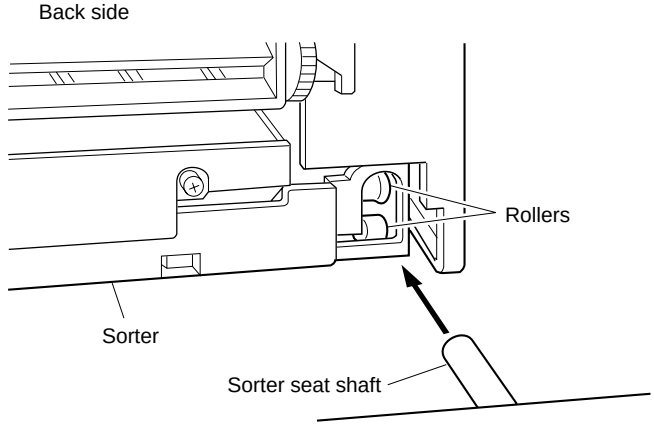

Next, insert the slide rail on the front of the sorter seat into the slide rail mount on the front of the sorter and push the sorter in place.

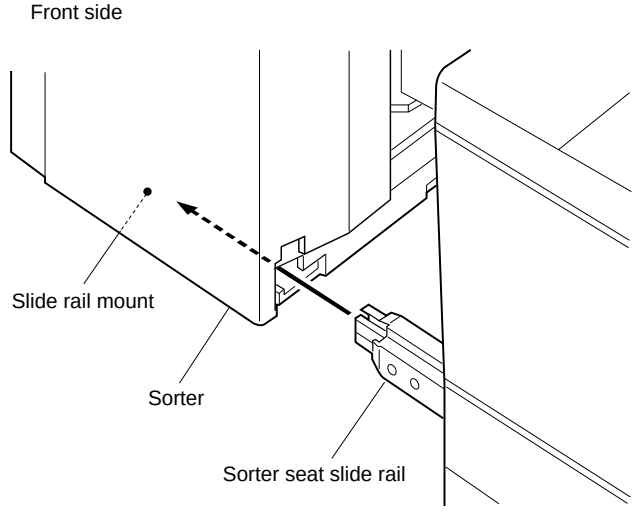

NOTE: Be sure to slide the sorter away from the copier and check that the sorter is not removed from the slide rail of the sorter seat.

8. Mount the stopper.

Mount the felt washer to the stopper screw and secure the screw to the sorter seat shaft.

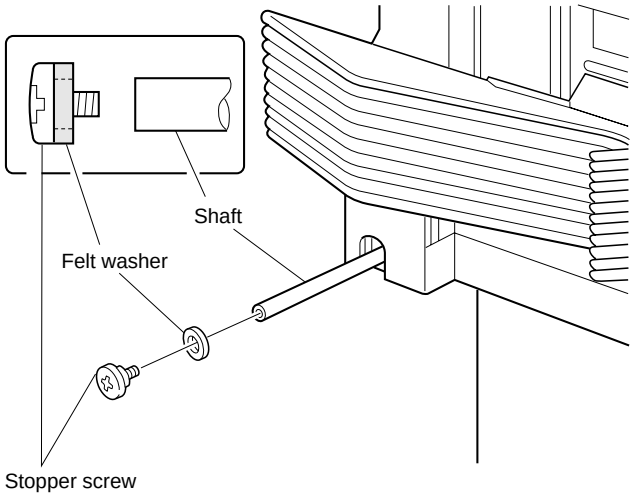

9. Remove the sorter's front cabinet panel.

Remove the front cabinet panel screw.
Next, using a screwdriver, pry open the lower part of the front cabinet panel to pull the lowest tab from the slot in which it is anchored.
Pull the front cabinet panel slightly up and out to remove it.
Disconnect the connector which is plugged into the front cabinet panel.

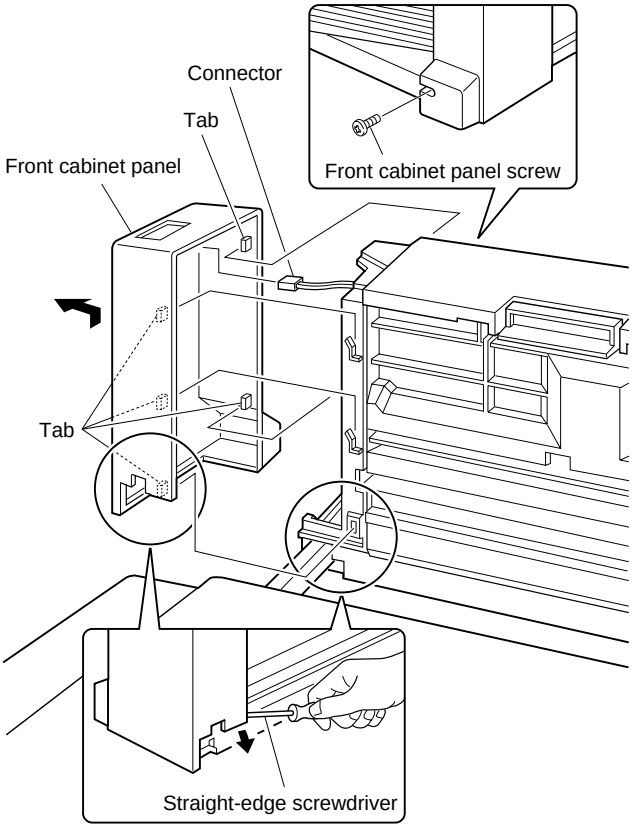

10. Attach the sorter to the sorter seat.

Install the M4 x 8 sorter securing screws (2 pcs.) in the screw holes on the sorter to attach the sorter to the sorter seat.

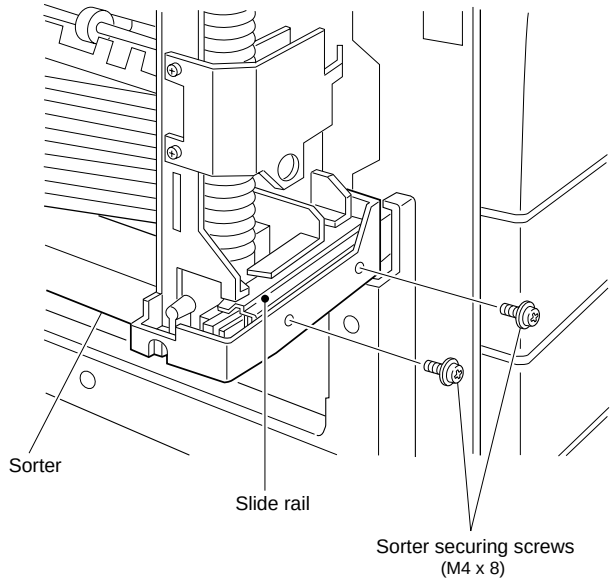

11. Mount the sorter's front cabinet panel.

Plug the connector from the sorter into the circuit board inside the sorter's front cabinet panel.

Fit the tabs on the left side of the front cabinet panel behind the ribs on the sorter, and slide the tabs on the right-hand side of the front cabinet panel behind the ribs in the sorter.

Check to be sure the tabs are securely positioned behind the ribs and inserted properly into the slot.

Secure the front cabinet panel using the screw which was removed in step 9.

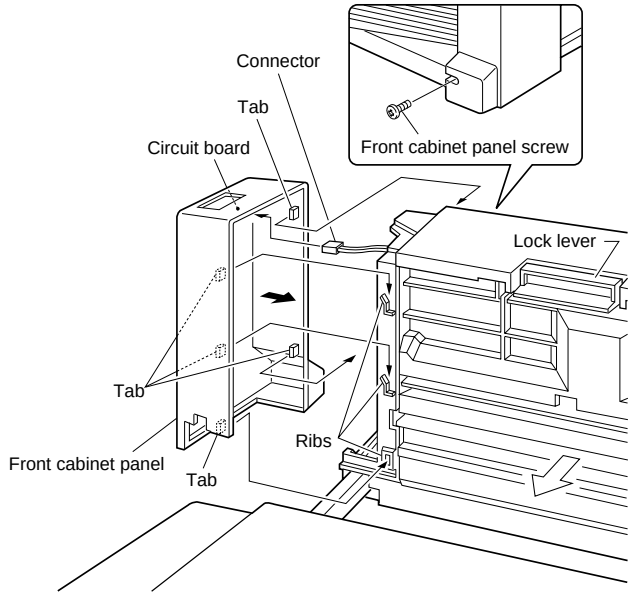

12. Connect the sorter connector.

Remove the sorter connector cover securing screw which is mounted to the rear cabinet panel of the copier and remove the sorter connector cover.

Connect the sorter connector to the connector on the copier and secure it using the sorter connector securing screw.

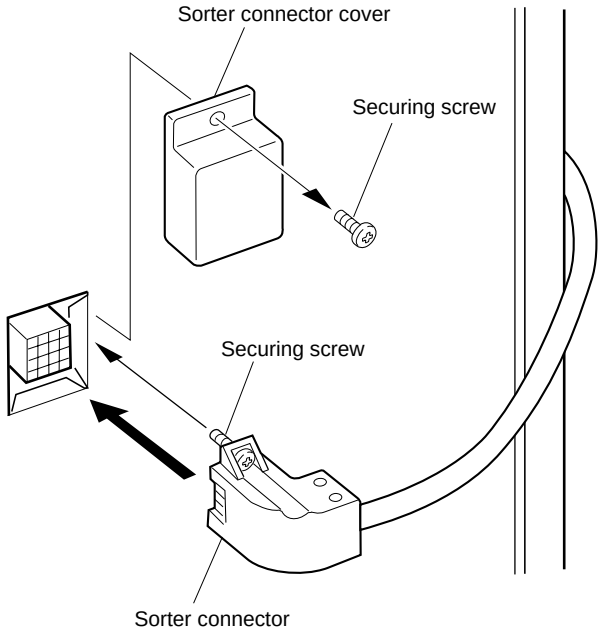

Plug the copier into a grounded outlet and turn the power switch on.

Then, follow the procedure below.

13. Set the mode.

- Operate the copier keys to set the mode.

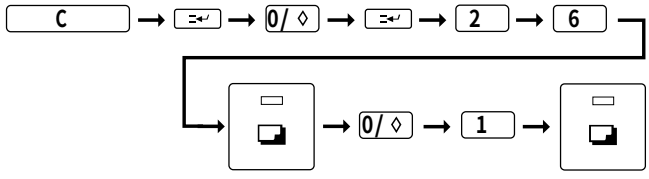

The above key operation will display the currently set mode.

- When only the SF-S18 is to be set, immediately after the above key operation, operate the keys as follows:

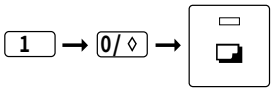

- If the mode is to be set in combination with other options, use the table shown below to add up the total of the setting values for all the peripheral devices to be set, and set that total value.

  For example, if the SF-S18 and RADF are to be set, the total setting value is 1 + 10 = 11.

  Operate the keys as follows:

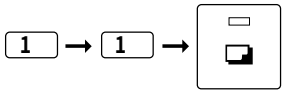

RADF	1
ADF	1

Stand/paper drawer	4

SF-S18	10

(6) SF-S15 (20-Bin Sorter)

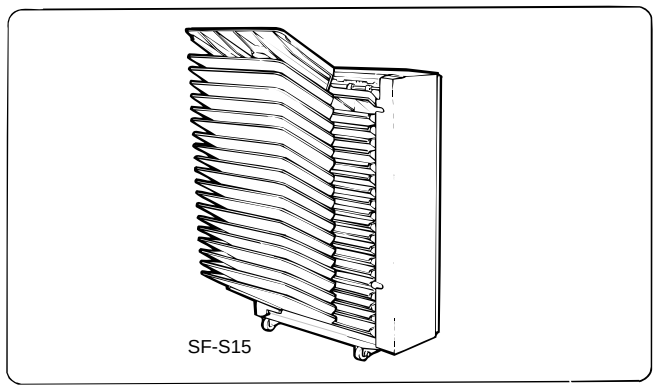

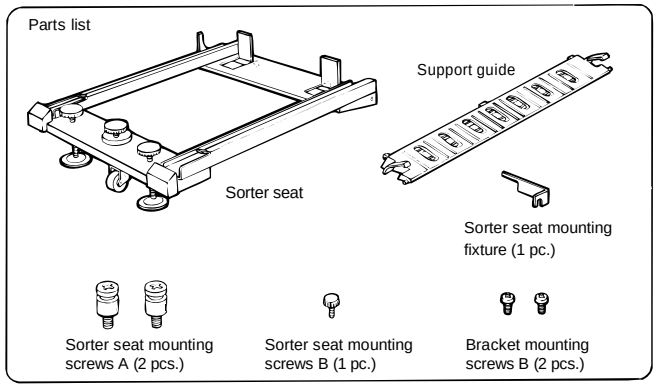

Unplug the copier and follow the procedure below.

1. Install the support guide.

Hook the pawls (two locations) of the support guide to the inside of the copier paper exit end to install the guide as shown in Fig.

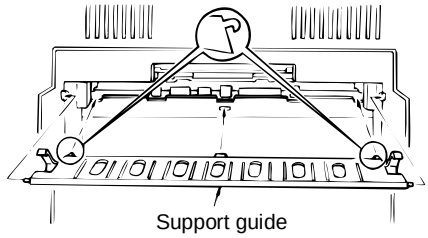

2. Mount the sorter seat to the desk.

Remove the two cut-outs in the cabinet panel on the left side of the desk.

Secure the two sorter seat mounting screws A to the desk.

Next, hook the sorter seat onto the two sorter seat mounting screws A which were secured to the desk, and then use the one sorter seat mounting screw B to secure the sorter seat mounting fixiture as shown.

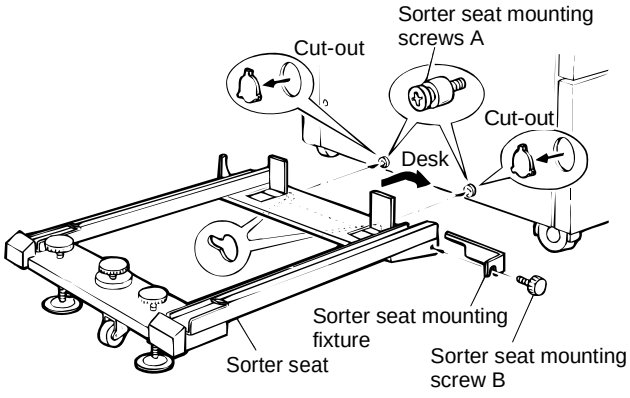

3. Remove the front panel of the sorter.

Loosen the four mounting screws in the front panel of the sorter and remove the panel.

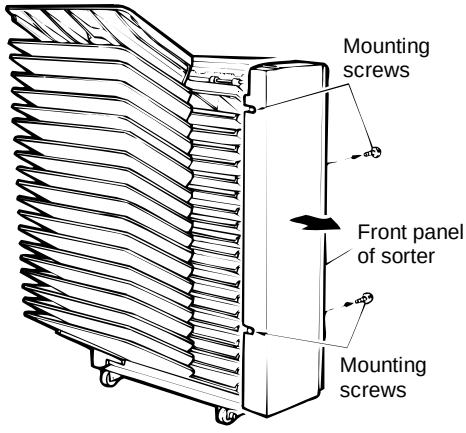

4. Place the sorter on the sorter seat.

While holding the handle, place the sorter on the sorter seat's guide rails and push it gently as far back as it will go.

When doing this, confirm that the rollers at the front of the sorter are correctly seated on the sorter seat.

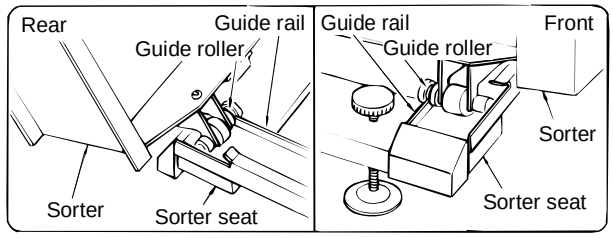

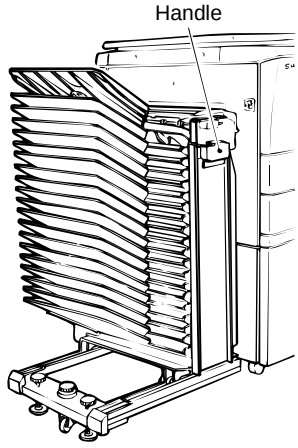

5. Remove the rear cabinet panel from the copier and cut out the notch in the cabinet panel.

Remove the four screws which secure the rear cabinet panel of the copier to remove the rear cabinet panel.

Cut out the notch (one location) in the cabinet panel.

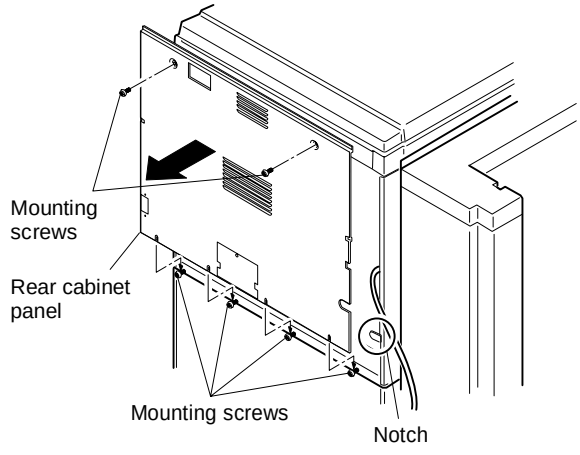

6. Connect the sorter connectors.

Use the two bracket mounting screws to secure the bracket attached to the sorter harness to the frame of the copier.

Connect the 6-pin and 10-pin sorter connectors to the 6-pin and 10-pin connectors of the copier and insert the tie band into the hole under the board installation part.

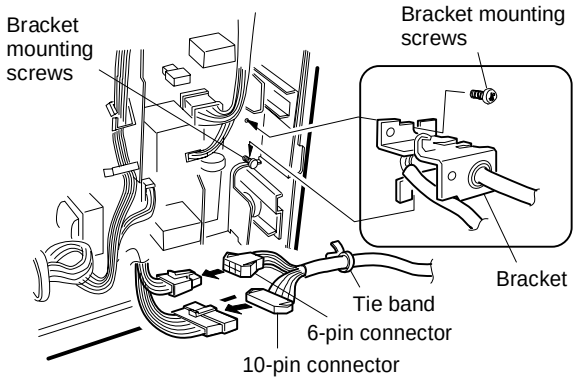

7. Reattach the rear cabinet panel.

Use the four mounting screws to reattach the rear cabinet panel removed in step (4) in its original position.

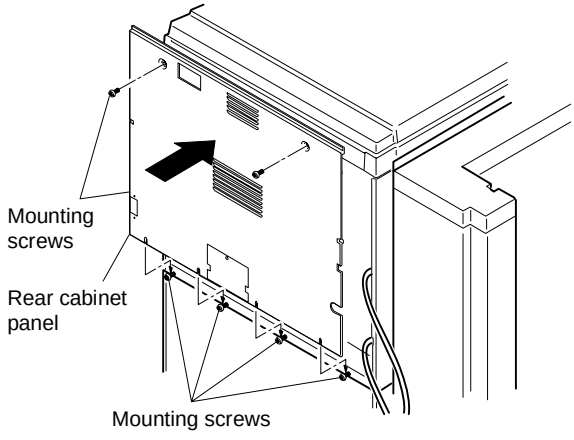

8. Reattach the front panel of the sorter.

Use the four mounting screws to reattach the front panel of the sorter removed in step (3) in its original position.

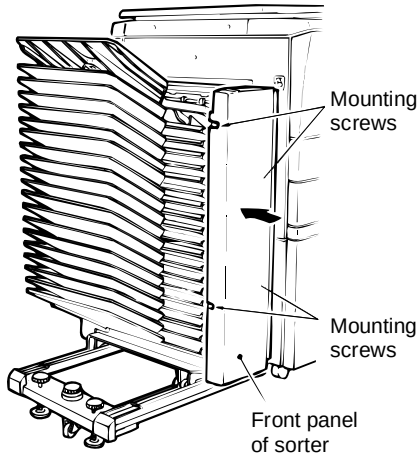

9. Adjust the clearance between the sorter and the copier.

Push the sorter gently against the copier's left cabinet panel. The clearance spacers attached to the back of the sorter will determine the standard clearance between the sorter and the copier. Turn the adjustment knobs on the sorter seat to adjust the clearance so that the spacers are touching the copier.

After adjusting the clearance, remove the clearance spacers.

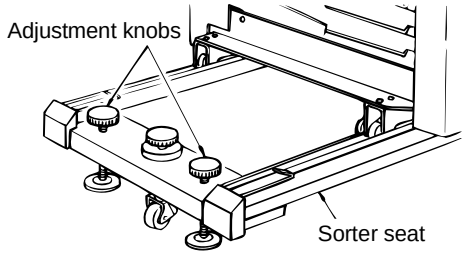

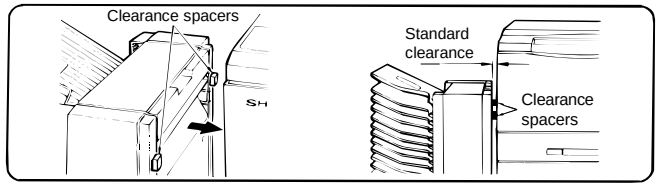

10. Set the mode.

- Operate the keys on the copier to set the mode.

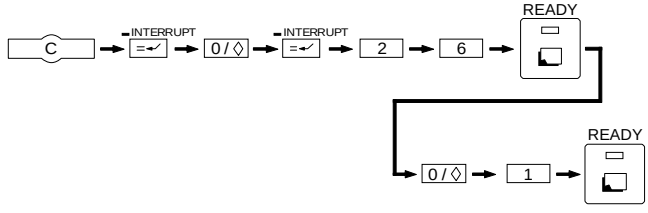

The above key operation will display the currently set mode.

- If only the SF-S15 is to be set, immediately after the above key operation, operate the keys as follows:

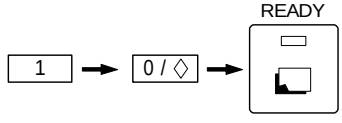

- If the mode is to be set for a combination with other options, add up the total of the setting values for all the peripheral devices to be set from the table shown below, and set theat total value.

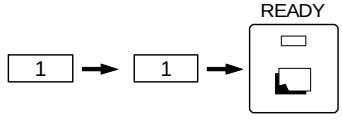

SF-A17/A56	1	SF-D20/21	4	Sorter	10

(7) SF-D20/21

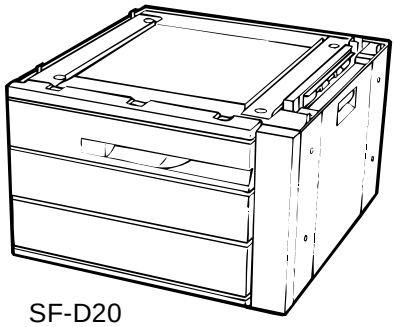

SF-D20

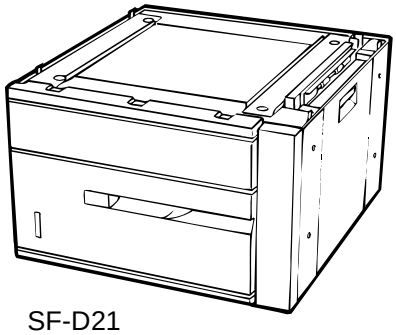

SF-D21

Included parts



Mounting screws: 4

Before installation, remove all of the screws, tape, and shipping material as shown below.

D20

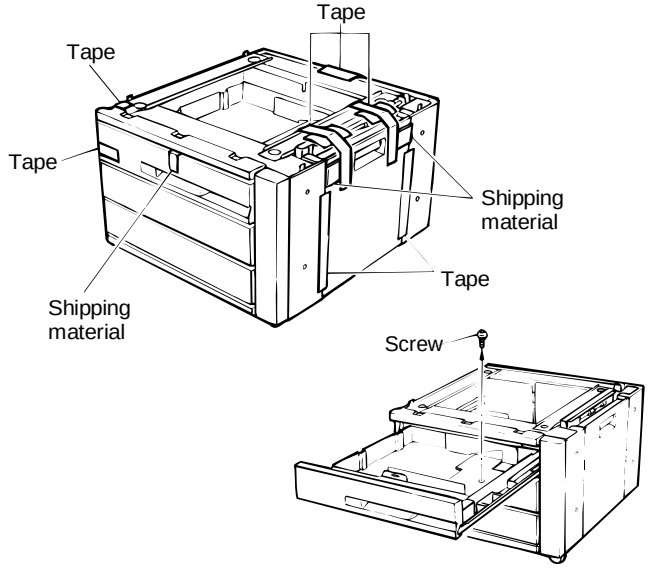

D21

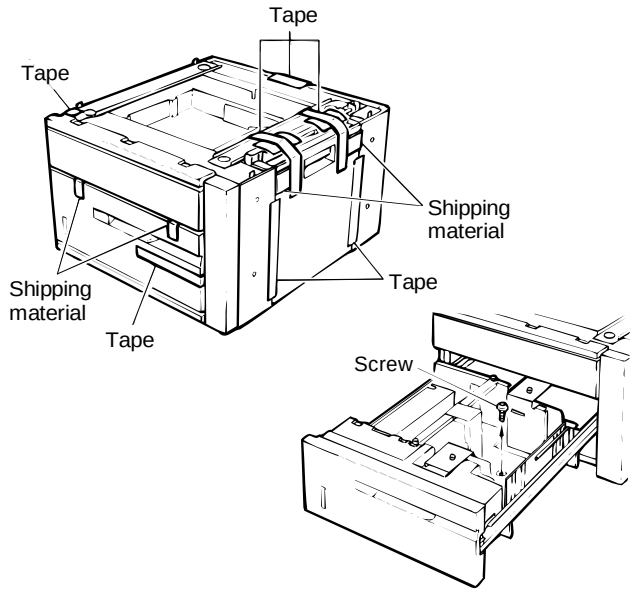

Be sure to unplug the copier before carrying out the following procedures.

1. Place the copier on the desk.

Place the copier on the desk so that the feet of the copier fit into the corresponding holes in the desk.
When doing this, be careful that the copier does not come to rest on the paper guide or other parts of the desk that might be damaged by the weight of the copier.

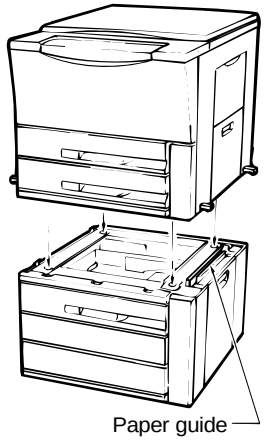

2. Secure the copier to the desk.

Use the included four mounting screws to secure the copier to the desk.
In addition to securing the copier to the desk, these screws also function to electrically ground the desk, so be sure to tighten all four mounting screws securely.

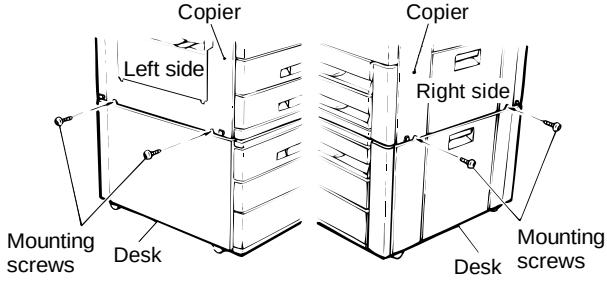

3. Remove the rear cabinet panel from the copier.

Remove the rear cabinet panel by removing the four screws which secure it to the copier.

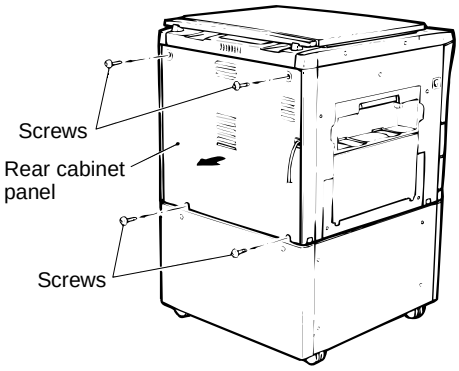

4. Connect the desk relay harness.

Remove the screw which secures the cover of the connector access hole in order to remove the cover.
Next, remove the temporary connector which is attached to the 14-pin connector of the desk relay harness, and connect the 14-pin connector to the connector on the desk.

✳ Note that the temporary connector will no longer be used.

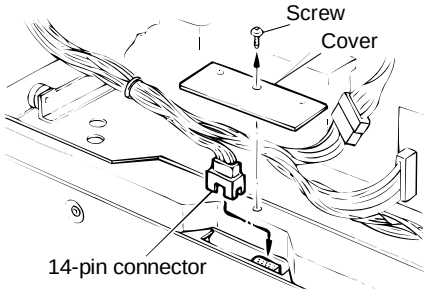

5. Remount the rear cabinet panel onto the copier.

Remount the rear cabinet panel which was removed in Step 3 in its original position and secure it with the four mounting screws.

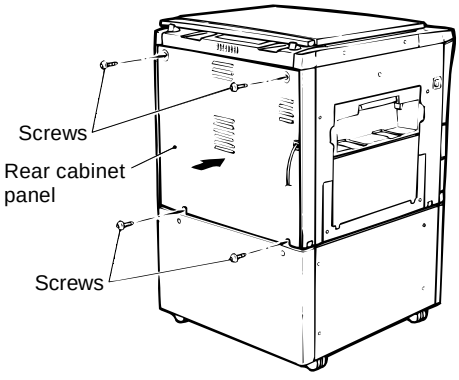

6. Move the copier to the desired installation location.

7. Lock the casters.

Move the lock levers of the two casters (one each left and right) at the front side of the desk downward in the direction indicated by the arrow in order to lock the casters.

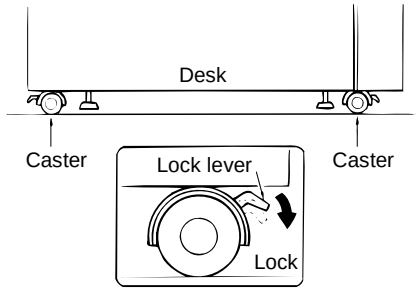

8. Lower the adjuster to secure the desk in place.

Use pliers or a wrench to loosen the lock nut of the adjuster, and then turn the adjuster to lower it to the floor in order to secure the desk in place.
After lowering the adjuster, re-tighten the lock nut all the way up as far as it will go in order to lock the adjuster.

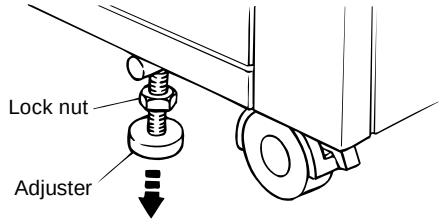

★ For the SF-D20

(The initial paper size setting is A4R for the AB system and 8 1/2 x 11R for the inch system.)

9. Pull out the paper cassette.

Lift up on the handle on the paper cassette and pull the cassette out from the desk until it stops, and then lift up on both sides of the back of the cassette in order to pull it all the way out of the desk.

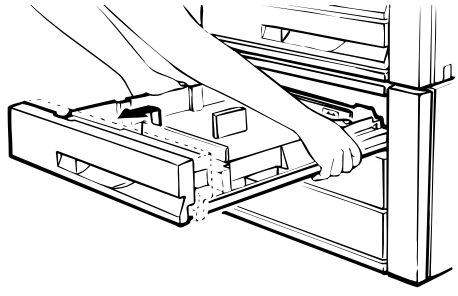

10. Adjust the positions of the front and rear side plates.

Remove the mounting screws (two each) which secure the front and rear side plates, fit the two side plates into the appropriate positions marked on the cassette corresponding to the desired paper size, and then secure the side plates once again with the mounting screws (two each).

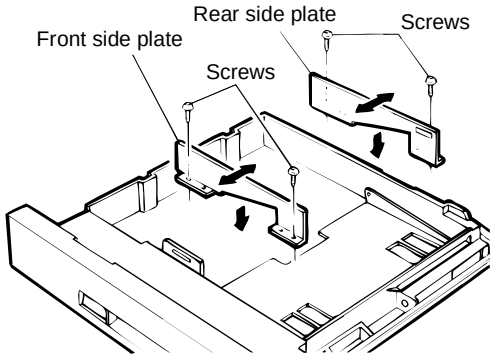

11. Adjust the position of the rear edge plate.

Remove the rear edge plate and fit it into the cassette at the position corresponding to the desired paper size.

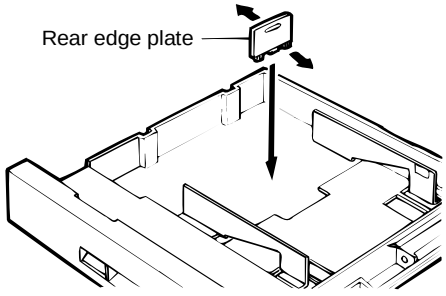

12. Set the paper size detection spacer.

Change the position of the paper size detection spacer to the position corresponding to the desired paper size.

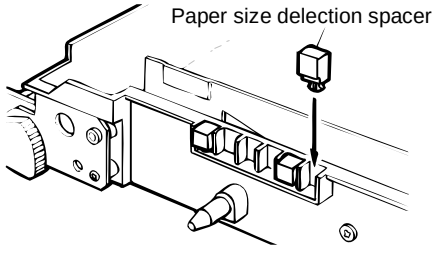

(Example: Position for A3 size paper)

Paper size detection spacer position diagram

AB system

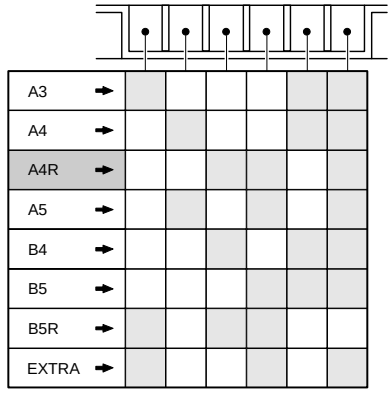

Inch system

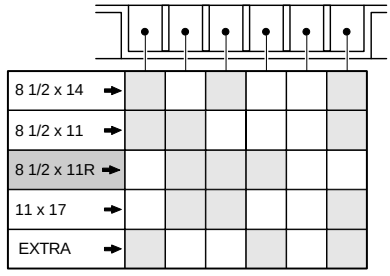

13. Change the paper size indicator.

Remove the paper size indicator and re-insert it so that the paper size for which the cassette has been set is visible in the paper size indication window.

Note that paper size indications are printed on both sides of the paper size indicator.

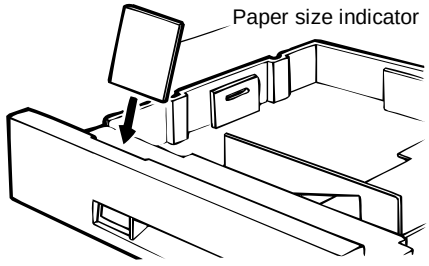

14. Re-insert the paper cassette.

Lift up on both sides of the back of the paper cassette and, while aligning the right guide on the cassette with the guide rail as shown in the figure, push the cassette into the desk along the guide rails.
After doing this, confirm that the cassette moves in and out smoothly.

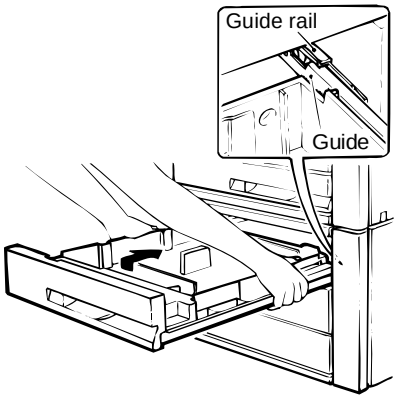

15. Place the paper in the cassette.

Place the paper in the paper cassette.
When doing this, do not stack the paper higher than the maximum height line indicated on the cassette.
Next, push the cassette all the way into the desk as far as it will go.

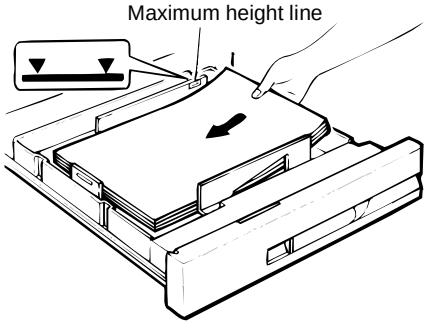

16. Set the mode.

- Operate the keys on the copier to set the mode.

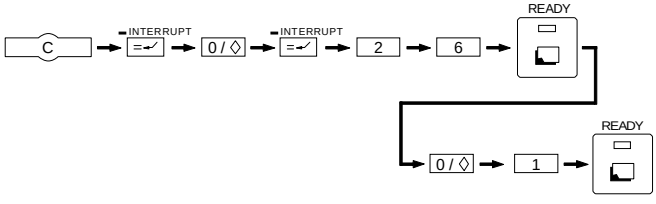

The above sequence of key operations will display the current setting value.

- If only the SF-D20 is being set, immediately after the above key operation sequence, perform the following key operation sequence to set the mode.

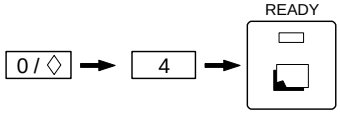

- If the mode is to be set for a combination of optional equipment, add together the setting values shown in the table below for each peripheral device, and set the mode to the total setting value.

  For example, to set the mode for a combination of the SF-D20 and the SF-S53, the total setting value is 4 + 10 = 14, so the key operation sequence is as follows.

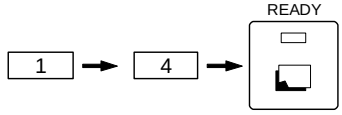

SF-A17/A56	1	SF-D20/D21	4	Sorter	10

★ For the SF-D21

(The initial paper size setting is A4 for the AB system and 8 1/2 x 11 for the inch system.)

17. Pull out the large-capacity paper cassette.

Lift up on the handle on the paper cassette and pull the cassette out from the desk until it stops (the paper loading position), and then lift up on the casette handle once again and pull the cassette all the way out of the desk.

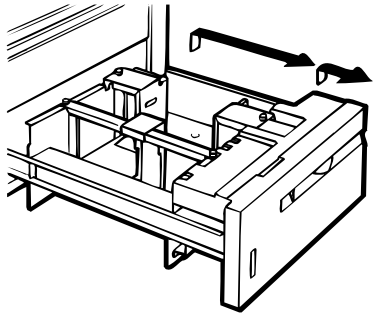

18. Adjust the positions of the front and rear paper guides.

Remove the mounting screws which secure the front and rear paper guides, fit the two paper guides into the appropriate positions corresponding to the desired paper size, and then also secure the mounting screws into the holes corresponding to the desired paper size.

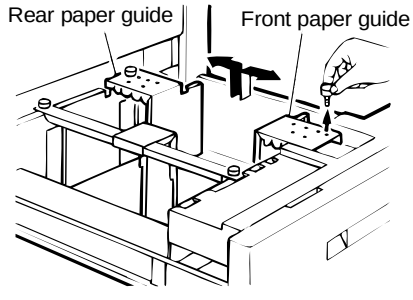

19. Adjust the position of the rear edge paper guide.

Loosen the two screws which secure the rear edge paper guide until it becomes possible to move the paper guide.
Next, fit the rear edge paper guide into the appropriate position corresponding to the desired paper size, and then also secure the two mounting screws into the holes corresponding to the desired paper size.

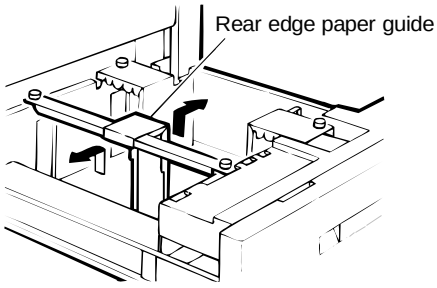

20. Set the paper size detection spacer.

Change the position of the paper size detection spacer to the position corresponding to the desired paper size.

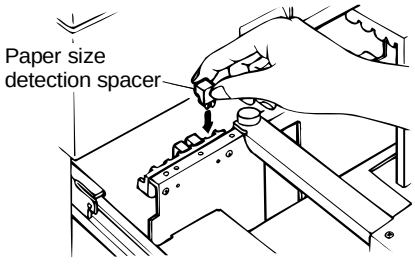

(Example: Position for A3 size paper)

Paper size detection spacer position diagrams

AB system

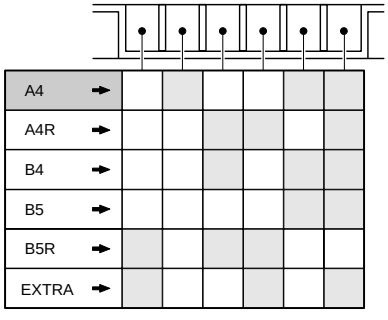

Inch system

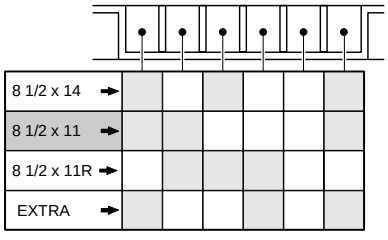

21. Change the paper size indicator.

Remove the paper size indicator and re-insert it so that the paper size for which the cassette has been set is visible in the paper size indication window.
Note that paper size indications are printed on both sides of the paper size indicator.

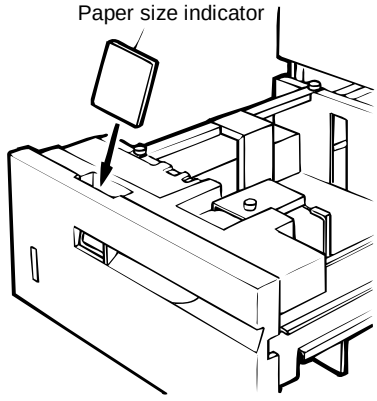

22. Re-insert the large-capacity paper cassette.

Lift up on the handle of the large-capacity paper cassette and re-insert in as far as the paper loading position.

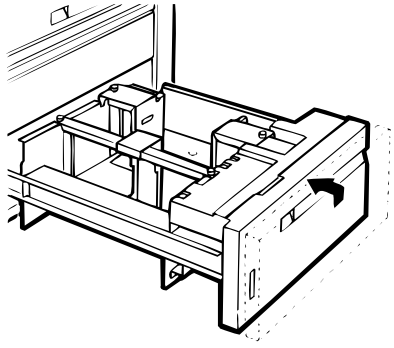

23. Place the paper in the cassette.

Place the paper in the paper cassette.
When doing this, do not stack the paper higher than the maximum height line indicated on the cassette.
Next, push the cassette all the way into the desk as far as it will go.

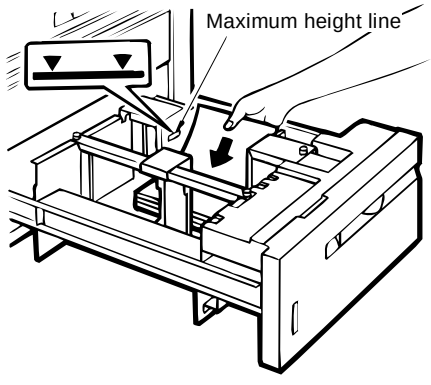

24. Set the mode.

- Operate the keys on the copier to set the mode.

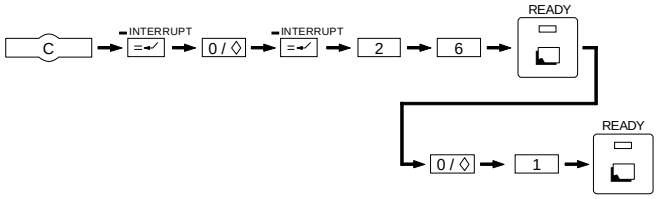

The above sequence of key operations will display the current setting value.

- If only the SF-D21 is being set, immediately after the above key operation sequence, perform the following key operation sequence to set the mode.

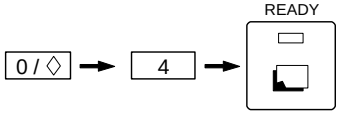

- If the mode is to be set for a combination of optional equipment, add together the setting values shown in the table below for each peripheral device, and set the mode to the total setting value.

  For example, to set the mode for a combination of the SF-D21 and the SF-S14, the total setting value is 4 + 10 = 14, so the key operation sequence is as follows.

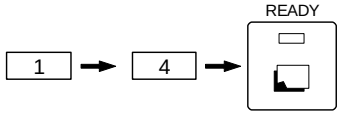

SF-A17/A56	1	SF-D20/21	4	Sorter	10

(8) SF-IC11

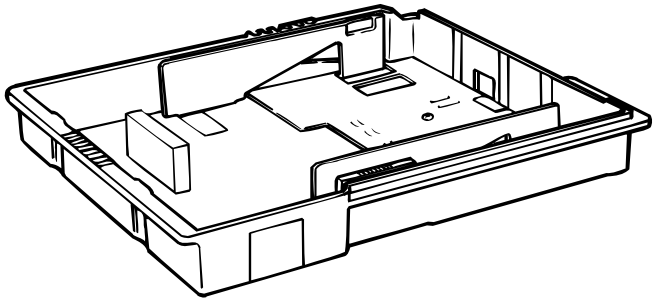

SF-IC11

Cassette main unit

Parts included

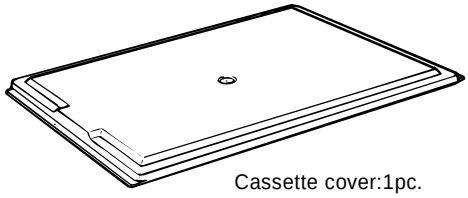

Cassette cover:1pc.

Size label for indication plate

AB system

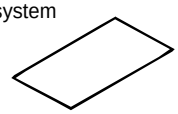

A5 1sheet

Inch system

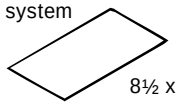

8½ x 5½ 1sheet

Cassette size label

AB system

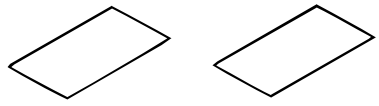

A3 · A4 · A4R · A5 · B4 two sheets each

Inch system

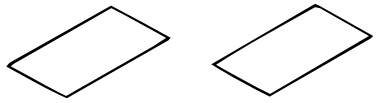

8½ x 11 · 8½ x 11R
8½ x 14 · 8½ x 5½
11 x 17 two sheets each

✳ Be sure to store any parts with care that are not used because they are necessary for changing the papersize.

Before performing the following procedure, be sure to remove the power plug of the copier main unit.

1. To remove the stopper for the packaging cassette unit.

Remove the stopper for the packaging the paper pressure plate in the cassette unit.

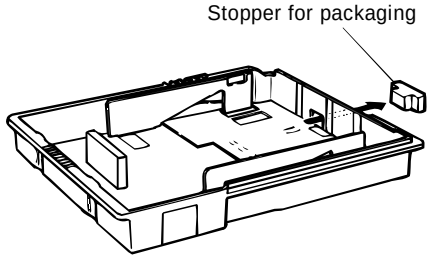

When using default setting:

★ Skip to step 7 and perform the following steps.
Initial set paper size is A3 or 11 x 17.

When using after changing paper size:

2. To change the size setting of side plate F and side plate R.

Insert side plate F and side plate R into the cassette main unit and align them on the marking for the desiredsize, and secure the side plates with fixing screws (2 pcs. each).

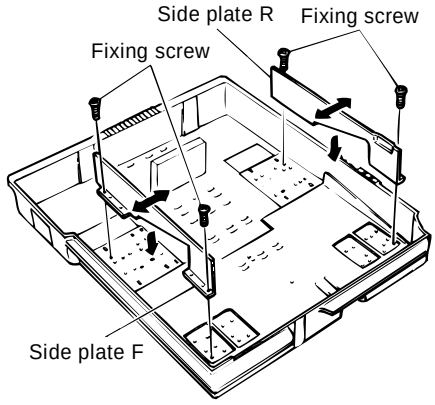

3. To change the size position of the rear end plate.

Remove the rear end plate from its rear storage place, and insert this into the cassette main unit for the desired size.

When you switch the size to A5 or 8½ x 5½, fix this plate to the rotary plate by using the screw that is attached to the rear end plate.

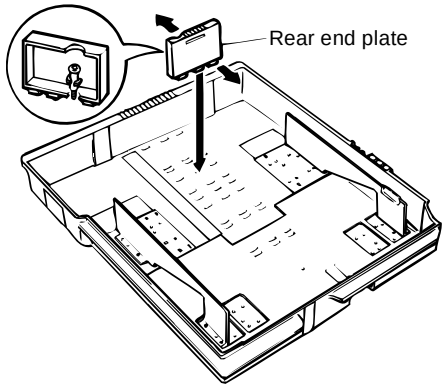

4. To set the size detection spacer.

Reposition the size detection spacer for the desired paper size.

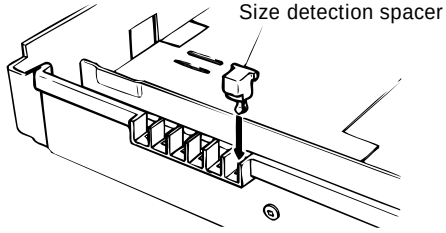

Setting diagram for size detection spacer

(AB system)

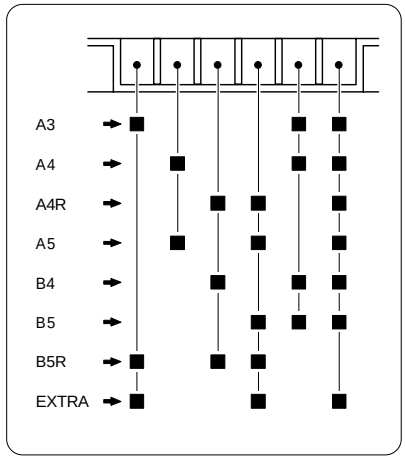

(Inch system)

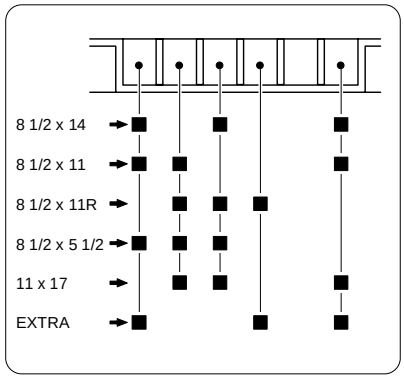

5. To stick the cassette size labels.

Stick the cassette size labels that indicate and correspond to the desired size on the marked positions for sticking (2 positions). If you change the size to A5 or 8-1/2 x 5-1/2, take out the paper size indication plateand stick the size label on the indication plate and align the sticking line as shown in the figure.

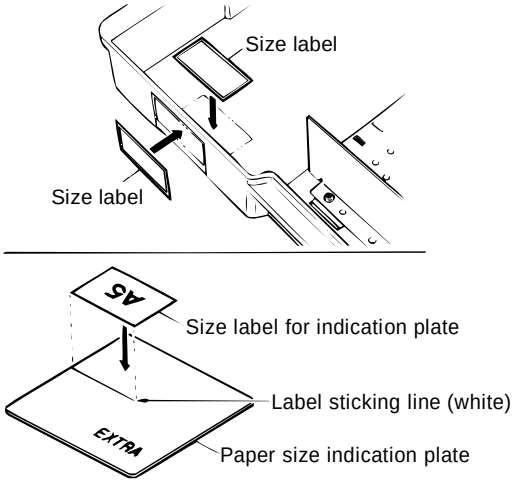

6. To change the paper size indication plate.

Take out the paper size indication plate and insert it so that the name of set paper size can be seen through the paper size indication window.

The paper size is written on both front and rear faces of the paper size indication plate.

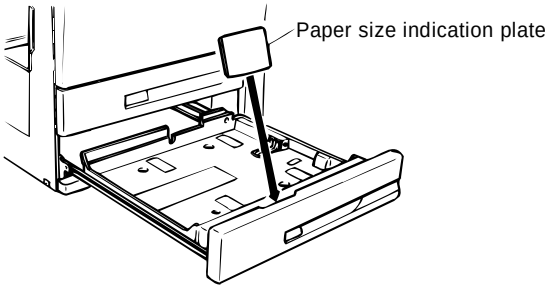

7. To install the cassette main unit on the paper tray.

Install the cassette main unit by putting the four projections into the corresponding holes of the paper tray.

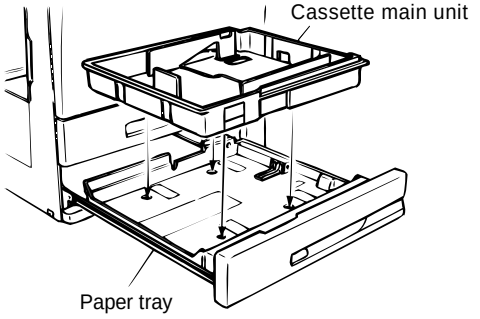

(9) SF-DM11

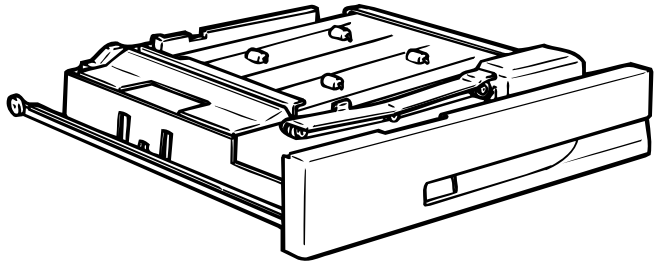

Parts included

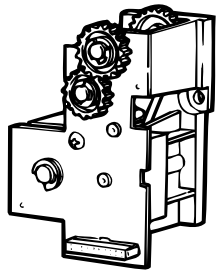

ADU drive unit:1pc.



Right stopper:1pc.

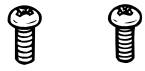

Fixing screw(M4 x 8):2pcs.

Before performing the following procedure, be sure to remove the power plug of the copier main unit.

1. To remove the rear cabinet of the copier main unit.

Remove the four screws that fix the rear cabinet of the copier main unit and remove the rear cabinet.

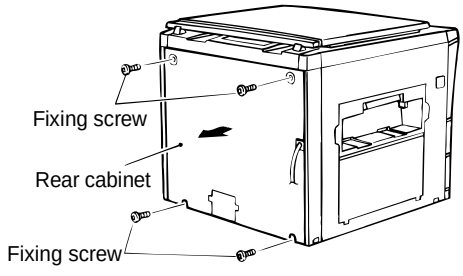

2. To install the ADU drive unit.

Remove the connector, that has been inserted temporarily to the connector near the copier main unit for connecting with ADU drive unit.

✳ The removed temporary connector, it will not be used.

Install the ADU drive unit to the two positioning bosses on the rear frame of the copier main unit, and secure this with two fixing screws.

Then, connect the connector near the copier main unit, to that of the ADU drive unit.

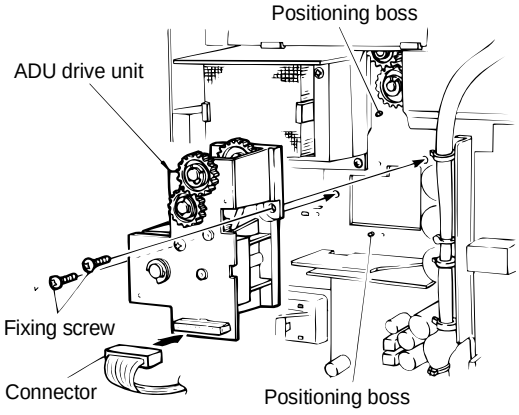

3. To install the rear cabinet of the copier main unit.

Reinstall the rear cabinet that has been removed in step 1 with four fixing screws.

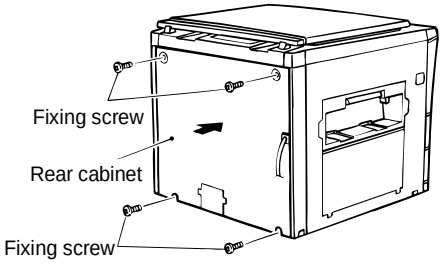

4. To remove the toner collecting container.

• When a container fixing lever is installed

Open the storage cover for the toner collecting container, pull the container fixing lever to your side and remove the container.

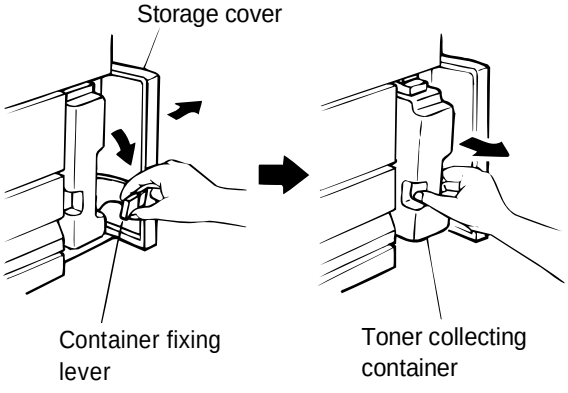

• When a container fixing lever is not installed

Open the storage cover for the toner collecting container, then remove the toner collecting container by pulling out and pressing down on it at the same time.

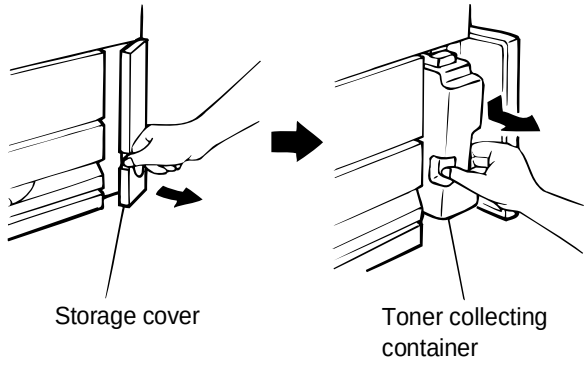

5. To remove the cover plate.

Remove the screw that fixes the cover plate and remove the cover plate.

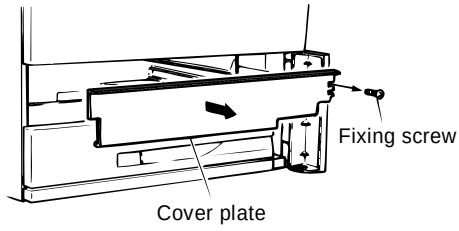

6. To install the ADU unit.

Install the ADU unit by inserting the guides to the guide rails.

At this time, the wheel for the left guide of the ADU unit should be behind the stopper on the left guide rail.

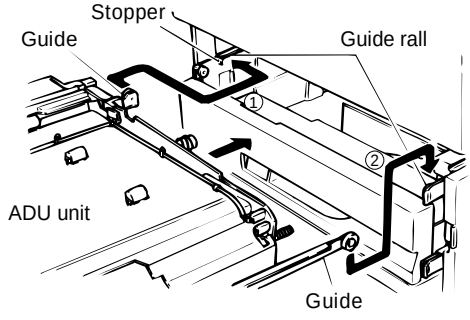

7. To install the right stopper.

Insert the right stopper into the notch before the wheel for the right guide of the ADU unit as shown in the figure.
At the time, ensure that the right side of the ADU unit is locked.

Then push the ADU unit to the innermost recess of the copier main unit.

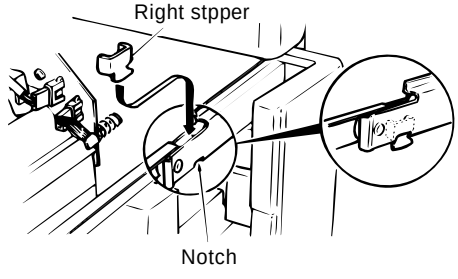

8. To install the toner collecting container.

• When a container fixing lever is installed

Reinstall the toner collecting container that has been removed in step 4, restore the container fixing lever, and close the storage cover for the toner collecting container.

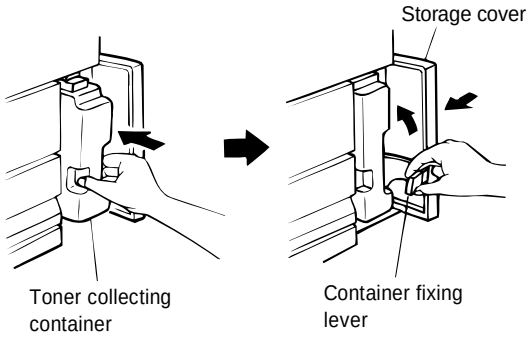

• When a container fixing lever is not installed

Reinstall the toner collecting container that has been removed in step 4. Press it down to its original position and push it into the machine as far as it will go. Close the storage cover.

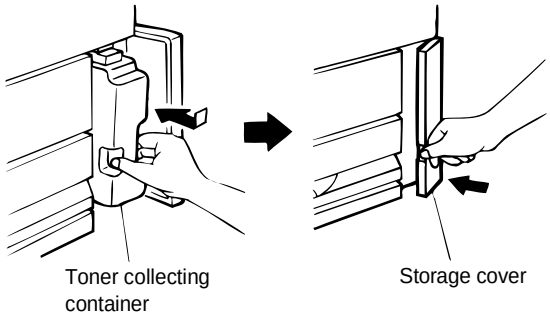

9. To check and adjust the matching guide.

① Mark a duplex copy.

② Remove the duplex unit from the copier main unit, and open the paper guide.

③ Set the copy that has been made in step I or a sheet of the same size on the duplex tray. Align the paper to either alignment guide F, or R, to check the gap. Check to see if the gap between either of the alignment guides and the paper is from 0 to 0.5 mm.

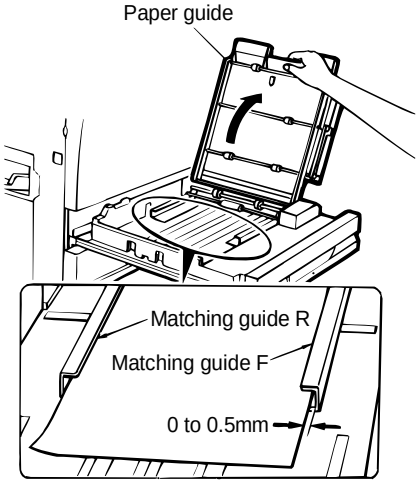

When the matching guide is aligned properly, perform step 10 in the Installation Procedure.

When the matching guide is not aligned properly, perform the following Procedure to adjust the matching guide.

A. Set the mode using the following key operation on the copier main unit:

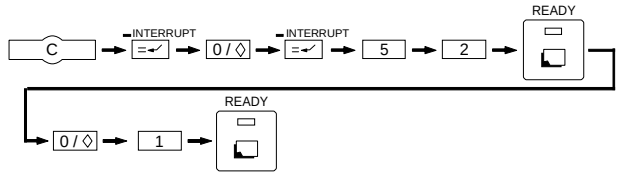

Then current set value is displayed.

B. To set the adjustment mode, input the set value as shown below after the operation above:

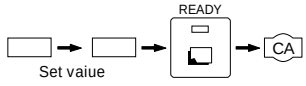

(Example) To set a value (5) with one digit, perform the following operation:

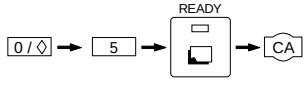

(Example) To set a value (15) with two digit, perform the following opeartion:

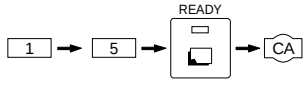

Changing the set value by (1) causes the matching guide width to move 0.5mm to 0.6mm.

✳ Criterion for changing set value



(Guide width becomes larger.) (Guide width becomes smaller.)

C. Perform the steps ① to ③ again to check the width.

10. To adjust the center dislocation.

When copy result shows center dislocation as shown in Fig. 1 and Fig. 2, loosen the four screws (indicated by ↓) that fix the front cabinet.

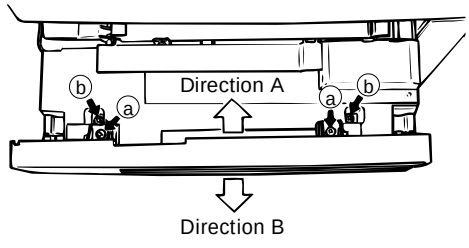

Caution:

When you fix the front cabinet, the gap between a fixing screw and the cabinet is symmetrical for the fixing screw sections ⓐ ⓑ.

(Reference drawing)

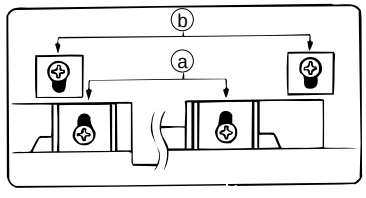

✳ In case of Fig. 1
Move the front cabinet to the direction A, tighten the fixing screws ⓐ (2 pcs.) and ⓑ (2 pcs.) in this order, and make a copy again to check that there is no center dislocation.

Fig.1

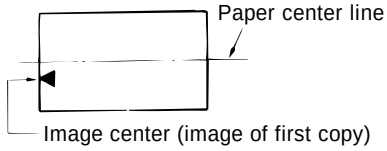

✳ In case of Fig. 2
Move the front cabinet to the direction B, tighten the fixing screws ⓐ (2 pcs.) and ⓑ (2 pcs.) in this order, and make a copy again to check that there is no center dislocation.

Fig.2

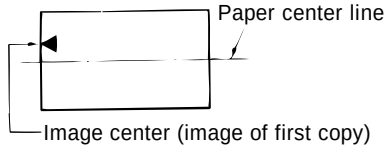

(10) SF-CM11

Paper Cassette

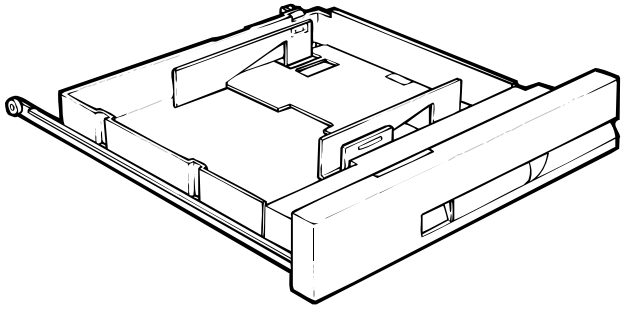

Included parts

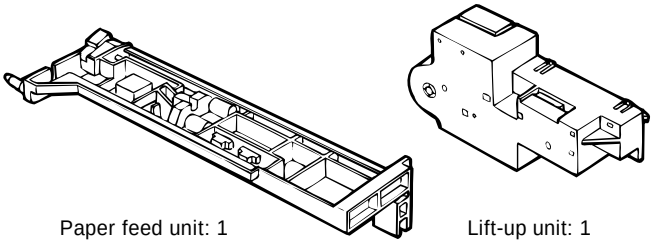

Paper feed unit: 1

Lift-up unit: 1



Right stopper: 1



Mounting screws A (M4 x 30): 2



Mounting screws B (M4 x 10): 2

Be sure to unplug the copier and install the unit as follows:

★ Procedures for installation on the copier

1. Remove the rear cabinet panel from the copier.

Remove the rear cabinet panel by removing the four screws which secure it to the copier.

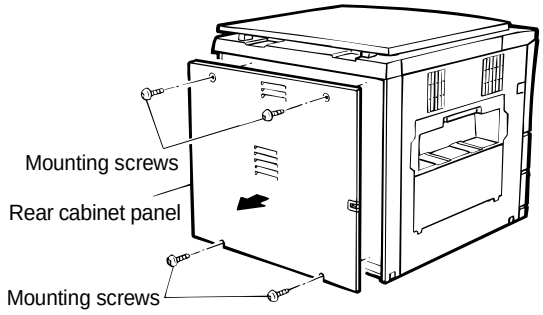

2. Install the lift-up unit.

Connect the connector (black colored) from the copier to the connector of the lift-up unit.

Next, hook the prongs on the lift-up unit into the rear frame of the copier, fit the lift-up unit into the positioning bosses (two locations), and secure it with the mounting screws A (2) and B (1).

Insert the twist band on the copier's harness into the lift-up unit.

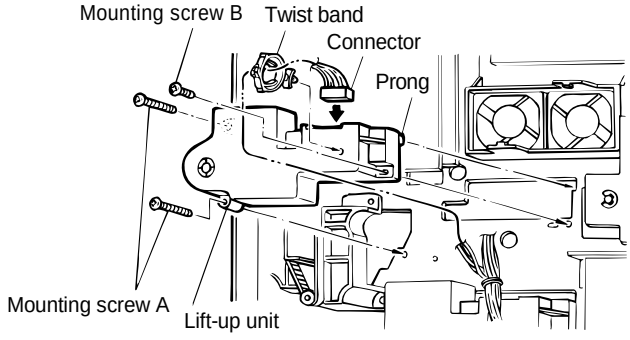

3. Remount the rear cabinet panel onto the desk.

Remount the rear cabinet panel which was removed in step 1 back in its original position and secure it with the four mounting screws.

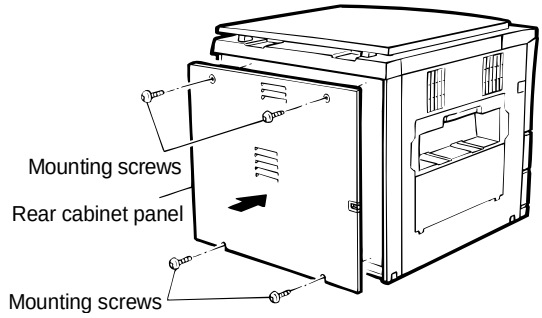

4. Remove the toner collecting container.

Open the toner collecting container cover, pull the fixed lever forward, and remove the container.

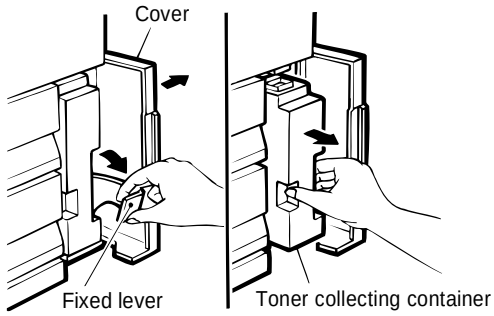

5. Remove the cover plate.

Remove the cover plate by removing the screw which secures it.

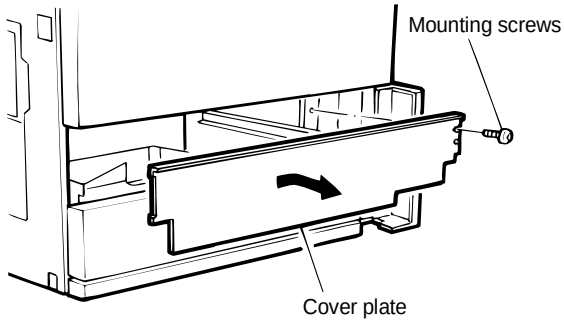

6. Install the paper feed unit.

Fit the groove in the paper feed unit into the guide rail, and then, while tilting the paper feed unit at an angle of approximately 30°, slide it all the way back as far as it will go.

Fit the paper feed unit into the positioning bosses (two locations) on the desk frame, and secure it with one mounting screw B.

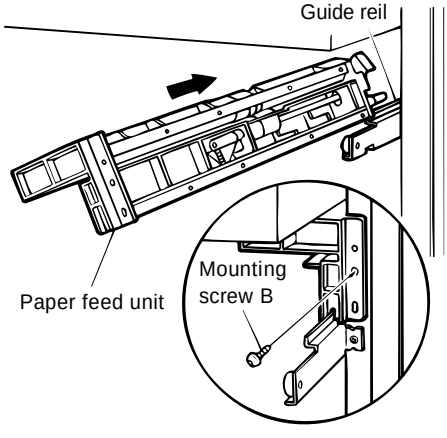

7. Remove the packing screw from the paper cassette.

Remove the packing screw which secures the paper pressure plate inside the paper cassette.

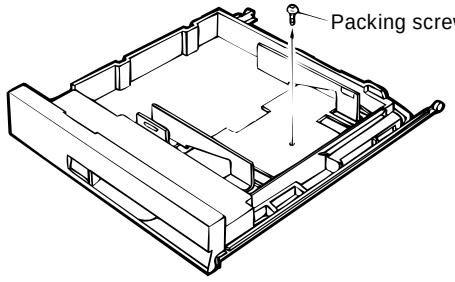

The paper size is set to A4 for AB system and 8½" x 14" for inch system at the factory.

8. Change the positions of the front and rear side plates.

Remove the mounting screws (2 each) which secure the front and rear side plates, fit the front and rear side plates into the appropriate locations marked on the cassette to set the desired paper size, and then secure the side plates once again with the mounting screws (2 each).

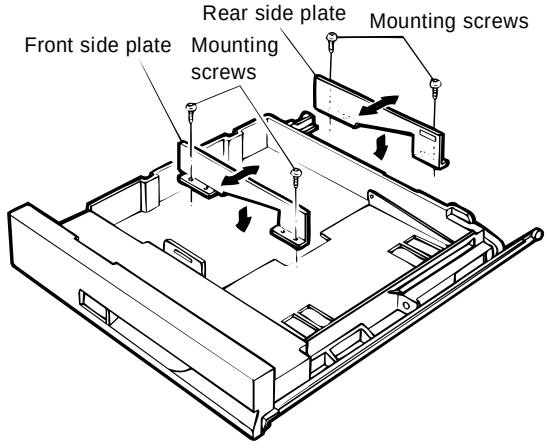

9. Position the rear edge plate.

Remove the rear edge plate from its storage slot and fit it into the cassette to set the desired paper size.

The rear edge plate is not needed to set the paper size to 11" x 17" (double letter size).

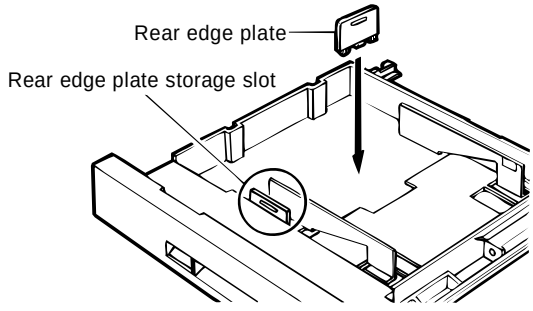

10. Set the paper size detection spacer.

Change the position of the paper size detection spacer to match the desired paper size.

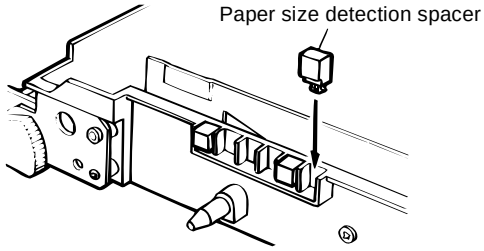

Paper size detection spacer position diagram

AB system

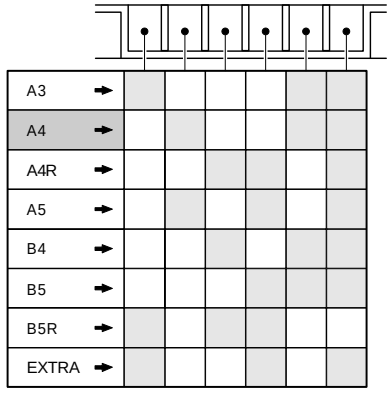

Inch system

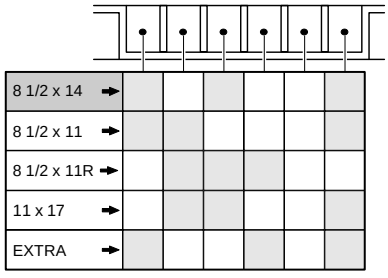

11. Change the paper size indicator.

Remove the paper size indicator and reinsert it to show the paper size for which the cassette has been set in the paper size indicator window.

Note that paper sizes are printed on both sides of the paper size indicator.

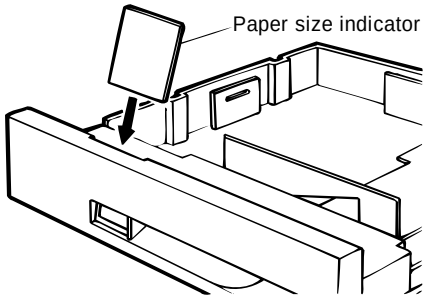

12. Fit the paper cassette guides into the guide rails.

Insert the paper cassette by fitting the guides of the paper cassette into the guide rails.
When doing this, insert the paper cassette all the way in so that the cassette's left guide roller goes past the stopper on the guide rail.

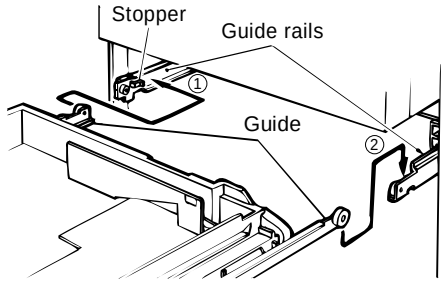

13. Mount the right stopper.

Fit the right stopper into the notch in front of the paper cassette's right guide roller as shown in the figure.
When doing this, confirm that the right side of the paper cassette is locked.

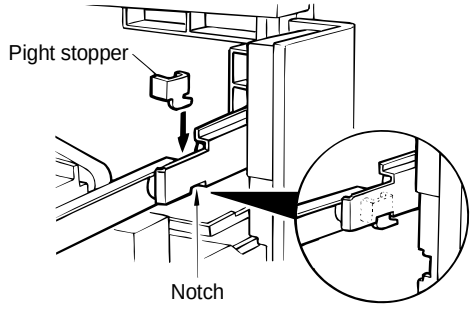

14. Install the paper cassette.

Lift the rear sides of the paper cassette and insert the both sides of guides into the Copier by fitting them to the guide rails as shown in the figure. Make sure that the paper cassette slides smoothly.

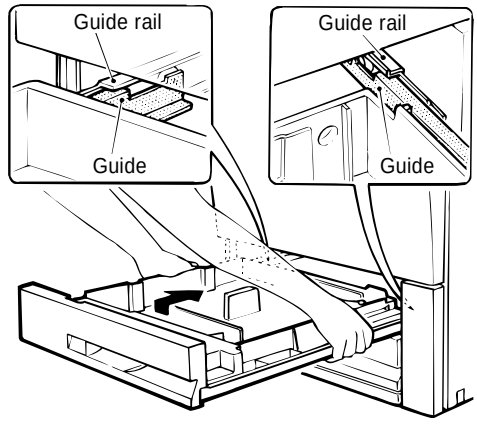

15. Place the paper.

Place the paper in the cassette.
Do not stack the paper higher than the maximum height line.
Next, push the cassette all the way into the copier.

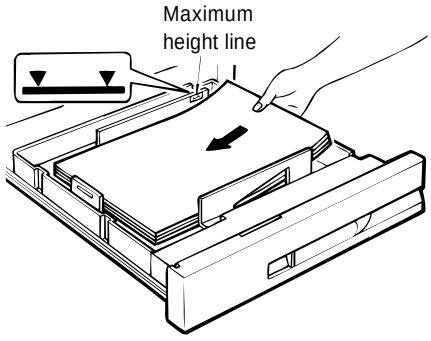

16. Install the toner collecting container.

Reinsert the toner collecting container which was removed in step 4 into its original position, return the fixed lever to its original position, and then close the cover.

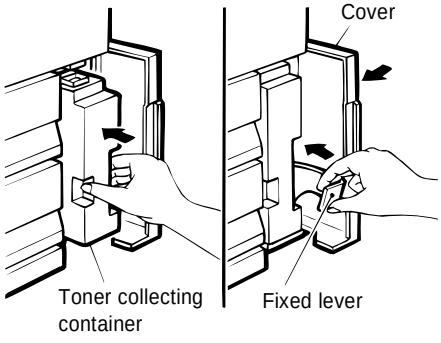

17. Adjust any center misalignment.

Make a copy, and if there is any center misalignment such as that shown in Fig. 1 or Fig. 2, loosen the four screws (indicated by the arrows) which secure the front cabinet panel.

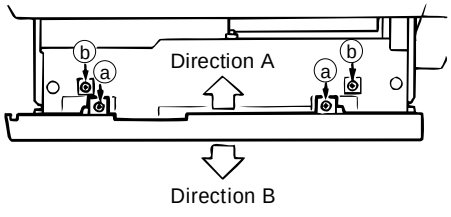

NOTE:
The mounting screws ⓐ and ⓑ will be in the symmetrical positions when they are tightened, as shown right.

(Reference figure)

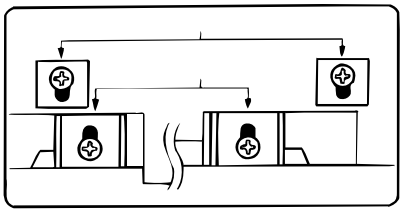

- If misaligned as shown in Fig. 1
  Move the front cabinet panel in direction A and retighten the two mounting screws ⓐ and then the other two screws ⓑ. Make another copy to confirm that the center is no longer misaligned.

Fig.1

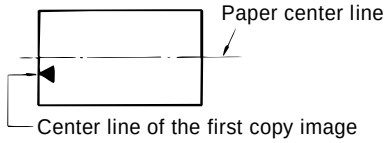

- If misaligned as shown in Fig. 2
  Move the front cabinet panel in direction B and retighten the two mounting screws ⓐ and then the other two screws ⓑ. Make another copy to confirm that the center is no longer misaligned.

Fig.2

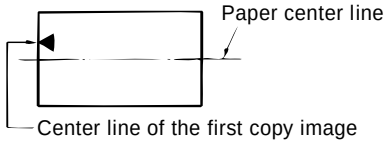

[6] DISASSEMBLY AND REASSEMBLY

1. Process unit

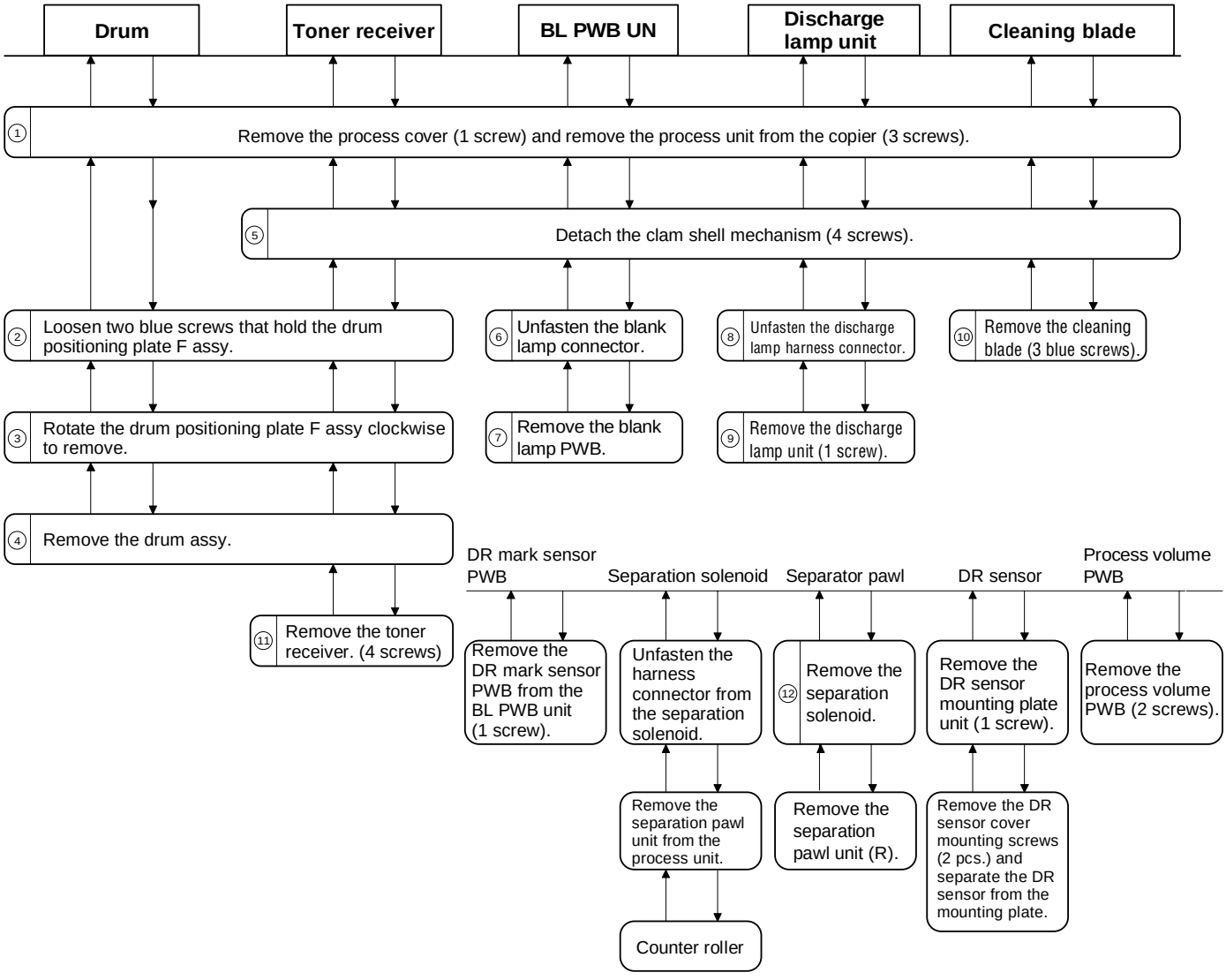

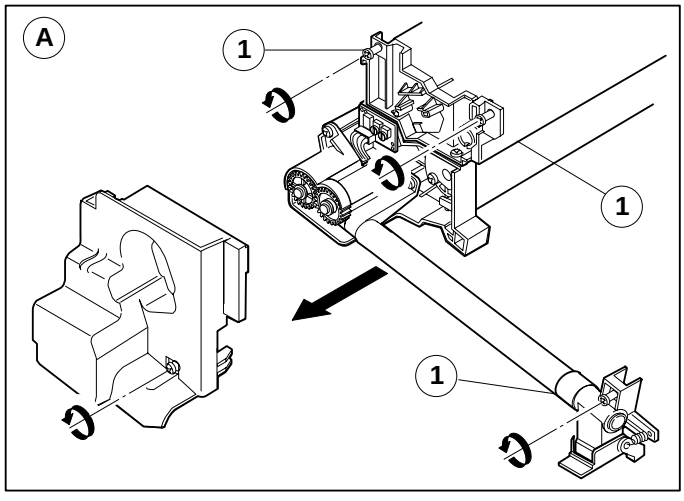

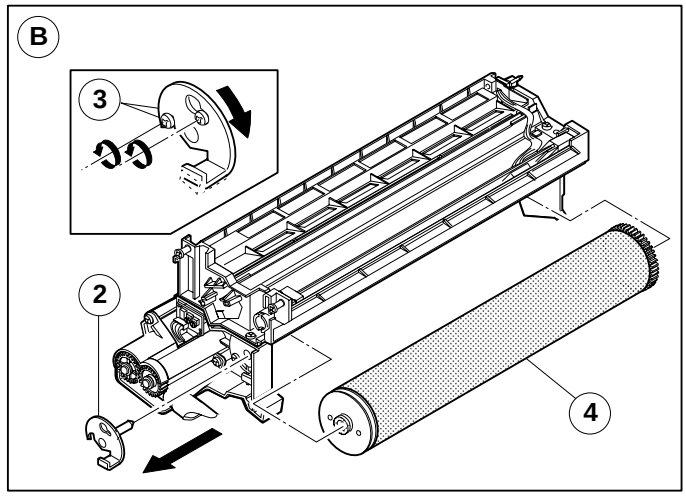

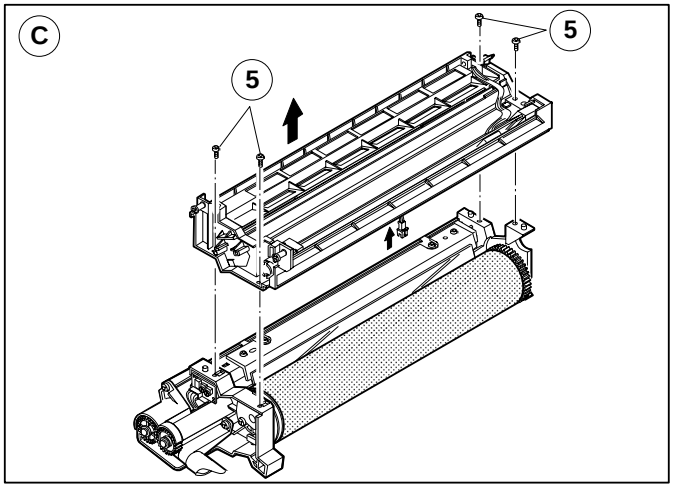
C
5
5

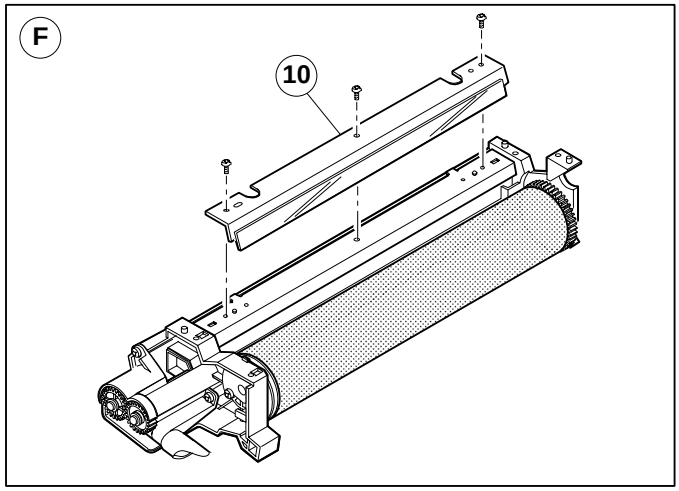
F
10

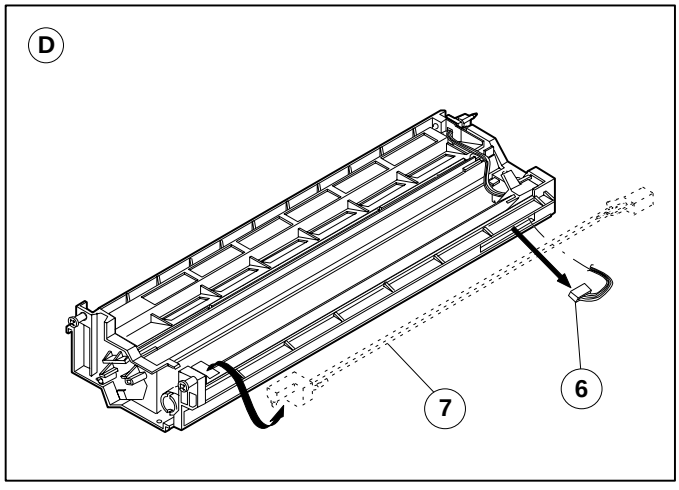
D
7
6

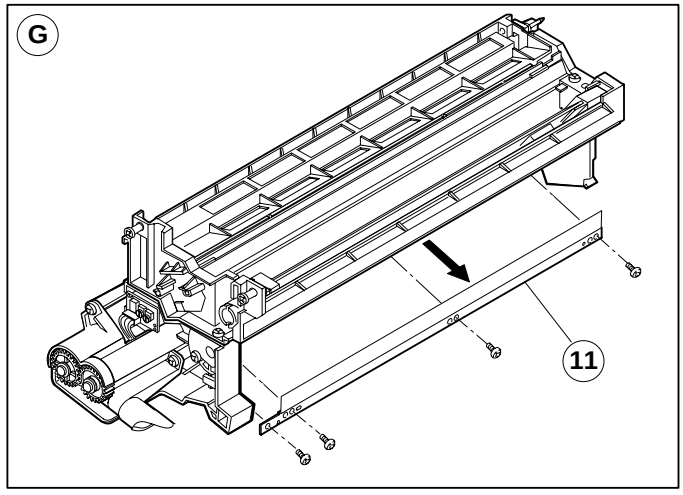
G
11

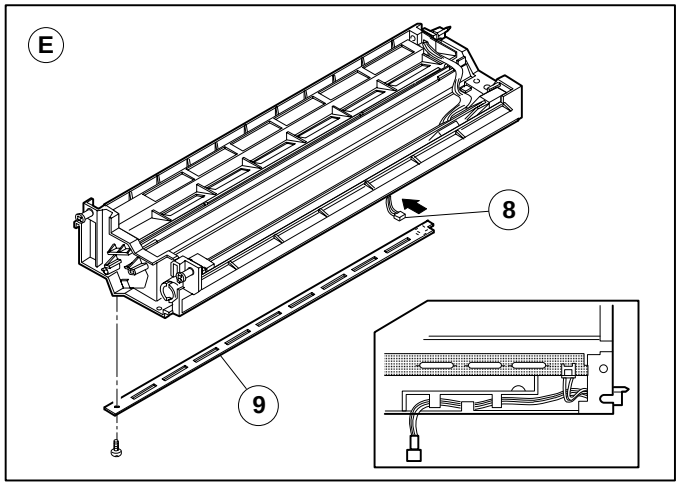
E
8
9

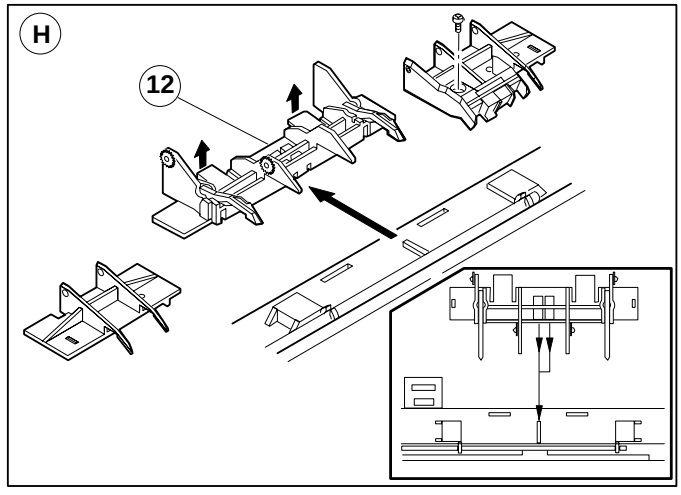
H
12

2. Manual feed multicopy unit

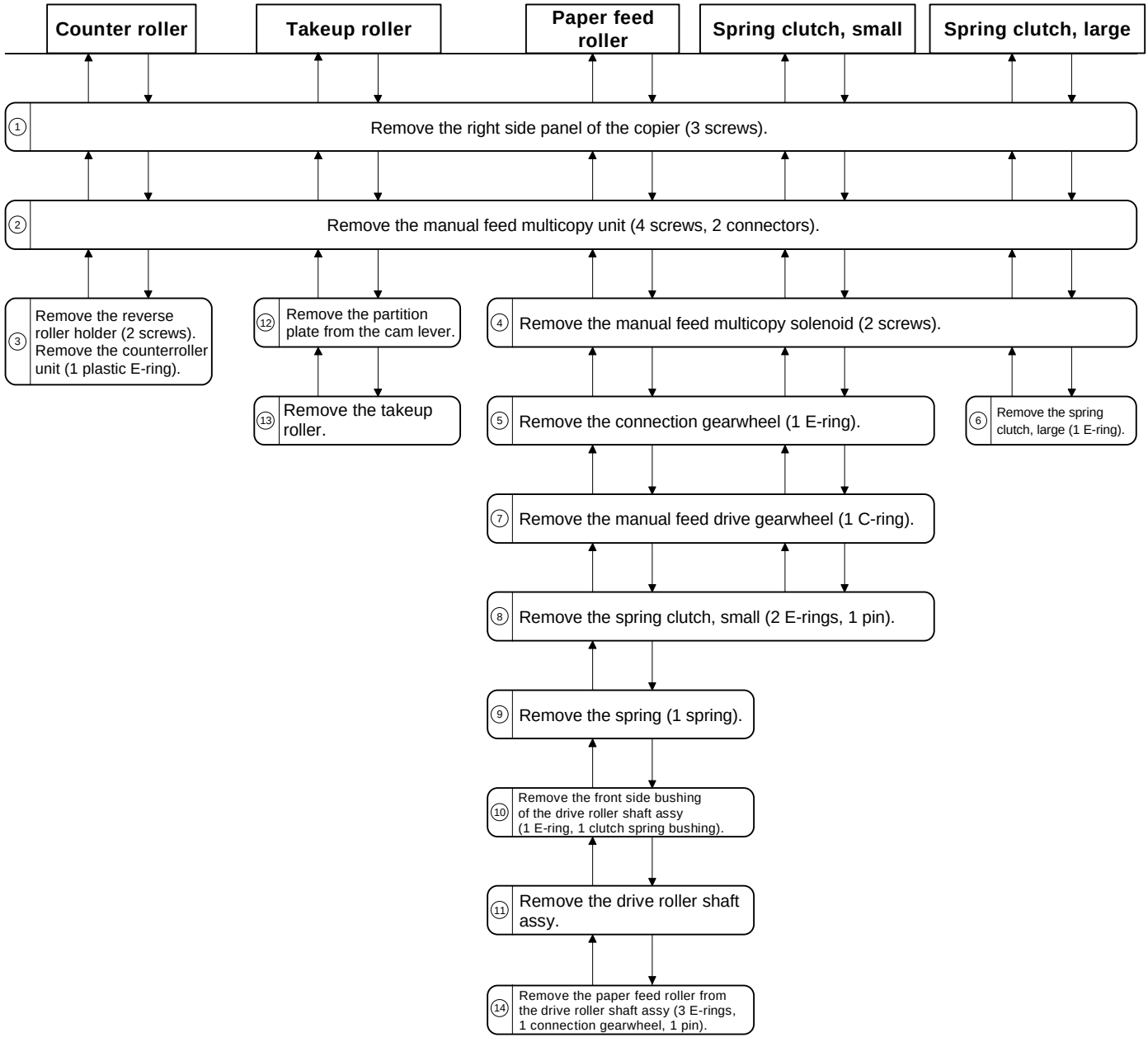

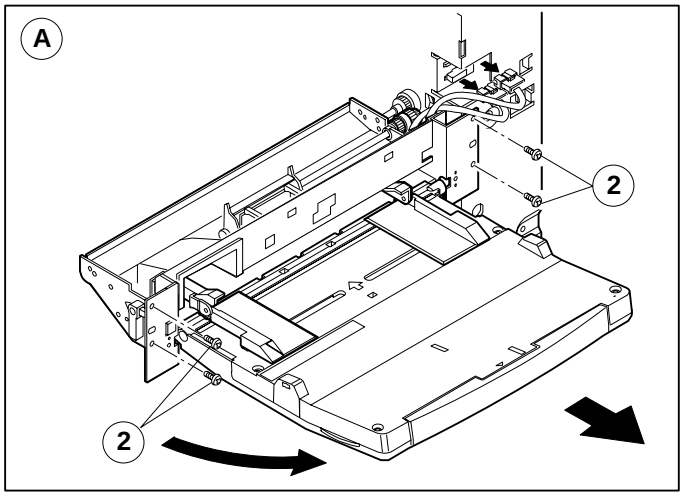

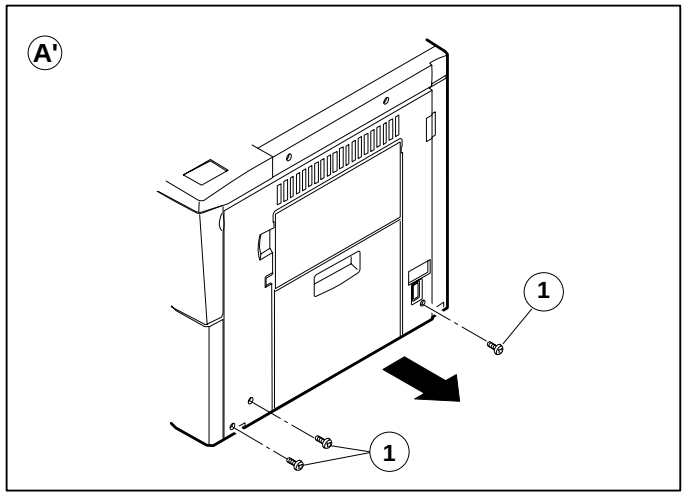

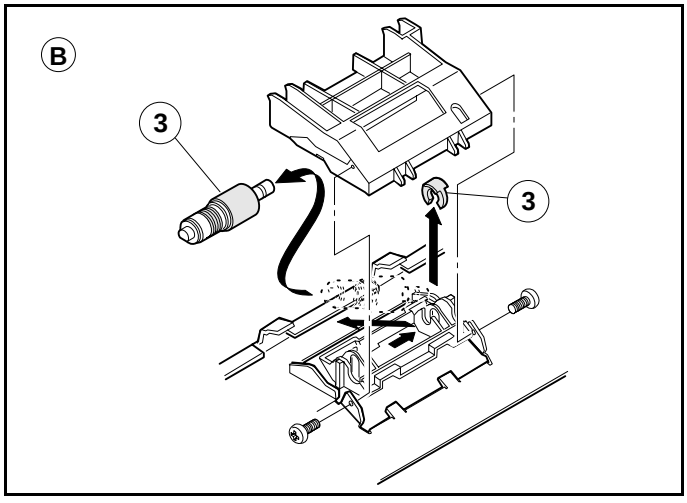
B
3
3

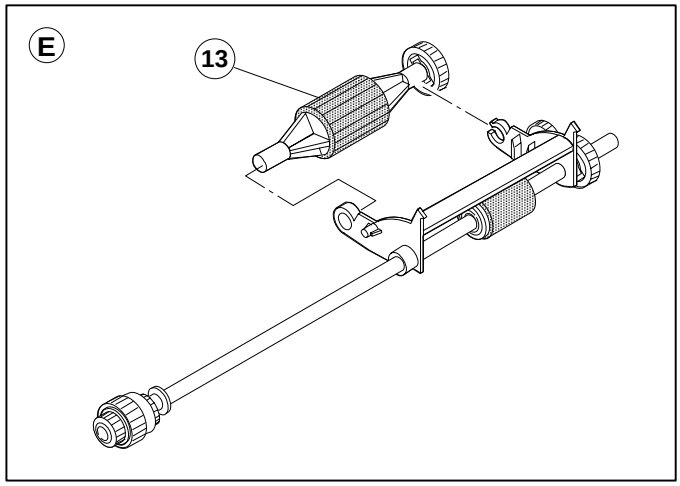
E
13

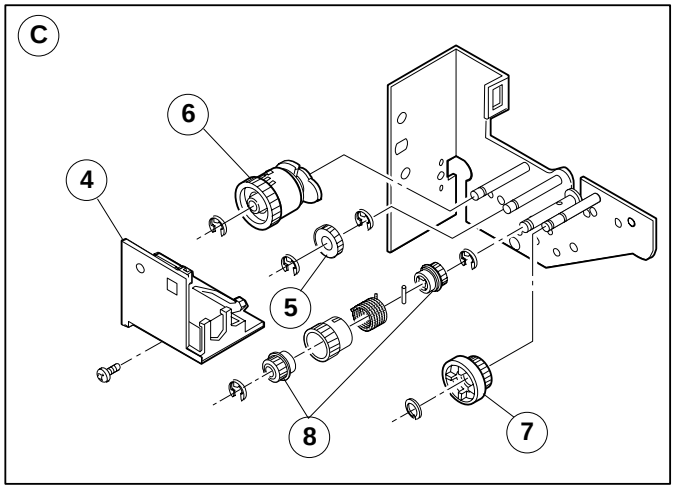
C
6
4
5
8
7

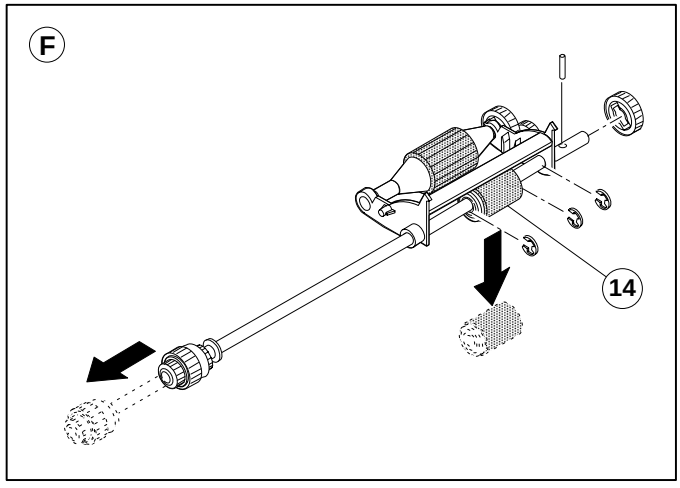
F
14

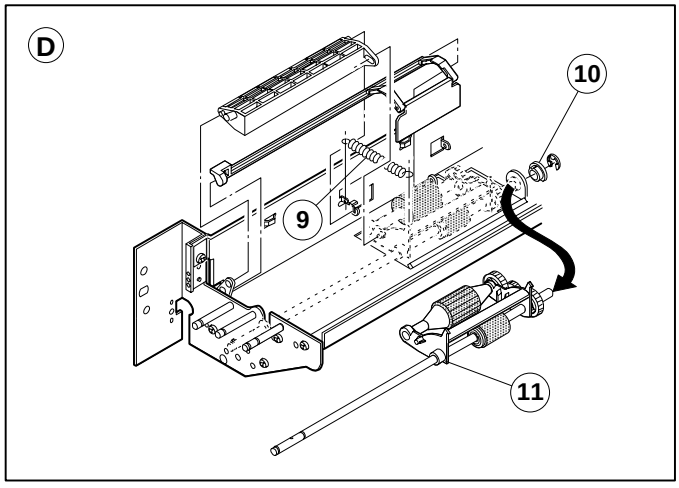
D
10
9
11

3. Paper feed unit

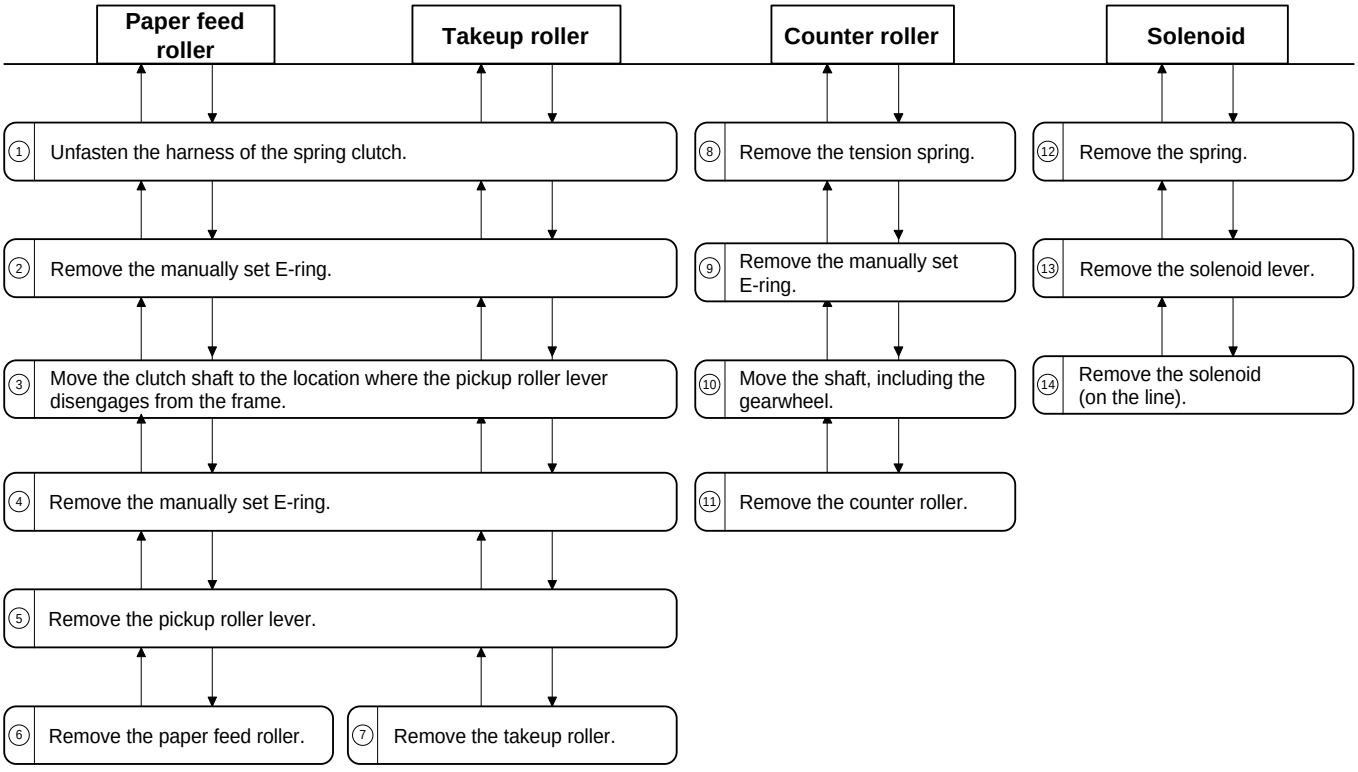

NOTE: The one-way clutch is on the rear frame side (clutch side).

NOTE: The side with a protrusion is on the rear side.

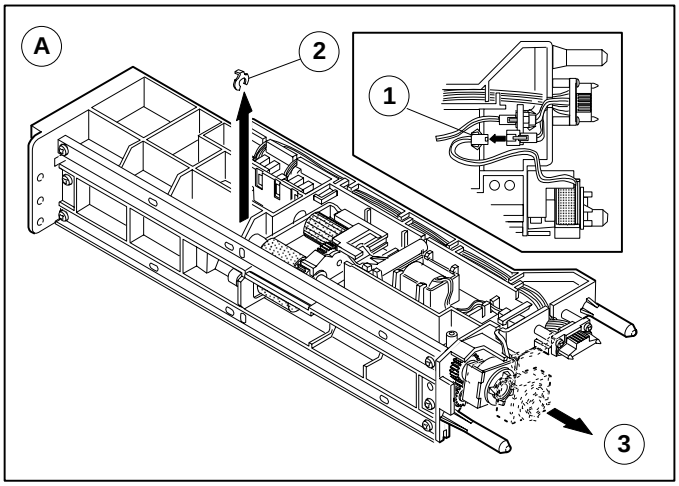
A
2
1
3

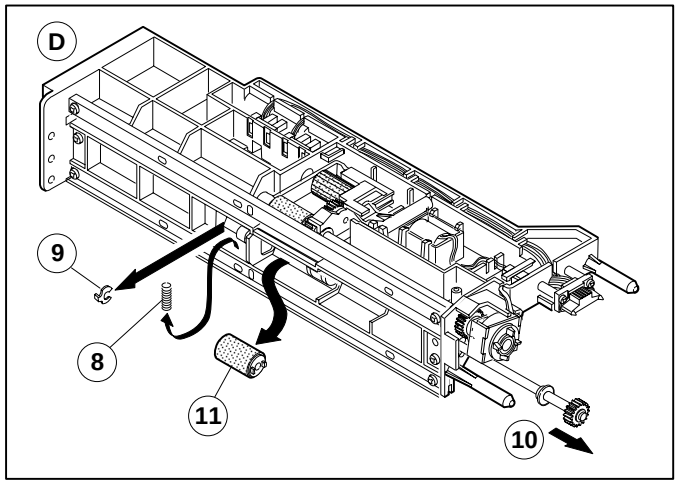
D
9
8
11
10

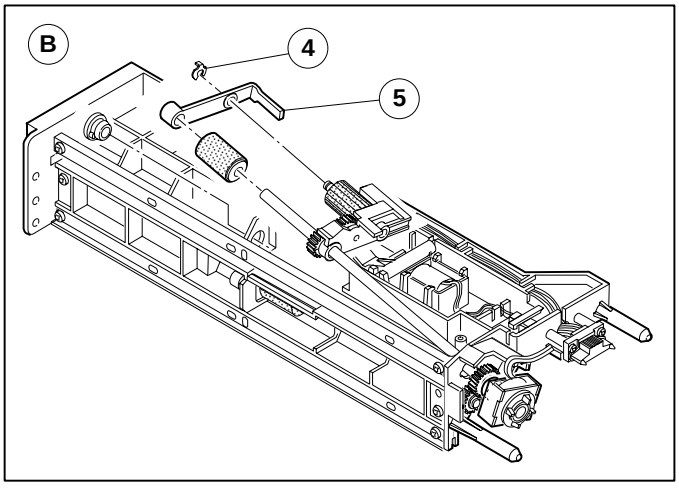
B
4
5

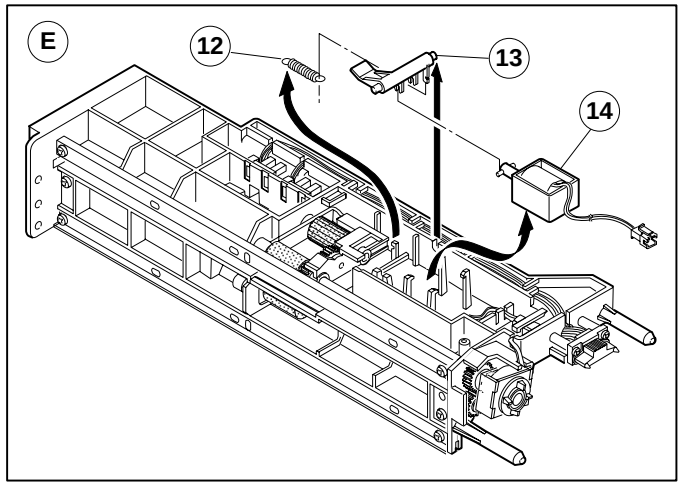
E
12
13
14

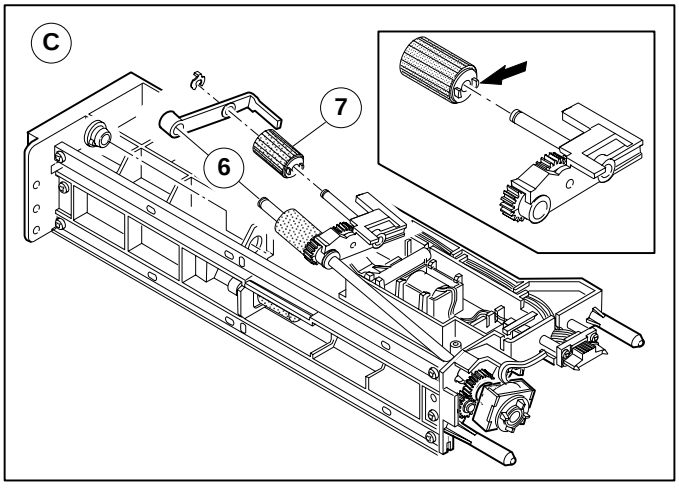
C
7
6

4. Transport baseplate unit

Suction unit transfer belt | **Paper stop roller** | **Paper stop clutch**

① Remove the transport baseplate from the machine (4 screw on front, 2 on rear, 2 connectors).

② Pull the paper entry side rolle towards the paper exit side, then remove it.

③ Move the suction transfer belt to the front side, then remove it.

NOTE: Note the arrowhead that shown on the suction unit transfer belt.

④ Remove the DV guide (6 screws).

⑤ Remove the spring and the auxiliary roller.

⑥ Remove the paper stop clutch (1 screw, and loosen 1 setscrew).

⑦ Remove the front side gearwheel (one each of E-ring, pin, washer, spring).

⑧ Remove the bearing (one each on front and rear).

⑨ Remove the paper stop roller.

⑩ Remove the connecting plate ⑤ in Fig. Ⓕ. (2 screws)

⑪ Remove the stopper and the 22T gear.

⑫ Remove the P.S clutch

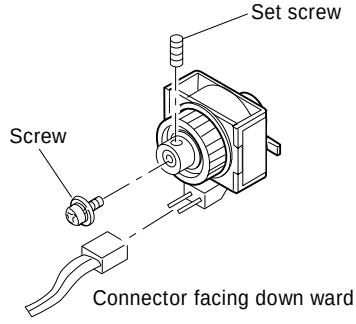

NOTE: H specificafions mode remove the demoisture heater lamp in the suction section.
(Remove heater connector ⓑ in Fig. Ⓑ.)

Suction lift lever

Loosen screw ⓐ in Fig. Ⓐ and shift the suction lift lever to R side, and the heater unit can be removed.

※ When removing the transport plate unit, remove the DV tank, the front cabinet, the process unit, and the upper cassette (ADU unit) in advance.
Before removing the upper cassette, it is advisable to remove the paper feed unit in advance.
Since the fuser unit will serve as the guide rail for removing and assembling the transport base plate, do not remove it.
Open the right cabinet.

※ When installing the transport base plate unit

① Fit the arrow mark in the DV guide with the groove in the left side of the rail transport base plate in the multi paper feed section of the main body and the mark in the fusing unit cover.

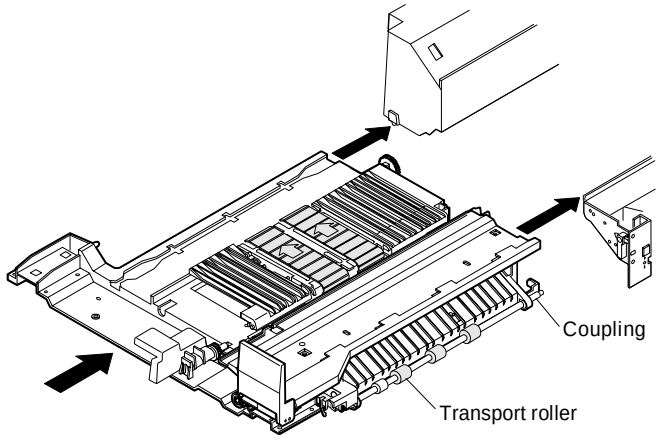

② Securely engage the transport roller coupling with the main body coupling. If not, the unit cannot be inserted fully.
Check that the roller can be turned manually. (If the couplings are not securely engaged, the roller cannot be turned manually.)

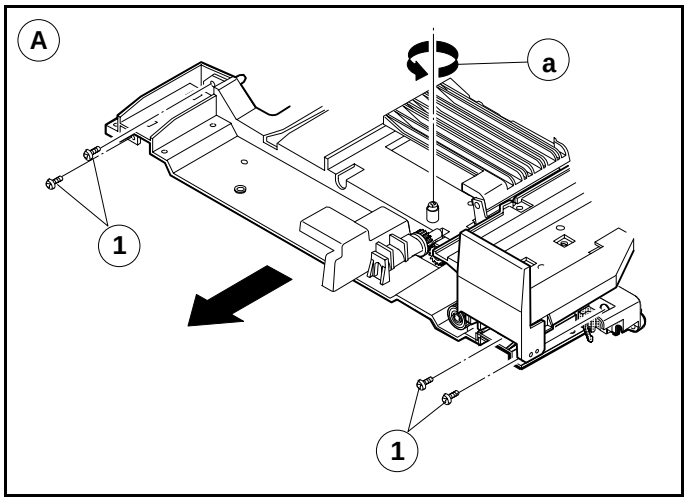
A
a
1
1

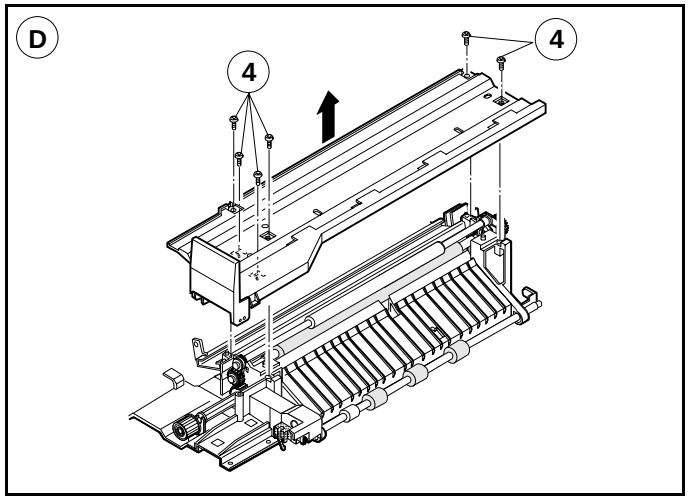
D
4
4

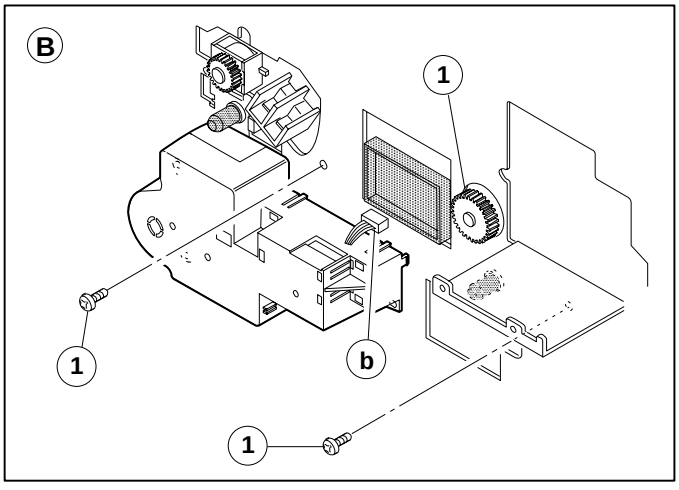
B
1
1
b
1

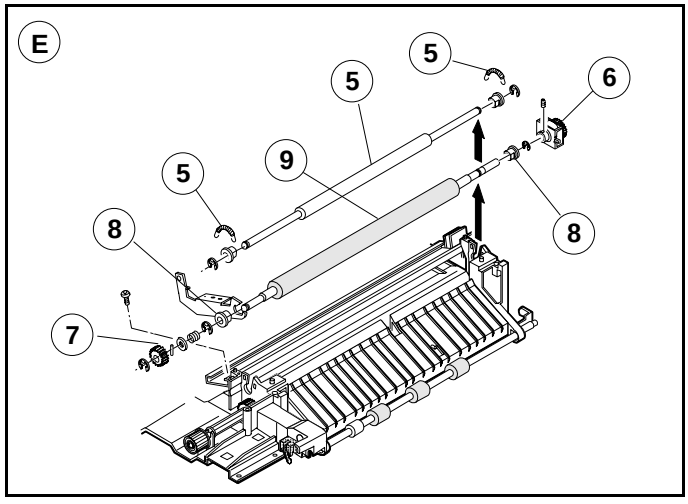
E
5
5
6
9
5
8
8
7

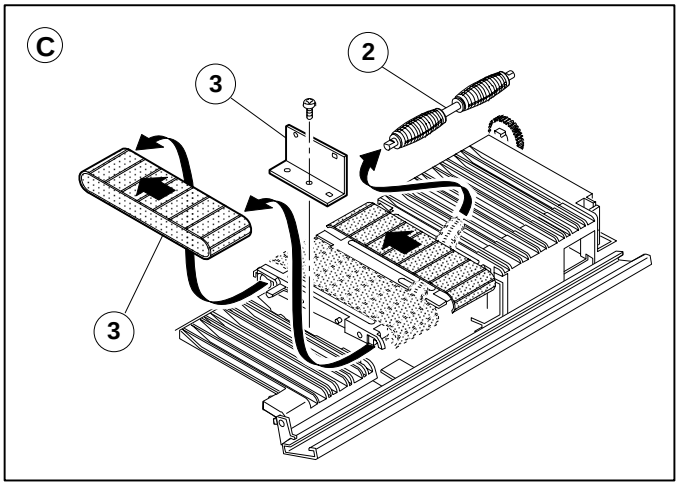
C
2
3
3

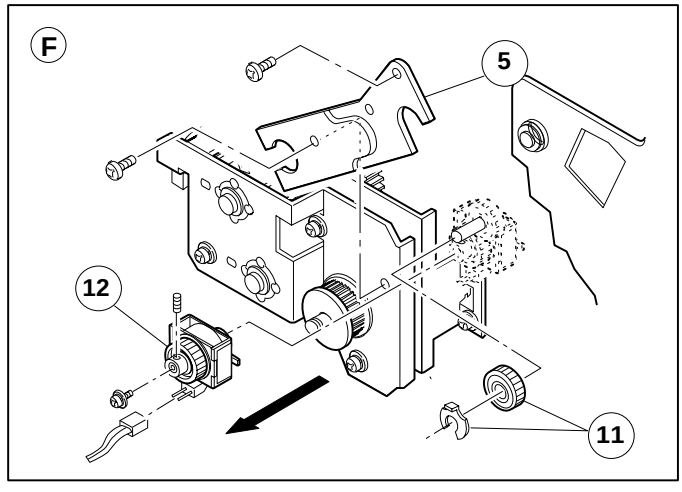
F
5
12
11

5. Fuser unit

Heater lamp | **Upper/lower heat roller** | **Upper/lower separation pawls** | **Cleaning roller**

① Remove the fuser cover (2 screws).

② Unfasten the heater lamp connectors on both sides.

③ Unfasten the thermistor and thermostat connectors.

④ Remove the lamp holder unit (2 screws).

⑤ Remove the heater lamp.

⑥ Remove the tension spring and release the fuser tension.

NOTE: When the clam shell is assembled, the periphery of the mechanism must meet together. Ensure gear mesh is correct. Ensure clamshell is seated properly.

⑦ Remove the clam shell mechanism holding screws (2 screws).

NOTE:
Do not use the spare screw hole.

⑧ Open the fuser unit.

⑨ Remove the upper heat roller assy.

⑫ Remove the upper separation pawls.

NOTE: When installing the lower heat roller, the pawls must be positioned away from the roller before closing the lower pawl holding plate, then restore pawls to proper position after installing roller.

⑩ Open the lower pawl holder bracket assy (2 screws).

⑪ Remove the lower heat roller assy.

⑬ Remove the lower separation pawls.

⑭ Remove the cleaning roller springs on the front and the rear sides.

⑮ Remove the upper cleaning roller

Lower cleaning roller

⑯ Put the front/rear/under CL spring in the frame groove and release the pressure.

(Discharge brush)
The discharge brush must be vin contact with the upper heat roller.

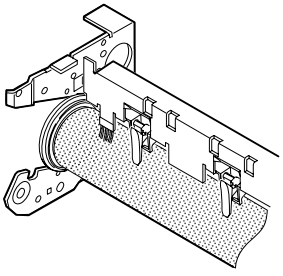

(Thermistor)

- The center of the thermistor must be in contact with the heat roller.
- Clean thermistor surface using alcohol.

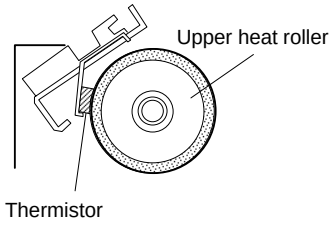

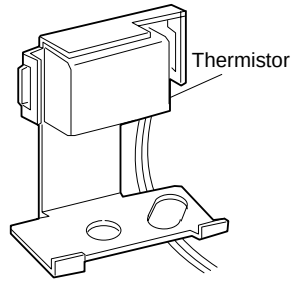

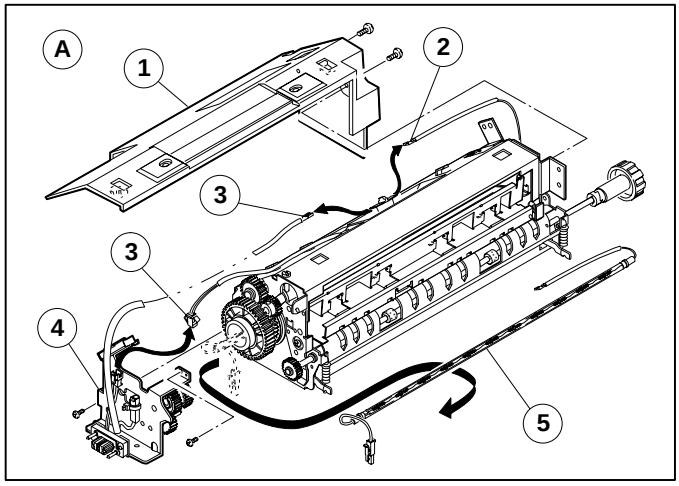
A
1
2
3
3
4
5

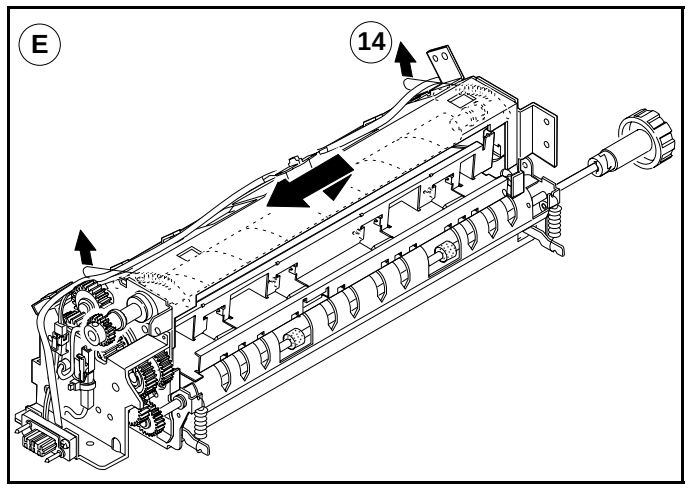
E
14

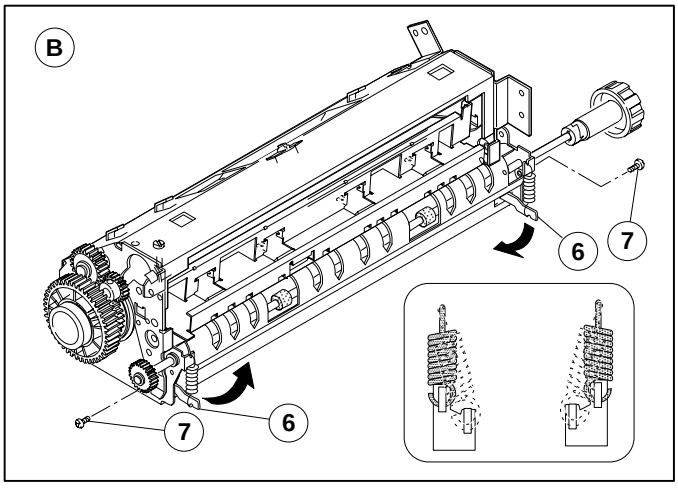
B
6
7
7
6

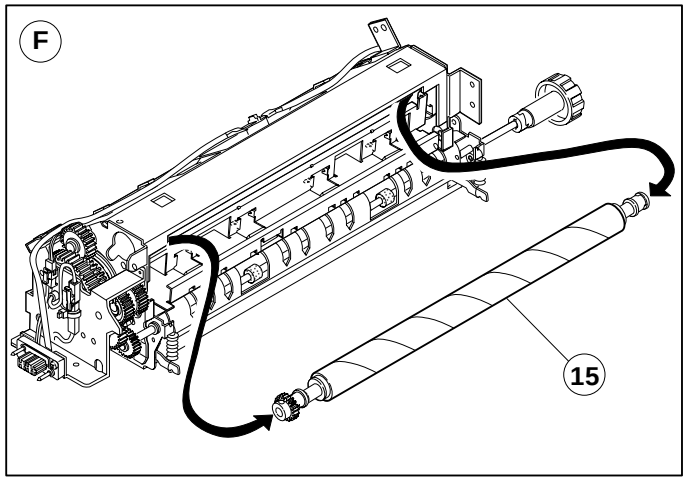
F
15

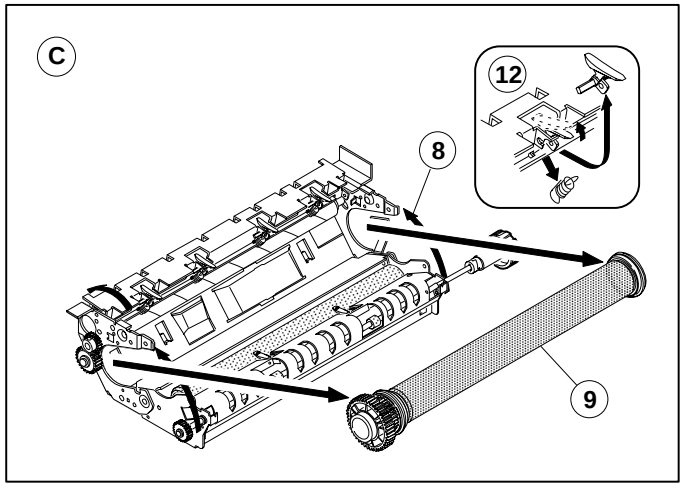
C
12
8
9

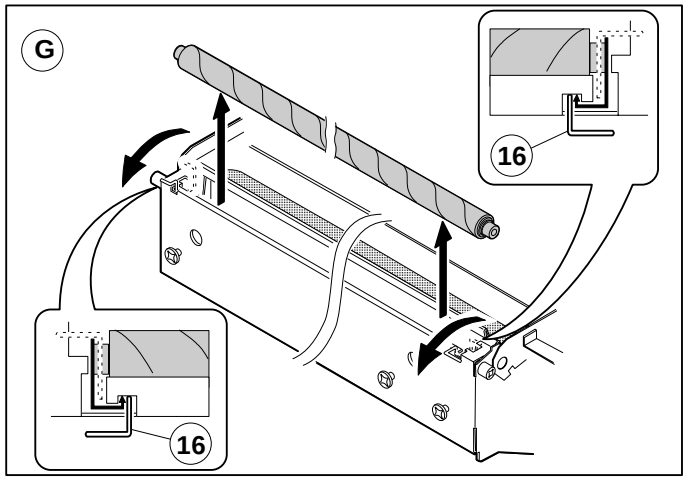
G
16
16

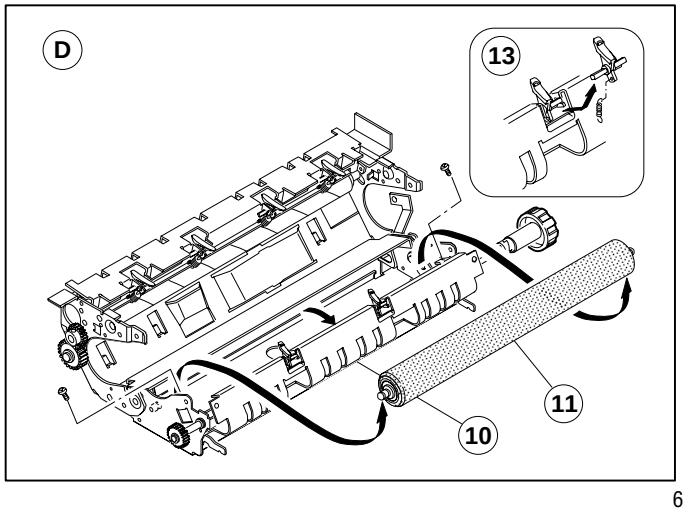
D
13
11
10

6. Duplex copy unit

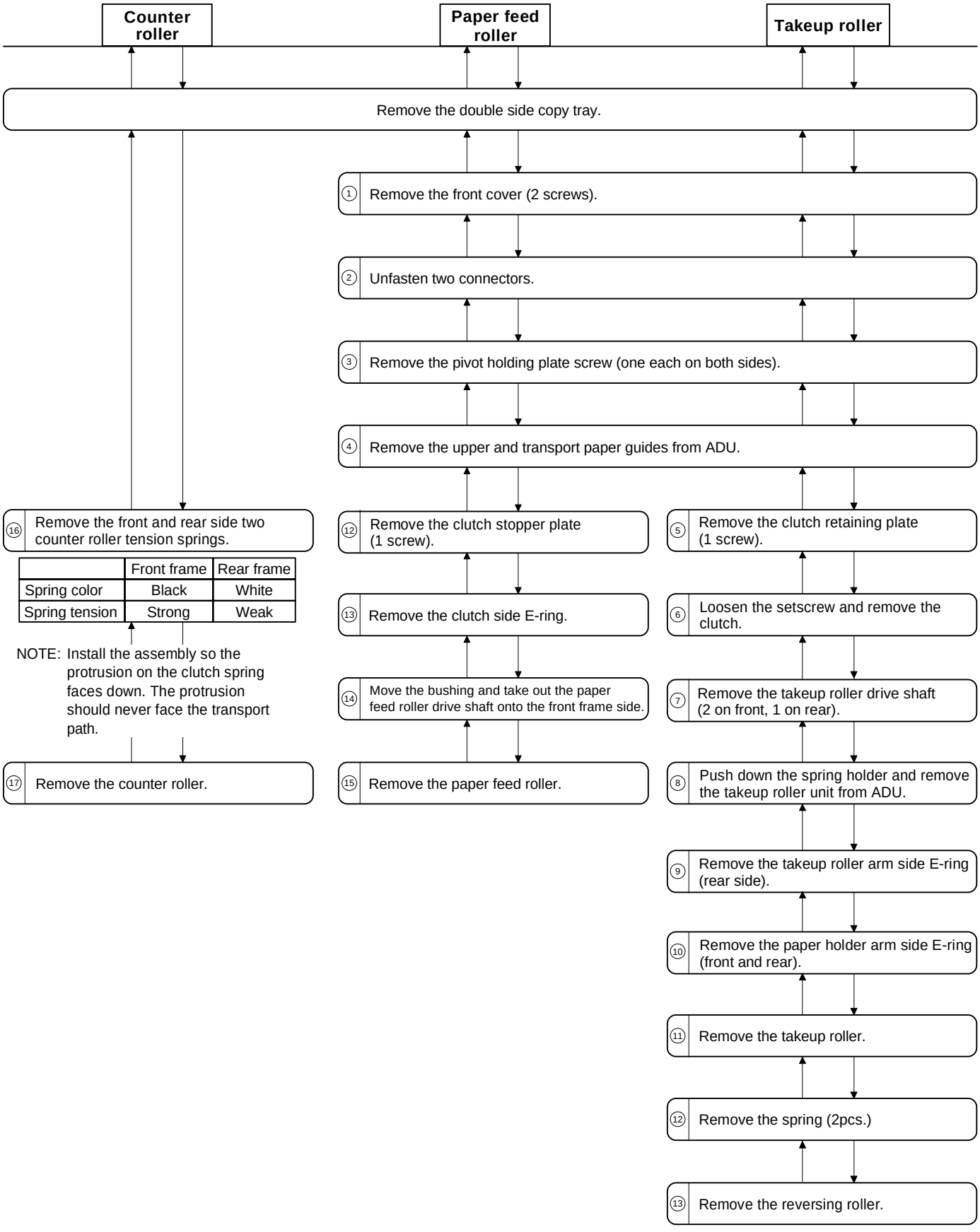

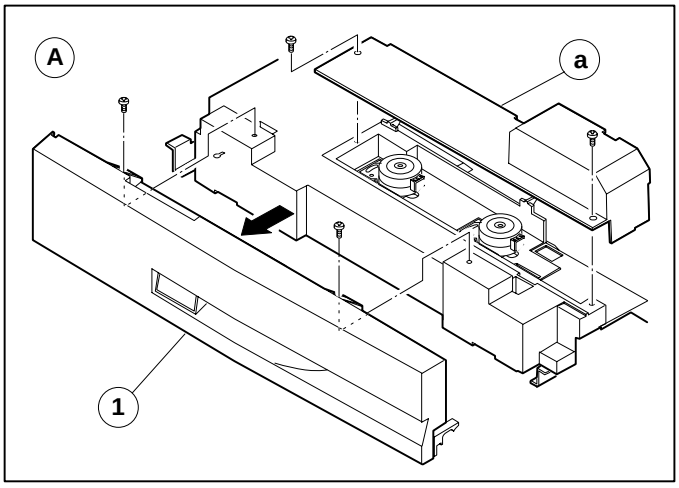
A
a
1

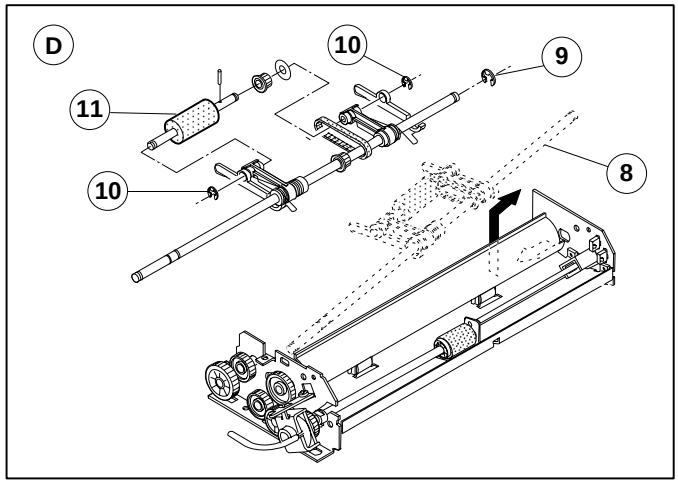
D
10
9
11
8
10

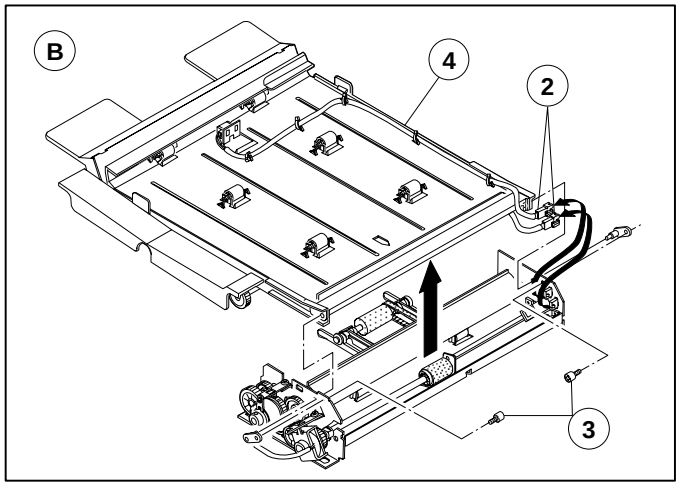
B
4
2
3

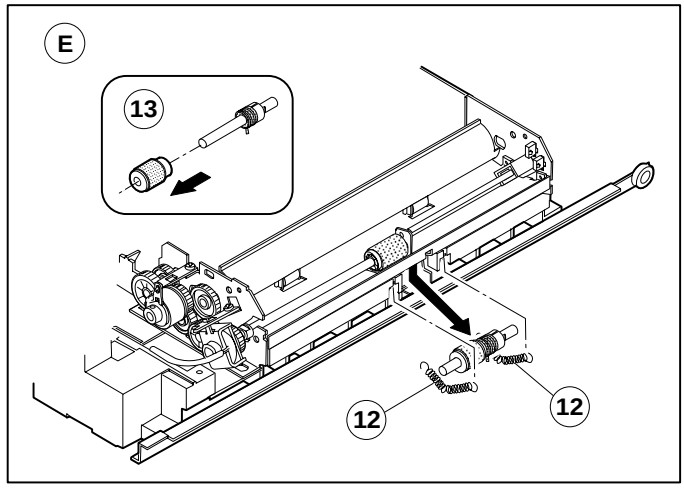
E
13
12
12

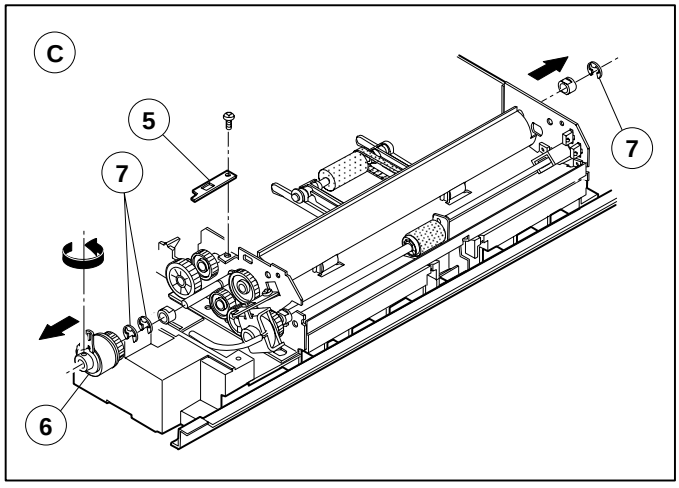
C
5
7
7
6

7. Rear frame side major components

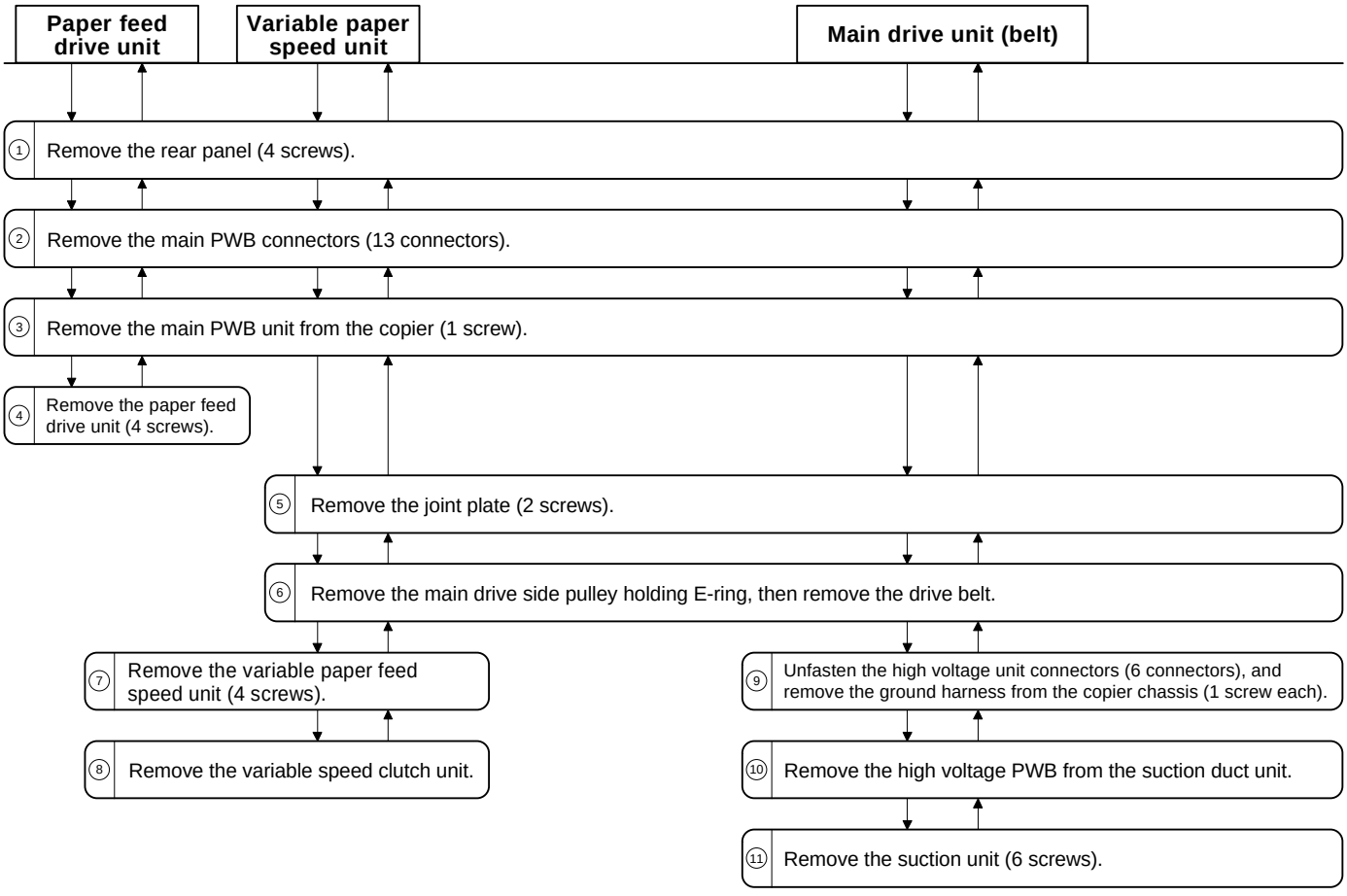

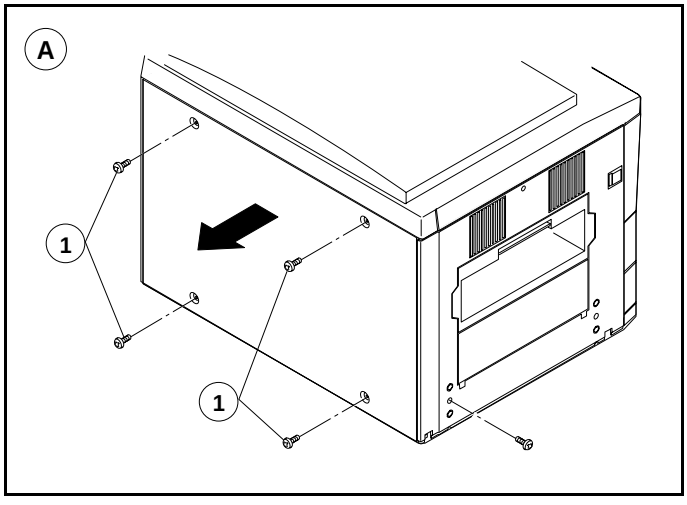

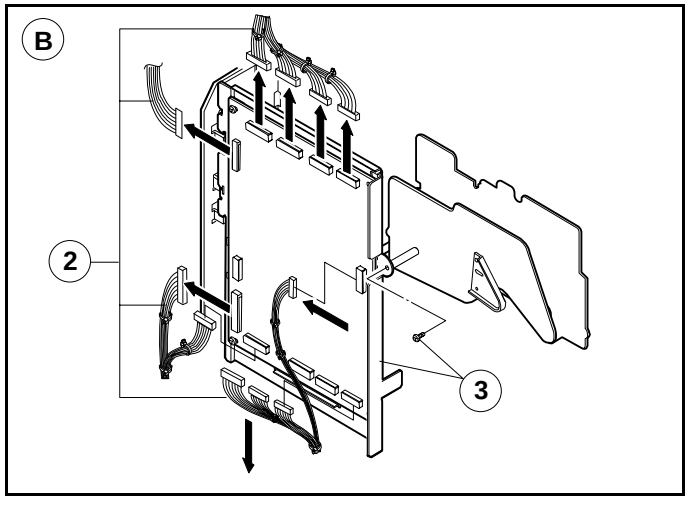

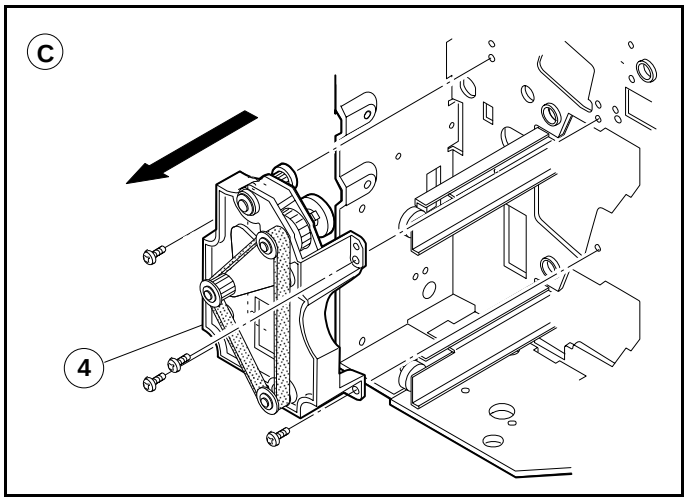
C
4

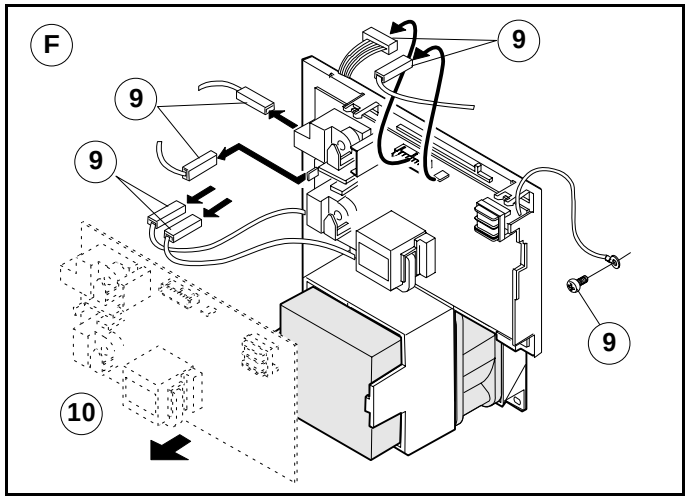
F
9
9
9
9
10

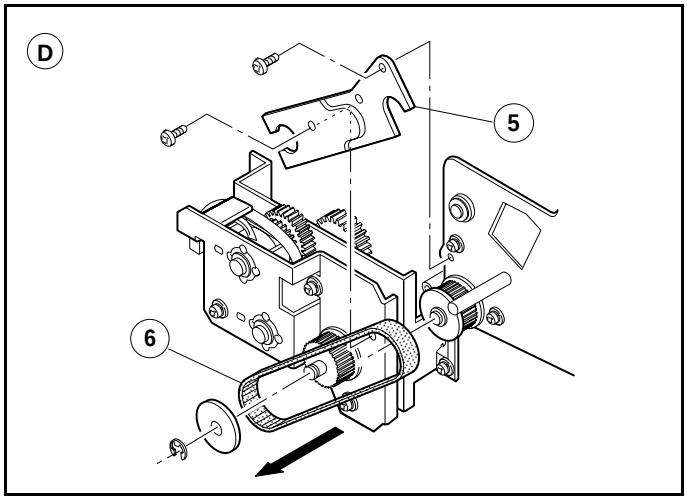
D
5
6

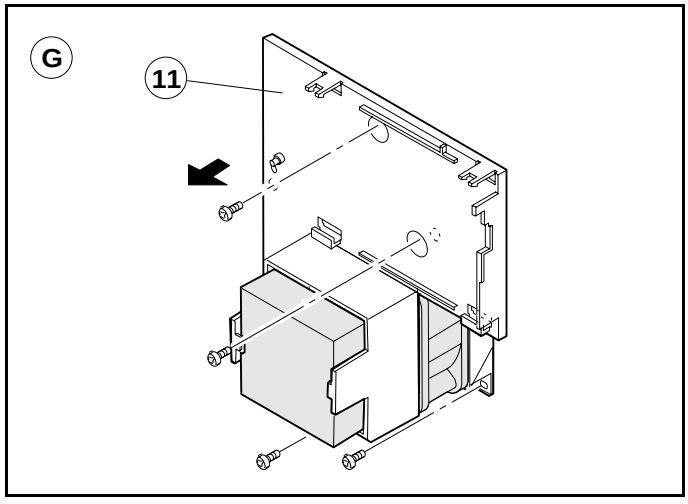
G
11

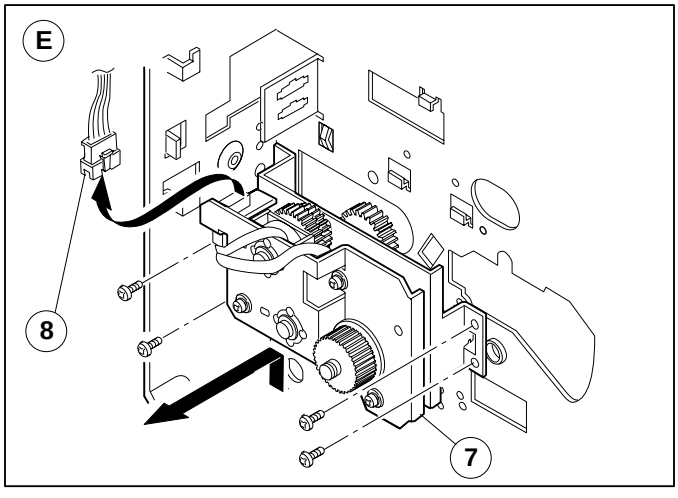
E
8
7

AC power supply PWB | **DC power supply PWB** | **Paper exit gate solenoid**

① Remove the rear panel of the copier (4 screws).

② Remove the rear side screw of the left side panel (1 screw).

③ Remove the AC power supply board (5 screws, 6 connectors).

④ Remove the DC power supply PWB (5 screws, 1 connector).

※ DC power PWB identification

100V system	200V system
White label	Red label

⑤ Remove the paper exit gate solenoid (2 screws, 2 connectors).

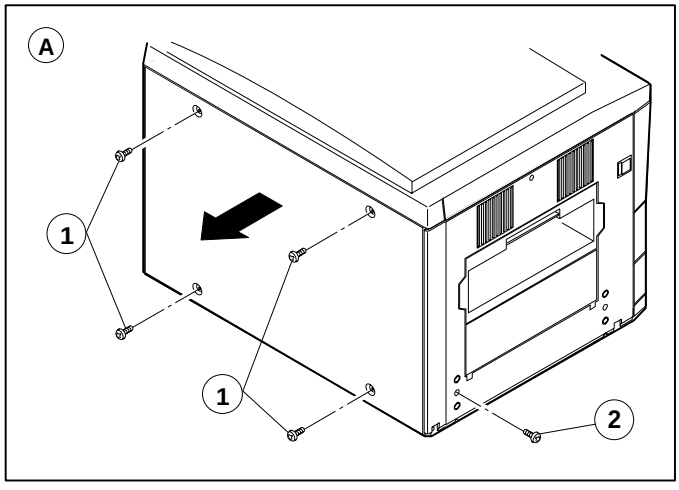

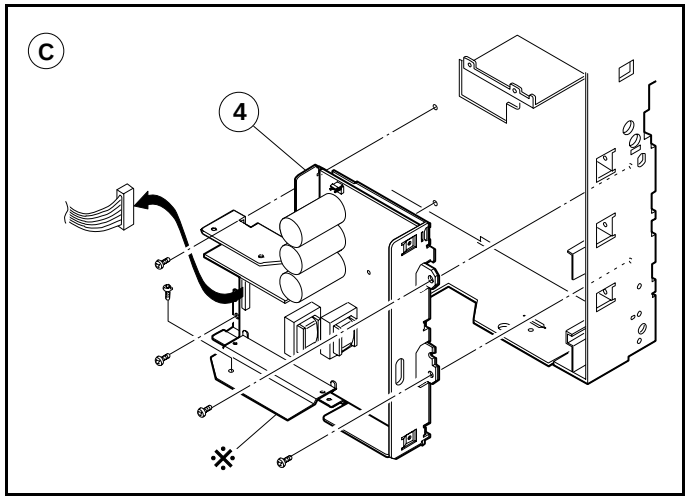

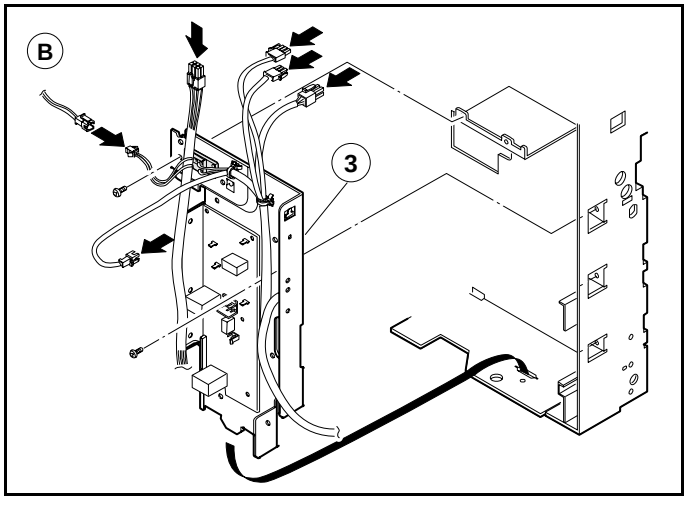

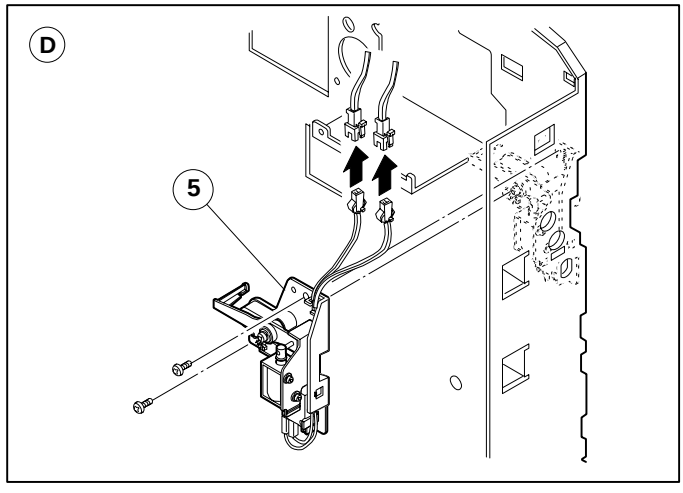

8. Operation panel unit and document size sensor board (light receive side)

Operation panel

① Open the front panel.

② Remove the middle panel (5 screws).

③ Remove the glass holding plate and front frame side right and left side screws (5 screws).

④ Remove the screws that hold the magnetic catch plate (one each on two locations).

⑤ Remove the operation panel unit.

⑥ Remove the operation panel from the operation panel unit (15 screws, 6 connectors).

Document size sensor board light receive side

⑦ Remove the document size sensor board (screw).

LCD unit

⑧ Remove the LCD control PWB from the operation panel unit. (2 screws, 4 connectors)

⑨ Remove the LCD control PWB mounting angle from the operation panel unit. (2 screws)

⑩ Remove the operation PWB from the operation panel unit. (9 screws)

⑪ Remove the LCD unit. (4 screws, connector)

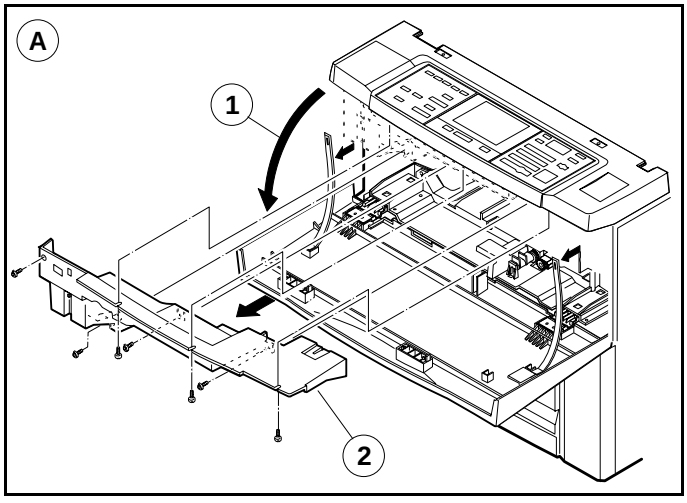

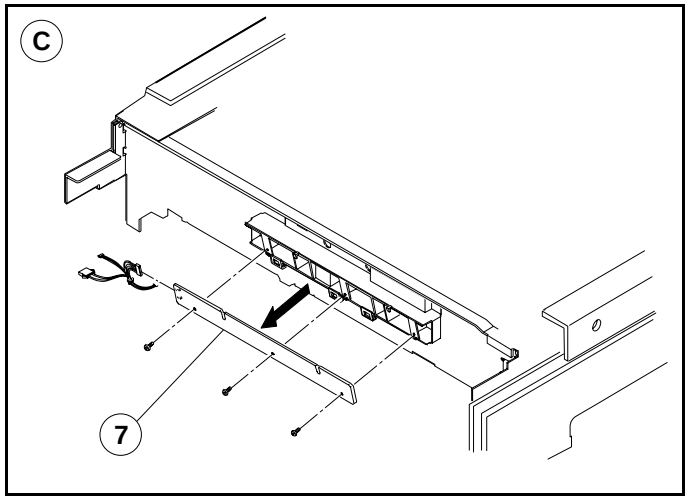

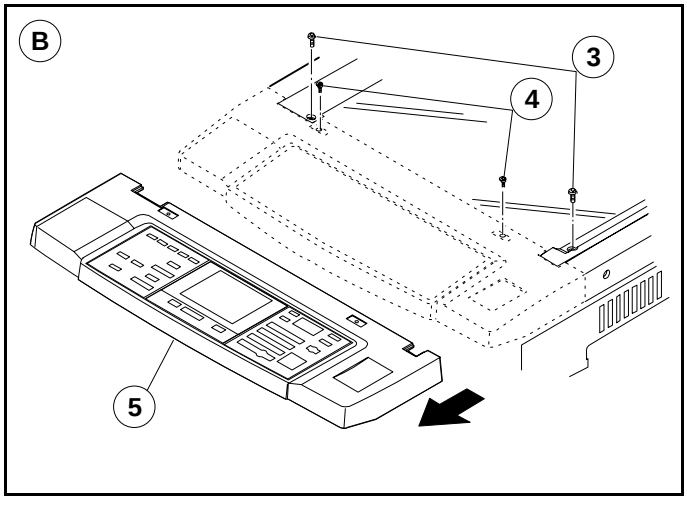

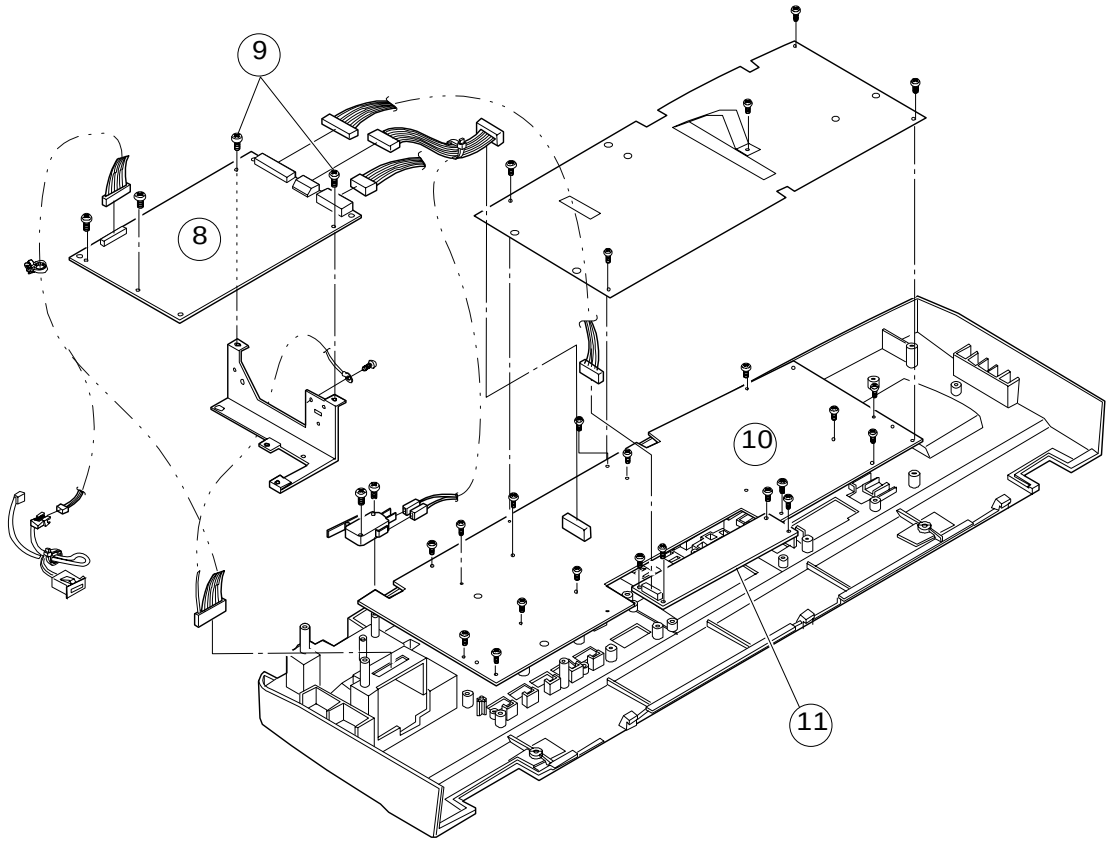
9
8
10
11

9. Optical unit

Copy lamp | **Copy lamp unit** | **#2/3 mirror base unit** | **#4/5 mirror base unit**

① Remove the original guides (L, R) and remove the table glass (two each screws).

② Move the copy lamp unit to the cut in the rear of the top cabinet and remove the rear frame side copy lamp electrode holding screw.

③ Remove the copy lamp.

NOTE: Note the direction of the copy lamp.

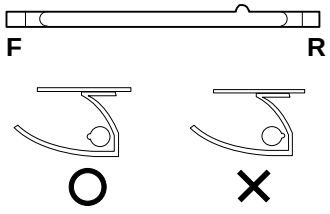

It must be installed with the bulge of the copy lamp near the rear side, as shown in the figure.

④ Remove the operation panel.
Remove the top cabinet, left.
Remove the left cabinet.

⑤ Remove the upper dark box cover (2 screw).

⑥ Remove the wire holding plates found on both frame sides of the copy lamp unit, then remove wires from the side plates (F, R).

⑦ Rotate the copy lamp unit to remove.

⑧ Remove the mirror base wire from the #2/3 mirror base unit.

⑨ Move the #2/3 mirror base unit to the square hole (a) on the front side of the optical baseplate, then rotate it to remove.

⑩ Remove the rear panel (6 screw).

⑪ Record value for assembly.

⑫ Remove the #4/5 mirror motor holding bracket (6 screw).

⑬ Remove the optical harness connectors.
Remove the lens motor connectors.
Remove the lens home position sensor connector.
Unfasten the document sensor light receive board connector. Remove the front cabinet switch junction harness.

⑭ Remove the mirror base unit together with the #4/5 mirror motor holding bracket assy.

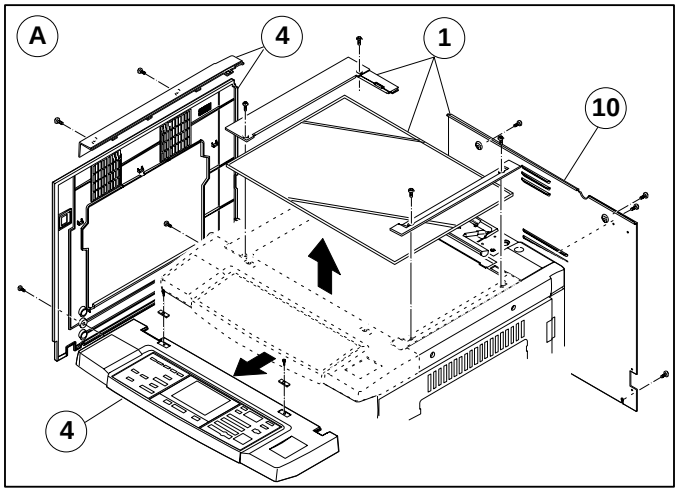

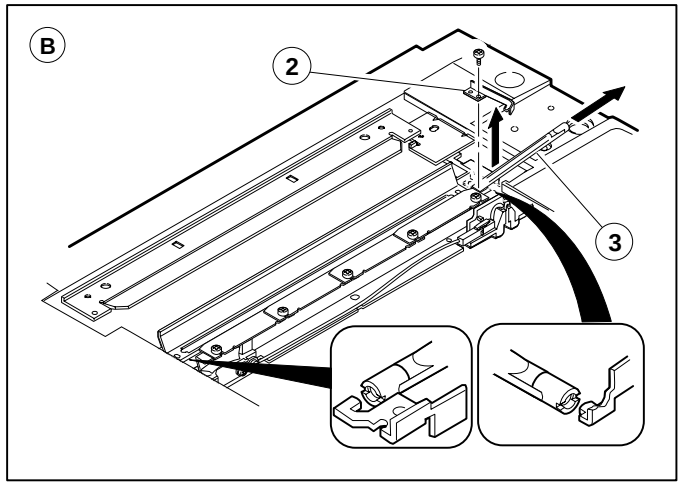

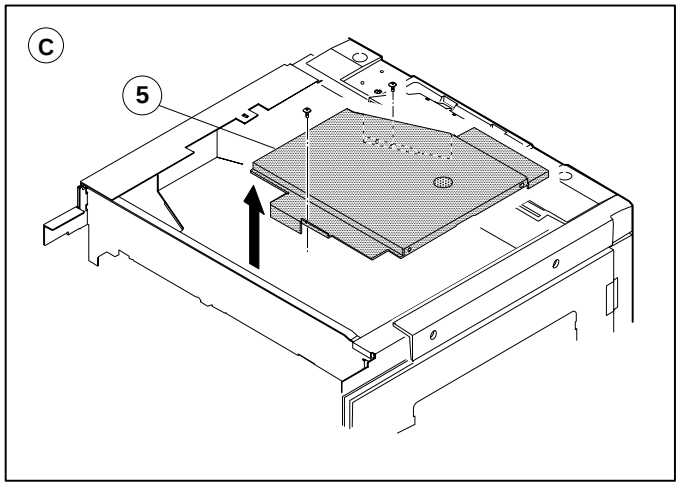
C
5

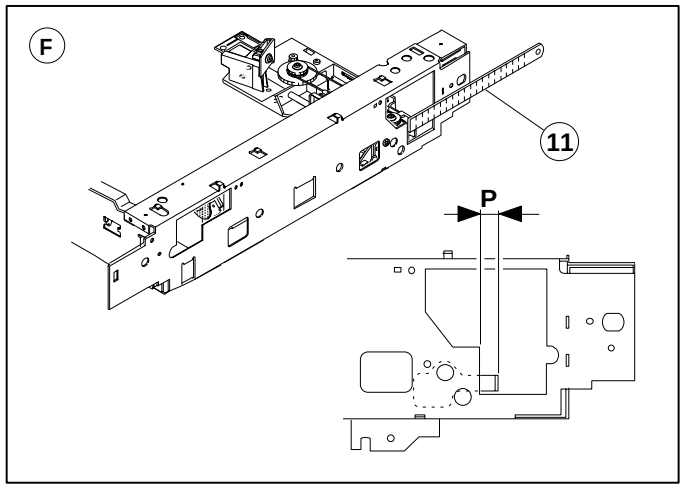
F
11
P

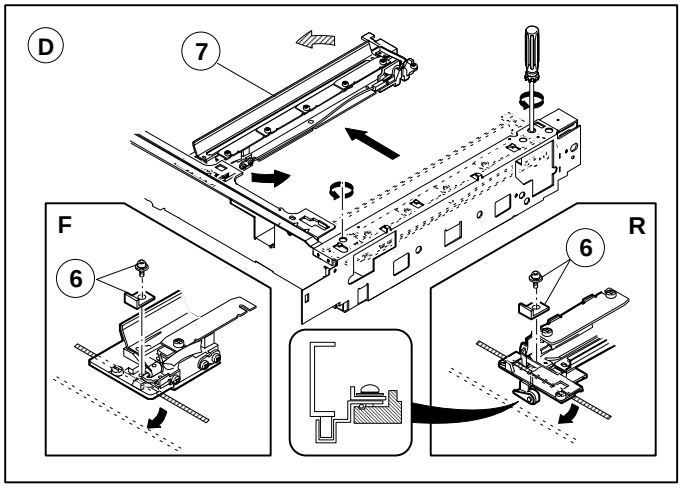
D
7
F
6
R
6

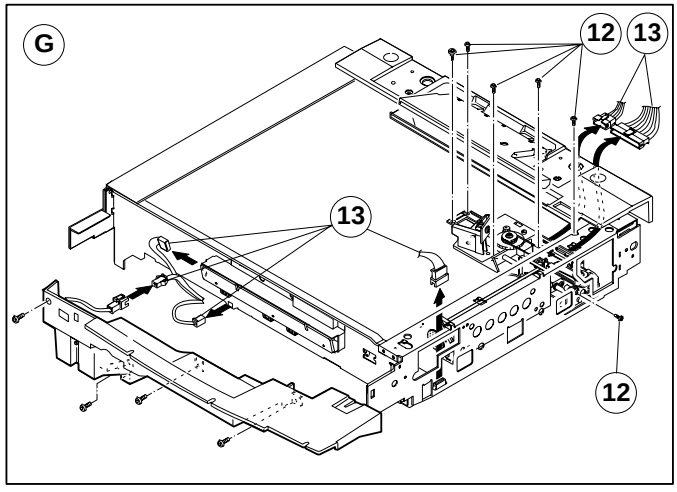
G
12
13
13
12

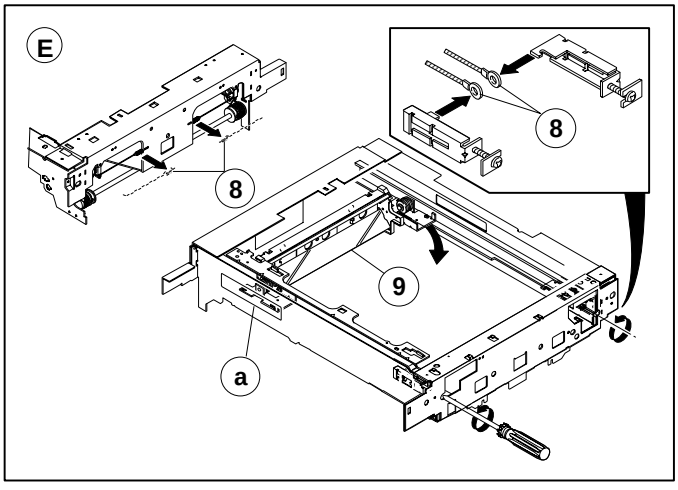
E
8
8
9
a

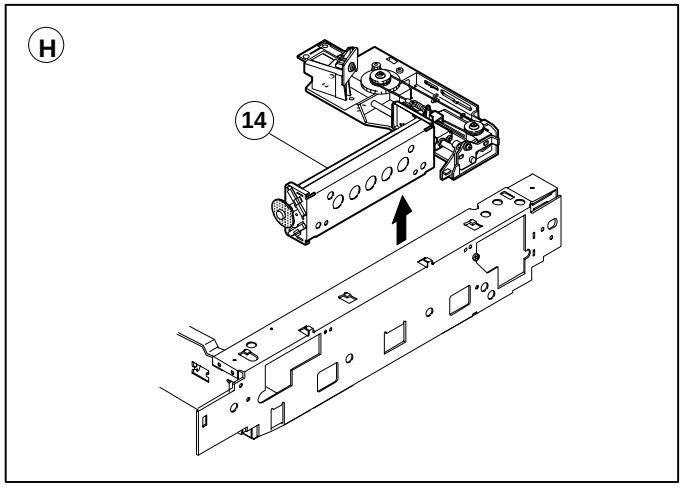
H
14

Mirror base wire stretching

(Preliminary checks)

Check the stop position of the wire winding pulley.

Visually check that the wire grooves of the front/rear wire winding pulleys are at the same level.

If there is a substantial discrepancy between the two, loosen the two setscrews which are fixing the pulleys and adjust the pulley positions. After adjustment, tighten the setscrews.

① Hang the mirror base wire fixing fixture on the tension adjustment plate hook.

② Fit mirror base B onto the mirror base positioning plates (front/rear). Pass the mirror base wire along the outer groove of the mirror base B pulley.

③ Pass the mirror base wire along the pulley groove in the paper feed side.

④ Pass the mirror base wire under mirror base B and wind it around the winding pulley.
At that time, fix the wire groove section in the winding pulley to the upper position, wind the mirror base wire 9 times, and put the 8th winding in the groove.

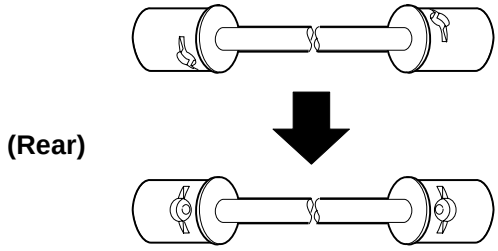

The first winding position should be 9 - 10mm toward the body frame from the pulley groove section.

⑤ Pass the mirror base wire along the pulley groove in the paper exit side.

⑥ Pass the mirror base wire along the internal groove of the mirror base B pulley.

⑦ Pass the mirror base wire through the wire guide.

⑧ Attach the mirror base wire tension spring to the long hole in the optical base plate.

(Rear frame side)

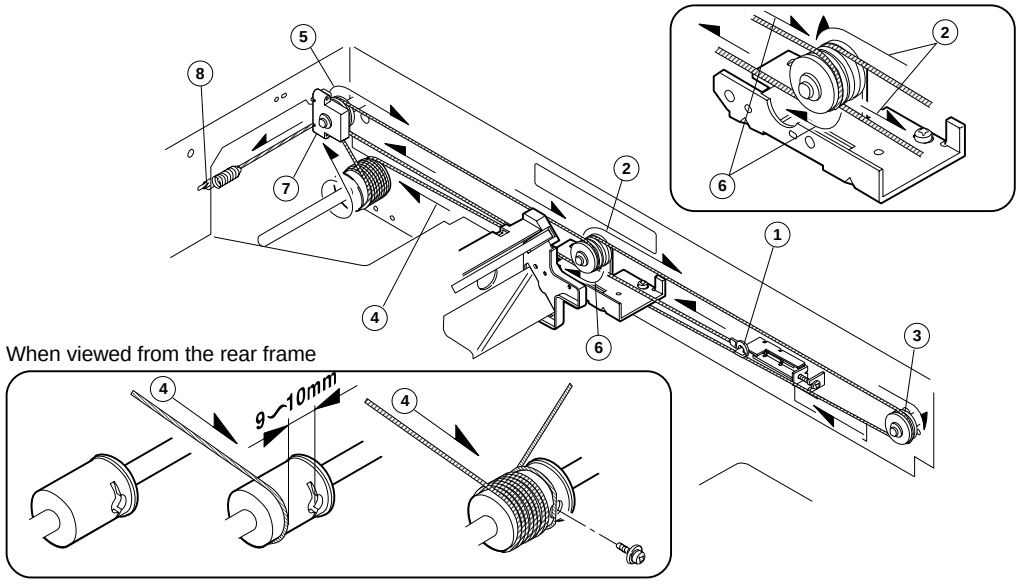

(Front frame side)

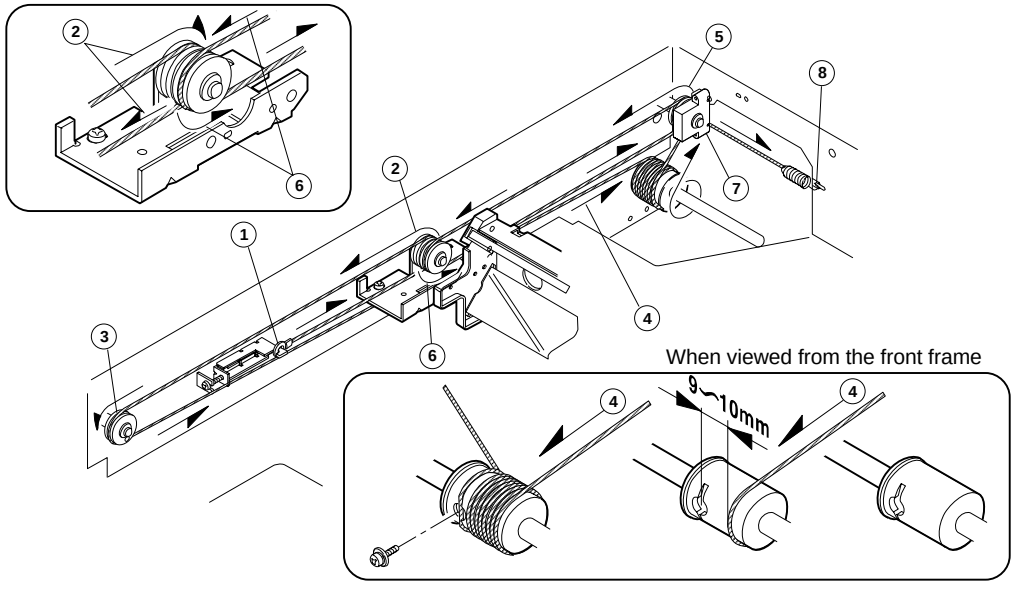

Mirror base wire tension adjustment

① Manually turn the mirror base drive pulley to shift mirror base B which is at the mirror base positioning plate 20 to 30mm to the paper exit side.

② Turn the mirror base wire tension adjustment screw clockwise to apply tension to the wire until the wire tension spring edge makes contact with the projection of mirror base B.

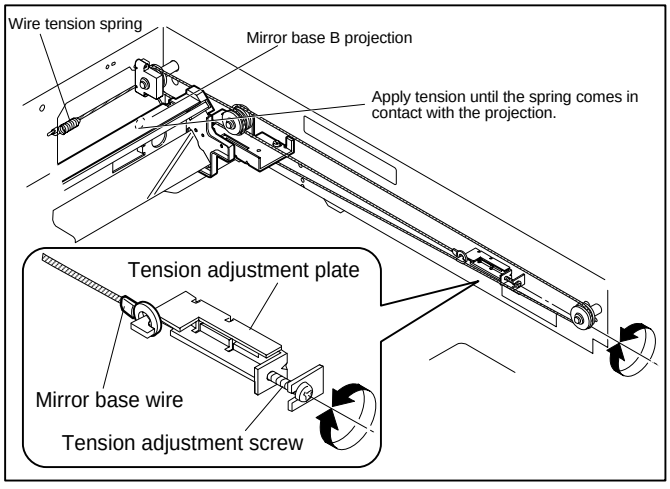

③ Manually turn the mirror base pulley to make mirror base B perform full scan a few times, and check that the mirror base wire spring edge is in contact with the projection of mirror base B. If they are not in contact with each other, adjust by turning the tension adjustment screw again. In this case, check also that there is no slack in the wire on the mirror base pulley.

④ Turn the mirror base wire tension adjustment screw 6 turns counterclockwise. (Then the distance between the mirror base wire spring and the projection of mirror base B will be about 4mm.)

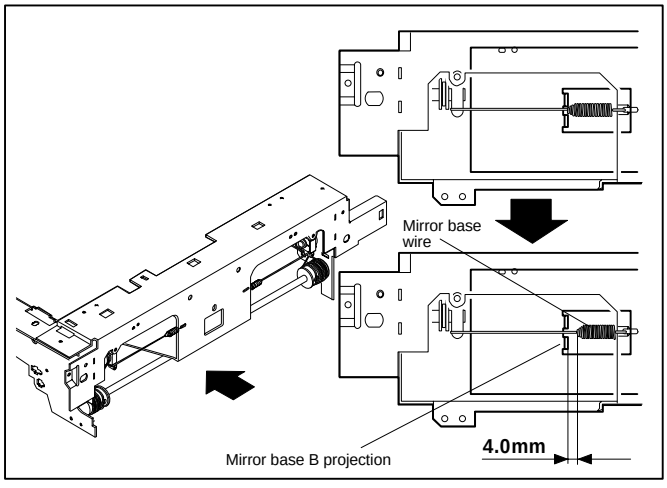

(Perform the same procedures for the front frame side and the rear frame side.)

Copy lamp unit installing position

① Pass the front/rear mirror base drive wire between the copy lamp unit frame and the wire fixing plate.
In this case, do not tighten the wire fixing screw.

② Press the copy lamp unit onto the positioning plate and tighten the wire fixing plate.

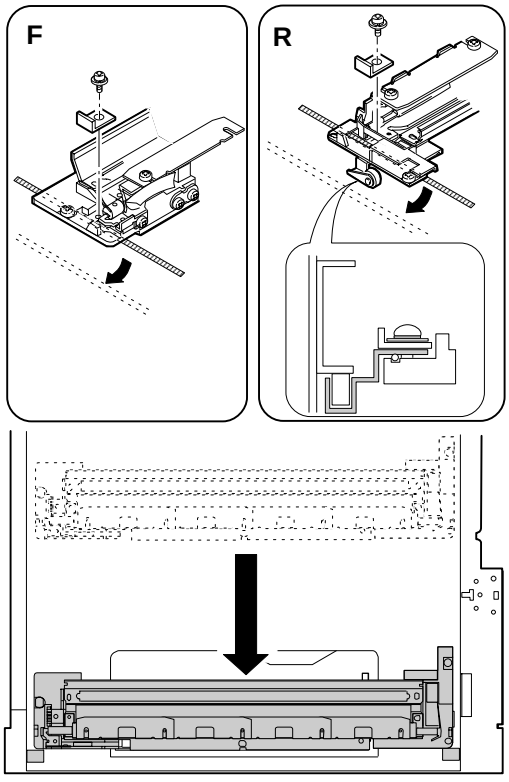

No. 2/3 mirror base unit installing position

This adjustment is to adjust parallelism of the mirror base B to the drum surface and the original surface.

① Manually turn the mirror base drive pulley to bring mirror base B into contact with the mirror base positioning plate. In this case, when the front frame side and the rear frame side of mirror base B are simultaneously brought into contact with the mirror base positioning plate, the parallelism of mirror base B is proper and there is no need for adjustment.

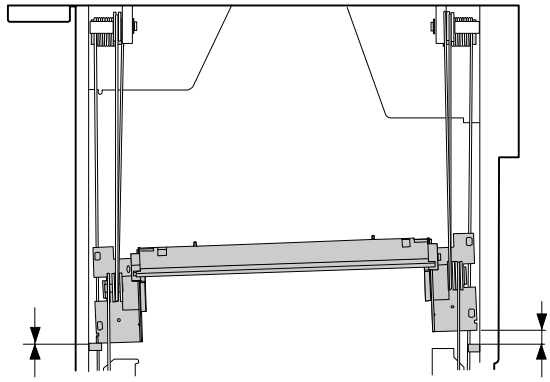

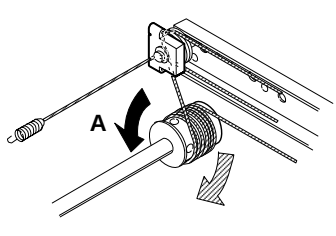

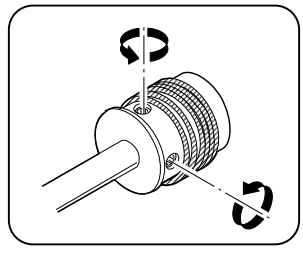

[7] ADJUSTMENTS

1. Developing Unit

(1) Clearance Adjustment of Developing Doctor Blade

① Remove the 5 screws and the 5-pin connector which connect the developer tank to the toner hopper, and pull out the developer tank.
② Loosen 4 setscrews A of the developing doctor blade.
(2 setscrews on the rear frame side and 2 on the front frame side).
③ Insert the feeler gauges into the clearance between the developing doctor blade and the magnet roller at the points 50-80 mm away from both ends.

Tool: UKOGM0075CSZZ (Feeler gauge)

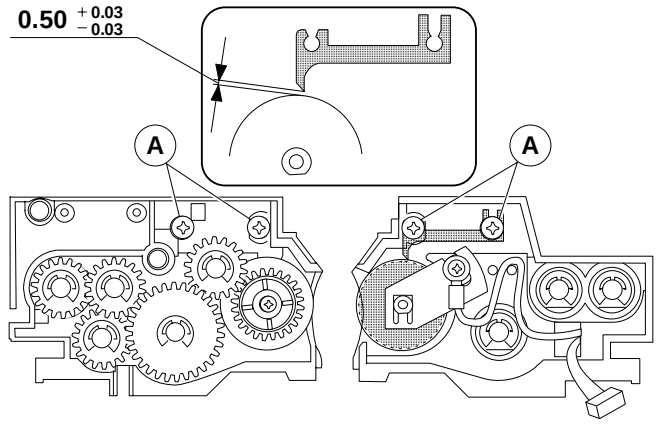

④ While pressing down the developing doctor blade in the arrow direction, tighten the 4 setscrews to secure the developing doctor blade.
⑤ Check that the clearance between the developing doctor blade and the magnet roller is 0.50±0.03 mm at the points 50-80 mm away from the doctor blade ends.
Caution: Do not damage the developing doctor blade or the magnet roller during insertion of the feeler gauge.

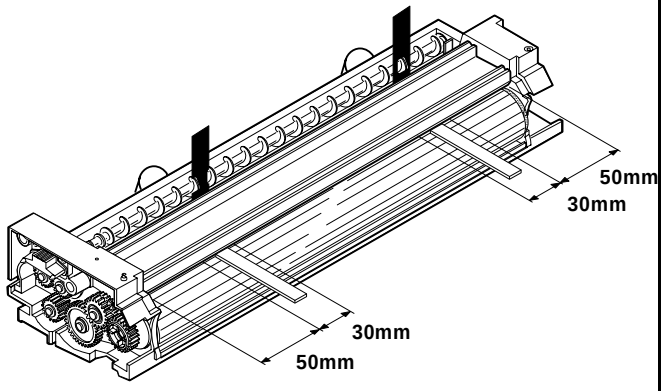

(2) Position Adjustment of Developing Magnet Roller Main Pole

① Remove the 5 screws and the 5-pin connector which connect the developer tank to the toner hopper and remove the toner hopper. Put developing unit on a flat surface.
② Thread a needle or pin as shown in the figure on the right.
③ While holding the thread, bring the needle near the magnet roller. (Do not use a clip because it will not provide an accurate position of the main pole).
④ Use a pen to put a mark on the point of the magnet roller surface to which the needle is attracted.
⑤ Measure the distance from the mark to the reference plane on which the developer tank is placed.
This distance must be 18.4 mm.
If not so, loosen setscrew A of the main pole adjusting plate and move the adjusting plate in the arrow direction to obtain the proper distance.

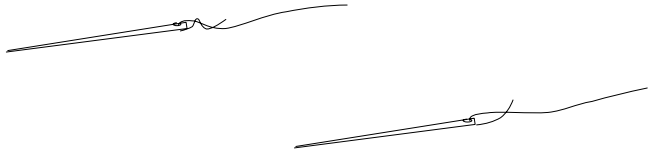

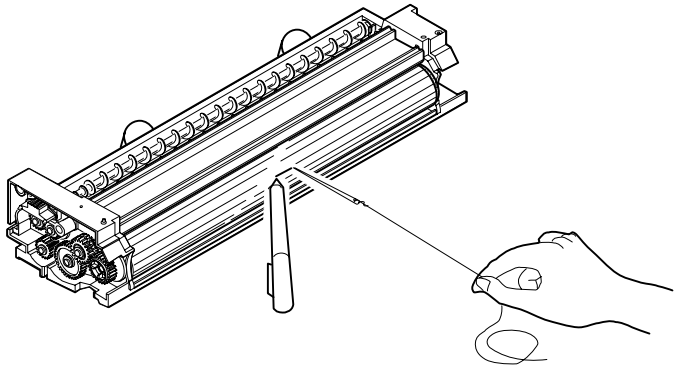

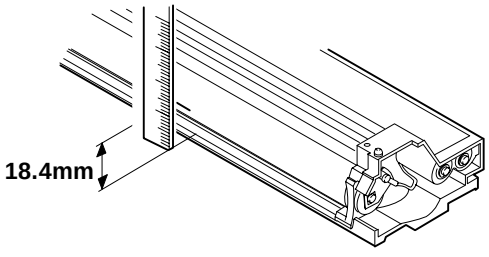

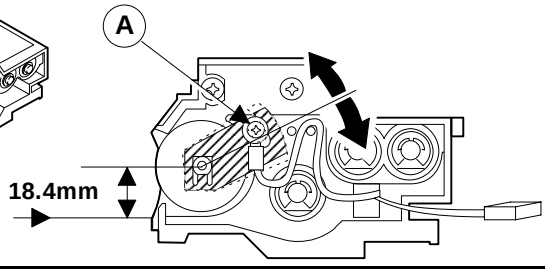

(3) Developing Bias Adjustment

① Set the measuring range of the digital multimeter to 300 Vdc or more.
② Apply the probes to the developing bias output check pin (BSCP) and the chassis(GND) of the high voltage unit.
③ Perform Simulation 8-1. (The developing bias voltage is output for 30 seconds.
④ Adjust VR301 for developing bias control so that the output voltage is –215±5V.

(4) Notes on installing various rollers of the developing unit

(1) V-rings must be attached in the correct direction.
(2) No gap must exist at ※ between the V-ring and the roller.
(3) When attaching ϕ8-ring PRNGP0013FCZZ, ϕ8-ring PRNGP0022FCZZ and ϕ6-ring PRNGP0015FCZZ to the developing magnet roller,
   1) the direction of the V-ring must be as shown in the upper figure.
   2) no gap must exist at ※ between the V-ring and the roller.

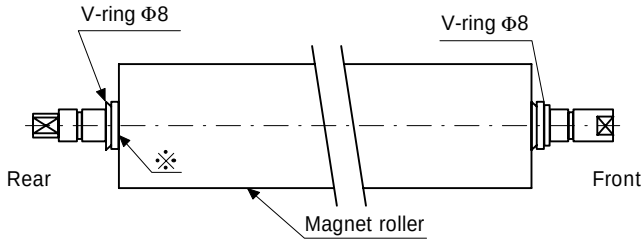

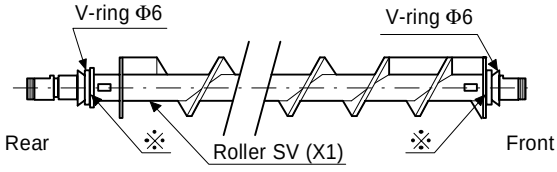

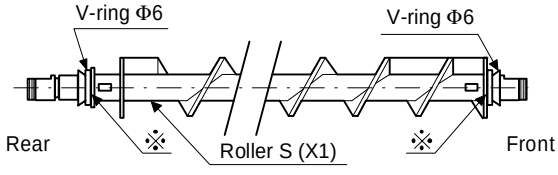

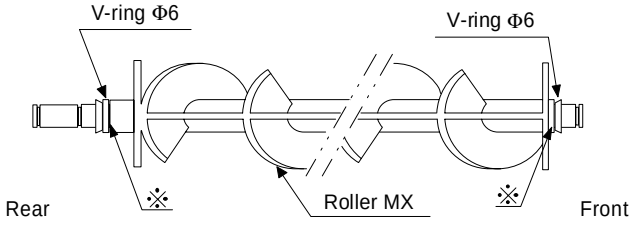

(5) Notes on applying the developing side seals (front and rear)

(1) The side seal must be applied on a surface which is free of oil, grease and foreign matter.
(2) The side seal must be securely attached to prevent it from coming off.

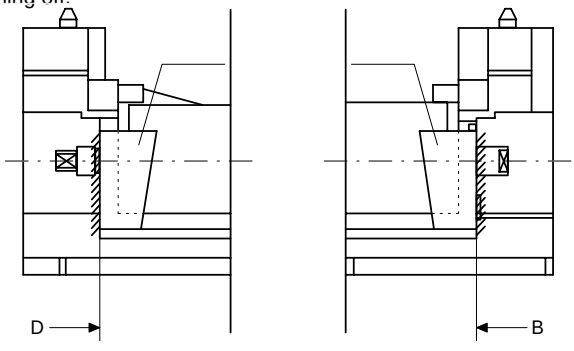

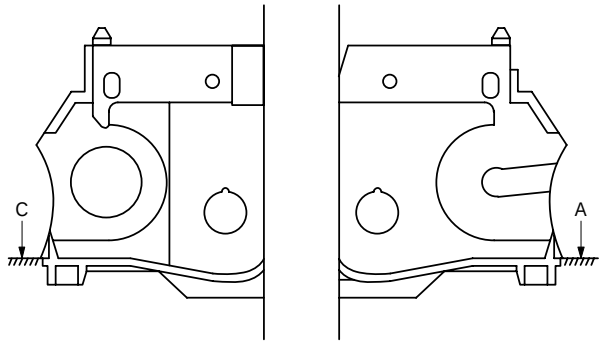

2. Processing Unit

(1) Adjustment of Blank Lamp Position

① Check that the center deviation is 2.0mm or less. (If the center deviation is more than 2.0 mm, correct it).
② Set an A3(11x17)-size blank original on the original table, and with the original cover opened, make a reduced (x 0.64) copy using an A3 (11 x 17) paper.
③ Measure the width of solid areas. If the width is more than 1 mm, adjust the blank lamp unit position so that the width of the solid areas is 1 mm or less.

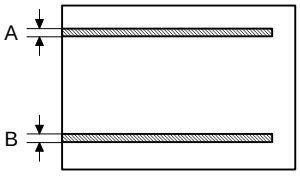

IA-BI≦1mm

1 notch of the adjusting cam : lamp movement 0.5 mm
Half notch of the adjusting cam : lamp movement 0.25 mm

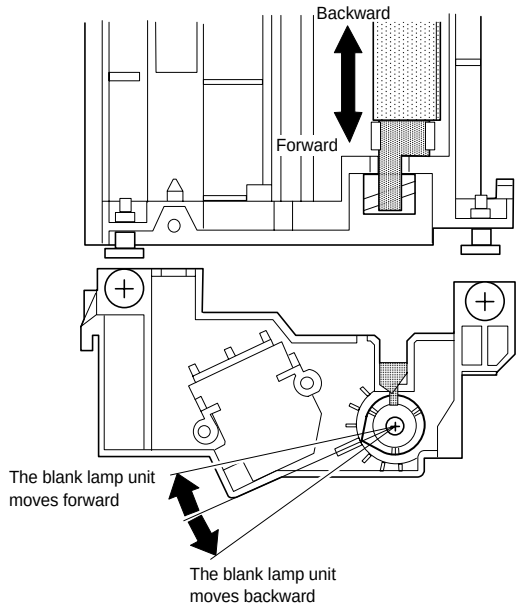

(2) Adjustment of High-Voltage Output Balance

A. Applying the Special Measuring Tool

Electrode sheet (UKOG-0110FCZZ)

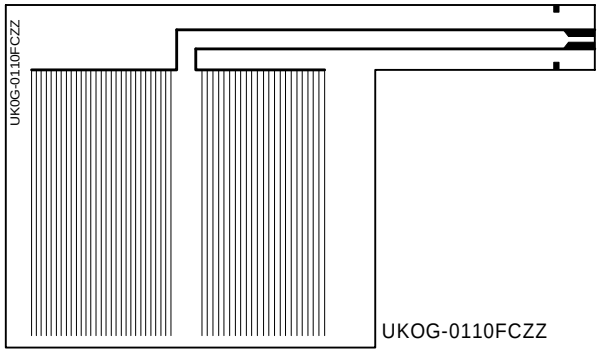

Electrode sheet harness (DHAI-0304FCZZ)

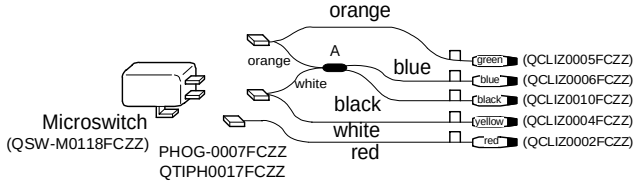

(Circuit diagram of A-portion)

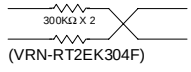

(VRN-RT2EK304F)

Digital multimeter (or ampere meter)
Note: use a multimeter with measuring range of 0 to 100 μA and error of ±1% or less.

B. Adjusting the Transfer Charger Current

① Remove the developing unit, transfer/separation charger unit, main charger unit and waste toner bottle from the machine.
② Remove the processing unit from the machine.
When removing (attaching) the processing unit, do not grasp the toner feed pipe.
③ Remove the photoreceptor drum from the processing unit and mount the electrode sheet on the drum using adhesive tape.
④ Install the photoreceptor drum into the processing unit and attach the processing unit to the machine.
⑤ Attach the drum holder unit to the machine in the manner which allows drawing the lead of the electrode sheet from the developer tank side.
⑥ After cleaning the transfer charger wire, attach the transfer/separation charger unit to the machine. (Do not attach the main charger unit).
⑦ Connect the electrode sheet to the digital multimeter (or an ampere meter).
Manually turn on the door switch.
⑧ Measure the drum current on the sides of front and rear frame. The difference in current between the front and rear frame must be 5.0 μA or less.
   a. Turn on the main switch and perform Simulation "8-06". (THVG will be ON for approx. 30 seconds)
   b. Measure the drum current on the front and rear frame side.
      - If the microswitch is OFF, the drum current on the side of front frame is indicated.
      - If the microswitch if ON, the drum current on the side of rear frame is indicated.

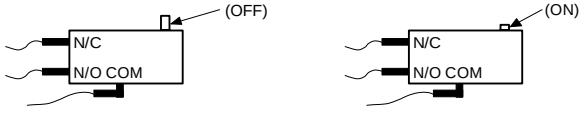

   c. Check that the difference in current between both sides is 5.0 μA or less. If the difference is more than 5.0 μA, replace the charger unit.
⑨ Adjust the THVG output voltage:
   a. Turn on the main switch and perform Simulation "8-06". (THVG will be ON for approx. 30 seconds)
   b. Use the THVG output control VR201 to adjust the THVG output voltage until it becomes –42±4 μA.

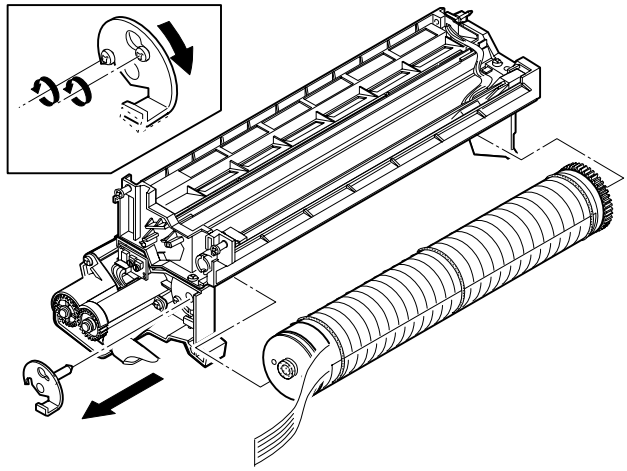

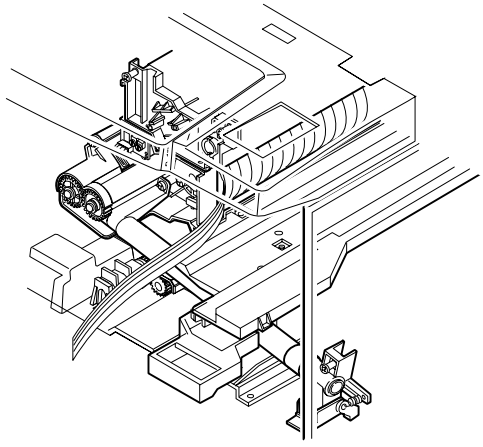

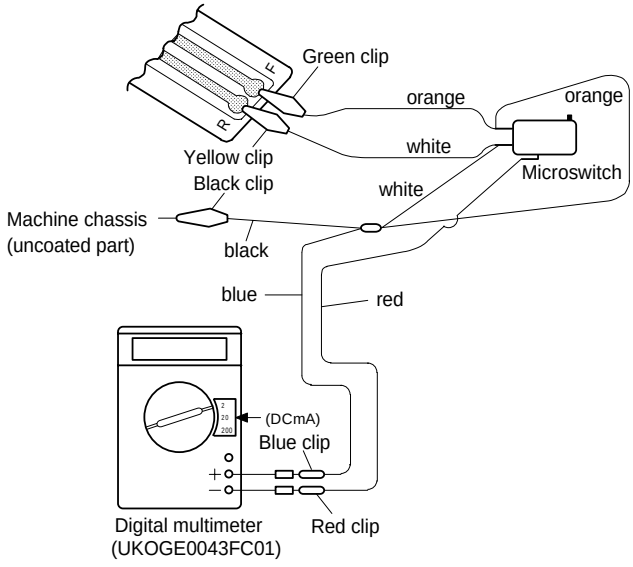

Note: Make sure the black clip is grounded at the machine chassis.
When using UKOGE0043CS01:
Control 1: set to DCmA
Control 2: set to 2
Red clip : connected to ⊕
Blue clip: connected to ⊖
When using a d.c. ampere meter:
Red clip : connected to ⊖ of d.c. ampere meter
Blue clip: connected to ⊕ of d.c. ampere meter

C. Checking the Electrostatic Main Charger Current

The drum current difference(balance) between the sides of front and rear frame is checked.

① Perform steps.

② Clean the saw-tooth plate of the main charger with polystyrene foam and attach the main charger to the machine.
(Do not attach the transfer/separation charger).
Manually turn on the door switch.

③ Measure the drum current on the sides of front and rear frame. The difference in current between the front and rear frame must be 8.0 μA or less.

a. Turn on the main switch and perform Simulation "8-02". (MHVG will be ON for approx. 30 seconds.)

b. Measure the drum current on the front and rear frame side.
- If the microswitch is OFF, the drum current on the side of front frame is indicated.
- If the microswitch if ON, the drum current on the side of rear frame is indicated.



c. Check that the difference in current between both sides is 8.0 μA or less. If the difference is more than 8 μA, replace the charger unit.

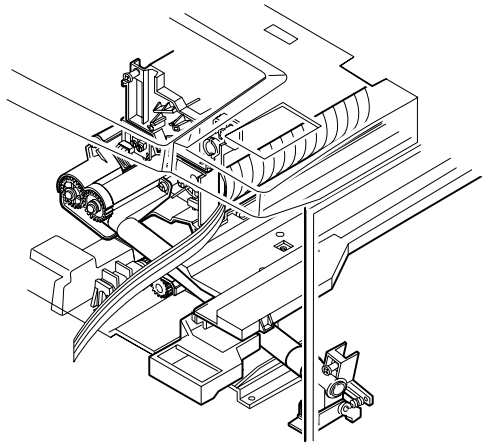

D. Adjusting the Electrostatic Main Charger Grid Voltage

① Turn off machine. Attach the developing unit and the drum holder unit to the machine.
(Do not use the electrode sheet).

② Attach the main charger unit to the machine. The machine should have all the charger units installed.

③ Turn on the main switch and check the grid voltage using Test command 44-11.
The grid voltage is displayed in two digits on the copy quantity display. The display changes in the sequence of N → TSM → P mode when the message feed key is pressed.

Mode	Figure	Grid voltage
Normal	56	–650V
TSM	52	–550V
Photo	50	–440V

NORMAL (Normal mode)
Set value: 650 = –650V output
To decrease the measurement voltage, make the set value smaller. (1 step: 1V)
To increase the measurement voltage, make the set value greater.

T/S (TSM mode)
Set value: 550 = –550V output
To decrease the measurement voltage, make the set value smaller. (1 step: 1V)
To increase the measurement voltage, make the set value greater.

PHOTO (Photo mode)
Set value: 440 = –440V output
To decrease the measurement voltage, make the set value smaller. (1 step: 1V)
To increase the measurement voltage, make the set value greater.

(Measure at check point CP-GB)

④ Remove the rear cover.

⑤ Connect the digital multimeter to the grid voltage pin (GB).

⑥ Set the measuring range of the digital multimeter to DCV.
(Use the digital multimeter with measuring range of up to 1000 Vdc).

⑦ Turn on the front cover switch manually.

⑧ There is another method to check the grid votage as follows:
Turn on the main switch, and adjust the output adjusting control so that output voltage values in Simulation "8-02"(normal mode), "8-03"(photo mode) and "8-04"(TSM mode) are as follows:

TEST POINT CP-GB	Output Voltage
Normal mode	–650±5V
TSM mode	–550±5V
Photo mode	–440±5V

E. Adjusting the Separation Charger Output

① Attach the developing unit and the drum holder unit to the machine and turn on the machine.
(Do not use the electrode sheet).
② Attach the separation charger unit and drum holder unit to the machine. The machine should have all the charger units installed.
③ Remove the rear cover.
④ Connect the digital multimeter to the SHVG output check pin (BCDCCP).
⑤ Set the measuring range of the digital multimeter to DCV.
⑥ Turn on the door switch manually.
⑦ Perform Simulation "8-07". (The SHVG will go on for approx. 30 seconds).
⑧ During the simulation, adjust the SHVG output control VR502 so that the output monitoring voltage (bias) BCDCCP of the separation charger is 0±10 Vdc.

(3) Notes on maintenance for high-voltage units

A. Electrostatic Charger Unit

① Do not distort nor stain the screen grid during handling. Be sure that the screen grid is secured in place.

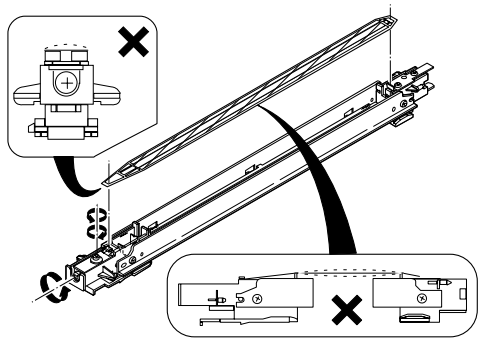

② The teeth of the saw-tooth assembly must be free of distortion.

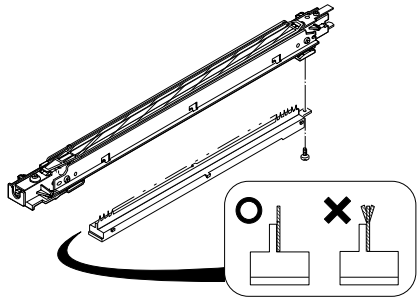

③ Do not touch the inside of the MC case(saw-tooth assembly side), the screen grid, and the saw-teeth.
④ The saw-teeth should be cleaned with polystyrene foam as shown in the figure.

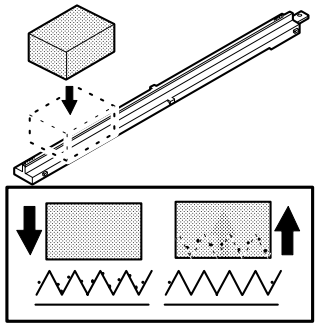

B. Transfer/Separation Charger Unit

① The charger spring must be 11±0.5 mm in length.

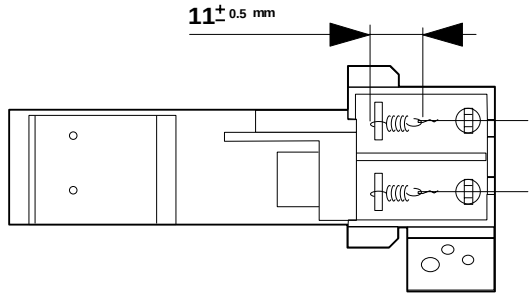

② The charger wire must be free of distortion and fitted in the holder groove.

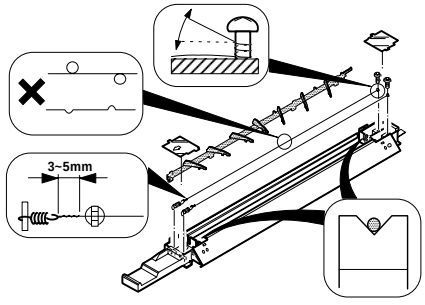

③ The charger case must be free of oil, grease and foreign matter.
④ The wire must be cleaned with alcohol.

3. Optical System

The optical system must be adjusted according to the following flowchart:

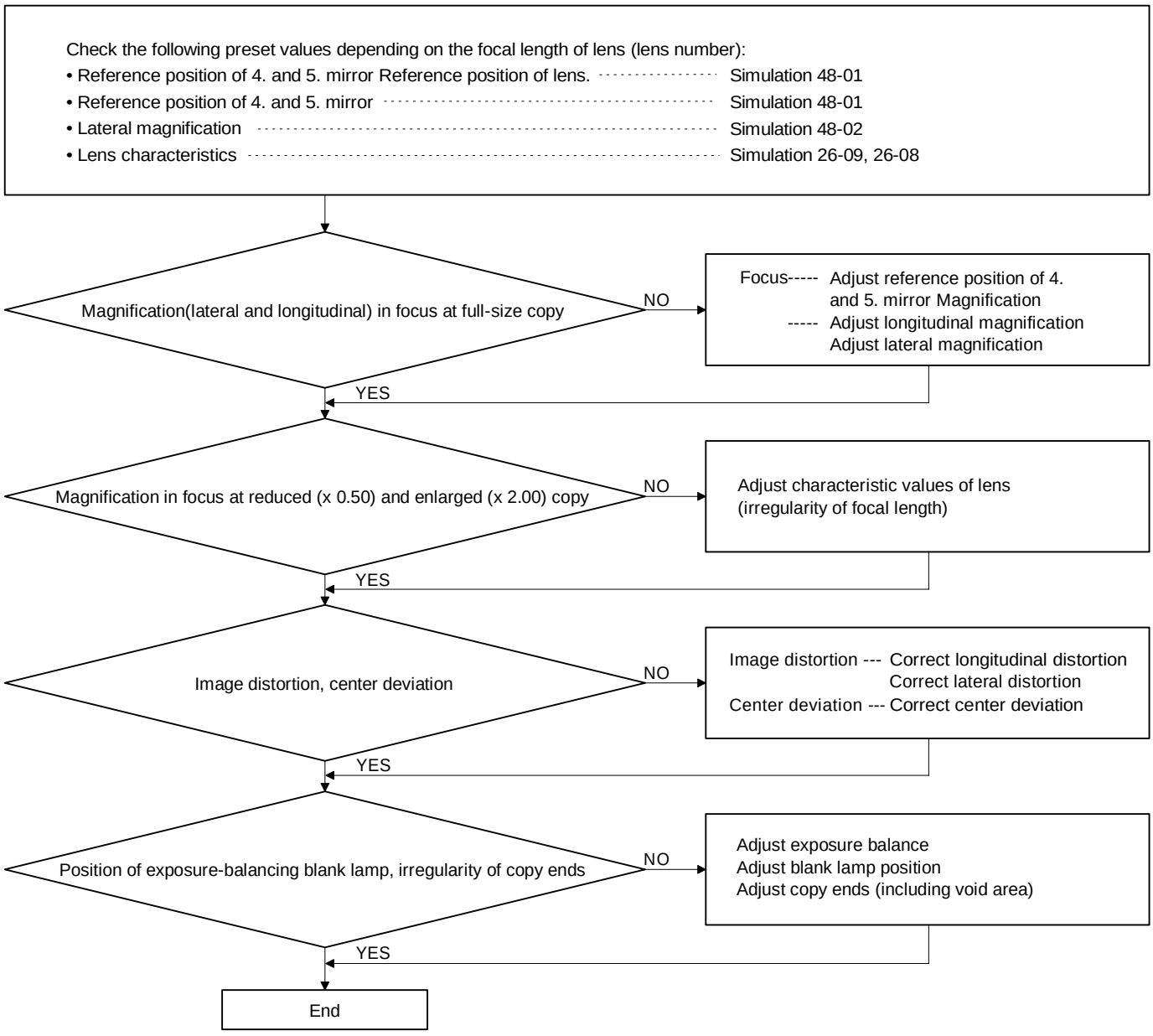

✳ The exposure balance, blank lamp position and copy ends can be separately adjusted. But items other than these must be adjusted according to the steps shown in the above flowchart.

(1) Adjusting the Reference Position of Lens

A reference value depending on lens characteristics must be input for adjusting the reference position of lens.
(This value determines the home position of lens).
(Procedure)
Perform Simulation 48-01 [=↵] .
[C] → [=↵] → [0] → [=↵] → [4] → [8] → [PSW] → [1] → [PSW] causes a preset value or "40" to → be shown on the copy quantity indicator.

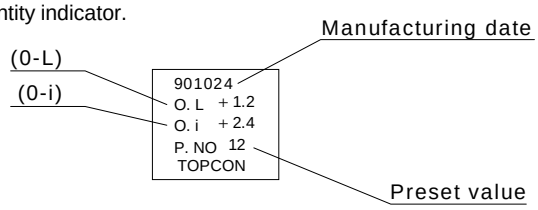

Label contents

Substitute the value (irregularity of distance between original and lens ⇒ –3.9 to +3.9) on the label applied on A shown in the right figure, for "0-L" of the expression "O-L" is the value on label.
40 – [(0 – L) x 5] = reference value for correction
and type the result.
Eg.: If the result (reference value for correction) is 1.2 ;
40 – (1.2 x 5)= 34 value to be input

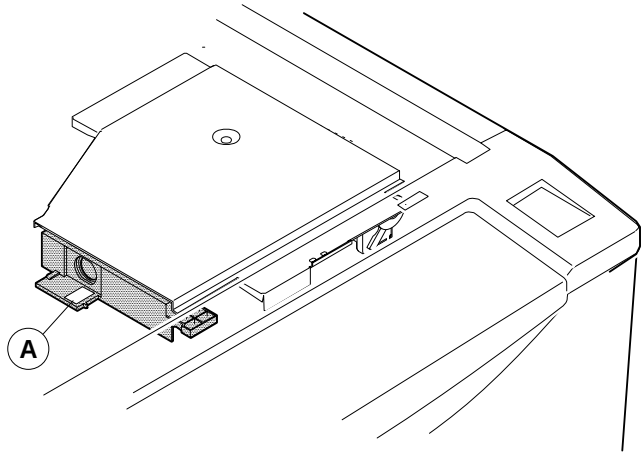

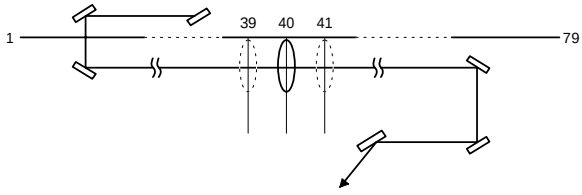

(2) Adjusting the Reference Position of 4. and 5. Mirror

A reference value corresponding to lens characteristics must be input also for adjusting the reference position of 4. and 5. mirror.
(This value determines the home position of 4. and 5. mirror base).
(Procedure)
Perform Simulation 48-01 [=↵] .
[C] → [=↵] → [0] → [=↵] → [4] [8] → [PSW] → [1] → [PSW] causes a preset value or "42" to be shown on the copy quantity indicator.
Substitute the value described above for "0-i" of the expression
42 x [(0 – i) x 10]= reference value for correction and type the result.
Eg.: If the result (reference value for correction) is 1.2 ;
50 – (1.2 x 10) = 38 value to be input
If the preset reference value is larger than the mid value "50", the 4. and 5. mirrors are set further away from lens.
If the preset reference value is smaller than mid value "50", the mirrors are set closer to lens.

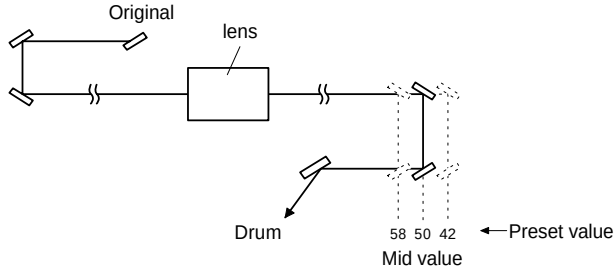

✳ To select inputs for No.4/5 mirror reference position and the lens reference position adjustment [7]-3-(1), use [➡] key (scrol display key). The previously set figures are displayed on the LCD.

(3) Adjusting the Longitudinal Magnification

This adjustment must be done while the mirror bases A, B and C are in parallel with each other and the lens is focalized.

- When the lens home position sensor (LHPS) is moved or replaced.
- When the lens is replaced.
- When the mirror base is moved or replaced.
- When the main PWB is replaced.
- When self diag U2 occurs.
- When RAM in the main PWB is replaced.

① Set a scale on the original table as shown in the right figure.
② Take a full-size copy of the scale using an A4-size(11" x 8.5") paper.
③ Compare the image on the paper with the scale.
④ Determine the correction factor for longitudinal magnification according to the following expression:
Correction factor for longitudinal magnification
$= \frac{(\text{original size} - \text{copy size})}{\text{original size}} \times 100\ (\%)$
Eg.: Correction factor for longitudinal magnification
$= \frac{(100 - 99)}{100} \times 100 = 1$

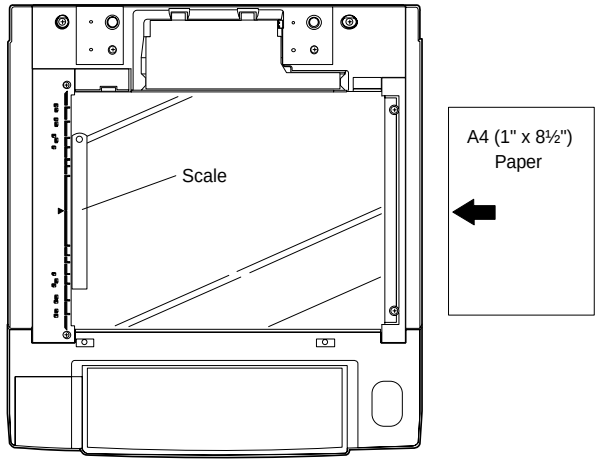

⑤ Perform Simulation 48-01 [=↵] .
[C] → [=↵] → [0/◊] → [=↵] → [4] → [8] → [PSW] → [1] → [PSW] causes a preset value of longitudinal magnification to be indicated.
⑥ Determine a preset value of longitudinal magnification according to the following expression:
Preset value of longitudinal magnification = previous preset value(indicated at step ⑤) + [correction factor for longitudinal magnification x 10]
Eg.: Preset value = 25 + [1 x 10] = 35
⑦ Type the preset value of longitudinal magnification:
[ ] → [ ] → [PSW]
Changing the preset by "1" provides the magnification change of 0.1 %.
⑧ Take a full-size copy of the scale and compare the image length with the scale length.
⑨ The image length must be the same as the scale length. Otherwise, repeat the above steps ① to ⑧ until this requirement is met.
⑩ Press the clear all key to clear Simulation 48.

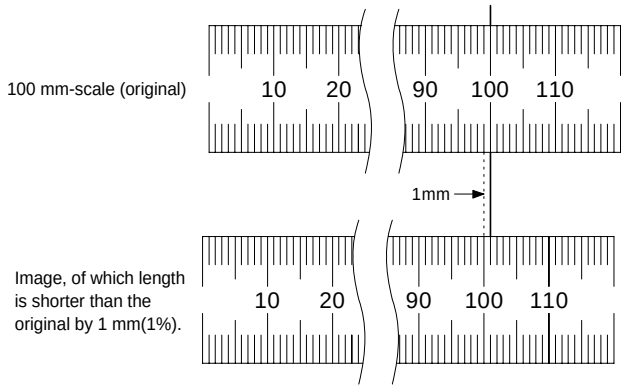

(4) Adjusting the Resolution

Applied Material: UKOG-0089CSZZ (Test chart)

① Perform Simulation 48-01 to check that a preset value corresponds to a focal length of lens used:
[C] → [0/◊] → [0/↵] → [=↵] → [4] → [8] → [PSW] → [1] → [PSW] .
When the ready lamp is lit, a preset value is indicated.
② If no preset value exists, set a reference value according to (2)"Adjusting the reference position of 4. and 5. mirror". Then take a copy of "UKOG-0089CSZZ" and check the resolution.
③ When changing a preset value:
[ ] → [ ] → [PSW] .

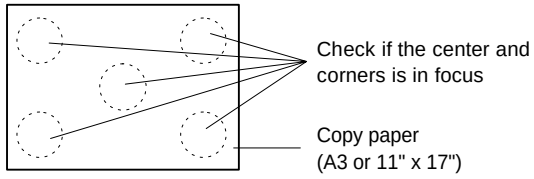

Checking Procedure
After adjusting the reference position of 4. and 5. mirror, check as follows:
① Set the test chart UKOG-0089CSZZ or a resolution test chart on the original table.
② Take a full-size copy.
③ Check if the center and corners of the copy paper is in focus.
④ The resolution must be at least 5.0 lines/mm in the center and 4.5 lines/mm in the corners. Otherwise, repeat the steps ② to ④ of (2) while changing the preset value by 1 at a time, until this requirement is met.

1. FRONT/REAR ADJ LENS: 45MB:

(5) Adjusting the Lateral Magnification

The lateral magnification should be adjusted in the following cases:

- When the main PWB is replaced.
- When the RAM in the main PWB is replaced.
- When self diag U2 occurs.
- When the mirror motor is replaced.

Change the mirror base scan speed to adjust the lateral magnification ratio.

① Set a scale on the original table as shown in the figure and perform Simulation 48-02.
The machine starts the warm-up cycle and the ready lamp is lit. At the same time a preset value (ranging from 15 to 35) is indicated.
Now take a full-size copy of the scale and determine the correction factor for lateral magnification according to the following expression:
Correction factor for lateral magnification = [(original size – copy size)/original size] x 100 (%)

② Use the correction factor to change the indicated value:
Value to be input = (preset value) + (correction factor for lateral magnification(%)) x 10
- Eg.1: 35 = 25 + 1 x 10
- Eg.2: 15 = 25 + (–1 x 10)

When a new value is typed and the print switch is pressed, the new value is stored in memory and the ready lamp goes off.

③ Clear Simulation 48-02.

Note: In Simulation 48-02 the correctable range of the preset value is limited from15 to 35.

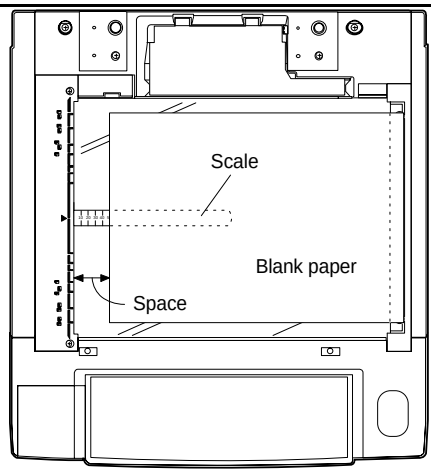

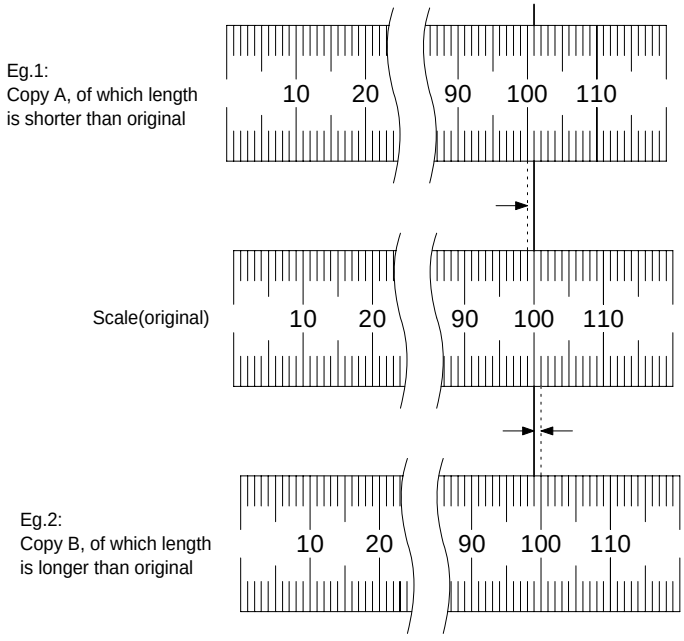

2. PAPER MOVING ADJUSTMENT (5-20-35)

(6) Inputting the Lens Travel Correction Value

(Simulation 26-08, 26-09)

<Inputting the lens characteristics>

The lens varies in focal length for each machine. The lens travel is required to correspond to the focal length of the lens. If the lens travels at a magnification would be constant among the machines in spite of the focal length irregularity, the magnification could vary depending on this irregularity.
To avoid this problem, we have prepared the table showing focal length ranks of lens and correction data (see the next page) which can be stored in memory at the time of Simulations described below. In order to copy properly at a magnification, the lens travel corresponding to its focal length is calculated on the basis of the stored data.

<When lens is replaced>

① Set correction data according to the "focal length ranks of lens and correction data" table at following Simulation:
[C] → [=↵] → [0/↵] → [=↵] → [2] → [6] → [PSW] → [9] → [PSW] to perform Simulation 26-09.

When the ready lamp is lit, a preset value (ranging from 1 to 21) is indicated.

② Input a new preset value.
Eg.: When a value shown on lens is +1.2, a correction value to be input is 14 according to the table.

[C] → [=↵] → [0/↵] → [=↵] → [2] → [6] → [PSW] → [8] → [PSW] to perform Simulation 26-08.

Value shown on the label	Test command 48-01	Test command 48-01 =↵	Test command 26-09 Zoom correction (No.4/5 mirror)	Test command 26-08 Zoom correction (lens)
+4.0	10	20	21	21
3.9	11	21		
3.8	12	22		
3.7	13	22	20	20
3.6	14	22		
3.5	15	23		
3.4	16	23		
3.3	17	24	19	19
3.2	18	24		
3.1	19	25		
3.0	20	25		
2.9	21	26	18	18
2.8	22	26		
2.7	23	27		
2.6	24	27		
2.5	25	28	17	17
2.4	26	28		
2.3	27	29		
2.2	28	29		
2.1	29	30	16	16
2.0	30	30		
1.9	31	31		
1.8	32	31		
1.7	33	32	15	15
1.6	34	32		
1.5	35	33		
1.4	36	33		
1.3	37	34	14	14
1.2	38	34		
1.1	39	35		
1.0	40	35		
0.9	41	36	13	13
0.8	42	36		
0.7	43	37		
0.6	44	37		
0.5	45	38	12	12
0.4	46	38		
0.3	47	39		
0.2	48	39		
+0.1	49	40	11	11
0	50	40		
–0.1	51	40		
0.2	52	41	10	10
0.3	53	41		
0.4	54	42		
0.5	55	42		
0.6	56	43	9	9
0.7	57	43		
0.8	58	44		
0.9	59	44		

(Lens value input vs. test command input)

Value shown on the label	Test command 48-01	Test command 48-01 =↵	Test command 26-09 Zoom correction (No.4/5 mirror)	Test command 26-08 Zoom correction (lens)
1.0	60	45	8	8
1.1	61	45		
1.2	62	46		
1.3	63	46		
1.4	64	47	7	7
1.5	65	47		
1.6	66	48		
1.7	67	48		
1.8	68	49	6	6
1.9	69	49		
2.0	70	50		
2.1	71	50		
2.2	72	51	5	5
2.3	73	51		
2.4	74	52		
2.5	75	52		
2.6	76	53	4	4
2.7	77	53		
2.8	78	54		
2.9	79	54		
3.0	80	55	3	3
3.1	81	55		
3.2	82	56		
3.3	83	56		
3.4	84	57	2	2
3.5	85	57		
3.6	86	58		
3.7	87	58		

(Lens value input vs. test command input)

(7) Correcting the Longitudinal Distortion

Use this procedure when replacing the mirror base driving wire.

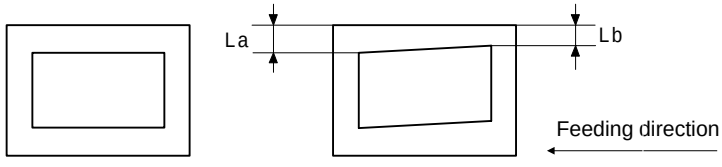

① Set an A3-size or 11" x 17" blank paper on the original table while applying the paper end to the glass retaining plate and aligning the paper side edge with the front frame, as shown in the right figure.
② Use an A3-size or 11" x 17" copy paper to take a full-size copy with the original cover opened.
③ Measure the width of solid at front and rear ends of the copy paper.

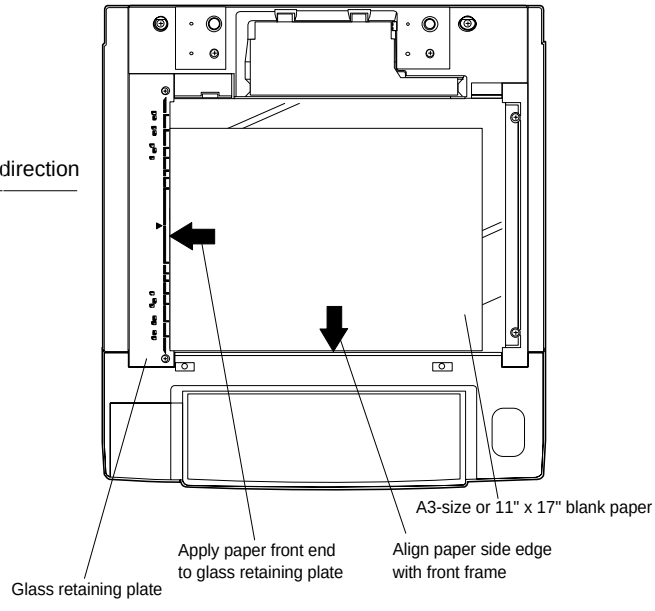

If the width of the front end solid (La) is equal to that of the rear end solid (Lb), no adjustment is required.
Otherwise, follow the steps ④ to ⑦ described below:

④ Loosen screws securing the mirror base driving pulley on the rear frame side.
If La is bigger than Lb, rotate the mirror base driving pulley on the rear frame side in the A direction. (Do not rotate the flange and the shaft of the mirror base driving pulley).
If La is smaller than Lb, rotate the mirror base driving pulley on the rear frame side in the B direction. (Do not rotate the flange and the shaft of the mirror base driving pulley).

⑤ Tighten the screws securing the mirror base driving pulley.

⑥ Repeat steps ① to ③.

⑦ If La is not equal to Lb, repeat steps ④ and ⑤ until La=Lb.

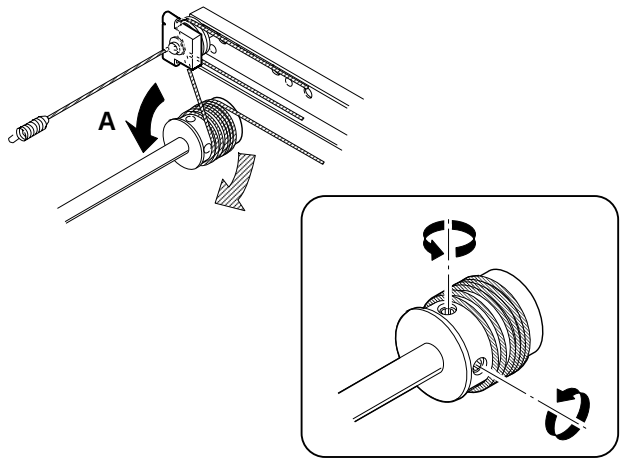

(8) Correcting the Lateral Distortion

If the lateral distortion occurs without the longitudinal distortion(distortion in the mirror base scanning direction), the lateral distortion can be corrected by adjusting the height of 2. and 3. mirror base and/or the eccentric roller of 4. and 5. mirror base.
The correction procedure is as follows:



Original Copy

① Preparing the reference original:
On an A3-size or 11" x 17" blank paper, draw 2 parallel lines at the positions 10 mm away from the both ends.

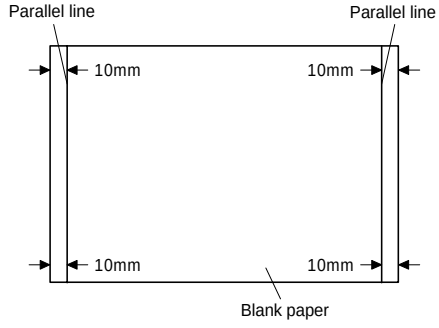

② Take a full-size copy of the paper using an A3-size or 11" x 17" paper.

③ Measure and the distance between the paper end and the line at 4 positions (La, Lb, Lc and Ld).

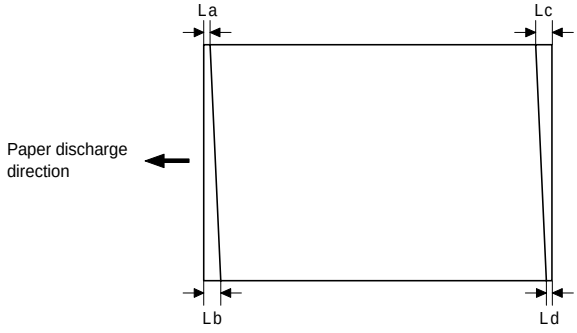

If La=Lb and Lc=Ld, no adjustment is required.
If La>Lb(Lc<Ld), rotate the eccentric roller in one direction to raise the front frame side of the 4. and 5. mirror base unit.
If La<Lb(Lc>Ld), rotate the eccentric roller in the other direction to lower the front frame side of the 4. and 5. mirror base unit.
Note: Remember how much the roller is rotated.
(One rotation of the roller causes the height of the front frame side to change by 2 mm and the difference between La and Lb to change by 4 mm).

∗ After opening the front cabinet, the adjustment described above can be made through the access hole.

If the above procedure does not provide sufficient adjustment, follow the steps shown below:

① Move the B rail of the mirror base upward or downward (in the arrow direction).
If La>Lb, raise the mirror base B rail on the paper discharge side by one-half of (La-Lb).
If La<Lb, lower the mirror base B rail on the paper discharge side by one-half of (Lb-La).
ex.:
When La=12 mm and Lb=9 mm, raise the mirror base B rail on the paper discharge side by 1.5 mm.

If Lc>Ld, lower the mirror base B rail on the paper discharge side by one-half of (Lc-Ld).
If Lc<Ld, raise the mirror base B rail on the paper discharge side by one-half of (Ld-Lc).
(Grasping the grip of the mirror base rail, move the mirror base rail).

② Adjust the eccentric roller as described in 1) until La=Lb and Lc=Ld.

③ After adjustment, manually rotate the mirror base driving pulley to check that the mirror base A and B do not come into contact with each other during full-scanning motion.

Note: If the mirror base rail is moved excessively, the mirror bases may contact with each other.

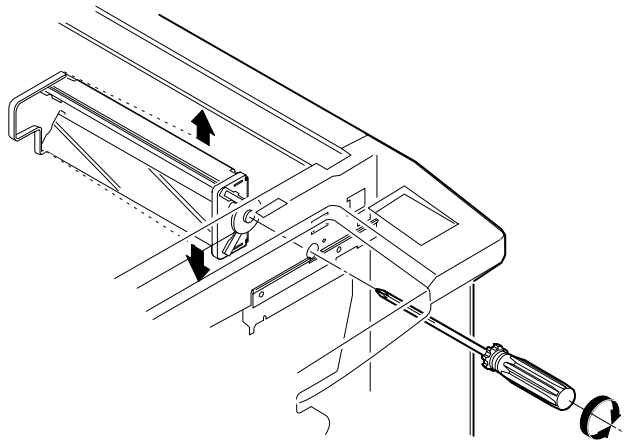

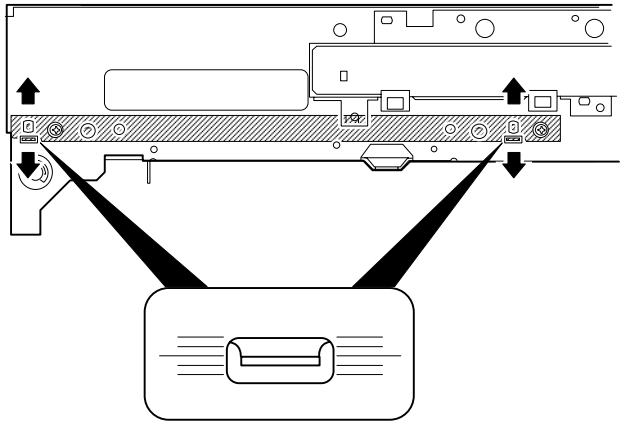

(9) Adjusting the Center Deviation

Take a full-size copy and compare the copy with the original.
If the deviation of the copy center from the original center, move the lens in the arrow direction so that the deviation is 2 mm or less.

Note: After moving the lens, adjust the position of the blank lamp because a change of the reference center position results in a change of the blank lamp position.

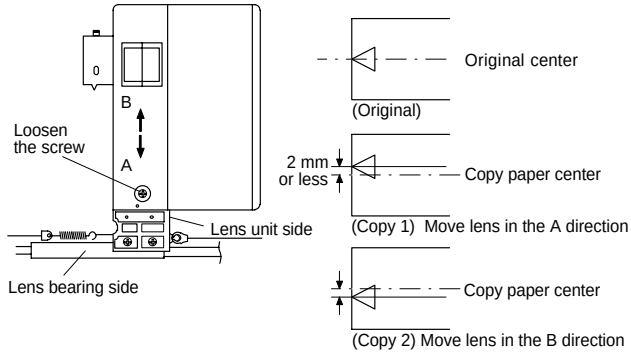

(10) Adjusting the Exposure Balance

Take a half-tone copy, and move the exposure control plate a, b, c and d to adjust the exposure balance. Movement of the plate in the A direction provides less exposure and the B direction more exposure.

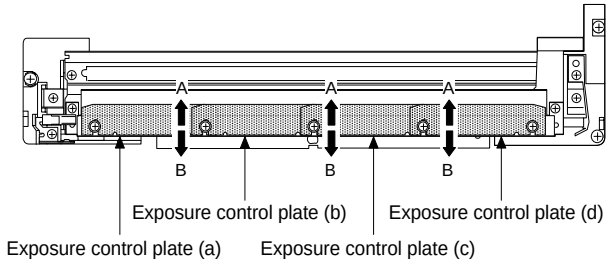

Eg. If the copy is as shown in the figure, move the exposure control plate a in the B direction to achieve the exposure balance.

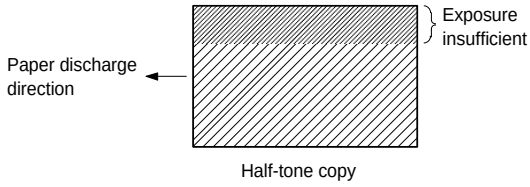

Half-tone copy

(11) Adjusting the Copy Lead Edge

Simulation 50-01 or 50-02 allows the copy adjustment.
(Full-size copy)
Image loss 0 ~ 3 mm (Registration)
Void area 1 ~ 3 mm

(When using Simulation 50-01)

Press the reduction key to set to 50%, and press the enlargement key to set to 200%.
Press the message forward scroll key to shift the highlight cursor, allowing selection.
[MA]: MFT (manual feed) RRC-A [CA]: CS (cassette) RRC-A
[MB]: MFT (manual feed) RRC-B [CB]: CS (cassette) RRC-B

MA: ** B: ** VOID
CA: ** B: ** F: ** R: **

Adjusting Procedure

① Set a scale on the original table.
② C → =↵ → 0/◊ → =↵ → 5 → 0/◊ → PSW → 1 → PSW to perform Simulation 50. When the ready lamp goes on, a preset value (ranging from 1 to 99) is indicated. Content of RRC-A.
③ Set values of both A and B to 0 and take a copy of the scale at magnification of 100% and 200% respectively.
- A full-size(100%) copy can be taken by typing
- 0/◊ → 0/◊ → ➡ → 0/◊ → 0/◊ → PSW .
- A enlarged(200%) copy can be taken by typing ENLARGE → (After the lens moves, ready lamp ON) → PSW .

④ Measure a distance from the paper end to the image (scale) end of each copy, and calculate the values of RRC-A and RRC-B with the following expressions:

If the preset value of RRC-A is not appropriate, the images at the both magnifications differs in end position. RRC-B is a preset value used to control the RRC ON-timing so that the end of the drum image is aligned with the end of a copy paper.

- L1: Lead edge deviation at 200% magnification
- L2: Lead edge deviation at 100% magnification
- RRC-A = 4.7222 x (L1 – L2)
- RRC-B = 7.2202 x L2 – 3.6101 x L1

⑤ Using the ten keys, input the values of RRC-A and RRC-B given by the expressions shown above. For input procedure see 3).
⑥ Take copies at 200%, 100% and 50% magnification and check the deviation difference at each magnification is less than approx. 1 mm.
If the difference is larger than 1 mm, repeat step ③ to ⑥.
⑦ Take a 100% copy to check the image loss for 4 mm or less. If the image loss is larger than 4 mm, change the content of RRC-B so that the range of the image loss is 3 mm or less.
Note: The image loss value adjusted as described above is the image loss value adjusted in Simulation 50-01, and not the final value.
⑧ Set a scale and an A3-size(11" x 17") blank paper on the original table as shown in the figure.

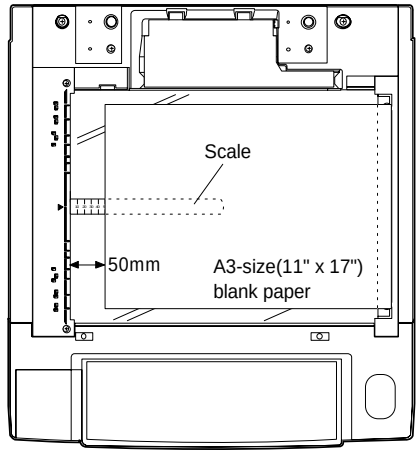

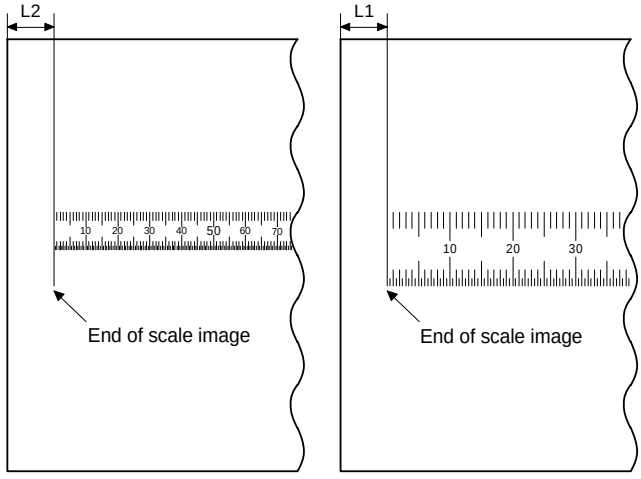

full-size(100%) copy Enlarged(200%) copy

⑨ Operate the scrol display key to set to the void adjustment mode of the LCD.

⑩ Take a copy. Type a value for adjusting the end void area of the full-size copy so that, measured with the scale image, the solid edge is 1 ~ 4 mm away from the paper end.

The key operation [ ] → [ ] → [PSW] provide a copy and sets the input value. The input value of "1" corresponds to 0.2 mm in void area. Larger input value provides larger void area.

Simulation No. 50-1
1. Lead edge image position adjustment
2. Lead edge image position adjustment (Calculation fomula)

MFT RRC	A:	**	B:	**	VOID		
CS RRC	A:	**	B:	**	F:	**	R: **

⑪ Take a full-size copy and check if the image loss and the void area meet the following standards:
(Standard value)
Image loss: 0 ~ 4 mm
Void area: 1 ~ 4 mm

⑫ Press the clear key to clear Simulation 50-01.

Note: After changing the RRC-A and RRC-B settings, always adjust the void area of copy end.

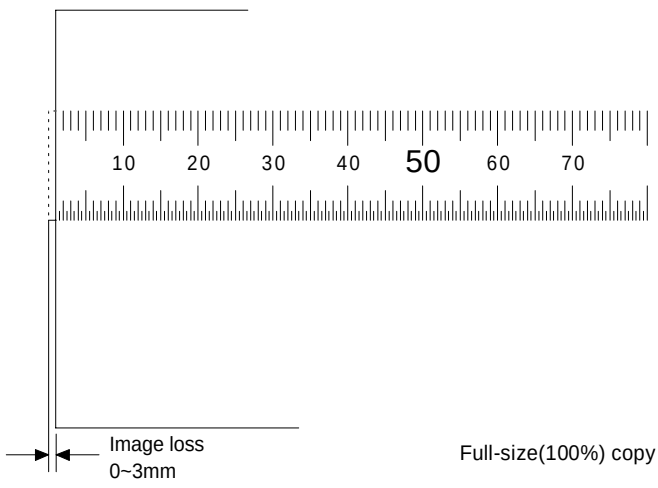

(When using Simulation 50-02)

The key and indicator functions in Simulation 50-02 are the same as those in Simulation 50-01.
Simulation 50-02 permits the values of L1 and L2 to be directly input and the end adjustment to be easily performed.

Adjusting Procedure

① Set a scale on the original table.

② [C] → [=↵] → [0/◊] → [=↵] → [5] → [0/◊] → [PSW] → [2] → [PSW] to enter the Simulation 50-02 mode.
The machine starts warm-up operation.

ML1:	***	L2:	***	VOID			
CL1	***	L2:	***	F:	**	R:	**

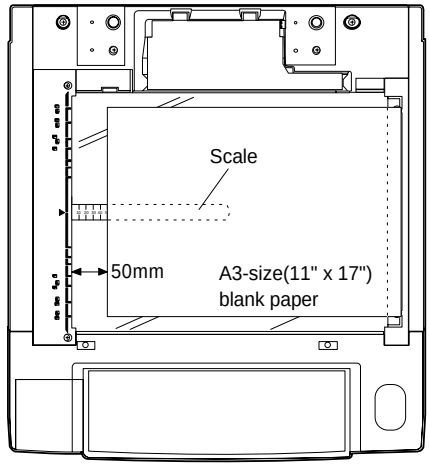

③ Display example:
- L1: Lead edge deviation at 200% magnification (○○○ mm: 3-digit)
- L2: Lead edge deviation at 100% magnification (XXX mm: 3-digit)

Indication example of copy quantity indicator
42.5 mm → [4] [2] [5] → indicated as [2] [5]

④ Using the scrol display key and ten keys, set both A and B values to 0 and take a copy at magnification 100% and 200% respectively.
- An 100% copy can be taken by typing [0/◊] → [0/◊] → [0/◊] → [➡] → [0/◊] → [0/◊] → [0/◊] → [PSW] .
- A 200% copy can be taken by typing [ENLARGE] → (After the lens moves, ready lamp ON) → [PSW] .

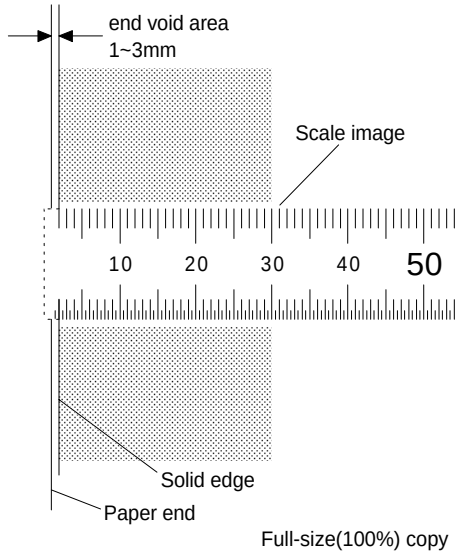

⑤ Measure the distance from the paper end to image(scale) end of the 200% and 100% copy, and using the scrol display key and the ten keys, type the L1 and L2 values. Type all three digits.
The RRC-A and RRC-B values of Simulation 50-01 are automatically calculated and stored in memory.
Input Procedure
Assuming the L1 is 25.4 mm and L2 is 15.0 mm:
After checking that the last digit of the magnification indicator is A, [2] → [5] → [4] → [➡] → [1] → [5] → [0] → [PSW] .

⑥ Adjust and check the deviation, image loss and void area in the same manner as in case of Simulation 50-01.

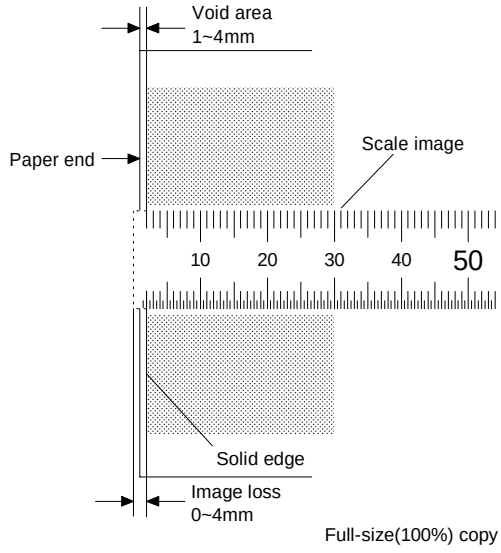

4. Adjustment of Copy Density

1. When must the copy density be adjusted ?

- When doing maintenance;
- After adjusting the output current of the main charger and transfer charger, the bias voltage of the separation charger and the grid voltage (After replacing the charger unit and/or the high voltage unit);
- After adjusting the developing bias;
- After replacing parts in the AC PWB unit;
- After replacing the automatic exposure sensor;
- After replacing the copy lamp;
- After replacing the optical unit;
- After disassembling, repairing and/or adjusting the optical unit;
- After moving the exposure control plate;
- After replacing the drum;
- After replacing the main substrate

2. Notes on adjustment of copy density

Before adjusting the copy density, do the followings:

① Clean the optical system(original glass plate, lens, mirror, copy lamp, reflector).

② Clean the automatic exposure sensor (clean the surface of the photosensor with a soft cloth soaked with alcohol or water).
(Note: The use of dry cloth will cause dust adhesion on the surface of the sensor due to static electricity).

③ Clean the (transfer and separation) charger wire and the screen grid.

④ Clean the blank lamp and the separation lamp around the drum holder unit.

⑤ Clean the drum cleaning blade. (After cleaning, always apply powder on the blade).

Note: Perform the manual-exposure density adjustment first, and then perform the auto-exposure density adjustment.

Note:
- **This machine automatically performs the correction to the optical system dirt.**
  When Simulation 46-01 is performed, each mode correction is initialized. When performing Simulation 46-01, perform the adjustments of all modes.
- **This machine automatically performs the correction to the sensitivity due to photoconductor aging. When a copy is made in Simulation 46-01, the correction state will be initialized.**

3. Procedure for copy density adjustment

(1) Initial setting of auto-exposure density level (User adjustment)

① Enter the key operator code.

② Execute program No. 20.

③ Push the SCROLL key.

④ Select "3" with the ten key.

The following message is displayed on the LCD.

```
AUTO EXPOSURE ADJUST.
```

↓

```
1.  2.        3. STD        4.  5.

← LIGHTER                DARKER →
```

⑤ Press [CA] key to cancel the set mode.

(2) Initial setting of TSM mode (User adjustment)

① Execute the key operator code.

② Execute program No. 22.

0: Cancel, 1: Setting

③ Select "0" with the 10 key pad.

④ Cancel the setting mode with [CA] key.

(3) Adjustment of AE sensor level

① Perform Simulation 47. (The mirror base makes scanning motion and stops at AE sensor level measuring position).

② Place four or five A3-size (or 11" x 17") papers one upon another on the original table.

③ Press the print switch again. The copy quantity indicator shows the AE sensor output level for blank paper, which is stored in memory.

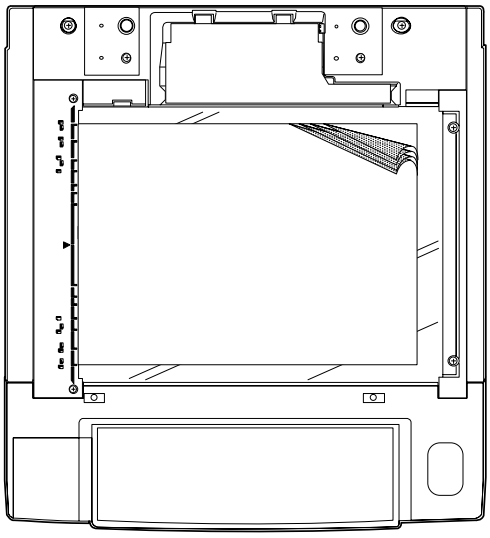

(4) Setting of drum sensitivity

① Perform Simulation 26-07 and check that the first digit of the 4-digit drum number printed on the front-frame sided drum flange is shown on the copy quantity indicator.

② If the indicated number differs from the drum number, press the copy quantity key to change the setting.

Note: If the setting is done with the copy quantity key, the indicated number is limited to 1, 2 or 3.

(5) Setting of test chart

① Align four or five papers with at least 120 mm in width and approx.420 mm in length one upon another.

② Set the test chart (UKOG-0162FCZZ) on exposure glass towards machine front side as shown.

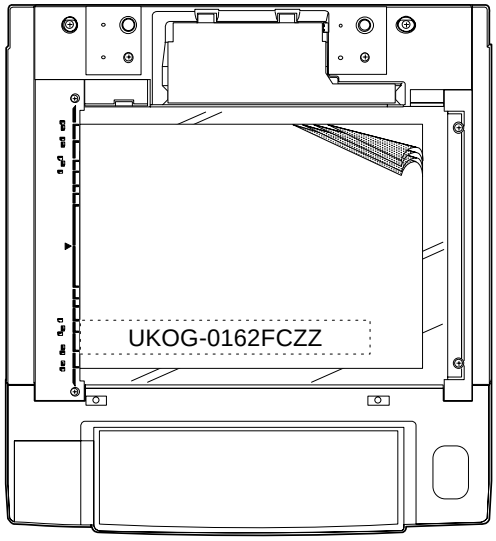

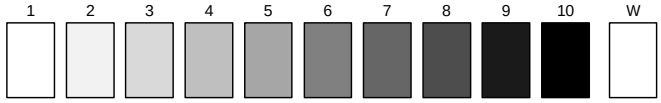

UKOG-0162FCZZ DENSITY No.	1	2	3	4	5	6	7	8	9	10	W
UKOG-0089CSZZ DENSITY No.	0.1		0.2		0.3				0.5	1.9	0
KODAK GRAY SCALE		1		2		3		4		19	A

SHARP CORPORATION
MADE IN JAPAN

(6) Adjustment of copy density

A. Checking the developing bias output
Check that the output value is –150 V when the exposure is set to "1" in the manual exposure mode. Perform Simulation 8-01 for checking the developing bias.

B. Adjusting the density in manual exposure mode

① Perform Simulation 46-01 for adjusting the copy density.
The exposure indicator of the operation panel shows "1" of the manual copy mode.

② Check that the cursor is on ME.1.
IF the cursor is not on ME.1, use ➡ message scroll key to select ME.1.

③ Make a copy.
Check that the "6" of UKOG-0162FCZZ (or 0.5 of UGOG-0089CSZZ) has slightly copied and "5"(0.3) is not copied.

<When light> Decrease the value shown on the copy quantity indicator.
<When dark> Increase the value shown on the copy quantity indicator.
✳ available values : 1-99

ME1	ME5	TS1	TS5	PE1
PE5	AE1	AE5	AT1	AT5

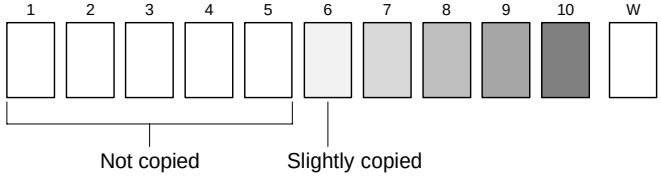

④ When the copy density meets the above requirement, press ➡ key to highlight "ME5:".

⑤ Make a copy.
Check that the "2" of UKOG-0162FCZZ (or 0.2 of UGOG-0089CSZZ) has slightly copied and "1"(0.1) is not copied.

<When light or dark> See 2).

ME1	ME5	TS1	TS5	PE1
PE5	AE1	AE5	AT1	AT5

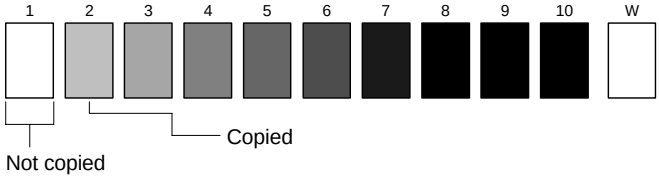

C. Adjusting the TSM mode

① Press ➡ key to highlight "TS1:".

② Perform adjustments of TS1 and TS5 similarly to ME1 and ME5.
Procedure B: ② ~ ④

ME1	ME	TS1	TS5	PE1
PE5	AE1	AE5	AT1	AT5

D. Adjusting the photo mode

① Press ➡ key to highlight PE1.

② Perform adjustments of PE1 and PE5 similarly to ME1 and ME5.
Procedure B: ② ~ ④

ME1	ME5	TS1	TS5	PE1
PE5	AE1	AE5	AT1	AT5

E. Adjusting the auto(normal) mode

① Press ➡ key to highlight AE1.

② Enter "0" for AE1.

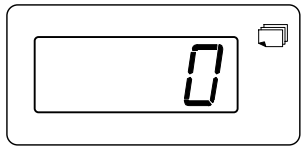

③ Press ➡ key to highlight AE5.

④ Make a copy.
Check that the "3" of UKOG-0162FCZZ (or 0.2 of UGOG-0089CSZZ) has slightly copied.
If the above condition is not met, readjust as follows:

<When light> Decrease the value shown on the copy quantity indicator.

<When dark> Increase the value shown on the copy quantity indicator.

ME1	ME5	TS1	TS5	PE1
PE5	AE1	AE5	AT1	AT5

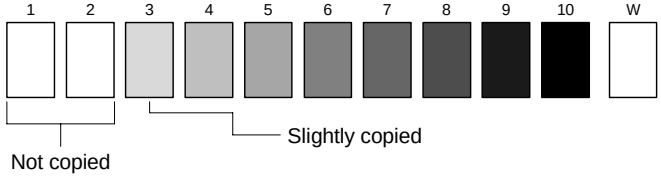

(2) Adjusting the auto (TSM) mode

① Press ➡ key to highlight AE1 (TS).

② Enter "0" for AE1 (TS).

ME1	ME5	TS1	TS5	PE1
PE5	AE1	AE5	AT1	AT5

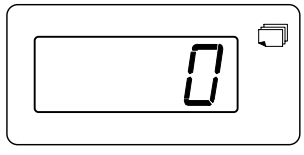

③ Press ➡ key to highlight AE5 (TS).

④ Perform adjustments similarly to auto exposure mode (normal mode).
Procedure E: ⑤

Procedures for Adjusting the Copy Density

Item	Description
(1) Auto-exposure density level	3 (Normal level) Sim 26-18
(2)Initial setting of TSM mode	0 (Cancel) Sim 26-18
(3) Setting of AE sensor characteristics	Perform Simulation 47
(4) Setting of drum sensitivity	Perform Simulation 26-07
(5) Setting of test chart	Test chart comparison table

UKOG-0162FCZZ DENSITY No.	1	2	3	4	5	6	7	8	9	10		W
UKOG-0089CSZZ DENSITY No.	0.1		0.2		0.3				0.5	1.9		0
KODAK GRAY SCALE		1		2		3		4		19		A

SHARP CORPORATION
MADE IN JAPAN

(6) Adjustment of copy density			
	A. Adjusting the developing bias output		–150 V (manual exposure 1) Perform Simulation 8-01
	B. Adjusting the manual-exposure copy density		Perform Simulation 46-01
		ME 1	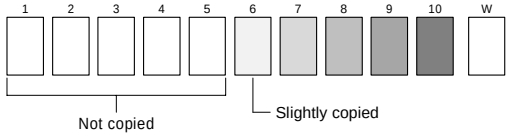
		ME 5	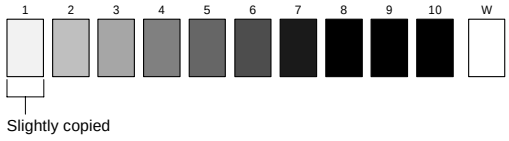
	C. Adjusting the TSM mode		
		TS 1	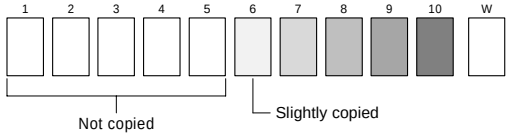
		TS 5	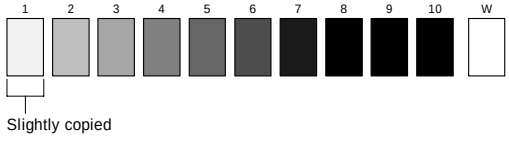
	D. Adjusting the copy density in photo mode		
		PE 1	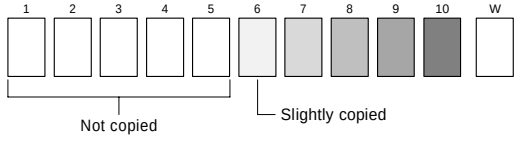
		PE 5	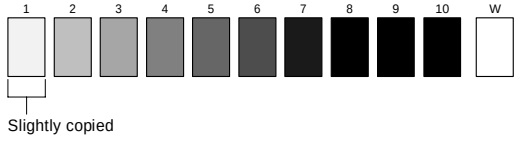
	E. Adjusting the auto-exposure copy density		
		(1) Normal mode AE 1	Input "0"
		AE 5	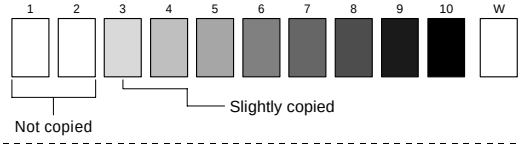
		(2) TSM mode AE 1	Input "0"
		AE 2	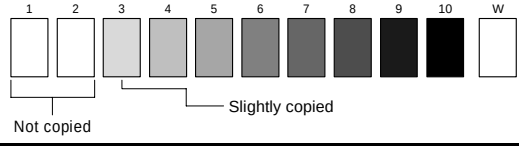

5. Adjustments relating to process control

(The adjustment procedures differ according to the state of service maintenance.)

A. Adjustment when installing the machine

- Unpack the machine (lock release).
- Install and supply the supply parts.
- Turn on the power.

(1) Execute simulation No. 25-2. Toner density reference value setting
Over toned error → EE(EL)
Under toned error → EE(EU)

B. Adjustment in maintenance within the life of supply part

- Complete the maintenance.
- Turn on the power.

(1) Execute simulation No. 44-1. Process control state check
[+ 1] Process control correction valid
[+ 2] Optical system dirt correction valid
[+ 4] OPC drum film wear correction valid
[+10] Toner control A correction valid
[+20] Toner control B correction valid
Note: [37] All valid
For this adjustment, check that the setting value is "37."

(2) Compulsorily execute simulation No. 44-6 process control.

(3) Execute simulation No. 46-1 copy exposure adjustment.
Execute copy exposure adjustment according to the procedure of [8]-5.

C. Adjustment when replacing the developer

- Complete replacement of the developer.
- Turn on the power.

(1) Execute simulation No. 25-2. Toner density reference value setting
Over toned error → EE(EL)
Under toned error → EE(EU)

(2) Execute simulation No. 44-6 compulsory execution of process control.

(3) Execute simulation No. 46-1 copy exposure adjustment.
Execute the copy exposure adjustment according to the procedure of [8]-5.

D. Adjustment when replacing the drum (Photoconductor)

- Complete replacement of the drum.
- Turn on the power.

(1) Execute simulation No. 24-7 drum film wear correction counter reset.

(2) Execute simulation No. 44-6 compulsory execution of process control.

(3) Execute simulation No. 44-2 drum mark sensor level adjustment.
Standard value: 204 ±10

(4) Execute simulation No. 46-1 copy exposure adjustment.
Execute the copy exposure adjustment according to the procedure of [8]-5.

E. Adjustments when replacing the developer and the drum (photoconductor)

- Complete replacement of the drum.
- Complete replacement of the developer.
- Turn on the power.

(1) Execute simulation No. 24-7 drum film wear correction counter reset.

(2) Execute simulation No. 25-2 toner density reference value setting
Over toned error → EE(EL)
Under toned error → EE(EU)

(3) Execute simulation No. 44-2 drum mark sensor level adjustment.
Standard value: 204±10

(4) Execute simulation No. 44-6 compulsory execution of process control.

(5) Execute simulation No. 46-1 copy exposure adjustment.
Execute the copy exposure adjustment according to the procedure of [8]-5.

F. Adjustment when replacing/cleaning the drum mark sensor

(1) Execute simulation No. 44-2 drum mark sensor level adjustment.
Standard value: 204±10

G. Adjustment when replacing/cleaning the image density sensor

(1) Execute simulation No. 44-3 image density sensor level adjustment.
Standard value: 204±10

H. Adjustment when replacing the sensor level adjustment VR PWB

Execute the procedures of F and G in the above.

1. Note: This model emplyes the high-sensitivity drum, which requires special care against pre-exposure.

1) Never expose the drum outside the bag. (Keep it in a black bag.)

2) When istalling this model, avoid facing the front cover toward a light source or window.
Avoid opening the front cover as far as possible.

2. Other note

1) If starting powder is attached to the density sensor when replacing the drum/blade, it may cause faulty operations of the sensor. Be sure to clean and remove powder.

(Trouble codes and countermeasures)

Trouble code	Sub code	Content	Possible cause	Countermeasure
F2	31	Image exposure sensor error Photoconductor surface reflection detection error Copier operation halt when sensing	Dirt on the image density sensor (ID)	Clean the image density sensor and its peripheral. Use soft cloth immersed in water or alcohol to clean the sensor surface.
			Dirt on the drum surface by incomplete cleaning	Check the cleaning blade and the photoconductor drum surface and replace them if necessary.
			Image density sensor (ID) sensing level is not adjusted. Image density sensor (ID) PWB trouble ⁎ Process control VR PWB trouble	Execute simulation No. 44-3. (Set to 204±10 with VR2.)
F2	32	Drum mark sensor trouble Surface level and drum mark sensing abnormality Copier operation halt when sensing.	Dirt on the drum mark sensor (DM)	Clean the drum mark sensor (DM) and its peripheral. Use soft cloth immersed in water or alcohol to clean the sensor surface.
			Dirt on the drum surface by incomplete cleaning	Check the cleaning blade and the photoconductor drum surface, and replace them if necessary.
			Drum mark sensor (DM) sensing level is not adjusted. Improper drum (drum without mark) ⁎ Drum mark sensor (DM) PWB trouble ⁎ Process control VR PWB trouble	Execute simulation No. 44-2. (Set to 204±10 with VR1.)
F2	35	Process control operation failure When ① or ② is detected, process control is fixed to the reference condition. In case of an accidental trouble caused by the change in environments (temperature, humidity), if the inside state of the machine recovers, then the trouble will be cleared.	① Image density is too high to be corrected. (When executing simulation No. 44-6) Developer/toner density changes greatly. Humidity and temperature is low.	Check the developer unit. Visually check the pressure contact and the lock state. • Check the high voltage output. Simulation No. 44-11. NO: –650V PH: –440V Simulation No. 8-1 DV BIAS: –215V • Developer stirring Simulation No. 25-1. Replace the developer.
			② Image density is too low to be corrected. (When executing simulation No. 44-6) Developer/toner density changes greatly. Humidity and temperature change greatly.	

[8] Simulation and diagnostics

1. Simulation

(1) Introduction

Simulation are used to do the following:

- To operate any functional block independently to check its function.
- To adjust the machine.
- To cancel troubles.
- To set up functions.

(2) Purpose

Simulation are used to help repair and adjust the machine.
When the PAUSE key is pressed in a course of a simulation being executed, the simulation is interrupted with the copy number window turned off and the copier becomes ready to accept entry of a simulation number.

∗1: If the key was pressed for more than five seconds, it may not go into the simulation mode.

∗2: Further operation may be needed depending on the kind of simulation.

∗3: One of the next methods is required to cancel the simulation as it varies according to the simulation. The machine then starts from the state immediately after power on.

— Other than simulation 7
The simulation is canceled when the CLEAR ALL key is pressed.

— Simulation 7
One of the following operation cancels the simulation execution.

1. Power switch off.
2. Press the CLEAR → PAUSE → 0 → PAUSE → CLEAR ALL keys.

— Simulation 14
The simulation 14 is used to clear the memory contents (H2, H3, H4) that have been stored. After the simulation 14 has been executed, the diagnostic is automatically terminated.

— Special keys
CLEAR ALL key: Simulation mode → normal mode.

PAUSE key: Execution of simulation is interrupted.

CLEAR key: Clears the copy number window.

— The diagnostic is automatically terminated after the doorswitch operation "ON → OFF → ON", except "H" and "U2" code.

(3) Simulation execution procedure

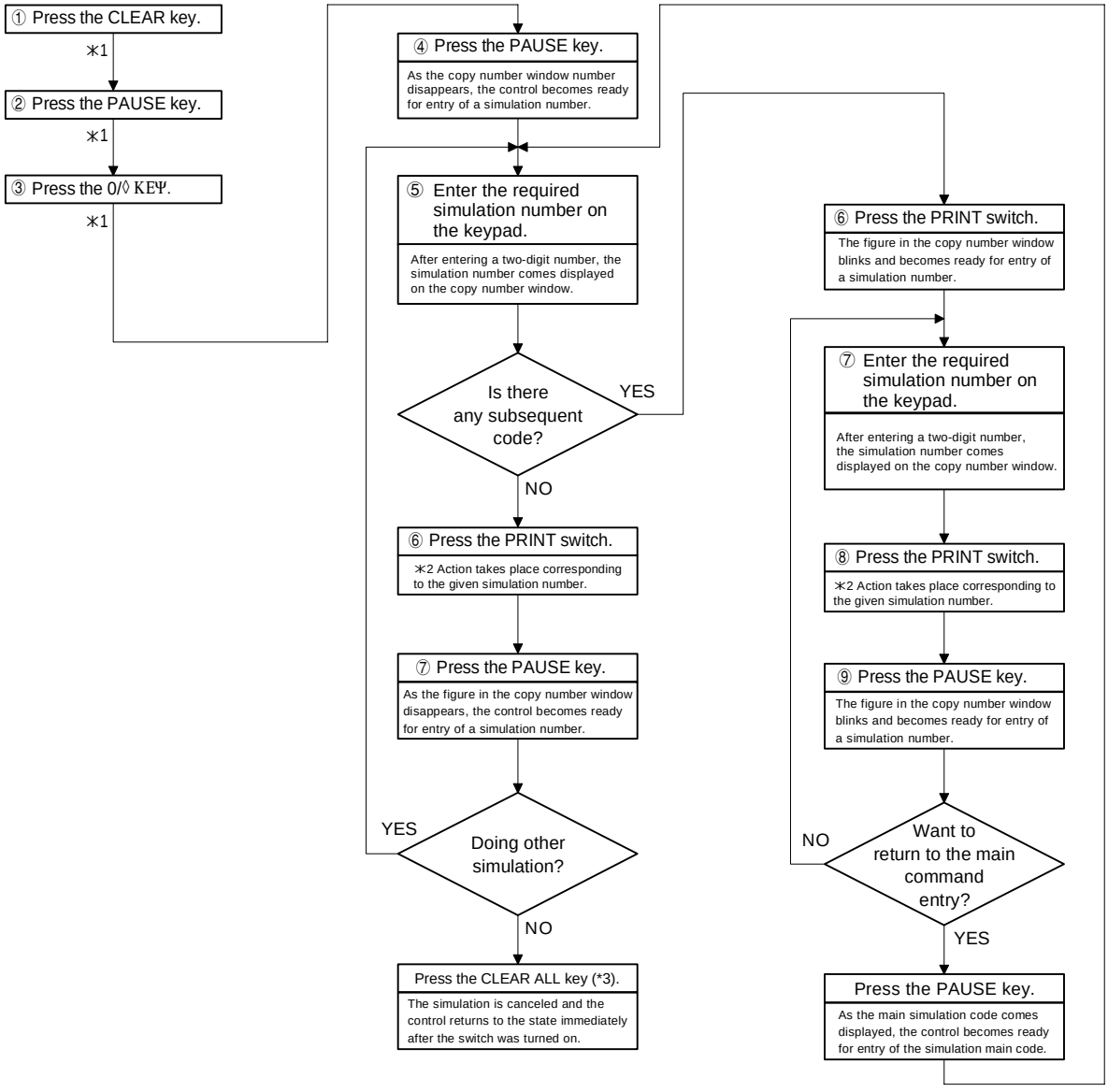

List of the test commands

Sim. NO	Sim. SUB	Description	
01	01	Optical system mirror scanning check	
	02	Optical system sensor state display	
	03	Lens movement operation check	
	04	Lens aging	
02	01	RADF aging	
	02	RADF sensor state display	
	03	RADF individual load operation check	Motor A forward rotation
	04		Motor A reverse rotation
	05		Motor B forward rotation
	06		Motor B reverse rotation
	07		Belt clutch
	08		Paper feed solenoid
	09		Reverse solenoid
	10		Stopper solenoid
	11		Brake clutch
03	02	Sorter sensor state display	
	03	Sorter individual load operation check	Transport motor
	04		Bin shift motor
	05		Fan motor (SF-S15 only)
	06		Gate solenoid
	08		Staple motor (SF-S53 only)
	09		Paper hold solenoid (SF-S53 only)
	10		Guide bar motor (SF-S53 only)
04	02	Desk sensor state display	
	03	1st cassette slot, cassette size switch check (Desk)	
	04	2nd cassette slot, cassette size switch check (Desk)	
	05	3rd cassette slot, cassette size switch check (Desk)	
	06	Desk individual load operation check	Transport motor
	07		1st cassette slot, lift-up motor
	08		2nd cassette slot, lift-up motor
	09		3rd cassette slot, lift-up motor
	10		Transport clutch
	11		1st cassette slot, paper feed solenoid
	12		1st cassette slot, paper feed clutch
	13		2nd cassette slot, paper feed solenoid
	14		2nd cassette slot, paper feed clutch
	15		3rd cassette slot, paper feed solenoid
	16		3rd cassette slot, paper feed clutch
05	01	Operation panel display check	
	02	Fuser lamp check	
	03	Copy lamp check	
	04	BL/DL check	
06	02	Separation pawl solenoid operation check	
07	01	Warm-up time display and aging with jam detection	
	04	Warm-up disabled	
	06	Intermittent aging	
	07	Intermittent aging without jam	
08	01	Developer bias check	
	02	MHV (Charge), grid check	ME
	03		Photo
	04		TSM
	06	THV (Transfer) check	
	07	SHV (Separation) check	
09	02	ADU sensor state display	
	03	ADU trail edge plate aging	
	04	ADU alignment plate aging	
	05	Gate solenoid operation check	
10	✳✳	Toner motor aging	
14	✳✳	Cancel of troubles except U2, H2, H3, H4	
16	✳✳	Cancel of U2 trouble code	
17	✳✳	PF trouble cancel	
20	✳✳	Maintenance counter clear	
21	01	Maintenance cycle setting	
	02	Setting of domestic mini maintenance for black copy kit	

Sim. NO	Sim. SUB	Description	
22	01	Maintenance counter display	
	02	Maintenance preset counter display	
	03	Jam memory display	
	04	Total jam counter display	
	05	Total counter display	
	06	Developer counter display	
	07	Developer preset cycle counter display	
	08	RADF counter display	
	09	ADU counter display	
	10	Staple counter display	
	11	Developer adjustment time display	
	12	Drum adjustment time display	
	13	Key operator code display	
	14	ROM version display	
	15	Trouble memory display	
	16	Cassette paper feed counter display	
24	01	Jam memory/total jam counter clear	
	03	Duplex counter clear	
	04	ADF/RADF counter clear	
	05	Staple counter clear	
	06	Developer adjustment time clear	
	07	Drum adjustment time clear	
	08	Cassette paper feed counter clear	
25	01	Main motor system ON, toner sensor output display	
	02	Auto developer adjustment	
	06	Toner control A counter value setting	
	07	Grid correction setting for toner control A	
26	01	Option setting	
	03	Coin vendor setting	
	05	Counter mode setting	
	06	Destination setting	
	07	Drum sensitivity setting	
	08	Lens focus setting	
	09	4/5 mirror characteristics setting	
	10	AE original density setting	
27	01	PPC communication trouble	
30	01	Paper sensor state display	
	02	Cassette size switch state display	
42	✳✳	Developer counter clear	
43	✳✳	Fusing temperature setting	
44	01	Correction mode setting,	
	02	Drum mark sensor sensitivity adjustment	
	03	Image density sensor sensitivity adjustment	
	05	Test mode	
	06	Compulsory execution of process control	
	07	Drum mark sensor/image density sensor gain select check	
	09	Process control data display	
	11	Enters the copy aging mode to allow the following operation and setting.	
	12	Copying is performed without process control.	
46	01	Exposure level adjustment	
47	✳✳	AE sensor characteristics setting	
48	01	Front/rear magnification ratio adjustment, focus adjustment	
	02	Paper transport direction magnification ratio adjustment (scanner speed)	
50	01	Lead edge image position adjustment, lead edge void adjustment (Calculation)	
	02	Lead edge image position adjustment, lead edge void adjustment (Measurement)	
51	02	Paper buckle adjustment	
52	01	ADU alignment plate adjustment value setting	
	02	ADU trail edge plate adjustment value setting	
	03	ADU drive clutch OFF time setting	
53	01	RADF stop position adjustment	Normal paper, Single copy
	02		Normal paper, Duplex copy
	03		Thin paper, Single copy
	04		Thin paper, Duplex copy
	05	RADF resist sensor adjustment	
	06	RADF timing sensor adjustment	
	07	RADF repulsion sensor adjustment	
	08	RADF empty sensor adjustment	

<table>
<tr><th>Main code</th><th>Sub code</th><th>Description</th><th>Ref. Page</th></tr>
<tr><td>01</td><td>01</td><td>This is the test command used to test the optical system. The mirror base automatically starts to scan.
(1) With depression of the PAUSE key, the control moves from the test command mode to be ready to execute it. The READY pilot lamp (RPL) comes active with the zoom ratio at 100%. It is possible to change the zoom mode using the ZOOM key.
(2) When the PRINT key is pressed while the RPL is active, the status lamp turns off and the test command starts to execute. The mirror base moves to scan in the zoom ratio at that time.
(3) If the door is opened while the operation is in process, the operation is interrupted with status "CH" prompted. Closing the door will start the operation all over again from its initial step.</td><td></td></tr>
<tr><td></td><td>02</td><td>This is the test command used to test the optical system sensors. When the test command starts and the sensor turns on and the display reverses, it starts to test the on/off action of a optical system sensor.
<table><tr><th></th><th>Active status lamp</th></tr><tr><td>RE</td><td>Mirror rotary encoder pulse (RE) input</td></tr><tr><td>MHPS</td><td>Mirror home position sensor</td></tr><tr><td>LHPS</td><td>Lens home position sensor</td></tr><tr><td>MPHPS</td><td>No.4/5 mirror home position sensor</td></tr></table></td><td></td></tr>
<tr><td></td><td>03</td><td>Used to test the zoom lens movement.
• The zoom ratio is displayed on the zoom ratio window.
AB series machine 100% → 50% → 70% → 81% → 86% → 115% → 122% → 141% → 200%
Inch series machine 100% → 50% → 64% → 77% → 95% → 121% → 129% → 141% → 200%</td><td></td></tr>
<tr><td></td><td>04</td><td>Used to test the zoom lens in the aging test mode.
• Test command 01-03 are repeated to test.</td><td></td></tr>
<tr><td>02</td><td>01</td><td>Used to test the action of the RADF. The aging test starts when the document presence sensor is manually turned on.</td><td></td></tr>
<tr><td></td><td>02</td><td>This is the test command used to test RADF sensors. On/off state of sensor can be manually tested. When the sensor turns on, the display reverses.
<table><tr><td>Sensing presence of document
DSD</td><td>Sensing DF block open/close
AUOD</td><td>Sensing document width
DWS1</td></tr><tr><td>Sensing pre-fed document
DFD</td><td>Sensing paper feed block open/close
FGOD</td><td>Sensing document width
DWS2</td></tr><tr><td>Sensing document release
RDD</td><td>Sensing paper inversion block open/close
TGOD</td><td>Sensing document width
DSW3</td></tr><tr><td></td><td></td><td>Sensing document width
DSW4</td></tr><tr><td>Sensing document width
DWS</td><td></td><td>Sensing document length
DLS1</td></tr><tr><td></td><td></td><td>Sensing document length
DLS2</td></tr></table>Reverse display: Paper presence/Door open, Normal display: No paper/Door closed</td><td></td></tr>
<tr><td></td><td>03</td><td>Used to test the action of RADF (individual load check)
Motor A forward rotation</td><td></td></tr>
<tr><td></td><td>04</td><td>Motor A revere rotation</td><td></td></tr>
<tr><td></td><td>05</td><td>Motor B forward rotation</td><td></td></tr>
<tr><td></td><td>06</td><td>Motor B revere rotation</td><td></td></tr>
<tr><td></td><td>07</td><td>Belt clutch</td><td></td></tr>
<tr><td></td><td>08</td><td>Paper feed solenoid</td><td></td></tr>
<tr><td></td><td>09</td><td>Inversion solenoid</td><td></td></tr>
<tr><td></td><td>10</td><td>Stopper solenoid</td><td></td></tr>
<tr><td></td><td>11</td><td>Brake clutch</td><td></td></tr>
<tr><td></td><td></td><td></td><td></td></tr>
</table>

<table>
<tr><th>Main code</th><th>Sub code</th><th>Description</th><th>Ref. Page</th></tr>
<tr><td>03</td><td>02</td><td>This is the test command used to test the sensors in the sorter.
On/off state of sensors can be manually tested.
When the sensor turns on, the display reverses.
<table><tr><td>Paper entry sense (non-sort)
PES/SPID</td><td>Indexer upper limit sense
IULS/—</td><td>Sorter set sense
SJS/JSW</td></tr><tr><td>Paper entry sense (sort)
—/SPPD</td><td>Indexer lower limit sense
ILLS/—</td><td>Top cover open/close sense
UCSW/—</td></tr><tr><td>Paper out sense
PWB-S/—</td><td>Indexer (bin) home sense
IHS/BHPS</td><td>Blower cover open/close sense
FCSW/—</td></tr><tr><td>Bin paper sense
—/BPED</td><td>Indexer (bin) position sensor
IPS/LCHPS</td><td>Staple cover open/close sense
—/SCSW</td></tr><tr><td>Staple position paper sense
—/SPED</td><td>Guide bar home position sense
—/SGHPS</td><td>Staple unit home position sense
—/SCS</td></tr><tr><td>Staple unit position sense
—/SSD</td><td>Staple operation home position sesnse
—/SHPS</td><td>Stapler needle sense
—/SED</td></tr></table>Note: The signal names are given in the order of S15/S53.
Reverse display: paper found/door opened/ON
Normal display: no paper found/door closed/OFF</td><td></td></tr>
<tr><td></td><td>03</td><td>Used to test the components of the sorter (individual load check).
Transport motor rotation</td><td></td></tr>
<tr><td></td><td>04</td><td>Indexer motor rotation (returns to the home position at first, then stops at each bin location Bin 1 to Bin 21, moving up and down. Sorter bin moving.</td><td></td></tr>
<tr><td></td><td>05</td><td>Fan motor rotation in the case of SF-S15 only</td><td></td></tr>
<tr><td></td><td>06</td><td>Gate solenoid ON</td><td></td></tr>
<tr><td></td><td>07</td><td>Offset solenoid (in the case of SF-S53)</td><td></td></tr>
<tr><td></td><td>08</td><td>Stapler motor rotation (the paper is stapled once when there is a paper in the stapler tray). (SF-S53 only)</td><td></td></tr>
<tr><td></td><td>09</td><td>Paper holder solenoid operation check (SF-S53 only)</td><td></td></tr>
<tr><td></td><td>10</td><td>Guide motor operation check</td><td></td></tr>
<tr><td>04</td><td>02</td><td>This is the test command used to test sensors in the desk. On/off state of the sensors can be manually tested.
When a sensor turns on, the display reverses.
<table><tr><td>Sensing paper fed from the upper cassette
DPOD1</td><td>Upper cassette lift upper limit sensor
DLUD1</td><td>Sensing paper presence on the upper cassette
DPE1</td></tr><tr><td>Sensing paper fed from the middle cassette
DPOD2</td><td>Middle cassette lift upper limit sensor
DLUS2</td><td>Sensing paper presence on the middle cassette
DPE2</td></tr><tr><td>Sensing paper fed from the bottom cassette
DPOD3</td><td>Bottom cassette lift upper limit sensor
DLUD3</td><td>Sensing paper presence on the bottom cassette
DPE3</td></tr><tr><td>Sensing door close/open
DDOP</td><td>—</td><td>—</td></tr></table>Reverse display: paper found/door opened/ON
Normal display: no paper found/door closed/OFF</td><td></td></tr>
<tr><td></td><td>03</td><td>Used to test the on/off state of the first cassette size switch of the desk.
When the switch turns on, the display reverses.
(Cassette size board)
Switch positions when viewed from the front frame
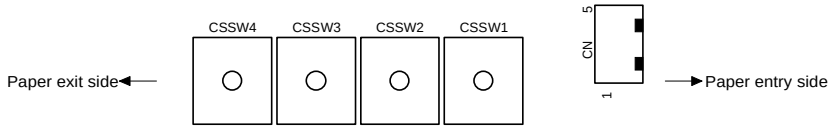
</td><td></td></tr>
<tr><td></td><td>04</td><td>Used to test the on/off state of the second cassette size switch of the desk. Function is identical to the test command 04-03.</td><td></td></tr>
<tr><td></td><td>05</td><td>Used to test the on/off state of the third cassette size switch of the desk. Function is identical to the test command 04-03.</td><td></td></tr>
</table>

Main code	Sub code	Description	Ref. Page
04	06	Transport motor rotation. (Desk)	
	07	Motor turns off when detected the upper limit of the first cassette lift up motor rotation. (Desk).	
	08	Motor turns off when detected the upper limit of the second cassette lift up motor rotation. (Desk)	
	09	Motor turns off when detected the upper limit of the third cassette lift up motor rotation. (Desk)	
	10	Activate transport clutch of the desk	
	11	Activate first cassette paper feed solenoid of the desk	
	12	Activate paper feed clutch of the first cassette of the desk	
	13	Activate second cassette paper feed solenoid of the desk	
	14	Activate paper feed clutch of the second cassette of the desk	
	15	Activate third cassette paper feed solenoid of the desk	
	16	Activate paper feed clutch of the third cassette of the desk	
05	01	All LED's on the operation panel are turned on for one minute. After one minute, the machine automatically goes into the sub code input wait state.	
	02	This is the test command used to test the heater lamp. Heater lamp turned on and off five times. 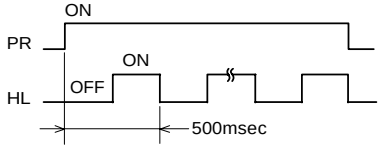 The heater turns on and off in the order shown above.	
	03	This is the test command used to test the copy lamp. Copy lamp turned on in the following order. When the test command starts, the copy lamp turns full power for one second with the manual exposure setting 3.0 shown, and the copy lamp intensity can be changed to the power set on the exposure setup key for a period of 6.25 seconds. 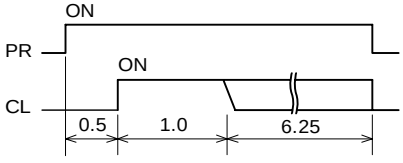 Use care not to damage original cover or RADF belt. * Refrain from repeating this test command without waiting for lamp and glass to cool.	
	04	This is the test command used to check activation of the discharge lamp (DL) and the blank lamps (BL). The discharge lamp (DL) turns on for 30 seconds. Each blank lamp turns on, from the front frame side to the rear frame side. Finally, all blank lamps turn on. After lighting, the machine automatically goes into the sub code input wait state.	
06	02	Activation of the separation solenoid Used to test the action of the drum separator pawl solenoid.	
07	01	Aging test with alert for paper misfeed 1. Used to check the warmup time. 2. Executes the continuing aging test for the given number of copies. When the test command is executed. the machine performs its normal action and the warmup time starts to count from zero and increase count every one second. The count is displayed on the copy lamp window. When the RPL is turned on, the addition of the copy number is interrupted with the copy number remaining on display as it is. When the CLEAR key is pressed, the copy number must be entered on the keypad, and with depression of the PRINT switch, the given number of copies repeated to produce. In this case, the paper misfeed function comes alive.	

<table>
<tr><th>Main code</th><th>Sub code</th><th>Description</th><th>Ref. Page</th></tr>
<tr><td>08</td><td>01</td><td>Developing bias voltage output. After delivering the output, the machine automatically goes into the sub code input wait state.
This is the test command used to check the developing bias voltage. The developing bias voltage is turned on for 30 seconds.
Standard developing bias setting is –215±10V.</td><td>[7]-2(3)</td></tr>
<tr><td></td><td>02</td><td>Main (charge) corona output [ME]. After delivering the output, the machine automatically goes into the sub code input wait state.
Standard manual exposure mode main corona grid voltage is –650±5V.
This is the test command used to check the main corona variance between the front and rear sides. The corona output continues for 30 seconds.
• The main corona variance must be within 8μA between the front and the rear.</td><td>[7]-5-(D)</td></tr>
<tr><td></td><td>03</td><td>Main corona output [PE]. After delivering the output, the machine automatically goes into the sub code input wait state.
Standard photographic mode main corona grid voltage is –440±5V.</td><td>[7]-5-(D)</td></tr>
<tr><td></td><td>04</td><td>Main corona output [TSM]. After delivering the output, the machine automatically goes into the sub code input wait state.
Standard TSM main corona grid voltage is –550V±5V.</td><td>[7]-5-(D)</td></tr>
<tr><td></td><td>06</td><td>Transfer corona output [TSM]. After delivering the output, the machine automatically goes into the sub code input wait state.
This is the test command used to check the transfer corona output (THV). The transfer corona output continues for 30 seconds.
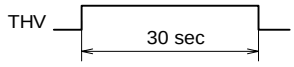

Standard transfer corona output is –42±4μA (F/R difference: Max. 5μA).</td><td>[7]-4-(B)</td></tr>
<tr><td></td><td>07</td><td>Separation corona output. After delivering the output, the machine automatically goes into the sub code input wait state.
This is the test command used to check the separation corona output (SHV). The separation corona output continues for 30 seconds.
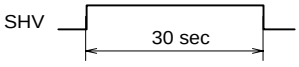

Standard separation corona output is 0±10 V.</td><td>[7]-6-(E)</td></tr>
<tr><td>09</td><td>02</td><td>ADU sensor check test command ON/OFF state of each sensor can be manually checked.
When the sensor turns on, the display reverses.
<table><tr><th>Sensor</th><th>Function</th></tr><tr><td>DPPD1</td><td>ADU transport sensor 1</td></tr><tr><td>DPPD2</td><td>ADU transport sensor 2</td></tr><tr><td>DTPID</td><td>ADU tray sensor</td></tr><tr><td>DPFD</td><td>ADU tray out sensor</td></tr><tr><td>APHPS1</td><td>ADU alignment plate home position sensor</td></tr><tr><td>APHPS2</td><td>ADU rear edge plate home position sensor</td></tr></table></td><td></td></tr>
<tr><td></td><td>03</td><td>ADU trail edge plate drive motor rotation
• Used to check the trail edge plate movement
(AB series)
HP.A3 → B4 → A4R → B5R → A4 → B5 → A5
(Inch series)
HP.11" x 17" → 11" x 14" → 8 1/2" x 11"(R) → 8 1/2" x 11"</td><td></td></tr>
<tr><td></td><td>04</td><td>ADU alignment plate drive motor rotation
• Used check the alignment plate movement
(AB series)
HP.A3 → B4 → A4R → B5R → A4 → B5 → A5
(Inch series)
HP.11" x 17" → 11" x 14" → 8 1/2" x 11"(R) → 8 1/2" x 11"</td><td></td></tr>
<tr><td></td><td>05</td><td>Gate solenoid activation
Used to check the gate solenoid operation.</td><td></td></tr>
</table>

Main code	Sub code	Description	Ref. Page
10	—	Toner motor activation Used to check the toner motor activation.	
14	—	Trouble code cancellation This is the test command used to cancel other than the "U2" trouble (H2, H3, H4). After the trouble has been removed, the test command terminates.	
16	—	U2 trouble code cancellation This is the test command used to cancel the "U2" trouble code. After the trouble code has been removed, the test command terminates.	
17	—	PF trouble cancel Used to cancel the PF trouble in the machine with PC/Modem when the copy inhibition command from the host machine is received. After cancelling the trouble, the test command is automatically cancelled.	
20	—	Maintenance counter clear Used to reset the maintenance preset counter to zero after the maintenance is completed. It is mandatory to clear the counter after the maintenance is completed.	
21	01	◦ Maintenance cycle setting Used to set the maintenance cycle. Code Maintenance cycle 0 ····· 80,000 sheets 1 ····· 5,000 sheets 2 ····· 10,000 sheets 3 ····· 20,000 sheets 4 ····· 40,000 sheets 5 ····· None The default is 0.	
22	01	◦ Maintenance counter display Copy number of the maintenance counter is displayed.	
	02	◦ Maintenance preset counter display This test command is used to check the contents of the maintenance preset cycle counter.	
	03	◦ JAM memory display (JAM map display) Displays the causes (positions) of JAM occurred in copy operation. To check the history of JAM cause, press the message forward feed key.	
	04	◦ Total misfeed counter display	
	05	◦ Total counter display This counter is used to show the total copy number of the machine.	
	06	◦ Developer counter display The contents of the copy number counter of the installed developing unit is displayed.	
	07	◦ Developer preset cycle counter display Number of developer replacements and the reset counter contents of the installed developing unit are displayed.	
	08	◦ RADF counter display Used to check the number of originals fed through the RADF.	
	09	◦ Duplex counter display Used to check the number of sheets fed through the duplex unit.	
	10	◦ Staple counter display Used to check the number of use of the staple unit.	
	11	◦ Developer adjustment time display Used to check the correction level according to the developer rotating time.	
	12	◦ Drum adjustment time display Used to check the correction level according to the drum rotating time.	
	13	◦ Key operator code display Used to check the key operator code registered voluntarily by the key operator.	
	14	◦ ROM version display Used to display the version of ROM which is currently installed.	
	15	◦ Trouble memory display Used to display the number of troubles occurred and the trouble codes up to 50 cases from the latest one.	
	16	◦ Cassette paper feed counter display Used to check the counter value of each cassette.	

<table>
<tr><th>Main code</th><th>Sub code</th><th>Description</th><th>Ref. Page</th></tr>
<tr><td>24</td><td>01</td><td>◦ Misfeed map memory and total misfeed counter clear</td><td></td></tr>
<tr><td></td><td>03</td><td>◦ RADF counter clear
The contents of the copy number counter is reset for the RADF.
It is mandatory to clear the memory contents after the maintenance is completed.</td><td></td></tr>
<tr><td></td><td>04</td><td>◦ Duplex counter clear
The contents of the copy number counter is reset to the duplex unit.
It is mandatory to clear the memory contents after the maintenance is completed.</td><td></td></tr>
<tr><td></td><td>05</td><td>◦ Staple counter clear
The staple unit using counter is cleared to zero.</td><td></td></tr>
<tr><td></td><td>06</td><td>◦ Developer adjustment time clear
The developer adjustment time is cleared to zero.</td><td></td></tr>
<tr><td></td><td>07</td><td>◦ Drum adjustment time clear
The drum adjustment time is cleared to zero.</td><td></td></tr>
<tr><td></td><td>08</td><td>◦ Tray paper feed counter clear
Used to clear the tray paper feed counter.</td><td></td></tr>
<tr><td>25</td><td>01</td><td>Main motor activation
• Used to check malfunction in the main motor drive train. (Rotates for 3 min.)
• Also, monitors the toner density sensor. (Sensor output value display)
[C] → [=↵] → [0] → [=↵] → [2] → [5] → [PSW] → [1] → [PSW]</td><td></td></tr>
<tr><td></td><td>02</td><td>Automatic developer adjustment
• This is the test command used to monitor the toner sensor and to automatically set the developer.
• For automatically setting developer, the developing tank is stirred and the toner sensor output is monitored. The sensor is monitored 16 times in 3 minutes after the stirring started and the mean value is stored in the memory as the toner density referance value. (See the area marked with an asterisk in the figure below.) (Afterwards, referance changes as copies are made to maintain density.)
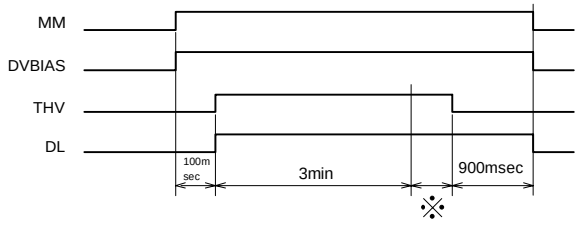

[C] → [=↵] → [0] → [=↵] → [2] → [5] → [PSW] → [2] → [PSW]</td><td></td></tr>
<tr><td>26</td><td>01</td><td>Option unit setup
• Used to set up option unit.
① When the test command is executed, the presently stored machine setup code is displayed with the READY lamp turned on.
② After the READY lamp has turned on, enter an appropriate setup code on the keypad and press the PRINT switch. Then, the date is stored in the memory and the READY lamp turns off.
<table><tr><th>Code</th><th>Option</th></tr><tr><td>+1</td><td>RADF</td></tr><tr><td>+2</td><td>ADU</td></tr><tr><td>+4</td><td>Desk</td></tr><tr><td>+10</td><td>Sorter</td></tr></table>◦ No need to set "+2 (ADU)". If the ADU is installed, "2" is automatically added.
◦ Used to set the code that corresponds to an option unit.
(EX): To set the RADF and desk together with ADU, enter 1+2+4=7, or 1+4=5.
NOTES:
(1) Be sure to enter the code that corresponds to the installed option unit.
(2) If option setup is incorrect, a trouble code is displayed. See the trouble code chart.</td><td></td></tr>
<tr><td></td><td>03</td><td>Coin vendor setting
0: Cancel, 1: Setting</td><td></td></tr>
</table>

<table>
<tr><th>Main code</th><th>Sub code</th><th>Description</th><th>Ref. Page</th></tr>
<tr><td>26</td><td>05</td><td>Counter mode setup
① When the test command is executed, the code of the presently stored mode is displayed with the READY lamp turned on.
② After the READY lamp has turned on, enter an appropriate setup code on the keypad and press the PRINT switch. Then, the code is stored in the memory and the READY lamp turns off.
<table><tr><th>Code</th><th>Total counter</th><th>Maintenance counter</th></tr><tr><td>0</td><td>Double count</td><td>Double count</td></tr><tr><td>1</td><td>Single count</td><td>Double count</td></tr><tr><td>2</td><td>Double count</td><td>Single count</td></tr><tr><td>3</td><td>Single count</td><td>Single count</td></tr></table></td><td></td></tr>
<tr><td></td><td>06</td><td>Destination setup
Used to set the destination setting.
① When the test command is executed, the presently stored model number and the destination code are displayed (see table below) and the READY lamp turns on.
② After the READY lamp has turned on, enter the model number and the destination code on the keypad and press the PRINT switch to store the setting in the memory. The READY lamp then turns off.
<table><tr><th>Code</th><th>Destination</th><th>AB/Inch</th></tr><tr><td>0</td><td>SEC (ES) America</td><td rowspan="4">(Inch)</td></tr><tr><td>1</td><td>SEC ✳ America</td></tr><tr><td>2</td><td>SECL Canada</td></tr><tr><td>3</td><td>Other</td></tr><tr><td>4</td><td>Japan</td><td rowspan="2">(AB Japan)</td></tr><tr><td>5</td><td>Other</td></tr><tr><td>6</td><td>SEEG German</td><td rowspan="4">(AB Export)</td></tr><tr><td>7</td><td>SUK U.K.</td></tr><tr><td>8</td><td>SCA Australia</td></tr><tr><td>9</td><td>Other</td></tr></table>✳ Energy star</td><td></td></tr>
<tr><td></td><td>07</td><td>Drum sensitivity setup
① When the test command is executed, the number stored in the memory is recalled and the READY lamp turns on.
② A number 1 to 3 may be entered on the keypad while the RPL is active.
③ Press the PRINT switch after the number has been entered. With this, the READY lamp turns off and the test command number is displayed.
° Drum
<table><tr><td>Keypad entry</td><td>1</td><td>2</td><td>3</td></tr><tr><td>Sensitivity</td><td>1</td><td>2</td><td>3</td></tr></table></td><td></td></tr>
<tr><td></td><td>08</td><td>Lens characteristics entry (at a time of lens replacement)
Because each lens has a variance in focal distance, the lens moving distance in any zoom mode must correspond with the focal distance of the lens. The zoom ratio varies proportionate to the variance of the lens focal distance.
To avoid focus problem, the class of the lens focal distance (refer to chart on page 7-11) is stored in the memory using the test command. In a variable zoom mode, the lens moving distance that corresponds to the lens focal distance is obtained on the basis of the data so as to produce the accurate zoom copy.
Setup method (26-08)
① When the test command is executed, the presently stored preset code is displayed and the READY lamp turns on.
② After the READY lamp turned on, enter the lens number shown on the top of lens area and press the PRINT switch to store the value in the memory. The READY lamp now turns off.
C → =↵ → 0/◊ → =↵ → 2 → 6 → PSW → 8 → PSW → 1 → 4 → PSW</td><td>[7]-10-(6)</td></tr>
</table>

Main code	Sub code	Description	Ref. Page
26	09	4/5 mirror characteristics entry (at a time of lens replacement) (Setup method (26-09) ① Set the correction value for lens marked value based on "lens value vs. test command input." Press [C] → [=↵] → [0/◊] → [=↵] → [2] → [6] → [PSW] → [9] → [PSW] keys to execute the test command 26-09. As the READY lamp turns on, the previously set value 1 to 21) is shown. ② Enter the new value on the keypad. EX: If the value shown on the lens is +1, 2, pick up "14." Press the [1] → [4] → [PSW] keys. A figure 0 to L is shown on the lens value label.	[7]-10-(6)

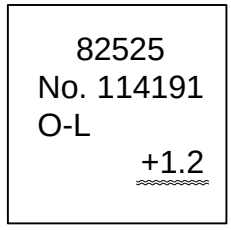

Value shown on the label	Test command 48-01	Test command 48-01 [=↵]	Test command 26-09 Zoom correction (No.4/5 mirror)	Test command 26-08 Zoom correction (lens)
+4.0	10	20	21	21
3.9	11	21		
3.8	12	22		
3.7	13	22	20	20
3.6	14	22		
3.5	15	23		
3.4	16	23		
3.3	17	24	19	19
3.2	18	24		
3.1	19	25		
3.0	20	25		
2.9	21	26	18	18
2.8	22	26		
2.7	23	27		
2.6	24	27		
2.5	25	28	17	17
2.4	26	28		
2.3	27	29		
2.2	28	29		
2.1	29	30	16	16
2.0	30	30		
1.9	31	31		
1.8	32	31		
1.7	33	32	15	15
1.6	34	32		
1.5	35	33		
1.4	36	33		
1.3	37	34	14	14
1.2	38	34		
1.1	39	35		
1.0	40	35		
0.9	41	36	13	13
0.8	42	36		
0.7	43	37		
0.6	44	37		

Main code	Sub code	Description	Ref. Page
26	09		

Value shown on the label	Test command 48-01	Test command 48-01 =↵	Test command 26-09 Zoom correction (No.4/5 mirror)	Test command 26-08 Zoom correction (lens)
0.5	45	38	12	12
0.4	46	38		
0.3	47	39		
0.2	48	39		
+0.1	49	40	11	11
0	50	40		
–0.1	51	40		
0.2	52	41	10	10
0.3	53	41		
0.4	54	42		
0.5	55	42		
0.6	56	43	9	9
0.7	57	43		
0.8	58	44		
0.9	59	44		
1.0	60	45	8	8
1.1	61	45		
1.2	62	46		
1.3	63	46		
1.4	64	47	7	7
1.5	65	47		
1.6	66	48		
1.7	67	48		
1.8	68	49	6	6
1.9	69	49		
2.0	70	50		
2.1	71	50		
2.2	72	51	5	5
2.3	73	51		
2.4	74	52		
2.5	75	52		
2.6	76	53	4	4
2.7	77	53		
2.8	78	54		
2.9	79	54		
3.0	80	55	3	3
3.1	81	55		
3.2	82	56		
3.3	83	56		
3.4	84	57	2	2
3.5	85	57		
3.6	86	58		
3.7	87	58		
3.8	88	59	1	1
3.9	89	59		
–4.0	90	60		

	10	AE original density setting Used to set the original density. (Set value: 1 ~ 9) Default: 2 Set to 9 if the density is extremely low.	
27	01	PPC communication trouble	

<table>
<tr><th>Main code</th><th>Sub code</th><th>Description</th><th>Ref. Page</th></tr>
<tr><td>30</td><td>01</td><td>Monitoring main unit paper sensor
Used to check the on/off state of paper sensor in the copier.
When the sensor turns on, the display reverses.</td><td></td></tr>
<tr><td></td><td>02</td><td>Monitoring paper cassette size
Used to check the on/off state of paper cassette size. When the switch turns on, the display reverses.</td><td></td></tr>
<tr><td>42</td><td>*</td><td>° Developer counter clear
Reset the contents of the copy number counter of the installed developing unit.</td><td></td></tr>
<tr><td>43</td><td>*</td><td>When main code "43" is entered, the following message is displayed on the LCD.
° Fusing temperature setting
Used to set the fusing temperature.
When this simulation is executed, the currently set fusing temperature is displayed.
Press the message forward scroll key under this state to change the fusing temperature by 5 degrees.
[1 → 1, 2 → 1] 1 2 3 4 5 6 7 8 9 0 SCROLL KEY → [1 → 2, 2 → 2] 1 2 3 4 5 6 7 8 9 0
<table><tr><td>1</td><td>2</td><td>3</td><td>4</td><td>5</td><td>6</td><td>7</td><td>8</td><td>9</td><td>0</td></tr><tr><td>160</td><td>165</td><td>170</td><td>175</td><td>180</td><td>185</td><td>190</td><td>195</td><td>200</td><td>205</td></tr></table></td><td></td></tr>
<tr><td>44</td><td>01</td><td>Correction mode setting
[+ 1] Process control correction enable
[+ 2] Optical dirt correction enable
[+ 4] Drum layer wear correction enable
[+10] Toner control A correction valid
[+20] Toner control B correction valid
Note: When all are "Enable," set to 37.
The corrections, except for the process control correction mode, can be disabled in the normal copy mode. When "0" is inputted, "1" (Process control correction) is enabled. (Automatic setting)</td><td></td></tr>
<tr><td></td><td>02</td><td>Drum mark sensor sensitivity adjustment : 0 ~ 255 255=5V
For the drum mark sensor gain rank, [2] is selected.
The main motor rotates and the drum mark sensor sensing level is displayed on the multi-display section. Adjust VR1 in the process unit to obtain [204±10].</td><td></td></tr>
<tr><td></td><td>03</td><td>Image density sensor sensitivity adjustment : 0 ~ 255 255=5V
For the image density sensor gain rank, [2] is selected.
The main motor rotates and the image density sensor sensing level is displayed on the multi-display section. Adjust VR2 in the process unit to obtain [204±10].</td><td></td></tr>
<tr><td></td><td>05</td><td>Test mode
The main motor rotates to form images in nine steps of the grid bias level from 350V to 590V (30V step) on the drum, and the image density sensor level is displayed on the LCD.
Display
45, 50, 55, 60, 65, 70
75, 80, 85
45: Ratio of reflection between toner patch and base at grid bias voltage of 450V
50: Ratio of reflection between toner patch and base at grid bias voltage of 500V
55: Ratio of reflection between toner patch and base at grid bias voltage of 550V
60: Ratio of reflection between toner patch and base at grid bias voltage of 600V
65: Ratio of reflection between toner patch and base at grid bias voltage of 650V
70: Ratio of reflection between toner patch and base at grid bias voltage of 700V
75: Ratio of reflection between toner patch and base at grid bias voltage of 750V
80: Ratio of reflection between toner patch and base at grid bias voltage of 800V
85: Ratio of reflection between toner patch and base at grid bias voltage of 850V</td><td></td></tr>
</table>

Main code	Sub code	Description	Ref. Page
44	06	Compulsory execution of process control	

NORM	(✱✱✱✱)	T/S	(✱✱✱✱)
DM_G	(✱)	PHOT	(✱✱✱✱)

GB_A	(✱✱✱✱)	TARG	(✱✱✱✱)
ID_G	(✱)	l✱m✱n	(✱✱✱✱)

PAT1	(✱✱✱)	BAS1	(✱✱✱)
PAT2	(✱✱✱)	BAS2	(✱✱✱)

PAT3	(✱✱✱)	BAS3	(✱✱✱)
MARK	(✱✱✱)	MARB	(✱✱✱)

l	(✱✱✱)	m	(✱✱✱)	n	(✱✱✱)
M1	(✱✱✱)	M2	(✱✱✱)		

Compulsory execution of half-tone density correction

NORM	NORMAL	:	Standard mode grid bias (350 - 1150V)
T/S	T/S	:	Toner save mode grid bias (350 - 1150V)
PHOT	PHOTO	:	Photo mode grid bias (350 - 1150V)
GB_A	GB ADJUST	:	Grid bias correction value after measurement (±0 ~ 999V)
TARG	TARGET	:	Patch/foundation, standard patch value when foundation is 255 (255= foundation)
ID_G	ID GAIN	:	Image density sensor gain rank in execution (1 ~ 7)
MARK	MARK	:	Drum mark sensor mark level in execution (0 ~ 255, 255=5V)
MARB	MARK B	:	Drum mark sensor surface level in execution (0 ~ 255, 255=5V)
DM_G	DM GAIN	:	Drum mark sensor gain rank in execution (1 ~ 7)
BAS1, 2, 3	BASE1, 2, 3	:	Drum surface image density sensor level in execution (0 ~ 255, 255=5V)
PAT1, 2, 3	PATCH1, 2, 3	:	Toner patch image density sensor level in execution (0 ~ 255, 255=5V)
l	l	:	Vg correction coefficient
m	m	:	Dirt correction coefficient
n	n	:	Film wear correction coefficient
M1	M1	:	Dirt correction coefficient (M1)
M2	M2	:	Dirt correction coefficient (M2)
l✱m✱n	l✱m✱n	:	Vc1 correction coefficient

	07	Drum mark sensor/image density sensor gain select check The image density sensor level can be checked for selection of each gain rank. : 0~255, 255 = 5V

DM)	7 6 5 4 3 2 1
ID)	7 6 5 4 3 2 1

Since the max. difference in amplifier rates between two gains is 132%, supposing the max. sensor input is 4.8V, the gain rank is increased by +1 for 3.6V.

<table>
<tr><th>Main code</th><th>Sub code</th><th>Description</th><th>Ref. Page</th></tr>
<tr><td>44</td><td>09</td><td>Process control data display
NORM (✱✱✱✱) T/S (✱✱✱✱)
DM_G (✱) PHOT (✱✱✱✱)

GB_A (✱✱✱✱) TARG (✱✱✱✱)
ID_G (✱) l✱m✱n (✱✱✱✱)

PAT1 (✱✱✱) BAS1 (✱✱✱)
PAT2 (✱✱✱) BAS2 (✱✱✱)

PAT3 (✱✱✱) BAS3 (✱✱✱)
MARK (✱✱✱) MARB (✱✱✱)

l (✱✱✱) m (✱✱✱) n (✱✱✱)
M1 (✱✱✱) M2 (✱✱✱)

Compulsory execution of half-tone density correction

NORM | NORMAL : Standard mode grid bias (350 ~ 1150V)
T/S | T/S : Toner save mode grid bias (350 ~ 1150V)
PHOT | PHOTO : Photo mode grid bias (350 ~ 11250V)
GB_A | GB ADJUST : Grid bias correction value after measurement (±0 ~ 999V)
TARG | TARGET : Patch/foundation, standard patch value when foundation is 255 (255= foundation)
ID_G | ID GAIN : Image density sensor gain rank in execution (1 ~ 7)
MARK | MARK : Drum mark sensor mark level in execution (0 ~ 255, 255=5V)
MARB | MARK B : Drum mark sensor surface level in execution (0 ~ 255, 255=5V)
DM_G | DM GAIN : Drum mark sensor gain rank in execution (1 ~ 7)
BAS1, 2, 3 | BASE1, 2, 3 : Drum surface image density sensor level in execution (0 ~ 255, 255=5V)
PAT1, 2, 3 | PATCH1, 2, 3 : Toner patch image density sensor level in execution (0 ~ 255, 255=5V)
l | l : Vg correction coefficient
m | m : Dirt correction coefficient
n | n : Film wear correction coefficient
M1 | M1 : Dirt correction coefficient (M1)
M2 | M2 : Dirt correction coefficient (M2)
l✱m✱n | l✱m✱n : Vc1 correction coefficient</td><td></td></tr>
<tr><td></td><td>11</td><td>Enters the copy aging mode to allow the following operation and setting.
Display

25 85 100 105 PA ✱✱✱✱
NO ✱✱✱✱ TS ✱✱✱✱ PH ✱✱✱✱

PA | PATCH (–375±10V)
PH | PHOTO (–440±5V)
NO | NOMAL (–650±5V)
TS | T/S (–550±5V)

Use "→" key to select, and press PSW to determine. Aging is started.</td><td></td></tr>
<tr><td></td><td>12</td><td>Copying is made without process control operation. This simulation is used to know whether the trouble is in the process section or in the other section when F2 trouble occurs.</td><td></td></tr>
<tr><td>46</td><td>01</td><td>○ Exposure level adjustment
Used to adjust the copy density and the copy density select level. Refer to adjustment section page 7-19.</td><td>[7]-18-(6)</td></tr>
</table>

Main code	Sub code	Description	Ref. Page
47	✳	◦ AE sensor characteristics measurement AE sensor output characteristics memory (1) AE sensor output characteristics input Press the [C] → [=↵] → [0] → [=↵] → [4] → [7] → [PSW] keys. The mirror base is initialized, scans about 10cm, then stops. The READY lamp turns on now and becomes ready to measure. Press the PRINT switch. The copy lamp driving voltage changes in increments of 10V (20V) each from 80V (160V) to 30V (600V), and the AE sensor output characteristics are stored in the memory. The values are used as referances. NOTE: Shown in parenthesis is for the 200V series machine.	[7]-20-(3)
48	01	Front/rear direction zoom ratio adjustment (refer to [7]-3-(6)-9 for the lens type value. Used to set the No.4/5 mirror home position (focal adjustment) and to adjust the zoom ratio of the copy in the vertical direction (from front to rear). There are two kinds of test command 48-01 of which are described as follows. 1-1. Horizontal copy zoom ratio standard value input method (at a time the lens or main PWB replacement) Press the [C] → [=↵] → [0] → [=↵] → [4] → [8] → [PSW] → [➡] keys. The already set value or "40" is displayed. Substitute the value of "O.L" shown on the label attached to the lens with the formula value. 40 – [(value of O.L.) x 5] = standard value of correction Ex: 40 – (+1.2 x 5) = 34 1-2. Use this test command to adjust the horizontal zoom ratio. Change the value entered in "1-1" to change. 2-1. No.4/4 mirror home position standard value input (at a time of lens or main PWB replacement). Press the [C] → [=↵] → [0] → [=↵] → [4] → [8] → [PSW] [1] → [PSW] keys. The already stored value or "50" is displayed. Substitute the value of "O.L" shown on the label attached to the lens with the formula value. 42 – [(O.L value) x 10] = standard value of correction Ex: 50 – (+1.2 x 10) = 38 2-2. To adjust the resolution, change the value entered at "2-1" using this test command. When the No. 4/5 mirror reference value is "+" from the center value "50", the mirror is shifted away from the lens to lengthen the light path. When it is "–", the mirror is shifted to the lens to shorten the light path. The value is calculated in this manner. (Label) 82525 No. 114191 O-L +1.2	[7]-8-(1) -(3) [7]-8-(2) [7]-9-(4)
	02	◦ Paper moving direction zoom adjustment Used to adjust the zoom ratio in the landscape mode. Varying the mirror base moving speed adjusts the zoom factor in the landscape direction of the copy (paper moving direction). ① Place a scale over the original table in the direction the paper moves. Make a copy in the 100% zoom mode and obtain the copy zoom ratio correction factor. Copy zoom correction factor = (original size) $-\frac{\text{(copy image size)}}{\text{(original size)}} \times 100\%$ ② As the READY lamp turns on, the previously set figure between 15 and 35 is displayed. Change it with the copy zoom factor correction factor obtained in ①. (Input value) = (previously stored value) + copy zoom ratio correction factor [%] × 10 Press the PRINT switch after entering the input value. With this, the input value is stored in the memory and the READY lamp turns off.	[7]-10-(5)
50	01	Used to adjust the copy lead edge image loss and void areas. For more information, refer to the optical system copy lead edge adjustment procedure.	[7]-15-(11)
	02	The function of this test command is similar to the test command 50-01. The test command 50-02 allows easier lead edge adjustment using the values of L1 and L2. For more information, refer to the optical system copy lead edge adjustment procedure.	[7]-15-(11)

Main code	Sub code	Description	Ref. Page
51	02	◦ Resist roller adjustments Used to set the on timing of the paper feed roller (rate of buckle in the paper caused by the resist roller). When the test command is executed, the manual feed mode is automatically established. Change the manual feed mode resisting rate, cassette paper feed resist rate, and ADU paper feed resist rate independantly. Press the [C] → [=↵] → [0/◊] → [=↵] → [5] → [1] → [PSW] → [2] → [PSW] → keys. The manual feed lamp turns on → ① Enter number → press the cassette key (main unit bottom cassette and pause lamp turn on) → ② enter number → press the cassette key (main unit bottom cassette lamp turns on) → ③ enter number → press the cassette key. ①: Manual feed paper resist rate adjustment (MALTI TRAY) ②: Cassette paper resist rate adjustment (TRAY) ③: ADU paper resist rate adjustment (ADU) Reference values: 40, 45, 50 (Enter "0" to display the reference value.) MUL1 TRAY : TRAY : ADU :	[7]-15-(11)
	05	◦ Frame delete rate adjustment (copy moving direction only) Used to set the frame delete rate. • When the test command is executed, the READY lamp turns on, and the figure previously stored is displayed on the copy number window. Now, it becomes ready to accept a number between 1 and 19 on the keypad. When the PRINT switch is pressed after the entry, the number is stored in the memory and the READY lamp turns off. A single rate deletes the frame of about 1.0mm. The standard value has been set to "6."	
52	01	◦ ADU alignment plate adjust value setup Used to adjust the home position of the ADU alignment plate. When the test command is executed, the READY lamp turns on. Enter a new value as the previously set value came displayed, and press the PRINT switch to stored it in the memory. It can be adjustable from 1 to 99. The default is 7. Setting a smaller value increases the width of the alignment plate and vice versa.	
	02	◦ ADU rear plate adjust value setup Used to adjust the home position of the ADU rear plate. When the test command is executed, the READY lamp turns on. Enter a new value as the previously set value came displayed, and press the PRINT switch to stored it in the memory. It can be adjustable from 0 to 99. The default is 0. Setting a smaller value increases the width of the rear plate and vice versa.	
	03	ADU drive clutch off time setup Can be set to any number between 0 and 99 (Standard: 18). 1 = 6ms, 4 = 30ms, 10 = 90ms Setting a smaller value shortens the ADU clutch off timings and decreases the enforced curling rate of paper.	
53	01	◦ RADF and ADF stop position adjustment value (normal paper, single copy) setting Used to adjust the RADF stop position in single copy with normal paper. When this simulation is executed, the ready lamp lights up and the currently set adjustment value is displayed. Enter the new adjustment value and press the PRINT switch to store it in the memory. The adjustment value should be in the range of 0 to 15.	
	02	◦ RADF stop position adjustment value (normal paper, duplex copy) setting Used to adjust the RADF stop position in duplex copy with normal paper. When this simulation is executed, the ready lamp lights up and the currently set adjustment value is displayed. Enter the new adjustment value and press the PRINT switch to store it in the memory. The adjustment value should be in the range of 0 to 15.	
	03	◦ RADF and ADF stop position adjustment value (thin paper, single copy) setting Used to adjust the RADF stop position in single copy with thin paper. When this simulation is executed, the ready lamp lights up and the currently set adjustment value is displayed. Enter the new adjustment value and press the PRINT switch to store it in the memory. The adjustment value should be in the range of 0 to 15.	
	04	◦ RADF and ADF stop position adjustment value (thin paper, duplex copy) setting Used to adjust the RADF stop position in duplex copy with thin paper. When this simulation is executed, the ready lamp lights up and the currently set adjustment value is displayed. Enter the new adjustment value and press the PRINT switch to store it in the memory. The adjustment value should be in the range of 0 to 15.	
	05	◦ RADF and ADF resist sensor adjustment Used to adjust the RADF resist sensor. (In the case of ADF, the resist sensor and the paper pass width sensor are adjusted.) When this simulation is executed, the RADF resist sensor is adjusted and the adjustment value is displayed.	

Main code	Sub code	Description	Ref. Page
53	06	◦ RADF and ADF timing sensor adjustment Used to adjust the RADF timing sensor. When this simulation is executed, the RADF timing sensor is adjusted and the adjustment value is displayed.	
	07	◦ RADF and ADF repulsion sensor adjustment Used to adjust the RADF repulsion sensor. When this simulation is executed, the RADF repulsion sensor is adjusted and the adjustment value is displayed.	
	08	◦ RADF and ADF empty sensor adjustment Used to adjust the RADF empty sensor. When this simulation is executed, the RADF empty sensor is adjusted and the adjustment value is displayed.	

(Trouble codes list)

Trouble status code	Subordinate code	Description
L4	01	Main motor lock detection
L5	03	No.4/5 mirror motor error detection
	04	No.4/5 mirror motor MHPS error detection
	05	Lens motor error detection
	06	Lens motor LHPS error detection
L8	01	Power supply line frequency error detection
H2	—	Open thermistor (Test command 14 to reset)
H3	—	Heat roller high temperature detection (Test command 14 to reset)
H4	—	Heat roller low temperature detection (Test command 14 to reset)
U2	00 01	Memory. Counter sumcheck error detection (Test command 16 to reset)
U3	20	Mirror motor lock detection
	21	Mirror motor MHPS error detection
U4	02	ADU alignment plate malfunction detected
	04	ADU rear plate malfunction detected
U5	00	ADF communication trouble detected
	01	A motor malfunction detected
	02	B motor malfunction detected
	03	Resist sensor malfunction detected
	04	Eject sensor malfunction detected
U6	00	Desk communication trouble detected
	01	Desk-1 cassette liftup motor trouble detected
	02	Desk-2 cassette liftup motor trouble detected
	03	Desk-3 cassette liftup motor trouble detected
	08	Desk 24V line error detected
	09	LCC motor overcurrent detected
	10	Desk transport motor trouble detected
U7	00	Communication trouble between PC/Modem and the copier.
F1	00	Sorter communication trouble detected
	01	Paper jog malfunction detected
	02	Transport motor malfunction detected
	04	Indexer lower limit detected
	05	Indexer upper limit detected
	06	Shift motor malfunction detected
F2	02	Toner motor malfunction detected
	31	ID sensor level abnormality (less than 3V) ID sensor photo conductor surface level abnormality (less than 2.25V)
	32	DM sensor level abnormality (less than 3V) DM sensor cannot sense. When measuring the gain level (at 1.5 rotations of the drum) DM sensor cannot sense. When measuring the patch (at 1.5 rotations of the drum)
	35✳	Adjustment impossible for GB (-32V ✳ 4 times) Adjustment impossible for GB (+32V ✳7 times) Preliminary adjustment impossible for GB (-200V to -88V)
F3	12	Main unit upper cassette liftup motor trouble detected
	22	Main unit bottom cassette liftup motor trouble detected
EE	EL	Toner sensor indicates extreme overtoned condition
	EU	Toner sensor indicates extreme undertoned condition
CC	—	Original size detect sensor level abnormality.
C2	00	THV leak trouble

Mark " ✳ ": The error display is given only when performing the simulation. (For the process control at warming-up,, the error display is not given.)

Display codes other than trouble

Trouble codes	Sub code	Operation
CH	—	Door open/DV unit uninstalled
PC	—	Personal counter uninstalled/auditor code input waiting
PF	—	Copy inhibit command is received from the host when installing PC/Modem.

(Key operator program)

The list below shows all key operator programs. These programs can be used only when the key operator code in inputted at the beginning.

Program Code No.	Program name	Function
P10	Auditing Mode	Enables or disables the basic auditing mode, which controls access to copier.
P11	Number of Copies per Account	Displays the total number of copies made against account numbers.
P13	Resetting Account	Resets all audit accounts or selectively resets individual accounts.
P14	Account Number Control	Registers accounts, deletes accounts, changes an account number, or displays all registered account numbers.
P16	Account Limit Setting	Sets the maximum number of copies which can be made against a registered account number.
P18	Account Number Security	Guards against trial and error entering of audit account numbers.
P19	Key Operator Code Number Change	Changes the key operator code number.
P20	Auto Exposure Adjust	Lightens or darkens copies in the automatic exposure mode.
P21	Auto Power Shut-off Timer	Sets a time interval after which the copier automatically turns off.
P22	Toner Save Mode	Reduces toner consumption.
P23	Auto Clear Setting	Sets a time interval after which the copier returns to the initial settings.
P24	Add or Change Extra Preset Ratios	Adds or changes reduction and enlargement preset copy ratios.
P25	Setting a Maximum Number of Copies	Sets the maximum number of copies that can be selected.
P26	Initial Margin Shift Setting	Sets the initial margin shift values.
P27	Erase Width Adjustment	Sets the amount of the erase area.
P28	Initial Status Setting	Sets the copier's initial settings in the ready condition.
P29	Total Copy Count	Recalls the total copy counts of the copier, document feeder, duplex module, and stapler.
P31	Preheat Mode Setting	Sets the time that elapses before the copier enters the preheat mode after copying is completed.
P42	Right/Left Shift Direction Selection	Determines whether shift direction change is to be allowed.
P45	Message Time Setting	Sets the length of time that messages are displayed.
P46	Power On Control	Prevents the copier from being started by people other than key operator.
P47	Stream Feeding Mode	Enables the stream feeding mode for copying from an optional document feeder.
P51	Sorter Bin Access Mode	Enables or disables the sorter bin access mode when an optional 10-bin sorter (SF-S18) is installed.
P70	Disabling of Auto Paper Selection	Prevents automatic paper selection when using the ORIGINAL SIZE ENTER key or copying from an optional document feeder.
P71	Disabling of Auto Tray Switching	Prevents automatic switching between the paper trays.
P72	Prohibiting of Manual Feed Tray in Duplex Copy	Prohibits the use of the manual feed tray during duplex copying. (Duplex copying can be performed when an optional duplex module is installed.)
P73	Disabling Deletion of Job Programs	Prevents stored programs from being replaced or deleted.
P74	Disabling of Document Feeder	Prevents the use of an optional document feeder when it malfunctions.
P75	Disabling of Duplex Copying	Temporarily prevents the optional duplex system from operating when it malfunctions. Allows the use of the copier but not the duplex system.
P76	Disabling of Stapler	Prevents damage to the stapler while awaiting repair service. (Staple sorters are optional.)
P77	Disabling of Covers	Prevents the selection of COVERS mode. (The COVERS mode can be used when an optional document feeder is installed.)
P83	Disabling of PC/Modem Access	Provides or prevents access to key operator programs through a PC/modem without key operator code entry. (Remote access to key operator programs can be performed only when a computer or other equipment is connected to the copier directly or through a telephone line.)
P90	Display the List of All P Codes	Sequentially displays all available programs.

[9] MAINTENANCE AND OTHERS

The maintenance of the SF-2030 should be performed every 80K and 120K cycles.
<Remarks>
★= lubrication, ○=cleaning, ≠adjustment, ▲=replacement/mounting, □=repositioning,
×=check (cleaning, replacement and/or adjustment if necessary)

Unit name	Part name	40K	80K	120K	160K	200K	240K	280K	320K	Note
Process UN	Drum		▲		▲		▲		▲	
	Cleaner blade		▲		▲		▲		▲	
	Toner reception seal		▲		▲		▲		▲	
	Cleaner seal		▲		▲		▲		▲	
	Charging plate UN (saw teeth)		▲		▲		▲		▲	
	Screen grid		▲		▲		▲		▲	
	MC case		○		○		○		○	
	Drum separation pawl		▲		▲		▲		▲	
	B.L.		○		○		○		○	
	D.L.		○		○		○		○	
	Density sensor		○		○		○		○	
	Drum mark sensor		○		○		○		○	
	TC wire		▲		▲		▲		▲	
	TC case		○		○		○		○	
Developing UN	Developer	▲	▲	▲	▲	▲	▲	▲	▲	
	DV seal		▲		▲		▲		▲	
	DSD color		○		○		○		○	
	DV side seal		×		▲		×		▲	
Fusing UN	Upper heat roller		▲		▲		▲		▲	
	Lower heat roller		▲		▲		▲		▲	
	Upper/lower cleaning rollers		▲		▲		▲		▲	
	Upper separation pawl		▲		▲		▲		▲	
	Lower separation pawl		▲		▲		▲		▲	
	Thermistor		○		○		○		○	
	Heat roller gear		▲		▲		▲		▲	
	Gears		★		★		★		★	
Optical UN	Mirror lens / Reflector / Sensors		○		○		○		○	
	Table glass / Dust-proof glass		○		○		○		○	
	Rails		★		★		★		★	
Ozone filters / filters			▲		▲		▲		▲	
Paper feed section	∗ Paper feed roller		×		×		×		×	∗2
D20, D21	∗ Reverse roller		×		×		×		×	∗2
	∗ Take-up roller		×		×		×		×	∗2
	∗ Torque limiter		×		×		×		×	
	Brake SP		★		★		★		★	
Suction	Suction belt		○		○		○		○	
Transport section	PS roller		○		○		○		○	
	Transport rollers		○		○		○		○	
	Paper guides		○		○		○		○	
Drive	Gears		★		★		★		★	
Picture quality			△		△		△		△	
ADU (DM11)	∗ Paper feed roller	×	×	×	×	×	×	×	×	∗3
	∗ Reverse feed roller	×	×	×	×	×	×	×	×	∗3
	∗ Take-up roller	×	×	×	×	×	×	×	×	∗3
	∗ Torque limiter		★		★		★		★	
	Transport rollers		○		○		○		○	
	Paper guides		○		○		○		○	

∗: Perform maintenance when the corresponding counter reaches the specified level.
∗2: Replace every 80K or 2 years. (For the manual paper feed section, replace every 40K or 2 years).
∗3: Replace every 40K or 2 years.

2. Counters and test commands related to maintenance

(1) List of counters and test commands related to maintenance

Function	Test Command		Description
	Main code	Sub code	
Clear the maintenance counter	20	*	The contents of the counter is cleared to zero.
Set the maintenance cycle	21	01	Code Maintenance cycle 0 ..... 80,000 sheets 1 ..... 5,000 2 ..... 10,000 3 ..... 20,000 4 ..... 40,000 sheets 5 ..... free
Maintenance counter display	22	01	○ Maintenance counter display Copy number of the maintenance counter is displayed.
Maintenance preset counter display		02	○ Maintenance preset counter display This test command is used to check the contents of the maintenance preset cycle counter.
Jam memory display		03	○ JAM memory display (JAM map display) Displays the causes (positions) of JAM occurred in copy operation. (Max. 50 JAMs from the recent one) To check the history of JAM cause
Total jam counter display		04	○ Total misfeed counter display
Total counter display		05	○ Total counter display This counter is used to show the total copy number of the machine.
Developer counter display		06	○ Developer counter display The contents of the copy number counter of the installed developing unit is displayed.
Developer preset cycle counter display		07	○ Developer preset cycle counter display Number of developer replacements and the reset counter contents of the installed developing unit are displayed.
RADF counter display		08	○ RADF counter display Used to check the number of originals fed through the RADF.
ADU counter display		09	○ Duplex counter display Used to check the number of sheets fed through the duplex unit.
Staple counter display		10	○ Staple counter display Used to check the number of uses of the staple unit.
Developer adjustment time display		11	○ Developer adjustment time display Used to check the correction level according to the developer rotating time.
Drum adjustment time display		12	○ Drum adjustment time display Used to check the correction level according to the drum rotating time.
Key operator code display		13	○ Key operator code display Used to check the key operator code registered voluntarily by the key operator.
ROM version display		14	○ ROM version display Used to display the version of ROM which is currently installed.
Trouble memory display		15	○ Trouble memory display Used to display the number of troubles occurred and the trouble codes up to 50 cases from the latest one.
Cassette paper feed counter display		16	○ Cassette paper feed counter display Used to check the counter value of each cassette.
Jam memory/total jam counter clear	24	01	○ Misfeed map memory and total misfeed counter clear
Duplex counter clear		03	○ RADF counter clear The contents of the copy number counter is reset for the RADF. It is mandatory to clear the memory contents after the maintenance is completed.
ADF/RADF counter clear		04	○ Duplex counter clear The contents of the copy number counter is reset to the duplex unit. It is mandatory to clear the memory contents after the maintenance is completed.
Staple counter clear		05	○ Staple counter clear The staple unit using counter is cleared to zero.
Developer adjustment time clear		06	○ Developer adjustment time clear The developer adjustment time is cleared to zero.
Drum adjustment time clear		07	○ Drum adjustment time clear The drum adjustment time is cleared to zero.
Cassette paper feed counter clear		08	○ Tray paper feed counter clear Used to clear the tray paper feed counter.
Clear the developer count	42	*	○ The contents of the developer counter are cleared to zero.

(2) Alarm message

When any trouble occurs which makes it unable to start or continue copying, one of the following messages is displayed. When the trouble is cancelled, the message is cleared and the machine is automatically reset.

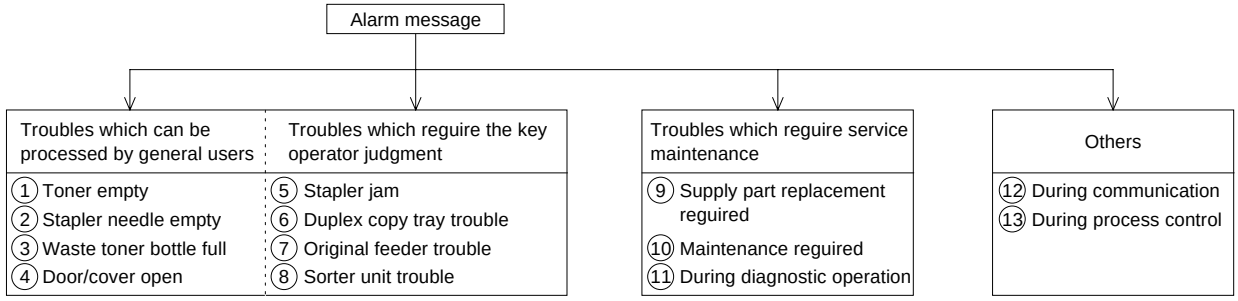

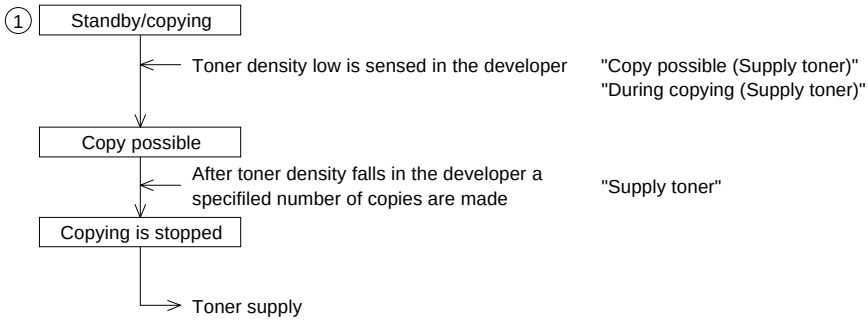

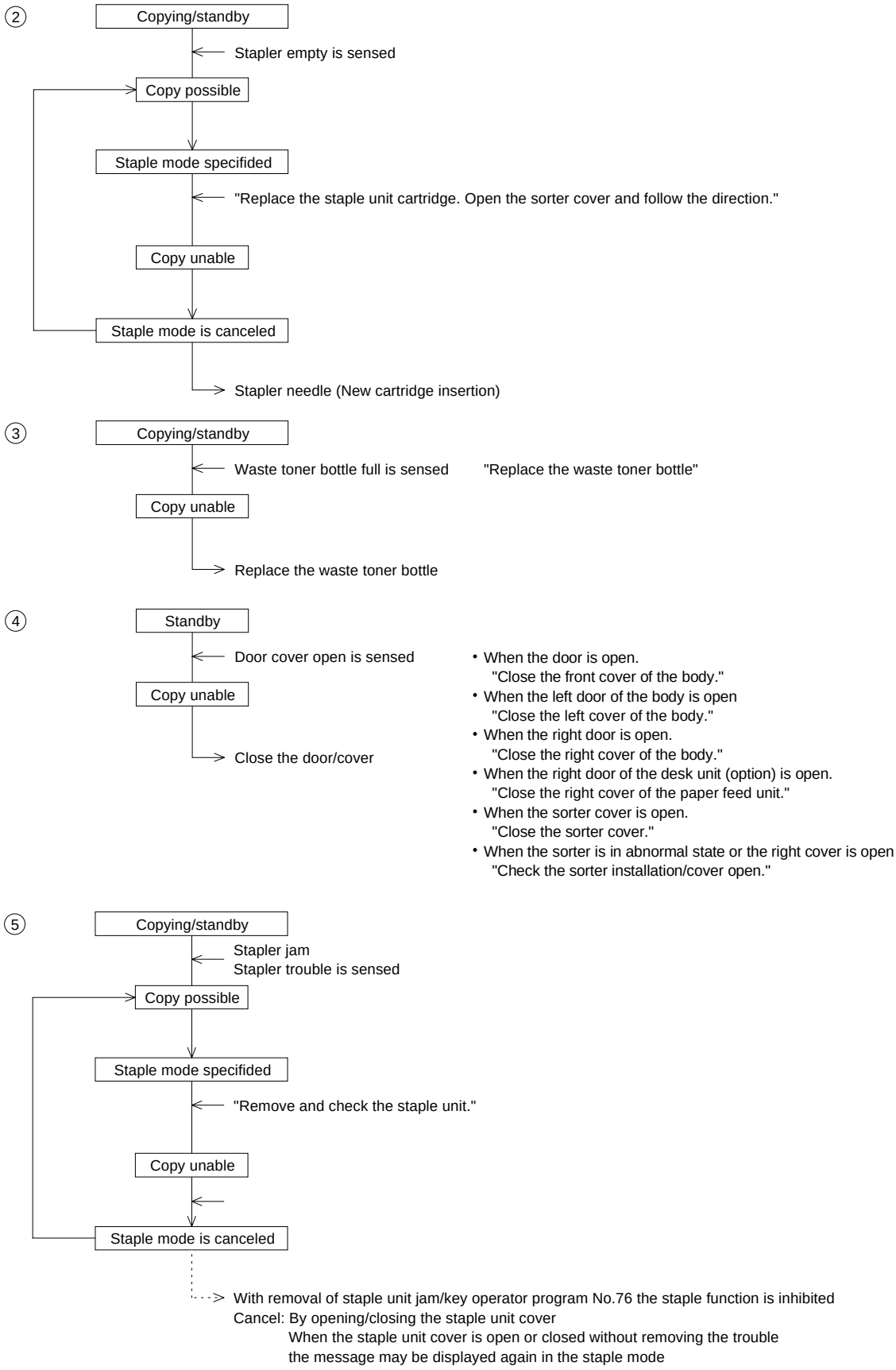
②
Copying/standby
Stapler empty is sensed
Copy possible
Staple mode specifided
"Replace the staple unit cartridge. Open the sorter cover and follow the direction."
Copy unable
Staple mode is canceled
Stapler needle (New cartridge insertion)
③
Copying/standby
Waste toner bottle full is sensed
"Replace the waste toner bottle"
Copy unable
Replace the waste toner bottle
④
Standby
Door cover open is sensed
Copy unable
Close the door/cover
• When the door is open.
"Close the front cover of the body."
• When the left door of the body is open
"Close the left cover of the body."
• When the right door is open.
"Close the right cover of the body."
• When the right door of the desk unit (option) is open.
"Close the right cover of the paper feed unit."
• When the sorter cover is open.
"Close the sorter cover."
• When the sorter is in abnormal state or the right cover is open
"Check the sorter installation/cover open."
⑤
Copying/standby
Stapler jam
Stapler trouble is sensed
Copy possible
Staple mode specifided
"Remove and check the staple unit."
Copy unable
Staple mode is canceled
With removal of staple unit jam/key operator program No.76 the staple function is inhibited
Cancel: By opening/closing the staple unit cover
When the staple unit cover is open or closed without removing the trouble
the message may be displayed again in the staple mode

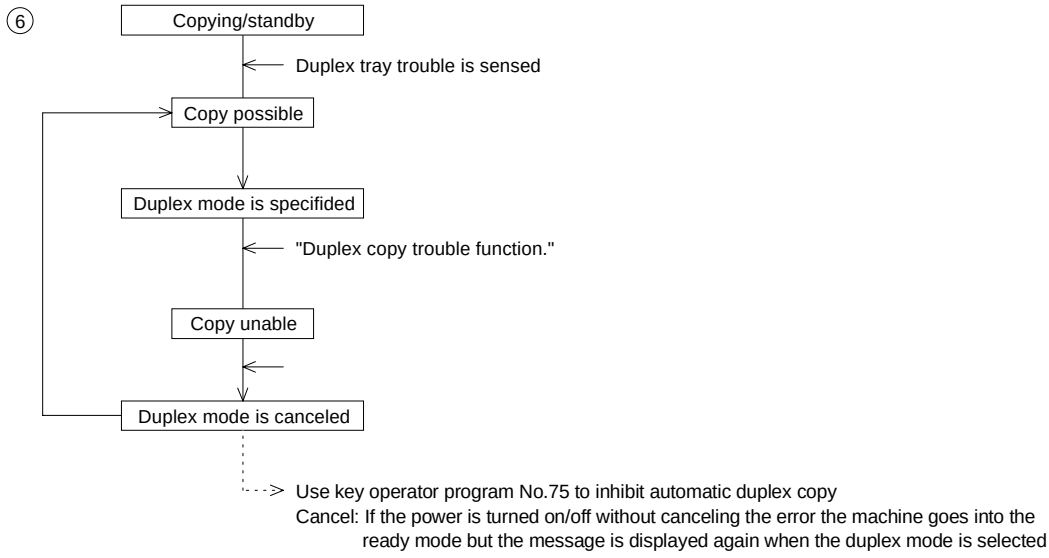

⑦ , ⑧ Use of the function or the unit is inhibited
- ⑦ Original feeder No.74
- ⑧ Stsple function No.76

⑨ , ⑩ , ⑪ Service maintenance is performed

⑫
- The remote diagnosis function is operated. If copying is disabled during communication between the machine and the host computer the following message is displayed. (In normal cases copying takes priorty)
  "Wait for a while. Data is being transmitted to service."

⑬
- During measurement of process control sensor
  Copying is disabie during feedback process control and the following message is displayed
  "Wait for a while. Pictur quality is adjusted."

(3) Setting the copy counter mode

Simulation		Setting code	Auto-clear available	Maintenance counter	Total counter
Main	Sub				
26	05	0	○	double count	double count
		1	○	single count	double count
		2	○	double count	single count
		3	○	single count	single count

∗1 The double/single count is limited to apply to A3-size paper.
∗2 Code other than those given in the above table is invalid or may cause operation error.

3. Replacing the Ozone Filter

The purpose of the ozone filter is to suppress emitting ozone from the machine, which is generated during corona discharge in the charger units. In order to maintain this effect, the ozone filter requires to be replaced every 80,000 sheets of copy paper.

(1) Replacing the suction ozone filter

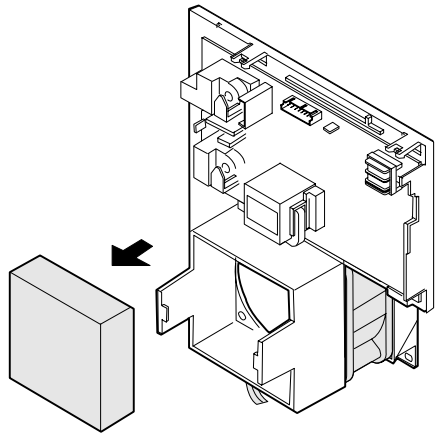

4. Oil/Grease Points

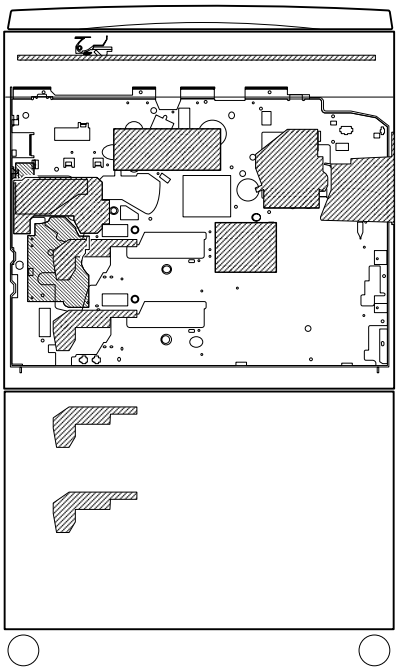

(1) Gear of main driving unit

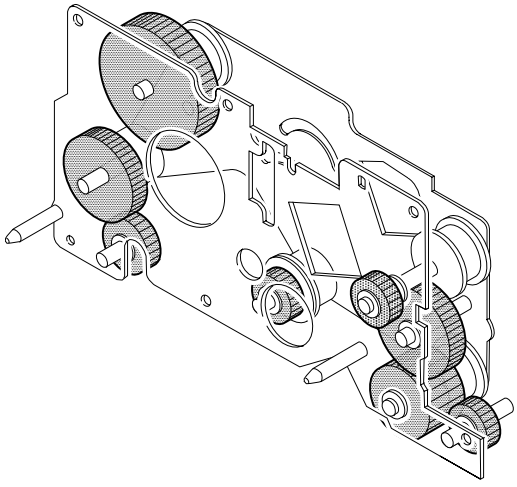

(2) Gears of variable-speed paper-feed unit

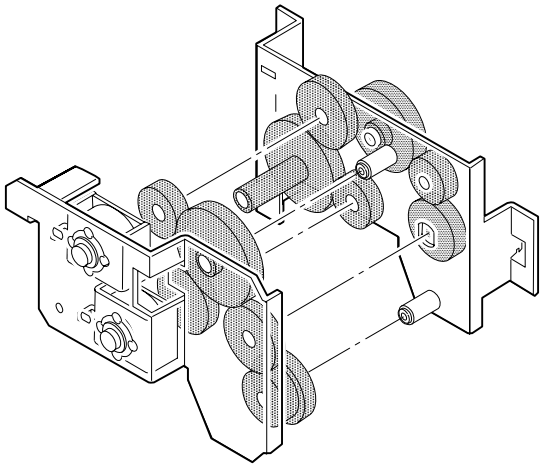

(3) Gears of paper-feed driving unit

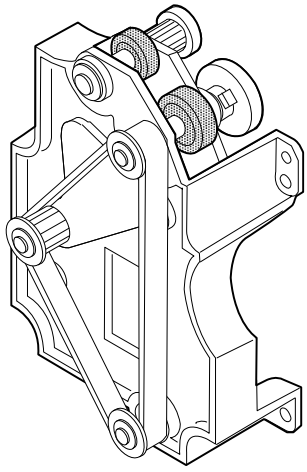

(4) Fusing unit driving gears

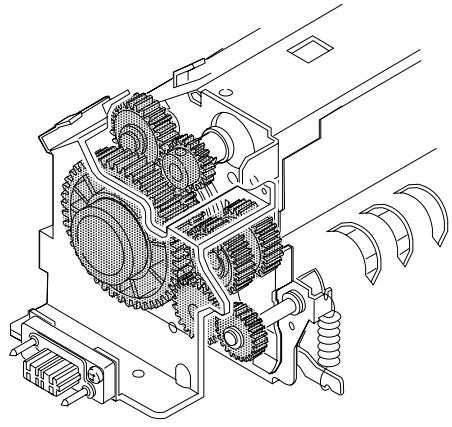

(5) Paper exit roller driving gears

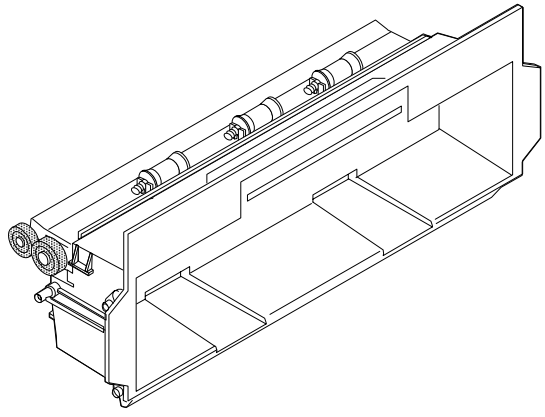

(6) Paper-feed torque limiter
500-sheet cassette brake spring

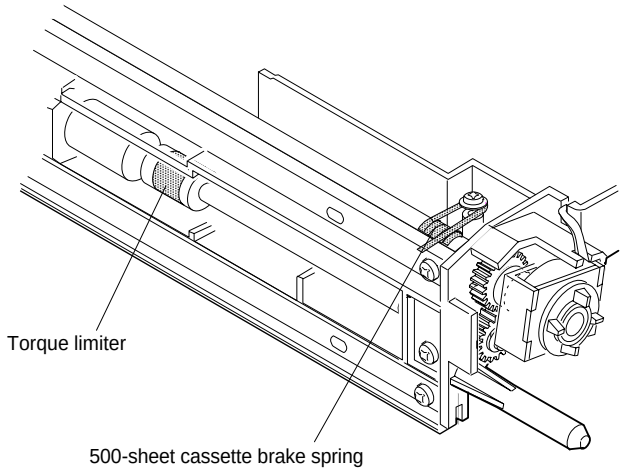

(7) Optical rail

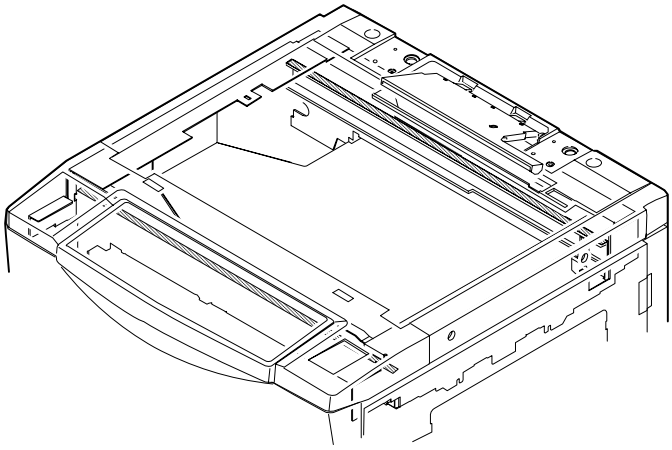

Note 1: Grease (Molycoat(UKOG-0062FCZZ) or White Molycoat (UKOG-0158FCZZ)) must be applied to the correct grease points of each gear. Do not use too much grease.

Note 2: No grease shall be applied inside the gear of the magnetic clutch.

5. Maintenance Schedule of Options

Maintenance of options must be done during that of the machine.
Maintenance of SF-D
20/D21/SF-DM11 is as follows:

- Duplex unit: Perform Simulation 22-9 to read out data in the duplex counter, and conduct maintenance on the basis of the data.
- Desk: every 80,000 sheets of copy paper.

Maintenance of RADF/ADF is as follows:
Perform Simulation 22-08 to check the contents of the RADF/ADF copy counter, and then conduct maintenance every 80,000 sheets of copy paper.
★ = lubrication ○ = cleaning △= adjustment ▲ = replacing/mounting ✕ = check(cleaning, replacing and/or adjustment, if necessary), □= repositioning