7-36
7-37

SF-7800
SF-7850

SHARP SERVICE MANUAL

CODE: 00ZSF7800SM/E

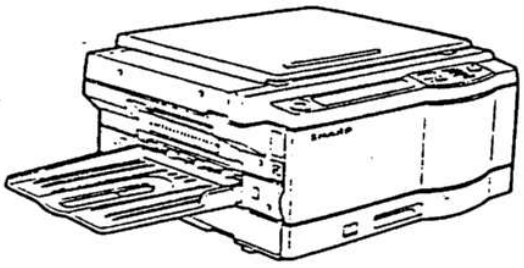

SF-7800

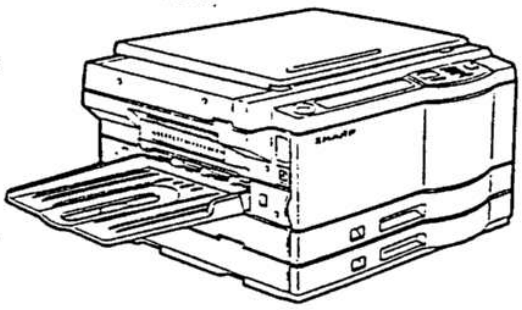

SF-7850

SF-7800
MODEL SF-7850

CONTENTS

[1] BASIC SPECIFICATIONS 1-1
[2] GENERAL 2-1
[3] UNPACKING AND INSTALLATION 3-1
[4] SUPPLIES 4-1
[5] EXTERNAL AND INTERNAL STRUCTURE 5-1
[6] DESCRIPTION ON EACH SECTION 6-1
[7] DISASSEMBLY, ASSEMBLY, AND ADJUSTMENTS 7-1
[8] ELECTRICAL SECTION 8-1
[9] MAINTENANCE 9-1
[10] TEST FUNCTIONS AND SELF-DIAGNOSIS 10-1
[11] COPY EXPOSURE ADJUSTMENT 11-1

SHARP CORPORATION

This document has been published to be used for after sales service only.
The contents are subject to change without notice.

SF-7800
SF-7850

TABLE OF CONTENTS

[1] BASIC SPECIFICATIONS 1-1

[2] GENERAL 2-1
1. Features 2-1
2. System configuration 2-1

[3] UNPACKING AND INSTALLATION 3-1
1. Unpacking 3-1
2. Installation conditions 3-1
(1) Environment 3-1
(2) Space around the copier 3-1
(3) Copier table 3-1
(4) Power source 3-1
(5) Ground connection 3-1
3. Installation 3-1
1) Releasing the optical system lock 3-1
2) Releasing 250 sheet cassette lock 3-2
3) Rotary cassette (SF-7850 only) 3-2
4) Drum setting 3-4
5) Setting developer unit 3-4
6) Toner concen. sensor level adj 3-5
7) Toner supply 3-5
8) Corona wire cleaning 3-6
9) Accessory attachment 3-7
10) Drum sensitivity setting 3-7
11) Automatic exposure copy mode level 3-7
12) Copy check 3-7
13) Mini maintenance counter setting 3-8
14) Option setting 3-8

[4] SUPPLRIES 4-1

[5] EXTENAL AND INTERNAL STRUCTURE 5-1
1. External structure 5-1
2. Operation panel 5-3
3. Internal structure 5-5
4. Switches, sensors and detectors 5-6
5. Motors 5-7
6. PWB's 5-8

[6] DESCRIPTION ON EACH SECTION 6-1
1. Optical system 6-1
2. Paper feed section 6-5
3. Transfer/transport section 6-6
4. Fusing/paper exit section 6-6
5. Image forming section 6-7
6. Rotary cassette section (SF-7850 only) 6-9

[7] DISASSEMBLY, ASSEMBLY AND ADJUSTMENT 7-1
1. Paper feed section 7-1
A. Removing paper feed roller and roller rubber 7-1
B. Paper feed frame unit removal (SF-7850 only) 7-2
C. Paper pass detector replacement 7-2
D. Removing transport upper paper guide ans PID 7-3
2. High voltage section 7-4
A. TC case unit disassembly/ass'y 7-4
B. Discharge plate replacement/cleaning 7-4
C. TC wire replacement/cleaning 7-4
D. Note for spring M assembly 7-4
3. Optical section 7-
(1) Disassembly/assembly 7-
A. Replacing copy lamp 7-5
B. Replacing lens drive wire 7-
C. Replacing lens 7-
D. Replacing adj. No.2,3 mirror drive wire 7-
E. Installing No.2,3 mirror unit (base B) 7-
F. Installing copy lamp unit (base A) 7-
G. Replacing mirror base C (No.4,5 unit) 7-
H. Replacing mirror base C drive wire 7-
I. Removing light emitting PWB (SF-7850) 7-
J. Removing light receiving PWB (SF-7850) 7-
K. Adj document detection arm unit (SF-7850) 7-13
(2) Adjustments 7-13
A. Lens reference position 7-
B. Adj. No.4,5 mirror reference position 7-
C. Adjusting vertical copy magnification 7-14
D. Adjusting resolution 7-
E. Adjusting horizontal magnification 7-
F. Entry of varible shift correction value 7-16
G. Adjusting verticle skew 7-17
H. Adjusting horizontal skew 7-
I. Adjusting center deviation 7-
J. Adjusting exposure balance 7-20
K. Adjusting copy lead edge 7-
L. Adjusting document sense level 7-
4. Developer unit 7-24
A. DV side seals F and R replacement 7-24
B. DV blade replacement 7-
C. V ring attachment 7-
D. Doctor gap adjustment 7-
E. MG roller main pole position 7-
F. Note for installing toner hopper gear 7-
G. Developer unit color identification resistance 7-26
5. Suction unit 7-2
A. Ozone filter replacement 7-2
B. Suction belt replacement 7-
6. Fuser unit 7-2
A. Fuser unit removal 7-2
B. Heater lamp replacement 7-2
C. Upper heat roller ass'y replacement 7-29
D. Replacing upper separation pawl 7-2
E. Lower heat roller replacement 7-2
F. Upper cleaning roll replacement 7-29
G. Cleaning roller replacement 7-30
H. Thermistor and thermostat removal 7-3
7. Drum peripheral section 7-3
A. Drum unit removal 7-30
B. Separation of drum unit and process frame 7-3
C. Blade removal 7-3
D. Blank lamp removal 7-31
E. Blank lamp adjustment 7-31
F. MC wire and screen grid replacement 7-3
8. Rotary cassette (SF-7850 only) 7-3
A. Rotary cassette removal 7-33
B. Cassette position detection adjustment 7-
C. Rotary cassette drive unit removal 7-3

Drive unit 7-35
A. Drive unit removal 7-35
B. Main motor replacement 7-35
C. Frequency change in drive unit 7-35
D. Note for drive unit assembly 7-36
10. PWB replacement and adjustment 7-36
A. Main PWB removal 7-36
B. Adjustments for replacing main PWB 7-36
C. DC power PWB removal 7-37
D. AC power PWB removal 7-37
E. High voltage PWB removal 7-37
F. DV bias adjustment 7-37
G. Main corona grisd bias adjustment 7-38
11. Others 7-38
A. Note for ventilation fan mounting 7-38
B. Cassette switch (CD-SW) removal (SF-7850) 7-38
C. Cassette detection sw (CSD) removal (SF-7850) 7-38

[8] ELECTRICAL SECTION 8-1
(1) Overall block diagram 8-1
(2) Main circuit block diagram 8-2
(3) IC1 (CPU) pin descriptions 8-3
(4) IC3 (I/O) pin descriptions 8-4

[9] MAINTENANCE 9-1
(1) Maintenance cycle and check items 9-1
(2) Maintenance procedure 9-2

[10] TEST FUNCTION AND SELF DIAGNOSIS .. 10-1
(1) Test function 10-1
(2) Diagnostics 10-12

[11] COPY EXPOSURE ADJUSTMENTS 11-1
(1) Note for copy exposure adjustment 11-1
(2) Copy exposure adjustment procedure 11-1
(3) Drum sensitivity setting 11-1
(4) Test chart setting 11-1

I] BASIC SPECIFICATIONS

	SF-7850	SF-7800
Model:	Desktop	←
Copying system:	Dry type electrostatic plain paper copy	←
Document:	Sheet, book	←
Document size:	Max. A3 (11" x 17")	←
Copy size:	Max. A3 (11" x 17") Min. A6 (8½" x 5½")	←
Copy speed:		
	Normal / Reduce (50%) / Enlarge (200%)	
A4 (8½" x 11") portrait	15 sheets/min / 12 sheets/min / 9 sheets/min	
B5 (8½" x 5½) portrait	15 sheets/min / 12 sheets/min / 9 sheets/min	
A4 (8½" x 11") landscape	12 sheets/min / 10 sheets/min / 9 sheets/min	
B5 landscape	12 sheets/min / 10 sheets/min / 9 sheets/min	←
B4 (8½" x 14")	10 sheets/min / 9 sheets/min / 9 sheets/min	
A3 (11" x 17")	8 sheets/min / 8 sheets/min / 8 sheets/min	
Fast copy:	10 sec	
Warm-up:	60 sec (Rated voltage, 20°C, 65%RH)	
Continuous copy:	1 – 99 sheets (Keypad entry, count-down display) Automatic repeat, pause (multicopy possible during pause)	
Magnification ratio:	1:0.50 to 1:2.00 (151 steps in 0.01 increment) (fixed ratio) AB series: 1:2.00, 1:1.41, 1:1.22, 1:1.15, 1:1.00, 1:0.86, 1:0.81, 1:0.70, 1:0.50 Inch series: 1:2.00, 1:1.41, 1:1.29, 1:1.21, 1:1.00, 1:0.95, 1:0.77, 1:0.64, 1:0.50	←
Exposure system:	Slit exposure with stationary platen, moving light source and variable light source illumination	←
Automatic exposure system:	Selected area exposure, ligh: reflection measured in synchronization with the exposure operation without disturbing focal beam path.	←
Paper feed system:	Double cassette, manual feed • Applicable paper Weight: 56 – 80g/m² Sharp standard paper Size: A3 – B5 (11" x 17" – 8½" – 5½") However, for the rotary cassette; AB series: A4 Inch series: 8½" x 11" • Applicable paper for manual feed Weight: 52 – 128g/m² (Papers of 105g/m² or more should be max. A4.) label paper, OHP, second original, Sharp standard postcard, coarse paper	Single cassette, manual feed (without rotary cassette)

SF-7800
SF-7850

	SF-7850	SF-7800
Developing system:	Magnetic brush development (2 components, toner ⊕, carrier ⊖)	←
Photoconductor:	30φOPC drum	←
Cleaning system:	Blade cleaning	←
Paper separation system:	Separation pawls and separation corona (discharge plate)	←
Document alignment:	Center reference	←
Transport system:	Transport roller, suction belt	←
Corona charge system:	-DC corona	←
Image transfer system:	-DC corona	←
Discharge system:	Discharge lamp	←
Light source:	Halogen lamp 100V series 275W, 200V series 310W	←
Power source:	AC 100V 50/60Hz 110V 50/60Hz 120V 60Hz 127V 60Hz 200V 50Hz 220V 50/60Hz 240V 50Hz Operating voltage ±10% Operating frequency ±2%	←
Power consumption:	Max. 1.5KW including ADF, sorter and other options. Approx. 160W/h for standby.	←
Fusing system:	Heat roller, upper tension roller (heater lamp 850W), lower silicone roller	
Dimensions:	700mm (W) x 610mm (D) x 400mm (H) (Glass surface)	700mm (W) x 610mm (D) x 320mm (H) (Glass surface)
Weight:	Approx. 50kg	Approx. 45kg

Accessories

Part name	SF-7850	SF-7800
Paper exit tray:	1	1
Instruction manual:	1	1
Installation manual:	1	1
Dust cover:	1	1
Corona cleaner:	1	1

* Dust cover is only for some areas only.

Options

Part name	
Automatic document feeder	SF-A12
10-bin sorter	SF-S12
Multi-paper feed unit	SF-MF12

]] GENERAL

1. Features

1) 151-step zoom function
   151 steps of magnification or reduction ratios can be selected as well as 9 steps of fixed magnification ratios.
2) Front loading cassette (Universal type)
   The front-loading cassette reduces installation space requirements.
3) Rotary cassette (Semi-universal type) (SF-7850 only)
   The rotary cassette system allows selection of copy paper direction according to the original. (A4, B5, 8½" x 1" paper)
4) Photo copy mode
   A black and white or color photograph can be clearly copied with this feature.

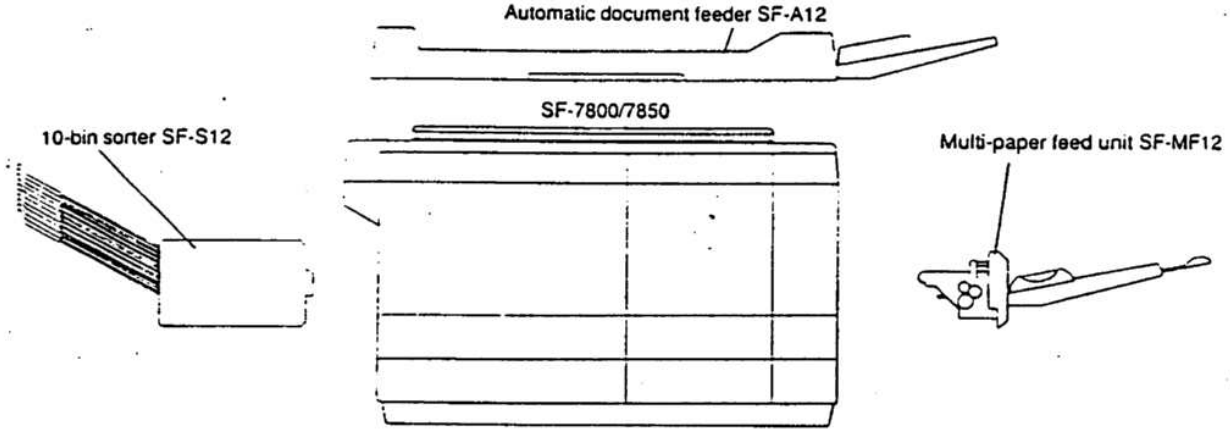

2. System configuration (Options)

The SF-7800/7850 system is as follows:

Specifications of the options

Name	Automatic document feeder SF-A12
Document feeding	Continuous, automatic feeding
Document exit	Reverse exit
Document transport	Single belt (center reference)
Document setting direction	Face down
Document size	A3 – A5 (A5 in landscape direction only) 11" x 17" – 8½" x 5½" (8½" x 5½" in portrait direction only)
Document weight	50g/m^2 – 120g/m^2
Document set capacity	Max. 50 sheets (50g/m^2 – 120g/m^2, Max. thickness 5mm)
Function	Document size detection
Power source	Supplied from the copier body.
Dimensions	948mm (W) x 517mm (D) x 72mm (H) (37.3" (W) x 20.4" (D) x 28" (H))

Name	10-bin sorter SF-S12
Bin number	10 bins
Receiving system	Face up
Copying capacity	Max. 25 sheets/min (A4)
Bin capacity	20 sheets/bin (The top bin: 100 sheets)
Paper size	Max.:A3 (11" x 17"), Min.:A6 (8½" x 5½")
Paper weight	52g/m^2 – 128g/m^2 (For the 2nd – 10th bin, 52g/m^2 – 90g/m^2)
Dimensions	418mm (W) x 462mm (D) x 225mm (H) (16.5" (W) x 18.2" (D) x 8.9" (H))
Weight	Approx. 7kg

Name	Multi-paper feed unit SF-MF12
Paper feed size	A3, B4, A4, A4R, B5, B5R, A6, postcard, 11" x 17" – 8½" x 5½"
Paper weight	50g/m^2 – 80g/m^2: Continuous feeding 52g/m^2 – 128g/m^2: Single paper feed (105g/m^2 or greater: A4 or smaller only)
Capacity	Max. 50 sheets (Sharp cassette standard paper), 20 sheets (Postcards)
Dimension	406mm (W) x 465mm (D) x 117mm (H) (16.1" (W) x 18.3" (D) x 4.6" (H))
Weight	Approx. 1.8kg

[3] UNPACKING AND INSTALLATION

1. Unpacking

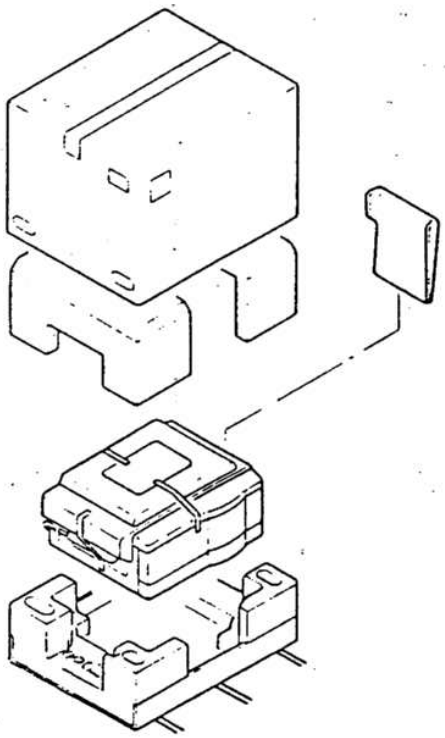

2. Installation conditions

The machine performance may be affected by the installation conditions. Please note the following requirements:

(1) Environment

① Avoid installation in direct sunlight or bright location near a window. (When installing near a window, draw the curtain and close the blind completely.)
Direct sunlight may cause the plastic components and the document cover to deform. Frosted glass may also produce the same effect.

② Avoid installation in a hot, damp place or where rapid changes in humidity occur. (for example; near an air conditioner).
This may cause paper to dampen or condensation to occur inside the copier, and may lead to a misfeed and a deterioration in copy quality.
The recommended environmental conditions are:
20 to 25 degrees C (68 to 77 degrees F), 65±5%RH
The operating environmental conditions
15 to 30 degrees C (59 to 80 degrees F), 20% – 85%RH (65%RH for 35 degrees C)

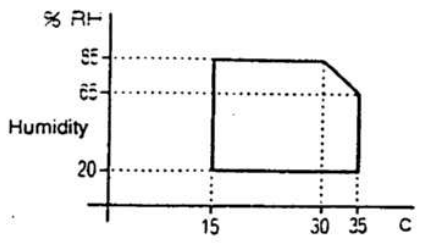

③ Avoid installation in a place where dust or vibration is countered.
Dust deposit inside the copier may lead to a deterioration of copy quality or machine problem.

④ Avoid installation on an unstable surface. The copier must be placed on a level surface to perform proper operation.

⑤ Avoid installation in a place where ventilation or air circulation is poor.
The copier produces ozone during copying. The quantity of ozone produced is too small to give a bad influence on human health. However, when producing a large number of copies, ozone may smell. It is advisable to ventilate properly.

⑥ Avoid installation near inflammable materials or in the presence of ammonia fumes.
Installation near a diazo copy machine may lead to a deterioration of copy quality or a machine malfunction.

⑦ Install the copier near a power outlet.

(2) Space around the copier

Allow a clearance of 10cm between the rear side and the wall for ventilation of the cooling fan. The adequate working space around copier is also required.

(3) Copier table

Install the machine on a level surface, using a water level (UKOGM0054CSZZ), to ensure the copier is level
(Note) If the copier is not level, the toner concentration control may malfunction, resulting in degraded copy.

(4) Power source

Avoid complex wiring.

(5) Ground connection

Be sure to ground the copier for prevention of accidents. A properly grounded outlet should be used.

3. Installation

1) Releasing the optical system lock

① Remove the fixing screws (2 pcs.) of the No. 2, 3 mirror unit on the left side.

② Then, remove the protection sheet.

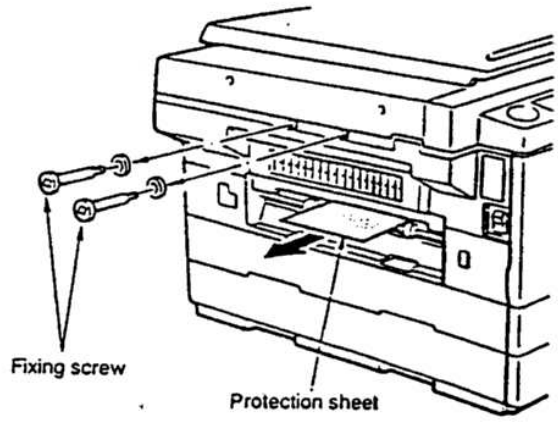

Remove the fixing screws (2 pcs.) of the No. 4, 5 mirror unit on the right side. Open the front cover, and remove the lens fixing screw under the operation panel.

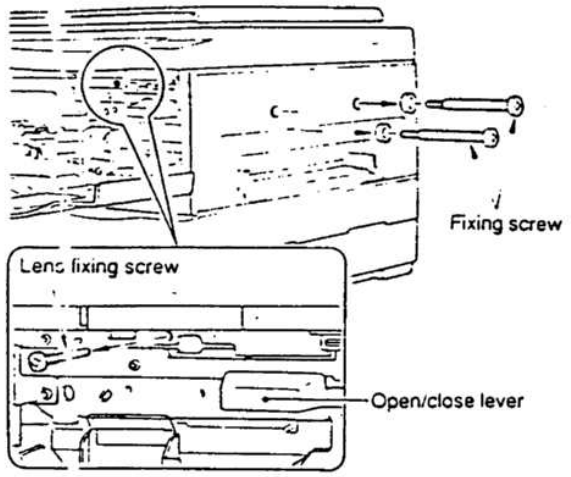

Releasing the 250-sheet cassette lock

① While lifting the front cassette lever, slowly pull it out until it stops. Remove the two package fixing screws which are fixing the rotary disk.

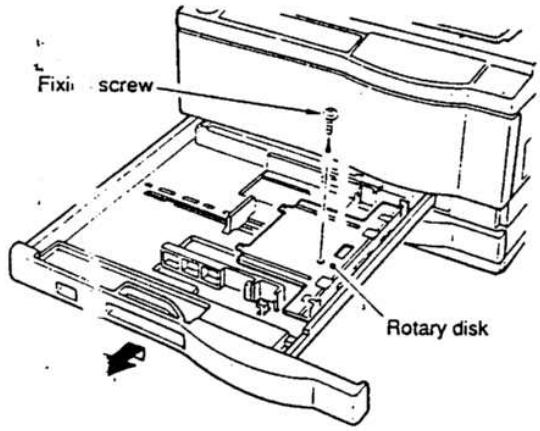

② Set paper in the front cassette so that the paper is placed under the cassette pawls (2 positions), and insert the cassette completely into the copier.

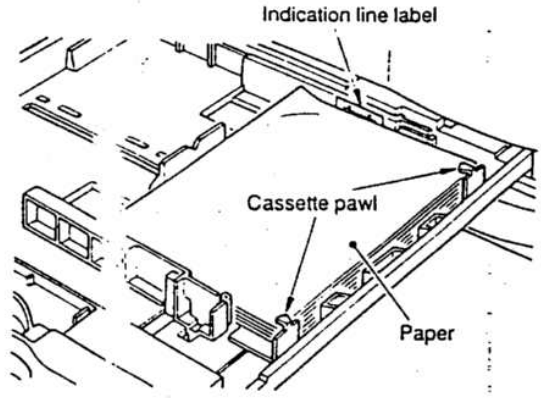

When shipping, the size is set to A3 (11" x 17"). When changing the size, be sure to change the paper side display.

3) Rotary cassette (SF-7850 only)

Releasing cassette lock

① While lifting the rotary cassette lever, slowly pull it out until it stops. Remove the package fixing screw which is fixing the rotary disk.

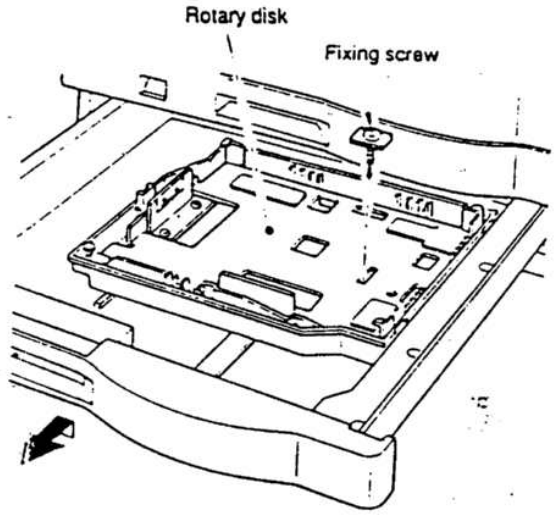

② Set paper in the rotary cassette so that the paper is placed under the cassette pawls (3 positions). Insert the cassette completely into the copier.

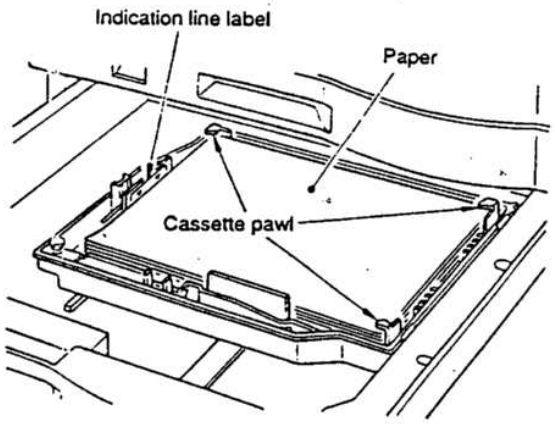

SF-7800
SF-7850

Size change pr edure and size setting

① Pull out the rota cassette.

② Manually turn the rotary feed shaft and turn the cassette about 30°.

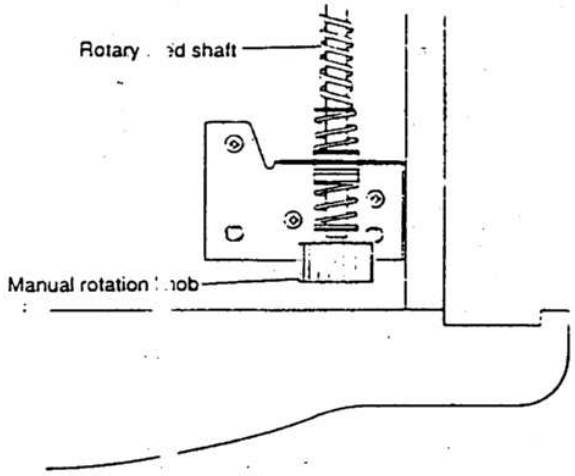

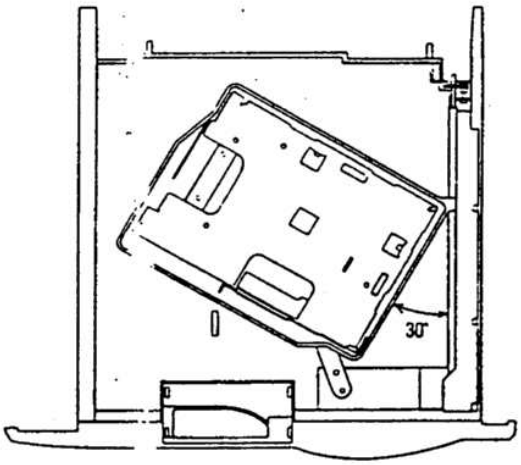

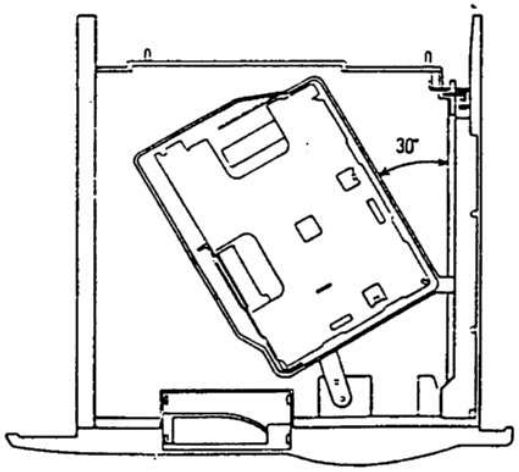

③ Remove th rotation holding plate fixing screws and set the r tion holdin late to the proper position according to the size to changed tc ? positions)

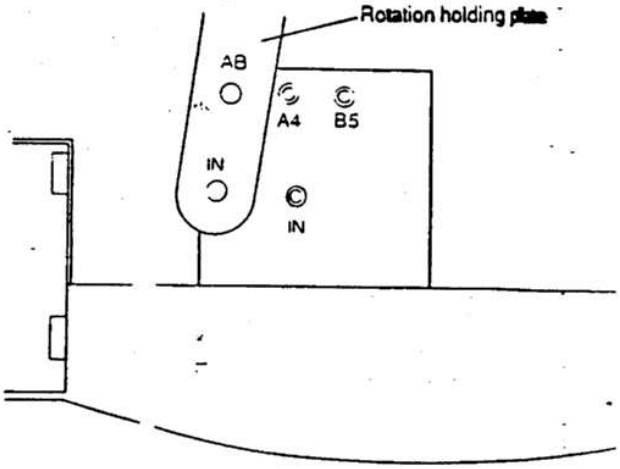

A4: Align th AB hole in the rotation holding plate and the hole in t cassette and fix with a screw.

B5: Align thr AB hole in the rotation holding plate and the B5 hole in t cassette and fix with a screw.

8½" x 11" (L): Align the IN hole in the rotary holding plate and the IN hole in the cassette and fix with a screw.

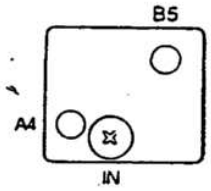

(Cassette rotation plate)

A4: Fix to the A4 hole with a screw.

B5: Fix to the B5 hole with a screw.

8½" x 11" (LT): Fix to the IN hole with a screw.

④ Change the regulation plate S position according to the selected size.

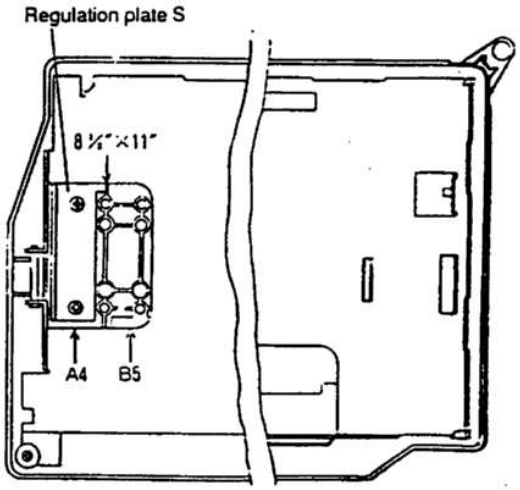

) Change the regulation plate L position according to the selected size.

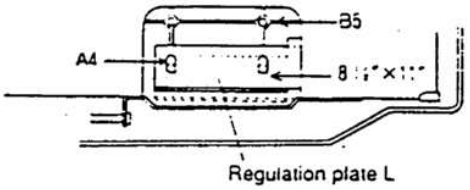

⑥ Cassette size setting

- Perform test command 97, select a desired cassette with the paper size select key, and the selected paper size is displayed in the paper size display.
- When the AUTO IMAGE size key is pressed, the ready lamp lights up and the machine goes into the paper size select mode. Further pressing the AUTO IMAGE size key changes the cassette size display lamp sequentially.
- Select the cassette size with the AUTO IMAGE size key, press the print switch, and the cassette size is registered.

) Drum setting

Push up the open/close lever and slowly open the upper unit.
Remove the drum protection sheet from the photoconductor drum. Be careful not to scratch the photoconductor drum and the drum separation pawl.

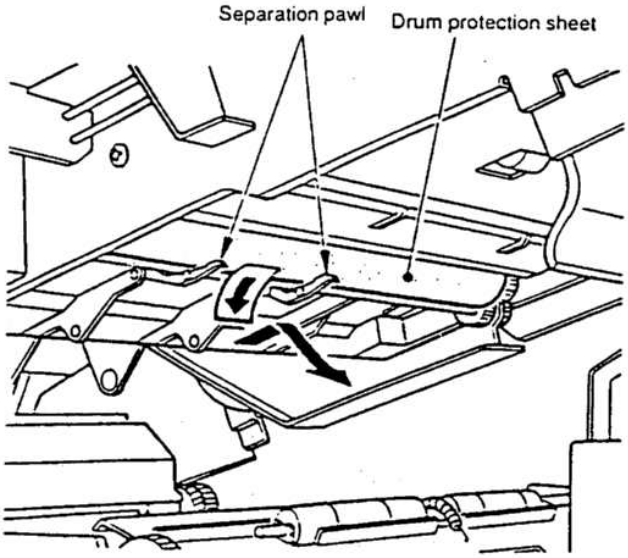

5) Setting the developer unit

① Tilt down the developer unit lever, hold it and remove the developer unit until it stops.

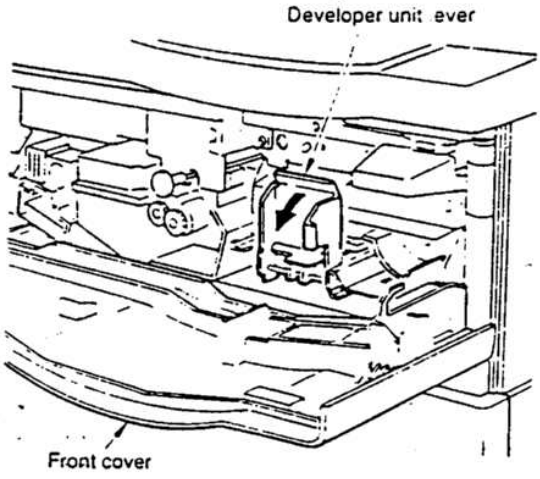

② Hold the grip of the developer unit and remove the developer unit. (Hold the grip upward to unlock the developer unit.)

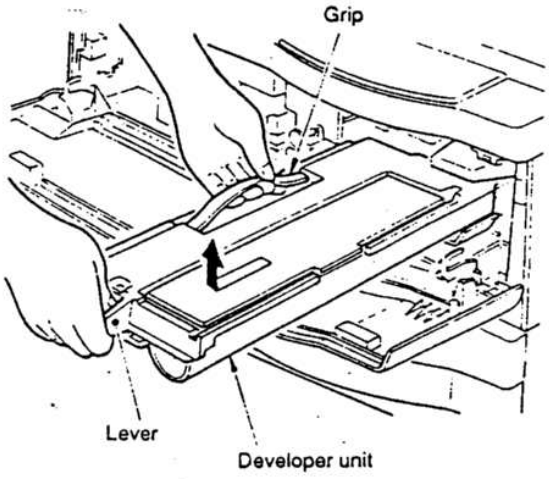

③ Remove the two fixing screws securing the toner hopper from the developer unit, and remove the toner hopper.

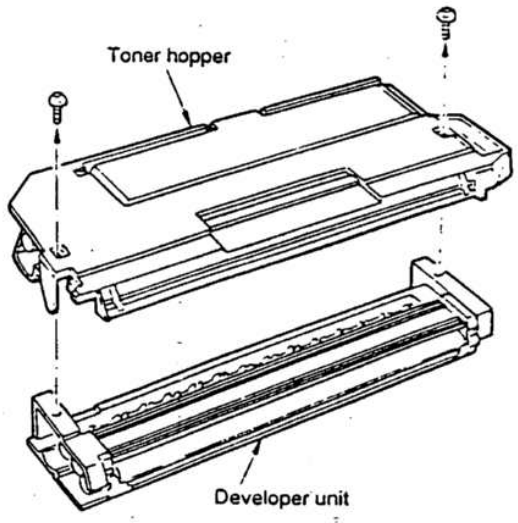

④ While supplying developer from the developer supply port of the developer unit, turn the MG gear clockwise with a screwdriver ⊕ to receive all developer inside the developer unit.

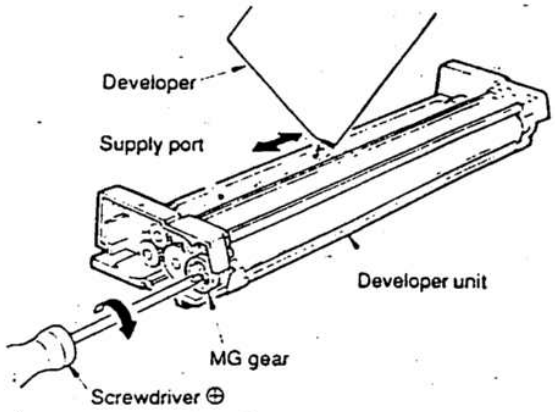

⑤ Fix the toner hopper to the developer unit with two fixing screws.

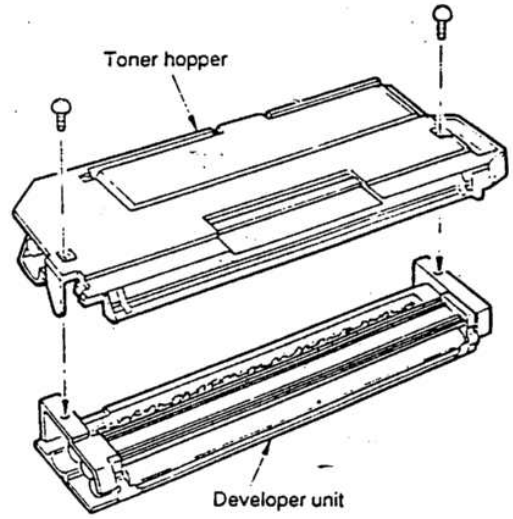

⑥ Insert the developer unit into the copier completely, lift the developer unit lever upward, and close the front cover.

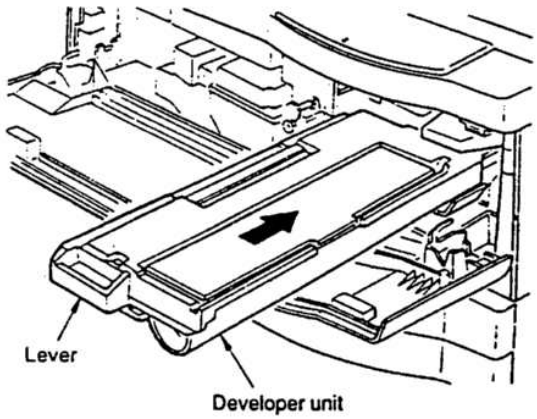

6) Toner concentration sensor level adjustment

① Turn on the power switch.

② Perform test command 25 [CA].

C — =_ — 0 — =_ — 2 — 5 — CA — PSW

③ The interruption lamp lights up and the automatic toner concentration adjustment is performed.

④ Stir the developer unit for 2 minutes in the case of black or for 3 minutes in the case of monochrome. The concentration is displayed in the copy quantity display. (0 ~ 99)

⑤ After stirring, the concentration value is stored in the memory and the machine stops. If the concentration is outside the range of 0 ~ 99, "EE" is displayed.

* For the details, refer to TEST FUNCTIONS AND SELF DIAGNOSIS.

When performing this test command, the color of the developer can be checked with the combination of the maintenance lamp, the jam lamp, and the developer lamp.

Color	Maintenance lamp	Jam lamp	Developer lamp
Black	ON	—	—
Red	—	ON	—
Blue	ON	ON	—
Brown	—	—	ON
Green	ON	—	ON

7) Toner supply

① Open the front cover.
Tilt down the developer unit lever, hold the handle of the developer unit and pull out the developer unit until it stops. Open the toner hopper cover.

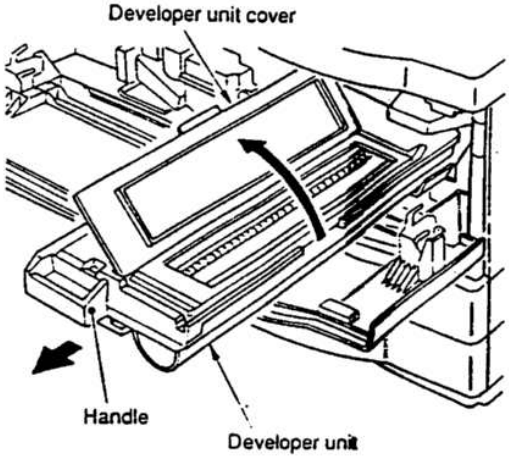

When supplying toner in the toner bottle:
Shake the bottle well and supply toner from the toner supply port.

After shaking the toner cartridge several times, install the toner cartridge to the toner hopper.
Check that the toner cartridge pawl is securely engaged with the toner hopper.

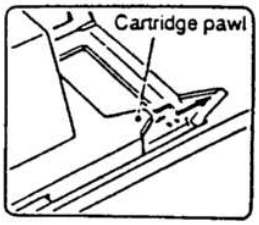

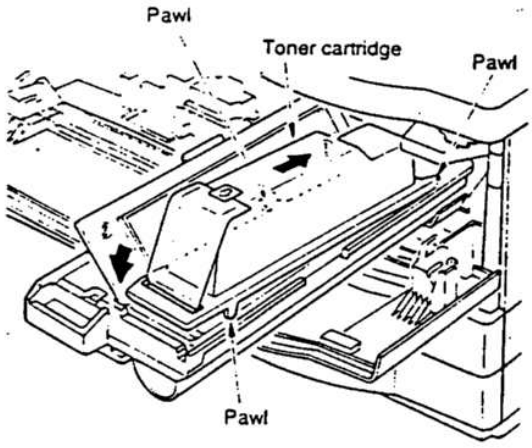

③ While pressing the toner cartridge, pull and remove the toner cartridge sheet to supply toner.
Tap the top of the toner cartridge several times to supply toner completely.
The toner cartridge sheet must be removed completely.

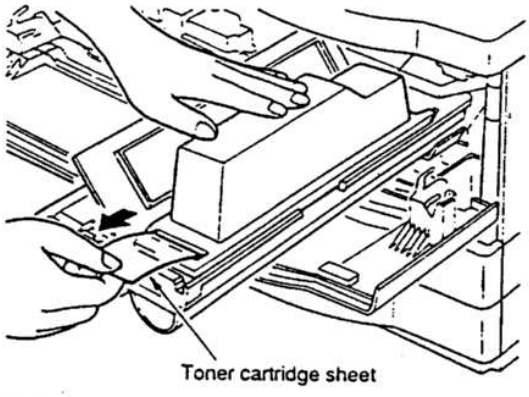

④ Hold the center of the toner cartridge and release the lock. Lift the toner cartridge upward to remove it.

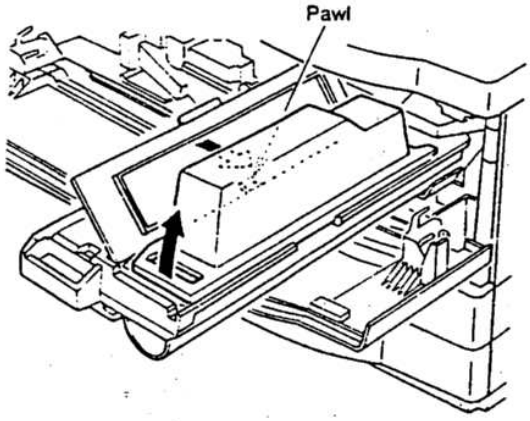

⑤ Close the toner hopper cover, and insert the developer unit completely.

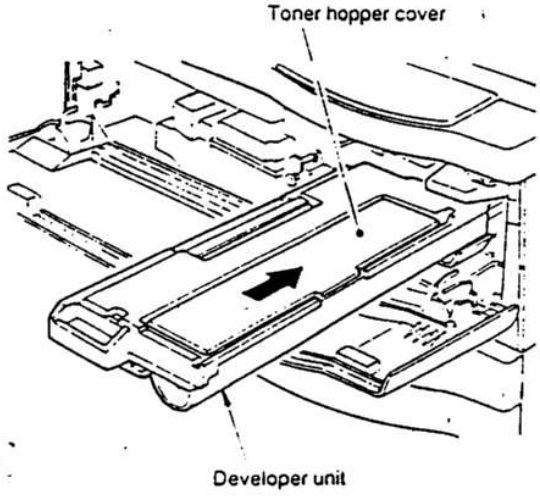

⑥ Close the developer unit level and the front cover.

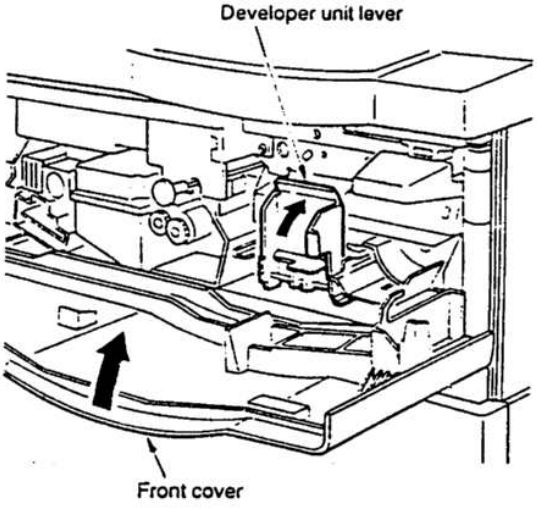

8) Corona wire cleaning

Slide the corona cleaning knob back and forth a few times and clean the corona wire.

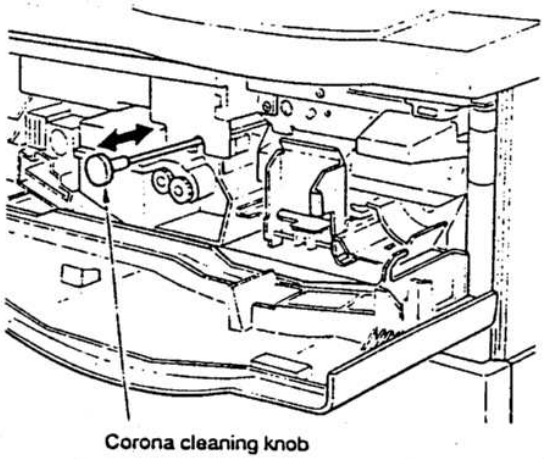

9) Accessory attachment

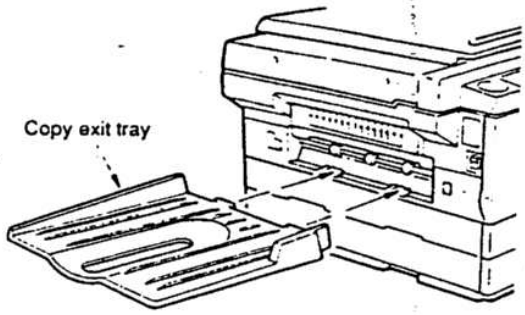

10) Drum sensitivity setting

Perform test command 45, and enter the sensitivity value on the sensitivity label which is located in the rear frame side of the drum unit.

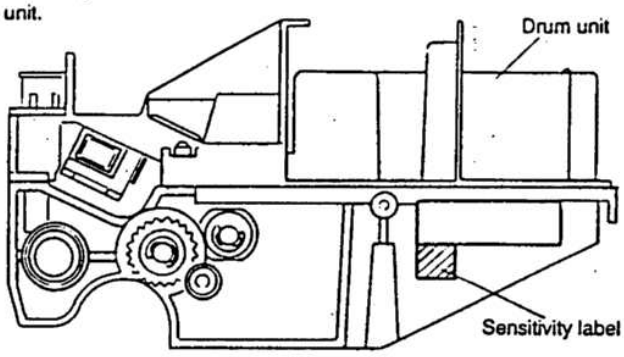

(Rear frame side)

11) Automatic exposure copy mode level check

This check should be performed in the following cases:

- When the machine is installed.
- When maintenance is performed.
- When copy exposure is adjusted.

Checking procedure

① Press the exposure select key to select the photo mode.

② Press the exposure select key again to select the automatic exposure mode, and keep pressing the key for 5 sec.

- When the automatic exposure level adjustment mode is attained, the automatic exposure display lamp blinks (from lighting state). The exposure adjustment display lamp lights up. (Either of 1 – 5.)

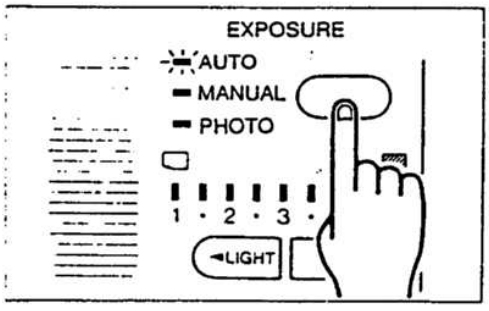

③ Check that the lamp of "3" lights up.
If another lamp than "3" lights up, use the exposure adjustment key to light the lamp of "3".

④ Press the exposure select key to cancel the automatic exposure level adjustment mode.
The exposure display lamp goes off and the automatic exposure display lamp lights up (from blinking state).

12) Copy check

Use a test chart to perform copy check. For a to c, use UKOG-0089CSZZ. For d, use UKOG-0089CSZZ, Kodak gray scale or UKOG-0162FCZZ.

a. Center deviation

Allowable deviation: Within 2.0mm
If not within the allowable range, adjust referring to [7] DISASSEMBLY, ASSEMBLY AND ADJUSTMENTS page 7-19.

b. Lead edge void area and lead edge image loss

Allowable range:
Lead edge void area; 1.0 – 3.0mm
Lead edge image loss; 0 – 3.0mm
If not within the allowable range, adjust referring to [7] DISASSEMBLY, ASSEMBLY AND ADJUSTMENTS page 7-20.

c. Resolution

Allowable range: In normal copy, 5.0 lines/mm at the center, 4.5 lines/mm at the corners.
If not within the allowable range, adjust referring to [7] DISASSEMBLY, ASSEMBLY AND ADJUSTMENTS page 7-14.

d. Copy exposure

Place four sheets of white paper of about 120mm wide and 420..... long on the document table in center reference. Set a test chart (UKOG-0089CSZZ, UKOG-0162FCZZ) or Kodak gray scale on the papers as shown below:

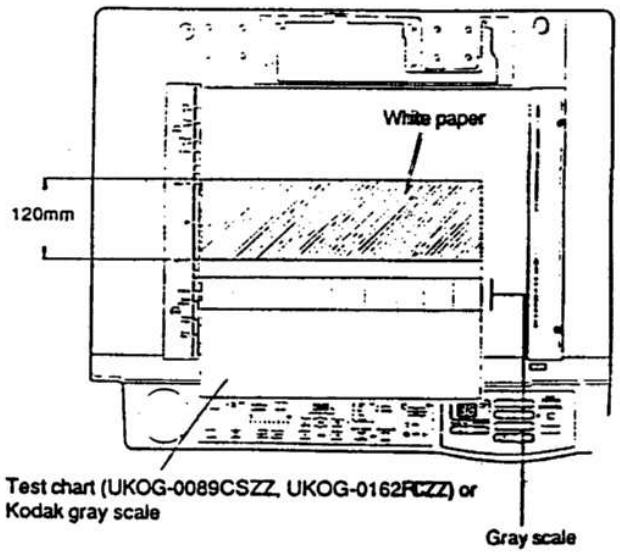

① Use the above chart to check manual exposure 1 and 5.
The reference exposure for each chart is as follows:
When UKOG-0089CSZZ is used:
Exposure 1; 0.5 is slightly copied.
Exposure 5; 0.1 is slightly copied and 0.2 is clearly copied.
When UKOG-0162FCZZ is used:
Exposure 1; 7 is slightly copied and 8 is clearly copied.
Exposure 5; 1 is not copied and 2 is slightly copied.
When Kodak gray scale is used:
Exposure 1; 3 is not copied and 4 is clearly copied
Exposure 5; A is not copied and 1 is clearly copied

② Check the photo mode exposure in the same manner as the manual exposure check. The reference exposure is same as the reference manual exposure.

Check the automatic exposure mode. The reference exposure for each chart is as follows:
When UKO-0089CSZZ is used: 0.2 is slightly copied and 0.3 is clearly copied.
When UKOG-0162FCZZ is used: 2 is not copied and 3 is slightly copied.
When Kodak gray scale is used: 1 is slightly copied and 2 is clearly copied.
For adjustment procedure, refer to [11] COPY EXPOSURE ADJUSTMENT.

13) Mini maintenance counter setting

Setting procedure

① Perform test command 72.
C — =J — 0 — =J — 7 — 2 — PSW
The currently set maintenance cycle code (in the table below) is displayed and the ready lamp lights up.

② After the ready lamp lights up, enter the set code corresponding to the maintenance cycle code.

Maintenance preset counter setting

Set code	Developer lamp		Maintenance lamp
	Black	Monochrome	
0	30,000 sheets	10,000 sheets	10,000 sheets
1	30,000 sheets	10,000 sheets	15,000 sheets
2	30,000 sheets	10,000 sheets	30,000 sheets
3	Not lighted	10,000 sheets	Not lighted.

14) Option setting

When any option is installed, perform the test command according to the option.

Setting procedure

① Perform test command 80.
C — =J — 0 — =J — 8 — 0 — PSW

② Calculate the total of the set code of the options installed, and set the total number.

Option mode set value

Option	Model	Code
ADF	SF-A12	1
Multi-paper feed unit	SF-MF12	4
Sorter	SF-S12	20

[4] SUPPLIES

Developer, toner, drum life

	Life	Storage period	Storage conditions
Drum	30,000 copies	24 months from production	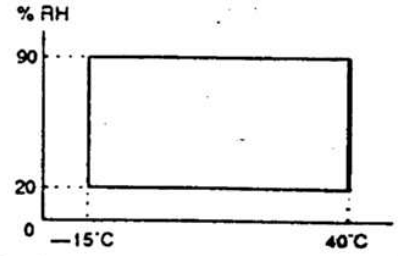
Developer	Black: 30,000 copies Red, Blue, Brown, Green: 10,000 copies	24 months from production	
Toner	Each color: 2,500 copies (125g each) * A4/letter size, 6% black background	24 months from production	

How to read the lot number

Drum

O O O O O O O O O
1 2 3 4 5 6 7 8 9

1. Photoconductor sensitivity
2. Model code (L)
3. The last digit of year
4. Month (123 ··· XY) } OPC coating date
5: 6: Day } OPC coating date
7. Month (123 ··· XY) } Drum/flange assembling date
8: 9: Day } Drum/flange assembling date

Toner, developer

O O O O O O O O
1 2 3 4 5 6 – 7

1: Production place
2: The last digit of year
3: 4: Production month
5: 6: Production day
7: Lot number

For U.S.A. and Canada

Name	Content	Life	Sharp model name	Packing unit	Remark
Drum unit	OPC drum including separation sub-pawl, cleaning blade, toner receiver, waste toner container.	30K	SF-780DR	10	Unit composition including the waste toner container.
Developer (Black)	Developer (500g) x 10 (Aluminum package)	30K (x 10 pcs.)	SF-780MD1	1	SF-780ND1 x 10 = SF-780MD1 Ordering unit: SF-780MD1
Developer (Red) (Blue) (Brown) (Green)	Developer (500g) x 10 (Bottle) Red: SF-780ND2 Blue: SF-780ND3 Brown: SF-780ND4 Green: SF-780ND5	10K (x 10 pcs.)	SF-780MD2 SF-780MD3 SF-780MD4 SF-780MD5	1	(SF-780ND2 – 5) x 10 = (SF-780MD2 – 5) Ordering unit: SF-780MD2 – 5
Toner	Toner (210g) x 10 (Cartridge)	5K (x 10 pcs.)	SF-780MT1	1	(SF-780NT1) x 10 = (SF-780MT1) Ordering unit: SF-780MT1
Toner	Toner (210g) x 10 (Cartridge) Red: SF-780NT2 Blue: SF-780NT3 Brown: SF-780NT4 Green: SF-780NT5	5K (x 10 pcs.)	SF-780MT2 SF-780MT3 SF-780MT4 SF-780MT5	1	(SF-780NT2 – 5) x 10 = (SF-780MT2 – 5) – Ordering unit: SF-780MT2 – 5
Color developer kit	Developer (500g) x 1 Toner cartridge (210g) x 1 Developer unit x 1 Storage case		SF-780NK2 SF-780NK3 SF-780NK4 SF-780NK5	1	
Heat roller kit	Upper/lower heat roller x 1 each Separation pawl, upper x 4, lower x 3 Cleaning roller x 1	60K	SF-780HR	5	

r Europe

Name	Content		Life	Sharp model name	Packing unit	Remark
Drum unit	OPC drum including separation sub-pawl, cleaning blade, toner receiver, waste toner container.		30K	SF-780DR	10	Unit composition including the waste toner container.
Developer (Black)	Developer (500g) (Aluminum package)	x 10	30K (x 10 pcs.)	SF-780LD1	1	SF-780DV1 x 10 = SF-780LD1 Ordering unit: SF-780LD1
Developer (Red) (Blue) (Brown) (Green)	Developer (500g) (Bottle) Red: SF-780DV2 Blue: SF-780DV3 Brown: SF-780DV4 Green: SF-780DV5	x 10	10K (x 10 pcs.)	SF-780DV2 SF-780DV3 SF-780DV4 SF-780DV5	10	Ordering unit: SF-780DV2 – 5
Toner	Toner (210g) (Cartridge)	x 10	5K (x 10 pcs.)	SF-780CT1	1	(SF-780ST1) x 10 = (SF-780CT1) Ordering unit: SF-780CT1
Toner	Toner (210g) (Cartridge) Red: SF-780T2 Blue: SF-780T3 Brown: SF-780T4 Green: SF-780T5	x 10	5K (x 10 pcs.)	SF-780T2 SF-780T3 SF-780T4 SF-780T5	10	Ordering unit: SF-780T2 – 5
olor developer kit	Developer (500g) Toner cartridge (210g) Developer unit Storage case	x 1 x 1 x 1		SF-780K2 SF-780K3 SF-780K4 SF-780K5	1	
Heat roller kit	Upper/lower heat roller Separation pawl, upper lower Cleaning roller	x 1 each x 4, x 3 x 1	60K	SF-780HR	5	

For other countries

Name	Content		Life	Sharp model name	Packing unit	Remark
Drum unit	OPC drum including separation sub-pawl, cleaning blade, toner receiver, waste toner container.		30K	SF-780DR	10	Unit composition including the waste toner container.
Developer (Black)	Developer (500g) (Aluminum package)	x 10	30K (x 10 pcs.)	SF-780MD1	1	SF-780ND1 x 10 = SF-780MD1 Ordering unit: SF-780MD1
Developer (Red) (Blue) (Brown) (Green)	Developer (500g) (Bottle) Red: SF-780ND2 Blue: SF-780ND3 Brown: SF-780ND4 Green: SF-780ND5	x 10	10K (x 10 pcs.)	SF-780MD2 SF-780MD3 SF-780MD4 SF-780MD5	1	(SF-780ND2 – 5) x 10 = (SF-780MD2 – 5) Ordering unit: SF-780MD2 – 5
Toner	Toner (210g) (Cartridge)	x 10	5K (x 10 pcs.)	SF-780MT1	1	(SF-780NT1) x 10 = (SF-780MT1) Ordering unit: SF-780MT1
Toner	Toner (210g) (Cartridge) Red: SF-780NT2 Blue: SF-780NT3 Brown: SF-780NT4 Green: SF-780NT5	x 10	5K (x 10 pcs.)	SF-780MT2 SF-780MT3 SF-780MT4 SF-780MT5	1	(SF-780NT2 – 5) x 10 = (SF-780MT2 – 5) Ordering unit: SF-780MT2 – 5
Color developer kit	Developer (500g) Toner cartridge (210g) Developer unit Storage case	x 1 x 1 x 1		SF-780NK2 SF-780NK3 SF-780NK4 SF-780NK5	1	
Heat roller kit	Upper/lower heat roller Separation pawl, upper lower Cleaning roller	x 1 each x 4, x 3 x 1	60K	SF-780HR	5	

[5] EXTERNAL AND INTERNAL STRUCTURE

1. External structure

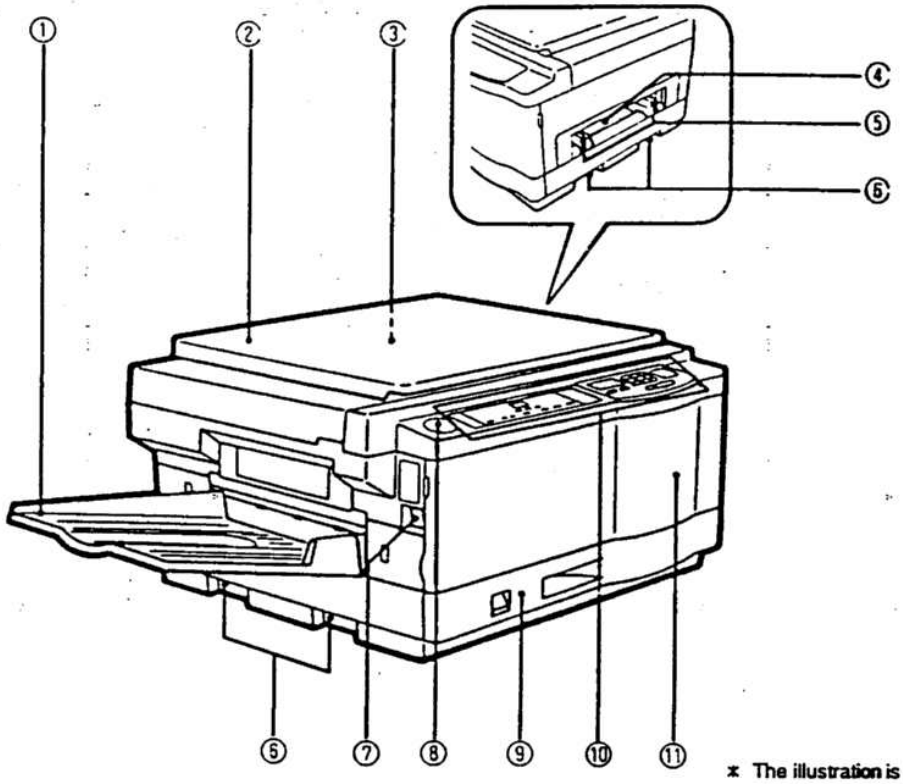

* The illustration is the SF-7800.

①	Copy tray	②	Document cover	③	Document table
④	Manual paper feed port	⑤	Manual paper feed guide	⑥	Carry handle
⑦	Power switch	⑧	Clip tray	⑨	Cassette
⑩	Operation panel	⑪	Front cover		

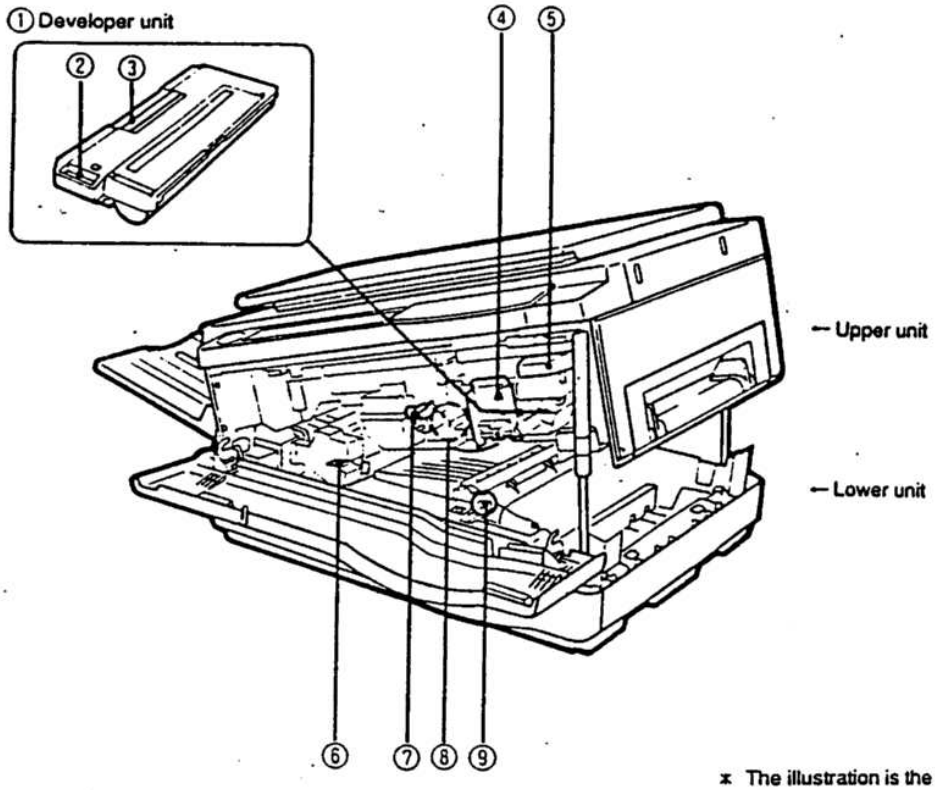

* The illustration is the SF-7800

①	Developer unit	②	Developer unit handle	③	Carry strap
④	Developer unit lever	⑤	Main body open/close lever	⑥	Fuser unit open/close knob
⑦	Corona cleaning knob	⑧	Photoconductor drum	⑨	Roller rotating knob

2. Operation panel

① Sorter key/indicator
Used to select the sorter modes and the group mode. The indicator corresponding to the selected mode lights up.

② Dual page copy key/indicator (SF-7850 only)
Makes individual copies of two originals placed side-by-side on the document table.

③ Exposure select key/indicator
Used to select the exposure mode: Auto/Manual/Photo.

④ LIGHT and DARK keys/indicators
Used to adjust the manual or photo exposure level.
Pressing the LIGHT key moves the indicator to the left, and pressing the DARK key moves the indicator to the right.

⑤ Copy magnification ratio indicator
Displays the copy magnification ratio for enlargement or reduction.

⑥ Reduction key
Used to sequentially select four preset reduction ratios.

⑦ Zoom keys
Use to select any enlargement or reduction copy magnification ratio from 50% to 200% in 1% increment.

⑧ Same-size key
Resets the copy magnification ratio to 100%.

⑨ Enlargement key
Used to sequentially select four preset enlargement copy magnification ratio.

⑩ Paper size auto select indicator (SF-7850 only)
Lights up when the paper size auto select feature is on.

⑪ Paper size indicator (SF-7850 only)
Used to indicate the selected paper size.

⑫ Paper size select key
Used to select copy paper size.

⑬ AUTO IMAGE size key/indicator (SF-7850 only)
Press for automatic copy magnification ratio selection.

⑭ Cassette/misfeed position indicator
The (■) lamp lights up to indicate the selected cassette, and the (▼) lamp blinks to indicate the paper jam position.

⑮ Paper empty lamp (SF-7850 only)
Lights up when copy paper is exhausted or the cassette is removed.

⑯ Color toner indicator
Lights up when a color developer unit is installed.

⑰ Misfeed indicator
Blinks when a paper jam occurs.

⑱ Mini maintenance indicator
Lights up when the mini maintenance is required.

⑲ Toner empty indicator
Lights up when toner in exhausted.

⑳ Maintenance indicator
Lights up when maintenance is required.
Blinks whe waste toner full is detected.

㉑ Copy quantity display

- Displays the set copy quantity or finished copy quantity.
- When the diagnostic function is active, an error code is displayed.
- "[P]" blinks when paper is exhausted or paper is jammed in the cassette section.
  [P] lights up when the cassette is removed. (SF-7800 only)

㉒ CLEAR ALL key
Clears all settings and returns the copier to the initial settings.

Standard state	
• Magnification ratio	= 100% (Normal size)
• Copy exposure	= Auto copy exposure mode
• Copy quantity display	= 0
• Interruption copy	= Cancel
○Sorter (Option) installation	= Non-sort state

㉓ INTERRUPT key/indicator
Used to interrupt a continuous copy operation for making another copy. Also called pause (P).

㉔ Keypad
Used to select the desired copy quantity.

㉕ Zero/readout key

- Enters 0 when specifying the copy quantity.
- When this key is pressed and held during continuous copy operation, the number of copies completed is displayed while it is pressed. When this key is pressed in the other mode than continuous copy operation, the total number of copies completed is displayed.

㉖ Clear key
Clears the copy quantity display or terminates a continuous copy operation.

㉗ COPY button (PSW) Print key
When the machine is ready to copy, the indicator in the button lights up. Press the button to start copying.

SF-7800

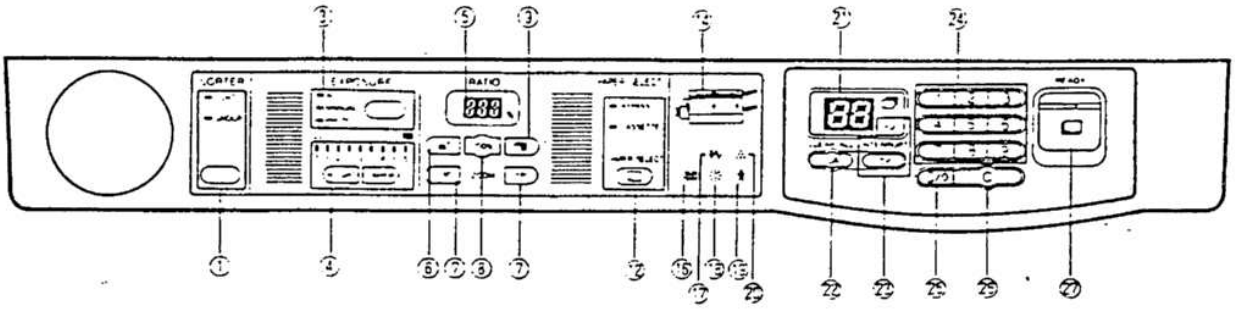

SF-7850 (INCH series)

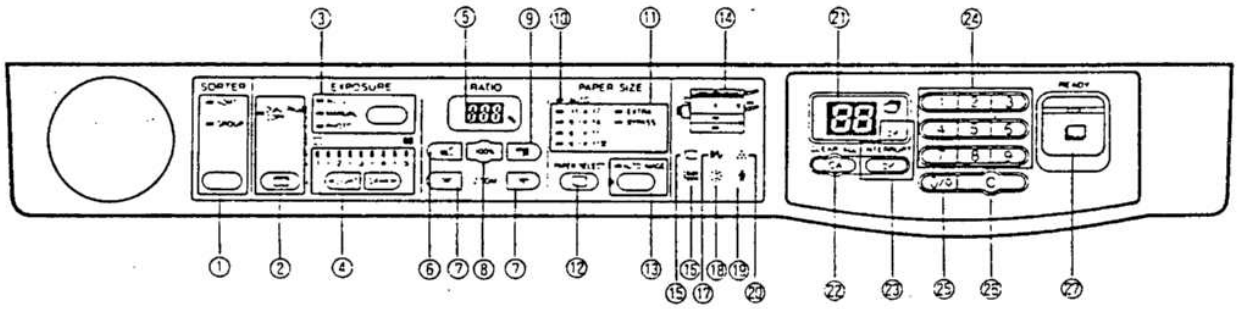

SF-7850 (AB series)

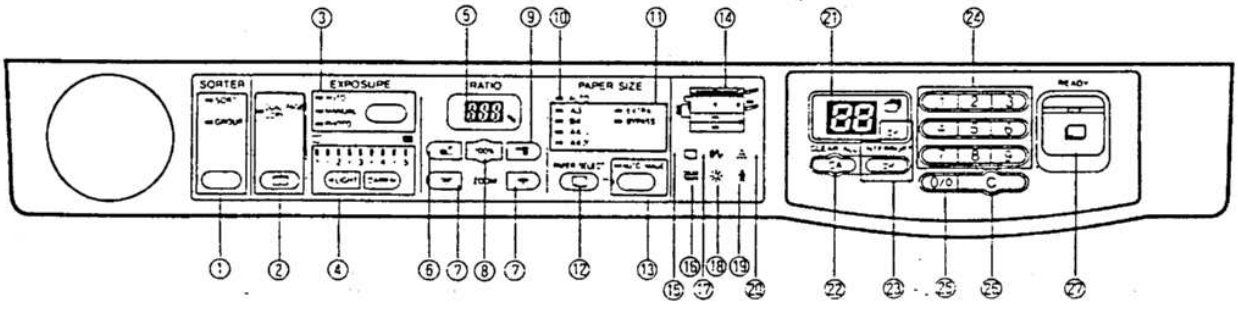

3. Internal structure

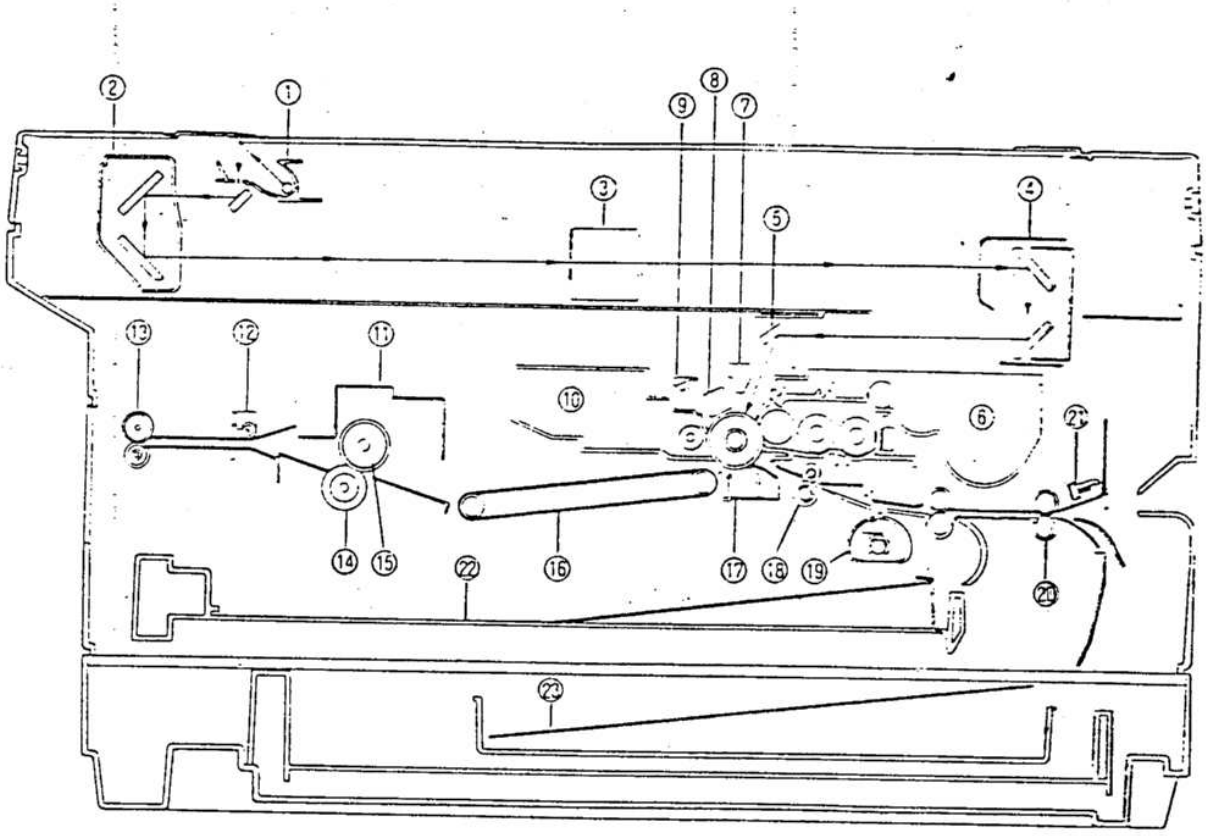

①	Copy lamp unit (Mirror base A)	②	No. 2/3 mirror base unit (Mirror base B)	③	Lens
④	No. 4/5 mirror base unit (Mirror base C)	⑤	No. 6 mirror	⑥	Developer unit
⑦	Blank lamp unit	⑧	Main corona	⑨	Discharge lamp unit
⑩	Waster toner box	⑪	Fuser unit	⑫	Paper exit detector (POD)
⑬	Paper exit roller	⑭	Fuser roller lower	⑮	Fuser roller upper
⑯	Suction unit	⑰	TC case unit	⑱	Resist roller
⑲	Paper feed roller 250	⑳	Transport roller S	㉑	Manual paper entry detector (PID)
㉒	250-sheet cassette	㉓	Rotary cassette (SF-7850 only)		

Switches, sensors, and detectors

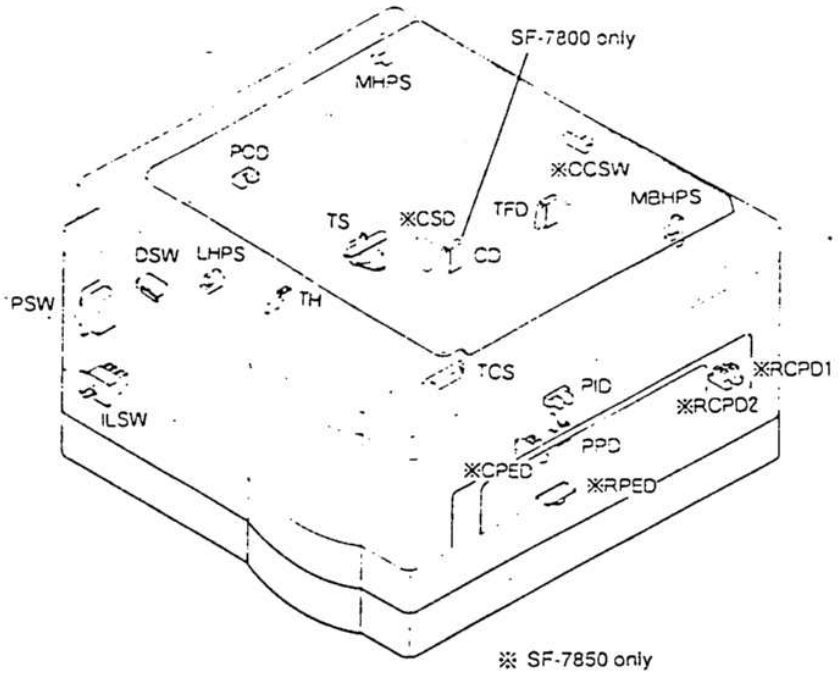

※ SF-7850 only

Code	Name	Type	Function	Output
MHPS	Mirror home position sensor	Transmission photosensor	Mirror base A (Copy lamp unit) home position detection	HIGH level when detected.
OCSW	Original cover switch	Transmission photosensor	Document cover open/close detection	HIGH level when detected.
MBHPS	Mirror base home position sensor	Transmission photosensor	No. 4/5 mirror base (Mirror base C) home position detection	HIGH level when detected.
LHPS	Lens home position sensor	Transmission photosensor	Lens home position sensor	HIGH level when detected.
DSW	Door switch	Microswitch	Front cover open/close switch	LOW level when closed.
PID	Paper in detector	Transmission photosensor	Manual paper feed detection switch	When paper is detected.
PPD	Paper pass detector	Transmission photosensor	Paper feed unit paper pass detection switch	HIGH level when paper is detected.
CPED	Cassette paper empty detector	Transmission photosensor	250-sheet cassette paper empty detection	HIGH level when paper empty.
RPED	Rotary cassette paper empty detector	Reflection photosensor	Rotary cassette paper empty detection	LOW level when paper empty.
RCPD1	Rotary cassette position detector 1	Transmission photosensor	Rotary cassette position detection 1	HIGH level when detected.
RCPD2	Rotary cassette position detector 2	Transmission photosensor	Rotary cassette position detection 2	HIGH level when detected.
TCS	Toner control sensor	Magnetic sensor	Developer unit toner control sensor	HIGH level when toner concentration becomes low.
TFD	Toner full detector	Microswitch	Waste toner full detection	HIGH level when toner full is detected.
CD	Cassette detector	Microswitch	Cassette switch	HIGH level when detected.
CSD	Cassette size detector	Special switch	Cassette size detection switch	—
TS	Thermostat	Thermostat	Fuser unit high temperature detection	Contact open when abnormally high temperature is detected.
THE	Thermistor	Thermistor	Fuser unit temperature control	Resistance becomes greater when low temperature is detected.
POD	Paper out detector	Transmission photosensor	Paper exit detection switch	LOW level when detected.
PSW	Power switch	See-saw switch	Power switch	—
ILSW	Interlock switch	Interlock switch	Front cabinet open/close switch	ON when closed.

5. Motors

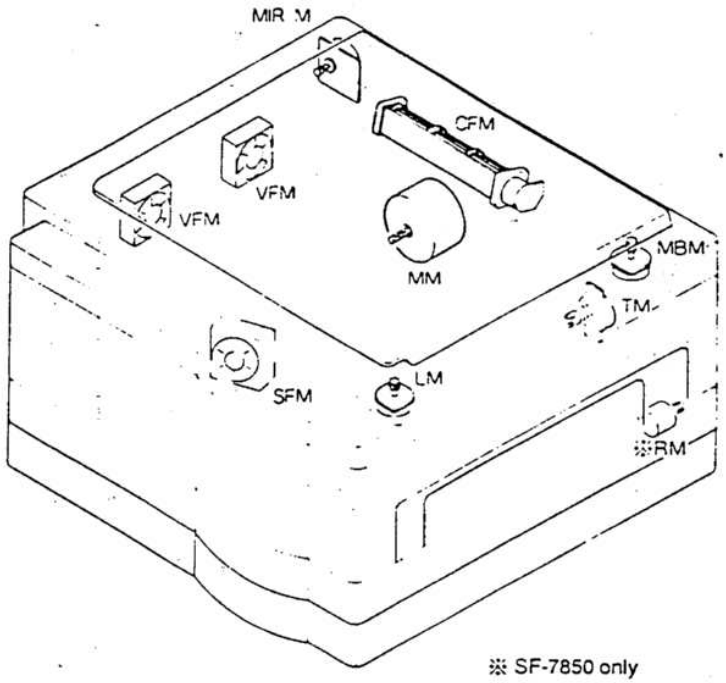

※ SF-7850 only

Code	Name	Type	Function
MIRM	Mirror motor	DC brushless motor	To feed and return mirror bases A, B.
CFM	Cooing fan motor	DC brushless motor	Cooling fan in the machine. ON when copying
MBM	Mirror base motor	Stepping motor	To drive No. 4/5 mirror bases.
TM	Toner motor	Synchronous motor	To supply toner.
LM	Lens motor	Stepping motor	To drive the lens
RM	Rotary cassette motor	DC brushless motor	To drive the rotary cassette.
VFM1,2	Ventilation fan motor	Brushless motor	Ventilation fan in the machine (The speed is reduced when in warming up or in stand-by mode.)
SFM	Suction fan motor	Brushless motor	Paper suction motor
MM	Main motor	AC synchronous motor	To drive each section.

PWB's

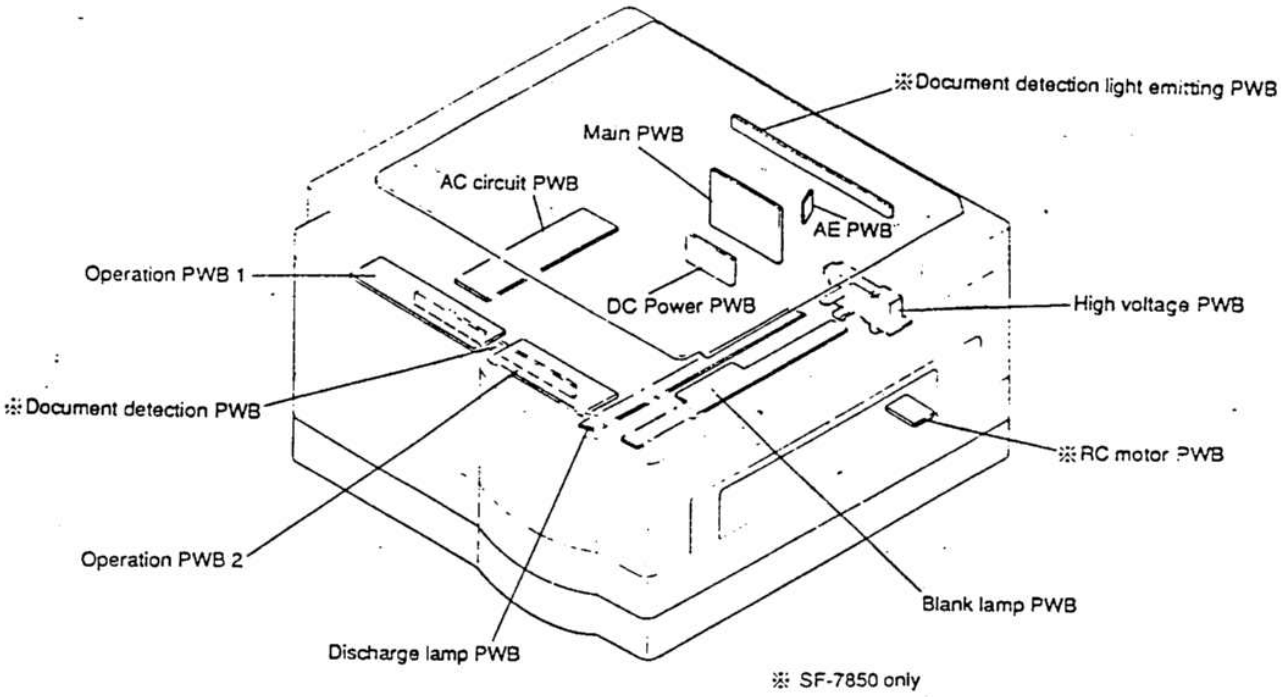

Name	Difference between SF-7800/7850	Remark
Main PWB	Different	
DC power PWB	Same	
High voltage PWB	Same	
Blank lamp PWB	Same	
AE PWB	Same	
Document detection light receiving PWB	—	SF-7850 only
Document detection light emitting PWB	—	SF-7850 only
Discharge lamp PWB	Same	
Operation PWB 1	Different	
Operation PWB 2	Same	
AC circuit PWB	Same	Includes the copy lamp control circuit.
RC motor PWB	—	SF-7850 only

[6] DESCRIPTION ON EACH SECTION

This machine is composed of the optical section, the paper feed section, the transfer/transport section, the fusing section, the image forming section, and the rotary cassette section (SF-7850 only).

Cross section

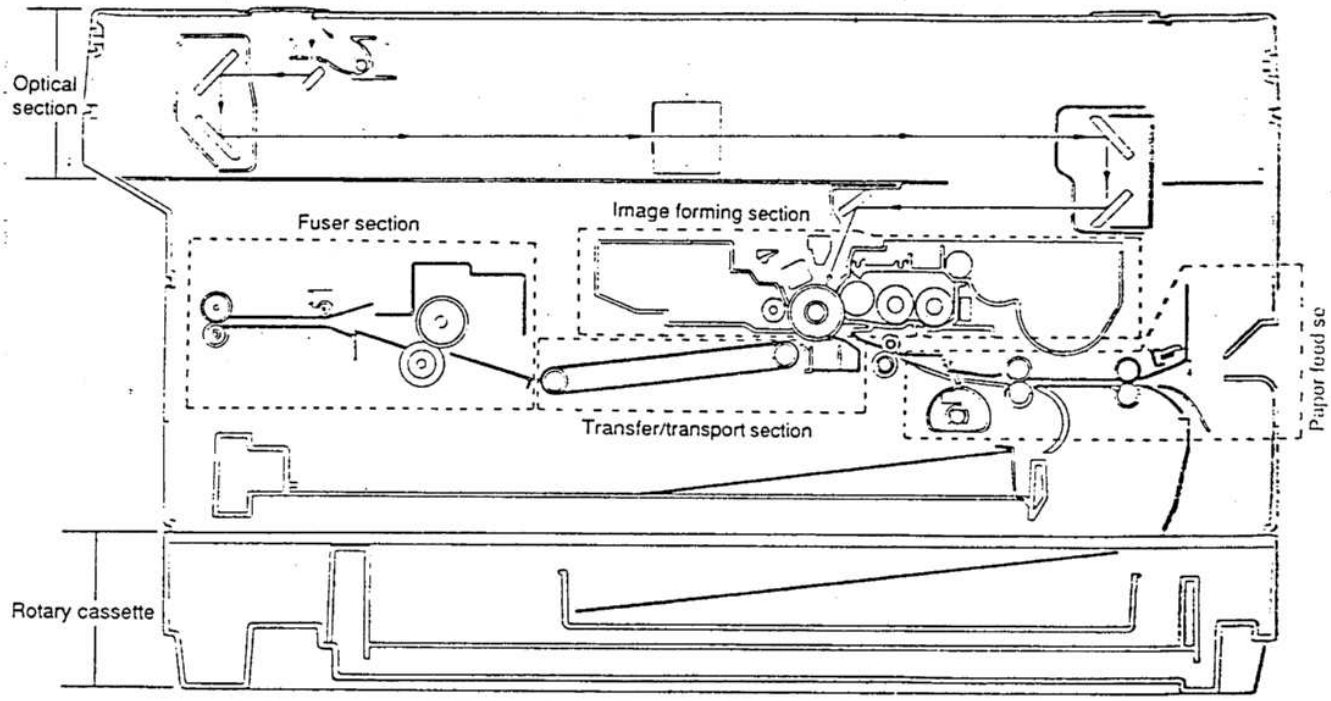

1. Optical system

The optical system consists of a fixed focal distance lens and six mirrors.
Because the lens position is shifted relative to the mirrors, reduction and enlargement is possible from x50% to x200% in 151 increments of 0.01.
The lens position relative to the mirror is changed by means of a stepping motor. The reason six mirrors are used is to adjust the optical path to internal mechanism which permits a smaller internal structure. Exposure is controlled electronically by varying the intensity of the copy lamp. The voltage applied to the copy lamp is stabilized to enhance uniform exposure.
A slit exposure and moving light source are used in combination with a stationary document exposure table.

Optical system cross sectional view

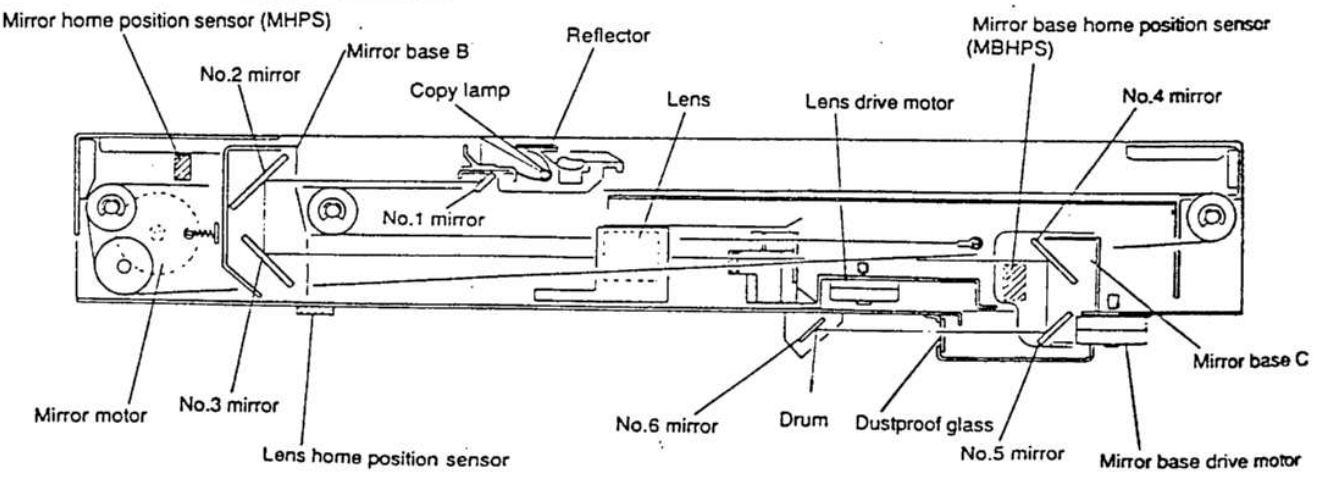

Relation of document. lens, vs. image in each magnification ratio

In the enlargement mode, as compared to the 1:1 or normal mode, the lens shifts closer to the document. The table glass distance becomes shorter. The No. 4 and No. 5 mirrors (mirror base C) move away from the lens, increasing the lens to image distance. This increases the object to image distance.

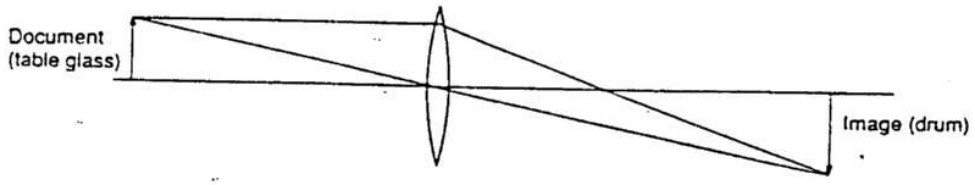

In the normal or 1:1 mode, the table glass to lens distance and the lens to image distance are equal. In this mode the object to image distance is shortest.

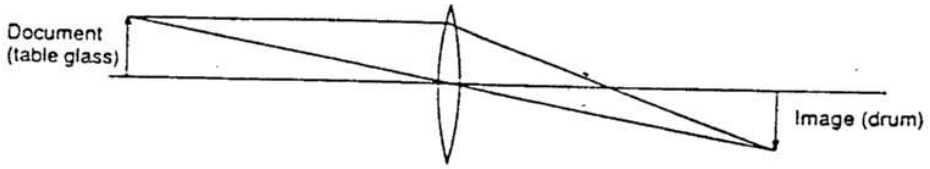

In the reduction mode, as compared to the normal or 1:1 mode, the lens shifts to the image. The document to lens distance becomes longer. The No. 4 and No. 5 mirrors (mirror base C) move away from the lens.
The lens to image distance increases along with the object to image distance.

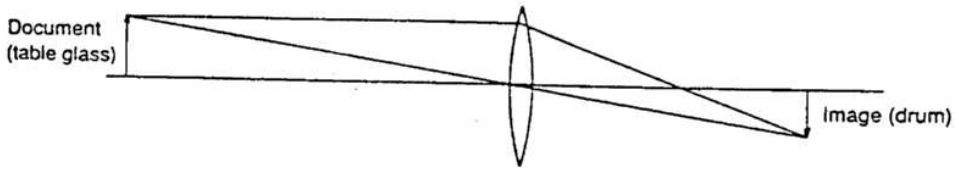

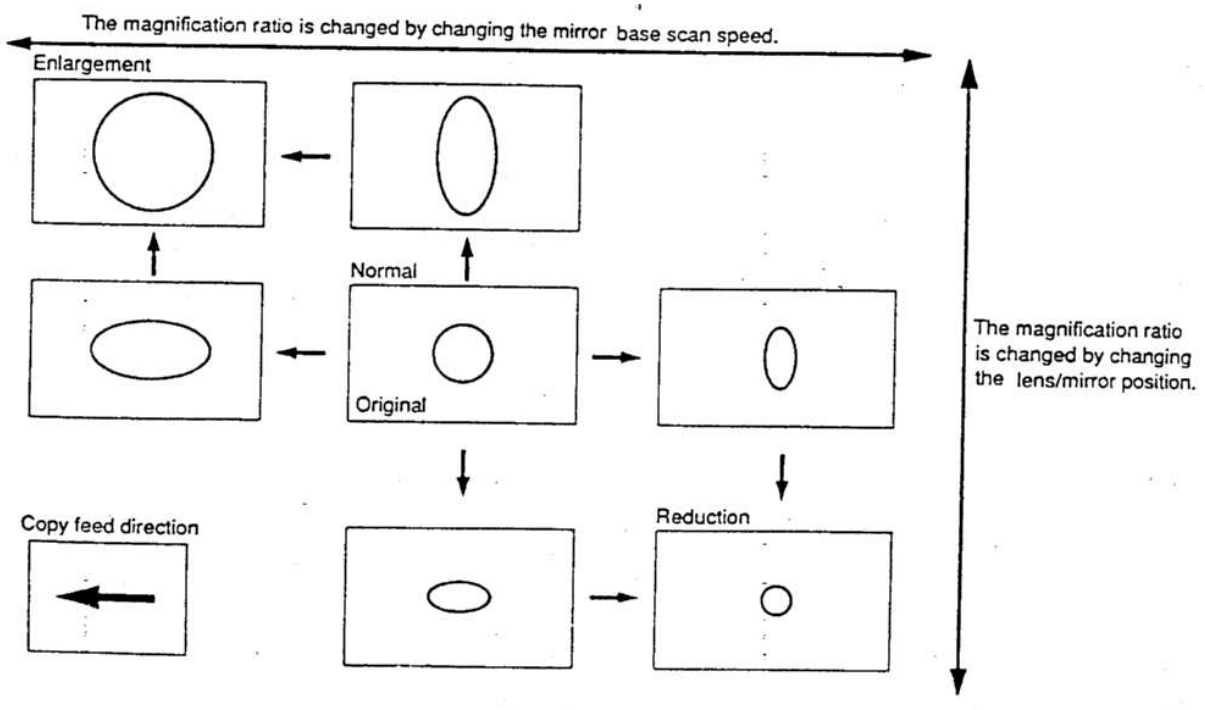

SF-7800
SF-7850

Names and functions of parts

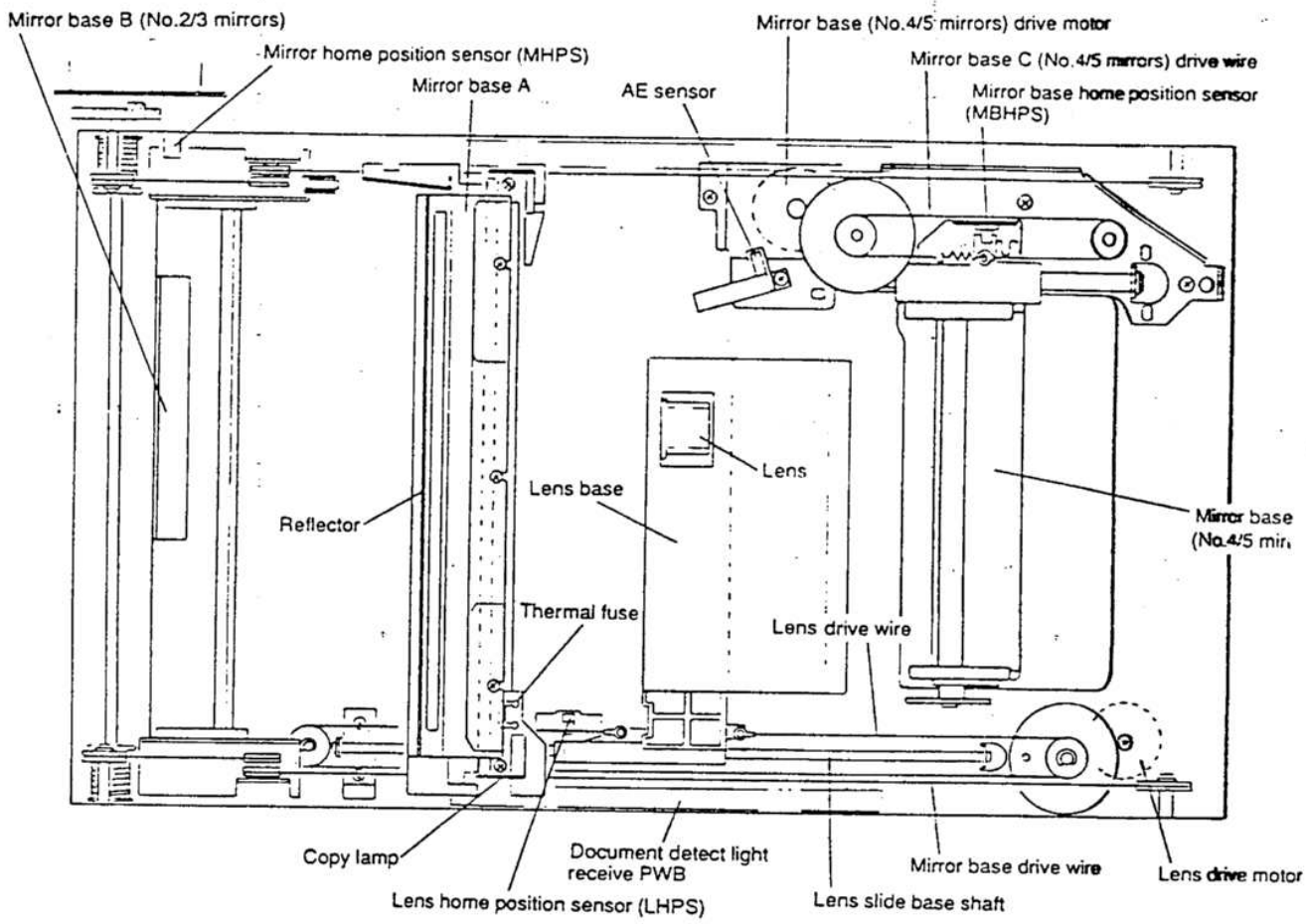

(1) Document table

The document table is stationary and the document is aligned at the center left of the document glass.

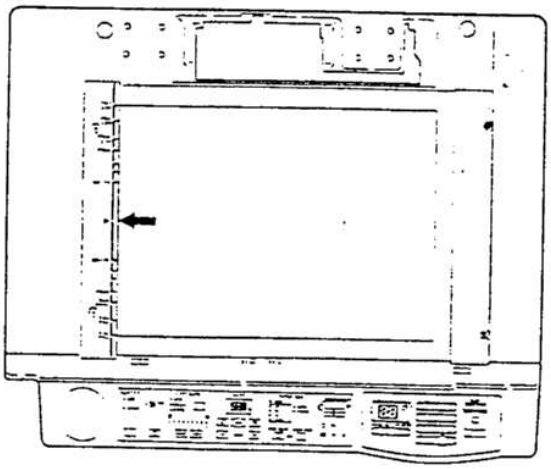

(2) Copy lamp

100V series: 85V, 275W
200V series: 170V, 310W
The copy lamp is controlled by the regulated power supply from the CLC (Copy Lamp Control) PWB to produce stable illumination.

(3) Mirrors

Six mirrors are used.
No. 1 mirror is mounted on the mirror base A.
No. 2 and No. 3 mirrors are mounted on the mirror base B.
No. 4 and No. 5 mirrors are mounted on the mirror base C.
The mirror base A and B move during copy operation in the enlarment and reduction modes.

(4) Lens (fixed focus distance lens)

- Structure: 3 lenses, 1 group
- Aperture: F8.5
- Focal distance: 195mm±1%

(5) Lens home position sensor (LHPS)

Used to sense the lens position. The output signal is used to control magnification ratio based on the home position of the lens. Magnification ratio varies depending on the lens location. A transmission photo sensor is used.

(6) Mirror base home position sensor (MBHPS)

Used to sense the mirror base C (No. 4 5 mirrors) position. The sensor output signal is basic signal to control the copy magnification ratio and focus. A transmission photo sensor is used.

(7) Lens base

The lens is mounted on this base which moves towards the paper entry side in the reduction mode or towards the paper exit side during the enlargement mode using the lens drive motor.

(8) Slide base shaft

Used to control the optical axis of the lens in the enlargement or reduction mode. The lens follows on the slide base shaft.

Lens drive wire

ed to move the lens base.

(10) Mirror base C

No. 4 and No. 5 mirrors are mounted on this base. The position of the mirror base C is shifted by means of the lens drive motor to match the object-to-image distance (OID) in the enlargement or reduction mode.

(11) Mirror base C (No. 4, No. 5 mirrors)drive wire

Used to move the mirror base C (No. 4 and No. 5 mirrors).

(12) Mirror motor

A DC motor is used to scan the mirror bases A and B. The motor speed is varied according to the magnification ratio.

(13) Mirror home position sensor (MHPS)

A photo sensor is used to sense the home position of mirror base A.

(14) Mirror base B

No. 2 and No. 3 mirrors are mounted on this base. It is driven by the mirror motor.

(15) Mirror base A

e mirror base A is composed of the No. 1 mirror, the thermal fuse, copy lamp, the exposure control plate, and the reflector. It is ...ven by the mirror motor.

(16) Thermal fuse

The thermal fuse is mounted on the reflector to detect an abnormal temperature rise in the optical system. In case of abnormal temperature rise, the fuse will open to cut the power supply to the copy lamp.
100V series: 109°C
200V series: 109°C

(17) Reflector

Light from the copy lamp is reflected onto the document.

(18) Exposure control plates

Three exposure control plates are installed on mirror base A which can be adjusted to attain uniform light exposure between the front and rear frame side.

(19) Mirror base drive wire

Used to convey power from the mirror motor to the mirror bases A and B, thus moving the mirror bases.

(20) Mirror base (No. 4/5 mirrors) drive wire

stepping motor is used to shift the mirror base C position.

(21) Lens drive motor

A stepping motor is used to shift the lens position.

(22) AE sensor

Density of the original is sensed by the light from the copy lamp. The AE sensor area is 100mm (4") at the center. A photodiode is used for the sensor element.

(23) Document size detection (SF-7850 only)

The document size detection system in this machine is the document interruption system of direct light reception. This system is less affected by external lights than the reflection system.
The LED in the rear frame side emits light to the table glass, and document size is detected when the document interrupts this light.

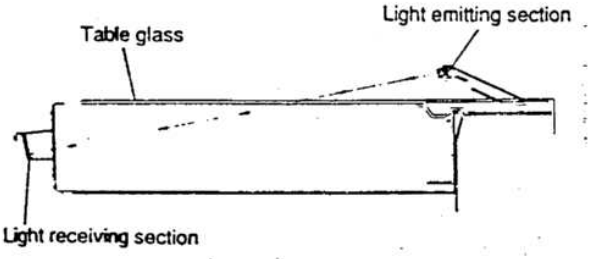

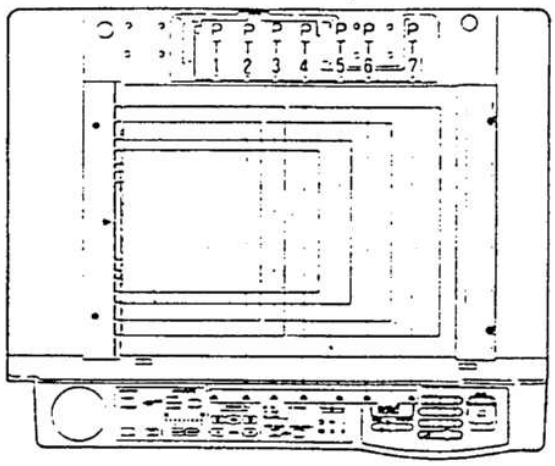

(24) Dustproof glass

To prevent dust from entering into the optical system, the glass is installed on the lower dark box cover.

SF-7800
SF-7850

2. Paper feed section

Outline of the paper feed section

(1) The SF-7800 allows the single manual paper feed in addition to the 250-sheet cassette (semi-universal). The SF-7850 is further equipped with the 250-sheet rotary cassette.

(2) Manual paper feed
Manual paper feed allowable range: 45 – 110kg (52g/m^2 – 128g/m^2) A3 – A6 For paper of 91 – 110 kg (105g/m^2 – 128g/m^2), the paper size should be max.

* • Special paper copy allowable range
  • Second original paper: 45 – 60kg (52 – 70g/m^2)
  • OHP film: 60 – 110kg (70 – 128g/m^2)
  • Offset master: A4/LT, about 90kg (105g/m^2)
  • Label paper, postcard: 60 – 110kg (70 – 128g/m^2)
  • Postcard (max. 25 sheets)

(3) Cassette paper feed

① 250-sheet semi-universal cassette (Size can be changed by the user.)
Paper size: A3, B4, A4, A4R (AB series)
11" x 17", 8½" x 14", 8½" x 11, 8½" x 11"R (inch series)

② 250-sheet rotary cassette (SF-7850 only) (Service selection is made by a serviceman.)
Paper size: A4 (AB series), 8½" x 11" (Inch series)

* Cassette paper feed allowable range
48 – 68kg (56g/m^2 – 80g/m^2) Standard type, economy type, Color paper

Paper feed section cross sectional view

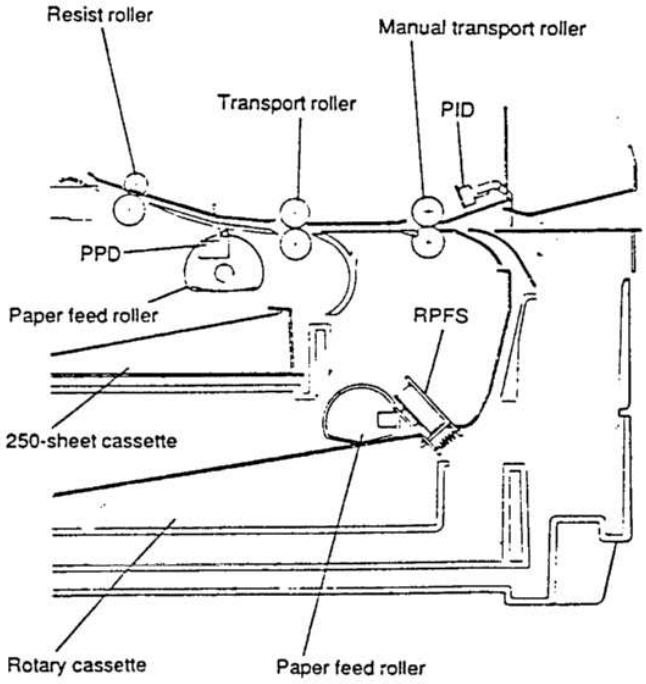

Cassette paper feed operation

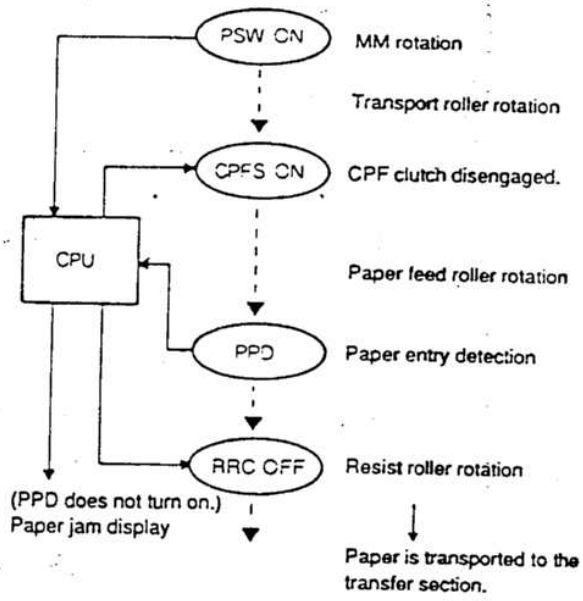

Manual paper feed operation

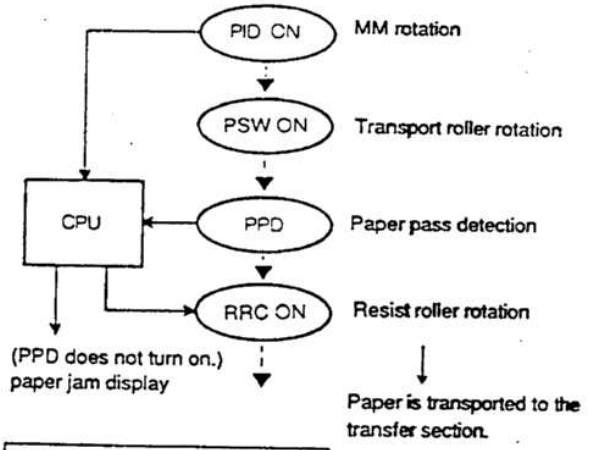

Rotary cassette operation

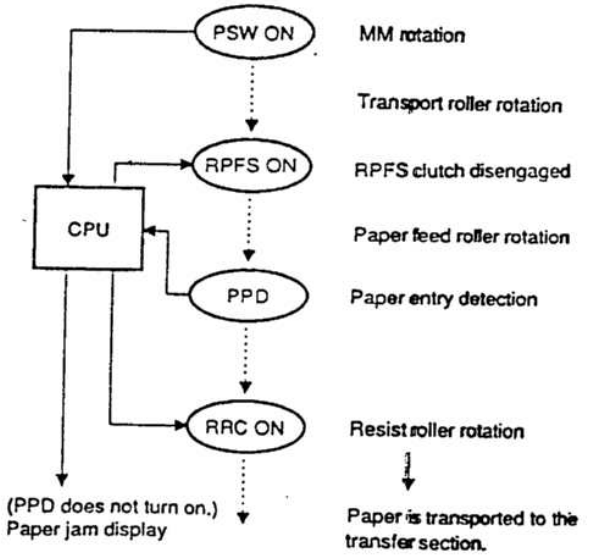

Transfer/transport section

- This machine uses a small-diameter drum (30mm in diameter).
- After passing through the resist roller, the paper is transported to the transfer section, where images on the drum are transferred onto the transfer paper by the transfer corona.
- After transfer, the transfer paper is discharged by the discharge plate and separated from the drum. The transfer paper which was not separated is forcibly separated by the drum separation pawl.

Transfer/transport section cross sectional view

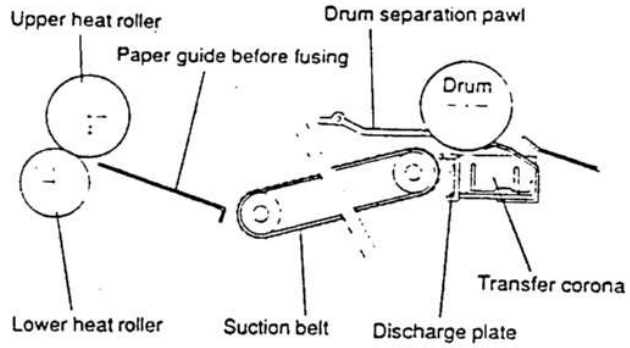

4. Fusing/paper exit section

Toner image transferred on the paper is fused on the paper by the heat and pressure of the upper and lower heat rollers. After fusing, static electricity is discharged by the discharge brush and the paper is fed onto the copy tray.

Fusing/paper exit section cross sectional view

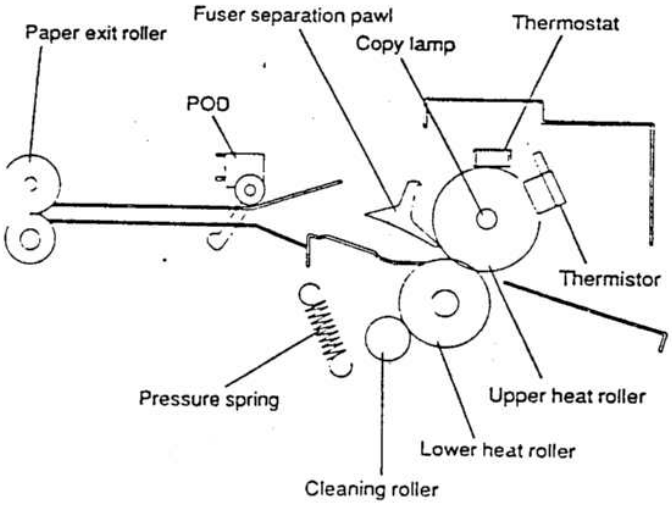

Operation

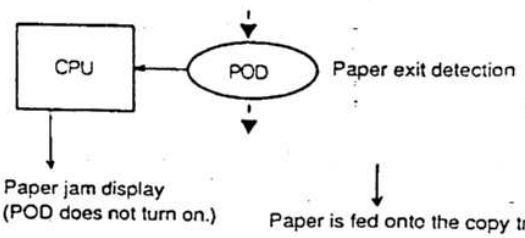

Temperature control

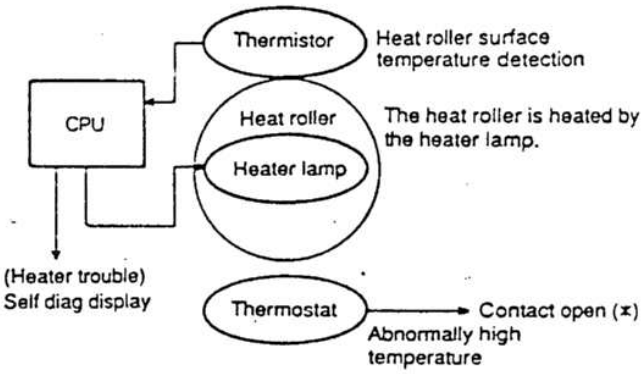

- Abnormally high temperature (H3): 230°C
- Abnormally low temperature (H4): Set temperature −40°C
- Thermistor breakage (H2)

(*) When the thermostat contact is opened, press the reset button in the upper side of the thermostat to reset. (The contact does not reset automatically.)

5. Image forming section

- This machine uses O.P.C. (Organic Photo Conductor) for image forming.

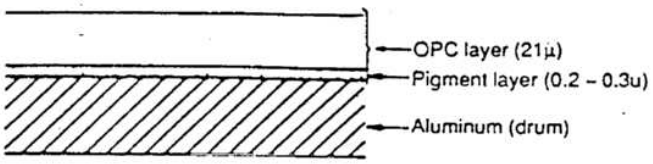

Functional diagram

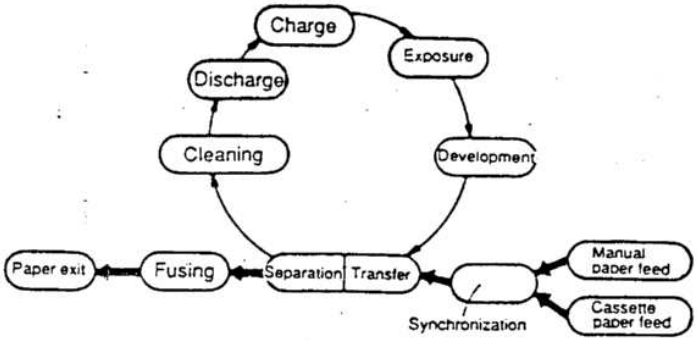

Cross sectional view

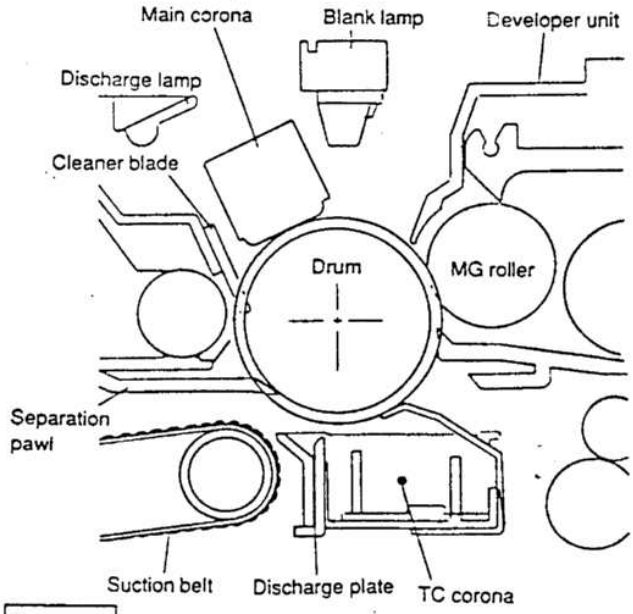

Process

Step 1. Charge DC–5.5KV 700uA Grid voltage –635V

A uniform negative charge is applied over the OPC drum surface by a negative charge from the main corona unit. The surface potential of the OPC drum is controlled by the screen grid and a potential equal to the grid voltage is retained.

- Drum surface potential < Grid voltage
  The negative discharge passes through the screen grid to charge the drum.
- Drum potential ≥ Grid voltage
  Since the negative charge passes to ground through the screen grid via the grid voltage output line of the high voltage transformer, the drum surface potential is kept at almost the same level as the grid voltage.

Standard copy mode: –535V
Photo mode: –510V for U.S.A. Canada, and U.K.
–535V for the other destinations.

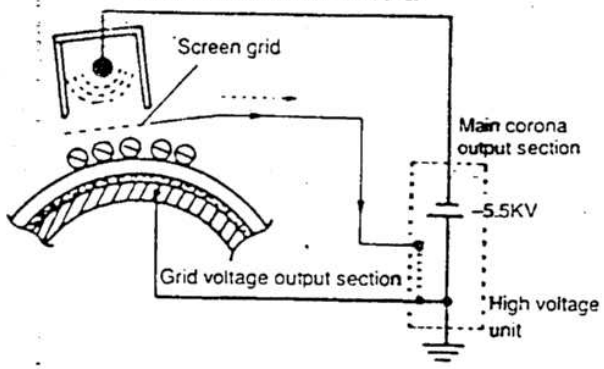

Step 2. Exposure (Copy lamp, mirror, lens)

Light from the copy lamp is reflected from the document and projected onto the drum surface via the mirrors and lens. The resistance of the OPC layer decreases in the area exposed to the light which corresponds to the light area of the document. This redu the negative charge in direct proportion to the intensity of the l The dark area of the document does not reflect light and an electr tatic latent image is formed on the drum surface.

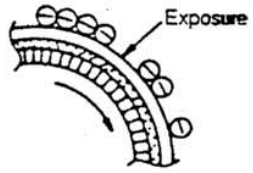

Exposure (copy lamp)

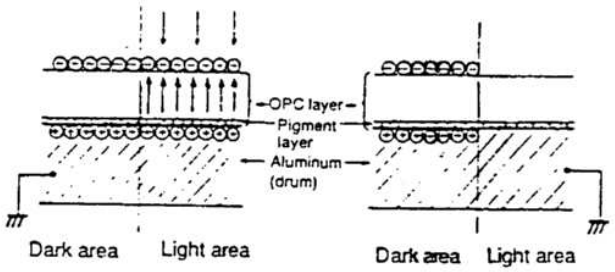

In the reduction mode, the area outside the document image area is neutralized by the blank lamp prior to exposing.

Step 3. Developing (Bias –200V)

The electrostatic latent image is converted into a visible image by the toner. A bias potential of -200V is applied to the carrier (MG roller) in the two component magnetic brush developing method, and the toner is charged positive through friction with the carrier.

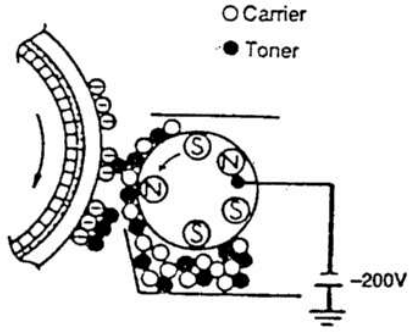

p 4. Transfer (DC–5.6KV, –35μA)

The visible image on the drum surface is transferred onto the copy paper by applying a negative charge from the transfer corona to the back of the copy paper.

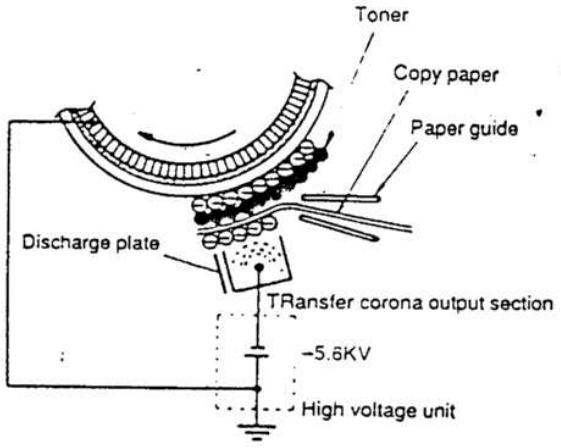

›p 5. Separation (DC+4.5KV without load)

Both the copy paper and the drum are charged negative after the transfer of the image. However, an attracting force remains between the copy paper and the drum because the negative potential of the copy paper is higher than the negative potential of the drum. A positive potential is applied by the discharge plate to reduce the copy paper potential to the same level as the drum surface. This eliminates the attracting force and allows the copy paper to separate from the drum by the rigidity of the paper itself. If the copy paper is not separated, it is forcibly separated by the separation pawl.

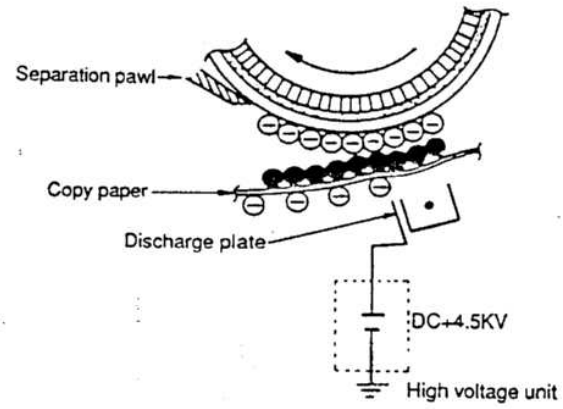

Step 6. Cleaning

A cleaning blade is used to remove residual toner from the drum surface.

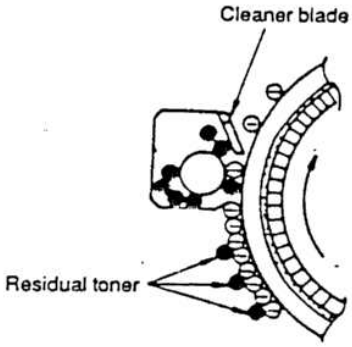

Step 7. Discharge

Light from the discharge lamp exposes the drum surface and reduces the electrical resistance in the OPC layer. This removes the residual surface charge.

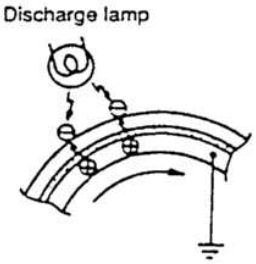

Photo mode

The SF-7800/7850 provides the photo mode to copy half tone documents clearly.
The gradations of the half tone documents are made clearer by reducing the main corona grid voltage and the copy lamp drive voltage to a lower level then in the normal copy mode.

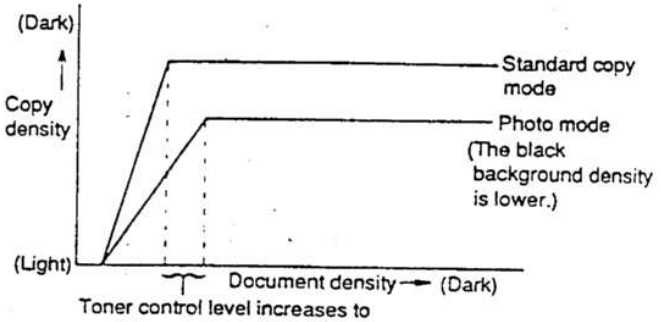

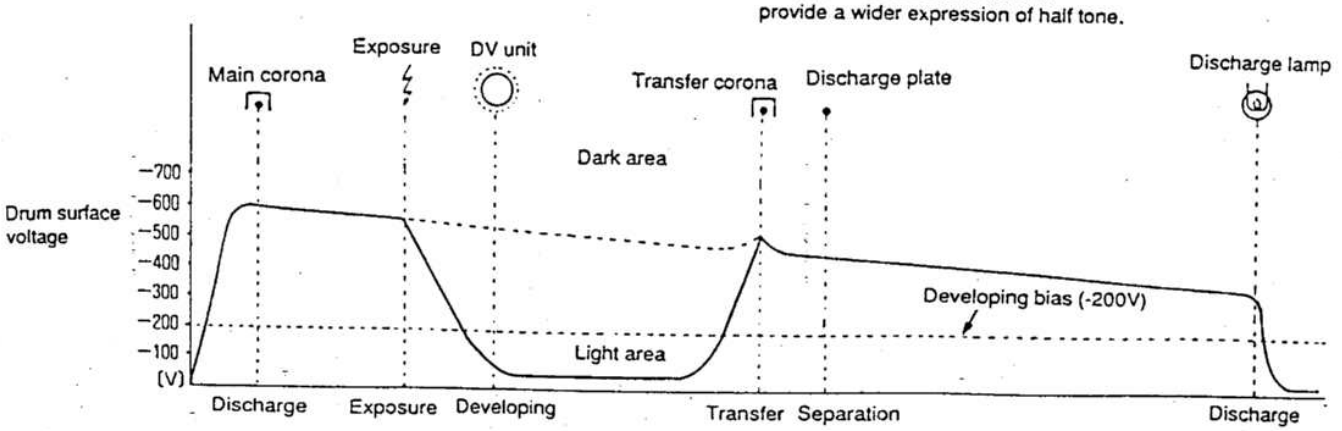

6. Rotary cassette section (SF-7850 only)

Description on the cassette rotation

<Rotation from landscape to portrait>

① The rotary cassette motor starts driving. When the rotary feed shaft rotates in the arrow direction A, the cassette rotates clockwise.

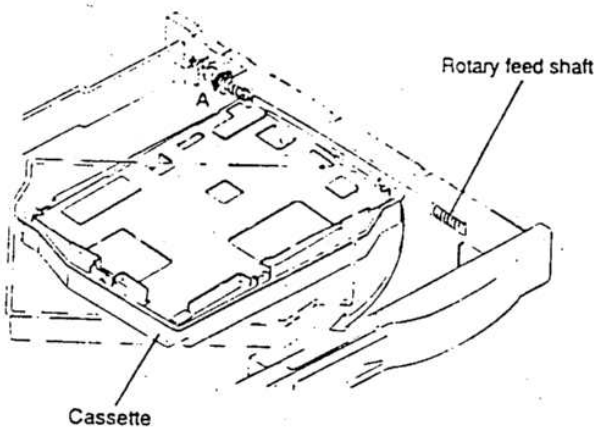

② When the cassette starts rotating, the lift slide plate is separated from the stopper, and section A of the rotation plate moves down and section B move up.

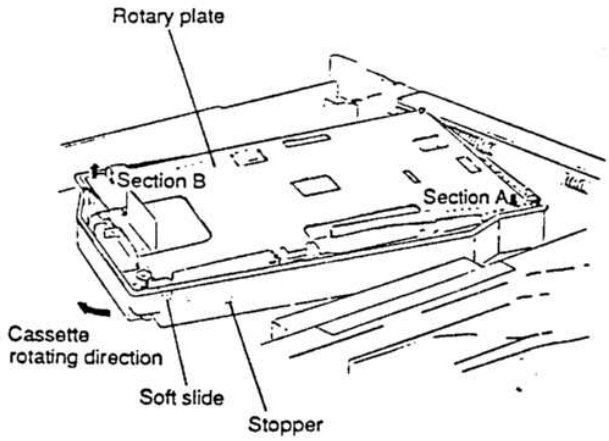

③ When the cassette rotates about 90 degrees, the cassette projection becomes in contact with the rotation stopper to stop the cassette rotation.

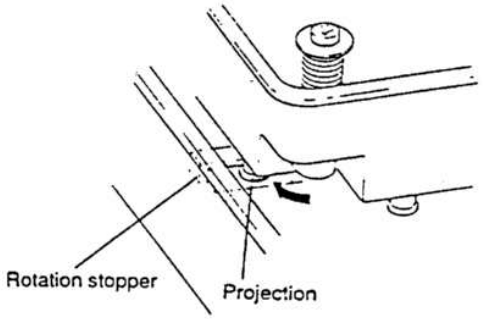

④ At the same time, section A of the rotation plate moves down section B moves up. As a result, the rotation plate moves up.

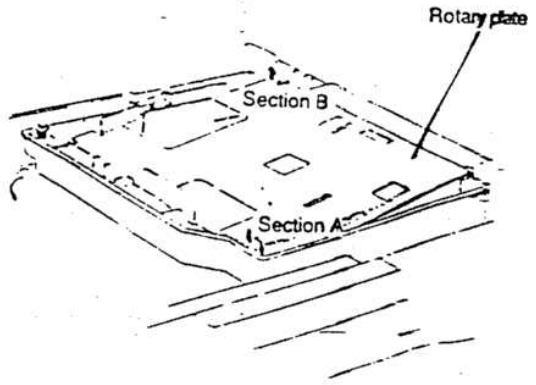

⑤ On the other hand, the rotary cassette motor is kept rotating. This motor power slides the rotation feed shaft to the rear frame side. At that time, the home position switch actuator is pushed to the rear frame side by the collar which is attached to the rotation shaft. When the actuator is detected (portrait detection) by rotation cassette position detecting switch, the motor stops.

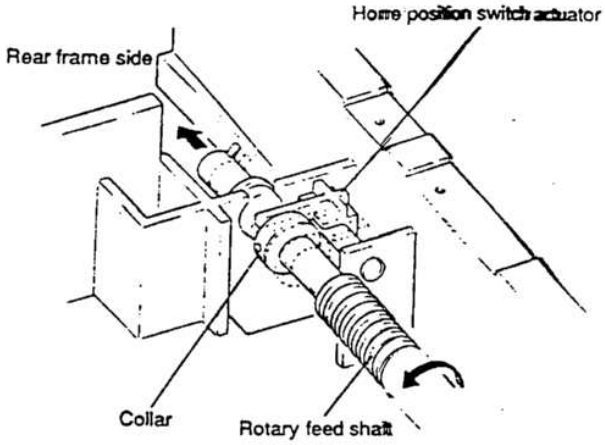

<Rotation from portrait to landscape>

① When the rotary cassette motor starts driving and the rotation feed shaft rotates in the arrow direction B, the cassette rotates counterclockwise.

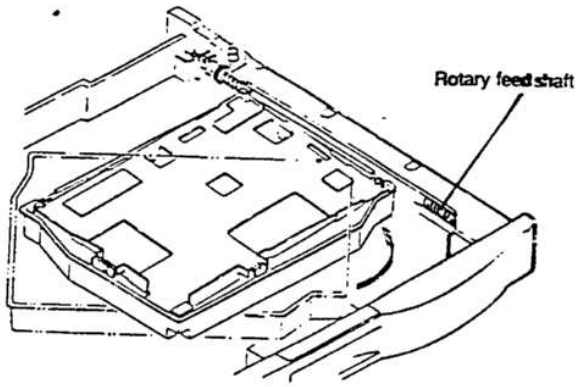

When the cassette rotates about 90 degrees, the cassette projection made contact with the rotation stopper and the cassette rotation is stopped.

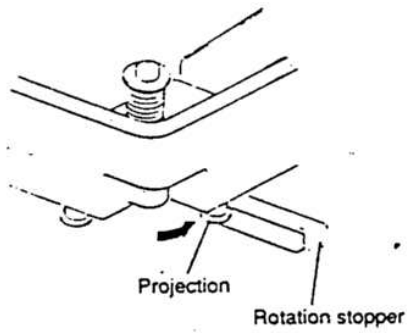

③ On the other hand, the rotary cassette motor is kept rotating. This motor power slides the rotation feed shaft to the front frame side. At that time, the home position switch actuator is pushed to the front frame side by the collar which is attached to the rotation feed shaft. When the actuator is detected (landscape detection) by the rotation cassette position detecting switch, the motor is stopped.

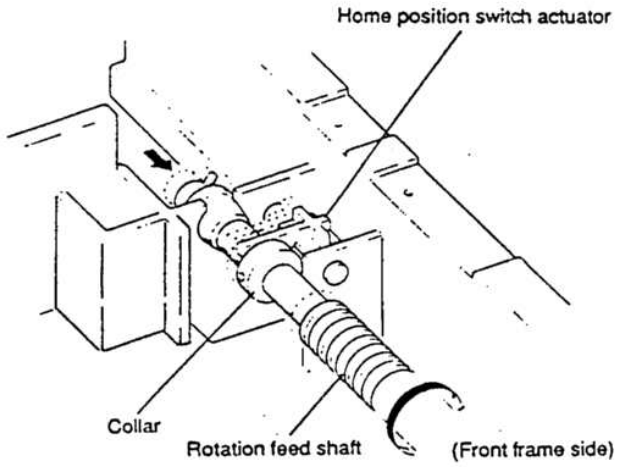

Rotary cassette position detection switch (RCPD1, 2) state

Detection switch state RCPD1	RCPD2	Illustration	Cassette state
ON	ON	Fig. A	The cassette is pulled out.
OFF	ON	Fig. B	Horizontal detection
ON	OFF	Fig. C	Vertical detection
OFF	OFF	Fig. D	Cassette is rotating.

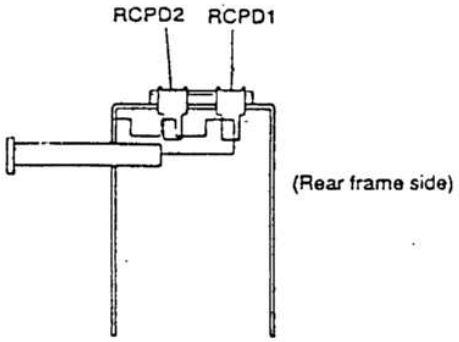

Fig. A

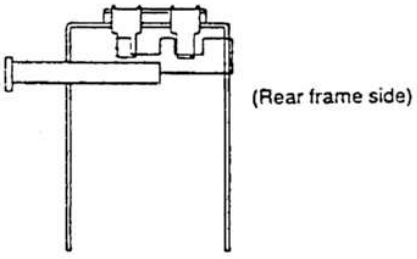

Fig. B

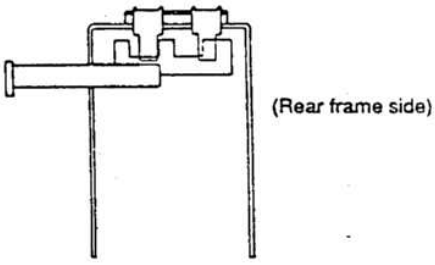

Fig. C

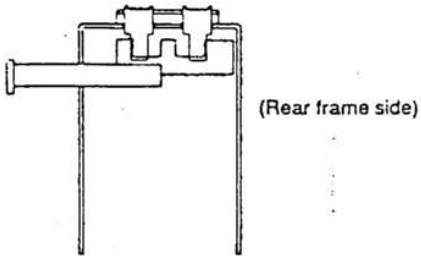

Fig. D

[7] DISASSEMBLY, ASSEMBLY, AND ADJUSTMENTS

<<Note for disassembly, assembly, and adjustment>>

(1) Before disassembling, disconnect the power plug from the power outlet.

(2) Never disassemble or assemble the PWB's and the connectors with the power ON.

(3) Be careful not to drop small parts or screws inside the machine. Use extreme care when disassembling and assembling.

(4) Do not pull the wire section of the connector, or it may be damaged. Hold the both sides of the connector and pull to disconnect.

(5) When carrying the control PWB, put it in a static electricity preventing bag.

(6) Keep the document glass and mirrors clean.
Wipe them with a dry cloth if necessary.

(7) Do not touch the lamp and glass surfaces.
(Oil on the surface concentrates heat and generates color change.)

1. Paper feed section

A. Removing the paper feed roller and the roller rubber

① Loosen the cassette lock screw, and remove the cassette.

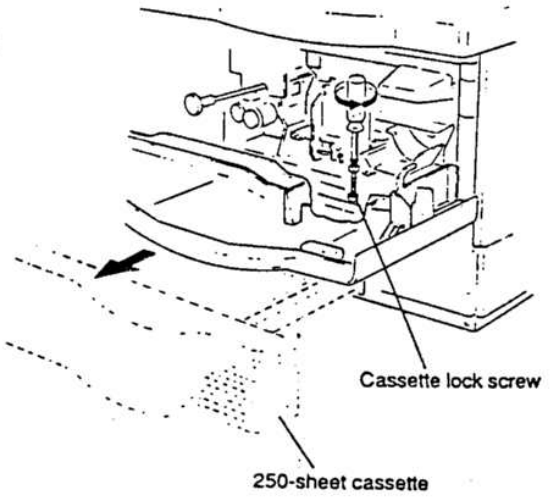

② Remove the paper feed roller solenoid and remove the paper clutch.

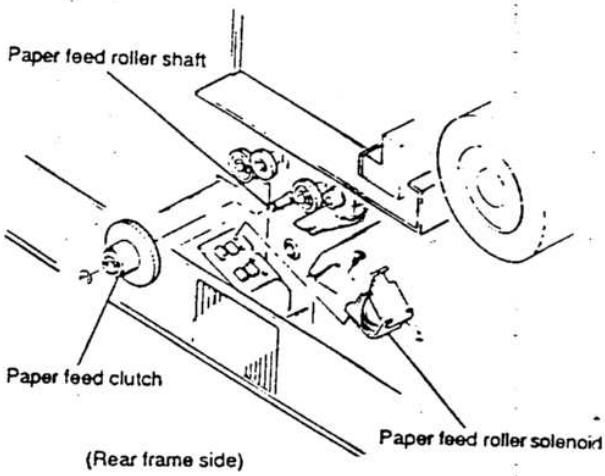

③ Remove the E-rings (in the rear frame side and the front frame side) which are fixing the roller shaft, slide the roller to the rear frame side, then slide it the front frame side to remove.

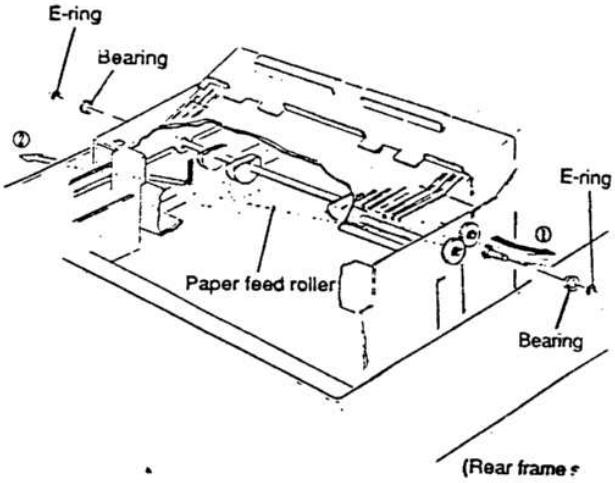

④ The roller rubber can be replaced in single unit.

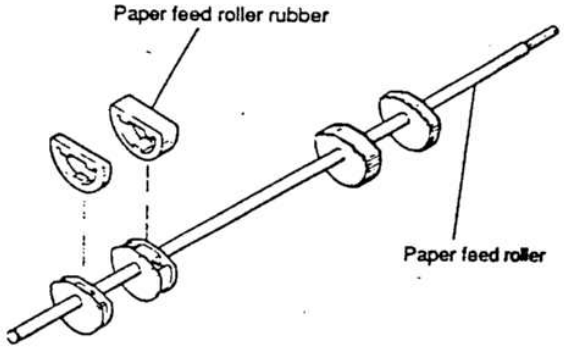

⑤ For assembly, reverse the removing procedure. After assembly, check the roller angle.

per feed roller angle adjustment

After installing the paper feed roller, adjust the roller angle. If the angle is shifted from the reference value, adjust it by changing the paper feed clutch spring hooking position.
(Perform the same adjustment for the rotary cassette paper feed roller.)

<Checking procedure>

① Engage the latch of the paper feed solenoid with the paper feed clutch sleeve pawl.

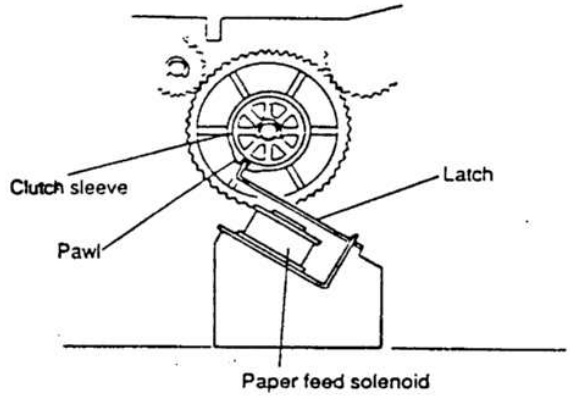

② Visually inspect from the insertion port of the cassette to check that the paper feed roller is horizontal (horizontality ± 5 degrees). If the roller is tilted, adjust as follows:

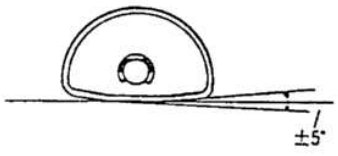

<Adjustment procedure>

- Change the hooking position of the clutch spring according to the tilting direction of the roller.

Example 1: The clutch sleeve hooking position is changed from B to C.

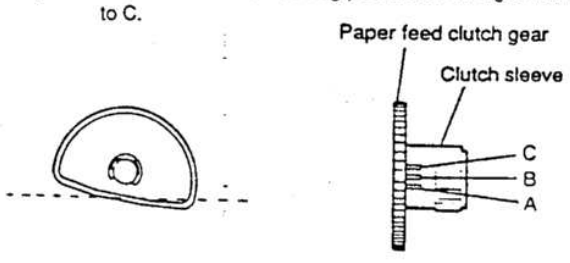

(Viewed from the front side)

Example 2: The clutch sleeve hooking position is changed from B to A.



(Viewed from the front side)

- If adjustment is not sufficient in the clutch sleeve side, change the hooking position in the clutch boss side.

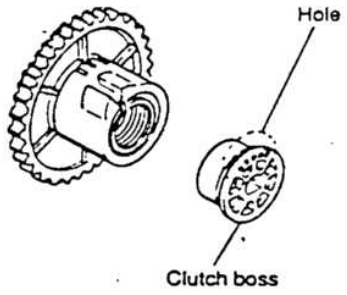

B. Paper feed frame unit removal (SF-7850 only)

① Open the clamshell, and remove connectors (2 pin, 3 pin).

② Remove the screws (two in the front frame side and 2 in the rear frame side) which are fixing the paper feed frame unit.

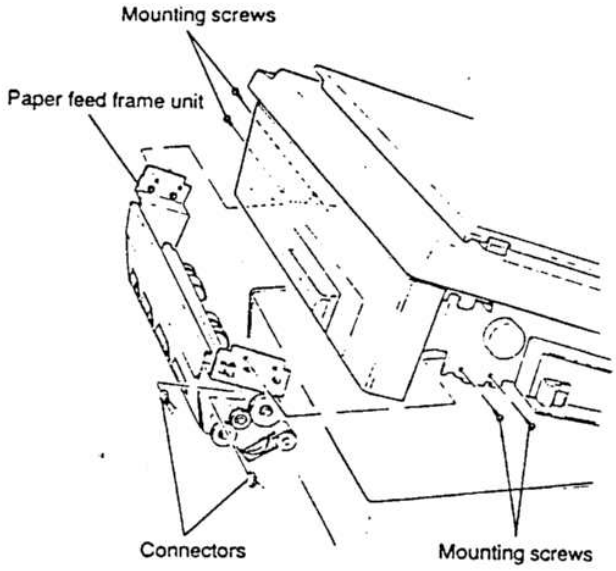

C. paper pass detector (PPD) replacement

(Removal)

① Remove the two screws which are fixing the PPD cover, and remove the PPD cover.

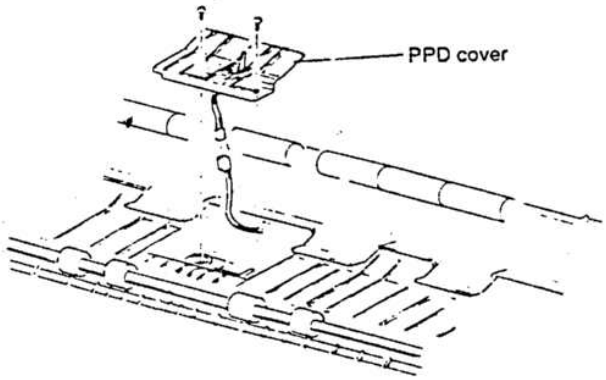

② Remove the PPD from the PPD cover, and remove the connectors.

(Assembly)

① Attach the PPD cover and insert the connector.

② When attaching the PPD cover, ensure the lead wires are not caught between the cover and the base plate.

③ Since the fixing screws are tap screws, do not tighten them excessively.

D. Removing the transport upper paper guide and the manual paper entry detector (PID)

<Removing the transport upper paper guide>

① Remove the right lower cover.

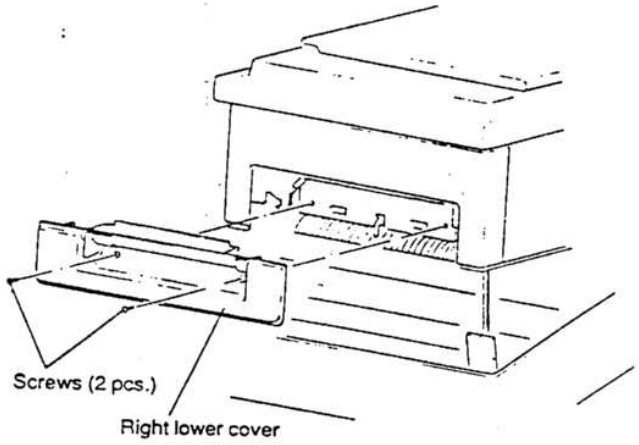

② Remove the 3-pin connector and five screws which are fixing the transport upper paper guide, and remove the paper guide.

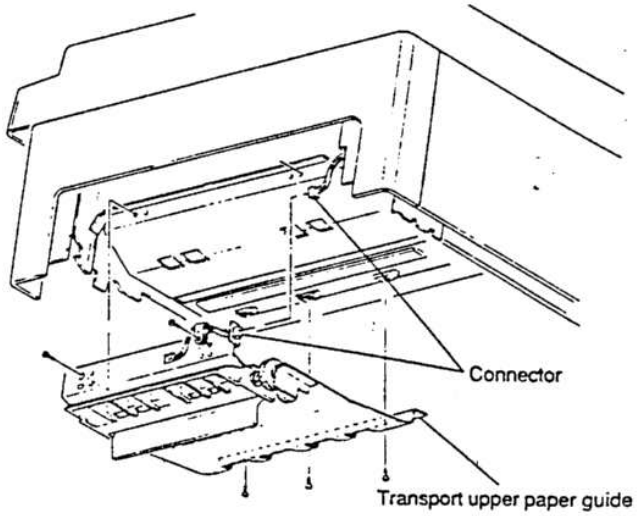

(Removing the manual paper entry detector)

Remove the connector of the manual paper entry detector, and remove the detector.

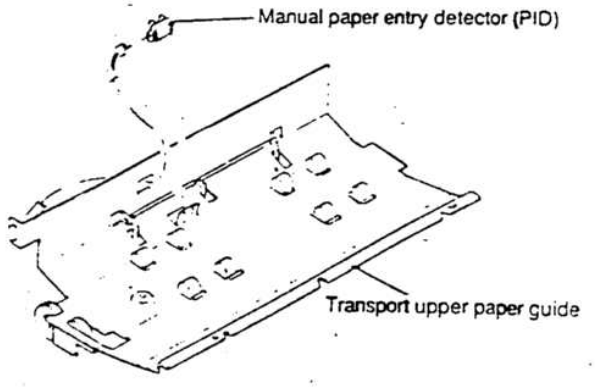

x When attaching the detector, check that the detector hook section is firmly connected. Be careful to prevent the interface harness from being in contact with the actuator.

<Removing the actuator>

Deflect the actuator as shown below and remove it from the holder.

x After attaching the actuator, check that it moves smoothly.

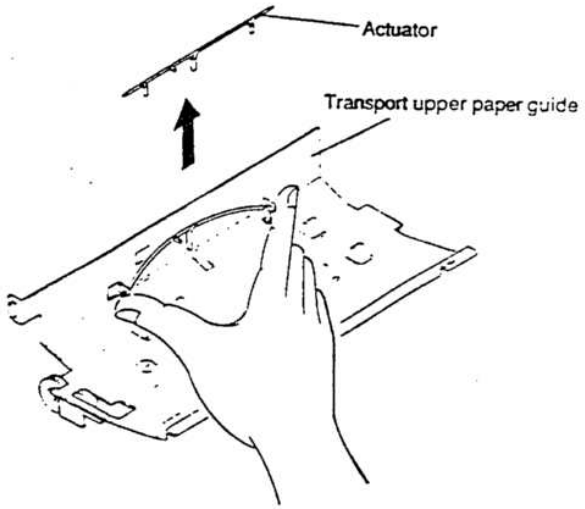

High voltage section

The TC case should be cleaned every 30,000 copies. The TC wire and the discharge plate should be cleaned every 30,000 copies, and should be replaced every 60,000 copies.

A. TC case unit disassembly/assembly

<Disassembly>

① Open the clamshell.

② Remove the step screw which is fixing the TC case unit.

③ Remove the TC case unit.

* When removing the TC case unit, be careful not to hit the drum.

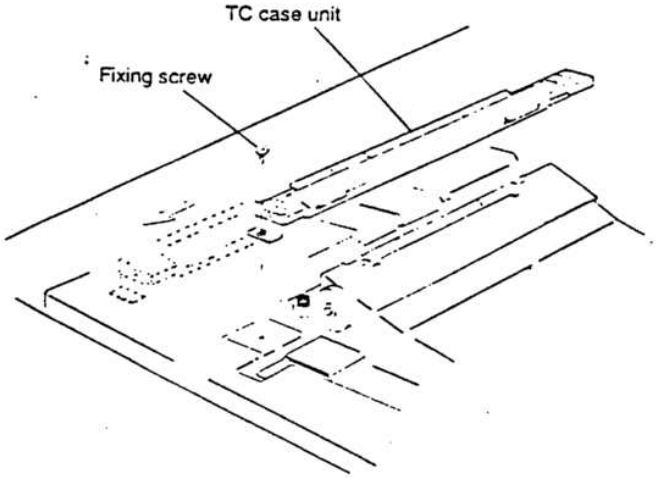

<Assembly>

① Set the TC unit case hook to the positioning hole in the base plate rear frame side.

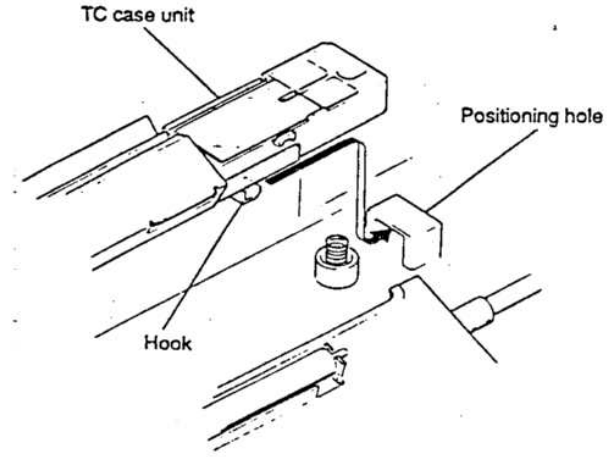

② Tighten the step screw. (Be careful not to catch the TC case with the step screw.)

B. Discharge plate replacement/cleaning (Every 60K copies)

① Remove the TC case unit from the body.

② Remove the holder cover.

Remove the discharge plate holder. (2 screws)

When assembling the discharge plate, use the positioning pin.
Note: Discharge plate is easy to deform. Use care.

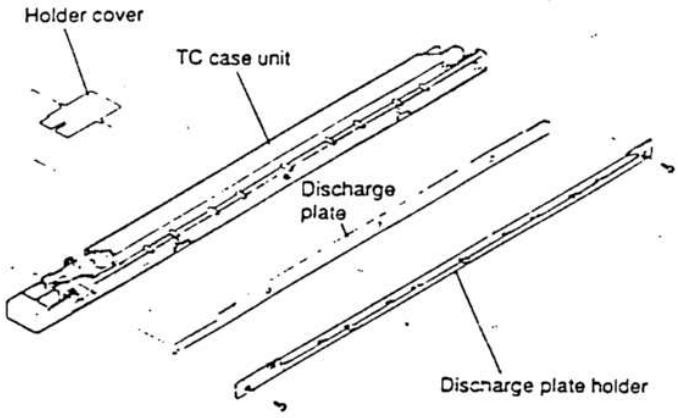

C. TC wire replacement/cleaning (Every 60K copies)

① Remove the TC case from the body.

② Remove the holder cover.

③ Loosen the wire fixing screw, and remove the wire.

④ Install the corona wire.

<Note for corona wire replacement>

- The corona wire should be free from twist and deformation.

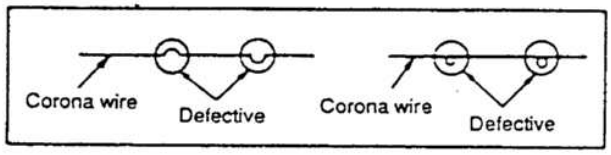

- Use corona wire of 70μ. (DWIR-0466CSZZ)

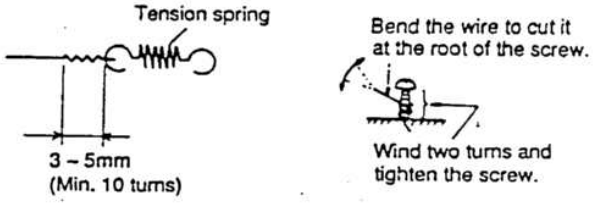

- The tension spring should be 16 – 17mm long when the wire is stretched.

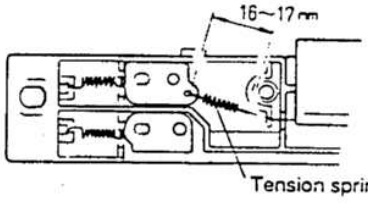

- Do not touch the working area of the wire. It may cause defective transfer.

⑤ After replacing the wire, clean the wire.
Note: When cleaning the wire, wipe it from the screw to the spring.

D. Note for spring M assembly

Attach the spring M as shown below:

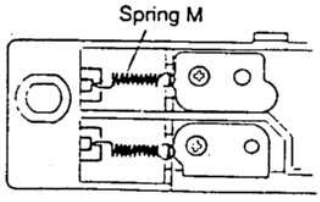

3. Optical section

(1) Disassembly/assembly

A. Replacing the copy lamp

① Remove the table glass holders (left, right) and the table glass.

② Move the copy lamp unit to square hole A.
When moving the copy lamp unit, do not pull forcibly. Pulling the copy lamp forcibly may disengage the wire fixing section. Do not move the exposure control plates.

③ Insert the copy lamp unit into the square hole and shift it fully in the direction of arrow.

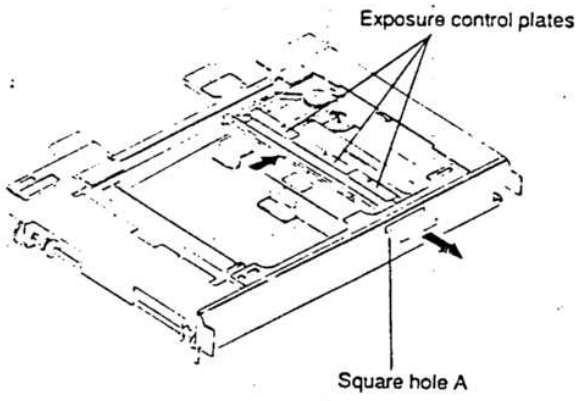

④ Disengage the rear end of the lamp unit from the rail and hold the unit as shown.

⑤ Remove the fixing screw of the lamp electrode in the rear side and remove the electrode.

⑥ Insert the rear side of the lamp into the oval hole in the frame and pull it out from the front side.
Note: When holding the lamp, do not hold the glass surface but hold the both insulators. If the glass surface is dirtied with oil, the lamp life may be shortened.

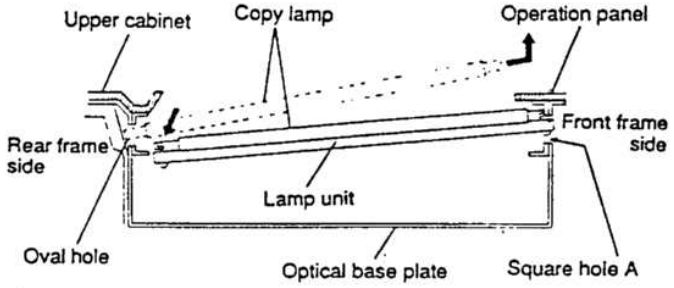

<Installing procedure>

For installing the copy lamp, reverse the disassembly procedure with observing the following notes.

① Be sure to put the copy lamp in the lamp groove properly.

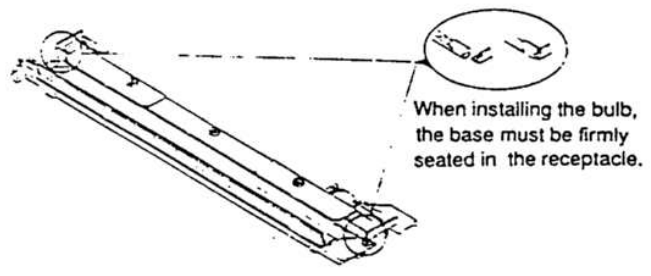

② Be careful to the installing direction of the copy lamp.
Install the bulb so that the projection on the bulb is towards the rear frame side and facing upwards as shown in the figure below:

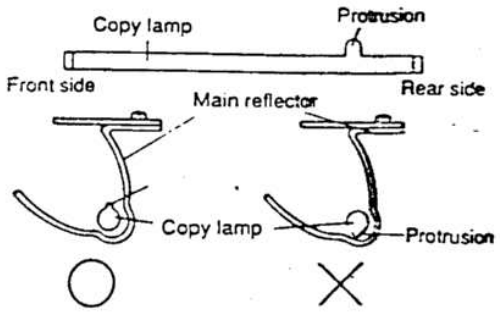

③ Check that the mirror base is on the rail.

B. Replacing the lens drive wire

(Removing the lens drive wire)

① Remove the table glass.

② Remove the dark box cover and the lens cover.

③ Remove the wire spring and the wire hook from the lens base boss.

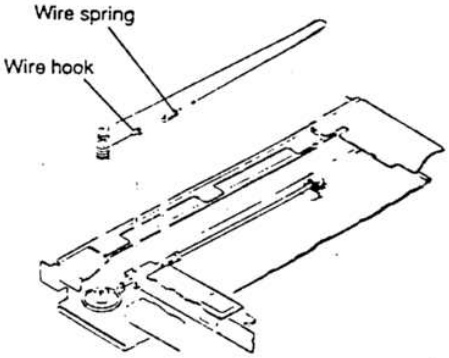

(Setting the lens drive wire)

① Align the lens slide base unit to the 50% position. The length section A is about 10mm.

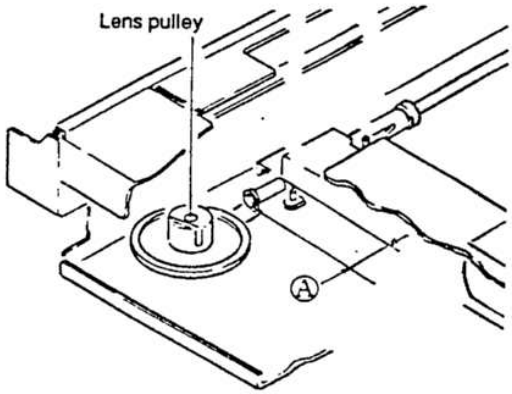

② Insert an M4 x 10 screw in the screw stop hole of the lens pulley gear and hold the pulley.

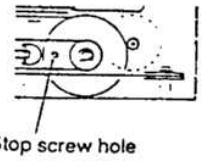

Insert the ball at the center of the lens drive wire in the slit of the lens pulley gear. Turn the wire end with shorter distance from the ball five turns counterclockwise from the lower to the upper side and hook it to the lens slide base pin via the pulley.

③ Wind the other end of the wire 2¼ turns clockwise from the upper to the lower sides and hook it to the wire spring via the pulley, then insert it in the lens slide base pin.

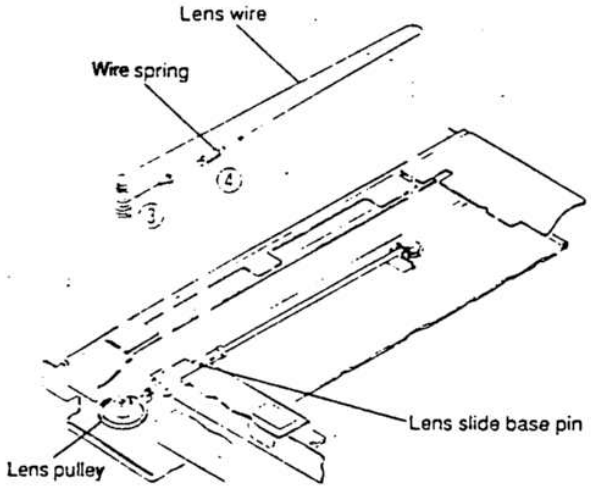

④ Remove the lens pulley gear stop screw.

⑤ Manually rotate the lens pulley gear. Move the lens slide base to the enlarge and reduce sides to check that it has no wire disconnection and it works smoothly without wire overlap.

C. Replacing the lens

(Removing the lens)

① Remove the table glass.

② Remove the dark box cover.

③ Remove the lens drive wire.

④ Remove the lens drive shaft holding plate and the lens drive shaft. In this state, the lens base may come out.

* Do not loosen the setscrew which is beside the lens drive shaft. This screw is used as a guide when installing the lens drive shaft holding plate.

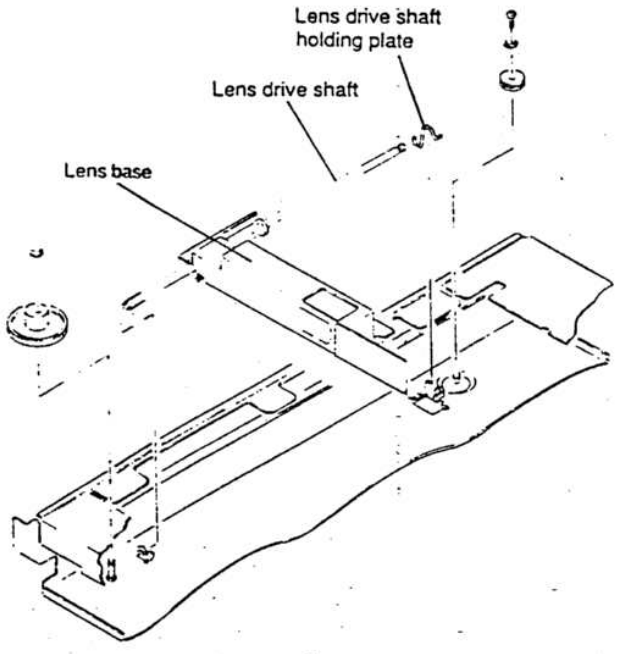

(Installing the lens)

Do the reverse sequence.

Note: When installing the lens drive shaft holding plate, move it to the front frame side so that the holding plate may hit the setscrew.

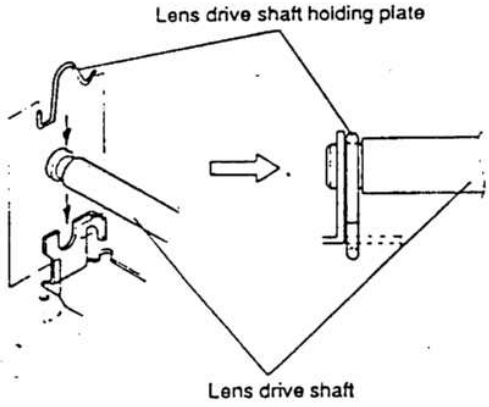

D. Replacing/adjusting No. 2 and No. 3 mirror drive wire

(Removing the copy lamp)

① Remove the glass holder and remove the table glass. (4 screws)

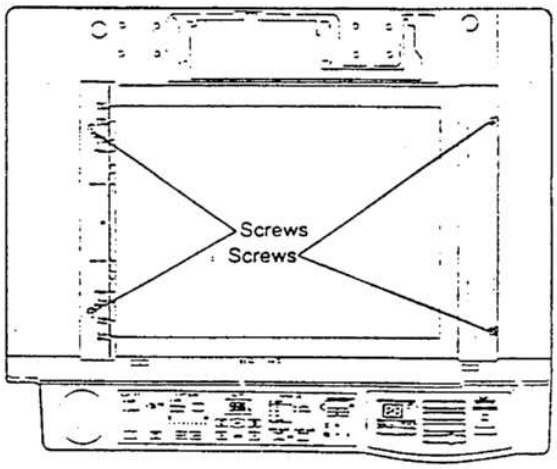

② Remove the operation panel, the upper cabinet rear, the right cabinet C.

③ Remove the dark box upper cover.

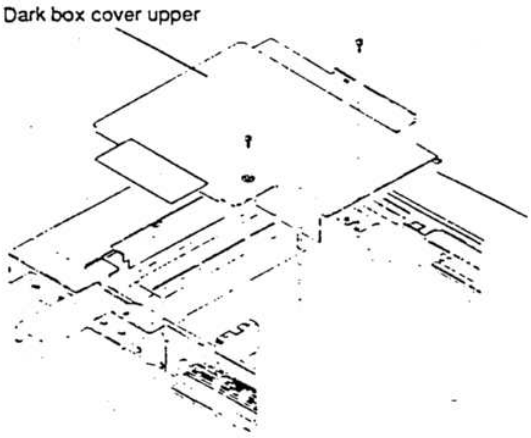

④ Manually move the mirror base (No. 2/3 mirror unit) to shift the copy lamp unit to square hole A.

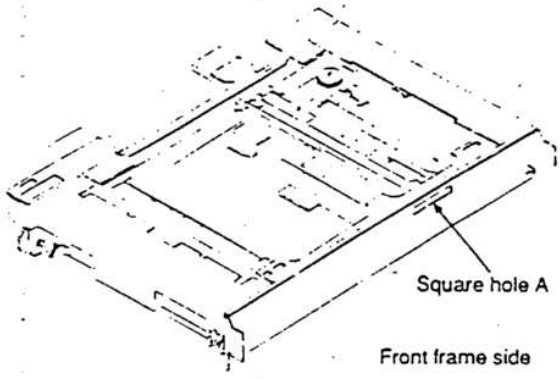

⑤ Remove the wire fixing plate in the front and rear frame sides of the copy lamp unit.

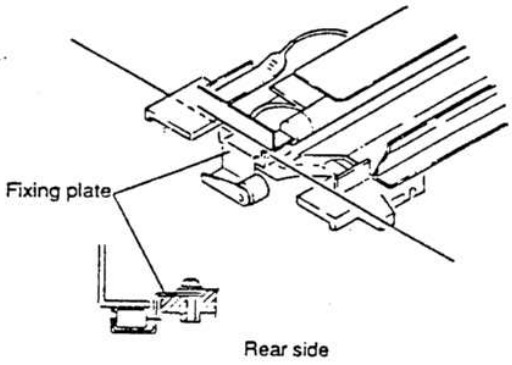

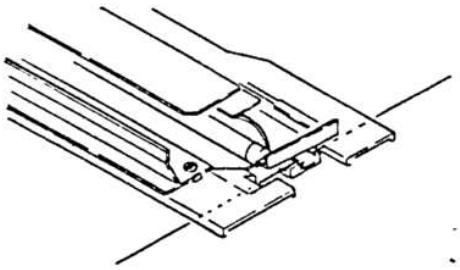

⑥ Insert an end of the lamp unit into square hole A (in the direction of a) and pull it out in the direction of b.

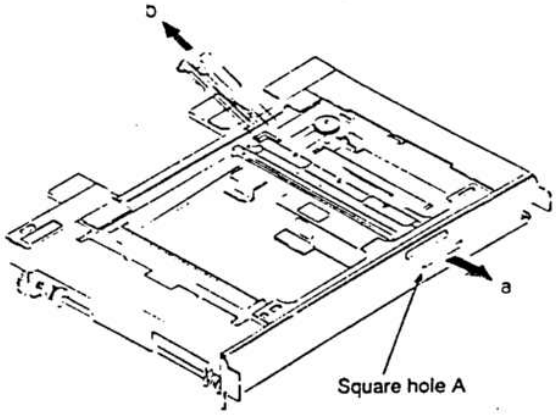

(Removing the No. 2/3 mirror drive wire)

① Fully turn the mirror base wire tension adjusting screw in the front frame side counterclockwise to loosen the mirror base wire tension.

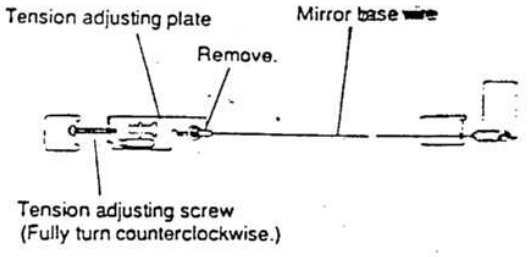

② Remove the mirror base wire end in the front frame side from the tension adjusting plate.

③ Remove the mirror base wire from the mirror base drive pulley. (Remove the wire holding screw.)

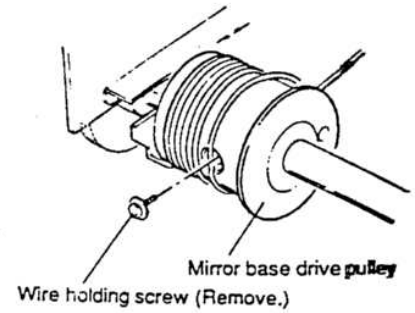

(Perform the same procedure for the rear frame side.)

(Removing the No. 2/3 mirror unit (mirror base B))

Remove the optical fan in the rear frame, move the mirror base B to square hole Ⓒ in the rear frame, and rotate it in direction ① to pull out.

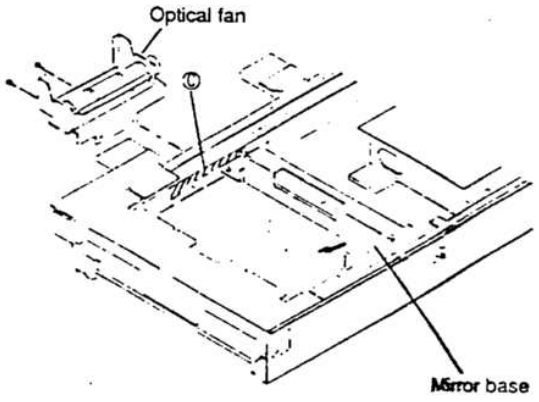

stalling the No. 2/3 mirror unit (mirror base B))

everse the removing procedure. Insert section ③ of the mirror base B into square hole ⓒ in the rear frame and turn it in direction ② to put it in. In this case, the optical fan is not installed in the rear side.

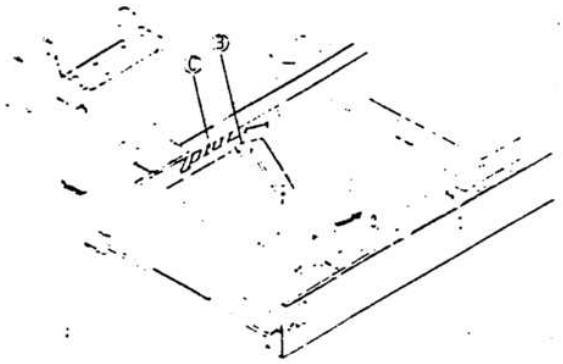

etting the No. 2/3 mirror drive wire)

eck that the wire grooves of the two mirror base drive pulleys (winding pulleys) in the front and the rear sides are at corresponding positions on the circumference. Then perform the following procedure. (If the wire grooves are not at corresponding positions, loosen the pulley fixing screws (two setscrews) and visually inspect and adjust the positions.)

① Hang the mirror base wire end (metal hook) on the tension adjusting plate hook.

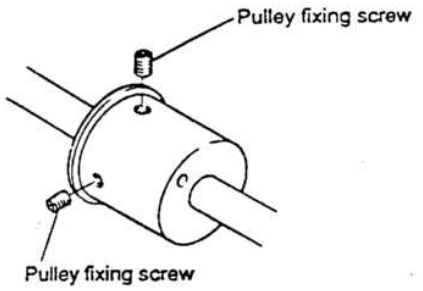

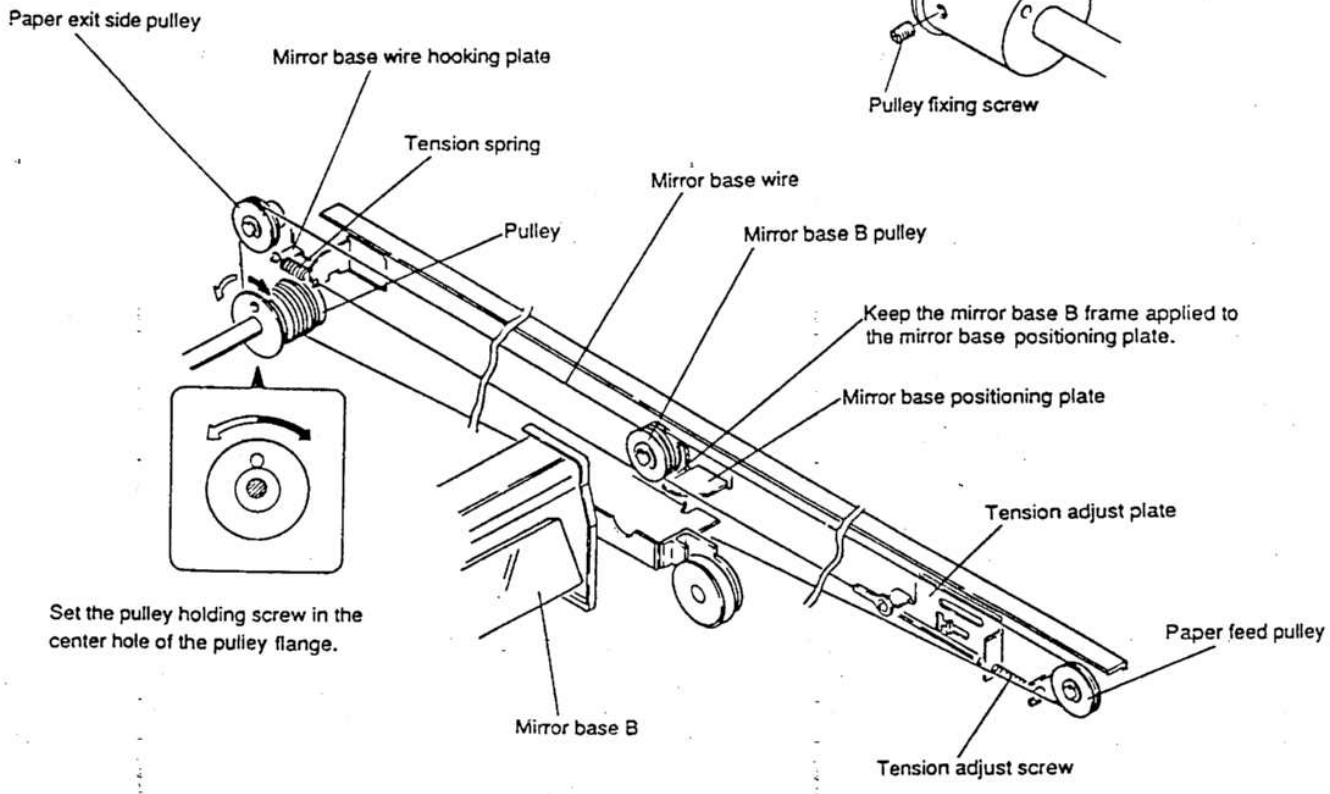

SF-7800
SF-7850

② Pass it through the mirror base B pulley (outside). In this case, the mirror base B is in contact with the mirror base positioning plate.

③ Pass it through the paper feed side pulley.

④ Pass it under the mirror base B.

⑤ Hold so that the wire groove section of the mirror base drive pulley is in the upper side, and wind the wire 9 turns with the 8th turn in the groove. (The first turn is 9 – 10mm from the groove. Winding should be tight and close.)

(Front frame side)

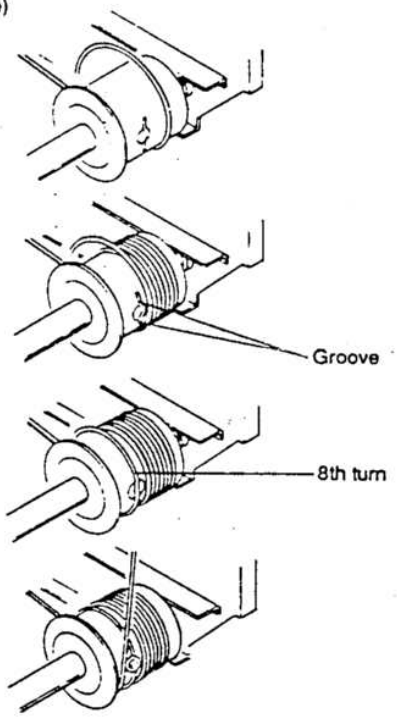

(Rear frame side)

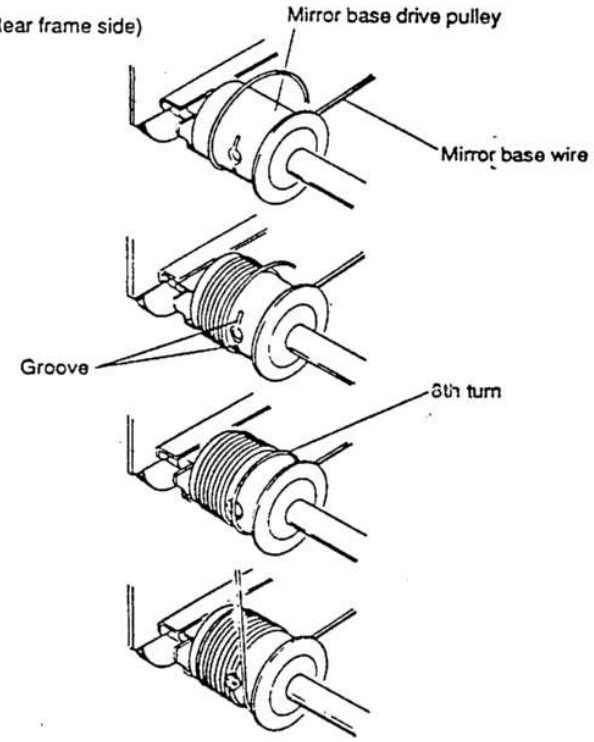

⑥ Pass it through the paper exit side pulley.

⑦ Pass it through the mirror base B pulley (inside).

⑧ Hang the mirror base wire end (spring) on the mirror base wire hook notch. (Perform the same procedure in the front and the rear sides.)

(Adjusting mirror base wire tension)

① Manually rotate the mirror base drive pulley to move mirror base B in contact with the mirror base positioning plate 20 to 30mm towards the paper exit side.

② Rotate the mirror base wire tension adjusting screw clockwise until the wire tension spring end just hits the mirror base wire hook plate.

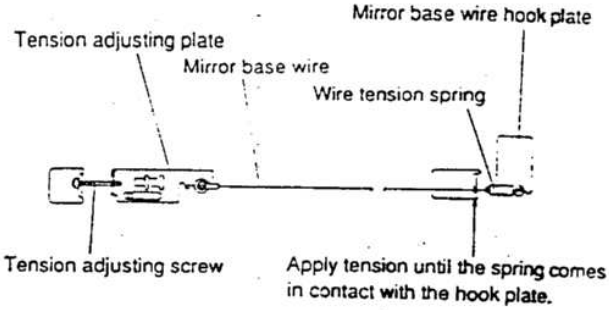

③ Manually rotate the mirror base pulley to make a full scan of mirror base B for a few times to ensure that the mirror base wire spring end is in contact with the mirror base wire hook plate. If not in contact, readjust the tension adjust screw. Also, check that the wire does not overlap each other on the mirror base pulley.

④ Rotate the mirror base wire tension adjust screw counterclockwise six times. (The distance between the mirror base wire spring and the mirror base wire hook plate becomes about 4mm.)

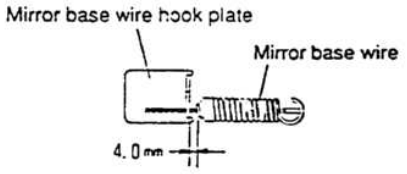

(Do the same for the front and rear frame sides.)

(Securing the mirror base wire)

① Manually rotate the mirror base drive pulley to move mirror base B to the location where it hits the mirror base positioning plate.

② Shift the ninth winding of the mirror base wire from the pulley screw hole.

(Front frame side) (Rear frame side)

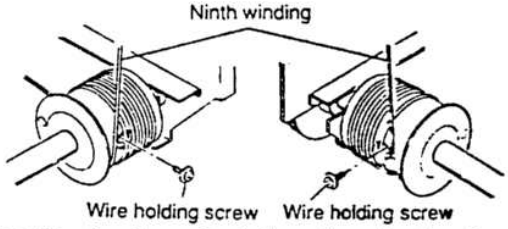

③ Fasten the mirror base wire to the pulley using the mirror base wire holding screw. Only the 8th winding should be secured with the screw.

④ Return the ninth winding of the mirror base wire to its original position. (do the same for the front and the rear frame sides.)

Installing the No. 2/3 mirror unit (mirror base B)

(Positioning mirror base B)

The adjustment is required to adjust the collateral position of mirror base B relative to the drum surface and the document surface.
Adjustment is required in one of the following cases:

- When the mirror base drive wire is replaced.
- When mirror base A or mirror base B is replaced.

① Manually rotate the mirror base drive pulley to make mirror base B in contact with the mirror base positioning plate. If the front frame side of mirror base B and the rear frame side should make contact with the mirror base positioning plate at the same moment, no adjustment is required as mirror base B in good parallelism.

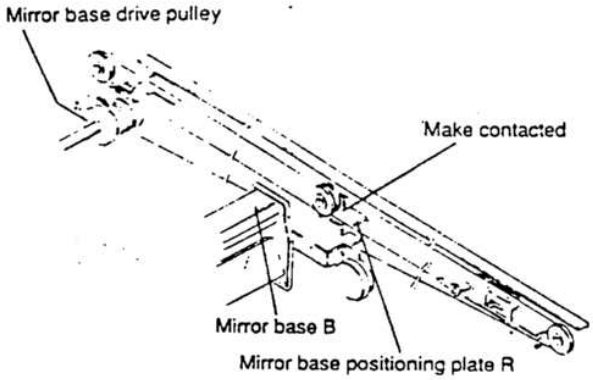

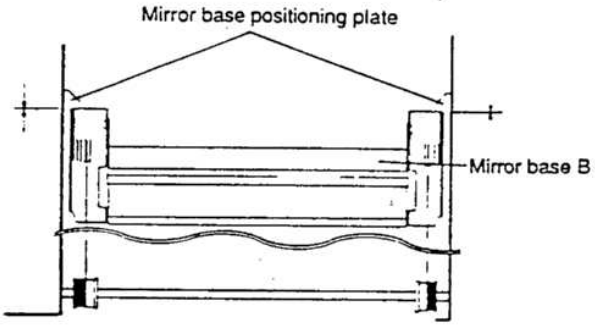

If the one side of mirror base B is in contact with the mirror base positioning plate, but the other side is not in contact with mirror base B, do the following steps.

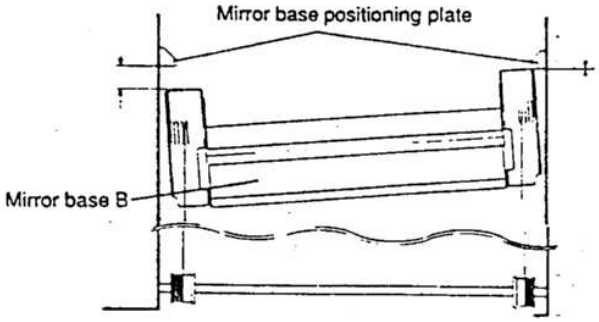

③ Loosen the mirror base pulley fixing screws which are on the side that mirror base B is not in contact with the mirror base positioning plate.

④ Manually rotate the side of the mirror base drive pulley mirror base B is not in contact with the mirror base positioning plate and stop it when mirror base B just came in contact with the mirror base positioning plate. (Do not move the flange and the mirror base drive pulley shaft.)

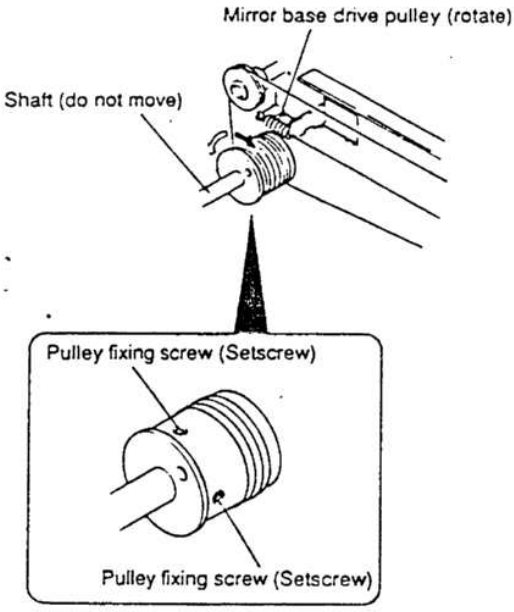

⑤ Tighten the mirror base drive pulley fixing screws.

⑥ Manually rotate the mirror base drive pulley, and release mirror base B from the mirror base positioning plate, then make it contact with the mirror base positioning plate again. At this point, check that the front frame side and the rear frame side of mirror base B make contact each other at the same time.

⑦ If the result is not satisfactory, repeat steps ③ through ⑤ until satisfied result is obtained.

F. Installing the copy lamp unit (mirror base A)

(Positioning mirror base A)

This adjustment is required for one of the following:

- When the mirror base drive wire is replaced.
- When mirror base A or B is replaced.
- When a part inside the dark box is replaced.

Do the reverse sequence of D ① through ⑤ (page 7-6 ~ 7-7) when installing the mirror base.

① Place the mirror base A inside the copier, and route the mirror base drive wire on the front and rear frame sides through the mirror base A frame and the mirror base wire holding plate, without tightening the mirror base A wire holding screw.

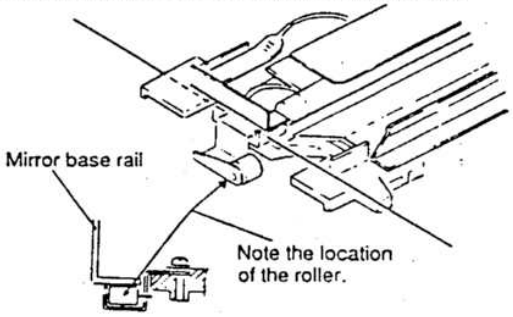

SF-7900
SF-7850

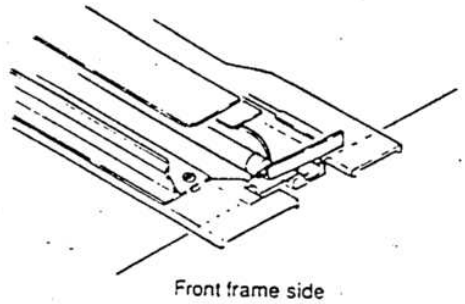

Front frame side

② Match the copy lamp unit and mirror base B to their positioning plates.

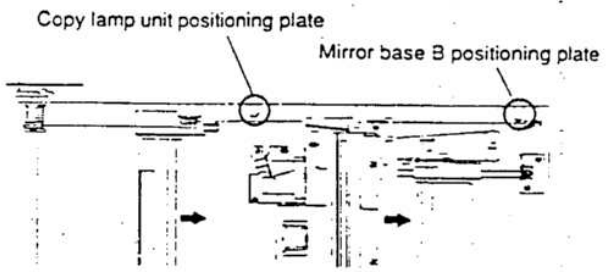

③ In the state of ②, secure the copy lamp unit to the wire.

G. Replacing the mirror base C (No. 4/5 mirror unit)

① Remove the table glass.

② Remove the dark box cover upper.

③ Remove the upper cover right, the right cover lower, and the rear cabinet.

④ Record the dimension A in the figure. (Measure with a scale.) (This is to control tilting of No. 4/5 mirrors which may cause improper focus and skew.)

⑤ Remove the three fixing screws of No. 4/5 mirrors.

⑥ Remove the connectors (large) and (small) in the rear frame side, and remove the lens motor connector and the snap band at the center. In this state, No. 4/5 mirrors drive plate section, and mirror base C can be removed in a assembly. (Be careful not to scratch the mirror base wire in the rear frame side.)

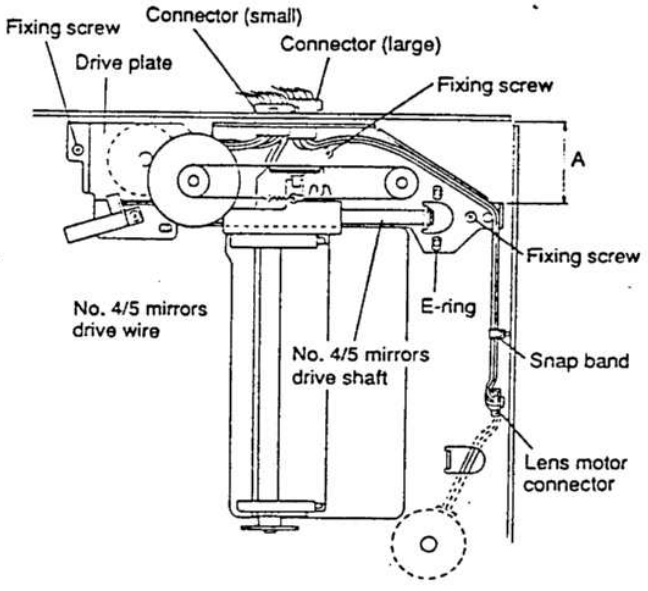

⑦ No. 4/5 drive section and mirror base C section can be separated by removing No. 4/5 mirrors drive shaft (E-ring) and No. 4/5 mirrors drive wire.

Note: When assembling to the machine again, check that three positions marked with (*) are firmly engaged with long holes in No. 4/5 drive plate. Observe dimension A measured in ⑤.

H. Replacing the mirror base C (No. 4/5 mirrors) drive wire

Removing the mirror base C drive wire

① Perform procedures 6-① through ⑤ and remove the No. 4/5 drive plate and mirror base C in a assembly.

② Remove the mirror base C drive wire spring and metal fixture from mirror base C.

③ Remove the mirror base C drive wire from the mirror base pulley.

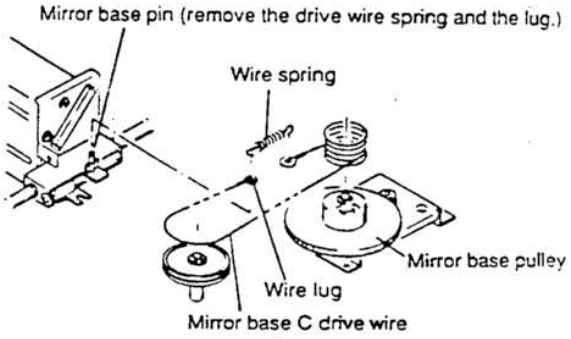

(Setting the mirror base C drive wire)

① Move the mirror base C to the normal position (1:1). (Set the mirror base to the location where the mirror base home position sensor activates.)

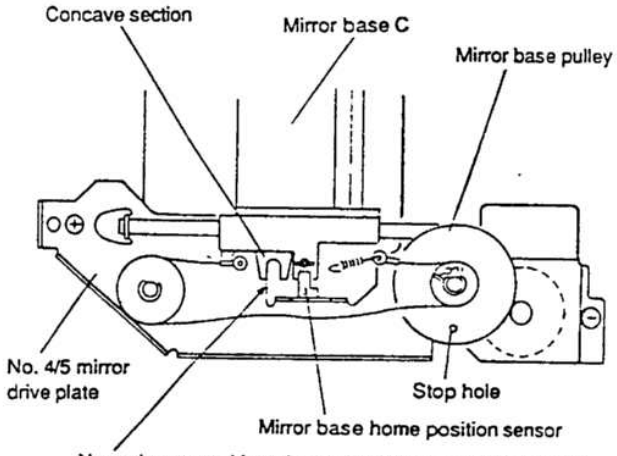

② Insert an M4 x 10 screw into the mirror base pulley stop hole to hold the pulley.

③ Insert the ball of the mirror base C drive wire in the slit of the mirror base pulley gear. Turn the longer side of the wire from the ball clockwise 1 1/2 turns from the lower to the upper side and set the lug on the mirror base pin through the pulley.

Turn the shorter side of the wire counterclockwise 2 3/4 turns from the lower to the upper side around the mirror base pulley gear. Put the lug on the wire spring and insert the lug into the mirror base pin.

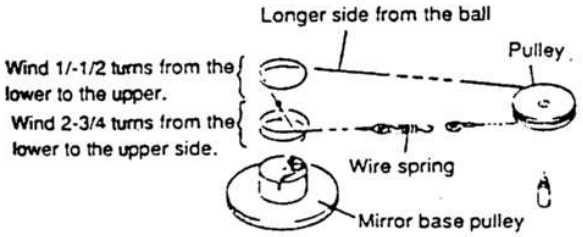

⑤ Remove the mirror base pulley gear holding screw.

⑥ Manually turn the mirror base pulley gear to shift the mirror base C to the enlarge copy or reduce copy position (paper entry side) to check that the wire is properly set and moves smoothly.

I. Removing the light emitting PWB (SF-7850 only)

Remove the original cover.

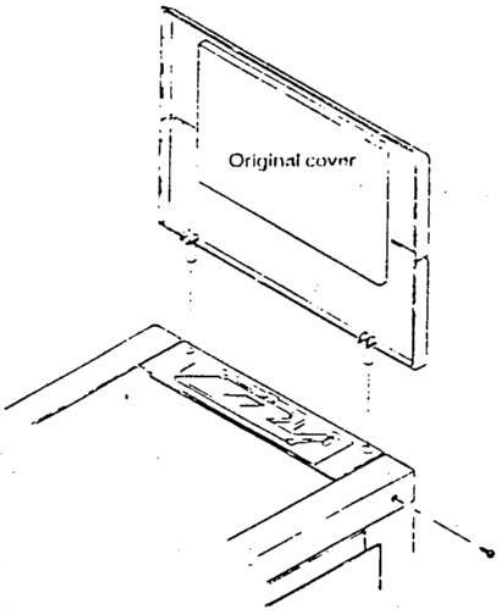

② Remove the hinge section screw which is fixing the document detection arm unit while sliding the document detection arm unit in the arrow direction.

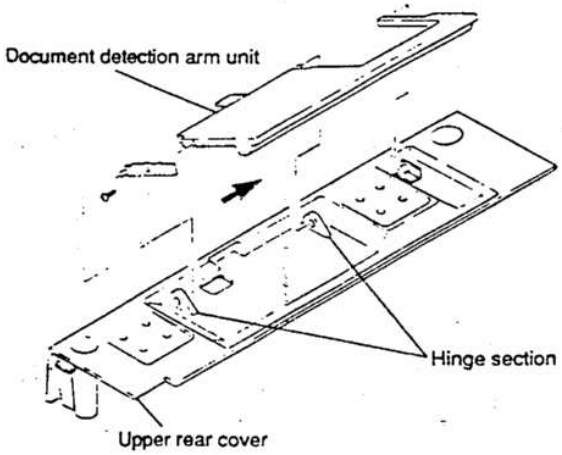

③ Remove the four screws in the rear side of the document detection arm unit, and remove the arm plate.

④ Remove the document detection PWB.

x When assembling the document detection PWB, check that the LED is visible from the arm unit slit.

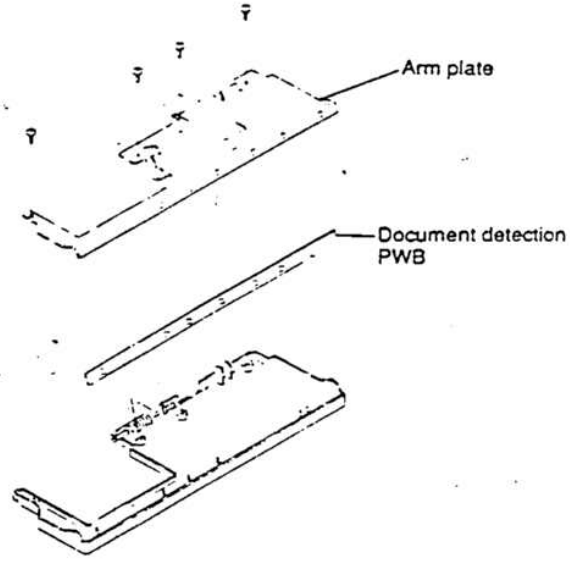

J. Removing the light receiving PWB (SF-7850 only)

① Remove the operation panel. (4 screws)

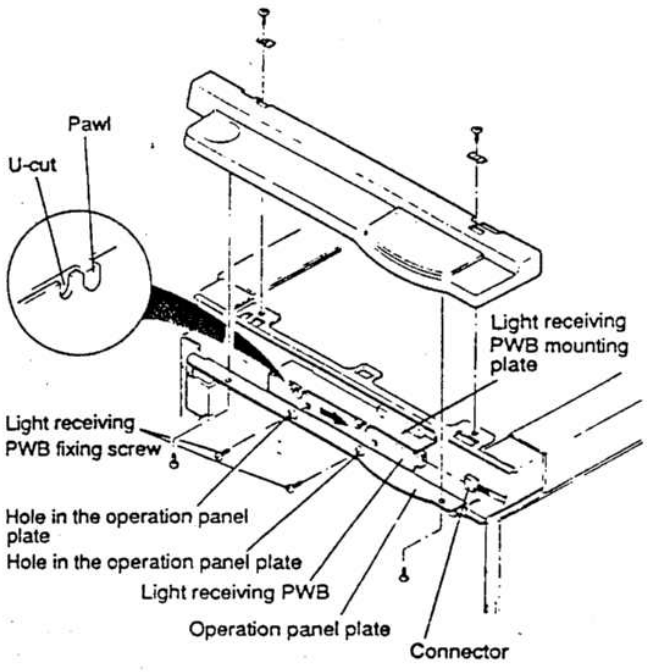

② Remove the two fixing screws of the light receiving PWB, and remove the connectors of the PWB.

③ Slide the PWB to the right to fit the pawl in the light receiving PWB mounting plate and the U-cut in the PWB.

④ Tilt the light receiving PWB forward to remove.

K. Adjustment of the document detection arm unit (SF-7850 only)

The adjustment of the document detection arm unit is required in the following cases:

- When test command 60 (adjustment) cannot be executed.
- When the document detection stopper is replaced.

① Angle adjustment of the document detection arm unit

- Open the original cover, loosen the adjusting screw of the document detection stopper projection amount of the document detection arm unit so that the projection amount is 12.5 ±0.5mm.

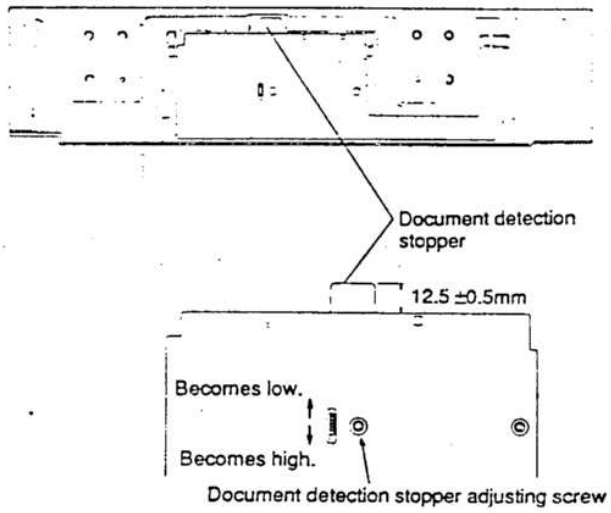

- After adjusting the projection amount, check that the height from the table glass to the top of the document detection arm unit is within 42.5 ±0.5mm.

* When the adjustment value is shifted from the reference value, loosen the document detection stopper adjusting screw and readjust.

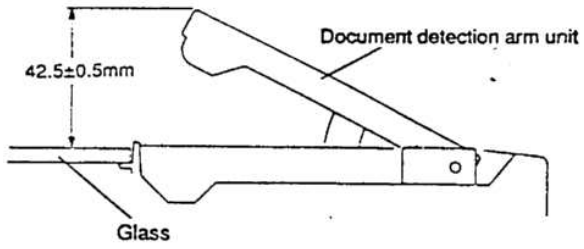

② Adjust the ON timing of the document cover switch.

- Perform test command 60.
  [C] → [=J] → [0] → [=J] → [6] → [0] → [PSW]
- Slowly tilt the document detection arm unit. Loosen the original cover switch actuator adjusting screw and slide the actuator to adjust so that the automatic paper select display is turned off with the height from the table glass to the top of the arm unit being 36.5 ±0.5mm. (If the original cover switch ON timing is shifted, the document detection function may not work properly.)

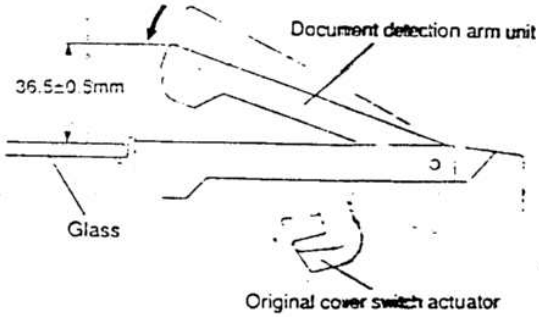

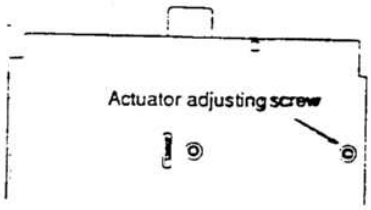

(2) Adjustments

The optical system needs to be adjusted in the following manner:

* Exposure balance, blank lamp position, and copy lead edge can be adjusted independently, but others must be adjusted according to the procedure above.

Check the following preset values according to the lens focal distance rank (lens No.):

- Lens reference position and vertical magnification ratio: Test command 48 INTERRUPT key.
- No. 4 and no. 5 mirror reference position: Test command 48
- Lens characteristics input (focal distance variation): Test command 77

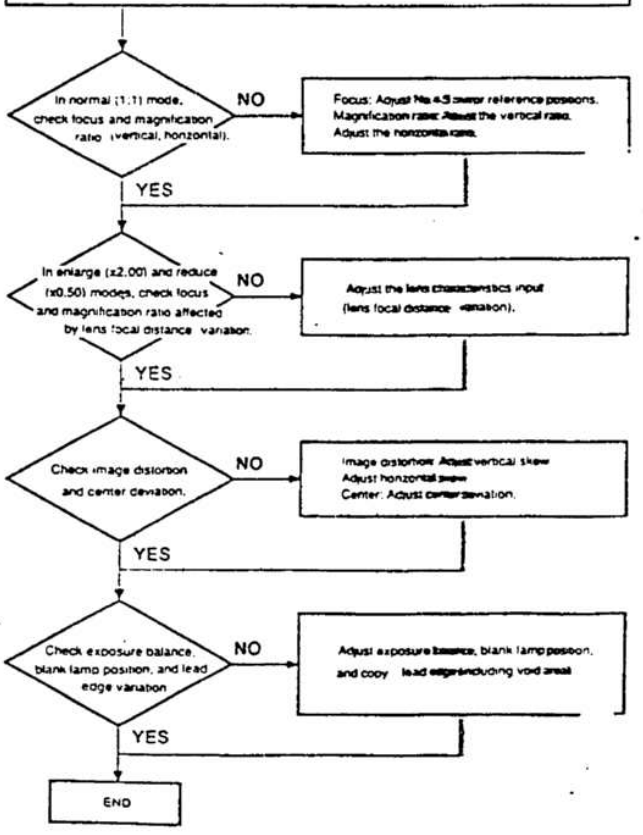

ne above flowchart is basically the same as the conventional models (SF-8300 series). The difference is: Test command 77 [CA] is added because test command 77 is divided into lens side shift correction and No. 4/5 mirror shift correction. (This is in order to improve the resolution level in the enlargement or reduction copy mode.)
Test command 77: No. 4/5 mirror unit shift correction
Test command 77 [CA] : Lens shift correction

A. Lens reference position

The figure (rank) unique to the individual lens characteristics needs to be entered.
The lens home position is determined with this parameter.

- When the lens is replaced.
- When the mirror base is replaced or when the mounting place is changed.
- When self diag U2 occurs.

(Procedure) Execute test command 48 [=J].
[C] — [=J] — [0] — [=J] — [4] — [8] — [PSW] — [=J] —
When the above key operation is performed, the preset value or "40" displayed in the copy quantity display.

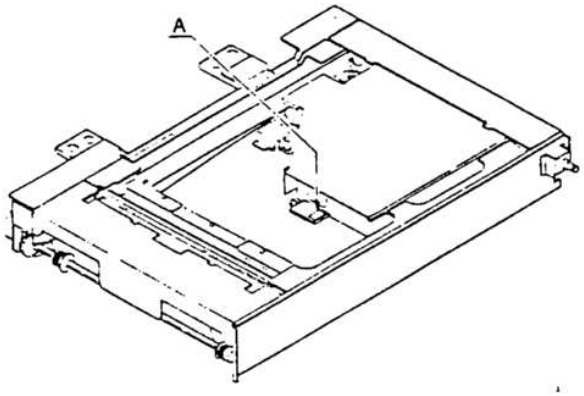

Enter the value (variation in the distance between the document surface to the lens, OL NO. -3.9 to +3.9) displayed at A in the above figure into the following formula and input the obtained value.
40 – [(Displayed value) x 5] = Correction reference value
ample: When the value is +1.2:
40 – (+1.2 x 5) = 34

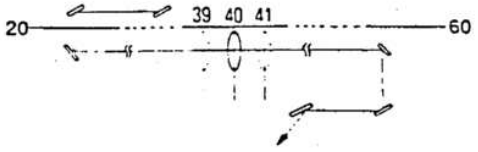

B. Adjusting no. 4/5 mirror reference positions

Similarly to A, the value of the lens rank must be entered. (The No. 4 and No. 5 mirror home positions are determined with this parameter.)

- When the lens is replaced.
- When the mirror base is replaced or when the mounting place is changed.
- When self diag U2 occurs.

(Procedure)
[C] — [=J] — [0] — [=J] — [4] — [8] — [PSW]
hen the above key operation is performed, the preset value or "50" displayed in the copy quantity display.

Enter the value (variation in the distance between the document surface to the image forming surface) displayed in section A of the lens unit in to the following formula, and input the obtained value.
50 – [(Displayed value) x 10] = Correction reference value
Example: When the value is +1.2:
50 – (+1.2 x 10) = 38
If the No. 4/5 mirror reference value is larger than the venter value 50, the optical path is increased by moving it opposite to the lens. If shorter, the optical path is decreased by moving it closer to the lens.

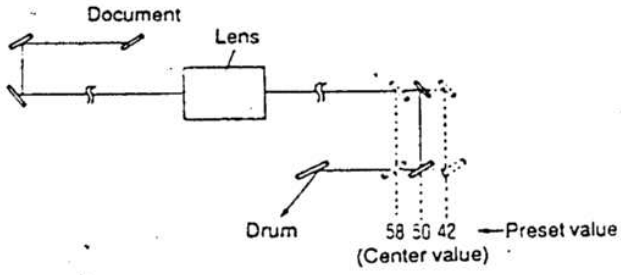

C. Adjusting the vertical copy magnification ratio

This adjustment must be performed under the state where mirror bases A, B and C are parallel and the focuses are properly set.
This adjustment must be performed in the following cases:

- When the lens home position sensor (LHPS) position is moved or the sensor is replaced.
- When the lens is replaced.
- When the mirror base is replaced or its position is changed.
- When the main PWB is replaced.
- When diagnostic status U2 occurs.

① Place a scale on the document table as shown below:

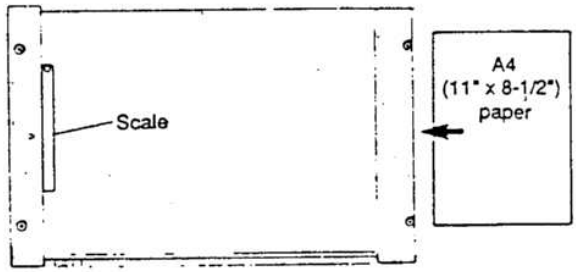

② Make a normal (1:1) copy on A4 (11" x 8 1/2") paper.

③ Compare the length of the copied scale image with the actual length of the scale.

④ Obtain the vertical copy magnification ratio correction factor from the following formula:

$$\text{Vertical magnification ratio correction factor} = \frac{\text{(Document size)} - \text{(Copy image size)}}{\text{(Document size)}} \times 100\%$$

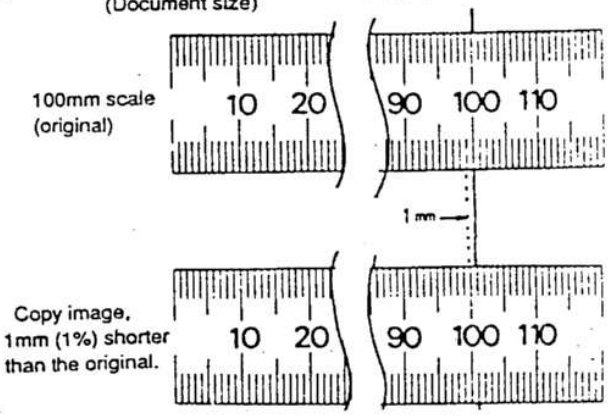

Vertical magnification ratio correction factor = $\frac{100-99}{100} \times 100$
= (0.1%)

⑤ Execute test command 48.
With the key operation of [C] → [=/J] → [0/0] → [=/J] → [4] → [8] → [PSW] → [=/J] the previous preset value of the vertical magnification ratio adjustment is displayed.

⑥ Obtain the vertical magnification ratio adjustment preset value from the following formula:
Vertical magnification ratio adjustment preset value = former preset value (displayed in ⑤) + vertical magnification ratio correction factor x 10
(Example) Former preset value = 25, correction factor = 1%
Vertical magnification ratio adjustment preset value = 25 + 1 x 10 = 35

⑦ Set the vertical magnification adjustment preset value as follows:
[ ] → [ ] → [PSW]
When the preset value is changed by 1, the copy magnification ratio is changed by 0.1%.

⑧ Make a normal (1:1) copy and compare the copied image length with the scale length.

⑨ When the image length is identical to the actual length, the adjustment is completed. If not, repeat the procedures (2) to (8) until the above condition is satisfied.

⑩ Clear test command 48 by depressing the CLEAR key.

D. Adjusting resolution

① Using test command 48, check that it has been preset to the given focus distance rank.
Press [C] → [=/J] → [0/0] → [=/J] → [4] → [8] → [PSW] to execute test command 48. As the READY lamp comes on, the preset value is displayed.

② If the preset value is not in the memory, set the reference value according to the No. 4/5 mirror reference adjustment procedure in ②.
Make a copy using UKOG-0089CSZZ and check the resolution.

③ To change the currently stored preset value, enter a new value with the key operation of
[ ] → [ ] → [PSW].

Check method

Check the following after adjusting the No. 4/5 mirror reference position.

① Place the test chart (UKOG-0089CSZZ) or a resolution test chart on the table glass.

② Make a copy on A3 (11" x 17") paper.

③ Check the focus at the center and corners of the copy.

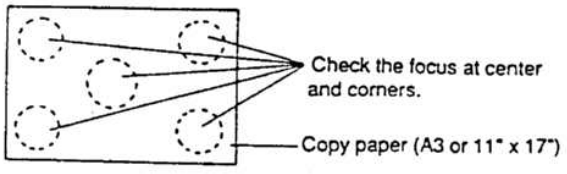

④ Check that the focus is good and resolution is more than 5.0 lines/mm at center and more than 4.5 lines/mm at corners.
If focus is not good, change the no. 4/5 mirror reference adjust preset value and repeat steps ② to ④ until the resolution is within specifications.

E. Adjusting the horizontal magnification ratio

Adjustment is required in any of the following cases:

- When the main PWB RAM is replaced.
- When the diagnostic status U2 occurs.
- When the mirror motor is replaced.
- When the mirror motor control PWB is replaced.

By varying the mirror base scanning speed, the horizontal magnification ratio of the copy is adjusted.

Adjusting procedure

① Place a scale on the document table, make a normal (1:1) copy, and obtain the copy magnification ratio correction factor.
Excute test command 49, and the machine will go into the warm-up cycle, the ready lamp will light up, and the preset value (between 15 – 35) will be displayed. (Value 15 through 35 are valid entry values.)

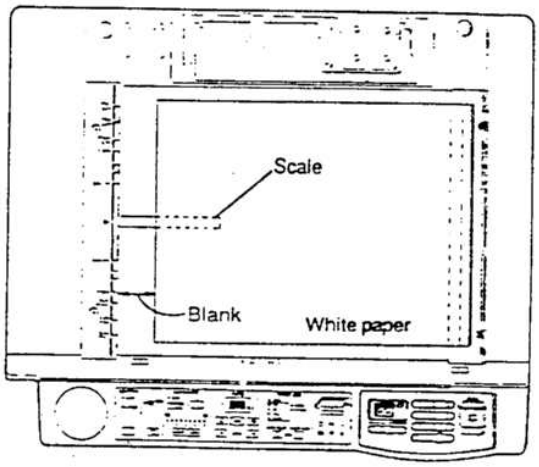

Magnification ratio correction factor (MRCF)
= $\frac{\text{(Document size)} - \text{(Copy image size)}}{\text{(Copy image size)}} \times 100\%$

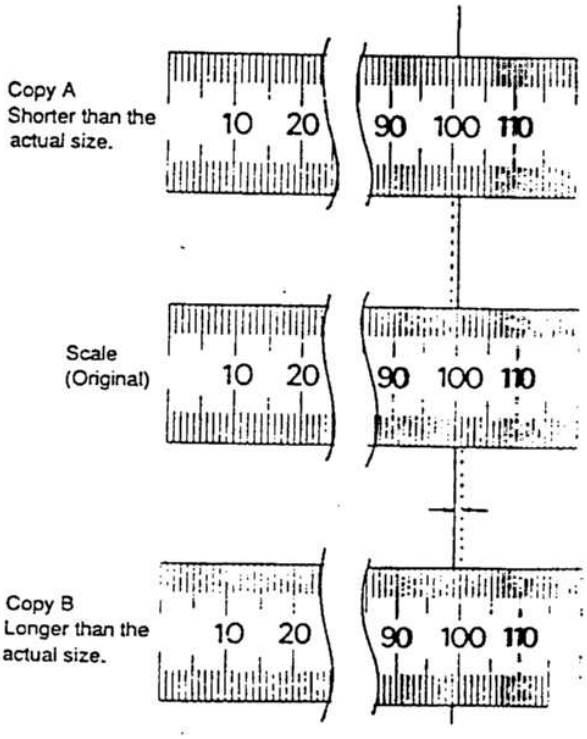

Change the displayed value with the value obtained by the copy magnification ratio correction factor (in procedure ①).
(Input value) = (Previous value) + (Magnification ratio correction factor) [%] x 10
(Example) If the previous value is 25, you will get the following input values for (Ex-1) of ① and (Ex-2).

- Ex-1: 35 = 25 + 1 x 10
- Ex-2: 15 = 25 + (−1 x 10)

When the print switch is pressed after entering the value, the value is stored in memory and the READY lamp goes out.

③ Cancel test command 49.
Note: The preset value input is restricted to the range of 5 to 35.

F. Entry of variable shift correction value (Test command 77 or 77 [CA])

(Entering the lens characteristics)

Since each lens has its focal distance variation, the lens moving distance in the enlargement and reduction mode must correspond to its focal distance. If the lens moving distance in the enlargement and or reduction mode is fixed regardless of the lens focal distance, the y magnification ratio will fluctuate according to the lens focal dis- ..ice variation.
To prevent this, a lens focal distance rank (refer to the comparison table) is stored by test command, and the lens moving distance in the enlargement and reduction mode is determined by the data to make a proper magnification copy.

(When the lens is replaced)

① Obtain the correction value for the lens value from the comparison table of the lens value and test command input value.
Execute test command 77.
[C] → [=J] → [0/◊] → [=J] → [7] → [7] → [PSW]
The READY lamp will light up and the preset value (between 1 – 21) will be displayed.

② Enter the new value.
Example: When the lens display value +1.2, the correction value "14" is obtained from the comparison table. Then enter [1] → [4] → [PSW].
Similarly press
[C] → [=J] → [0/◊] → [=J] → [7] → [7] → [CA] → [PSW] to execute test command 77 [CA], and enter "14."

hen the focus or magnification ratio is not correct)

ıf the focus of magnification ratio is not correct with the above correction vaiue, perform the following procedure.
The correction value of test command 77 is basically the sama as that of test command 77 [CA]. If, however, the focus or magnification ration is nor correct, perform the following procedure:
When the focus is not correct: Change the value of test command 77 by 1 rank.
When the magnification ratio is not correct: Change the value of test command 77 [CA] by 1 rank.

☆ Test command 77 is for no. 4/5 mirror shift correction.
Test command 77 [CA] is for lens shift correction (magnification ratio).

Lens display value	Test command 48 input value	Test command 48 [=J] input value	Test command 77 magnification ratio correction (No. 4/5 mirror)	Test command 77 [CA] magnification ratio correction (lens)	
+4.0	10	20	21	21	
3.9	11	21			
3.8	12	21			+3.8
3.7	13	22	20	20	+3.7
3.6	14	22			
3.5	15	23			
3.4	16	23			+3.4
3.3	17	24	19	19	+3.3
3.2	18	24			
3.1	19	25			
3.0	20	25			+3.0
2.9	21	26	18	18	+2.9
2.8	22	26			
2.7	23	27			
2.6	24	27			+2.6
2.5	25	28	17	17	+2.5
2.4	26	28			
2.3	27	29			
2.2	28	29			+2.2
2.1	29	30	16	16	+2.1
2.0	30	30			
1.9	31	31			
1.8	32	31			+1.8
1.7	33	32	15	15	+1.7
1.6	34	32			
1.5	35	33			
1.4	36	33			+1.4
1.3	37	34	14	14	+1.3
1.2	38	34			
1.1	39	35			
1.0	40	35			+1.0
0.9	41	36	13	13	+0.9
0.8	42	36			
0.7	43	37			
0.6	44	37			+0.6
0.5	45	38	12	12	+0.5
0.4	46	38			
0.3	47	39			
0.2	48	39			+0.2
+0.1	49	40	11	11	+0.1
0	50	40			
−0.1	51	40			−0.1
0.2	52	41	10	10	−0.2
0.3	53	41			
0.4	54	42			
0.5	55	42			−0.5
0.6	56	43	9	9	−0.6
0.7	57	43			
0.8	58	44			
0.9	59	44			−0.9

Lens display value	Test command 48 input value	Test command 48 [=J] input value	Test command 77 magnification ratio correction (No. 4/5 mirror)	Test command 77 [CA] magnification ratio correction (lens)	
1.0	60	45	8	8	-1.0
1.1	61	45			
1.2	62	46			
1.3	63	46			-1.3
1.4	64	47	7	7	-1.4
1.5	65	47			
1.6	66	48			
1.7	67	48			-1.7
1.8	68	49	6	6	-1.8
1.9	69	49			
2.0	70	50			
2.1	71	50			-2.1
2.2	72	51	5	5	-2.2
2.3	73	51			
2.4	74	52			
2.5	75	52			-2.5
2.6	76	53	4	4	-2.6
2.7	77	53			
2.8	78	54			
2.9	79	54			-2.9
3.0	80	55	3	3	-3.0
3.1	81	55			
3.2	82	56			
3.3	83	56			-3.3
3.4	84	57	2	2	-3.4
3.5	85	57			
3.6	86	58			
3.7	87	58			-3.7
3.8	88	59	1	1	-3.8
3.9	89	59			
-4.0	90	60			

<Comparison table of the lens value and the test command input value>

G. Adjusting vertical skew

The adjustment is required in the following cases:

- When the mirror base drive wire is replaced.
- When the No. 1 or no. 2 mirror base is replaced.
- When the following skew copies are produced.

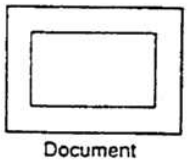

Document

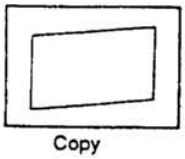

Copy

① Place a sheet of A3 (11" x 17") white paper on the document exposure table so the sides come in contact with the glass holder and the front frame.

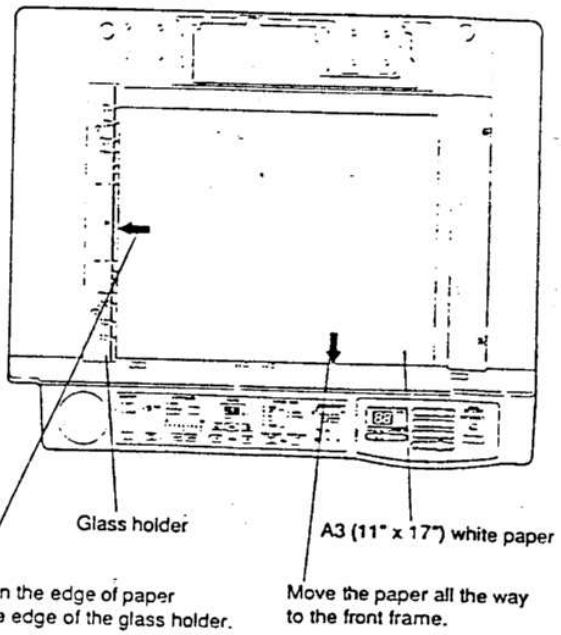

② With the document cover open, make a normal (1:1) copy on A3 (11" x 17") paper.

③ Measure the black background area at the lead edge and trail edge.

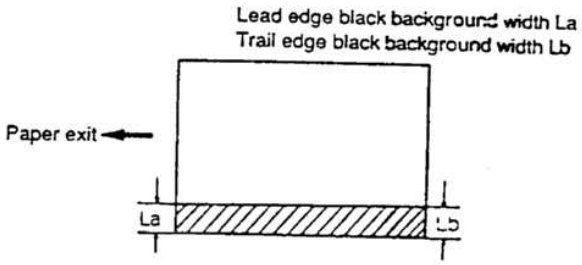

If the width of the lead edge black background (La) is he same as the trail edge black background (Lb), no adjustment is required. (In this case, there is no need to perform procedures ④ to ⑦.)

④ Loosen the rear frame side mirror base drive pulley holding screw.
If La is greater than Lb, turn the rear frame mirror base drive pulley in arrow direction A. (Do not move the flange and mirror base drive pulley shaft.)
If La is smaller than Lb, turn the rear frame mirror base drive pulley in arrow direction B. (Do not move the flange and the mirror base drive pulley shaft.)

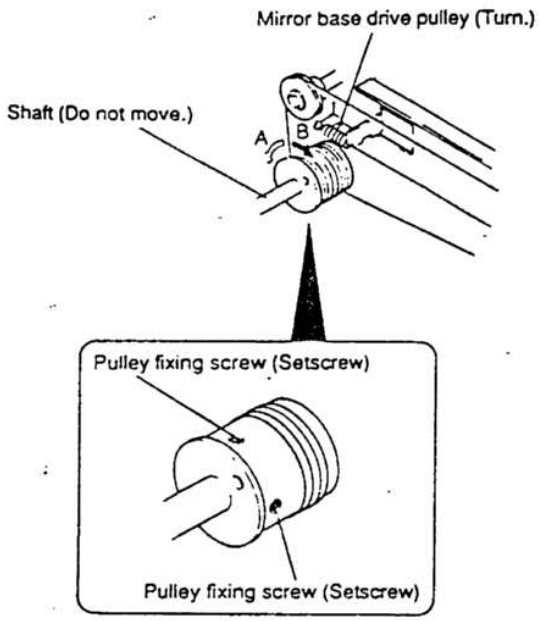

⑤ Tighten the mirror base drive pulley screw to secure the mirror base drive pulley to the flange.

⑥ Perform procedures ① to ③.

⑦ If La is not equal to Lb, perform ④ and ⑤. (If La equals Lb, the adjustment has been completed.)
Repeat steps ① through ⑤ until La equals Lb.

H. Adjusting horizontal skew

If a horizontal skew (verticality to the scanning direction) is met without skew in the mirror base scanning direction, you can adjust the horizontal skew by adjusting the height of the No. 2/3 mirror base rail using the eccentric screw of the No. 4/5 mirror base unit.
This adjustment is required for any of the following reasons:

- When the mirror base drive wire is replaced.
- When the No. 1/2 mirror base is replaced.
- When the No. 2 mirror base rail is replaced or the location is changed.

When the copy shown below is produced.

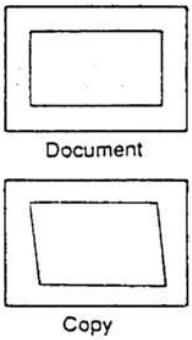

① Preparing document for adjustment
Draw parallel lines 10mm from both edges of A3 (11" x 17") white paper. (This must be done accurately.)

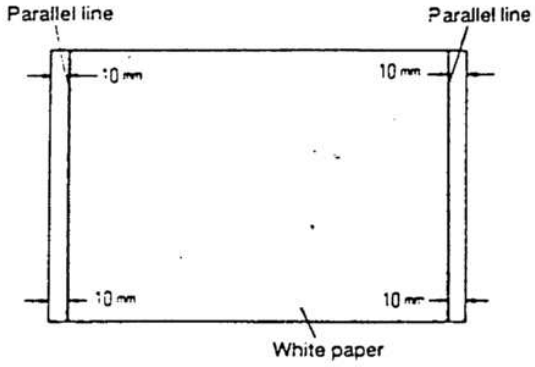

② Set the document prepared in ① on the document exposure table as shown below:

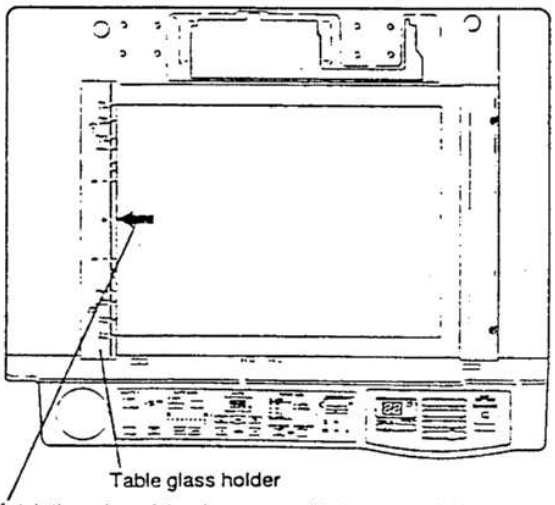

Match the edge of the document with the edge of the table glass.

③ Make a normal (1:1) copy on A3 (11" x 17") paper.

④ Measure the distance from the copy paper edge to the line at four corners (La, Lb, Lc, Ld).

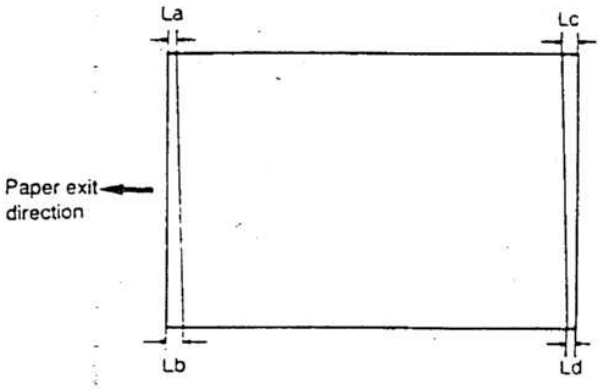

Adjustment is not required if La equals Lb and Lc equal Ld.

Adjusting procedure

If La > Lb (Lc < Ld):
Raise the front frame side of the no. 4/5 mirror base in arrow direction A.

SF-7800
SF-7850

If La < Lb (Lc > Ld):

Lower the front frame side of the no. 4/5 mirror base in arrow direction B.

Take note how far the eccentric screw is rotated. a full turn of the eccentric screw changes the height by 2mm. that is, a 4m deference occurs between La and Lb.

* Open the front panel and make the adjustment through the adjusting hole.

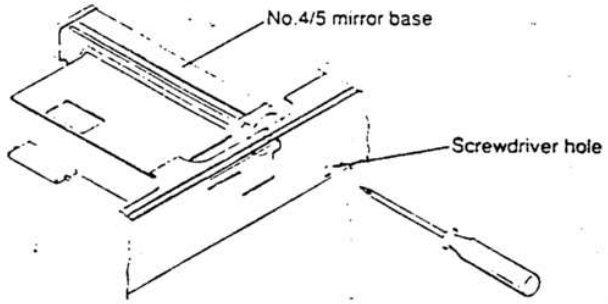

If adjustment cannot be achieved with the above procedure, perform the adjustment in the following manner.

Adjusting procedure

① Move mirror base B rail up and down to adjust.

If La is greater than Lb: Move the paper exit side mirror base B rail up by half the difference of La – Lb.

If La is smaller than Lb: Move the paper exit side mirror base B rail down by half the difference of La – Lb.

(Example) If La is 12mm and Lb is 9mm, move the paper exit side mirror base B rail up by 1.5mm.

If Lc is greater than Ld: Move the paper entry side mirror base B rail down by half the difference of Lc – Ld.

If Lc is smaller than Ld: Move the paper entry side mirror base b rail up by half the difference of Lc – Ld.

(To move the mirror base rail, hold the mirror base handle.)

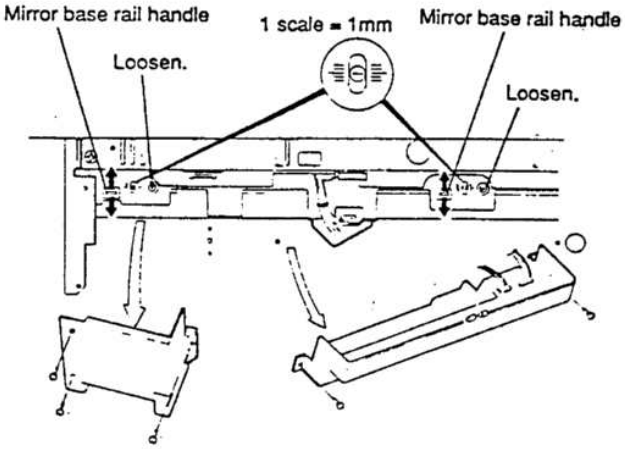

Remove the main switch cover.

② Do adjustment in above step ① so that La equals Lb and Lc equals Ld.

③ After the adjustment has been completed, manually rotate the mirror base drive pulley to make a full scan of the mirror bases A and B to check that the mirror bases do not make contact each other.

Note: If the mirror base rail is moved excessively, the mirror bases may make contact each other.

I. Adjusting center deviation

Center deviation can be adjusted by moving the lens in the arrow direction so that the difference between the copy center image and the document center image may be less than 2mm. make a normal (1:1) copy and compare the center line between the original document and the copy.

Note: After the lens was moved, it is necessary to adjust the blank lamp position because blank lamp center position is affected when the document center reference position is changed.

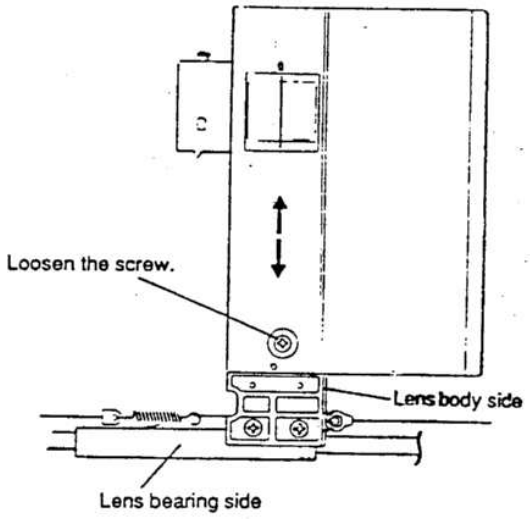

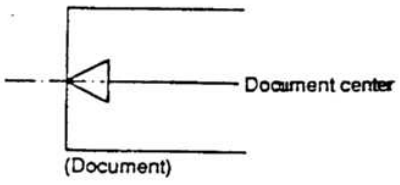

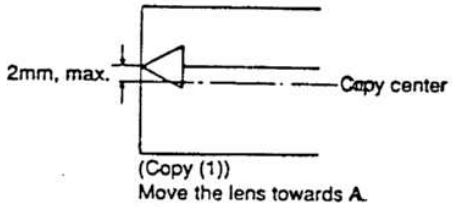

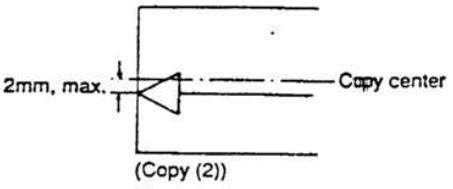

Adjusting exposure balance

Make a half tone copy. Move the exposure control plates X, Y, and Z in the arrow direction. Moving in the direction A makes a darker exposure, and moving in the direction B makes a lighter exposure.

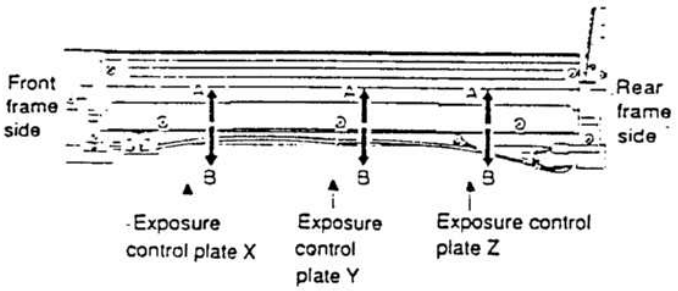

Example: If the copy as shown below is produced, move the exposure control plate X in the direction B to adjust the exposure balance.

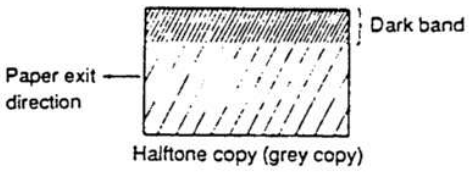

Halftone copy (grey copy)

The exposure control plate Y must be adjusted within 2mm from the edge of the reflector.

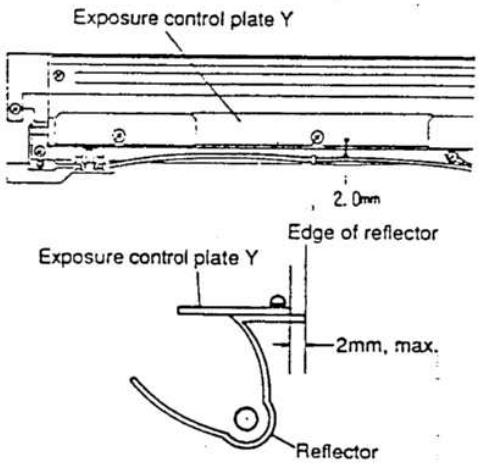

K. Adjusting the copy lead edge

The copy lead edge can be adjusted with test command 50 or 58.
(Normal copy) Image loss: 0 – 3mm
Void area 1 – 3mm

The copy lead edge adjustment is required in the following cases:

- When the mirror hole position sensor (MHPS) is replaced or its location is changed.
- When the mirror base is replaced.
- When the resist roller or the resist roller clutch is replaced.
- When the automatic document feeder is installed or removed.
- When the main control PWB is replaced.

(When test command 50 is used)

a test command 50 to adjust the ON timing of the RRC. When the ..rror base starts scanning and the mirror home position sensor (MHPS) turns off, the time and pulses are counted by the CPU and RRC turns on as the proper timing as determined by test command 50.
Time interval from MHPS off to RRC on depends on values from enlargement, normal, and reduction modes.

Keys and displays during execution of test command 50

In this test command, the following keys and displays perform special functions.

Reduction key: makes the magnification ratio 50%.
Enlargement key: Makes the magnification ratio 200%.

Zoom-up key:
Pressing the zoom-up key turns the display in the copy quantity display as A → b → C → A →. The set value corresponding to the display will be displayed in the copy quantity display.

A : RRC-A set value
b : RRC-B set value
C : Void amount set value

When the zoom-up key is pressed, the previously displayed value is stored in memory.

Zoom-down key:
Pressing the zoom-down key turns the display in the copy quantity display as A → C → b → A →. The set value corresponding to the display will be displayed in the copy quantity display. The other effects are the same as the zoom-up key.

Display section:
During execution of test command 50, the RRC-A set value is displayed in the copy quantity display and "10A" is displayed in the magnification ratio display. The upper two digits of the display shows the copy magnification ratio (100%), and the lowest digit shows that the RRC-A set value is displayed.

Adjusting procedure

① Place a scale on the document exposure table as shown below:

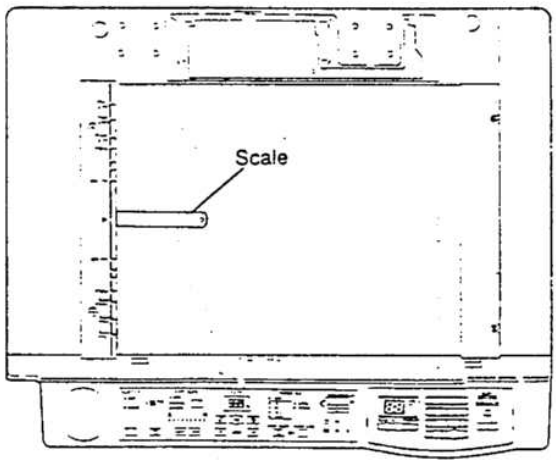

② Press keys in order of
[C] → [=J] → [0/0] → [=J] → [5] → [0/0] → [PSW] to execute test command 50. As the READY lamp comes on, a preset value between 9 and 99 will be displayed.
This is the content of RRC-A memory.

③ Set the values of A and b to zero and make copies in normal mode and 200% enlargement mode.

- [0/0] → [0/0] → [Zoom-up] → [0/0] → [0/0] → [PSW]
  (A normal copy is produced.)
- [Enlargement] → (READY after lens shift) → [PSW]
  (A 200% copy is produced.)

④ Measure the distance between the paper lead edge and the image (scale) lead edge in the above copies, and obtain RRC-A and RRC-B from the formulas below:

If the RRC-A preset value is not proper the lead edge position differs in each magnification ratio. RRC-B is the preset value to control RRC ON timing to fit the drum image lead edge with the lead edge of transfer paper.

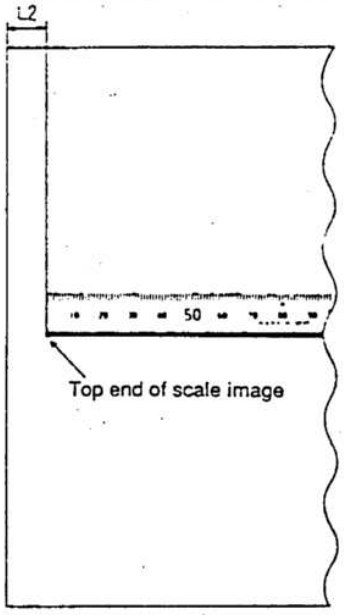

Normal (1:1) copy

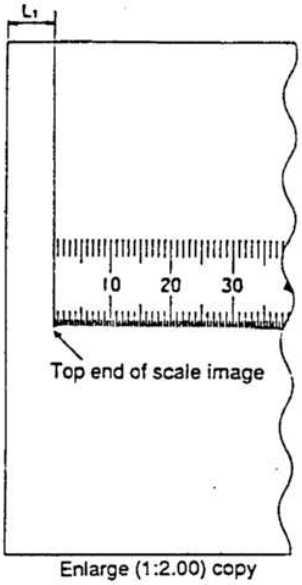

Enlarge (1:2.00) copy

- L1: 200% lead edge shift [mm]
- L2: 100% lead edge shift [mm]
- RRC-A = 8.313 x (L1 – L2)
- RRC-B = 20.190 x L2 – 10.095 x L1

⑤ Enter the obtained values of RRC-A and RRC-B in the same manner as ③.

⑥ Make copies in 200%, 100% and 50% mode, and check variations between each two modes. (About 1.0mm)
If the variations is too great, repeat procedures from ③ again.

⑦ Make a normal (1:1) copy and check that the lead edge image loss is within 0 to 3mm. If not, change the contents of RRC-A and RRC-B to readjust.

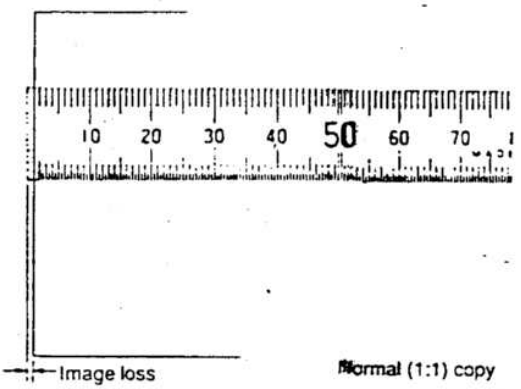

Normal (1:1) copy

Note; The above image loss adjustment value is the adjustment value for test command 50 and not the final adjustment value.

⑧ Place a scale and an A3 (11" x 17") white paper as shown below:

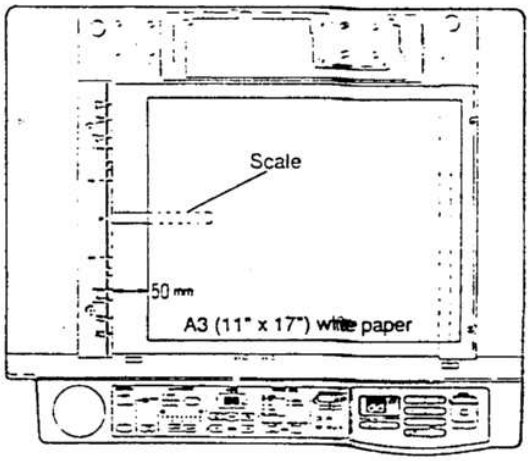

⑨ Press the zoom key to make the lowest digit of the magnification ratio display "C". (void amount adjustment mode)

⑩ Make a copy and enter the normal (1:1) copy lead edge void adjustment set value so that the black background edge is at 3mm scale of the copy scale image.

Press [ ] → [ ] → [PSW], and a copy is produced and the key input is set. When the set values changed by 1, the void area will change by about 0.2mm. The greater the set value is, the greater the void amount is.

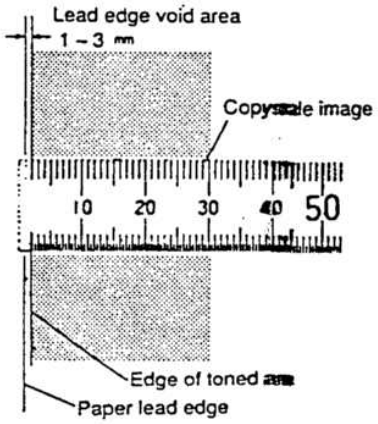

Normal (1:1) copy

Make a normal copy and check that the image loss and the void area are within the specified range.
(Specified range)
Image loss : 0 – 3mm
Void area : 1 – 3mm

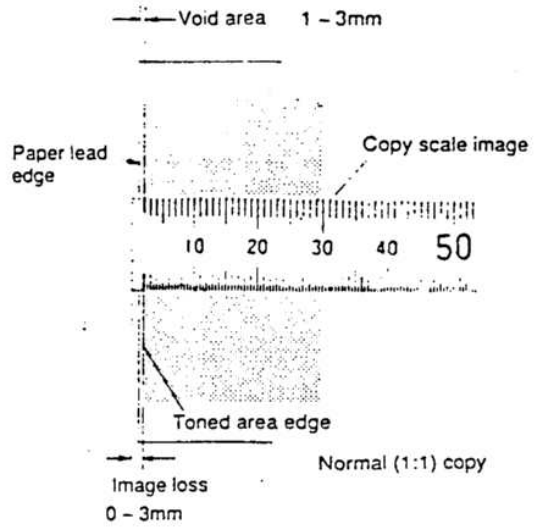

⑰ Press the CLEAR key to cancel test command 50.

Note: When the RRC-A or RRC-B set value is changed in test command 50, be sure to adjust the copy lead edge void area.

(When test command 58 is used)

In the case of test command 58, the key operation and the display are the same as test command 50.
With test command 58, the lead edge adjustment can be done easily by directly entering L1 and L2 values.

L1 = Distance from the enlarged (1:2.00) copy paper edge to the scale image edge.
L2 = Distance from the normal (1:1) copy paper edge to the copied scale image edge.

The void area can be adjusted using the auto image size key as with test command 50.

Adjusting procedure

① Place a scale on the document table.

② Press keys in order of
[C] → [=J] → [0/0] → [=J] → [5] → [8] → [PSW] to start executing test command 58. The machine starts warming-up.

③ The upper two digits of L1 are displayed in the copy quantity display, and "10A" is displayed in the copy magnification ratio display.
The upper two digits of the display in the magnification ratio display shows the magnification ratio (100%), and the lowest digit shows that L1 is displayed in the copy quantity display.

- L1: 200% lead edge shift (○○○mm: 3 digits)
- L2: 100% lead edge shift (×××mm: 3 digits)

Example of copy quantity display

Example: In the case of 42.5mm, [4] [2] [5] → The display is [2] [5].

④ Using the zoom key and 10 key, set the values of A and b to zero, and make copies in 100% and 200% modes.

- [0/0] → [0/0] → [0/0] → [Zoom-up] → [0/0] → [0/0] → [0/0] → [PSW] (A 100% copy is produced.)
- [Enlargement] → [PSW] (A 200% copy is produced.)

⑤ Measure the distance between the paper lead edge and the image (scale) lead edge) in the 100% and 200% copies. Enter L1 and L2 values with the zoom key and 10 key. With this operation, RRC-A and RRC-B values of test command 50 are automatically calculated and stored in memory
Input example
Example
L1 = 24.5mm
L2 = 15.0mm
Check that the lowest digit of the magnification ratio display is A, perform the following key operation. [2] → [4] → [5] ("45" is displayed in the copy quantity display.) → [ZOOM] → [1] → [5] → [0] ("50" is displayed.) → [PSW]

⑥ Check and adjust shift, image loss, and void area in the same manner as test command 50.

L. Adjusting document sense level

(Input of document sense level)

With this test command the sensor threshold value is entered for the sensor to determine the presence of a document. This test command is also used to monitor the sensor on/off state.

① [C] → [=J] → [0] → [=J] → [6] → [0] → [PSW] → [Auto zoom key]
The READY lamp (RPL) and the auto image size lamp light up.

② Open the document cover without placing a document on the glass and depress the PRINT switch.
The READY lamp goes out momentarily and lights up again. The INTERRUPT lamp also lights up simultaneously. The document no-presence sensor level is read into memory.

③ Place an A3 (11" x 17") copy paper on the document table and press the PRINT switch with the document cover left open. The document sensor level is read and the level for document presence is stored in the memory, At the same time, the control returns to the sensor check mode.

* In this case, if there is any abnormality in the sensor level, "CC" is displayed. (The sensor levels can be checked with test command 94.)

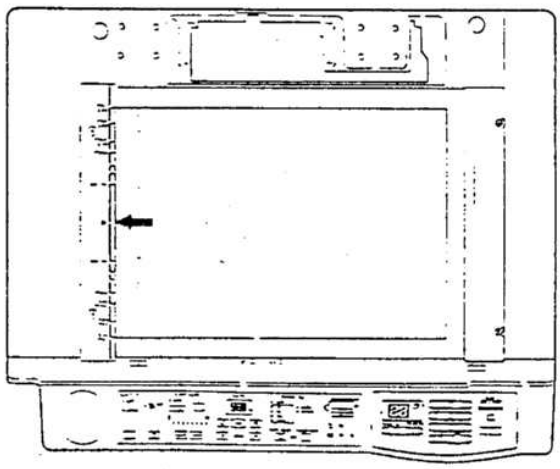

<Reference>
The levels of the sensor when a document is present and not present are read and their mean value is read.

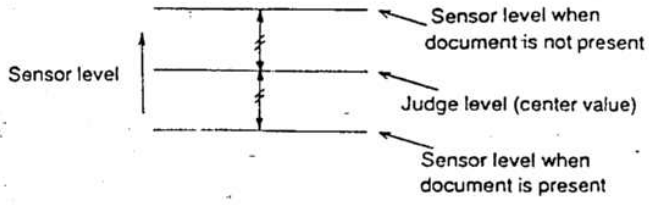

[redacted]
SF-7800
SF-7850

(Sensor check mode)

The photo sensor check can be made with test command 60. (After the document sense level check, the machine automatically goes into the check mode.

Check method of the photo sensor

- Key operation:

  [C] → [=J] → [0] → [=J] → [6] → [0] → [PSW]

  The document size lamp and the auto paper select lamp light up simultaneously when the machine goes into the check mode. The document size lamp goes off when the light emitting section of the LED PWB is shaded.

  * The photo sensor arrangement is as shown below:

Optical axis	Japan AB series	Outside Japan AB series	Outside japan inch series
1	—	—	—
2	B5	—	—
3	A4	A4	LT
4	B5R	—	—
5	A4R	A4R	LTR
6	B4	B4	LG
7	A3	A3	17"

The auto paper select lamp is for checking open/close of the original cover. (On when open, OFF when close)
When the original cover close is detected, all the document size display lamps are turned off.

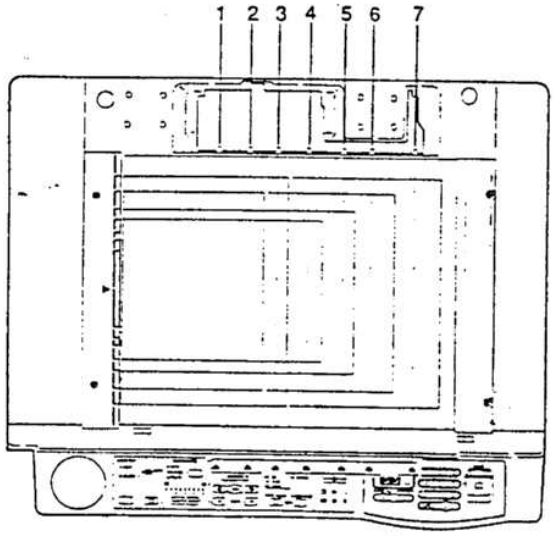

(Checking the light reception level and the judgement level)

The light reception level and the judgement level can be checked with test command 94.

① Light reception level display mode

[C] → [=J] → [0] → [=J] → [9] → [4] → [PSW]

- The light reception level during execution of test command 94 is displayed in the copy quantity display.
- After executing the test command, enter the value corresponding to each sensor using numeric keys. The document size display lamp lights up and the light reception level of each sensor can be checked.
- The auto paper select lamp is used for checking the orig cover open/close. (ON when open, OFF when close.) In the case of "1," when the original cover is closed, the sensor level is fixed at the preceding value.

② Set level display mode

[C] → [=J] → [0] → [=J] → [9] → [±] → [PSW] → [Auto zoom key]

- With the above key operation, the INTERRUPT lamp lights up.
- The sensor levels set with test command 60 are displayed in the copy quantity display.
- After executing test command 94, enter the value corresponding to each sensor using numeric keys. The document size display lamp lights up and the set level of each sensor can be checked.

. Developer unit

A. DV side seals F and R replacement (every 120K copies)

① Remove the two screws connecting the hopper section and the developer tank.

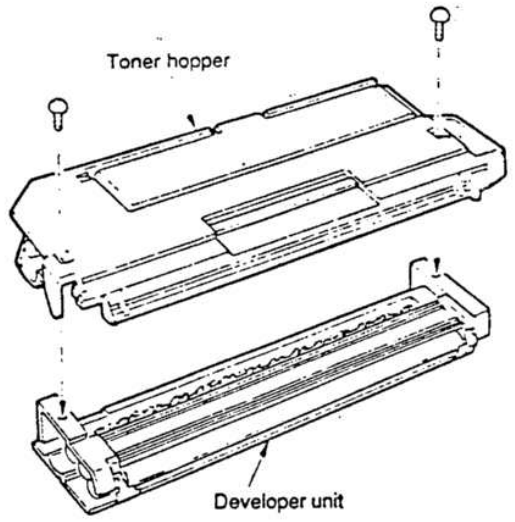

② Replace the DV unit side seals F and R as shown below.

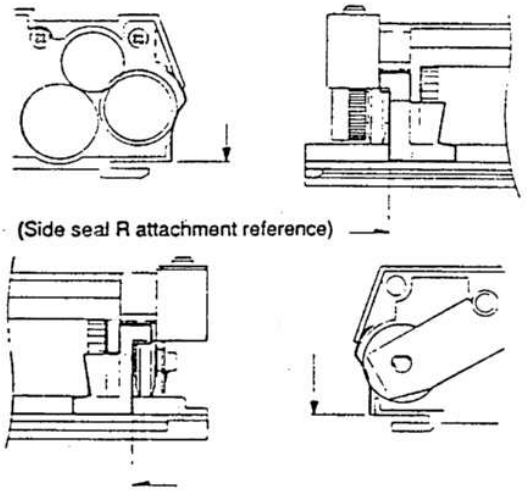

Note: The DV side seals are adjacent to the drum. Be careful not to allow peeling off or defective attachment.

B. DV blade replacement (every 120K copies)

① Remove the old DV blade from the DV cover. (Remove the duplex tape also.)

② Install a new DV blade with the base sheet attached on it as shown below. Attach the DV blade to align with A and the reference line (凸 0.2). The sheet must not extend from end surface A. It must not cover the scribed line. The allowance shift is within 0.5mm from the scribed line. The sheet must be attached without wrinkles.

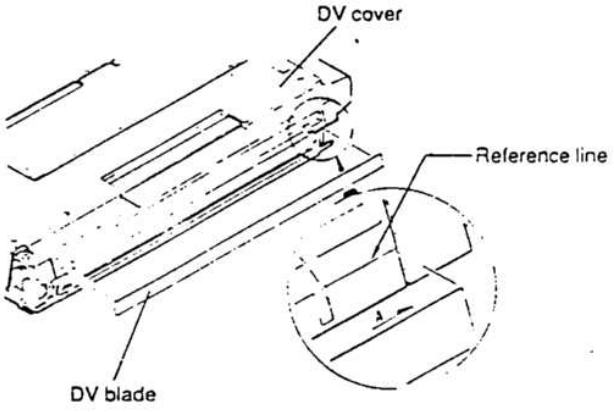

③ Remove the base sheet from the DV blade.

C. V ring attachment

Attach the V rings to the MG roller, the MX-A roller and the MX-B roller as shown below. (Note the installing directions.)

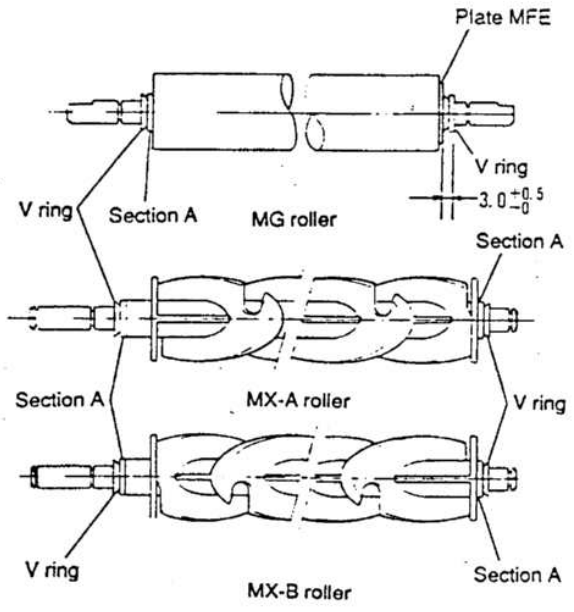

① Note the installing directions of the V rings.

② There must be no clearance between the V ring and section A of each roller.

③ Attach the V ring to the MG roller right side as shown. ($3.0^{-0.5}$)

※ Note: When replacing the MG roller, attach plate MFE.

. Developer unit

A. DV side seals F and R replacement (every 120K copies)

① Remove the two screws connecting the hopper section and the developer tank.

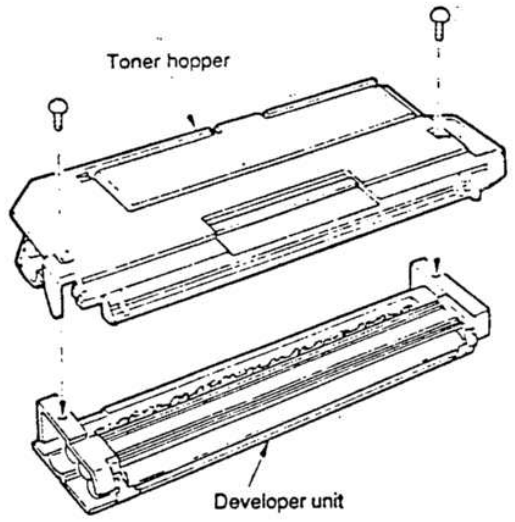

② Replace the DV unit side seals F and R as shown below.

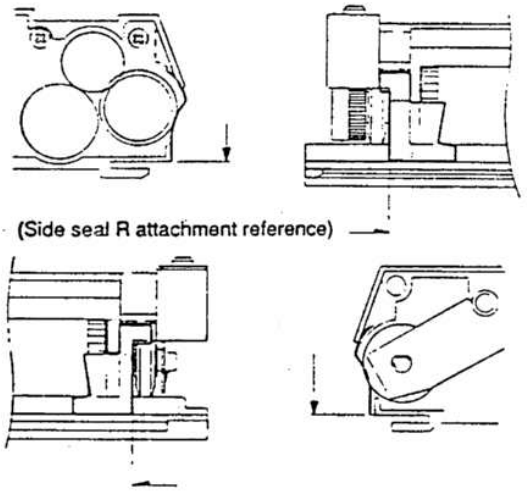

Note: The DV side seals are adjacent to the drum. Be careful not to allow peeling off or defective attachment.

B. DV blade replacement (every 120K copies)

① Remove the old DV blade from the DV cover. (Remove the duplex tape also.)

② Install a new DV blade with the base sheet attached on it as shown below. Attach the DV blade to align with A and the reference line (凸 0.2). The sheet must not extend from end surface A. It must not cover the scribed line. The allowance shift is within 0.5mm from the scribed line. The sheet must be attached without wrinkles.

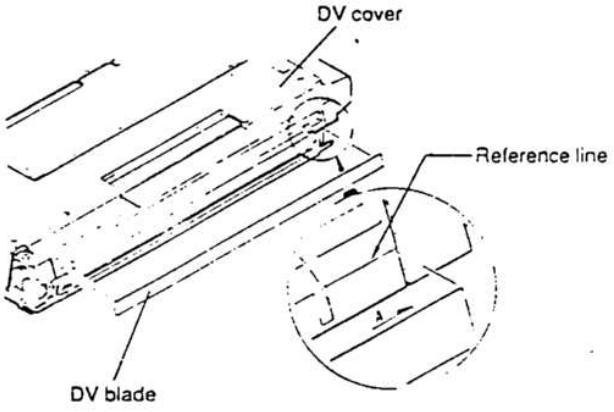

③ Remove the base sheet from the DV blade.

C. V ring attachment

Attach the V rings to the MG roller, the MX-A roller and the MX-B roller as shown below. (Note the installing directions.)

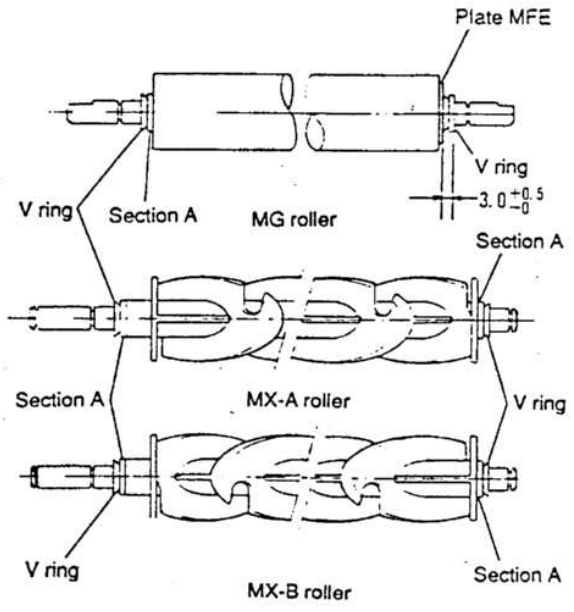

① Note the installing directions of the V rings.

② There must be no clearance between the V ring and section A of each roller.

③ Attach the V ring to the MG roller right side as shown. ($3.0^{-0.5}$)

※ Note: When replacing the MG roller, attach plate MFE.

SF-7800
SF-7850

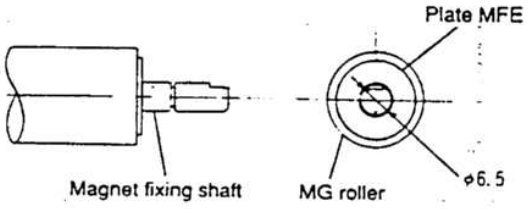

Do not allow the hole (ø6.5) of the plate MFE to make contact with the magnet fixing shaft. Clean and remove oil and dirt from the attachment surface.

※ Note: When attaching the MG roller, put the milled surface facing upwards.

D. Doctor gap adjustment

If the clearance between the DV doctor and the MG roller is improper, the following trouble may occur.

- Too low copy density
- Too high copy density
- Toner dusting

(Procedure)

① Remove the two screws which are connecting the toner hopper and the DV tank, and separate them from each other.

② Loosen the DV doctor fixing screws. (2 pcs. in the rear frame side and 2 pcs. in the front frame side)

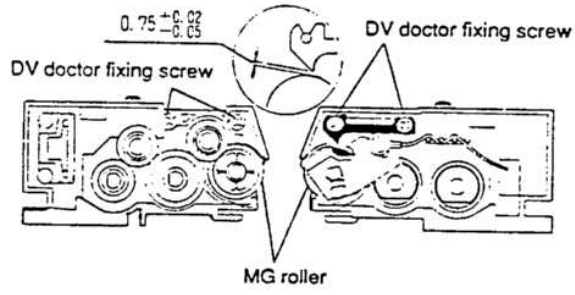

③ Insert a 0.75mm thickness gauge between 50mm~80mm from the DV doctor end surface.

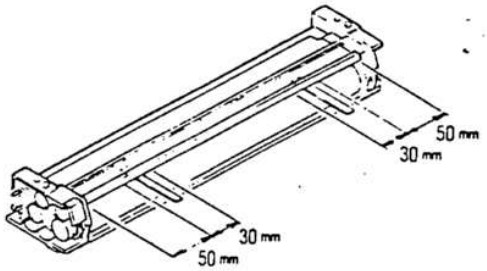

④ Push the DV doctor in the arrow direction and tighten the DV doctor fixing screws in the front and the rear frame sides.

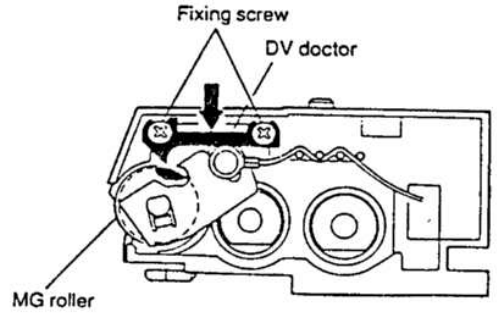

⑤ Check that there is a clearance of 0.75 $^{+0.02\text{mm}}_{-0.05\text{mm}}$ at either end the center of the DV doctor.

※ Note: When inserting a thickness gauge, be careful not to scratch the DV doctor and the MG roller.

E. MG roller main pole position adjustment

If the MG roller main pole position is improper, the following trouble may occur.

- Too low copy exposure
- Toner dusting

(Procedure)

① Remove two screws which are connecting the toner hopper and the DV tank, and separate them from each other. Place the DV tank on a flat surface.

② Arrange a needle with string as shown below:



③ Hold the string and bring the needle close to the MG roller. (Since the MG roller is small in diameter, use of a clip is not advisable to position precisely.)

④ Mark the contact position on the MG roller surface with the needle with a pen.

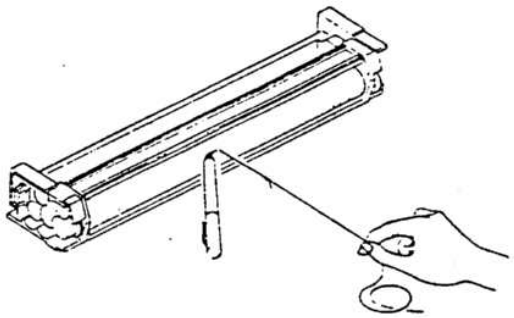

⑤ Check that the distance between the marking position and the tank is 16.5mm.
If the distance is not 16.5mm, loosen the main pole adjustment plate fixing screw, move the adjustment plate in the arrow direction and adjust.

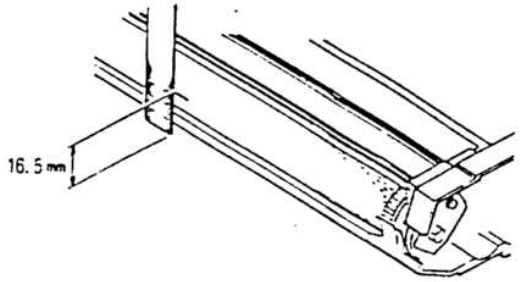

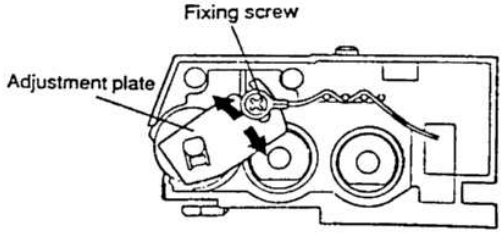

After adjustment, tighten the screw to fix the adjustment plate.

F. Note for installing the toner hopper drive gear (31T) and the stirring shaft

- Be careful to the installing positions of the stirring shafts A and B.

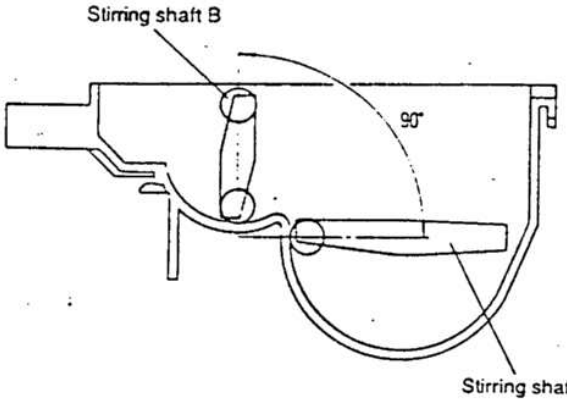

Install so that stirring shafts A and B form 90 degrees as shown above.

- When installing the toner hopper drive gear (31T), be careful to the stop position of the E-ring as shown below: (If the E-ring covers the milled surface, the gear may be easily disengaged.

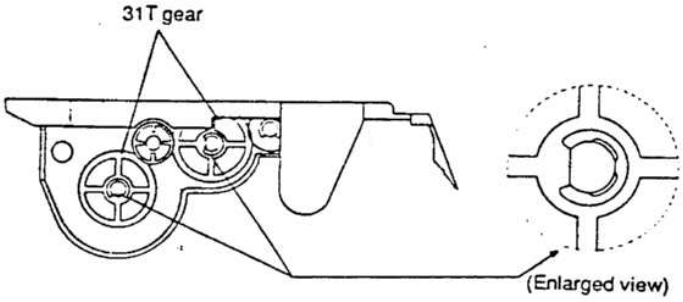

G. Developer unit color identification resistance

A developer unit resistance is changed according to its color for color identification.

Color	Resistance [KΩ]	Identification signal voltage (DVC) [V]
Black	0	0
Red	6.2	2.25
Blue	8.2	2.56
Brown	12	2.97
Green	24	3.58
Spare	1.4	0.83

5. Suction unit

A. Ozone filter replacement (Every 120K copies)

① Remove the nylon clamp fixing screw.

② Lift the suction duct mylar and remove the ozone cleaner.

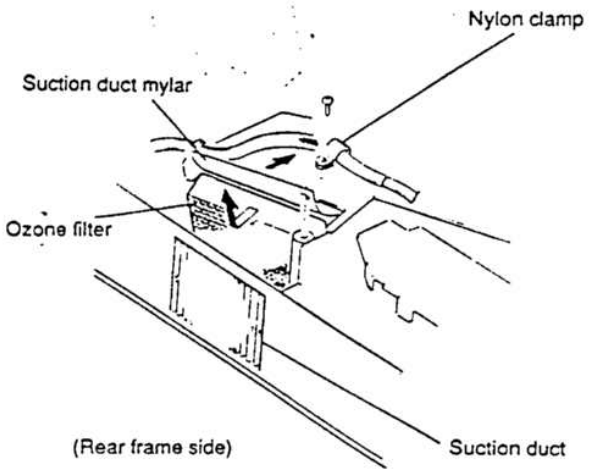

③ Insert a new ozone filter completely until it reaches the bottom.

④ Tighten the screw to fix the nylon clamp. (Note the direction and do not pinch the wire.)

B. Suction belt replacement

The suction belt should be cleaned every 30K copies.
Suction belt replacement

① Open the clamshell, and remove the TC case unit and the fusing unit.

② Remove the suction drive belt. Be careful not to deform the flange mylar.

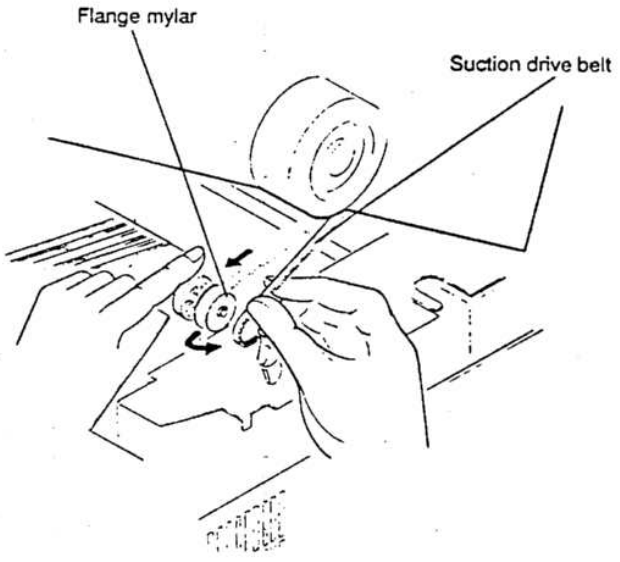

x While turning the drive belt, remove it.

SF-7800
SF-7850

③ Pull the belt shaft S to the paper feed side and remove it from the holder section.

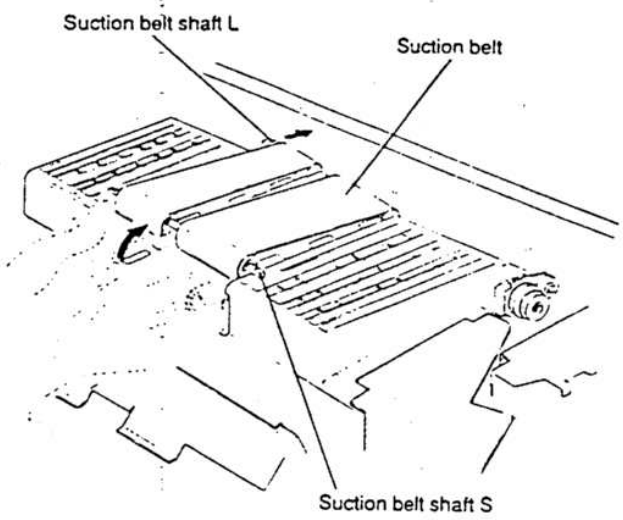

④ Remove the belt shaft L from the holder section, and remove the belt from the shaft.

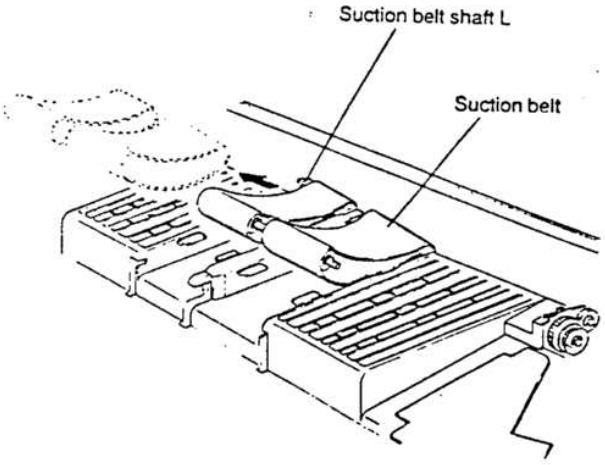

⑤ Set a new belt on the shaft and put the belt shaft S and L in the holder section.

Note for assembly

- Note the installing direction of the belt. Install so that the arrow mark faces in the paper exit direction (rotating direction).
- Do not pull the belt excessively. When the belt is pulled excessively, it may be stretched out.
- The belt shaft S is of D-shape. When inserting it into the holder section, put the flat surface (cut surface) upwards.
- The belt should not extend from the belt roller.

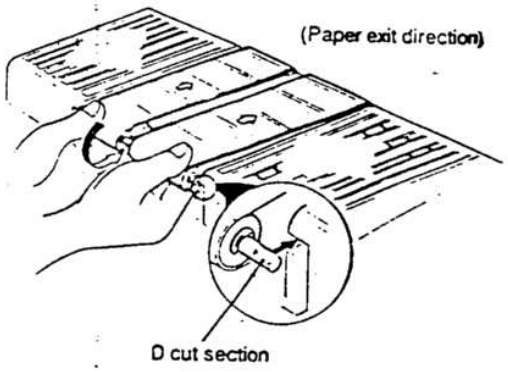

⑥ For assembly, reverse the disassembly procedure.

⑦ After assembly, turn the drive belt to check that the belt is driven smoothly.

Fuser unit

A. Fuser unit removal

① Open the clamshell.

② Remove the fuser unit fixing screw, and hold the fuser unit to slide it in the arrow direction. (Be careful, the fuser unit is may be hot)

③ Disconnect two connectors (2-pin), and slide unit towards front.

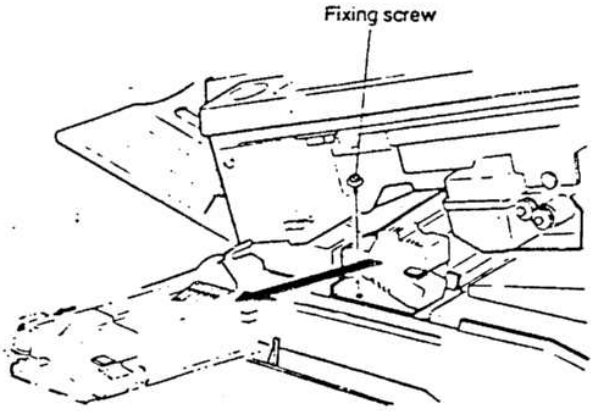

B. Heater lamp replacement

<Removal>

① Remove the fuser front cover fixing screw (1 pc), slide the front cover in the arrow direction to remove.

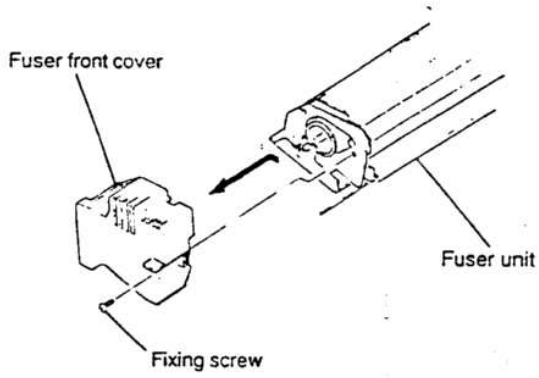

② Remove two fixing screws of the fuser cover, turn the fuser cover in the arrow direction to remove.

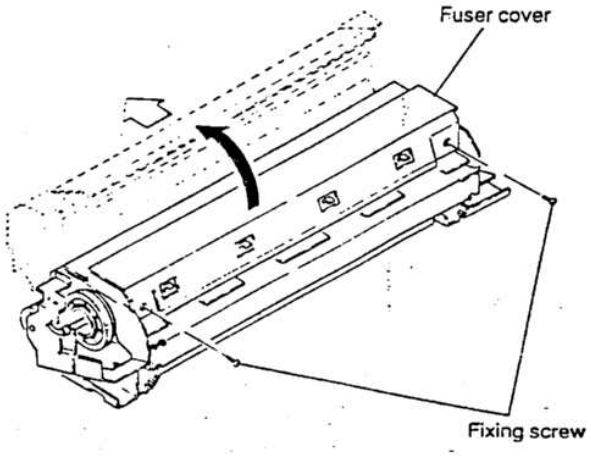

③ Pull out the Faston terminal from the thermostat. (While pressing the projection of the terminal, pull it out.)

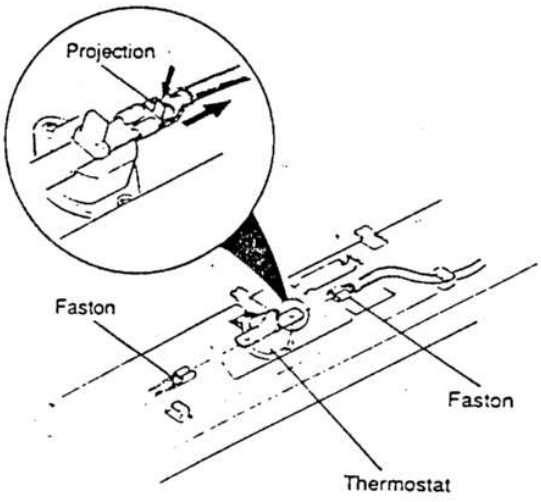

④ Remove the three screws to remove the lamp holder.

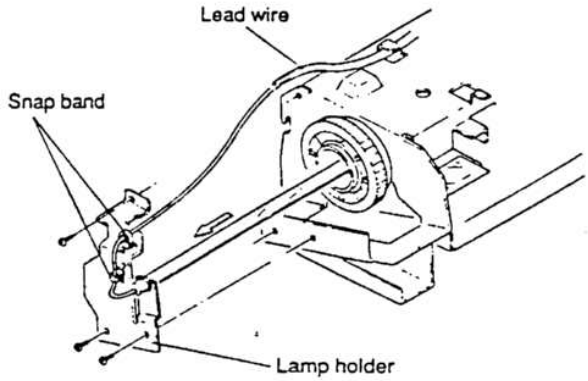

⑤ Pull out the heater lamp with heater lamp holder from the rear frame side.

<Attachment>

For attachment, reverse the removal procedure. When attaching, follow the items below:

- When securing the lamp lead wire, bring the tube close to the fuser frame edge. (Lead wire protection)
- Arrange the harness as shown below. Note the snap band direction.

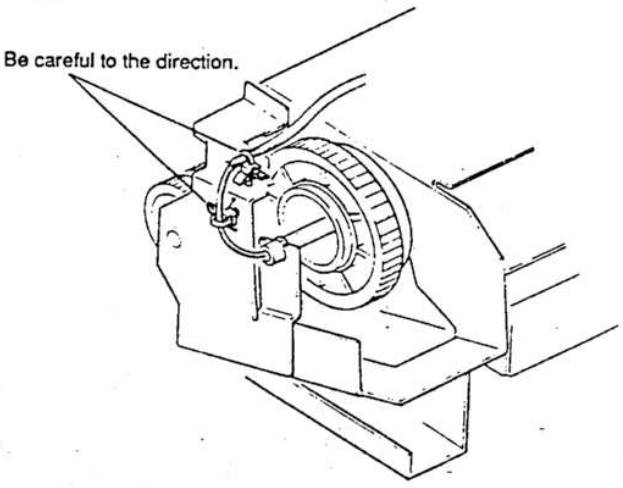

C. Upper heat roller ass'y replacement (every 60K copies)

<Removal>

① Remove the heater lamp.

② Open the fuser unit, separate the separation pawl from the roller, and remove the roller bearing fixing screws (one in the front frame and one in the rear frame).

③ Turn the bearing 90 degrees and take the heat roller out upwards.

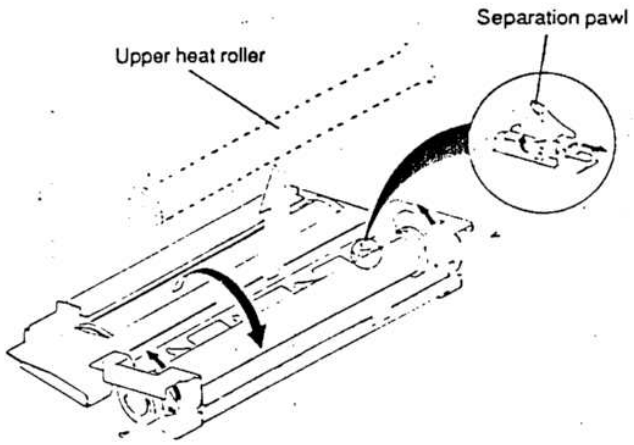

<Installation>

* Carefully arrange the lead wire of the heater lamp.

D. Replacing the upper separation pawl (every 60K copies)

<Installation>

① Remove the fuser unit and remove the fuser cover.

② Remove the tension spring, turn the separation pawl in the arrow direction, and pull it out downward.

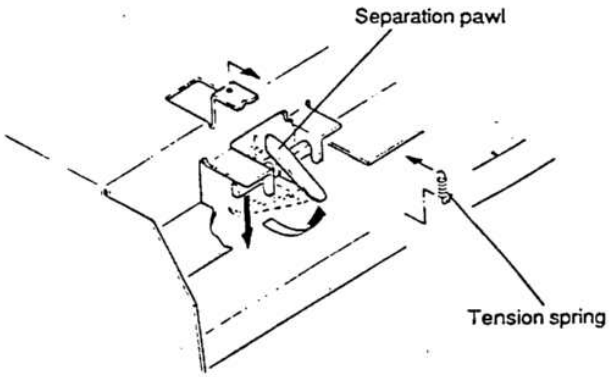

<Installation>

When installing, Note the spring hook direction. Check that the hook section is engaged with the notch.

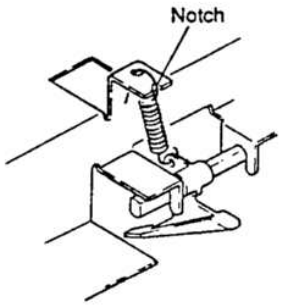

E. Lower heat roller replacement (every copies)

<Removal>

① Remove the fuser unit, and turn the unit upside down.

② Remove the pressure springs (in the front and the rear side).

③ Turn the cleaner roller in the arrow direction, and remove the lower heat roller.

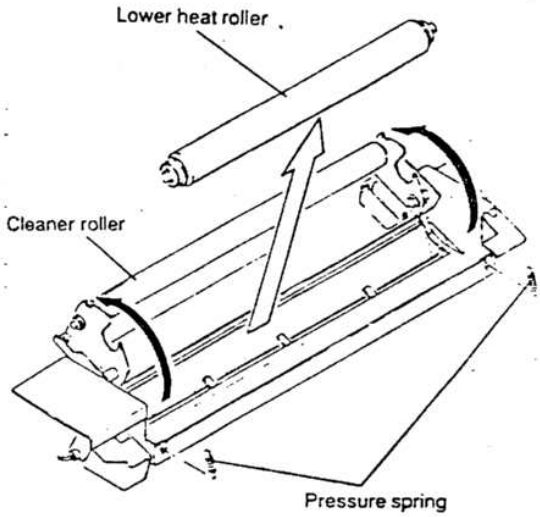

<Installation>

Note for installation

- Check that the lower heat roller bearing is properly positioned in the bearing holder.
- Check that the scraper (lower separation pawl) is in contact with the roller.

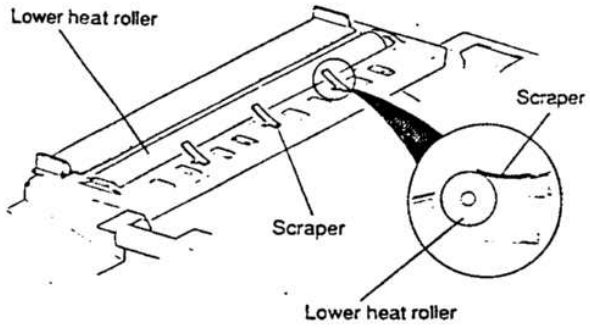

- Manually rotate the lower heat roller to check that it rotates smoothly. Check that the scraper is not caught by the roller.

F. Upper cleaning roller replacement (every 60K copies)

① Remove the fuser cover.

② Loosen the thermistor fixing screw.

③ Remove the cleaning roller fixing plate, and replace the upper cleaning roller.

Cleaning roller replacement (Every 60K copies)

① Remove the fuser unit from the machine, and remove the pressure springs.

② Rotate the cleaner roller in the same manner as the lower heat roller removal.

③ Remove the cleaner roller springs, and replace the roller.

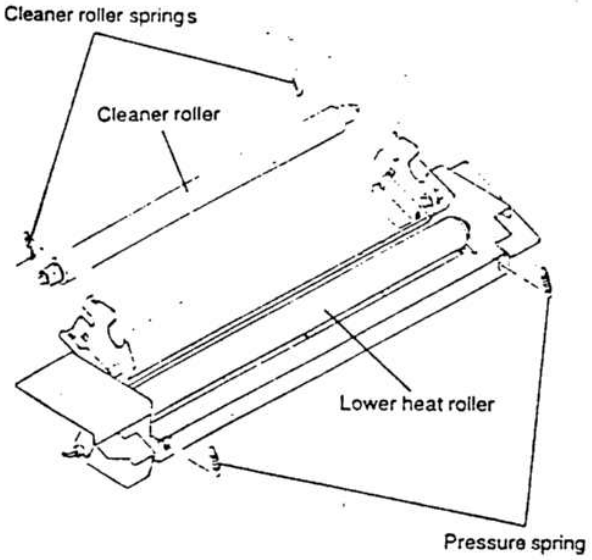

H. Thermistor and thermostat removal

<Removal>

Remove the fuser cover and remove the following fixing screws.

- Thermistor fixing screw (1 pc.)
- Thermostat fixing screws (2 pcs.)

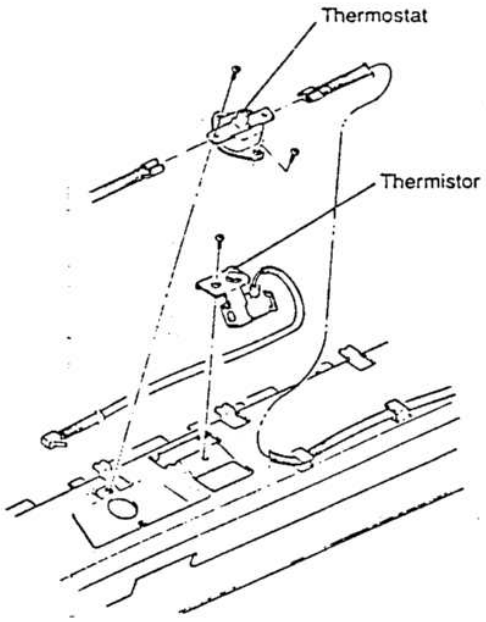

<Check after installation>

- Thermistor
  The thermistor must be in close contact with the upper heat roller.

  Thermostat
  There must be a clearance of 0.75±0.25mm between the thermostat and the upper heat roller when the upper and the lower rollers are pressed.

7. Drum peripheral section

A. Drum unit removal

① Open the clamshell, and remove the developer unit.

② Open the internal cover, and remove the connectors (2-pin x 1, 7-pin x 1).

③ Remove the drum unit fixing screws (blue screws x 2), and pull out the unit.

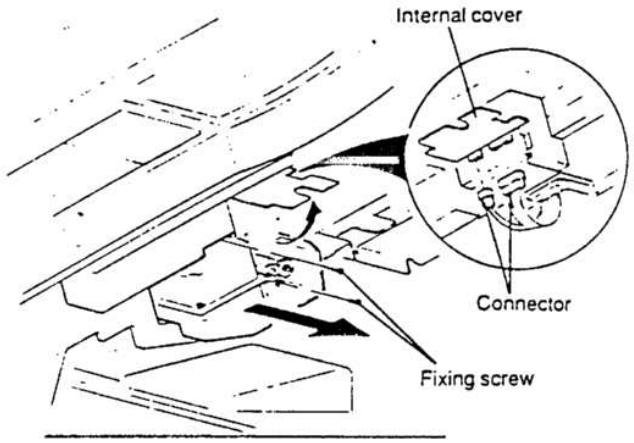

B. Separation of the drum unit and the process frame upper

- Remove the screws (2 pcs in the front frame side and 2 pcs. in the rear frame side) which connects the drum unit and the process frame upper.

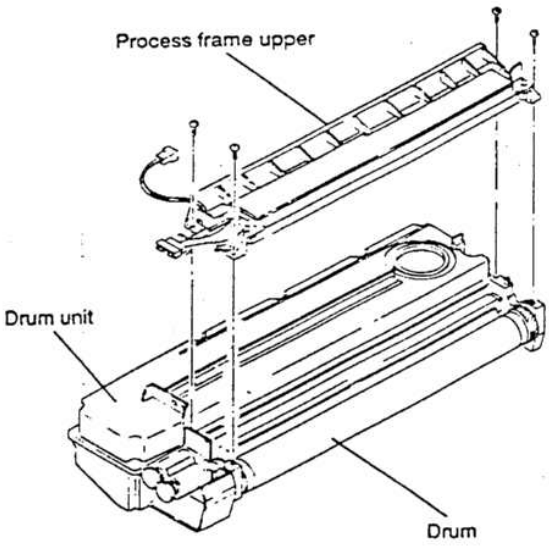

Note: Be careful not to scratch the MC case mylar and the screen grid of the removed process frame.

C. Blade removal

① Remove the process frame upper from the drum unit.

② Remove the screws (2 pcs. of 3 x 8 screws, 3 pcs. of 3 x 6 screws) which are fixing the blade, and remove the blade.

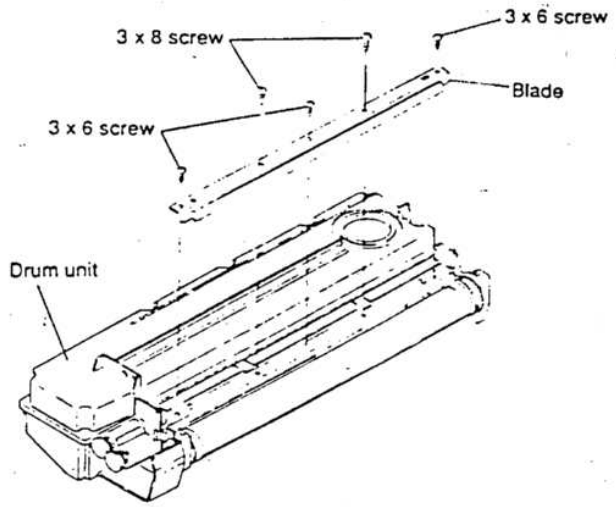

* When installing the blade, Note the screw lengths. After installing, manually turn the drum to make smooth operation of the blade and the drum.

D. Blank lamp removal

- Remove the blank lamp fixing screws (1 in the front side and 1 in the rear side) and remove the blank lamp.

* Note:
  - When removing the blank lamp with the process frame upper removed from the drum unit, be careful not to deform the MC mylar.
  - When installing, align the scribed lines of the blank lamp holder and the drum frame.

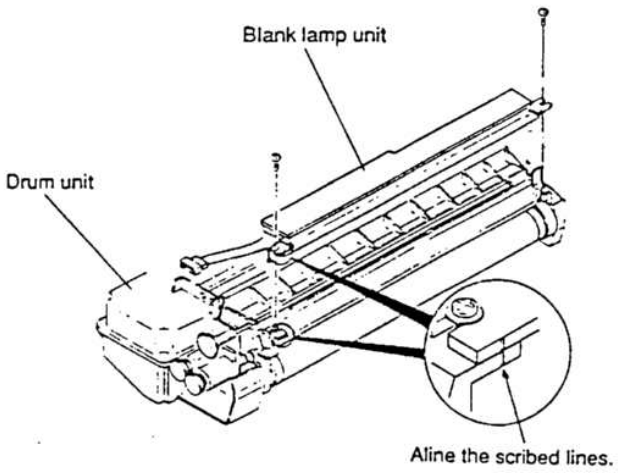

E. Blank lamp adjustment

The blank lamp position adjustment is required in the following cases:

- When the blank lamp unit is replaced.
- When the center deviation is adjusted.
- When the mirror or lens is removed.

① Check that the center deviation is within 2.0mm. (If the center deviation is more than 2.0mm, perform the center deviation adjustment.)

② Place a white paper of A3 at the center of the document t
Make a copy with A3 paper in the reduction mode (X 0.64) wit
the original cover open.

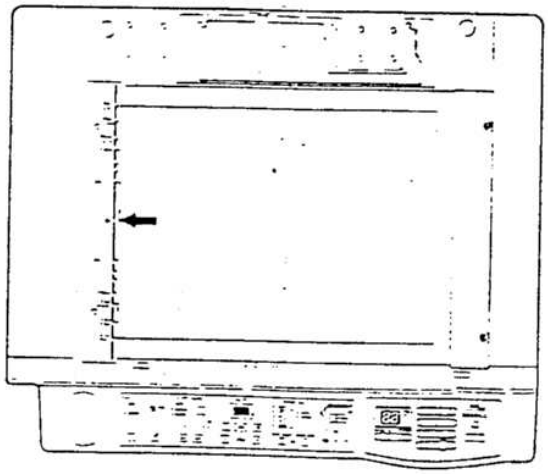

③ Measure the sizes of black background in the both sides. M
the blank lamp unit position to adjust so that the width of blac
background are uniform.

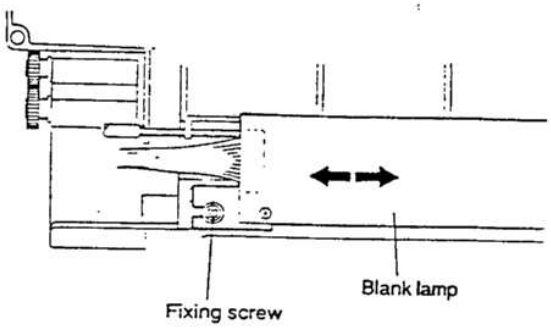

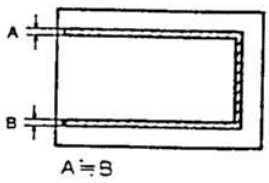

F. MC wire replacement and screen grid replacement (Every 60K copies)

① Remove the drum unit and remove the process frame upper.

② Loosen the screen grid electrode screw, and remove the screen grid.

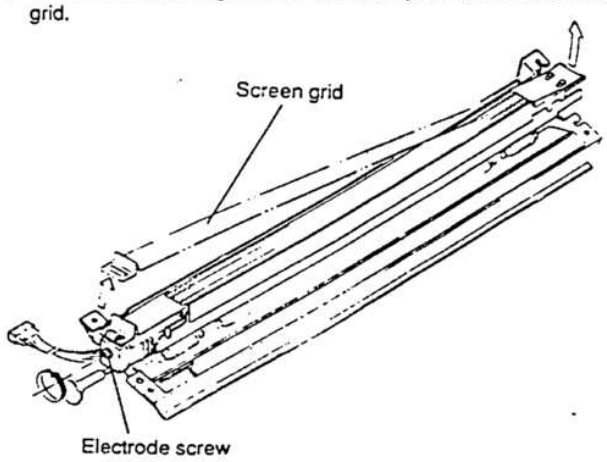

Remove the blank lamp.

④ With the corona cleaner at the bottom (the rear frame side), turn the cleaner shaft 90 degrees and remove it upward.

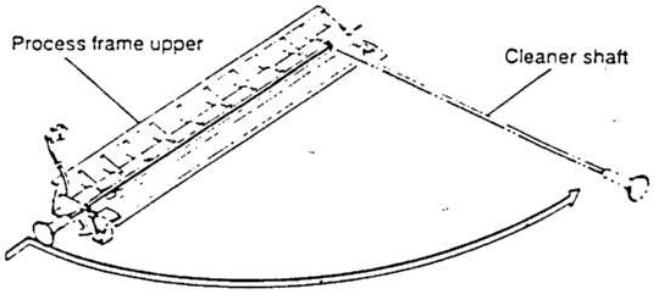

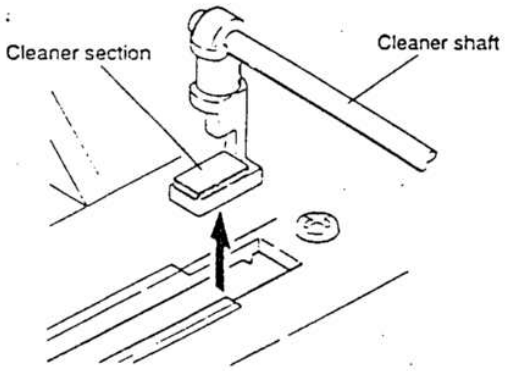

⑤ Loosen the wire fixing screw and remove the wire.

⑥ Set the corona wire.

<<Note for corona wire replacement>>

- Be careful not to twist or deform the corona wire.

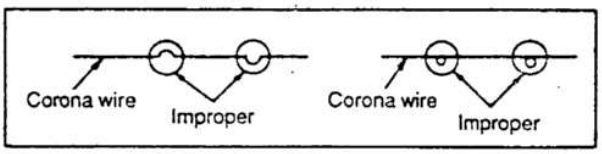

- Use corona wire of 70u (DWIR-0466CSZZ).

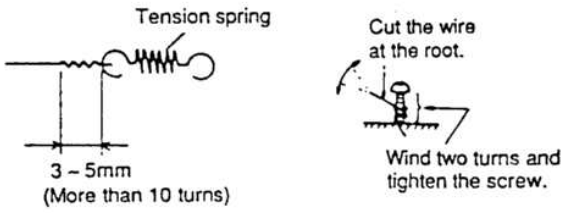

- With the wire installed, check that the tension spring is 11±0.5mm long.

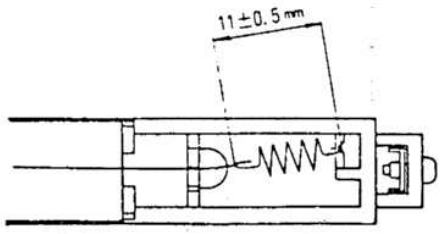

- Do not touch the effective section of the wire. If touched, defective charging may occur.

⑦ Install the corona cleaner by reversing the removing procedure.

<Note for installation>

- Attach section A first. (To protect the corona wire.)
- Check that the cleaner section is under the corona wire.

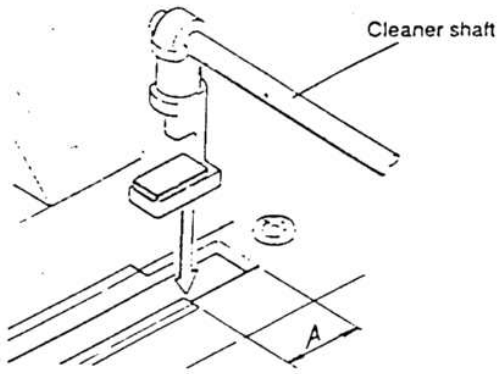

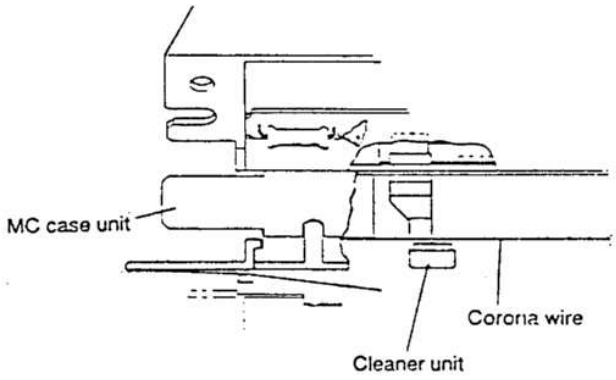

- Check that the corona cleaner moves smoothly.

⑧ Hang the rear frame side of the screen grid on the hook section of the MC holder cover, and hang the other side on the screen grid electrode. Then tighten the electrode screw.

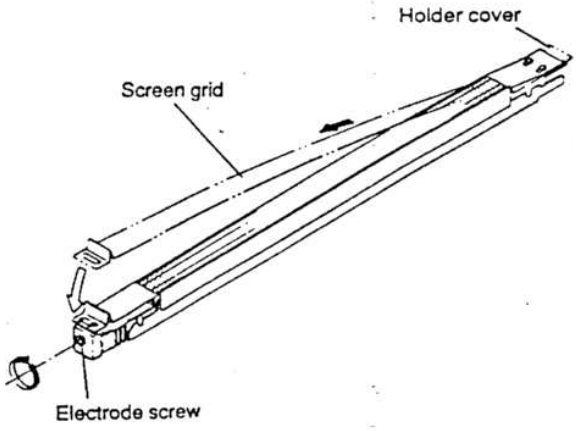

⚠ • Do not touch the mesh section of the screen grid.
- Check that the screen grid is free from slack.

⑨ Attach the blank lamp.

8. Rotary cassette (SF-7850 only)

A. Rotary cassette removal

① Manually turn the rotation feed shaft to rotate the cassette about 30 degrees.

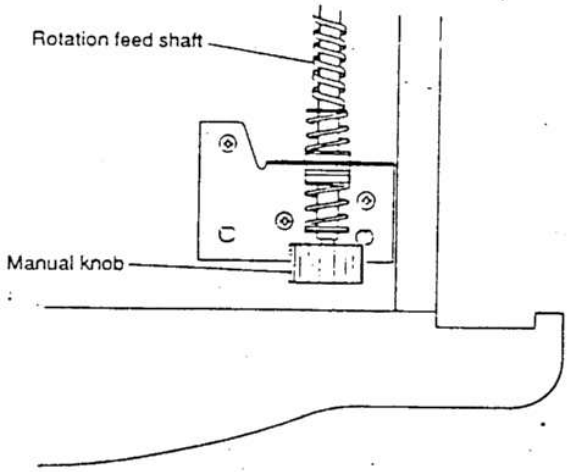

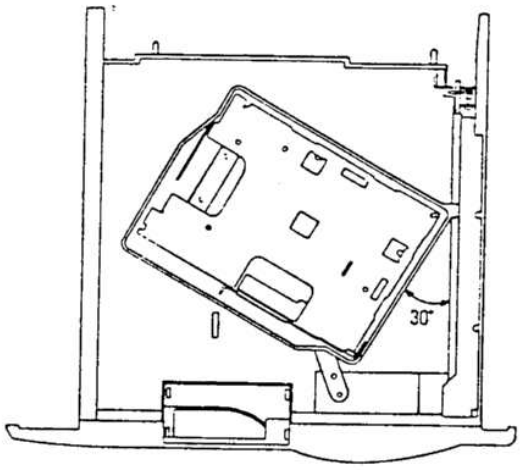

(In the case of landscape feed)

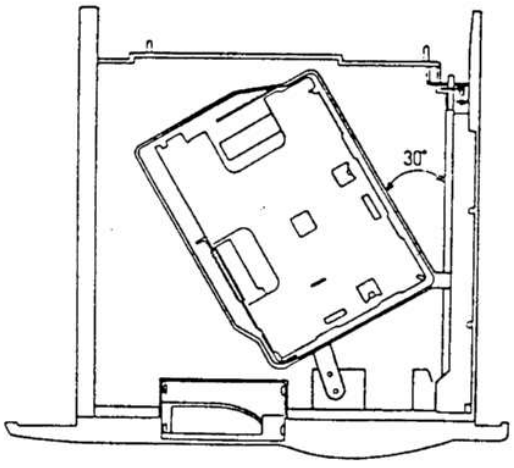

(In the case of portrait feed)

② Remove the cover (4 screws) and remove the grip ring whi connecting the cassette and the rotation feed shaft.

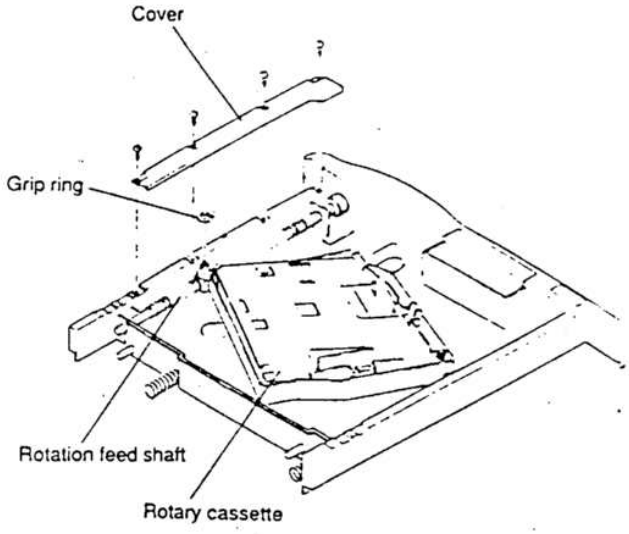

③ Remove the screw which fixes the rotation holding plate and the cassette, and remove the cassette.

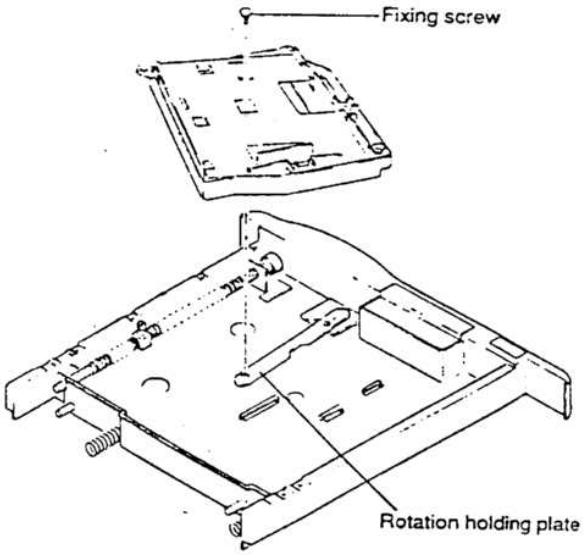

1. Cassette position detection adjustment

This adjustment is required in the following cases:

- When skew feed occurs.
- When paper jam occurs.
- When the sensor is replaced.
- When the rotary cassette drive section is disassembled.

Procedure

① Remove the upper cassette (250-sheet cassette).

② Perform test command 69 (Rotary cassette aging). When the cassette is halted in the landscape feed position, remove the cassette.

③ Check that the rotary cassette projection is in contact with the cassette stopper.

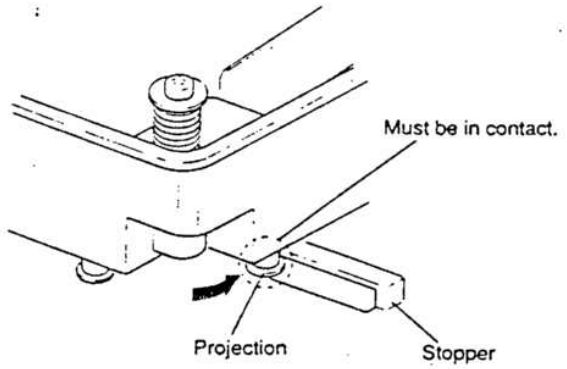

If they are not in contact, loosen the setscrew of the collar of the rotary fed shaft, slide the collar to the rear frame side, and perform procedures ② and ③ again.

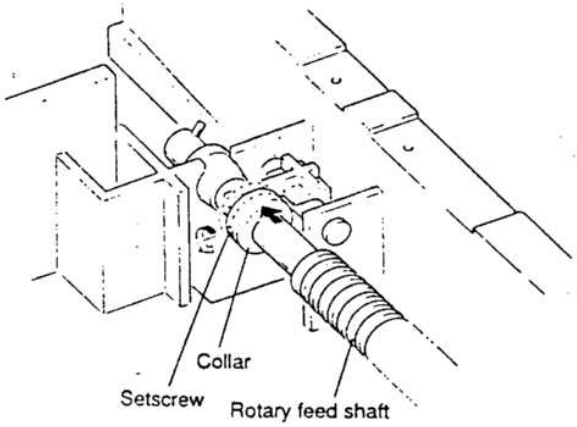

④ Insert the cassette into the copier. When the cassette is halted in the portrait feed position, remove the cassette. Check that the rotary cassette projection is in contact with the cassette stopper.

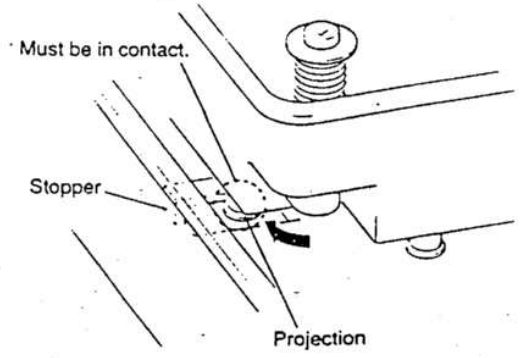

If they are not in contact, loosen the setscrew of the rotary feed shaft, slide the collar to the front frame side, and perform procedure ④ again.

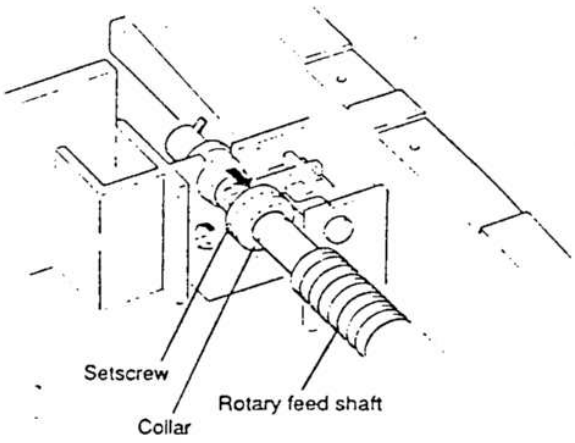

* After this adjustment, be sure to check the landscape feed position again.

C. Rotary cassette drive unit removal

① Remove the four screws which are fixing the drive unit.

② Remove the connectors and pull out the drive unit.

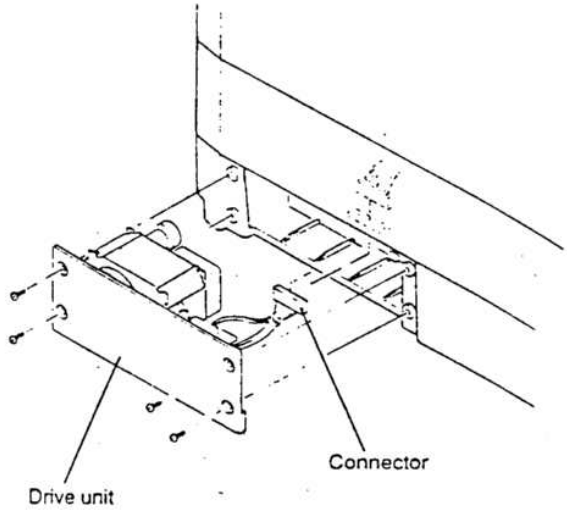

9. Drive unit

A. Drive unit removal

① Remove the rear cover.

② Remove the main PWB.

③ Remove the high voltage PWB.

④ Remove the main motor connector, the waste toner full detect switch (TFD) connector, and the separation pawl solenoid connector. Remove the harness from the wire saddle. (2 positions)

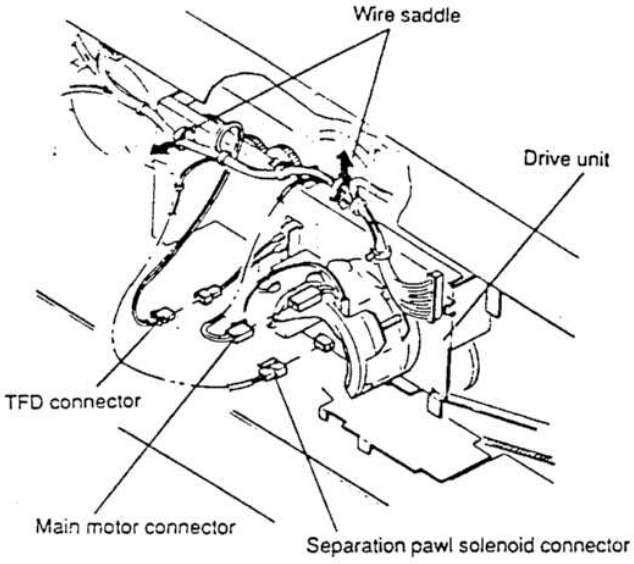

⑤ Remove the five screws which are fixing the drive unit, and remove the drive unit.

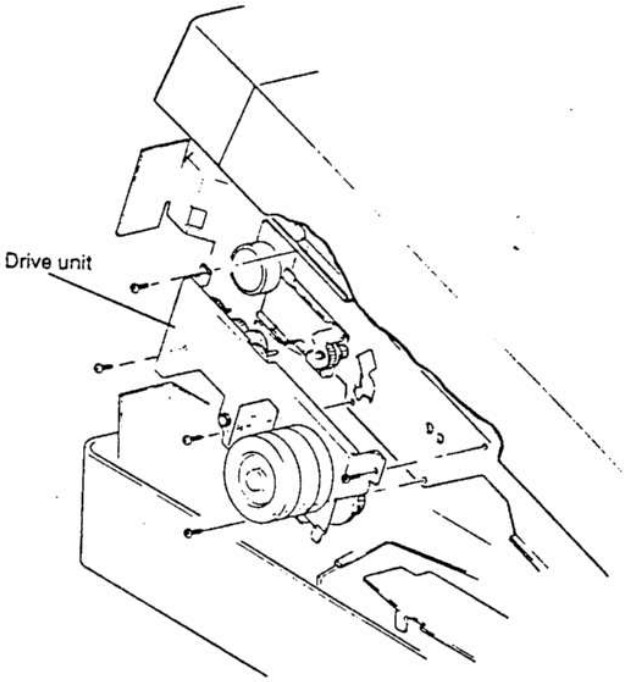

B. Main motor replacement

① Remove the drive unit.

② In the case of 60Hz
Remove the 74.40T gear, 55T gear, 72.28T gear, 60.20T gear 2. (The 60.20T gear is for 60Hz and its color is white.)

In the case of 50Hz
Remove the 74.40T gear, 55T gear, 72.28T gear, 50.20T gear 2.
(The 50.20T gear is for 50Hz and its color is black.)

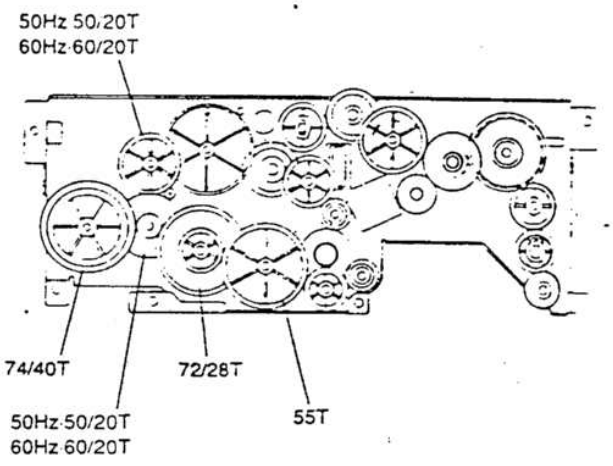

③ Remove the three screws which are fixing the main motor, and replace the main motor.

Note: The following items should be noted when installing the main motor.

- The installing position of the main motor differs depending on the frequency (50Hz/60Hz).
  In the case of 60Hz, install the main motor in the left hole (marked with 60) when viewed from the rear frame.
  In the case of 50Hz, install in the right hole.
- Be careful to the installing direction of the gears. (Refer to the above figure.)

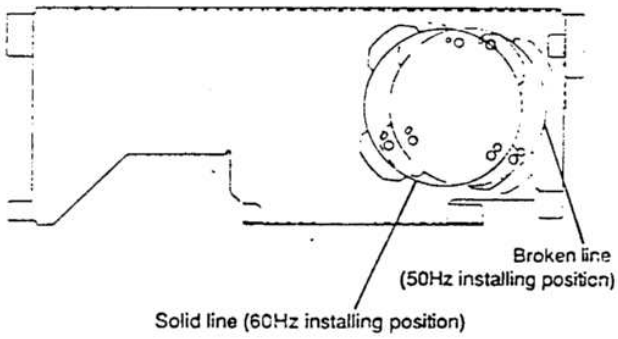

C. Frequency change in the drive unit

- Main motor: Frequency is 50Hz or 60Hz. (Observe the voltage specification.)
- Gear: Two gears in contact with the motor shaft are different depending on the frequency.
  60Hz --- Gear 60.20T
  50Hz --- Gear 50/20T
- Motor capacitor: Differs depending on the voltage and the frequency. Use the proper one.

Note for the drive unit assembly

- When replacing the gears, apply white MOLICOAT (UKOG-0158FCZZ) to the shaded section of the shaft in the figure below:
- Apply white MOLICOAT (UKOG-0158FCZZ) to the main motor output shaft, gears 72/28T, 74/40, 20/35, the ratchet gear, the torque limiter gear.

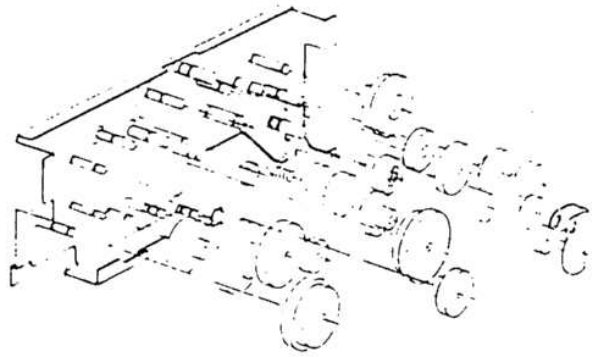

- Do not apply grease to the 36T gear (for toner full detection).

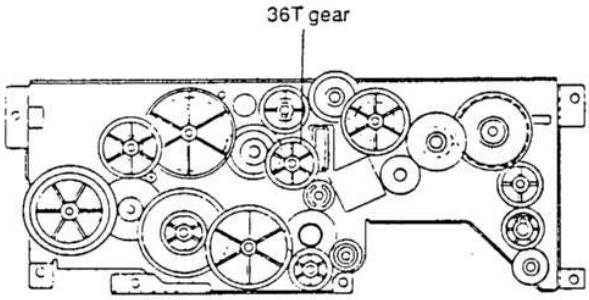

10. PWB replacement and adjustment

A. Main PWB removal

① Remove the rear cover.

② Remove the connectors.

③ Remove the two screws which are fixing the main PWB.

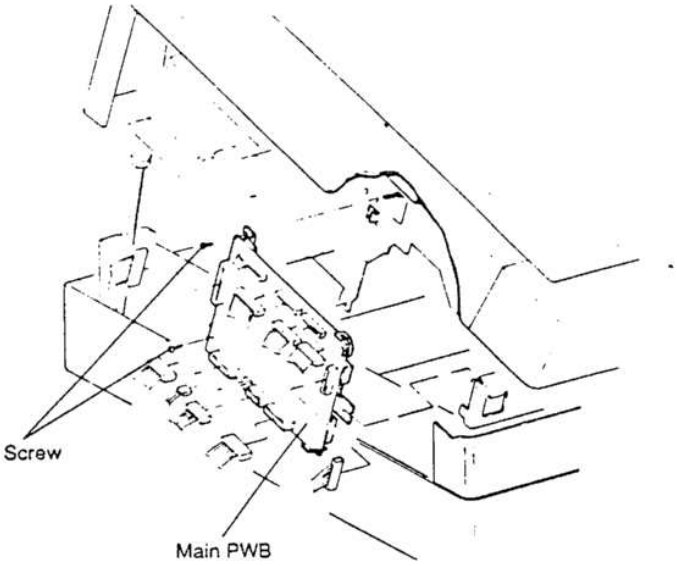

④ Remove the main PWB from the main PWB mounting plate.

B. Adjustments after Replacing the main PWB

Test command	Function	Ref. page
25	Developer adjustment	10-6
45	Drum sensitivity setting	10-7
46	Copy exposure setting	11-2
47	AE sensor characteristic input	10-7
48	No. 4/5 mirror home position reference value input	10-7
49	Magnification ratio adjustment (feeding direction)	10-8
50	Copy lead edge adjustment	7-20
60	Document detection adjustment (SF-7850 only)	10-9
72	Mini maintenance, copy kit setting	10-9
77	Lens characteristic input	7-16
78	Counter mode setting	10-10
79	Model destination setting	10-10
80	Option setting (When using options)	10-10
97	Rotary cassette size setting (SF-7850 only)	10-11
98	Rotary cassette paper sense level adjustment (SF-7850 only)	10-11

Копировать, выполняя мне после замены главной платы.

C. DC power PWB removal

① Remove the rear cover.

② Remove the grounding screw and remove the PWB mounting screw.

③ Remove the DC power PWB and disconnect the connectors.

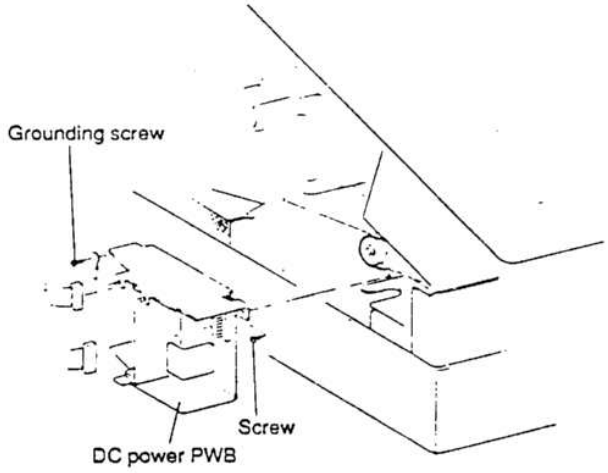

D. AC power PWB removal

① Remove the right (lower) cover.

② Remove the PWB holding plate and remove the grounding screw.

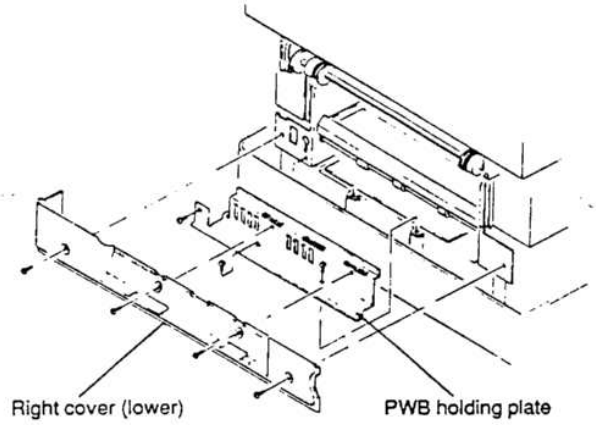

③ Remove the AC power PWB and disconnect the connector.

Note for installation

Note the inserting position of the 1-pin connector.

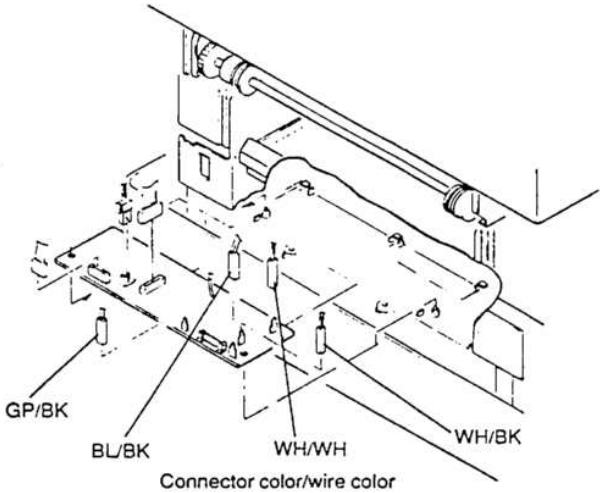

• When attaching the holding plate, carefully arrange the wires.

E. High voltage PWB removal

① Remove the two connectors and remove the grounding screw.

② Remove the three screws which are fixing the PWB, and remove the PWB.

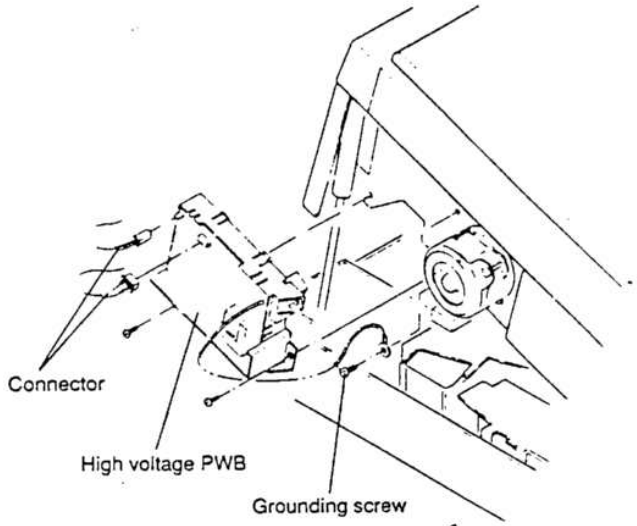

F. DV bias adjustment

① Set the digital multi-meter range to DC300V or more.

② Apply the probe to the left terminal of R410 and the other probe to chassis (GND).

③ Perform test command 8. (The DV bias voltage is supplied for 30 sec.)

④ Adjust the DV bias voltage adjustment VR (VR401) to set the output voltage to −200V ±6V.

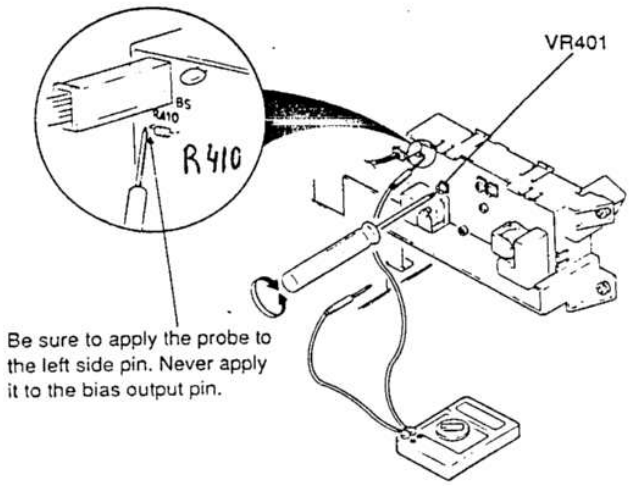

Main corona grid bias adjustment

This adjustment is performed in the copy mode.

① Manually turn on the manual paper feed detection switch (PID).

② Perform test command 23 to perform aging without paper.

③ During the test command operation, select between the standard mode and the photo mode with the copy mode select key on the operation panel, and perform adjustment in either mode.

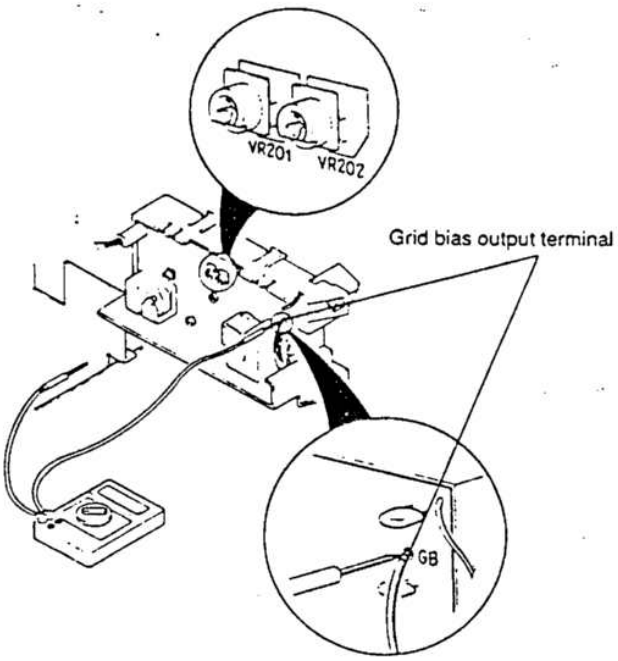

Copy mode	Output voltage	Adjustment VR
Standard	−635±8V	VR201
Photo	See the note below.	VR202

(Note)
For U.S.A, Canada, and United Kingdom, −510 ± 7V.
For the other destinations, −535 ± 7V.

11. Others

A. Note for ventilation fan mounting

Install the ventilation fan so that the label side comes toward you as shown below and arrange the lead wire as shown below. Carefully arrange the lead wire.

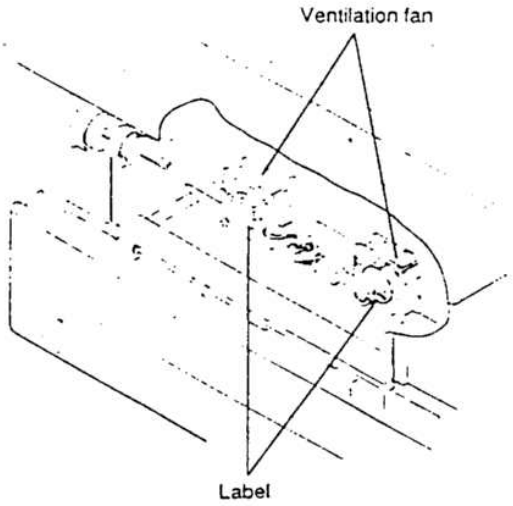

B. Cassette switch (CD-SW) removal (SF-7800 only)

① Remove the DC power unit.

② Remove the cassette switch mounting plate S from the base plate unit. (2 screws)

③ Remove the Faston from the switch and remove the switch from the mounting plate. (2 screws)

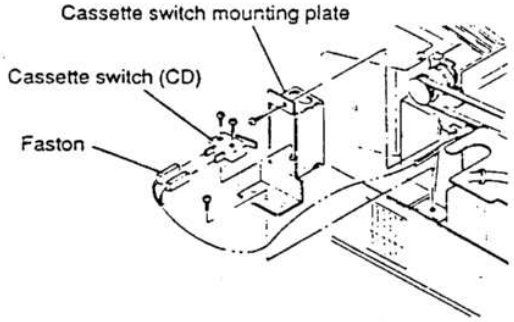

C. Cassette size detection switch (CSD) removal (SF-7850 only)

① Remove the power unit.

② Remove the cassette size detection mounting plate from the base plate unit. (2 screws)

③ Remove the connector from the switch and remove the switch from the mounting plate.

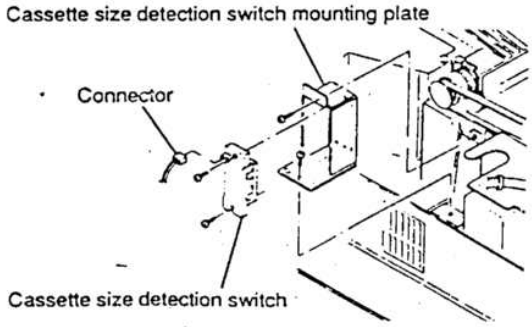

SF-7800
SF-7850

[8] ELECTRICAL SECTION

1. Overall block diagram

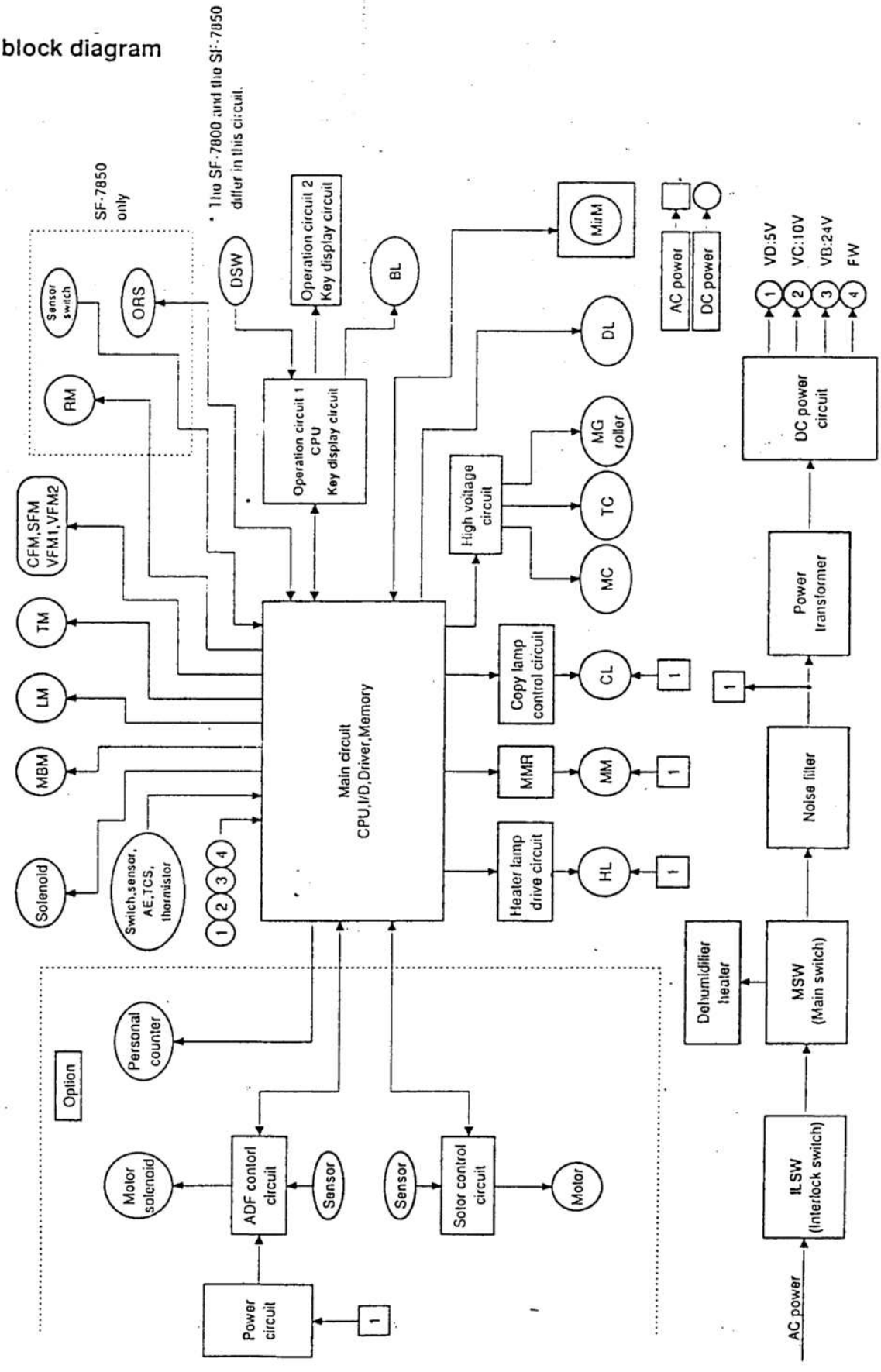

2. Main circuit block diagram

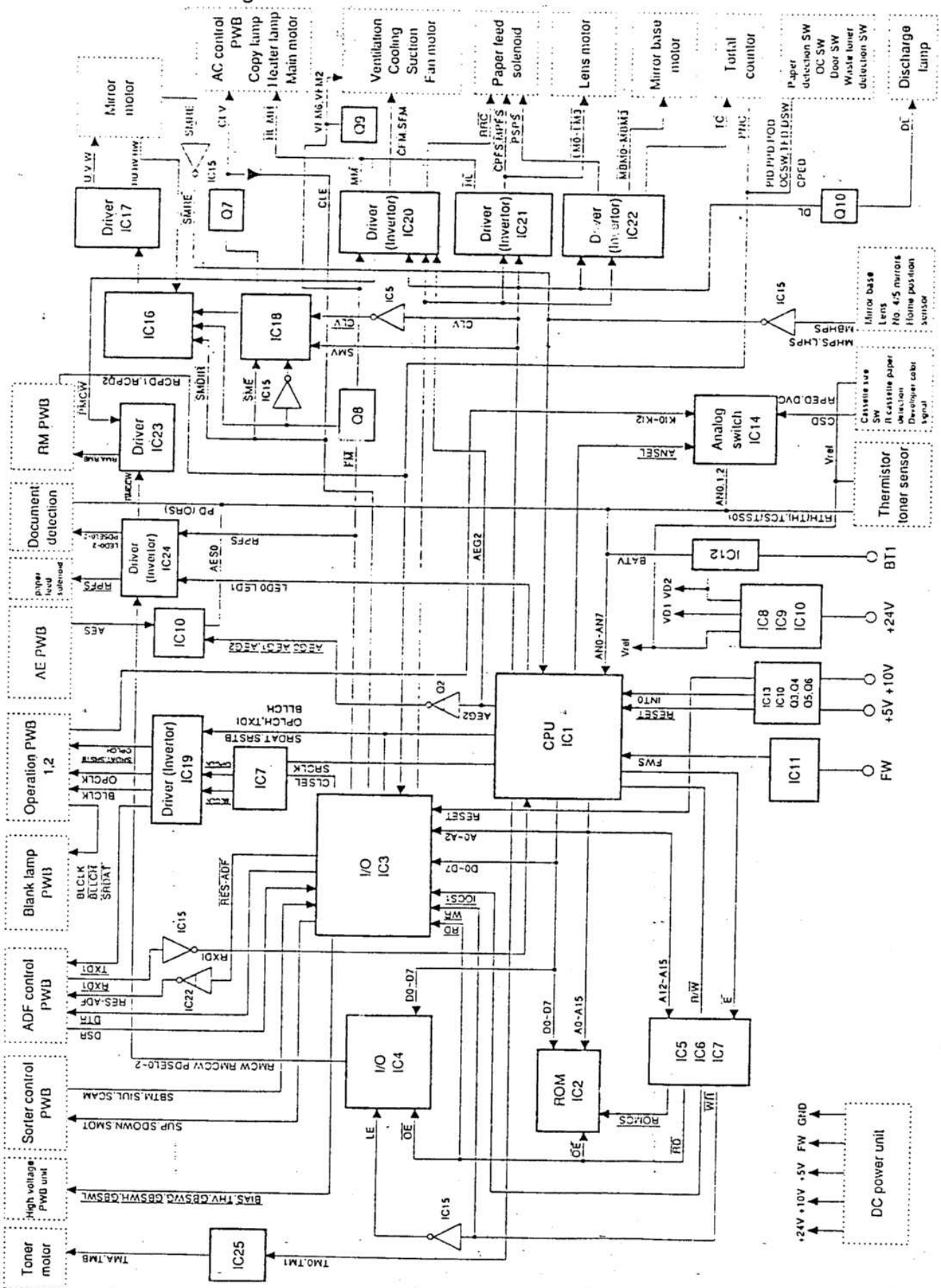

3. IC1 (CPU) pin descriptions

Pin No.	In/Out	Signal name	Descriptions
1, 3, 79, 80	IN	AN0, 2, 1	Analog input signal <key input signal (KI0, 1, 2), cassette size detection signal (CSD), rotary cassette paper empty signal (RPED), developer unit color identification signal (DVC)> * See the table below.
2	IN	$\overline{SMRE}$	Mirror motor rotary encoder detection signal
3	IN	FWS	Power frequency detection signal (AC waveform zero cross timing)
4	OUT	HI	Heater lamp control signal. At HIGH level (+5V), the discharge lamp lights up.
5	OUT	$\overline{ANSEL}$	Analog switch (IC14) select signal
6	IN	$\overline{MHPS}$	Mirror base home position detection signal in the optical unit
7	IN	$\overline{INT0}$	When the power is stabilized, HIGH level (+5V).
8	OUT	DL	Discharge lamp control signal. The discharge lamp lights up at HIGH (+5V) level.
9	OUT	SMV	Mirror motor speed control pulse
10	OUT	TC	Total counter (option) output signal
11	OUT	CLV	Copy lamp light quantity control pulse
12	OUT	RRC	Resist roller control signal. the resist roller stops at HIGH (+5V) level.
13, 14	OUT	LED1, LED0	Document size detection LED lighting signal. LED lights up at HIGh (+5V).
15	OUT	PSPS	Paper separation solenoid control signal. The separation pawl is brought into close contact with the drum at HIGH (+5V) level.
16, 17	OUT	TM1, TM0	Toner motor rotation pulse signal (50Hz)
18	OUT	SRSTB	OP PWB, BI PWB, output driver ON/OFF control signal
19	OUT	OPLCH	Data latch signal to OP PWB
20	OUT	BLLCH	Data latch signal to BL PWB
21	IN	$\overline{MBHPS}$	No. 4/5 mirror home position detection signal
22	IN	$\overline{LHPS}$	Lens home position detection signal
23	IN	MM	Main motor control signal. The main motor rotates at HIGH (+5V) level.
24, 25, 26	—	—	Not used.
27	IN	CN, VSS	Processor mode selection
28	IN	$\overline{RESET}$	When LOW (0V), reset state.
29, 30	IN	XIN, XOUT	Clock (8MHz)
31	OUT	$\overline{E}$	When LOW (0V), data or command code read and data write are performed.
32	—	VSS	GND (0V)
33, 34, 35	—	—	Not used.
36	OUT	R/W	ROM/RAM data read, RAM I/O data write signal
37 – 44	IN/OUT	D7 – D0	Data signal
45 – 60	OUT	A15 – A0	Address signal
61	OUT	TXD1	Serial data output to slave CPU (ADE)
62	IN	RXD1	Serial data input from slave CPU (ADE)
63	OUT	AEG2	AE sensor gain lamp select signal
64	—	—	Not used.
65	OUT	SRDAT	Serial data output to OP PWB, BL PWB.
66	—	RXD0	Not used.
67	—	SRCLK	Data transfer clock signal to OP PWB and BL PWB
68	—	—	Not used.
69,70	—	VCC, AVCC	Power (+5V)
71	IN	Vref	Analog/digital conversion reference voltage (About +5V)
72,73	—	AVss, Vss	GND (0V)
74	IN	BATV	Analog input signal (Battery voltage)
75	IN	ORS	Analog input signal (Document detection data)
76	IN	TH	Analog input signal (Thermistor)
77	IN	TSS0	Analog input signal (Toner control sensor output)
78	IN	AES0	Analog input signal (AE sensor output)

*

$\overline{ANSEL}$	L (0V)	H (+5V)
AN0	KI0 (Key input signal)	CSD (Cassette size detection signal)
AN1	KI1 (Key input signal)	RPED (Rotary cassette paper empty signal
AN2	KI2 (Key input signal)	DVC (Developer color identification signal)

IC3 (I/O) pin descriptions

Pin No.	IN/OUT	Signal name	Descriptions
1	OUT	SDOWN	Sorter bin motor control signal. The bin moves down at HIGh (+5V).
2	OUT	SUP	Sorter bin motor control signal. The bin moves upward at LOW (0V).
3	—	VCC	Power (+5V)
4	OUT	$\overline{DTR}$	Data are sent to ADF CPU at HIGH (+5V), data are received at LOW (0V).
5	OUT	$\overline{GBSWL}$	Grid bias high voltage output (in the photo mode) control signal
6	OUT	$\overline{GBSWH}$	Grid bias high voltage output (in the normal mode) control signal
7	OUT	$\overline{GBSWG}$	Grid bias high voltage output (in the void form mode) control signal
8	OUT	$\overline{THV}$	Transfer corona high voltage output control signal. Output at LOW (0V).
9	OUT	$\overline{BIAS}$	Developer bias high voltage output control signal. Output at LOW (0V).
10	OUT	SLSEL	OP PWB output clock/BL PWB output clock select signal
11	OUT	$\overline{FM}$	Cooling fan motor, suction fan motor control signal. Rotates at LOW (0V).
12	—	GND3	GND (0V)
13 ~ 16	OUT	MRM0 ~ MRM3	No. 4/5 mirror motor control signal
17 ~ 20	OUT	LM0 ~ LM3	Lens motor control signal
21	IN	PID	Manual feed and multi-feeder paper empty detect signal
22	IN	PPD	Paper entry detect signal
23	IN	POD	Paper exit detect signal
24	IN	TED	Waste toner full detect signal
25	IN	PNC	Personal counter installation detect signal
26	IN	UC	U2 cancel detect signal
27	IN	OCSW	Original cover open/close detect signal
28	IN	DSW	Front door open/close detect signal
29	—	VCC	Power (+5V)
30	IN	RD	Reads data at each port at LOW (0V).
31	IN	WR	Write data into each port and each control word resistor at LOW (0V).
32	IN	$\overline{IOCS1}$	Chip select signal
33	IN	RESET	Reset at HIGH (+5V).
34	—	GND1	GND (0V)
35, 36, 37	IN	A2, A1, A0	Address signal
38 ~ 45	IN	D0 ~ D7	Data signal
46	OUT	$\overline{RES\text{-}ADF}$	ADF CPU reset signal
47	OUT	RPFS	Rotary cassette paper feed solenoid control signal. The rotary cassette paper feed roller rotates at HIGH (+5V).
48	OUT	CPFS	250-sheet cassette paper feed solenoid control signal. The 250-sheet cassette paper feed roller rotates at HIGH (+5V).
49	OUT	MPFS	Multi-feeder paper feed solenoid control signal. The multi-feeder paper feed roller rotates at HIGH (+5V).
50	IN	S-80	Test command No. 80 entry allowable detect signal.
51	IN	RCPD2	Rotary cassette position sensor 2 sense signal ⁎ See the table below.
52	IN	CPED	250-sheet cassette paper empty detect signal
53	IN	RCPD1	Rotary cassette position sensor 1 sense signal ⁎ See the table below.
54	IN	DSR	Data request signal from ADF
55	IN	SCAM	Sorter position sense signal
56	IN	SINL	Sorter door open signal
57	IN	SBTM	Sorter door home position sense signal
58	—	GND2	GND (0V)
59	OUT	AEG0	AE sensor gain lamp select signal
60	OUT	AEG1	AE sensor gain lamp select signal
61	OUT	CLE	Copy lamp lighting allow signal
62	OUT	SME	Mirror motor operation allow signal
63	OUT	$\overline{SMDIR}$	Mirror motor feed/return select signal
64	OUT	SMOT	Sorter transport motor ON signal

⁎ Rotary cassette position sensor specifications

	RCPD1	RCPD2	
①	ON (Interruption)	ON (Interruption)	Without cassette
②	OFF (Transmission)	ON	Portrait (A4, B5 letter)
③	ON	OFF	Landscape (A4R, B5R, letter R)
④	OFF	OFF	Cassette moving

[9] MAINTENANCE

1. Maintenance cycle and check items

The maintenance of the SF-7800/7850 should be performed every 60K copies.

★ = Lubrication
○ = Cleaning
Δ = Adjustment
▲ = Replacement/Installation
× = Check (Clean, replace, or adjust as required.)

Section	Part name	Maintenance frequency					
		Installation	Service call	30K	60K	90K	120K
Developer unit	Developer	▲		▲	▲	▲	▲
	DV blade						▲
	Side seals (F, R)						▲
Drum section	Drum unit			▲	▲	▲	▲
	MC wire		C(×)	○	▲	○	▲
	MC case		○	○	○	○	○
	Screen grid		C(×)	○	▲	○	▲
	TC wire		C(×)	○	▲	○	▲
	TC case		○	○	○	○	○
	Discharge plate		C(×)	○	▲	○	▲
	Blank lamp (BL)		○	○	○	○	○
	Discharge lamp (DL)		○	○	○	○	○
Suction unit	Suction belt		C(×)	○	○	○	○
	Ozone filter						▲
Fuser unit	Upper heat roller ass'y (including bearings and gears.)		○	○	▲	○	▲
	Lower heat roller		○	○	▲	○	▲
	Upper separation pawl		○	○	▲	○	▲
	Lower separation pawl		C(×)	○	○	○	○
	Lower cleaning roller				▲		▲
	Upper cleaning rolelr				▲		▲
	Thermistor		○	○	○	○	○
Optical system	Mirror/Lens/Reflector/Filter		○	○	○	○	○
	No. 2/3 mirror drive wire/Winding pulley			×	×	×	×
	Lens, No. 4/5 mirror drive wire			×	×	×	×
	No. 4/5 mirror home position sensor		○	○	○	○	○
	Lens home position sensor		○	○	○	○	○
	Lamp unit home position sensor		○	○	○	○	○
	AE sensor		○	○	○	○	○
	Mirror base rail			★	★	★	★
Paper feed unit	Paper feed roller (each cassette)			○	○	○	○
	Resistor rollers (upper and lower)			○	○	○	○
	Transport roller, transport follower roller			○	○	○	○
	Spring clutches			★	★	★	★
Copy quality			×	×	×	×	×
Others	Ozone filter (paper entry section)						▲
	Paper guide		C(×)	○	○	○	○
	Table glass/Original guide)		○	○	○	○	○
	Gears			★	★	★	★

Maintenance procedure

A. Developer unit

a. Developer replacement (every 30K)
Refer to the following sections:
[3] UNPACKING AND INSTALLATION 3. Installation
5) Developer unit setting
6) Toner concentration sensor level adjustment

b. DV blade replacement (every 120K)
Refer to the following sections:
[7] DISASSEMBLY, ASSEMBLY, AND ADJUSTMENT
4. Developer unit
B. DV blace replacement

c. Side seals F and R replacement (every 120K)
Refer to the following sections:
[7] DISASSEMBLY, ASSEMBLY, AND ADJUSTMENT
4. Developer unit
A. DV side seals F and R replacement

B. Drum section

Drum cartridge replacement (every 30K)
Refer to the following sections:
[7] DISASSEMBLY, ASSEMBLY, AND ADJUSTMENT
7. Drum section
A. Drum unit removal
B. Separation of the drum unit and the process frame upper

b. MC wire replacement (every 60K)
Refer to the following sections:
[7] DISASSEMBLY, ASSEMBLY, AND ADJUSTMENT
7. Drum section
F. MC wire replacement and screen grid replacement

c. Screen grid replacement (every 60K)
Refer to the following sections:
[7] DISASSEMBLY, ASSEMBLY, AND ADJUSTMENT
7. Drum section
F. MC wire replacement and screen grid replacement

d. TC wire replacement (every 60K)
Refer to the following sections:
[7] DISASSEMBLY, ASSEMBLY, AND ADJUSTMENT
2. High voltage section
C. TC wire replacement

Discharge plate cleaning and replacement (Clean every 30K and replace every 60K.)
Refer to the following sections:
[7] DISASSEMBLY, ASSEMBLY, AND ADJUSTMENT
5. Suction unit
B. Discharge plate replacement

C. Suction unit

Ozone filter replacement (every 120K)
Refer to the following sections:
[7] DISASSEMBLY, ASSEMBLY, AND ADJUSTMENT
5. Suction unit
A. Ozone filter replacement

D. Fuser unit

a. Upper heat roller ass'y cleaning and replacement (Clean every 30K and replace every 60K.)
Refer to the following sections:
[7] DISASSEMBLY, ASSEMBLY, AND ADJUSTMENT
6. Fuser unit
C. Upper heat roller ass'y replacement

Lower heat roller ass'y cleaning and replacement (Clean every 30K and replace every 60K.)
Refer to the following section:
[7] DISASSEMBLY, ASSEMBLY, AND ADJUSTMENT
6. Fuser unit
E. Lower heat roller replacement

c. Upper separation pawl cleaning and replacement (Clean every 30K and replace every 60K.)
Refer to the following sections:
[7] DISASSEMBLY, ASSEMBLY, AND ADJUSTMENT
6. Fuser unit
D. Upper separation pawl replacement

d. Lower cleaning roller (Every 60K)
Refer to the following sections:
[7] DISASSEMBLY, ASSEMBLY, AND ADJUSTMENT
6. Fuser unit

e. Upper cleaning roller (Every 60K)

E. Optical system

a. No. 1 – No. 5 mirrors and lens cleaning

① Remove the table glass and the dark box cover.

② Softly wipe the mirrors and lens with clean cloth.

x When attaching the table glass, be careful to the direction.

b. Dust-prevention filter cleaning
After former procedure a, slide the mirror base C (No. 4/5 mirrors) to the paper feed side.

c. No. 6 mirror cleaning
Remove the developer unit and softly wipe inside with clean cloth.

F. Copy quality

Refer to the following section:
[3] UNPACKING AND INSTALLATION 3. Installation
12)Copy check

G. Others

Ozone filter paper exit section (every 120K)

① Remove the left cover. (2 screws)

② Insert a screwdriver through the slit in the cabinet to push out the filter.

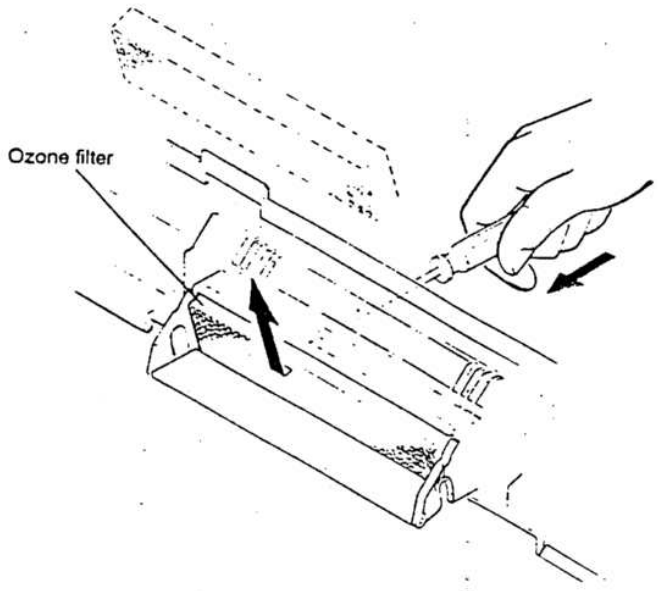

③ Attach a new filter.

SF-7800
SF-7850

[10] TEST FUNCTIONS AND SELF-DIAGNOSIS

1. Test functions

(1) General

The test functions allow the following operations:

- To drive each section independently to check the operation of the section.
- To perform adjustments.
- To cancel a trouble status.
- To set specific functions and options.

(2) Purpose

The test functions are used to help servicing, repairing, and adjust

(3) Test command operation

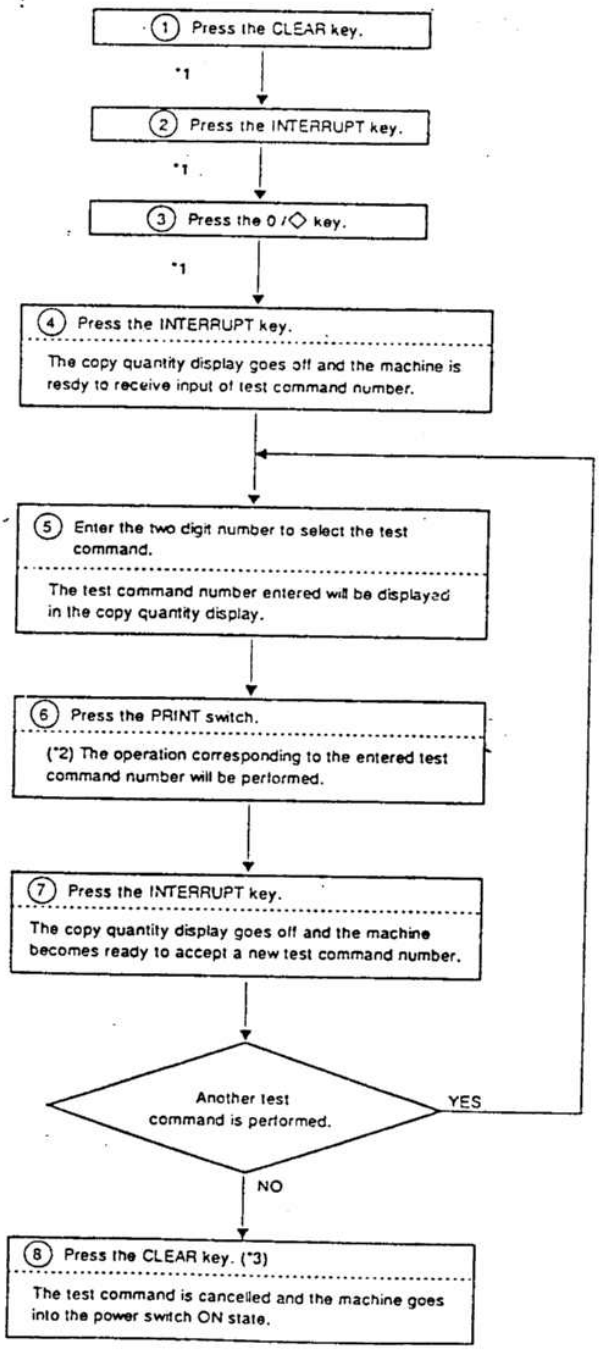

When the INTERRUPT key is pressed in the middle of executin test command, the operation stops and the number in the multi-co window goes out. With this, the copier becomes ready to accept a new test command number.

*1: Unless the next key entry is performed within 5 sec, it won't be accepted.

*2: Depending on the test command number, additional entries may be required.

*3: Since a different method is required to cancel the test command depending on the test command, the following operation must be done. After the test command is cancelled, the machine starts from the state as when the power is just turned on.

- To cancel any test command other than 21, 22, 23, and 24: Press the CLEAR key twice.
- To cancel test command 21, 22, 23, or 24, perform one of the following operation.
  1. Turn off/on the power switch.
  2. Press the CLEAR key, the INTERRUPT key, 0 key, the INTERRUPT key, and the CLEAR key in this sequence.
- For test command 13 and 14:
  Since test commands 13 and 14 are used to clear the contents the diagnostic status (U1, H3, H4) stored in the LSI, the diagnos mode will be automatically cancelled after completion of the test command.

List of the test commands

No.	Function
1	Optical system mirror test
2	Optical system sensor test
3	Paper sensor test
4	Cassette size switch test
5	Display system test. 5 sec ON
6	Fusing heater lamp test. Heater lamp 5 times of ON/OFF
7	Copy lamp test. Full power for 1 sec. ME for 5 sec.
8	Bias output test
9	Main corona output, grid bias test
10	Transfer corona output test
11	Separation corona output test
12	Blank lamp, discharge lamp test
13	U1 trouble cancel
14	Trouble cancel for other than U1 and U2. Toner full detection cancel
15	Jam map, jam total counter clear
16	Maintenance preset counter display
17	Jam map display, jam total counter display
18	Total count display
19	Maintenance count display
20	Maintenance counter clear
21	Warm up time display, aging with jam detection
22	Warm up time display, aging without jam detection
23	Aging without fusing and jam detection
24	Warm-up omission
25	Automatic developer adjustment, rotary parts test
26	Lens operation test
27	Lens cycling
30	ADF sensor state display
31	ADF aging
33	ADF individual load test
34	Separation pawl test, 20 times of ON/OFF
40	Developer preset counter display
41	Developer count display
42	Developer counter clear
45	Drum sensitivity setting
46	Exposure level adjustment
47	AE sensor characteristics test, gain setting
48	Front/rear direction magnification ratio adjustment
49	Paper transport direction, magnification ratio adjustment
50	Lead edge image position adjustment
58	Lead edge image position adjustment
60	Document size sensor test/adjustment
61	Sorter load individual operation test, sensor test
63	Rotary cassette sensor test
69	Rotary cassette aging
70	ADF count display
72	Maintenance preset counter setting
77	Lens, mirror base focus setting
78	Counter mode setting
79	Destination setting
80	Option setting
92	Rotary cassette paper sensor display
94	Document sensor display
96	Fusing temperature setting
97	Rotary cassette size setting
98	Rotary cassette paper sensor test/adjustment

(5) Details of the test functions

Test command	Function
1	Optical system diagnostic program. The mirror base automatically scans. (1) With the depression of the PRINT switch, it changes from the test command mode to execution wait mode with the rea pilot lamp (RPL) active and the magnification ratio at 100%. The magnification ratio may be changed using ... magnification ratio select key. (2) When the PRINT switch is pressed while RPL is active, the lamp goes out and the test command starts executing. T mirror base scans according to the magnification ratio set at that time.
2	Optical sensor test command. When this test command is executed, the on/off state of optical sensors can be tested wi... the following lamps: ① MPL (maintenance lamp): Mirror rotary encoder pulse (RE) input ② IPL (jam lamp): Mirror home position sensor (MHPS) ③ DVL (Developer maintenance lamp): Lens home position sensor (LHPS) ④ TPL (Toner empty lamp): No. 4/5 mirror base home position sensor (MBHPS)
3	Paper sensor test command. The on and off state of three sensors can be tested using the misfeed location indicators. also enables the testing of the cassette paper empty sensors (including manual feed) and sorter paper empty sensor. ① J3L (paper entry jam): PPD (Paper pass detector) ② J2L (Paper exit jam): POD (Paper-out detector ③ J4L (Manual paper feed jam): PID (Manual paper-in detector) ④ MFL (Multi-manual paper feed jam): PID (Multi-manual paper-in detector) * Only when the SF-MF12 is installed. ⑤ CSL1 (250CS jam): CPED (cassette paper empty detector) SF-7850 only ⑥ CSL2 (rotary cassette jam): RPED (Rotary cassette paper empty detector) 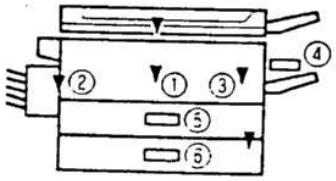
4	Paper size detection switch test command. See the table below for the relation of the switch to be tested vs. indicator. 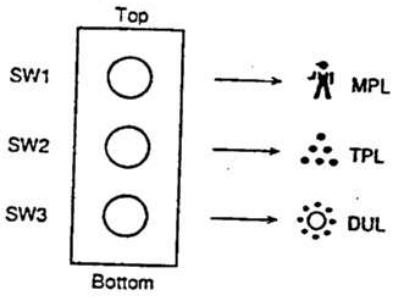
5	All the LEDs on the operation panel are activated for 5 sec.
6	Heater lamp test command. This turns the heater lamp on and off 5 times. 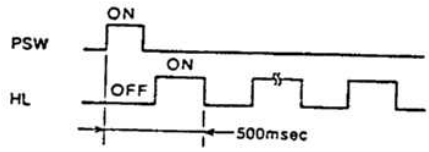 In the order shown above, the heater is turned on and off 5 times.

SW-1 (Upper)	SW-2 (Center)	SW-3 (Lower)	Inch series	AB series
ON	OFF	OFF	11" x 17" (W letter)	B5
ON	OFF	ON	8½" x 11" (Letter)	B5R
OFF	ON	ON	8½" x 14" (Legal)	A4
ON	ON	OFF	8½" x 11" (Letter R)	A4R
OFF	OFF	ON	EXTRA	B4
OFF	ON	OFF	EXTRA	A3
ON	ON	ON	EXTRA	EXTRA

est command	Function
7	Copy lamp test command. The copy lamp is turned on in the following sequence. 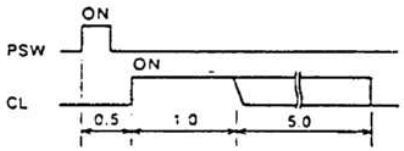 When this test command is executed, manual exposure "3.0" is displayed. After full power ON for 1 sec, the exposure is made according to the exposure key setting. * This test command must not be executed continuously.
8	Developing bias test command. The bias voltage is supplied for 30 sec.
9	Main corona front/rear balance test. ON for 30 sec. During execution of this test command, the grid bias can be changed with numeric key entry. 0: High 1: Low 2: GND
10	Transfer corona (THV) output test command. The transfer corona is activated for 30 sec. When the test command number is entered and the CA (Clear All) key is pressed, the PAL (INTERRUPT lamp) lights up. When the PSW (Print switch) is pressed after that, the transfer corona (THV) and separation corona (SHV) are turned on for 30 sec.
11	Separation corona (SHV) output test. ON for 30 sec.
12	Discharge lamp (DL) and blank lamp (BL) test command. • The discharge lamp turns on for 30 sec. • The blank lamps light up one by one from the front frame side to the rear frame side. (All the blank lamps light up at the end.)
13	U1 trouble cancel. After cancellation of U1 trouble, the test command is also cancelled automatically.
14	Used to cancel troubles other than U1 and U2. After cancellation of trouble, the test command is also cancelled automatically. Also used to cancel toner full detection (the maintenance lamp blinking).
15	Jam map, jam total counter clear test command. Differing from the other test commands, this test command is cleared by pressing the CA key and then the PSW. This is to prevent erroneous cancellation. C → =J → 0 → =J → 1 → 5 → CA → PSW
16	Used to check the contents of the maintenance preset counter. The contents are displayed in three divisions of two digits at a time in the copy quantity display. 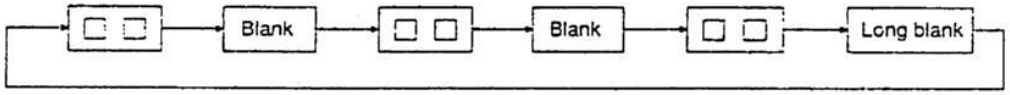
17	Used for jam map display and jam total counter display. Jam memory: When a jam trouble occurs, the jam is stored in memory and the total counter counts up by one. However, jams occurred when the power is turned on or when in the initial jam check from resctting test command, are not counted. Jam and remedy ① ADF jam: Common to document/paper jam ② PPD remain jam ③ POD not-reaching jam ④ POD remain jam ⑤ Multi-manual paper feed jam ⑥ Manual spare paper jam: Including manual paper feed in multi-copy. ⑦ 250-sheet cassette paper feed jam ⑧ Rotary cassette paper feed jam

Test command	Function
	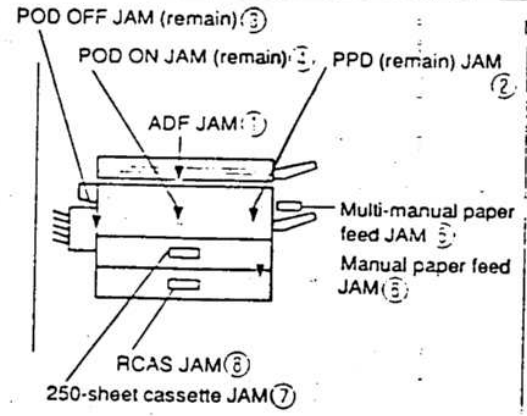 SF-7850 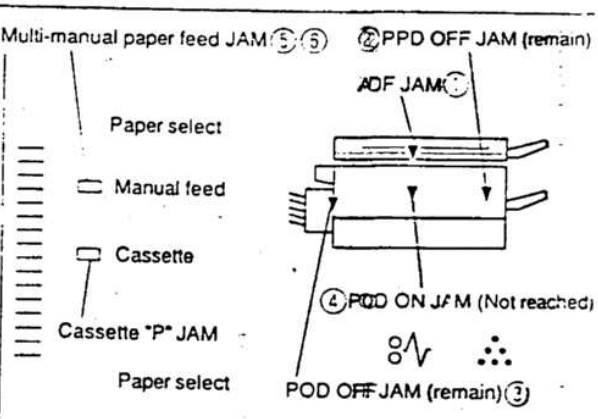 SF-7800 ° Jam map display C → =J → O → =J → 1 → 7 → PSW In this mode, the jam map index is displayed in the multi display, and the LED lights up to indicate the jam location. The latest jam is displayed at first. With the ZOOM UP. DOWN key, the jam map can be checked in sequence. <ZOOM-UP> Index display: 50 → 1 → 2 → 48 → 49 <ZOOM-DOWN> Index display: 50 → 49 → 48 → 2 → 1 When the total jam count is 0, the index display is 0 and the ZOOM-UP/ ZOOM-DOWN keys are not effective. When the total index is at the maximum, and the display is changed with the ZOOM-UP key and the ZOOM-DOWN key. ° Jam total counter display C → =J → O → =J → 1 → 7 → CA → PSW With the above key operation, the INTERRUPT lamp lights up the total number of jam is displayed in the numeric entry section.
18	Used to check the machine total counter copy number. Displayed in the same manner as test command 16.
19	Displays the copy quantity in the maintenance counter in the same manner as test command 16.
20	Used to reset the contents of the maintenance counter to zero after completion of machine maintenance. This test command should be executed after the completion of machine maintenance.
21	1. Used to check the warm-up time 2. Used to repeat the aging test according to the selected copy quantity. When this test command is executed, the machine goes into the ordinary operating mode, and the warm-up time is displayed in seconds in the copy quantity display. When RPL turns on, warm-up counting stops and the display remains as it is. Depression of the CLEAR key, entry of a copy quantity, and pressing the PRINT switch begins the aging operation until the entered copy quantity is reached. The paper misfeed detect function stays active.
22	The aging test carried out without using paper. As it is almost identical to the test command 21, the aging test can performed, disabling the misfeed detect function. The warmup time is displayed similarly to test command 21.
23	Almost identical to the test command 22, the warmup time display is omitted, the heater trouble detect function and paper misfeed detect function are disabled. (The heater lamp does not turn on.)
24	Permits machine operational check by omitting the warmup time. RPL lights up immediately after the execution of the test command. It is possible to immediately proceed to check machine operation. However, the trouble status "H4" may be displayed as the low heater temperature may be detected if the heater temperature is low..

<table>
<tr><th>Test command</th><th>Function</th></tr>
<tr><td>25</td><td>
Test command 25 has two modes:
① Drive section test, toner sensor test and toner full detection test mode.
② Automatic developer adjustment mode
① C → =J → 0/0 → =_ → 2 → 5 → PSW
Operations similar to the conventional test command 25 operation is performed. (3 min). At that time, ON/OFF of the toner full detector can be checked with the color toner lamp.
During execution of this test command, the toner sensor output is displayed in the copy quantity display as below:
<table>
<tr><th>Copy quantity display</th><th>Toner concentration sensor value</th></tr>
<tr><td>EL</td><td>1.5V max.</td></tr>
<tr><td>0</td><td>1.5V</td></tr>
<tr><td>↓</td><td>↓</td></tr>
<tr><td>50</td><td>2.5V</td></tr>
<tr><td>↓</td><td>↓</td></tr>
<tr><td>99</td><td>3.5V</td></tr>
<tr><td>EU</td><td>3.5V min.</td></tr>
</table>
* When the sensor value changes by about 0.02V the display changes by 1.
Toner lamp ON: Sensor input value > Proper concentration (Under toned)
Toner lamp OFF: Sensor input value ≤ Proper concentration (Over toned)
The above is displayed and the developer color can be checked with the following lamp display.
<table>
<tr><th>Color</th><th>Maintenance lamp</th><th>Jam lamp</th><th>Developer lamp</th></tr>
<tr><td>Black</td><td>ON</td><td>—</td><td>—</td></tr>
<tr><td>Red</td><td>—</td><td>ON</td><td>—</td></tr>
<tr><td>Blue</td><td>ON</td><td>ON</td><td>—</td></tr>
<tr><td>Brown</td><td>—</td><td>—</td><td>ON</td></tr>
<tr><td>Green</td><td>ON</td><td>—</td><td>ON</td></tr>
<tr><td>(Spare)</td><td>—</td><td>ON</td><td>ON</td></tr>
</table>
② C → =J → 0/0 → =J → 2 → 5 → CA → PSW
→ The interruption lamp lights up.
With the above key operation, automatic developer adjustment is executed in the following process.
i) The developer is stirred (2min for the black developer, 3 min for the other developers). During stirring, the toner concentration sensor value is displayed in the copy quantity display.
ii) After 2 min (3 min in the case of color developer), the toner concentration sensor value is read 16 times (at every 0.3 sec) and the average value is stored in memory as the proper toner concentration.
If the average value is outside the range of 0 - 99, it is judged as an error and "EE" is displayed in the copy quantity display. In that case, when the PRINT switch is pressed, the display will change as follows:
° EL: Toner concentration value 1.5V or less → (Cause) Defective sensor, developer empty, etc.
° EU: Toner concentration value 3.5V or more → (Cause) Defective sensor, sensor harness disconnection, etc.
iii) If the average value is within the range of 0 - 99, the automatic toner concentration value adjustment is completed.
</td></tr>
<tr><td>26</td><td>
Used to check the zoom lens operation.
• The magnification ratio is displayed in the copy magnification ratio display.
AB series 100% 50% 70% 81% 86%
115% 122% 41% 200%
Inch series 100% 50% 64% 77% 95%
121% 129% 141% 200%
</td></tr>
<tr><td>27</td><td>
• Used for aging of the zoom lens.
• Repeats the operation of test command 26.
</td></tr>
<tr><td>30</td><td>
Used to check the ADF (option) sensor.
<table>
<tr><th>LED</th><th>Sensor</th></tr>
<tr><td>MPL (Maintenance lamp)</td><td>DF section open/close sensor</td></tr>
<tr><td>DVL (Developer maintenance lamp)</td><td>Document presence/empty sensor</td></tr>
<tr><td>CTL (Color toner lamp)</td><td>Document exit sensor</td></tr>
<tr><td>TPL (Toner empty lamp)</td><td>Resist section document width sensor</td></tr>
<tr><td>JPL (Jam lamp)</td><td>Document spare paper feed sensor</td></tr>
</table>
</td></tr>
<tr><td>31</td><td>
Used for aging of the ADF.
The load are operated by the timer and there is need to set document.
</td></tr>
</table>

Test command	Function
33	Used for ADF individual load test. Immediately after execution of this test, "0" is automatically selected. During execution, the quantity to be tested can be changed with the numeric keys. "0" : MOT paper feed direction rotation "1" : MOT transport direction rotation, low speed "2" : MOT transport direction rotation, medium speed "3" : MOT transport direction rotation, high speed "4" : Document stopper solenoid ON To cancel, press the CA key, the CLEAR key, and the INTERRUPT key.
34	• Used to check the drum separation pawl operation. • On off operations are repeated 20 times.
40	Used to display the content of the developer preset counter of the installed developer unit. • Display is made similarly to test command 16. • The color display of the installed developer is similar to test command 25.
41	Used to display the content of the copy counter of the installed developer. • Display is made similarly to test command 16. • The color display of the installed developer is similar to test command 25.
42	To clear the copy counter of the installed developer unit. • Display is made similarly to test command 16. • The color display of the installed developer is similar to test command 25.
45	Used to set the drum sensitivity to the number on the sensitivity label in the rear frame side of the drum unit. ① When this test command is executed, the set value is displayed in the copy quantity display and the RPL (ready p lamp) lights up. ② Pressing the numeric keys when the RPL is on allows setting of "1" to "3." ③ After setting the value, when the PRINT switch is pressed, the RPL goes off and the test command No. is displayed, and the setting is completed. Key 1 2 3 Sensitivity 1 2 3
46	Used to adjust copy exposure and copy exposure adjustable range. For details, refer to [11] COPY EXPOSURE ADJUSTMENT (11-1).
47	Used to measure the AE sensor output characteristics and to set the gain rank with the measured value. The mirror base is initialized, scanned about 10cm, and stopped. The ready lamp lights up. When the PRINT switch is pressed, the AE sensor output is measured at gain rank of "0" and copy lamp applying voltage MAX (75V in 100V system and 150V in 200V system). Then the gain rank is measured according to the measured value. The voltage changes from 7V (150V) to 55V (110V) in the increment of 5V (10V) to memory the AE sensor output characteristics. The values in ( ) are for 200V system. AES / Gain rank / AEG0 / AEG1 / AEG2 / Magnification ratio 2.77 or less / 3 / x / x / H / 2.154 2.78 ~ 3.21 / 2 / x / L / L / 1.867 3.22 ~ 3.65 / 1 / L / H / L / 1.638 3.66 or more / 0 / H / H / L / 1.460 After completion, the sensor level (after gain setting, MAX) is displayed in two digits of hexadecimal.
48	Used to set No. 4/5 mirror home position and to adjust the copy magnification ratio in vertical direction. Test command 48 has two modes according to purposes as shown below: Entering the reference value of the vertical magnification ratio (when the lens and the main PWB are replaced), and adjusting the vertical copy magnification ratio. C — =↵ — 0 — =↵ — 4 — 8 — PSW — =↵ * For details, refer to [7] DISASSEMBLY, ASSEMBLY AND ADJUSTMENT, 3. Optical system (2) Adjustment (7-14). • Entering the reference value of No. 4/5 mirror home position (when the lens and the main PWB are replaced) and adjusting the resolution. C — =↵ — 0 — =↵ — 4 — 8 — PSW * For details, refer to [7] DISASSEMBLY, ASSEMBLY AND ADJUSTMENT, 3. Optical system (2) Adjustment (7-14).

Test command	Function
49	Used to adjust the horizontal magnification ratio. By changing the mirror base scanning speed, the horizontal magnification ratio of the copy can be adjusted. Adjusting method 1. Place a scale on the document table facing from front to rear then make a copy in the normal mode and obtain the magnification ratio factor. Copy magnification ratio correction factor = $\frac{\text{(document size)} - \text{(copy image size)}}{\text{(document size)}} \times 100\%$ 2. Perform test command 49. As the ready lamp turns on, the preset value (5 to 35) is displayed. Enter this value with the magnification ratio correction factor obtained in the above procedure as shown below. (Input value) = (preset value) – (copy magnification ratio correction factor [%]) x 10 When the PRINT switch is pressed, after entry of the input value, the input value is stored in the memory and the ready lamp goes off. * For more information, refer to [7] DISASSEMBLY, ASSEMBLY AND ADJUSTMENTS OPTICAL SYSTEM, (2) Adjustment, Horizontal copy magnification ratio adjustment (7-15).
50	Used to adjust the copy lead edge image loss and void area. (Note) This test command can be executed only when the machine goes into the ready state. * For more information, refer to [7] DISASSEMBLY, ASSEMBLY AND ADJUSTMENTS OPTICAL SYSTEM, (2) Adjustment, Copy lead edge adjustment (7-20).
58	Used to adjust the copy lead edge image loss and void area. For more information, refer to [7] DISASSEMBLY, ASSEMBLY AND ADJUSTMENTS OPTICAL SYSTEM, (2) Adjustment, Copy lead edge adjustment (7-22).
60	Used to check the document size photosensor and to enter the detection level. (SF-7850 only) (The document length is detected by the document interruption system.) (also on page 7-22) ① Photo sensor check method • Key operation: C → [=/J] → 0 → [=/J] → 6 → 0 → PSW The document size display lamp and the auto paper select lamps light up. • The document size lamp goes off when the light emitting section of the size detection LED PWB is shaded. * The photosensor arrangement is as follows:

Reception axis	Japan AB series	Outside Japan AB series	Outside Japan inch series
1	—	—	—
2	B5	—	—
3	A4	A4	LT
4	B5R	—	—
5	A4R	A4R	LTR
6	B4	B4	LG
7	A3	A3	17"

- The auto paper select lamp is for open/close check of the original cover. (OFF when close).
- When the original cover close is detected, all the document size display lamps go off.

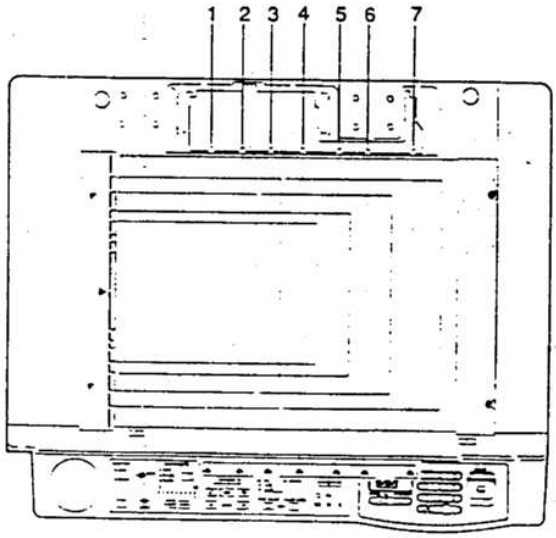

Test command	Function
	② Light reception level setting • Key operation [C] → [=J] → [0] → [=J] → [6] → [0] → [PSW] → [Auto magnification ratio select key] The ready lamp (RPL) and the auto magnification ratio select lamp light up. • With the original cover open without placing paper on it, press the PRINT switch. • The ready lamp instantaneously goes off and then lights up again. At the same time, the INTERRUPT lamp lights up. (The sensor level without paper is stored in the memory.) • Place a transfer paper of A3 (17" x 11") on the document table, and press the PRINT switch with the original cover open. (The sensor level with paper is stored and the judgement level of paper presence/empty is stored.) • The machine returns to the sensor check mode. If there is any abnormality in the sensor level, "CC" is displayed.
61	Used to check the sorter (option) load and the sensor. ① Pressing the numeric key allows to check the following operations: "0" Transport motor (SFM) sorter bin shift stop "1" Transport motor (SFM) ON "2" Sorter bin shift up "3" Sorter bin shift down ② With the display lamps, ON/OFF operation of the switch can be checked. MPL (Maintenance lamp) | Sorter bin home position sensor TPL (Toner lamp) | Sorter home bin SW DVL (Developer lamp) | Sorter door SW
63	Used to check the rotary cassette sensor with the display lamps. PEL (Paper empty lamp) | Rotary cassette empty sensor (RPED) MPL (Maintenance lamp) | Rotary cassette position sensor (RCPD1) landscape feed position DVL (Developer lamp) | Rotary cassette position sensor (RCPD2) landscape feed position TPL (Toner lamp) | Common to RCPD1 and RCPD2 (Cassette non-insertion detection)
69	Used for aging of the rotary cassette. Rotary operations in the vertical direction and the horizontal direction are repeated.
70	Used to check ADF count. The display is made similarly to test command 16.
72	Used to set the maintenance cycle. Setting procedure ① When this test command is executed, the preset values of the copy kit or the maintenance lamp count No. are displayed and the ready lamp lights up. ② After the ready lamp lights up, enter the maintenance lamp set code with the 0 – 2 keys. Press the print switch, and the set code is stored in the memory and the ready lamp goes off. <Outside Japan>
77	Used to enter the lens characteristics when replacing the lens. Setting procedure ① When this test command is executed, the preset value is displayed and the ready lamp lights up. ② After the ready lamp lights up, enter the lens number, press the print switch, and the preset value is stored in the memory and the ready lamp goes off. Refer to [7] DISASSEMBLY, ASSEMBLY AND ADJUSTMENT, 3. Optical system, (2) Adjustments (7-16).

Set code	Developer lamp		Maintenance lamp
	Black	Color	
0	30,000 sheet	10,000 sheet	10,000 sheet
1	30,000 sheet	10,000 sheet	15,000 sheet
2	30,000 sheet	10,000 sheet	30,000 sheet
3	Not lighted.	10,000 sheet	Not lighted.

Test command	Function

78

Used to set the counter mode.

① When this test command is executed, the preset mode set code is displayed and the ready lamp lights up.

② After the ready lamp lights up, enter the set code with the 10 key, press the PRINT switch, and the set code is stored and the ready lamp goes off.

Set code	Timer auto clear	CPC mode setting (Toner save mode)	Total counter (Single/Double)	Maintenance counter (Single/Double)
0	○	×	Double count	Double count
1	○	×	Single count	Double count
2	○	×	Double count	Single count
3	○	×	Single count	Single count
20	○	○	Double count	Double count
21	○	○	Single count	Double count
22	○	○	Double count	Single count
23	○	○	Single count	Single count
40	×	×	Double count	Double count
41	×	×	Single count	Double count
42	×	×	Double count	Single count
43	×	×	Single count	Single count
60	×	○	Double count	Double count
61	×	○	Single count	Double count
62	×	○	Double count	Single count
63	×	○	Single count	Single count

○ – enabled
× – disabled

× CPU mode (toner save mode): CPU mode with test command 79.

79

Used to set the model and destination.

① When this test command is executed, the preset code of machine state is displayed and the ready lamp lights up.

② After the ready lamp lights up, enter the set code for the machine state with the numeric keys and press the PRINT switch, and the set data is stored and the ready lamp lights up.

Model / Destination	Japan	Britain (SUK)	Outside Britain (Outside japan AB series)	Inch series (USA)	Inch series (Outside USA)
SF-7850	0	1	5	6	7
SF-7800	10	11	15	16	17

- Indonesia: If it was set to the Indonesian version, installation of other than black developer is disregarded ("CH" displayed).

80

- When any option is installed, perform this test command.

① C → =J → 0 → =J → 8 → 0 → PSW

② Calculate total of set code of options installed, set total.

Option	Model	Code
ADF	SF-A12	1
Multi-pacer feed unit	SF-MF12	4
Sorter	SF-S12	20

- Enter the code corresponding to the options as shown in the above table.
  Example: When setting SF-A12, MF12, and S12, the code to be entered is 1 + 4 + 20 = 25. Enter 25.

Note:
(1) Be sure to follow the above table for setting.
(2) If not, some trouble may occur.

92

Used to check the sensor level of the rotary cassette paper detection.
This test command has following two mode:

① Sensor monitor mode
C → =– → 0 → =J → 9 → 2 → PSW
The cassette paper sensor level is displayed in hexadecimal number in the copy quantity display.

② Sensor judgement level check mode
C → =– → 0 → =J → 9 → 2 → PSW → Auto magnification ratio select key
The paper sensor paper presence/empty judgement level set with test command 98 is displayed in hexadecimal number in the copy quantity display.

SF-7800
SF-7850

Test command	Function
94	Used to check the document sense level. (SF-7850 only) ① Light reception level display mode C → =J → 0 → =J → 9 → 4 → PSW • The light reception level during execution of the test command is displayed in the copy quantity display. • When the value corresponding to each sensor is entered with numeric keys after execution of this test mode, the corresponding document size display lamp lights up. This allows checking of the sensor light reception level. • The auto paper select lamp is for checking the original cover open/close. On for open, off for close. In the case of ①, if the original cover is closed, the sensor level is fixed at the previous value. ② Set level display mode C → =J → 0 → =J → 9 → 4 → PSW → Auto magnification select key • With the above key operation, the INTERRUPT lamp lights up. • The sensor level set with test command 60 is displayed in the copy quantity display. • When the value corresponding to each sensor is entered with numeric keys after execution of this test mode, the corresponding document size display lamp lights up. This allows checking of the sensor light reception level.
96	Used to set the fusing temperature. When this test command is executed, the lower two digits of the preset temperature is displayed. (Example: 75 --- 175 degree C) When the auto magnification ratio select key is pressed under this state, the fusing temperature can be changed in the increment of 5 degree C. Destination / Standard set value / Variable range Japan / 185°C / 165°C – 200°C USA / 190°C / 170°C – 205°C Others / 190°C / 180°C – 205°C * Do not change the set value unnecessarily.
97	Used to set the rotary cassette size. (SF-7850 only) • When this test command is executed, the selected paper size is displayed in the paper size display. • When the auto magnification select key is pressed at that time, the ready lamp lights up and the machine goes into the paper size setting mode. When the auto magnification select key is pressed further, the corresponding cassette size display lamp in the operation panel lights up. • By selecting the cassette size with the auto magnification select key and pressing the PRINT switch, the displayed cassette size is stored.
98	Used for the rotary cassette paper sensor (RPED) check adjustment. (SF-7850 only) ① C → =J → 0/0 → =J → 9 → 8 → PSW The machine goes into the paper sensor check mode, and the paper sensor state is displayed with the paper empty lamp. (ON when paper empty is detected.) When the auto magnification select key is pressed at that time, the auto magnification select lamp lights up to show that the machine is in the paper sensor adjustment mode. The ready lamp lights up at the same time. ② Set paper in the rotary cassette, install the cassette to the machine, and press PSW. The sensor value is temporarily stored in the memory and the interruption lamp lights up. ③ Remove paper from the rotary cassette, install the cassette to the machine and press PSW. The paper presence/empty level is calculated from the sensor value and the temporarily stored value in ②, and th obtained value is stored in the memory. The machine goes into the paper sensor check mode simultaneously. If there is any abnormality in the sensor level, "CC" is displayed in the copy quantity display.

Diagnosis

(1) Purpose

The diagnostic program is provided for the following purposes:

- Occurrence of an abnormal condition in the machine is detected by the machine itself and the trouble status is displayed in the copy quantity display to inform the operator or service engineer of an error.
- When trouble is detected, the power is turned off to prevent the load components within the copier from damage.

(2) Outline

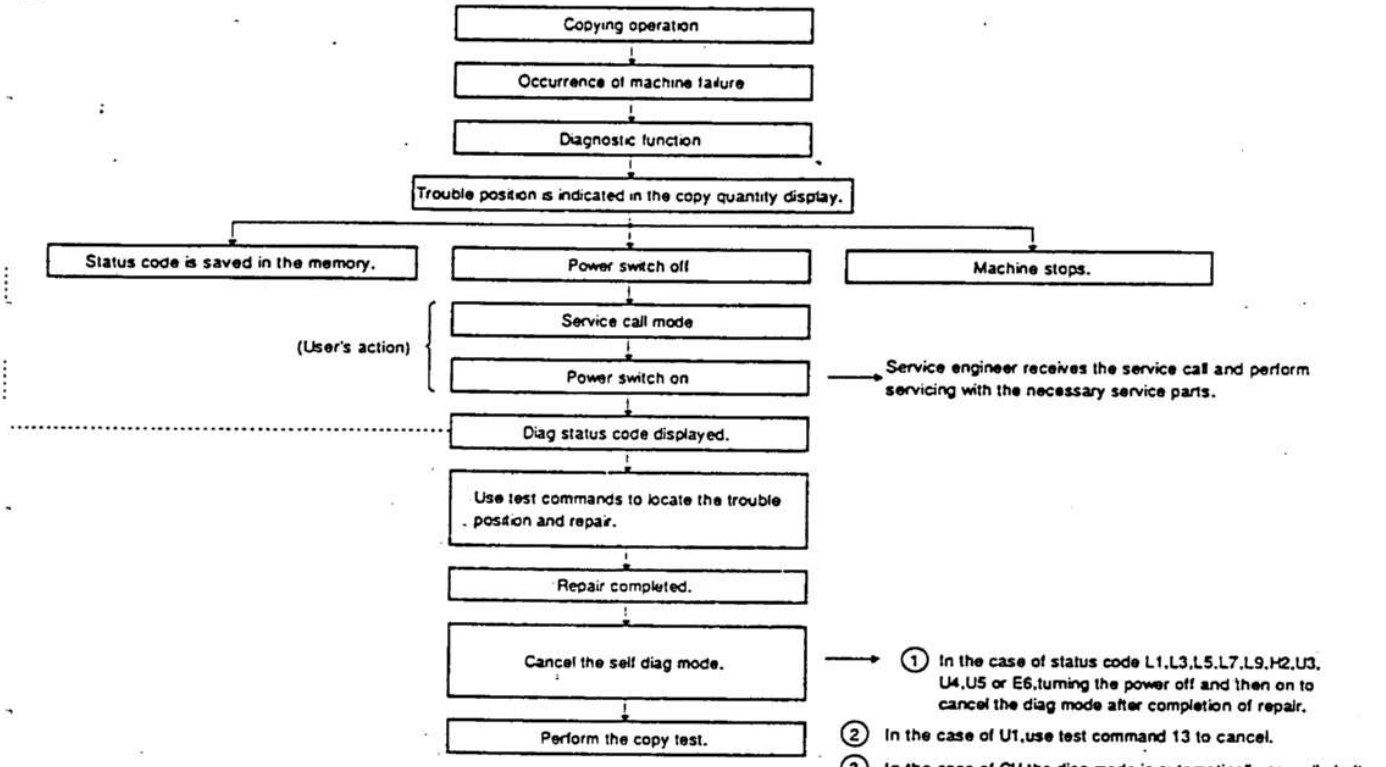

') List of diagnosis

tatus	Significance
L1	Mirror feed trouble
L2	Mirror feed trouble
L3	Mirror return trouble
L5	Lens trouble
L6	Rotary cassette trouble (SF-7850 only)
L8	Full wave signal error
L9	Sorter trouble
EE	Automatic developer adjustment error
EU, EL	Automatic developer adjusting sensor input error
CH	Door open
CC	Document sense trouble
PC	Counter not installed
U1	Low battery voltage
U2	Backup memory error
U3	AE sensor trouble
U5	ADF system trouble
H2	Thermistor open
H3	High temperature trouble
H4	Low temperature trouble

(4) Details of self diagnosis

Status	Cause No.	Trouble description	Cause	Test command
L1	—	The forward scan is not completed within 10 sec after the mirror starts moving.	Mirror motor control PWB failure, Mirror motor failure	1, 2
L2	1	Mirror motor lock	Mirror motor control PWB failure, Mirror motor failure	1, 2
	2	Mirror home position sensor (MHPS) trouble	Mirror motor control PWB failure, Mirror motor failure	1, 2
L3	—	Mirror returning is not completed within 10 sec from the initial start in the case of mirror initialization and from the completion of copying in the case of copying operation.	MHPS failure Mirror motor control PWB failure, Mirror motor failure	1, 2
L5	0	Lens move is not completed within 12.5 sec after the lens started to move.	Lens motor, LHPS failure	26, 27
	1	No. 4/5 mirror stepping motor trouble	No. 4/5 stepping motor failure, No. 4/5 mirror home position sensor failure	26, 27
	2	No. 4/5 mirror home position sense trouble	Main PWB	26, 27
	4	Lens stepping motor trouble	Lens motor failure, main PWB	26, 27
	8	Lens home position sense trouble	Lens home position sensor, main PWB	26, 27
L6		Rotary cassette position sense failure	Cassette position sensor failure RC motor failure	63, 69
L8		Full wave signal abnormality		—
L9	11	Sorter home position is not detected within 10 sec from resetting the sorter home bin.	Home position sensor failure, motor failure	61
	13	The standby position is failed to keep after shift operation completed within 1.1 sec after sorter 1-bin shift operation.	Index stop position sense SW failure, motor failure	61
H2	—	Thermistor open detection, thermistor open or the fusing unit is not installed when the door is closed.	Thermistor open	—
H3	—	Heat roller abnormally high temperature	Triac shorted	6 → 14
H4	—	The set temperature is not reached within 90 sec after turning on the power. (the heater lamp lights up after 1 sec from turning on the power relay.) After reaching the specified temperature, abnormal temperature is detected.	Heater lamp open Defective installation of thermistor Thermostat open	6
U1	—	Low battery voltage for backup memory		13
U2	—	Sum check error in the backup memory counter		—
U3	80	AE sensor trouble In test command 47, AE sensor output level does not change for the copy lamp light intensity.	AE sensor, main PWB failure	—
U5	0	ADF communication trouble	Harness, ADF control PWB failure	—
	1	ADF motor drive failure	Motor failure, motor rotation sensor failure	30, 31, 33
EE		Automatic developer adjustment trouble Sensor level input error * Occurs after automatic developer adjustment with test command 25.	Toner control sensor failure	25
EL		Sensor level input error (Over toner) * Occurs during sensor level reading with test command 25.	Toner control sensor failure	25
EU		Sensor level input error (Under toner) * Occurs during sensor level reading with test command 25.	Toner control sensor failure	25
CC		Document sensor trouble. When the level difference between paper presence and paper empty is less than 4 steps in test command 60. (1 step = 5V/256)	LED PWB failure, Light receiving PWB failure, arm unit adjustment failure	60 94
CH	(ON)	Door switch is not turned on. (The interlock switch is ON.)	—	—
CH	(Blink)	• The DV tank is not installed.	—	—
PC		• The personal counter is not installed. • The personal counter connector is disconnected.	—	

1] COPY EXPOSURE ADJUSTMENT

The copy exposure adjustment should be performed in the following cases:

- When maintenance is performed.
- When the main corona output current, or the grid voltage is adjusted. (When the corona unit or the high voltage unit is replaced.)
- When the developer bias is adjusted.
- When the AC PWB unit and CL-reg circuit part are replaced.
- When the AE sensor is replaced.
- When the copy lamp is replaced.
- When the optical unit is replaced.
- When the optical unit id disassembled, repaired, or adjusted.
- When the exposure adjustment plate is moved.
- When the drum is replaced.
- When the main PWB is replaced.

1. Note for copy exposure adjustment

Before performing the copy exposure adjustment, perform the following procedures.

① Clean the optical system (Table glass, lens, mirror, copy lamp, reflector).

② Clean the AE sensor. (Wipe the photo.sensor surface with cloth immersed in alcohol or water).

Note: Do not use a dry cloth, because it may charge the sensor surface to attract dusts.

③ Clean the corona wires and screen grids. (Main corona, transfer corona)

④ Clean the blank lamps and the discharge lamps around the drum holder unit.

Note: Perform the manual copy exposure adjustment first, then perform the automatic copy exposure adjustment. Do not reverse the sequence.

Copy exposure adjustment procedure

(1) Automatic copy exposure level adjustment

Refer to the "Automatic copy exposure adjustment" in [3] UNPACKING AND INSTALLATION, and set the automatic copy exposure level to 3. (3-7)

(2) AE sensor level adjustment

① Perform test command 47. (The mirror base scans and stops at the AE sensor level measurement position.)

② Place 4 or 5 sheets of white paper (A3 or 11" x 17") on the document table in the center reference.

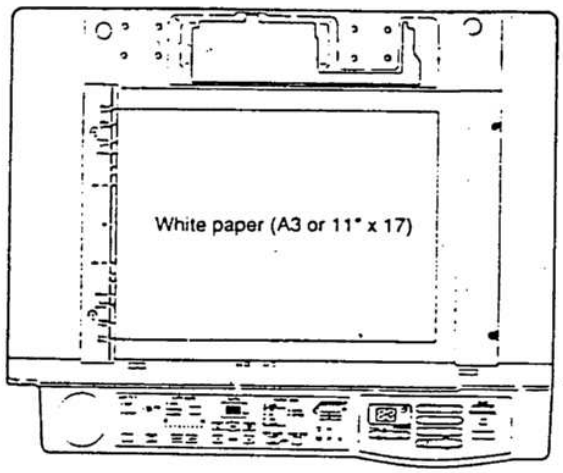

③ Press the PSW again. (The copy lamp lights up and the sensor level is stored in the memory.)

(3) Drum sensitivity setting

① Perform test command 45, and check that the top digit of the 9-digit drum number printed on the flange in the drum front frame side in the copy quantity display.

② If the displayed number is different from the top digit of the drum number, press the copy quantity set key to adjust the value. Then press the PSW.
(Refer to the "Drum sensitivity setting" in [3] UNPACKING AND INSTALLATION. (3-7)

(4) Test chart setting

Place four sheets of paper (Sharp specification, about 120mm wide and about 420mm long) on the document table in the center reference. Set the test chart (UKOG-0089CSZZ, UKOG-0162FCZZ) or Kodak gray scale.

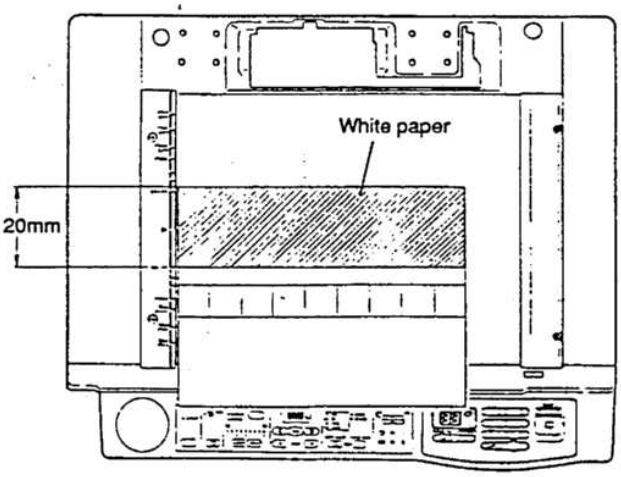

SF-7800
SF-7850

(5) Copy exposure adjustment procedure

A. Manual mode copy exposure check

① Perform test command 46 (copy exposure adjustment). The manual copy mode exposure is displayed in the exposure display on the operation panel.

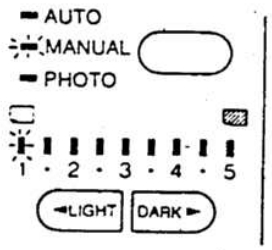

② In manual exposure mode 1.0, make a copy.

For each test chart, check as follows:

- When UKOG-0089CSZZ is used:

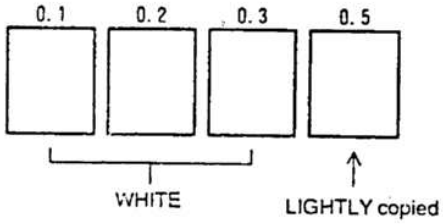

- When UKOG-0162FCZZ is used.

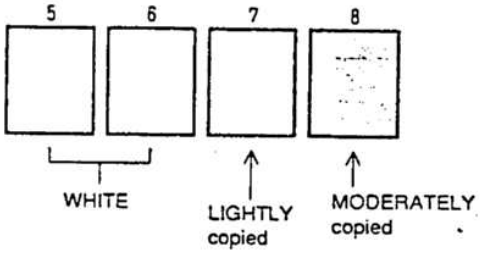

- When Kodak gray scal is used:

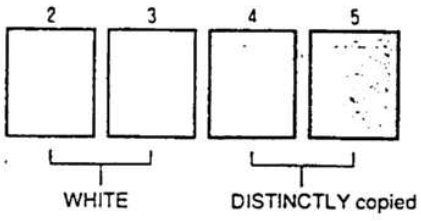

<When the copy is too light>

Set a smaller value than the displayed value in the copy quantity display. (Use the copy quantity set key.)

<When the copy is too dark>

Set a larger value than the displayed value in the copy quantity display.

※ The set value range is 1 to 99.

(Note) During test command 46 execution, never press the CL key. (To change the set value, no need to press the CLEAR key, but just enter the desired value.)

③ Make a copy.

When the copy exposure is within the specified range, press the DARK key, until exposure 5 is displayed in the exposure display on the operation panel.

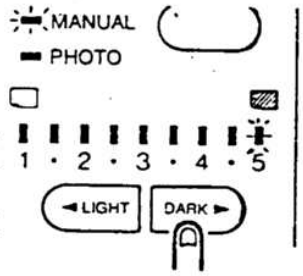

④ In manual mode exposure 5.0, make a copy.

For each test chart, check as follows:

- When UKOG-0089CSZZ is used.

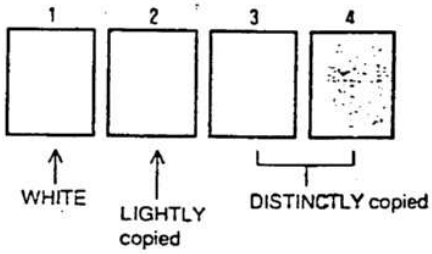

- When UKOG-0162FCZZ is used:

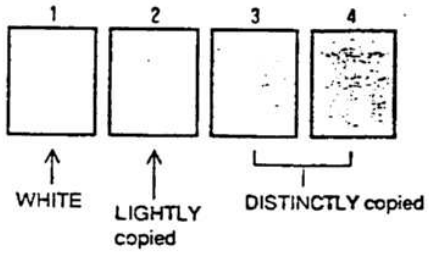

- When Kodak gray scale is used:

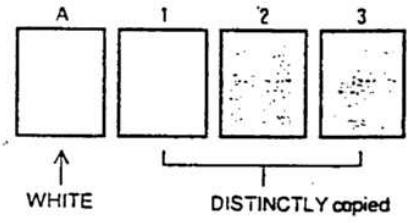

To adjust the exposure, perform the same procedure as exposure 1 setting.

Photo mode copy exposure check

Select the photo mode with the mode select key.
The photo mode exposure "5" is displayed in the copy exposure display on the operation panel.

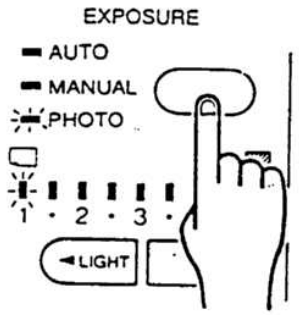

② Perform the same procedure as the manual copy exposure check with exposure 1 and exposure 5.
The copy exposure reference in the photo mode differs according to the destinations.

- For U.S.A., Canada, and United Kingdom, adjust with the following reference.
- For the other destinations, adjust with the copy exposure reference in the manual mode.

③ In manual exposure mode 1.0, make a copy.

For each test chart, check as follows:

- When UKOG-0089CSZZ is used:

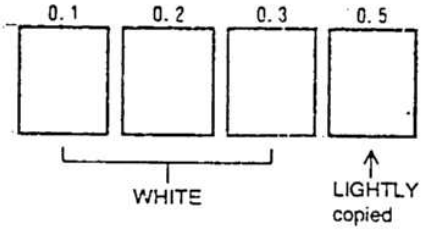

- When UKOG-0162FCZZ is used.

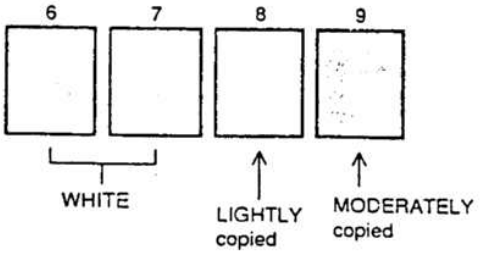

- When Kodak gray scal is used:

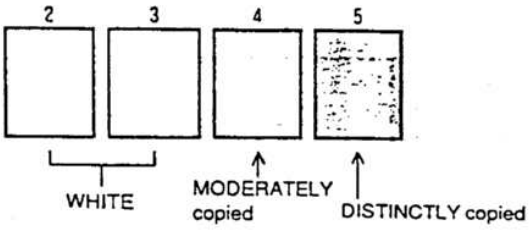

<When the copy is too light>
Set a smaller value than the displayed value in the copy quantity display. (Use the copy quantity set key.)

<When the copy is too dark>
Set a larger value than the displayed value in the copy quantity display.
* The set value range is 1 to 99.

④ Make a copy.
When the copy exposure is within the specified range, press the DARK key, until exposure 5 is displayed in the exposure display on the operation panel.

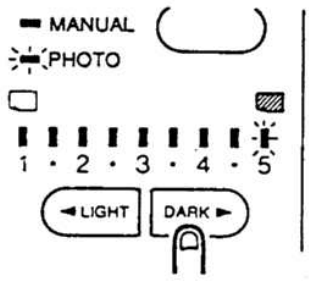

⑤ In manual mode exposure 5.0, make a copy.

For each test chart, check as follows:

- When UKOG-0089CSZZ is used.

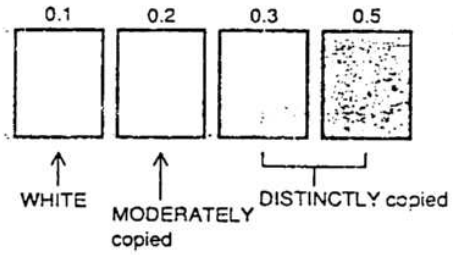

- When UKOG-0162FCZZ is used:

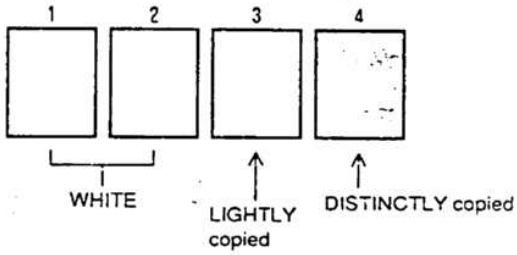

- When Kodak gray scale is used:

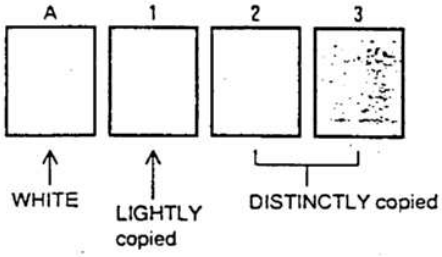

To adjust the exposure, perform the same procedure as exposure 1 setting.

SF-7800
SF-7850

c. Perform the copy check in the automatic exposure mode.

① Select the auto mode with the mode select key.
Automatic exposure 1 is displayed in the exposure display in the operation panel.

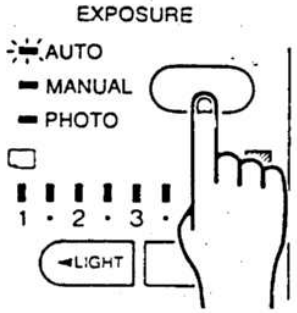

② Check that "0" is displayed in the copy quantity display.
If display is not "0," set to "0."

③ Press the "DARK" key.
Exposure 5 is displayed in the exposure display in the operation panel.

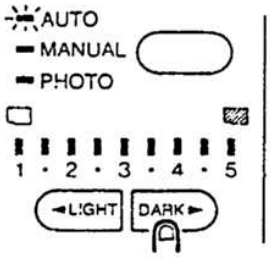

④ In the automatic copy mode, make a copy.

For each test chart, check as follows:

- When UKOG-0089CSZZ is used:

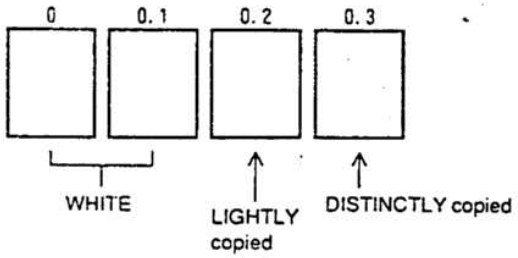

- When UKOG-0162FCZZ is used:

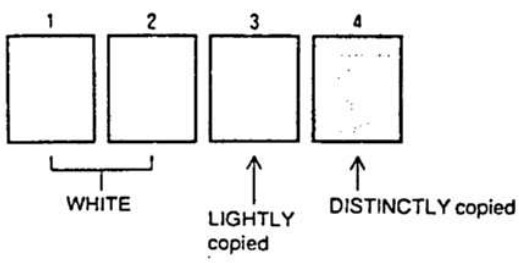

- When Kodak gray scale is used:

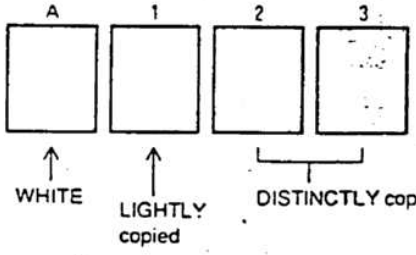

- If the copy exposure is too dark or too light, adjust in the same manner as EX5 in the manual copy mode.

d. Perform the copy check in the toner save mode

① Press the mode select key.
The automatic exposure and photo indicator on the operation panel lights up, and exposure "1" is displayed.

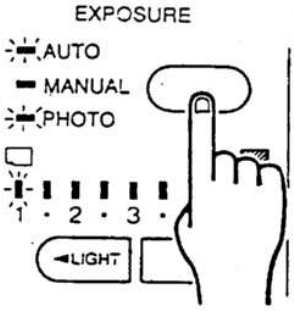

② Check that "0" is displayed in the copy quantity display.
If display is not "0," set to "0."

③ Press the "DARK" key.
Exposure 5 is displayed in the exposure display in the operation panel.

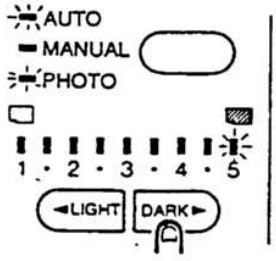

④ In the automatic copy mode, make a copy.

For each test chart, check as follows:

- When UKOG-0089CSZZ is used:

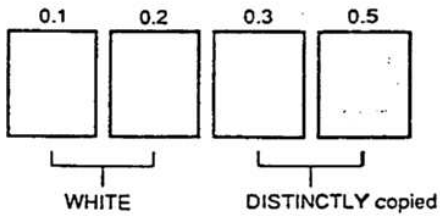

- When UKOG-0162FCZZ is used:

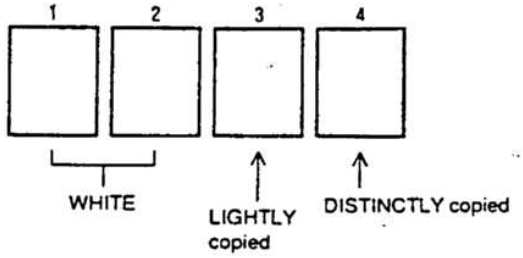

- When Kodak gray scale is used:

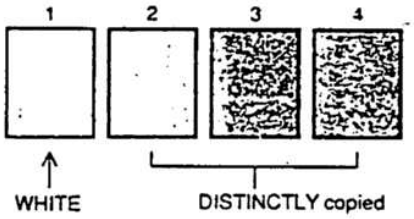

- If the copy exposure is too dark or too light, adjust in the same manner as EX5 in the manual copy mode.

⑤ Cancel test command 46.

SF-7800
SF-7850

SHARP CIRCUIT DIAGRAM

CODE : 00ZSF7800C／CM

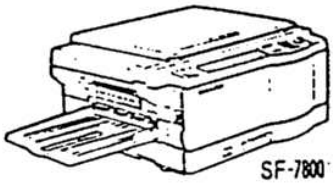

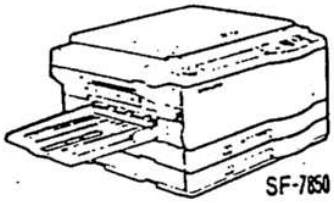

MODEL SF-7800 SF-7850

CONTENTS

〔1〕 AC POWER SUPPLY CIRCUIT-1 ····· 1
〔1〕 AC POWER SUPPLY CIRCUIT-2(CLR) ····· 2
〔1〕 AC POWER SUPPLY PWB ····· 3
〔2〕 MAIN CONTROL CIRCUIT-1(SF-7800) ····· 4
〔2〕 MAIN CONTROL CIRCUIT-2(SF-7800) ····· 5
〔2〕 MAIN CONTROL CIRCUIT-3(SF-7800) ····· 6
〔2〕 MAIN CONTROL PWB (SF-7800) ····· 7
〔2〕 MAIN CONTROL CIRCUIT-1(SF-7850) ····· 11
〔2〕 MAIN CONTROL CIRCUIT-2(SF-7850) ····· 12
〔2〕 MAIN CONTROL CIRCUIT-3(SF-7850) ····· 13
〔2〕 MAIN CONTROL PWB (SF-7850) ····· 14
〔3〕 OPERATION CIRCUIT-1(SF-7800) ····· 16
〔3〕 OPERATION CIRCUIT-1(SF-7850) ····· 17
〔3〕 OPERATION CIRCUIT-2 ····· 18
〔3〕 OPERATION PWB-1, 2 ····· 19
〔4〕 DOCUMENT SIZE SENSOR CIRCUIT (SF-7850 ONLY) ····· 21
〔4〕 DOCUMENT SIZE SENSOR PWB(SF-7850 ONLY) ··· 21
〔5〕 DISCHARGE LAMP CIRCUIT ····· 23
〔5〕 DISCHARGE LAMP PWB ····· 23
〔6〕 BLANK LAMP CIRCUIT ····· 24
〔6〕 BLANK LAMP PWB ····· 25
〔7〕 AE SENSOR CIRCUIT ····· 26
〔7〕 AE SENSOR PWB ····· 26
〔8〕 RM CIRCUIT (SF-7850 ONLY) ····· 27
〔8〕 RM PWB (SF-7850 ONLY) ····· 27
〔9〕 DC POWER SUPPLY CIRCUIT ····· 28
〔9〕 DC POWER SUPPLY PWB ····· 29
〔10〕 TIMEING CHART-1 (Preliminary Operation) ····· 30
〔.0〕 TIMEING CHART-2 (A4, 81/2˝×11˝ copy) Rotary Cassette ····· 31
〔10〕 TIMEING CHART-3 (A4, 81/2˝×11˝ copy) 250 Sheet Cassette ····· 32
〔10〕 TIMEING CHART-4 (A3, 17˝×11˝ copy) ····· 33
〔10〕 TIMEING CHART (A4, 81/2˝×11˝ Manual Feed) ··· 34
〔11〕 ACTUAL WIRING CHART-1 (Operetion, Optical section) ····· 35
〔11〕 ACTUAL WIRING CHART-2 (Main Frame, Optical Section) ····· 36
〔11〕 ACTUAL WIRING CHART-3 (Lower Primary side, Option) ····· 37

〔1〕 AC電源回路－1 ····· 1
〔1〕 AC電源回路－2 (コピーランプ回路部) ····· 2
〔1〕 AC電源基板 ····· 3
〔2〕 メイン回路－1 (SF-7800) ····· 4
〔2〕 メイン回路－2 (SF-7800) ····· 5
〔2〕 メイン回路－3 (SF-7800) ····· 6
〔2〕 メイン基板(SF-7800) ····· 7
〔2〕 メイン回路－1 (SF-7850) ····· 11
〔2〕 メイン回路－2 (SF-7850) ····· 12
〔2〕 メイン回路－3 (SF-7850) ····· 13
〔2〕 メイン基板(SF-7850) ····· 14
〔3〕 操作回路－1 (SF-7800) ····· 16
〔3〕 操作回路－1 (SF-7850) ····· 17
〔3〕 操作回路－2 ····· 18
〔3〕 操作基板－1, 2 ····· 19
〔4〕 原稿検知回路(SF-7850のみ) ····· 21
〔4〕 原稿検知基板(SF-7850のみ) ····· 21
〔5〕 除電ランプ回路 ····· 23
〔5〕 除電ランプ基板 ····· 23
〔6〕 ブランクランプ ····· 24
〔6〕 ブランクランプ基板 ····· 25
〔7〕 AEセンサー回路 ····· 26
〔7〕 AEセンサー基板 ····· 26
〔8〕 回転カセットモーター回路(SF-7850のみ) ····· 27
〔8〕 回転カセットモーター基板(SF-7850のみ) ····· 27
〔9〕 DC電源回路 ····· 28
〔9〕 DC電源基板 ····· 29
〔10〕 タイミングチャート－1 (空転) ····· 30
〔10〕 タイミングチャート－2 (A4コピー)回転カセット ··· 31
〔10〕 タイミングチャート－3 (A4コピー)250枚カセット ··· 32
〔10〕 タイミングチャート－4 (A3コピー) ····· 33
〔10〕 タイミングチャート (A4手差しコピー) ····· 34
〔11〕 実体配線図－1 (操作部、光学部前側) ····· 35
〔11〕 実体配線図－2 (メインフレーム、光学部後側) ····· 36
〔11〕 実体配線図－3 (下ユニット、一次側、オプション) ····· 37

SHARP CORPORATION

This document has been published to be used for after sales service only.
The contents are subject to change without notice.

(1) AC POWER SUPPLY CIRCUIT-1

(1) AC電源回路－1

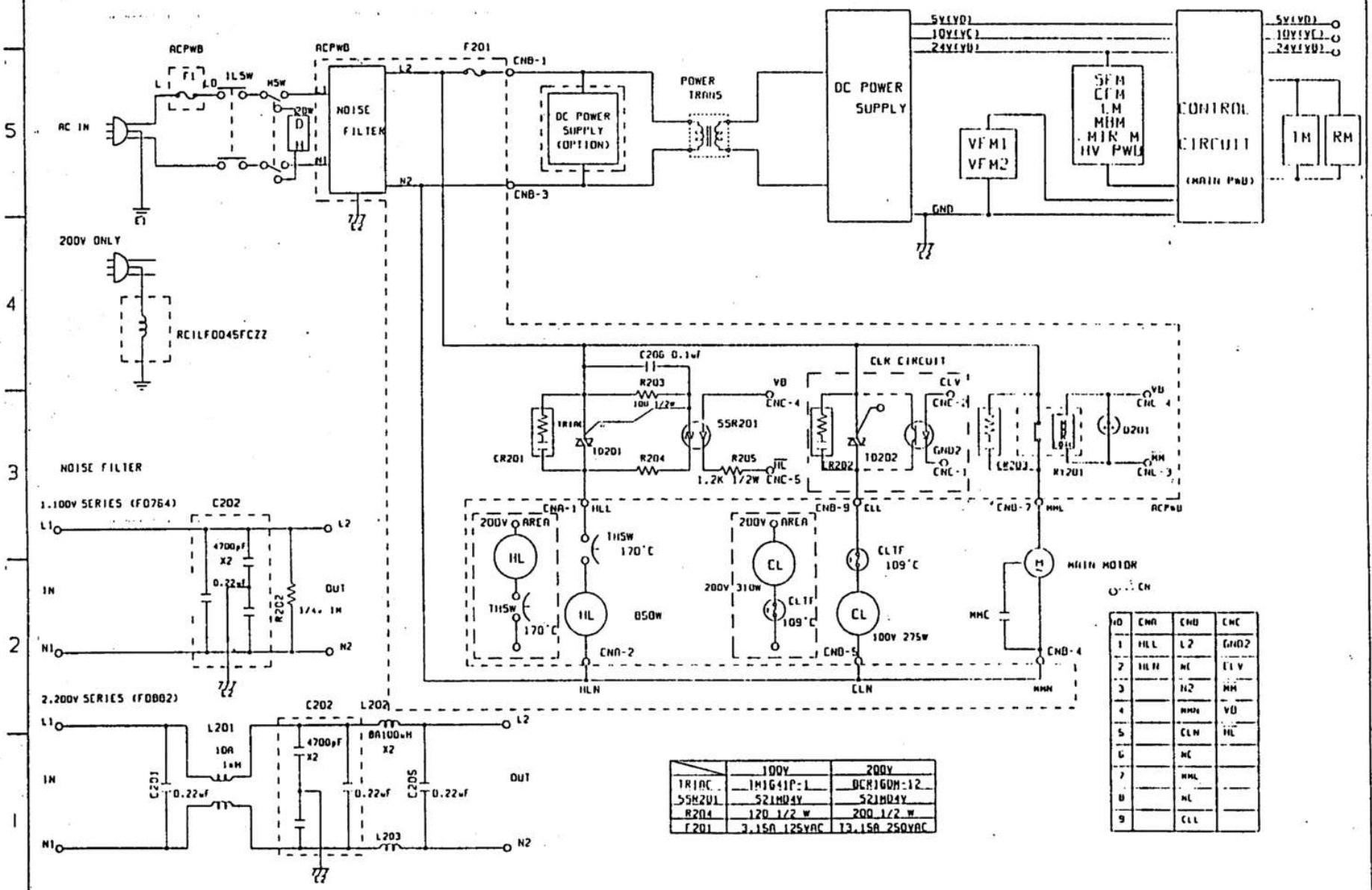

	100V	200V
IRIAC	IM1G41P-1	DCR16DM-12
SSR201	S21MD4Y	S21MD4Y
R204	120 1/2 W	200 1/2 W
F201	3.15A 125VAC	T3.15A 250VAC

CN	CNA	CNB	CNC
1	HLL	L2	GND2
2	HLN	NC	CLV
3		N2	MM
4		NMN	VB
5		CLN	HL
6		NC	
7		MML	
8		NL	
9		CLL	

(1) AC POWER SUPPLY CIRCUIT-2(CLR)
(1) AC電源回路－2（コピーランプ回路部）

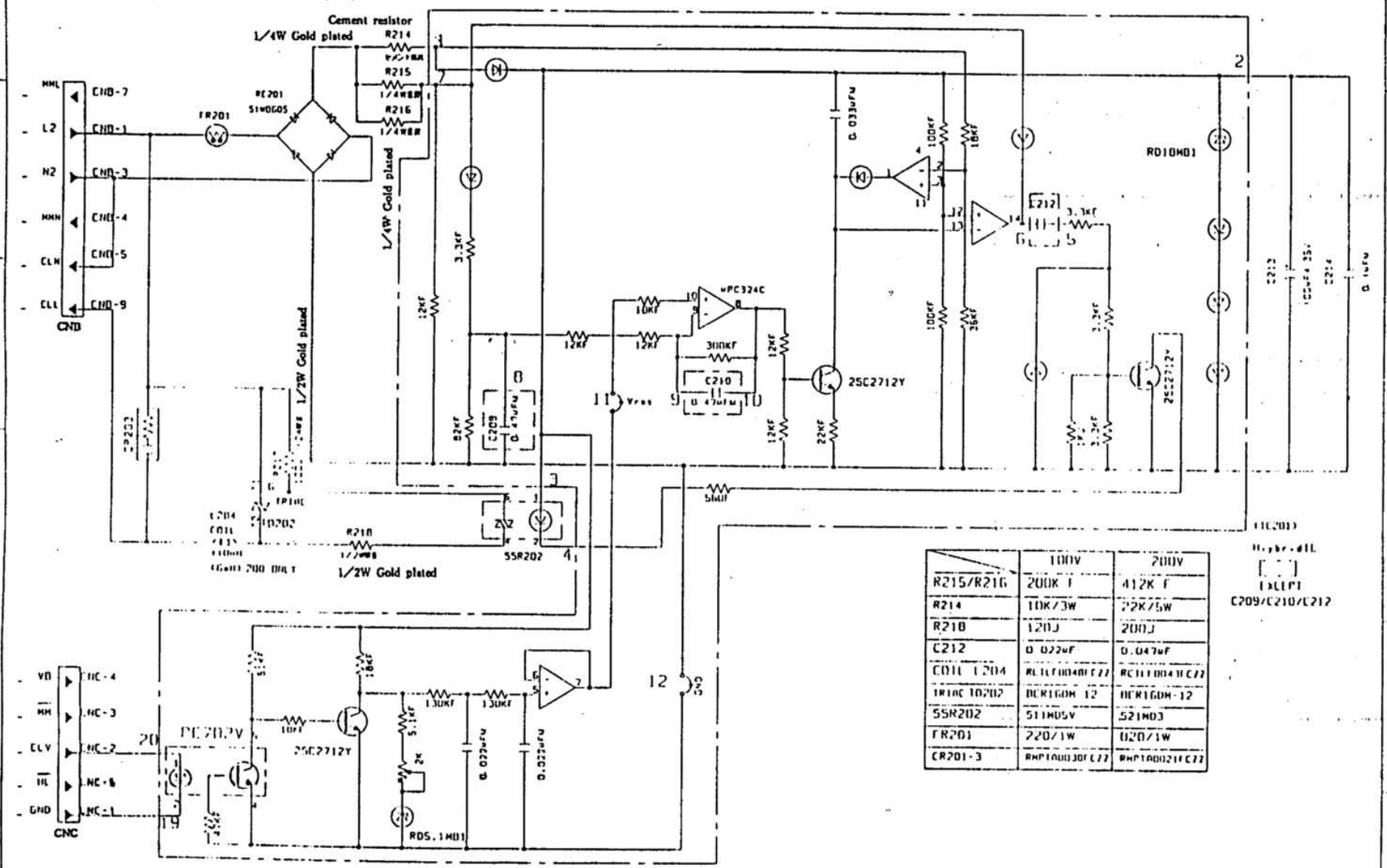

	100V	200V
R215/R216	200K Ω	412K Ω
R214	10K/3W	22K/5W
R218	120Ω	200Ω
C212	0.022uF	0.047uF
COIL T204	RCILF0040E22	RCILF0043E22
TRIAC TD202	DCR16DM-12	DCR16DM-12
SSR202	S11MD5V	S21MD3
FR201	220/1W	820/1W
CR201-3	RHP10003DE22	RHP10021E22

EXCEPT
C209/C210/C212

Note 1 : The resistance is 1/8W unless other wise specified.
Note 2 : Hybrid IC components must be equivalent parts of this circuit.

) AC POWER SUPPLY PWB

〔1〕AC電源基板

100V Series

100V系

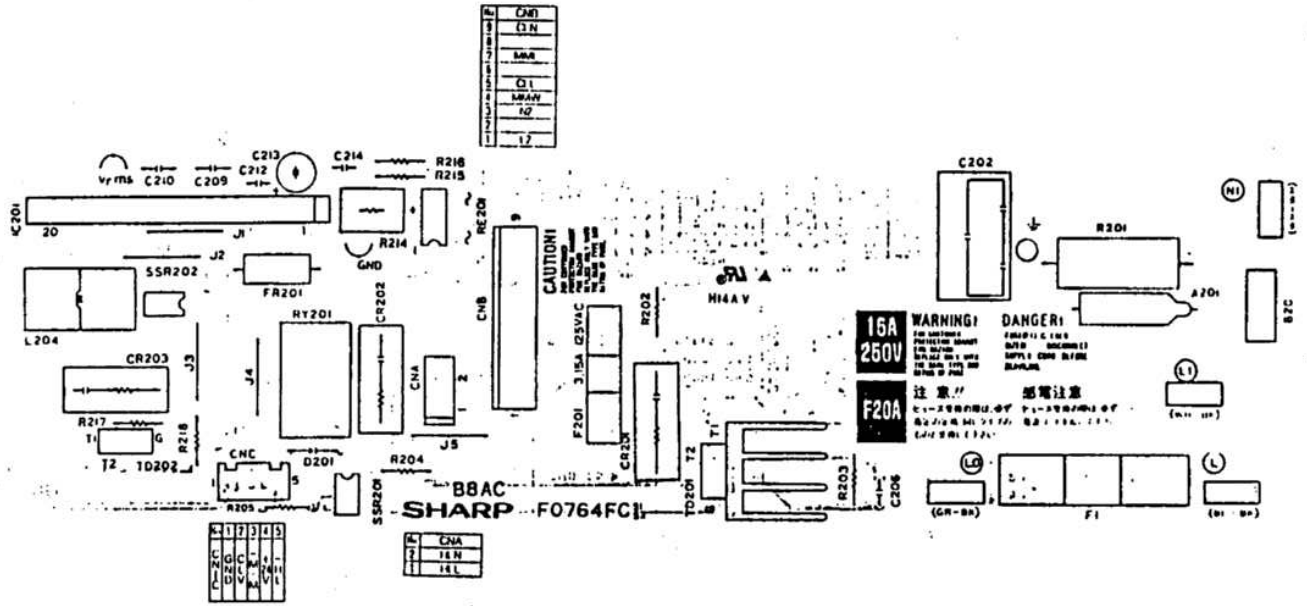

200V Series

200V系

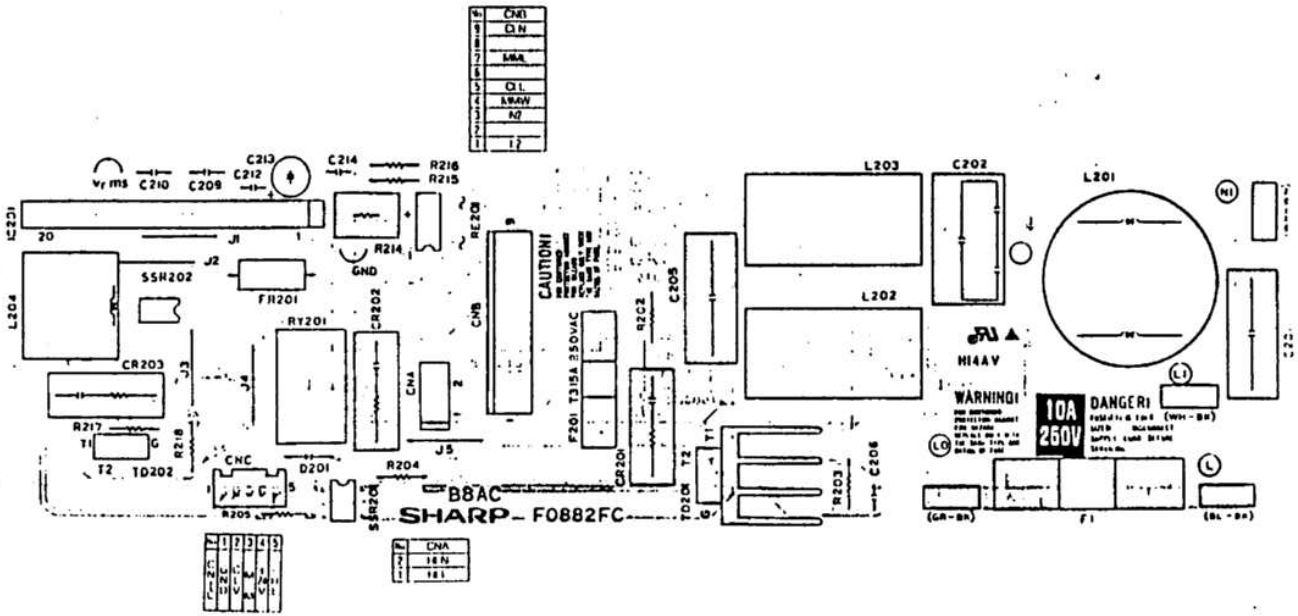

〔2〕 MAIN CONTROL CIRCUIT-1(SF-7800)
〔2〕 メイン回路－1(SF-7800)

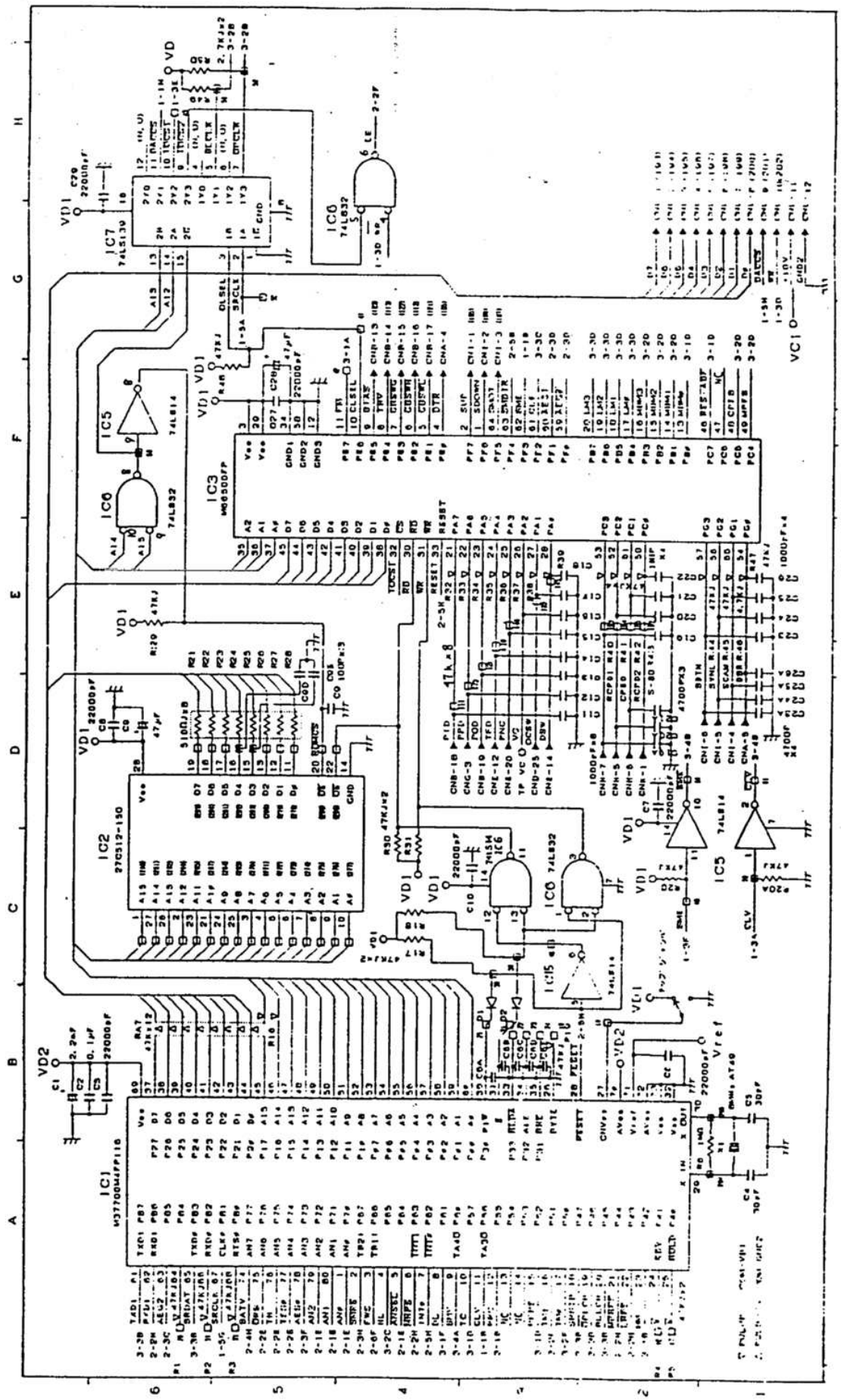

MAIN CONTROL CIRCUIT-2(SF-7800)
(2) メイン回路－2(SF-7800)

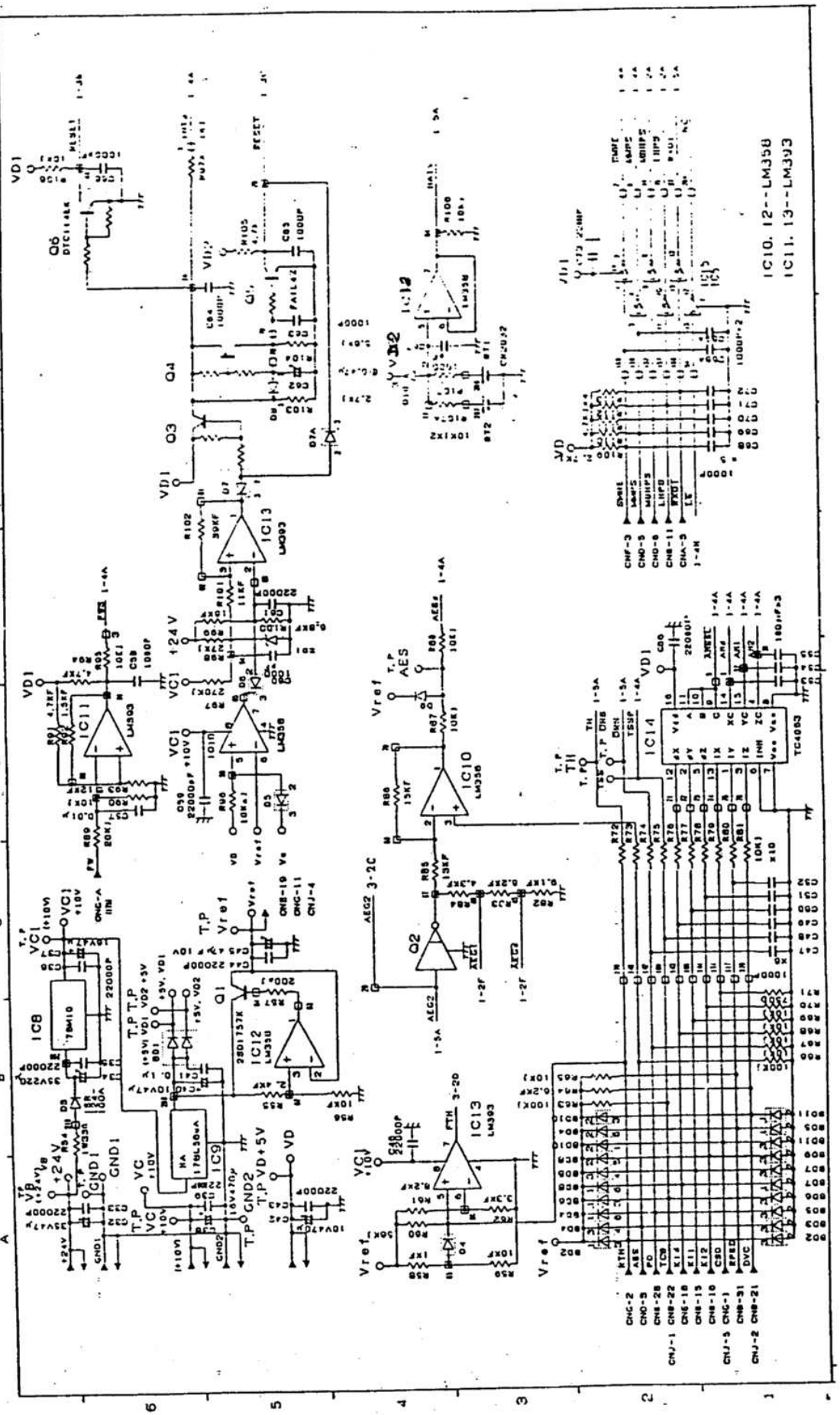

〔2〕 MAIN CONTROL CIRCUIT-3(SF-7800)
〔2〕 メイン回路－3(SF-7800)

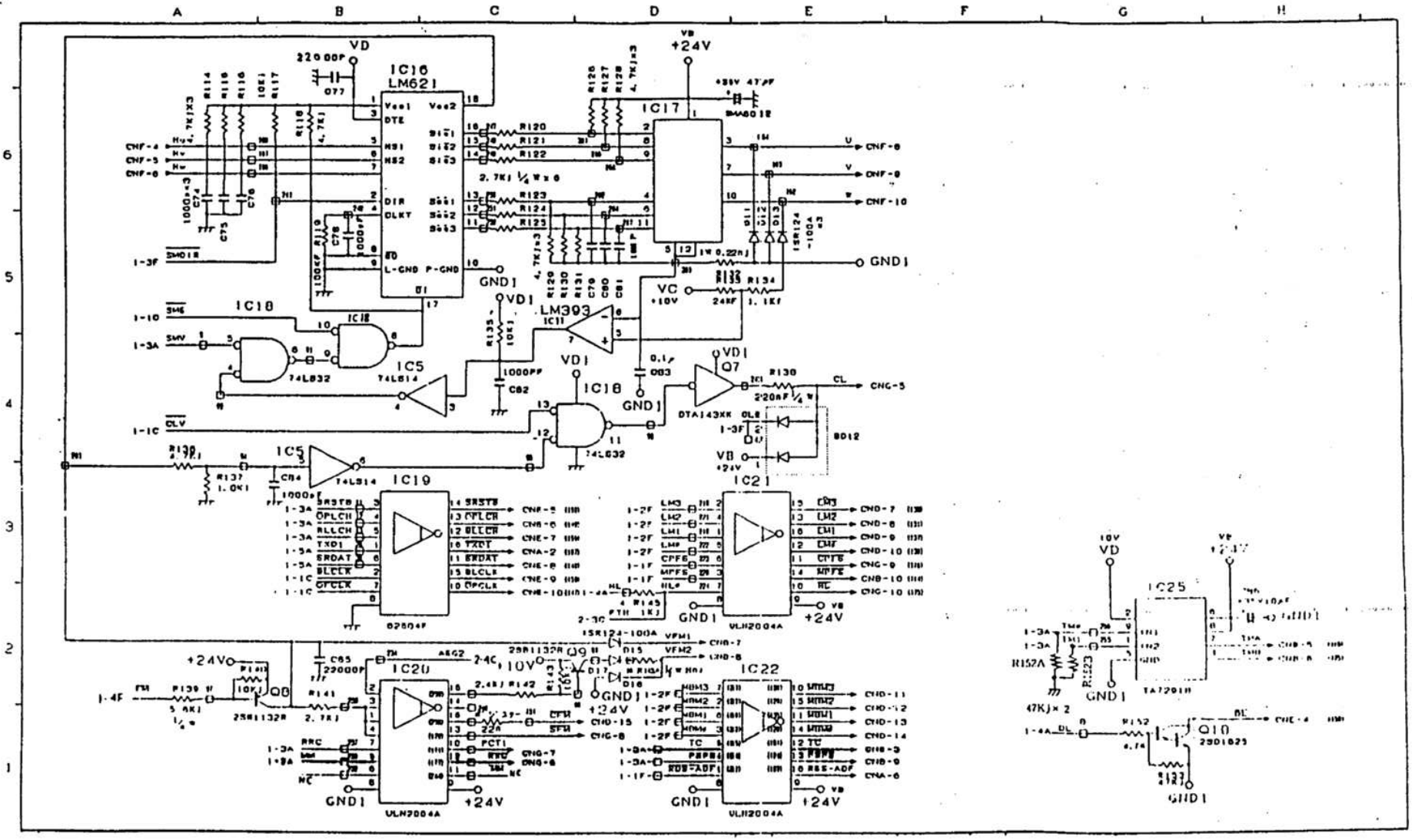

(2) メイン回路－1(SF-7850)
(2) MAIN CONTROL CIRCUIT-1(SF-7850)

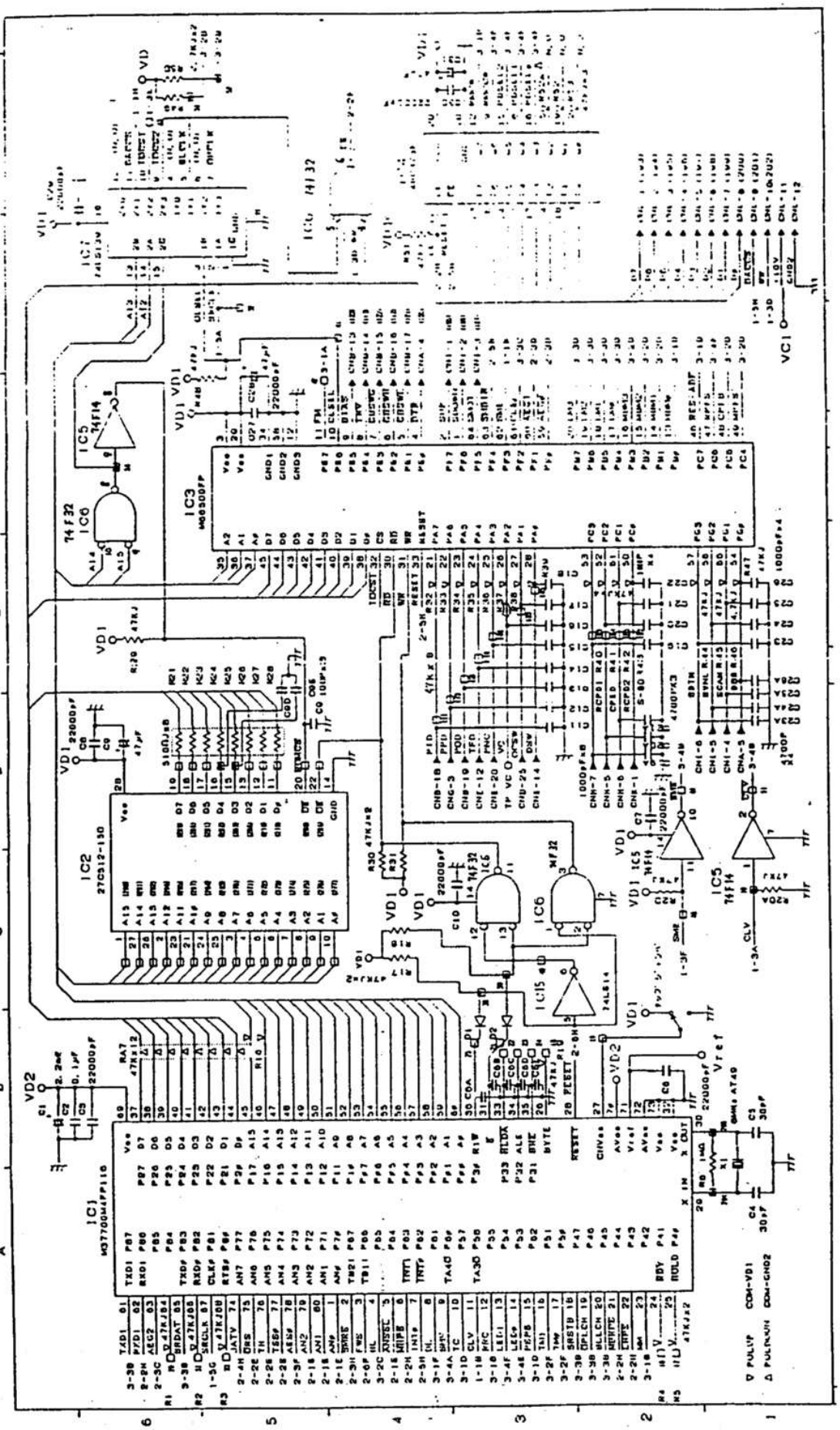

〔2〕 MAIN CONTROL CIRCUIT-2(SF-7850)
〔2〕 メイン回路－2 (SF-7850)

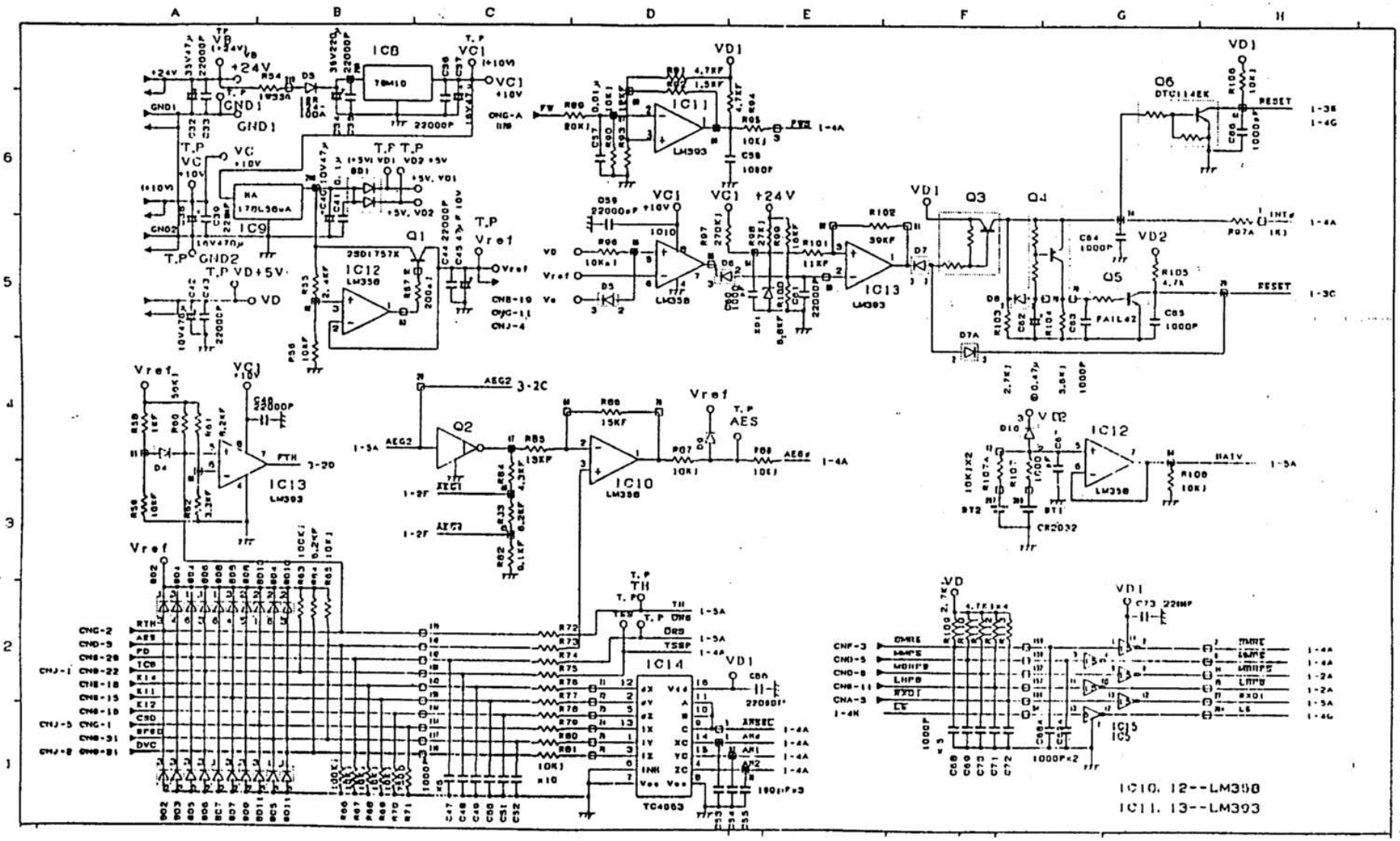

(2) メイン回路－3 (SF-7850)

MAIN CONTROL CIRCUIT-3(SF-7850)

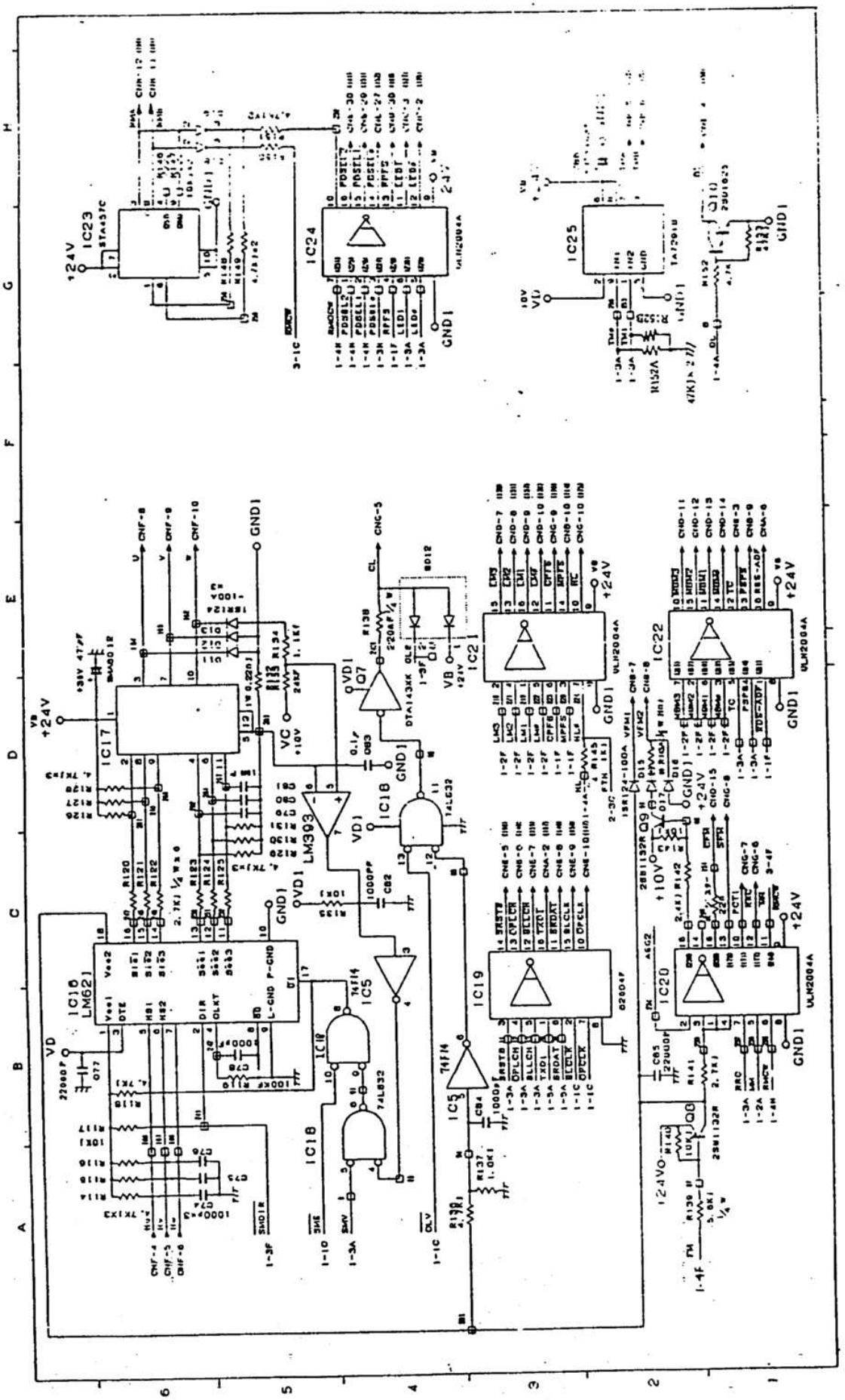

〔2〕 MAIN CONTROL CIRCUIT-1(SF-7850)

〔2〕 メイン回路－1(SF-7850)

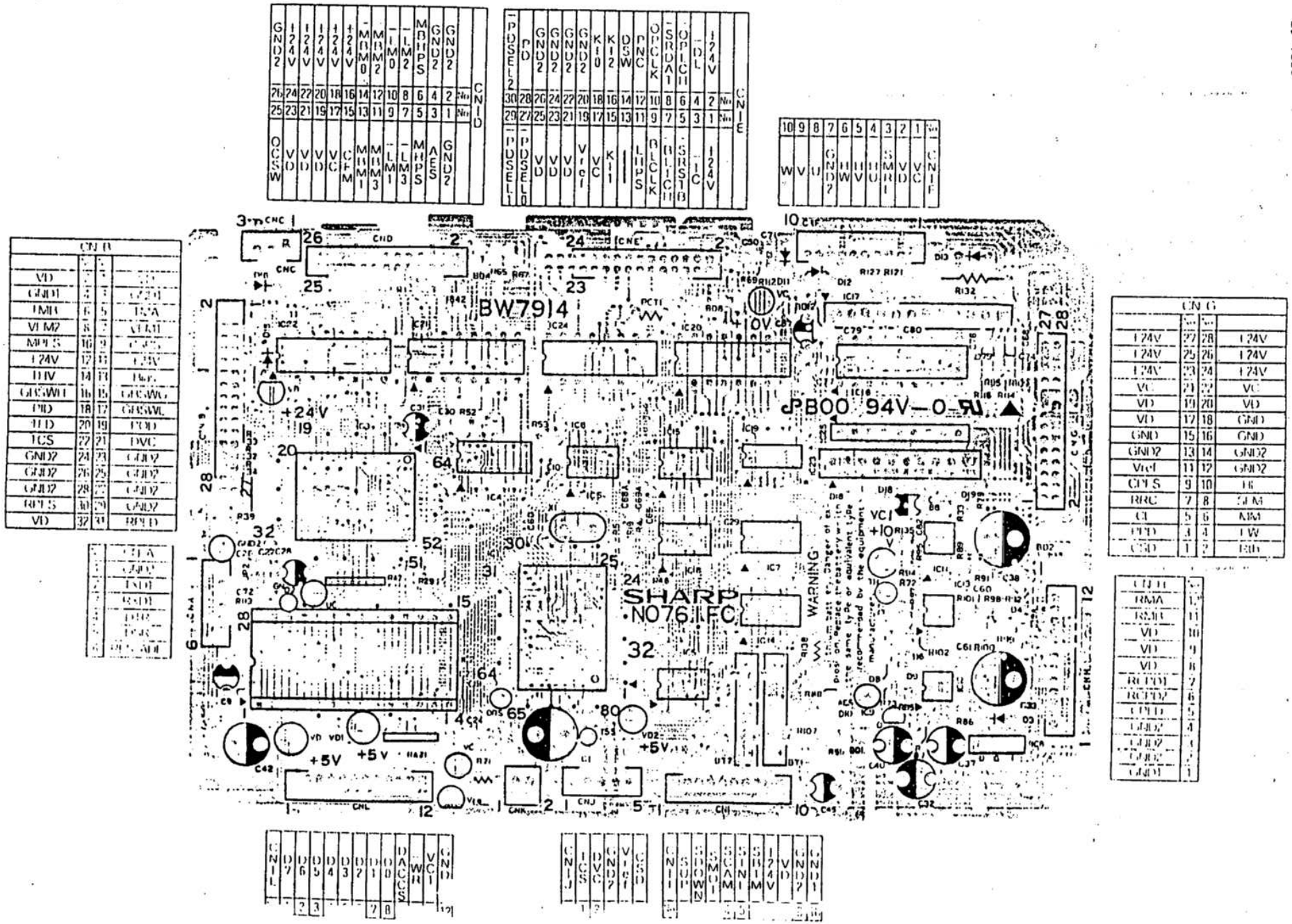

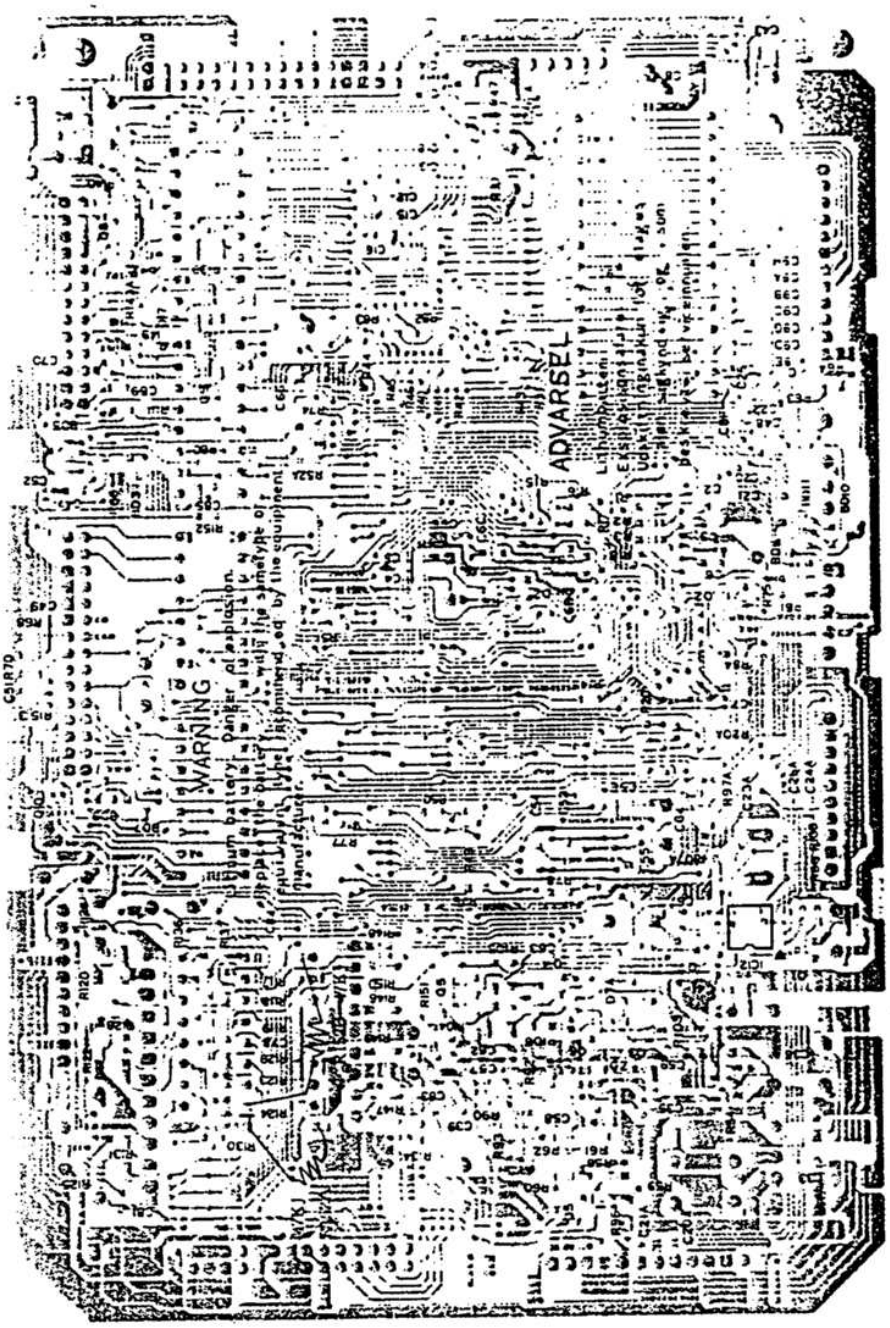
ADVARSEL
WARNING

SF-7800
SF-7850

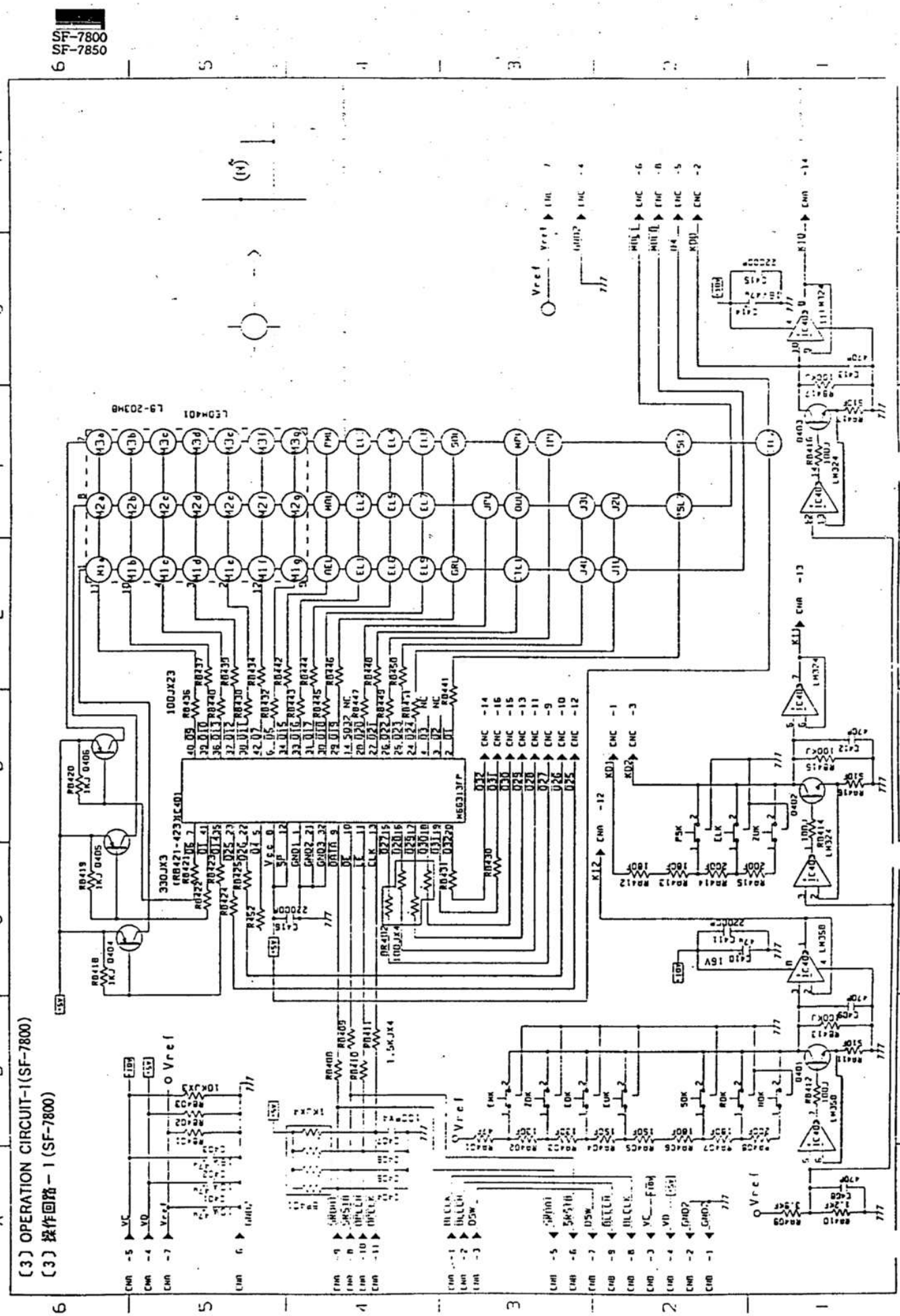

〔3〕 OPERATION CIRCUIT-1(SF-7800)
〔3〕 操作回路－1 (SF-7800)

〔3〕 OPERATION CIRCUIT-1(SF-7850)

〔3〕操作回路－1(SF-7850)

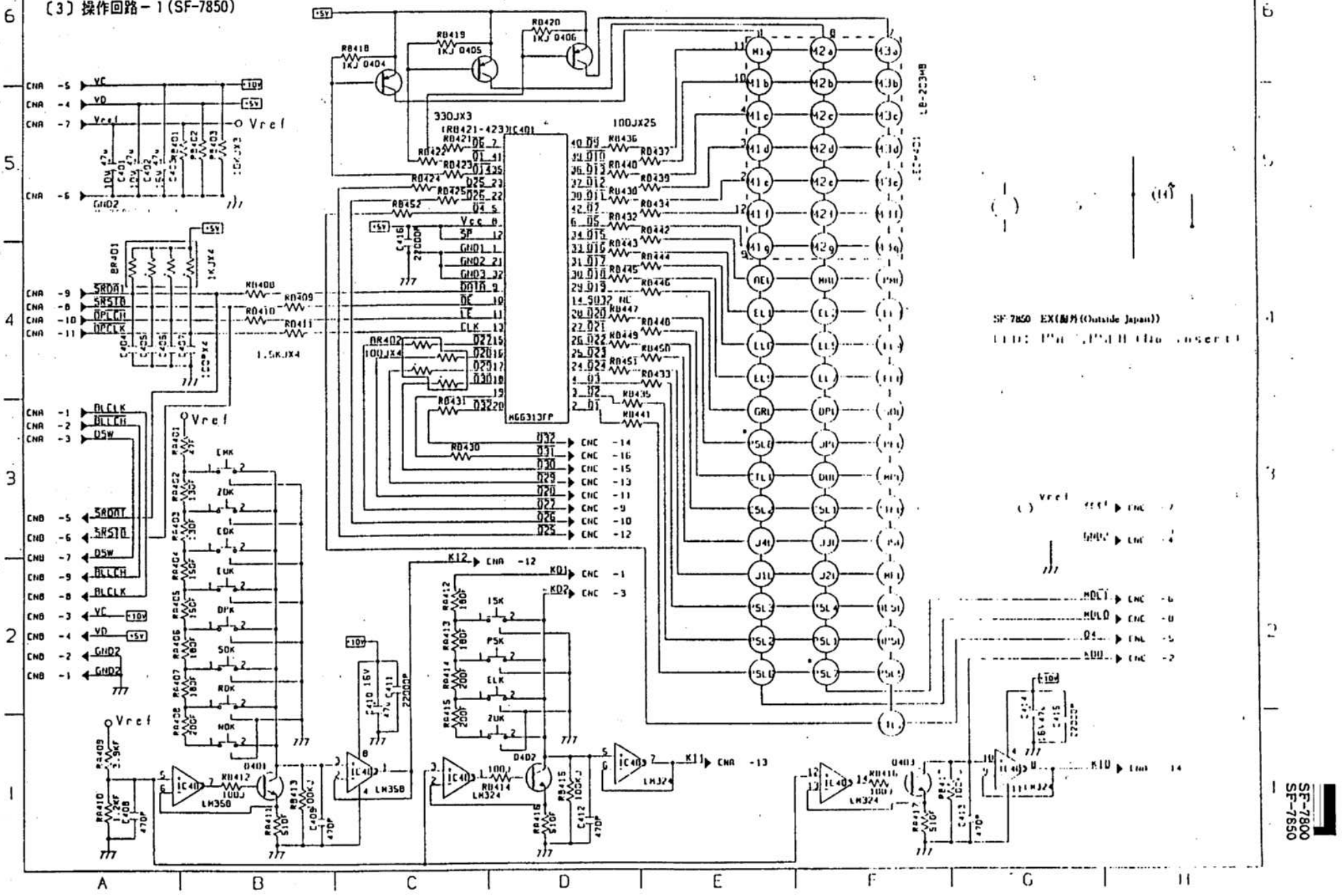

(3) OPERATION CIRCUIT-2

(3) 操作回路－2

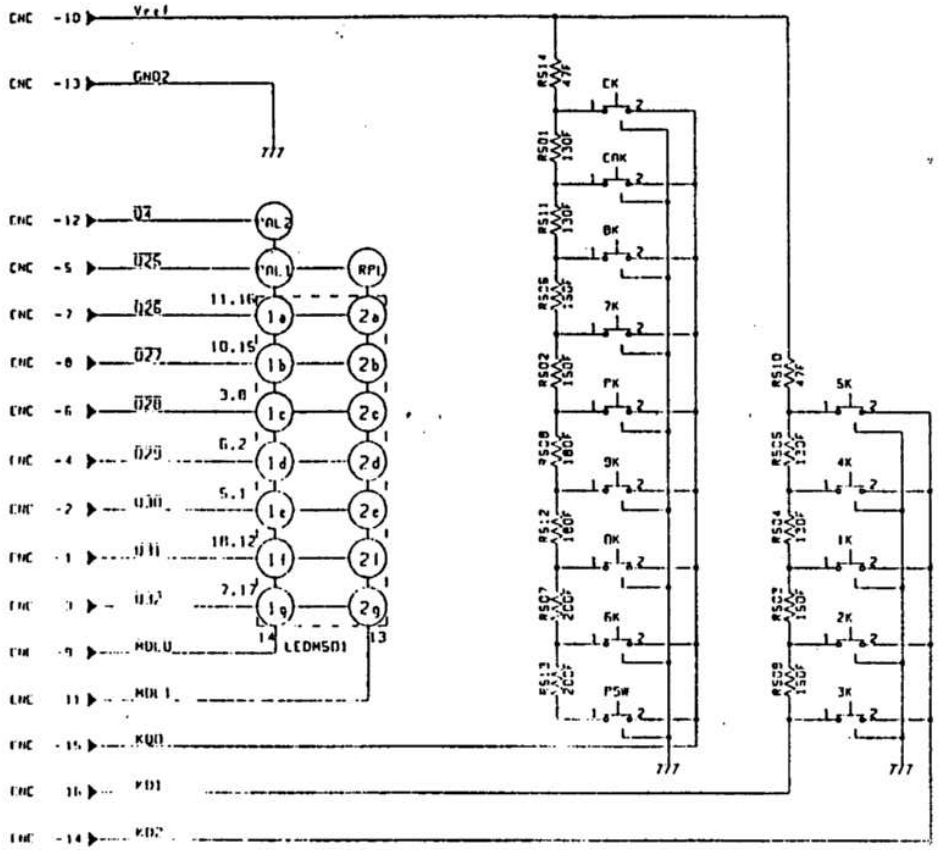

〔5〕 DISCHARGE LAMP CIRCUIT
〔5〕 除電ランプ回路

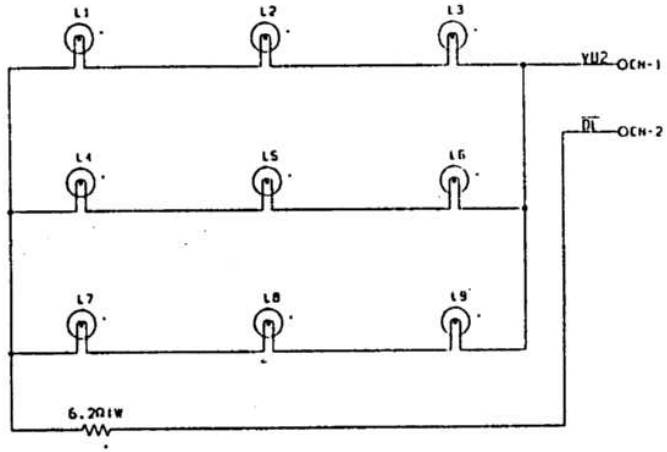

〔5〕 DISCHARGE LAMP PWB
〔5〕 除電ランプ基板

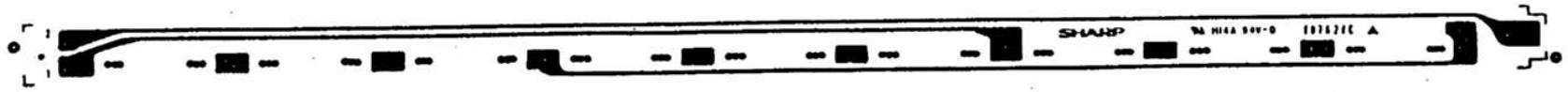

(6) BLANK LAMP CIRCUIT
(6) ブランクランプ

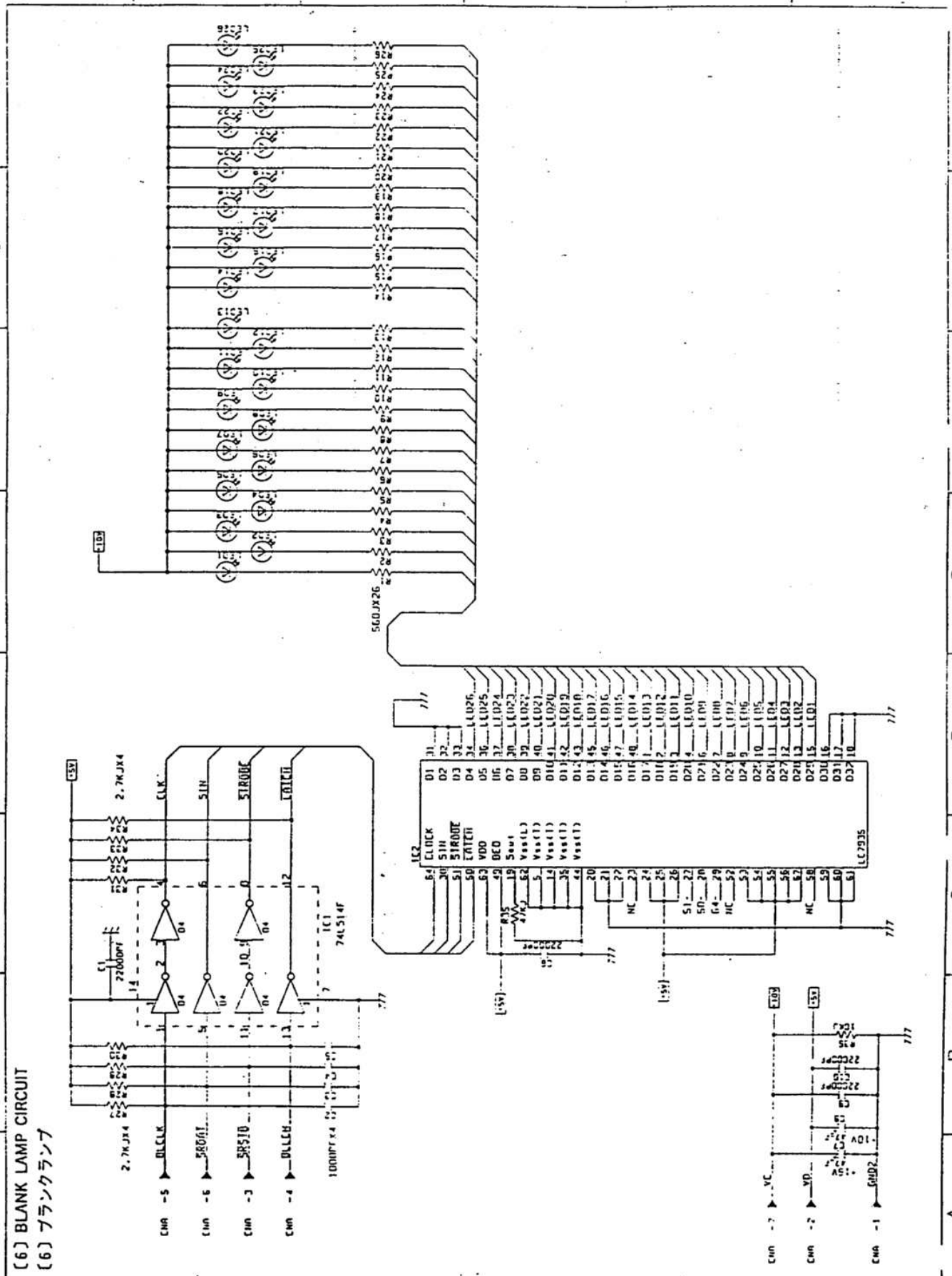

〔o〕 BLANK LAMP PWB

〔6〕 ブランクランプ基板



〔7〕 AE SENSOR CIRCUIT
〔7〕 AEセンサー回路

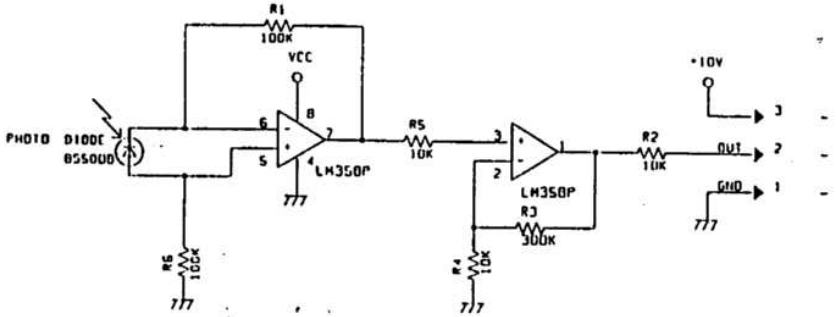

〔7〕 AE SENSOR PWB
〔7〕 AEセンサー基板

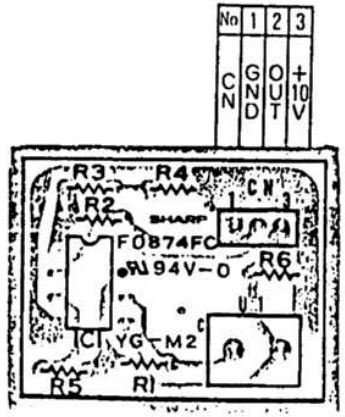

〔8〕 RM CIRCUIT (SF-7850 ONLY)
〔8〕 回転力セットモーター回路(SF-7850のみ)

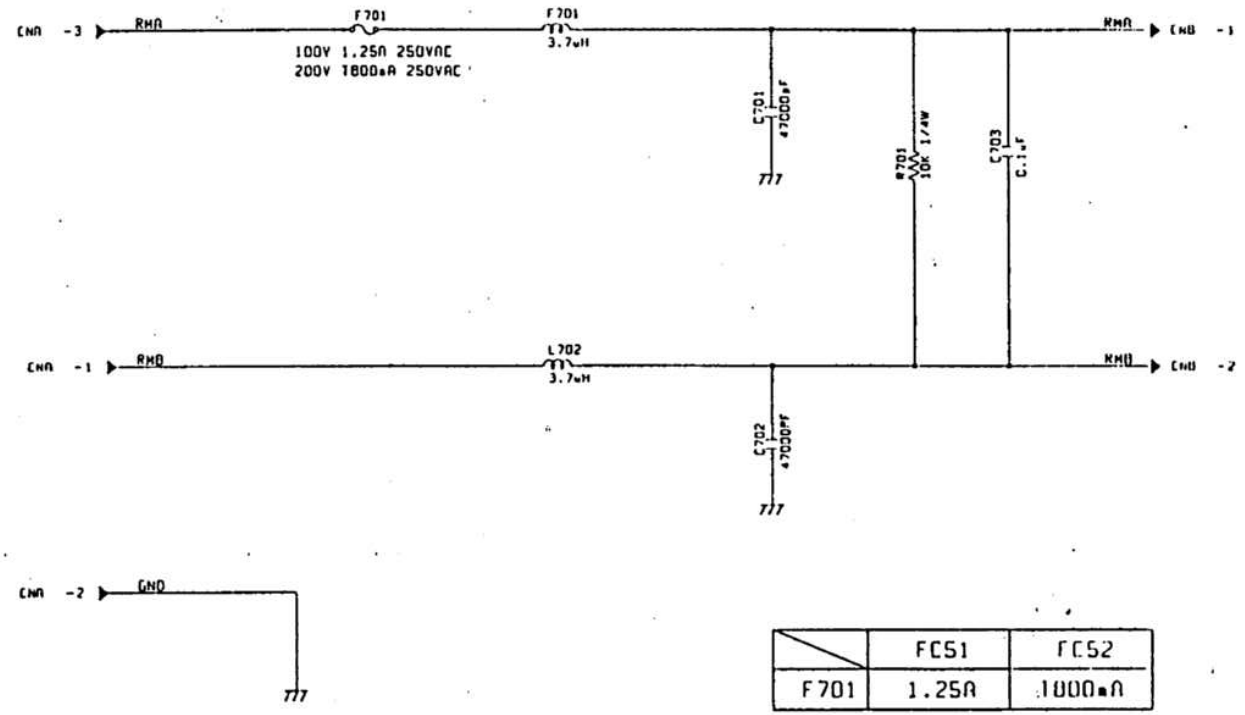

	FC51	FC52
F701	1.25A	1600mA

〔8〕 RM PWB (SF-7850 ONLY)
〔8〕 回転力セットモーター基板(SF-7850のみ)

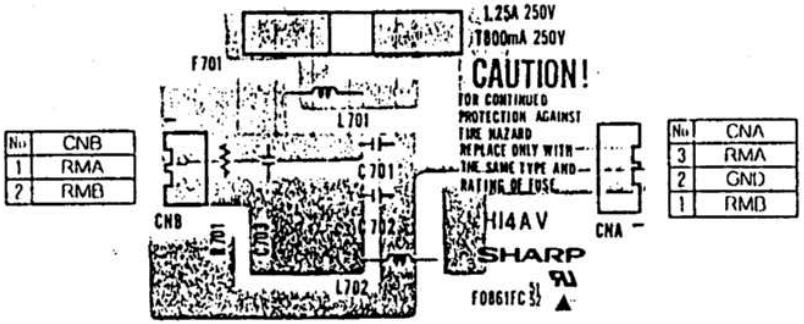

No.	CNB
1	RMA
2	RMB

No.	CNA
3	RMA
2	GND
1	RMB

[9] DC POWER SUPPLY CIRCUIT
[9] DC電源回路

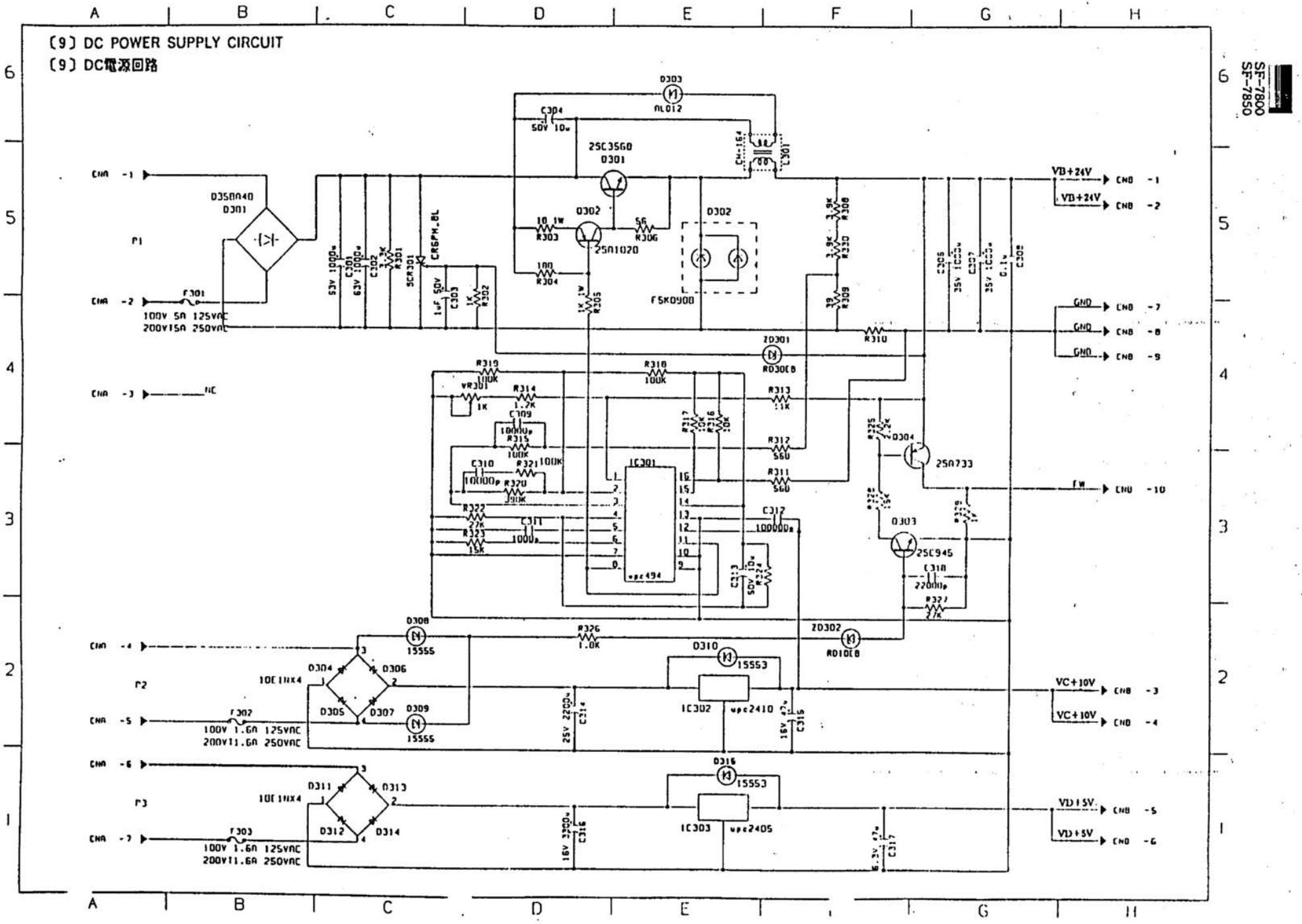

[9] DC POWER SUPPLY PWB
1) DC電源基板

100V Series
100V系

No.	CNB
10	FW
9	GND
8	GND
7	GND
6	+5V
5	+5V
4	+10V
3	+10V
2	+24V
1	+24V

No.	CNA
7	+10V
6	+10V
5	+15V
4	+15V
3	
2	+35V
1	+35V

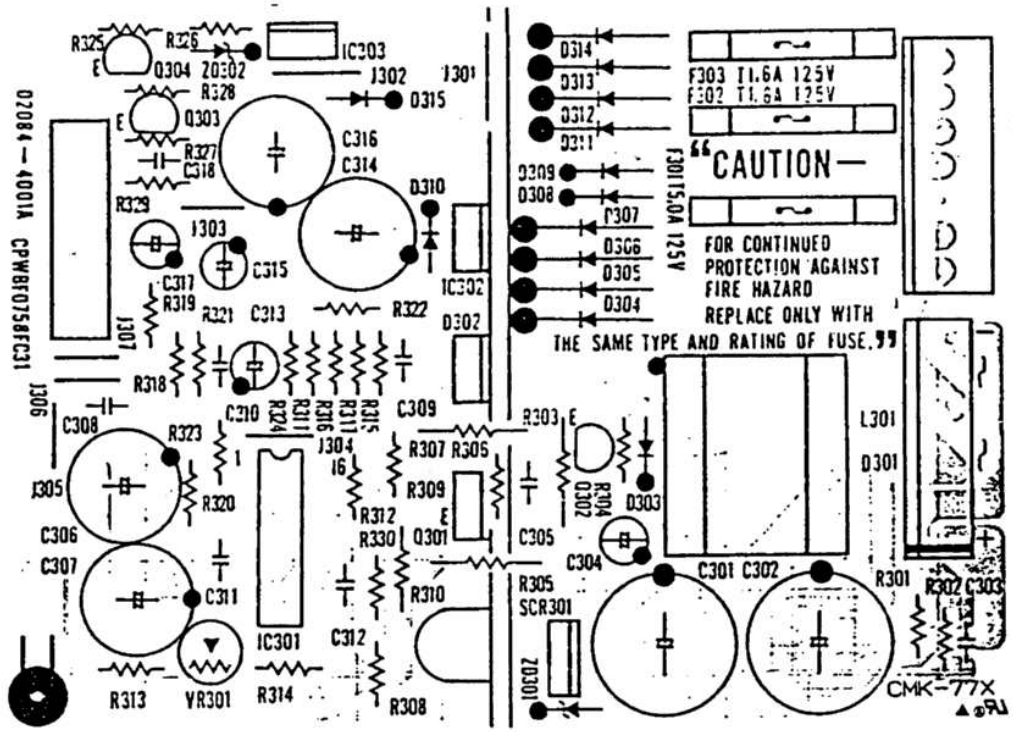

200V Series
200V系

No.	CNB
10	FW
9	GND
8	GND
7	GND
6	+5V
5	+5V
4	+10V
3	+10V
2	+24V
1	+24V

No.	CNA
7	+10V
6	+10V
5	+15V
4	+15V
3	
2	+35V
1	+35V

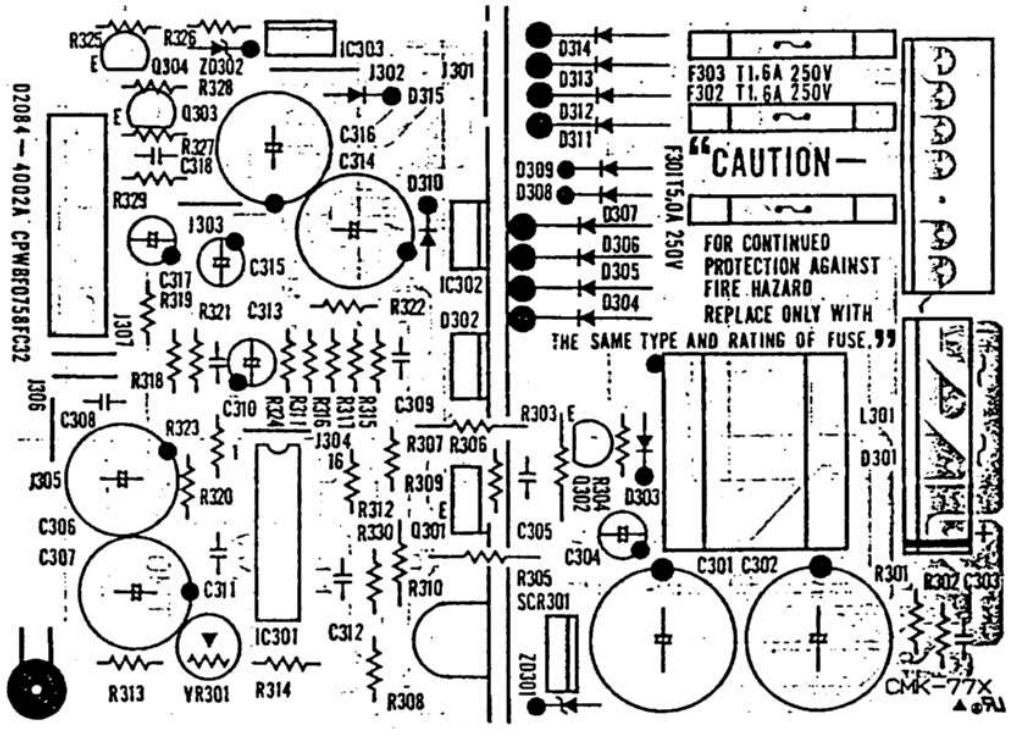

〔10〕 TIMEING CHART-1 (Preliminary Operation)
〔10〕 タイミングチャート－1 (空転)

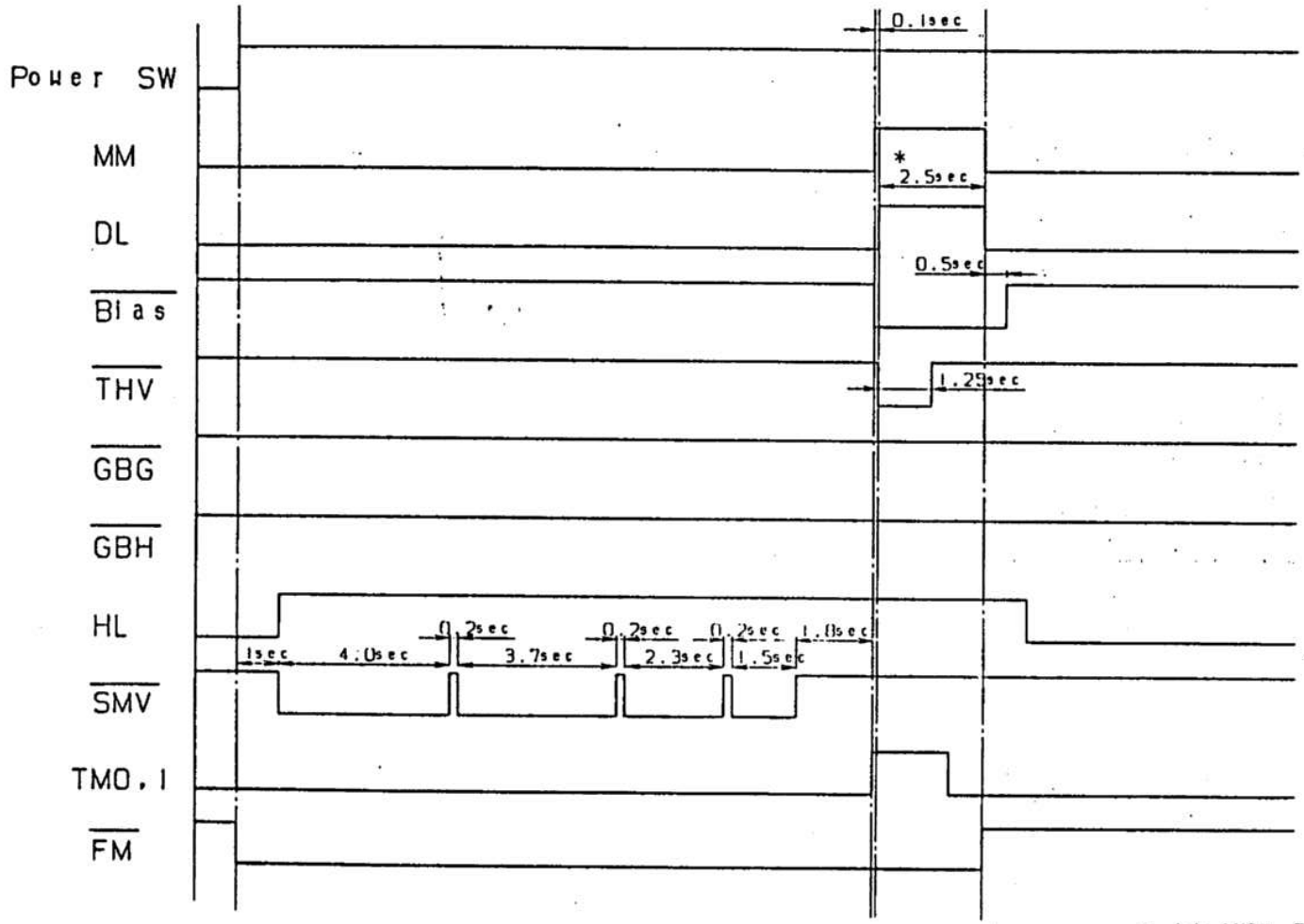

＊ トナー補給時、最大2分。

*When toner is supplied, max. 2min.

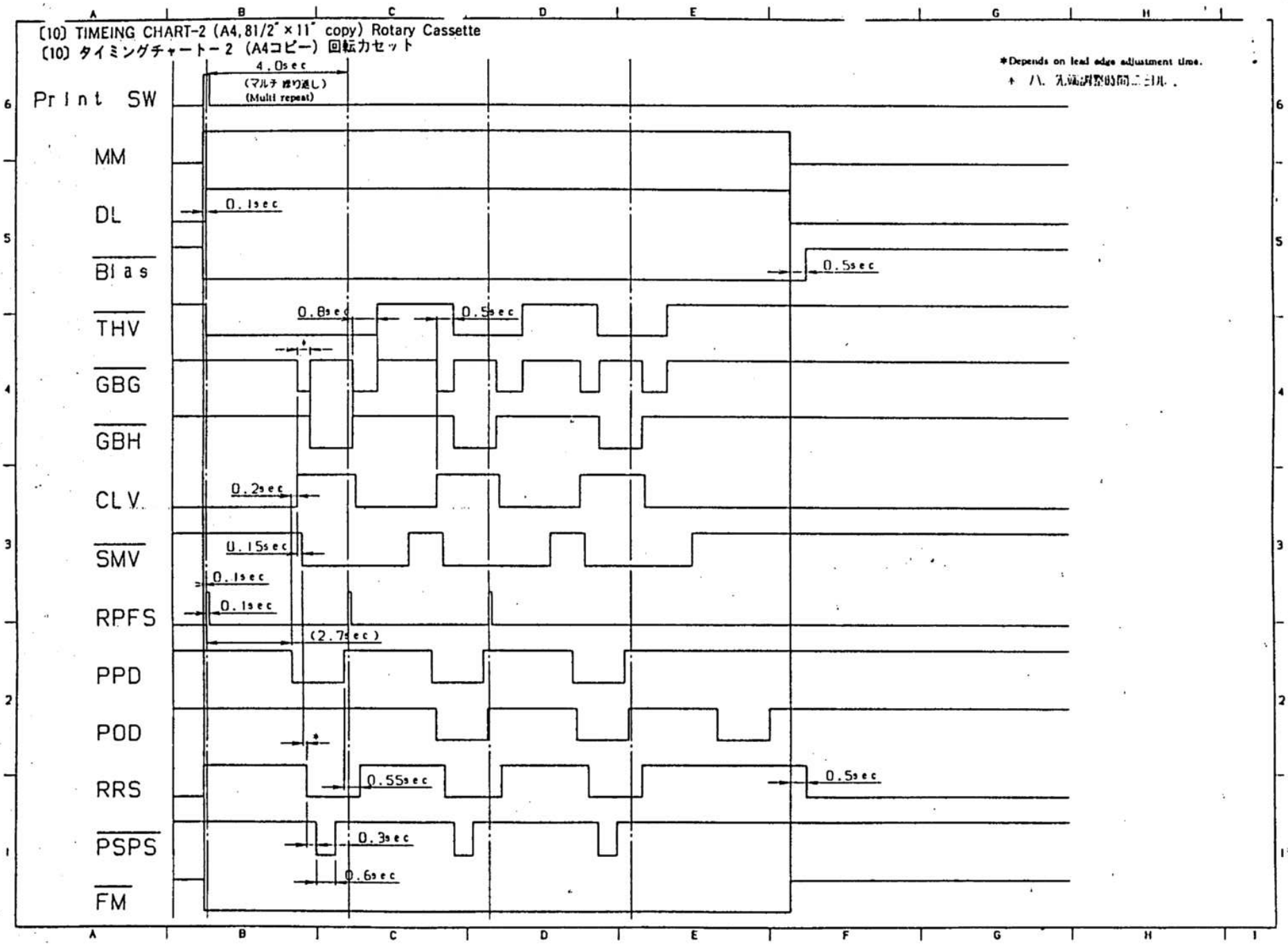
〔10〕 TIMEING CHART-2 (A4, 81/2" × 11" copy) Rotary Cassette
〔10〕 タイミングチャート－2 (A4コピー) 回転カセット
*Depends on lead edge adjustment time.
Print SW
4.0sec
(マルチ繰り返し)
(Multi repeat)
MM
DL
0.1sec
Bias
0.5sec
THV
0.8sec
0.5sec
GBG
GBH
CLV
0.2sec
SMV
0.15sec
0.1sec
RPFS
0.1sec
(2.7sec)
PPD
POD
RRS
0.55sec
0.5sec
PSPS
0.3sec
0.6sec
FM

〔10〕 TIMEING CHART-3 (A4, 81/2" × 11" copy) 250 Sheet Cassette

〔10〕 タイミングチャート－3 (A4コピー) 250枚カセット

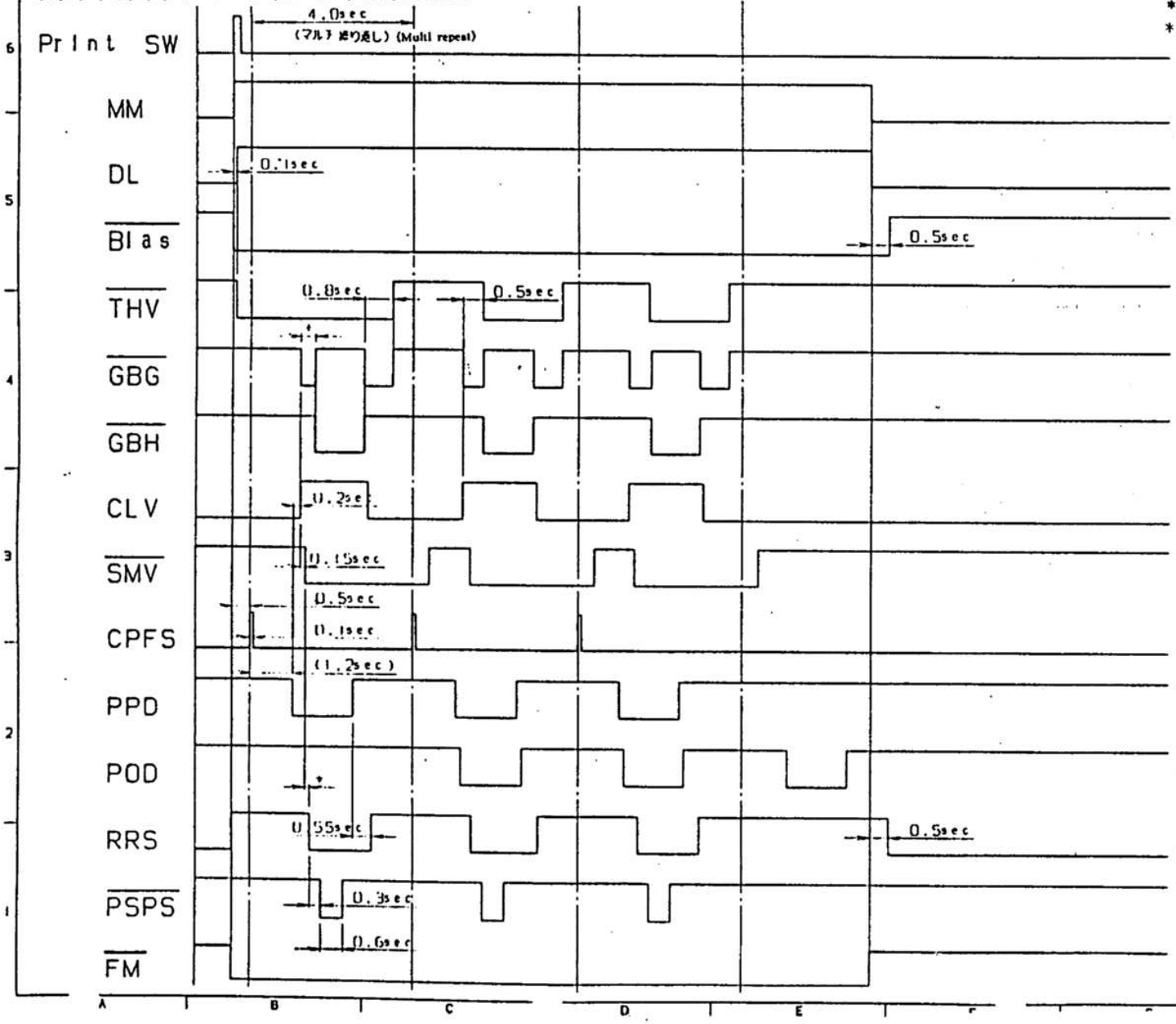

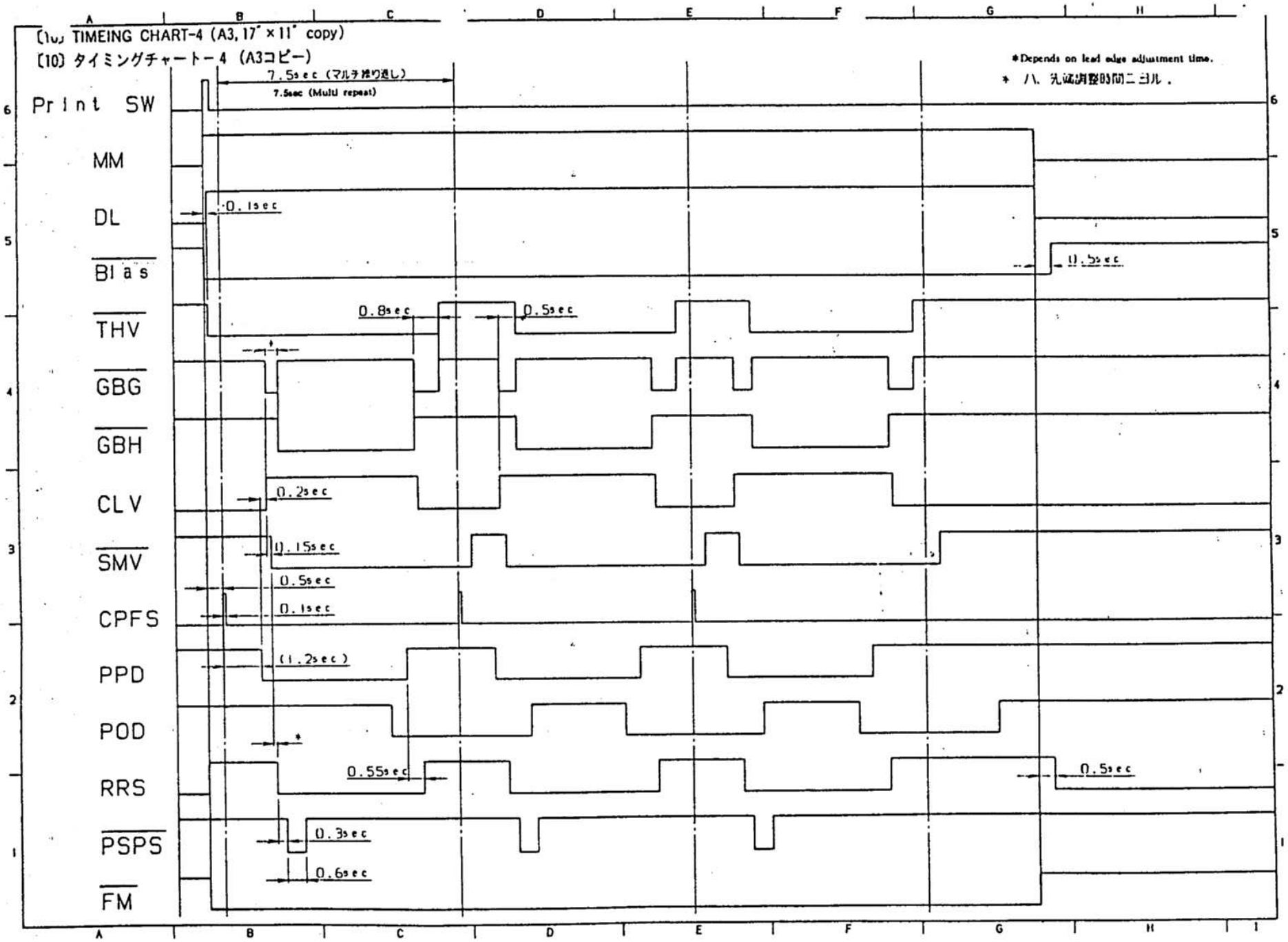
(10) TIMEING CHART-4 (A3, 17" × 11" copy)
(10) タイミングチャート－4 (A3コピー)
7.5sec (マルチ繰り返し)
7.5sec (Multi repeat)
*Depends on lead edge adjustment time.
* ハ、先端調整時間ニヨル。
Print SW
MM
DL
Bias
THV
GBG
GBH
CLV
SMV
CPFS
PPD
POD
RRS
PSPS
FM
0.1sec
0.5sec
0.8sec
0.5sec
0.2sec
0.15sec
0.5sec
0.1sec
(1.2sec)
0.55sec
0.5sec
0.3sec
0.6sec
A
B
C
D
E
F
G
H
I
1
2
3
4
5
6

〔10〕 TIMEING CHART (A4, 81/2" × 11" Manual Feed)

〔10〕 タイミングチャート (A4手差しコピー)

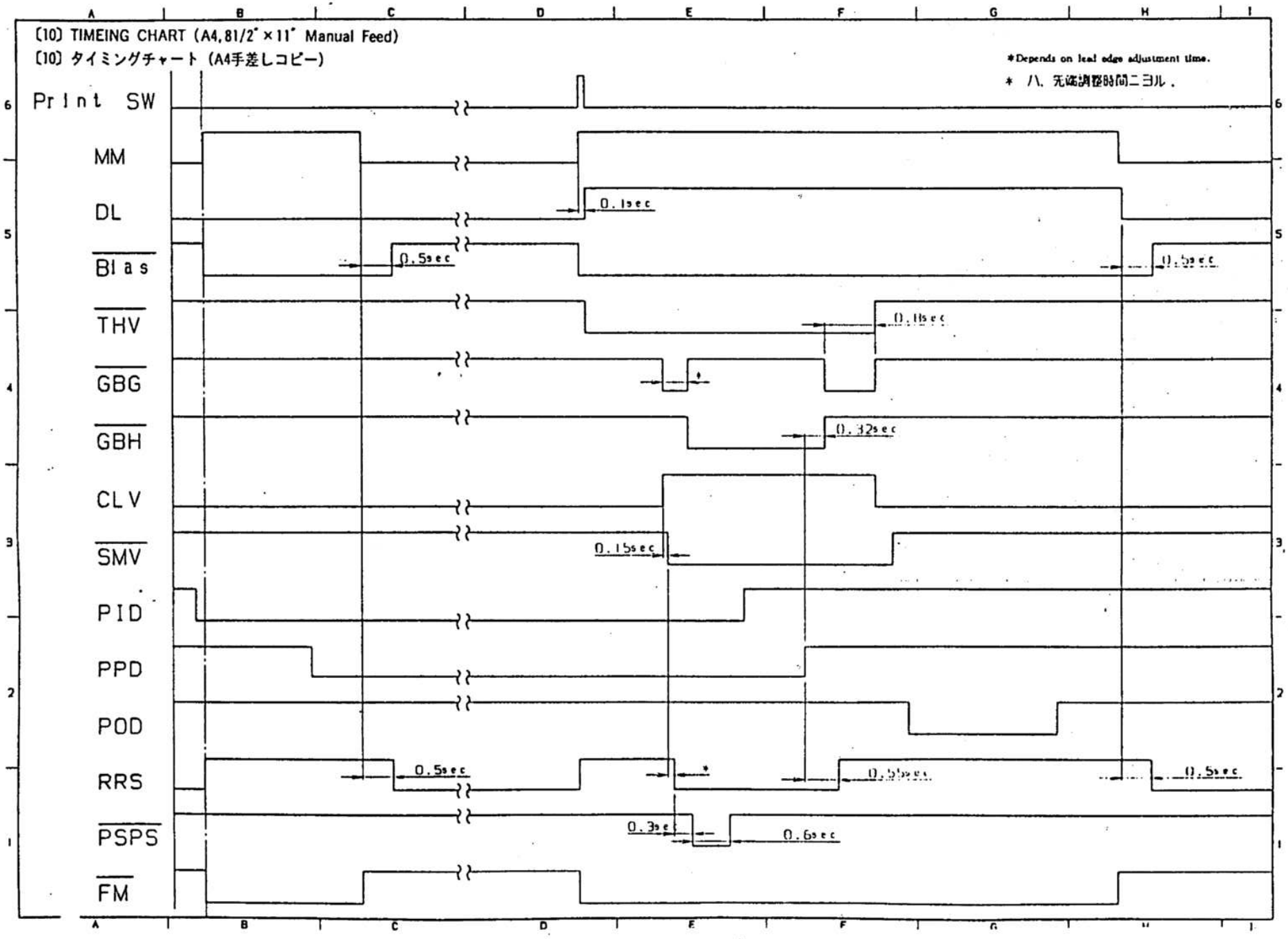

(11) ACTUAL WIRING CHART-1 (Operetion, Optical section)
(11) 実体配線図－1 (操作部、光学部前側)

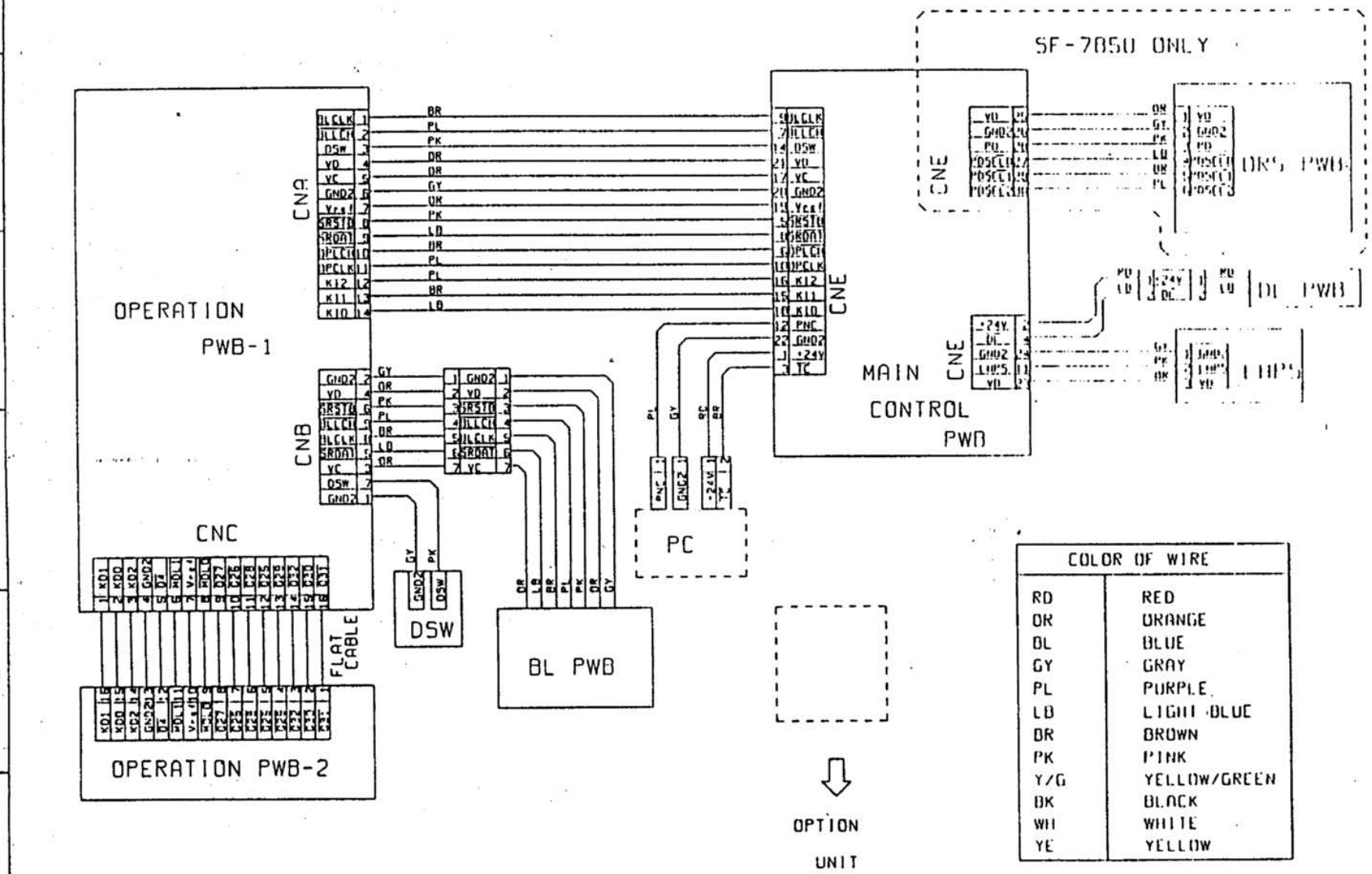

SF-7800
SF-7850

(11) ACTUAL WIRING CHART-2 (Main Frame, Optical Section)
(11) 実体配線図－2（メインフレーム、光学部後側）

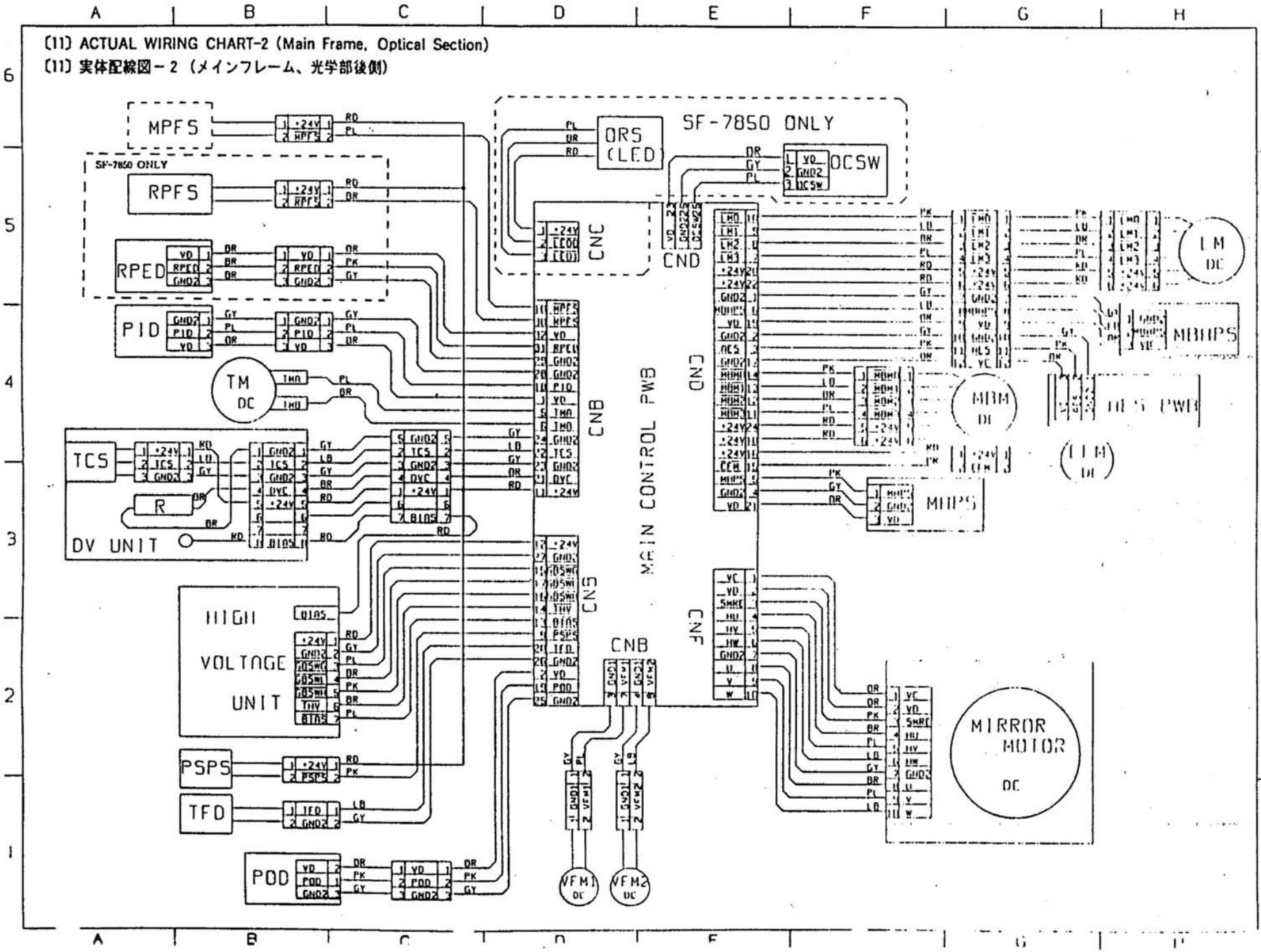

〔11〕 ACTUAL WIRING CHART-3 (Lower Primary side, Option)

〔11〕 実体配線図－3 （下ユニット、一次側、オプション）

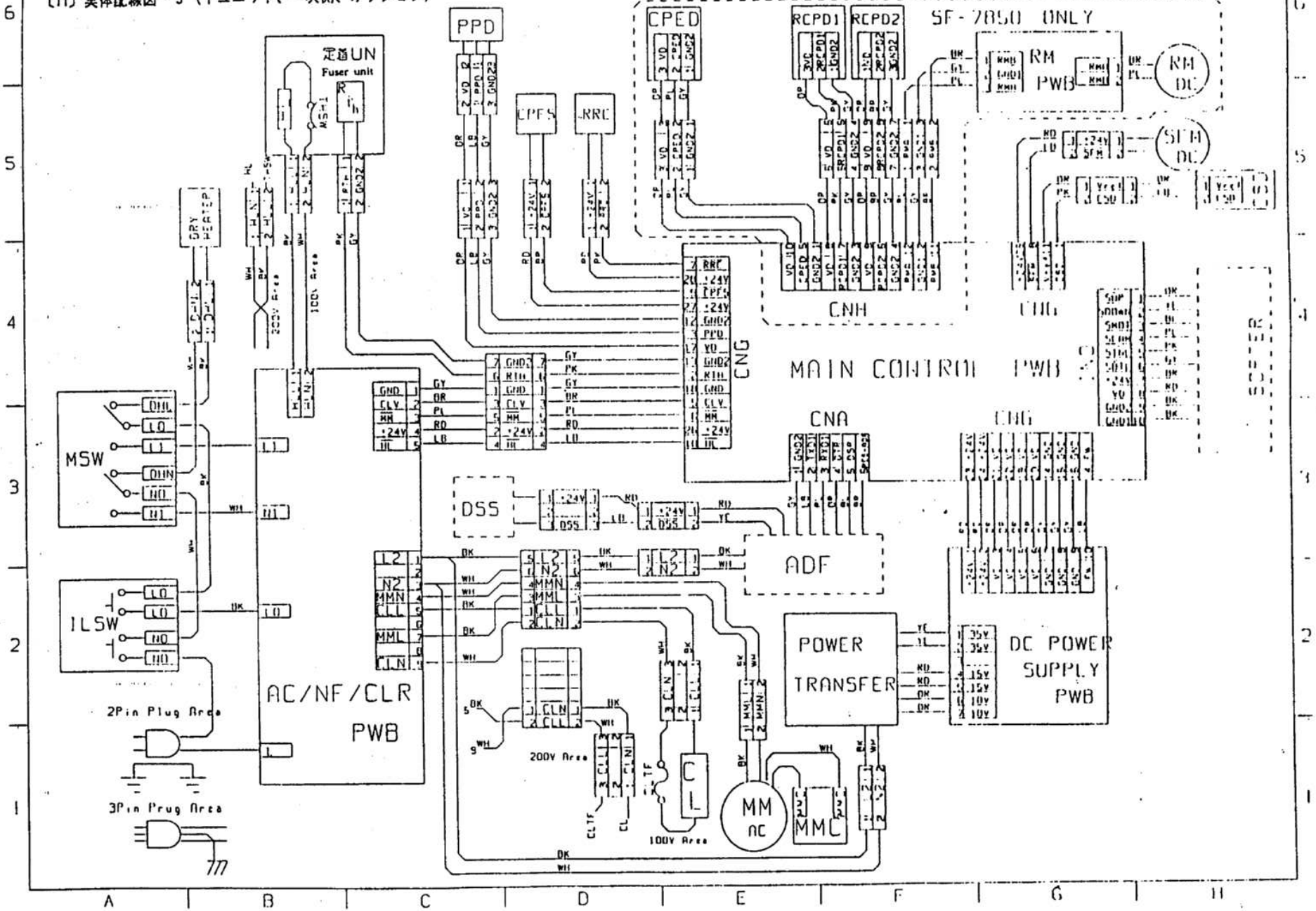

SF-7800
SF-7850

SF7850

SHARP PARTS GUIDE

CODE : 00ZSF7850PG-V1

SF-7800
MODEL SF-7850

CONTENTS

1 外装 (Exteriors)
2 操作部 (Operation panel)
3 オリジナルカバー (Original Cover)
4 ＤＶ駆動ユニット (DV Drive unit)
5 ＤＶガイドユニット (DV Guide unit)
6 プロセスユニット (Process unit)
7 光学ユニット (Optical unit)
8 シャーシ (Chassis)
9 上フレーム部 (Upper frame)
10 回転カセット…SF-7850専用 (Rotary cassete)…SF-7850 only
11 メイン基板ユニット (Main PWB unit)
90 梱包材&付属品 (Packing materials & Accessories)
99 ビス・ナット・ワッシャ (Hardware parts)
401 ＤＶユニット (DV unit)
402 トナーボックスユニット (Toner box unit)
403 前キャビネットユニット (Front exterior)
404 250カセット (Cassette unit)
405 ＴＣケースユニット (TC charger unit)
406 ＭＣケースユニット (MC charger unit)
407 駆動フレームユニット (Drive frame unit)
408 ドラムフレーム上ユニット (Drum frame unit)
409 第２，３ミラーユニット (2nd, 3rd mirror unit)
410 第４，５ミラーユニット (4th, 5th mirror unit)
411 コピーランプユニット (Copy lamp unit)
412 下クリーニングローラーユニット (Lower cleaning roller unit)
413 定着ユニット (Fusing unit)
414 250カセ給紙ローラーユニット (Paper feed roller unit-250)
421 給紙ユニット…SF-7850専用 (Paper feeding unit)…SF-7850 only
422 回転カセット…SF-7850専用 (Rotary cassette)…SF-7850 only
423 ＲＭフレームユニット…SF-7850専用 (RM frame unit)…SF-7850 only
424 回転カセット給紙ローラーユニット…SF-7850専用 (Paper feed roller unit-R)…SF-7850 only
425 ＲＣ回路基板…SF-7850専用 (RC PWB)…SF-7850 only
501 操作基板１ (Operation PWB-1)
502 ＡＣ回路基板 (AC circuit PWB)
701 操作基板２ (Operation PWB-2)
801 メイン基板 (Main PWB)
802 ＤＣ電源基板 (DC power supply PWB)

CPS

SHARP CORPORATION

This document has been published to be used for after sales service only.
The contents are subject to change without notice.

1 外装(Exteriors)

NO.	PARTS CODE	PRICE RANK Ex	PRICE RANK Ja	NEW MARK	PART RANK	DESCRIPTION	
1	GCAB-0642FCZZ	AP	EQ		D	Upper exterior Right	ウエキービギ
2	GCAB-0643FCZZ	AQ	EU		D	Upper exterior left	ウエキーヒダリ
3	GCAB-0644FCZZ	AT	FG		D	Upper exterior rear	(SF-7800) ウエキーヒウシロ
4	GCAB-0718FCZZ	AP	EQ	N	D	Left exterior lower	ヒダリキービンタ
5	GCAB-0719FCZZ	AW	FR	N	D	Rear exterior	ウシロキーヒBA
8	PF-LZ0167FCZZ	AF	DP	N	C	Optical fan filter	コウセンファンフィルター
9	CF-X-0346FC01	AQ	ET		C	Table glass fixing plate (Left) (Japan only)	ガラスオーエ L
	CF-X-0346FC04	AP	EM		C	Table glass fixing plate (Left) (AB series)	ガラスオーエ LAB
	CF-X-0346FC05	AN	EL		C	Table glass fixing plate (Left) (inch series)	ガラスオーエ LIN
10	LF-X-0406FCZZ	AM	ED	N	C	Table glass fixing plate (right)	ガラスオーエ B8
11	LX-BZ0512FCZZ	AB	DC		C	Screw	ビス
12	LX-BZ0513FCZZ	AA	DA		C	Screw	ビス
13	PGLSP0065FCZZ	AZ	GF		B	Table glass	オーブンガラスBG
14	GCAB-0716FCZZ	AU	FJ	N	D	Right exterior lower	ミギキービンタ
15	NGERH0193FCZZ	AB	DC		C	UC manual feed gear	UCチャンダー
16	NGERR0377FCZZ	AD	DH		C	Manual feed gear	チャンラック B4
17	PG-DM1268FCZZ	AC	DE	N	C	Manual feed guide F	チャンガイドFBA
18	PG-DM1269FCZZ	AC	DE	N	C	Manual feed guide R	チャンガイドRB8
19	PSHEZ1760FCZZ	AB	DB		C	Manual feed gear brake sheet	チャンダーブレーキシート
20	TLABZ2761FCZZ	AE	DK	N	C	Manual paper feeding size label (Japan only)	チャンマイズラベルJ
	TLABZ2762FCZZ	AE	DK	N	C	Manual paper feeding size label (AB series)	チャンマイズラベルAB
	TLABZ2763FCZZ	AE	DJ	N	C	Manual paper feeding size label (Inch series)	チャンマイズラベルIN
21	XJPSD30P08000	AA	DA		C	Screw (3×8)	ビス
23	XWHSD30-08100	AA	DA		C	Washer	ワッシー
24	GCAB-0717FCZZ	AU	FL	N	D	Left exterior upper	ヒダリキーヒウエ
25	LPLTM3792FCZZ	AG	DS	N	C	Guide plate	ガイドプレート
26	TLABZ2811FCZZ	AB	DB	N	C	Power supply label (Japan only)	デンゲンラベルJ
	TLABZ2813FCZZ	AB	DB	N	C	Power supply label (SEEG U.Kingdom)	デンゲンラベルBGBK
	TLABZ2812FCZZ	AB	DB	N	C	Power supply label (other countries)	デンゲンラベルエイ
27	GCAB-0721FCZZ	AW	FP	N	D	Right exterior upper	ミギキーヒウエB8
28	CSOU-0090FC01	AS	FD	N	D	Delivery tray	ハインレイAS B8
29	CPLTM3738FC01	AH	DV	N	C	Front hinge plate A	マエヒンジイタ A
30	CPLTM3739FC01	AH	DV	N	C	Front hinge plate B	マエヒンジイタ B
31	PCLR-0346FCZZ	AE	DJ	N	C	Hinge collar	ヒンジヨウカラー
32	XRESP20-04000	AA	DA		C	E type ring	Eリング
33	XWHSD30-05060	AA	DA		C	Washer	ワッシー
34	LPLTM3573FCZZ	AD	DF		C	ADF Magnet plate	ADF MGプレート
35	PF-LZ0166FCZZ	AP	EP	N	C	Ozone filter	オゾンフィルターB8
36	TLABH2836FCZZ	AD	DH	N	C	250 Cassette instruction label (Japan only)	250セツメイラベルJ
	TLABH2837FCZZ	AD	DH	N	C	250 Cassette instruction label (USA,U.Kingdom,Australia)	250セツメイラベルU
	TLABH2838FCZZ	AE	DH	N	C	250 Cassette instruction label (E,F,G,S)	250セツメイラベルE4
37	TCAUH0918FCZZ	AA	DA		C	Service caution label (USA Australia)	サービスチュウイ ラベル
	TCAUH0687FCZZ	AA	DB		C	Service caution label (CANADA)	サービスチュウイ ラベル
	TCAUA0766FCZZ	AB	DB		C	Service caution label (U.Kingdom)	サービスチュウイ ラベル
	TCAUA0770FCZZ	AB	DC		C	Service caution label (Export…SEEG and Others)	サービスチュウイ ラベル
38	PCOVP0911FCZZ	AB	DC		D	Upper exterior rear cover R	ウエキーヒアトカバーR
39	PCOVP0941FCZZ	AB	DC		D	Upper exterior rear cover L	ウエキーヒアトカバーL
41	CHLDZ0967FC01	AD	DH		C	Manuscript detect holder R	(SF-7850) ゲンコウケンチホルダーR
42	CHLDZ0967FC03	AD	DH		C	Manuscript detect holder L	(SF-7850) ゲンコウケンチホルダーL
43	CPLTM3295FC01	AF	DQ		C	Manuscript detect plate R	(SF-7850) ゲンコウケンチイタ R
44	CPLTM3296FC01	AF	DN		C	Manuscript detect plate L	(SF-7850) ゲンコウケンチイタ L
45	CPWBF0659FC31	AU	FK	N	E	ORS LED PWB (Japan)	(SF-7850) ゲンコウケンチハッコウPWBJ
	CPWBF0859FC32	AT	FG	N	E	ORS LED PWB (Export)	(SF-7850) ゲンコウケンチハッコウPWBEX
46	GCAB-0644FCZZ	AT	FG		D	Upper exterior rear	(SF-7850) ウエキーヒウシロ
47	LPLTM3157FCZZ	AP	EQ		C	Arm plate	(SF-7850) アームイタ
49	LPLTP3159FCZZ	AE	DJ		C	Manuscript detect shield plate	(SF-7850) ゲンコウケンチシールドイタ
50	LSTPP0223FCZZ	AB	DC		C	Manuscript detect stopper	(SF-7850) ゲンコウケンチストッパー
51	MARMP0122FCZZ	AL	EB		C	Manuscript detect arm	(SF-7850) ゲンコウケンチアーム
52	MSPRT1563FCZZ	AC	DD		C	Manuscript detect spring	(SF-7850) ゲンコウケンチスプリング
53	NSFTZ1392FCZZ	AF	DM		C	Manuscript detect shaft	(SF-7850) ゲンコウケンチシャフト
54	CPLTM3739FC02	AH	DV	N	C	Front exterior hinge plate	マエヒンジイタCAS
55	CFRM-0668FC01	AP	EM	N	C	Lock frame front	ロックフレーム マエ
56	PCLR-0346FCZZ	AE	DJ	N	C	Hinge collar	ヒンジヨウカラー
57	XRESP20-04000	AA	DA		C	E type ring	Eリング
58	XWHSD30-05080	AA	DA		C	Washer	ワッシー
59	LF-X-0410FCZZ	AC	DE	N	C	Switch fixing plate	スイッチオーエバン
60	LX-BZ0102FCZZ	AA	DA		C	Screw (3×10)	ビス
61	XEBSD40P12000	AA	DA		C	Screw (4×12)	ビス
403	CCAB-0715FC01	AX	FX	N	D	Front exterior (Japan only)	(SF-7800) マエキーCAS J
	CCAB-0715FC02	AY	FY	N	D	Front exterior (USA only)	(SF-7800) マエキーCASSEC
	CCAB-0715FC03	AX	FY	N	D	Front exterior (U.Kingdom,Australia)	(SF-7800) マエキーCAS U
	CCAB-0715FC04	AX	FY	N	D	Front exterior (E,F,G,S)	(SF-7800) マエキーCAS E4
	CCAB-0715FC05	AX	FX	N	D	Front exterior (Indonesia)	(SF-7800) マエキーCAS インドネシア
	CCAB-0715FC06	AX	FX	N	D	Front exterior (Japan only)	(SF-7850) マエキーCAS J
	CCAB-0715FC07	AY	FY	N	D	Front exterior (USA only)	(SF-7850) マエキーCAS SEC
	CCAB-0715FC08	AX	FX	N	D	Front exterior (U.Kingdom,Australia)	(SF-7850) マエキーCAS U
	CCAB-0715FC09	AX	FX	N	D	Front exterior (E,F,G,S)	(SF-7850) マエキーCAS E4
	CCAB-0715FC10	AX	FX	N	D	Front exterior (Indonesia)	(SF-7850) マエキーCAS インドネシア
404	CCASP0151FC31	BK	HY	N	E	250 Cassette unit (Japan only)	(SF-7800) 250カセ ユニット
	CCASP0151FC32	BK	HY	N	E	250 Cassette unit (Export…AB series)	(SF-7800) 250カセ ユニット EXAB

1 外装(Exteriors)

NO.	PARTS CODE	PRICE RANK Ex	PRICE RANK Ja	NEW MARK	PART RANK	DESCRIPTION
404	CCASP0151FC33	BK	HY	N	E	250 Cassette unit (Inch series) (SF-7800) 250カセットユニット(EIN
	CCASP0151FC41	BL	LB	N	E	250 Cassette unit (Japan only) (SF-7850) 250カセットユニット(J
	CCASP0151FC42	BL	LB	N	E	250 Cassette unit (Export···AB series) (SF-7850) 250カセットユニット(EXAB
	CCASP0151FC43	BL	LB	N	E	250 Cassette unit (Inch series) (SF-7850) 250カセットユニット(EXIN

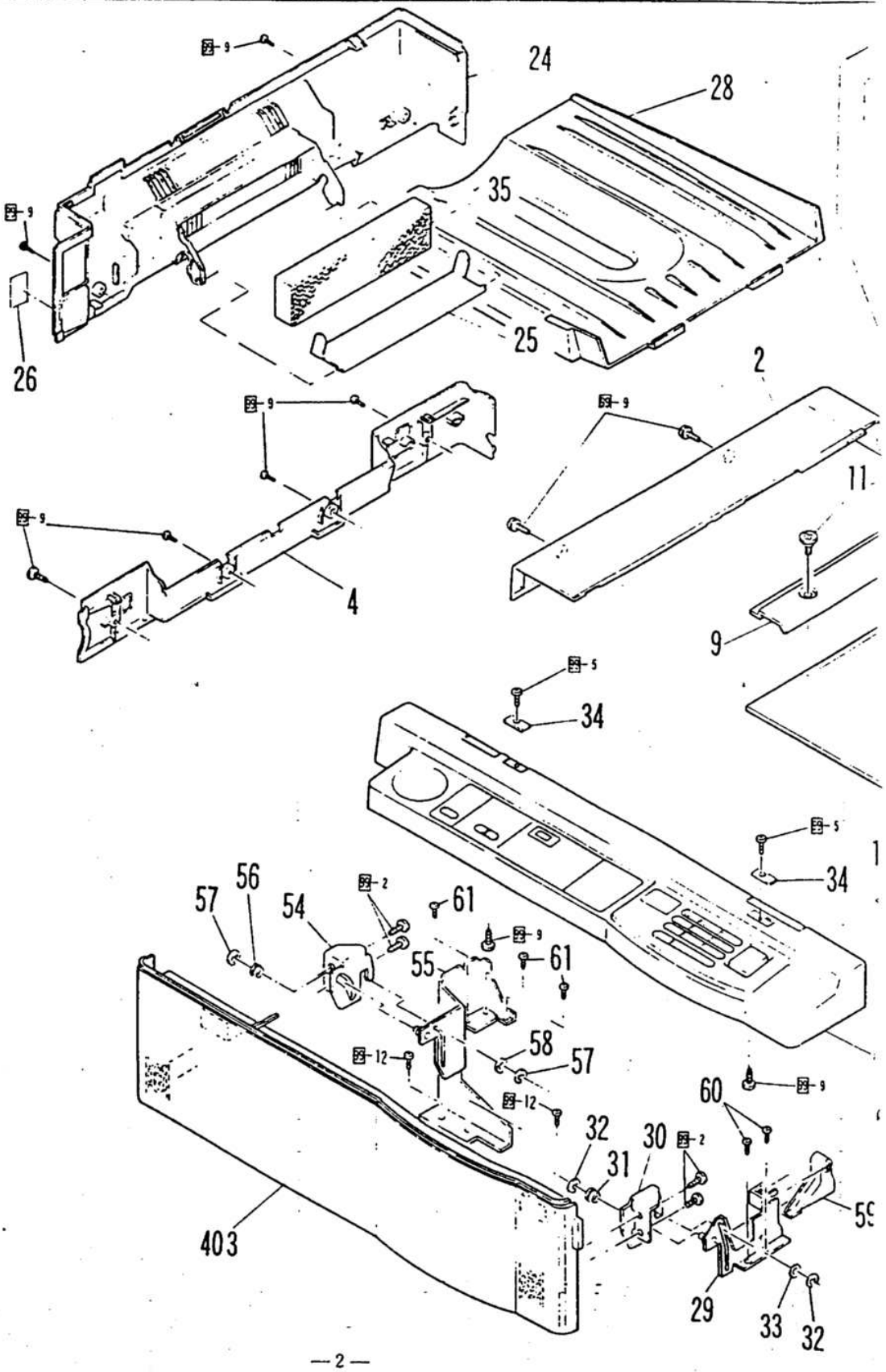

SF7850

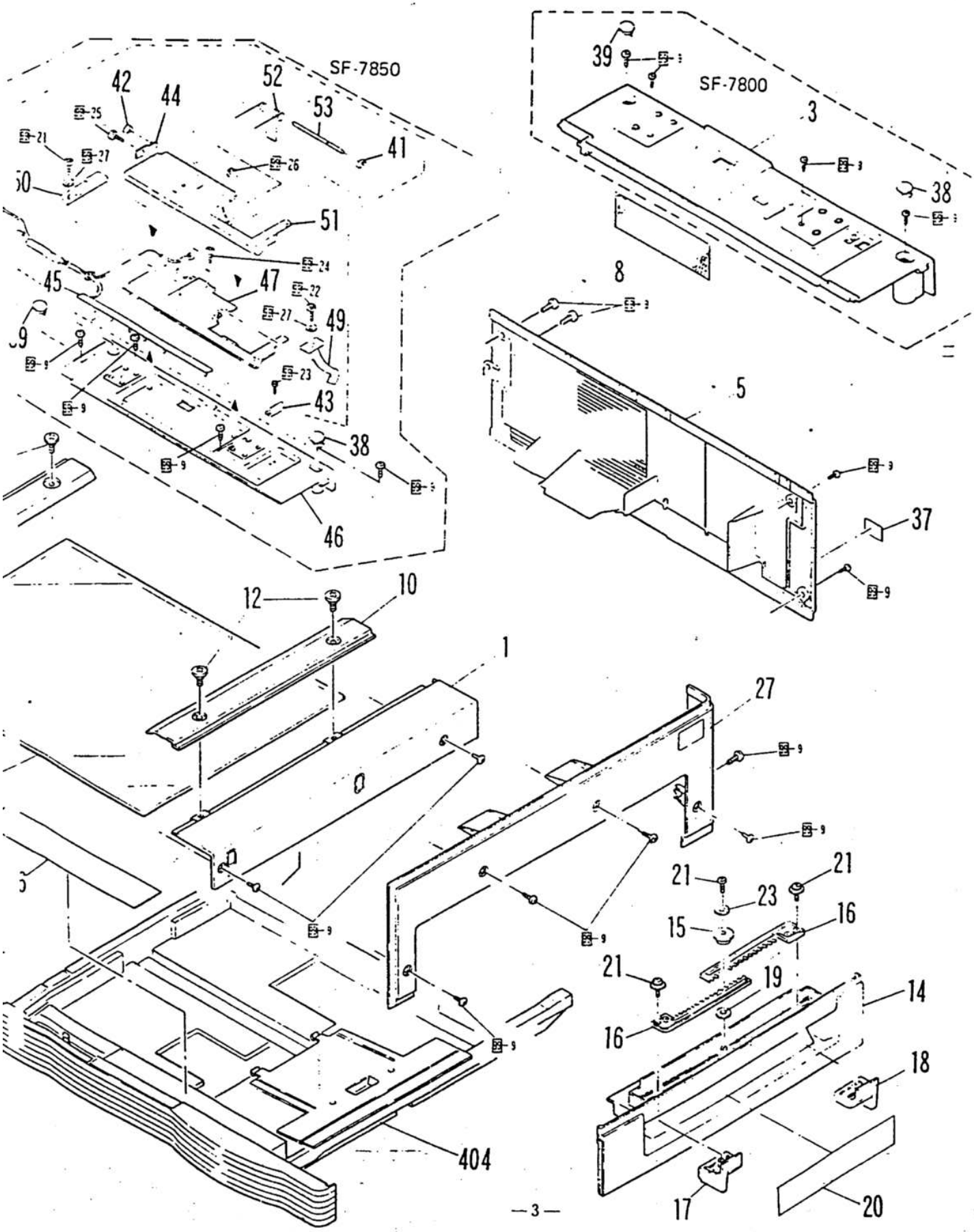
SF-7850
SF-7800
39
42
44
52
53
41
51
45
47
49
43
38
46
3
8
5
37
12
10
1
27
21
23
15
16
19
14
18
17
20
404

2 操作部(Operation panel)

NO.	PARTS CODE	PRICE RANK Ex	PRICE RANK Ja	NEW MARK	PART RANK	DESCRIPTION	
1	CBTN-0122FC01	AG	DS	N	C	Copy key	コピーキーAS B8
2	CBTN-0123FC01	AG	DR	N	C	Ten key	テンキーAS B8
3	CBTN-0124FC01	AD	DG	N	C	CL key	クリヤーキーAS B8
4	CBTN-0125FC01	AF	DN	N	C	Interrupt key	ワリコミキーAS B8
5	CPNLC0198FC01	AW	FR	N	D	Operation panel (Japan only)	(SF-7800) ソウサパネルAS J
	CPNLC0198FC02	AW	FR	N	D	Operation panel (AB series)	(SF-7800) ソウサパネルASAB
	CPNLC0198FC03	AW	FR	N	D	Operation panel (Inch series)	(SF-7800) ソウサパネルASIN
	CPNLC0198FC04	AW	FR	N	D	Operation panel (Japan only)	(SF-7850) ソウサパネルAS J
	CPNLC0198FC05	AW	FR	N	D	Operation panel (AB series)	(SF-7850) ソウサパネルAS AB
	CPNLC0198FC06	AW	FR	N	D	Operation panel (Inch series)	(SF-7850) ソウサパネルAS IN
6	DHAI-1890FCZZ	AM	EE	N	C	BL interface harness	Hi チュウケイハーネス
7	HINDP0297FCZZ	AT	FH	N	D	Key sheet (Japan only)	(SF-7800) キーシートJ B8
	HINDP0298FCZZ	AT	FH	N	D	Key sheet (Inch series)	(SF-7800) キーシートEXINB8
	HINDP0299FCZZ	AT	FH	N	D	Key sheet (AB series)	(SF-7800) キーシートEXABB8
	HINDP0300FCZZ	AT	FH	N	D	Key sheet (CANADA only)	(SF-7800) キーシート
	HINDP0302FCZZ	AU	FJ	N	D	Key sheet (Japan only)	(SF-7850) キーシートW コクサイ
	HINDP0304FCZZ	AU	FJ	N	D	Key sheet (Inch series)	(SF-7850) キーシートW EXIN
	HINDP0303FCZZ	AU	FJ	N	D	Key sheet (AB series)	(SF-7850) キーシートW EXAB
8	LDAIUG425FCZZ	AT	FG	N	C	Operation base plate	ソウサダイバンB8
9	LHLDW0970FCZZ	AA	DA		C	Wire holder	ワイヤーホルダー
10	LHLDW0898FCZZ	AA	DA		C	Wire holder (WS2NA)	ワイヤーホルダー
11	PFILW0165FCZZ	AG	DS	N	C	Smoke filter	スモークフイルターB8
12	PMAGT0015FCZZ	AD	DH		B	Magnet catch (10P)	マグネットキャッチ
13	QSW-MD421FCZZ	AF	DM	N	B	Microswitch	マイクロスイッチ
14	XBPSD30P06000	AA	DA		C	Screw (3×6)	ビス
15	XBPSD30P14000	AA	DA		C	Screw (3×14)	ビス
16	LX-BZ0502FCZZ	AA	DA		C	Screw (4×6)	ビス
17	XBPBZ40P06K00	AA	DA		C	Screw (4×6K)	ビス
18	XEPSD20P05000	AA	DA		C	Screw	ビス
19	XCPSD30P06000	AA	DB		C	Screw (3×6)	ビス
20	DHAI-1872FCZZ	AW	FR	N	C	Optical harness A	(SF-7800) コウガクハーネスAS
	DHAI-1871FCZZ	AX	FV	N	C	Optical harness A	(SF-7850) コウガクハーネスAW
801	CPWBF0763FC53	BG	HN	N	E	Operation PWB 1	(SF-7800) ソウサキバン1
	CPWBF0763FC51	BH	HS	N	E	Operation PWB 1 (Japan only)	(SF-7850) ソウサキバン1J
	CPWBF0763FC52	BH	HR	N	E	Operation PWB 1 (Export)	(SF-7850) ソウサキバン1
803	CPWBF0872FC52	AY	GA	N	E	Operation PWB 2	ソウサキバン2

3 オリジナルカバー(Original cover)

NO.	PARTS CODE	PRICE RANK Ex	PRICE RANK Ja	NEW MARK	PART RANK	DESCRIPTION	
1	GCOVH0194FCZZ	AY	FZ	N	D	Original cover	ORカバー B8
2	MHNG-0086FCZZ	AL	EC		C	OC hinge	OCヒンジ
3	MHNG-0096FCZZ	AL	EC		C	OC hinge R	OCヒンジR
6	PSHEZ2714FCZZ	AT	FG	N	C	OC sheet (Japan only)	OCマットJ B8
	PSHEZ2715FCZZ	AU	FK	N	C	OC sheet (Export)	OCマットEX B8
7	XJBSD40P12000	AA	DA	N	C	Screw (4×12)	ビス

4 DV 駆動ユニット(DV drive unit)

NO.	PARTS CODE	PRICE RANK Ex	PRICE RANK Ja	NEW MARK	PART RANK	DESCRIPTION	
1	CFRM-0687FC01	AK	DZ	N	C	DV drive frame	DVクドウフレーム
2	DHAI-1869FCZZ	AN	EL	N	C	DV interface harness	DVチュウケイハーネス
3	LX-BZ0583FCZZ	AB	DB	N	C	Screw	ビス
4	LX-BZ0589FCZZ	AA	DA	N	C	Screw	ビス
5	LX-WZ0186FCZZ	AA	DA		C	Washer (Φ6)	ポリスライダー
6	MSPRC1534FCZZ	AA	DA		C	DV drive spring	DVドライブスプリング
7	NBRGC0060FCZZ	AD	DH		C	DFC bearing	DFCヨウノクウケ
8	NCPL-0007FCZZ	AC	DC		C	DV cup ring	DVカップリング
9	NGERH0111FCZZ	AD	DH		C	Gear (24T)	ギヤー
10	NSFTD1602FCZZ	AK	DY	N	C	DV drive shaft	DVクドウノクB8
11	RMOTD0619FCZZ	AR	EX	N	B	Main motor	メーンモーター B8
12	XHPSD30P06000	AA	DA		C	Screw (3×6)	ビス
13	XRESP50-06000	AA	DA		C	E type ring	Eリング
14	XRESP70-08000	AA	DA		C	E type ring	Eリング
15	MSPRC1299FCZZ	AA	DA		C	DV drive spring	DVクドウスプリング
16	LPINS0155FCZZ	AA	DA		C	Pin	ヘイコウピン

2 操作部(Operation panel)

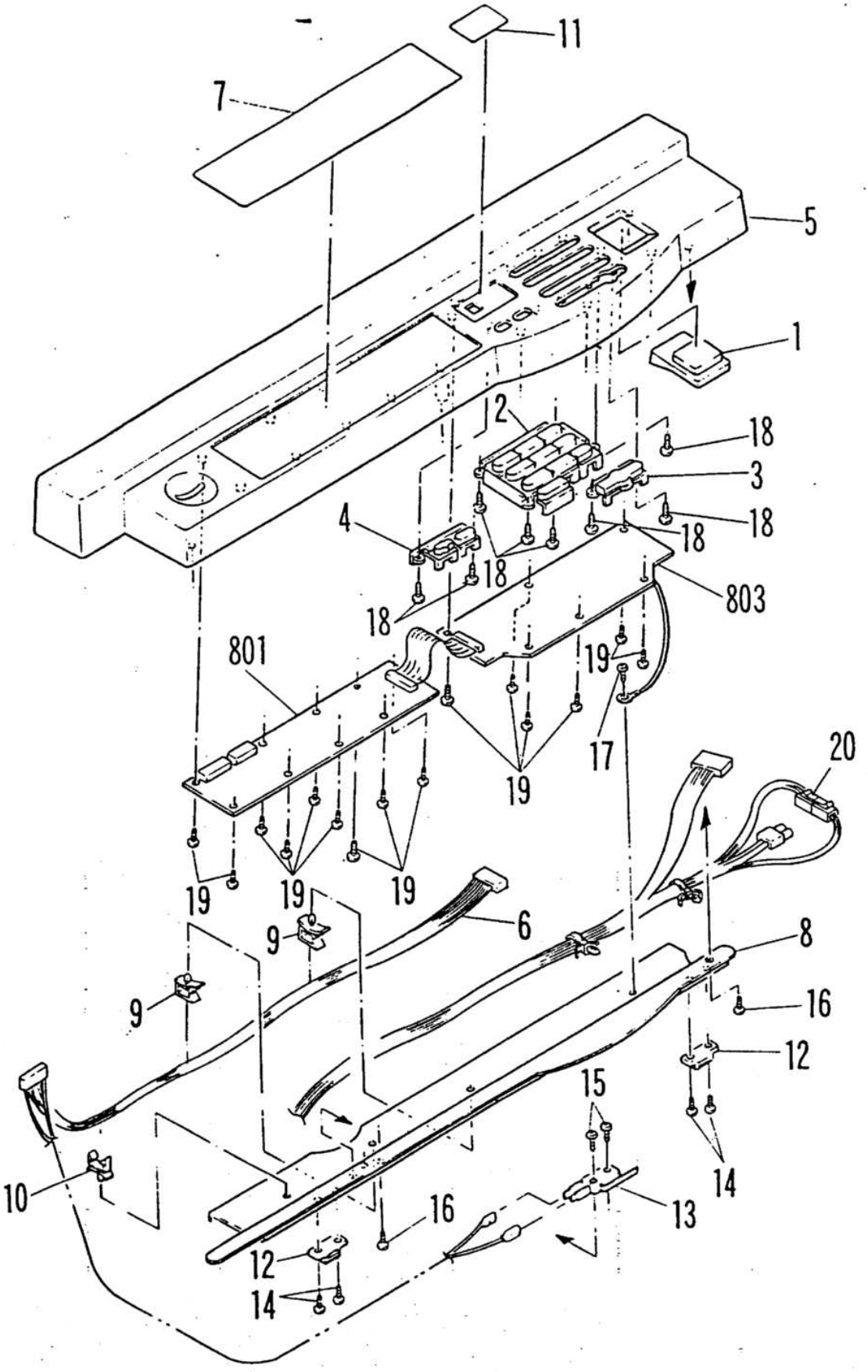

3 オリジナルカバー(Original cover)

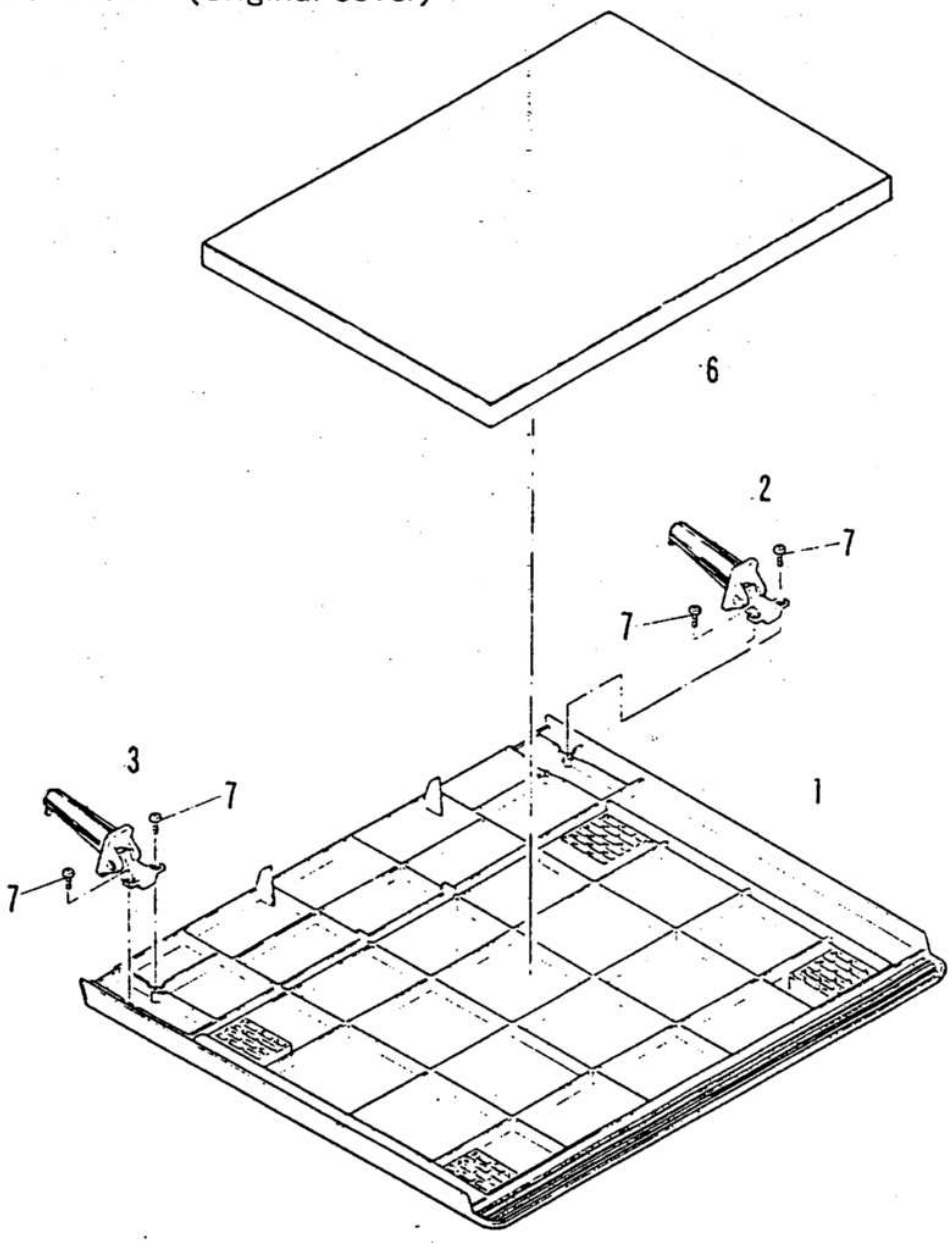

4 DV駆動ユニット(DV drive unit)

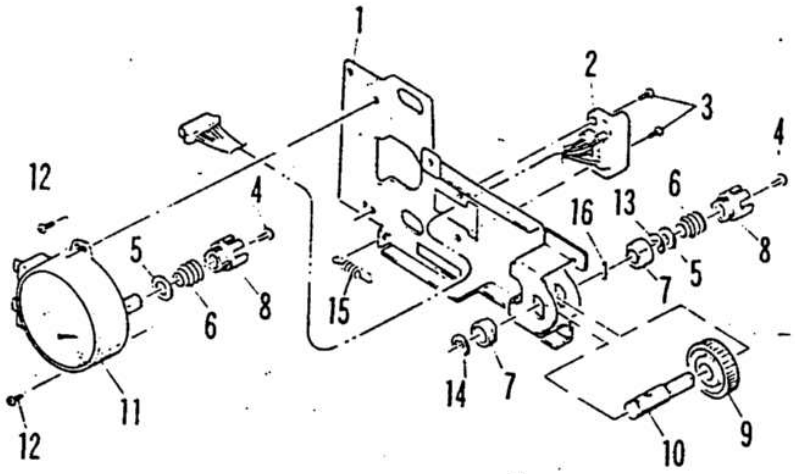

5 DV ガイドユニット(DV guide unit)

NO.	PARTS CODE	PRICE RANK Ex	PRICE RANK Ja	NEW MARK	PART RANK	DESCRIPTION	
1	CG1OH1270FC01	AV	FM	N	C	DV guide	DVガイドAS
2	CPLTM2415FC01	AG	DS		C	DV plate A	DVリセッブレート A
3	CPLTM2632FC01	AE	DJ		C	DV plate A	DVリセッブレート A
4	LPLTM3718FCZZ	AG	DS	N	C	Plate DVG	プレートDVG B8
5	LPLTM3719FCZZ	AF	DN	N	C	Plate DVH	プレートDVH B8
6	MSPRT1203FCZZ	AA	DA		C	DV spring	DVリセッ スプリング
7	NSFTZ1595FCZZ	AD	DF	N	C	Shaft G	シャフトG B8
8	PSHEP2725FCZZ	AD	DG	N	C	TC guide sheet	TC ガイドマイラーB8
9	XRESP20-03000	AA	DA	N	C	E type ring	Eリング
10	XRESP30-05000	AA	DA		C	E type ring	Eリング
11	XRESP40-06000	AA	DA		C	E type ring	Eリング(4MM)
12	TLABZ1887FCZZ	AB	DB		C	Handle label	トッテヨウラベル

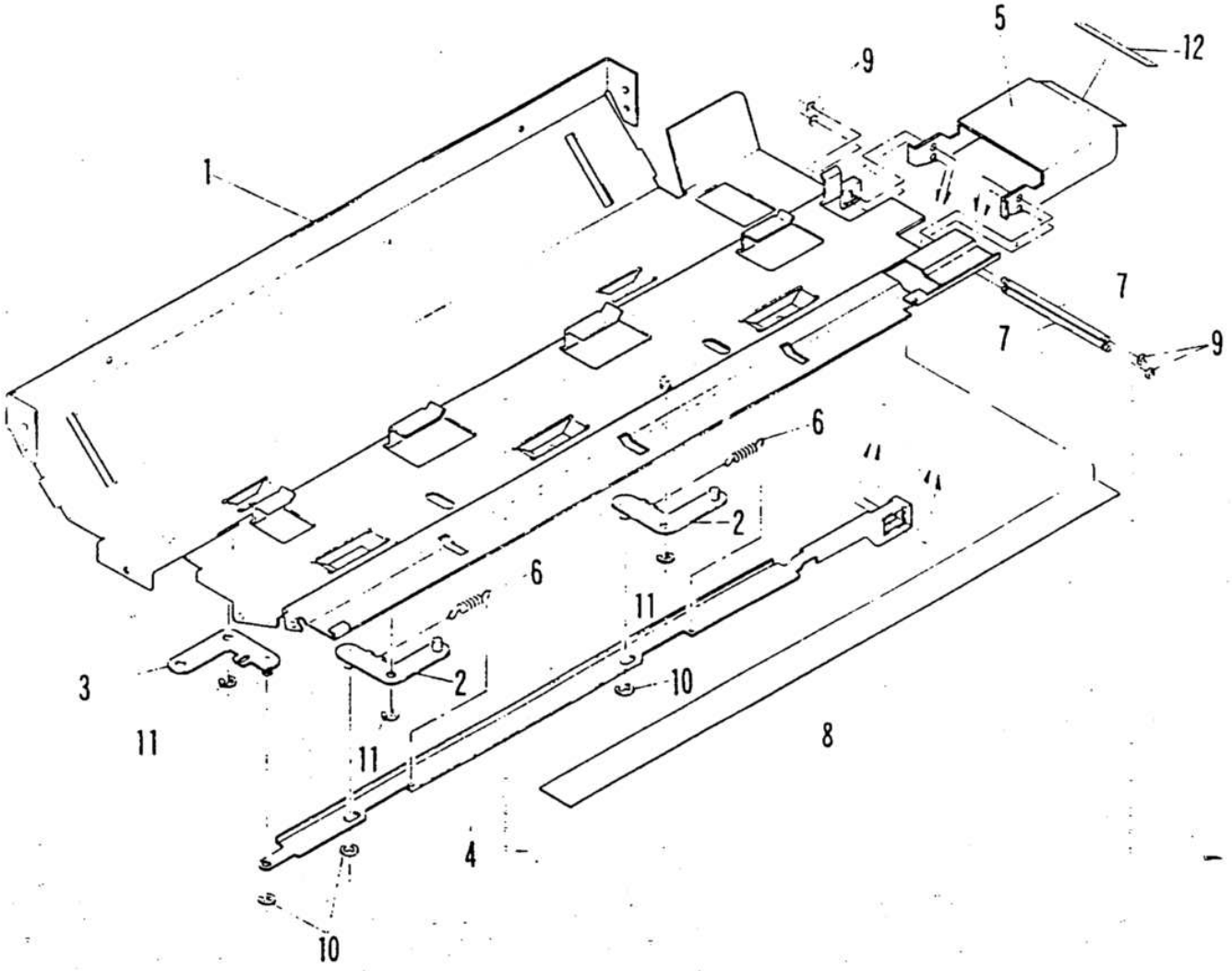

6 プロセスユニット(Process unit)

NO.	PARTS CODE	PRICE RANK Ex	PRICE RANK Ja	NEW MARK	PART RANK	DESCRIPTION	
1	UCLEZ0108FCZZ	AT	FG	N	C	Blade	ブレードFF30
2	XEBSF30P08000	AA	DA		C	Screw (3×8)	ビス
3	CBOSZ1346FC01	AG	DR	N	C	Drum boss F	ドラムボスF AS
4	XEBSF30P08000	AA	DA		C	Screw (3×8)	ビス
408	CFRM-0698FC51	BN	LN	N	E	DR frame upper unit	DRフレームアッパーユニット

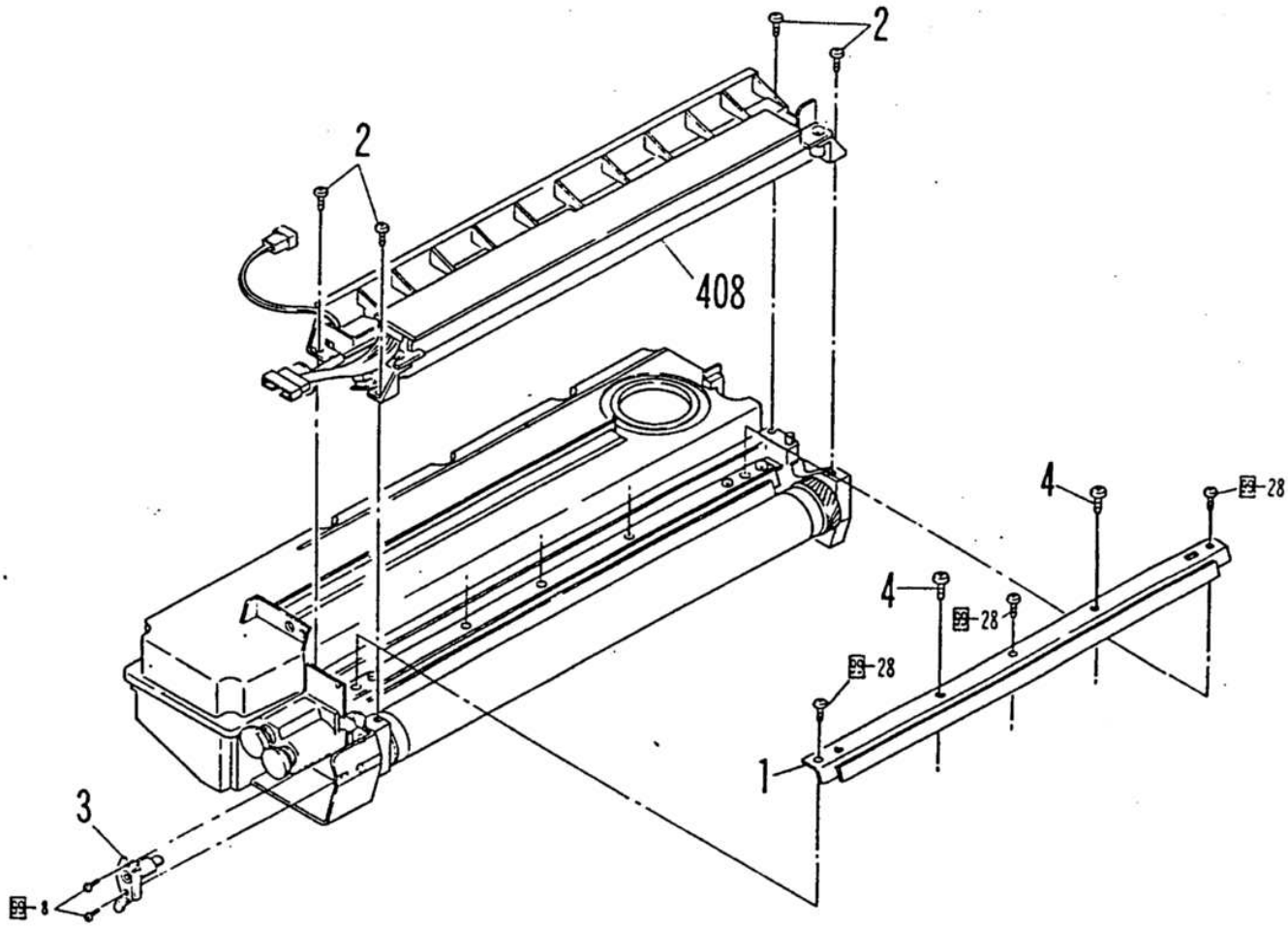

7 光学ユニット(Optical unit)

NO.	PARTS CODE	PRICE RANK Ex	PRICE RANK Ja	NEW MARK	PART RANK	DESCRIPTION	
1	CCOVP1051FC31	AU	FJ	N	E	Dark box cover lower unit	アンバコカバーシタユニット
2	CR-WZ0242FC05	AQ	ES		B	Dry heater (100V)	ノョンツヒーター
	CR-WZ0243FC05	AQ	ES		B	Dry heater (110V)	ノョンツヒーター
	CR-WZ0244FC05	AQ	ES		B	Dry heater (120V)	ノョンツヒーター
	CR-WZ0245FC05	AQ	ES		B	Dry heater (127V)	ノョンツヒーター
	CR-WZ0247FC05	AQ	ES		B	Dry heater (220V)(240V)	ノョンツヒーター
4	NFANC0034FCZZ	AZ	GE	N	C	CFM	CFM B8
5	CPWBFC874FC31	AQ	EV	N	E	AE sensor PWB	AEセンサーキバン
6	PBOX-0084FCZZ	AE	DK	N	C	AE box	AE-BOX B8
7	XEPSD30P06000	AA	DA		C	Screw (3×6)	ビス
8	LPLTM3732FCZZ	AC	DE	N	C	LHP control plate	LHPケンシュツバン
9	NBRGC2029SCZZ	AB	DD		C	Bearing (F3×6×4.7×1)	ベアリング
10	PLNS-0043FCZZ	BG	HK	N	B	Lens	レンズ B8
11	PSHEP2335FCZZ	AA	DA		C	Shield sheet	ヒカリシクシーコウシート
12	PSHEP2750FCZZ	AH	DX	N	C	Lens shield sheet upper	レンズシーコウシートウエ
13	PSHEP2751FCZZ	AC	DD	N	C	Lens shield sheet	レンズシーコウシートヨコ
14	XEPSD30P06000	AA	DA		C	Screw (3×6)	ビス
15	XRESP20-04000	AA	DA		C	E type ring	Eリング
16	CPLTM3728FC01	AQ	ET	N	C	4th,5th drive plate	4,5クドウイタAS
17	DHA1-1875FCZZ	AN	EL	N	C	Optical harness C	コウガクハーネスC
18	RMOTP0623FCZZ	AV	FL	N	B	4th,5th mirror motor	4,5ミラーモーターB8
19	VHPGP1A71A1-1	AG	DT	N	B	Photo transistor (GP1A71A1)	フォトトランジスター
20	LX-BZ0032FCZZ	AB	DB		C	Screw (3×10)	ビス
21	NGERH0734FCZZ	AF	DM	N	C	Mirror motor gear	ミラーモータギヤB8
22	NPLYZ0172FCZ1	AL	EB		C	Winder pulley DN	マキトリプーリーDN
23	NSFTD1596FCZZ	AR	EY	N	C	Winder drive shaft	マキトリクドウシク
24	XRESP70-08000	AA	DA		C	E type ring	Eリング
25	XXXSP40L08000	AB	DB		C	Screw (4×8)	ビス
27	DHA1-1874FCZZ	AY	GB	N	C	Optical harness B	(SF-7300) コウガクハーネスBS
	DHA1-1873FCZZ	AY	GB	N	C	Optical harness B	(SF-7850) コウガクハーネスBW
28	LANGT1250FCZZ	AD	DF		C	Tension adjusting angle	テンションチョウセイアングル
29	LBNDJ0014FCZZ	AB	DD		C	Cable clamp(small)	ケーブルクランプ(ショウ)
30	LBSHC0231FCZZ	AA	DA		C	Bushing (SG16L6-)	ジクブッシュ
31	LFIX-0320FCZZ	AB	DB		C	6th mirror fixing plate	ダイ6ミラーオーニ
32	LFIX-0408FCZZ	AB	DB	N	C	6th mirror fixing plate	ダイ6ミラーオーニ
33	LFIX-0409FCZZ	AB	DB	N	C	Lens shaft fixing plate	レンズジクオーニ
34	LHLD2053SFCZZ	AD	DH		C	Collar holder	ボウシンコロホルダー
35	LPLTM3155FCZZ	AB	DC		C	Wire fixing plate	ワイヤーコテイバンB7
36	LPLTM3156FCZ1	AC	DE		C	HP control plate	HPケンシュツバンB7
37	LPLTM3309FCZZ	AD	DF		C	MHP sensor fixing plate	MHPセンサートリツケイタ
38	LPLTM3724FCZZ	AH	DV	N	C	Mirror motor fixing plate	ミラーモータートリツケイタ
39	LPLTM3779FCZZ	AK	EA	N	C	White sheet plate	シロマイラーハリツケイタ
40	LRALM0075FCZZ	AK	DZ		C	MB-B rail F	MB-Bレールf
41	LX-BZ0135FCZZ	AC	DD		C	Screw (Red)	ヘンシンビス
43	LX-BZ0335FCZZ	AA	DA		C	Screw (4×6)(Red)	ビス
44	LX-WZ0050FCZZ	AA	DA		C	Washer	ナミワッシャ
45	MLOV-0004FCZZ	AF	DM		C	Plate	フウコウチョウセイルーバー
46	MSPRC1289FCZZ	AA	DA		C	Drive wire spring	クドウワイヤースプリング
47	NBRGC0254FCZZ	AB	DC		C	Delivery roller bearing	ハイシローラーヨウジクウケ
48	NBRGC0387FCZZ	AB	DC		B	Bearing	ベアリング
49	NPLYZ0137FCZZ	AC	DC		C	Pulley	ドウプーリー
50	NPLYZ0152FCZZ	AD	DF		C	Lens drive winder pulley	レンズクドウマキトリプーリー
51	NPLYZ0167FCZZ	AF	DN		C	Pulley	プーリー
52	NPLYZ0181FCZZ	AB	DB		C	CL pulley	CLプーリー
53	NSFTD1597FCZZ	AP	EL	N	C	Lens drive shaft	レンズクドウシク
54	NSFTD1598FCZZ	AG	DU	N	C	4th,5th drive shaft	4,5クドウシク
55	PCLR-0308FCZZ	AB	DB		C	Collar	ボウシンコロ
56	PCOVP1050FCZZ	AR	EX	N	C	Dark box cover upper	アンバコカバーウエ
57	PGUMS0147FCZZ	AA	DA		C	Table glass rubber (small)	テーブルガラスゴム ショウ
58	PGUMS0174FCZZ	AB	DB		C	Table glass rubber (large)	テーブルガラスゴム ダイ
59	PGUMS0183FCZZ	AA	DA		C	Table glass rubber	テーブルガラスゴム
60	PMIR-0093FCZZ	AQ	ET	N	B	6th mirror	ダイ6ミラー B8
61	PSHEP2752FCZZ	AC	DD	N	C	6th shield sheet	ダイ6シヤコウシート
62	PWIR-0116FCZZ	AM	ED		C	Lens drive wire	レンズクドウワイヤー
65	RMOTP0618FCZZ	BD	GV	N	B	Mirror motor	ミラーモーター B8
66	RMOTP0622FCZZ	AT	FH	N	B	Lens motor	レンズモーターB8
67	VHPGP1A71A1-1	AG	DT	N	B	Photo transistor (GP1A71A1)	フォトトランジスター
68	VHPGP3A38J-1	AH	DV		B	Photo transistor (GP3A38)	フォトトランジスター
69	XBPSD30P04000	AA	DA		C	Screw (3×4)	ビス
71	XBPSD40P06K00	AA	DA		C	Screw (4×6K)	ビス
72	XBPSD40P12K50	AA	DA		C	Screw (4×12K5)	ビス
74	XBPSD40P30000	AA	DA		C	Screw (4×30)	ビス
75	XBPSZ40P06K00	AA	DA	N	C	Screw (4×6K)	ビス
76	XBTSF40P06000	AA	DA		C	Screw (4×6)	ビス
78	XNESD40-32000	AA	DA		C	Nut	ナット
79	XRESP50-06000	AA	DA		C	E type ring	Eリング
80	XRESP60-08000	AA	DA		C	E type ring	Eリング
81	XRESP70-08000	AA	DA		C	E type ring	Eリング
82	XWHSD40-08000	AA	DA		C	Washer	ワッシャ
84	PWIR-0135FCZ1	AH	DW	N	C	4th,5th mirror drive wire	4,5ミラークドウワイヤー

7 光学ユニット(Optical unit)

NO.	PARTS CODE	PRICE RANK Ex	PRICE RANK Ja	NEW MARK	PART RANK	DESCRIPTION	
85	PWIR-0136FCZ1	AN	EK	N	C	MB wire	MHワイヤー Hx
86	CPWBF0860FC31	AY	FY	N	E	ORS PWB (Japan)	(SF-7850) ｵﾝｺｳｾﾝｻｼﾞｭｺｳｷﾊﾞﾝ J
	CPWBF0860FC32	AX	FV	N	E	ORS PWB (Export)	(SF-7850) ｵﾝｺｳｾﾝｻｼﾞｭｺｳｷﾊﾞﾝ E
91	LPLTP3729FCZZ	AH	DX	N	C	ORS PWB fixing plate	(SF-7850) ｼﾞｭｺｳｷﾊﾞﾝﾄﾘﾒｹﾞﾈ
92	PSHEZ2818FCZZ	AB	DB	N	C	6th mirror R sheet	ﾀﾞｲ6ﾐﾗｰRｼｰﾄ
93	VHPGP1A22LC-1	AK	EA		B	Photo sensor (GP1A22LC)	(SF-7850) ﾌｫﾄｾﾝｻｰ
94	XBPSD40P10000	AA	DA		C	Screw (4×10)	(SF-7850) ﾋﾈｼﾞ

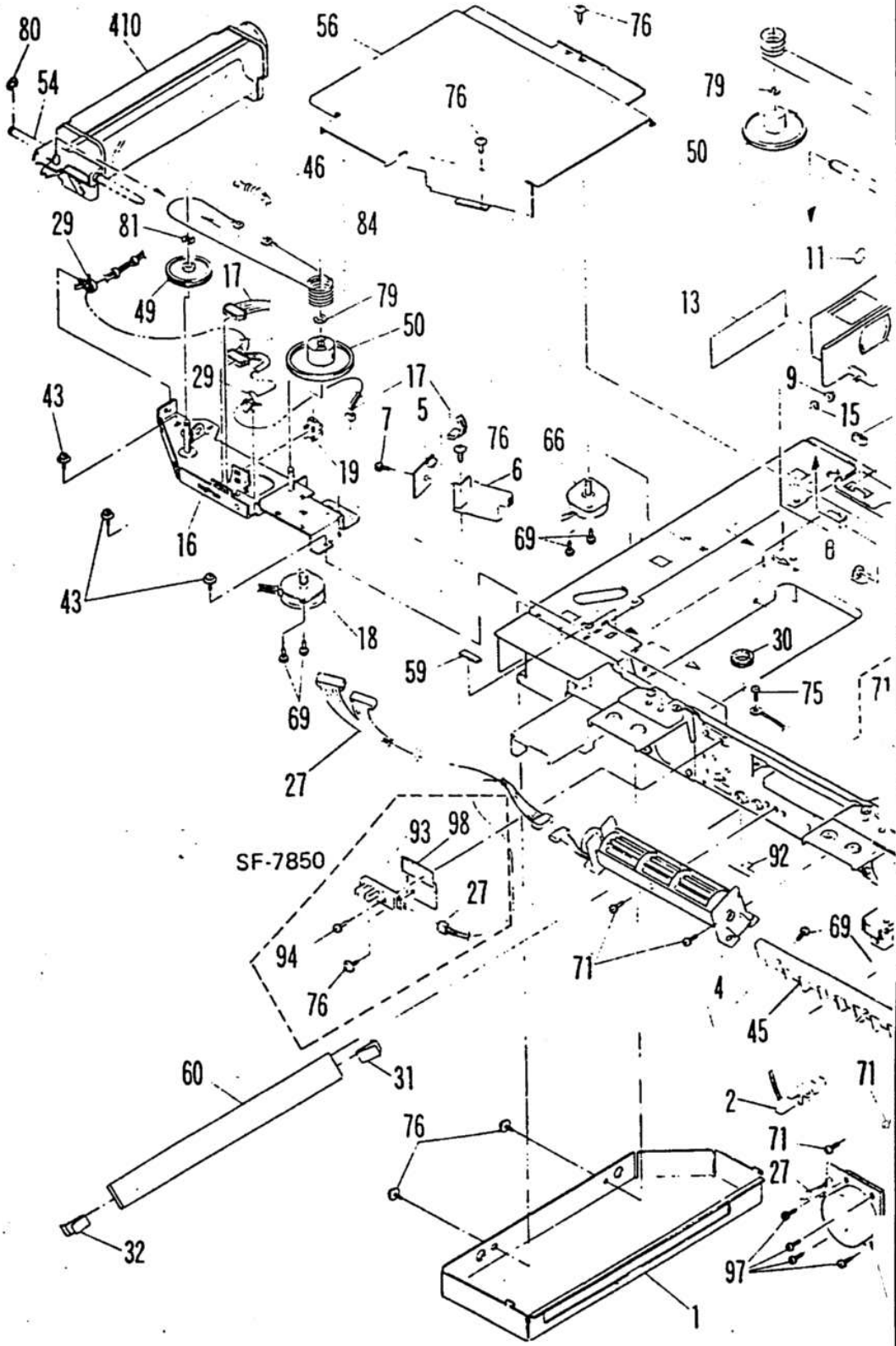

7 光学ユニット(Optical unit)

NO.	PARTS CODE	PRICE RANK Ex	PRICE RANK Ja	NEW MARK	PART RANK	DESCRIPTION	
95	XEPSD40P05000	A A	D A	N	C	Screw (4×6)	(SF-7850) ビス
96	PSHEG2817FCZZ	A D	O F	N	C	Lens ock sheet	レンズロックシート
98	LPLTM3310FCZZ	A D	O G		C	OC switch fixing plate	(SF-7850) OCスイッチトリツケイタ
409	CHLDZ1029FC31	B K	H X	N	E	2nd 3rd mirror unit	2,3ミラーユニット B4
410	CPLTM3725FC31	B E	H C	N	E	4th 5th mirror unit	4,5ミラーユニット B4
411	CREFL0139FC31	B N	L N	N	E	Copy lamp unit (100V series)	コピーランプユニット100
	CREFL0139FC32	B N	L N	N	E	Copy lamp unit (200V series)	コピーランプユニット200

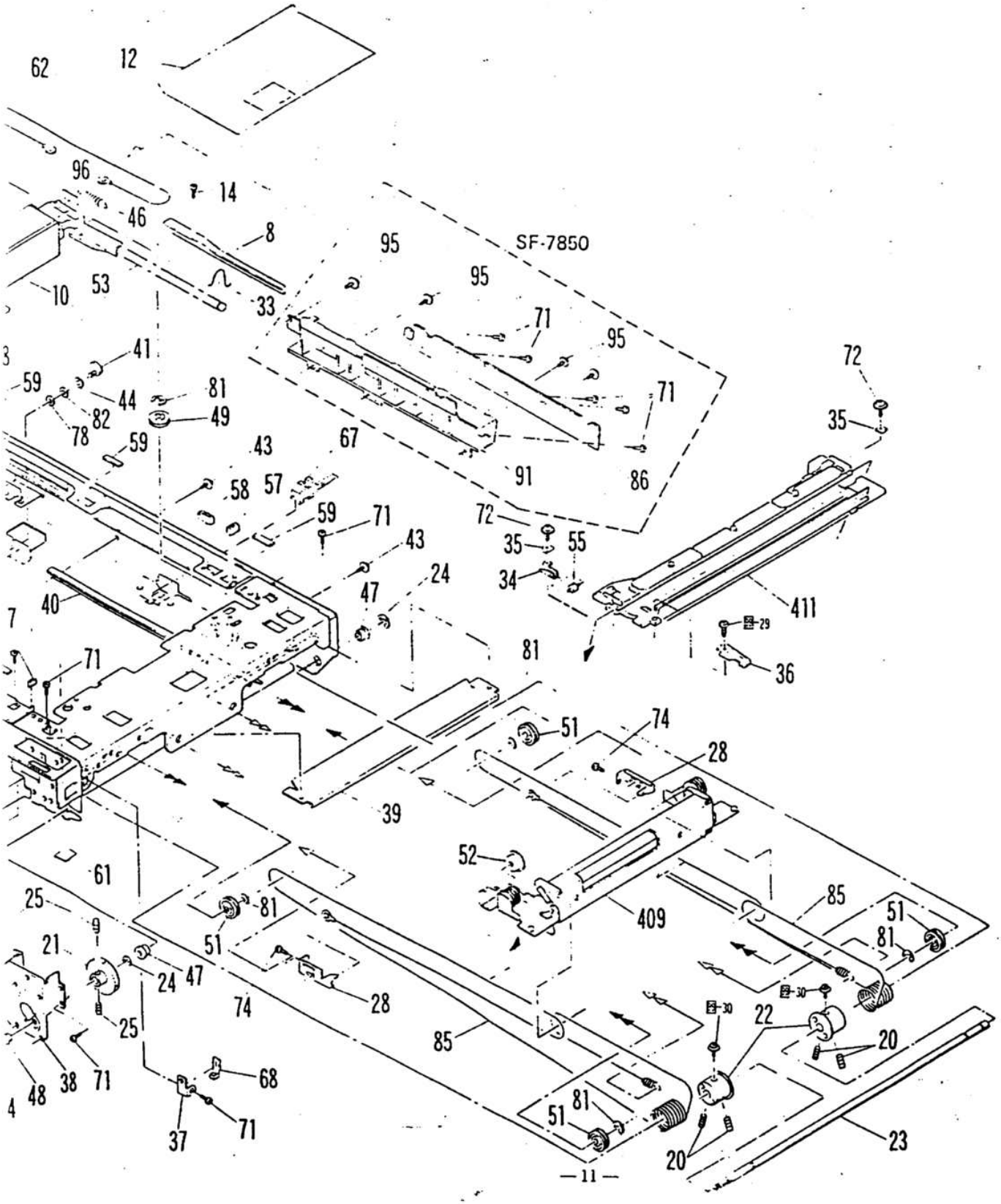

8 シャーシ(Chassis)

NO.	PARTS CODE	PRICE RANK Ex	PRICE RANK Ja	NEW MARK	PART RANK	DESCRIPTION	
1	CANGT1323FC01	AD	DH	N	C	Drive angle S	ドウアングルSAS
2	CPLTM3736FC01	AG	DR	N	C	S cassette collar plate L	Sカセットコロイタ L
3	CRALP0090FC01	AP	EL	N	C	S cassette rail R	Sカセットレール RAS
4	DHA1-1897FCZZ	AK	DX	N	C	PPD interface harness	(SF-7800) PPDチュウケイハーネス
5	GDA1-0151FCZZ	BQ	ML	N	C	Base plate S	ダイバンS B8
6	JKNBP0114FCZZ	AC	DE	N	C	CFF knob	CFFツマミ
7	LBSHZ1100CCZZ	AC	DD		C	Bushing	ザイドシクブッシング
8	LPINS0075FCZZ	AB	DB		C	Pin (φ3-13)	ヘンコウピン
9	LPINS0089FCZZ	AA	DA		C	Spring pin	スプリングピン
10	LPINS0096FCZZ	AB	DB		C	Pin (3×12)	ヘンコウピン
11	LPLTG3737FCZZ	AB	DB	N	C	Rubber plate	(SF-7800) ゴムバン B8
12	LPLTM3745FCZZ	AQ	ER	N	C	Base plate supporting F Plate	ダイバンホチョウイタF
13	LPLTM3746FCZZ	AQ	EU	N	C	Base plate supporting R Plate	ダイバンホチョウイタR
14	LPLTM3751FCZZ	AN	EG	N	C	Duct bottom plate	ダクトソコイタ B8
15	LPLTP3747FCZZ	AD	DF	N	C	Cassette positioning plate	カセットイチメボダバン
16	LSTYM0178FCZZ	AM	ED	N	C	Base plate S stay F upper	ダイバンSステイFウエ
17	MSPRC1440FCZZ	AA	DA		C	Separator spring	ハクリソクヨウスプリング
18	NBLTH0170FCZZ	AH	DV	N	B	Suction belt	サクションベルト B8
19	NBRGC0167FCZZ	AB	DC		B	PF bearing	PFジクウケ
20	NBRGC0188FCZZ	AB	DB		B	PF bearing	PFジクウケ
21	NBRGP0320FCZZ	AB	DB		C	PS bearing	PSジクウケNo2
22	NBRGP0415FCZZ	AC	DD	N	C	Belt bearing	ベルトジクウケB8
23	NGERH0183FCZZ	AC	DC		C	24T toner transport gear	トナーハンソウギヤー24T
24	NGERH0382FCZZ	AB	DB		C	Gear (16T)	ギヤー
25	NGERH0457FCZZ	AC	DC		C	DV drive gear R	DVクドウギヤー R
26	NROLP0833FCZZ	AC	DD	N	C	Belt roller	ベルトローラー B6
27	NROLR0836FCZZ	AW	FP	N	C	PS roller lower	PSローラーシタ B8
29	NSFTZ1607FCZZ	AN	EH	N	C	Belt shaft L	ベルトジクL B8
30	NSFTZ1608FCZZ	AG	DS	N	C	Belt shaft S	ベルトジクS B8
31	PCLC-0191FCZZ	AV	FM	N	C	PS clutch	PSクラッチ B8
32	PSHEP2703FCZZ	AB	DB	N	C	Frame sheet	フレームマイラー B6
33	PSHEP2735FCZZ	AD	DH	N	C	PS front sheet	PSマエシート B8
34	RPLU-0267FCZZ	AM	EF	N	B	PF-S solenoid	PF-Sソレノイド
35	PSHEP2720FCZZ	AA	DA	N	C	Flange sheet	マル6フランジマイラー
36	XBPSE40P12000	AA	DA	N	C	Screw	ビス
37	XHPSD30P10000	AA	DA		C	Screw (3×10)	ビス
38	XHPSD40P10000	AA	DA		C	Screw (4×10)	ビス
39	XRESP30-06000	AA	DA		C	E type ring	Eリング
41	XRESP40-06000	AA	DA		C	E type ring	Eリング(4MM)
42	XRESP50-06000	AA	DA		C	E type ring	Eリング
43	XRESP70-08000	AA	DA		C	E type ring	Eリング
44	PCOVP1057FCZZ	AC	DE	N	C	PPD cover	PPDカバー B8
45	VHPGP3S78//-1	AL	EC	N	B	Photo transistor (GP3S78)	フォトトランジスター
51	DHA1-1886FCZZ	AY	GB	N	C	AC interface harness (100V series)	ACチュウケイハーネス10
	DHA1-1887FCZZ	AY	GA	N	C	AC interface harness (200V series)	ACチュウケイハーネス20
52	LFRM-0689FCZZ	AY	FY	N	C	Fulcrum frame	シテンフレーム B8
53	LPINS0089FCZZ	AA	DA		C	Spring pin	スプリングピン
55	MSPRT1799FCZZ	AB	DB	N	C	Delivery spring F	ハイシスプリング F B8
56	MSPRT1800FCZZ	AB	DB	N	C	Delivery spring R	ハイシスプリング R B8
57	NBRGC0188FCZZ	AB	DB		B	PF bearing	PFジクウケ
58	NPLYZ0239FCZZ	AC	DC	N	C	14XL pulley	14XLプーリー B8
59	NROLR0837FCZZ	AM	EE	N	C	Delivery roller	ハイシローラー B8
60	PBRSR0061FCZZ	AH	DW		B	Discharge brush	ジョデンブラシ
61	PGIDH1277FCZZ	AL	EC	N	C	Delivery paper guide lower	ハイシペーパーザイドシタ B8
62	PSHEP2720FCZZ	AA	DA	N	C	Flange sheet	マル6フランジマイラ
63	QSW-C9372QCZZ	AN	EH		B	Seesaw switch	シーソースイッチ
64	QSW-M0296FCZZ	AM	EF		B	Microswitch (Power SW)	マイクロスイッチ
65	XBPBZ40P06K00	AA	DA		C	Screw (4×6K)	ビス
66	XBPSD40P25000	AA	DA		C	Screw (4×25)	ビス
67	XEBSD40P10000	AA	DA	N	C	Screw (4×10)	ビス
68	XRESP50-06000	AA	DA		C	E type ring	Eリング
69	CFRM-0693FC01	AS	FB	N	C	Paper feeding frame R	キュウシフレーム R
70	NGERH0317FCZZ	AC	DE		C	DV gear (18T)	DVギヤー
71	NGERH0457FCZZ	AC	DC		C	DV drive gear R	DVクドウギヤー R
72	XRESP70-08000	AA	DA		C	E type ring	Eリング
73	LBOSZ1031FCZZ	AC	DE		C	Clutch boss	クラッチボス
74	MSPRC1406FCZZ	AE	DJ		C	PF Clutch spring	PFクラッチスプリング
75	NGERH0746FCZZ	AG	DS	N	C	Gear (44T)	44Tギヤ
76	PPIPP0153FCZZ	AB	DC	N	C	CL sleeve	CLスリーブ B8
77	LPLTM3752FCZZ	AG	DT	N	C	Suction fan fixing plate	サクションファンシリツケイタ
78	PFILZ0146FCZZ	AN	EJ		C	Ozone cleaner lower	オゾンクリーナー シタ
79	PSHEP2774FCZZ	AD	DF	N	C	Duct sheet S	ダクトマイラーS
80	RMOTE0570FC11	AW	FQ	N	B	Suction fan motor	サクションファンモーター
81	XEPSD40P35000	AA	DA	N	C	Screw (4×35)	ビス
82	LBNDJ0043FCZZ	AA	DA		C	Snap band (SG130)(100V series)	スナップバンド
83	LFIX-0016FCZZ	AD	DH		C	AC Cord holder	ACコードオサエ
84	LPLTM3744FCZZ	AG	DR	N	C	AC cord fixing plate	ACコードシリツケイタ
85	PHOG-0360FCZZ	AA	DA		C	Plug holder (172076-6)(100V series)	プラグホルダー
86	PTUBP0090FCZZ	AA	DA	N	C	Protect tube (100V series)	ホゴチューブ B8
87	QCNW-0001QCZZ	AN	EH		C	BS cord (10A 500V)(U Kingdom)	BSコード

8 シャーシ(Chassis)

NO.	PARTS CODE	PRICE RANK Ex	PRICE RANK Ja	NEW MARK	PART RANK	DESCRIPTION	
	QPLGA0005QCZZ	AN	EH		B	AC plug (U.Kingdom)	ACプラグ
	QACCJ3412QCZZ	AN	EG		B	AC cord (Japan)	ACコード
	QACCL8421QCZZ	AW	FV		B	AC cord (Australia,new zealand)	ACコード
	QACCV6420QCZZ	AV	FL		B	AC cord (3.8φ2P plug) (SEEG)	ACコード
	QACCD7417QCN1	AR	EY		B	AC cord (USA CANADA)	ACコード
	QCNW-0120FCZZ	AU	FL		B	AC cord (Saudi arabia)	ACコード
87	QCNW-0131FCZZ	AU	FL		B	AC cord (4.0φ2P plug)	ACコードマルチ2P
	FHOG-1022CCZZ	AB	DB		B	Protect sleeve (Hong kong,south africa)	ホゴスリーブ
	QPLGA0001QCZZ	AN	EH		B	AC plug (16A 250V 3pin)	ACプラグ
	QPLGA0002QCZZ	AN	EH		B	AC plug (Saudi arabia)	ACプラグ
	QPLGA0003QCZZ	AN	EA		B	AC plug (Singapore)	ACプラグ
	QPLGA0018WREC	AN	EG		B	AC plug (Hong kong,south africa)	ACプラグ
	QTANP0096FCZZ	AA	DA		B	Terminal (Saudi arabia)	タンシ
88	QCNW-0069FCZZ	AC	DD		C	Earth wire (Japan)	アースワイヤー
89	QPLGN0056FCZZ	AB	DB		C	Terminal (170329-1DE)(100V series)	タンシ
90	QTANP1004UCZZ	AA	DA		C	Terminal (N2-M4)(100V series)	タンシ
91	XBPBZ40P06K00	AA	DA		C	Screw (4×6K)	ビス
92	XBPSD40P08KS0	AA	DA		C	Screw (4×8K,S)	ビス
93	XBPSD40P20XS0	AA	DA		C	Screw (4×20K)	ビス
94	LPLTM3776FCZZ	AN	EH	N	C	PS upper paper guide plate	PSウエペーパーガイドイタ B8
95	MSPRT1793FCZZ	AA	DA	N	C	PS roller spring	PSコーラースプリング B8
96	NROLP0831FCZZ	AD	DG	N	C	PS roller upper	PSローラーウエ B8
97	NSFTZ1599FCZZ	AL	EB	N	C	PS roller shaft	PSローラージク B8
98	XRESP40-05000	AA	DA		C	E type ring	Eリング
99	CPLTM3753FC01	AE	DK	N	C	Transport drive joint plate	ハンソウクドウレンケツイタAS
100	LPINS0075FCZZ	AB	DB		C	Pin (φ3-13)	ヘンコウピン
101	MSPRC1818FCZZ	AA	DA	N	C	Joint spring	レンケツスプリング B8
102	NBRGC0053FCZZ	AD	DH		C	Bearing	ベアリング
103	NGERH0317FCZZ	AC	DE		C	DV gear (18T)	DVギヤー
104	NGERH0457FCZZ	AC	DC		C	DV drive gear R	DVクドウギヤー R
105	NROLR0840FCZZ	AT	FH	N	C	Transport roller S2	ハンソウローラーS2
106	XRESP70-06000	AA	DA		C	E type ring	Eリング
107	DHAI-1883FCZZ	AH	DX	N	C	CD interface harness	(SF-7800) CDチュウケイハーネスS
	DHAI-1882FCZZ	AG	DT	N	C	CD interface harness	(SF-7850) CDチュウケイハーネスW
108	LPLTM3742FCZZ	AG	DU	N	C	Cassette switch fixing plate	(SF-7800) カセットスイッチトリツケイタS
	LPLTM3743FCZZ	AK	DZ	N	C	Cassette switch fixing plate	(SF-7850) カセットスイッチトリツケイタW
109	QSW-M0424FCZZ	AF	DP	N	B	Microswitch	(SF-7800) マイクロスイッチ
	QSW-Z0422FCZZ	AN	EH	N	B	Cassette size switch	(SF-7850) カセットサイズスイッチ
110	XBPSD23P08000	AA	DA		C	Screw (2.3×8)	ビス
112	DHAI-1879FCZZ	AX	FT	N	C	Lower unit harness	(SF-7800) シタUNハーネスS
	DHAI-1878FCZZ	AY	GB	N	C	Lower unit harness	(SF-7850) シタUNハーネスW
113	RTRNP0425FCZZ	BD	GU	N	B	Power transformer (100V)	デンゲントランス
	RTRNP0426FCZZ	BD	GT	N	B	Power transformer (110V)	デンゲントランス
	RTRNP0427FCZZ	BD	GT	N	B	Power transformer (120V)	デンゲントランス
	RTRNP0428FCZZ	BD	GT	N	B	Power transformer (127V)	デンゲントランス
	RTRNP0429FCZZ	BD	GU	N	B	Power transformer (220V)	デンゲントランス
	RTRNP0430FCZZ	BD	GU	N	B	Power transformer (240V)	デンゲントランス
114	XEBSD40P12000	AA	DA		C	Screw (4×12)	ビス
115	MSPRT1242FCZZ	AA	DA		C	Delivery roller upper spring	ハイシローラウエバネ
116	NROLP0510FCZ1	AC	DD		C	Delivery roller (upper)	ハイシローラー (ウエ)
117	PGIDH1276FCZZ	AN	EK	N	C	Delivery paper guide upper	ハイシペーパーガイドウエ B8
118	CSPRB1815FC31	AW	FR	N	E	Blancer spring	バランサーB8
119	LBNDJ0005FCZZ	AB	DB		C	Band	ケッソクバンド
	LHLDW0004SCZZ	AB	DA		C	Wire holder (HP-6N)	ナイロン クランプ
122	CPLTM3778FC01	AN	EK	N	C	AC PWB fixing plate	ACPWBオサイタAS
123	MSPRC1795FCZZ	AB	DC	N	C	TC pressure spring	TCアッチークスプリング
124	NBLTH0171FCZZ	AF	CQ	N	B	184XL belt	184XLベルト B8
126	PCOVP1048FCZZ	AG	DT	N	C	Inter lock switch cover	インタロックスイッチカバー
127	PCOVP1073FCZZ	AD	DG	N	C	Power supply cover	デンゲンカバー
128	TLABZ2848FCZZ	AB	DB	N	C	Arrow label	ヤジルシラベルB8
129	LHLDW1038FCZZ	AA	DA	N	C	Wire holder	ツイストバンド10-4
131	MLEVP0564FCZZ	AB	DB	N	C	PE lever	(SF-7850) PEアクチニーターB8
132	VHPGP1A71A1-1	AG	DT	N	B	Photo transistor (GP1A71A1)	(SF-7850) フォトトランジスター
136	MSPRT1792FCZZ	AA	DA	N	C	Transport roller spring	(SF-7850) ハンソウローラースプリング
137	NROLP0591FCZZ	AA	DA		C	PF-B pressure roller	(SF-7850) PF-Bアッチャクローラー
138	PGIDH1287FCZZ	AN	EK	N	C	U turn lower paper guide	(SF-7850) Uターンシタペーパーガイド W
139	PSHEP2850FCZZ	AE	DK	N	C	U turn guide sheet	(SF-7850) Uターンガイドシート
140	LX-BZ0102FCZZ	AA	DA		C	Screw (4×10)	ビス
141	LX-BZ0495FCZZ	AC	DD		C	Stopper screw	ストッパービス
142	NPLYZ0239FCZZ	AC	DC	N	C	14XL pulley	14XLプーリー B8
144	MSPRT1835FCZZ	AC	DD	N	C	U turn lower PG spring F	(SF-7850) Uターンシタペーパーガイド Wスプリング F
145	TCAUH0819FCZZ	AA	DA		C	High pressure caution label (Japan only)	コウアッチュウイ ラベル
	TCAUH0854FCZZ	AA	DA		C	High pressure caution label (USA,U.Kingdom,Australia)	コウアッチュウイ ラベル
	TCAUH0821FCZZ	AA	DA		C	High pressure caution label (E,F,G,S)	コウアッチュウイ ラベル
146	LX-BZ0377FCZZ	AA	DA		C	Screw	ビス
151	DHAI-1894FCZZ	AP	EN		C	3P terminal harness (200V series)	3Pタンシチュウケイハーネス
152	LBNDJ0033FCZZ	AB	DB		C	Wire band (L=100)(200V series)	ケッソクバンド
153	PCOVP1078FCZZ	AC	DD		C	3P terminal base cover (200V series)	3Pタンシダイ
154	PSHEP2717FCZZ	AC	DD		C	3P terminal sheet (200V series)	3Pタンシダイシート

8 シャーシ(Chassis)

NO.	PARTS_CODE	PRICE RANK Ex	PRICE RANK Ja	NEW MARK	PART RANK	DESCRIPTION	
155	QTANN0015FCZZ	AG	DS		C	3P Terminal (200V series)	3P ターミナル
156	RC-LF0045FCZZ	AN	EH		C	Earth coil (200V series)	アースコイルアッセー
157	XBPSD30P14000	AA	DA		C	Screw (3×14)	ビス
405	CCAS20215FC51	AZ	GD	N	E	TC case unit	TCケースUNIT
413	DUNTW6404FCZZ	BW	TA	N	E	Fusing unit (100V)	ヒューザーユニット 100
	DUNTW6404FC11	BW	TA	N	E	Fusing unit (110V)	ヒューザーユニット 110
	DUNTW6404FC12	BW	TA	N	E	Fusing unit (120V)	ヒューザーユニット 120
	DUNTW6404FC13	BW	TA	N	E	Fusing unit (127V)	ヒューザーユニット 127
	DUNTW6404FC14	BW	TA	N	E	Fusing unit (220V)	ヒューザーユニット 220
	DUNTW6404FC15	BW	TA	N	E	Fusing unit (240V)	ヒューザーユニット 240

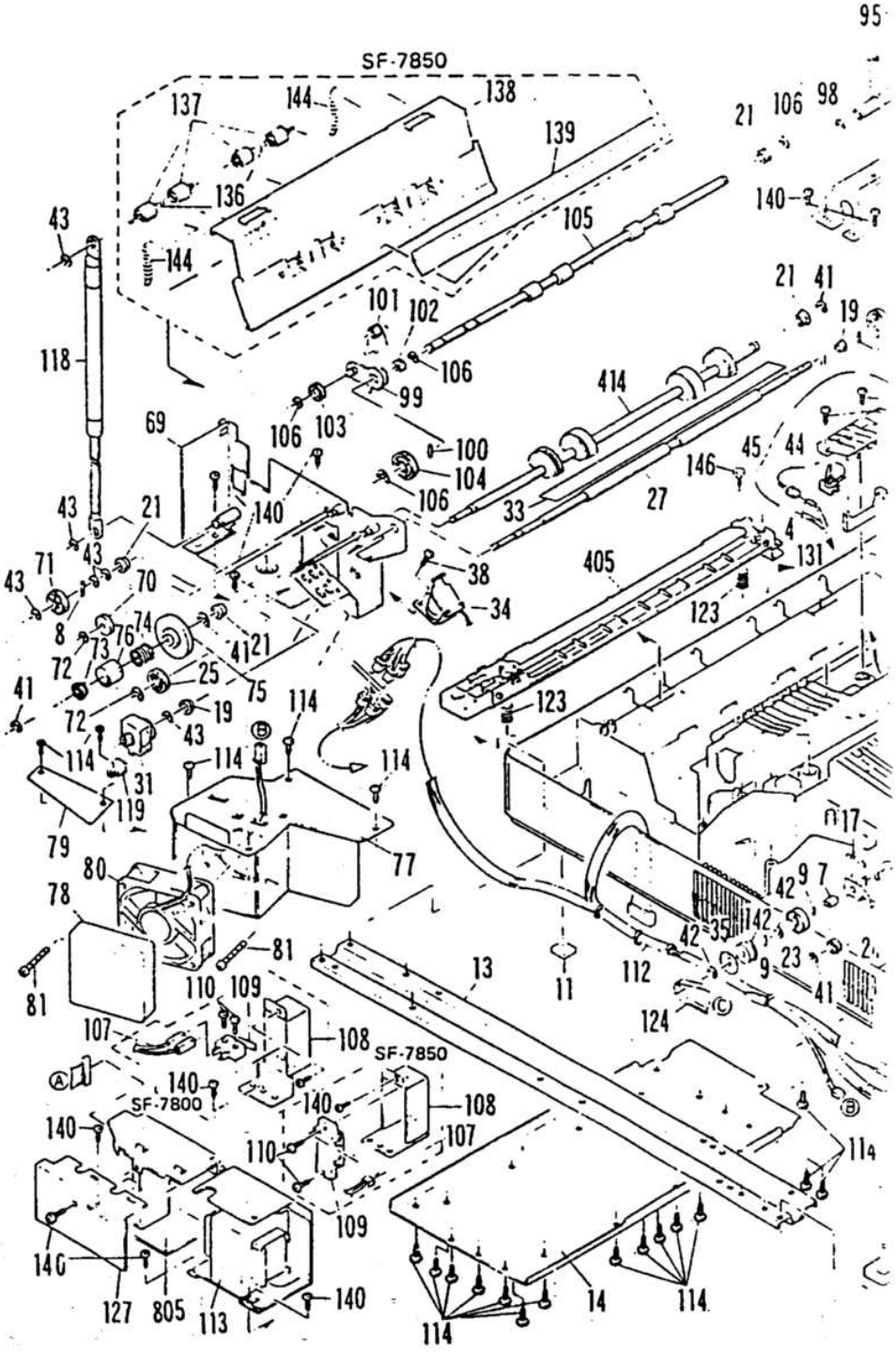

8 シャーシ(Chassis)

NO.	PARTS CODE	PRICE RANK Ex	PRICE RANK Ja	NEW MARK	PART RANK	DESCRIPTION	
414	NROLR0839FCZZ	A	V	F	L	N	C	PF roller S	PFローラーS R8
802	CPWBF0764FC51	B	H	M	P	N	E	AC circuit PWB (100V/110V)	ACカイロキバン100
	CPWBF0764FC52	B	H	M	P	N	E	AC circuit PWB (120V/127V)	ACカイロキバン120
	CPWBF0382FC51	B	N	L	T	N	E	AC circuit PWB (200V series)	ACカイロキバン200
805	CPWBF0753FC31	B	H	M	T	N	E	DC power supply PWB (100V series)	DCデンゲンキバン100
	CPWBF0753FC32	B	H	M	T	N	E	DC power supply PWB (200V series)	DCデンゲンキバン200

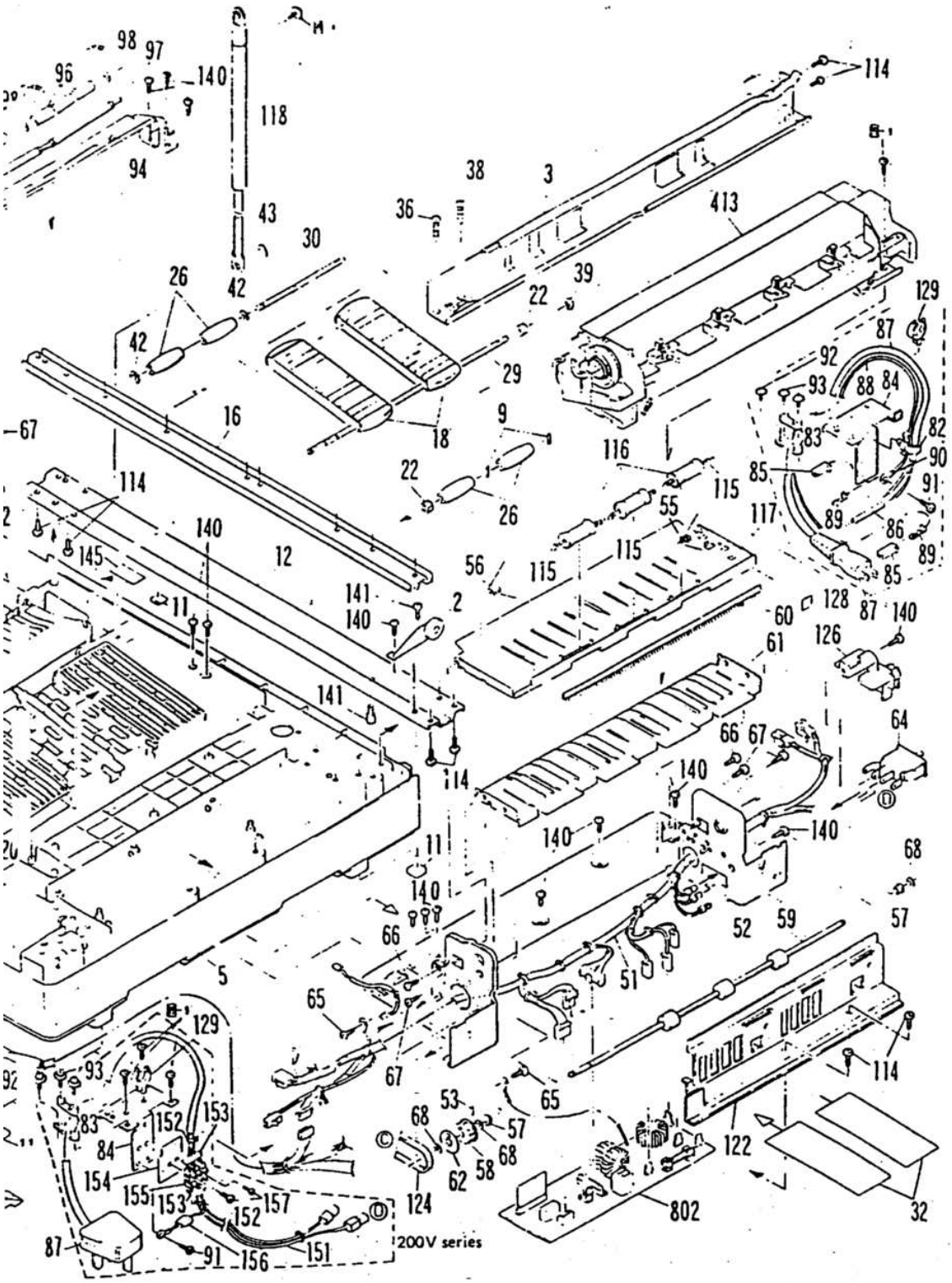

9 上フレーム部(Upper frame)

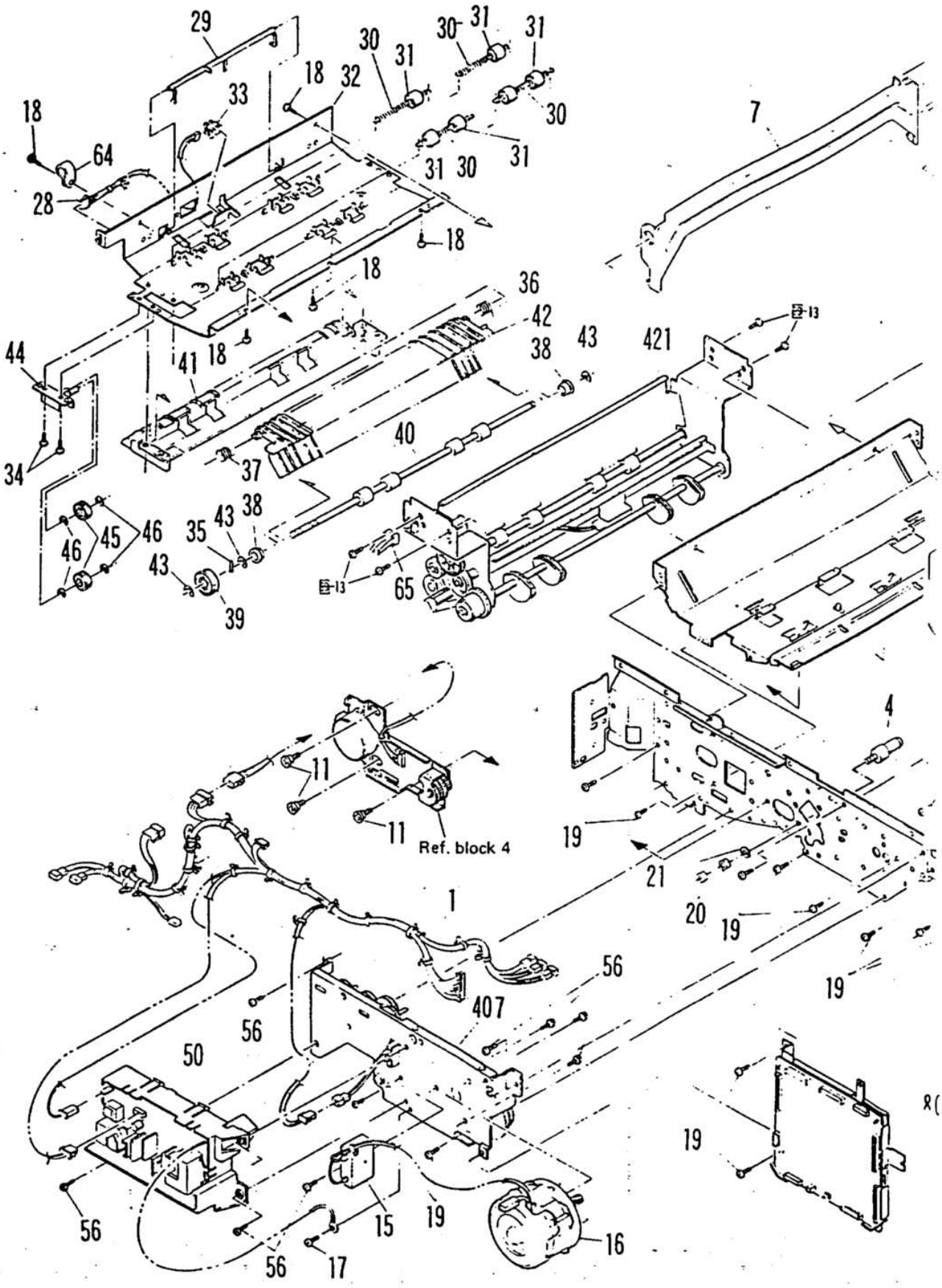

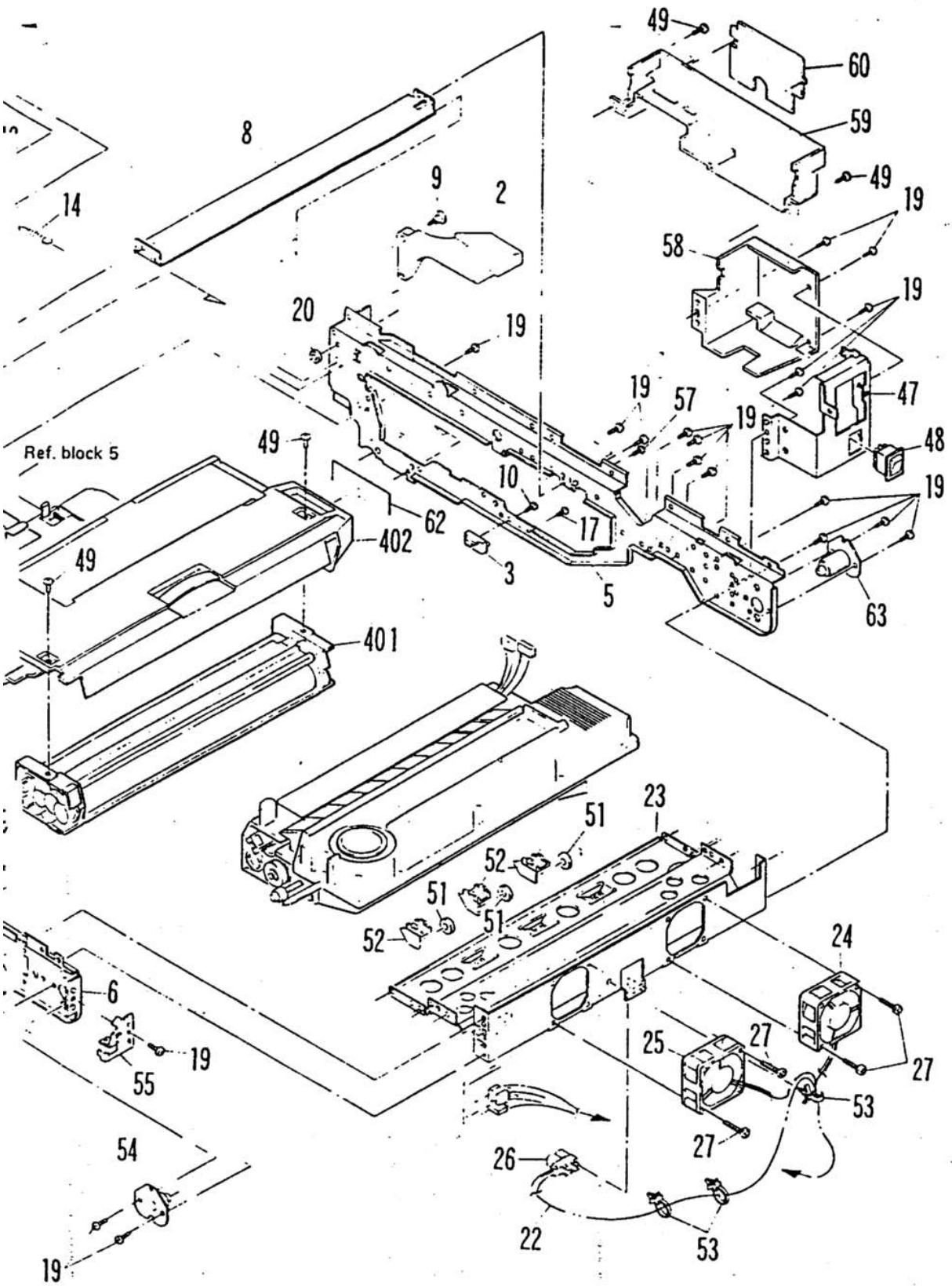
Ref. block 5
49
60
59
49
19
58
19
47
48
19
57
19
8
9
2
14
20
19
10
17
3
5
62
402
401
63
23
51
52
24
6
55
25
27
53
26
22
54

[9] 上フレーム部(Upper frame)

NO.	PARTS CODE	PRICE RANK Ex	PRICE RANK Ja	NEW MARK	PART RANK	DESCRIPTION	
1	DHA1-1876FCZZ	AY	GA	N	C	Main frame harness	(SF-7850) メインフレームハーネスW
	DHA1-1877FCZZ	AX	FW	N	C	Main frame harness	(SF-7800) メインフレームハーネスS
2	JHNCP3133FCZZ	AH	DX	N	C	Lock plate handle	ロックバントッチBX
3	LANGT1320FCZZ	AB	DC	N	C	TC positioning angle	TCイチオメアングル
4	LBOSZ1313FCZZ	AM	EF	N	C	DR boss	DRボス BX
5	LFRM-0584FCZZ	AX	FT	N	C	Upper frame F	ウエフレームF BX
6	LFRM-0585FCZZ	AW	FR	N	C	Upper frame R	ウエフレームR BX
7	LPLTM1714FCZZ	AP	EN	N	C	Lock plate	ロックバン B8
8	LRAIM0033FCZZ	AK	DY	N	C	Process guide rail	プロセスガイドレール
9	LX-BZ0396FCZZ	AB	DB		C	Screw	ブリーヨウ ダンビス
10	LX-BZ0458FCZZ	AA	DA		C	Screw (3×7)	ビス
11	LX-BZ0581FCZZ	AB	DB	N	C	Screw	ビス
12	LX-BZ0593FCZZ	AC	DC	N	C	Screw	ビス
14	MSPRT1796FCZZ	AA	DA	N	C	Lock spring	ロックスプリングB8
15	RC-FZ0322FCZZ	AM	EE	N	B	MMC capacitor (120-127V)	コンデンサーMMC
	RC-FZ0321FCZZ	AN	EH	N	B	MMC capacitor (100-110V)	コンデンサーMMC
	RC-FZ0323FCZZ	AA	ER	N	B	MMC capacitor (220/240V)	コンデンサーMMC
16	RMOTD0612FCZZ	BG	HM	N	B	Main motor (100V)	メインモーター100
	RMOTD0613FCZZ	BG	HM	N	B	Main motor (110V)	メインモーター110
	RMOTD0614FCZZ	BG	HM	N	B	Main motor (120V)	メインモーター120
	RMOTD0615FCZZ	BG	HM	N	B	Main motor (127V)	メインモーター127
	RMOTD0616FCZZ	BH	HR	N	B	Main motor (220V)	メインモーター220
	RMOTD0617FCZZ	BH	HR	N	B	Main motor (240V)	メインモーター240
17	XHPSD40P06000	AA	DA		C	Screw (4×6)	ビス
18	XHBSE40P06000	AA	DA		C	Screw (4×6)	ビス
19	XHBSE40P10000	AA	DA		C	Screw (4×10)	ビス
20	XNESD40-32000	AA	DA		C	Nut	ナット
21	XWSSD40-10000	AA	DA		C	Washer	ワッシー
22	DHA1-1934FCZZ	AG	DS	N	C	POD interface harness	PODチュウケイハーネス
23	LDAIU0424FCZZ	AU	FK	N	C	Fan fixing base	ファントリツケダイ
24	RMOTE0620FCZZ	AW	FS	N	B	VFM 1	VFM1(ハイキファン)
25	RMOTE0620FC11	AW	FS	N	B	VFM 2	VFM2(ハイキファン)
26	VHPGP1S42//-1	AK	DX	N	B	Photo transistor (GP1S42)	フォトトランジスター
27	XHPSD40P30000	AA	DA	N	C	Screw (4×30)	ビス
28	DHA1-1896FCZZ	AF	DQ	N	C	PID interface harness	PIDチュウケイハーネス
29	MLEVP0561FCZZ	AC	DE	N	C	Lever	アクチュニーター B8
30	MSPRT1792FCZZ	AA	DA	N	C	Transport roller spring	ハンソウローラースプリング
31	NROLP0591FCZZ	AA	DA		C	PF-B pressure roller	PF-Bアッチクローラー
32	PGIDH1271FCZZ	AU	FL	N	C	Transport upper paper guide	ハンソウウエペーパーガイド B8
33	VHPGP1A71A1-1	AG	DT	N	B	Photo transistor (GP1A71A1)	フォトトランジスター
34	XHBSE40P10000	AA	DA		C	Screw (4×10)	ビス
35	LPINS0075FCZZ	AB	DB		C	Pin (φ3-13)	ヘンコウピン
36	MSPRC1828FCZZ	AB	DB	N	C	U turn paper guide spring	B8Uターンペーパーガイドスプリング
37	MSPRC1843FCZZ	AB	DB	N	C	U turn paper guide spring R	Uターンペーパーガイドスプリング R
38	NBRGC0133FCZZ	AC	DD		C	Bearing	ベアリング
39	NGERH0457FCZZ	AC	DC		C	DV drive gear R	DVクドウギヤー R
40	NROLR0832FCZZ	AR	EZ	N	C	Transport roller S1	ハンソウローラーS1
41	PGIDH1272FCZZ	AK	DZ	N	C	U turn paper guide P	Uターンペーパーガイド B8
42	PGIDH1284FCZZ	AL	EC	N	C	U turn paper guide P2	Uターンペーパーガイド P2
43	XRESP70-08000	AA	DA		C	E type ring	Eリング
44	CPLTM3734FC01	AH	DV	N	C	Transport drive plate	ハンソウクドウイタ
45	NGERH0317FCZZ	AC	DE		C	DV gear (18T)	DVギヤー
46	XRESP70-08000	AA	DA		C	E type ring	Eリング
47	LPLTM3715FCZZ	AK	EA	N	C	Main switch fixing plate	Mスイッチトリツケイタ
48	QSW-C3971QCZZ	AP	EN		B	Seesaw switch	シーソースイッチ
49	XBTSD40P08000	AA	DA		C	Screw (4×8)	ビス
50	CPWBF0760FC51	BQ	MK	N	E	High voltage PWB	コウアツキバン B8
51	LX-WZ0142FCZZ	AB	DB		C	Washer	ハクリヨウワッシー
52	PTME-0164FCZ1	AB	DB	N	C	Additional separation pawl	ハクリホジョツメ N
53	LBNDJ0043FCZZ	AA	DA		C	Snap band (SG130)	スナップ
54	CBOSZ1309FC01	AL	EB	N	C	Fulcrum boss R	シテンヨウボスRAS
55	LPLTM3716FCZZ	AF	DN	N	C	Left exterior fixing plate R	ヒダリキーピトリツケイタR
56	LX-BZ0180FCZZ	AA	DA		C	Screw	ビス
57	LX-BZ0426FCZZ	AA	DA		C	Screw (M4)(Blue)	ビス
58	PCOVP1047FCZZ	AH	DV	N	C	Main switch cover	メインスイッチカバー
59	PCOVP1049FCZZ	AH	DW	N	C	Process front cover	プロセスマエカバー
60	PFTA-0085FCZZ	AC	DE	N	C	Process front cover	プロセスマエカバーフタ
62	TLABZ2851FCZZ	AB	DB	N	C	Label	Tンキベツラベルクロ
63	CBOSZ1303FC01	AL	EC	N	C	Fulcrum boss F	シテンヨウボスFAS
64	LBNDJ0010FCZZ	AB	DA		C	Wire fixing band	コードバンド
65	DHA1-1885FCZZ	AM	ED	N	C	PF interface harness	(SF-7850) キュウシチュウケイハーネス
401	CBOX-0085FC51	BR	NA	N	E	DV box unit	BOX D UN クロ
402	CBOX-0086FC51	BF	HD	N	E	Toner box unit	BOX-TH UN
407	CFRM-0686FC51	BH	HQ	N	E	Drive frame unit	(50HZ) クドウフレームユニット10050
	CFRM-0686FC52	BH	HQ	N	E	Drive frame unit	(60HZ) クドウフレームユニット10060
421	CFRM-0694FC31	BL	LD	N	C	Paper feeding frame unit	(SF-7850) キュウシフレームユニット

10 回転カセット・・SF-7850専用(Rotaly cassette・・SF-7850 only)

NO.	PARTS CODE	PRICE RANK Ea	PRICE RANK Ja	NEW MARK	PART RANK	DESCRIPTION	
1	GDA1-0153FCZZ	BA	GG	N	D	R base plate	Rダイバン B8
3	LSTYP0179FCZZ	AD	DG	N	C	R rotating plate stoper	Rカイテンバンストッパー B8
4	LX-BZ0137FCZZ	AB	DC		C	Screw	ビス
7	MARMM0138FCZZ	AF	DQ	N	C	T arm N	TアームN B8
8	MLEVT0565FCZZ	AC	DD	N	C	HP-SW lever	HP-SWアクチニータ
9	MSPRC1145FCZZ	AA	DA		C	Stopper spring	ストッパーヨウスプリング
10	MSPRC1807FCZZ	AB	DC	N	C	Base plate spring	ダイバンスプリング B8
13	NSFTZ0622FCZZ	AB	DC		C	UC cassette hold shaft (UC)	UCカイテンシノク
14	NSFTZ1659FCZZ	AB	DC	N	C	Shaft ACC	ACCヨウノク B6
15	PCOVP1060FCZZ	AG	DU	N	C	R base plate cover	Rダイバンカバー
16	PRNGP0023FCZZ	AA	DA		C	Grip ring (GTW-7)	グリップリング
17	PSHEP2756FCZZ	AF	DP	N	C	R base plate sheet	Rダイバンシート
19	XEPSD30P08000	AA	DA		C	Screw (3×8)	ビス
20	XEPSD40P08000	AA	DA		C	Screw (4×8)	ビス
21	XRESP30-04000	AA	DA		C	E type ring	Eリング
25	JKNBP0086FCZ1	AB	DB	N	C	Feeding shaft knob	オクリノクツマミ
26	LANGT1324FCZZ	AD	DF	N	C	Drive shaft angle A	クドウノクアングルA
27	LFIX-0297FCZZ	AB	DC		C	Metal fixing plate	メタルオサエ
28	LX-BZ0193FCZZ	AB	DB		C	Screw (3×4)	ビス
29	LX-WZ0017FCZZ	AA	DA		C	Washer	ワッシー
30	MSPRC1805FCZZ	AC	DC	N	C	Overran spring	オーバーランスプリング
31	NBRGC0254FCZZ	AB	DC		C	Delivery roller bearing	ハインローラーヨウジクウケ
32	NBRGC2019SCZZ	AC	DH		C	Bearing (φ8)	ベアリング
33	NBRGP0417FCZZ	AC	DE	N	C	R feeding shaft bearing	カイテンオクリジクウケ
34	NSFTZ1617FCZZ	AX	FX	N	C	R feeding shaft	カイテンオクリジク
35	PCLR-0259FCZZ	AB	DB		C	Brake collar	ブレーキヨウカラー
36	PCLR-0349FCZZ	AF	DP	N	C	Adjusting collar	チョウセイヨウカラー
37	XRESP70-08000	AA	DA		C	E type ring	Eリング
38	XXXSP30-04000	AA	DA	N	C	Screw (3×4)	ビス
39	XXXSP30-08000	AA	DA	N	C	Screw (3×8)	ビス
40	GDA1-0152FCZZ	BQ	MC	N	D	Base plate W	ダイバンW B8
41	LPLTG3737FCZZ	AB	DB	N	C	Rubber plate	ゴムバン B8
42	LPLTM3780FCZZ	AN	EL	N	C	W base plate supporting plate	WダイバンホキョウイタF
43	LPLTP3840FCZZ	AG	DS	N	C	W cassette rail left	Wカセットレールヒダリ
44	LRALP0091FCZZ	AM	EF	N	C	W cassette rail right	Wカセットレールミギ
45	XEBSD40P12000	AA	DA		C	Screw (4×12)	ビス
46	DHA1-1884FCZZ	AN	EK	N	C	RC harness A	RCハーネスA B8
47	LHLDZ1032FCZZ	AM	EE	N	C	W-drive holder	Wクドウホルダー
48	XBPBZ40P06K00	AA	DA		C	Screw (4×6K)	ビス
49	XHBSD30P10000	AA	DA		C	Screw	ビス
50	NSFTZ1605FCZZ	AD	DF	N	C	W cassette shaft R	Wカセットコロジク R
51	NROLP0813FCZZ	AE	DH	N	C	FU transport roller U	FUハンソウローラーU
52	TLABH2845FCZZ	AC	DD	N	C	R cassette size label A4	Rカセットサイズラベル A4
53	LPLTM3767FCZZ	AF	DP	N	C	Unit lock plate L	ユニットロックバンL
54	LPLTM3766FCZZ	AD	DF	N	C	Unit lock plate R	ユニットロックバンR
55	LX-BZ0586FCZZ	AA	DA	N	C	Screw	ビス
56	TLABH2839FCZZ	AC	DE	N	C	Paper supply label (Japanes)	カミホキュウラベルJ
	TLABH2840FCZZ	AC	DE	N	C	Paper supply label (English)	カミホキュウラベルU
	TLABH2841FCZZ	AC	DE	N	C	Paper supply label (E,F,G,S)	カミホキュウラベルE4
57	TLABH2842FCZZ	AE	DL	N	C	Rotary cassette instruction label (Japanes)	Rカセットセツメイラベル J
	TLABH2843FCZZ	AE	DL	N	C	Rotary cassette instruction label (English)	Rカセットセツメイラベル U
	TLABH2844FCZZ	AE	DL	N	C	Rotary cassette instruction label (E,F,G,S)	Rカセットセツメイラベル E4
58	XBPSD30P08K00	AA	DA		C	Screw (3×8K)	ビス
422	CCASP0152FC31	BP	MB	N	E	Rotary cassette unit (AB series)	Rカセットユニット AB
	CCASP0152FC32	BP	MB	N	E	Rotary cassette unit (Inch series)	Rカセットユニット INCH
423	CFRM-0696FC51	BF	HH	N	E	RM frame unit	RMフレームユニット
425	CPWBF0861FC51	AS	FD	N	E	RC circuit PWB (100V series)	RCカイロバン
	CPWBF0861FC52	AS	FD	N	E	RC circuit PWB (200V series)	RCカイロバン

⑩ 回転カセット・・S F -7850専用(Rotaly cassette・・SF-7850 only)

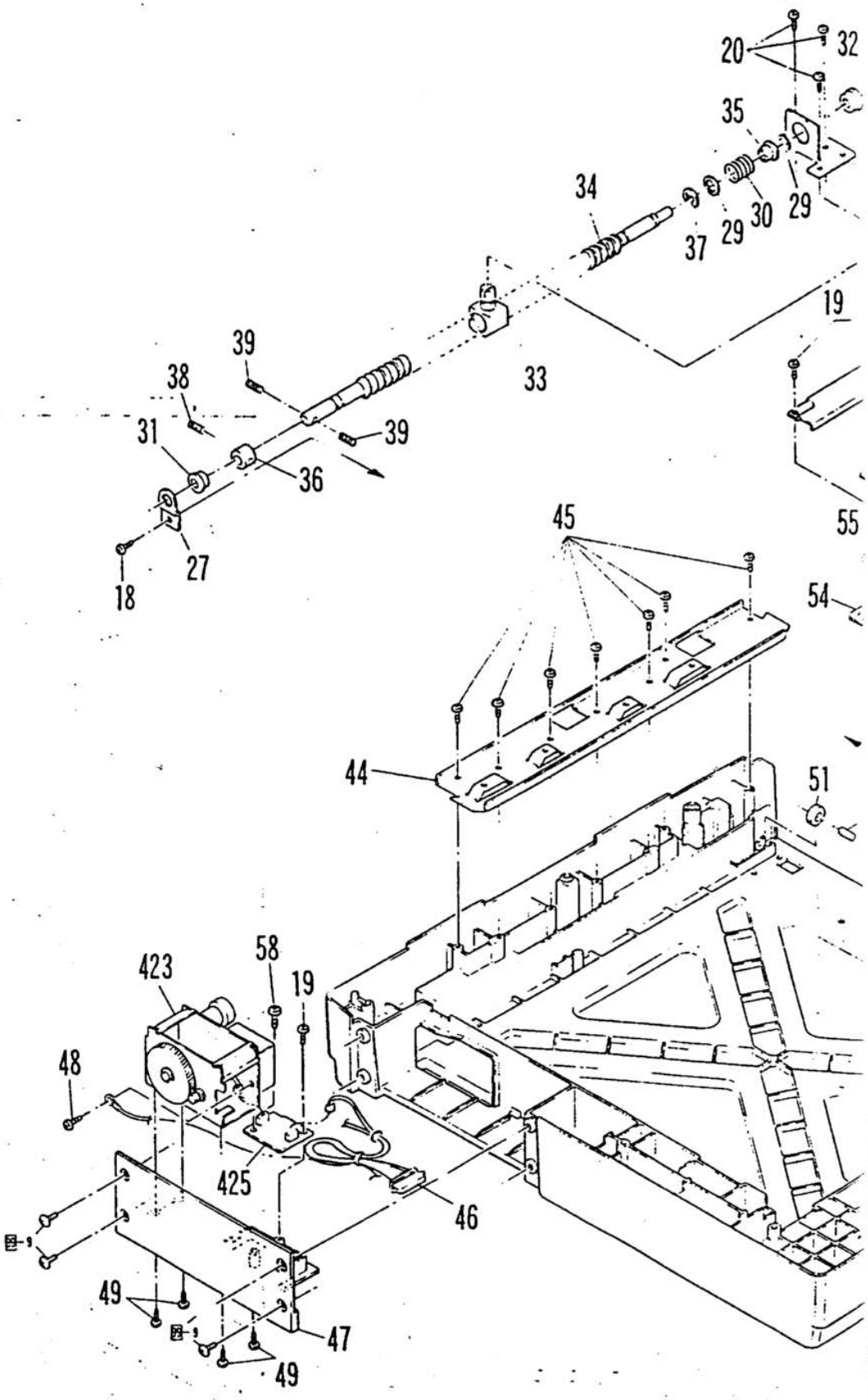

SF7850

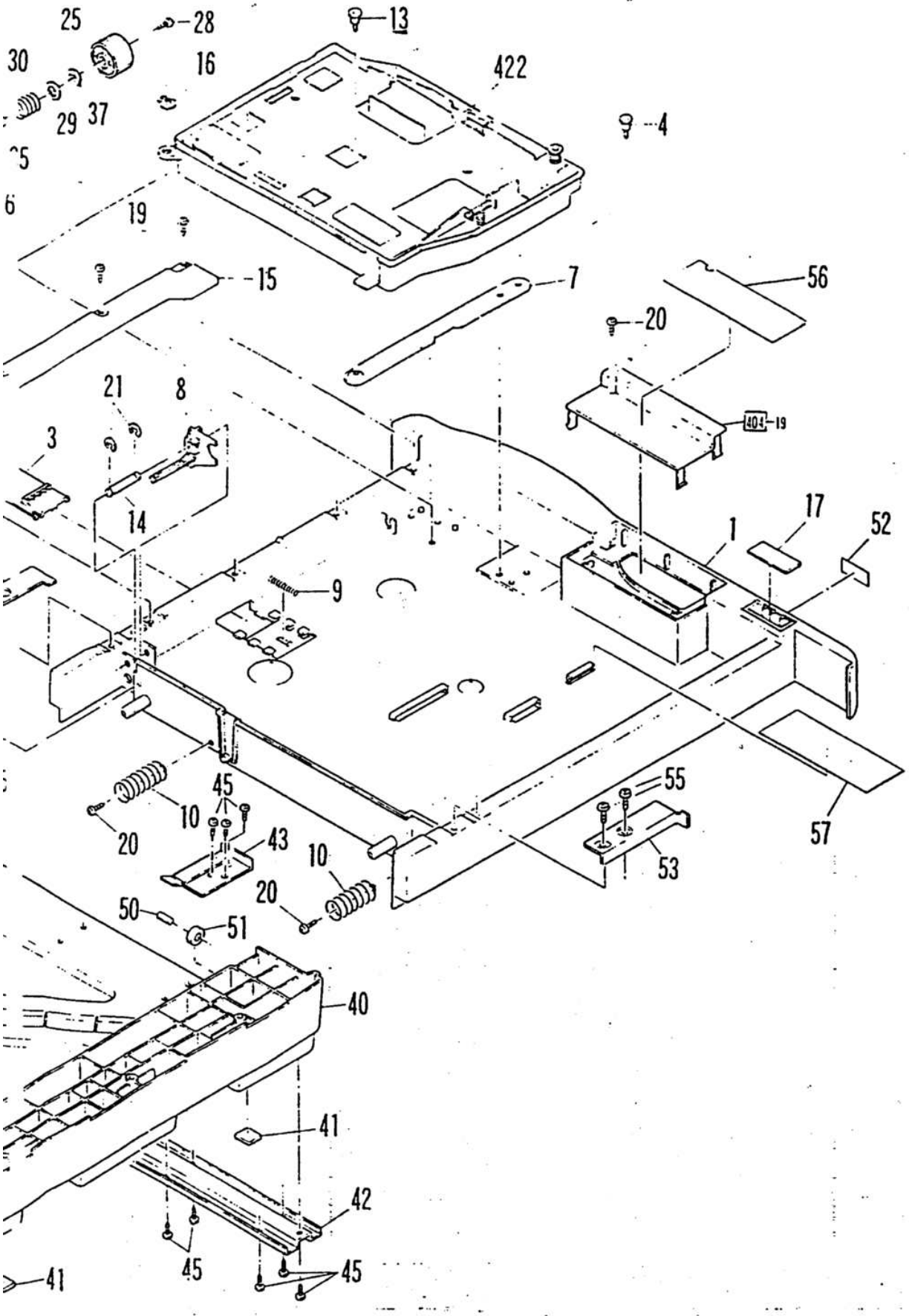
25
28
13
30
16
422
29
37
4
19
15
7
56
20
21
8
404-19
3
14
17
1
52
9
45
10
20
43
55
53
57
10
20
50
51
40
41
42
45
45
41

11 メイン基板ユニット(Main PWB unit)

NO.	PARTS CODE	PRICE RANK Ex	PRICE RANK Ja	NEW MARK	PART RANK	DESCRIPTION	
1	LPLTM3720FCZZ	AK	DZ	N	C	Main PWB fixing plate	メインキバントリツケバン
2	LSUPP0009FCZZ	AB	DB		C	PWB supporter (LCBS-3N)	キバン サポーター
804	CPWBN0761FC3B	BU	NZ	N	E	Main PWB	(SF-7800) H8Sメインキバン
	CPWBN0761FC3A	BU	RG	N	E	Main PWB	(SF-7850) H8Wメインキバン

90 梱包材&付属品(Packing materials)

NO.	PARTS CODE	PRICE RANK Ex	PRICE RANK Ja	NEW MARK	PART RANK	DESCRIPTION	
1	CPAKA4349FC01	AZ	GC	N	D	Bottom case	(SF-7800) ソコケース AS
	CPAKA4349FC02	AZ	GD	N	D	Bottom case	(SF-7850) H8Wソコケース
2	LX-BZ0576FCZZ	AC	DD	N	C	Screw	ビス
3	LX-BZ0579FCZZ	AD	DG	N	C	Screw	ビス
4	LX-BZ0580FCZZ	AC	DD	N	C	Screw	ビス
5	PMLT-0659FCZZ	AB	DB		C	MB fixing cushion	MBコテイキッションA6
6	SPAKA1624FCZZ	AB	DC		D	AC cord sleeve	ACコードスリーブ
7	SPAKA3914FCZZ	AC	DE		D	DV sleeve	(SF-7800) DVスリーブ
8	SPAKA4348FCZZ	AV	FN	N	D	Upper packing cushion	(SF-7800) ウンパッキングクッション
	SPAKA4453FCZZ	AW	FP	N	D	Upper packing cushion	(SF-7850) ウンパッキングクッション
9	SPAKA4352FCZZ	AC	DE	N	D	Cassette protect packing	カセットホゴザイ
10	SPAKC4345FCZZ	AX	FV	N	D	Packing case (Japan only)	(SF-7800) パッキングケース
	SPAKC4346FCZZ	AX	FV	N	D	Packing case (Export)	(SF-7800) パッキングケース
	SPAKC4379FCZZ	AX	FX	N	D	Packing case (Japan only)	(SF-7850) パッキングケース
	SPAKC4380FCZZ	AX	FX	N	D	Packing case (Export)	(SF-7850) パッキングケース
	SPAKC4381FCZZ	AX	FX	N	D	Packing case (Indonesia)	パッキングケース
11	TLABH2646FCZZ	AB	DC		C	Label	ビスカイコンラベル
12	TLABZ0248FCZZ	AB	DB		C	Screw caution label (Japan only)	コテイネジレリーズラベル
	TLABZ0241FCZZ	AB	DB		C	Screw caution label (Export)	コテイネジレリーズラベル
15	CCASZ0067FC02	AM	ED		D	Maintenance case (Japan only)	メンテナンスケース
	CCASZ0067FC01	AD	DH		D	Maintenance case (Export)	メンテナンスケース
16	GCOVZ0195FCZZ	AV	FN	N	D	Dust cover (Japan only)	(SF-7800) ダストカバー H8
	GCOVZ0196FCZZ	AV	FN	N	D	Dust cover (Japan only)	(SF-7850) ダストカバー H8W
17	SSAKA0003FCZZ	AA	DB		D	Vinyl bag (320×470㎜)(SEEG only)	ポリブクロ
	SSAKA0002FCZZ	AA	DA		D	Vinyl bag (300×420㎜)(other countries)	ポリブクロ
18	TCADS0497FCZZ	AH	DV		D	Card (Japan only)	ノウニュウセッチホウコクショ
	TCADS0649FCZZ	AM	EF		D	Card (SEEG only)	ノウニュウセッチホウコクショ
	TCADS0764FCZZ	AE	DJ		D	Card (U.Kingdom only)	ワランティーレジストカード
19	TCADZ0772FCZZ	AE	DJ		D	Card (Japan only)	サービスケイヤクショ
20	TCADZ0893FCZZ	AF	DQ	N	D	Card (Japan only)	セッチテジュンショ
21	TINSJ0874FCZZ	AT	FF	N	D	Operation manual (Japanese)	(SF-7800) トリアツカイセツメイショ
	TINSE0875FCZZ	AR	EZ	N	D	Operation manual (USA)	(SF-7800) トリアツカイセツメイショ
	TINSE0876FCZZ	AS	FB	N	D	Operation manual (English)	(SF-7800) トリアツカイセツメイショ
	TINSE0949FCZZ	AR	EY	N	D	Operation manual (U.Kingdom only)	(SF-7800) トリアツカイセツメイショ
	TINSF0878FCZZ	AU	FJ	N	D	Operation manual (France)	(SF-7800) トリアツカイセツメイショ
	TINSG0879FCZZ	AV	FN	N	D	Operation manual (Germany)	(SF-7800) トリアツカイセツメイショ
	TINSI0877FCZZ	AV	FN	N	D	Operation manual (Italy)	(SF-7800) トリアツカイセツメイショ
	TINSS0880FCZZ	AV	FN	N	D	Operation manual (Spain)	(SF-7800) トリアツカイセツメイショ
	TINSE0882FCZZ	AT	FG	N	D	Operation manual (Indonesia)	(SF-7800) トリアツカイセツメイショ
	TINSJ0898FCZZ	AT	FF	N	D	Operation manual (Japanese)	(SF-7850) トリアツカイセツメイショ
	TINSE0899FCZZ	AN	EG	N	D	Operation manual (USA)	(SF-7850) トリアツカイセツメイショ
	TINSE0900FCZZ	AQ	EV	N	D	Operation manual (English)	(SF-7850) トリアツカイセツメイショ
	TINSE0950FCZZ	AR	EY	N	D	Operation manual (U.Kingdom only)	(SF-7850) トリアツカイセツメイショ
	TINSF0902FCZZ	AR	EY	N	D	Operation manual (France)	(SF-7850) トリアツカイセツメイショ
	TINSG0903FCZZ	AT	FG	N	D	Operation manual (Germany)	(SF-7850) トリアツカイセツメイショ
	TINSI0901FCZZ	AT	FG	N	D	Operation manual (Italy)	(SF-7850) トリアツカイセツメイショ
	TINSS0904FCZZ	AT	FG	N	D	Operation manual (Spain)	(SF-7850) トリアツカイセツメイショ
	TINSZ0581FCZZ	BL	LB	N	D	Operation manual (Arabic)	(SF-7800) トリアツカイセツメイショ
	TINSZ0905FCZZ	AY	GA	N	D	Operation manual (Arabic)	(SF-7850) トリアツカイセツメイショ
	TINSE0906FCZZ	AT	FG	N	D	Operation manual (Indonesia)	(SF-7850) トリアツカイセツメイショ
22	TLSTS1015CCZZ	AA	DA		D	Service list (Japan only)	サービスリストSSS
23	TLABH2122FCZZ	AB	DB		C	Drum caution label (Japan only)	ドラムカイコンチュウイラベル
	TLABH2123FCZZ	AB	DB		C	Drum caution label (Export･･Except U.Kingdom,SEEG)	ドラムカイコンチュウイラベル
24	XEPSD40P10000	AA	DA	N	C	Screw (4×10)	ビス
25	TCADZ0894FCZZ	AD	DF	N	D	Tag card (SEEG only)	(SF-7800) タグカード H8S
	TCADZ0895FCZZ	AD	DF	N	D	Tag card (SEEG only)	(SF-7850) タグカード H8S
26	SPAKA4511FCZZ	AC	DD	N	D	Cassette packing cushion	(SF-7800) カセットホキョウザイ
27	SPAKA4393FCZZ	AD	DF	N	D	Original detect fixing packing	(SF-7850) オンコウケンチコテイザイ
28	LX-BZ0602FCZZ	AA	DA	N	C	Screw	(SF-7850) ビス
29	LX-WZ0235FCZZ	AA	DA		C	Washer	(SF-7850) ワッシャー
30	TLABH2846FCZZ	AC	DD	N	C	Rotary cassette size label (B5)(Japan only)	(SF-7850) Kカセットサイズラベル H5
	TLABH2847FCZZ	AC	DD	N	C	Rotary cassette size label (LT-R)(Inch series)	(SF-7850) Kカセットサイズラベル LT-K

99 ビス・ナット・ワッシャ(Hardware parts)

NO.	PARTS CODE	PRICE RANK Ex	PRICE RANK Ja	NEW MARK	PART RANK	DESCRIPTION	
1	XBPSD40P06K00	AA	DA		C	Screw (4×6K)	ビス
2	XBPSD40P08KS0	AA	DA		C	Screw (4×6KS)	ビス
3	XBPSD40P12000	AA	DA		C	Screw (4×12)	ビス
4	XBPSD40P30000	AA	DA		C	Screw (4×30)	ビス
5	XBSSF30P10000	AA	DA		C	Screw (3×10)	ビス
6	XBTSF40P06000	AA	DA		C	Screw (4×6)	ビス

401 DVユニット(DV unit)

NO.	PARTS CODE	PRICE RANK Ex	PRICE RANK Ja	NEW MARK	PART RANK	DESCRIPTION	
1	CBOX-0035FC01	AW	FQ	N	C	DV box	BOX D V5 B8
2	DHA:-1388FCZZ	AM	EG	N	C	DV harness	DV ハーネス B8 ア
3	LHLDZ1025FCZZ	AB	DB	N	C	Holder M	ホルダーM B8
4	LPLTM2430FCZZ	AC	DD		C	Magnet adjusting plate	MG キャラクティング
5	LPLTM2723FCZZ	AR	EX	N	C	Plate D	プレート D
6	LPLTM2725FCZZ	AC	DD	N	C	Plate MFE	プレート MFE
7	NBRGC0136FCZZ	AC	DD		B	Toner box bearing (φ6)	トナーボックスベアリング
8	NGERH0750FCZZ	AC	DD	N	C	Gear DV1	ギヤDV1 B8
9	NGERH0751FCZZ	AC	DD	N	C	Gear DV2	ギヤDV2 B8
10	NGERH0752FCZZ	AC	DC	N	C	Gear DV3	ギヤDV3 B8
11	NGERH0753FCZZ	AA	DA	N	C	Gear DVA	ギヤDVA B8
12	NROLM0847FCZZ	BB	GM	N	C	MAG roller	MAGローラー B8
13	NROLP0844FCZZ	AM	EG	N	C	Roller MXA	ローラーMXA B8
14	NROLP0845FCZZ	AM	EG	N	C	Roller MXB	ローラーMXB B8
15	PCLR-0345FCZZ	AF	DP	N	C	D collar	Dカラー B8
16	PRNGP0015FCZZ	AK	DY		C	V ring (φ6)	Vリング
17	PSEL-0430FCZZ	AB	DB	N	C	Seal DVA	シールDVA B8
18	PSEL-0431FCZZ	AA	DA	N	C	Seal DVB	シールDVB B8
19	PSEL-0434FCZZ	AC	DD	N	C	Seal DEF	シールDEF B8
20	PSEL-0435FCZZ	AC	DD	N	C	Seal DER	シールDER B8
21	PSHEP2713FCZZ	AC	DC	N	C	Sheet TB	シートTB B8
22	RDTCT0089FCZZ	AW	FT	N	B	Toner sensor	トナーセンサー B8
23	XBBSD30P18000	AA	DA		C	Screw (3×18)	ビス
24	XBPSD30P08KS0	AA	DA		C	Screw (3×8KS)	ビス
25	XEBSF30P10000	AA	DA		C	Screw (3×10)	ビス
27	XRESP40-06000	AA	DA		C	E type ring	Eリング(4MM)
28	XUBUZ30P06000	AA	DA		C	Screw (3×6)	ビス
29	PSEL-0443FCZZ	AA	DA	N	C	Seal MF	B8 シールMF

402 トナーボックスユニット(Toner box unit)

NO.	PARTS CODE	PRICE RANK Ex	PRICE RANK Ja	NEW MARK	PART RANK	DESCRIPTION	
1	LPINS0089FCZZ	AA	DA		C	Spring pin	スプリングピン
2	MARMP0120FCZZ	AE	DL		C	Toner transport arm	トナーハンソウアーム
3	MARMP0139FCZZ	AE	DM	N	C	Arm TA	アームTA B8
4	MSPRT1640FCZZ	AC	DC		C	Toner stirring spring A	トナーカクハン スプリングA
5	NBRGP0299FCZZ	AC	DE		B	DV bearing	DVジクウケ
6	NGERH0314FCZZ	AC	DD		C	Toner transport gear (16T)	トナーハンソウギヤー
7	NGERH0623FCZZ	AB	DC		C	Stirring gear	カクハンギヤ
8	NGERH0626FCZZ	AC	DC		C	Toner drive gear (16T)	TクドウギヤT16T
9	NROLS0848FCZZ	AP	EP	N	C	Toner roller	トナーローラー B8
10	NSFTZ1627FCZZ	AG	DR	N	C	Shaft TA	シャフトTA B8
11	NSFTZ1628FCZZ	AF	DP	N	C	Shaft TB	シャフトTB B8
12	PBOX-0086FCZZ	AN	EK	N	C	Box TH	BOX-TH B8
13	PMLT-0836FCZZ	AB	DB	N	C	Cushion TD	モルトTD B8
14	PSEL-0432FCZZ	AA	DA	N	C	Seal THA	シールTHA B8
15	PSEL-0433FCZZ	AB	DC	N	C	Seal THB	シールTHB B8
16	XEBSD40P08000	AA	DA	N	C	Screw (4×8)	ビス
17	XEBSF30P08000	AA	DA		C	Screw (3×8)	ビス
18	XRESP40-06000	AA	DA		C	E type ring	Eリング(4MM)
19	XWHSD30-05080	AA	DA		C	Washer	ワッシャ
20	JHNDP0103FCZZ	AE	DJ	N	C	DV handle	DVハンドル B8
21	LSTPP0256FCZZ	AB	DC	N	C	Stopper T	ストッパーT B8
22	LX-WZ0064FCZZ	AA	DA		C	Push nut (φ3)	プッシュナット
23	LX-WZ0225FCZZ	AA	DA		C	Washer (φ5-φ16)	ワッシャ
24	MSPRT1813FCZZ	AA	DA	N	C	Spring T	スプリングT B8
25	PCOVP1062FCZZ	AM	EG	N	C	Cover TA	カバーTA B8
26	PMLT-0834FCZZ	AB	DB	N	C	Cushion TB	モルトTB B8
27	PMLT-0835FCZZ	AA	DA	N	C	Cushion TC	モルトTC B8
28	PMLT-0836FCZZ	AB	DB	N	C	Cushion TD	モルトTD B8
29	PRNGP0025FCZZ	AA	DA		C	Ring (GTW-5)	リング
30	PSHEP2712FCZZ	AA	DA	N	C	Sheet TA	シートTA B8
31	PSHEP2743FCZZ	AC	DD	N	C	Sheet AT	B8 シートAT
32	PSHEZ2744FCZZ	AB	DB	N	C	Sheet TA1	B8 シートTA1
33	PSHEZ2745FCZZ	AA	DA	N	C	Sheet TA2	B8 シートTA2
34	PSHEZ2746FCZZ	AC	DC	N	C	Sheet TA3	B8 シートTA3
35	UCLEZ0110FCZZ	AE	DL	N	C	Blade TD	ブレードTD B8
36	XUBSD30P05000	AA	DA	N	C	Screw (3×5)	ビス
37	PCOVP1063FCZZ	AG	DS	N	C	Cover TB	カバーTB B8
38	PSHEP2747FCZZ	AE	DL	N	C	Sheet BT	B8 シートBT
39	PSEL-0446FCZZ	AA	DA	N	C	Seal T1	シールT1
40	PSEL-0447FCZZ	AA	DA	N	C	Seal T2	シールT2

403 前キャビネットユニット(Front exterior)

NO.	PARTS CODE	PRICE RANK Ex	PRICE RANK Ja	NEW MARK	PART RANK	DESCRIPTION	
1	TLABH2802FCZZ	AE	DK	N	C	Label (Japan only)	(SF-7800) B8Sホシュテンケンラベル J
	TLABH2803FCZZ	AE	DK	N	C	Label (USA only)	(SF-7800) ホシュテンケンラベルSEC
	TLABH2804FCZZ	AE	DK	N	C	Label (U.Kingdom,Australia)	(SF-7800) B8Sホシュテンケンラベル U
	TLABH2805FCZZ	AE	DK	N	C	Label (E,F,G,S)	(SF-7800) B8Sホシュテンケンラベル(

403 前キャビネットユニット(Front exterior)

NO.	PARTS CODE	PRICE RANK Ex	PRICE RANK Ja	NEW MARK	PART RANK	DESCRIPTION	
1	TLABH2806FCZZ	AE	DK	N	C	Label (Japan only)	(SF-7850) HdWポシェテンケンラベルJ
	TLABH2807FCZZ	AE	DM	N	C	Label (USA only)	(SF-7850) HdWポシェテンケンラベルSEC
	TLABH2808FCZZ	AE	DK	N	C	Label (U Kingdom Australia)	(SF-7850) HdWポシェテンケンラベルU
	TLABH2809FCZZ	AE	DK	N	C	Label (E F G S)	(SF-7850) HdWポシェテンケンラベル4

402 トナーボックスユニット(Toner box unit)

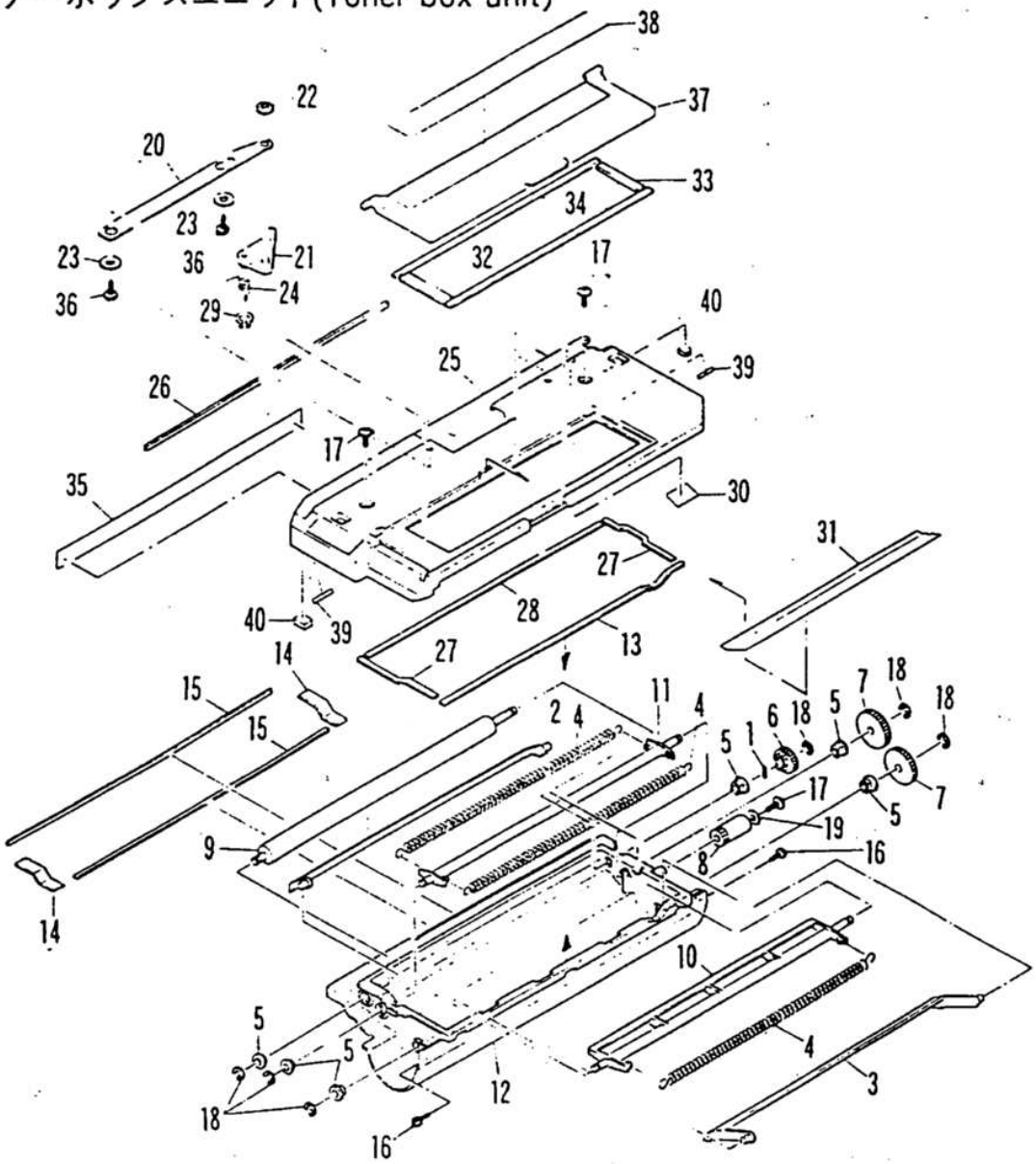

403 前キャビネットユニット(Front exterior)

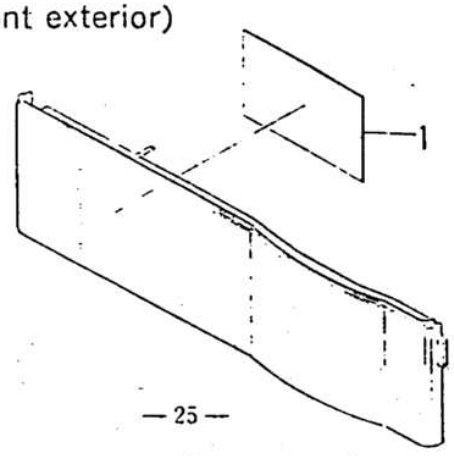

404 250カセット(Cassette unit)

NO.	PARTS CODE	PRICE RANK Ex	PRICE RANK Ja	NEW MARK	PART RANK	DESCRIPTION	
1	GCASP0151FCZZ	AZ	GD	N	D	250 cassette	250カセットホンタイ
2	JKNBZ0117FCZZ	AB	DC	N	C	Side plate ST knob	ソクバンSTツマミ
3	LDA:U0427FCZZ	AD	DF	N	C	Cassette SP base	カセットSPダイB8
4	LPLTM3755FCZZ	AR	EX	N	C	Turning plate	カイテンバン B8
5	LPLTP3756FCZZ	AG	DU	N	C	Side plate F	ソクバンF B8
6	LPLTP3757FCZZ	AG	DU	N	C	Side plate R	ソクバンR B8
7	LPLTP3760FCZZ	AD	DF	N	C	Rear plate	コウタンバン B8
8	LSTPP0161FCZZ	AB	DC		C	Turning plate stopper	カイテンイタ ストッパー
9	LSTPP0255FCZZ	AB	DC	N	C	Side plate ST stopper	ソクバンST B8
10	LX-WZ2028SCZZ	AA	DA		C	Washer	ワッシー
11	MSPRC1145FCZZ	AA	DA		C	Stopper spring	ストッパーヨウ スプリング
12	MSPRC1801FCZZ	AC	DD	N	C	Cassette spring S	カセットスプリング S
13	MSPRC1803FCZZ	AA	DA	N	C	Switch spring (SF-7800)	スイッチスプリング B8
14	MSPRC1804FCZZ	AA	DA	N	C	Side plate ST spring	ソクバンST スプリング
15	NGERH0193FCZZ	AB	DC		C	UC manual feed gear	UCキサンギヤー
16	NGERR0747FCZZ	AE	DJ	N	C	Cassette gear R	カセットラックR B8
17	NGERR0748FCZZ	AD	DH	N	C	Cassette gear L	カセットラックL B8
18	PCLR-0259FCZZ	AB	DB		C	Brake collar	ブレーキヨウカラー
19	PCOVP1059FCZZ	AG	DS	N	C	Lock cover	ロックカバー B8
20	PCOVP1066FCZZ	AF	DQ	N	C	Size display cover	サイズヒョウジカバー
21	PSHEZ2313FCZZ	AB	DB		C	Cassette sheet	カセットシート
22	PSHEZ2708FCZZ	AD	DH	N	C	Turning plate sheet S	カイテンバンシートS
23	PSHEZ2723FCZZ	AG	DS	N	C	Size display sheet (Japan only)	サイズヒョウジシートJ
	PSHEZ2705FCZZ	AG	DS	N	C	Size display sheet (AB series)	サイズヒョウジシートAB
	PSHEZ2706FCZZ	AG	DS	N	C	Size display sheet (Inch series)	サイズヒョウジシートIN
24	PTME-0206FCZZ	AG	DS	N	C	Cassette pawl F	カセットツメF B8
25	PTME-0207FCZZ	AE	DL	N	C	Cassette pawl R	カセットツメR B8
26	XEPSD30P08000	AA	DA		C	Screw (3×8)	ビス
27	XEPSD40P08000	AA	DA		C	Screw (4×8)	ビス
28	TLABZ2253FCWZ	AB	DB		C	Label W	シジョウラベル W
29	LX-BZ0586FCZZ	AA	DA	N	C	Screw (SF-7850)	ビス
30	LX-WZ0086FCZZ	AA	DA		C	Washer (SF-7850)	ワッシー
31	MARMP0136FCZZ	AF	DP	N	C	Size detect arm (SF-7850)	サイズケンチアーム
32	LPLTP3758FCZZ	AF	DN	N	C	Size detect plate (AB series) (SF-7850)	サイズケンチイタAB
	LPLTP3759FCZZ	AF	DN	N	C	Size detect plate (Inch series) (SF-7850)	サイズケンチイタINCH

405 TCケースユニット(TC charger unit)

NO.	PARTS CODE	PRICE RANK Ex	PRICE RANK Ja	NEW MARK	PART RANK	DESCRIPTION	
1	DWIR-0466CSZZ	BG	GZ		C	Wire	チャージーセン
2	LFRM-0690FCZZ	AH	DU	N	C	Holder frame	ホルダーフレームB8
3	LHLDZ1030FCZZ	AF	DQ	N	C	Discharge holder	ジョデンホルダー
4	LPLTM3748FCZZ	AH	DX	N	C	Discharge plate	ジョデンバンB8
5	LPLTM3749FCZZ	AC	DC	N	C	TC fixing plate	TCトリツケバンB8
6	LPLTM3750FCZZ	AC	DC	N	C	Discharge fixing plate	ジョデントリツケイタ
7	MSPRT1395FCZZ	AA	DA		C	Spring M	スプリング M
9	PCASZ0215FCZZ	AM	EF	N	C	TC case	TCケース B8
11	PCOVP1053FCZZ	AB	DB	N	C	Holder cover R	ホルダーカバーR
13	PGIDH1274FCZZ	AG	DS	N	C	Paper guide TC	ペーパーガイドTC B8
15	PSHEP2701FCZZ	AC	DD	N	C	TC sheet upper	TCマイラーウエ B8
16	PSHEP2702FCZZ	AC	DD	N	C	TC sheet lower	TCマイラーシタ B8
17	XEBSD30P07000	AA	DA	N	C	Screw (3×7)	ビス
18	XHBSD30P06000	AA	DA		C	Screw (3×6)	ビス

04 250カセット(Cassette unit)

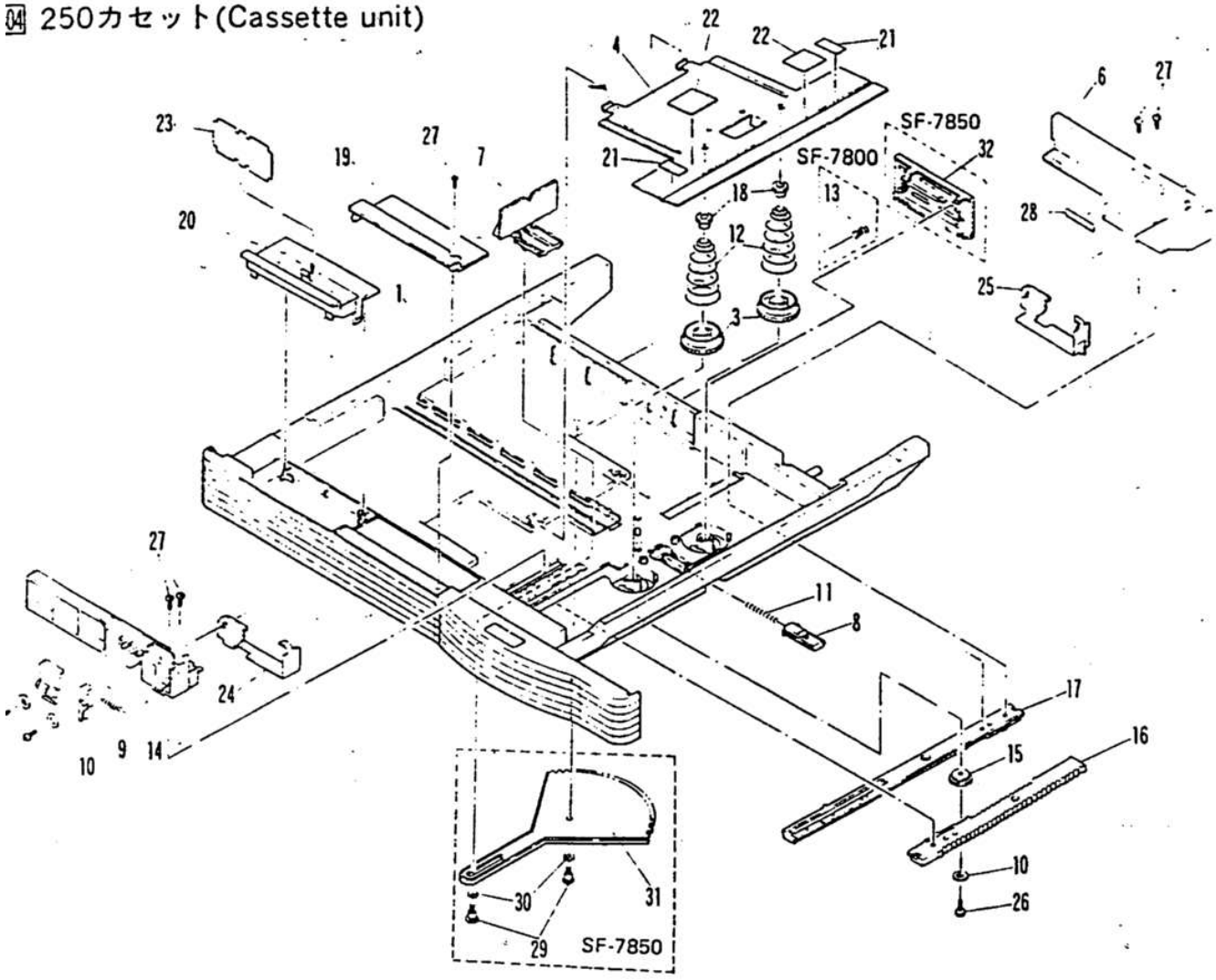

5 TCケースユニット(TC charger unit)

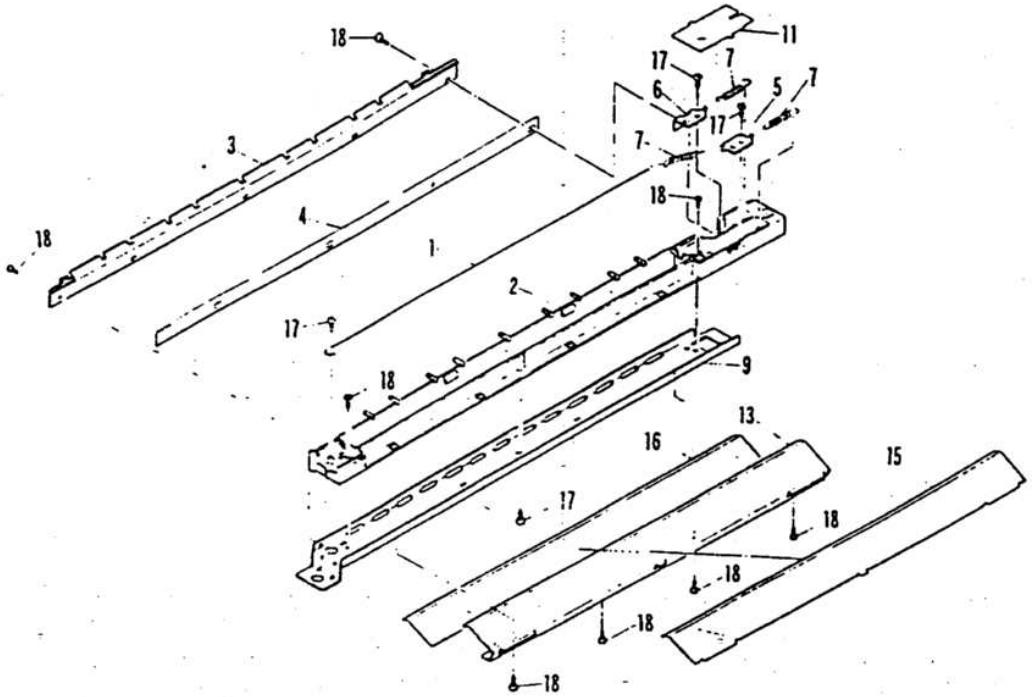

406 MCケースユニット(MC charger unit)

NO.	PARTS CODE	PRICE RANK Ex	PRICE RANK Ja	NEW MARK	PART RANK	DESCRIPTION	
1	DWIR-0466CSZZ	BG	GZ		C	Wire	チャージーワイヤ
2	LPLTM3771FCZZ	AL	EC	N	C	SCOROTRON plate	スコロトロン FB30
3	MSPRT0513FCZZ	AA	DB		B	MC tension spring	MC テンションバネ
4	PFTA-0085FCZZ	AB	DC	N	C	MC holder cover	MC ホルダーヨウカバー
5	PSHEP2222FCZZ	AC	DD	N	C	MC case sheet	MC ケースヨウシート
6	QSLP-0143FCZZ	AD	DG	N	C	MC electrode	MC デンキョクバネ B5
7	QSLP-0144FCZZ	AC	DE	N	C	Electrode	スコロトロン デンキョク
8	XBPBZ30P06000	AA	DA		C	Screw (3×6)	ビス

407 駆動フレームユニット(Drive frame unit)

NO.	PARTS CODE	PRICE RANK Ex	PRICE RANK Ja	NEW MARK	PART RANK	DESCRIPTION	
1	CARMM0135FC01	AG	DR	N	C	Arm 1ST	1STヨウアームAS
2	CFRM-0686FC01	AX	FY	N	C	Drive frame A	ドウフレーム A
3	CGERH0267FC01	AF	DP		C	DV joint gear (19T)	DV レンケツギー
4	CGERH0517FC01	AE	DL	N	C	Gear (30/16T)	ギヤー
5	CGERH0736FC01	AE	DL	N	C	Gear (50/20T)	(50HZ) ギヤ50/20AS
	CGERH0735FC01	AE	DL	N	C	Gear (60/20T)	(60HZ) ギヤ60/20AS
6	DHAI-1898FCZZ	AD	DF	N	C	TFD interface harness	TFDナイワイハーネス
7	LHLDW1038FCZZ	AA	DA	N	C	Wire holder	ツイストバンド10-4
8	LX-WZ0278FCZZ	AA	DA	N	C	Washer	ワッシー
9	MSPRC1794FCZZ	AA	DA	N	C	Spring for 36T	36Tヨウスプリング B8
10	NBRGM1040HCZZ	AC	DE		C	Bearing	プラテン ベアリング
11	NGERH0118FCZZ	AC	DD		C	Idle gear	アイドルギヤー
12	NGERH0183FCZZ	AC	DC		C	24T toner transport gear	トナーハンソウギヤー24T
13	NGERH0349FCZZ	AC	DC		C	CL gear (28T)	CL ギヤー
14	NGERH0457FCZZ	AC	DC		C	DV drive gear R	DVクドウギヤー R
15	NGERH0458FCZZ	AC	DE		C	Gear (20/35T)	20/35Tギヤー
16	NGERH0495FCZZ	AC	DD		C	Gear (20T)	ギヤー
17	NGERH0737FCZZ	AD	DF	N	C	Gear (72/28T)	ギヤ72/28
18	NGERH0738FCZZ	AD	DF	N	C	Gear (55T)	ギヤ55T
19	NGERH0739FCZZ	AB	DC	N	C	Gear (27T)	ギヤ27T
20	NGERH0741FCZZ	AD	DG	N	C	Gear (74/40T)	ギヤ74/40
21	NGERH0742FCZZ	AB	DC	N	C	Gear (36T)	ギヤ36T
22	NGERH0743FCZZ	AE	DK	N	C	Gear (40/37T)	ギヤ40/37
23	NGERH0744FCZZ	AC	DD	N	C	Gear (29/18T)	ギヤ29/18
24	QSW-M0431FCZZ	AF	DQ	N	B	Microswitch	マイクロスイッチ
25	RPLU-0266FCZZ	AL	EC	N	B	Separate pawl solenoid	ハクリツメソレノイド
27	XBPSD40P06K00	AA	DA		C	Screw (4×6K)	ビス
28	XHBSE40P10000	AA	DA		C	Screw (4×10)	ビス
29	XHPSD23P10000	AA	DA	N	C	Screw (2.3×10)	ビス
30	XRESP40-05000	AA	DA		C	E type ring	Eリング
31	XRESP50-06000	AA	DA		C	E type ring	Eリング
32	XRESP70-08000	AA	DA		C	E type ring	Eリング
33	LPINS0155FCZZ	AA	DA		C	Pin (φ3×10)	ヘイコウピン
34	NBRGM1040HCZZ	AC	DE		C	Bearing	プラテン ベアリング
35	NGERH0740FCZZ	AB	DC	N	C	Gear (20T)	ギヤ20T
36	NSFTD1601FCZZ	AH	DV	N	C	Drum drive shaft	ドラムクドウジク
37	XRESP50-06000	AA	DA		C	E type ring	Eリング

406 MCケースユニット(MC charger unit)

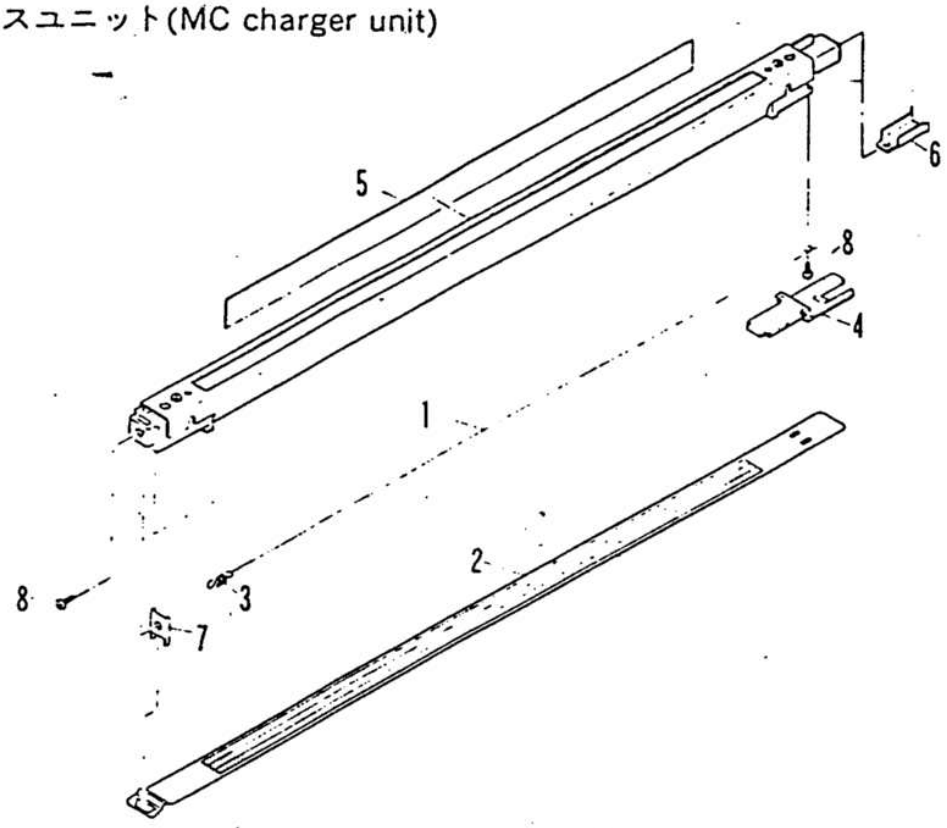

407 駆動フレームユニット(Drive frame unit)

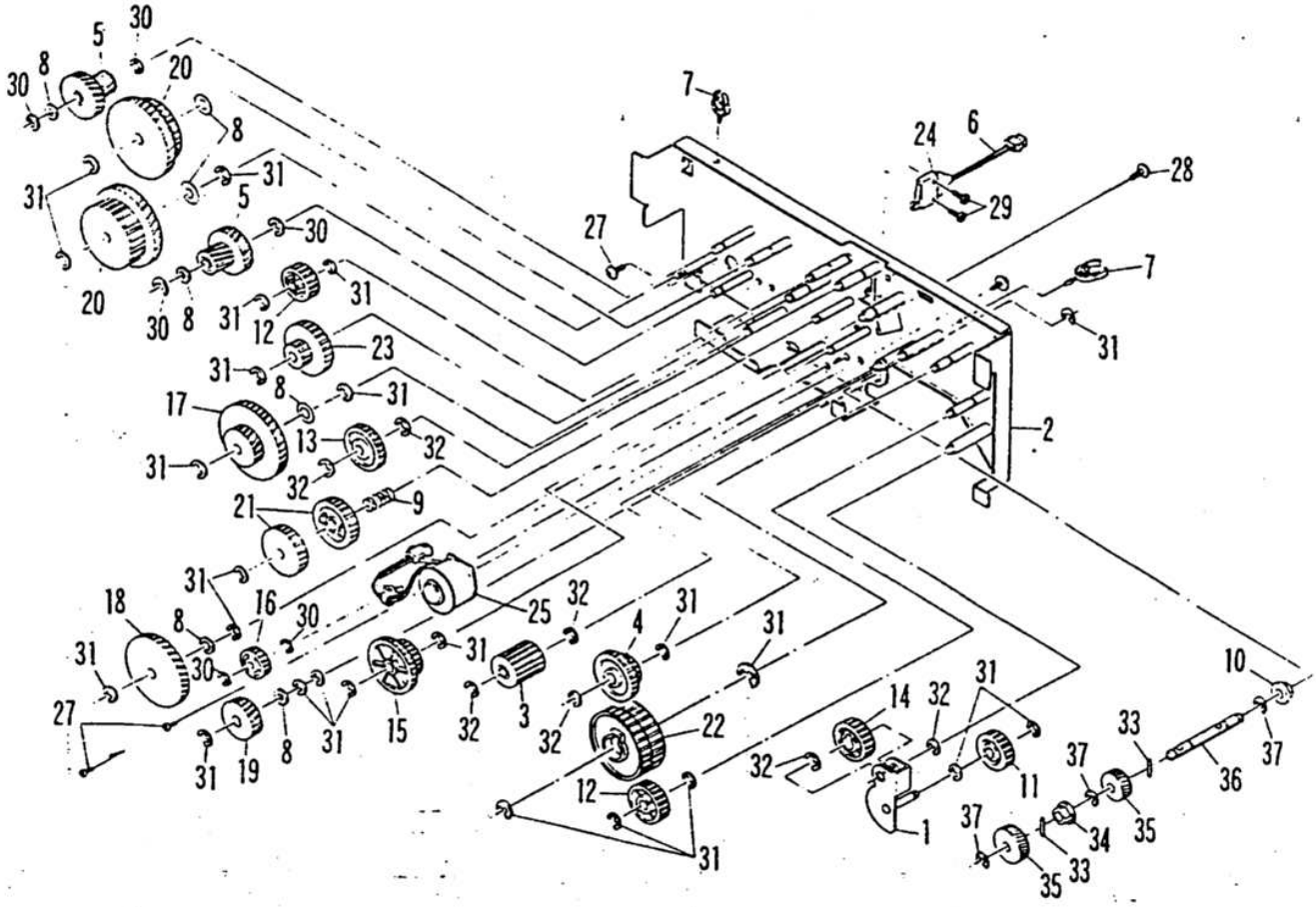

408 ドラムフレーム上ユニット(Drum frame unit)

NO.	PARTS CODE	PRICE RANK Ex	PRICE RANK Ja	NEW MARK	PART RANK	DESCRIPTION	
1	CCLEZ0109FC01	AK	DY	N	C	MC cleaner	MCクリーナーASB8
2	CPWBF0762FC51	AX	FU	N	E	DL PWB	DL ｷﾊﾞﾝ
3	CPWBF0765FC31	BC	GS	N	E	BL PWB	BL ｷﾊﾞﾝ
4	LFRM-0698FCZZ	AN	EJ	N	C	DR frame upper	DRﾌﾚｰﾑｳﾜﾆ B8
6	XEBSF30P08000	AA	DA		C	Screw (3×8)	ﾋﾞｽ
7	XBBSD30P06000	AA	DB		C	Screw (3×6)	ﾋﾞｽ
8	XBSSD30P06000	AA	DA		C	Screw (3×6)	ﾋﾞｽ
406	CCASZ0217FC51	AW	FT	N	E	MC case unit	MCｹｰｽUN B8

409 第2,3ミラーユニット(2nd,3rd mirror unit)

NO.	PARTS CODE	PRICE RANK Ex	PRICE RANK Ja	NEW MARK	PART RANK	DESCRIPTION	
1	CSLI-0103FC31	AF	DN	N	E	Slider (4PCS/set)	ｽﾍﾞﾘｻﾞｲ(X4)
2	LFIX-0254FCZZ	AC	DD		C	4th mirror fixing plate F	ﾀﾞｲ4ﾐﾗｰｵｻｴ F
3	LFIX-0320FCZZ	AB	DB		C	5th mirror fixing plate	ﾀﾞｲ5ﾐﾗｰｵｻｴ
5	NPLYZ0167FCZZ	AF	DN		C	Pulley	ﾌﾟｰﾘｰ
6	PCUSS0201FCZZ	AA	DA		C	MB-B cushion	MB-Bｼｮｸｼｮﾝ
7	PMIR-0094FCZZ	AT	FG	N	B	2nd mirror	ﾀﾞｲ2ﾐﾗｰ B8
8	PMIR-0095FCZZ	AX	FU	N	B	3rd mirror	ﾀﾞｲ3ﾐﾗｰ B8
10	XEPSD40P06000	AA	DA	N	C	Screw (4×6)	ﾋﾞｽ
11	XRESP70-08000	AA	DA		C	E type ring	Eﾘﾝｸﾞ

410 第4,5ミラーユニット(4th,5th mirror unit)

NO.	PARTS CODE	PRICE RANK Ex	PRICE RANK Ja	NEW MARK	PART RANK	DESCRIPTION	
1	LFIX-0272FCZZ	AC	DC		C	5th mirror holder R	ﾀﾞｲ5ﾐﾗｰｵｻｴ R
2	LFIX-0284FCZZ	AC	DC		C	4th,5th mirror holder F	ﾀﾞｲ4,5ﾐﾗｰｵｻｴ F
3	LHLDZ0831FCZ1	AH	DX		C	4th,5th mirror holder	4,5ﾐﾗｰﾎﾙﾀﾞｰ
4	LPLTM3725FCZZ	AN	EJ	N	C	4th,5th mirror fixing plate	4,5ﾐﾗｰﾄﾘｯｹｲﾀ
5	LX-BZ0515FCZZ	AA	DA		C	Screw	ﾋﾞｽ
6	LX-WZ0057FCZZ	AA	DA		C	Washer (M4)	ﾅﾐﾜｯｼｬ
7	PCLR-0305FCZZ	AC	DD		C	Collar	ﾍﾝｼﾝﾋﾞｽﾖｳｺﾛ
8	PMIR-0091FCZZ	AV	FN	N	B	4th mirror	ﾀﾞｲ4ﾐﾗｰ B8
9	PMIR-0092FCZZ	AS	FD	N	B	5th mirror	ﾀﾞｲ5ﾐﾗｰ B8
10	PSHEZ2418FCZZ	AB	DC		C	4th,5th mirror sheet front	4,5ﾐﾗｰｼｰﾄｳｼｰﾄ ﾏｴ
11	PSHEZ2419FCZZ	AC	DD		C	4th,5th mirror sheet rear	4,5ﾐﾗｰｼｰﾄｳｼｰﾄ ｳｼﾛ
13	XBPSD40P06000	AA	DA		C	Screw (4×6)	ﾋﾞｽ
14	XNESD40-32000	AA	DA		C	Nut	ﾅｯﾄ
15	XWHSD40-08000	AA	DA		C	Washer	ﾜｯｼｬ

411 コピーランプユニット(Copy lamp unit)

NO.	PARTS CODE	PRICE RANK Ex	PRICE RANK Ja	NEW MARK	PART RANK	DESCRIPTION	
1	CFS-T0084FC31	AK	DX	N	B	Temperature fuse	ｵﾝﾄﾞﾋｭｰｽﾞ
2	CSLI-0103FC31	AF	DN	N	E	Slider	ｽﾍﾞﾘｻﾞｲ(X4)
3	DHAI-1618FCZZ	AS	FB		C	CL lead harness	CLﾘｰﾄﾞﾊｰﾈｽ
4	LFIX-0350FCZZ	AC	DE		C	Harness fixing plate	ﾊｰﾈｽｵｻｴ
6	LPLTM3212FCZZ	AC	DD		C	Control plate C	ｾﾞｳｺｳﾊﾞﾝ C
7	LPLTM3213FCZZ	AB	DC		C	Control plate F･R	ｾﾞｳｺｳﾊﾞﾝﾄﾞ F･R
8	LPLTP3153FCZZ	AM	ED		C	Side plate F	ｿｸﾊﾞﾝ F
9	LPLTP3154FCZZ	AM	EE		C	Side plate R	ｿｸﾊﾞﾝ R
10	LX-BZ0339FCZZ	AA	DA		C	Screw	ﾋﾞｽ
11	MSPRP1566FCZZ	AF	DQ		C	Lamp spring F	ﾗﾝﾌﾟﾊﾞﾈ F
12	MSPRP1567FCZZ	AF	DP		C	Lamp spring R	ﾗﾝﾌﾟﾊﾞﾈ R
13	MSPRP1591FCZZ	AC	DD		B	Mirror spring	ﾐﾗｰﾊﾞﾈ
14	PCUSU0203FCZZ	AE	DK		C	Cushion	ﾎﾜﾝｼｸｯｼｮﾝ
15	PMIR-0076FCZZ	AP	EP		B	1st mirror	ﾀﾞｲ1ﾐﾗｰ
16	PREFL0139FCZZ	AY	GA	N	C	Main reflector	ﾒｲﾝﾚﾌﾚｸﾀｰ B8
17	PSEL-0392FCZZ	AC	DC		C	Slit shield seal	ｽﾘｯﾄｼｰﾙﾄﾞｺｳｼｰﾙ
18	PSHEZ2401FCZZ	AH	DV		C	Sheet	ﾒｲｺｳﾎﾜﾝｼｭｰﾄﾞ
19	RLMPU0334FCZZ	AZ	GE		B	Copy lamp (100V series)	ｺﾋﾟｰﾗﾝﾌﾟ
	RLMPU0335FCZZ	AZ	GE		B	Copy lamp (200V series)	ｺﾋﾟｰﾗﾝﾌﾟ

408 ドラムフレーム上ユニット(Drum frame unit)

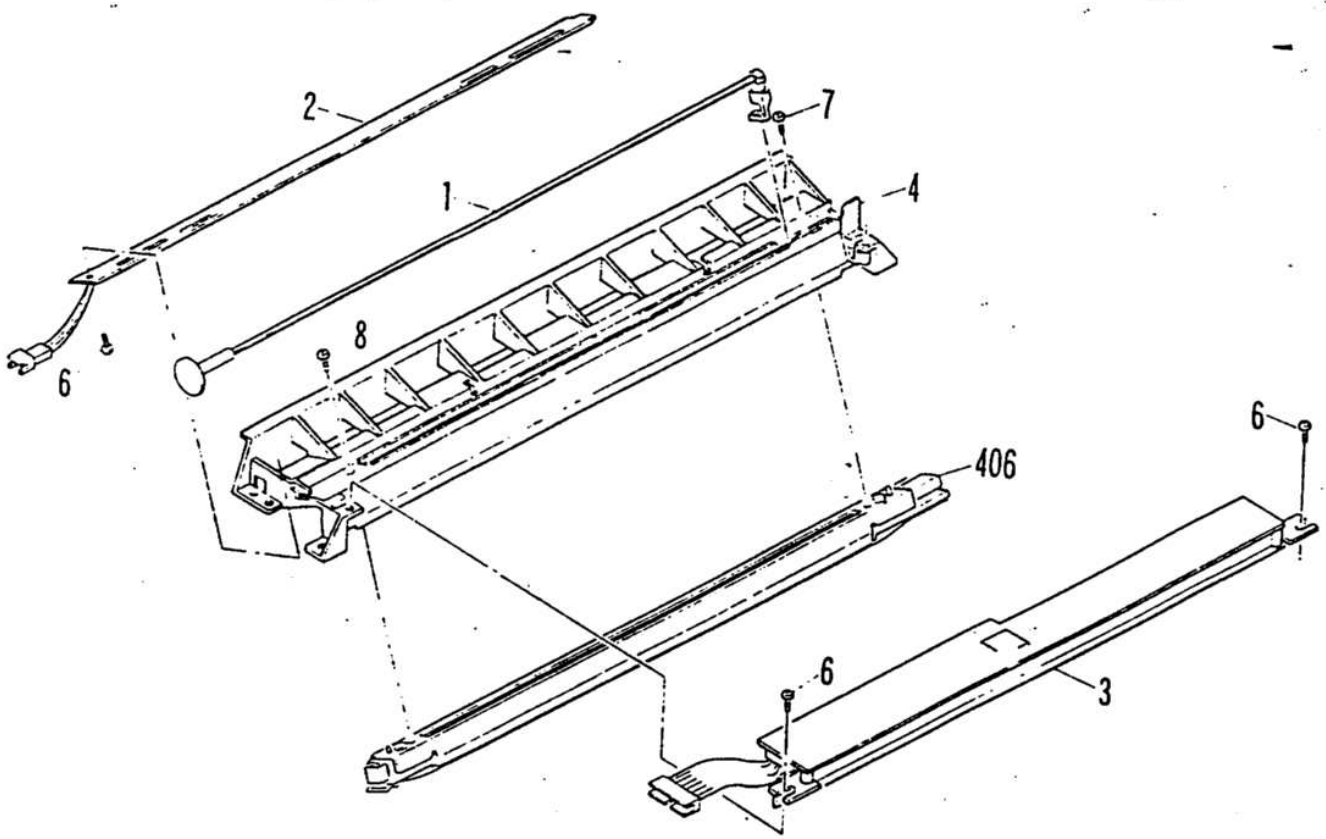

409 第2,3ミラーユニット(2nd,3rd mirror unit)

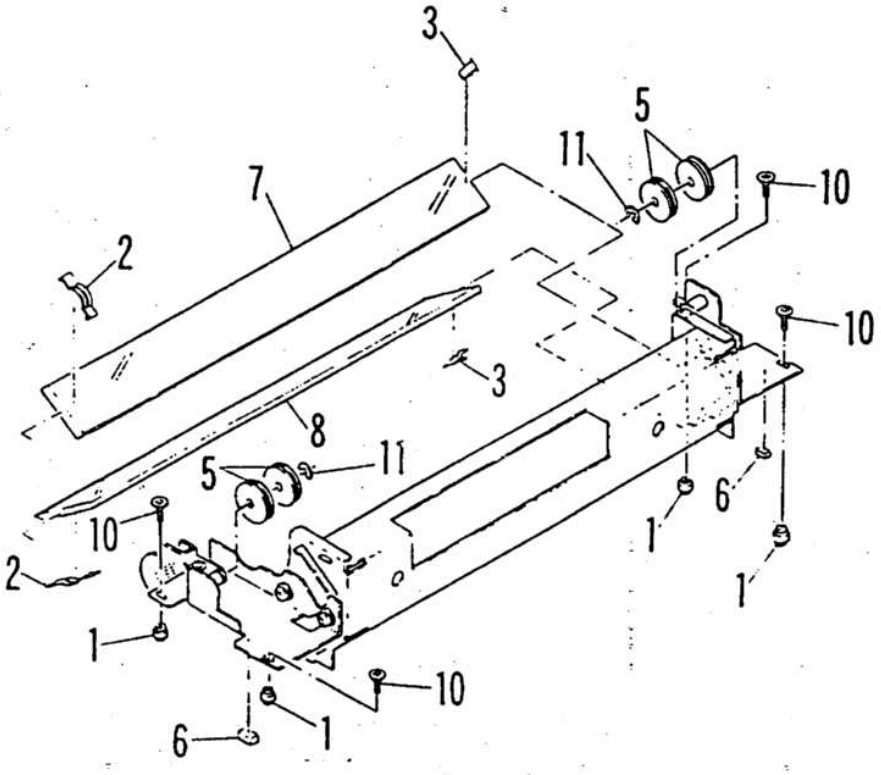

410 第4,5ミラーユニット(4th,5th mirror unit)

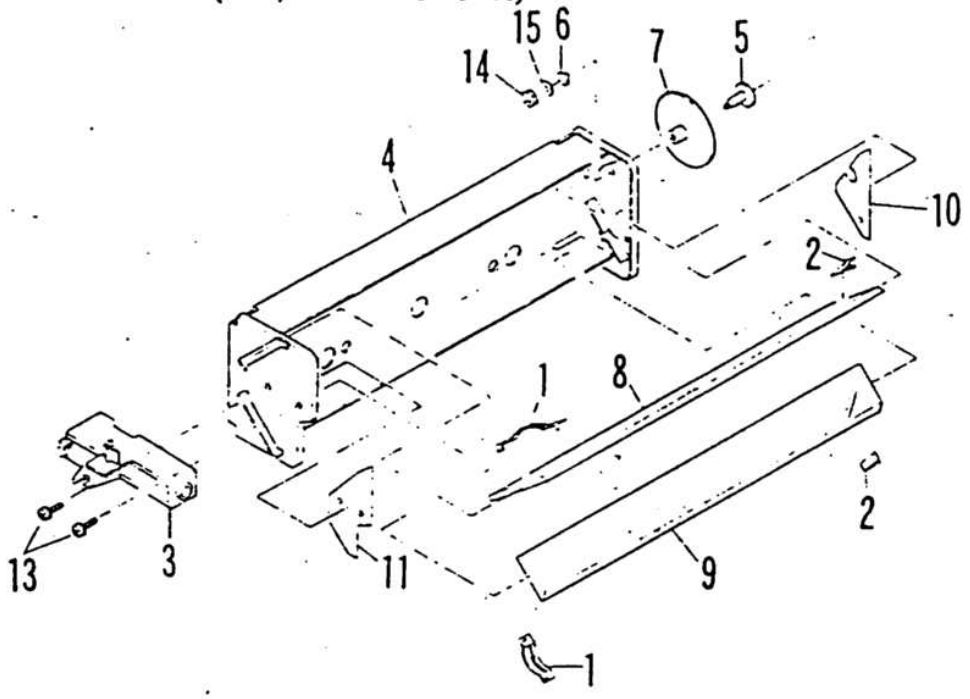

411 コピーランプユニット(Copy lamp unit)

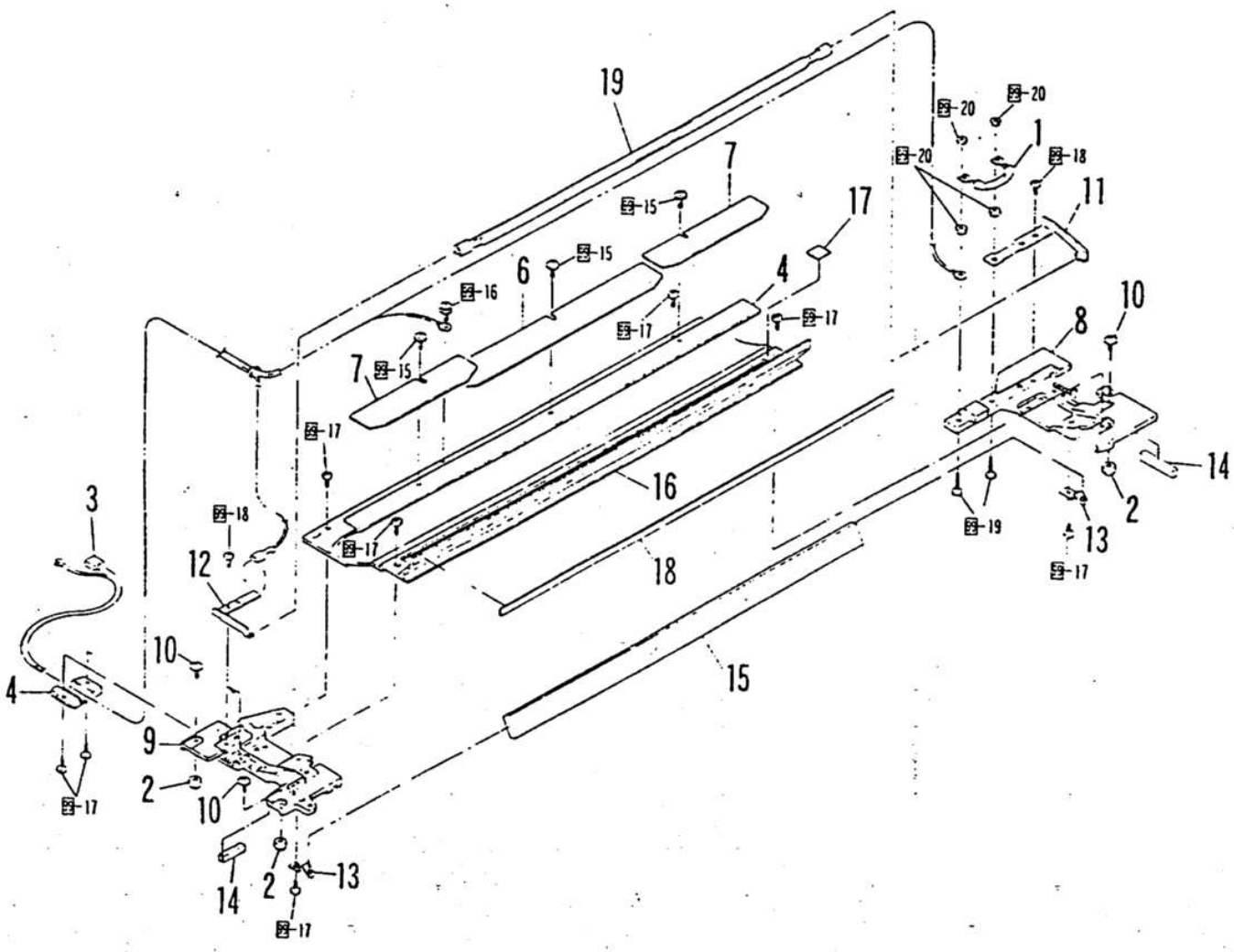

412 シタクリーニングローラーユニット(Lower cleaning roller unit)

NO.	PARTS CODE	PRICE RANK Ex	PRICE RANK Ja	NEW MARK	PART RANK	DESCRIPTION	
1	NBRGC0100FCZZ	AC	DD		B	Bearing	ベアリング
2	NROLN0834FCZZ	AW	FR	N	C	Lower CL roller	シタCLローラー B8
3	XRESP70-08000	AA	DA		C	E type ring	Eリング

413 定着ユニット(Fusing unit)

NO.	PARTS CODE	PRICE RANK Ex	PRICE RANK Ja	NEW MARK	PART RANK	DESCRIPTION	
1	LFRM-0691FCZZ	AS	FE	N	C	Fusing upper frame	テイチャクウエフレーム
2	LX-BZ0342FCZZ	AB	DB		C	Screw	ビス
3	MSPRT1798FCZZ	AA	DA	N	C	Pawl spring	ツメスプリング B8
4	NBRGP0416FCZZ	AH	DW	N	C	Fusing bearing	テイチャクノクワ
5	PTME-0214FCZZ	AF	DQ	N	C	Pawl for fusing	テイチャクヨウツメ
6	RDTCT0045FCZZ	AT	FG		B	Thermistor	サーミスター
7	RTHM-0009FCZZ	AK	EA		B	Thermostat	サーモスタット
8	XHPSD30P04000	AA	DA		C	Screw (3×4)	ビス
9	CFRM-0692FC01	AU	FK	N	C	Fusing lower frame	テイチャクシタフレーム
10	LPLTM2865FCZZ	AC	DC		C	Plate	スクレーパー A10
12	MLEVF0562FCZZ	AE	DJ	N	C	Pressure lever F	アッチャクレバーF
13	MLEVF0563FCZZ	AE	DJ	N	C	Pressure lever R	アッチャクレバーR
14	MSPRC1796FCZZ	AA	DA	N	C	Pressure spring	アッチャクスプリング B8
15	MSPRT1797FCZZ	AA	DA	N	C	CL spring	CL スプリング B8
16	NBRGY0325FCZZ	AL	EB		C	Pressure roller bearing	アッチャクローラージクワ
17	NROL-0836FCZZ	AY	GB	N	C	Pressure roller	アッチャクローラーB8
18	PGIDH1275FCZZ	AH	DV	N	C	Fusing front paper guide	テイチャクマエペーパーガイド
21	XRESP70-08000	AA	DA		C	E type ring	Eリング
22	CCOVQ1055FC01	AT	FH	N	C	Fusing cover (Japan only)	テイチャクカバーASJ
	CCOVQ1055FC02	AT	FH	N	C	Fusing cover (Export)	テイチャクカバーASEX
	CCOVQ1055FC03	AT	FH	N	C	Fusing cover (U.S.A.U.Kingdom,Australia)	テイチャクカバーエイブン
23	LX-BZ0342FCZZ	AB	DB		C	Screw	ビス
24	PCOVQ1056FCZZ	AK	DY	N	C	Fusing cover front	テイチャクカバーマエ
25	RLMPU0442FCZZ	BA	GF	N	B	Heater lamp (100V)	ヒーターランプ
	RLMPU0443FCZZ	BA	GF	N	B	Heater lamp (110V)	ヒーターランプ
	RLMPU0444FCZZ	BA	GF	N	B	Heater lamp (120V)	ヒーターランプ
	RLMPU0445FCZZ	BA	GF	N	B	Heater lamp (127V)	ヒーターランプ
	RLMPU0446FCZZ	BA	GF	N	B	Heater lamp (220V)	ヒーターランプ
	RLMPU0447FCZZ	BA	GF	N	B	Heater lamp (240V)	ヒーターランプ
26	XHPSD30P06000	AA	DA		C	Screw (3×6)	ビス
27	CHLDZ1031FC01	AH	DV	N	C	Lamp holder R	ランプホルダーRAS
28	LX-WZ0052FCZZ	AA	DA		C	Washer	ワッシー
29	MSPRC0936FCZZ	AB	DB		C	Cup link gear spring	カップリンクギヤ スプリング
30	NGERH0526FCZZ	AE	DL		C	Gear (30T)	ニウセイギヤーウエ
31	NGERH0745FCZZ	AC	DD	N	C	Gear (28T)	28Tラチエツトギヤ
32	XRESP50-06000	AA	DA		C	E type ring	Eリング
33	LSTPF0172FCZZ	AA	DA		C	Roller stopper	ローラーストッパー
34	NGERH0443FCZ1	AD	DG		C	Gear (48T)	ギヤー
35	NROLT0835FCZZ	AZ	GE	N	C	Upper heat roller	B8ウエヒートローラー
412	CROLN0834FC01	AU	FL	N	C	Lower CL roller	シタCLローラーAS

414 250カセット給紙ローラーユニット(Paper feed roller unit-250)

NO.	PARTS CODE	PRICE RANK Ex	PRICE RANK Ja	NEW MARK	PART RANK	DESCRIPTION	
1	PGUMR0220FCZZ	AG	DR	N	C	PF roller rubber A	B8PFローラゴムA
2	PGUMR0221FCZZ	AG	DR	N	C	PF roller rubber B	B8PFローラゴムB

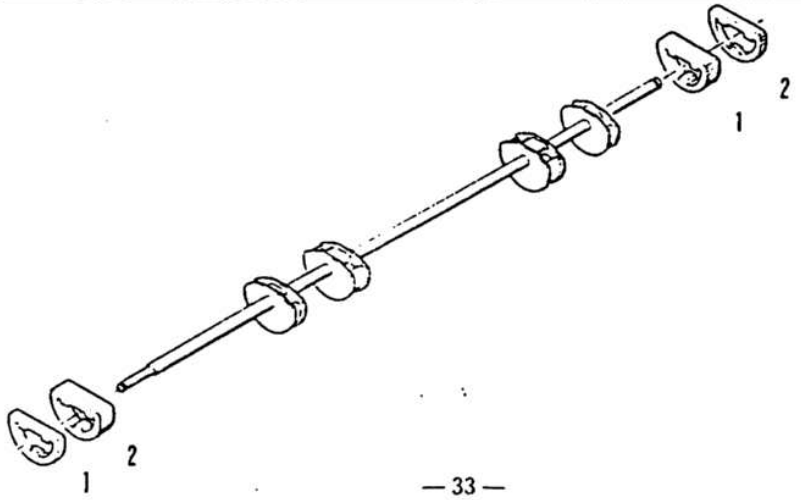

412 シタクリーニングローラーユニット(Lower cleaning roller unit)

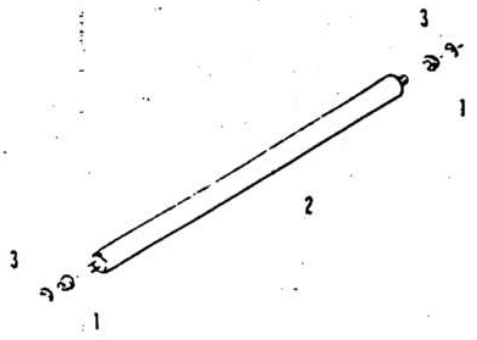

413 定着ユニット(Fusing unit)

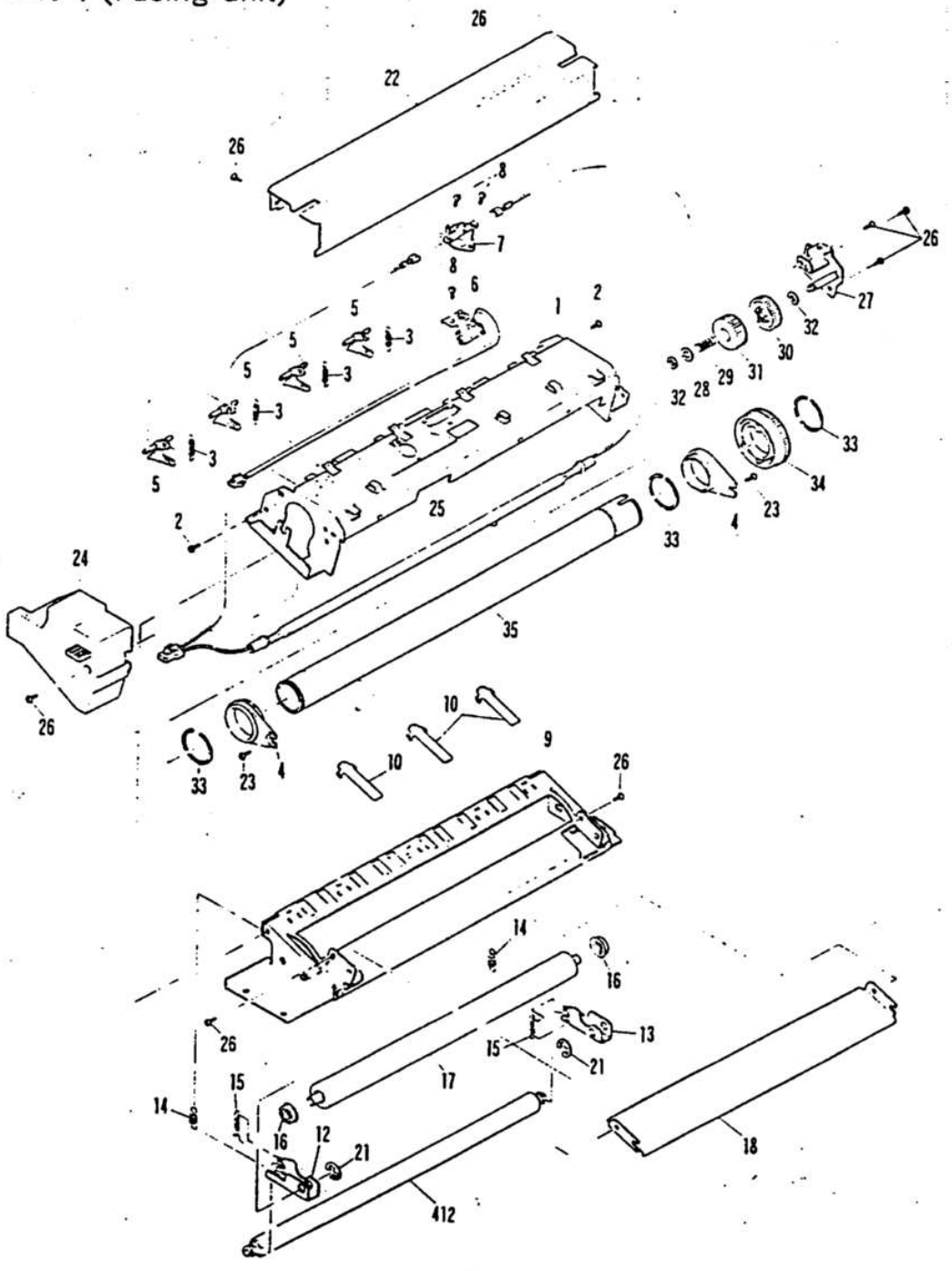

421 給紙ユニット‥SF-7850専用(Paper feeding unit SF-7850 only)

NO.	PARTS CODE	PRICE RANK Ex	PRICE RANK Ja	NEW MARK	PART RANK	DESCRIPTION	
1	CFRM-0695FC01	AR	EZ	N	C	Paper feeding W frame R	キュウシWフレーム R
2	DHA1-1880FCZZ	AH	DU	N	C	RPED interface harness	RPEDチュウケイハーネス
3	LBNDJ0043FCZZ	AA	DA		C	Snap band (SG130)	スナップ
4	LBOSZ1031FCZZ	AC	DE		C	Clutch boss	クラッチボス
5	LFRM-0694FCZZ	AK	EA	N	C	Paper feeding W frame F	キュウシWフレームF
6	LPINS0155FCZZ	AA	DA		C	Pin (φ3×10)	ヘイコウピン
7	MSPRC1406FCZZ	AE	DJ		C	PF Clutch spring	PFクラッチスプリング
8	NBRGC2019SCZZ	AC	DH		C	Bearing (φ8)	ベアリング
9	NGERH0317FCZZ	AC	DE		C	DV gear (18T)	DVギヤー
10	NGERH0384FCZZ	AE	DK		C	Gear (27T)	ギヤー
11	NGERH0430FCZZ	AB	DC		C	Gear (20/32T)	T20/32ギヤB5
12	NGERH0457FCZZ	AC	DC		C	DV drive gear R	DVクドウギヤー R
13	NGERH0515FCZZ	AC	DD		C	Gear (27T)	ギヤー
14	NROLR0841FCZZ	AR	EW	N	C	Transport roller W	B8ハンソウローラーW
15	PGIDH1278FCZZ	AP	EQ	N	C	U turn paper guide W	Uターンペーパーガイド W B8
16	PPIPP0153FCZZ	AB	DC	N	C	CL sleeve	CLスリーブ B8
17	RPLU-0268FCZZ	AM	EF	N	B	RC PF solenoid	RCキュウシソレノイド
18	XBBSE40P10000	AA	DA	N	C	Screw (4×10)	ビス
19	XRESP40-06000	AA	DA		C	E type ring	Eリング(4MM)
20	XRESP70-08000	AA	DA		C	E type ring	Eリング
22	LPLTM3754FCZZ	AD	DF	N	C	PESW fixing plate	PESWトリツケバン
23	VHPGP2A10//-1	AR	EX		B	Photo transistor (GP2A10)	フォトトランジスター
24	XBPSD30P10K00	AA	DA		C	Screw (3×10K)	ビス
424	NROLR0842FCZZ	AU	FL	N	C	PF roller W	PFローラーW B8

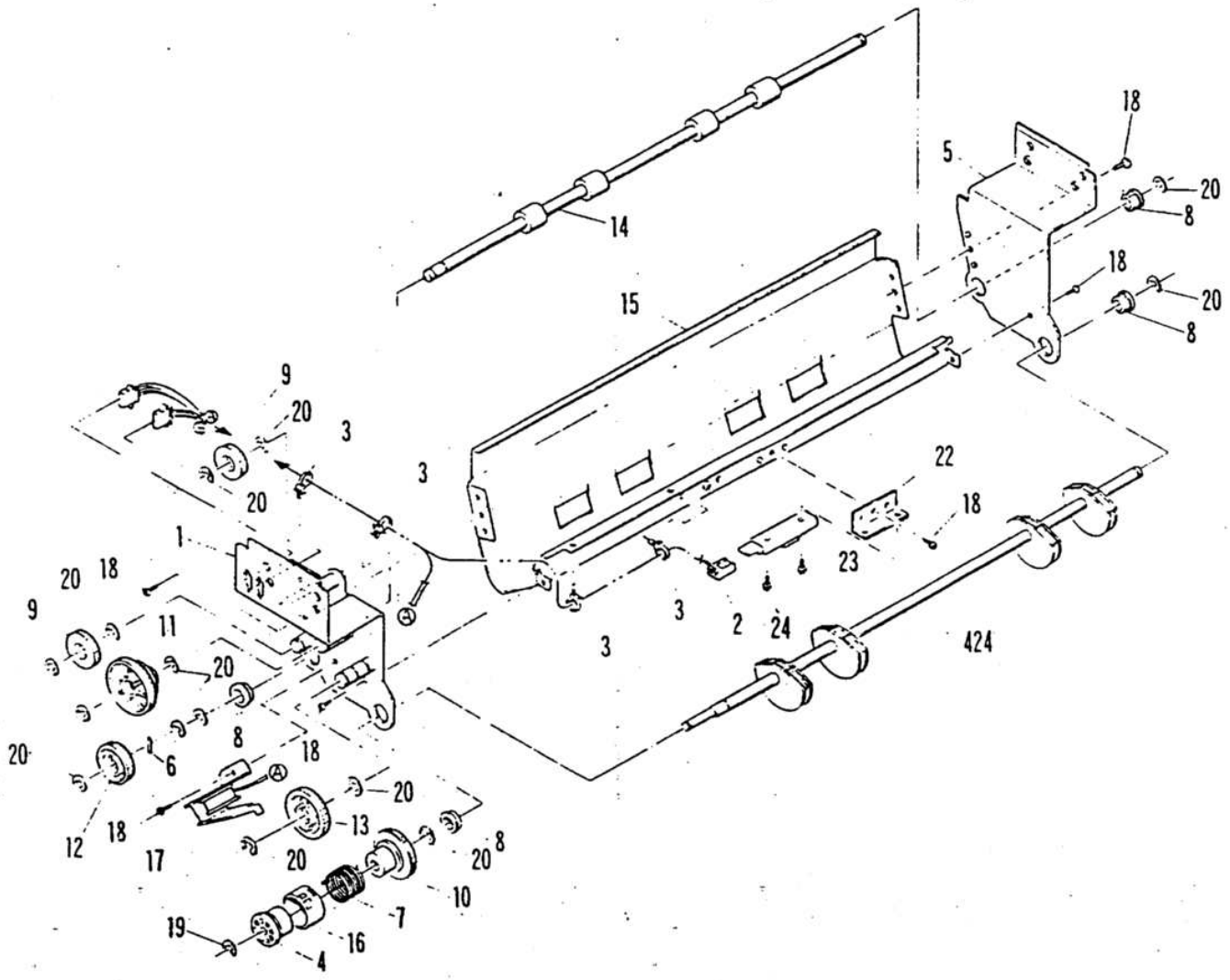

422 回転カセット・・SF-7850専用(Rotary cassette SF-7850 only)

NO.	PARTS CODE	PRICE RANK Ex	PRICE RANK Ja	NEW MARK	PART RANK	DESCRIPTION	
1	CPLTM3764FC01	AH	DV	N	C	Lift slide plate	リフトスライドイタ
2	GCASP0152FCZZ	AR	EV	N	D	R cassette	Rカセット B8
3	LX-BZ0016FCZZ	AA	DA		C	Screw	アイドラカイテンビス
4	LX-BZ0585FCZZ	AA	DA	N	C	Screw	ビス
5	LX-WZ0069FCZZ	AA	DA		C	Washer	ワッシー
6	LX-WZ0086FCZZ	AA	DA		C	Washer	ワッシー
7	MJNTP0011FCZZ	AB	DB		C	Joint A	ジョイント A
8	MJNTP0012FCZZ	AB	DB		C	Joint B	ジョイント B
9	MSPRC1696FCZZ	AA	DA		C	Joint spring	ジョイントヨウスプリング
10	MSPRC1806FCZZ	AC	DD	N	C	Lift up spring	リフトUP スプリング Hd
11	MSPRC1841FCZZ	AC	DD	N	C	Lift up spring B	リフトUP スプリング B
12	NBRGP0266FCZZ	AA	DA		C	Bearing (φ5)	ノクワケ
13	NBRGP0370FCZZ	AE	DJ		C	R point bearing	Rポイントベアリング
14	NROLP0547FCZZ	AB	DC		C	Separator sub roller	ハクリホジョローラー
15	NSFTZ1621FCZZ	AC	DE	N	C	Shaft for turning plate	カイテンイタヨウジク
16	NSFTZ1622FCZZ	AC	DC	N	C	Pulley shaft	プーリーヨウジク
17	PWIR-0137FCZ1	AK	DY	N	C	Lift up wire A	リフトUPワイヤーA
18	PWIR-0138FCZ1	AK	DY	N	C	Lift up wire B	リフトUPワイヤーB
20	TLABZ2253FCWZ	AB	DB		C	Label W	シノセンラベル W
21	XEPSD40P06000	AA	DA	N	C	Screw (4×6)	ビス
22	XNESD30-24000	AA	DA		C	Nut	ナット
23	XRESP30-04000	AA	DA		C	E type ring	Eリング
25	LPLTM3761FCZZ	AT	FG	N	C	R Turning plate	Rカイテンバン B8
26	PSHEZ2707FCZZ	AD	DG	N	C	Turning plate sheet W	カイテンバンシートW
27	PSHEZ2708FCZZ	AD	DH	N	C	Turning plate sheet S	カイテンバンシートS
28	PSHEZ2709FCZZ	AD	DF	N	C	Turning plate sheet L	カイテンバンシートL
29	CTME-0208FC01	AG	DS	N	C	R pawl L	Rツメ L AS B8
30	LPLTM3762FCZZ	AH	DV	N	C	R positioning plate-L	Rキセイバン L B8
31	XRESP40-06000	AA	DA		C	E type ring	Eリング(4MM)
32	CTME-0209FC01	AG	DS	N	C	R pawl S	Rツメ S AS B8
33	LPLTM3763FCZZ	AH	DV	N	C	R positioning plate-S	Rキセイバン S B8
34	XRESP40-06000	AA	DA		C	E type ring	Eリング(4MM)
35	CTME-0210FC01	AG	DS	N	C	R pawl	Rツメ W AS B8
36	LPLTM3765FCZZ	AC	DE	N	C	R pawl fixing plate	Rツメ W トリツケバン
37	XRESP40-06000	AA	DA		C	E type ring	Eリング(4MM)

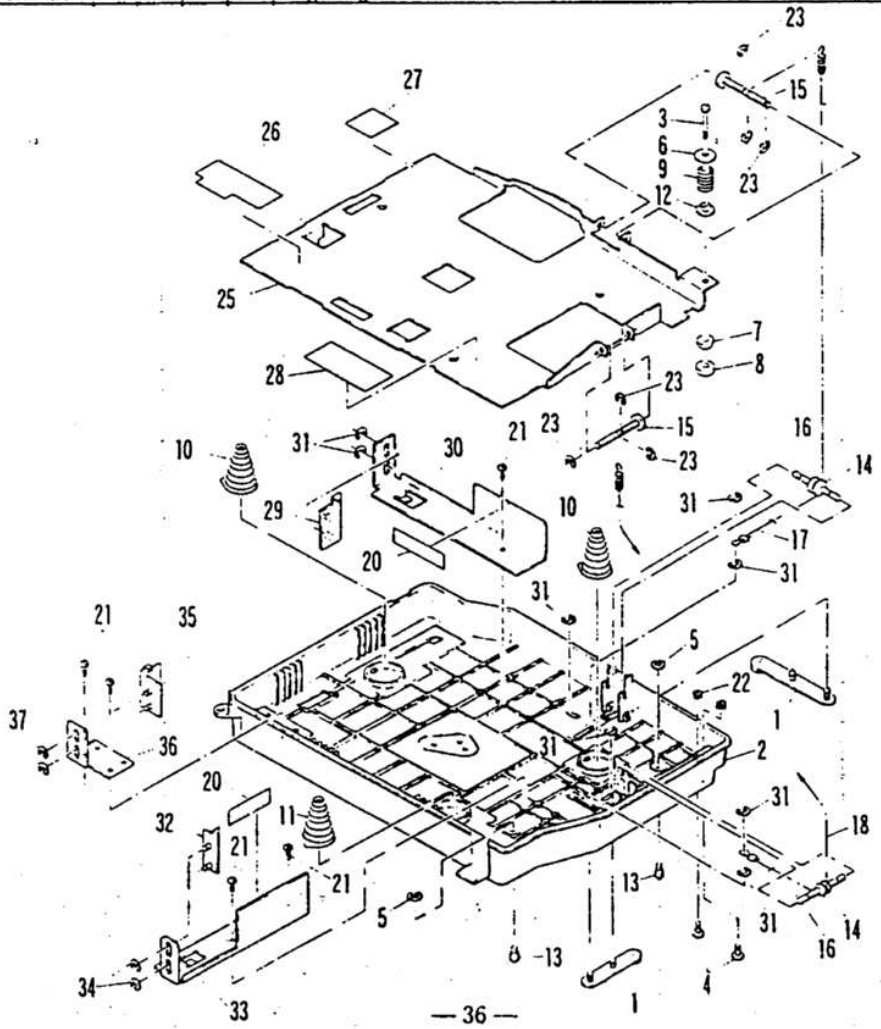

423 RMフレームユニット・・SF-7850専用(RM frame unit SF-7850 only)

NO.	PARTS CODE	PRICE RANK Ex	PRICE RANK Ja	NEW MARK	PART RANK	DESCRIPTION	
1	DHA1-1881FCZZ	AD	DG	N	C	RM interface harness	RMチュウケイハーネス
2	LFRM-0696FCZZ	AH	DW	N	C	RM frame	RMフレーム B8
3	LPINS0096FCZZ	AB	DB		C	Pin (3×12)	ヘイコウピン
4	LPINS0155FCZZ	AA	DA		C	Pin (φ3×10)	ヘイコウピン
5	LPINS0235FCZZ	AA	DA	N	C	Spring pin	SPピン(マル3*20)
6	LPLTM3800FCZZ	AD	DF	N	C	HP switch fixing plate	HP SWトリツケイタ
7	LPLTP3768FCZZ	AD	DF	N	C	Photo shield plate	フォトシャコウバン
8	LPLTP3769FCZZ	AC	DC	N	C	Limitter plate	リミッタープレート
9	LSTYM0180FCZZ	AC	DE	N	C	W drive plate stay	Wクドウプレートステイ
10	LX-WZ0017FCZZ	AA	DA		C	Washer	ワッシャ
11	MSPRC1869FCZZ	AB	DB	N	C	CL pressure spring	CLアッチャクスプリング
12	MSPRC1809FCZZ	AA	DA	N	C	Limitter spring	リミッタースプリング B8
13	MSPRC1810FCZZ	AA	DA	N	C	Shield plate spring	シャコウバンスプリング
14	NBRGC2019SCZZ	AC	DH		C	Bearing (φ8)	ベアリング
15	NGERH0128FCZZ	AC	DD		C	Gear (24T)	24Tギャナイロン
16	NGERH0457FCZZ	AC	DC		C	DV drive gear R	DVクドウギヤー R
17	NGERH0749FCZZ	AE	DL	N	C	Gear (102T)	ギヤ102T B8
18	NSFTD1623FCZZ	AG	DU	N	C	R drive shaft A	CクドウジクA
19	NSFTD1624FCZZ	AH	DV	N	C	R drive shaft B	RクドウジクB
20	NSFTZ1625FCZZ	AC	DD	N	C	Shield slide shaft	シャコウスライドジク
21	PCLC-0190FCZZ	AC	DC	N	C	Rotary joint clutch	カイテンレンケツクラッチ
22	PCOVP1061FCZZ	AE	DK	N	C	Motor cover	モーターカバー B8
23	PSHEP2757FCZZ	AB	DB	N	C	Contact protection sheet	セッテンボゴシート
24	PSHEZ2710FCZZ	AB	DC	N	C	Sheet	リミッターシート B8
25	PSPAZ0095FCZZ	AB	DB		C	Clutch spacer	クラッチスペーサー
26	RMOTV0632FCZZ	AX	FX	N	B	RM motor	RMモーター B8W
27	VHPGP1A71A/-1	AG	DS	N	B	Photo transistor (GP1A71A)	フォトトランジスター
28	VHPGP1A71A1-1	AG	DT	N	B	Photo transistor (GP1A71A1)	フォトトランジスター
29	XBPSD30P04K00	AA	DA		C	Screw (3×4K)	ビス
30	XHBSD30P08000	AA	DA		C	Screw (3×8)	ビス
31	XRESP30-05000	AA	DA		C	E type ring	Eリング
32	XRESP70-08000	AA	DA		C	E type ring	Eリング
33	XXXSP30-08000	AA	DA	N	C	Screw (3×8)	ビス
35	XEBSD30P08000	AA	DA		C	Screw (3×8)	ビス
36	XHBSD30P06000	AA	DA		C	Screw (3×6)	ビス

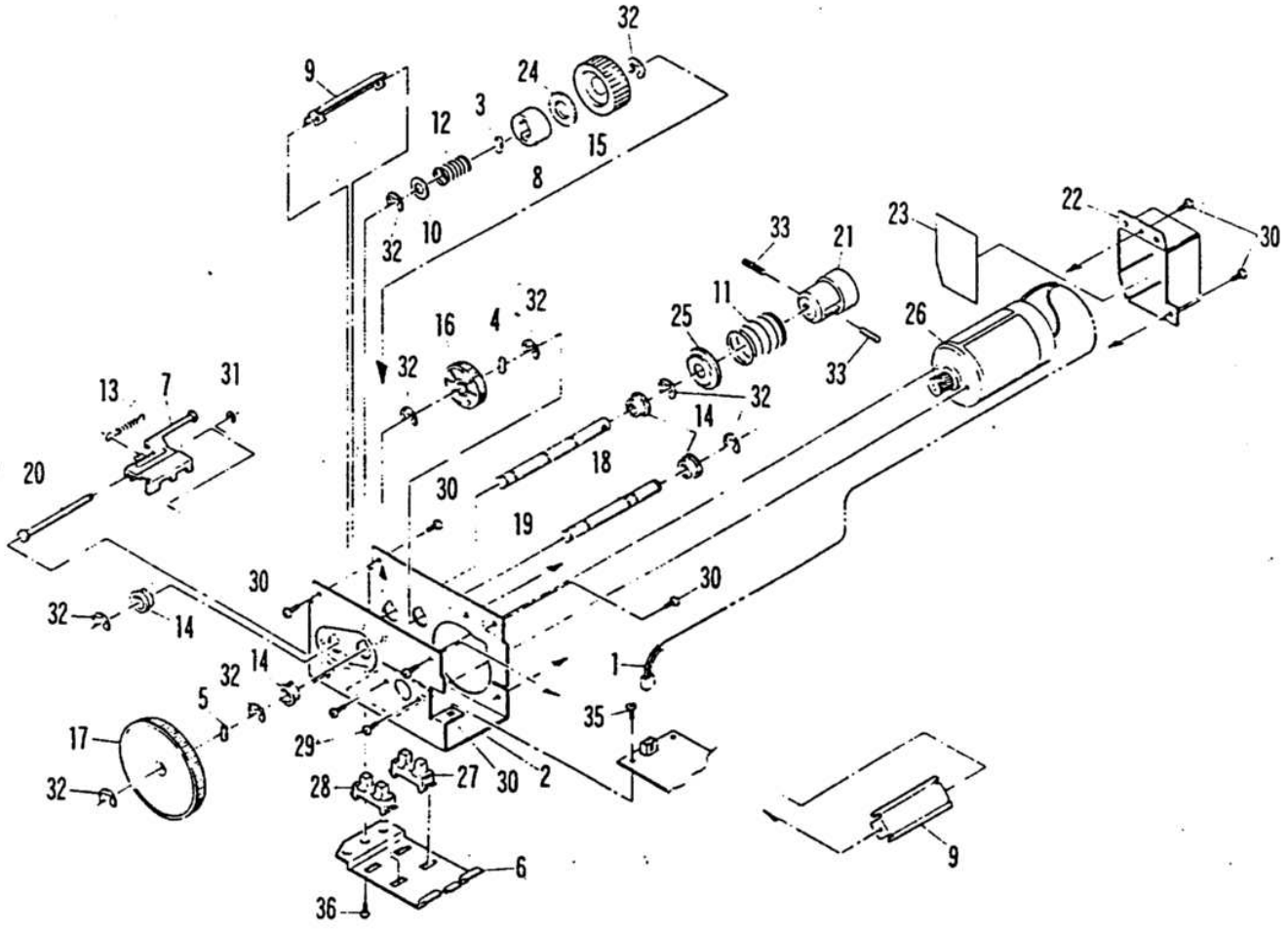

424 回転カセット給紙ローラーユニット‥SF-7850専用(Paper feed roller unit-R‥SF-7850 only)

NO.	PARTS CODE	PRICE RANK Ex	PRICE RANK Ja	NEW MARK	PART RANK	DESCRIPTION	
1	PGUMR0220FCZZ	AG	DR	N	C	PF roller rubber A	ﾍﾟｲﾊﾟﾄﾞﾛｰﾗｺﾞﾑA
2	PGUMR0221FCZZ	AG	DR1	N	C	PF roller rubber B	ﾍﾟｲﾊﾟﾄﾞﾛｰﾗｺﾞﾑB

425 RC回路基板‥SF-7850専用(RC PWB‥SF-7850 only)

NO.	PARTS CODE	PRICE RANK Ex	PRICE RANK Ja	NEW MARK	PART RANK	DESCRIPTION	
⚠ 1	QFS-B1321QCZZ	AD	DF		A	Fuse (1.25A 250V)(100V series)	ﾋｭｰｽﾞ
⚠	QFS-C1301CCZZ	AE	DH		A	Fuse (0.8A 250V)(200V series)	ﾋｭｰｽﾞ

424 回転カセット給紙ローラーユニット‥SF-7850専用(Paper feed roller unit-R‥SF-7850 only)

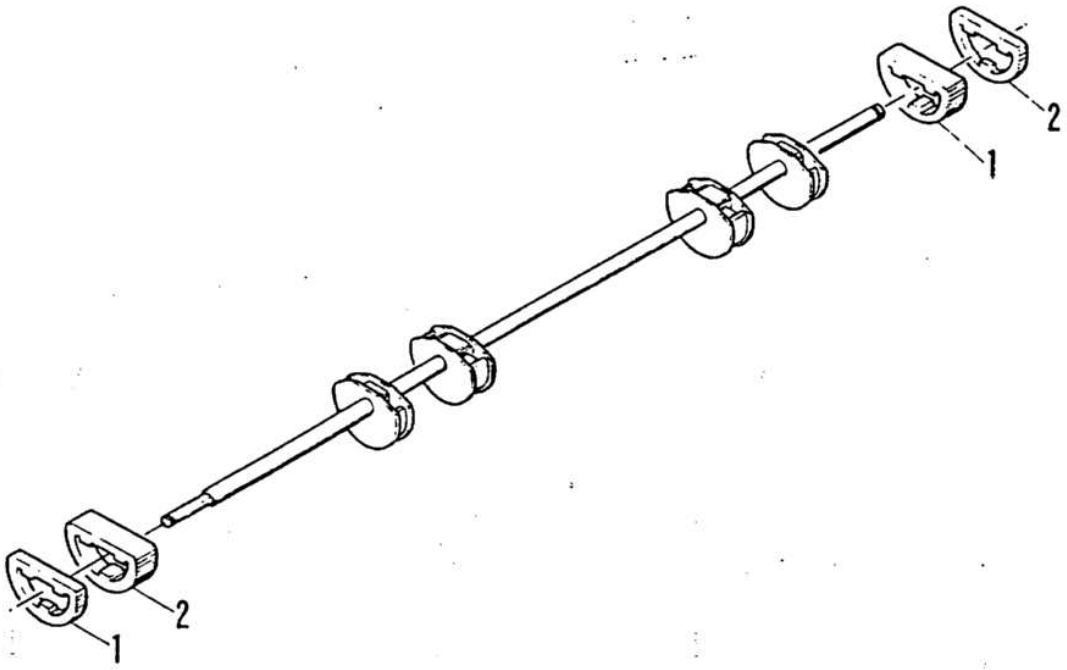

425 RC回路基板‥SF-7850専用(RC PWB‥SF-7850 only)

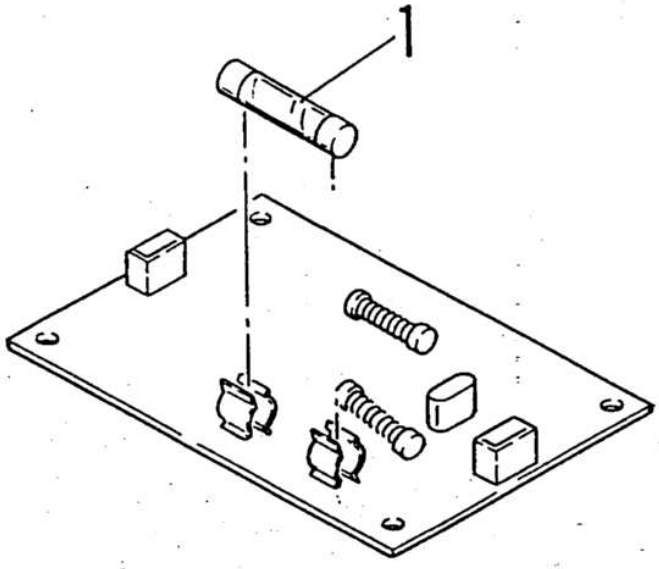

801 操作基板1(Operation PWB-1)

NO.	PARTS CODE	PRICE RANK Ex	PRICE RANK Ja	NEW MARK	PART RANK	DESCRIPTION	
1	DHA1-1902FCZZ	AD	DG	N	C	OP interface harness FFC	OPチュウケイハーネスFFC
2	PSPAZ0545FCZZ	AB	DB	N	C	Display spacer (for LED403)	ハイヒョウジスペーサー
3	VHPGL3EG47/-1	AB	DB		B	Photo transistor (GL3EG47) (SF-7800)	フォトトランジスター
AEL	VHPSLR-320MC/	AB	DB	N	B	Photo transistor (SLR-320MC)	フォトトランジスター
AES	VHPSLR-320MC/	AB	DB	N	B	Photo transistor (SLR-320MC) (SF-7850)	フォトトランジスター
APS	VHPSLR-320MC/	AB	DB	N	B	Photo transistor (SLR-320MC) (SF-7850)	フォトトランジスター
BR401	RMPTC4102QCJB	AB	DC		B	Block resistor (1KΩ×4 1/8W ±5%)	チイコウアレー
BR402	RMPTW4101QCJB	AB	DB	N	B	Block resistor (100Ω×4 1/8W ±5%)	ブロックチイコウ
C401	VCEAGU1AW476M	AA	DA		C	Capacitor (10WV 47μF)	コンデンサー
C402	VCEAGU1AW476M	AA	DA		C	Capacitor (10WV 47μF)	コンデンサー
C403	VCEAGU1CW476M	AB	DB		C	Capacitor (16WV 47μF)	コンデンサー
C404	VCKYTS1HB101K	AB	DB		C	Capacitor (50WV 100PF)	コンデンサー
C405	VCKYTS1HB101K	AB	DB		C	Capacitor (50WV 100PF)	コンデンサー
C406	VCKYTS1HB101K	AB	DB		C	Capacitor (50WV 100PF)	コンデンサー
C407	VCKYTS1HB101K	AB	DB		C	Capacitor (50WV 100PF)	コンデンサー
C408	VCKYTS1HB471K	AA	DA		C	Capacitor (50WV 470PF)	コンデンサー
C409	VCKYTS1HB471K	AA	DA		C	Capacitor (50WV 470PF)	コンデンサー
C410	VCEAGU1CW476M	AB	DB		C	Capacitor (16WV 47μF)	コンデンサー
C411	VCKYTS1HB223Z	AA	DA		C	Capacitor (50WV 0.022μF)	コンデンサー
C412	VCKYTS1HB471K	AA	DA		C	Capacitor (50WV 470PF)	コンデンサー
C413	VCKYTS1HB471K	AA	DA		C	Capacitor (50WV 470PF)	コンデンサー
C414	VCEAGU1CW476M	AB	DB		C	Capacitor (16WV 47μF)	コンデンサー
C415	VCKYTS1HB223Z	AA	DA		C	Capacitor (50WV 0.022μF)	コンデンサー
C416	VCKYTS1HB223Z	AA	DA		C	Capacitor (50WV 0.022μF)	コンデンサー
CNA	QCNCW0526FCZZ	AC	DE	N	C	Connector (14pin)	コネクター
CNB	QCNCW0521FCZZ	AB	DC	N	C	Connector (9pin)	コネクター
CNC	QCNCY0685FCZZ	AC	DE	N	C	Connector (for FFC)	コネクター
CSL1	VHPSLR-320MC/	AB	DB	N	B	Photo transistor (SLR-320MC) (SF-7850)	フォトトランジスター
CSL2	VHPSLR-320MC/	AB	DB	N	B	Photo transistor (SLR-320MC) (SF-7850)	フォトトランジスター
CTL1	VHPSLR-320MC/	AB	DB	N	B	Photo transistor (SLR-320MC)	フォトトランジスター
CTL2	VHPSLR-320MC/	AB	DB	N	B	Photo transistor (SLR-320MC)	フォトトランジスター
DPK	QSW-P0425FCZZ	AB	DB	N	B	Push switch (SF-7850)	プッシュスイッチ
DPL	VHPSLR-320MC/	AB	DB	N	B	Photo transistor (SLR-320MC) (SF-7850)	フォトトランジスター
DUL	VHPGL3HD47/-1	AB	DB		B	Photo transistor (GL3HD47)	フォトトランジスター
EDK	QSW-P0425FCZZ	AB	DB	N	B	Push switch	プッシュスイッチ
EL1	VHPSLR-320MC/	AB	DB	N	B	Photo transistor (SLR-320MC)	フォトトランジスター
EL2	VHPSLR-320MC/	AB	DB	N	B	Photo transistor (SLR-320MC)	フォトトランジスター
EL3	VHPSLR-320MC/	AB	DB	N	B	Photo transistor (SLR-320MC)	フォトトランジスター
EL4	VHPSLR-320MC/	AB	DB	N	B	Photo transistor (SLR-320MC)	フォトトランジスター
EL5	VHPSLR-320MC/	AB	DB	N	B	Photo transistor (SLR-320MC)	フォトトランジスター
EL6	VHPSLR-320MC/	AB	DB	N	B	Photo transistor (SLR-320MC)	フォトトランジスター
EL7	VHPSLR-320MC/	AB	DB	N	B	Photo transistor (SLR-320MC)	フォトトランジスター
EL8	VHPSLR-320MC/	AB	DB	N	B	Photo transistor (SLR-320MC)	フォトトランジスター
EL9	VHPSLR-320MC/	AB	DB	N	B	Photo transistor (SLR-320MC)	フォトトランジスター
ELK	QSW-P0425FCZZ	AB	DB	N	B	Push switch	プッシュスイッチ
EMK	QSW-P0425FCZZ	AB	DB	N	B	Push switch	プッシュスイッチ
EUK	QSW-P0425FCZZ	AB	DB	N	B	Push switch	プッシュスイッチ
GRL	VHPSLR-320MC/	AB	DB	N	B	Photo transistor (SLR-320MC)	フォトトランジスター
IC401	VHiM66313FP-1	AN	EH	N	B	IC (M66313FP)	IC
IC402	VHiLM358PS/-S	AC	DE	N	B	IC (LM358PS)	IC
IC403	VHiLM324NS/-S	AC	DE		B	IC (LM324NS)	IC
ISK	QSW-P0425FCZZ	AB	DB	N	B	Push switch (SF-7850)	プッシュスイッチ
J1	VHPSLR-320VC/	AB	DB	N	B	Photo transistor (SLR-320VC)	フォトトランジスター
J2	VHPSLR-320VC/	AB	DB	N	B	Photo transistor (SLR-320VC)	フォトトランジスター
J3	VHPSLR-320VC/	AB	DB	N	B	Photo transistor (SLR-320VC)	フォトトランジスター
J4	VHPSLR-320VC/	AB	DB	N	B	Photo transistor (SLR-320VC)	フォトトランジスター
J5	VHPSLR-320VC/	AB	DB	N	B	Photo transistor (SLR-320VC) (SF-7850)	フォトトランジスター
JPL	VHPGL3HD47/-1	AB	DB		B	Photo transistor (GL3HD47)	フォトトランジスター
LED401	VHPLB203-MB-1	AN	EJ	N	B	Photo transistor (LB203-MB)	フォトトランジスター
MAL	VHPSLR-320MC/	AB	DB	N	B	Photo transistor (SLR-320MC)	フォトトランジスター
MFL	VHPSLR-320MC/	AB	DB	N	B	Photo transistor (SLR-320MC) (SF-7850)	フォトトランジスター
MPL	VHPGL3HD47/-1	AB	DB		B	Photo transistor (GL3HD47)	フォトトランジスター
NOK	QSW-P0425FCZZ	AB	DB	N	B	Push switch	プッシュスイッチ
PEL	VHPGL3HD47/-1	AB	DB		B	Photo transistor (GL3HD47) (SF-7850)	フォトトランジスター
PML	VHPSLR-320MC/	AB	DB	N	B	Photo transistor (SLR-320MC)	フォトトランジスター
PSK	QSW-P0425FCZZ	AB	DB	N	B	Push switch	プッシュスイッチ
PSL1	VHPSLR-320MC/	AB	DB	N	B	Photo transistor (SLR-320MC) (SF-7850)	フォトトランジスター
PSL2	VHPSLR-320MC/	AB	DB	N	B	Photo transistor (SLR-320MC) (SF-7850)	フォトトランジスター
PSL3	VHPSLR-320MC/	AB	DB	N	B	Photo transistor (SLR-320MC) (SF-7850)	フォトトランジスター
PSL4	VHPSLR-320MC/	AB	DB	N	B	Photo transistor (SLR-320MC) (SF-7850)	フォトトランジスター
PSL5	VHPSLR-320MC/	AB	DB	N	B	Photo transistor (SLR-320MC)	フォトトランジスター
PSL6	VHPSLR-320MC/	AB	DB	N	B	Photo transistor (SLR-320MC) (SF-7850)	フォトトランジスター
PSL7	VHPSLR-320MC/	AB	DB	N	B	Photo transistor (SLR-320MC) (SF-7800,SF-7850··Japan only)	フォトトランジスター
PSL8	VHPSLR-320MC/	AB	DB	N	B	Photo transistor (SLR-320MC) (SF-7850··Japan only)	フォトトランジスター
Q401	VS2SC2412K/-1	AB	DB		B	Transistor (2SC2412K)	トランジスター
Q402	VS2SC2412K/-1	AB	DB		B	Transistor (2SC2412K)	トランジスター
Q403	VS2SC2412K/-1	AB	DB		B	Transistor (2SC2412K)	トランジスター
Q404	VS2SB1295-/-1	AB	DC	N	B	Transistor (2SB1295)	トランジスター
Q405	VS2SB1295-/-1	AB	DC	N	B	Transistor (2SB1295)	トランジスター
Q406	VS2SB1295-/-1	AB	DC	N	B	Transistor (2SB1295)	トランジスター

801, 操作基板1(Operation PWB-1)

NO	PARTS CODE	PRICE RANK Ex	PRICE RANK Ja	NEW MARK	PART RANK	DESCRIPTION	
RA401	VRNRC2EK47R0F	AA	DA	N	C	Resistor (1/4W 47Ω ±1%)	テイコク
RA402	VRNRC2EK130DF	AA	DA	N	C	Resistor (1/4W 130Ω ±1%)	テイコク
RA403	VRNRC2EK130DF	AA	DA	N	C	Resistor (1/4W 130Ω ±1%)	テイコク
RA404	VRNRC2EK150DF	AA	DA	N	C	Resistor (1/4W 150Ω ±1%)	テイコク
RA405	VRNRC2EK150DF	AA	DA	N	C	Resistor (1/4W 150Ω ±1%)	テイコク
RA406	VRNRC2EK180DF	AA	DA		C	Resistor (1/4W 180Ω ±1%)	テイコク
RA407	VRNRC2EK180DF	AA	DA		C	Resistor (1/4W 180Ω ±1%)	テイコク
RA408	VRNRC2EK200DF	AA	DA		C	Resistor (1/4W 200Ω ±1%)	テイコク
RA409	VRNRC2EK3901F	AA	DA		C	Resistor (1/4W 3.90KΩ ±1%)	テイコク
RA410	VRNRC2EK120JF	AA	DA		C	Resistor (1/4W 12KΩ ±1%)	テイコク
RA411	VRNRC2EK510DF	AA	DA		C	Resistor (1/4W 510Ω ±1%)	テイコク
RA412	VRNRC2EK180DF	AA	DA		C	Resistor (1/4W 180Ω ±1%)	テイコク
RA413	VRNRC2EK180DF	AA	DA		C	Resistor (1/4W 180Ω ±1%)	テイコク
RA414	VRNRC2EK200DF	AA	DA		C	Resistor (1/4W 200Ω ±1%)	テイコク
RA415	VRNRC2EK200DF	AA	DA		C	Resistor (1/4W 200Ω ±1%)	テイコク
RA416	VRNRC2EK510DF	AA	DA		C	Resistor (1/4W 510Ω ±1%)	テイコク
RA417	VRNRC2EK510DF	AA	DA		C	Resistor (1/4W 510Ω ±1%)	テイコク
RB401	VRS-TP2BD103J	AA	DA		C	Resistor (1/8W 10KΩ ±5%)	テイコク
RB402	VRS-TP2BD103J	AA	DA		C	Resistor (1/8W 10KΩ ±5%)	テイコク
RB403	VRS-TP2BD103J	AA	DA		C	Resistor (1/8W 10KΩ ±5%)	テイコク
RB406	VRS-TS2AD152J	AA	DA		C	Resistor (1/10W 1.5KΩ ±5%)	テイコク
RB409	VRS-TS2AD152J	AA	DA		C	Resistor (1/10W 1.5KΩ ±5%)	テイコク
RB410	VRS-TS2AD152J	AA	DA		C	Resistor (1/10W 1.5KΩ ±5%)	テイコク
RB411	VRS-TS2AD152J	AA	DA		C	Resistor (1/10W 1.5KΩ ±5%)	テイコク
RB412	VRS-TP2BD101J	AA	DA		C	Resistor (1/8W 100Ω ±5%)	テイコク
RB413	VRS-TS2AD104J	AA	DA		C	Resistor (1/10W 100KΩ ±5%)	テイコク
RB414	VRS-TP2BD101J	AA	DA		C	Resistor (1/8W 100Ω ±5%)	テイコク
RB415	VRS-TS2AD104J	AA	DA		C	Resistor (1/10W 100KΩ ±5%)	テイコク
RB416	VRS-TP2BD101J	AA	DA		C	Resistor (1/8W 100Ω ±5%)	テイコク
RB417	VRS-TS2AD104J	AA	DA		C	Resistor (1/10W 100KΩ ±5%)	テイコク
RB418	VRS-TS2AD102J	AA	DA		C	Resistor (1/10W 1.0KΩ ±5%)	テイコク
RB419	VRS-TS2AD102J	AA	DA		C	Resistor (1/10W 1.0KΩ ±5%)	テイコク
RB420	VRS-TS2AD102J	AA	DA		C	Resistor (1/10W 1.0KΩ ±5%)	テイコク
RB421	VRS-TP2BD331J	AB	DB		C	Resistor (1/8W 330Ω ±5%)	テイコク
RB422	VRS-TP2BD331J	AB	DB		C	Resistor (1/8W 330Ω ±5%)	テイコク
RB423	VRS-TP2BD331J	AB	DB		C	Resistor (1/8W 330Ω ±5%)	テイコク
RB424	VRS-TP2BD101J	AA	DA		C	Resistor (1/8W 100Ω ±5%)	テイコク
RB425	VRS-TP2BD101J	AA	DA		C	Resistor (1/8W 100Ω ±5%)	テイコク
RB430	VRS-TP2BD101J	AA	DA		C	Resistor (1/8W 100Ω ±5%)	テイコク
RB431	VRS-TP2BD101J	AA	DA		C	Resistor (1/8W 100Ω ±5%)	テイコク
RB432	VRS-TP2BD101J	AA	DA		C	Resistor (1/8W 100Ω ±5%)	テイコク
RB433	VRS-TP2BD101J	AA	DA		C	Resistor (1/8W 100Ω ±5%)	(SF-7850) テイコク
RB434	VRS-TP2BD101J	AA	DA		C	Resistor (1/8W 100Ω ±5%)	テイコク
RB435	VRS-TP2BD101J	AA	DA		C	Resistor (1/8W 100Ω ±5%)	(SF-7850) テイコク
RB436	VRS-TP2BD101J	AA	DA		C	Resistor (1/8W 100Ω ±5%)	テイコク
RB437	VRS-TP2BD101J	AA	DA		C	Resistor (1/8W 100Ω ±5%)	テイコク
RB438	VRS-TP2BD101J	AA	DA		C	Resistor (1/8W 100Ω ±5%)	テイコク
RB439	VRS-TP2BD101J	AA	DA		C	Resistor (1/8W 100Ω ±5%)	テイコク
RB440	VRS-TP2BD101J	AA	DA		C	Resistor (1/8W 100Ω ±5%)	テイコク
RB441	VRS-TP2BD101J	AA	DA		C	Resistor (1/8W 100Ω ±5%)	テイコク
RB442	VRS-TP2BD101J	AA	DA		C	Resistor (1/8W 100Ω ±5%)	テイコク
RB443	VRS-TP2BD101J	AA	DA		C	Resistor (1/8W 100Ω ±5%)	テイコク
RB444	VRS-TP2BD101J	AA	DA		C	Resistor (1/8W 100Ω ±5%)	テイコク
RB445	VRS-TP2BD101J	AA	DA		C	Resistor (1/8W 100Ω ±5%)	テイコク
RB446	VRS-TP2BD101J	AA	DA		C	Resistor (1/8W 100Ω ±5%)	テイコク
RB447	VRS-TP2BD101J	AA	DA		C	Resistor (1/8W 100Ω ±5%)	テイコク
RB448	VRS-TP2BD101J	AA	DA		C	Resistor (1/8W 100Ω ±5%)	テイコク
RB449	VRS-TP2BD101J	AA	DA		C	Resistor (1/8W 100Ω ±5%)	テイコク
RB450	VRS-TP2BD101J	AA	DA		C	Resistor (1/8W 100Ω ±5%)	テイコク
RB451	VRS-TP2BD101J	AA	DA		C	Resistor (1/8W 100Ω ±5%)	テイコク
RB452	VRS-TP2BD101J	AA	DA		C	Resistor (1/8W 100Ω ±5%)	テイコク
RDK	QSW-P0425FCZZ	AB	DB	N	B	Push switch	プッシュスイッチ
SDK	QSW-P0425FCZZ	AB	DB	N	B	Push switch	プッシュスイッチ
SDL	VHPSLR-320MC/	AB	DB	N	B	Photo transistor (SLR-320MC)	フォトトランジスター
TPL	VHPGL3HD47/-1	AB	DB		B	Photo transistor (GL3HD47)	フォトトランジスター
ZDK	QSW-P0425FCZZ	AB	DB	N	B	Push switch	プッシュスイッチ
ZUK	QSW-P0425FCZZ	AB	DB	N	B	Push switch	プッシュスイッチ

802 AC回路基板(AC circut PWB)

NO.	PARTS CODE	PRICE RANK Ex	PRICE RANK Ja	NEW MARK	PART RANK	DESCRIPTION	
1	PRDAR0048FCZZ	AC	DE	N	C	Heat sink (for TD201)	R8ホウネツバン
2	PSHEZ2727FCZZ	AC	DE	N	C	Insulator sheet (for TD201)	R8ゼツエンシート
3	QFSHD0001QCZZ	AA	DA		C	Fuse holder (for F1)	ヒューズホルダー
4	QFSHD0002QCZZ	AA	DA		C	Fuse holder (for F201)	ヒューズホルダー
5	QTANP0155FCZZ	AA	DA		C	Terminal (V1.25-M4)	タンシV1.25-M4

802 AC回路基板(AC circut PWB)

NO.	PARTS CODE	PRICE RANK Ex	Ja	NEW MARK	PART RANK	DESCRIPTION	
6	QTANP0156FCZZ	AA	DA		C	Terminal (SIN-217-18)	タンSIN-217-18
7	XBPSD3CP08000	AA	DA		C	Screw (3×8)(for TD201)	ビス
8	QTANP0115FCZZ	AB	DB		C	Terminal (T86032)	タブタンT86032
9	VRNRC2EK2150F	AA	DA		C	Resistor (1/4W 215Ω ±1%)	テイコウ
10	QFS-A1002CCZZ	AE	DL		A	Fuse (2A 250V::200V series)	ヒューズ
C201	RC-QZ0324FCZZ	AE	DL		C	Capacitor (200V series)	コンデンサー
C202	RC-QZ0314FCZZ	AH	DV		C	Capacitor	コンデンサー
C205	RC-QZ0324FCZZ	AE	DL		C	Capacitor (200V series)	コンデンサー
C206	VCQYNU1HM104K	AB	DB		C	Capacitor (50WV 0.1μF)	コンデンサー
C209	RC-QZ0117FCZZ	AD	DH		C	Capacitor (50WV 0.47μF)	コンデンサー
C210	RC-QZ0117FCZZ	AD	DH		C	Capacitor (50WV 0.47μF)	コンデンサー
C212	VCQYNU1HM223K	AA	DA		C	Capacitor (50WV 0.022μF)(100V series)	コンデンサー
	VCQYNU1HM473K	AB	DA		C	Capacitor (50WV 0.047μF)(200V series)	コンデンサー
C213	VCEAGA1VW107M	AB	DB		C	Capacitor (35WV 100μF)	コンデンサー
C214	VCQYNU1HM104K	AB	DB		C	Capacitor (50WV 0.1μF)	コンデンサー
CNA	QCNCW0690FCZZ	AB	DC	N	C	Connector (2pin)	コネクター
CNB	QCNCM0529FCZZ	AD	DF		C	Connector (6pin)	コネクター
CNC	QCNCW0446FCZZ	AB	DB	N	C	Connector (5pin)	コネクター
CR201	RMPTA0021FCZZ	AH	DX		B	Block resistor (200V series)	ブロックテイコウ
	RMPTA0030FCZZ	AE	DJ		B	Block resistor (100V series)	ブロックテイコウ
CR202	RMPTA0021FCZZ	AH	DX		B	Block resistor (200V series)	ブロックテイコウ
	RMPTA0030FCZZ	AE	DJ		B	Block resistor (100V series)	ブロックテイコウ
CR203	RMPTA0021FCZZ	AH	DX		B	Block resistor (200V series)	ブロックテイコウ
	RMPTA0030FCZZ	AE	DJ		B	Block resistor (100V series)	ブロックテイコウ
D201	VHD1SR35-100A	AB	DB		B	Diode (1SR35-100A)	ダイオード
F1	QFS-A2700QCZZ	AD	DH		A	Fuse (20A) (100V)	ヒューズ
	QFS-B0012FCZZ	AH	DK		A	Fuse (10A) (200V series)	ヒューズ
	QFS-B0030FCZZ	AH	DS		A	Fuse (15A) (120V/127V)	ヒューズ
F201	QFS-B2330QCZZ	AD	DF		A	Fuse (3.15A/125V)(100V series)	ヒューズ
	QFS-C1025CCZZ	AF	DL		B	Fuse (3.15A/250V)(200V series)	ヒューズ
FR201	RR-XZ0337FCZZ	AC	DE		B	Fuse resistor (220Ω)(100V series)	ヒューズテイコウ
	RR-XZ0338FCZZ	AC	DE		B	Fuse resistor (820Ω)(200V series)	ヒューズテイコウ
IC201	VHiSHN001//-1	AS	FE	N	B	IC (SHN001)	IC
L201	RCiLF0027FCZZ	AQ	EW		C	Coil (1mH 10A)(200V series)	コイル
L202	RCiLF0031FCZZ	AR	EZ		C	Coil (100μH 8A)(200V series)	コイル
L203	RCiLF0031FCZZ	AR	EZ		C	Coil (100μH 8A)(200V series)	コイル
L204	RCiLF0043FCZZ	AL	EC		C	Noise filter coil (200V series)	ノイズフィルターコイル
	RCiLF0048FCZZ	AG	DR		C	Coil (100μH 3A)(100V series)	コイル
R202	VRD-HT2EY105J	AA	DA		C	Resistor (1/4W 1.0MΩ ±5%)(100V series)	テイコウ
R203	VRS-HT2HA101J	AA	DA		C	Resistor (1/2W 100Ω ±5%)	テイコウ
R204	VRS-HT2HA121J	AA	DA		C	Resistor (1/2W 120Ω ±5%)(100V series)	テイコウ
	VRS-HT2HA201J	AA	DA		C	Resistor (1/2W 200Ω ±5%)(200V series)	テイコウ
R205	VRD-RB2HY122J	AA	DA		C	Resistor (1/2W 1.2KΩ ±5%)	テイコウ
R214	RR-WZ0237FCZZ	AD	DH		B	Cement resistor (3W 10KΩ)(100V series)	セメントテイコウ
	RR-WZ0238FCZZ	AE	DK		B	Cement resistor (5W 22KΩ)(200V series)	セメントテイコウ
R215	VRNHT2HK2003F	AC	DE	N	C	Resistor (1/2W 200KΩ ±1%)(100V series)	テイコウ
	VRNHT2HK4123F	AC	DE		C	Resistor (1/2W 412KΩ ±1%)(200V series)	テイコウ
R216	VRNHT2HK2003F	AC	DE	N	C	Resistor (1/2W 200KΩ ±1%)(100V series)	テイコウ
	VRNHT2HK4123F	AC	DE		C	Resistor (1/2W 412KΩ ±1%)(200V series)	テイコウ
R217	VRS-HT2HA101J	AA	DA		C	Resistor (1/2W 100Ω ±5%)	テイコウ
R218	VRS-HT2HA121J	AA	DA		C	Resistor (1/2W 120Ω ±5%)(100V series)	テイコウ
	VRS-HT2HA201J	AA	DA		C	Resistor (1/2W 200Ω ±5%)(200V series)	テイコウ
RE201	VHDS1WBA60S-1	AD	DH		B	Diode (S1WBA60S)	ダイオード
RY201	RRLYD1320QCZZ	AH	DW		B	Relay	リレー
SSR201	VHRS21MD4V/-1	AG	DR	N	B	Photo thyristor (S21MD4V)	フォトサイリスター
SSR202	VHRS11MD5V/-1	AF	DQ		B	Photo thyristor (S11MD5V)(100V series)	フォトサイリスター
	VHRS21MD3V/-1	AE	DL		B	Photo thyristor (S21MD3V)(200V series)	フォトサイリスター
TD201	VHiTM1641P-L/	AM	ED		B	IC (TM1641P)(100V series)	IC
	VHSBCR16DM-12	AM	EF		B	Thermistor (BCR16DM)(200V series)	サーミスター
TD202	VHSBCR16DM-12	AM	EF		B	Thermistor (BCR16DM)	サーミスター

803 操作基板2(Operation PWB-2)

NO.	PARTS CODE	PRICE RANK Ex	Ja	NEW MARK	PART RANK	DESCRIPTION	
1	PSPAZ0544FCZZ	AB	DB	N	C	Display spacer (for LED1)	アイヒョウジスペーサー
2	PSPAZ0546FCZZ	AB	DB	N	C	Print key spacer (for RPL)	プリントキースペーサー
3	DHAi-1940FCZZ	AG	DR	N	C	Operation PWB earth wire	OPキバンアースセン
CAK	QSW-P0425FCZZ	AB	DB	N	B	Push switch	プッシュスイッチ
CK	QSW-P0425FCZZ	AB	DB	N	B	Push switch	プッシュスイッチ
CNC	QCNCY0689FCZZ	AC	DE	N	C	Connector	コネクター
LED1	VHPLB-602MA1/	AL	EC	N	B	Photo transistor (LB-602MA1)	フォトトランジスター
PAL1	VHPSLR-320MC/	AB	DB	N	B	Photo transistor (SLR-320MC)	フォトトランジスター
PAL2	VHPSLR-320MC/	AB	DB	N	B	Photo transistor (SLR-320MC)	フォトトランジスター
PK	QSW-P0425FCZZ	AB	DB	N	B	Push switch	プッシュスイッチ
PSW	QSW-P0426FCZZ	AC	DC	N	B	Push switch	プッシュスイッチ
R501	VRNRC2EK1300F	AA	DA	N	C	Resistor (1/4W 130Ω ±1%)	テイコウ

[803] 操作基板2(Operation PWB-2)

NO.	PARTS CODE	PRICE RANK Ex	PRICE RANK Ja	NEW MARK	PART RANK	DESCRIPTION
R502	VRNRC2EK150JF	AA	DA	N	C	Resistor 1/4W 150Ω ±1%
R503	VRNRC2EK150JF	AA	DA	N	C	Resistor 1/4W 150Ω ±1%
R504	VRNRC2EK130JF	AA	DA	N	C	Resistor 1/4W 130Ω ±1%
R505	VRNRC2EK130JF	AA	DA	N	C	Resistor 1/4W 130Ω ±1%
R506	VRNRC2EK151JF	AA	DA	N	C	Resistor 1/4W 150Ω ±1%
R507	VRNRC2EK201JF	AA	DA		C	Resistor 1/4W 200Ω ±1%
R508	VRNRC2EK191JF	AA	DA		C	Resistor 1/4W 190Ω ±1%
R509	VRNRC2EK151JF	AA	DA	N	C	Resistor 1/4W 150Ω ±1%
R510	VRNRC2EK470JF	AA	DA	N	C	Resistor 1/4W 47Ω ±1%
R511	VRNRC2EK131JF	AA	DA	N	C	Resistor 1/4W 130Ω ±1%
R512	VRNRC2EK201JF	AA	DA		C	Resistor 1/4W 200Ω ±1%
R513	VRNRC2EK470JF	AA	DA	N	C	Resistor 1/4W 47Ω ±1%
RPL	VHPLD-201MG-1	AE	DK		B	Photo transistor (LD-201MG)
S1	QSW-P0425FCZZ	AB	DB	N	B	Push switch
S2	QSW-P0425FCZZ	AB	DB	N	B	Push switch
S3	QSW-P0425FCZZ	AB	DB	N	B	Push switch
S4	QSW-P0425FCZZ	AB	DB	N	B	Push switch
S5	QSW-P0425FCZZ	AB	DB	N	B	Push switch
S6	QSW-P0425FCZZ	AB	DB	N	B	Push switch
S7	QSW-P0425FCZZ	AB	DB	N	B	Push switch
S8	QSW-P0425FCZZ	AB	DB	N	B	Push switch
S9	QSW-P0425FCZZ	AB	DB	N	B	Push switch
S0	QSW-P0425FCZZ					

[804] メイン基板(Main PWB)

NO.	PARTS CODE	PRICE RANK Ex	PRICE RANK Ja	NEW MARK	PART RANK	DESCRIPTION
BT1	UBATL0010FCZZ	AG	DR	N	A	Battery (CR2032)
C1	0EVUJB0L222TP	AE	DK	N	C	Capacitor (UJD0L222TPA1AA)
C9	VCEAGU1AW476M	AA	DA		C	Capacitor (10WV 47μF)
C28	VCEAGU1AW476M	AA	DA		C	Capacitor (10WV 47μF)
C31	VCEAGU1AW476M	AA	DA		C	Capacitor (10WV 47μF)
C32	VCEAGU1VW476M	AB	DB		C	Capacitor (35WV 47μF)
C34	VCEAGU1VW227M	AC	DD		C	Capacitor (35WV 220μF)
C37	VCEAGU1CW476M	AB	DB		C	Capacitor (16WV 47μF)
C38	VCEAGU1CW477M	AC	DD		C	Capacitor (16WV 470μF)
C40	VCEAGU1AW476M	AA	DA		C	Capacitor (10WV 47μF)
C42	VCEAGU1AW477M	AC	DD		C	Capacitor (10WV 470μF)
C45	VCEAGU1AW476M	AA	DA		C	Capacitor (10WV 47μF)
C56	VCEAGU1VW106M	AA	DA		C	Capacitor (35WV 10μF)
C87	VCEAGU1VW476M	AB	DB		C	Capacitor (35WV 47μF)
CNA	0EV3A6P2DSA//	AB	DB	N	C	Connector (DF3A-6P-2DSA)
CNB	0EV1128DP2DPS	AG	DR	N	C	Connector (DF11-28DP-2DPSA)
	0EV1132DP2DPS	AG	DT	N	C	Connector (DF11-32DP-2DPSA)
CNC	0EV1B3P2.5DSA	AB	DC	N	C	Connector (DF18-3P-2.5DSA)
CND	0EV1126DP2DPS	AG	DR	N	C	Connector (DF11-26DP-2DPSA)
CNE	0EV1124DP2DPS	AF	DQ	N	C	Connector (DF11-24DP-2DPSA)
	0EV1130DP2DPS	AG	DT	N	C	Connector (DF11-30DP-2DPSA)
CNF	0EV3A10P2DSA/	AB	DC	N	C	Connector (DF3A-10P-2DSA)
CNG	0EV1128DP2DPS	AG	DR	N	C	Connector (DF11-28DP-2DSA)
CNH	0EV3A12P2DSA/	AB	DC	N	C	Connector (DF3A-12P-2DSA)
CNI	0EV3A10P2DSA/	AB	DC	N	C	Connector (DF3A-10P-2DSA)
CNJ	0EV1B5P2.5DSA	AC	DD	N	C	Connector (DF1B-5P-2.5DSA)
CNK	0EVB2PSHF1AA/	AC	DC	N	C	Connector (B2P-SHF-1AA)
CNL	0EV3A12P2DSA/	AB	DC	N	C	Connector (DF3A-12P-2DSA)
D3	0EV1SR124100A	AB	DC	N	B	Diode (1SR124-100A)
D11	0EV1SR124100A	AB	DC	N	B	Diode (1SR124-100A)
D12	0EV1SR124100A	AB	DC	N	B	Diode (1SR124-100A)
D13	0EV1SR124100A	AB	DC	N	B	Diode (1SR124-100A)
D15	0EV1SR124100A	AB	DC	N	B	Diode (1SR124-100A)
D16	0EV1SR124100A	AB	DC	N	B	Diode (1SR124-100A)
IC1	VHi7700M4F116	BC	GQ	N	B	IC (7700M4F116)
IC2	VHi27C51201FC	AY	FZ	N	B	IC (27C51201FC)
IC3	VHiM66500FP-1	AT	FH	N	B	IC (M66500FP)
IC4	VHiMC74HC373F	AF	DU		B	IC (MC74HC373F)
IC5	VHiSN74LS14NS	AL	EC		B	IC (SN74LS14SN)
IC6	VHiSN74LS32NS	AF	DR		B	IC (NS74LS32NS)
IC7	VHiSN74LS139N	AL	EG		B	IC (SN74LS139N)
IC8	0EVUPC78M10HF	AE	DK	N	B	IC (UPC78M10HF)
IC9	0EVHA178L56P/	AC	DE	N	B	IC (HA178L56P)
IC10	VHiLM358PS/-S	AC	DE		B	IC (LM358PS)
IC11	VHiLM393PS/-S	AC	DE	N	B	IC (LM393PS)
IC12	VHiLM358PS/-S	AC	DE		B	IC (LM358PS)
IC13	VHiLM393PS/-S	AF	DQ	N	B	IC (LM393PS)
IC14	0EVTC40538F//					IC (TC-40538F)

804 メイン基板(Main PWB)

NO.	PARTS CODE	PRICE RANK Ex	Ja	NEW MARK	PART RANK	DESCRIPTION	
IC15	VHiSN74LS14NS	AL	EC		B	IC (SN74LS14SN)	IC
IC16	VHiLM621N//-1	AL	EC	N	B	IC (LM621N)	IC
IC17	VHiSMA6012/-1	AM	EE	N	B	IC (SMA6012)	IC
IC18	VHiSN74LS32NS	AF	DR		B	IC (NS74LS32NS)	IC
IC19	VHiTD62504F-1	AF	DR		B	IC (TD62504F)	IC
IC20	VHiULN2004A-1	AL	EC		B	IC (ULN2004A)	IC
IC21	VHiULN2004A-1	AL	EC		B	IC (ULN2004A)	IC
IC22	VHiULN2004A-1	AL	EC		B	IC (ULN2004A)	IC
IC23	VHiSTA457C/-1	AH	DW	N	B	IC (STA457C)	IC
IC24	VHiULN2004A-1	AL	EC		B	IC (ULN2004A) (SF-7850)	IC
IC25	VHiTA7291S/-1	AF	DN	N	B	IC (TA7291S) (SF-7850)	IC
PCT1	RH-QX0022FCZZ	AF	DM		B	Posistor (PTH60G14AR220M056)	IC
R71	0EVB25DY7500/	AG	DR	N	C	Resistor (CRB25 R-65 DY7500)	ポジスター(PTH60G14AR)
R132	0EV1XFC10JR22	AC	DC	N	C	Resistor (CRH100XFC10JR22)	テイコウ
R136	VRN-RT2EK221F	AA	DA		C	Resistor (1/4W 220Ω ±1%)	テイコウ
S1	QSOC26428ACZZ	AE	DL		C	IC socket (ICC05028-360T)	テイコウ(B25FX2200)
X1	RCRSQ5030SCZZ	AG	DU		B	Crystal (8MHz)	ICソケット(ICC05028-36)
							クリスタル

805 DC電源基板(DC power supply PWB)

NO.	PARTS CODE	PRICE RANK Ex	Ja	NEW MARK	PART RANK	DESCRIPTION	
1	0CBSBD0502ZZ/	AD	DF	N	C	Label (D2084-6001A)(100V series)	ラベル
	0CBSBD0503ZZ/	AD	DF	N	C	Label (D2084-6002A)(200V series)	ラベル
A302	0CBLRZ1034ZZ/	AP	EN	N	C	Chasiss (D2084-5001A EZS)	シャーシー
A303	0CBLRZ1035ZZ/	AK	DY	N	C	Heat sink (D2084-5002A AL)	ヒートシンク
A304	0CBLRZ1036ZZ/	AE	DK	N	C	Heat sink (D2084-5003A AL)	ヒートシンク
A305	0CBLRS0025ZZ/	AK	EA	N	C	Supporter (SUP-045 SUS)	プロテクトバー
A306	0CBLRSC028ZZ/	AD	DF		C	Supporter (SUP-048 SUS)	サポーター
C301	0CBUGAG102GQ/	AH	DW	N	C	Electrolytic capacitor (UVZ1J102MRH)	デンカイコンデンサ
C302	0CBUGAG102GQ/	AH	DW	N	C	Electrolytic capacitor (UVZ1J102MRH)	デンカイコンデンサ
C303	0CBUGCF103BR/	AB	DB		C	Ceramic Capacitor (DD806F103Z50)	セラミック コンデンサ
C304	0CBUGAF100GQ/	AC	DC		C	Electrolytic capacitor (UVZ1H100MAH)	デンカイ コンデンサ
C306	0CBUGAE102CW/	AG	DT	N	C	Electrolytic capacitor (UPF1V102MRH)	デンカイ コンデンサ
C307	0CBUGAE102CW/	AG	DT	N	C	Electrolytic capacitor (UPF1V102MRH)	デンカイ コンデンサ
C308	0CBUGFF104AR/	AD	DF		C	Film Capacitor (AMZ-104K50)	フィルム コンデンサ
C309	0CBUGFF103AR/	AC	DE		C	Film capacitor (50WV 0.01μF)	フィルム コンデンサ
C310	0CBUGFF103AR/	AC	DE		C	Film capacitor (50WV 0.01μF)	フィルム コンデンサ
C311	0CBUGFF102AR/	AB	DB		C	Film capacitor (AMZ-102K50)	フィルムコンデンサ
C312	0CBUGFF104AR/	AD	DF		C	Film Capacitor (AMZ-104K50)	フィルム コンデンサ
C313	0CBUGAF100GQ/	AC	DC		C	Electrolytic capacitor (UVZ1H100MAH)	デンカイ コンデンサ
C314	0CBUGAD222GQ/	AG	DT	N	C	Electrolytic capacitor (UVZ1E222MRH)	デンカイコンデンサ
C315	0CBUGAC470GQ/	AC	DC		C	Electrolytic capacitor (UVZ1C470MAH)	デンカイ コンデンサ
C316	0CBUGAC222GQ/	AG	DR		C	Electrolytic capacitor (DC16V 2200μF)	デンカイ コンデンサ
C317	0CBUGAA470GQ/	AC	DC	N	C	Electrolytic capacitor (UVZ0J470MAH)	デンカイ コンデンサ
C318	0CBUGFF223AR/	AC	DB		C	Film Capacitor (AMZ-223K50)	フィルム コンデンサ
CN301	0CBPK2019ZZZ/	AD	DF	N	C	Connector (B 7P-VH)	ベーステキボスト
CN302	0CBPCZ009ZZZ/	AD	DF	N	C	Connector (DF1B-10P-2.5DSA)	コネクター
D301	0CBUBB0149CZ/	AH	DV		B	Diode (D3SBA40)	ダイオードスタック
D302	0CBUBC0167ET/	AG	DU	N	B	Diode (F5KQ90B)	セイリュウダイオード
D303	0CBUBC0208BZ/	AD	DF	N	B	Diode (AL01Z)	セイリュウダイオード
D304	0CBUBC0108AZ/	AB	DC		B	Diode (10E-1N)	ダイオード
D305	0CBUBC0108AZ/	AB	DC		B	Diode (10E-1N)	ダイオード
D306	0CBUBC0108AZ/	AB	DC		B	Diode (10E-1N)	ダイオード
D307	0CBUBC0108AZ/	AB	DC		B	Diode (10E-1N)	ダイオード
D308	VHD1N4148//-1	AA	DA		B	Diode (1N4148)	ダイオード(UBA0005AZ)
D309	VHD1N4148//-1	AA	DA		B	Diode (1N4148)	ダイオード(UBA0005AZ)
D310	0CBUBA0004AZ/	AB	DB		B	Diode (1SS53)	ダイオード
D311	0CBUBC0108AZ/	AB	DC		B	Diode (10E-1N)	ダイオード
D312	0CBUBC0108AZ/	AB	DC		B	Diode (10E-1N)	ダイオード
D313	0CBUBC0108AZ/	AB	DC		B	Diode (10E-1N)	ダイオード
D314	0CBUBC0108AZ/	AB	DC		B	Diode (10E-1N)	ダイオード
D315	0CBUBA0004AZ/	AB	DB		B	Diode (1SS53)	ダイオード
F301	0CBPJCCB5001/	AG	DS	N	A	Current fuse (TSC 5.0A 125V UL SOC)(100V series)	デンリュウヒューズ
	0CBPJCAC5001/	AE	DK	N	A	Current fuse (BET 5.0A 250V)(200V series)	デンリュウヒューズ
F302	0CBPJCCB1601/	AF	DN	N	A	Current fuse (TSC 1.6A 125V UL SOC)(100V series)	デンリュウヒューズ
	0CBPJCAC1601/	AE	DK	N	A	Current fuse (BET 1.6A 250V)(200V series)	デンリュウヒューズ
F303	0CBPJCAC1601/	AE	DK	N	A	Current fuse (BET 1.6A 250V)(200V series)	デンリュウヒューズ
	0CBPJCCB1601/	AF	DN	N	A	Current fuse (TSC 1.6A 125V UL SOC)(100V series)	デンリュウヒューズ
IC301	0CBUCZ009IZZ/	AL	EA		B	IC (M5T494P)	IC
IC302	0CBUCB0063FZ/	AL	EA	N	B	IC (UPC2410HF)	IC
IC303	0CBUCB0063AZ/	AK	EA	N	B	IC (UPC2405HF)	IC
L301	0CB829810014/	AT	FG	N	C	Choke coil (CH-164-KT)	チョークコイル
Q301	0CBUAC0107AZ/	AK	DY	N	B	Transistor (2SC3568)	トランジスター
Q302	0CBUAA0022AZ/	AE	DK		B	Transistor (2SA1020)	トランジスター
Q303	VSDSC001-//-1	AA	DA		B	Transistor (DSC001)	トランジスター(UAC0004AZ)
Q304	0CBUAA0006AZ/	AC	DD		B	Transistor (2SA733)	トランジスター

805 DC電源基板(DC power supply PWB)

NO.	PARTS CODE	PRICE RANK Ex	PRICE RANK J3	NEW MARK	PART RANK	DESCRIPTION	
R301	0CBUEEB332BA/	AA	DA		C	Carbon resistor (1/4W 3.3KΩ ±5%)	カーボンテイコウ
R302	0CBUEEB102BA/	AC	DA		C	Carbon resistor (1/4W 1KΩ ±5%)	カーボンテイコウ
R303	0CBUEBB100AC/	AD	DF	N	B	Fusible resistor (RF16SD100J)	ヒューズテイコウ
R304	0CBUEBB101AC/	AD	DF	N	B	Fusible resistor (RF16SD101J)	ヒューズテイコウ
R305	0CBUEFD102AU/	AB	DB		C	Metal film resistor (RS1FS102J)	キンゾクヒマクテイコウ
R306	0CBUEEB560BA/	AA	DA		C	Carbon resistor (1/4W 56Ω ±5%)	カーボンテイコウ
R308	0CBUEEB392BA/	AC	DA		C	Carbon resistor (1/4W 3.9KΩ ±5%)	カーボンテイコウ
R309	0CBUEEB390BA/	AA	DA	N	C	Carbon resistor (1/4W 39Ω ±5%)	カーボンテイコウ
R310	0CBUEZ0013ZZ/	AA	DA		C	Manganese wire (P1401-3117A)	マンガニンセン
R311	0CBUEEB561BA/	AA	DA		C	Carbon resistor (1/4W 560Ω ±5%)	カーボンテイコウ
R312	0CBUEEB561BA/	AA	DA		C	Carbon resistor (1/4W 560Ω ±5%)	カーボンテイコウ
R313	0CBUEEB113BA/	AA	DA	N	C	Carbon resistor (1/4W 11KΩ ±5%)	カーボンテイコウ
R314	0CBUEEB122BA/	AA	DA		C	Carbon resistor (1/4W 1.2KΩ ±5%)	カーボンテイコウ
R315	0CBUEEB104BA/	AC	DA		C	Carbon resistor (1/4W 100KΩ ±5%)	カーボンテイコウ
R316	0CBUEEB103BA/	AA	DA		C	Carbon resistor (1/4W 10KΩ ±5%)	カーボンテイコウ
R317	0CBUEEB103BA/	AA	DA		C	Carbon resistor (1/4W 10KΩ ±5%)	カーボンテイコウ
R318	0CBUEEB104BA/	AC	DA		C	Carbon resistor (1/4W 100KΩ ±5%)	カーボンテイコウ
R319	0CBUEEB104BA/	AC	DA		C	Carbon resistor (1/4W 100KΩ ±5%)	カーボンテイコウ
R320	0CBUEEB394BA/	AA	DA	N	C	Carbon resistor (1/4W 390KΩ ±5%)	カーボンテイコウ
R321	0CBUEEB104BA/	AC	DA		C	Carbon resistor (1/4W 100KΩ ±5%)	カーボンテイコウ
R322	0CBUEEB273BA/	AA	DA	N	C	Carbon resistor (1/4W 27KΩ ±5%)	カーボンテイコウ
R323	0CBUEEB153BA/	AA	DA		C	Carbon resistor (1/4W 15KΩ ±5%)	カーボンテイコウ
R325	0CBUEEB222BA/	AC	DA		C	Carbon resistor (1/4W 2.2KΩ ±5%)	カーボンテイコウ
R326	0CBUEEB182BA/	AA	DA	N	C	Carbon resistor (1/4W 1.8KΩ ±5%)	カーボンテイコウ
R327	0CBUEEB273BA/	AA	DA	N	C	Carbon resistor (1/4W 27KΩ ±5%)	カーボンテイコウ
R328	0CBUEEB153BA/	AA	DA		C	Carbon resistor (1/4W 15KΩ ±5%)	カーボンテイコウ
R329	0CBUEEB102BA/	AC	DA		C	Carbon resistor (1/4W 1KΩ ±5%)	カーボンテイコウ
R330	0CBUEEB392BA/	AC	DA		C	Carbon resistor (1/4W 3.9KΩ ±5%)	カーボンテイコウ
SCR301	0CBUDA0063AZ/	AK	DY	N	B	Thyristor (CR6PM-8L)	サイリスタ
VR301	0CBUFBA102CD/	AC	DE		B	Variable resistor (RVF6P51-5-102N)	ボリウム
ZD301	0CBUBDAA300B/	AC	DC		B	Zener diode (RD30EB1)	ツェナーダイオード
ZD302	0CBUBDAA100B/	AC	DC	N	B	Zener diode (RD10EB1)	ツェナーダイオード

■索 引 (Index)

PARTS CODE	NO.	PRICE R Ex	PRICE R Ja	NEW	P/R	
[C]						
CANGT1323FC01	8- 1	AD	DH	N	C	
CARMM0135FC01	407- 1	AG	DR	N	C	
CBOSZ1308FC01	9- 63	AL	EC	N	C	
CBOSZ1309FC01	9- 54	AL	EB	N	C	
CBOSZ1346FC01	6- 3	AG	DR	N	C	
CBOX-0085FC01	401- 1	AW	FQ	N	C	
CBOX-0085FC51	9- 401	BR	NA	N	E	
CBOX-0086FC51	9- 402	BF	HO	N	E	
CBTN-0122FC01	2- 1	AG	DS	N	C	
CBTN-0123FC01	2- 2	AG	DR	N	C	
CBTN-0124FC01	2- 3	AD	DG	N	C	
CBTN-0125FC01	2- 4	AF	DN	N	C	
CCAB-0715FC01	1- 403	AX	FX	N	D	
CCAB-0715FC02	1- 403	AY	FY	N	D	
CCAB-0715FC03	1- 403	AX	FY	N	D	
CCAB-0715FC04	1- 403	AX	FY	N	D	
CCAB-0715FC05	1- 403	AX	FX	N	D	
CCAB-0715FC06	1- 403	AX	FX	N	D	
CCAB-0715FC07	1- 403	AY	FY	N	D	
CCAB-0715FC08	1- 403	AX	FX	N	D	
CCAB-0715FC09	1- 403	AX	FX	N	D	
CCAB-0715FC10	1- 403	AX	FX	N	D	
CCASP0151FC31	1- 404	BK	HY	N	E	
CCASP0151FC32	1- 404	BK	HY	N	E	
CCASP0151FC33	1- 404	BK	HY	N	E	
CCASP0151FC41	1- 404	BL	LB	N	E	
CCASP0151FC42	1- 404	BL	LB	N	E	
CCASP0151FC43	1- 404	BL	LB	N	E	
CCASP0152FC31	10- 422	BP	MB	N	E	
CCASP0152FC32	10- 422	BP	MB	N	E	
CCASZ0067FC01	90- 15	AD	DH		D	
CCASZ0067FC02	90- 15	AM	ED		D	
CCASZ0215FC51	8- 405	AZ	GD	N	E	
CCASZ0217FC51	408- 406	AW	FT	N	E	
CCLEZ0109FC01	408- 1	AK	DY	N	C	
CCOVP1051FC31	7- 1	AU	FJ	N	E	
CCOVQ1055FC01	413- 22	AT	FH	N	C	
CCOVQ1055FC02	413- 22	AT	FH	N	C	
CCOVQ1055FC03	413- 22	AT	FH	N	C	
CFIX-0346FC01	1- 9	AQ	ET		C	
CFIX-0346FC04	1- 9	AP	EM		C	
CFIX-0346FC05	1- 9	AN	EL		C	
CFRM-0686FC01	407- 2	AX	FY	N	C	
CFRM-0686FC51	9- 407	BH	HQ	N	E	
CFRM-0686FC52	9- 407	BH	HQ	N	E	
CFRM-0687FC01	4- 1	AK	DZ	N	C	
CFRM-0688FC01	1- 55	AP	EM	N	C	
CFRM-0692FC01	413- 9	AU	FK	N	C	
CFRM-0693FC01	8- 69	AS	FB	N	C	
CFRM-0694FC31	9- 421	BL	LD	N	C	
CFRM-0695FC01	421- 1	AR	EZ	N	C	
CFRM-0696FC51	10- 423	BF	HH	N	E	
CFRM-0698FC51	6- 408	BN	LN	N	E	
CFS-T0084FC31	411- 1	AK	DX	N	B	
CGERH0267FC01	407- 3	AF	DP		C	
CGERH0517FC01	407- 4	AE	DL	N	C	
CGERH0735FC01	407- 5	AE	DL	N	C	
CGERH0736FC01	407- 5	AE	DL	N	C	
CGIDH1270FC01	5- 1	AV	FM	N	C	
CHLDZ0967FC01	1- 41	AD	DH		C	
CHLDZ0967FC03	1- 42	AD	DH		C	
CHLDZ1029FC31	7- 409	BK	HX	N	E	
CHLDZ1031FC01	413- 27	AH	DV	N	C	
CPAKA4349FC01	90- 1	AZ	GC	N	D	
CPAKA4349FC02	90- 1	AZ	GD	N	D	
CPLTM2415FC01	5- 2	AG	DS		C	
CPLTM2632FC01	5- 3	AE	DJ		C	
CPLTM3295FC01	1- 43	AF	DQ		C	
CPLTM3296FC01	1- 44	AF	DN		C	
CPLTM3725FC31	7- 410	BE	HC	N	E	
CPLTM3728FC01	7- 16	AQ	ET	N	C	
CPLTM3734FC01	9- 44	AH	DV	N	C	
CPLTM3736FC01	8- 2	AG	DR	N	C	
CPLTM3738FC01	1- 29	AH	DV	N	C	
CPLTM3739FC01	1- 30	AH	DV	N	C	
CPLTM3739FC02	1- 54	AH	DV	N	C	
CPLTM3753FC01	8- 99	AE	DK	N	C	
CPLTM3764FC01	422- 1	AH	DV	N	C	
CPLTM3778FC01	8- 122	AN	EK	N	C	

PARTS CODE	NO.	PRICE R Ex	PRICE R Ja	NEW	P/R	
CPNLC0198FC01	2- 5	AW	FR	N	D	
CPNLC0198FC02	2- 5	AW	FR	N	D	
CPNLC0198FC03	2- 5	AW	FR	N	D	
CPNLC0198FC04	2- 5	AW	FR	N	D	
CPNLC0198FC05	2- 5	AW	FR	N	D	
CPNLC0198FC06	2- 5	AW	FR	N	D	
CPWBF0758FC31	8- 805	BH	HT	N	E	
CPWBF0758FC32	8- 805	BH	HT	N	E	
CPWBF0760FC51	9- 50	BQ	MK	N	E	
CPWBF0762FC51	408- 2	AX	FU	N	E	
CPWBF0763FC51	2- 801	BH	HS	N	E	
CPWBF0763FC52	2- 801	BH	HR	N	E	
CPWBF0763FC53	2- 801	BG	HN	N	E	
CPWBF0764FC51	8- 802	BH	HP	N	E	
CPWBF0764FC52	8- 802	BH	HP	N	E	
CPWBF0765FC31	408- 3	BC	GS	N	E	
CPWBF0859FC31	1- 45	AU	FK	N	E	
CPWBF0859FC32	1- 45	AT	FG	N	E	
CPWBF0860FC31	7- 86	AY	FY	N	E	
CPWBF0860FC32	7- 86	AX	FV	N	E	
CPWBF0861FC51	10- 425	AS	FD	N	E	
CPWBF0861FC52	10- 425	AS	FD	N	E	
CPWBF0872FC52	2- 803	AY	GA	N	E	
CPWBF0874FC31	7- 5	AQ	EV	N	E	
CPWBF0882FC51	8- 802	BN	LT	N	E	
CPWBN0761FC3A	11- 804	BU	RG	N	E	
CPWBN0761FC3B	11- 804	BU	NZ	N	E	
CR-WZ0242FC05	7- 2	AQ	ES		B	
CR-WZ0243FC05	7- 2	AQ	ES		B	
CR-WZ0244FC05	7- 2	AQ	ES		B	
CR-WZ0245FC05	7- 2	AQ	ES		B	
CR-WZ0247FC05	7- 2	AQ	ES		B	
CRALP0090FC01	8- 3	AP	EL	N	C	
CREFL0139FC31	7- 411	BN	LN	N	E	
CREFL0139FC32	7- 411	BN	LN	N	E	
CROLN0834FC01	413- 412	AU	FL	N	C	
CSLI-0103FC31	409- 1	AF	DN	N	E	
〃	411- 2	AF	DN	N	E	
CSOU-0090FC01	1- 28	AS	FD	N	D	
CSPRB1815FC31	8- 118	AW	FR	N	E	
CTME-0208FC01	422- 29	AG	DS	N	C	
CTME-0209FC01	422- 32	AG	DS	N	C	
CTME-0210FC01	422- 35	AG	DS	N	C	
[D]						
DHAI-1618FCZZ	411- 3	AS	FB		C	
DHAI-1871FCZZ	2- 20	AX	FV	N	C	
DHAI-1872FCZZ	2- 20	AW	FR	N	C	
DHAI-1873FCZZ	7- 27	AY	GB	N	C	
DHAI-1874FCZZ	7- 27	AY	GB	N	C	
DHAI-1875FCZZ	7- 17	AN	EL	N	C	
DHAI-1876FCZZ	9- 1	AY	GA	N	C	
DHAI-1877FCZZ	9- 1	AX	FW	N	C	
DHAI-1878FCZZ	8- 112	AY	GB	N	C	
DHAI-1879FCZZ	8- 112	AX	FT	N	C	
DHAI-1880FCZZ	421- 2	AH	DU	N	C	
DHAI-1881FCZZ	423- 1	AD	DG	N	C	
DHAI-1882FCZZ	8- 107	AG	DT	N	C	
DHAI-1883FCZZ	8- 107	AH	DX	N	C	
DHAI-1884FCZZ	10- 46	AN	EK	N	C	
DHAI-1885FCZZ	9- 65	AM	ED	N	C	
DHAI-1886FCZZ	8- 51	AY	GB	N	C	
DHAI-1887FCZZ	8- 51	AY	GA	N	C	
DHAI-1888FCZZ	401- 2	AM	EG	N	C	
DHAI-1889FCZZ	4- 2	AN	EL	N	C	
DHAI-1890FCZZ	2- 6	AM	EE	N	C	
DHAI-1894FCZZ	8- 151	AP	EN		C	
DHAI-1896FCZZ	9- 28	AF	DQ	N	C	
DHAI-1897FCZZ	8- 4	AK	DX	N	C	
DHAI-1898FCZZ	407- 6	AD	DF	N	C	
DHAI-1902FCZZ	801- 1	AD	DG	N	C	
DHAI-1934FCZZ	9- 22	AG	DS	N	C	
DHAI-1940FCZZ	803- 3	AG	DR	N	C	
DUNTW6404FCZZ	8- 413	BW	TA	N	E	
DUNTW6404FC11	8- 413	BW	TA	N	E	
DUNTW6404FC12	8- 413	BW	TA	N	E	
DUNTW6404FC13	8- 413	BW	TA	N	E	
DUNTW6404FC14	8- 413	BW	TA	N	E	
DUNTW6404FC15	8- 413	BW	TA	N	E	
DWIR-0466CSZZ	405- 1	BG	GZ		C	
〃	406- 1	BG	GZ		C	

PARTS CODE	NO.	PRICE R Ex	PRICE R JB	NEW	P/R	
[G]						
GCAB-0542FCZZ	1- 1	AP	EQ		D	
GCAB-0543FCZZ	1- 2	AQ	EU		D	
GCAB-0544FCZZ	1- 3	AT	FG		D	
〃	1- 46	AT	FG		D	
GCAB-0716FCZZ	1- 14	AU	FJ	N	D	
GCAB-0717FCZZ	1- 24	AU	FL	N	D	
GCAB-0718FCZZ	1- 4	AP	EQ	N	D	
GCAB-0719FCZZ	1- 5	AW	FR	N	D	
GCAB-0721FCZZ	1- 27	AW	FP	N	D	
GCASP0151FCZZ	404- 1	AZ	GD	N	D	
GCASP0153FCZZ	422- 2	AR	EV	N	D	
GCOVH0194FCZZ	3- 1	AY	FZ	N	D	
GCOVZ0195FCZZ	90- 16	AV	FN	N	D	
GCOVZ0196FCZZ	90- 16	AV	FN	N	D	
GDAI-0151FCZZ	8- 5	BQ	ML	N	C	
GDAI-0152FCZZ	10- 40	BQ	MC	N	D	
GDAI-0153FCZZ	10- 1	BA	GG	N	D	
[H]						
HINDP0297FCZZ	2- 7	AT	FH	N	D	
HINDP0298FCZZ	2- 7	AT	FH	N	D	
HINDP0299FCZZ	2- 7	AT	FH	N	D	
HINDP0300FCZZ	2- 7	AT	FH	N	D	
HINDP0302FCZZ	2- 7	AU	FJ	N	D	
HINDP0303FCZZ	2- 7	AU	FJ	N	D	
HINDP0304FCZZ	2- 7	AU	FJ	N	D	
[J]						
JHNDP0102FCZZ	9- 2	AH	DX	N	C	
JHNDP0103FCZZ	402- 20	AE	DJ	N	C	
JKNBP0096FCZ1	10- 25	AB	DB	N	C	
JKNBP0114FCZZ	8- 6	AC	DE	N	C	
JKNBZ0117FCZZ	404- 2	AB	DC	N	C	
[L]						
LANGT1290FCZZ	7- 28	AD	DF		C	
LANGT1320FCZZ	9- 3	AB	DC	N	C	
LANGT1324FCZZ	10- 26	AD	DF	N	C	
LBNDJ0005FCZZ	8- 119	AB	DB		C	
LBNDJ0010FCZZ	9- 64	AB	DA		C	
LBNDJ0014FCZZ	7- 29	AB	DD		C	
LBNDJ0033FCZZ	8- 152	AB	DB		C	
LBNDJ0043FCZZ	8- 82	AA	DA		C	
〃	9- 53	AA	DA		C	
〃	421- 3	AA	DA		C	
LBOSZ1031FCZZ	8- 73	AC	DE		C	
〃	421- 4	AC	DE		C	
LBOSZ1313FCZZ	9- 4	AM	EF	N	C	
LBSHC0231FCZZ	7- 30	AA	DA		C	
LBSHZ1100CCZZ	8- 7	AC	DD		C	
LDAIU0424FCZZ	9- 23	AU	FK	N	C	
LDAIU0425FCZZ	2- 8	AT	FG	N	C	
LDAIU0427FCZZ	404- 3	AD	DF	N	C	
LFIX-0016FCZZ	8- 83	AD	DH		C	
LFIX-0254FCZZ	409- 2	AC	DD		C	
LFIX-0272FCZZ	410- 1	AC	DC		C	
LFIX-0284FCZZ	410- 2	AC	DC		C	
LFIX-0297FCZZ	10- 27	AB	DC		C	
LFIX-0320FCZZ	7- 31	AB	DB		C	
〃	409- 3	AB	DB		C	
LFIX-0350FCZZ	411- 4	AC	DE		C	
LFIX-0406FCZZ	1- 10	AM	ED	N	C	
LFIX-0408FCZZ	7- 32	AB	DB	N	C	
LFIX-0409FCZZ	7- 33	AB	DB	N	C	
LFIX-0410FCZZ	1- 59	AC	DE	N	C	
LFRM-0684FCZZ	9- 5	AX	FT	N	C	
LFRM-0685FCZZ	9- 6	AW	FR	N	C	
LFRM-0689FCZZ	8- 52	AY	FY	N	C	
LFRM-0690FCZZ	405- 2	AH	DU	N	C	
LFRM-0691FCZZ	413- 1	AS	FE	N	C	
LFRM-0694FCZZ	421- 5	AK	EA	N	C	
LFRM-0696FCZZ	423- 2	AH	DW	N	C	
LFRM-0698FCZZ	408- 4	AN	EJ	N	C	
LHLDW0004SCZZ	8- 119	AB	DA		C	
LHLDW0898FCZZ	2- 10	AA	DA		C	
LHLDW0970FCZZ	2- 9	AA	DA		C	
LHLDW1038FCZZ	8- 129	AA	DA	N	C	
〃	407- 7	AA	DA	N	C	
LHLDZ0831FCZ1	410- 3	AH	DX		C	
LHLDZ0939FCZZ	7- 34	AD	DH		C	
LHLDZ1030FCZZ	405- 3	AF	DQ	N	C	

PARTS CODE	NO.	PRICE R Ex	PRICE R JB	NEW	P/R	
LHLDZ1032FCZZ	10- 47	AM	EE	N	C	
LHLDZ1036FCZZ	401- 3	AB	DB	N	C	
LPINS0075FCZZ	8- 8	AB	DB		C	
〃	8- 100	AB	DB		C	
〃	9- 35	AB	DB		C	
LPINS0089FCZZ	8- 9	AA	DA		C	
〃	8- 53	AA	DA		C	
〃	402- 1	AA	DA		C	
LPINS0096FCZZ	8- 10	AB	DB		C	
〃	423- 3	AB	DB		C	
LPINSJ155FCZZ	4- 16	AA	DA		C	
〃	407- 33	AA	DA		C	
〃	421- 6	AA	DA		C	
〃	423- 4	AA	DA		C	
LPINS0235FCZZ	423- 5	AA	DA	N	C	
LPLTG3737FCZZ	8- 11	AB	DB	N	C	
〃	10- 41	AB	DB	N	C	
LPLTM2430FCZZ	401- 4	AC	DD		C	
LPLTM2573FCZZ	1- 34	AO	DF		C	
LPLTM2365FCZZ	413- 10	AC	DC		C	
LPLTM3155FCZZ	7- 35	AB	DC		C	
LPLTM3156FCZ1	7- 36	AC	DE		C	
LPLTM3157FCZZ	1- 47	AP	EQ		C	
LPLTM3212FCZZ	411- 6	AC	DD		C	
LPLTM3213FCZZ	411- 7	AB	DC		C	
LPLTM3309FCZZ	7- 37	AD	DF		C	
LPLTM3310FCZZ	7- 98	AD	DG		C	
LPLTM3714FCZZ	9- 7	AP	EN	N	C	
LPLTM3715FCZZ	9- 47	AK	EA	N	C	
LPLTM3716FCZZ	9- 55	AF	DN	N	C	
LPLTM3718FCZZ	5- 4	AG	DS	N	C	
LPLTM3719FCZZ	5- 5	AF	DN	N	C	
LPLTM3720FCZZ	11- 1	AK	DZ	N	C	
LPLTM3724FCZZ	7- 38	AH	DV	N	C	
LPLTM3725FCZZ	410- 4	AN	EJ	N	C	
LPLTM3732FCZZ	7- 8	AC	DE	N	C	
LPLTM3742FCZZ	8- 108	AG	DU	N	C	
LPLTM3743FCZZ	8- 108	AK	DZ	N	C	
LPLTM3744FCZZ	8- 84	AG	DR	N	C	
LPLTM3745FCZZ	8- 12	AQ	ER	N	C	
LPLTM3746FCZZ	8- 13	AQ	EU	N	C	
LPLTM3748FCZZ	405- 4	AH	DX	N	C	
LPLTM3749FCZZ	405- 5	AC	DC	N	C	
LPLTM3750FCZZ	405- 6	AC	DC	N	C	
LPLTM3751FCZZ	8- 14	AN	EG	N	C	
LPLTM3752FCZZ	8- 77	AG	DT	N	C	
LPLTM3754FCZZ	421- 22	AD	DF	N	C	
LPLTM3755FCZZ	404- 4	AR	EX	N	C	
LPLTM3761FCZZ	422- 25	AT	FG	N	C	
LPLTM3762FCZZ	422- 30	AH	DV	N	C	
LPLTM3763FCZZ	422- 33	AH	DV	N	C	
LPLTM3765FCZZ	422- 36	AC	DE	N	C	
LPLTM3766FCZZ	10- 54	AD	DF	N	C	
LPLTM3767FCZZ	10- 53	AF	DP	N	C	
LPLTM3771FCZZ	406- 2	AL	EC	N	C	
LPLTM3772FCZZ	401- 5	AR	EX	N	C	
LPLTM3773FCZZ	401- 6	AC	DD	N	C	
LPLTM3776FCZZ	8- 94	AN	EH	N	C	
LPLTM3779FCZZ	7- 39	AK	EA	N	C	
LPLTM3780FCZZ	10- 52	AN	EL	N	C	
LPLTM3792FCZZ	1- 25	AG	DS	N	C	
LPLTM3800FCZZ	423- 6	AD	DF	N	C	
LPLTP3153FCZZ	411- 8	AM	ED		C	
LPLTP3154FCZZ	411- 9	AM	EE		C	
LPLTP3159FCZZ	1- 49	AE	DJ		C	
LPLTP3729FCZZ	7- 91	AH	DX	N	C	
LPLTP3747FCZZ	8- 15	AD	DF	N	C	
LPLTP3756FCZZ	404- 5	AG	DU	N	C	
LPLTP3757FCZZ	404- 6	AG	DU	N	C	
LPLTP3758FCZZ	404- 32	AF	DN	N	C	
LPLTP3759FCZZ	404- 32	AF	DN	N	C	
LPLTP3760FCZZ	404- 7	AD	DF	N	C	
LPLTP3768FCZZ	423- 7	AD	DF	N	C	
LPLTP3769FCZZ	423- 8	AC	DC	N	C	
LPLTP3840FCZZ	10- 43	AG	DS	N	C	
LRALM0075FCZZ	7- 40	AK	DZ		C	
LRALM0088FCZZ	9- 8	AK	DY	N	C	
LRALP0091FCZZ	10- 44	AM	EF	N	C	
LSTPF0172FCZZ	413- 33	AA	DA		C	
LSTPP0161FCZZ	404- 8	AB	DC		C	

SF7850

PARTS CODE	NO.	PRICE R Ex	PRICE R Ja	N-LW	P-R
LSTPP0223FCZZ	1- 50	AB	DC		C
LSTPP0255FCZZ	404- 9	AB	DC	N	C
LSTPP0256FCZZ	402- 21	AB	DC	N	C
LSTYM0178FCZZ	8- 16	AM	ED	N	C
LSTYM0180FCZZ	423- 9	AC	DE	N	C
LSTYP0179FCZZ	10- 3	AD	DG	N	C
LSUPP0009FCZZ	11- 2	AB	DB		C
LX-BZ0016FCZZ	422- 3	AA	DA		C
LX-BZ0032FCZZ	7- 20	AB	DB		C
LX-BZ0102FCZZ	1- 60	AA	DA		C
〃	8- 140	AA	DA		C
LX-BZ0135FCZZ	7- 41	AC	DD		C
LX-BZ0137FCZZ	10- 4	AB	DC		C
LX-BZ0180FCZZ	9- 56	AA	DA		C
LX-BZ0193FCZZ	10- 28	AB	DB		C
LX-BZ0335FCZZ	7- 43	AA	DA		C
LX-BZ0339FCZZ	411- 10	AA	DA		C
LX-BZ0342FCZZ	413- 2	AB	DB		C
〃	413- 23	AB	DB		C
LX-BZ0377FCZZ	8- 146	AA	DA		C
LX-BZ0399FCZZ	9- 9	AB	DB		C
LX-BZ0426FCZZ	9- 57	AA	DA		C
LX-BZ0458FCZZ	9- 10	AA	DA		C
LX-BZ0495FCZZ	8- 141	AC	DD		C
LX-BZ0502FCZZ	2- 16	AA	DA		C
LX-BZ0512FCZZ	1- 11	AB	DC		C
LX-BZ0513FCZZ	1- 12	AA	DA		C
LX-BZ0515FCZZ	410- 5	AA	DA		C
LX-BZ0576FCZZ	90- 2	AC	DD	N	C
LX-BZ0579FCZZ	90- 3	AD	DG	N	C
LX-BZ0580FCZZ	90- 4	AC	DD	N	C
LX-BZ0581FCZZ	9- 11	AB	DB	N	C
LX-BZ0583FCZZ	4- 3	AB	DB	N	C
LX-BZ0585FCZZ	422- 4	AA	DA	N	C
LX-BZ0586FCZZ	10- 55	AA	DA	N	C
〃	404- 29	AA	DA	N	C
LX-BZ0589FCZZ	4- 4	AA	DA	N	C
LX-BZ0590FCZZ	9- 12	AC	DC	N	C
LX-BZ0602FCZZ	90- 28	AA	DA	N	C
LX-WZ0017FCZZ	10- 29	AA	DA		C
〃	423- 10	AA	DA		C
LX-WZ0050FCZZ	7- 44	AA	DA		C
LX-WZ0052FCZZ	413- 28	AA	DA		C
LX-WZ0057FCZZ	410- 6	AA	DA		C
LX-WZ0064FCZZ	402- 22	AA	DA		C
LX-WZ0069FCZZ	422- 5	AA	DA		C
LX-WZ0086FCZZ	404- 30	AA	DA		C
〃	422- 6	AA	DA		C
LX-WZ0142FCZZ	9- 51	AB	DB		C
LX-WZ0186FCZZ	4- 5	AA	DA		C
LX-WZ0225FCZZ	402- 23	AA	DA		C
LX-WZ0235FCZZ	90- 29	AA	DA		C
LX-WZ0278FCZZ	407- 8	AA	DA	N	C
LX-WZ2028SCZZ	404- 10	AA	DA		C
[M]					
MARMM0138FCZZ	10- 7	AF	DQ	N	C
MARMP0120FCZZ	402- 2	AE	DL		C
MARMP0122FCZZ	1- 51	AL	EB		C
MARMP0136FCZZ	404- 31	AF	DP	N	C
MARMP0139FCZZ	402- 3	AE	DM	N	C
MHNG-0086FCZZ	3- 2	AL	EC		C
MHNG-0096FCZZ	3- 3	AL	EC		C
MJNTP0011FCZZ	422- 7	AB	DB		C
MJNTP0012FCZZ	422- 8	AB	DB		C
MLEVF0562FCZZ	413- 12	AE	DJ	N	C
MLEVF0563FCZZ	413- 13	AE	DJ	N	C
MLEVP0561FCZZ	9- 29	AC	DE	N	C
MLEVP0564FCZZ	8- 131	AB	DB	N	C
MLEVT0565FCZZ	10- 8	AC	DD	N	C
MLOV-0004FCZZ	7- 45	AF	DM		C
MSPRC0536FCZZ	413- 29	AB	DB		C
MSPRC1145FCZZ	10- 9	AA	DA		C
〃	404- 11	AA	DA		C
MSPRC1289FCZZ	7- 46	AA	DA		C
MSPRC1299FCZZ	4- 15	AA	DA		C
MSPRC1406FCZZ	8- 74	AE	DJ		C
〃	421- 7	AE	DJ		C
MSPRC1440FCZZ	8- 17	AA	DA		C
MSPRC1534FCZZ	4- 6	AA	DA		C
MSPRC1696FCZZ	422- 9	AA	DA		C

PARTS CODE	NO.	PRICE R Ex	PRICE R Ja	N-LW	P-R
MSPRC1794FCZZ	407- 9	AA	DA	N	C
MSPRC1795FCZZ	8- 123	AB	DC	N	C
MSPRC1796FCZZ	413- 14	AA	DA	N	C
MSPRC1801FCZZ	404- 12	AC	DD	N	C
MSPRC1803FCZZ	404- 13	AA	DA	N	C
MSPRC1804FCZZ	404- 14	AA	DA	N	C
MSPRC1805FCZZ	10- 30	AC	DC	N	C
MSPRC1806FCZZ	422- 10	AC	DD	N	C
MSPRC1807FCZZ	10- 10	AB	DC	N	C
MSPRC1809FCZZ	423- 12	AA	DA	N	C
MSPRC1810FCZZ	423- 13	AA	DA	N	C
MSPRC1818FCZZ	8- 101	AA	DA	N	C
MSPRC1826FCZZ	9- 36	AB	DB	N	C
MSPRC1841FCZZ	422- 11	AC	DD	N	C
MSPRC1843FCZZ	9- 37	AB	DB	N	C
MSPRC1869FCZZ	423- 11	AB	DB	N	C
MSPRP1566FCZZ	411- 11	AF	DQ		C
MSPRP1567FCZZ	411- 12	AF	DP		C
MSPRP1591FCZZ	411- 13	AC	DD		B
MSPRT0513FCZZ	406- 3	AA	DB		B
MSPRT1203FCZZ	5- 6	AA	DA		C
MSPRT1242FCZZ	8- 115	AA	DA		C
MSPRT1395FCZZ	405- 7	AA	DA		C
MSPRT1563FCZZ	1- 52	AC	DD		C
MSPRT1640FCZZ	402- 4	AC	DC		C
MSPRT1786FCZZ	9- 14	AA	DA	N	C
MSPRT1792FCZZ	8- 136	AA	DA	N	C
〃	9- 30	AA	DA	N	C
MSPRT1793FCZZ	8- 95	AA	DA	N	C
MSPRT1797FCZZ	413- 15	AA	DA	N	C
MSPRT1798FCZZ	413- 3	AA	DA	N	C
MSPRT1799FCZZ	8- 55	AB	DB	N	C
MSPRT1800FCZZ	8- 56	AB	DB	N	C
MSPRT1813FCZZ	402- 24	AA	DA	N	C
MSPRT1835FCZZ	8- 144	AC	DD	N	C
[N]					
NBLTH0170FCZZ	8- 18	AH	DV	N	B
NBLTH0171FCZZ	8- 124	AF	DQ	N	B
NBRGC0053FCZZ	8- 102	AD	DH		C
NBRGC0080FCZZ	4- 7	AD	DH		C
NBRGC0100FCZZ	412- 1	AC	DD		B
NBRGC0133FCZZ	9- 38	AC	DD		C
NBRGC0136FCZZ	401- 7	AC	DD		B
NBRGC0167FCZZ	8- 19	AB	DC		B
NBRGC0188FCZZ	8- 20	AB	DB		B
〃	8- 57	AB	DB		B
NBRGC0254FCZZ	7- 47	AB	DC		C
〃	10- 31	AB	DC		C
NBRGC0387FCZZ	7- 48	AB	DC		B
NBRGC2019SCZZ	10- 32	AC	DH		C
〃	421- 8	AC	DH		C
〃	423- 14	AC	DH		C
NBRGC2029SCZZ	7- 9	AB	DD		C
NBRGM1040HCZZ	407- 10	AC	DE		C
〃	407- 34	AC	DE		C
NBRGP0266FCZZ	422- 12	AA	DA		C
NBRGP0299FCZZ	402- 5	AC	DE		B
NBRGP0320FCZZ	8- 21	AB	DB		C
NBRGP0370FCZZ	422- 13	AE	DJ		C
NBRGP0415FCZZ	8- 22	AC	DD	N	C
NBRGP0416FCZZ	413- 4	AH	DW	N	C
NBRGP0417FCZZ	10- 33	AC	DE	N	C
NBRGY0325FCZZ	413- 16	AL	EB		C
NCPL-0007FCZZ	4- 8	AC	DC		C
NFANC0034FCZZ	7- 4	AZ	GE	N	C
NGERH0111FCZZ	4- 9	AD	DH		C
NGERH0118FCZZ	407- 11	AC	DD		C
NGERH0128FCZZ	423- 15	AC	DD		C
NGERH0183FCZZ	8- 23	AC	DC		C
〃	407- 12	AC	DC		C
NGERH0193FCZZ	1- 15	AB	DC		C
〃	404- 15	AB	DC		C
NGERH0314FCZZ	402- 6	AC	DD		C
NGERH0317FCZZ	8- 70	AC	DE		C
〃	8- 103	AC	DE		C
〃	9- 45	AC	DE		C
〃	421- 9	AC	DE		C
NGERH0349FCZZ	407- 13	AC	DC		C
NGERH0382FCZZ	8- 24	AB	DB		C
NGERH0384FCZZ	421- 10	AE	DK		C

PARTS CODE	NO.	PRICE R Ex	Ja	N/M	P/R
NGERH0430FCZZ	421- 11	AB	DC		C
NGERH0443FCZZ	413- 34	AD	DG		C
NGERH0457FCZZ	8- 25	AC	DC		C
〃	8- 71	AC	DC		C
〃	8- 104	AC	DC		C
〃	9- 39	AC	DC		C
〃	407- 14	AC	DC		C
〃	421- 12	AC	DC		C
〃	423- 16	AC	DC		C
NGERH0458FCZZ	407- 15	AC	DE		C
NGERH0495FCZZ	407- 16	AC	DD		C
NGERH0515FCZZ	421- 13	AC	DD		C
NGERH0526FCZZ	413- 30	AE	DL		C
NGERH0621FCZZ	402- 7	AB	DC		C
NGERH0626FCZZ	402- 8	AC	DC		C
NGERH0734FCZZ	7- 21	AF	DM	N	C
NGERH0737FCZZ	407- 17	AD	DF	N	C
NGERH0738FCZZ	407- 18	AD	DF	N	C
NGERH0739FCZZ	407- 19	AB	DC	N	C
NGERH0740FCZZ	407- 35	AB	DC	N	C
NGERH0741FCZZ	407- 20	AD	DG	N	C
NGERH0742FCZZ	407- 21	AB	DC	N	C
NGERH0743FCZZ	407- 22	AE	DK	N	C
NGERH0744FCZZ	407- 23	AC	DD	N	C
NGERH0745FCZZ	413- 31	AC	DD	N	C
NGERH0746FCZZ	8- 75	AG	DS	N	C
NGERH0749FCZZ	423- 17	AE	DL	N	C
NGERH0750FCZZ	401- 8	AC	DD	N	C
NGERH0751FCZZ	401- 9	AC	DD	N	C
NGERH0752FCZZ	401- 10	AC	DC	N	C
NGERH0753FCZZ	401- 11	AA	DA	N	C
NGERR0377FCZZ	1- 16	AD	DH		C
NGERR0747FCZZ	404- 16	AE	DJ	N	C
NGERR0748FCZZ	404- 17	AD	DH	N	C
NPLYZ0137FCZZ	7- 49	AC	DC		C
NPLYZ0152FCZZ	7- 50	AD	DF		C
NPLYZ0167FCZZ	7- 51	AF	DN		C
〃	409- 5	AF	DN		C
NPLYZ0172FCZ1	7- 22	AL	EB		C
NPLYZ0181FCZZ	7- 52	AB	DB		C
NPLYZ0239FCZZ	8- 58	AC	DC	N	C
〃	8- 142	AC	DC	N	C
NROLI0636FCZZ	413- 17	AY	GB	N	C
NROLM0847FCZZ	401- 12	BB	GM	N	C
NROLN0834FCZZ	412- 2	AW	FR	N	C
NROLP0510FCZ1	8- 116	AC	DD		C
NROLP0547FCZZ	422- 14	AB	DC		C
NROLP0591FCZZ	8- 137	AA	DA		C
〃	9- 31	AA	DA		C
NROLP0813FCZZ	10- 51	AE	DH	N	C
NROLP0831FCZZ	8- 96	AD	DG	N	C
NROLP0833FCZZ	8- 26	AC	DD	N	C
NROLP0844FCZZ	401- 13	AM	EG	N	C
NROLP0845FCZZ	401- 14	AM	EG	N	C
NROLR0832FCZZ	9- 40	AR	EZ	N	C
NROLR0837FCZZ	8- 59	AM	EE	N	C
NROLR0838FCZZ	8- 27	AW	FP	N	C
NROLR0839FCZZ	8- 414	AV	FL	N	C
NROLR0840FCZZ	8- 105	AT	FH	N	C
NROLR0841FCZZ	421- 14	AR	EW	N	C
NROLR0842FCZZ	421- 424	AU	FL	N	C
NROLS0848FCZZ	402- 9	AP	EP	N	C
NROLT0835FCZZ	413- 35	AZ	GE	N	C
NSFTD1596FCZZ	7- 23	AR	EY	N	C
NSFTD1597FCZZ	7- 53	AP	EL	N	C
NSFTD1598FCZZ	7- 54	AG	DU	N	C
NSFTD1601FCZZ	407- 36	AH	DV	N	C
NSFTD1602FCZZ	4- 10	AK	DY	N	C
NSFTD1623FCZZ	423- 18	AG	DU	N	C
NSFTD1624FCZZ	423- 19	AH	DV	N	C
NSFTZ0622FCZZ	10- 13	AB	DC		C
NSFTZ1392FCZZ	1- 53	AF	DM		C
NSFTZ1595FCZZ	5- 7	AD	DF	N	C
NSFTZ1599FCZZ	8- 97	AL	EB	N	C
NSFTZ1605FCZZ	10- 50	AD	DF	N	C
NSFTZ1607FCZZ	8- 29	AN	EH	N	C
NSFTZ1608FCZZ	8- 30	AG	DS	N	C
NSFTZ1617FCZZ	10- 34	AX	FX	N	C
NSFTZ1621FCZZ	422- 15	AC	DE	N	C
NSFTZ1622FCZZ	422- 16	AC	DC	N	C

PARTS CODE	NO.	PRICE R Ex	Ja	N/M	P/R
NSFTZ1625FCZZ	423- 20	AC	DD	N	C
NSFTZ1627FCZZ	402- 10	AG	DR	N	C
NSFTZ1628FCZZ	402- 11	AF	DP	N	C
NSFTZ1629FCZZ	10- 14	AB	DC	N	C
(P)					
PBOX-0084FCZZ	7- 5	AE	DK	N	C
PBOX-0086FCZZ	402- 12	AN	EK	N	C
PBRSR0061FCZZ	8- 60	AH	DW		B
PCASZ0215FCZZ	405- 9	AM	EF	N	C
PCLC-0190FCZZ	423- 21	AC	DC	N	C
PCLC-0191FCZZ	8- 31	AV	FM	N	C
PCLR-0259FCZZ	10- 35	AB	DB		C
〃	404- 15	AB	DB		C
PCLR-0308FCZZ	7- 55	AB	DB		C
PCLR-0309FCZZ	410- 7	AC	DD		C
PCLR-0345FCZZ	401- 15	AF	DP	N	C
PCLR-0346FCZZ	1- 31	AE	DJ	N	C
〃	1- 56	AE	DJ	N	C
PCLR-0345FCZZ	10- 36	AF	DP	N	C
PCOVP0311FCZZ	1- 38	AB	DC		D
PCOVP0341FCZZ	1- 39	AB	DC		D
PCOVP1047FCZZ	9- 58	AH	DV	N	C
PCOVP1048FCZZ	8- 126	AG	DT	N	C
PCOVP1049FCZZ	9- 59	AH	DW	N	C
PCOVP1050FCZZ	7- 56	AR	EX	N	C
PCOVP1053FCZZ	405- 11	AB	DB	N	C
PCOVP1057FCZZ	8- 44	AC	DE	N	C
PCOVP1059FCZZ	404- 19	AG	DS	N	C
PCOVP1060FCZZ	10- 15	AG	DU	N	C
PCOVP1061FCZZ	423- 22	AE	DK	N	C
PCOVP1062FCZZ	402- 25	AM	EG	N	C
PCOVP1063FCZZ	402- 37	AG	DS	N	C
PCOVP1066FCZZ	404- 20	AF	DQ	N	C
PCOVP1073FCZZ	8- 127	AD	DG	N	C
PCOVP1078FCZZ	8- 153	AC	DD		C
PCOVQ1056FCZZ	413- 24	AK	DY	N	C
PCUSS0201FCZZ	409- 6	AA	DA		C
PCUSU0203FCZZ	411- 14	AE	DK		C
PFILW0165FCZZ	2- 11	AG	DS	N	C
PFILZ0146FCZZ	8- 78	AN	EJ		C
PFILZ0166FCZZ	1- 35	AP	EP	N	C
PFILZ0167FCZZ	1- 8	AF	DP	N	C
PFTA-0085FCZZ	406- 4	AB	DC	N	C
PFTA-0086FCZZ	9- 60	AC	DE	N	C
PGIDH1271FCZZ	9- 32	AU	FL	N	C
PGIDH1272FCZZ	9- 41	AK	DZ	N	C
PGIDH1274FCZZ	405- 13	AG	DS	N	C
PGIDH1275FCZZ	413- 18	AH	DV	N	C
PGIDH1276FCZZ	8- 117	AN	EK	N	C
PGIDH1277FCZZ	8- 61	AL	EC	N	C
PGIDH1278FCZZ	421- 15	AP	EQ	N	C
PGIDH1284FCZZ	9- 42	AL	EC	N	C
PGIDH1287FCZZ	8- 138	AN	EK	N	C
PGIDM1268FCZZ	1- 17	AC	DE	N	C
PGIDM1269FCZZ	1- 18	AC	DE	N	C
PGLSP0065FCZZ	1- 13	AZ	GF		B
PGUMR0220FCZZ	414- 1	AG	DR	N	C
〃	424- 1	AG	DR	N	C
PGUMR0221FCZZ	414- 2	AG	DR	N	C
〃	424- 2	AG	DR	N	C
PGUMS0147FCZZ	7- 57	AA	DA		C
PGUMS0174FCZZ	7- 58	AB	DB		C
PGUMS0183FCZZ	7- 59	AA	DA		C
PHOG-0360FCZZ	8- 85	AA	DA		C
PHOG-1023CCZZ	8- 87	AB	DB		B
PLNS-0043FCZZ	7- 10	BG	HK	N	B
PMAGT0015FCZZ	2- 12	AD	DH		B
PMIR-0076FCZZ	411- 15	AP	EP		B
PMIR-0091FCZZ	410- 8	AV	FN	N	B
PMIR-0092FCZZ	410- 9	AS	FD	N	B
PMIR-0093FCZZ	7- 60	AQ	ET	N	B
PMIR-0094FCZZ	409- 7	AT	FG	N	B
PMIR-0095FCZZ	409- 8	AX	FU	N	B
PMLT-0659FCZZ	90- 5	AB	DB		C
PMLT-0834FCZZ	402- 26	AB	DB	N	C
PMLT-0835FCZZ	402- 27	AA	DA	N	C
PMLT-0836FCZZ	402- 13	AB	DB	N	C
〃	402- 28	AB	DB	N	C
PPIPP0153FCZZ	8- 76	AB	DC	N	C
〃	421- 16	AB	DC	N	C

PARTS CODE	NO.	PRICE R Ex	PRICE R Ja	NLW	P'R
PRDAR0048FCZZ	802- 1	AC	DE	N	C
PREFL0135FCZZ	411- 16	AY	GA	N	C
PRNGP0015FCZZ	401- 16	AK	DY		C
PRNGP0023FCZZ	10- 16	AA	DA		C
PRNGP0025FCZZ	402- 29	AA	DA		C
PSEL-0352FCZZ	411- 17	AC	DC		C
PSEL-0430FCZZ	401- 17	AB	DB	N	C
PSEL-0431FCZZ	401- 18	AA	DA	N	C
PSEL-0432FCZZ	402- 14	AA	DA	N	C
PSEL-0433FCZZ	402- 15	AB	DC	N	C
PSEL-0434FCZZ	401- 19	AC	DD	N	C
PSEL-0435FCZZ	401- 20	AC	DD	N	C
PSEL-0443FCZZ	401- 29	AA	DA	N	C
PSEL-0446FCZZ	402- 39	AA	DA	N	C
PSEL-0447FCZZ	402- 40	AA	DA	N	C
PSHEG2817FCZZ	7- 96	AD	DF	N	C
PSHEP2335FCZZ	7- 11	AA	DA		C
PSHEP2701FCZZ	405- 15	AC	DD	N	C
PSHEP2702FCZZ	405- 16	AC	DD	N	C
PSHEP2703FCZZ	8- 32	AB	DB	N	C
PSHEP2712FCZZ	402- 30	AA	DA	N	C
PSHEP2713FCZZ	401- 21	AC	DC	N	C
PSHEP2717FCZZ	8- 154	AC	DD		C
PSHEP2720FCZZ	8- 35	AA	DA	N	C
〃	8- 62	AA	DA	N	C
PSHEP2722FCZZ	406- 5	AC	DD	N	C
PSHEP2725FCZZ	5- 8	AD	DG	N	C
PSHEP2735FCZZ	8- 33	AD	DH	N	C
PSHEP2743FCZZ	402- 31	AC	DD	N	C
PSHEP2747FCZZ	402- 38	AE	DL	N	C
PSHEP2750FCZZ	7- 12	AH	DX	N	C
PSHEP2751FCZZ	7- 13	AC	DD	N	C
PSHEP2752FCZZ	7- 61	AC	DD	N	C
PSHEP2756FCZZ	10- 17	AF	DP	N	C
PSHEP2757FCZZ	423- 23	AB	DB	N	C
PSHEP2774FCZZ	8- 79	AD	DF	N	C
PSHEP2850FCZZ	8- 139	AE	DK	N	C
PSHEZ1760FCZZ	1- 19	AB	DB		C
PSHEZ2313FCZZ	404- 21	AB	DB		C
PSHEZ2401FCZZ	411- 18	AH	DV		C
PSHEZ2418FCZZ	410- 10	AB	DC		C
PSHEZ2419FCZZ	410- 11	AC	DD		C
PSHEZ2705FCZZ	404- 23	AG	DS	N	C
PSHEZ2706FCZZ	404- 23	AG	DS	N	C
PSHEZ2707FCZZ	422- 26	AD	DG	N	C
PSHEZ2708FCZZ	404- 22	AD	DH	N	C
〃	422- 27	AD	DH	N	C
PSHEZ2709FCZZ	422- 28	AD	DF	N	C
PSHEZ2710FCZZ	423- 24	AB	DC	N	C
PSHEZ2714FCZZ	3- 6	AT	FG	N	C
PSHEZ2715FCZZ	3- 6	AU	FK	N	C
PSHEZ2723FCZZ	404- 23	AG	DS	N	C
PSHEZ2727FCZZ	802- 2	AC	DE	N	C
PSHEZ2744FCZZ	402- 32	AB	DB	N	C
PSHEZ2745FCZZ	402- 33	AA	DA	N	C
PSHEZ2746FCZZ	402- 34	AC	DC	N	C
PSHEZ2819FCZZ	7- 92	AB	DB	N	C
PSPAZ0095FCZZ	423- 25	AB	DB		C
PSPAZ0544FCZZ	803- 1	AB	DB	N	C
PSPAZ0545FCZZ	801- 2	AB	DB	N	C
PSPAZ0546FCZZ	803- 2	AB	DB	N	C
PTME-0164FCZ1	9- 52	AB	DB	N	C
PTME-0206FCZZ	404- 24	AG	DS	N	C
PTME-0207FCZZ	404- 25	AE	DL	N	C
PTME-0214FCZZ	413- 5	AF	DQ	N	C
PTUBP0050FCZZ	8- 86	AA	DA	N	C
PWIR-0116FCZZ	7- 62	AM	ED		C
PWIR-0135FCZ1	7- 84	AH	DW	N	C
PWIR-0136FCZ1	7- 85	AN	EK	N	C
PWIR-0137FCZ1	422- 17	AK	DY	N	C
PWIR-0138FCZ1	422- 18	AK	DY	N	C
〔Q〕					
QACCD7417QCN1	8- 87	AR	EY		B
QACCJ3412QCZZ	8- 87	AN	EG		B
QACCL8421QCZZ	8- 87	AW	FV		B
QACCV6420QCZZ	8- 87	AV	FL		B
QCNCM0529FCZZ	802-CNB	AD	DF		C
QCNCW0446FCZZ	802-CNC	AB	DB	N	C
QCNCW0521FCZZ	801-CNB	AB	DC	N	C
QCNCW0526FCZZ	801-CNA	AC	DE	N	C

PARTS CODE	NO.	PRICE R Ex	PRICE R Ja	NLW	P'R
QCNCW0690FCZZ	802-CNA	AB	DC	N	C
QCNCY0689FCZZ	801-CNC	AC	DE	N	C
〃	803-CNC	AC	DE	N	C
QCNW-0001QCZZ	8- 87	AN	EH		C
QCNW-0065FCZZ	8- 86	AC	DD		C
QCNW-0120FCZZ	8- 87	AU	FL		B
QCNW-0131FCZZ	9- 57	AU	FL		B
QFS-A1002CCZZ	802- 10	AE	DL		A
QFS-A2700QCZZ	802-F1	AD	DH		A
QFS-B0012FCZZ	802-F1	AH	DK		A
QFS-B0030FCZZ	802-F1	AH	DS		A
QFS-B1321QCZZ	425- 1	AD	DF		A
QFS-B2330QCZZ	802-F201	AD	DF		A
QFS-C4301CCZZ	425- 1	AE	DH		A
QFS-C1025CCZZ	802-F201	AF	DL		B
QFSHD0001QCZZ	802- 3	AA	DA		C
QFSHD0002QCZZ	802- 4	AA	DA		C
QPLGA0001QCZZ	8- 87	AN	EH		B
QPLGA0002QCZZ	8- 87	AN	EH		B
QPLGA0003QCZZ	8- 87	AN	EA		B
QPLGA0005QCZZ	8- 87	AN	EH		B
QPLGA0018WRE0	8- 87	AN	EG		B
QPLGN0056FCZZ	8- 89	AB	DB		C
QSLP-0143FCZZ	406- 6	AD	DG	N	C
QSLP-0144FCZZ	406- 7	AC	DE	N	C
QSOCZ6428ACZZ	804-S1	AE	DL		C
QSW-C3971QCZZ	9- 48	AP	EN		B
QSW-C9372QCZZ	8- 63	AN	EH		B
QSW-M0296FCZZ	8- 64	AM	EF		B
QSW-M0421FCZZ	2- 13	AF	DM	N	B
QSW-M0424FCZZ	8- 109	AF	DP	N	B
QSW-M0431FCZZ	407- 24	AF	DQ	N	B
QSW-P0425FCZZ	801-DPK	AB	DB	N	B
〃	801-EDK	AB	DB	N	B
〃	801-ELK	AB	DB	N	B
〃	801-EMK	AB	DB	N	B
〃	801-EUK	AB	DB	N	B
〃	801-ISK	AB	DB	N	B
〃	801-NOK	AB	DB	N	B
〃	801-PSK	AB	DB	N	B
〃	801-ROK	AB	DB	N	B
〃	801-SOK	AB	DB	N	B
〃	801-ZDK	AB	DB	N	B
〃	801-ZUK	AB	DB	N	B
〃	803-CAK	AB	DB	N	B
〃	803-CK	AB	DB	N	B
〃	803-PK	AB	DB	N	B
〃	803-S1	AB	DB	N	B
〃	803-S2	AB	DB	N	B
〃	803-S3	AB	DB	N	B
〃	803-S4	AB	DB	N	B
〃	803-S5	AB	DB	N	B
〃	803-S6	AB	DB	N	B
〃	803-S7	AB	DB	N	B
〃	803-S8	AB	DB	N	B
〃	803-S9	AB	DB	N	B
〃	803-SO	AB	DB	N	B
QSW-P0426FCZZ	803-PSW	AC	DC	N	B
QSW-Z0422FCZZ	8- 109	AN	EH	N	B
QTANN0015FCZZ	8- 155	AG	DS		C
QTANP0096FCZZ	8- 87	AA	DA		B
QTANP0115FCZZ	802- 8	AB	DB		C
QTANP0155FCZZ	802- 5	AA	DA		C
QTANP0156FCZZ	802- 6	AA	DA		C
QTANP1004UCZZ	8- 90	AA	DA		C
〔R〕					
RC-FZ0321FCZZ	9- 15	AN	EH	N	B
RC-FZ0322FCZZ	9- 15	AM	EE	N	B
RC-FZ0323FCZZ	9- 15	AA	ER	N	B
RC-QZ0117FCZZ	802-C209	AD	DH		C
〃	802-C210	AD	DH		C
RC-QZ0314FCZZ	802-C202	AH	DV		C
RC-QZ0324FCZZ	802-C201	AE	DL		C
〃	802-C205	AE	DL		C
RCILF0027FCZZ	802-L201	AQ	EW		C
RCILF0031FCZZ	802-L202	AR	EZ		C
〃	802-L203	AR	EZ		C
RCILF0043FCZZ	802-L204	AL	EC		C
RCILF0045FCZZ	8- 156	AN	EH		C
RCILF0048FCZZ	802-L204	AG	DR		C

PARTS CODE	NO.	PRICE RANK Ex	Jp	INTER	P/R	
RCRS050305CZZ	304-X1	AG	DU		B	
RDFCT0045FCZZ	413- 6	AT	FG		B	
RDFCT0039FCZZ	401- 22	AW	FT	N	B	
RM-QX0022FCZZ	304-PC11	AF	DM		B	
RLMPU0334FCZZ	411- 25	AZ	GE		B	
RLMPU0335FCZZ	411- 19	AZ	GE		B	
RLMPU0443FCZZ	413- 25	BA	GF	N	B	
RLMPU0444FCZZ	413- 25	BA	GF	N	B	
RLMPU0445FCZZ	413- 25	BA	GF	N	B	
RLMPU0446FCZZ	413- 25	BA	GF	N	B	
RLMPU0447FCZZ	413- 25	BA	GF	N	B	
RMOTD0611FCZZ	9- 16	BG	HM	N	B	
RMOTD0613FCZZ	9- 16	BG	HM	N	B	
RMOTD0614FCZZ	9- 16	BG	HM	N	B	
RMOTD0615FCZZ	9- 16	BG	HM	N	B	
RMOTD0616FCZZ	9- 16	BH	HR	N	B	
RMOTD0617FCZZ	9- 16	BH	HR	N	B	
RMOTD0619FCZZ	4- 11	AR	EX	N	B	
RMOTE0570FC11	8- 80	AW	FQ	N	B	
RMOTE0620FCZZ	9- 24	AW	FS	N	B	
RMOTE0620FC11	9- 25	AW	FS	N	B	
RMOTP0618FCZZ	7- 65	BD	GV	N	B	
RMOTP0622FCZZ	7- 66	AT	FM	N	B	
RMOTP0623FCZZ	7- 18	AV	FL	N	B	
RMOTV0632FCZZ	423- 26	AX	FX	N	B	
RMPTA0021FCZZ	802-CR201	AH	DX		B	
"	802-CR202	AH	DX		B	
"	802-CR203	AH	DX		B	
RMPTA0030FCZZ	802-CR201	AE	DJ		B	
"	802-CR202	AE	DJ		B	
"	802-CR203	AE	DJ		B	
RMPTC4102QCJB	801-BR401	AB	DB	N	B	
RMPTW4101QCJB	801-BR402	AB	DB	N	B	
RPLU-0266FCZZ	407- 25	AL	EC	N	B	
RPLU-0267FCZZ	8- 34	AM	EF	N	B	
RPLU-0268FCZZ	421- 17	AM	EF	N	B	
RR-WZ0237FCZZ	802-R214	AD	DH		B	
RR-WZ0238FCZZ	802-R214	AE	DK		B	
RR-XZ0337FCZZ	802-FR201	AC	DE		B	
RR-XZ0338FCZZ	802-FR201	AC	DE		B	
RRLYD1320QCZZ	802-RY201	AH	DW		B	
RTHM-0009FCZZ	413- 7	AK	EA		B	
RTRNP0425FCZZ	8- 113	BD	GU	N	B	
RTRNP0426FCZZ	8- 113	BD	GT	N	B	
RTRNP0427FCZZ	8- 113	BD	GT	N	B	
RTRNP0428FCZZ	8- 113	BD	GU	N	B	
RTRNP0429FCZZ	8- 113	BD	GU	N	B	
RTRNP0430FCZZ	8- 113					
[S]						
SPAKA1624FCZZ	90- 6	AB	DC		D	
SPAKA3914FCZZ	90- 7	AC	DE		D	
SPAKA4348FCZZ	90- 8	AV	FN	N	D	
SPAKA4352FCZZ	90- 9	AC	DE	N	D	
SPAKA4393FCZZ	90- 27	AD	DF	N	D	
SPAKA4453FCZZ	90- 8	AW	FP	N	D	
SPAKA4511FCZZ	90- 26	AC	DD	N	D	
SPAKC4345FCZZ	90- 10	AX	FV	N	D	
SPAKC4346FCZZ	90- 10	AX	FV	N	D	
SPAKC4379FCZZ	90- 10	AX	FX	N	D	
SPAKC4380FCZZ	90- 10	AX	FX	N	D	
SPAKC4381FCZZ	90- 10	AX	FX	N	D	
SSAKA0002FCZZ	90- 17	AA	DA		D	
SSAKA0003FCZZ	90- 17	AA	DB		D	
[T]						
TCADS0497FCZZ	90- 18	AH	DV		D	
TCADS0649FCZZ	90- 18	AM	EF		D	
TCADS0764FCZZ	90- 18	AE	DJ		D	
TCADZ0772FCZZ	90- 19	AE	DJ		D	
TCADZ0893FCZZ	90- 20	AF	DQ	N	D	
TCADZ0894FCZZ	90- 25	AD	DF	N	D	
TCADZ0895FCZZ	90- 25	AD	DF	N	D	
TCAUA0766FCZZ	1- 37	AB	DB		C	
TCAUA0770FCZZ	1- 37	AB	DC		C	
TCAUH0687FCZZ	1- 37	AA	DB		C	
TCAUH0819FCZZ	8- 145	AA	DA		C	
TCAUH0821FCZZ	8- 145	AA	DA		C	
TCAUH0884FCZZ	8- 145	AA	DA		C	
TINSE0918FCZZ	1- 37	AR	EZ	N	D	
TINSE0875FCZZ	90- 21	AR	EZ	N	D	

PARTS CODE	NO.	PRICE RANK Ex	Jp	INTER	P/R	
TINSE0878FCZZ	90- 21	AS	FB	N	D	
TINSE0879FCZZ	90- 21	AT	FG	N	D	
TINSE0880FCZZ	90- 21	AN	EG	N	D	
TINSE0881FCZZ	90- 21	AQ	EV	N	D	
TINSE0882FCZZ	90- 21	AT	FG	N	D	
TINSE0883FCZZ	90- 21	AR	EY	N	D	
TINSE0884FCZZ	90- 21	AR	EY	N	D	
TINSE0885FCZZ	90- 21	AU	FJ	N	D	
TINSF0873FCZZ	90- 21	AR	EY	N	D	
TINSF0902FCZZ	90- 21	AV	FN	N	D	
TINSG0879FCZZ	90- 21	AT	FG	N	D	
TINSG0903FCZZ	90- 21	AV	FN	N	D	
TINSI0877FCZZ	90- 21	AT	FG	N	D	
TINSI0901FCZZ	90- 21	AT	FF	N	D	
TINSJ0874FCZZ	90- 21	AT	FF	N	D	
TINSJ0893FCZZ	90- 21	AV	FN	N	D	
TINSS0880FCZZ	90- 21	AT	FG	N	D	
TINSS0904FCZZ	90- 21	BL	LB	N	D	
TINSZ0881FCZZ	90- 21	AY	GA	N	D	
TINSZ0905FCZZ	90- 23	AB	DB		C	
TLABH2122FCZZ	90- 23	AB	DB		C	
TLABH2123FCZZ	50- 11	AB	DC		C	
TLABH2645FCZZ	403- 1	AE	DK	N	C	
TLABH2802FCZZ	403- 1	AE	DK	N	C	
TLABH2803FCZZ	403- 1	AE	DK	N	C	
TLABH2804FCZZ	403- 1	AE	DK	N	C	
TLABH2805FCZZ	403- 1	AE	DK	N	C	
TLABH2806FCZZ	403- 1	AE	DM	N	C	
TLABH2807FCZZ	403- 1	AE	DK	N	C	
TLABH2808FCZZ	403- 1	AE	DK	N	C	
TLABH2809FCZZ	1- 36	AD	DH	N	C	
TLABH2836FCZZ	1- 36	AD	DH	N	C	
TLABH2837FCZZ	1- 36	AE	DH	N	C	
TLABH2838FCZZ	10- 56	AC	DE	N	C	
TLABH2839FCZZ	10- 56	AC	DE	N	C	
TLABH2840FCZZ	10- 56	AC	DE	N	C	
TLABH2841FCZZ	10- 57	AE	DL	N	C	
TLABH2842FCZZ	10- 57	AE	DL	N	C	
TLABH2843FCZZ	10- 57	AE	DL	N	C	
TLABH2844FCZZ	10- 52	AC	DD	N	C	
TLABH2845FCZZ	90- 30	AC	DD	N	C	
TLABH2846FCZZ	90- 30	AC	DD	N	C	
TLABH2847FCZZ	90- 12	AB	DB		C	
TLABZ0241FCZZ	90- 12	AB	DB		C	
TLABZ0248FCZZ	5- 12	AB	DB		C	
TLABZ1887FCZZ	404- 28	AB	DB		C	
TLABZ2253FCWZ	422- 20	AB	DB		C	
"	1- 20	AE	DK	N	C	
TLABZ2761FCZZ	1- 20	AE	DK	N	C	
TLABZ2762FCZZ	1- 20	AE	DJ	N	C	
TLABZ2763FCZZ	1- 26	AB	DB	N	C	
TLABZ2811FCZZ	1- 26	AB	DB	N	C	
TLABZ2812FCZZ	1- 26	AB	DB	N	C	
TLABZ2813FCZZ	8- 128	AB	DB	N	C	
TLABZ2848FCZZ	9- 62	AB	DB	N	C	
TLABZ2851FCZZ	90- 22	AA	DA		D	
TLSTS1015CCZZ						
[U]						
UBATL0010FCZZ	804-BT1	AG	DR	N	A	
UCLEZ0108FCZZ	6- 1	AT	FG	N	C	
UCLEZ0110FCZZ	402- 35	AE	DL	N	C	
[V]						
VCEAGA1VW107M	802-C213	AB	DB		C	
VCEAGU1AW476M	801-C401	AA	DA		C	
"	801-C402	AA	DA		C	
"	804-C9	AA	DA		C	
"	804-C28	AA	DA		C	
"	804-C31	AA	DA		C	
"	804-C40	AA	DA		C	
"	804-C45	AA	DA		C	
VCEAGU1AW477M	804-C42	AC	DD		C	
VCEAGU1CW476M	801-C403	AB	DB		C	
"	801-C410	AB	DB		C	
"	801-C414	AB	DB		C	
VCEAGU1CW477M	804-C37	AB	DB		C	
VCEAGU1VW106M	804-C38	AC	DD		C	
VCEAGU1VW227M	804-C86	AA	DA		C	
VCEAGU1VW476M	804-C34	AC	DD		C	
"	804-C32	AB	DB		C	
VCKYTS1HB101K	804-C87	AB	DB		C	
	801-C404	AB	DB		C	

PARTS CODE	NO.	PRICE R Ex	PRICE R Ja	NEW	P/R
VCKYTS1HB101K	801-C405	AB	DB		C
〃	801-C406	AB	DB		C
〃	801-C407	AB	DB		C
VCKYTS1HB222Z	801-C411	AA	DA		C
〃	801-C415	AA	DA		C
〃	801-C416	AA	DA		C
VCKYTS1HB471K	801-C408	AA	DA		C
〃	801-C409	AA	DA		C
〃	801-C412	AA	DA		C
〃	801-C413	AA	DA		C
VCQYNU1HM104K	802-C206	AB	DB		C
〃	802-C214	AB	DB		C
VCQYNU1HM223K	802-C212	AA	DA		C
VCQYNU1HM473K	802-C212	AB	DA		C
VHDS1WBA60S-1	802-RE201	AD	DH		B
VHDIN4148//-1	805-D308	AA	DA		B
〃	805-D309	AA	DA		B
VHDISR35-100A	802-D201	AB	DB		B
VHILM324NS/-S	801-IC403	AC	DE		B
VHILM358PS/-S	801-IC402	AC	DE	N	B
〃	804-IC10	AC	DE	N	B
〃	804-IC12	AC	DE	N	B
VHILM393PS/-S	804-IC11	AC	DE		B
〃	804-IC13	AC	DE		B
VHILM621N//-1	804-IC16	AL	EC	N	B
VHIMC74HC373F	804-IC4	AF	DU		B
VHIM66313FP-1	801-IC401	AN	EH	N	B
VHIM66500FP-1	804-IC3	AT	FH	N	B
VHISHN001//-1	802-IC201	AS	FE	N	B
VHISMA6012/-1	804-IC17	AM	EE	N	B
VHISN74LS139N	804-IC7	AL	EG		B
VHISN74LS14NS	804-IC5	AL	EC		B
〃	804-IC15	AL	EC		B
VHISN74LS32NS	804-IC6	AF	DR		B
〃	804-IC18	AF	DR		B
VHISTA457C/-1	804-IC23	AH	DW	N	B
VHITA7291S/-1	804-IC25	AF	DN	N	B
VHITD62504F-1	804-IC19	AF	DR		B
VHITM1641P-L/	802-TD201	AM	ED		B
VHIULN2004A-1	804-IC20	AL	EC		B
〃	804-IC21	AL	EC		B
〃	804-IC22	AL	EC		B
〃	804-IC24	AL	EC		B
VHI27C512O1FC	804-IC2	AY	FZ	N	B
VHI7700M4F116	804-IC1	BC	GQ	N	B
VHPGL3EG47/-1	801- 3	AB	DB		B
VHPGL3HD47/-1	801-DUL	AB	DB		B
〃	801-JPL	AB	DB		B
〃	801-MPL	AB	DB		B
〃	801-PEL	AB	DB		B
〃	801-TPL	AB	DB		B
VHPGP1A22LC-1	7- 93	AK	EA		B
VHPGP1A71A/-1	423- 27	AG	DS	N	B
VHPGP1A71A1-1	7- 19	AG	DT	N	B
〃	7- 67	AG	DT	N	B
〃	8- 132	AG	DT	N	B
〃	9- 33	AG	DT	N	B
〃	423- 28	AG	DT	N	B
VHPGP1S42//-1	9- 26	AK	DX	N	B
VHPGP2A10//-1	421- 23	AR	EX		B
VHPGP3A38//-1	7- 66	AH	DV		B
VHPGP3S78//-1	8- 45	AL	EC	N	B
VHPLB-602MA1/	803-LED1	AL	EC	N	B
VHPLB203-MB-1	801-LED401	AN	EJ	N	B
VHPLD-201MG-1	803-RPL	AE	DK		B
VHPSLR-320MC/	801-AEL	AB	DB	N	B
〃	801-AES	AB	DB	N	B
〃	801-APS	AB	DB	N	B
〃	801-CSL1	AB	DB	N	B
〃	801-CSL2	AB	DB	N	B
〃	801-CTL1	AB	DB	N	B
〃	801-CTL2	AB	DB	N	B
〃	801-DPL	AB	DB	N	B
〃	801-EL1	AB	DB	N	B
〃	801-EL2	AB	DB	N	B
〃	801-EL3	AB	DB	N	B
〃	801-EL4	AB	DB	N	B
〃	801-EL5	AB	DB	N	B
〃	801-EL6	AB	DB	N	B
〃	801-EL7	AB	DB	N	B

PARTS CODE	NO.	PRICE R Ex	PRICE R Ja	NEW	P/R
VHPSLR-320MC/	801-EL8	AB	DB	N	B
〃	801-EL9	AB	DB	N	B
〃	801-GPL	AB	DB	N	B
〃	801-MAL	AB	DB	N	B
〃	801-MFL	AB	DB	N	B
〃	801-PML	AB	DB	N	B
〃	801-PSL1	AB	DB	N	B
〃	801-PSL2	AB	DB	N	B
〃	801-PSL3	AB	DB	N	B
〃	801-PSL4	AB	DB	N	B
〃	801-PSL5	AB	DB	N	B
〃	801-PSL6	AB	DB	N	B
〃	801-PSL7	AB	DB	N	B
〃	801-PSL8	AB	DB	N	B
〃	801-SOL	AB	DB	N	B
〃	803-PAL1	AB	DB	N	B
〃	803-PAL2	AB	DB	N	B
VHPSLR-320VC/	801-J1	AB	DB	N	B
〃	801-J2	AB	DB	N	B
〃	801-J3	AB	DB	N	B
〃	801-J4	AB	DB	N	B
〃	801-J5	AB	DB	N	B
VHRS11MD5V/-1	802-SSR202	AF	DQ		B
VHRS21MD3V/-1	802-SSR202	AE	DL		B
VHRS21MD4V/-1	802-SSR201	AG	DR	N	B
VHSBCR16DM-12	802-TD201	AM	EF		B
〃	802-TD202	AM	EF		B
VRD-HT2EY105J	802-R202	AA	DA		C
VRD-RB2HY122J	802-R205	AA	DA		C
VRN-RT2EK221F	804-R138	AA	DA		C
VRNHT2HK2003F	802-R215	AC	DE	N	C
〃	802-R216	AC	DE	N	C
VRNHT2HK4123F	802-R215	AC	DE		C
〃	802-R216	AC	DE		C
VRNRC2EK1201F	801-RA410	AA	DA		C
VRNRC2EK1300F	801-RA402	AA	DA	N	C
〃	801-RA403	AA	DA	N	C
〃	803-R501	AA	DA	N	C
〃	803-R504	AA	DA	N	C
〃	803-R505	AA	DA	N	C
〃	803-R511	AA	DA	N	C
VRNRC2EK1500F	801-RA404	AA	DA	N	C
〃	801-RA405	AA	DA	N	C
〃	803-R502	AA	DA	N	C
〃	803-R503	AA	DA	N	C
〃	803-R506	AA	DA	N	C
〃	803-R509	AA	DA	N	C
VRNRC2EK1800F	801-RA406	AA	DA		C
〃	801-RA407	AA	DA		C
〃	801-RA412	AA	DA		C
〃	801-RA413	AA	DA		C
〃	803-R508	AA	DA		C
〃	803-R512	AA	DA		C
VRNRC2EK2000F	801-RA408	AA	DA		C
〃	801-RA414	AA	DA		C
〃	801-RA415	AA	DA		C
〃	803-R507	AA	DA		C
〃	803-R513	AA	DA		C
VRNRC2EK2150F	802- 9	AA	DA		C
VRNRC2EK3901F	801-RA409	AA	DA		C
VRNRC2EK47R0F	801-RA401	AA	DA	N	C
〃	803-R510	AA	DA	N	C
〃	803-R514	AA	DA	N	C
VRNRC2EK5100F	801-RA411	AA	DA		C
〃	801-RA416	AA	DA		C
〃	801-RA417	AA	DA		C
VRS-HT2HA101J	802-R203	AA	DA		C
〃	802-R217	AA	DA		C
VRS-HT2HA121J	802-R204	AA	DA		C
〃	802-R218	AA	DA		C
VRS-HT2HA201J	802-R204	AA	DA		C
〃	802-R218	AA	DA		C
VRS-TP2BD101J	801-RB412	AA	DA		C
〃	801-RB414	AA	DA		C
〃	801-RB416	AA	DA		C
〃	801-RB424	AA	DA		C
〃	801-RB425	AA	DA		C
〃	801-RB430	AA	DA		C
〃	801-RB431	AA	DA		C
〃	801-RB432	AA	DA		C

PARTS CODE	NO.	PRICE R Ea	Ja	NEW	P R
VRS-TP2BD101J	801-RB433	AA	DA		C
〃	801-RB434	AA	DA		C
〃	801-RB435	AA	DA		C
〃	801-RB436	AA	DA		C
〃	801-RB437	AA	DA		C
〃	801-RB438	AA	DA		C
〃	801-RB439	AA	DA		C
〃	801-RB440	AA	DA		C
〃	801-RB441	AA	DA		C
〃	801-RB442	AA	DA		C
〃	801-RB443	AA	DA		C
〃	801-RB444	AA	DA		C
〃	801-RB445	AA	DA		C
〃	801-RB446	AA	DA		C
〃	801-RB447	AA	DA		C
〃	801-RB448	AA	DA		C
〃	801-RB449	AA	DA		C
〃	801-RB450	AA	DA		C
〃	801-RB451	AA	DA		C
〃	801-RB452	AA	DA		C
VRS-TP2BD103J	801-RB401	AA	DA		C
〃	801-RB402	AA	DA		C
〃	801-RB403	AA	DA		C
VRS-TP2BD331J	801-RB421	AB	DB		C
〃	801-RB422	AB	DB		C
〃	801-RB423	AB	DB		C
VRS-TS2AD102J	801-RB418	AA	DA		C
〃	801-RB419	AA	DA		C
〃	801-RB420	AA	DA		C
VRS-TS2AD104J	801-RB413	AA	DA		C
〃	801-RB415	AA	DA		C
〃	801-RB417	AA	DA		C
VRS-TS2AD152J	801-RB408	AA	DA		C
〃	801-RB409	AA	DA		C
〃	801-RB410	AA	DA		C
〃	801-RB411	AA	DA		C
VSDSC001-//-1	805-Q303	AA	DA		B
VS2SB1295-/-1	801-Q404	AB	DC	N	B
〃	801-Q405	AB	DC	N	B
〃	801-Q406	AB	DC	N	B
VS2SC2412K/-1	801-Q401	AB	DB		B
〃	801-Q402	AB	DB		B
〃	801-Q403	AB	DB		B
[X]					
XBBSD30P06000	99- 18	AA	DB		C
〃	408- 7	AA	DB		C
XBBSD30P18000	401- 23	AA	DA		C
XBBSE40P10000	421- 18	AA	DA	N	C
XBPBZ30P06000	99- 16	AA	DA		C
〃	99- 24	AA	DA		C
〃	406- 8	AA	DA		C
XBPBZ40P06K00	2- 17	AA	DA		C
〃	8- 65	AA	DA		C
〃	8- 91	AA	DA		C
〃	10- 48	AA	DA		C
〃	99- 14	AA	DA		C
XBPSD23P08000	8- 110	AA	DA		C
XBPSD30P04K00	423- 29	AA	DA		C
XBPSD30P04000	7- 69	AA	DA		C
XBPSD30P06000	2- 14	AA	DA		C
〃	99- 23	AA	DA		C
XBPSD30P08KS0	401- 24	AA	DA		C
XBPSD30P08K00	10- 58	AA	DA		C
XBPSD30P08000	802- 7	AA	DA		C
XBPSD30P10K00	421- 24	AA	DA		C
XBPSD30P10000	99- 19	AA	DA		C
XBPSD30P14000	2- 15	AA	DA		C
〃	8- 157	AA	DA		C
XBPSD40P05K00	99- 15	AA	DA		C
XBPSD40P06K00	7- 71	AA	DA		C
〃	99- 1	AA	DA		C
〃	407- 27	AA	DA		C
XBPSD40P06000	410- 13	AA	DA		C
XBPSD40P08KS0	8- 92	AA	DA		C
〃	99- 2	AA	DA		C
XBPSD40P08000	99- 28	AA	DA		C
XBPSD40P10K00	99- 13	AA	DA		C
XBPSD40P10000	7- 94	AA	DA		C
XBPSD40P12KS0	7- 72	AA	DA		C
XBPSD40P12000	99- 3	AA	DA		C

PARTS CODE	NO.	PRICE R Ea	Ja	NEW	P R
XBPSD40P14000	99- 12	AA	DA		C
XBPSD40P20XS0	8- 93	AA	DA		C
XBPSD40P25000	8- 66	AA	DA		C
XBPSD40P30000	7- 74	AA	DA		C
〃	99- 4	AA	DA		C
XBPSE40P12000	8- 36	AA	DA	N	C
XBPSF30P04000	99- 25	AA	DA		C
XBPSZ40P06K00	7- 75	AA	DA	N	C
XBSSD30P06000	403- 8	AA	DA		C
XBSSF30P10000	99- 5	AA	DA		C
XBTSD40P03000	9- 49	AA	DA		C
XBTSF30P06000	99- 30	AA	DA		C
XBTSF40P06000	7- 76	AA	DA		C
〃	99- 6	AA	DA		C
XCPSD30P06000	2- 19	AA	DB		C
XEBSD30P07000	405- 17	AA	DA	N	C
XEBSD30P08000	423- 35	AA	DA		C
XEBSD40P03000	402- 16	AA	DA	N	C
XEBSD40P10000	8- 67	AA	DA	N	C
XEBSD40P12000	1- 61	AA	DA		C
〃	8- 114	AA	DA		C
〃	10- 45	AA	DA		C
〃	99- 7	AA	DA		C
XEBSF30P08000	6- 2	AA	DA		C
〃	6- 4	AA	DA		C
〃	99- 8	AA	DA		C
〃	402- 17	AA	DA		C
〃	408- 6	AA	DA		C
XEBSF30P10000	401- 25	AA	DA		C
XEPSD20P05000	2- 18	AA	DA		C
XEPSD30P06000	7- 7	AA	DA		C
〃	7- 14	AA	DA		C
XEPSD30P08000	10- 19	AA	DA		C
〃	404- 26	AA	DA		C
XEPSD40P06000	7- 95	AA	DA	N	C
〃	409- 10	AA	DA	N	C
〃	422- 21	AA	DA	N	C
XEPSD40P08000	10- 20	AA	DA		C
〃	404- 27	AA	DA		C
XEPSD40P10000	90- 24	AA	DA	N	C
XEPSD40P35000	8- 81	AA	DA	N	C
XHBSD30P06000	405- 18	AA	DA		C
〃	423- 36	AA	DA		C
XHBSD30P08000	423- 30	AA	DA		C
XHBSD30P10000	10- 49	AA	DA		C
XHBSE40P06000	9- 18	AA	DA		C
XHBSE40P10000	9- 19	AA	DA		C
〃	9- 34	AA	DA		C
〃	99- 9	AA	DA		C
〃	407- 28	AA	DA		C
XHPSD23P10000	407- 29	AA	DA	N	C
XHPSD30P04000	413- 8	AA	DA		C
XHPSD30P06000	4- 12	AA	DA		C
〃	413- 26	AA	DA		C
XHPSD30P10000	8- 37	AA	DA		C
XHPSD40P06000	9- 17	AA	DA		C
XHPSD40P10000	8- 38	AA	DA		C
XHPSD40P30000	9- 27	AA	DA	N	C
XJBSD40P12000	3- 7	AA	DA	N	C
XJPSD30P08000	1- 21	AA	DA		C
XNEBN30-24000	99- 20	AC	DA		C
XNESD30-24000	422- 22	AA	DA		C
XNESD40-32000	7- 78	AA	DA		C
〃	9- 20	AA	DA		C
〃	410- 14	AA	DA		C
XRESP20-03000	5- 9	AA	DA	N	C
XRESP20-04000	1- 32	AA	DA		C
〃	1- 57	AA	DA		C
〃	7- 15	AA	DA		C
XRESP30-04000	10- 21	AA	DA		C
〃	99- 26	AA	DA		C
〃	422- 23	AA	DA		C
XRESP30-05000	5- 10	AA	DA		C
〃	423- 31	AA	DA		C
XRESP30-06000	8- 39	AA	DA		C
XRESP40-05000	8- 98	AA	DA		C
〃	407- 30	AA	DA		C
XRESP40-06000	5- 11	AA	DA		C
〃	8- 41	AA	DA		C
〃	401- 27	AA	DA		C

SF7850

PARTS CODE	NO.	PRICE R Ea	PRICE R Ja	NEW	P/R
XRESP40-06000	402- 18	AA	DA		C
〃	421- 19	AA	DA		C
〃	422- 31	AA	DA		C
〃	422- 34	AA	DA		C
〃	422- 37	AA	DA		C
XRESP50-06000	4- 13	AA	DA		C
〃	7- 79	AA	DA		C
〃	8- 42	AA	DA		C
〃	8- 58	AA	DA		C
〃	99- 10	AA	DA		C
〃	407- 31	AA	DA		C
〃	407- 37	AA	DA		C
〃	413- 32	AA	DA		C
XRESP60-09000	7- 30	AA	DA		C
XRESP70-08000	4- 14	AA	DA		C
〃	7- 24	AA	DA		C
〃	7- 31	AA	DA		C
〃	8- 43	AA	DA		C
〃	8- 72	AA	DA		C
〃	8- 106	AA	DA		C
〃	9- 43	AA	DA		C
〃	9- 46	AA	DA		C
〃	10- 37	AA	DA		C
〃	99- 11	AA	DA		C
〃	407- 32	AA	DA		C
〃	409- 11	AA	DA		C
〃	412- 3	AA	DA		C
〃	413- 21	AA	DA		C
〃	421- 20	AA	DA		C
〃	423- 32	AA	DA		C
XUBSD30P05000	402- 36	AA	DA	N	C
XUBSF30P06000	99- 17	AA	DA		C
〃	99- 29	AA	DA		C
XUBUZ30P06000	401- 28	AA	DA		C
XWHSD30-05080	1- 33	AA	DA		C
〃	1- 58	AA	DA		C
〃	402- 19	AA	DA		C
XWHSD30-08100	1- 23	AA	DA		C
〃	99- 27	AA	DA		C
XWHSD40-08000	7- 82	AA	DA		C
〃	410- 15	AA	DA		C
XWSSD40-10000	9- 21	AA	DA		C
XXHSP30L04000	99- 21	AB	DB		C
XXHSP30L06000	99- 22	AB	DB		C
XXXSP30-04000	10- 38	AA	DA	N	C
XXXSP30-08000	10- 39	AA	DA	N	C
〃	423- 33	AA	DA	N	C
XXXSP40L08000	7- 25	AB	DB		C
[0]					
0CBLRS0025ZZ/	805-A305	AK	EA	N	C
0CBLRS0028ZZ/	805-A306	AD	DF		C
0CBLRZ1034ZZ/	805-A302	AP	EN	N	C
0CBLRZ1035ZZ/	805-A303	AK	DY	N	C
0CBLRZ1036ZZ/	805-A304	AE	DK	N	C
0CBPCZ0097ZZ/	805-CN302	AD	DF	N	C
0CBPJCAC1601/	805-F302	AE	DK	N	A
〃	805-F303	AE	DK	N	A
0CBPJCAC5001/	805-F301	AE	DK	N	A
0CBPJCCB1601/	805-F302	AF	DN	N	A
〃	805-F303	AF	DN	N	A
0CBPJCCB5001/	805-F301	AG	DS	N	A
0CBPKZ0197ZZ/	805-CN301	AD	DF	N	C
0CBSBD0502ZZ/	805- 1	AD	DF	N	C
0CBSBD0503ZZ/	805- 1	AD	DF	N	C
0CBUAA0006AZ/	805-Q304	AC	DD		B
0CBUAA0022AZ/	805-Q302	AE	DK		B
0CBUAC0107AZ/	805-Q301	AK	DY	N	B
0CBUBA0004AZ/	805-D310	AB	DB		B
〃	805-D315	AB	DB		B
0CBUBB0149CZ/	805-D301	AH	DV		B
0CBUBC0108AZ/	805-D304	AB	DC		B
〃	805-D305	AB	DC		B
〃	805-D306	AB	DC		B
〃	805-D307	AB	DC		B
〃	805-D311	AB	DC		B
〃	805-D312	AB	DC		B
〃	805-D313	AB	DC		B
〃	805-D314	AB	DC		B
0CBUBC0167ET/	805-D302	AG	DU	N	B
0CBUBC0208BZ/	805-D303	AD	DF	N	B

PARTS CODE	NO.	PRICE R Ea	PRICE R Ja	NEW	P/R
0CBU8DAA1000B/	805-ZD302	AC	DC	N	B
0CBU8DAA3000B/	805-ZD301	AC	DC		B
0CBUCB0063AZ/	805-IC303	AK	EA	N	B
0CBUCB0065FZ/	805-IC302	AL	EA	N	B
0CBUCZ0091ZZ/	805-IC301	AL	EA		B
0CBUDA0063AZ/	805-SCR301	AK	DY	N	B
0CBUEBB100AC/	805-R303	AD	DF	N	B
0CBUEBB101AC/	805-R304	AD	DF	N	B
0CBUEEB102BA/	805-R302	AC	DA		C
〃	805-R329	AC	DA		C
0CBUEEB103BA/	805-R316	AA	DA		C
〃	805-R317	AA	DA		C
0CBUEEB104BA/	805-R315	AC	DA		C
〃	805-R318	AC	DA		C
〃	805-R319	AC	DA		C
〃	805-R321	AC	DA		C
0CBUEEB113BA/	805-R313	AA	DA	N	C
0CBUEEB122BA/	805-R314	AA	DA		C
0CBUEEB153BA/	805-R323	AA	DA		C
〃	805-R328	AA	DA		C
0CBUEEB192BA/	805-R326	AA	DA	N	C
0CBUEEB222BA/	805-R325	AC	DA		C
0CBUEEB273BA/	805-R322	AA	DA	N	C
〃	805-R327	AA	DA	N	C
0CBUEEB332BA/	805-R301	AA	DA		C
0CBUEEB390BA/	805-R309	AA	DA	N	C
0CBUEEB392BA/	805-R308	AC	DA		C
〃	805-R330	AC	DA		C
0CBUEEB394BA/	805-R320	AA	DA	N	C
0CBUEEB5608A/	805-R306	AA	DA		C
0CBUEEB561BA/	805-R311	AA	DA		C
〃	805-R312	AA	DA		C
0CBUEFD102AU/	805-R305	AB	DB		C
0CBUEZ0013ZZ/	805-R310	AA	DA		C
0CBUFBA102CD/	805-VR301	AC	DE		B
0CBUGAA470GQ/	805-C317	AC	DC	N	C
0CBUGAC222GQ/	805-C316	AG	DR		C
0CBUGAC470GQ/	805-C315	AC	DC		C
0CBUGAD222GQ/	805-C314	AG	DT	N	C
0CBUGAE102CW/	805-C306	AG	DT	N	C
〃	805-C307	AG	DT	N	C
0CBUGAF100GQ/	805-C304	AC	DC		C
〃	805-C313	AC	DC		C
0CBUGAG102GQ/	805-C301	AH	DW	N	C
〃	805-C302	AH	DW	N	C
0CBUGCF103BR/	805-C303	AB	DB		C
0CBUGFF102AR/	805-C311	AB	DB		C
0CBUGFF103AR/	805-C309	AC	DE		C
〃	805-C310	AC	DE		C
0CBUGFF104AR/	805-C308	AD	DF		C
〃	805-C312	AD	DF		C
0CBUGFF223AR/	805-C318	AC	DB		C
0CB829810014/	805-L301	AT	FG	N	C
0EVB2PSHF1AA/	804-CNK	AC	DC	N	C
0EVB25DY7500/	804-R71	AG	DR	N	C
0EVHA178L56P/	804-IC9	AE	DK	N	B
0EVTC4053BF//	804-IC14	AF	DQ	N	B
0EVUJB0L222TP	804-C1	AE	DK	N	C
0EVUPC78M10HF	804-IC8	AE	DK	N	B
0EV1B3P2 5DSA	804-CNC	AB	DC	N	C
0EV1B5P2 5DSA	804-CNJ	AC	DD	N	C
0EV1SR124100A	804-D3	AB	DC	N	B
〃	804-D11	AB	DC	N	B
〃	804-D12	AB	DC	N	B
〃	804-D13	AB	DC	N	B
〃	804-D15	AB	DC	N	B
〃	804-D16	AB	DC	N	B
0EV1XFC10JR22	804-R132	AC	DC	N	C
0EV1124DP2DPS	804-CNE	AF	DQ	N	C
0EV1126DP2DPS	804-CND	AG	DR	N	C
0EV1128DP2DPS	804-CNB	AG	DR	N	C
〃	804-CNG	AG	DR	N	C
0EV1130DP2DPS	804-CNE	AG	DT	N	C
0EV1132DP2DPS	804-CNB	AG	DT	N	C
0EV3A10P2DSA/	804-CNF	AB	DC	N	C
〃	804-CNI	AB	DC	N	C
0EV3A12P2DSA/	804-CNH	AB	DC	N	C
〃	804-CNL	AB	DC	N	C
0EV3A6P2DSA//	804-CNA	AB	DB	N	C