⚠ IMPORTANT SAFETY NOTICES

PREVENTION OF PHYSICAL INJURY

1. Before disassembling or assembling parts of the copier and peripherals, make sure that the copier power cord is unplugged.
2. The wall outlet should be near the copier and easily accessible.
3. Note that the optional tray heater and the optional anti-condensation heaters are supplied with electrical voltage even if the main switch is turned off.
4. If any adjustment or operation check has to be made with exterior covers off or open while the main switch is turned on, keep hands away from electrified or mechanically driven components.
5. The inside and the metal parts of the fusing unit become extremely hot while the copier is operating. Be careful to avoid touching those components with your bare hands.

HEALTH SAFETY CONDITIONS

1. Toner and developer are non-toxic, but if you get either of them in your eyes by accident, it may cause temporary eye discomfort. Try to remove with eye drops or flush with water as first aid. If unsuccessful, get medical attention.

OBSERVANCE OF ELECTRICAL SAFETY STANDARDS

1. The copier and its peripherals must be installed and maintained by a customer service representative who has completed the training course on those models.

SAFETY AND ECOLOGICAL NOTES FOR DISPOSAL

1. Do not incinerate toner cartridges or used toner. Toner dust may ignite suddenly when exposed to open flame.
2. Dispose of used toner, developer, and organic photoconductors in accordance with local regulations. (These are non-toxic supplies.)
3. Dispose of replaced parts in accordance with local regulations.

SECTION 1

OVERALL
MACHINE INFORMATION

1. SPECIFICATIONS

Configuration: Desk Top

Copy Process: Dry electrostatic transfer system

Originals: Sheet/Book

Original Size: Maximum: A3/11" x 17"

Copy Paper Size: Maximum: A3/11" x 17"
Minimum:
A5/5 1/2" x 8 1/2" sideways (Paper tray feed)
A6/5 1/2" x 8 1/2" lengthwise (By-pass feed)
Non-standard sizes:
Vertical 45 mm ~ 308 mm, 1.8" ~ 12"
Horizontal 148 mm ~ 432 mm, 5.8" ~ 17"

Copy Paper Weight: Paper tray feed: 64 to 90 g/m^2, 17 to 24 lb
By-pass feed: 52 to 157 g/m^2, 14 to 42 lb

Reproduction Ratios:

	Metric Version	Inch Version
Enlargement	200% 141% 122%	200% 155% 129%
Full Size	100%	100%
Reduction	93% 82% 71% 50%	93% 74% 65% 50%

Zoom: From 50% to 200% in 1% steps

Copying Speed: 15 copies/minute (A4/8.5" x 11" sideways)
9 copies/minute (A3/11" x 17")

Warm-up Time: 120 V machines: Less than 30 seconds (at 23°C)
230 V machines: Less than 45 seconds (at 23°C)

First Copy Time: Less than 6.9 seconds (A4/8.5" x 11" sideways)

Copy Number Input: Number keys, 1 to 99

Manual Image Density Selection: 7 steps

Automatic Reset: 1 minute standard setting; can also be set to 3 minutes or no auto reset

Paper Capacity:

Paper tray: 500 sheets or less than 56 mm stack height

By-pass feed entrance:

Standard paper	80 sheets
OHP	10 sheets
Others	1 sheet

Toner Replenishment: Bottle exchange (215 g/bottle)

Copy Tray Capacity: 100 sheets

Power Source:

120 V/60 Hz: More than 15 A (for North America)
220 ~ 240 V/50 Hz: More than 8 A (for Europe)
220 V/50 Hz: More than 8 A (for Asia)
220 V/60 Hz: More than 8 A (for Middle East/Asia)
110 V/60 Hz: More than 15 A (for Taiwan)
127 V/60 Hz: More than 15 A (for Middle East)

Power Consumption:

	Copier only	**Full system***
Maximum	1.4 kW (120 V machines)	1.5 kW (120 V machines)
	0.9 kW (230 V machines)	1.0 kW (230 V machines)
Copy cycle	0.71 kW	0.74 kW
Warm-up	0.95 kW	0.95 kW
Stand-by	0.25 kW	0.25 kW
Energy saver	0.2 kW	0.2 kW

*Full system: Copier with document feeder and 10-bin sorter

Dimensions:

	Width	**Depth**	**Height**
Copier	579 mm (22.8")	560 mm (22.1")	420 mm (16.6")
Full system*	775 mm (30.2")	560 mm (22.1")	508 mm (19.8")

*Full system: Copier with document feeder and 10-bin sorter

Noise Emissions:

Sound pressure level (the measurements are made in accordance with ISO 7779 at the operator position.)

	Copier only	Full system*
Copying	Less than 57 dB	Less than 61 dB

*Full system: Copier with document feeder and 10-bin sorter

Sound power level (the measurements are made in accordance with ISO 7779)

	Copier only	Full system*
Stand-by	Less than 40 dB	Less than 40 dB
Copy cycle	Less than 63 dB	Less than 67 dB

*Full system: Copier with document feeder and 10-bin sorter

Weight:

Copier only	42 kg (93.0 lb)
Full system*	55 kg (121 lb)

*Full system: Copier with document feeder and 10-bin sorter

Optional Equipment: (Sales items)
Document feeder (A662)
10-bin sorter (A657)

Optional Equipment: (Service items)
Optics anti-condensation heater
Tray heater

- Specifications are subject to change without notice.

2. COPY PROCESS AROUND THE DRUM

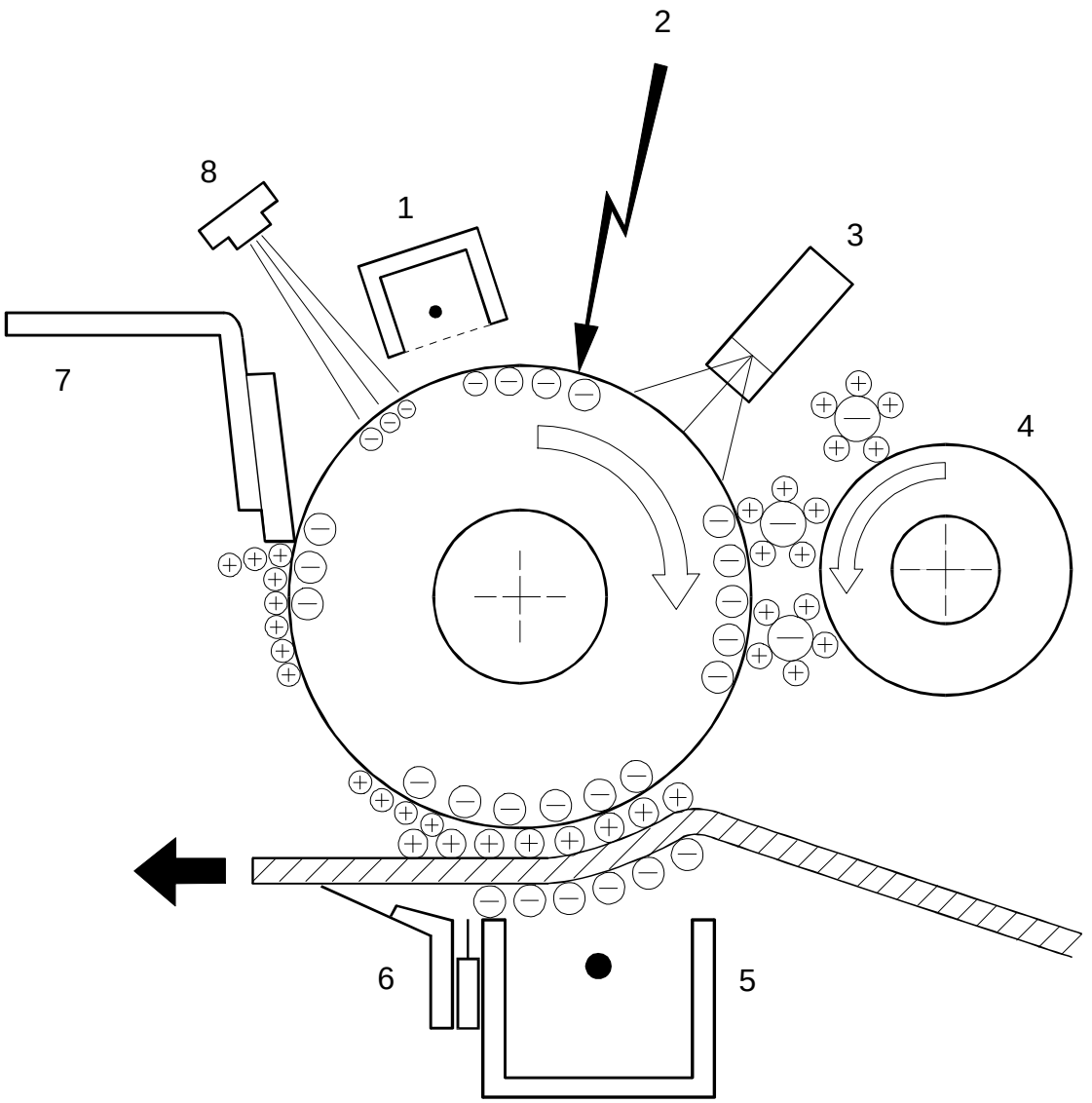

A219V503.wmf

1. DRUM CHARGE

In the dark, the charge corona unit gives a uniform negative charge to the organic photoconductive (OPC) drum. The charge remains on the surface of the drum because the OPC drum has a high electrical resistance in the dark.

2. EXPOSURE

An image of the original is reflected to the drum surface via the optics assembly. The charge on the drum surface is dissipated in direct proportion to the intensity of the reflected light, thus producing an electrical latent image on the drum surface.

3. ERASE

The erase lamp illuminates the area of the charged drum surface that will not be used for the copy image. The resistance of the drum in the illuminated areas drops and the charge on those areas dissipates.

4. DEVELOPMENT

Positively charged toner is attached to the negatively charged areas of the drum, thus developing the latent image. (The positive triboelectric charge is caused by friction between the carrier and toner particles.)

5. IMAGE TRANSFER

Paper is fed to the drum surface at the proper time so as to align the copy paper and the developed image on the drum surface. Then, a strong negative charge is applied to the back side of the copy paper, producing an electrical force which pulls the toner particles from the drum surface to the copy paper. At the same time, the copy paper is electrically attracted to the drum surface.

6. PAPER SEPARATION

A strong positive dc charge is applied to the back side of the copy paper via a discharge plate, reducing the negative charge on the copy paper and breaking the electrical attraction between the paper and the drum. Then, the stiffness of the copy paper causes the paper to separate from the drum surface.

7. CLEANING

The cleaning blade scrapes the toner off the drum. The collected toner is recycled.

8. QUENCHING

Light from the quenching lamp electrically neutralizes the drum surface.

3. MECHANICAL COMPONENT LAYOUT

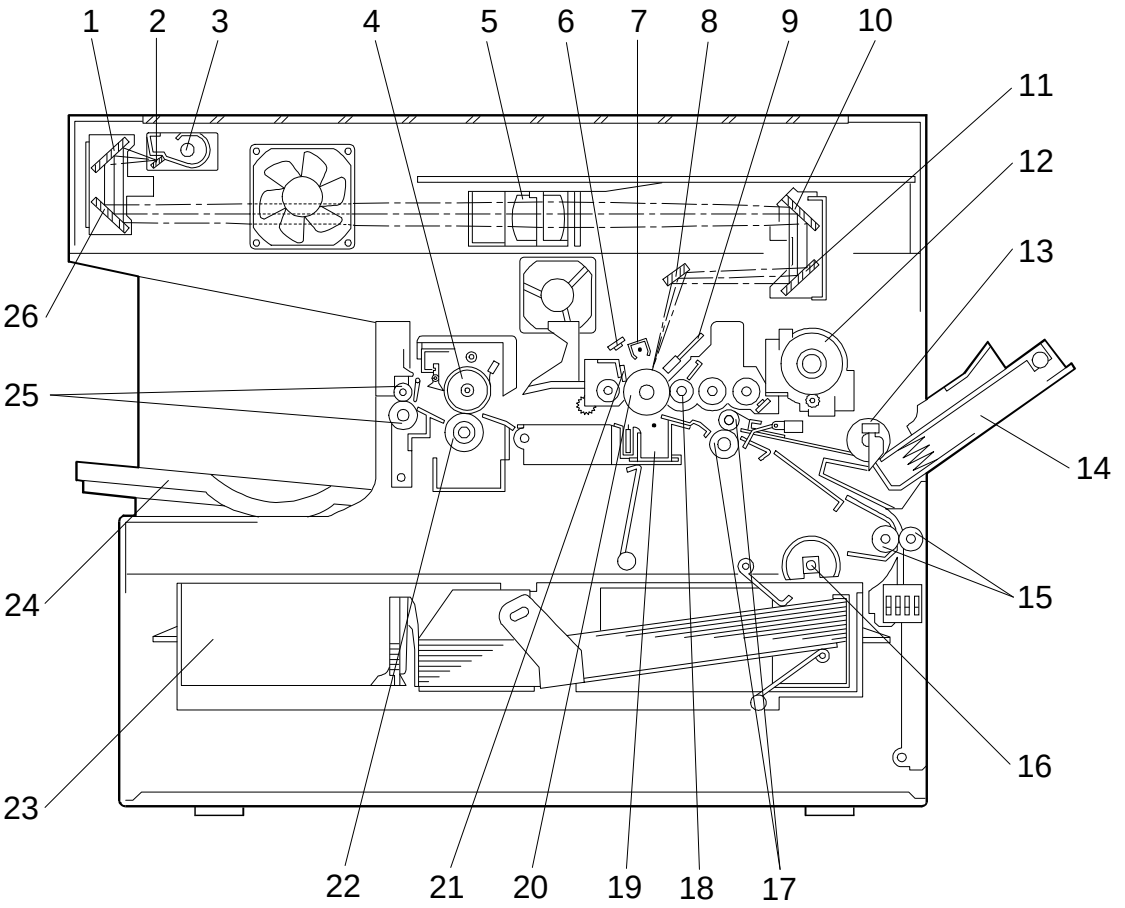

A219V500.wmf

1. 2nd Mirror
2. 1st Mirror
3. Exposure Lamp
4. Hot Roller
5. Lens
6. Quenching Lamp
7. Charge Corona Unit
8. 6th Mirror
9. Erase Lamp
10. 4th Mirror
11. 5th Mirror
12. Toner Bottle Holder
13. By-pass Feed Roller
14. By-pass Feed Table
15. Relay Rollers
16. Tray Paper Feed Rollers
17. Registration Rollers
18. Development Roller
19. Transfer/Separation Unit
20. Drum
21. Cleaning Blade
22. Pressure Roller
23. Paper Tray
24. Copy Tray
25. Exit Rollers
26. 3rd Mirror

4. DRIVE LAYOUT

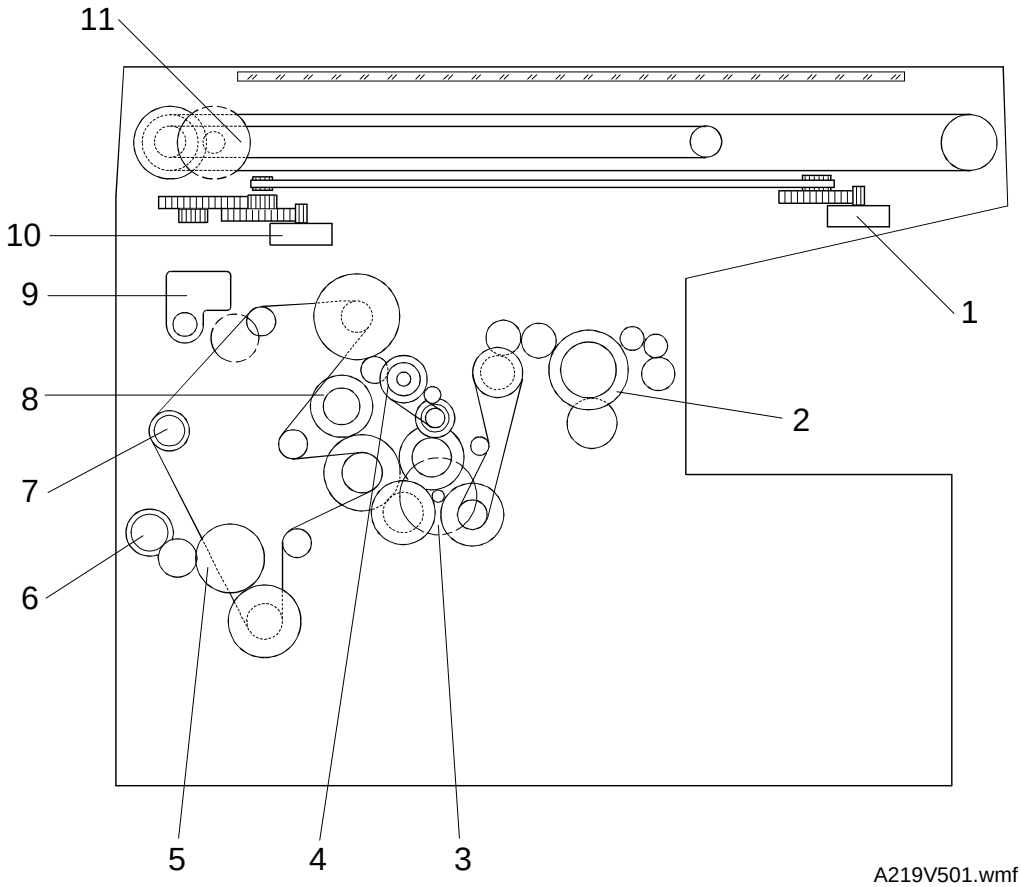

1. Lens Motor
2. Fusing Unit Drive Gear
3. Main Motor
4. Drum Drive Gear
5. Tray Paper Feed Clutch Gear
6. Relay Roller Clutch Gear
7. By-pass Paper Feed Clutch
8. Registration Clutch Gear
9. Toner Supply Motor
10. 4th/5th Mirror Motor
11. Scanner Drive Motor

5. PAPER PATH

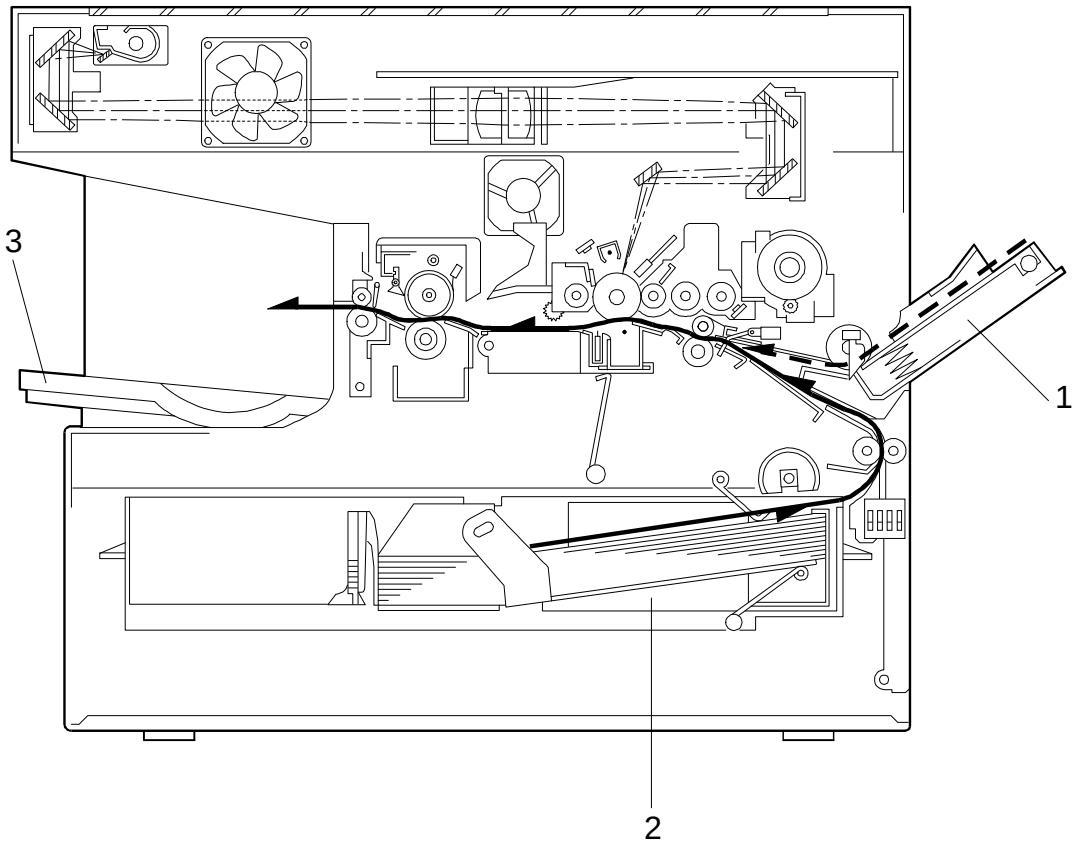

A219V502.wmf

1. By-pass Feed
2. Paper Tray Feed
3. Copy Tray

6. ELECTRICAL COMPONENT DESCRIPTIONS

Refer to the electrical component layout and the point-to-point diagram on the waterproof paper in the pocket for symbols and index numbers.

Symbol	Name	Function	Index No.
Motors			
M1	Main Motor	Drives all the main unit components except for the optics unit and fans.	8
M2	Scanner Drive Motor	Drives the scanners (1st and 2nd).	9
M3	Lens Motor	Moves the lens position in accordance with the selected magnification.	18
M4	4th/5th Mirror Motor	Moves the 4th/5th mirror position in accordance with the selected magnification.	16
M5	Toner Supply Motor	Rotates the toner bottle to supply toner to the development unit.	10
M6	Optics Cooling Fan Motor	Prevents build-up of hot air in the optics cavity.	17
M7	Exhaust Fan Motor	Removes heat from around the fusing unit and blows the ozone built up around the charge corona unit towards the ozone filter.	7
Clutches			
CL1	Tray Paper Feed Clutch	Transfers main motor drive to the paper feed roller.	14
CL2	By-pass Paper Feed Clutch	Starts paper feed from the by-pass feed table.	12
CL3	Relay Roller Clutch	Drives the relay rollers for paper tray feed.	13
CL4	Registration Clutch	Drives the registration rollers.	11
Switches			
SW1	Main Switch	Supplies power to the copier.	38
SW2	Interlock Switch	Cuts all power when the front cover is opened.	37
SW3	Tray Paper Size Switch	Determines what size of paper is in the paper tray.	31
SW4	Right Vertical Guide Switch	Cuts the +24 V dc power line of the relay roller clutch.	27
Sensors			
S1	4th/5th Mirror Home Position Sensor	Informs the CPU when the 4th/5th mirror assembly is at the home position (full size position).	33
S2	ADS Sensor	Detects the background density of the original.	24

Symbol	Name	Function	Index No.
S3	Tray Paper End Sensor	Informs the CPU when the paper tray runs out of paper.	28
S4	Registration Sensor	Detects the leading edge of the copy paper to determine the stop timing of the relay roller clutch, and detects misfeeds.	30
S5	By-pass Feed Paper End Sensor	Informs the CPU when there is no paper in the by-pass tray.	29
S6	Exit Sensor	Detects misfeeds.	23
S7	Scanner Home Position Sensor	Informs the CPU when the 1st scanner is at the home position.	40
S8	Lens Home Position Sensor	Informs the CPU when the lens is at the home position.	22
S9	Toner Density (TD) Sensor	Detects the ratio of toner to carrier in the developer.	26
Printed Circuit Boards			
PCB1	Main Control Board	Controls all copier functions.	1
PCB2	High Voltage Supply Board - C/G/B/T/S	Provides high voltage to the charge corona, grid, development bias, transfer corona, and discharge plate.	2
PCB3	AC Drive/DC Power Supply Board	Drives the exposure lamp, fusing lamp, and main motor. Rectifies 30 Vac and 8 Vac input and outputs 5 Vdc and 24 Vdc.	3
PCB4	Operation Panel Board	Informs the CPU of the selected modes and displays the situation on the panel.	6
Lamps			
L1	Erase Lamp	Discharges the drum outside of the image area. (Provides leading/trailing edge and side erases.)	4
L2	Quenching Lamp	Neutralizes any charge remaining on the drum surface after cleaning.	5
L3	Exposure Lamp	Applies high intensity light to the original for exposure.	20
L4	Fusing Lamp	Provides heat to the hot roller.	25
Others			
CO1	Total Counter	Keeps track of the total number of copies made.	34
H1	Tray Heater (Option)	Turns on when the main switch is off to keep paper in the paper tray dry.	32
H2	Optics Anti-condensation Heater (Option)	Turns on when the main switch is off to prevent moisture from accumulating in the optics.	39
TF1	Exposure Lamp Thermofuse	Provide back-up overheat protection around the exposure lamp.	21

Symbol	Name	Function	Index No.
TF2	Fusing Thermofuse	Provide back-up overheat protection in the fusing unit.	36
TH1	Fusing Thermistor	Monitors the temperature around the exposure lamp for overheat protection.	35
TH2	Optics Thermistor	Monitors the temperature around the exposure lamp for overheat protection.	19
TR	Transformer	Steps down the wall voltage to 30 Vac and 8 Vac.	15

SECTION 2

DETAILED DESCRIPTIONS

1. DRUM

1.1 OPC DRUM CHARACTERISTICS

The OPC (Organic Photoconductor) drum used in this copier is small in diameter (30 mm), ensuring good paper separation. An OPC drum has the following characteristics.

1. The drum is able to accept a high negative electrical charge in the dark. (The electrical resistance of a photoconductor is high in the absence of light.)
2. It dissipates the electrical charge when exposed to light. (Exposure to light greatly increases the conductivity of a photoconductor.)
3. The amount of charge dissipated is in direct proportion to the intensity of the light. That is, where stronger light is directed to the photoconductor surface, a smaller voltage remains on the drum.
4. An OPC drum is less sensitive to changes in temperature (when compared to selenium F type drums).
5. During the drum's life, drum residual voltage gradually increases and the photoconductive surface becomes worn. Therefore, some compensation for these characteristics is required.

1.2 DRIVE MECHANISM

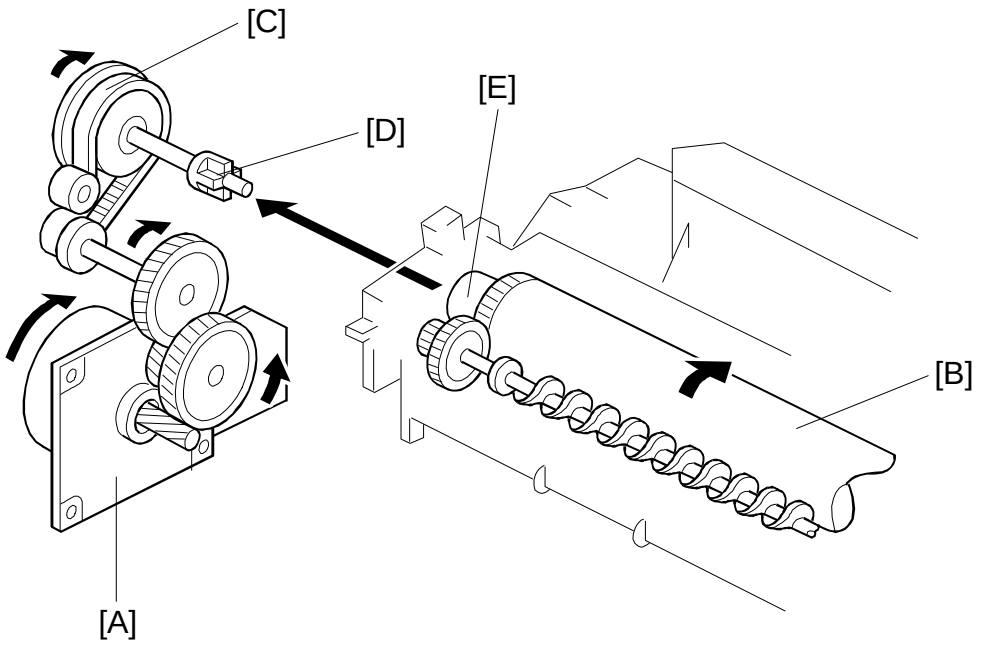

A219D520.wmf

The drive from the main motor [A] is transmitted to the drum [B] through a series of gears, a timing belt [C], and the drum drive shaft [D].

When the imaging unit is installed in the copier, the drum drive shaft engages inside the drum's flange [E] as shown.

2. CHARGE

2.1 OVERVIEW

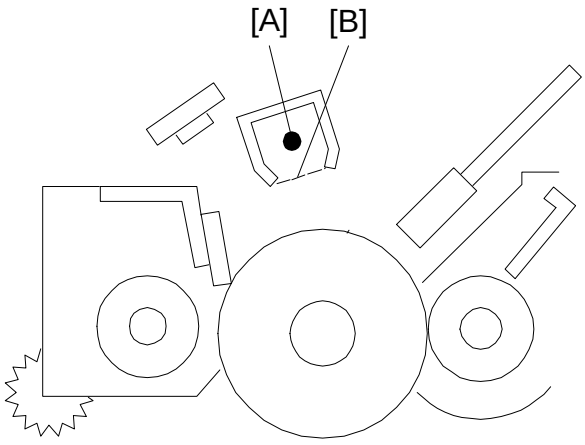

A219D505.wmf

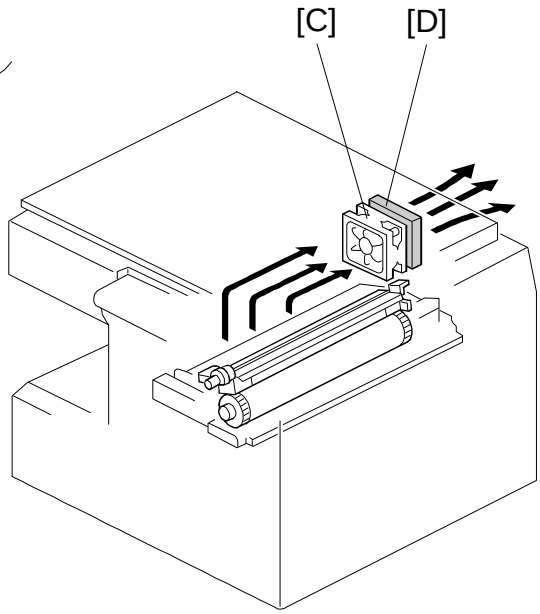

A219D521.wmf

This copier uses a single wire scorotron to charge the drum. The corona wire [A] generates a corona of negative ions when the high voltage supply unit applies a negative voltage. The stainless steel grid plate [B] ensures that the drum coating receives a uniform negative charge as it rotates past the corona unit.

The exhaust fan [C] causes a flow of air above and through the charge corona section. This prevents an uneven build-up of negative ions that can cause uneven image density.

An ozone filter [D], which absorbs ozone (O_3) generated by the charge corona, is located beside the exhaust fan. The ozone filter decreases in efficiency over time as it absorbs ozone. The ozone filter should be replaced every PM cycle (45 k copies).

2.2 CHARGE CORONA WIRE CLEANER MECHANISM

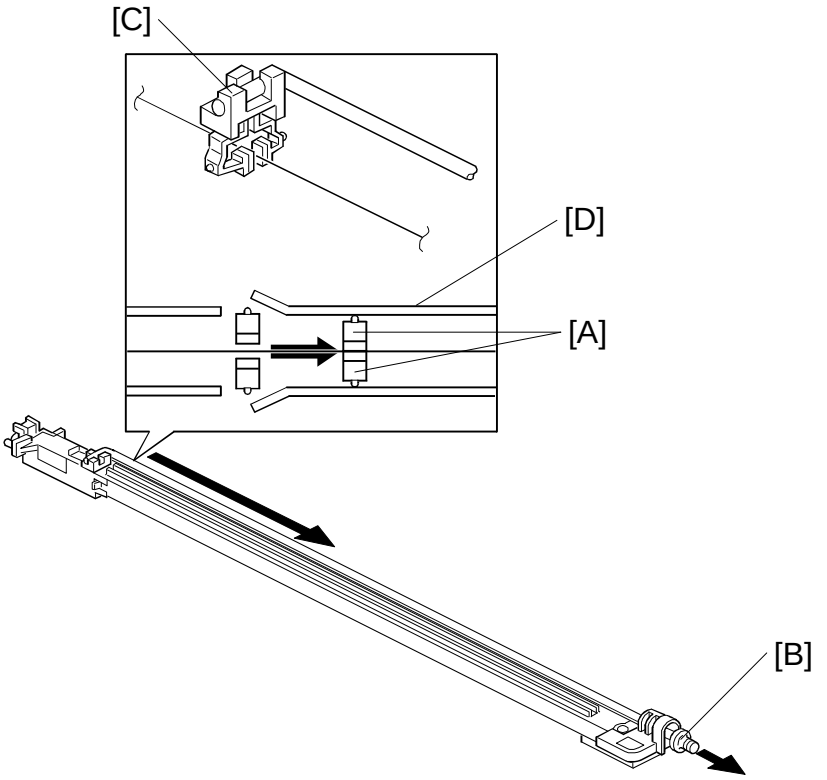

A219D536.wmf

Pads [A] move along the charge corona wire as the wire cleaner knob [B] is manually slid in and out.

The cleaner pad bracket [C] is connected to the wire cleaner knob. When the knob is pulled out, the pads move into contact with the corona wire as shown, since the casing [D] is narrower away from the home position.

The pads move away from the wire when the wire cleaner knob is fully inserted and the pad bracket is pushed back to the home position.

After copier installation, the key operator should be instructed to use this mechanism when copies have white streaks or uneven image density. Instruct the operator to firmly push the pad bracket into the home position. Poor copy quality will result if the cleaning pads remain in contact with the charge corona wire.

2.3 CHARGE CORONA CIRCUIT

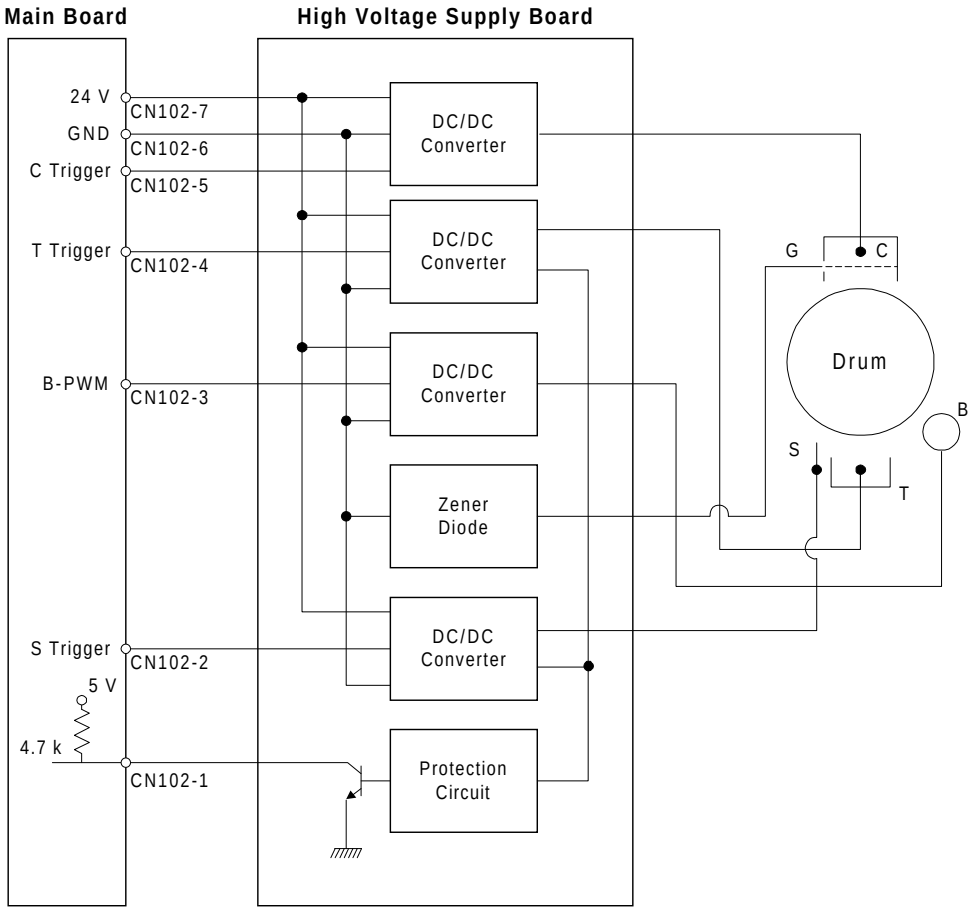

A219D506.wmf

The main board supplies +24 V to the high voltage supply board at CN102-7. After the [◈] key is pressed, the CPU drops CN102-5 from +24 V to 0 V. This activates the charge corona circuit which applies a high negative voltage of approximately –5 k volts to the charge corona wire. The corona wire then generates a negative corona charge.

The grid plate limits the charge voltage to ensure that the charge does not fluctuate and that an even charge is applied to the entire drum surface. The grid plate is connected to ground through a zener diode in the high voltage supply unit. The grid plate drains any charge in excess of –910 V, which is discharged to ground through the zener diode.

3. OPTICS

3.1 OVERVIEW

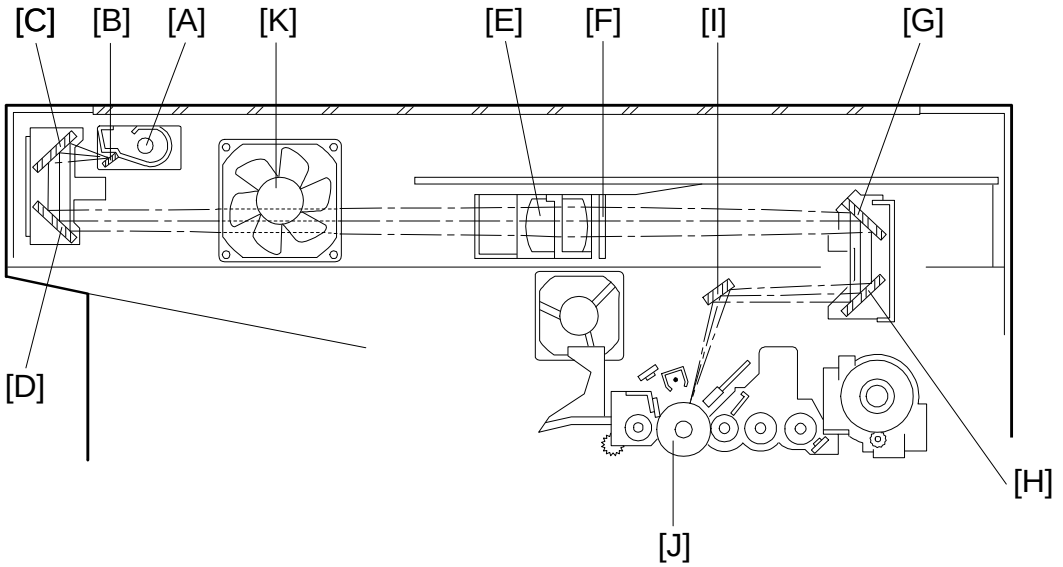

A219D507.wmf

During the copy cycle, an image of the original is reflected onto the drum surface through the optics assembly as follows:

Light path:
Exposure Lamp [A] → Original → First Mirror [B] → Second Mirror [C] → Third Mirror [D] → Lens [E] → Blue Filter [F] → Fourth Mirror [G] → Fifth Mirror [H] → Sixth Mirror [I] → Drum [J]

This copier has eight standard reproduction ratios and a zoom function. The operator can also change the reproduction ratio in one-percent steps from 50% to 200%. Stepper motors are used to change the positions of the lens and 4th/5th mirrors to enlarge/reduce the image across the page. Changes in reproduction ratio down the page are achieved by changing the scanner speed.

The CPU monitors the temperature around the optics through a thermistor which is located on the scanner frame. When the temperature reaches 40°C, the optics cooling fan [K] starts rotating to draw cool air into the optics cavity. The fan operates until the temperature drops below 38°C.

Additionally, a thermofuse on the 1st scanner provides back-up overheat protection. It opens when the temperature reaches 128°C and cuts ac power to the exposure lamp.

A blue filter is located just after the lens to improve the reproduction of red areas of the original on copies.

3.2 SCANNER DRIVE

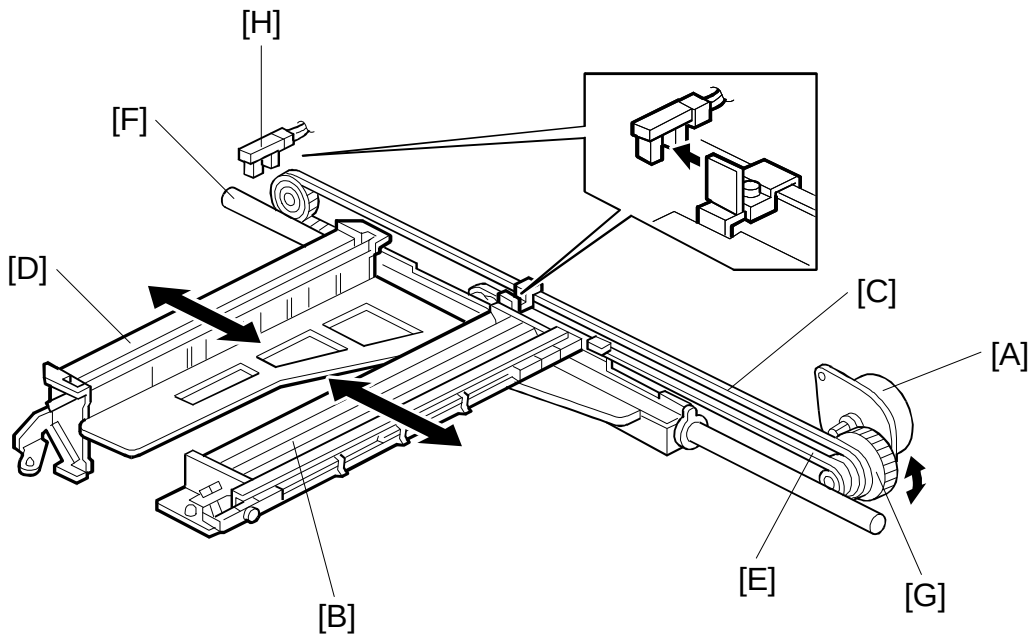

A219D522.wmf

A stepper motor [A] is used to drive the scanners.

The first scanner [B], which consists of the exposure lamp and the first mirror, is connected to the first scanner belt [C]. The second scanner [D], which consists of the second and third mirrors, is connected to the second scanner belt [E]. Both the scanners move along the guide rod [F].

There are no scanner drive wires, and only one side of the scanner is supported (by a rod and guide rail). Therefore, the scanners should be moved by moving the timing belt, and never by moving the scanners directly.

The pulley [G] drives both the first and second scanner belts. The 2nd scanner moves at half the speed of the first scanner. This maintains the focal distance between the original and the lens during scanning.

The scanner home position is detected by a home position sensor [H]. The scanner return position is determined by counting the scanner motor drive pulses.

3.3 LENS DRIVE

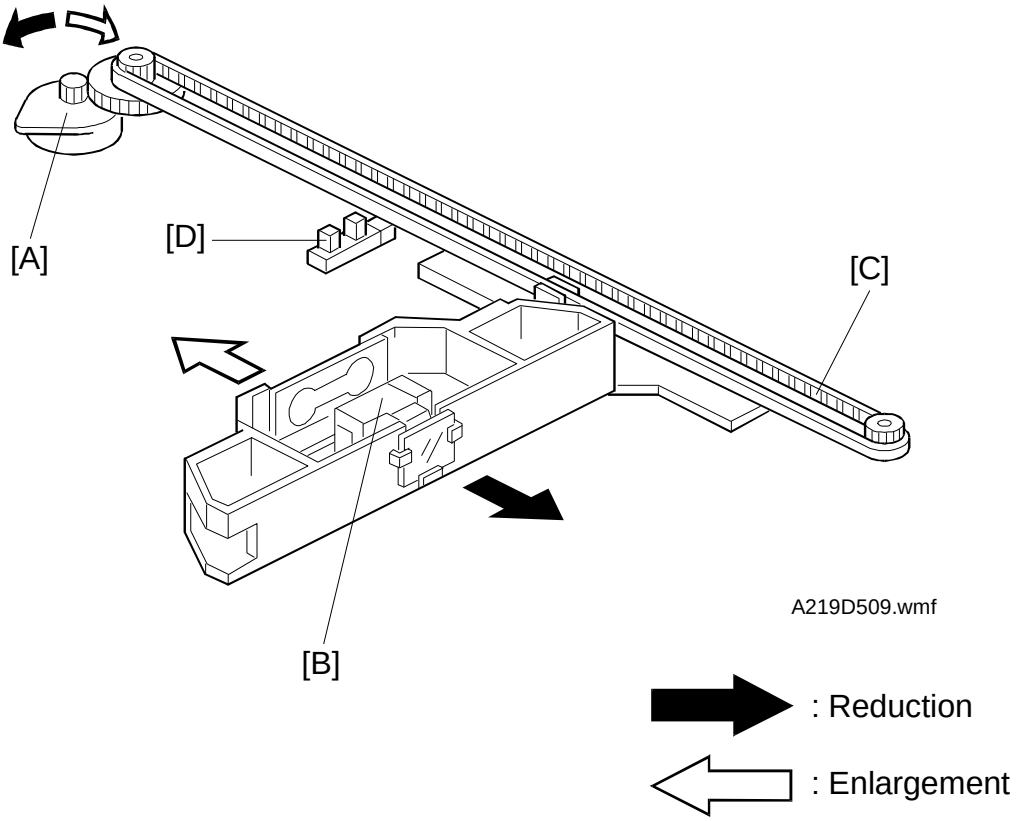

The lens motor [A] (stepper motor) changes the lens [B] position through the timing belt [C] in accordance with the selected reproduction ratio to provide the proper optical distance between the lens and the drum surface.

The rotation of the lens drive pulley moves the lens back and forth in discrete steps. The home position of the lens is detected by a home position sensor [D]. The main board keeps track of the lens position based on the number of pulses sent to the lens motor.

3.4 4TH/5TH MIRROR DRIVE

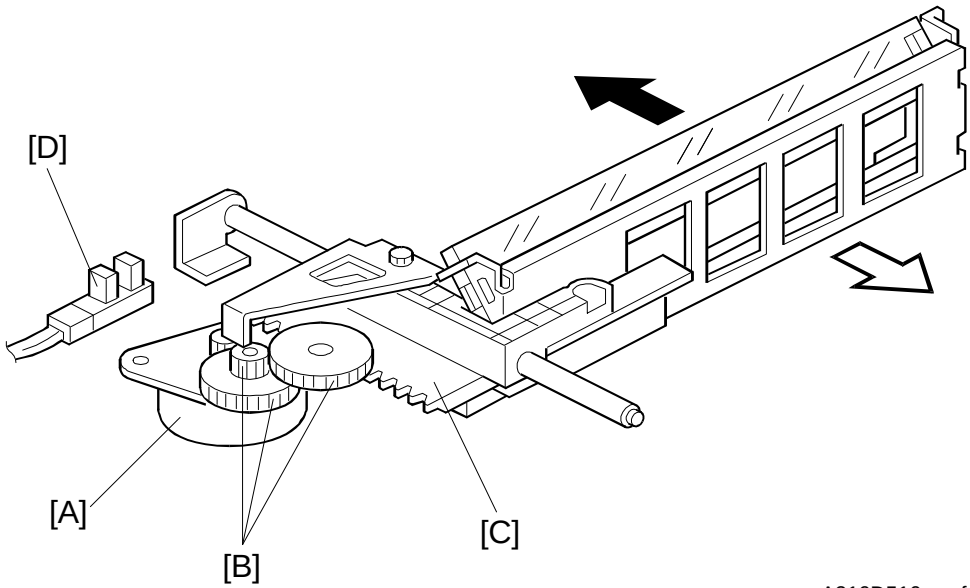

A219D510.wmf

The 4th/5th mirror drive motor [A] (stepper motor) changes the 4th/5th mirror assembly position through the pinion gears [B] and the rack gear [C] in accordance with the selected reproduction ratio to provide the proper optical distance between the lens and drum surface.

The home position of the 4th/5th mirror assembly is detected by a home position sensor [D]. The main board keeps track of the lens position based on the number of pulses sent to the 4th/5th mirror motor.

3.5 AUTOMATIC IMAGE DENSITY SENSOR

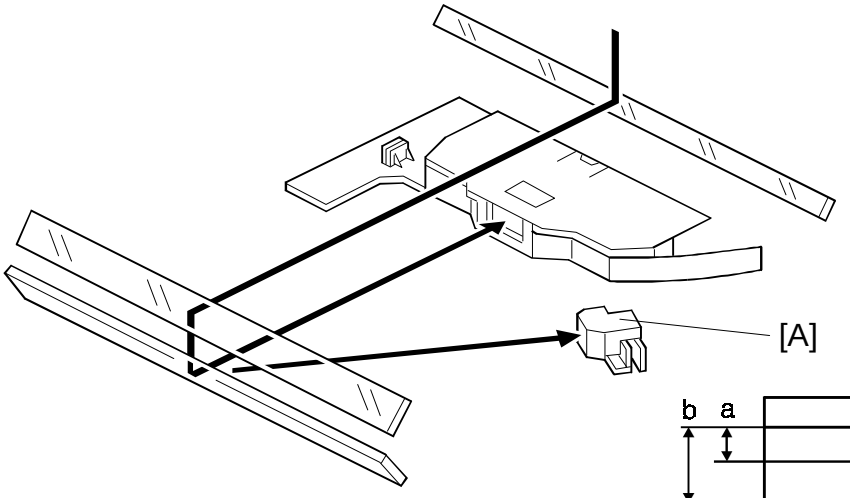

A219D511.wmf

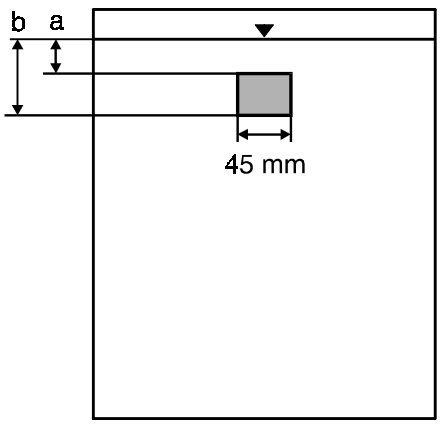

A219D512.wmf

The auto ID sensor [A], a photodiode, is mounted on the upper front frame. The sensor cover has a hole in it to allow light to fall directly onto the sensor.

Sampling starts 6 millimeters from the leading edge of the original and continues for 11.5 millimeters from the leading edge of original in full size mode. These lengths "a" and "b" will vary depending on the selected reproduction ratio. The lengths "a" and "b" for each reproduction ratio are calculated as follows:

$$a = \frac{6\ \text{mm}}{\text{Reproduction Ratio (\%)}} \times 100 \qquad b = \frac{11.5\ \text{mm}}{\text{Reproduction Ratio (\%)}} \times 100$$

Every original in ADS mode, the photosensor circuit converts the light intensity to a voltage. The detected voltage is amplified and sent to the main board. If less light is reflected from the original (the image is darker), the sensor outputs a lower voltage. The CPU compares the maximum ADS output voltage with the standard ADS reference voltage and compensates the copy image density by changing the development bias voltage in accordance with the difference. The standard ADS reference voltage (2.5 ± 0.1 V) is generated by SP 56. Details about changes to the development bias voltage are explained in "Development Bias for Image Density Control".

3.6 EXPOSURE LAMP VOLTAGE CONTROL

The main board controls the exposure lamp voltage through the ac drive/dc power supply board. The exposure lamp voltage is based on the base lamp voltage and various correction factors. The method of control is different depending on whether the image density is manually selected or the auto image density mode is selected.

The exposure lamp voltage is determined by the following factors:

Lamp Voltage = Base Lamp Voltage Setting (SP48)
+
*Image Density Adjustment Factor (SP34)
+
*Manual Image Density Setting Factor
+
V_L Correction 1 Factor (SP62)
+
V_L Correction 2 Factor
+
Reproduction Ratio Correction Factor

***NOTE:** SP34 (Image Density Adjustment Factor) is applied for ADS mode only.
The "Manual Image Density Factor" is applied for manual ID mode only.

1) Base Lamp Voltage Setting

The lamp voltage is determined by the SP48 setting.

Base Lamp Voltage = SP48 setting x 0.5 (120 V machines)
SP48 setting x 1.0 (230 V machines)

The default setting is: 140 = 70 V (120 V machines)
140 = 140 V (230 V machines)

The current lamp voltage (after all correction factors are included) can be viewed with SP 51.

2) Image Density Adjustment Factor (SP34)

Depending on the SP34 setting, the development bias and the exposure lamp settings are increased or decreased during ADS mode.

SP34 Setting	Setting	Dev. Bias	Exposure Lamp
0	Normal	0	0
1	Light	–40 V	0
2	Dark	+40 V	0
3	Lightest	–40 V	+4 steps
4	Darkest	+40 V	–4 steps

1 step = 0.5 V (120 V machines) or 1.0 V (230 V machines)

3) Manual Image Density Setting Factor

Depending on the manual image density setting on the operation panel, the exposure lamp voltage is changed as shown in the table below:

Darker ⟷ Lighter

Manual ID Level	1	2	3	4	5	6	7
Exposure Lamp Voltage Factor	**V_0 – 6 steps**	**V_0 – 4 steps**	**V_0 – 2 steps**	**V_0**	**V_0 + 2 steps**	**V_0 + 6 steps**	**V_0 + 12 steps**
Development Bias Voltage (Volts)	–200	–200	–200	–200	–200	–240	–240

V_0: Base lamp voltage setting (SP48)

1 step = 0.5 V (120 V machines) or 1.0 V (230 V machines)

4) V_L Correction 1 Factor

The light intensity may decrease because of dust accumulated on the optics parts. Additionally, the drum sensitivity gradually decreases during the drum's life. This may cause dirty background on copies. To compensate for this, V_L corrections 1 and 2 are done.

The exposure lamp voltage is increased by two steps at the set copy count interval (a step is +2.0 V for 230 V machines, and +1 V for 120 V machines). The table below shows the relationship between the SP setting and the interval.

SP62 Setting	V_L Correction Interval
0	2 steps/8,000 copies
1	2 steps/6,000 copies
2	2 steps/4,000 copies
3	2 steps/2,000 copies
4	2 steps/1,000 copies
5	No correction

(Default setting: 2)

V_L correction 1 compensates for the decrease of drum sensitivity and the decrease in reflectivity of the 4th, 5th, and 6th mirrors due to dust.

5) V_L Correction 2 Factor

V_L correction 2 compensates for dust on the lens and mirrors 1 to 3, but is independent of the drum condition.

The ADS sensor receives the light reflected through the 1st, 2nd and 3rd mirrors from the white plate located under the middle part of the left scale. The photosensor circuit converts this light intensity to a voltage, and the CPU stores this in memory as the white plate reference voltage. This is done every time SP56 (ADS reference voltage adjustment) is done, before sampling starts for the ADS sensor adjustment.

Every 500 copies, the machine reads the intensity of light reflected from the white plate and compares it with the white plate reference voltage.

If the measured voltage difference is more than 0.1 volt, +2 steps will be added to the exposure lamp setting as the V_L correction 2 factor.

The sum of V_L correction factors 1 and 2 cannot exceed +40 steps.

V_L correction factors 1 and 2 are automatically reset every time the light intensity is adjusted with SP48. (SP56 must be done immediately after SP48; see Service Remarks for details.)

6) Reproduction Ratio Correction Factor

The exposure lamp voltage is increased depending on the selected magnification ratio in order to compensate for the change in concentration of light on the drum.

Magnification Ratio	Reproduction Ratio Correction Factor
50% to 61%	+2 steps
62% to 119%	0
120% to 139%	+2 steps
140% to 159%	+4 steps
160% to 179%	+8 steps
180% to 200%	+12 steps

1 step = 0.5 V (120 V machines) or 1.0 V (230 V machines)

4. ERASE

4.1 OVERVIEW

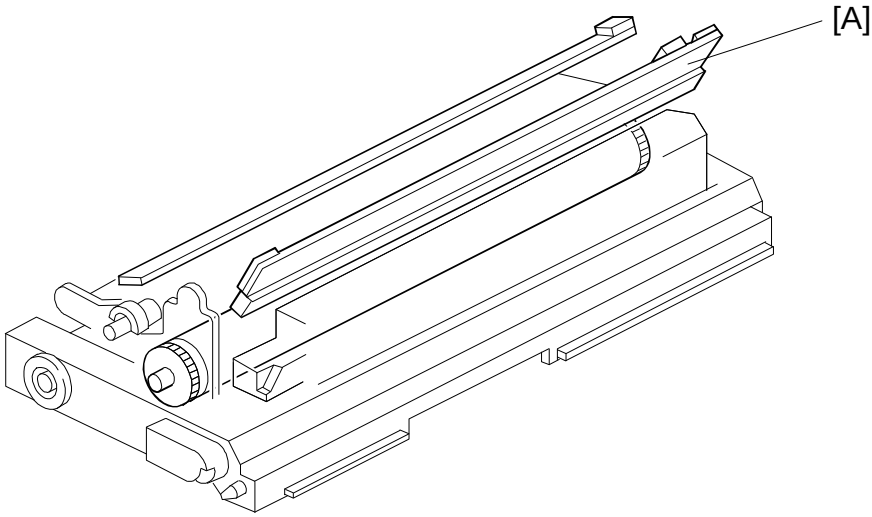

A219D513.wmf

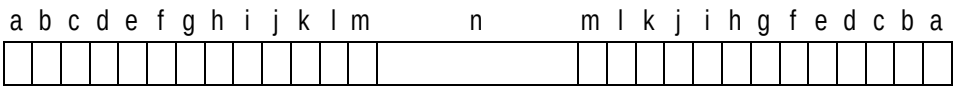

A219D527.wmf

The erase lamp [A], which is installed in the copier main frame, consists of a single row of white LEDs (38 LEDs) extended across the full width of the drum. The erase lamp has the following functions: leading edge erase, side erase and trail edge erase. (Trail edge erase begins after the trailing edge of the copy paper; therefore, the trailing edge of the copy will not be erased.) In side erase mode, the appropriate LEDs turn on in accordance with the modes selected by the user.

4.2 LEAD EDGE ERASE

The entire line of LEDs turn on when the main motor turns on. They stay on until the erase margin slightly overlaps the lead edge of the original image area on the drum (Lead Edge Erase Margin). This prevents the shadow of the original edge from being developed on the copy. At this point, side erase starts. The width of the leading erase margin can be adjusted using SP41.

4.3 SIDE ERASE

Based on the combination of copy paper size and the reproduction ratio data, the LEDs turn on in blocks (labeled "a" to "n" on the previous page). This reduces drum cleaning load.

Also, to prevent horizontal black lines from appearing on the edge of copies as a result of light leaking under the edge of the DF belt, the side erase combination is changed between platen mode and DF mode; in DF mode, more of the image is erased at the sides. (The setting of SP24 must be 0.)

-Platen Mode-

Blocks On	Paper Size	Reproduction Ratio (%)
None		99% to 200%
a to b		95% to 98%
a to c	11" x 17", 11" x 8 1/2"	92% to 94%
a to d		88% to 91%
a to e	B4, B5 sideways	84% to 87%
a to f		80% to 83%
a to g		75% to 79%
a to h	8 1/2" x 11", 8 1/2" x 5 1/2"	72% to 74%
a to i	A4 Lengthwise	68% to 71%
a to j		63% to 67%
a to k	B5	59% to 62%
a to l		54% to 58%
a to m		50% to 53%
All (a to n)	Lead Edge and Trail Edge Erase	

-DF Mode-

Blocks On	Paper Size	Reproduction Ratio (%)
None		99% to 200%
a to b		97% to 98%
a to c	11" x 17", 11" x 8 1/2"	93% to 96%
a to d		90% to 92%
a to e	B4, B5 sideways	86% to 89%
a to f		81% to 85%
a to g		77% to 80%
a to h	8 1/2" x 11", 8 1/2" x 5 1/2"	73% to 76%
a to i	A4 Lengthwise	70% to 72%
a to j		65% to 69%
a to k	B5	61% to 64%
a to l		56% to 60%
a to m		50% to 55%
All (a to n)	Lead Edge and Trail Edge Erase	

4.4 TRAILING EDGE ERASE

This minimizes toner consumption.

The entire line of LEDs turns on when the drum has turned 9 mm at the end of scanning (about 100 ms). The LEDs stay on to erase the leading edge of the latent image in the next copy cycle. After the final copy, the erase lamps turn off at the same time as the main motor.

5. DEVELOPMENT

5.1 OVERVIEW

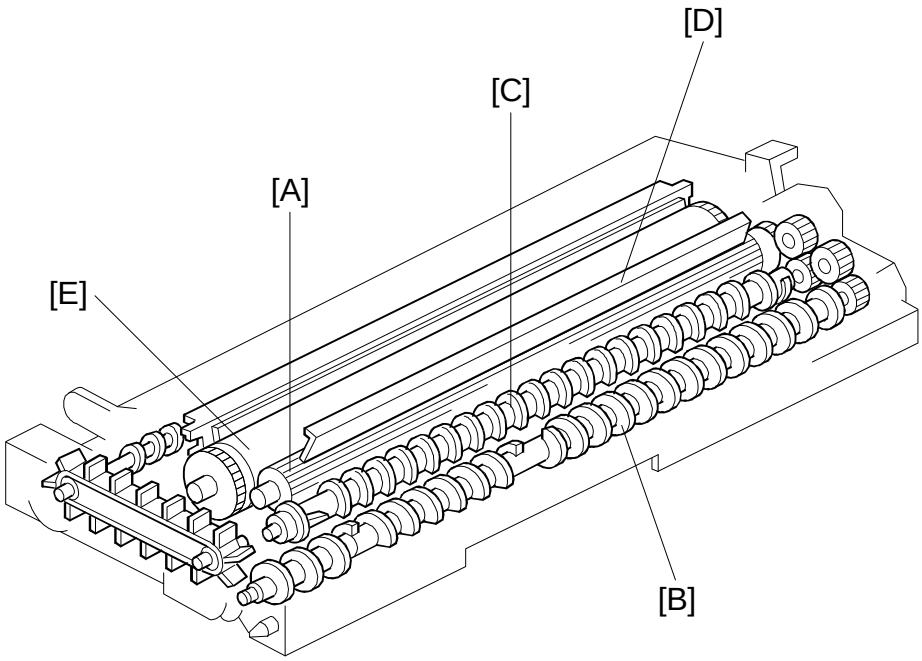

A219D514.wmf

When the main motor turns on, the development roller [A] and two agitators [B] and [C] start turning.

There are permanent magnets in the development roller which attract the developer particles (which are about 50 μm in diameter) to the roller. The turning sleeve of the development roller carries the developer past the doctor blade [D] which trims the developer to the desired thickness.

The development roller sleeve continues to turn, carrying the developer to the drum [E]. When the developer brush contacts the drum surface, the negatively charged areas of the drum surface attract and hold the positively charged toner. In this way, the latent image is developed.

The development roller is given a suitable negative bias for preventing toner from being attracted to the non-image areas on the drum which may have a residual negative charge. The bias also controls image density.

5.2 DRIVE MECHANISM

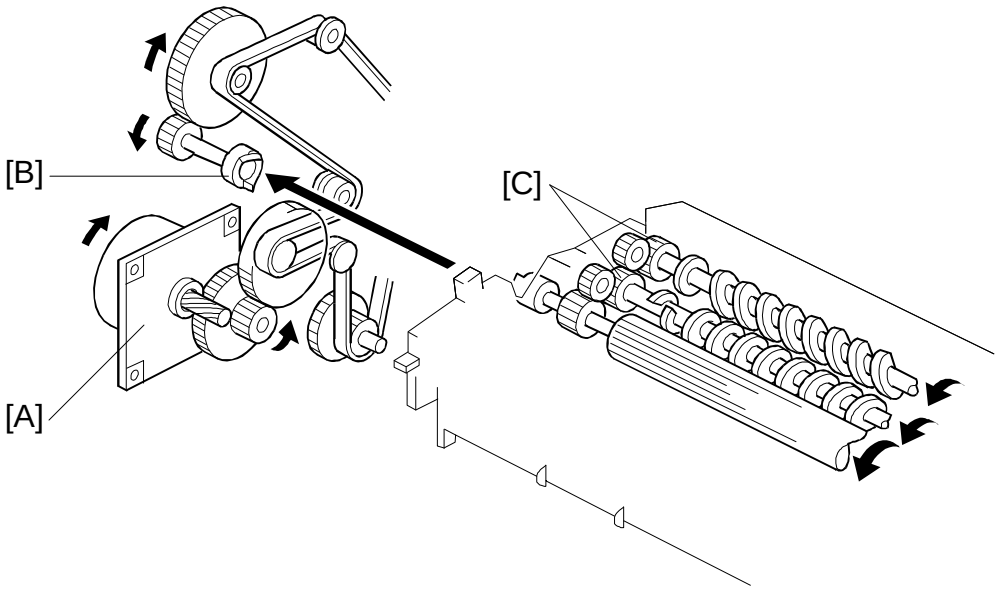

A219D515.wmf

When the main motor [A] turns on, the drive is transmitted to the development drive shaft [B] through gears and a timing belt. The rotation of the development roller gear is transmitted to the agitator gears [C] through other gears.

5.3 CROSS-MIXING

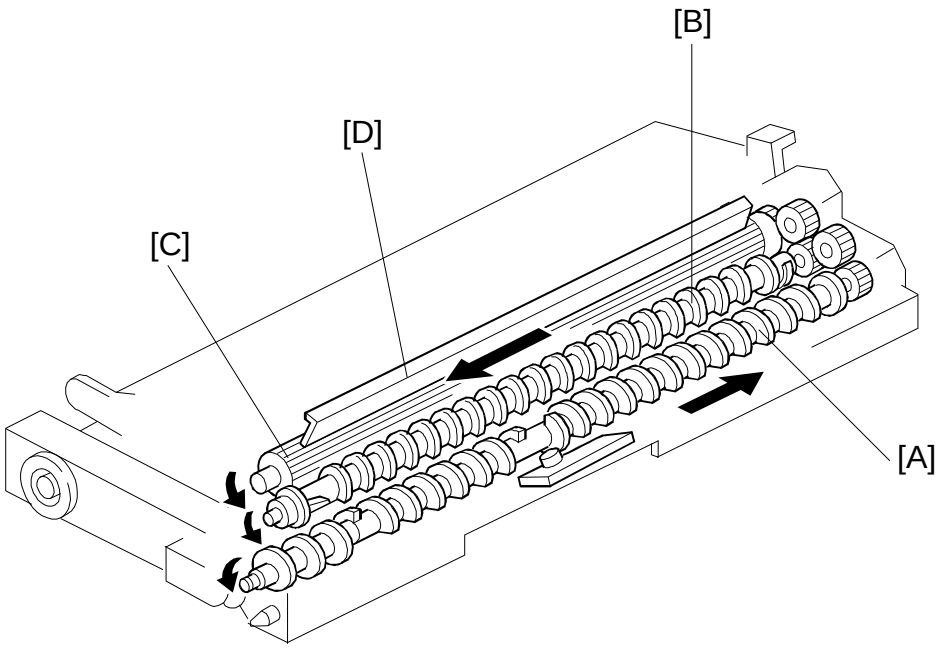

A219D516.wmf

A cross-mixing mechanism is used to keep the toner and developer evenly mixed. It also helps agitate the developer to prevent developer clumps from forming and helps create the triboelectric charge.

Two agitators (helical coils) [A] and [B] are used for cross-mixing. The 1st agitator [A] moves the developer from left to right. The toner supplied from the cutout in the toner cartridge holder is mixed with the developer by the 1st agitator. The 2nd agitator [B] rotates to move the developer back from right to left. In this way, the developer is evenly distributed in the development unit.

The magnets in the development roller [C] attract the developer, and the development roller sleeve rotates to carry the developer to the drum. The doctor blade [D] trims the developer on the development roller to the desired thickness.

5.4 DEVELOPMENT BIAS FOR IMAGE DENSITY CONTROL

The image density is controlled by changing two items: the amount of bias voltage applied to the development roller sleeve, and the amount of voltage applied to the exposure lamp.

Applying a bias voltage to the development sleeve reduces the potential between the development roller and the drum, thereby reducing the amount of toner transferred. As the bias voltage becomes greater, the copy becomes lighter.

The method of control depends on whether the image density is manually selected or auto image density is used.

The development bias voltage applied to the development roller sleeve has the following factors:

Development bias voltage = Base Bias Voltage
(Manual or auto image density mode)
+
*Image Bias Adjustment Factor (SP33)
+
*Image Density Adjustment Factor (SP34)
+
Drum Residual Voltage (V_R) Correction Factor

***NOTE:** Image Bias Adjustment Factor (SP33) is applied for manual ID mode only.
Image Density Adjustment Factor (SP34) is applied for ADS mode only.

5.4.1 Base Bias Voltage Factor in Manual Image Density Mode

Darker ⟷ Lighter

Manual ID Level	1	2	3	4	5	6	7
Exposure Lamp Voltage Factor	V_0 – 6 steps	V_0 – 4 steps	V_0 – 2 steps	V_0	V_0 + 2 steps	V_0 + 6 steps	V_0 + 12 steps
Development Bias Voltage (Volts)	**–200**	**–200**	**–200**	**–200**	**–200**	**–240**	**–240**

V_0: Depends on the setting of SP48

When manual ID level 6 or 7 is selected, –40 V is added to the base bias voltage.

Using SP33 (Image Bias Adjustment), the base bias voltage can be increased or decreased for all manual ID levels as follows:

SP Setting	Setting	Dev. Bias	Note
0	Normal	0	Default
1	Darkest	+40 V	
2	Darker	+20 V	
3	Lighter	–20 V	
4	Lightest	–40 V	

5.4.2 Base Bias Voltage Factor in Automatic Image Density (ADS) Mode

The bias voltage for ADS mode depends on the background image density of the original which is measured by the ADS sensor. (See "Automatic Image Density Sensor" for more information about the ADS sensor.)

The CPU checks the voltage output from the automatic ID circuit. This circuit has a peak hold function. The peak hold voltage is the maximum ADS sensor output voltage, which corresponds to the maximum reflectivity of the original. The CPU then determines the proper base bias level by comparing this voltage (read from the original) with the standard ADS reference voltage.

The table below shows the relationship between the original background density (ADS voltage ratio) and the base bias voltage.

ADS Voltage Ratio [α] (%)	Bias Voltage
80 to 100 (light)	–200 V
75 to 79	–240 V
70 to 74	–280 V
60 to 69	–320 V
29 to 59	–360 V
0 to 28 (dark)	–380 V

$$\text{ADS Voltage Ratio } [\alpha] = \frac{\text{Maximum ADS Output Voltage}}{V_{ADS0}}$$

V_{ADS0}: Standard ADS Reference Voltage (2.5 ± 0.1 V)

Using SP34, the base bias voltage and the exposure lamp setting can be increased or decreased for the ADS mode as follows:

SP Setting	Setting	Dev. Bias	Exposure Lamp
0	Normal	0	0
1	Lighter	–40 V	0
2	Darker	+40 V	0
3	Lightest	–40 V	+4 steps
4	Darkest	+40 V	–4 steps

(Default Setting: 0)

5.4.3 Drum Residual Voltage (V_R) Correction Factor

During the drum's life, drum residual voltage (V_R) will gradually increase. To compensate for this, the bias voltage is increased by –20 V every 5 k copies.

The V_R correction is done up to 20 k copies. The V_R correction will not change after 20 k copies.

5.5 DEVELOPMENT BIAS CIRCUIT

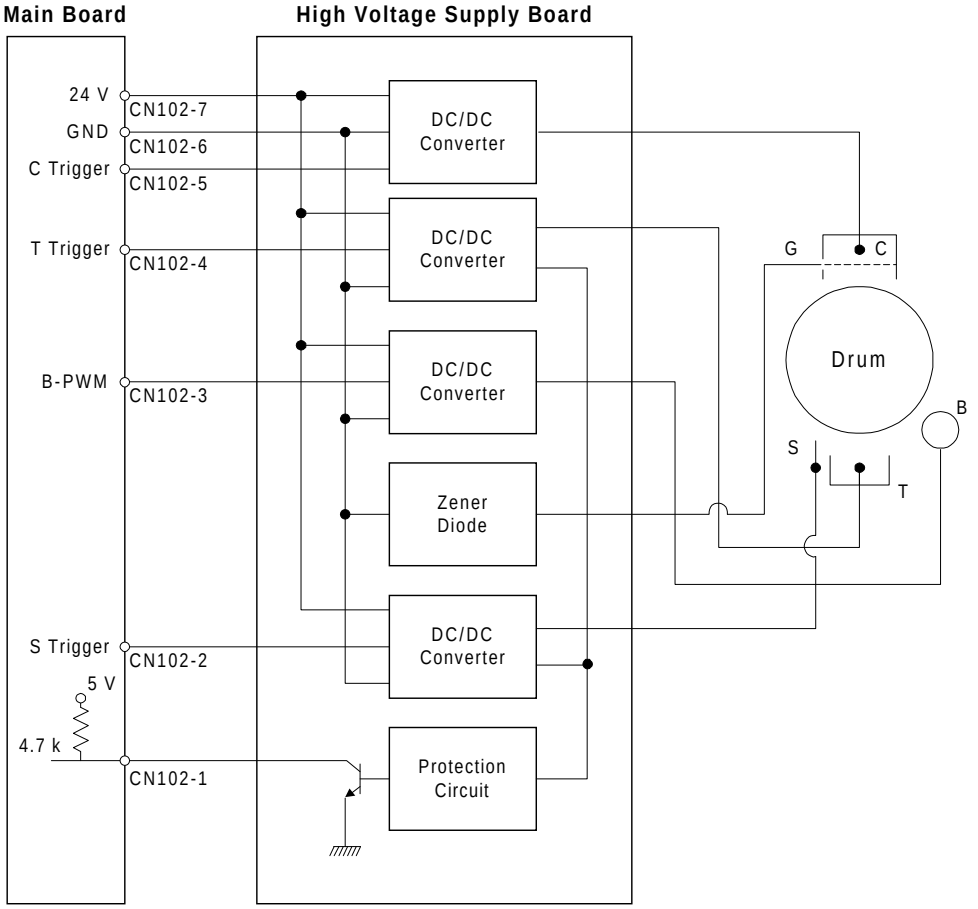

A219D506-2.wmf

The main board supplies +24 volts to the high voltage supply board from CN102-7. When the ◈ key is pressed, the CPU starts sending the bias trigger pulses from CN102-3. This energizes the development bias circuit within the high voltage supply board, which applies a high negative voltage to the development roller. The development bias is applied whenever the drum is rotating.

6. TONER SUPPLY

6.1 TONER BOTTLE REPLENISHMENT MECHANISM

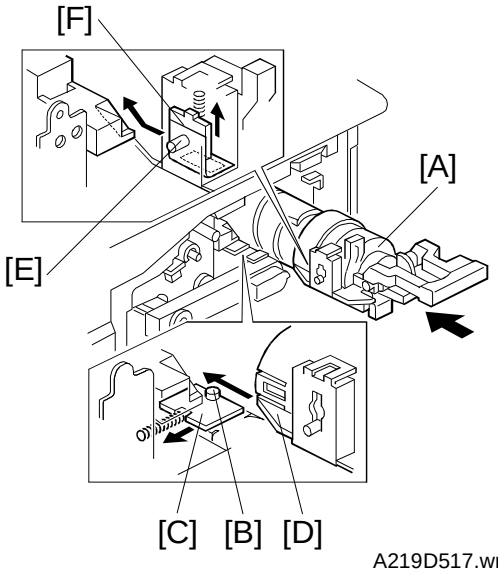

A219D517.wmf

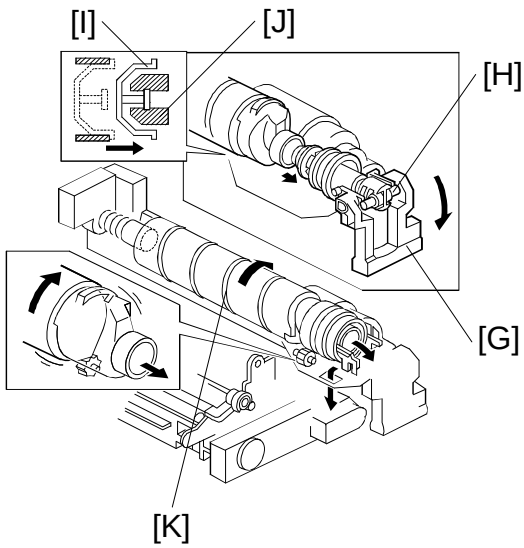

A219D518.wmf

When a toner bottle is placed on the bottle holder unit [A] and pushed back in completely, the following happens automatically.

- The pin [B] on the imaging unit toner shutter [C] is pushed out (shutter opened) by the projection [D].
- The pin [E] on the toner shutter [F] is pulled up (shutter opened) as a result of the shape of the developer cartridge.

When the toner bottle holder lever [G] is pushed down to the operation position, the following happens automatically to allow toner to be supplied to the development unit.

- The shaft [H] is pushed out from the machine by the curved rail behind the toner bottle holder lever, and this pulls out the cap [I] into the chuck [J], where it is held.

The toner end detection system determines when to drive the toner bottle replenishment mechanism (see Toner End Detection). The toner supply mechanism transports toner from the bottle to the development unit. The toner bottle has a spiral groove [K] that helps move toner to the development unit.

When the bottle holder unit is pulled out to add new toner, the following happens automatically to prevent toner from scattering.

- The chuck releases the toner bottle cap into its proper position.
- Both shutters shut as a result of pressure from springs.

6.2 TONER SUPPLY MECHANISM

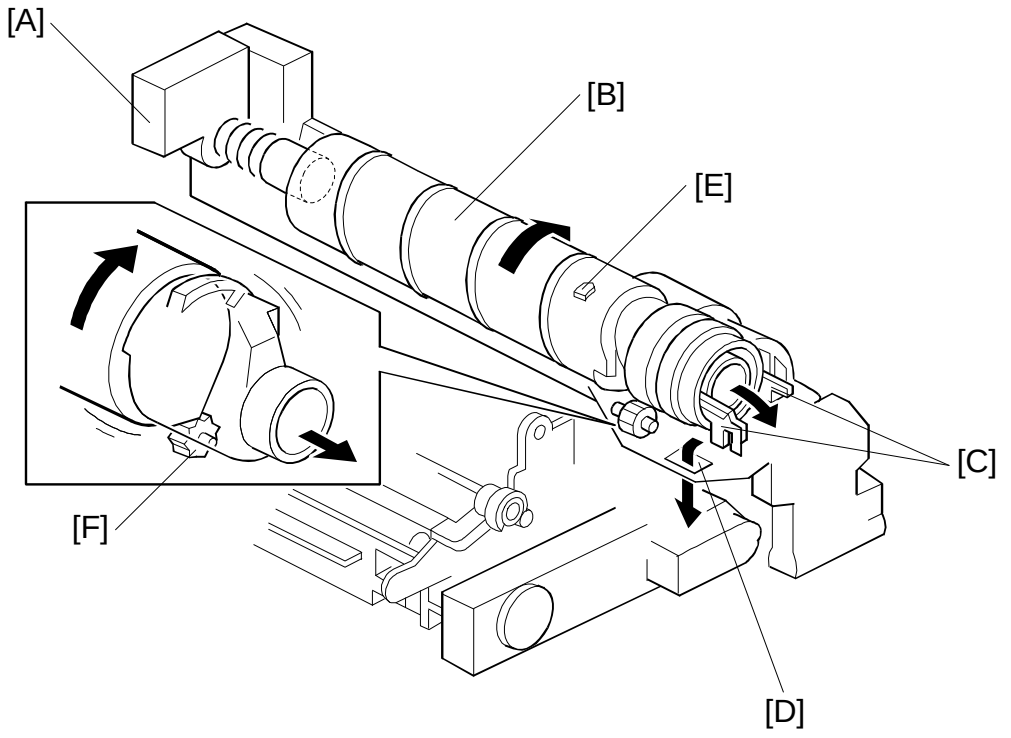

A219D519.wmf

The toner supply motor [A] drives the toner bottle [B] and the mylar blades [C]. First, the toner falls down into the toner holder. The two toner supply mylar blades transfer the toner to the opening [D], then the toner falls down into the development unit.

There is a notch [E] on the toner bottle, and a roller [F] located under the toner bottle. They both shake the toner bottle to prevent toner clumps from forming. They also help to transport the toner inside the toner bottle when the amount of toner inside is low.

6.3 TONER DENSITY DETECTION MECHANISM

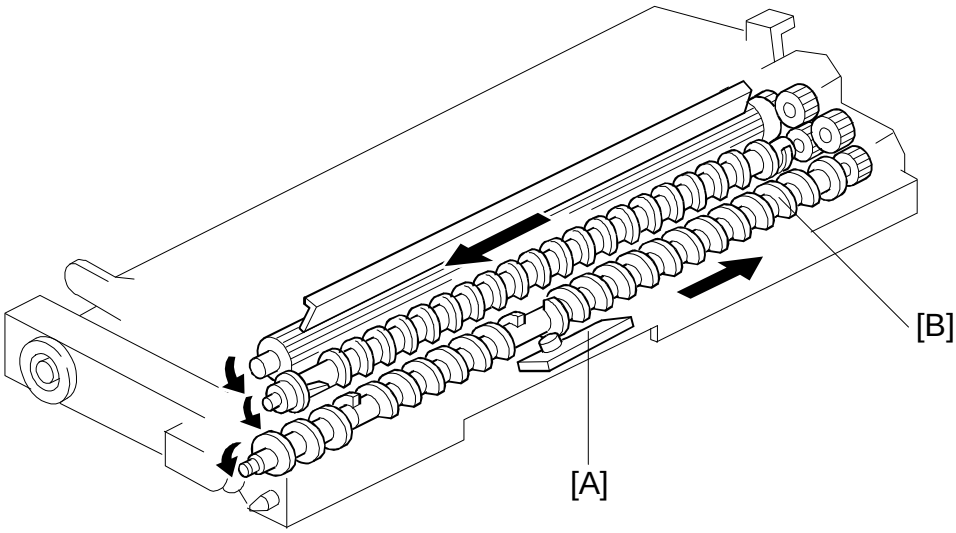

A219D516-2.wmf

A toner density sensor (TD sensor) [A] is used for toner density control.

The TD sensor is located under the 1st agitator [B]. The developer being conveyed by the 1st agitator passes over the top of the sensor. As the toner in the developer is consumed during development, the toner to carrier ratio changes, resulting in a change in the magnetic permeability of the developer. This in turn is converted to a corresponding voltage. The CPU monitors the voltage to control the toner supply mechanism.

When new developer is installed, and SP66 (TD Sensor Initial Setting) is done, the machine starts idling for developer initialization. During developer initialization, the CPU adjusts the TD sensor control voltage so that the TD sensor outputs 1.9 ± 0.1 V for the toner to carrier ratio of new developer (4.0% by weight). This voltage is used as the standard TD sensor voltage.

6.4 TD SENSOR CHECK AND TONER SUPPLY TIMING

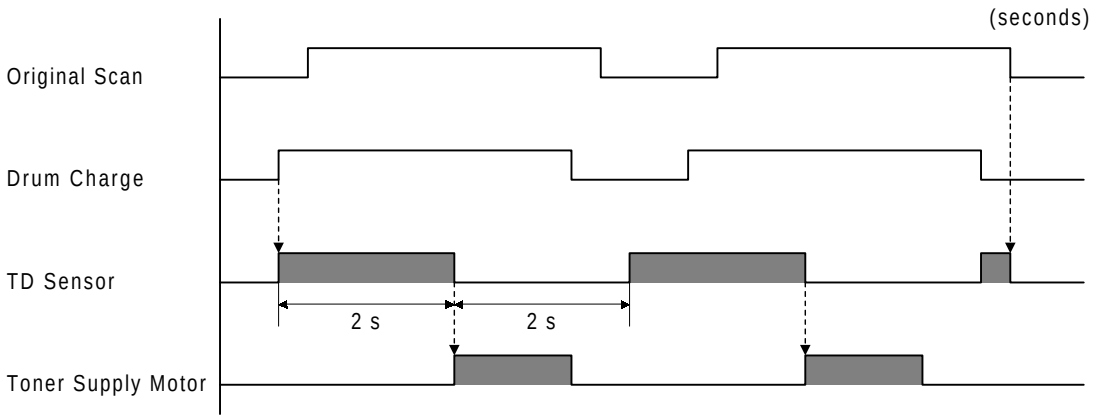

A219D540.wmf

The TD sensor voltage is monitored for two seconds when the 1st copy drum charge starts. The CPU checks the voltage every 40 ms and stores the second highest voltage of every 240 ms period. The stored voltages during the two seconds are averaged, and then the average is used as the TD sensor value for that detection period. The related amount of toner is added by the toner supply motor (as described in Toner Supply Amount). The TD sensor is monitored for two-second intervals is until the last original scan is finished. Unlike a toner supply clutch mechanism, with a toner supply motor, the copier can add toner during image development.

6.5 TONER SUPPLY CONTROL

6.5.1 Modes Available

NOTE: The following pages explain how the various settings control the toner supply mechanism. They should not be adjusted in the field, unless instructed to do so as a countermeasure for a specific problem that may occur in the future.

SP30 Setting	Toner Supply Mode	Target Toner Sensor Voltage	Toner Supply Amount	Toner Near/End Detection
0	Detect Supply Mode	Depends on the initial TD sensor setting (1.9 ± 0.1 V).	Depends on the TD sensor output.	Yes
1		Depends on SP53 (input manually).	Depends on the TD sensor output.	Yes
2		Depends on the initial TD sensor setting (1.9 ± 0.1 V).	Fixed	No
3		Depends on SP53 (input manually).	Fixed	No
4	Fixed Supply Mode	None	Fixed	No

Default setting: 0

Depending on the SP30 setting, Detect Supply mode or Fixed Supply mode is selected. If 0, 1, 2, or 3 is selected with SP30, Detect Supply mode is used. If 4 is selected, Fixed Supply mode is used.

Note that when 2, 3, or 4 is selected, the machine will not perform the toner near-end/end detection. Normally, SP30 should always be kept at the default setting. The following pages describe the toner supply mode settings in detail.

6.5.2 Detect Supply Mode

In Detect Supply mode, the CPU monitors the TD sensor voltage, which depends on the toner to carrier ratio in the developer. As the toner in the developer is consumed, the TD sensor output voltage increases.

The TD sensor voltage is compared with the standard voltage (known as the Target Toner Sensor Voltage), and toner is supplied when the TD sensor output is higher than this target voltage.

The machine has two ways of calculating the target toner sensor voltage (either the initial TD sensor setting is used, or a value can be input using SP53); the method used depends on SP30. The toner supply amount can also be changed using SP31 or 32.

1) Target Toner Sensor Voltage

- Method 1 -

Normally (if 0 or 2 is selected with SP30) the voltage is determined by the following factors:

Target Toner Sensor Voltage (V_{TS}) = Initial Developer Setting Voltage (V_{T0})
+
Toner Density Adjustment Factor

a) Initial Developer Setting Voltage (V_{T0})
This voltage is adjusted to 1.9 ± 0.1 V during developer initialization (refer to Toner Density Detection).

b) Toner Density Adjustment Factor
The target toner density can be changed by customers or service engineers using SP mode 38 or user tool No. 6.

SP 38 Setting	User Tool 6 Setting	Toner Density	Toner Density Adjustment Factor (β)
0	0	Normal	0
1	1	Darker	–S x 1/2
2	2	Lighter	+S x 1/2
3		Darkest	–S
4		Lightest	+S

S: TD Sensor Sensitivity (SP36) Default: Normal

The sensor sensitivity is stored in SP36.

TD Sensor Sensitivity (S) [V/wt%] =

Change of TD sensor output [V]/Change of toner density [wt%] =

SP36 setting x 0.05 [V] (Default: SP36 = 15)

- Method 2 -

If 1 or 3 is selected with SP30, the setting of SP53 is used as the target toner sensor voltage. In this case, the target toner sensor voltage is determined by the following formula:

Target Toner Sensor Voltage = SP53 setting x 0.02 [V] (Default: 97 = 1.94 V)

The TD sensor initial setting is not changed by this SP mode. However, it is ignored if method 2 is selected.

2) Toner Supply Amount

- Method 1 -

Normally (if 0 or 1 is selected with SP30), the toner supply amount is determined by the difference between the actual TD sensor voltage (V_T) and the target toner sensor voltage (V_{TS}). The following table shows the relationship between the sensor output and the toner supply motor on time for each copy.

Toner Supply Level	TD Sensor Voltage Level [V_T]	Toner Supply Motor On Time
1	$V_{TS} < V_T \leq V_{TS} + S/16$	t
2	$V_{TS} + S/16 < V_T \leq V_{TS} + S/8$	2 x t
3	$V_{TS} + S/8 < V_T \leq V_{TS} + S/4$	4 x t
4	$V_{TS} + S/4 < V_T \leq V_{TS} + S/2$	8 x t
5	$V_{TS} + S/2 < V_T \leq V_{TS} + 4S/5$	16 x t
6 (Near End Level)	$V_T \geq V_{TS} + 4S/5$	*10 seconds
7 (Toner End Level)	$V_T \geq V_{TS} + S$	*10 seconds

The toner supply time unit "t" can be changed using SP31.
t = SP31 setting x 0.1 [second] (Default: 4 = 0.4 second)
S: TD Sensor Sensitivity (SP36)
* This value can be changed using SP35.

- Method 2 -

If 2 or 3 is selected with SP30, a fixed amount of toner is supplied when the TD sensor voltage becomes higher than the target toner sensor voltage. The amount of toner can be selected using SP32.

SP32 Setting	Toner Supply Motor On Time (seconds)	Corresponding image area ratio (%)
0	0.3	3.5
1	0.6	7
2	1.2	15
3	2.4	30
4	3.6	45
5	4.8	60
6	Stays on until the TD sensor voltage becomes lower than the target voltage.	
7	0 (No toner supply)	0

6.5.3 Fixed Supply Mode

If 4 is selected with SP30, the TD sensor is not used for toner supply control. A fixed amount of toner is supplied every copy cycle. The toner supply amount is determined by the SP32 setting.

6.5.4 Abnormal Condition in Toner Density Detection

If the output of the TD sensor goes below 0.2 volts (indicating far too much toner), the CPU determines that the toner density supply is abnormal. The CPU changes from the detect supply mode to the fixed supply mode. At the same time, either the Auto ID indicator or the selected manual ID level starts blinking, and the machine can be used. No SC code is generated. Under this condition, the machine will not perform the toner end detection.

If the value recovers above 0.2 volts, or the main switch is turned off and on, this condition is canceled and the toner density detection will recover to the toner supply mode that was in use immediately before the abnormal condition occurred.

6.6 TONER END

Toner Supply Level	TD Sensor Voltage Level [V_T]	Toner Supply Motor On Time
1	$V_{TS} < V_T \leq V_{TS} + S/16$	t
2	$V_{TS} + S/16 < V_T \leq V_{TS} + S/8$	2 x t
3	$V_{TS} + S/8 < V_T \leq V_{TS} + S/4$	4 x t
4	$V_{TS} + S/4 < V_T \leq V_{TS} + S/2$	8 x t
5	$V_{TS} + S/2 < V_T \leq V_{TS} + 4S/5$	16 x t
6 (Near End Level)	$V_T \geq V_{TS} + 4S/5$	*10 seconds
7 (Toner End Level)	$V_T \geq V_{TS} + S$	*10 seconds

The toner supply time unit "t" can be changed using SP31.
t = SP31 setting x 0.1 [second] (Default: 4 = 0.4 second)
S: TD Sensor Sensitivity (SP36)
* This value can be changed using SP35.

6.6.1 Toner Near End

If the CPU detects toner supply level 6 ($V_T \geq V_{TS} + 4S/5$) five times consecutively, the toner end indicator blinks and the machine goes to the toner near end condition.

In this condition, the toner supply motor is energized for 10 seconds for every copy (this time can be changed using SP35). Also, the toner supply motor stays on continuously between pages of a multi-copy job.

If a toner sensor voltage lower than $V_{TS} + 4S/5$ is detected twice consecutively while the toner supply motor is on, the machine recovers from the toner near end condition. Also, if this condition is detected during the normal copy cycle, the toner near end is canceled.

6.6.2 Toner End

If toner supply level 6 is detected, the machine supplies toner between copies and for 10 seconds after the copy job is finished (as explained above). While the toner supply motor is on, if the CPU detects toner supply level 7 ($V_T \geq V_{TS} + S$) three times consecutively, a toner end condition is detected and copier operation is disabled.

If the toner sensor voltage stays at level 6 after the toner near end condition is detected, 50 more copies can be made. After 50 copies, the toner end indicator lights and copying is disabled.

6.6.3 Toner End Recovery

If the main switch is turned off and on, or the front door is opened and closed during a toner end condition, the machine checks the toner bottle for replacement. The main motor turns on and the toner supply motor is intermittently energized. If the TD sensor voltage does not recover from level 7 within 40 seconds, the machine stops, keeping the toner end condition. If the TD sensor voltage becomes lower than V_{TS} +3S/5 in this period, the machine recovers from the toner end condition. Then the toner supply motor stops, but the main motor continuously rotates for 40 seconds to distribute toner evenly inside the development unit.

7. IMAGE TRANSFER AND PAPER SEPARATION

7.1 OVERALL

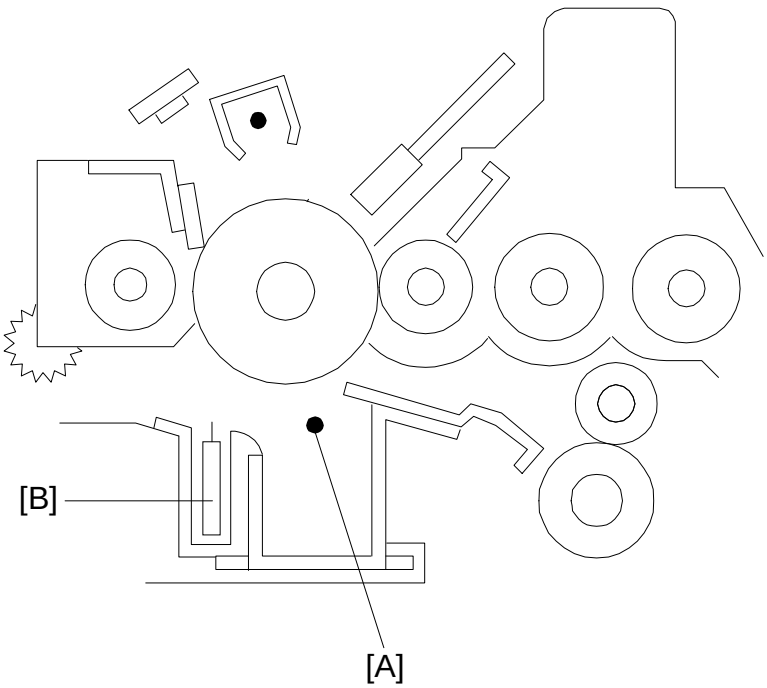

A219D528.wmf

A high negative voltage (approximately –5 kV) is applied to the transfer corona wire [A], and the corona wire generates negative ions. These negative ions are applied to the back side of the copy paper. This negative charge forces the paper against the drum and attracts the positively charged toner onto the paper.

A high positive voltage (approximately +2.2 kV) is applied to the discharge plate [B]. The negative charge on the copy paper is discharged after image transfer by this discharge plate to ensure paper separation from the drum.

7.2 TRANSFER CORONA AND DISCHARGE PLATE CIRCUIT

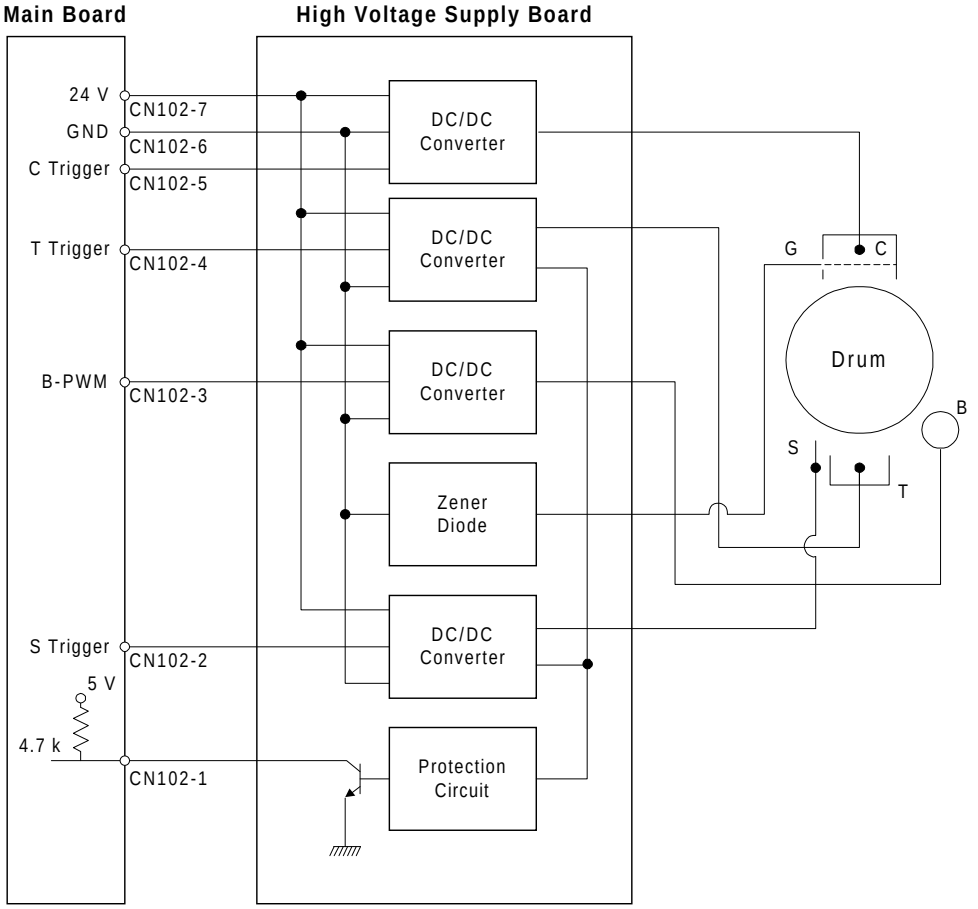

A219D506-3.wmf

When the CPU drops CN102-4 from +24 V to 0 V, the transfer corona is applied to the drum. When the CPU drops CN102-2 from 24 V to 0 V, a high positive voltage (+2.2 kV) is applied to the discharge plate.

8. DRUM CLEANING

8.1 OVERVIEW

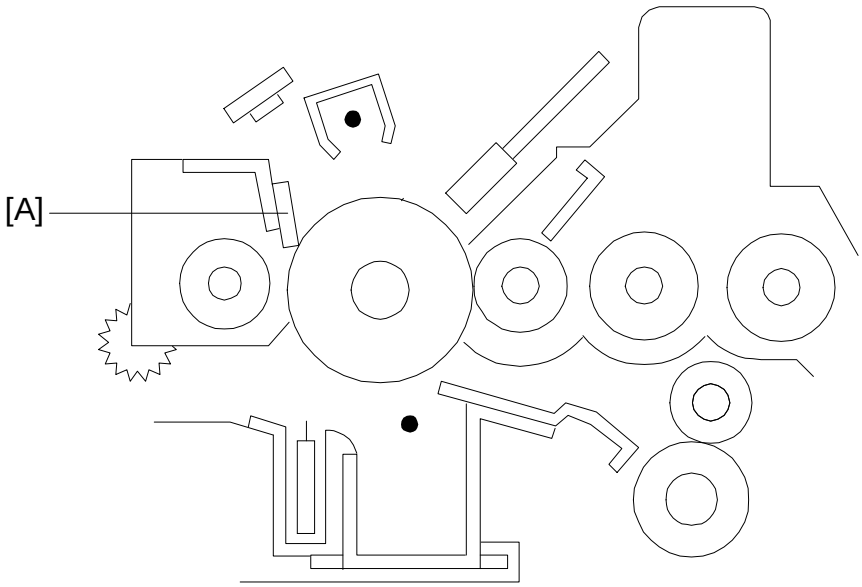

A219D528-2.wmf

A counter blade system is used for drum cleaning. The cleaning blade [A] scrapes off any toner remaining on the drum after the image is transferred to the paper.

The removed toner is transported into the developer to be recycled.

8.2 TONER RECYCLING MECHANISM

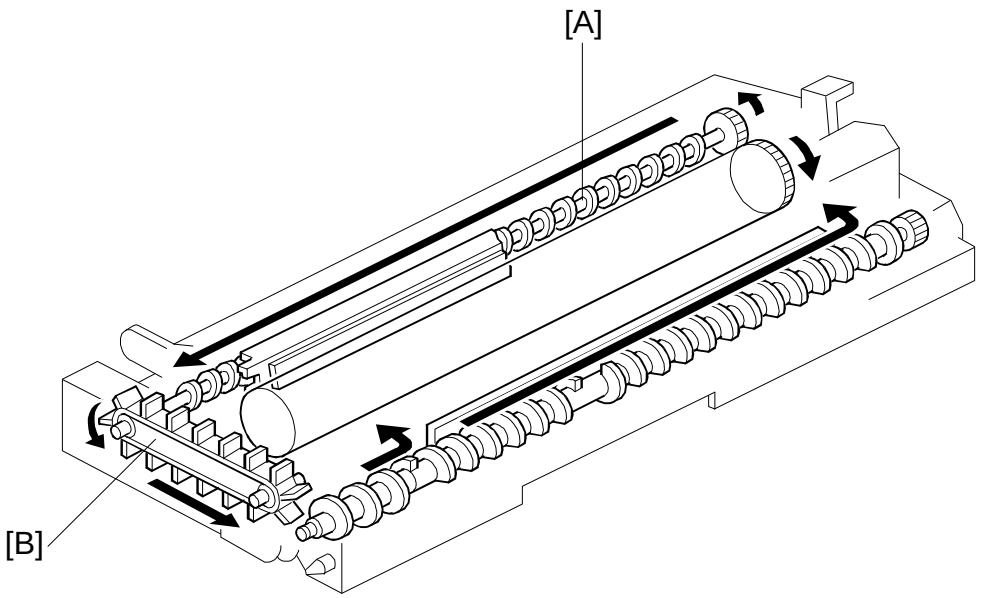

A219D530.wmf

The toner removed from the drum falls onto the toner collection coil [A]. The drum gear rotation is directly transmitted to the toner collection coil drive gear.

As the coil rotates, the toner moves from rear to front until it reaches the toner recycling belt [B]. The paddles of the belt, which is driven by the toner collection coil shaft, transports the toner into the developer, and the toner is recycled.

9. QUENCHING

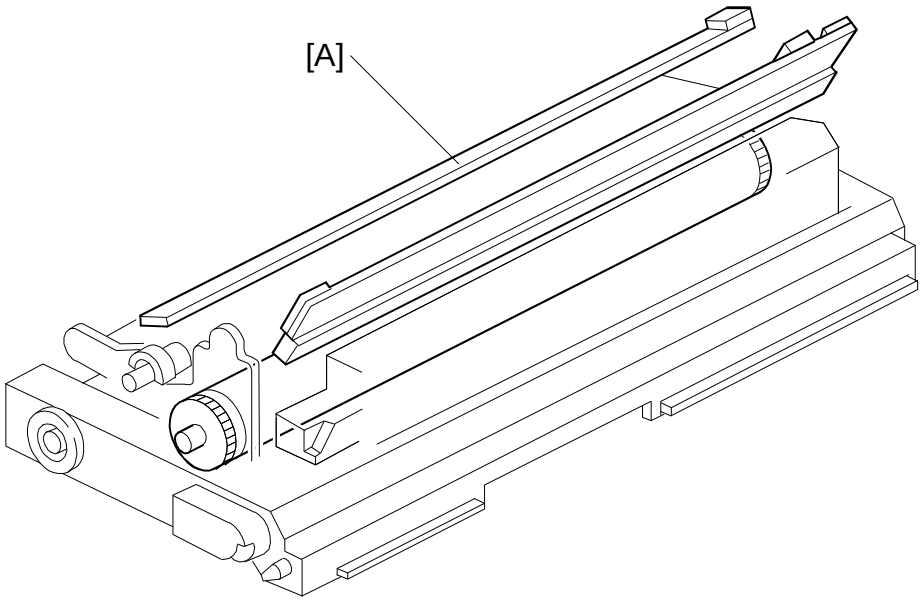

A219D513-2.wmf

In preparation for the next copy cycle, light from the quenching lamp (QL) [A], which is installed in the upper unit, neutralizes any charge remaining on the drum.

LEDs are used for quenching and the lamp is turned on whenever the main motor rotates.

10. PAPER FEED AND REGISTRATION

10.1 OVERVIEW

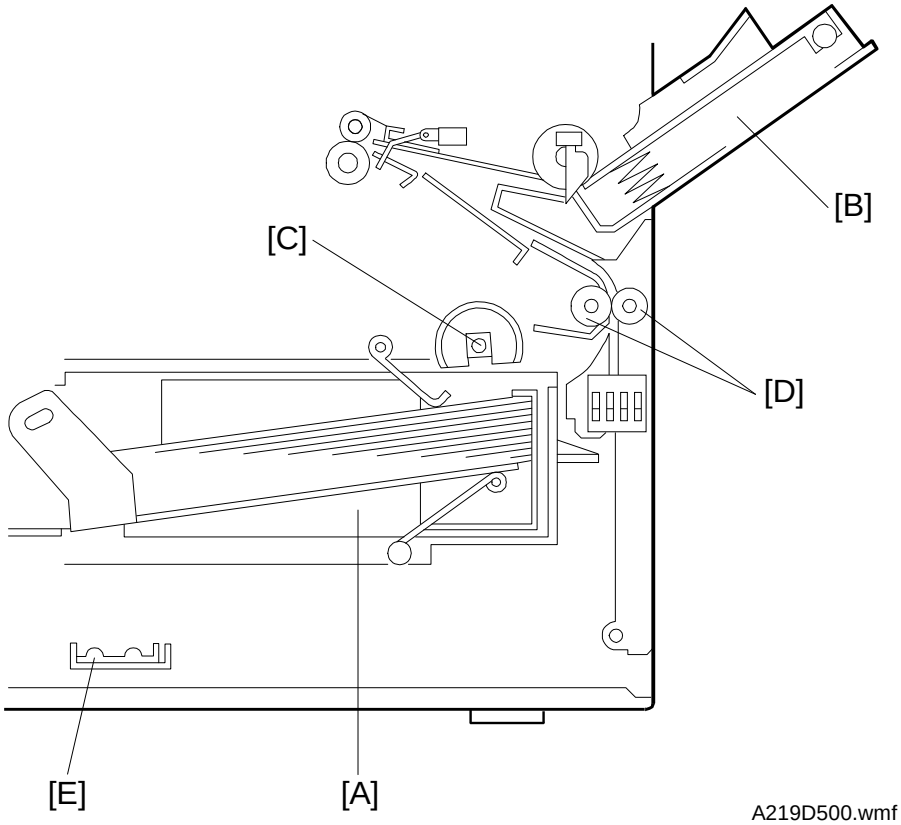

This copier has one paper feed station and a by-pass feed table.

The paper feed station uses a paper tray [A] which can hold 500 sheets. The by-pass feed table [B] can hold 80 sheets.

The paper tray uses two semicircular feed rollers [C] and a corner separator. The semicircular feed rollers make one rotation to drive the top sheet of the paper stack to the relay rollers [D]. The paper tray has two corner separators, which allow only one sheet to feed. They also hold the paper stack. When the paper tray is drawn out of the machine, the spring pressure is released, and the tray bottom plate drops. In addition, there is no need to press the bottom plate down when putting the tray back in.

The by-pass feed table uses a feed roller and friction pad system to feed the top sheet of paper to the registration rollers.

In humid environments, copy paper may crease as it comes out of the fusing unit. The optional tray heater [E] is available as a service part to keep copy paper dry.

10.2 PAPER TRAY FEED

10.2.1 Paper Lift Mechanism

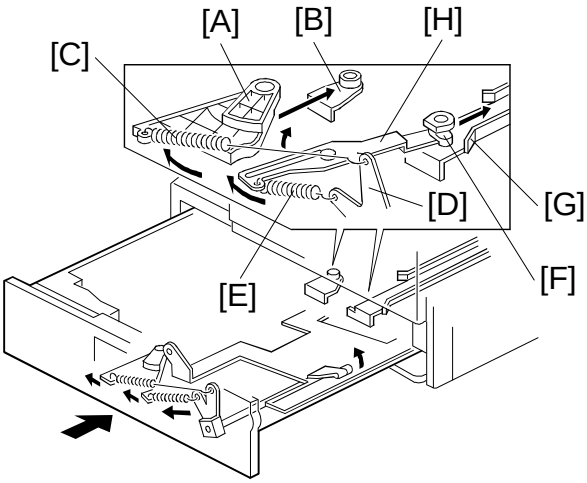

A219D534.wmf

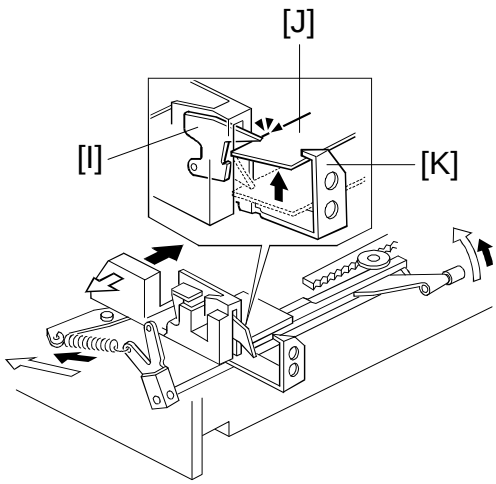

A219D535.wmf

The capacity of this tray is higher than usual for a corner separator type. Because of this, there are two springs to lift the bottom plate.

As the tray is pushed into the machine, shutter [A] under the tray pushes against projection [B]. As the shutter slides past the projection, the shutter rotates, which forces the main lift spring [C] to pull the bottom plate lever [D]. The secondary lift spring [E] also pulls the bottom plate lever (this is described below).

The tension applied to the main lift spring is always the same. However, the secondary spring is only used when wider paper is installed, to lift the extra weight of the paper stack. The tension applied to the secondary lift spring depends on the paper width. Below a certain threshold width, tension is not applied. Above this width, the wider the paper, the more tension is applied. To apply spring tension for wider paper, projection [F] stops against the end of rail [G]. When this happens, lever [H] swings out in the direction shown above, which stretches the spring as the tray is pushed in. The side fence position affects the orientation of [F]; wider paper causes [F] to contact [G] earlier, leading to greater spring tension when the tray has been pushed all the way in.
For narrow paper, the secondary lift spring is not needed. The side fence orients projection [F] so that it slides past the rail as the tray is pushed into the machine, and the spring stays slack.

The bottom plate stopper [I] rests on the bottom plate [J]. It stops the bottom plate at the maximum height. When the tray is getting empty, the corner separators [K] start to rise, and continue to rise as the amount of paper in the tray decreases, so that the paper is always at the correct height.

10.2.2 Paper Feed Mechanism

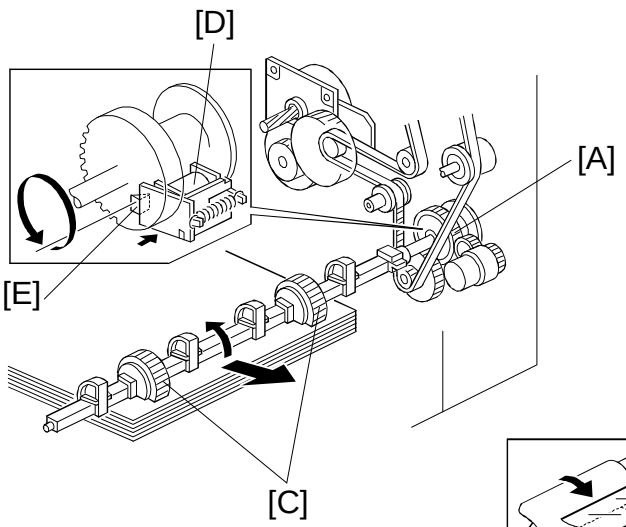

A219D508.wmf

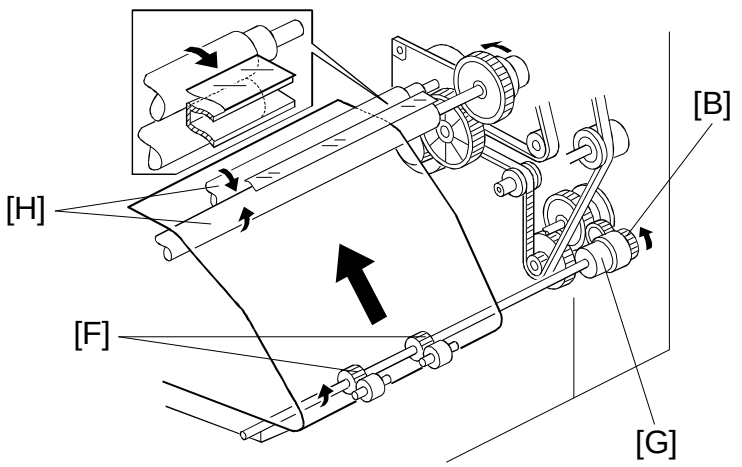

A219D523.wmf

Through several gears and a timing belt, main motor rotation is transmitted to the tray paper feed clutch gear [A] and the relay roller clutch gear [B].

-Feed rollers-

The tray paper feed clutch gear is on the same shaft as the semicircular feed rollers [C]. After the ◈ key is pressed, the tray paper feed clutch [D] is energized for 250 milliseconds to release the stopper [E]. Then the drive of the main motor is transmitted, and the feed rollers make one complete rotation to feed the top sheet of paper which is enough for the leading edge of the paper to be caught by the relay rollers [F]. The feed rollers stop when the stopper drops back into the notch at the end of one complete turn.

-Relay rollers-

The relay roller clutch gear is on the same shaft as the relay rollers. The rotation timing of the relay rollers is controlled by the relay roller clutch [G]. The CPU energizes the relay roller clutch after the ◈ key is pressed (at the same time as the tray paper feed clutch). Paper is fed from the relay rollers to the registration rollers [H].

10.3 BY-PASS FEED

10.3.1 Overview

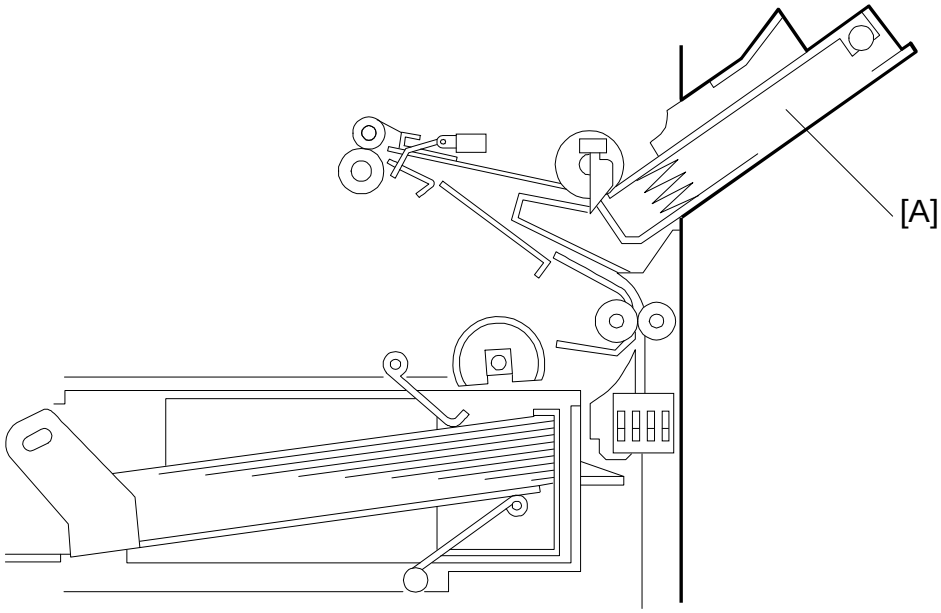

A219D501.wmf

The by-pass feed table [A] can hold 80 sheets of paper.

This machine does not have a by-pass feed cover sensor. The by-pass feed indicator is always displayed on the operation panel. The Add Paper indicator will light when the user selects by-pass feed while the by-pass feed table is closed or if there is no paper on the by-pass feed table.

After the ⧫ key is pressed, the cpu energizes the by-pass feed clutch and the by-pass feed roller starts to feed paper to the registration roller.

This machine does not have any sensor or switch to determine the paper size for by-pass feed. The machine will perform a full scan for all copies.

10.3.2 Paper Feed Mechanism and Paper End Detection

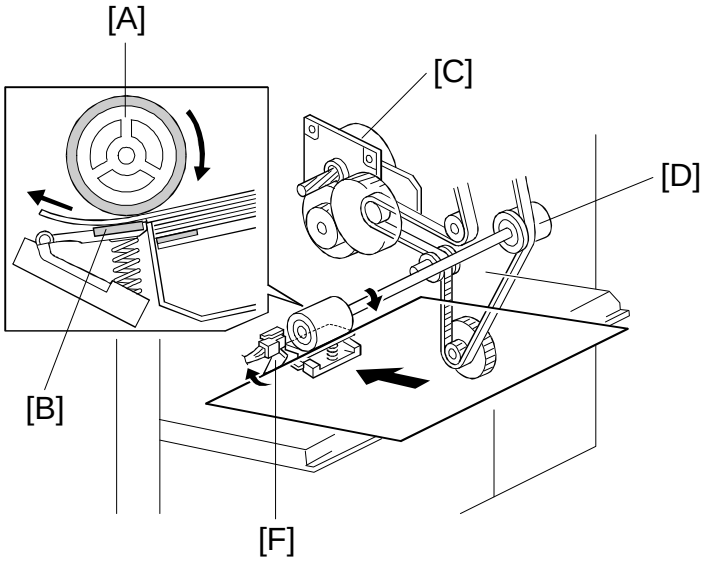

A219D524.wmf

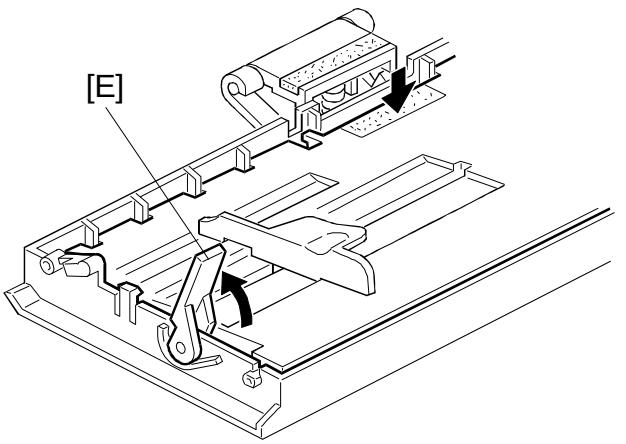

A219D502.wmf

This machine uses a feed roller [A] and friction pad [B] mechanism, with drive from the main motor [C] transmitted when the by-pass feed clutch [D] turns on. The friction pad prevents all but the top sheet from feeding. Therefore, during paper feed, the top sheet of paper is separated from the stack and fed to the registration rollers.

Before placing paper on the by-pass feed table, the user must lower the by-pass feed table by using the lever [E]. This is to ensure that the paper is placed between the friction pad and the feed roller. Then, before starting to copy, it must be put back up to move the paper stack into contact with the feed roller.

When there is no paper on the by-pass feed table, the paper end feeler [F] drops into the cutout in the by-pass feed table and the by-pass feed paper end sensor is activated.

10.4 PAPER REGISTRATION

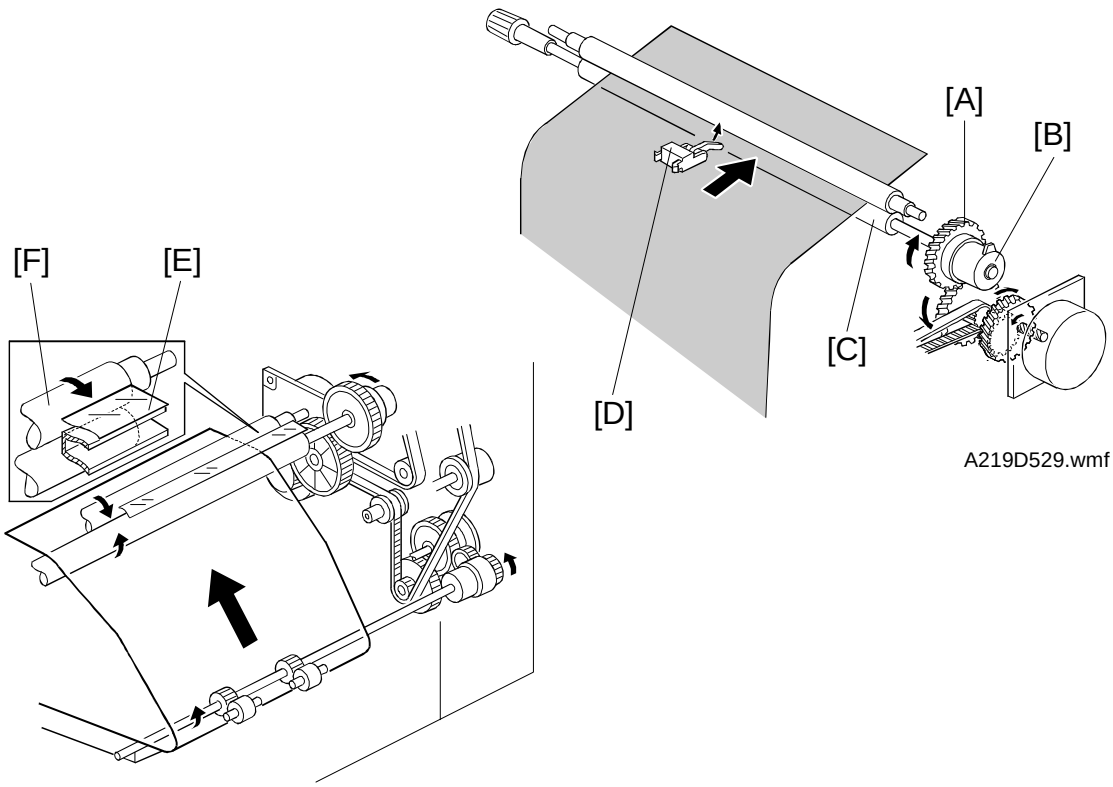

A219D529.wmf

A219D523-2.wmf

Main motor rotation is transmitted to the registration roller clutch gear [A] through several gears and a timing belt. When the registration clutch [B] is energized, the rotation of the clutch gear is transmitted to the lower registration roller [C].

The registration sensor [D], which is positioned just before the registration rollers, controls the relay roller clutch stop timing. The relay roller clutch stays on for 130 milliseconds after the leading edge of the paper actuates the registration sensor. The CPU then turns off the relay roller clutch. This delay allows time for the paper to press against the registration rollers and buckle slightly to correct skew.

The CPU energizes the registration clutch at the proper time to align the paper with the image on the drum.

The registration sensor is also used for paper misfeed detection.

The paper dust mylar [E] on the upper registration roller [F] removes paper dust before the paper reaches the transfer/separation unit.

10.5 SIDE FENCE DOUBLE STOPPER MECHANISM

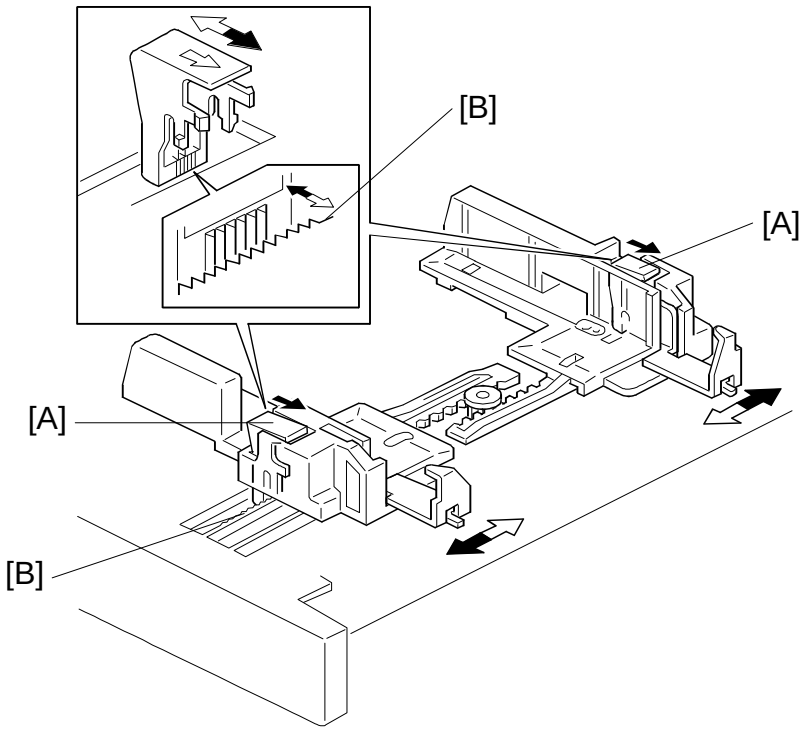

A219D503.wmf

There is a side fence stopper mechanism for both the front and rear side fences.

If the tray is closed with excessive force after loading paper, paper may come over the rear side fence, because the fence is deformed by the weight of the paper leaning against it. As a result, skewing or paper jams may occur. To prevent this, a side fence stopper mechanism has been added to the rear side fence.

The release levers [A] each have a stopper which contains teeth like those on a gear. The guide rails [B] also have teeth. When the release lever is pushed, the gear teeth release each other and the side fences can be moved.

10.6 PAPER END DETECTION

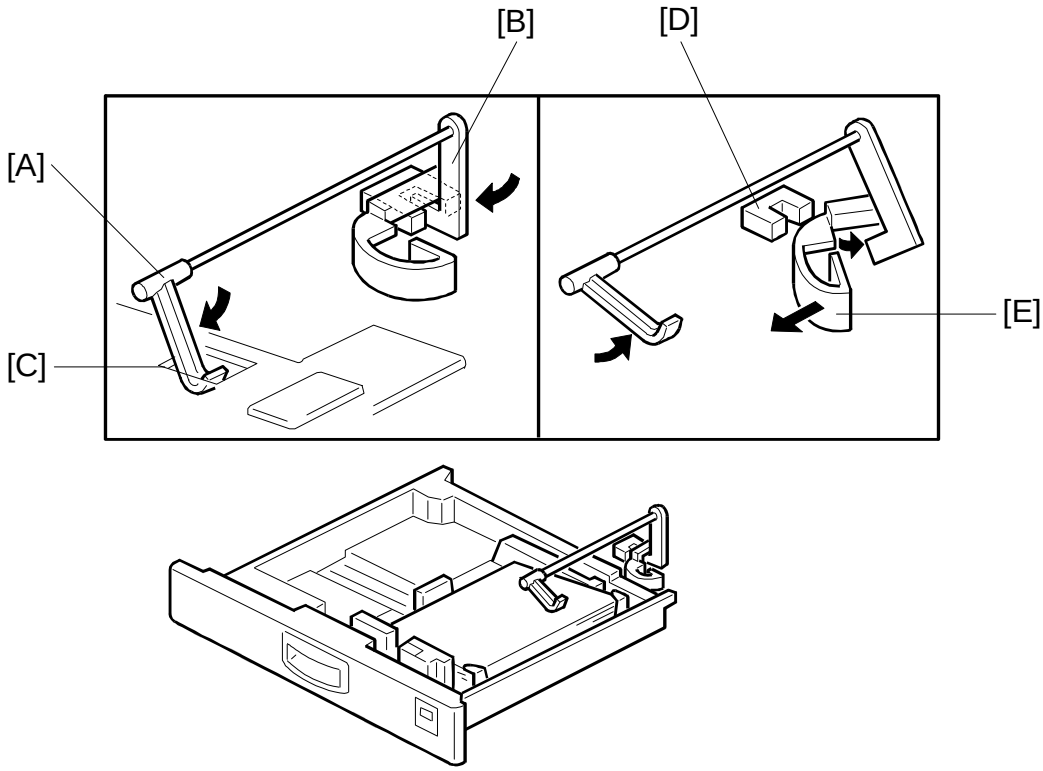

A219D504.wmf

The paper end feeler [A] is on the same shaft as the paper end actuator [B]. When the paper tray runs out of paper, the paper end feeler drops into the cutout [C] in the tray bottom plate. The paper end actuator activates the paper end sensor [D].

The paper end actuator is in contact with the lever [E]. When the tray is drawn out, the lever turns as shown by the arrow in the diagram. Then the lever pushes up the actuator. As a result, the feeler rotates upwards. This mechanism is necessary to prevent the feeler from getting damaged by the paper tray body.

10.7 PAPER FEED AND MISFEED DETECTION TIMING

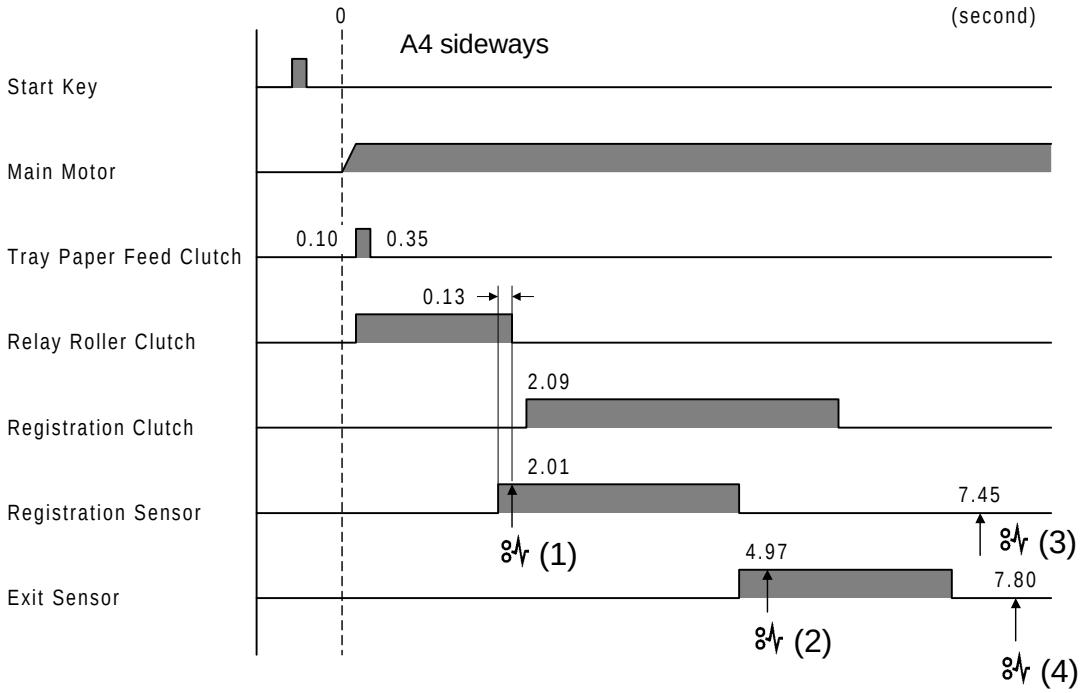

A219D526.wmf

The registration sensor and the exit sensor are used for misfeed detection. If the CPU detects a misfeed, the Check Paper Path and the Location indicators turn on.

Just after the main switch is turned on, the CPU checks these sensors for any jammed paper.

During the copy cycle, the CPU performs four kinds of misfeed detection. The following explains jam detection timing for copying A4 sideways paper.

- (1): Checks whether the registration sensor is actuated within 2.01 seconds after the ◇ key is pressed.
- (2): Checks whether the exit sensor is actuated within 4.97 seconds after the ◇ key is pressed.
- (3): Checks whether the copy paper has passed through the registration sensor 7.45 seconds after the ◇ key is pressed.
- (4): Checks whether the copy paper has passed through the exit sensor 7.80 seconds after the ◇ key is pressed.

NOTE: (1) and (2) are detected from the lead edge of the copy paper. (3) and (4) are detected from the trail edge of the copy paper. The detection timing for (3) and (4) will vary with the copy paper size in use.

10.8 OTHERS

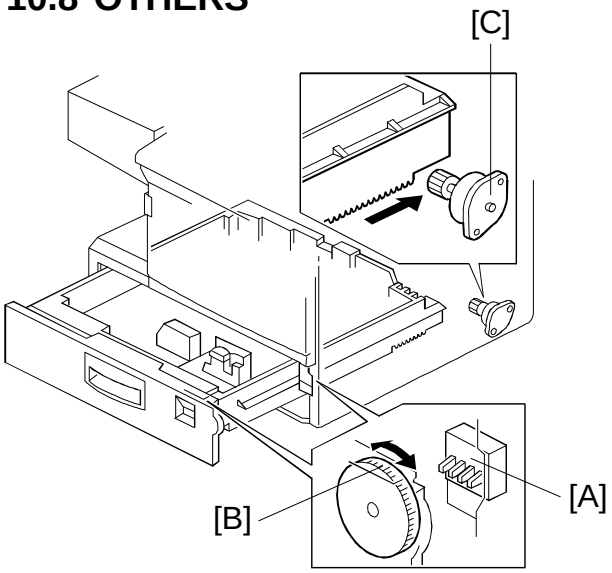

A219D525.wmf

SW (from right to left) / Size	1	2	3	4
A3, F(8 1/2"x13")	●	●	●	❍
A4 Lengthwise	●	❍	●	❍
A4 Sideways	●	●	❍	❍
A5 Sideways, 11"x17"	●	❍	❍	❍
B4, 8 1/2"x14"	❍	●	❍	❍
B5 Sideways, 8 1/2"x11"	❍	❍	❍	❍
B5 Lengthwise, 11"x8 1/2"	❍	❍	●	❍
* (Asterisk)	❍	❍	●	●

●: ON (Not pushed) ❍: OFF (Pushed)

10.8.1 Paper Size Detection

There are four microswitches [A] on the front right plate of the main frame. The sensors are actuated by a paper size actuator [B] behind the paper size indicator plate on the front right of the tray. Each paper size has its own actuator, with a unique combination of notches. To determine which size tray has been installed, the cpu reads which switches have been pressed. The cpu disables paper feed if the paper size cannot be detected. If the paper size actuator is broken, or if there is no tray, the Add Paper indicator will light.

When the paper size actuator is at the "*" mark, the paper tray can be set up to accommodate one of a wider range of paper sizes. The setting for this mode is performed with SP74. Paper length will be taken from this setting, and not from the registration sensor readings.

Because of the limited space on the operation panel, not all the paper sizes possible with the paper size actuator can be displayed on the operation panel. In some cases, the " * " mark will be displayed, but the machine will operate in accordance with the selected paper size.
The paper size switch also acts as a tray open sensor.

10.8.2 Shock Absorber

At the position shown, a damper [C] is installed to reduce the shock to the paper tray when it is pushed back into the copier. This is to prevent the stack of paper inside the paper tray from coming over the corner separators, which will cause double feeding or image skew on copies.

11. IMAGE FUSING

11.1 OVERVIEW

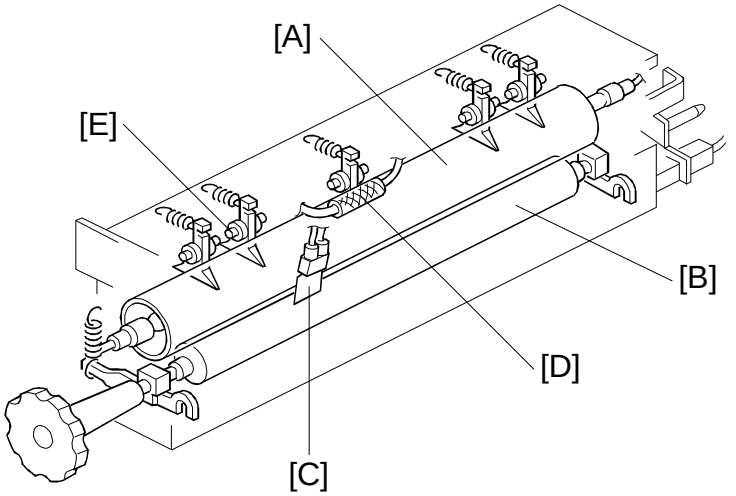

A219D531.wmf

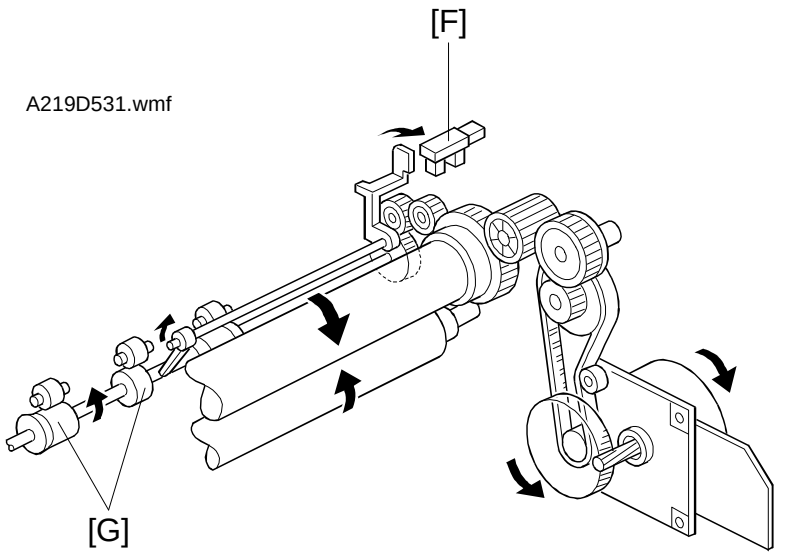

A219D539.wmf

After the image is transferred, the copy paper enters the fusing unit. The image is fused to the copy paper by heat and pressure using a hot roller [A] and a pressure roller [B].

The CPU monitors the hot roller temperature through a thermistor [C] which is in contact with the hot roller surface. A thermofuse [D] prevents the fusing unit from overheating.

The hot roller strippers [E] separate the copy paper from the hot roller and direct it to the exit rollers. The exit sensor [F] monitors the progress of the copy paper through the fusing unit and acts as a misfeed detector. The exit rollers [G] drive the copy paper to the copy tray.

11.2 FUSING DRIVE MECHANISM

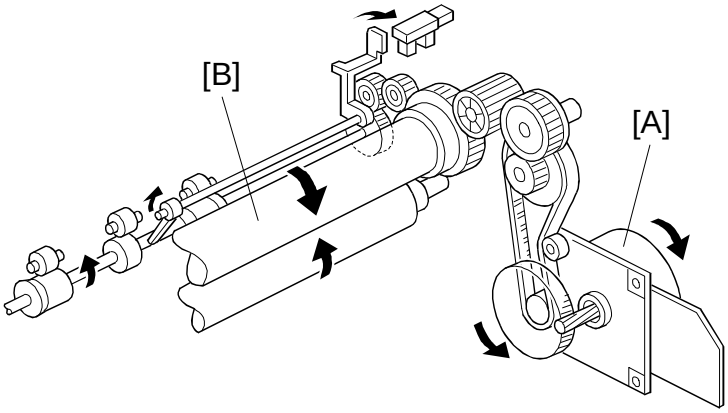

A219D539-2.wmf

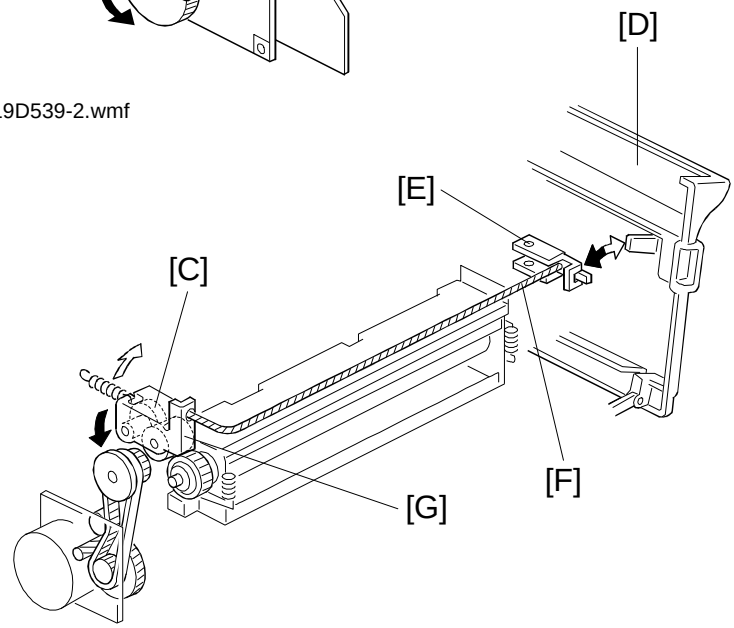

A219D532.wmf

Drive from the main motor [A] is transmitted to the hot roller [B] through idle gears and a timing belt. The hot roller always rotates while the main motor rotates.

The fusing unit drive release mechanism automatically disengages the fusing drive gear [C] when the front cover [D] is opened. This allows the fusing unit drive gear to rotate freely so that misfed paper can be easily removed.

When the front cover is opened, the actuator plate [E] pulls the release wire [F]. The wire pulls the fusing unit gear bracket [G] and the fusing unit drive is disengaged.

11.3 FUSING LAMP CONTROL

The CPU monitors the temperature of the hot roller surface using a thermistor. The fusing lamp is turned on and off to keep the hot roller surface at the target temperature. The target temperature depends on the machine condition as follows:

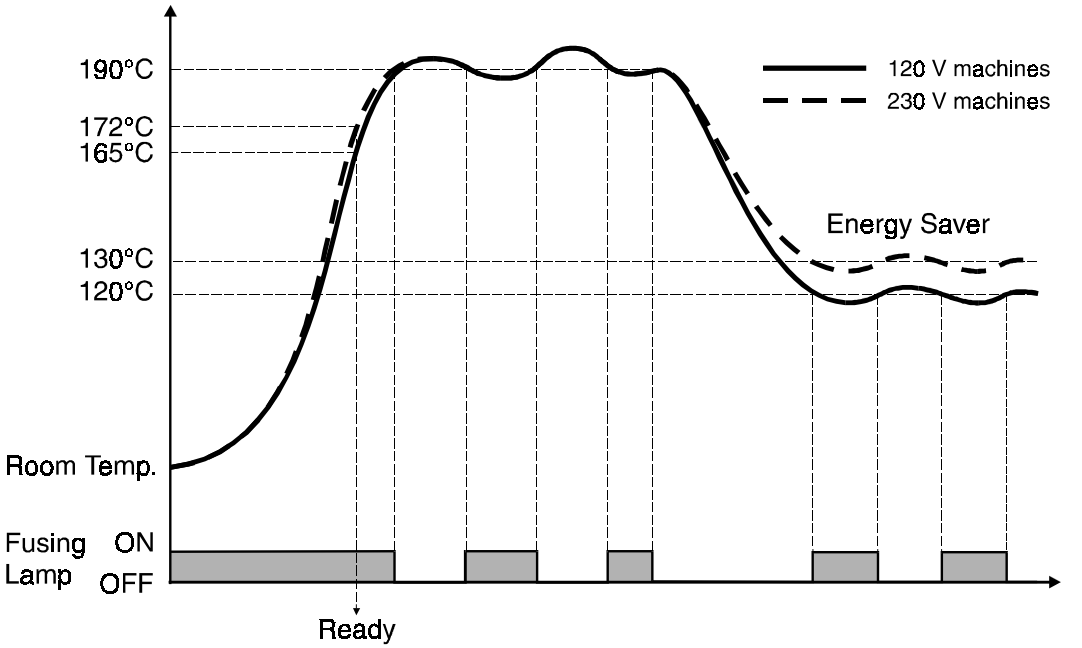

A219D533.wmf

Machine Condition	Fusing Lamp ON/OFF Threshold	Remarks
Ready	165°C: 120 V machines 172°C: 230 V machines	—
After the main switch is turned on, until one minute has passed since the fusing temperature reached the Ready condition.	190°C	After the fusing temperature reaches the ready temperature, the fusing lamp is kept on until it reaches 190°C.
After the above time period, the copier enters the energy saver mode.	120°C: 120 V machines 130°C: 230 V machines	When the ◇ key is pressed, the red indicator blinks and copying starts after the fusing temperature reaches the Ready condition.
During copying	190°C	—

When the main switch is turned on, the CPU turns on the fusing lamp. When the fusing thermistor detects the ready temperature, the machine enters the ready condition. After the ready temperature is detected, the CPU keeps the fusing temperature at 190°C for one minute, then the target temperature is changed to 120°C (120 V machines) or 130°C (230 V machines).

When the ◇ key is pressed, if the fusing lamp temperature is higher than the ready temperature, the machine starts copying immediately. If the temperature is lower, the fusing lamp is turned on and the start indicator turns red and blinks. Copying starts after the fusing temperature reaches the ready temperature, and the fusing temperature is kept at 190ÉC during copying.

After copying is finished, the fusing temperature is kept at 190°C for one minute.

To prevent any copy quality problem caused by exposure lamp intensity fluctuation, the fusing lamp does not turn on while the exposure lamp is on, even if the fusing temperature drops below 190°C.

11.4 FUSING LAMP CONTROL CIRCUIT

11.4.1 Overview

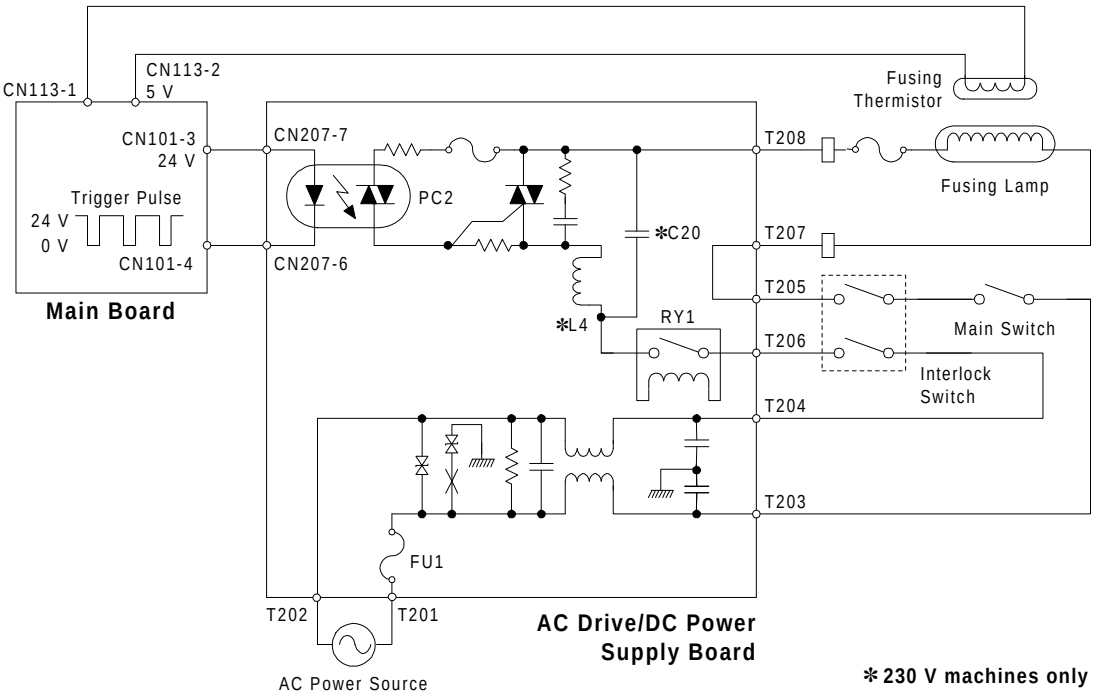

A219D537.wmf

The main board monitors the fusing temperature through a thermistor. It uses the zero cross signal generated by the ac drive/dc power supply board to control the applied power accurately.

Normally, the voltage applied to the lamp is the full duty cycle of the ac waveform. However, through SP29, fusing power can be set to phase control mode. (Phase control is used only if the customer has a problem with electrical noise or interference.)

11.4.2 On/Off Control

When the main switch is turned on, the main board starts to output a trigger pulse, which has the same timing as the zero cross signal, to the ac drive/dc power supply board. This trigger pulse allows maximum ac power to be applied to the fusing lamp. When the operating temperature is reached, the CPU stops outputting the trigger pulse (the trigger stays HIGH) and the fusing lamp turns off.

11.4.3 Phase Control Mode

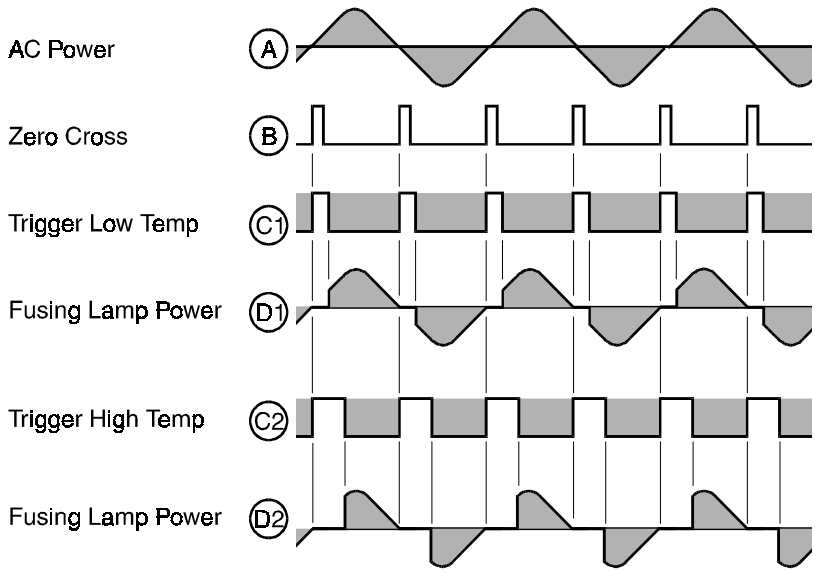

A219D538.wmf

The main board sends the fusing lamp trigger pulse (LOW active) to the ac drive/dc power supply board, which provides ac power to the fusing lamp at the falling edge of each trigger pulse. The trigger pulse goes HIGH when the main board receives the zero cross signal.

The amount of time that power is applied to the fusing lamp depends on the temperature of the hot roller.

The trigger pulse (LOW part) is wider [C1] and power is supplied for longer [D1] when the hot roller temperature is lower. It is narrower [C2] and power is supplied for a shorter time [D2] when the hot roller is near the operating temperature.

11.4.4 Overheat Protection

There is an overheat protection circuit in the main board. If the hot roller temperature reaches 245°C during the main motor off condition, or 255°C during the main motor on condition, the resistance of the thermistor (between CN113-1 and CN113-2) becomes too low. If the main board detects this condition, "E-53" lights on the operation panel and power to the fusing lamp is cut.

Even if the thermistor overheat protection fails, the thermofuse opens when it reaches 169°C, removing power from the fusing lamp.

SECTION 3

INSTALLATION

1. INSTALLATION REQUIREMENTS

1.1 ENVIRONMENT

1. Temperature Range: 10°C to 30°C (50°F to 87°F)
2. Humidity Range: 15% to 90% RH
3. Ambient Illumination: Less than 1,500 lux (Do not exposure to direct sunlight.)
4. Ventilation: Room air should turn over at least 3 times per hour
5. Ambient Dust: Less than 0.15 mg/m^3 (4 x 10^{-3} oz/yd^3)
6. If the place of installation is air-conditioned or heated, do not place the machine:
   1) Where it will not be subjected to sudden temperature changes.
   2) Where it will not be directly exposed to cool air from an air-conditioner.
   3) Where it will not be directly exposed to heat from a heater.
7. Do not place the machine where it will be exposed to corrosive gasses.
8. Do not install the machine at any location over 2,000 m (6,500 feet) above sea level.
9. Place the copier on a strong and level base.
10. Do not place the machine where it may be subjected to strong vibrations.

1.2 MACHINE LEVEL

1. Front to back: Within 5 mm (0.2") of level
2. Right to left: Within 5 mm (0.2") of level

1.3 MINIMUM SPACE REQUIREMENTS

Place the copier near the power source, providing clearance as shown:

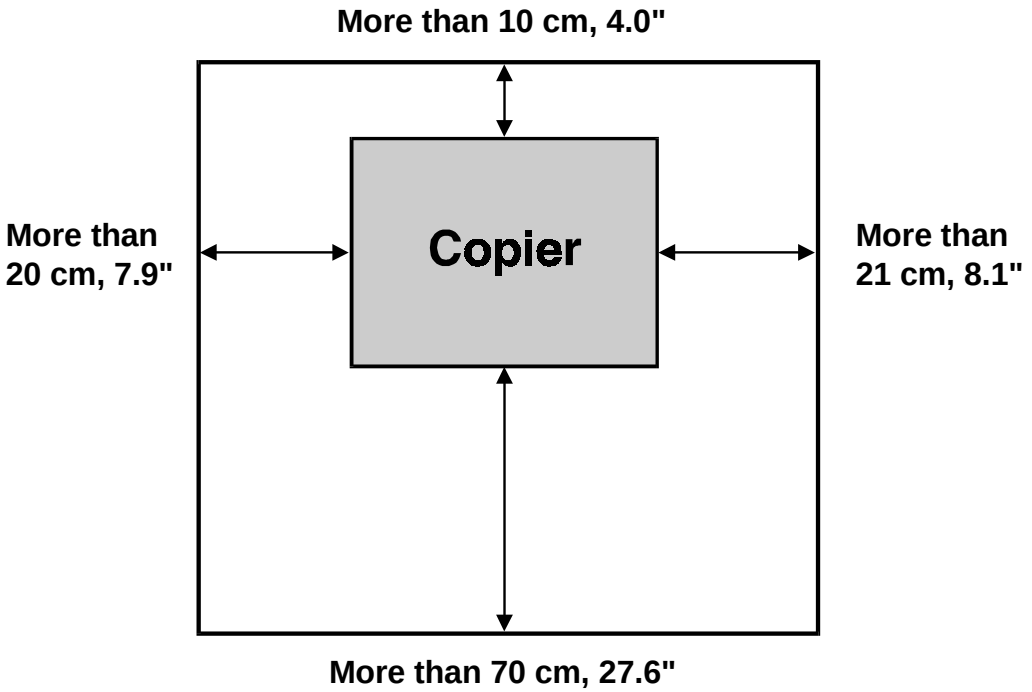

A219I506.wmf

1.4 POWER REQUIREMENTS

⚠ CAUTION

1. Make sure the plug is firmly inserted in the outlet.
2. Avoid multi-wiring.
3. Do not set anything on the power cord.

1. Input voltage level: 110 ~ 127 V/60 Hz: More than 15 A
   220 ~ 240 V/50/60 Hz: More than 8 A
2. Permissible voltage fluctuation: 10%

2. COPIER (A219)

2.1 ACCESSORY CHECK

Check the quantity and condition of the accessories in the box against the following list:

1. Model Name Decal (-10, -22 machines)
2. Symbol Explanation Decal - Multi-language
3. Installation Procedure - Multi-language (-10, -15, -22, -26 machines)
4. Operation Instructions - English (-10, -15, -17, -19, -22, -26, -29 machines)
5. NECR - English (-17 machines)
6. NECR - Multi-language (-27, -29 machines)
7. Copy Tray
8. User Survey Card (-17 machines)
9. Envelope for NECR (-17 machines)

2.2 INSTALLATION PROCEDURE

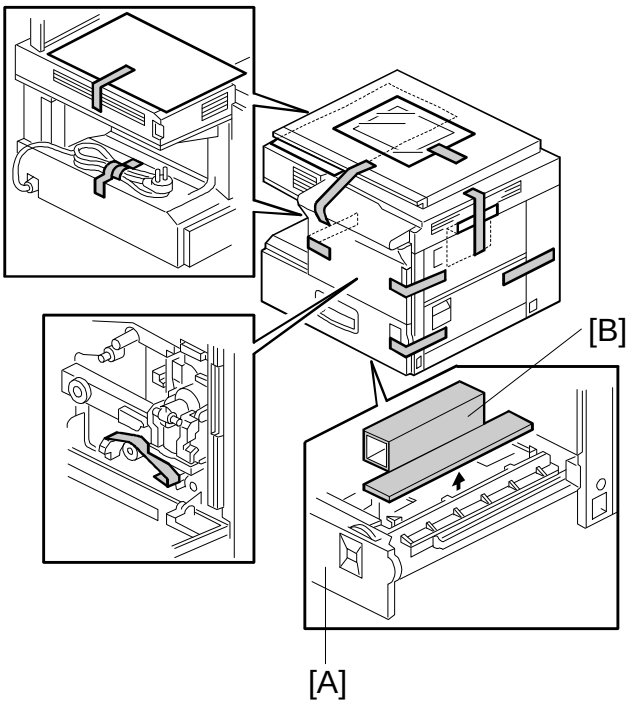

A219I500.wmf

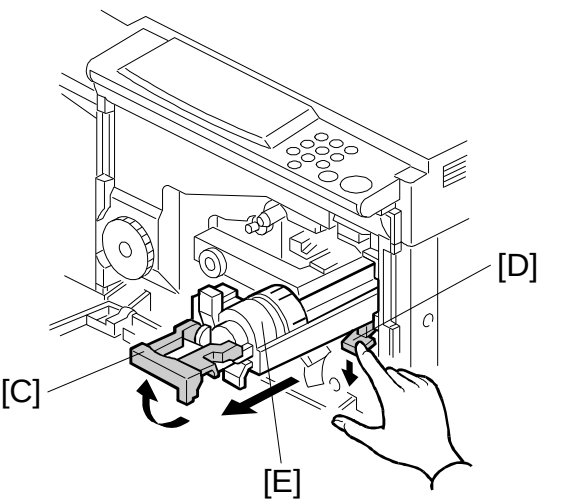

A219I501.wmf

⚠ CAUTION

Do not plug in the power cord before starting the following procedure.

1. Remove all strips of tape shown above.
2. Pull out the paper tray [A], and remove the cardboard [B].
3. Open the front cover and raise the toner bottle holder lever [C].
   Then pull down the securing lever [D], and remove the toner bottle holder [E].

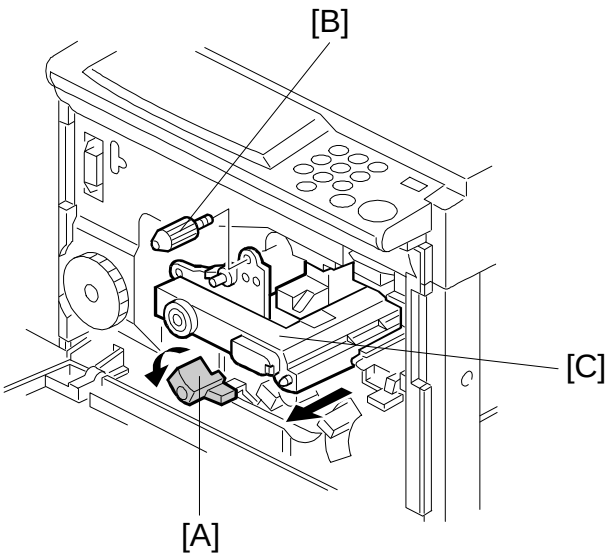

A219I502.wmf

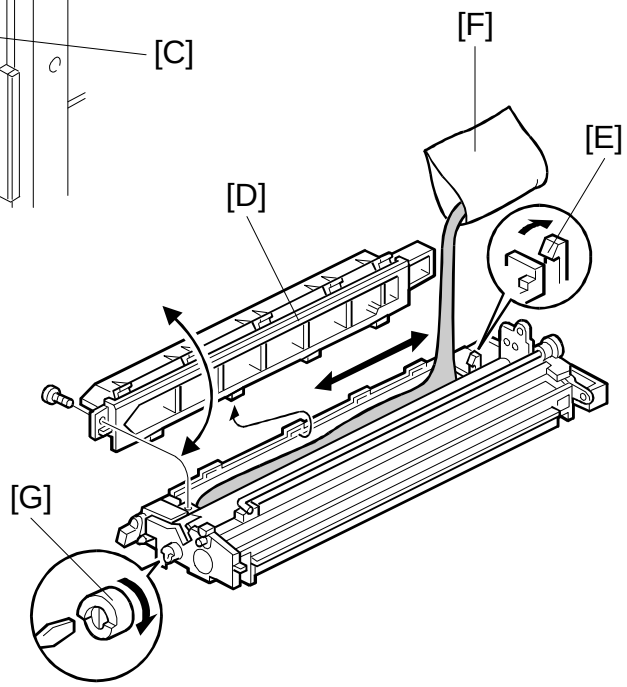

A219I503.wmf

4. Turn the "B1" lever [A] counterclockwise to lower the transfer corona unit.
5. Remove the knob screw [B] and gently pull out the imaging unit [C]. Then place it on a clean sheet of paper.
6. Remove the cover [D] from the imaging unit (1 screw and 1 snap [E]).
7. Pour in the developer [F] evenly into the imaging unit. Then rotate the outer gear [G] for one or two turns to distribute the developer as shown.

   NOTE: When installing new developer or manually rotating the development roller, always make sure to turn the gear in the direction shown above. Also do not rotate the gear more than 3 turns to prevent damage to the unit.
8. Remount the cover on the imaging unit, and install the unit in the copier (1 knob screw). Then turn the "B1" lever clockwise to raise the transfer corona unit.

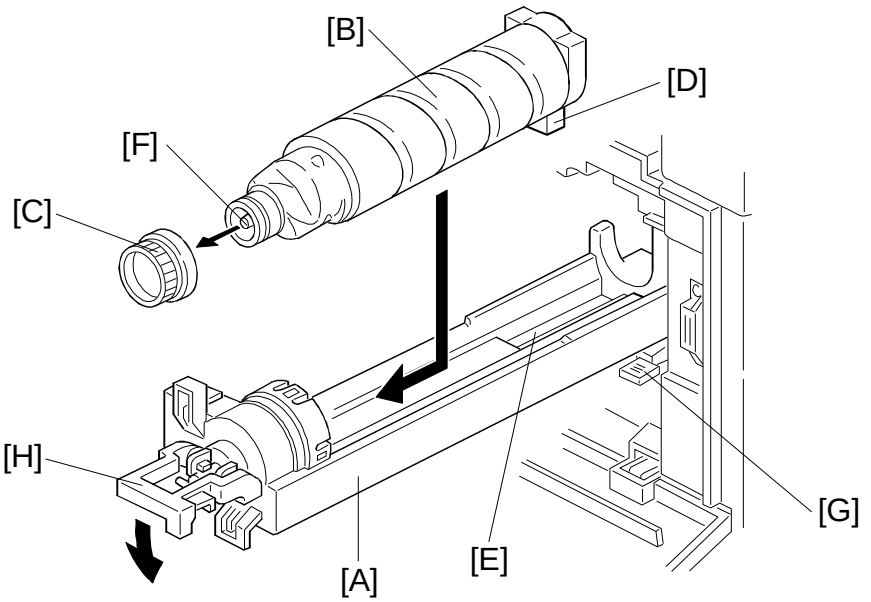

9. Install the toner bottle holder [A] in the copier as shown.
10. Shake the toner bottle [B] well.

    NOTE: Do not remove the bottle cap [C] of the toner bottle at this time.
11. Unscrew the bottle cap and insert the toner bottle into the holder, so that the rib [D] rides the rail [E].

    NOTE: Do not open the inner bottle cap [F].
12. Reposition the holder by making sure that the securing lever [G] clicks. Then press down the holder lever [H] to secure the bottle. Close the front cover.

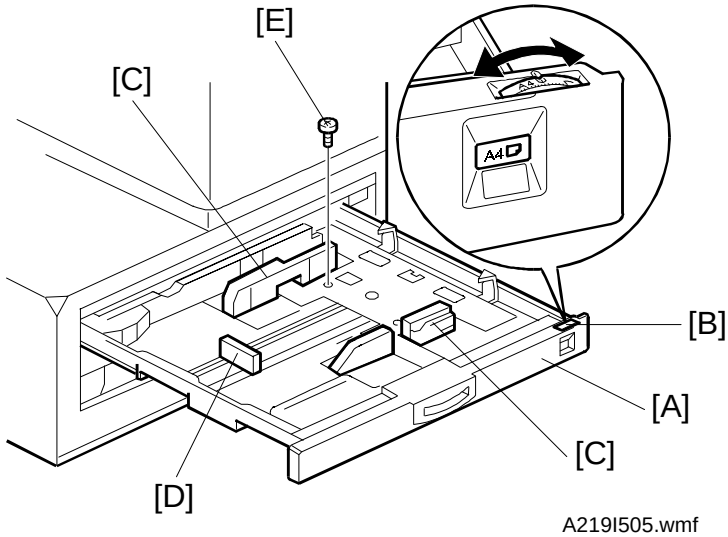

13. Pull the paper tray [A] out and turn the paper size dial [B] to select the appropriate size. Adjust the side guides [C] and the end guide [D] to match the paper size.

    NOTE: 1) Make sure the stack of paper is aligned, and that there is no space between the side guides and the paper stack.

    2) Always push the paper tray in gently.

14. Plug in the copier and turn on the main switch. Wait until it warms up. (It takes about 45 seconds.)

15. Enter the SP mode as follows:

    1) Press the key.

    2) Enter "107" using the numeric keys.

    3) Hold down the C/ key for more than 3 seconds.

16. Perform the TD sensor initial setting as follows:

    1) Enter "66" using the numeric keys.

    2) Press the "Auto Image Density" key.

    NOTE: The machine will automatically stop when completed. (It takes about 1 minute.)

17. Turn the main switch off and on to exit SP mode.

18. Check the copy quality and machine operation.

19. Inform the customer of the notes in step 13 concerning the paper tray. Also find out if the customer changes paper sizes frequently. If not, inform the customer that the side guides can be fixed with a screw [E] to achieve better paper feed quality (use tapping screw M3 x 8).

3. DOCUMENT FEEDER (A662)

3.1 ACCESSORY CHECK

Check the accessories against the following list:

Description	Q'ty
1. Voltage Reference Decal	1
2. Thumb Screw M4 x 12	2
3. Stud Screw (M3)	2
4. Installation Procedure - English	1
5. NECR - Multi-language	1
6. Interface Unit for A219 copier	1
7. Accessory Kit for A203 copier	1
• Interface Unit Bracket	1
• Stud Screw (M4)	2
• Harness Clamp	1
• Upper Unit Stand	1
• Stepped Screw (Short)	1
• Stepped Screw (Long)	1
• Magnet	1
• Operation Decal	1
• Screw Driver	1

3.2 INSTALLATION PROCEDURE

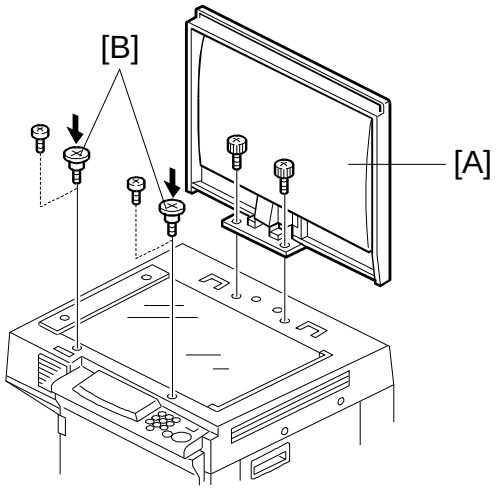

A662I500.wmf

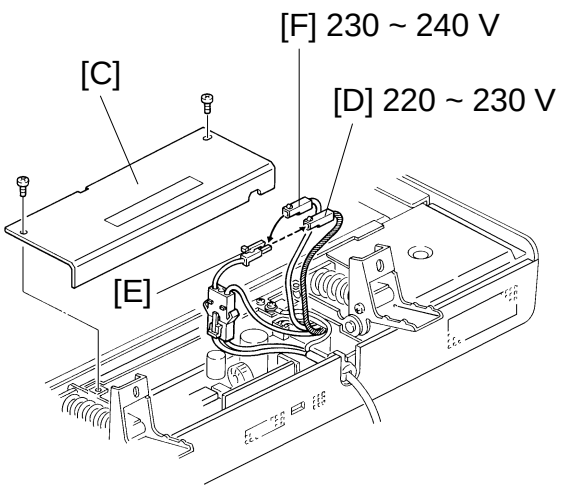

A662I501.img

⚠ CAUTION

When installing the DF, make sure the copier is unplugged.

1. Remove the platen cover [A] from the copier.
2. Replace the 2 screws with the 2 stud screws [B].
   - Use the M3 stud screws for A219.
   - Use the M4 stud screws for A203.
3. Remove the strips of tape from the DF.

⚠ CAUTION

The next step (step 4) must be done only in 240 volt areas.

4. Perform the conversion from 220 ~ 230 V to 240 V as follows:
   1) Remove the main board cover [C] (2 screws).
   2) Disconnect the connector for 220 ~ 230 V [D] (Black Wire) from the ac harness connector [E] and connect the connector for 240 V [F] (White Wire) to the ac harness connector.
   3) Reinstall the cover.

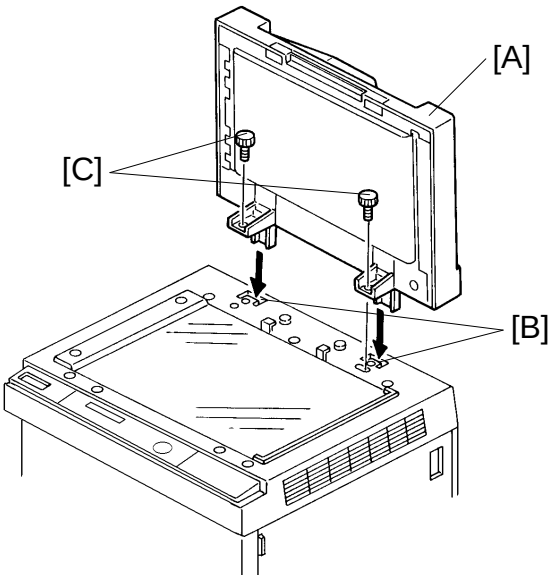

A662I502.img

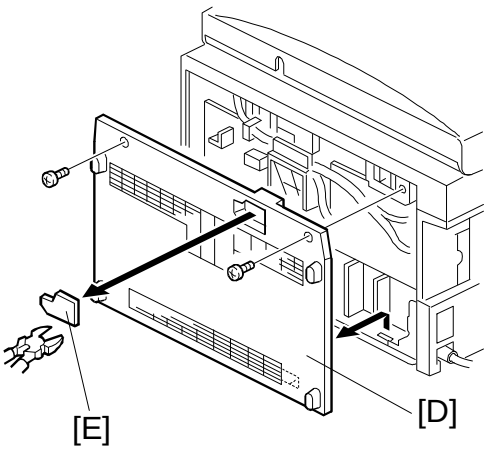

A662I503.wmf

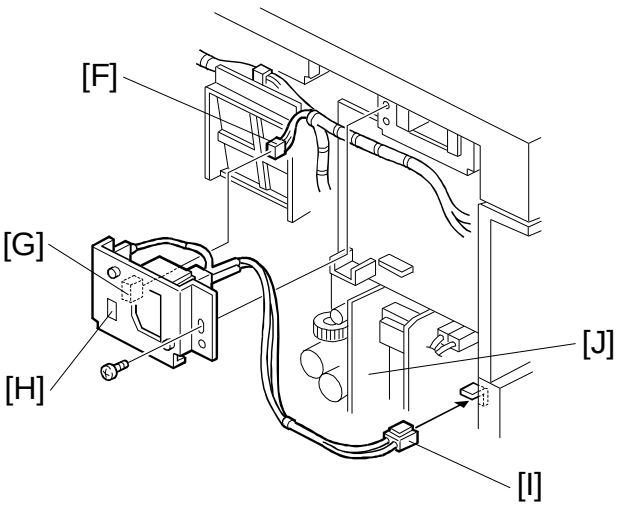

A662I504.wmf

5. Insert the DF [A] into the holes [B] in the copier upper cover.
6. Secure the DF to the copier (2 thumb screws [C]).
7. Remove the rear cover [D] (2 screws) and cut away the portion [E] with cutting pliers as shown.
8. Locate the 4P connector [F] and connect it to the ADF interface board [G], then secure the DF interface unit [H] to the copier (1 screw).
9. Plug the connector [I] (3P) in to CN202 on the ac drive dc power supply board [J].

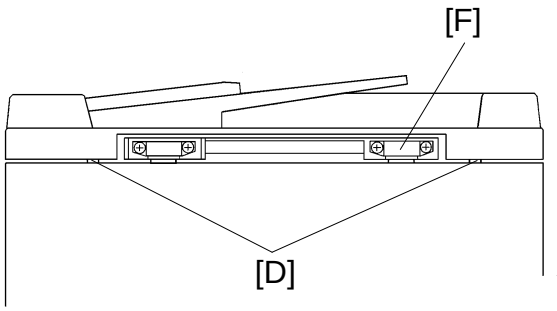

A662I514.img

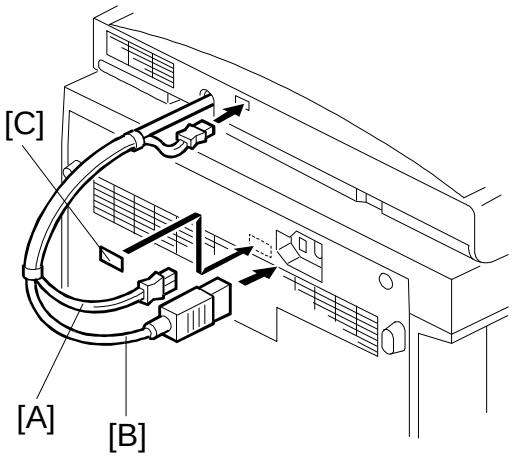

A662I505.wmf

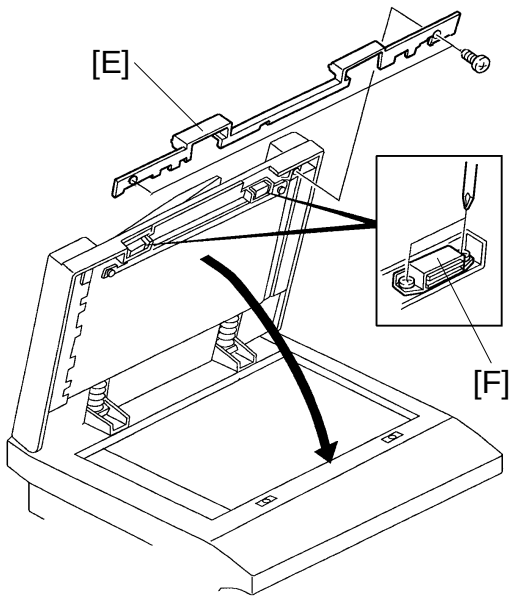

A662I515.img

10. Reinstall the rear cover.
11. Plug the optics fiber cable [A] into the DF and the copier.
12. Plug the power supply cord [B] of the DF into the outlet in the copier rear cover.
13. Attatch the voltage reference decal [C].
14. Check that the rubber pad [D] is in contact with the top of the operation panel cover. If it is not, remove the DF grip [E] (2 screws), then adjust the position of the magnet catch [F] so that the rubber pad is in contact with the top of the operation panel cover.
15. Turn on the main switch and check the operation of the DF.

4. SORTER (A657)

4.1 ACCESSORY CHECK

Check the accessories against the following list:

Description	Q'ty
1. Holder Bracket	1
2. Magnet Catch	1
3. Tapping Screw M4 x 6	6
4. Grounding Screw M4 x 8	1
5. Snap Ring	1
6. NECR - Multi-language	1
7. Installation Procedure - English	1

4.2 INSTALLATION PROCEDURE

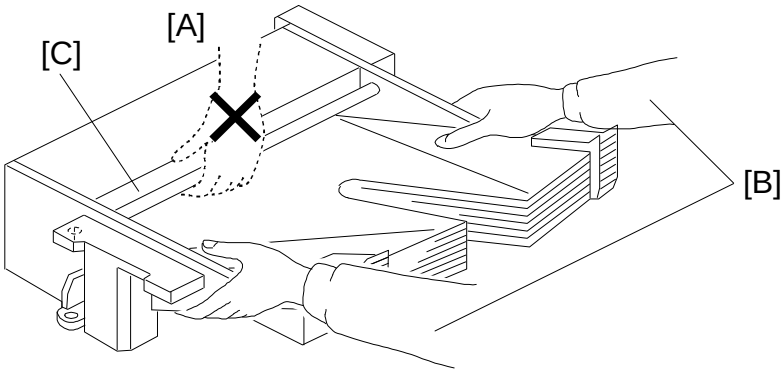

A657I500.wmf

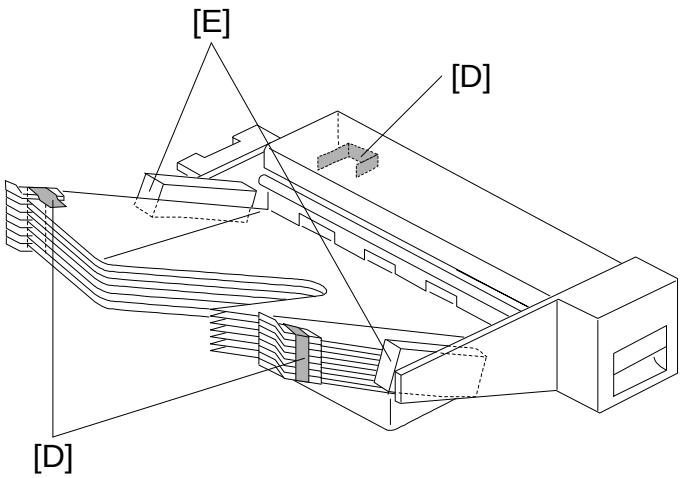

A657I501.wmf

NOTE: 1) Keep the shipping retainers after installing the machine. They will be reused if the machine will be transported to an another location in the future.

2) Proper installation of the shipping retainers is required in order to avoid any transport damage.

3) Do not grasp the sorter by the top cover and stay as shown by [A]. Hold both sides of the sorter as shown by [B]. This is to prevent damage to the anti-static brush [C].

⚠ CAUTION

Unplug the copier power cord before starting the following procedure.

1. Remove the copy tray from the copier.
2. Remove the strips of tape [D] and styrofoam blocks [E].

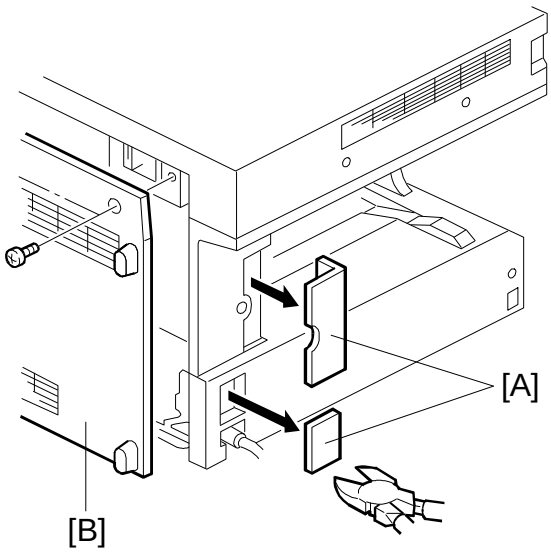

A657I502.wmf

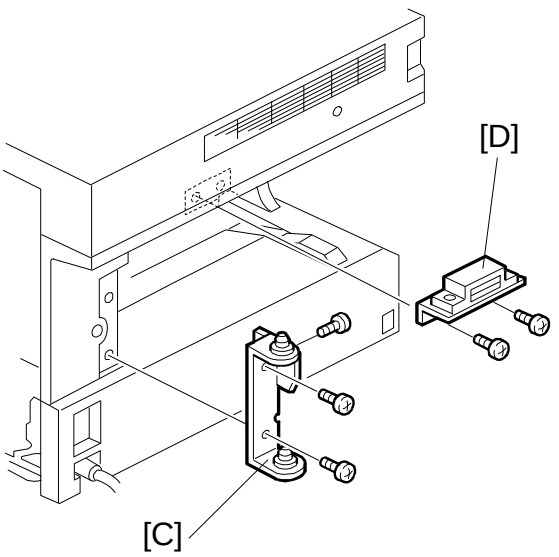

A657I503.wmf

3. Remove the 2 portions [A] on the left hand side of the copier with cutting pliers as shown.
4. Remove the rear cover [B] (2 screws).
5. Mount the sorter holder bracket [C] on the copier frame (3 tapping screws).
6. Mount the magnetic catch [D] near the exit cover (2 tapping screws).

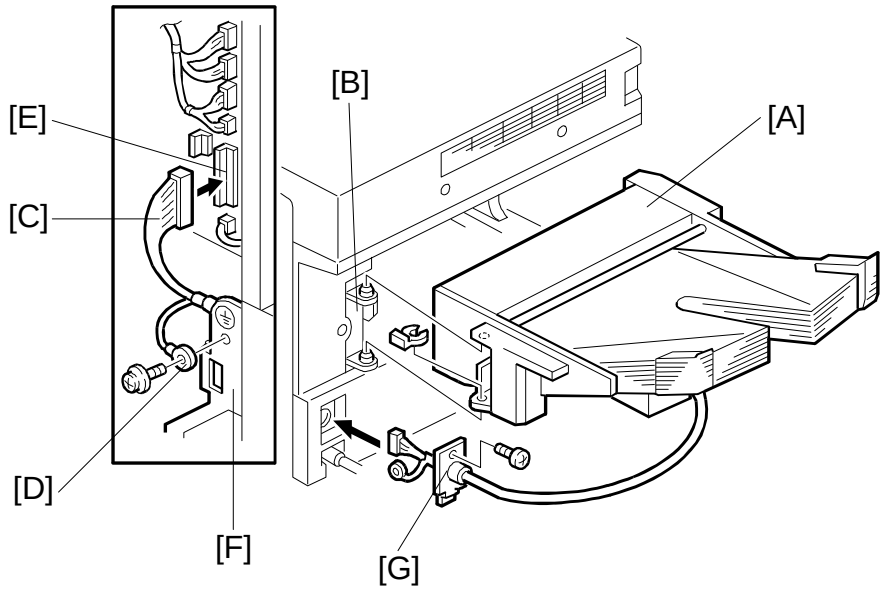

A657I504.wmf

7. Install the sorter [A] on the sorter holder bracket [B] (1 snap ring) as shown.
8. Insert the sorter harness [C] and the grounding wire [D] through the opening in the lower left cover. Plug the connector in to CN130 [E] on the main control board, and secure the grounding wire to the copier frame [F] (1 M4 x 8 screw).
9. Secure the bracket [G] (1 tapping screw).
10. Reinstall the rear cover.
11. Plug in the copier power cord and turn on the main switch.
12. Enter SP mode as follows:
    1) Press the ◈/⊘ key.
    2) Enter "107" using the numeric keys.
    3) Hold down the C/⊘ key for more than 3 seconds.
13. Press the following sequence of keys to change the "SP 71" value to "1".

    7 → 1 → ◑ → 1 → ◑

14. Turn the main switch off and on.
15. Check the sorter's operation.

5. OTHERS

5.1 OPTICS ANTI-CONDENSATION HEATER INSTALLATION (OPTION)

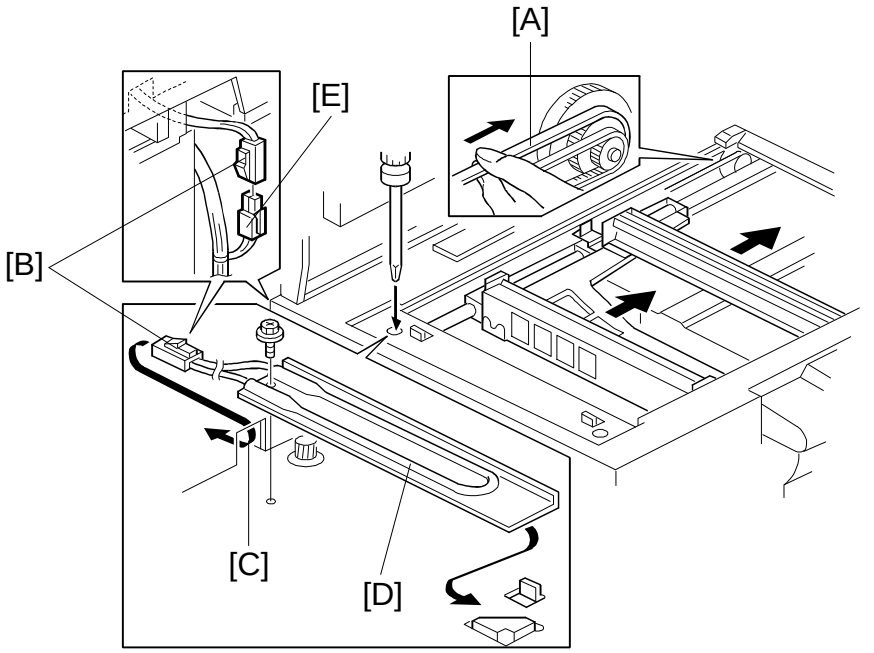

A219I507.wmf

NOTE: The optics anti-condensation heater keeps water from condensing on the copier's mirrors.
Such condensation occurs at cold temperatures with high humidity, and causes the first few copies of the day to be dark, or even black.
The heater is available as a service part. (See the parts catalog.)

⚠ CAUTION

Unplug the copier power cord before starting the following procedure.

1. Remove the rear cover. (See "Replacement and Adjustment - Exterior Cover Removal".)
2. Remove the exposure glass. (See "Replacement and Adjustment - Exposure Glass Removal".)
3. By using the timing belt [A], manually move the 1st and 2nd scanner units away from the home position.

   NOTE: Move the scanners by using the timing belt as shown in the diagram. Do not handle the scanners directly.

4. Pass the connector [B] through the opening [C], and mount the anit-condensation heater [D] as shown (1 screw).
5. Connect the red two-pin connector [E] at the rear of the copier to the heater's connector [B] (red).
6. Make sure that scanner drive belt and mirrors do not touch the heater harness while they are functioning.

NOTE: Tell the customer that even when the copier main switch is turned off, the copier power cord should be plugged in. Otherwise, the optics anti-condensation heater will not function.

5.2 TRAY HEATER INSTALLATION (OPTION)

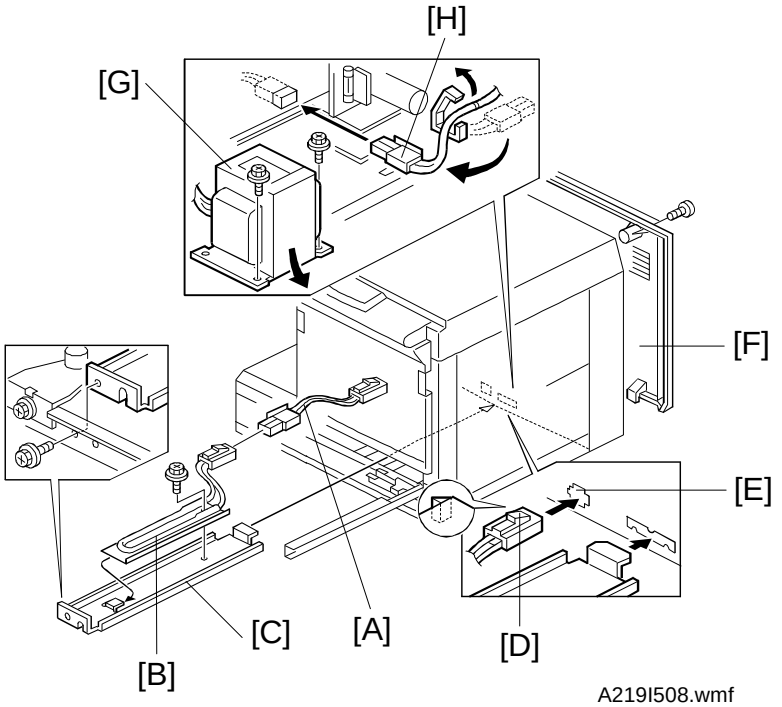

NOTE: The optional tray heater keeps copy paper dry. In humid environments, copy paper may crease as it comes out of the fusing unit. The heater is available as a service part. (See the parts catalog.)

⚠ CAUTION

Unplug the copier power cord before starting the following procedure.

1. Remove the paper tray. (See "Replacement and Adjustment - Paper Tray Removal".)
2. Connect the interface harness [A] to the tray heater [B]. Then mount the heater on the heater bracket [C] as shown (1 screw).
3. Mount the heater bracket on the bottom of the copier main frame, while passing the connector [D] through the opening [E] in the copier main frame as shown (1 screw).
4. Remove the rear cover [F] (2 screws).
5. Remove the transformer [G] (2 screws).
6. Locate the red two-pin connector [H] at the rear of the copier, and connect it to the heater's connector (red), as shown.

NOTE: Tell the customer that even when the copier main switch is turned off, the copier power cord should be plugged in.
Otherwise, the tray heater will not function.

SECTION 4

SERVICE TABLES

1. SERVICE REMARKS

1.1 GENERAL CAUTIONS

1. To prevent physical injury, keep hands away from the mechanical drive components when the main switch is on (especially during the warm-up cycle).
   If the ◈ key is pressed before the copier finishes the warm-up cycle, the Start indicator starts blinking and the copier starts making copies as soon as the warm-up cycle is completed.
2. Before disassembling or assembling any parts of the copier, make sure that the power cord is unplugged.

1.2 IMAGING UNIT

1. Always ensure the following when removing the imaging unit from the copier.
   - Do not touch the drum surface with bare hands. When the drum surface is touched with fingers or becomes dirty, wipe it with a dry cloth.
   - Place the imaging unit on a clean and level place. Take care not to scratch the drum from under the unit as there is no cover to protect it.
   - Cover the imaging unit with sheets of paper to prevent the drum from being exposed to light.
   - Do not turn the imaging unit upside down. Toner and developer may fall out from the unit.
2. Before pulling out the imaging unit, place a sheet of paper under the unit to catch any spilled toner.
3. Never use alcohol to clean the drum; alcohol dissolves the drum surface.
4. Take care not to scratch the drum as the photoconductive layer is thin and is easily damaged.
5. Never expose the drum to corrosive gases such as ammonia gas.
6. Store the imaging unit in a cool, dry place away from heat.
7. Do not touch the charge corona wire or the grid plate with bare hands. Oil stains may cause uneven image density on copies.
8. Clean the charge corona wire by pulling on the wire cleaning knob.
9. Clean the charge grid with a blower brush (not with a cloth).

10. Be careful not to damage the edge of the cleaning blade.
11. After installing a new cleaning blade, be sure to apply setting powder evenly on the surface and edge of the blade.
12. When installing a **NEW** drum, do the following:
    1) Apply setting powder to the entire surface of the drum.
    2) Reinstall the drum and all other parts. Perform SP93 (VR Correction Reset).
    3) Open SP33 (Image Bias Adjustment - Manual ID Mode) and return the setting to the normal value if it has been changed.
    4) SP48 (Light Intensity Adjustment) - see the SP mode table for details.
    5) SP56 (ADS Reference Voltage Adjustment) - see the SP mode table for details.
13. When replacing developer, make sure that all toner and developer are cleaned from inside the imaging unit.
14. After installing **NEW** developer, reinstall the machine and perform SP66 (TD Sensor Initial Setting).

1.3 OPTICS

1. Clean the exposure glass with glass cleaner and a dry cloth to reduce the amount of static electricity on the glass surface.
2. Only use a clean soft cloth to clean the mirrors and reflectors.
3. Only use a blower brush to clean the 6th mirror and the lens.
4. Do not touch the following parts with bare hands:
    1) Reflectors
    2) Exposure Lamp
    3) Mirrors and Lens
5. Do not change the cutout position of the reflectors as they are adjusted at the factory.
6. Always replace the 1st scanner unit as an assembly, as the matching of each set of exposure lamp and reflectors is performed at the factory.
7. Only use the scanner timing belts when manually moving the scanner units.

8. Whenever cleaning or replacing the optics, all the following actions must be done in order.
   1) Optics cleaning
   2) Open SP33 (Image Bias Adjustment - Manual ID Mode) and return the setting to the normal value if it has been changed.
   3) SP48 (Light Intensity Adjustment) - see the SP mode table for details
   4) SP56 (ADS Reference Voltage Adjustment) - see the SP mode table for details

1.4 TRANSFER CORONA

1. Clean the corona wire and casing with a blower brush.
2. Never loosen the two screws securing the entrance guide plate. The position is set with a special instrument at the factory to ensure proper image transfer onto the copy paper.

1.5 FUSING UNIT

1. Be careful not to damage the edges of the hot roller strippers or their tension springs.
2. Do not touch the fusing lamp with bare hands.
3. Make sure that both fusing lamp insulators are properly set in the holders.
4. When handling the fusing unit, hold the unit by the bottom frame. Do not grasp it by the hot roller stripper bracket or by the fusing entrance guide as they are easily damaged. The upper frame tends to hold more heat than the lower frame. Be careful.
5. Do not rotate the rollers while the pressure springs are not installed and the hot roller strippers are in place. If done, the hot roller may be damaged by the strippers.

1.6 PAPER FEED

1. Do not touch the feed rollers with bare hands.
2. The side fences and the end fence of the paper tray should be positioned correctly so that they securely hold the paper. Make sure the stack of paper is aligned, and that there is no space between the side guides and the paper stack.
3. Always push the paper tray in gently. The paper stack might go over the side fence or the corner separators, causing double feed or image skewing problems.
4. Avoid storing paper for a long time.
   At high temperature and high humidity, or at low temperature and low humidity, store paper in a plastic bag. This is especially important to decrease the amount of curls or waves that would lead to paper misfeeds.
5. Find out if the customer changes the paper size in the paper tray frequently. If not, inform the customer that the side guides can be fixed with a screw to achieve better paper feed quality (use tapping screw M3 x 8).

1.7 OTHERS

1. When replacing the main board, remove the EEPROM (IC112) from the old main board and place it on the new main board. Then install the new main board in the copier.
2. After installing a new main board with a new EEPROM (IC112), the Clear All Memory (SP99) procedure must be performed. (Do not perform SP99 if you have placed the old EEPROM on the new main board.)
3. Never perform SP99 (Clear All Memory) except for the following two cases:
   a) When the copier malfunctions due to a damaged EEPROM.
   b) When replacing the EEPROM.
4. Whenever SP99 (Clear All Memory) is performed, the drum and developer must be replaced with new ones. Otherwise, copy quality might be seriously affected.

5. Securely tighten the screws used for grounding the following PCBs when reinstalling them.
   - Main Control Board
   - AC Drive/DC Power Supply Board
   - High Voltage Supply Board C/G/B/T/S
6. If the optional tray and anti-condensation heaters have been installed, keep the copier power cord plugged in, even when the copier main switch is turned off. This keeps the heaters energized.

2. PROGRAM MODES

2.1 BASIC OPERATION

1. Component

This copier is equipped with two program modes. One is the Service Program (SP) Mode for factory and field technician usage, and the other is the User Program (UP) mode for the user. Both program modes have a different access procedure, but all the UP mode functions can be accessed from the SP mode.

To be able to reset a service call (E5) condition using SP mode, the SP mode can be accessed while the error condition exists. The error code will not be displayed in the copy counter during these conditions.

2. Operation

To access these program modes, certain keys must be pressed after turning on the main switch. After accessing, select the required mode number and perform the procedure needed for that function. It is possible to move on to the next required mode without exiting each time.

To exit these modes, turn the main switch off/on.

3. Display

The Copy Counter is used to display the program mode number. The Magnification Ratio display is used to display the current value.

When the **Copy Counter is blinking**, and the **dot is lit**, the machine is ready to **accept a program mode number**. (The program mode number is displayed when you input it.) The Magnification Ratio display is blinking at this time.

When the **Copy Counter stops blinking**, and the **dot starts blinking**, the machine is ready to **accept an adjustment value**, and it may be displaying the current adjustment value on the Magnification Ratio display.

4. Notes

1. **With the exception of SP57, all copies made inside the program modes are made with ID level 4 (center value).**

2.2 SP MODE

1. Service Program Mode Access Procedure

How to enter the SP mode

1. Press the following keys in sequence.

   [◇/⊛] → [1] → [0] → [7] → [C/⊛]

   NOTE: 1) The above procedure must be finished within 20 seconds.
   2) Hold the final [C/⊛] key for more than 3 seconds.

2. When SP mode is selected, "1" blinks in the Copy Counter, and a dot (•) will appear in the top left corner of the Copy Counter. Also, the Auto Image Density indicator starts blinking, and the magnification ratio display turns off.

How to enter the UP mode

1. Press the following keys in sequence to enter the UP mode.

   [◇/⊛] → [C/⊛]

   * Hold the final [C/⊛] key for more than 3 seconds.

2. How to Select the Program Number

1. By using the Number keys, enter the required program number. At this point, the Copy Counter will be blinking, and the dot (•) will be lit.
2. When the Auto Image Density key is pressed, the number which is currently blinking in the Copy Counter will be entered as the selected program number.

3. Changing the Value of an SP Mode

1. Enter the desired value or setting using the Number keys.

   NOTE: After changing the value (setting), the previous value (setting) can be recalled again if the [C/⊛] key is pressed at this point.

2. When the Auto Image Density key is pressed, the number which is currently displayed in the Copy Counter will be entered as the new value or setting, and will be stored in memory.
3. The copier is ready to accept a new program number. Repeat from step 1 or leave SP mode by turning the main switch off/on.

Service Tables

2.3 SP MODE QUICK REFERENCE TABLE

SP Mode No.	Function	SP Mode No.	Function
4	Forced Start (Free Run)	*41	Lead Edge Erase Margin Adjustment
5	Free Run with Exposure Lamp Off	*42	Registration Adjustment
6	Misfeed Detection Off	*43	Vertical Magnification Adjustment
7	Free Run	*44	Horizontal Magnification Adjustment
8	Input Check	45	Registration Buckle Adjustment
9	Output Check	46	Registration Buckle Adjustment - A5 Paper
10	Scanner Free Run	*47	Focus Adjustment
11	All Indicators On	*48	Light Intensity Adjustment
14	Auto Shut Off Time (Energy Star)	49	Fusing Temperature Adjustment
15	Auto Reset Time Setting (Energy Saver)	50	Fusing Ready Temperature Adjustment
16	Count Up/Down Selection	51	Exposure Lamp Voltage Display
17	Narrow Paper Select Mode	52	Fusing Temperature Display
18	Auto Feed Station Shift (Japanese Market Only)	53	TD Sensor Target Control Voltage Adjustment
19	ADS Priority	54	TD Sensor Gain Adjustment
22	SADF Shut Off Time	55	TD Sensor Output Display Data
24	Horizontal Edge Margin Width Adjustment	56	ADS Reference Voltage Adjustment
28	Auto Sort Select	57	ADS Output Voltage Display
29	Fusing Temperature Control Selection	59	Optics Temperature Display
30	Toner Supply Mode Selection	60	Drum Potential Measurement (With Paper)
31	Toner Supply Amount (TD Sensor Mode)	61	Drum Potential Measurement (Without Paper)
32	Toner Supply Amount (Fixed Supply Mode)	62	V_L Correction Interval
33	Image Bias Adjustment (Manual ID Mode)	63	Forced Toner Supply
34	Image Density Adjustment (ADS Mode)	64	V_R Correction Value
35	Total Toner Supply ON Time During Toner Near/End Condition	66	TD Sensor Initial Setting
36	TD Sensor Sensitivity Setting	67	TD Sensor Initial Output Display
38	Toner Density Adjustment	68	V_{L2} Correction Selection

* Items listed on the factory setting data sheet

SP Mode No.	Function	SP Mode No.	Function
69	Imaging Unit Counter Display	94	V_{L2} Correction Reset
71	Sorter Operation	95	V_L Correction Reset
74	Special Paper Size Setting	96	Toner End Force Cancel
76	Sorter Bin Capacity	97	Service Call (E5) Reset
77	Auto Shut Off (Energy Star) On/Off	98	Total Counter Clear
78	Auto Energy Saver Mode On/Off	99	Clear All Memory
81	Factory Initialization	100	By-pass Feed Copy Counter Display
82	Data Communication	101	Paper Feed Tray Copy Counter Display
83	Factory Potential Adjustment	106	DF Original Counter Display
88	Total Copy Counter Display	130	Total Service Calls
90	Factory Data and Counter Clear	131	Total Misfeeds
93	V_R Correction Reset		

* Items listed on the factory setting data sheet

2.4 UP MODE AND SP MODE CROSS REFERENCE TABLE

UP Mode No.	SP Mode No.	Function
1	34	Image Density Adjustment (ADS Mode)
2	17	Narrow Paper Select Mode
3	15	Auto Reset Time Setting (Energy Saver)
4	78	Auto Energy Saver Mode On/Off
5	14	Auto Shut Off Time Setting (Energy Star)
6	38	Toner Density Adjustment
7	16	Count Up/Down Selection

2.5 SERVICE PROGRAM MODE TABLE

1. In the *Function* column, comments (extra information) are in italics.
2. In the ***Settings*** column, the default value is printed in bold letters.
3. If there is a † mark in the Mode No. column, copies can be made within this SP Mode.

Mode No.		Function	Settings
4	Forced Start (Free Run)	Performs a free run with a forced start. Press the [◈] key to start the free tun. Press the [C/⊗] key to stop the free run.	
		If this mode is switched on, the copier starts the free run even if the fusing temperature has not reached the required value yet. *This mode is performed with the selected paper size and magnification ratio without the paper feed clutch or total counter increment.* ***Normally, use SP7 to prevent fusing-related service call conditions from occurring.***	
5	Free Run with Exposure Lamp Off	A free run is performed without exposure. Press the [◈] key to start the free run. Press the [C/⊗] key to stop the free run.	
		This mode is performed with the selected paper size and magnification ratio without the paper feed clutch or total counter increment. ***Normally, use SP7 to reduce the cleaning blade load.***	
6	Misfeed Detection Off †	Copies are made without misfeed detection by the registration, exit sensors, and sorter paper sensor. Press the [◈] key to make a copy. It stops when reaching the set count, or when the [C/⊗] key is pressed.	
		Use this mode to check whether a paper misfeed was caused by a sensor malfunction. ***The total counter increments when copies are made in this mode.***	
7	Free Run	Performs a free run with the exposure lamp on. Press the [◈] key to start the free run. Press the [C/⊗] key to stop the free run.	
		This mode is performed with the selected paper size and magnification ratio without the paper feed clutch or total counter increment. ***Before starting, close the platen cover to reduce the cleaning blade load.***	

Mode No.		Function	Settings
8	Input Check †	Enter the desired number given in the following table. The magnification indicator is used to display the input data from the sensors while making a normal copy. Press the ◈ key to perform this mode.	

Component No.	Sensor/ Switch/Signal	Reading	
		0	1
1	Registration Sensor	Paper Not Present	Paper Present
2	Exit Sensor	Paper Not Present	Paper Present
3	By-pass Feed Paper End Sensor	Paper Not Present	Paper Present
4	Tray Paper End Sensor	Paper Present	Paper Not Present
8	High Voltage Leak Signal	No Leak Signal	Leak Signal Detected
9	Power Supply Board Signal	120 V	230 V
10	Right Vertical Guide Switch	Cover Closed	Cover Open
12	Scanner HP Sensor	Sensor Not Actuated	Sensor Actuated (HP)
13	4th/5th Mirror HP Sensor	Sensor Not Actuated	Sensor Actuated (HP)
14	Lens HP Sensor	Sensor Not Actuated	Sensor Actuated (HP)
16	Sorter Paper Sensor	Paper Not Detected	Paper Detected
17	Sorter Wheel Switch	Switch Actuated (Switch Pushed in: Wheel Moving)	Switch Not Actuated
18	Sorter Bin HP Switch	Switch Not Actuated	Switch Actuated (HP)
19	Sorter Switch	Sorter Closed	Sorter Opened
20	ADF Installation	ADF Not Installed	ADF Installed
21	ADF Lift Switch	ADF Closed	ADF Opened
22	Key Counter Set Signal (Not Used)	Key Counter Not Set	Key Counter Set

Service Tables

<table>
<tr><th>Mode No.</th><th>Function</th><th>Settings</th></tr>
<tr><td>9</td><td>Output Check</td><td>Use to turn on individual electrical components.
Enter the desired number given in the following table.
Press the [◈] key to turn on the electrical component.
Press the [C/⊗] key to turn off the electrical component.

<table>
<tr><th>Component No.</th><th>Electrical Component</th><th>Note</th></tr>
<tr><td>1</td><td>Main Motor + Quenching Lamp + Exhaust Fan Motor (High Speed)</td><td></td></tr>
<tr><td>2</td><td>Charge Corona</td><td></td></tr>
<tr><td>3</td><td>Transfer Corona</td><td></td></tr>
<tr><td>4</td><td>Discharge Plate</td><td></td></tr>
<tr><td>5</td><td>Development Bias Voltage</td><td>Standard Voltage for Manual ID Level 4.</td></tr>
<tr><td>6</td><td>Erase Lamp</td><td>All LEDs On</td></tr>
<tr><td>7</td><td>Machine Shut Off</td><td>Main Switch Relay Off.</td></tr>
<tr><td>8</td><td>Exhaust Fan Motor (High Speed)</td><td></td></tr>
<tr><td>9</td><td>Optics Cooling Fan</td><td></td></tr>
<tr><td>10</td><td>Exposure Lamp + Optics Cooling Fan</td><td></td></tr>
<tr><td>11</td><td>Toner Supply Motor</td><td></td></tr>
<tr><td>12</td><td>Toner Supply Motor (Reverse)</td><td></td></tr>
<tr><td>14</td><td>Sorter Roller Drive Motor</td><td></td></tr>
<tr><td>15</td><td>Sorter Bin Drive Motor (Bin Up)</td><td>Moves One Bin Up.</td></tr>
<tr><td>16</td><td>Sorter Bin Drive Motor (Bin Down)</td><td>Moves One Bin Down.</td></tr>
<tr><td>17</td><td>Registration Clutch</td><td></td></tr>
<tr><td>18</td><td>By-pass Paper Feed Clutch</td><td></td></tr>
<tr><td>19</td><td>Tray Paper Feed Clutch</td><td></td></tr>
<tr><td>21</td><td>Relay Roller Clutch</td><td></td></tr>
<tr><td>23</td><td>Total Counter</td><td></td></tr>
<tr><td>24</td><td>Key Counter</td><td>Not Used</td></tr>
</table>
</td><td></td></tr>
<tr><td>10</td><td>Scanner Free Run</td><td>Start a scanner free run.
Press the [◈] key to start the free run.
Press the [C/⊗] key to stop the free run.
This mode is performed in accordance with the selected paper size and magnification ratio.</td><td></td></tr>
<tr><td>11</td><td>All Indicators On</td><td>Turns on all the indicators on the operation panel for 30 seconds. They will turn off automatically after 30 seconds.
To turn off the indicators, press the [◑] key.</td><td></td></tr>
</table>

Mode No.		Function	Settings
14	Auto Shut Off Time Setting (Energy Star)	Selects the auto shut off time. *The copier main switch is shut off automatically after the selected auto shut off time, if SP77 is at "0".*	**0: 30 min.** 1: 15 min. 2: 60 min. 3: 90 min. 4: 120 min.
15	Auto Reset Time Setting (Energy Saver)	Selects an auto reset time of 1 or 3 minutes, or cancels this mode. *The copier goes to energy saver mode automatically after the selected auto reset time, if SP78 is at "1".*	**0: 1 min.** 1: 3 min. 2: None
16	Count Up/Down Selection	Selects count up or count down.	**0: Up** 1: Down
17	Narrow Paper Select Mode	Selects narrow paper feed mode for the by-pass feed table. *Use this mode to feed non-standard paper sizes that are too narrow to be detected by the by-pass feed paper end sensor. In this case, the copier will operate even if the Add Paper indicator is on.*	**0: No** 1: Yes
18	Auto Feed Station Shift (Japanese Market Only)	Selects auto feed station shift mode. *The copier automatically shifts to the paper feed station holding the same size of paper when paper runs out.*	**0: Auto Shift** 1: Manual
19	ADS Priority	Specifies whether the copier defaults to ADS or Manual mode when the main switch is turned on.	**0: ADS** 1: Manual
22	SADF Shut Off Time	Selects the shut off time for SADF mode. *The DF must be installed on the machine.*	**0: 5 s.** 1: 60 s.
24	Horizontal Edge Margin Width Adjustment	Selects whether the side erase mechanism changes when the optional document feeder is installed. *See "Detailed Descriptions - Erase" for more details.*	**0: DF Mode** 1: Always stays in Platen Mode
28	Auto Sort Select	In Auto Sort Mode, the sorter is automatically selected when more than 1 original is set on the DF table and the entered copy quantity is greater than 1 and less than 11. In Manual mode, sort mode has to be selected at the operation panel. *The sorter and DF must be installed on the machine.*	**0: Manual** 1: Auto Sort
29	Fusing Temperature Control Selection	Selects the fusing temperature control mode. *After selecting the control mode and turning the main switch off/on, the fusing temperature control mode is changed.*	**0: ON/OFF control** 1: Phase control

Service Tables

<table>
<tr><th></th><th>Mode No.</th><th>Function</th><th>Settings</th></tr>
<tr><td>30</td><td>Toner Supply Mode Selection</td><td>Selects the toner supply system.
Normally, this value should not be changed.

<table><tr><th>SP Setting</th><th>Toner Supply System</th><th>Note</th></tr><tr><td>0</td><td>Detect supply mode using the initial TD sensor setting.</td><td>Default</td></tr><tr><td>1</td><td>Detect supply mode using the target TD sensor voltage set with SP53.</td><td></td></tr><tr><td>2</td><td>Detect supply mode (fixed amount) using the initial TD sensor setting.</td><td></td></tr><tr><td>3</td><td>Detect supply mode (fixed amount) using the target TD sensor voltage set with SP53.</td><td></td></tr><tr><td>4</td><td>Fixed supply mode.</td><td>Use only in abnormal TD sensor conditions.</td></tr></table>
See SP31/SP32 for the toner supply amount.</td><td>Default = 0</td></tr>
<tr><td>31</td><td>Toner Supply Amount (TD Sensor Mode)</td><td>Determines how much toner is supplied in detect supply mode.
Select the toner supply time from 0.0 s to 5.0 s in 0.1 s steps.
See "Detailed Descriptions-Toner Supply Control" for more details.</td><td>0 ~ 50
Default = 4 (0.4 s)</td></tr>
<tr><td>32</td><td>Toner Supply Amount (Fixed Supply Mode)</td><td>Determines how much toner is supplied in fixed supply mode and in detect supply (fixed amount) mode.
For example, if the user normally makes copies of A4 originals that are about 7% black, select the 7% setting for best results.

<table><tr><th>SP Setting</th><th>Ratio</th><th>Supply Time</th><th>Note</th></tr><tr><td>0</td><td>3.5%</td><td>0.3 s</td><td>Default</td></tr><tr><td>1</td><td>7.0%</td><td>0.6 s</td><td></td></tr><tr><td>2</td><td>15%</td><td>1.2 s</td><td></td></tr><tr><td>3</td><td>30%</td><td>2.4 s</td><td></td></tr><tr><td>4</td><td>45%</td><td>3.6 s</td><td></td></tr><tr><td>5</td><td>60%</td><td>4.8 s</td><td></td></tr><tr><td>6</td><td>—</td><td>∞</td><td>Continuous supply</td></tr><tr><td>7</td><td>0%</td><td>0</td><td>No toner supply</td></tr></table>
See "Detailed Descriptions - Toner Supply Control" for more details.</td><td>0 ~ 7
Default = 0</td></tr>
</table>

<table>
<tr><th></th><th>Mode No.</th><th>Function</th><th>Settings</th></tr>
<tr><td>33</td><td>Image Bias Adjustment (Manual ID Mode)</td><td>Adjusts the development bias voltage used in manual ID mode. This adjustment affects all manual ID settings. Use this SP mode to adjust the density of pale gray areas.

<table><tr><th>SP Setting</th><th>Setting</th><th>Dev. Bias</th><th>Note</th></tr><tr><td>0</td><td>Normal</td><td>0</td><td>Default</td></tr><tr><td>1</td><td>Darkest</td><td>+40 V</td><td></td></tr><tr><td>2</td><td>Darker</td><td>+20 V</td><td></td></tr><tr><td>3</td><td>Lighter</td><td>–20 V</td><td></td></tr><tr><td>4</td><td>Lightest</td><td>–40 V</td><td></td></tr></table>
See "Detailed Descriptions - Development" for more details.</td><td>0: Normal
1: Darker
2: Darkest
3: Lighter
4: Lightest</td></tr>
<tr><td>34</td><td>Image Density Adjustment (ADS Mode) †</td><td>Selects the image density level in ADS mode.
The development bias and the exposure lamp voltages are increased or decreased.
This adjustment affects copies made in ADS mode.

<table><tr><th>SP Setting</th><th>Setting</th><th>Dev. Bias</th><th>Exposure Lamp</th></tr><tr><td>0</td><td>Normal</td><td>0</td><td>0</td></tr><tr><td>1</td><td>Lighter</td><td>–40 V</td><td>0</td></tr><tr><td>2</td><td>Darker</td><td>+40 V</td><td>0</td></tr><tr><td>3</td><td>Lightest</td><td>–40 V</td><td>+4 steps</td></tr><tr><td>4</td><td>Darkest</td><td>+40 V</td><td>–4 steps</td></tr></table>
The exposure lamp setting specifies the change relative to the base exposure lamp voltage (Vo) in SP48, 1 step of the lamp voltage equals 0.5 V for 120 V (NA), and 1.0 V for 230 V (EU) machines.

See "Detailed Descriptions - Development" for more details.</td><td>0: Normal
1: Light
2: Dark
3: Lighter
4: Darker</td></tr>
<tr><td>35</td><td>Total Toner Supply ON Time During Toner Near/End Condition</td><td>Selects the toner supply motor on time after every copy job during a toner near/end condition.

See "Detailed Descriptions - Toner Supply" for more details.
This SP mode is intended for designer use only.</td><td>1: 10 s
2: 20 s
3: 30 s
4: 40 s
5: 50 s
6: 60 s</td></tr>
</table>

<table>
<tr><th colspan="2">Mode No.</th><th>Function</th><th>Settings</th></tr>
<tr><td>36</td><td>TD Sensor Sensitivity Setting</td><td>Adjust the sensitivity of the TD sensor.
Normally, this value should not be changed.

<table><tr><th>SP Setting</th><th>Sensitivity (V/wt%)</th><th>Note</th></tr><tr><td>0</td><td>0</td><td></td></tr><tr><td>1</td><td>0.05</td><td></td></tr><tr><td>2</td><td>0.10</td><td></td></tr><tr><td>↓</td><td>↓</td><td>0.05 per step</td></tr><tr><td>12</td><td>0.60</td><td></td></tr><tr><td>13</td><td>0.65</td><td></td></tr><tr><td>14</td><td>0.70</td><td></td></tr><tr><td>15</td><td>0.75</td><td>Default</td></tr><tr><td>16</td><td>0.80</td><td></td></tr><tr><td>↓</td><td>↓</td><td>0.05 per step</td></tr><tr><td>19</td><td>0.95</td><td></td></tr><tr><td>20</td><td>1.00</td><td></td></tr></table>
The toner supply motor on time and/or the toner density are changed by this setting. See "Detailed Descriptions - Toner Supply Control" for more details.</td><td>0 ~ 20
Default = 15</td></tr>
<tr><td>38</td><td>Toner Density Adjustment</td><td>Adjusts copy quality by changing the toner concentration inside the development unit.
This can be adjusted using a UP mode.
See "Detailed Descriptions - Toner Supply Control" for more details.</td><td>0: Normal
1: Darker
2: Lighter
3: Darkest
4: Lightest</td></tr>
<tr><td>41</td><td>Lead Edge Erase Margin Adjustment †</td><td>Adjusts the lead edge erase margin.
0.5 mm per step (–4.0 mm to +3.5 mm).
See "Replacement and Adjustment - Copy Quality Adjustment" for details.</td><td>0 ~ 15
Default = 8
(2.5 mm from leading edge)</td></tr>
<tr><td>42</td><td>Registration Adjustment †</td><td>Adjusts the registration.
0.5 mm per step (–4.0 mm to +3.5 mm). See "Replacement and Adjustment - Copy Quality Adjustment" for details.</td><td>0 ~ 15
Default = 8</td></tr>
<tr><td>43</td><td>Vertical Magnification Adjustment †</td><td>Adjusts magnification in the paper travel direction by changing the scanner speed.
0.2% per step (–3.2% to +3.0%).
Check the focusing after doing this SP mode, and adjust with SP47 if necessary.
See "Replacement and Adjustment - Copy Quality Adjustment" for details.</td><td>0 ~ 31
Default = 16</td></tr>
</table>

<table>
<tr><th colspan="2">Mode No.</th><th>Function</th><th>Settings</th></tr>
<tr><td rowspan="2">44</td><td rowspan="2">Horizontal Magnification Adjustment †</td><td>Adjusts magnification perpendicular to the direction of paper travel, by changing the home position of the lens and mirrors.</td><td rowspan="2">0 ~ 50
Default = 20</td></tr>
<tr><td>0.2% per step (–4.0% to +6.0%).
Check the focusing after doing this SP mode, and adjust with SP47 if necessary.
See "Replacement and Adjustment - Copy Quality Adjustment" for details.</td></tr>
<tr><td rowspan="2">45</td><td rowspan="2">Registration Buckle Adjustment †</td><td>Adjusts the amount of paper buckle in the registration area.</td><td rowspan="2">0 ~ 15
Default = 8</td></tr>
<tr><td>0.5 mm per step (–4.0 mm to +3.5 mm).</td></tr>
<tr><td rowspan="2">46</td><td rowspan="2">Registration Buckle Adjustment - A5 Paper †</td><td>When feeding A5 sideways paper, the registration buckle can be adjusted separately from the SP45 setting to reduce the buckle.</td><td rowspan="2">Default = 0</td></tr>
<tr><td>0.5 mm per step (0 mm to –5.0 mm).</td></tr>
<tr><td rowspan="2">47</td><td rowspan="2">Focus Adjustment †</td><td>Adjusts the 4th/5th mirror position to correct the focus.</td><td rowspan="2">0 ~ 100
Default = 40
(0.1 mm per step)</td></tr>
<tr><td>This mode must be done after vertical and horizontal magnification adjustments (SP43 and SP44).
See "Replacement and Adjustment - Copy Quality" for details on how to do this adjustment.</td></tr>
<tr><td rowspan="2">48</td><td rowspan="2">Light Intensity Adjustment †</td><td>Clean the optics, then adjust the exposure lamp voltage. The V_L and V_{L2} corrections are reset automatically when entering this mode.

<table>
<tr><th rowspan="2">SP Setting</th><th colspan="2">Lamp Voltage (V)</th></tr>
<tr><th>120 V (NA) Version</th><th>230 V (EU) Version</th></tr>
<tr><td>100</td><td>50.0</td><td>100</td></tr>
<tr><td>101</td><td>50.5</td><td>101</td></tr>
<tr><td>102</td><td>51.0</td><td>102</td></tr>
<tr><td>↓</td><td>↓</td><td>↓</td></tr>
<tr><td>150</td><td>75.0</td><td>150</td></tr>
<tr><td>↓</td><td>↓</td><td>↓</td></tr>
<tr><td>180</td><td>90.0</td><td>180 Max</td></tr>
<tr><td>↓</td><td>↓</td><td>—</td></tr>
<tr><td>193</td><td>96.5</td><td>—</td></tr>
<tr><td>194</td><td>97.0 Max</td><td>—</td></tr>
</table>
</td><td>120 V Machines
100 ~ 194
Default = 140

230 V Machines
100 ~ 180
Default = 140</td></tr>
<tr><td colspan="3">Before performing this mode, clean the optics.
Then open SP33 and return the setting to the normal value if it has been changed. Then adjust the light intensity using an OS-A3 Test Chart with the platen cover placed over it. After adjusting the light intensity, adjust the ADS Reference Voltage Adjustment (SP56).
See "Replacement and Adjustment - Copy Quality" for details on how to do this adjustment.</td></tr>
</table>

Service Tables

Mode No.		Function	Settings
49	Fusing Temperature Adjustment	Adjusts the control temperature of the hot roller during copying in 1°C steps.	120 V Machines 180°C ~ 195°C **Default = 190°C** 230 V Machines 180°C ~ 200°C **Default = 190°C**
50	Fusing Ready Temperature Adjustment	Adjusts the ready temperature of the hot roller during the warm-up period in 1°C steps. ***Normally, this value should not be changed.***	120 V Machines 160°C ~ 170°C **Default = 165°C** 230 V Machines 165°C ~ 175°C **Default = 172°C**
51	Exposure Lamp Voltage Display	Displays the current exposure lamp voltage. For 120 V machines, the actual applied voltage = displayed value/2 *The exposure lamp turns on for 10 seconds when this mode is selected. Do not repeat more than 5 times, to avoid overheating the optics cavity.*	0 ~ 247
52	Fusing Temperature Display †	Displays the fusing temperature detected by the fusing thermistor. Press the ◈ key to monitor the temperature during the normal copy cycle.	
53	TD Sensor Target Control Voltage Adjustment	If the setting of SP30 (Toner Supply Mode Selection) is 1 or 3, this value is used for the TD sensor target voltage. ***Normally, this value should not be changed.***	1 ~ 200 **Default = 97 (0.02 V per step)**
54	TD Sensor Gain Adjustment	When the TD Sensor initial setting is performed, this mode is adjusted automatically. ***Normally, this value should not be changed.***	0 ~ 255 **Default = 149 (0.04 V per step)**
55	TD Sensor Output Display Data †	Displays the TD sensor output voltage. Press the ◈ key to monitor the output voltage during the normal copy cycle. The output voltage will display "0" when this mode is accessed after turning on the main switch without making any copies.	**(0.02 V per step) x Data**
56	ADS Reference Voltage Adjustment	Adjusts the ADS reference voltage. *After adjusting the light intensity (SP48), place 5 sheets of A4(LT) white paper on the exposure glass and select this mode. Adjust the ADS voltage to 2.5 V ± 0.1 V using VR101 on the main control board.*	
57	ADS Output Voltage Display †	Displays the ADS output voltage. Press the ◈ key to monitor the output voltage during the normal copy cycle. *For only this SP mode, the copies are made with the ADS mode (other SP modes use manual ID level 4).*	

<table>
<tr><th colspan="2">Mode No.</th><th>Function</th><th>Settings</th></tr>
<tr><td rowspan="2">59</td><td rowspan="2">Optics Temperature Display †</td><td>Displays the optics temperature detected by the optics thermistor.</td><td rowspan="2"></td></tr>
<tr><td>Press the [◈] key to monitor the temperature during the normal copy cycle.</td></tr>
<tr><td>60</td><td>Drum Potential Measurement (With Paper)</td><td>Factory use only.</td><td></td></tr>
<tr><td>61</td><td>Drum Potential Measurement (Without Paper)</td><td>Factory use only.</td><td></td></tr>
<tr><td>62</td><td>VL Correction Interval</td><td>Sets the interval for VL correction. The exposure lamp voltage (SP48) is increased by 1 step at the set copy count interval.

<table><tr><th>SP Setting</th><th>Exposure Lamp</th><th>Note</th></tr><tr><td>0</td><td>+2 steps/8,000 copies</td><td></td></tr><tr><td>1</td><td>+2 steps/6,000 copies</td><td></td></tr><tr><td>2</td><td>+2 steps/4,000 copies</td><td>Default</td></tr><tr><td>3</td><td>+2 steps/2,000 copies</td><td></td></tr><tr><td>4</td><td>+2 steps/1,000 copies</td><td></td></tr><tr><td>5</td><td>No Correction</td><td></td></tr></table>
1 step of the lamp voltage equals 0.5 V for N-American, and 1.0 V for European machines.
See "Detailed Section Descriptions - Exposure Lamp Voltage Control" for details.</td><td>0 ~ 8
Default = 2</td></tr>
<tr><td>63</td><td>Forced Toner Supply</td><td>Forces the toner bottle to supply toner to the development unit.
This mode starts when the [◈] key is pressed, and stops automatically after the selected time. Use this mode to achieve standard image density when copy quality problems indicate low toner.</td><td>0: 6 seconds
1: 3 seconds</td></tr>
<tr><td>64</td><td>VR Correction Value</td><td>Sets the VR correction value.
Keep this at the default setting.</td><td>Default = 0</td></tr>
<tr><td>66</td><td>TD Sensor Initial Setting</td><td>Performs the TD sensor initial setting.
This SP mode controls the voltage applied to the TD sensor to make the TD sensor output 1.9 ± 0.1 V.
After using SP66, check SP67 to see if the sensor is working correctly.
This mode is started by pressing the [◑] key and stops automatically after about 1 minute. Use this mode only after installing new developer.</td><td></td></tr>
<tr><td>67</td><td>TD Sensor Initial Output Display</td><td>Display the TD sensor initial setting output.</td><td>(0.02 V x displayed value)</td></tr>
</table>

Service Tables

	Mode No.	Function	Settings
68	VL2 Correction Selection	Selects or deselects VL2 correction. *Keep this setting at 0.*	**0: VL2 Correction** 1: No VL2 Correction
69	Imaging Unit Counter Display	Shows the total number of copies made so far by the imaging unit installed in the machine. This counter is reset by SP93. *The first three digits are displayed in the magnification indicator.* *Press the ◑ key to view the last three digits.*	
71	Sorter Operation	Enables sorter operation.	**0: No Sorter** 1: Sorter Installed
74	Special Paper Size Setting	Sets the appropriate paper size for special paper loaded in the paper feed tray. *The "∗" mark on the paper size dial must be selected to use this special feature.* *When the paper feed tray is selected, the appropriate paper size or the "∗" mark will be displayed and the copier will operate in accordance with the set paper size.*	**0: ∗ (Universal)** 1: A3 2: ∗ (Universal) 3: B4 4: A4 5: A4R 6: B5 7: B5R 8: A5 9: B6 13: DLT 14: LG 15: LT 16: LTR 17: HLT 19: F 27: 8 k 28: 16 k (Sideways) 29: 16 k (Lengthwise)
76	Sorter Bin Capacity	Sets the stock quantity limits. If set to 1, the maximum amount of copies depends on the paper size (see the specifications for the sorter).	0: No limit **1: Limit**
77	Auto Shut Off (Energy Star) On/Off	Selects the "Automatic Shut off" mode. *The copier automatically shuts itself off at the auto shut off time selected (SP14).*	**0: Yes** 1: No
78	Auto Energy Saver Mode On/Off	Selects the "Automatic Energy Saver" mode. *The copier automatically goes to Energy Saver mode at the auto reset time selected (SP15).*	0: No **1: Yes**
81	Factory Initialization	Factory use only.	
82	Data Communication	Factory use only.	

Mode No.		Function	Settings
83	Factory Potential Adjustment	Factory use only.	
88	Total Copy Counter Display	Displays the total (electrical) copy counter. *The first three digits are displayed in the magnification indicator.* *Press the ◗ key to view the last three digits.* ***The mechanical total counter and the electrical total counter may not always display the same value, because of initial differences in the counter values.***	
90	Factory Data and Counter Clear	Factory use only.	
93	V_R Correction Reset	Resets the drum residual voltage correction counter for the VR correction. To clear, enter "1" then press the ◑ key and the ◗ key at the same time. ***Use this mode only after installing a new drum.***	**0: No** 1: Yes
94	V_{L2} Correction Reset	Resets the exposure lamp data and counter for the V_{L2} correction. Always perform this mode with SP95 as a set. To Clear, enter "1" then press the ◑ key and the ◗ key at the same time. *Normally not needed in the field, as this is handled by SP48.*	**0: No** 1: Yes
95	V_L Correction Reset	Resets the exposure lamp data and counter for the V_L correction. Always perform this mode with SP94 as a set. To clear, enter "1" then press the ◑ key and the ◗ key at the same time. *Normally not needed in the field, as this is handled by SP48.*	**0: No** 1: Yes
96	Toner End Force Cancel	The Toner End condition is canceled forcibly. *By pressing the ◑ key to enter this SP mode, the toner end condition is canceled.*	
97	Service Call (E5) Reset	Resets a service call (E5) condition. *Turn the main switch off and on to check if the service call condition is reset.*	
98	Total Counter Clear	Clears the total (electrical) counter. **Normally, this SP mode should not be performed.** *To clear, enter "1" then press the ◑ key and the ◗ key at the same time.* *To avoid resetting the counter by mistake, the counter is reset only when the ◑ key and the ◗ key are pressed at the same time.*	0: No 1: Yes

Mode No.		Function	Settings
99	Clear All Memory	Clears all counters and returns all modes to the default settings. See the Clear All Memory Procedure in this section for more details. **Normally, this SP mode should not be performed.** This SP mode is required only when replacing the EEPROM, or when the copier malfunctions due to a damaged EEPROM.	**0: No** 1: Yes
		To clear, enter "1" then press the ◑ key and the ◗ key at the same time. *To avoid resetting the counter by mistake, the counter is reset only when the ◑ key and the ◗ key are pressed at the same time.*	
100	By-pass Feed Copy Counter Display	Displays the total (electrical) copy counter for the by-pass feed table. Since the copy counter for displaying the current SP mode number has only 2 digits, the manual image density indicator is used to display the first digit.	
		The first three digits are displayed in the magnification indicator. *Press the ◗ key to view the last three digits.*	
101	Paper Feed Tray Copy Counter Display	Displays the total (electrical) copy counter for the paper feed tray. Since the copy counter for displaying the current SP mode number has only 2 digits, the manual image density indicator is used to display the first digit.	
		The first three digits are displayed in the magnification indicator. *Press the ◗ key to view the last three digits.*	
106	DF Original Counter Display	Displays the total (electrical) number of originals fed from the DF. Since the copy counter for displaying the current SP mode number has only 2 digits, the manual image density indicator is used to display the first digit.	
		The first three digits are displayed in the magnification indicator. *Press the ◗ key to view the last three digits.*	
130	Total Service Calls	Displays the total number of service call conditions. Since the copy counter for displaying the current SP mode number has only 2 digits, the manual image density indicator is used to display the first digit.	
		The first three digits are displayed in the magnification indicator. *Press the ◗ key to view the last three digits.*	

Mode No.		Function	Settings
131	Total Misfeeds	Displays the total number of misfeeds excluding original misfeeds in the DF. Since the copy counter for displaying the current SP mode number has only 2 digits, the manual image density indicator is used to display the first digit.	
		The first three digits are displayed in the magnification indicator. *Press the ◑ key to view the last three digits.*	

2.6 CLEAR ALL MEMORY PROCEDURE

CAUTION: The Clear All Memory procedure (SP99) resets all the correction data for copy process control and all the software counters, and returns all modes and adjustments to the default settings. Normally, this SP mode should not be performed.
This procedure is required only when replacing the EEPROM or when the copier malfunctions due to a damaged EEPROM.

1. Enter SP99.
2. Enter "1".
3. Press the ◑ key and the ◗ key at the same time.

   NOTE: To avoid resetting the memory by mistake, the memory is reset only when the ◑ key and the ◗ key are pressed at the same time.
4. Turn the main switch off and on.

- Recovering the machine after a memory reset -

CAUTION: If SP99 is performed, all the software counters for process control and the TD sensor initial setting data are reset. As a result, the old drum and the old developer cannot be used any more. Otherwise, dirty background and/or toner scattering will appear on copies sooner or later because proper process control will not be applied to the drum.
After doing SP99, execute the following procedure to return the machine to its normal operating condition.

1. Install a new drum.
2. Install new developer.
3. Clean the optics and inside the copier if necessary.

4. Refer to the "SP MODE FACTORY SETTING DATA" sheet located behind the operation guide sheet installed on the front cover, and enter the data that were stored in the following SP modes at the factory.
   - SP41: Lead Edge Erase Margin
   - SP42: Registration Adjustment
   - SP43: Vertical Magnification Adjustment
   - SP44: Horizontal Magnification Adjustment
   - SP47: Focus Adjustment
   - SP48: Light Intensity Adjustment
5. Perform SP66 (TD Sensor Initial Setting).

   NOTE: The machine will automatically stop when completed. (It takes about 1 minute.)
6. Check the copy quality and the paper path and do any necessary adjustment (see Replacement and Adjustment - Copy Quality Adjustments).

3. PRACTICAL SP MODE USE TABLE

The following table shows the SP modes that must be done, and the order in which they must be done when the listed items are replaced or cleaned.

(Priority Number)

No.	SP Mode No.	Description	Replaced or Cleaned Item				
			Developer	TD Sensor	OPC Drum	ADS Sensor	Optics (Scanner Unit)
1	SP66	TD Sensor Initial Setting	❍	❍			
2	SP93	V_R Correction Reset			❍		
*3	SP48	Light Intensity Adjustment			❍		❍
4	SP56	ADS Reference Voltage Adjustment			❍	❍	❍

***NOTE:** 1) Before performing SP48 (Light Intensity Adjustment), always check to see if the setting of SP33 (Image Bias Adjustment - Manual ID Mode) is set to the default value so that it is possible to adjust the light intensity properly.

2) The V_L and V_{L2} corrections are reset automatically when entering this mode.

4. SERVICE TABLES

4.1 TEST POINTS (Main Control Board)

Number	Label	Monitored Signal
TP101	(HET)	Fusing thermistor output
TP102	(ADS)	Auto image density sensor output
TP103	(ETH)	Optics thermistor output
TP104	(T. CON)	Toner density sensor target control voltage output
TP105	(TV)	Toner density sensor output

4.2 VARIABLE RESISTORS

Number	Location	Function
VR101	Main Control Board	Changes the ADS voltage (2.5 ± 0.1 V)
VR1(VRC)	High Voltage Supply Board - C/G/B/T/S	Changes the charge corona voltage
VR51(VRT)	High Voltage Supply Board - C/G/B/T/S	Changes the transfer corona voltage
VR152(VRB)	High Voltage Supply Board - C/G/B/T/S	Changes the standard development bias (base bias voltage)
VR21(VRG)	High Voltage Supply Board - C/G/B/T/S	Changes the charge grid voltage
VR101(VRD)	High Voltage Supply Board - C/G/B/T/S	Changes the discharge plate voltage

SECTION 5

PREVENTIVE MAINTENANCE

1. PREVENTIVE MAINTENANCE SCHEDULE

1.1 PM TABLE

NOTE: 1) The amounts mentioned as the PM interval indicate the number of copies.

2) Refer to "REGULAR PM PROCEDURE" in this section.

Symbol key: L: Lubricate R: Replace C: Clean I: Inspect A: Adjust

	EM	45 k	90 k	135 k	180 k	Notes
Optics						
Reflector		C	C	C	C	Silicone cloth
1st to 5th Mirrors		C	C	C	C	Silicone cloth
6th Mirror		C	C	C	C	Blower brush
Lens		C	C	C	C	Blower brush
Exposure Glass	C	C	C	C	C	Soft cloth dampened with alcohol or water
Platen Cover Sheet	C	C	R	C	R	Soft cloth dampened with water
Scanner Guide Rod		C, L	C, L	C, L	C, L	Dry cloth, Grease - CPL501
Scanner Guide Rail		C, L	C, L	C, L	C, L	Dry cloth, Silicone Grease - G501
4th/5th Mirror Guide Rod		C, L	C, L	C, L	C, L	Dry cloth, Silicone Grease - G501
4th/5th Mirror Guide Rail		C, L	C, L	C, L	C, L	Dry cloth, Silicone Grease - G501
Blue Filter		C	C	C	C	Soft cloth
Exposure Lamp/1st Scanner Ass'y						Replace at 200 k copies
Around the Drum						
Charge Corona Wire	C	R	R	R	R	Blower brush
Transfer Corona Wire	C	C	R	C	R	Blower brush
Charge Corona Grid			R		R	
Transfer Guide Plate	C	C	C	C	C	Soft cloth
End Blocks and Casings		C	C	C	C	Blower brush or dry cloth
Charge Corona Cleaning Pad	I	R	R	R	R	
Erase Lamp	C	C	C	C	C	Blower brush or dry cloth
QL	C	C	C	C	C	Blower brush or dry cloth
Discharge Plate		R	R	R	R	
Cleaning						
Cleaning Blade		R	R	R	R	Apply setting powder
Inside the Cleaning Unit		C	C	C	C	Remove all toner and developer

	EM	45 k	90 k	135 k	180 k	Notes
Cleaning Entrance Seal		C	C	C	C	Dry cloth. Replace if necessary
Development Unit						
Developer		R	R	R	R	
Development Unit Entrance Seal		I	I	I	I	
Toner Supply Drive Gear		I	I	I	I	
Development Drive Gear		L	L	L	L	Grease - CPL501
Imaging Unit Lower Cover		C	C	C	C	Dry cloth
Paper Feed (for each paper feed station)						
Feed Roller	C		R		R	Soft cloth dampened with water
By-pass Feed Roller	C		R		R	Soft cloth dampened with water
Friction Pad	C		R		R	Soft cloth dampened with water
Tray Bottom Plate Pad	C	C	R	C	R	Soft cloth dampened with water
By-pass Bottom Plate Pad	C	C	C	C	C	Soft cloth dampened with water
Registration Roller	C	C	C	C	C	Soft cloth dampened with water
Paper Feed Guide		C	C	C	C	Soft cloth dampened with water
Paper Dust Mylar	C	C	C	C	C	Soft cloth
Fusing						
Hot Roller		R	R	R	R	
Pressure Roller		R	R	R	R	
Stripper Pawls		C	C	R	C	Suitable solvent
Fusing Entrance and Exit Guide Plates		C	C	C	C	Suitable solvent
Fusing Thermistor		C	C	C	C	Suitable solvent
Hot Roller Bearings		C, L	C, L	C, L	C, L	Barrierta JFE55/2
Pressure Roller Bearings		I	I	I	I	
Others						
ADS	A					Adjust when the lamp voltage is changed.
Exit and Registration Sensors			I		I	
Bearings		I	I	I	I	
Ozone Filter		R	R	R	R	
Driving Belts		I	I	I	I	

	EM	24 k	48 k	Notes
DOCUMENT FEEDER (A662) (for originals)				
Transport Belt	C	R	R	Belt cleaner
Friction Belt	C	R	R	Belt cleaner
Pick-up Roller	C	C	C	Soft cloth dampened with water
Feed Roller	C	C	C	Soft cloth dampened with water

	EM	Notes
SORTER (A657)		
Bin Guide/Wheel	L	Silicone Grease - G501: If movement is not smooth.
Bushings	L	Launa oil: If bushings generate noise.
Exit Rollers	C	Alcohol

1.2 REGULAR PM PROCEDURE

Every 45 k Every 90 k Others

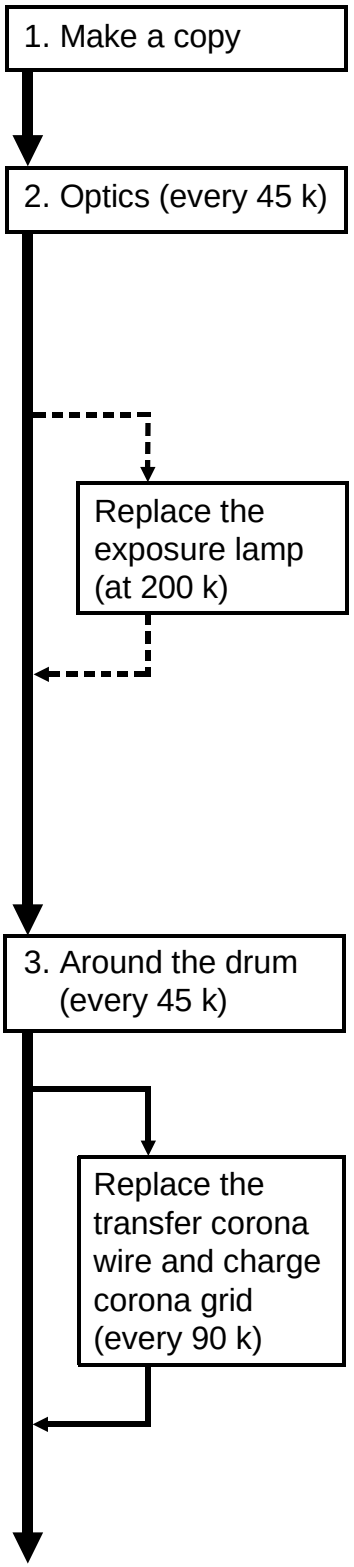

Make a copy of an OS-A3 test chart at manual image density level 4.

1. Clean the reflector and 1st to 5th mirrors with a silicone cloth.
2. Clean the 6th mirror and lens with a blower brush.
3. Clean the exposure glass with a soft cloth dampened with alcohol or water.
4. Clean the platen cover sheet with a soft cloth dampened with water (replace every 90 k).
5. Lubricate the scanner guide rod with Grease - CPL501.
6. Remove the oil on the scanner guide rail, 4th/5th mirror guide rail, and 4th/5th mirror guide rod. Then lubricate them all with Silicone Grease - G501.
7. Clean the blue filter with a silicone cloth.

1. Clean the transfer corona wire, the transfer entrance guide plate, and the charge corona grid with a blower brush or dry cloth.
2. Clean the end blocks and casings with a blower brush or dry cloth.
3. Remove the old developer.

4. Remove all toner, developer and the drum from the imaging unit. Clean the **whole** imaging unit, especially the lower cover with a dry cloth.
5. Inspect the development entrance seal, toner supply drive gear, and development drive gears in the imaging unit (lubricate the latter with 2 or 3 spots of CPL501).
6. Install new developer.
7. Clean the cleaning entrance seal and replace the cleaning blade. Apply setting powder evenly on the surface and edge of the new cleaning blade.
8. Clean the erase lamp and the quenching lamp with a blower brush or dry cloth.
9. Replace the charge corona wire and charge corona cleaning pad.
10. Replace the discharge plate.

6. Paper Feed (every 45 k)

1. Clean the bottom plate pad with a soft cloth dampened with water.
2. Clean the registration roller with a soft cloth dampened with water.
3. Clean the paper feed guide with a soft cloth dampened with water.
4. Clean the paper dust mylar with a soft dry cloth.

Replace the feed roller, by-pass feed roller, friction pad and tray bottom plate pad (every 90 k)

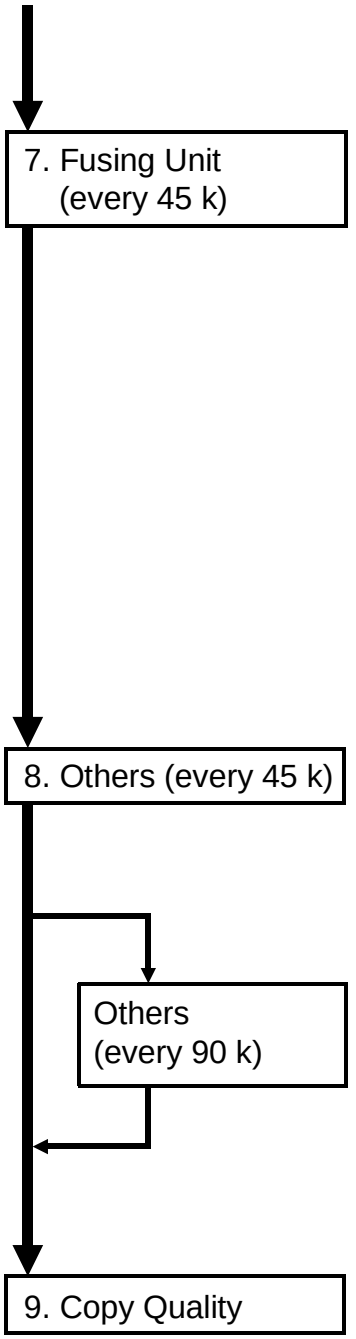

1. Clean the stripper pawls with a suitable solvent. (Replace every 135 k.)
2. Clean the fusing entrance and exit guide plates with a suitable solvent.
3. Clean the fusing thermistor with a suitable solvent.
4. Replace the hot and pressure rollers.
5. Clean the inside of the hot roller bearings and lubricate with Barrierta JFE55/2.
6. Inspect the pressure roller bearings.

1. Replace the ozone filter.
2. Inspect the bearings and the drive belts.

1. Inspect the exit and registration sensors.

1. Open SP33 (Image Bias Adjustment - Manual ID Mode) and turn the setting to the normal value if it has been changed.
2. Make a copy of a test chart at manual image density level 4. Perform the light intensity adjustment (SP48).
3. Perform the ADS reference voltage adjustment (SP56).

2. SPECIAL TOOLS AND LUBRICANTS

Part Number	Description	Q'ty
A184 9501	Scanner Positioning Pin (2 pcs/set)	1
5420 9516	Test Chart - OS-A3 (10 pcs/set)	1
5442 9103	Launa Oil	1
5203 9501	Silicone Grease - G-501	1
5420 9507	Digital Multimeter	1
5442 9101	Setting Powder	1
A028 9300	Grease Kok Barrierta - JFE 55/2	1
A190 9002	Grease - CPL501 (5 pcs/set)	1

SECTION 6

REPLACEMENT AND ADJUSTMENT

1. EXTERIOR AND INNER COVERS

1.1 EXTERIOR COVER REMOVAL

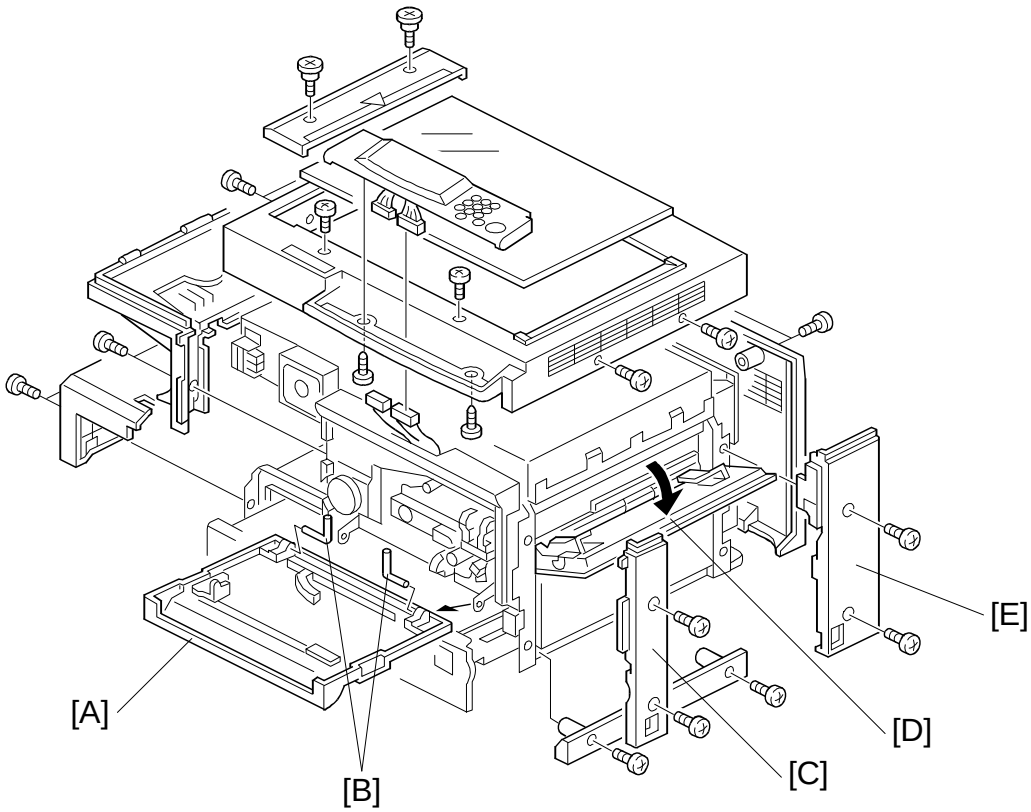

A219R500.wmf

1.1.1 Front Cover

1. Open the front cover [A].
2. Remove the front cover [A] (2 locking pins [B]).

1.1.2 Front Right Cover

1. Remove the front right cover [C] (2 screws).

1.1.3 Rear Right Cover

1. Open the by-pass feed table [D].
2. Remove the rear right cover [E] (2 screws).

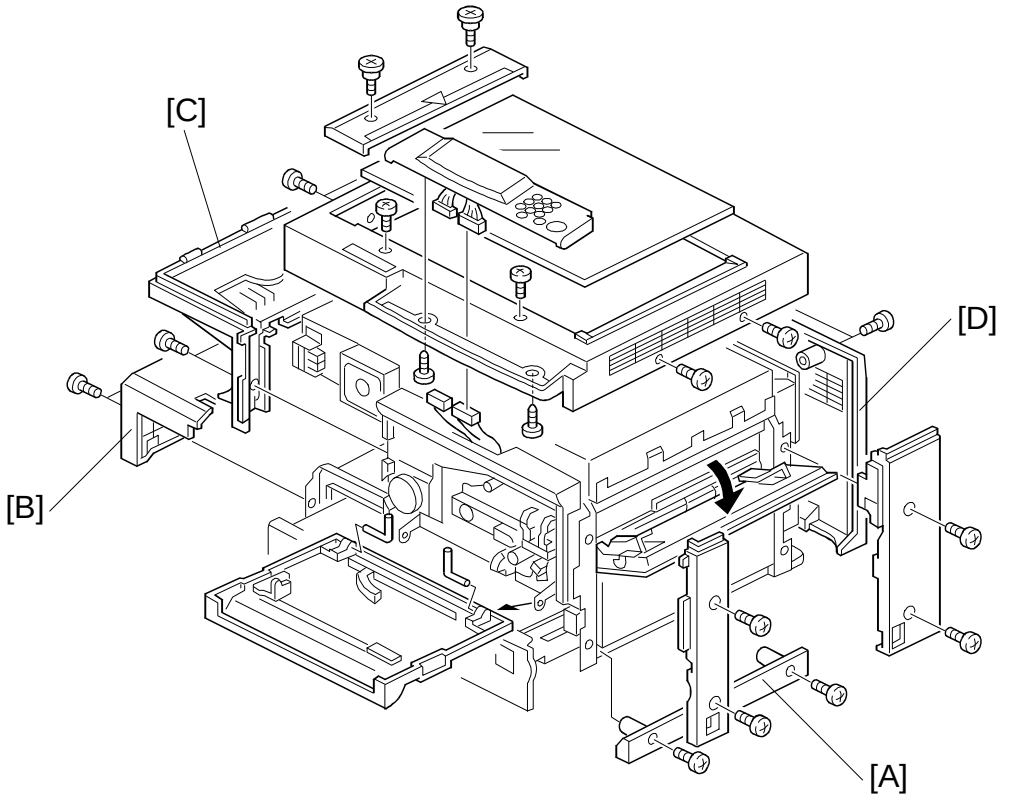

A219R500-2.wmf

1.1.4 Lower Right Cover

1. Remove the lower right cover [A] (2 screws).

1.1.5 Lower Left Cover

1. Remove the lower left cover [B] (2 screws).

1.1.6 Upper Left Cover

1. Remove the lower left cover [B] (2 screws).
2. Remove the upper left cover [C] (2 screws).

1.1.7 Rear Cover

1. Remove the rear cover [D] (2 screws).

1.1.8 Upper Cover

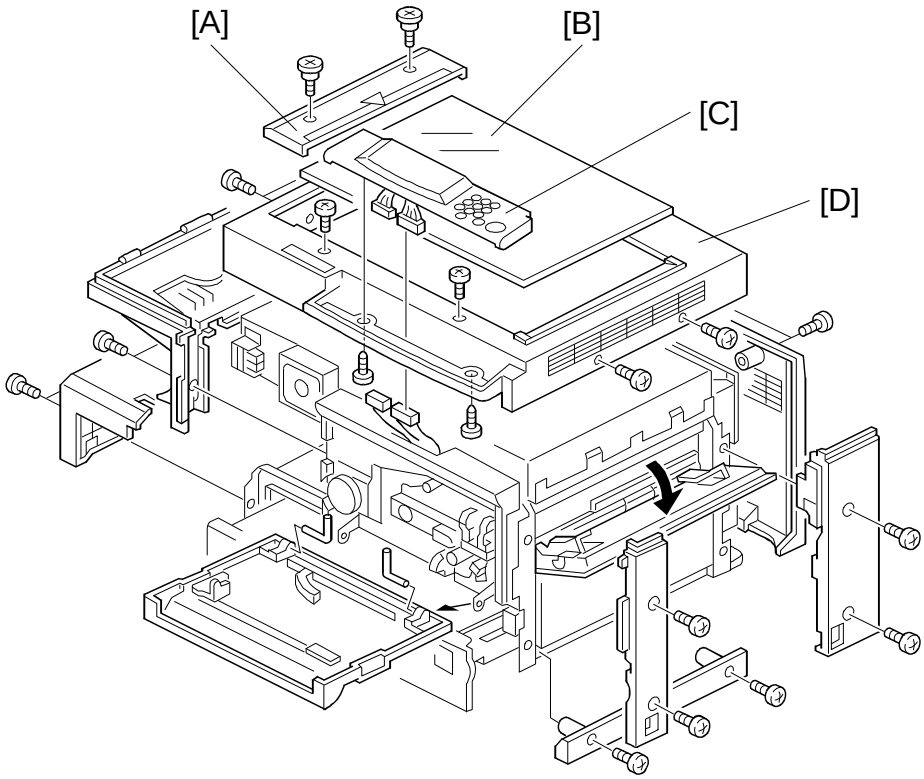

A219R500-3.wmf

1. Turn off the main switch and unplug the power supply cord.
2. Remove the platen cover or DF.
3. Remove the left side scale [A] (2 screws).
4. Remove the exposure glass [B]. (See Exposure Glass Removal.)
5. Remove the operation panel [C] from the upper cover (2 screws and 2 connectors).
6. Remove the upper cover [D] with the operation panel (8 screws).

1.2 INNER COVER REMOVAL

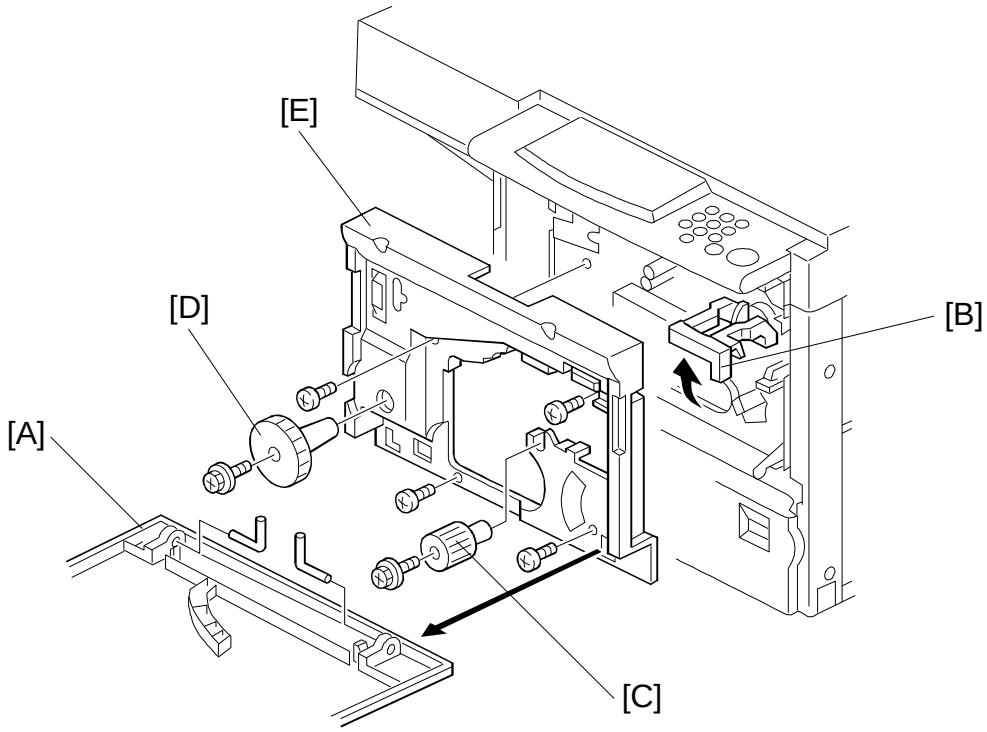

A219R501.wmf

1. Open and remove the front cover [A]. (See Front Cover Removal.)
2. Pull up the toner supply unit lever [B].
3. Remove the registration knob [C] and the fusing unit knob [D] (1 screw each).
4. Remove the inner cover [E] (4 screws).

2. OPTICS

2.1 EXPOSURE GLASS REMOVAL

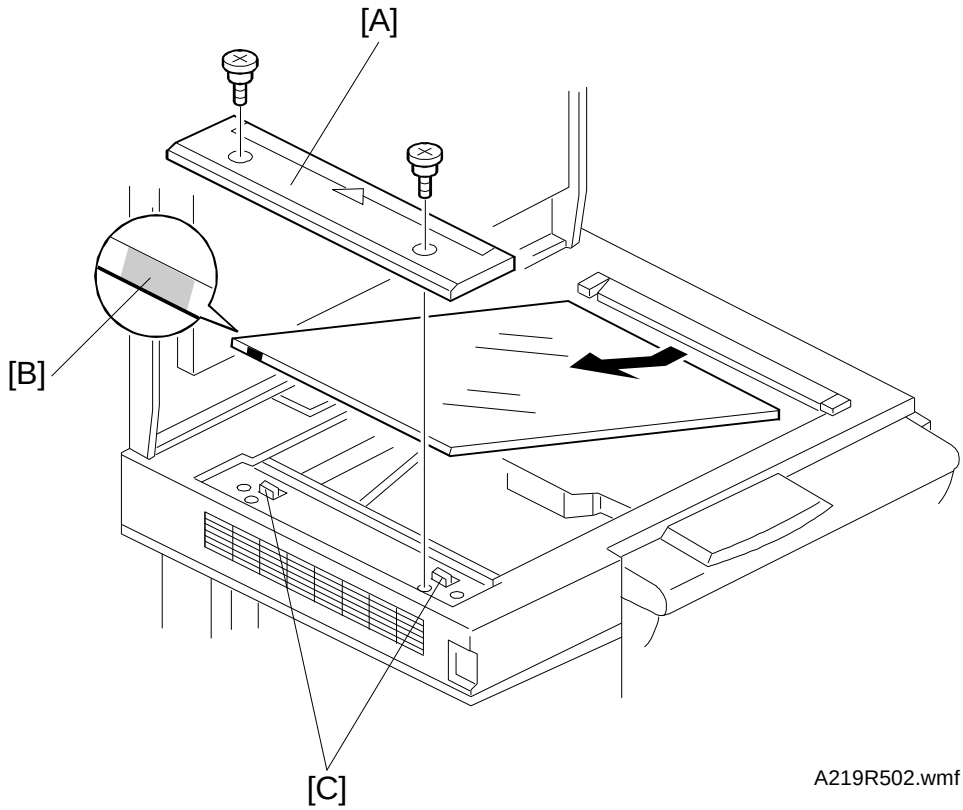

1. Remove the left scale [A] (2 shoulder screws).
2. To remove the exposure glass, grasp the left edge of the exposure glass and lift it up, then slide the other edge out from under the right glass holder.

   NOTE: 1) Position the red mark [B] at the upper left corner. This side is smoother and generates less static electricity when in DF mode.

   2) When reinstalling the exposure glass, ensure the left edge of the glass is flush with the tabs [C] to the left of the scale plate, and the right glass holder firmly secures the exposure glass.
3. Check the image quality. Do the Copy Quality Adjustments if necessary (see Copy Quality Adjustments).

2.2 1ST SCANNER/EXPOSURE LAMP REMOVAL

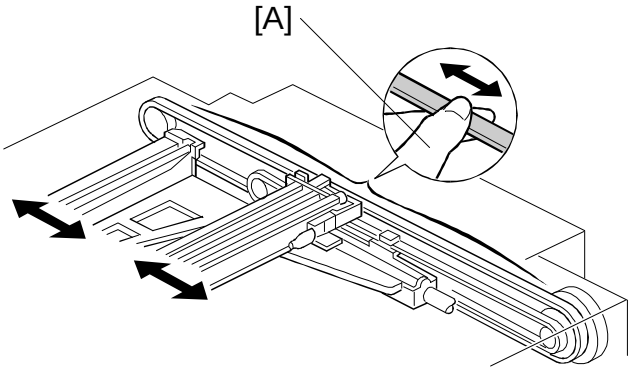

A219R508.wmf

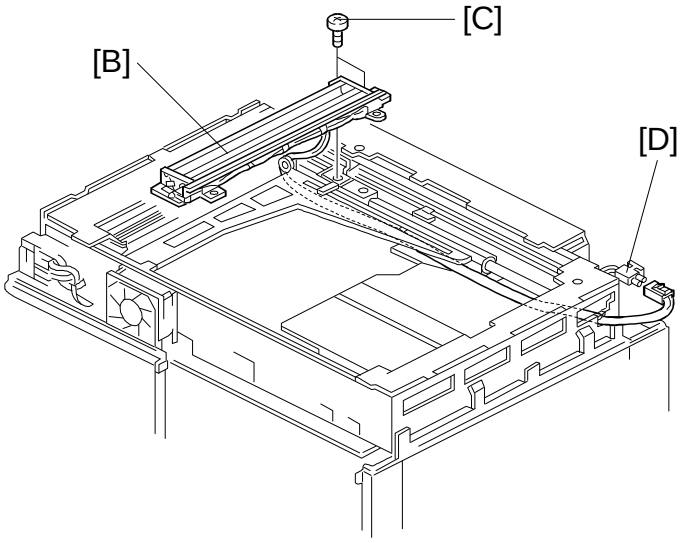

A219R528.wmf

1. Turn off the main switch and unplug the power supply cord.
2. Remove the platen cover or DF.
3. Remove the exposure glass. (See Exposure Glass Removal.)
4. Remove the upper cover. (See Upper Cover Removal.)
5. Remove the rear cover. (See Rear Cover Removal.)
6. Move the 1st scanner 150 mm from the left scale, as shown by [A].

CAUTION: To move the 1st scanner, pull the scanner belt. Do not apply force to the scanner directly.

7. Remove the 1st scanner [B] (2 screws [C] and 1 connector [D]).

NOTE: The 1st scanner contains the exposure lamp.

-Reinstallation-

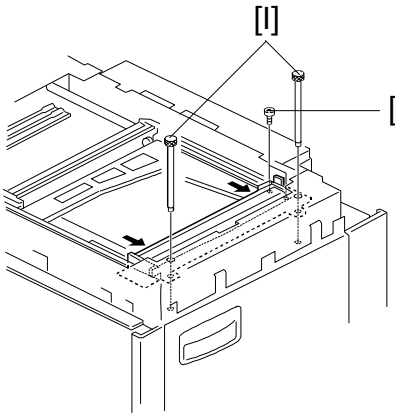

A219R509.wmf

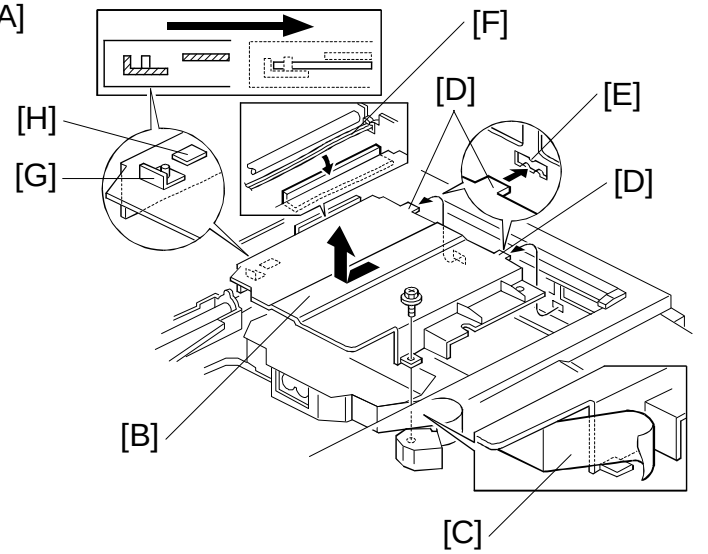

A219R527-2.wmf

1. Reinstall the 1st scanner. (2 screws [A]; do not fully tighten the screws.)
2. Remove the lens cover [B].

   NOTE: When replacing the lens cover, be sure to:
   - Position the ribbon cable [C] so that it is not caught by the cover, as shown.
   - Insert the tabs [D] into the slots [E].
   - Position the harness [F] alongside the cover, as shown.
   - Position the cover pin [G] and tab [H] as shown.
3. Slide the 1st scanner fully to the right. Line up and insert the two scanner locking pins [I].

   NOTE: Scanner positioning pins are available as a service part. P/N: A184 9501 (See the Parts Catalog.)
4. Connect the two connectors and secure the harness to the clamps.
5. Tighten the two screws [A] to secure the 1st scanner.
6. Remove the scanner positioning pins [I].
7. Install the lens cover, the exposure glass and exterior covers.
8. Check the image quality. Perform the Focus Adjustment (see Focus Adjustment) and the Horizontal Magnification Adjustment (see Horizontal Magnification Adjustment), if necessary.

2.3 SCANNER BELT REMOVAL

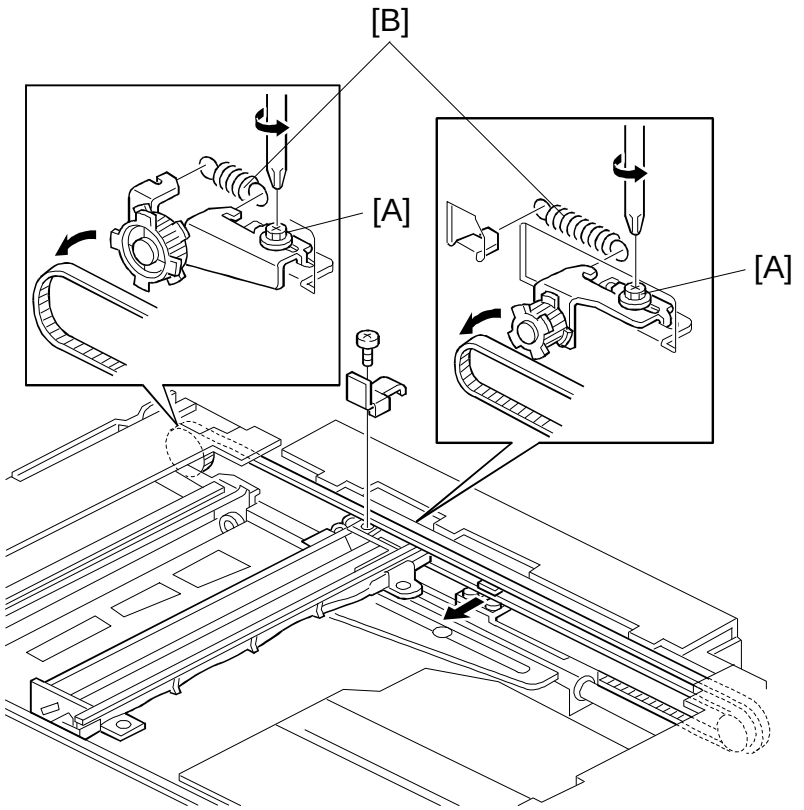

A219R510.wmf

1. Turn off the main switch and unplug the power supply cord.
2. Remove the platen cover or DF.
3. Remove the exposure glass. (See Exposure Glass Removal.)
4. Remove the upper cover. (See Upper Cover Removal.)
5. Remove the rear cover. (See Rear Cover Removal.)
6. Loosen the two screws [A] securing the wire tension brackets, as shown.
7. Remove the two springs [B].
8. Remove the 1st scanner and the 2nd scanner.
9. Replace the scanner belts.
10. Reassemble.
11. Adjust the position of the 1st scanner and the 2nd scanner. (See 1st And 2nd Scanner Adjustment.)

2.4 1ST AND 2ND SCANNER POSITION ADJUSTMENT

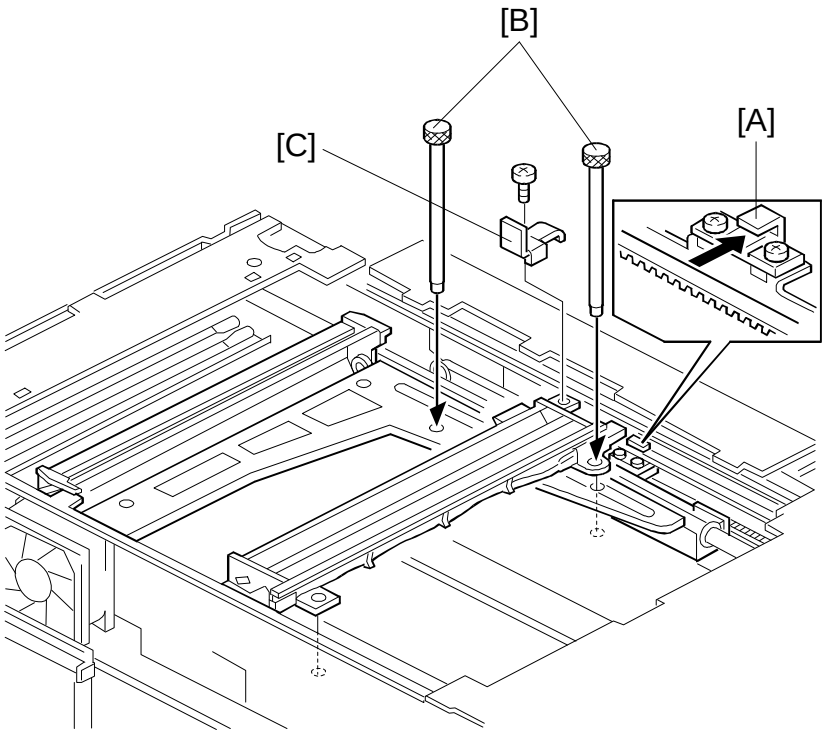

A219R511.wmf

NOTE: Adjust when replacing the scanner belt or the 2nd scanner.

1. Turn off the main switch and unplug the power supply cord.
2. Remove the upper cover. (See Upper Cover Removal.)
3. From the 1st Scanner Reinstallation procedure, loosen the two screws in step 1, then do steps 2-5.
4. Attach the short belt to the clamp [A] to connect the two scanners.
5. Move the lens to the rightmost position.
6. Insert two positioning pins [B] in the holes to secure the 1st and 2nd scanners.

   NOTE: To move the scanners, pull the scanner belt. Do not apply force to the scanners directly.
7. Attach the long belt to the the clamp [C] to connect the two scanners.
8. Check the image quality. Perform the Focus Adjustment (see Focus Adjustment., and the Horizontal Magnification Adjustment (see Horizontal Magnification Adjustment) if necessary.

2.5 SCANNER DRIVE MOTOR REMOVAL

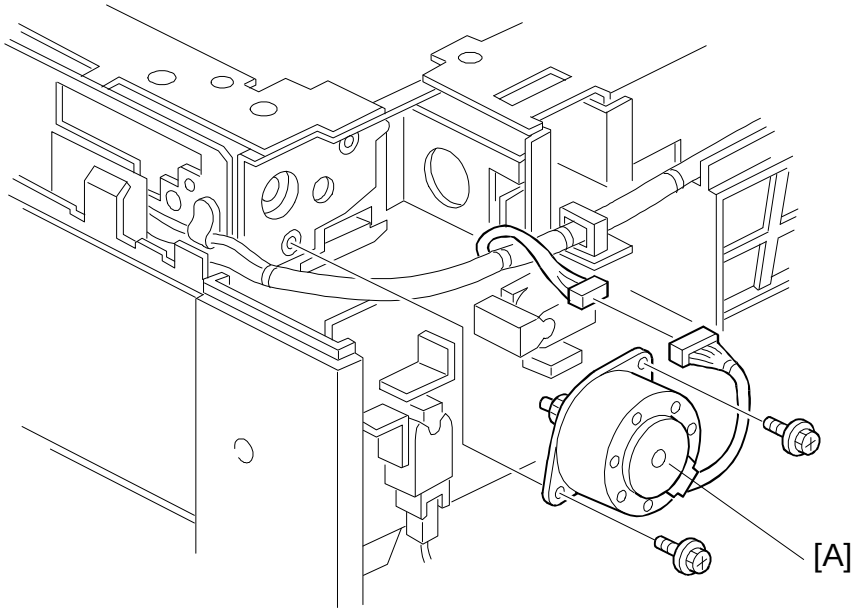

A219R503.wmf

1. Turn off the main switch and unplug the power supply cord.
2. Remove the upper cover. (See Upper Cover Removal.)
3. Remove the motor [A] (2 screws and 1 connector).

2.6 LENS DRIVE MOTOR REMOVAL

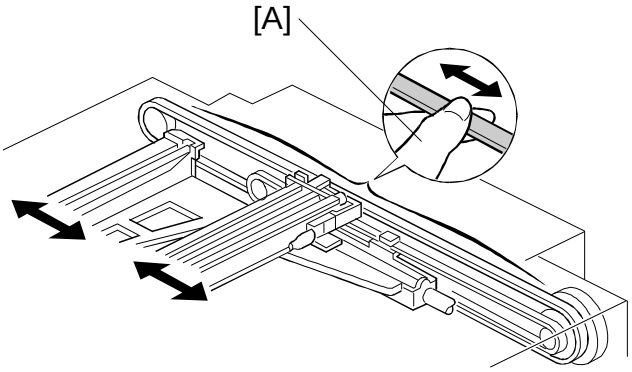

A219R508-2.wmf

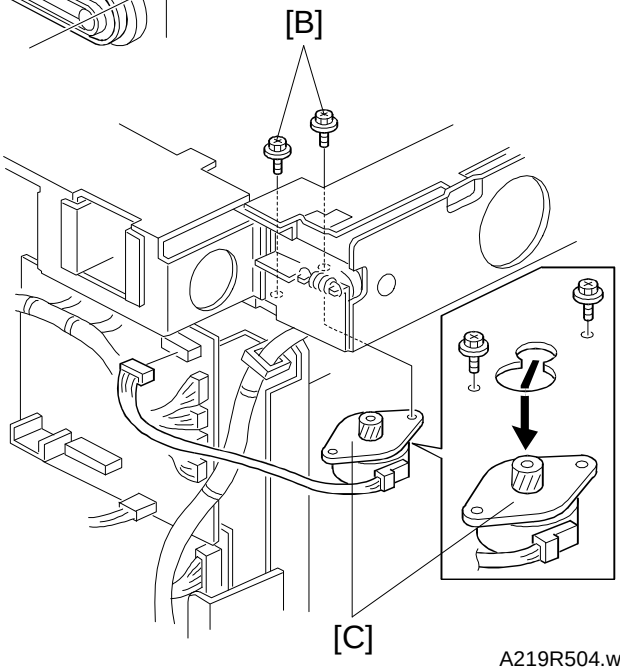

A219R504.wmf

1. Turn off the main switch and unplug the power supply cord.
2. Remove the upper cover. (See Upper Cover Removal.)
3. Remove the lower left cover. (See Lower Left Cover Removal.)
4. Remove the upper left cover. (See Upper Left Cover Removal.)
5. Move the 1st scanner away from the left scale, as shown by [A].

CAUTION: To move the 1st scanner, pull the scanner belt. Do not apply force to the scanner directly.

6. Remove the two screws [B].
7. Slide the motor [C] as shown, and remove it (1 connector).

2.7 4TH/5TH MIRROR DRIVE MOTOR REMOVAL

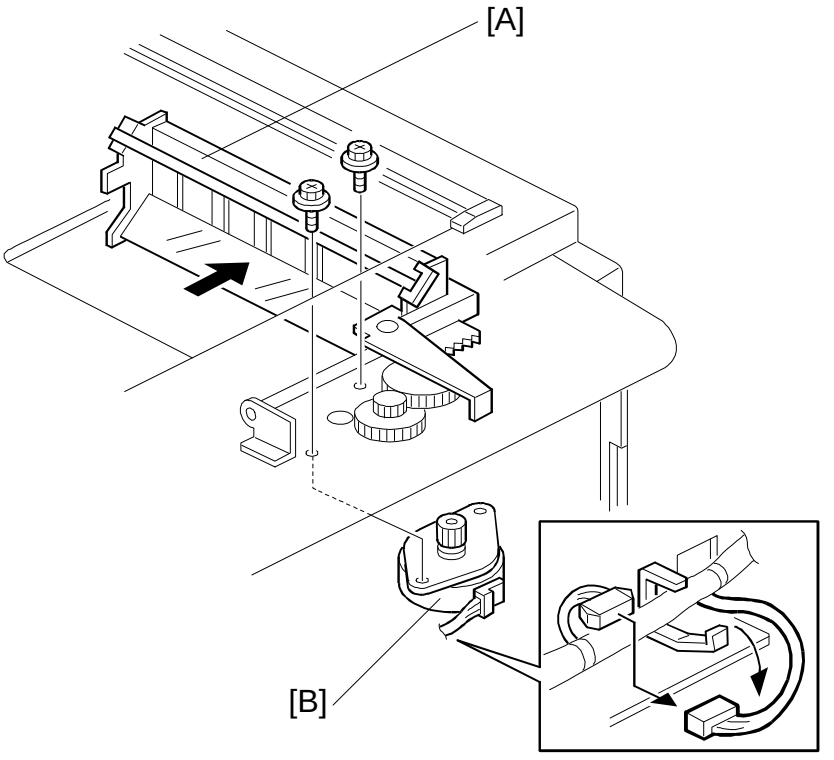

A219R505.wmf

1. Turn off the main switch and unplug the power supply cord.
2. Remove the inner cover. (See Inner Cover Removal.)
3. Remove the toner supply unit.
4. Remove the imaging unit. (See Imaging Unit Removal.)
5. Move the 4th/5th mirror unit [A] to the rightmost position.
6. Remove the motor [B] (2 screws and 1 connector).

2.8 2ND MIRROR REPLACEMENT

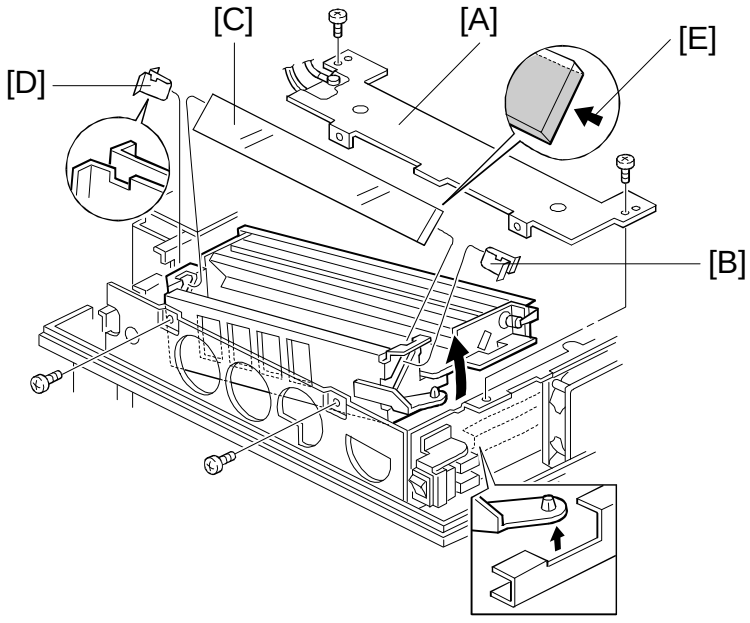

A219R526.wmf

1. Turn off the main switch and unplug the power supply cord.
2. Remove the upper cover. (See Upper Cover Removal.)
3. Move the 1st scanner to home position.

CAUTION: To move the 1st scanner, pull the scanner belt. Do not apply force to the scanner directly.

4. Remove the bracket [A] (4 screws).
5. Lift up the 1st scanner to remove the front 2nd mirror spring plate [B].
6. Carefully shift the 2nd mirror [C] toward the front of the machine to remove the rear spring plate [D].
7. Remove the 2nd mirror.
8. Reassemble.

- To reinstall -

1. Place the 2nd mirror in the front and rear side plate cutouts.

   NOTE: Make sure that the reflecting surface [E] faces the lens.

2. Set the rear spring plate in the rear side plate cutout while holding the mirror, then set the front spring plate in the front side plate cutout.

   NOTE: 1) Make sure that the notches in the spring plate are positioned as shown.

   2) Do not touch the reflecting surface with bare hands.

2.9 3RD MIRROR REPLACEMENT

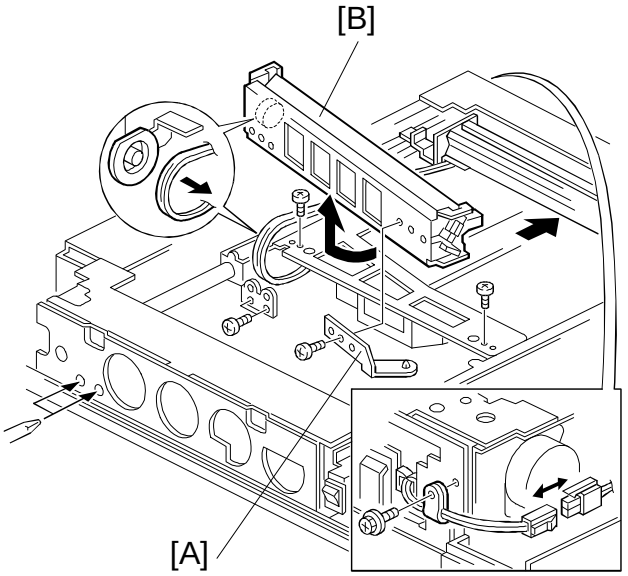

A219R506.wmf

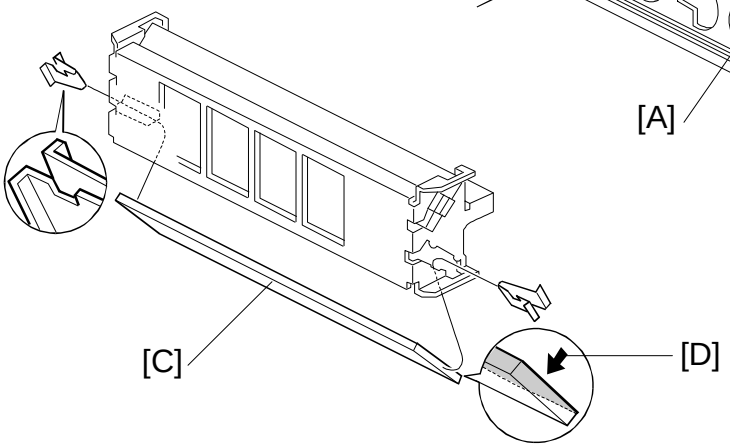

A219R507.wmf

1. Turn off the main switch and unplug the power supply cord.
2. Remove the upper cover. (See Upper Cover Removal.)
3. Move the 1st scanner two thirds of the way from the left scale, as shown.

CAUTION: To move the 1st scanner, pull the scanner belt. Do not apply force to the scanner directly.

4. Remove the bracket [A] (1 screw).
5. Remove the 2nd scanner [B], as shown (4 screws, 1 connector).

CAUTION: 1) When removing the 2nd scanner, do not bend the bracket.
2) When reinstalling the 2nd scanner, thread the harness around the pulley.

6. Replace the 3rd mirror [C] in the same way as the 2nd mirror.

NOTE: Make sure that the reflecting surface [D] faces the lens.

2.10 4TH AND 5TH MIRROR REPLACEMENT

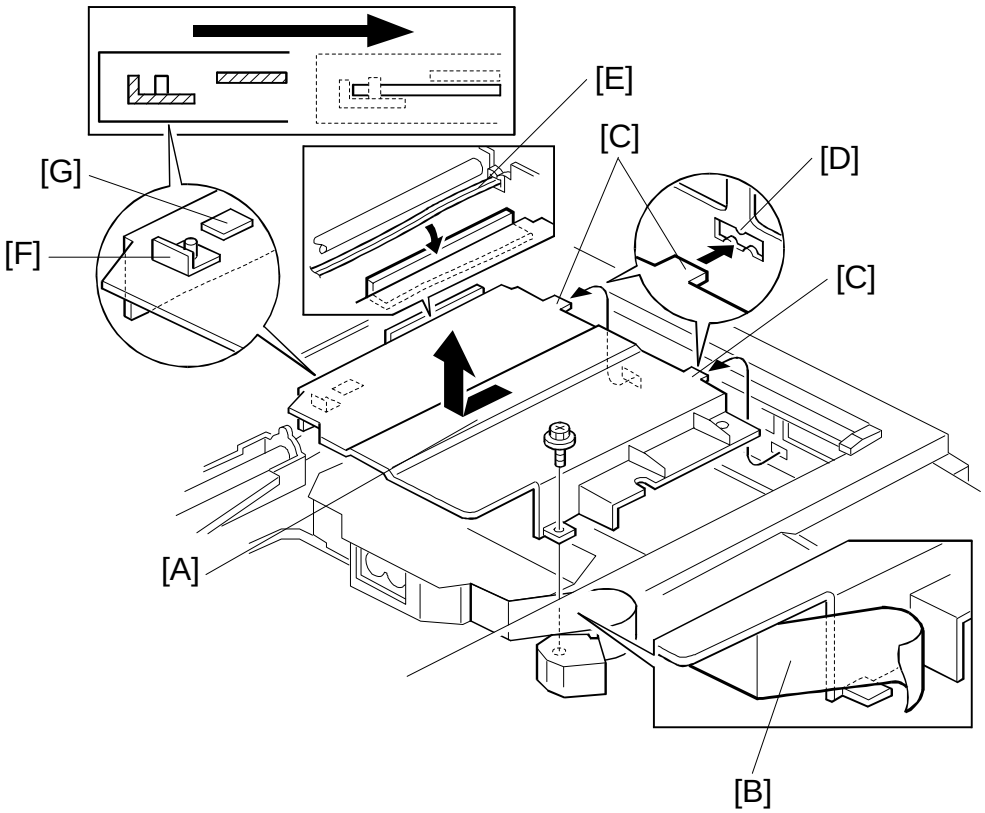

A219R527.wmf

1. Turn off the main switch and unplug the power supply cord.
2. Remove the upper cover. (See Upper Cover Removal.)
3. Remove the lens cover [A].

NOTE: When replacing the lens cover, be sure to:

- Position the light shield [B] so that it is not caught by the cover, as shown.
- Insert the tabs [C] into the slots [D].
- Position the harness [E] alongside the cover, as shown.
- Position the cover pin [F] and tab [G] as shown.

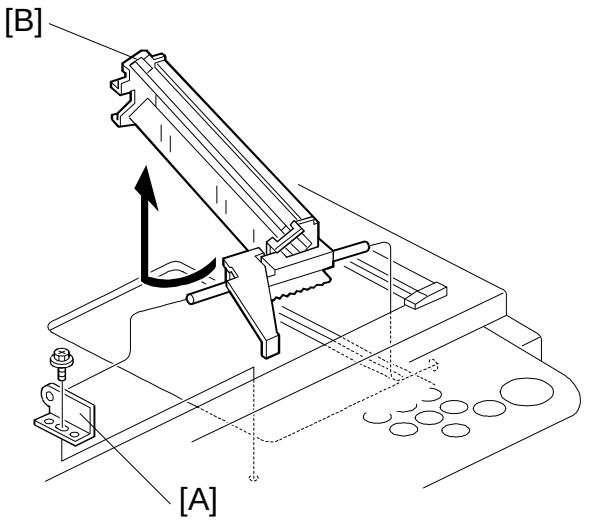

A219R531.wmf

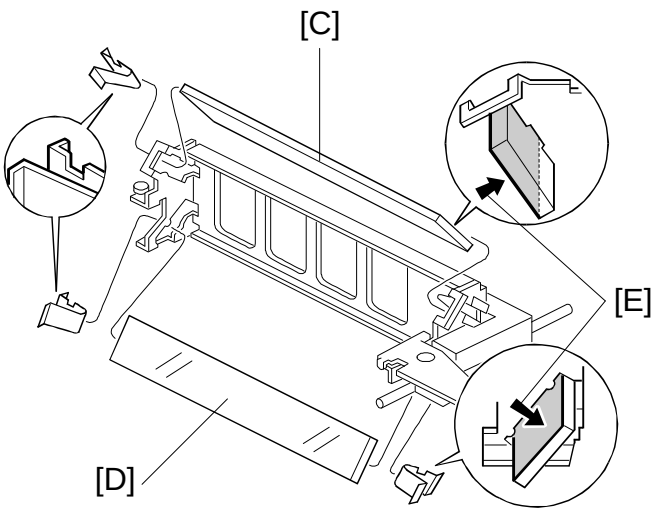

A219R532.wmf

4. Remove the 4th/5th mirror unit.
   1) Remove the bracket [A].
   2) Remove the 4th/5th mirror unit [B], as shown.
5. Replace the 4th and 5th mirrors [C, D] in the same way as the 2nd mirror.
   NOTE: Make sure that the reflecting surface [E] faces the lens.

2.11 ADS SENSOR REPLACEMENT

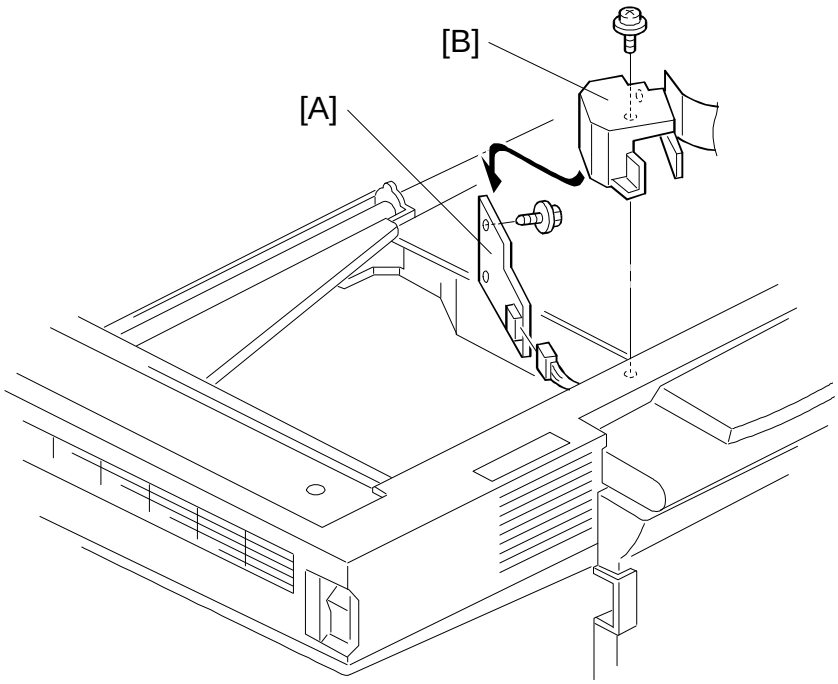

A219R566.wmf

1. Turn off the main switch and unplug the power supply cord.
2. Remove the exposure glass. (See Exposure Lamp Removal.)
3. Remove the ADS sensor [A] and cover [B] as an ass'y (1 screw and 1 connector).
4. Replace the ADS sensor [A] (1 screw).
5. Reassemble.
6. Perform the ADS reference voltage adjustment. (See ADS Adjustment.)

3. AROUND THE DRUM

3.1 IMAGING UNIT REMOVAL AND TONER BOTTLE REMOVAL

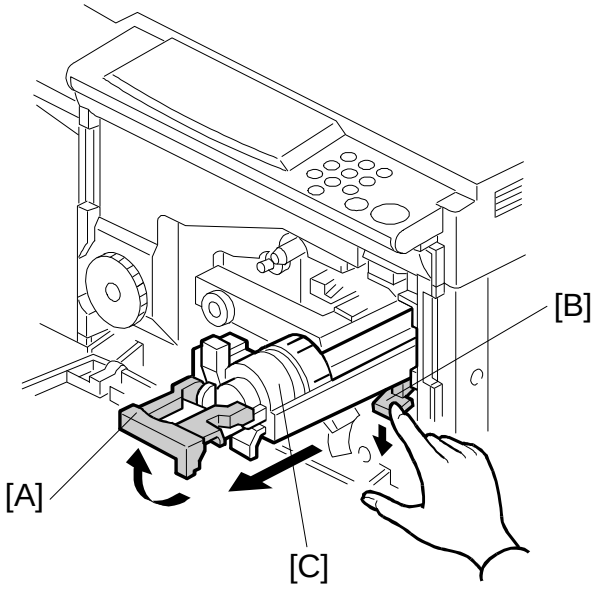

A219R516.wmf

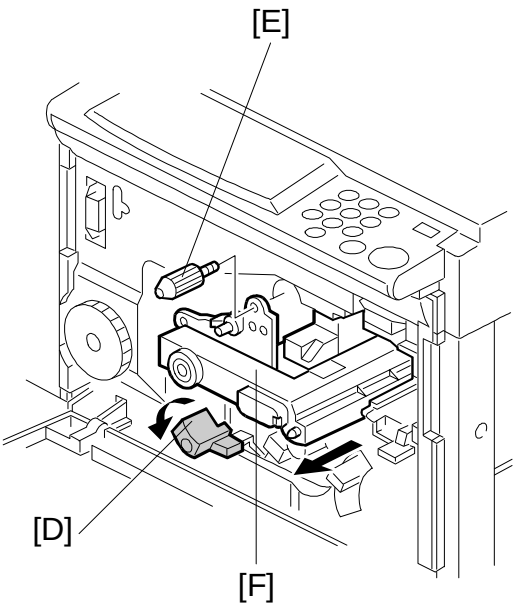

A219R517.wmf

1. Open the front cover.
2. Raise the toner bottle holder lever [A] as shown.
3. Then push down the securing lever [B], and remove the toner bottle holder [C].
4. Turn the "B1" lever [D] counterclockwise to lower the transfer corona unit.
5. Remove the transfer corona unit or cover it with a clean sheet of paper.
6. Remove the knob screw [E] and place a sheet of paper under the imaging unit. Gently pull out the imaging unit [F]. Then place it on a clean sheet of paper.

3.2 CHARGE CORONA WIRE AND CHARGE CORONA GRID REPLACEMENT

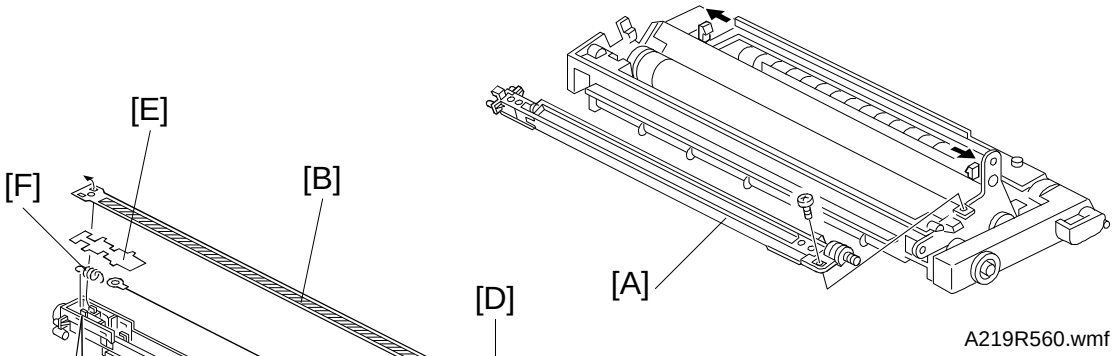

A219R560.wmf

A219R518.wmf

1. Open the front cover.
2. Remove the imaging unit. (See Imaging Unit Removal.)
3. Remove the charge corona unit [A] (1 screw) from the imaging unit.
4. Remove the grid [B] from the charge corona unit, as shown by [C].
5. Remove the front endblock cover [D] and the rear endblock cover [E].
6. Unhook the spring [F] from the corona wire and replace the wire.

NOTE: 1) The new corona wire must be in the groove of the front endblock [F] as shown.

2) Do not handle the new corona wire with bare hands. Oil on the wire may cause uneven charge on the drum.

3) Do not rub the corona wire with rough material (sandpaper, etc.). This will damage the corona wire.

4) Do not use any solvents to clean the wire. This will cause uneven charge on the drum.

5) Do not damage the grid plate when replacing the corona wire.

6) Oils and chemicals from your hands will deteriorate the grid plate.

7) Do not bend the grid plate. This can result in an uneven charging.

3.3 CLEANING BLADE REPLACEMENT

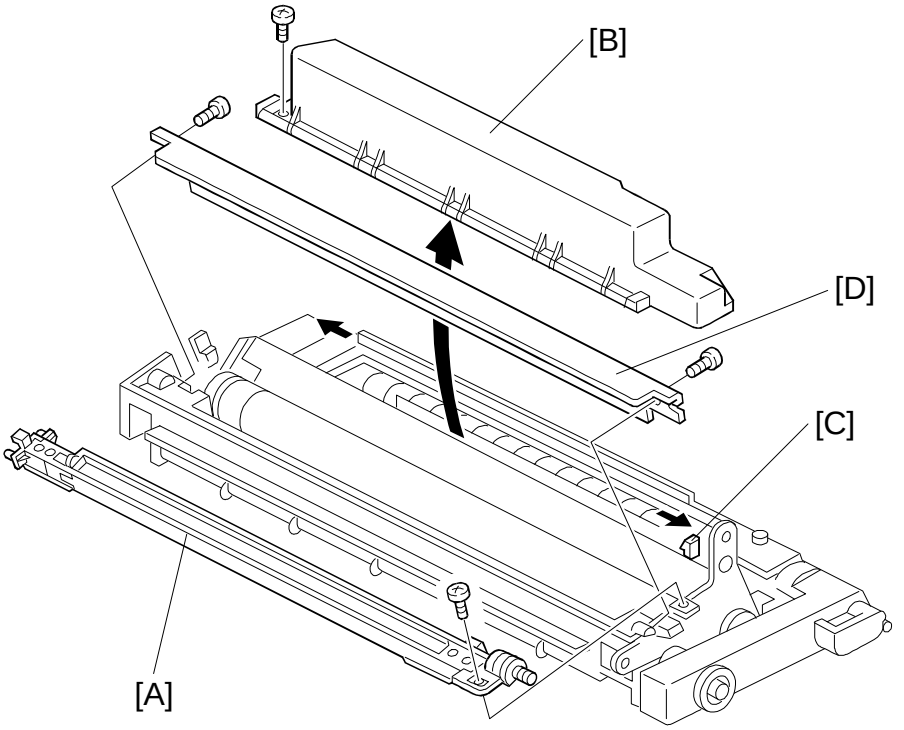

A219R519.wmf

1. Open the front cover.
2. Remove the imaging unit. (See Imaging Unit Removal.)
3. Remove the charge corona unit [A] (1 screw) and development case [B] (1 screw and 1 snap [C]) from the imaging unit.
4. Remove the cleaning blade [D] (2 screws).

NOTE: 1) When removing the cleaning blade, be careful not to scratch the drum surface.

2) When installing a new cleaning blade, apply setting powder to the edge and surface of the cleaning blade.

3.4 DRUM REPLACEMENT

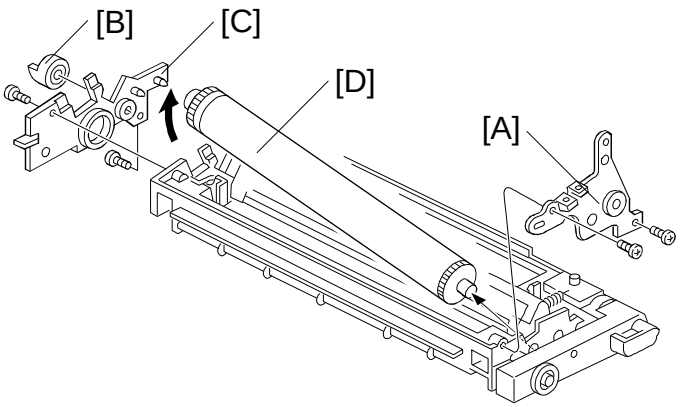

A219R520.wmf

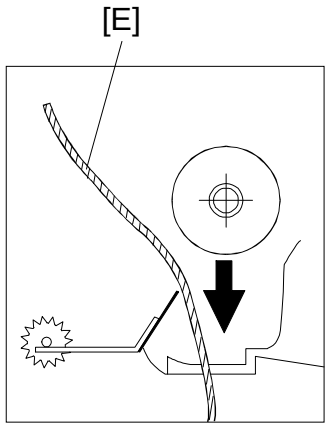

A219R521.wmf

1. Open the front cover.
2. Remove the imaging unit. (See Imaging Unit Removal.)
3. Remove the charge corona unit, cover, and cleaning blade from the imaging unit.
4. Remove the front side plate [A] (2 screws).
5. Remove the outer gear [B] and rear side plate [C] (2 screws).
6. Take the rear edge of the drum [D] and lift it up slightly. Remove the drum.

   NOTE: When removing the drum, take care not to strike it against any objects.
7. Set a sheet of paper [E] in the imaging unit, as shown.
8. Put the new drum in the imaging unit without removing the protective sheet.

   NOTE: When setting the drum, do not bend the entrance seal.
9. Reinstall the outer gear and rear side plate (2 screws).
10. Reinstall the front side plate (2 screws).
11. Remove the protective sheet and apply setting powder evenly on the drum surface.
12. Set the cleaning blade, cover, and charge corona unit in the imaging unit.
13. Reinstall the other units around the imaging unit.
14. Perform SP93.
15. Do SP93. Then clean the optics and make sure that SP33 is at the default. Then do the light intensity adjustment (SP48) and the ADS adjustment (SP56).

3.5 TONER COLLECTION COIL AND TONER RECYCLING BELT REPLACEMENT

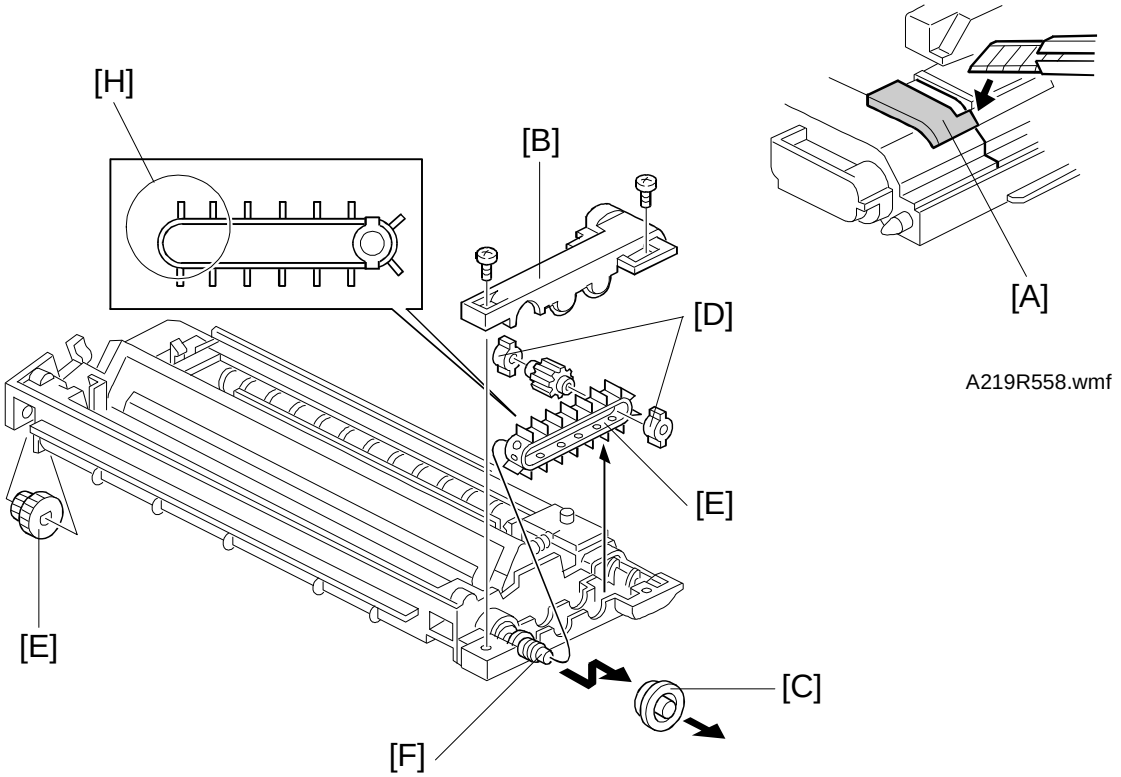

A219R558.wmf

A219R522.wmf

1. Open the front cover.
2. Remove the imaging unit. (See Imaging Unit Removal.)
3. Cut the seal [A] as shown.
4. Remove the toner recycling cover [B] (2 screws).
5. Remove the bearings [C,D].
6. Remove the toner recycling belt [E].
7. Remove the toner collection coil [F].

   NOTE: When removing the toner collection coil, do not lose the rear gear [G].

8. Replace the toner recycling belt and toner collection coil.

   NOTE: When installing a new toner recycling belt, make sure that the belt [H] is properly positioned, as shown.
   When reinstalling the toner recycling cover, make sure that there is no gap between the toner recycle cover and the imaging unit cover.

3.6 DEVELOPER REPLACEMENT

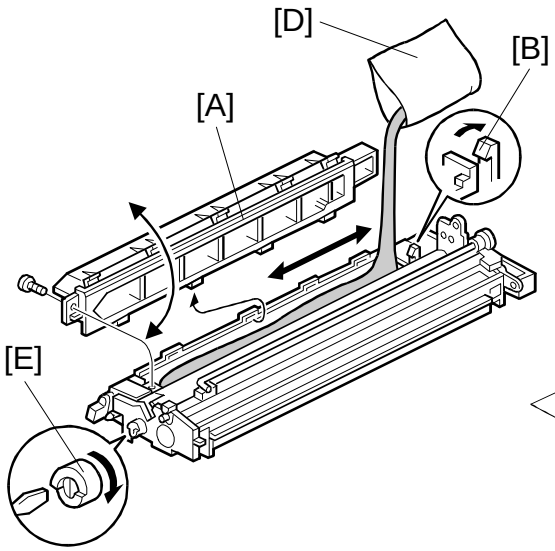

A219R523.wmf

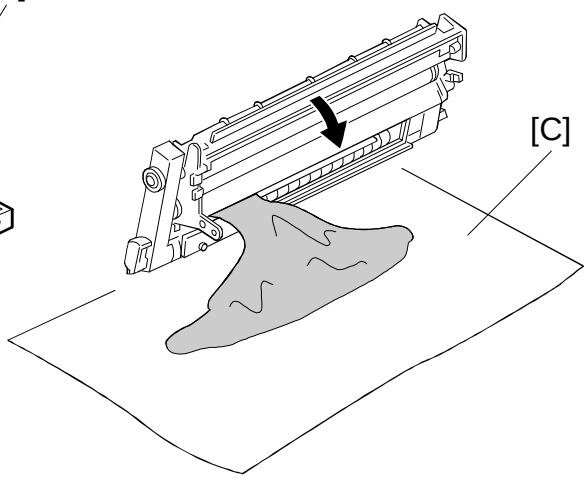

A219R524.wmf

NOTE: When performing the following procedures, make sure that the developer is not spilt in the imaging unit drive gear section.

1. Open the front cover.
2. Remove the imaging unit. (See Imaging Unit Removal.)
3. Set the imaging unit on a large sheet of paper.
4. Remove the development case [A] from the imaging unit (1 screw and 1 snap [B]).
5. Empty all the developer onto the paper [C]. Make sure no developer remains on the development roller or in the unit.

   NOTE: Make sure that no toner remains in the toner recycle.
6. Pour the developer [D] evenly into the imaging unit. Then rotate the outer gear [E] for one or two turns to distribute the developer, as shown.

   NOTE: When installing new developer or manually rotating the development roller, always make sure to turn the gear in the direction shown above. Also, do not rotate the gear more then 3 turns to prevent damage to the unit.
7. Remount the cover on the imaging unit, and reinstall the unit in the copier (1 knob screw).
8. Perform the initial setting for new developer using SP66.
9. Check the copy quality. Adjust if necessary (see Copy Quality Adjustments).

3.7 REPLACEMENT THE TONER DENSITY SENSOR (TD SENSOR)

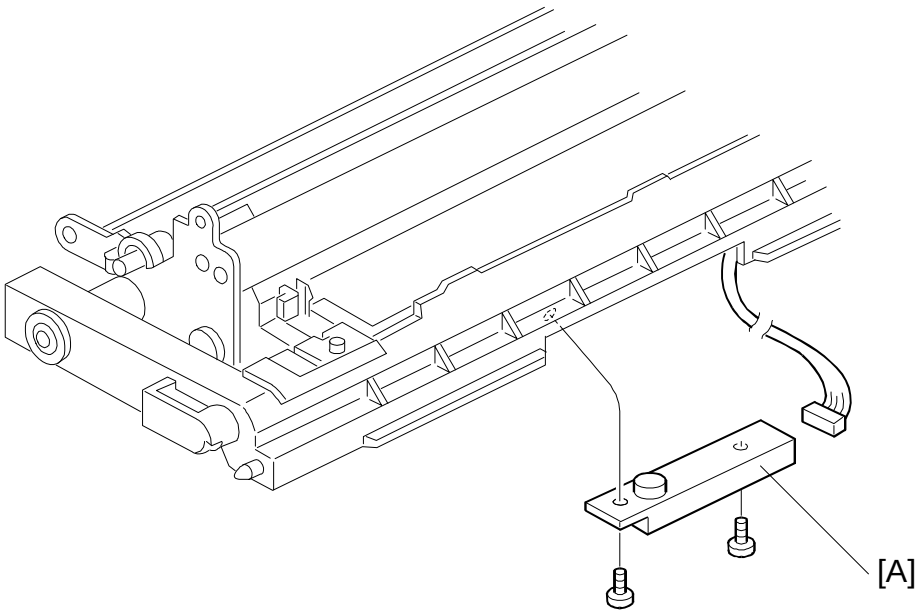

A219R568.wmf

1. Open the front cover.
2. Remove the imaging unit. (See imaging unit Removal.)
3. Empty all the developer on to the paper. (See developer replacement.)
4. Remove the TD sensor [A] (2 screws and 1 connector) from the imaging unit.
5. Replacement the TD sensor.
6. Pour in the new developer evenly into the imaging unit. (See developer replacement.)
7. Reinstall the imaging unit (1 knob screw).
8. Perform SP66.

3.8 AGITATOR REPLACEMENT

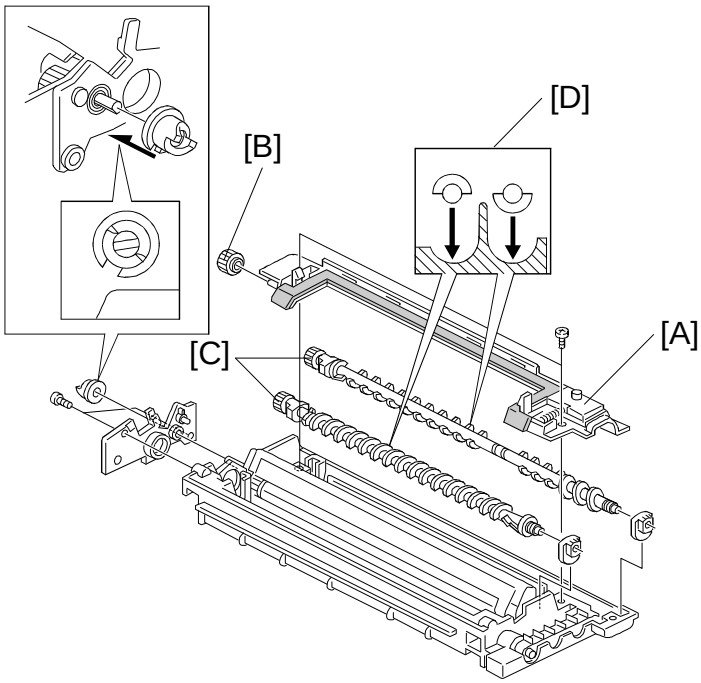

A219R525.wmf

1. Open the front cover.
2. Remove the imaging unit. (See Imaging Unit Removal.)
3. Set the imaging unit on a large sheet of paper.
4. Remove the charge corona unit from the imaging unit. (See the charge corona unit removal procedures.)
5. Empty all the developer onto the paper, making sure that no developer remains on the development roller or in the unit.
6. Remove the cleaning blade and drum from the imaging unit. (See cleaning blade, and drum removal procedures.)
7. Remove the toner recycling cover from the imaging unit. (See Toner Recycling Belt Removal.)
8. Remove the upper case [A] (2 screws) from the imaging unit.

   NOTE: When removing the upper case, do not lose the idle gear [B].
9. Remove and replace the agitators [C].

   NOTE: 1) Make sure that agitators are positioned correctly, as shown [D].

   2) When installing the new agitator, install a new bearing or apply CPL501 evenly onto the old bearing.

3.9 TONER SUPPLY MOTOR ASS'Y REPLACEMENT

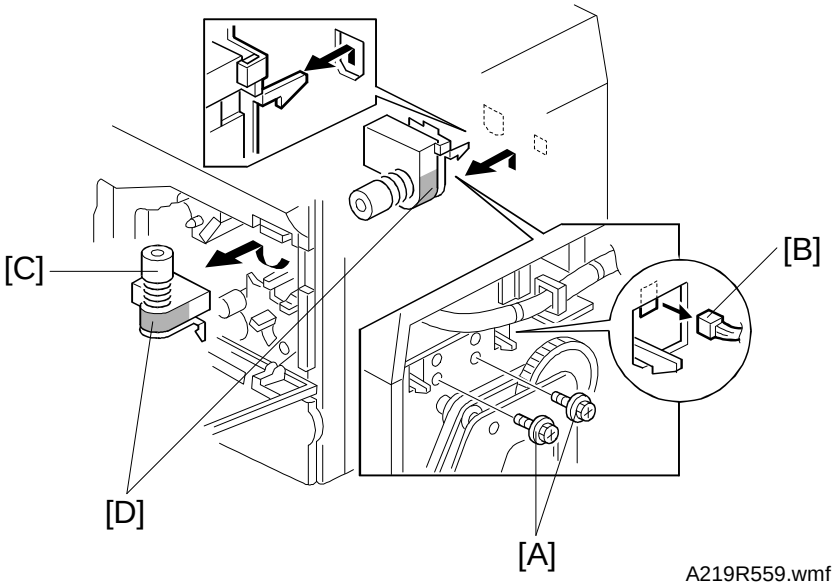

NOTE: 1) Do not manually rotate the new toner supply motor. Doing so may cause damage to the motor.

2) Make sure not to touch the 6th mirror when performing this procedure.

1. Open the front cover.
2. Remove the imaging unit. (See Imaging Unit Removal.)
3. Remove the screw securing the erase lamp unit. Hang the erase lamp unit freely inside the copier.
4. Remove the rear cover. (See Rear Cover Removal.)
5. Remove the high voltage supply board (4 screws and 6 connectors).
6. Remove the 2 screws [A] and 1 connector [B] from the rear.
7. Remove the toner supply motor ass'y [C].
8. Replace the toner supply motor ass'y.

NOTE: When reinstalling the toner supply motor ass'y, make sure of the followings:

1) First connect the hooks to the holes on the front. Then replace the screws and connectors from the rear.

2) Install the motor seal [D] to the new toner supply motor. If the seal can not be pealed off and placed on the new motor, a new seal should be ordered.

3.10 ERASE LAMP REPLACEMENT

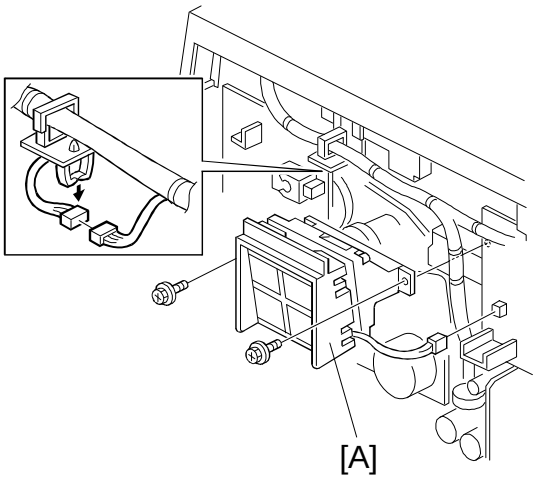

A219R557.wmf

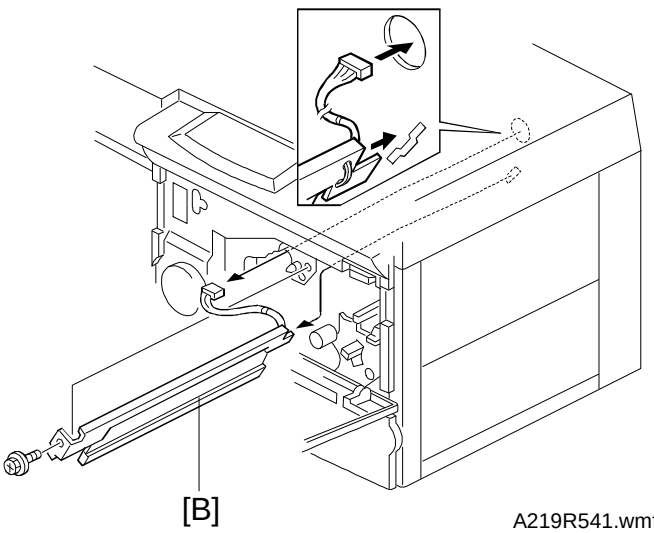

A219R541.wmf

1. Open the front cover.
2. Remove the imaging unit. (See Imaging Unit Removal.)
3. Open the rear cover. (See Rear Cover Removal.)
4. Remove the high voltage supply board (4 screws and 6 connectors).
5. Remove the optics cooling fan motor [A] (2 screws and 1 connector).
6. Remove the erase lamp [B] (1 screw and 1 connector) from the front of the copier as shown.

3.11 QUENCHING LAMP REPLACEMENT

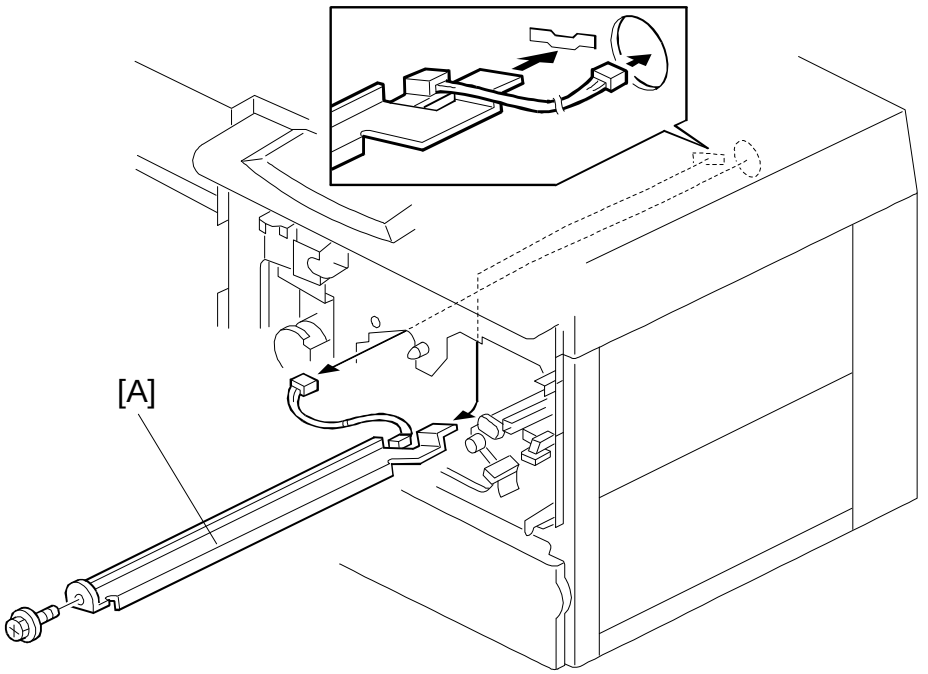

A219R540.wmf

1. Open the front cover.
2. Remove the imaging unit. (See Imaging Unit Removal.)
3. Open the rear cover. (See Rear Cover Removal.)
4. Remove the erase lamp. (See Erase Lamp Replacement.)
5. Remove the inner cover. (See Inner Cover Removal.)
6. Remove the quenching lamp [A] (1 screw and 1 connector) from the front of the copier.

4. PAPER FEED

4.1 PAPER TRAY REMOVAL

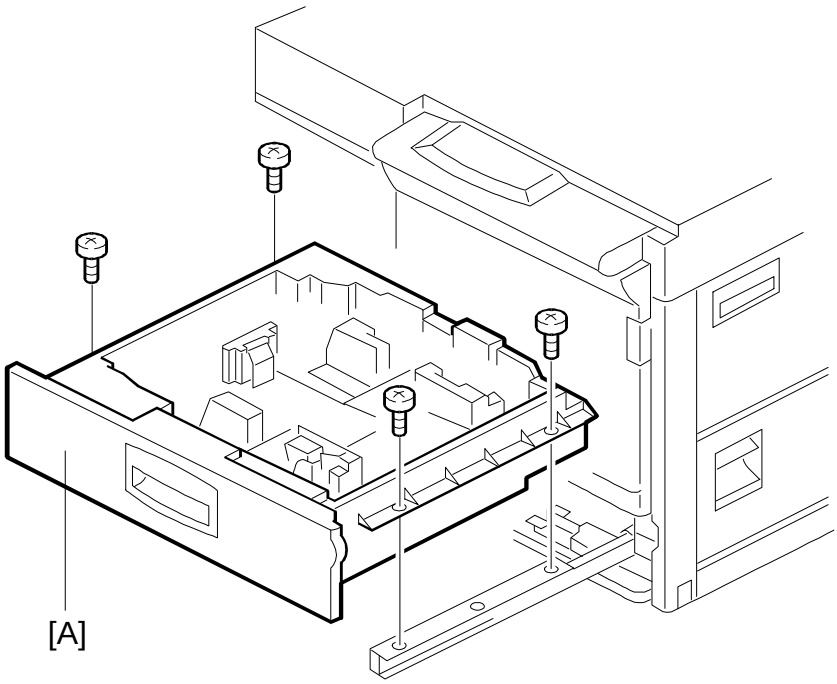

A219R551.wmf

1. Pull the paper tray out.
2. Remove the paper tray [A] (4 screws).

4.2 TRAY FEED ROLLER REPLACEMENT

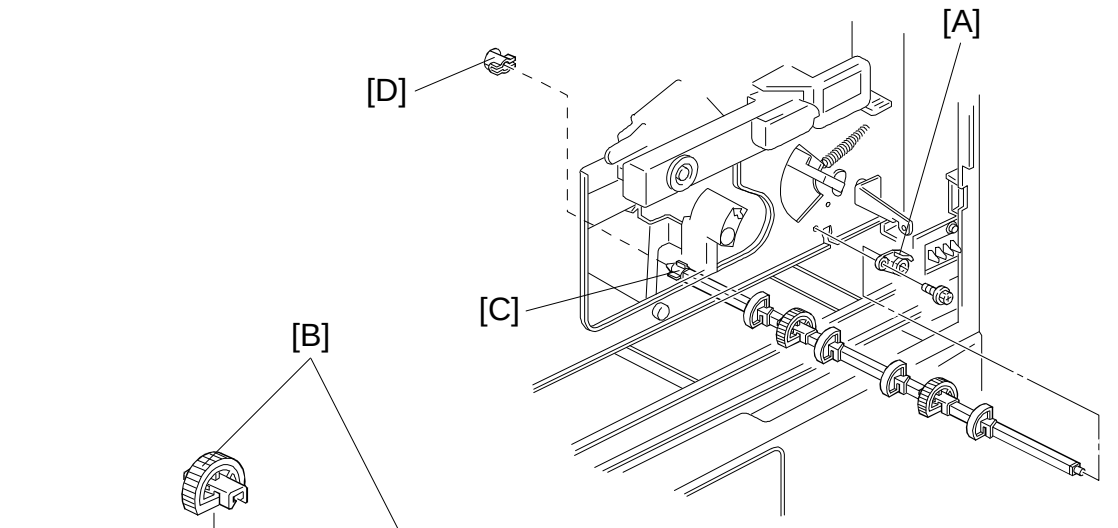

A219R512.wmf

A219R513.wmf

1. Turn off the main switch.
2. Remove the paper tray. (See Paper Tray Removal.)
3. Remove the front cover. (See Front Cover Removal.)
4. Remove the inner cover. (See Inner Cover Removal.)
5. Remove the bracket [A] and shaft (1 screw).
6. Replace the two feed rollers [B] on the shaft.

NOTE: When reinstalling the feed roller assembly, make sure of the following:

1) Do not touch the feed rollers with bare hands.
2) Reinstall the feed rollers face up as shown.
3) Ensure that the pin [C] on the end of the feed roller shaft fits into the slot [D] on the end of the drive shaft.

4.3 TRAY PAPER FEED ROLLER ADJUSTMENT

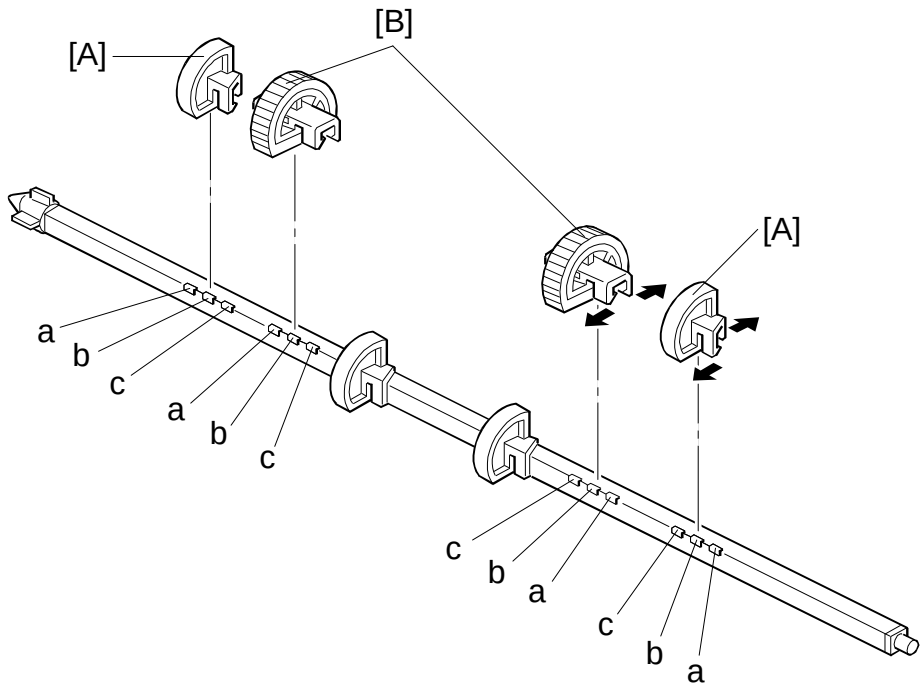

A219R567.wmf

NOTE: Perform this adjustment if the customer uses **only** either A size (A3, A4, or A5) or B size (B4 or B5) paper in the paper tray.

1. Remove the tray paper feed roller. (See Tray Feed Roller Replacement.)
2. For A sizes move the feed rollers [A, B] to position "a."
3. For B sizes move the feed rollers [A, B] to position "c."

NOTE: 1) Position "b" is the default setting.

2) In North America, if the customer **never** uses executive size paper in the paper tray, set the feed rollers to position "a".

4.4 BY-PASS FEED ROLLER AND FRICTION PAD REPLACEMENT

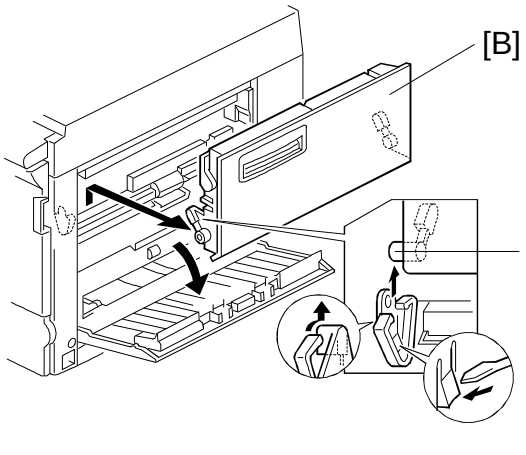

A219R514.wmf

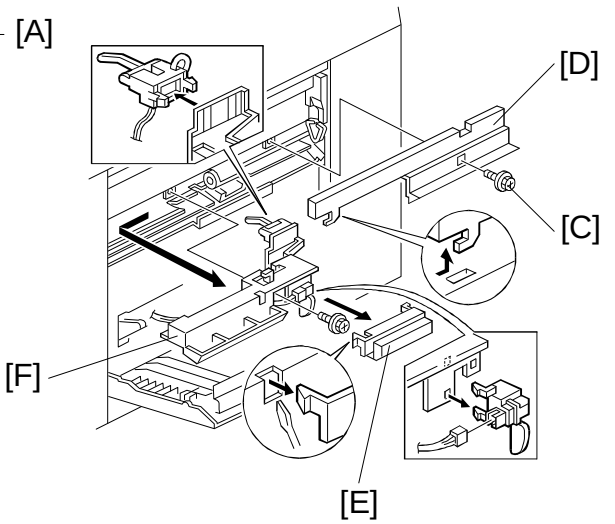

A219R515.wmf

1. Turn off the main switch and unplug the power supply cord.
2. Remove the by-pass feed table.
   1) Open the by-pass feed table.
   2) Slide out the left shaft [A] and the right shaft of the by-pass feed table, as shown.
   3) Remove the by-pass feed table [B].
3. Remove the screw [C].
4. Slide the feed roller shaft cover [D] to the right, and remove it (1 screw).
5. Remove the paper end sensor cover [E] (1 tab).
6. Remove the sensor ass'y [F] (1 screw and 2 connectors).

NOTE: 1) Be careful not to damage the feeler when removing the sensor ass'y.
2) When reinstalling the ass'y, ensure that the harness is not caught on the upper guide.

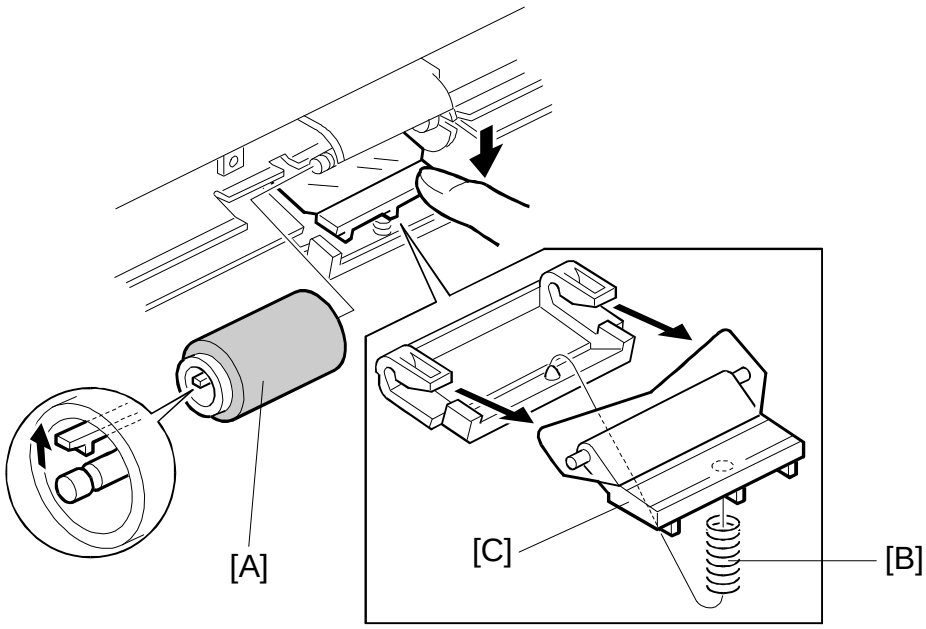

A219R542.wmf

7. Remove the by-pass feed roller [A], as shown.
8. Remove the spring [B].
9. Push the friction pad [C] down and then pull it out.

NOTE: Don't touch the feed roller with bare hands.

- To reinstall -

1. Reinstall the friction pad, the spring, and the by-pass feed roller.
2. Reinstall the sensor ass'y.

CAUTION: 1) Handle the registration sensor with care.
2) Be sure to reconnect the harnesses.

3. Reinstall the paper end cover.
4. Reinstall the by-pass feed table.

4.5 BY-PASS PAPER FEED CLUTCH, HIGH VOLTAGE SUPPLY BOARD, AND REGISTRATION CLUTCH REPLACEMENT

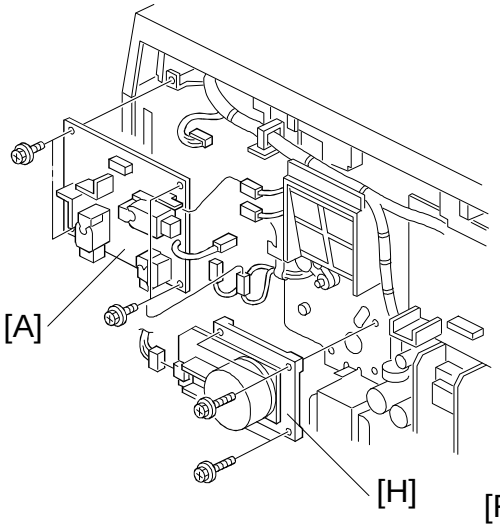

A219R545.wmf

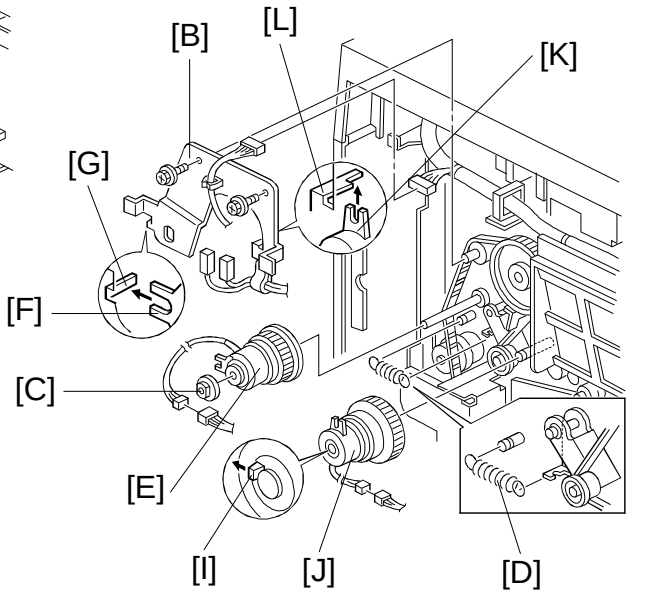

A219R546.wmf

1. Turn off the main switch and unplug the power supply cord.
2. Remove the rear cover. (See Rear Cover Removal.)
3. Remove the high voltage supply board [A] (4 screws and 6 connectors).
4. Remove the bracket [B] (3 screws).
5. Remove the bearing [C].
6. Remove the spring [D].
7. Replace the by-pass paper feed clutch [E].

   NOTE: When reinstalling a new clutch, engage the notch [F] with the stopper [G], as shown.
8. Remove the main motor [H] (4 screws and 1 connector).
9. While pulling back the hook [I], remove the registration clutch [J].

   NOTE: When reinstalling a new clutch, engage the notch [K] with the stopper [L].

4.6 RIGHT VERTICAL GUIDE SWITCH REPLACEMENT

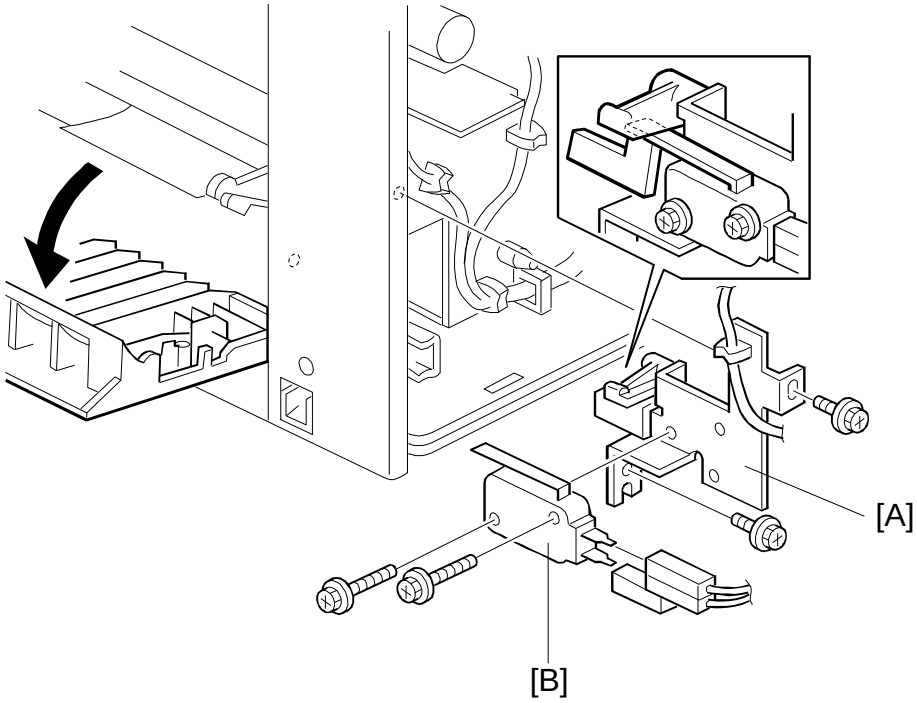

A219R547.wmf

1. Turn off the main switch and unplug the power supply cord.
2. Remove the rear cover. (See Rear Cover Removal.)
3. Remove the switch bracket [A] (2 screws and 1 connector).
4. Replace the switch [B] (2 screws).

4.7 RELAY ROLLER CLUTCH AND PAPER FEED CLUTCH REPLACEMENT

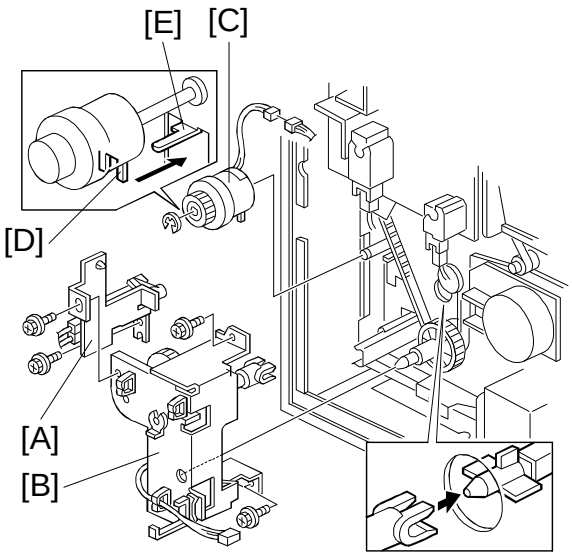

A219R548.wmf

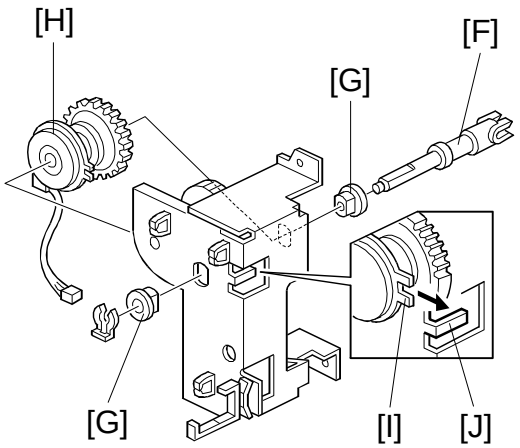

A219R549.wmf

1. Turn off the main switch and unplug the power supply plug.
2. Remove the rear cover. (See Rear Cover Removal.)
3. Remove the switch bracket [A] (2 screws and 1 connector).
4. Remove the paper feed clutch ass'y [B] (2 screws).
5. Replace the relay roller clutch [C] (1 E-ring and 1 connector).

   NOTE: When reinstalling a new clutch, engage the notch [D] with the stopper [E].
6. Remove the paper feed shaft [F] and the bearings [G] (1 snap ring).
7. Replace the paper feed clutch [H].

   NOTE: When reinstalling a new clutch, engage the notch [I] with the stopper [J].

4.8 PAPER SIZE SWITCH REPLACEMENT

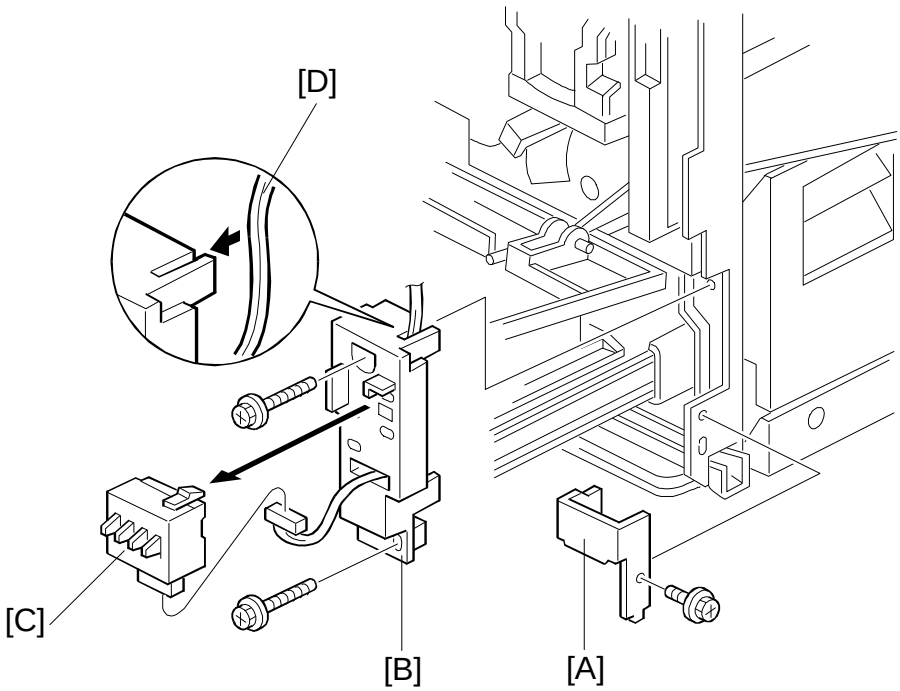

A219R550.wmf

1. Turn off the main switch and unplug the power supply cord.
2. Remove the front right cover. (See Front Right Cover Removal.)
3. Remove the size switch bracket [A] (1 screw).
4. Remove the size switch ass'y [B] (2 screws and 1 connector).
5. Remove the size switch [C] (2 tabs).

NOTE: When reinstalling the size switch ass'y [B], make sure that the harness [D] is inserted into the slot, as shown.

4.9 BY-PASS PAPER END SENSOR AND REGISTRATION SENSOR REPLACEMENT

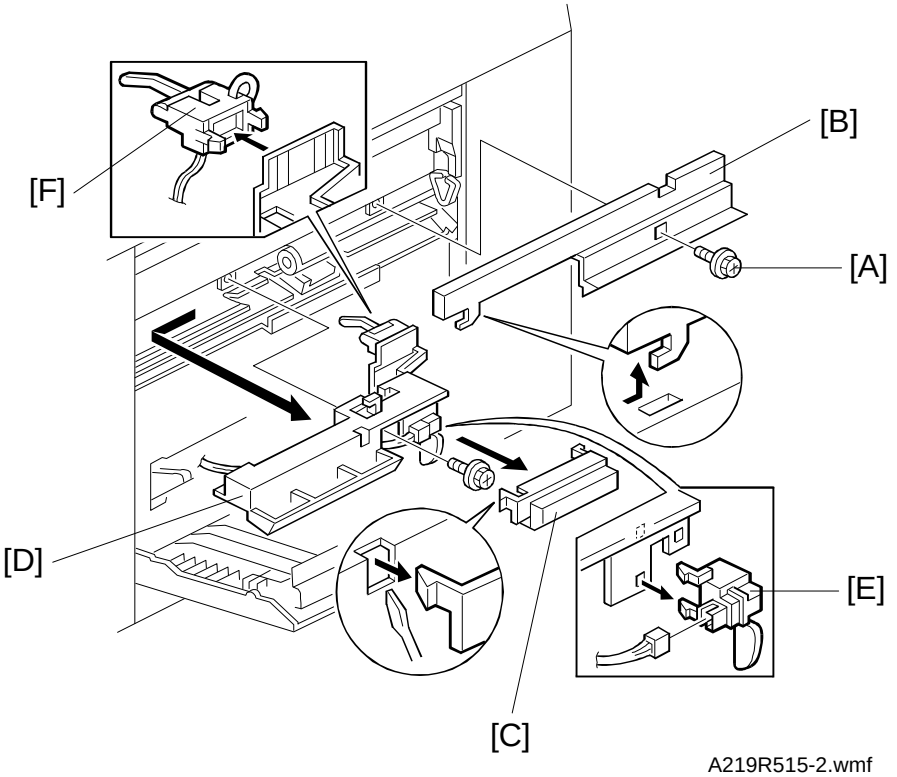

1. Turn off the main switch and unplug the power supply cord.
2. Remove the by-pass feed table. (See step 2 of By-pass Feed Roller and Friction Pad Replacement.)
3. Remove the screw [A].
4. Slide the feed roller shaft cover [B] to the right, and remove it (1 screw).
5. Remove the paper end sensor cover [C] (1 tab).
6. Remove the sensor ass'y [D] (1 screw and 2 connectors).
7. Replace the by-pass paper end sensor [E] and the registration sensor [F].

NOTE: 1) Take care not to damage the feeler when removing the sensor ass'y.

2) When reinstalling the ass'y, be careful not to get the harness caught on the upper guide.

5. FUSING

5.1 FUSING UNIT REMOVAL

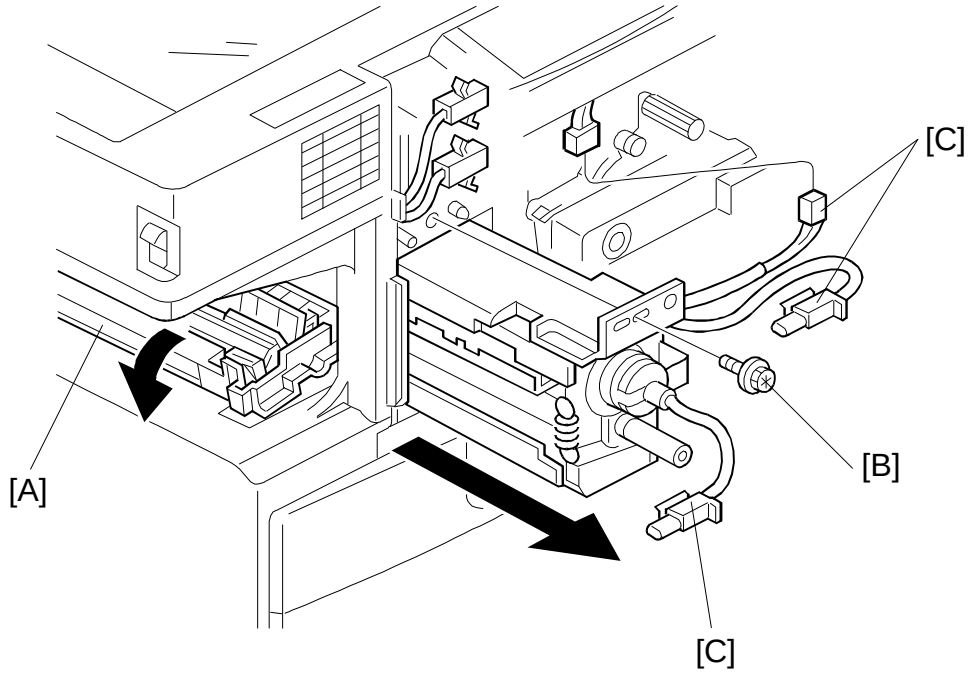

A219R533.wmf

1. Make sure that main switch is turned off and the power supply cord is unplugged.
2. Open the front cover.
3. Remove the inner cover. (See Inner Cover Removal.)
4. Open the exit unit [A].
5. Remove the fusing unit (1 screw [B] and 3 connectors [C]).

5.2 HOT ROLLER REPLACEMENT

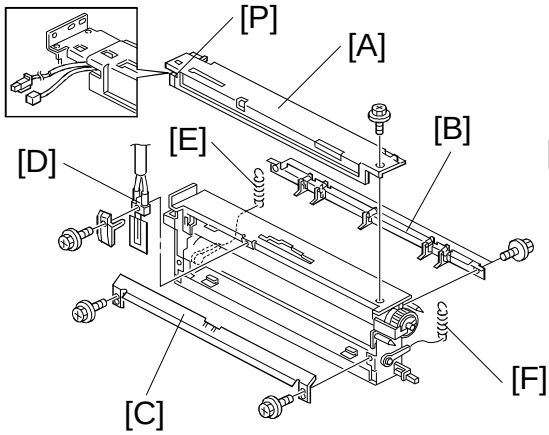

A219R534.wmf

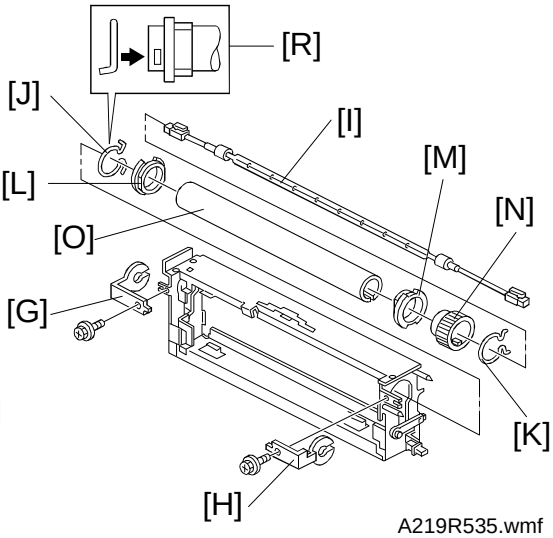

A219R535.wmf

1. Take out the fusing unit and remove the upper cover [A] from the fusing unit.
2. Remove the hot roller stripper bracket [B] (2 screws).

   NOTE: When reinstalling the stripper bracket, be careful not to scratch the hot roller surface.
3. Remove the fusing entrance guide [C] (2 screws).
4. Remove the fusing thermistor [D] (1 screw).
5. Remove the front [E] and rear [F] pressure springs.
6. Remove the front [G] and rear [H] brackets (1 screw each), and the fusing lamp [I].
7. Remove the front C-ring [J] and rear C-ring [K], bearings [L] and [M], and gear [N]. Then replace the hot roller [O].

NOTE: 1) When reinstalling the thermistor, make sure that harness is positioned correctly [P] as shown.

2) The shape of the front C-ring is different from the rear C-ring. The ends of the front C-ring [J] are bent, as shown.

3) When replacing the hot roller, clean the bearing. Then apply BARRIERTA JFE55/2 evenly on the bearing.

4) When reinstalling the fusing lamp, do not forget the red connector at the rear side.

5) Do not touch the hot roller surface with bare hands.

6) When reinstalling the fusing entrance guide, make sure that the entrance guide adjustment screws are positioned correctly.

5.3 PRESSURE ROLLER REPLACEMENT

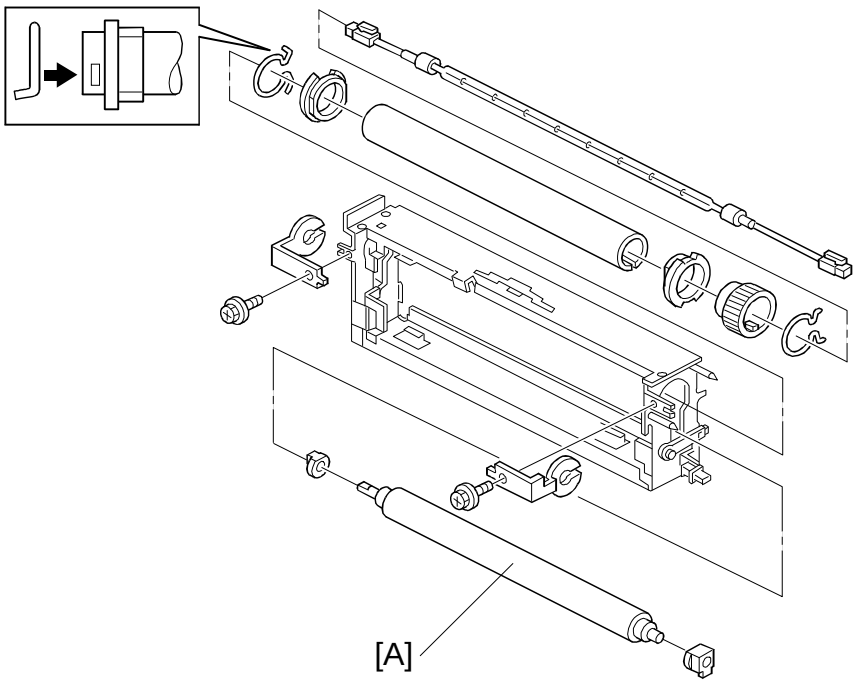

A219R539.wmf

1. Remove the hot roller. (See Hot Roller Replacement.)
2. Remove the pressure roller [A].

5.4 HOT ROLLER STRIPPER REPLACEMENT

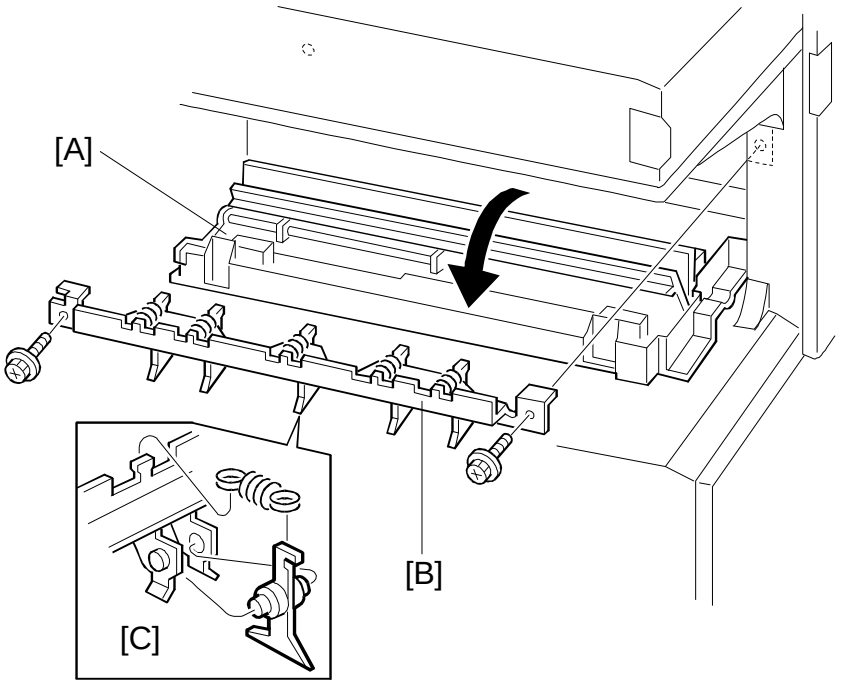

A219R537.wmf

1. Open the exit unit [A].
2. Remove the bracket [B] (2 screws).
3. Replace the hot roller strippers [C] (1 spring each).

5.5 FUSING ENTRANCE GUIDE ADJUSTMENT

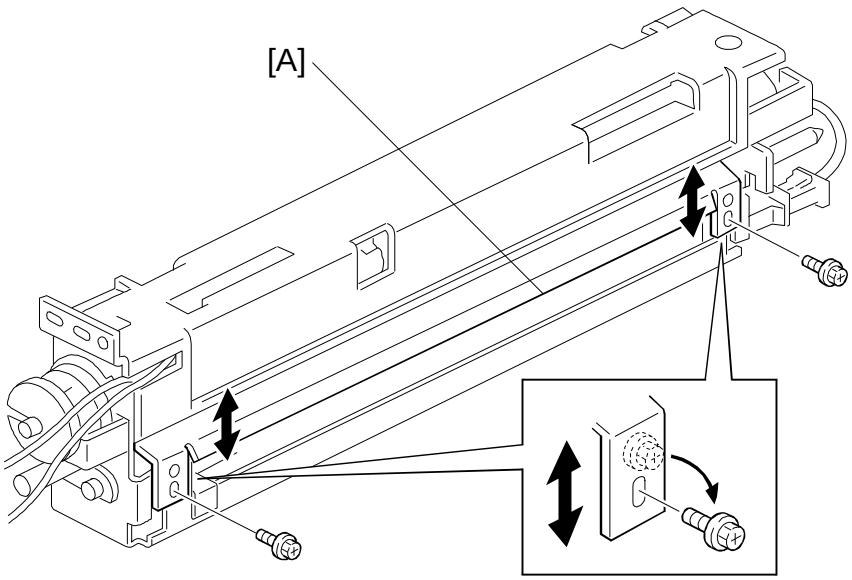

A219R536.wmf

If there is paper creasing after fusing, move the guide plate [A] to the upper position as shown.

5.6 FUSING PRESSURE ADJUSTMENT

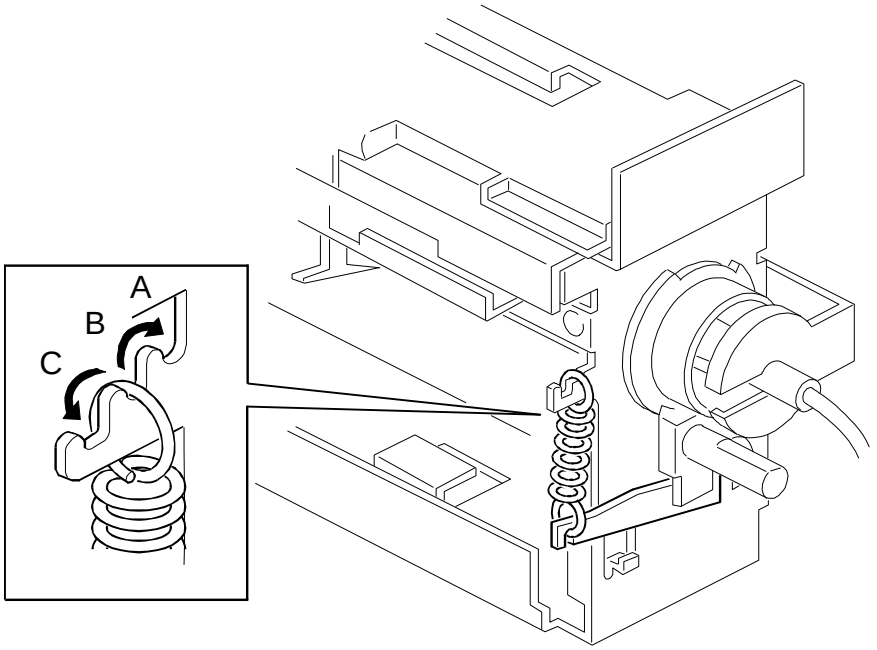

A219R538.wmf

- Fusing pressure adjustment combinations -

Combination	Pressure Level
A	Stronger
B	Factory Setting
C	Weaker

The fusing pressure can be set at three different levels. Adjust the pressure spring position to [A] if poor fusing occurs or to [C] if copy paper becomes creased. For removal and installation, see the pressure roller replacement section.

NOTE: Make sure that the front and rear springs are similarly positioned.

6. TRANSFER/SEPARATION

6.1 TRANSFER CORONA WIRE REPLACEMENT

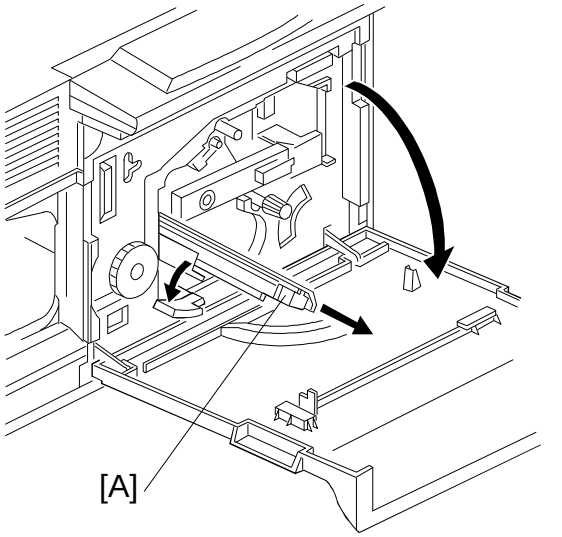

A219R554.wmf

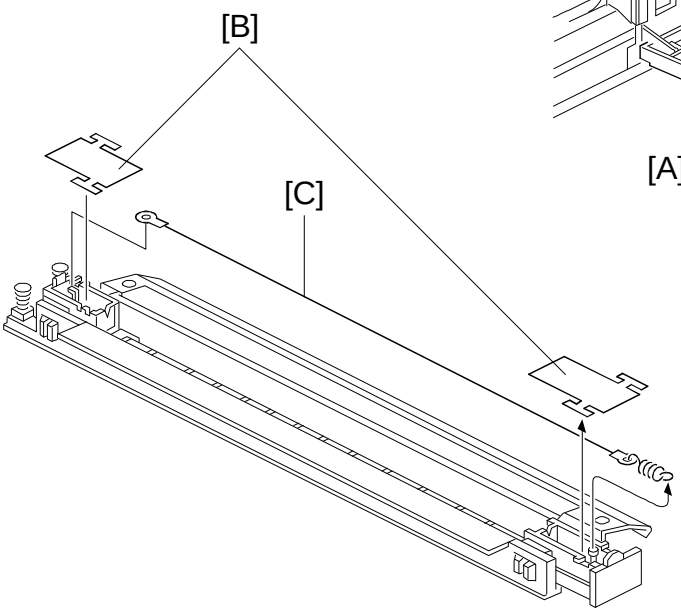

A219R555.wmf

1. Turn off the main switch.
2. Open the front cover.
3. Remove the transfer corona unit [A].
4. Remove the 2 sheets of mylar [B].
5. Replace the transfer corona wire [C].

6.2 DISCHARGE PLATE REPLACEMENT

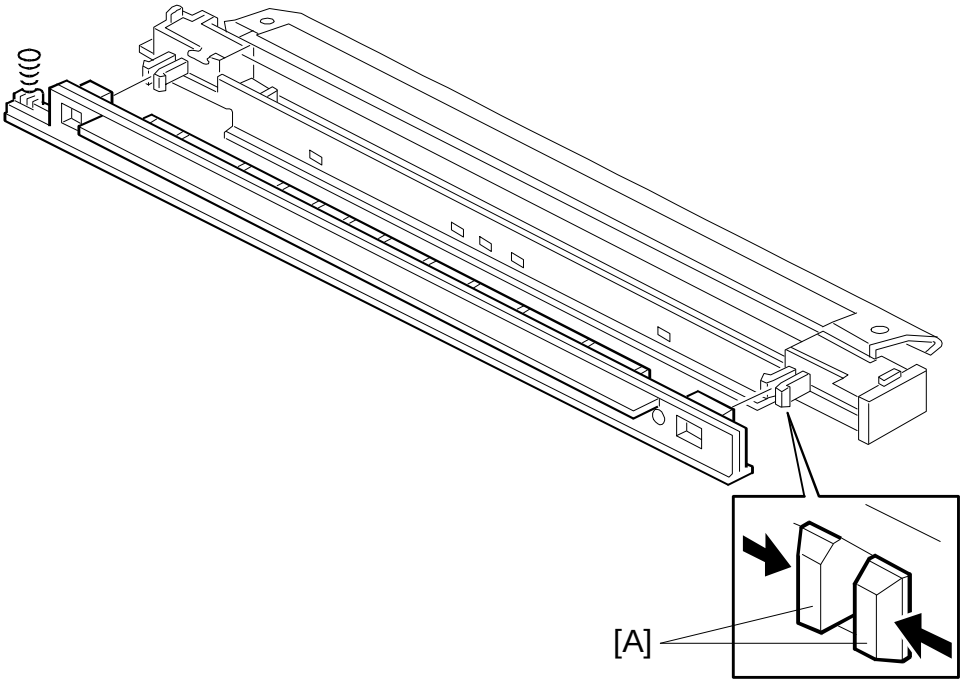

A219R556.wmf

1. Turn off the main switch.
2. Open the front cover.
3. Remove the transfer corona unit.
4. Remove the discharge plate by squeezing the knobs [A] on both sides.

7. OTHERS

7.1 OZONE FILTER REPLACEMENT

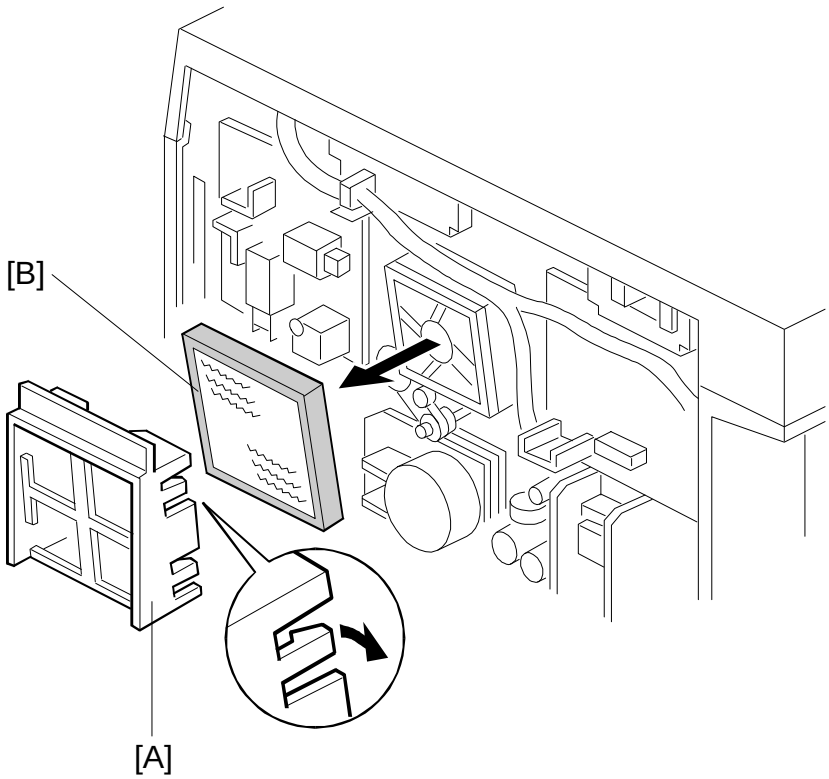

A219R552.wmf

1. Turn off the main switch.
2. Remove the rear cover. (See Rear Cover Removal.)
3. Remove the ozone filter cover [A].
4. Replace the ozone filter [B].

7.2 MAIN CONTROL BOARD REPLACEMENT

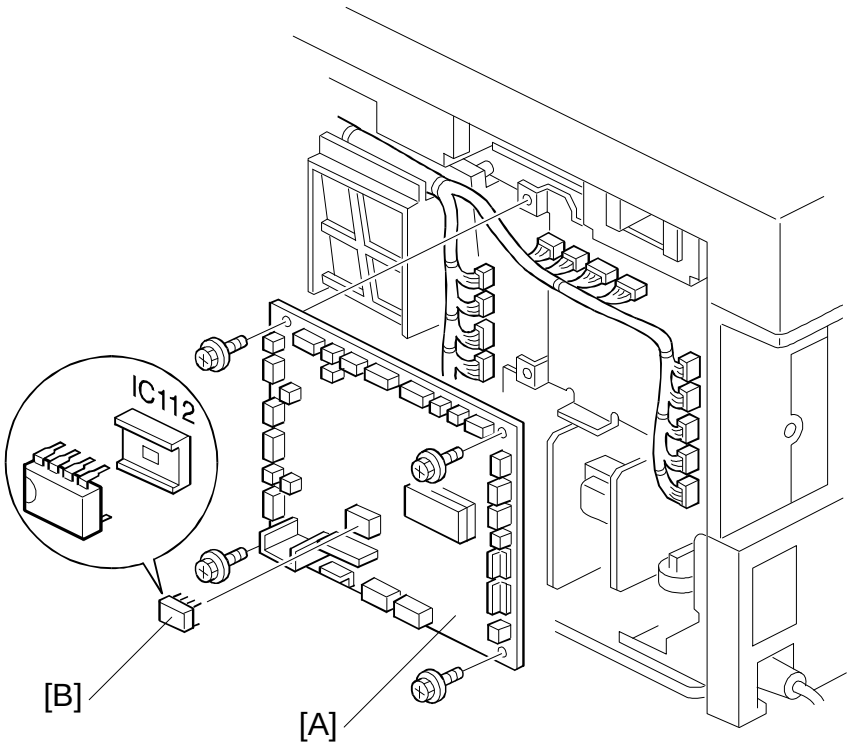

A219R553.wmf

1. Turn off the main switch and unplug the power supply cord.
2. Remove the rear cover. (See Rear Cover Removal.)
3. Remove the main control board [A] (4 screws and all connectors).
4. Remove the EEPROM [B] from the old main board and install it on the new board.

8. COPY QUALITY ADJUSTMENT

- General Information -

Image density is affected by the following factors:

(1) Light Intensity
(2) Development Bias Voltage
(3) Toner Density
(4) Grid Voltage/Drum Current

The items listed above must be kept in balance to maintain correct image density.

In the field, image density should be adjusted first by changing the exposure lamp voltage. If results are unsatisfactory, the bias voltage can be changed (SP33/34). Also, if requested by the customer, the overall image density can be changed by changing the toner density (SP38/UP6). Normally, this should be kept at the normal position (factory setting).

The grid voltage and charge corona current are carefully adjusted at the factory. Any adjustment out of the adjustment standard will result in overtoning, toner scattering, dirty background, or light image density problems. The grid voltage and charge corona current adjustment should be done only when replacing the power pack or to correct certain problems with image density after checking all other possible causes.

8.1 LIGHT INTENSITY ADJUSTMENT

8.1.1 Base Exposure Lamp Voltage Adjustment

When:	Every Call
Purpose:	To maintain the correct light intensity.
Adjustment Standard:	Level 2 (E0.2) of the gray scale on the OS-A3 chart should be slightly visible on the copy when the 4th manual image density level is selected.
How to Adjust:	SP48
How it works:	Changes the ac drive board output voltage.

1. Unplug the power cord.
2. Clean the following parts:

Item No.	Section	Method
(1)	Optics (mirrors, lens, filter, reflectors, exposure glass)	Damp cotton, silicone cloth, and blower brush
(2)	Corona wires (charge and transfer) and casings.	Blower blush
(3)	QL, Erase Lamp	Dry cloth and blower blush

3. Open SP33 and return the setting to the normal value if it has been changed.
4. Place the OS-A3 test chart on the exposure glass and make a full size copy at manual image density level 4 (center).
5. Confirm that level 2 (E0.2) of the gray scale is slightly visible on the copy. If the image density is not correct, proceed to the following steps.
6. Enter the lamp voltage setting mode using the numeral keys (SP48).
7. Change the value with the numeral keys as follows:
   If the image density is too dark: Increase the value
   If the image density is too light: Decrease the value
8. Confirm that the image density is within the adjustment standard.
9. Perform the ADS adjustment. (See ADS Adjustment.)

8.1.2 Image Density Adjustment

When:	The customer requires the image density to be either darker or lighter.
Purpose:	To get proper image density.
Method:	SP34
How it works:	Changes the ac drive/dc power board output voltage.

NOTE: SP34 settings can be changed by customers.

- SP34: Image Density Adjustment (ADS Mode) -

Setting	0	1	2	3	4
Bias Voltage Change [V]	±0	–40	+40	–40	+40
Exposure Lamp Change	±0	±0	±0	+4 steps	–4 steps
Image Density	Normal	Lighter	Darker	Lightest	Darkest

1 step = 0.5 V (120 V machines) or 1.0 V (230 V machines)

- SP62 V_L Correction Interval -

Setting	V_L Correction Interval
0	2 steps/8,000 copies
1	2 steps/6,000 copies
2	2 steps/4,000 copies
3	2 steps/2,000 copies
4	2 steps/1,000 copies
5	No correction

1 step = 0.5 V (120 V machines) or 1.0 V (230 V machines)

8.2 DEVELOPMENT BIAS VOLTAGE ADJUSTMENT

8.2.1 Base Bias Voltage Adjustment

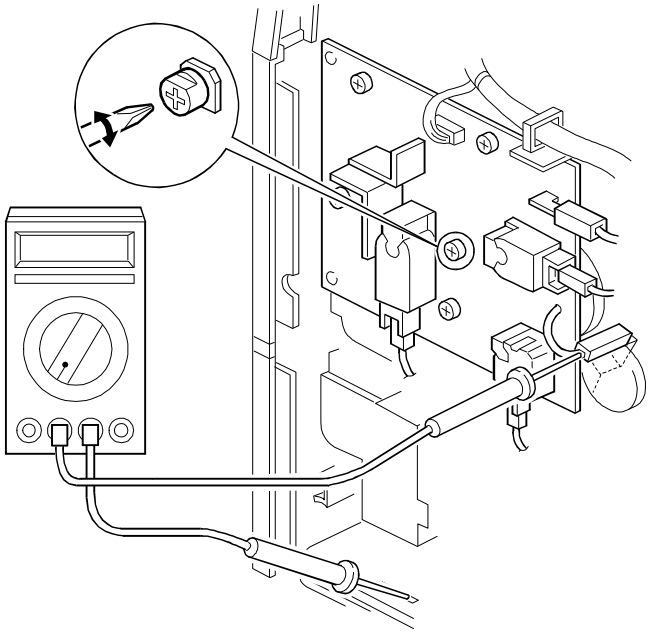

A219R561.wmf

ADJUSTMENT STANDARD	Adjusting VR	SP Mode
DC –200 ± 4 V	VRB	SP9-5

NOTE: Normally, each High Voltage Supply Board spare part is adjusted in the factory before shipment. This adjustment is not required when the board is replaced.

⚠WARNING

Very high voltage is applied from the high voltage supply unit terminals. Pay extreme attention when adjusting the bias voltage. Make sure that the machine is unplugged before connecting the multimeter.

1. Remove the rear cover. (See Rear Cover Removal.)
2. Set the multimeter range to dc 1,500 V, and connect the multimeter leads as shown.
3. Turn on the development bias using SP9-5.
4. Adjust the development bias voltage by turning VRB on the high voltage supply board.

8.2.2 SP Bias Settings

When:	1. The image is blurred in ADS mode, even though the image density in black solid areas is acceptable. 2. Dirty background in ADS mode. The problem is not caused by excess toner and cannot be solved by adjusting the light intensity.
Purpose:	To get the proper image density
Method:	VRB on the high voltage supply board, SP33, SP34
How it works:	Changes the bias voltage while the image area on the drum is being developed.

NOTE: SP34 can be changed by customers.

- SP33 Image Bias Adjustment (Manual ID Mode) -

Setting	0	1	2	3	4
Bias Voltage Change [V]	±0	+40	+20	–20	–40
Image Density	Normal	Darkest	Darker	Lighter	Lightest

1 step = 0.5 V (120 V machines) or 1.0 V (230 V machines)

- SP34 Image Density Adjustment (ADS Mode) -

Setting	0	1	2	3	4
Bias Voltage Change [V]	±0	–40	+40	–40	+40
Exposure Lamp Change	±0	±0	±0	+4 steps	–4 steps
Image Density	Normal	Lighter	Darker	Lightest	Darkest

1 step = 0.5 V (120 V machines) or 1.0 V (230 V machines)

8.3 TONER DENSITY ADJUSTMENT

When:	The customer wants to change the overall image density of the copies.
Purpose:	To change the toner concentration inside the development unit.
How to Adjust:	SP38
How it works:	Changes the development bias voltage and either raises/lowers the toner supply threshold.

NOTE: SP38 can be changed by customers.

8.4 TONER SUPPLY RATIO SELECTION

When:	The factory setting for the toner supply amount is not appropriate for the type of original in use.
Purpose:	To adjust the toner supply amount.
Adjustment Standard:	TD Sensor Mode: 0.4 s (Factory Setting) Fixed Mode: 0.3 s (Factory Setting)
How to Adjust:	Detect Mode (using TD sensor): SP31 Fixed Mode: SP32
How it works:	Changes the interval that the toner supply motor is on.

8.5 GRID VOLTAGE ADJUSTMENT

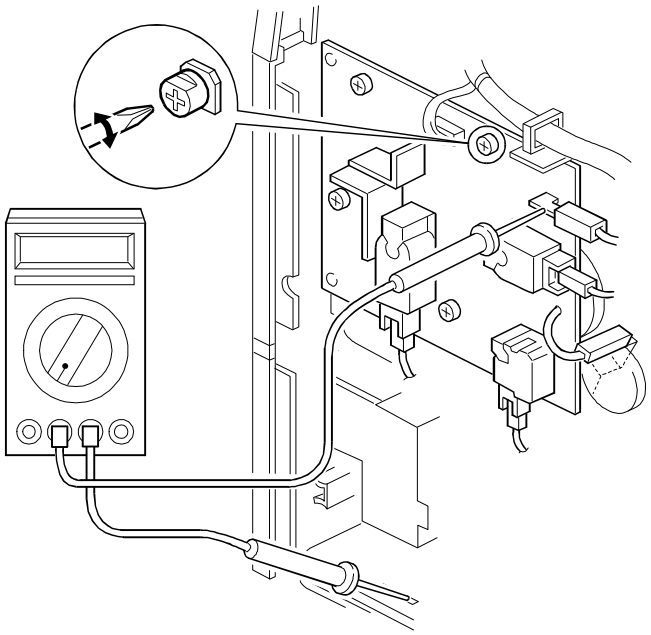

A219R562.wmf

ADJUSTMENT STANDARD	Adjusting VR	SP Mode
DC –910 ± 15 V	VRG	SP9-2

NOTE: Normally, each High Voltage Supply Board spare part is adjusted in the factory before shipment. This adjustment is not required when the board is replaced.

⚠WARNING

Very high voltage is applied from the high voltage supply unit terminals. Pay extreme attention when adjusting the grid voltage. Make sure that the machine is unplugged before connecting the multimeter.

1. Remove the rear cover. (See Rear Cover Removal.)
2. Set the multimeter range to dc 1,500 V, and connect the multimeter leads as shown.
3. Turn on the charge corona using SP9-2.
4. Adjust the grid voltage by turning VRG on the high voltage supply unit.

8.6 TRANSFER CURRENT ADJUSTMENT

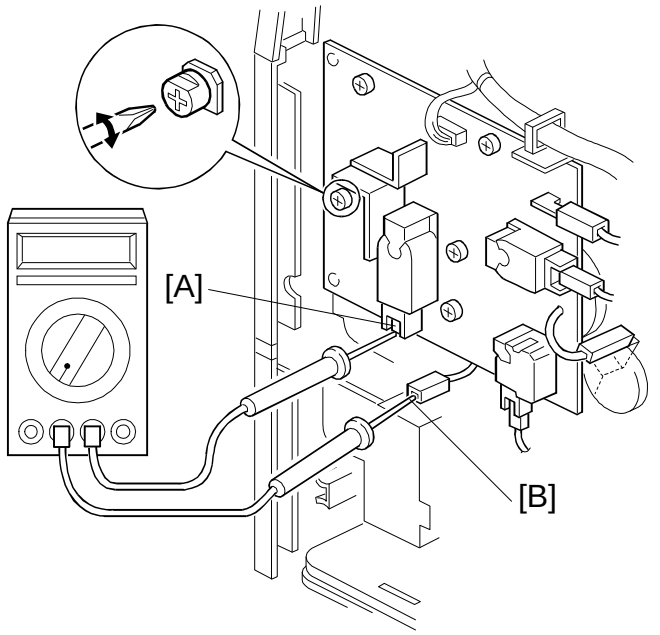

A219R563.wmf

ADJUSTMENT STANDARD	Adjusting VR	SP Mode
DC –350 ± 4 μA	VRT	SP9-3

NOTE: Normally, each High Voltage Supply Board spare part is adjusted in the factory before shipment. This adjustment is not required when the board is replaced.

⚠WARNING

Very high voltage is applied from the high voltage supply unit terminals. Pay extreme attention when adjusting the drum current. Make sure that the machine is unplugged before connecting the multimeter.

1. Remove the rear cover. (See Rear Cover Removal.)
2. Disconnect the connector from the T corona current terminal [A]. Then connect the ground terminal of the multimeter to the connector [B], and connect the positive terminal to the T terminal of the high voltage supply board as shown in the illustration.

   NOTE: Make sure that the connector [B] is not in contact with the T terminal [A].

4. Turn on the transfer corona using SP9-3.
5. Adjust the drum current by turning VRT on the high voltage supply board.

8.7 CHARGE CURRENT ADJUSTMENT

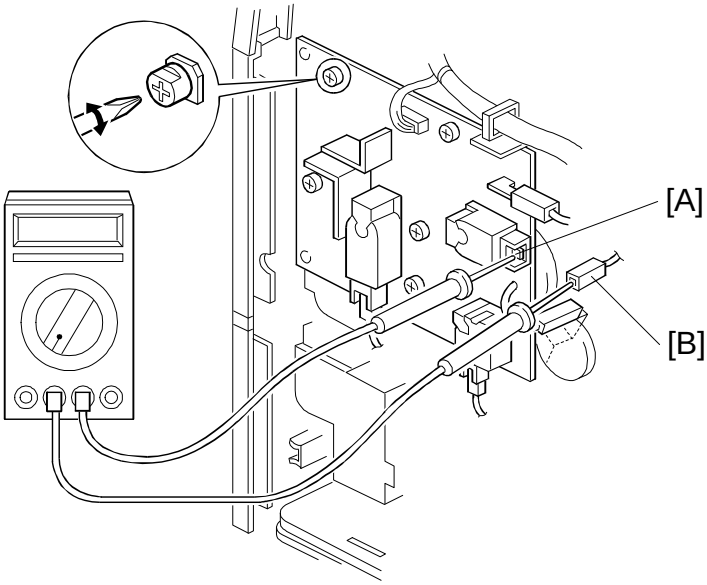

A219R564.wmf

ADJUSTMENT STANDARD	Adjusting VR	SP Mode
DC –400 ± 2 μA	VRC	SP9-2

NOTE: Normally, each High Voltage Supply Board spare part is adjusted in the factory before shipment. This adjustment is not required when the board is replaced.

⚠WARNING

Very high voltage is applied from the high voltage supply unit terminals. Pay extreme attention when adjusting the charge current. Make sure that the machine is unplugged before connecting the multimeter.

1. Remove the rear cover. (See Rear Cover Removal.)
2. Disconnect the connector from the CT corona current terminal [A]. Then connect the ground terminal of the multimeter to the connector [B], and connect the positive terminal to the CT terminal of the high voltage supply board as shown in the illustration.

   NOTE: Make sure that the connector [B] is not in contact with the CT terminal [A].

4. Turn on the charge corona using SP9-2.
5. Adjust the charge current by turning VRC on the high voltage supply board.

8.8 HORIZONTAL MAGNIFICATION ADJUSTMENT

When:	The horizontal magnification is not within the adjustment standard.
Purpose:	To maintain proper horizontal magnification.
Adjustment Standard:	Less than ± 0.8% difference between original and copy.
How to Adjust:	SP44 (0.2%/step, 51 steps)
How it works:	Changes the lens home position.

1. Change the value of SP44 to 20 (default value).
2. Confirm that the scanner wire clamps are positioned correctly using the scanner positioning pins. (See 1st and 2nd Scanner Adjustment.)
3. Place a 150 mm scale parallel to the left scale on the exposure glass.
4. Adjust the horizontal magnification using SP44. Make three copies to check the magnification.

   NOTE: If the copy image is out of focus as making copies after this adjustment, adjust the focus. (See Focus Adjustment.)

8.9 VERTICAL MAGNIFICATION ADJUSTMENT

When:	The vertical magnification is not within the adjustment standard.
Purpose:	To maintain proper vertical magnification.
Adjustment Standard:	Less than ± 1.0% difference between original and copy.
How to Adjust:	SP43 (0.2%/step, 32 steps)
How it works:	Changes the scanner speed.

1. Place a 150 mm scale perpendicular to the left scale on the exposure glass.
2. Adjust the vertical magnification using SP43. Make three copies to check the magnification.

   NOTE: If the copy image is out of focus as making copies after this adjustment, adjust the focus. (See Focus Adjustment.)

8.10 FOCUS ADJUSTMENT

When:	The copy image is out of focus. After adjusting the horizontal magnification.
Purpose:	To maintain proper focus.
Adjustment Standard:	Copy image in focus.
How to Adjust:	SP47 (0.1 mm/step,101 steps)
How it works:	Adjusts the 4th/5th mirror assembly home position, changing the distance between the original and the drum surface.

1. Make three copies with the test chart.
2. Adjust the focus using SP47. Check the text on the copies.

8.11 LEADING EDGE ERASE MARGIN ADJUSTMENT

When:	The leading edge erase margin is not within the adjustment standard.
Purpose:	To maintain the correct leading erase margin.
Adjustment Standard:	2.5 ± 2.0 mm (0.1 ± 0.08")
How to Adjust:	SP41 (0.5 mm/step, 16 steps)
How it works:	Changes the erase lamp on period.

1. Place a 150 mm scale perpendicular to the left scale on the exposure glass.
2. Adjust the leading edge erase margin using SP41. Make three copies and check the erase margin.

8.12 REGISTRATION ADJUSTMENT

When:	Registration is not within the adjustment standard.
Purpose:	To maintain proper registration.
Adjustment Standard:	0 ± 2 mm (0 ± 0.08")
How to Adjust:	SP42 (0.5 mm/step, 16 steps)
How it works:	Changes the registration roller start timing.

1. Place a 150 mm scale perpendicular to the left scale on the exposure glass.
2. Adjust the registration using SP42. Make three copies and check the registration.

8.13 4TH/5TH MIRROR HEIGHT ADJUSTMENT

When:	Parallelogram (skewed) image appears.
Purpose:	To maintain the proper copy image.
How to Adjust:	Turn the 4th/5th mirror height adjustment screw.
How it works:	Changes the 4th/5th mirror height.

CAUTION: Never perform this adjustment until you have positively verified that the source of the skewing is optical and not in the paper path.

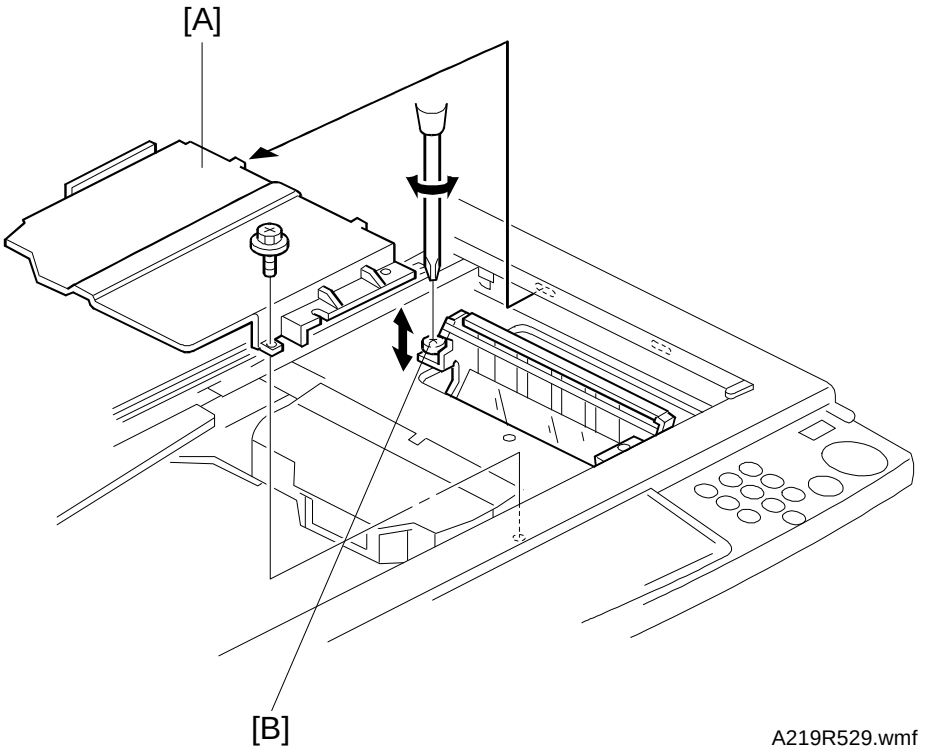

1. Turn off the main switch and remove the exposure glass. (See Exposure Glass Removal.)
2. Remove the lens cover [A] (2 screws).
3. Adjust the 4th/5th mirror height by turning the screw [B].

NOTE: When replacing the lens cover, make sure of the notes described on page 6-15.

8.14 ADS (Auto Image Density Sensor) ADJUSTMENT

When:	1. After light intensity adjustment. 2. ADS voltage is not within the adjustment standard. 3. After replacing the main board.
Purpose:	To maintain correct ADS mode operation.
Adjustment Standard:	ADS Reference Voltage = 2.5 ± 0.1 volts
How to Adjust:	SP56
How it works:	Changes the main board ADS output voltage. The voltage reading is displayed on the operation panel.

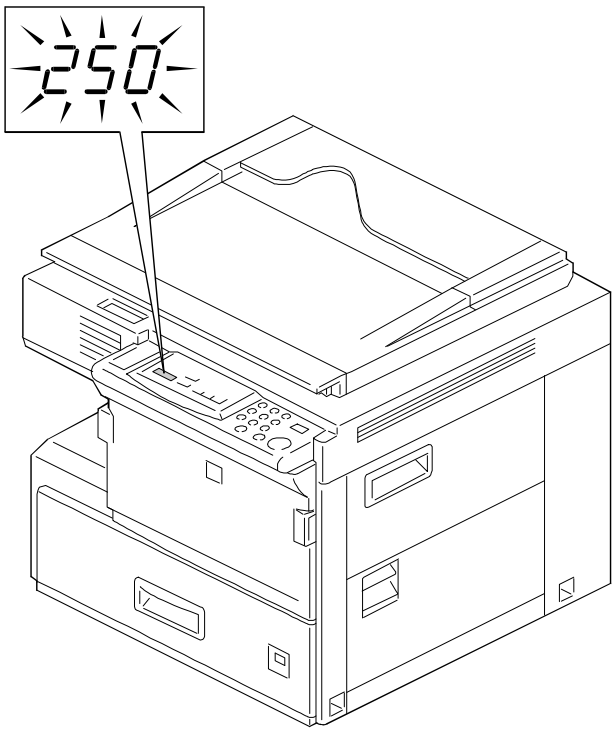

A219R530.wmf

1. Place five sheets of clean white A4 (8.5" x 11") paper on the exposure glass.
2. Select SP56 and press the ◑ key.
3. If the voltage is not within the adjustment standard, adjust it by turning VR101 on the main board.

8.15 SIDE-TO -SIDE REGISTRATION ADJUSTMENT

When:	Side-to-side registration is out of the adjustment standard.
Purpose:	To main the proper side-to-side registration
Adjustment Standard:	0 ± 2 mm (0 ± 0.08")
How to Adjust:	1. Change the lens position. 2. Change the side fence position in the paper tray.
How it works:	Shift the copy image.

NOTE: 1) When side-to-side registration is out of the adjustment standard only for the paper tray, adjust the side fence position in the paper tray.

2) When side-to-side registration is out of the adjustment standard for both the paper tray and the by-pass feed table, adjust the lens position. Check the adjustment by making a copy from the by-pass feed table. Then, make a copy from the paper tray and adjust the side fence position in the paper tray if necessary.

-Side Fence Adjustment (Paper Tray)-

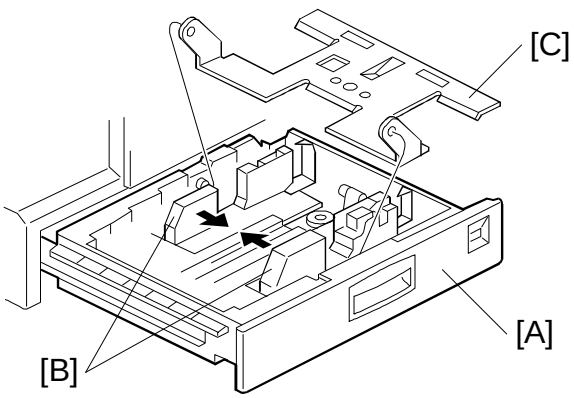

A219R543.wmf

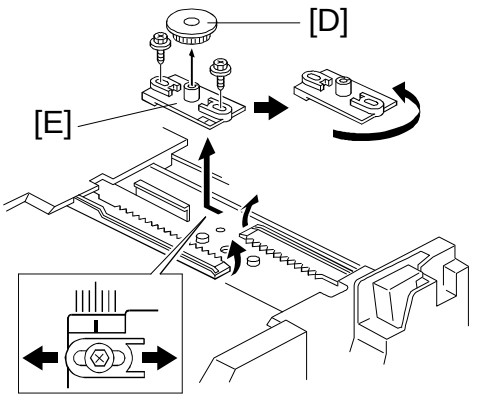

A219R544.wmf

1. Pull the paper tray [A] out.
2. Move the side fences [B] to the A4 or half letter position.
3. Slide the bottom plate [C] to the front and remove it.
4. Remove the pinion gear [D].
5. Move the side fences [B] to their narrowest position and remove them.
6. Remove the registration adjustment plate [E] (2 screws).
7. Turn the registration plate 180°. The position can now be adjusted using the long screw hole.

-Lens Position Adjustment-

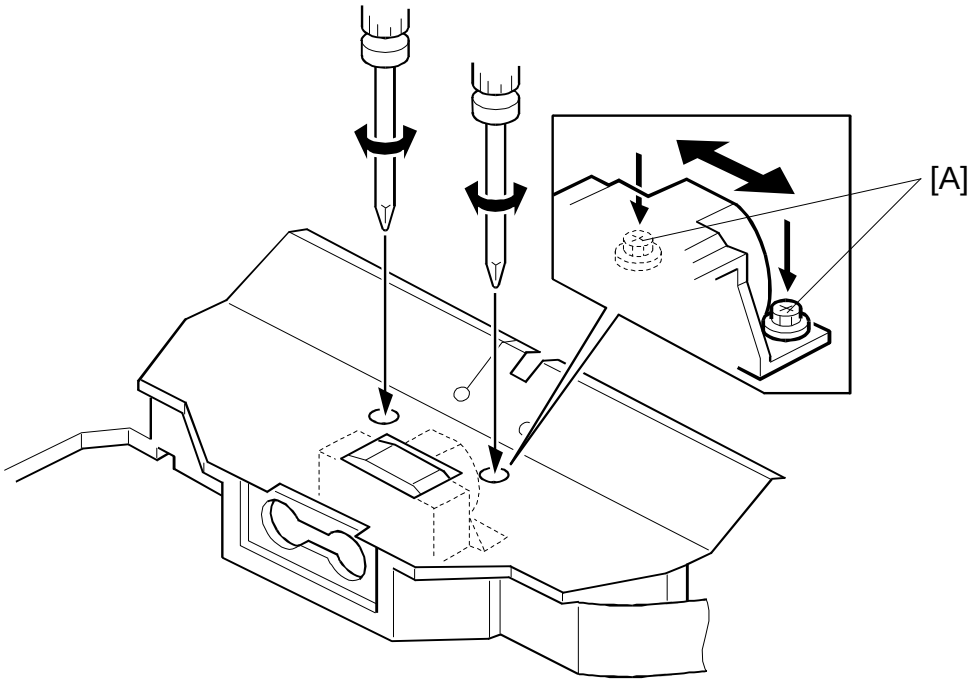

A219R565.wmf

1. Turn off the main switch.
2. Remove the exposure glass. (See Exposure Glass Removal.)
3. Remove the lens cover (2 screws).
4. Loosen 2 screws [A] and shift the lens by trial-and-error to adjust the side-to side registration.

SECTION 7

TROUBLESHOOTING

1. COPY QUALITY

1.1 BLANK COPY (WHITE COPY)

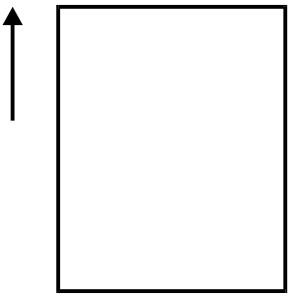

A219T500.wmf

- Problem -

White or almost white copy.

- Possible Causes -

1. Charge is not applied.
   - High voltage supply board (charge or grid) failure
   - Poor charge corona unit contact
   - Broken charge corona wire
   - Leak in insulator or endblock
   - Charge corona wire cleaner pads are in contact with the corona wire.

2. Copy image is not transferred to the paper.
   - High voltage supply board (transfer) failure
   - Poor transfer corona unit contact
   - Broken transfer corona wire
   - Leak in the insulator or endblocks

3. Poor drum sensitivity.
   - The drum was exposed to fluorescent light or direct sunlight for a long period of time.
   - The drum was exposed to ammonia gas or corrosive fumes for a long period of time.

4. The imaging unit does not rotate.
   - Broken drive gear

- Action -

Is the charge corona wire cleaner knob fully inserted?
Is the cleaner mechanism working properly?

Yes

No → Fully insert the knob or fix the cleaner pad bracket.

Are the charge and transfer corona units correctly installed?

Yes

No → Install the charge and transfer corona units correctly.

Are the charge and transfer corona wires broken?

No

Yes → Replace the corona wires.

Is leakage occurring in the endblocks or receptacles?

No

Yes → Replace the defective parts.

Are the imaging unit drive gears worn or broken?

No

Yes → Replace the drive gears.

Check CN102-4 and 102-5 (Charge/Transfer trigger lines)

1) If the signal stays HIGH after the ◇ key is pressed, replace the main board.
2) If the charge or transfer corona does not turn on even if the signal changes to LOW, replace the high voltage supply board.

If there is no problem with the signal lines, replace the drum if the sensitivity does not recover even when the drum is not exposed to light.

1.2 DIRTY BACKGROUND

- Problem -

1. Dirty background at image density level 4 (manual setting).
2. When newspapers are copied, the background is dirty even at level 7.
3. ADS copies have a dirty background.

- Possible Causes -

1. Dirty optics
2. Toner scattering
   - High toner density
   - The inlet seal of the development unit is stripped off.
   - User/SP mode setting error
3. The exposure lamp is not bright enough. This may be caused by deterioration of the exposure lamp or low lamp voltage.
4. In ADS mode, light reflected from the original is too intense.
5. The ADS optical fiber is cut or bent.
6. The development bias is grounded.

- Action -

Make a copy in reduction mode at manual image density level 4.

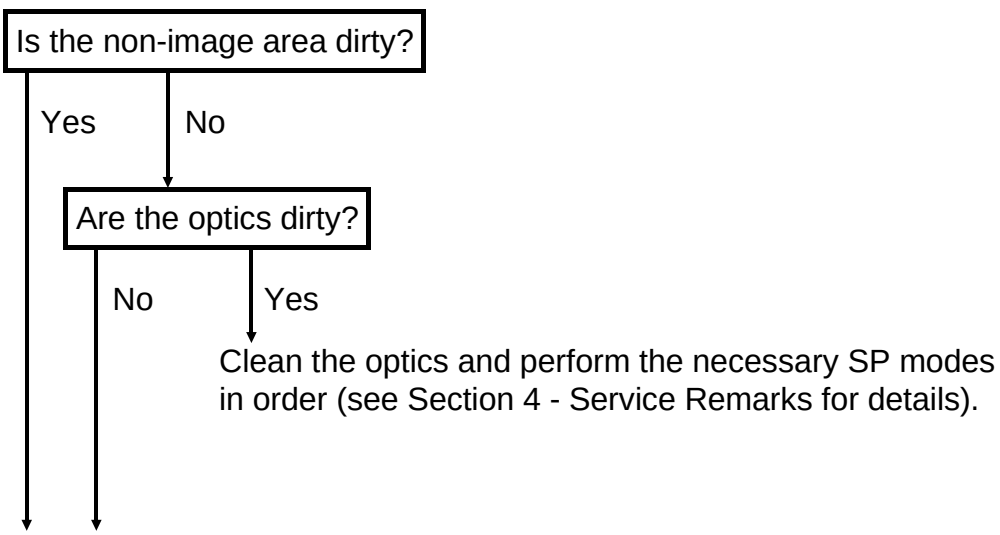

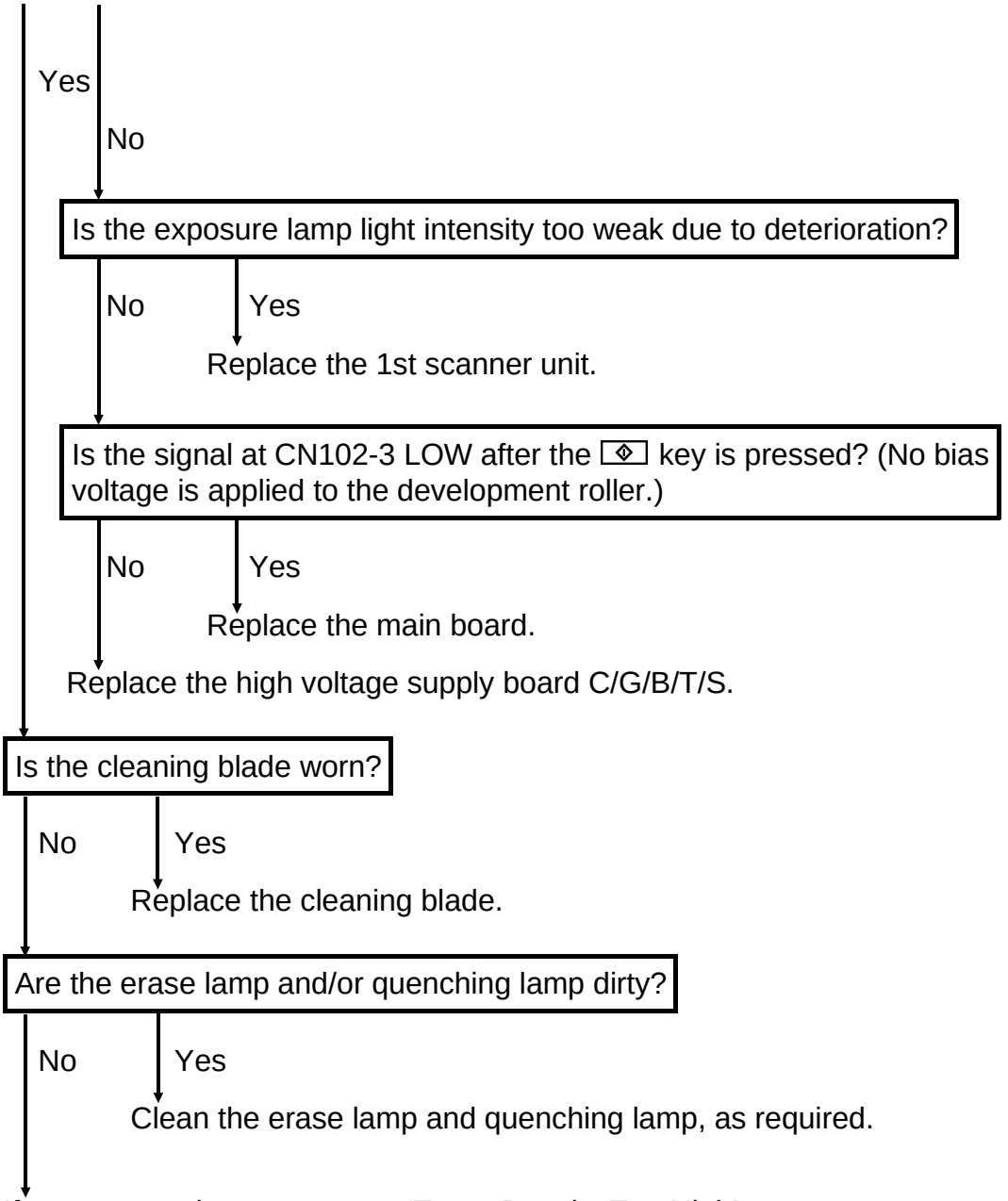

If toner scattering occurs, see ‘Toner Density Too High’.
If dirty background occurs only in ADS mode, do the following:

- If the ADS voltage is not within ± 0.2 volts of the standard voltage (2.5 V), readjust the ADS voltage.
- If the signal at CN114-5 stays HIGH, check the harness and sensor, and replace any defective parts.
- If the signal at CN114-6 stays LOW, replace the main board.

1.3 UNEVEN IMAGE DENSITY

- Problem -

Uneven image density appears on the copies.

- Possible Cause -

1. Dirty optics
2. Uneven cutout position of the reflectors
3. Dirty corona wires or grid
4. Uneven height of the charge corona wire

- Action -

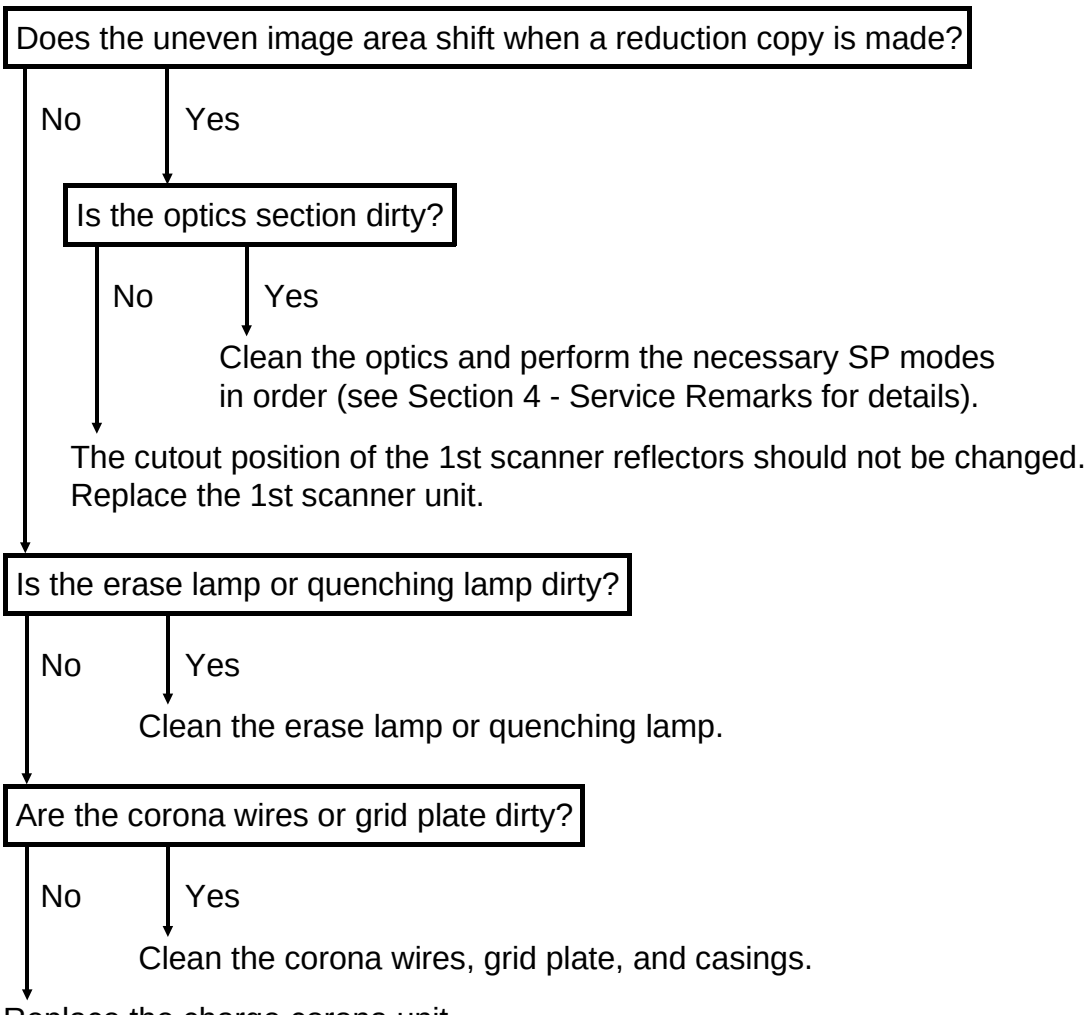

1.4 VERTICAL BLACK BANDS

- Problem -

Vertical black bands appear on the copy.

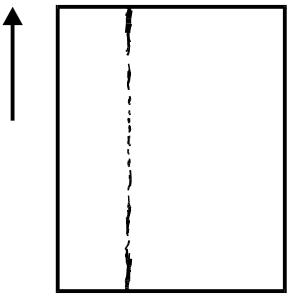

A219T501.wmf

- Possible Causes -

1. Dirty optics
2. Dust between the cleaning blade and drum
3. Deformed edge of the cleaning blade
4. Deformed inlet seal on the development unit

- Action -

Do the black bands shift when a reduction copy is made?

No

Yes

Check and clean the optics section. After cleaning the optics, perform the necessary SP modes in order (see Section 4 - Service Remarks for details).

Remove the cleaning blade and clean the edge of the cleaning blade. Then check if the edge of the cleaning blade is deformed or not.

No

Yes

Replace the cleaning blade.

Replace the imaging unit.

1.5 VERTICAL BLACK LINES

- Problem -

Thin black lines appear on the copy.

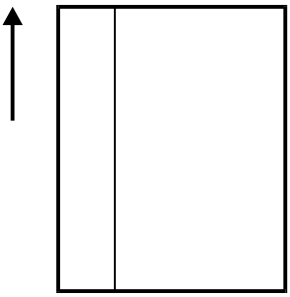

A219T502.wmf

- Possible Causes -

1. Scratched cleaning blade
2. Dirty or scratched exposure glass or dirty or scratched mirrors
3. Scratched or dirty drum
4. Scratched hot roller

- Action -

Do the black lines shift when a reduction copy is made?

No

Yes

Clean or replace the exposure glass or mirrors. After cleaning the optics, perform the necessary SP modes in order (see Section 4 - Service Remarks for details).

Is the edge of the cleaning blade scratched?

No

Yes

Replace the cleaning blade.

Is the hot roller scratched?

No

Yes

Check whether black lines appear on the copy by stopping the copy paper in the transport section. If no black lines appear, replace the hot roller.

Check whether the drum is scratched or toner is built-up on the drum. Replace the drum if necessary.

1.6 VERTICAL WHITE LINES OR BANDS-1 (DULL OR BLURRED)

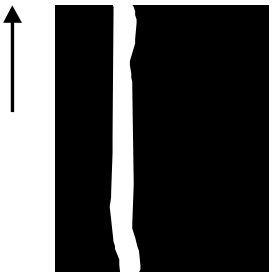

A219T503.wmf

- Problem -

Dull or blurred white lines appear on the copy.

- Possible Causes -

1. Dirty or deteriorated charge corona wire
2. Dirty or deformed grid plate
3. Damp or deformed inlet seal on the development unit

- Action -

Are the charge corona wires or grid plate dirty?

No

Yes

Clean the charge corona wires or grid plate.

Is the grid plate or the charge corona wire deteriorated or deformed?

No

Yes

Replace the charge corona unit.

Replace the imaging unit.

1.7 VERTICAL WHITE LINES OR BANDS-2 (THIN, DISTINCT)

- Problem -

Vertical white lines appear on the copy.

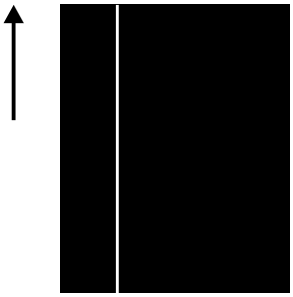

A219T504.wmf

- Possible Causes -

1. Paper dust on the edge of the cleaning blade
2. Scratched drum
3. Scratched hot roller

- Action -

Remove the cleaning blade. Clean and inspect the edge of the blade. Is the edge of the cleaning blade deformed?

No

Yes

Replace the cleaning blade.

Make a copy and stop the machine when the paper reaches the transport section. Do white lines appear on the copy?

No

Yes

Replace the drum.

Replace the hot roller if it is scratched.

1.8 HORIZONTAL BLACK/WHITE LINES

- Problem -

Black or white lines perpendicular to the paper feed direction appear on the copy image.

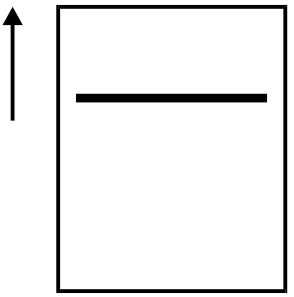

A219T505.wmf

- Possible Causes -

1. Drum or hot roller is scratched.
   If black lines appear at 94.6 mm intervals, the cause is a scratched drum, scratched hot roller, or toner build up.
2. Toner adheres to the drum surface.
   Due to insufficient cleaning, foreign matter may accumulate on the blade, causing toner to stick to the drum surface when the drum stops.

- Action -

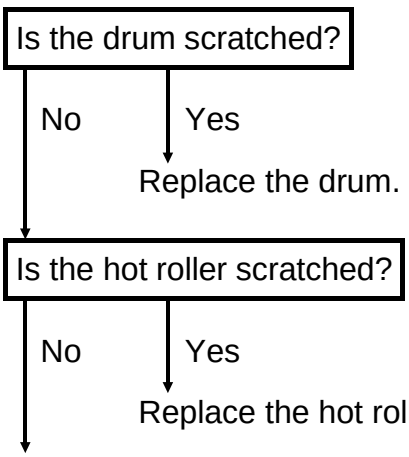

If toner adheres to the drum surface, clean the drum with water. Also clean or replace the cleaning blade.

1.9 JITTER

- Problem -

Jitter appears on the copy.

- Possible Causes -

1. Drum not turning smoothly
2. Scanner not moving smoothly

- Action -

Does the jitter interval change when a reduction copy is made?

Yes

No

Check drum drive mechanisms such as the drum drive gears and drum pulleys.

No Good

Reinstall them correctly or replace the defective parts.

Are the scanner drive belts correctly installed?

Yes

No

Reinstall them correctly or replace the defective parts.

Does the voltage at CN103-2 through 5 on the main board stay at 24 volts when the ◇ key is pressed?

24 volts

Not always 24 volts

Replace the scanner motor or check the scanner operation.

Replace the main board.

1.10 BLACK SPOTS ON THE COPY IMAGE

- Problem -

The grid voltage is not applied correctly.

- Poor contact between the charge corona casing and grid plate
- Main control board defective
- High voltage supply board C/G/B/T/S defective

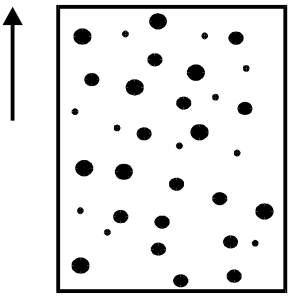

A219T506.wmf

- Action -

Is there good electrical contact between the charge corona casing and the grid plate?

Yes

No

Repair the poor contact or replace the charge corona unit if needed.

Check the voltage at CN102-6 on the main board.

0 volts

Not 0 volts

Replace the main control board.

Replace the high voltage supply board C/G/B/T/S.

1.11 SKEWED (OPTICAL) COPY IMAGE

- Problem -

The copy image is skewed (parallelogram shape).

The sides of the copy image are straight, but the leading and trailing edges are skewed.
(This differs from skewing originating in the paper path.)

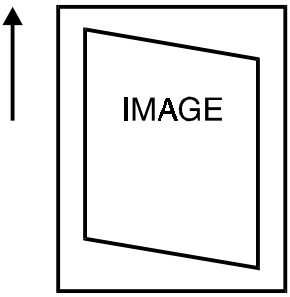

A219T507.wmf

- Possible Causes -

1. The 4th/5th mirror assembly is not parallel with the 1st and 2nd scanners.
2. The mirrors are in the wrong position.

- Action -

Is each mirror positioned correctly on its scanner and on the 4th/5th mirror assembly?

Yes

No

Reposition the mirror correctly. If the spring plates are defective, replace them.

Readjust the height of 4th/5th mirror assembly by turning the adjusting screw.

1.12 TONER DENSITY ON COPIES TOO HIGH

- Problem -

1. Dirty background appears on the copy.
2. The image density of black solid areas is too high.

- Possible Causes -

1. The toner supply motor keeps on turning continuously.
2. SP30 (Toner Supply Mode Selection) has been changed from the default setting.
3. The main control board is defective.
4. The charge corona current is too low.
5. Some SP or UP modes have been changed that would lead to this problem.
6. TD sensor defective.

- Action -

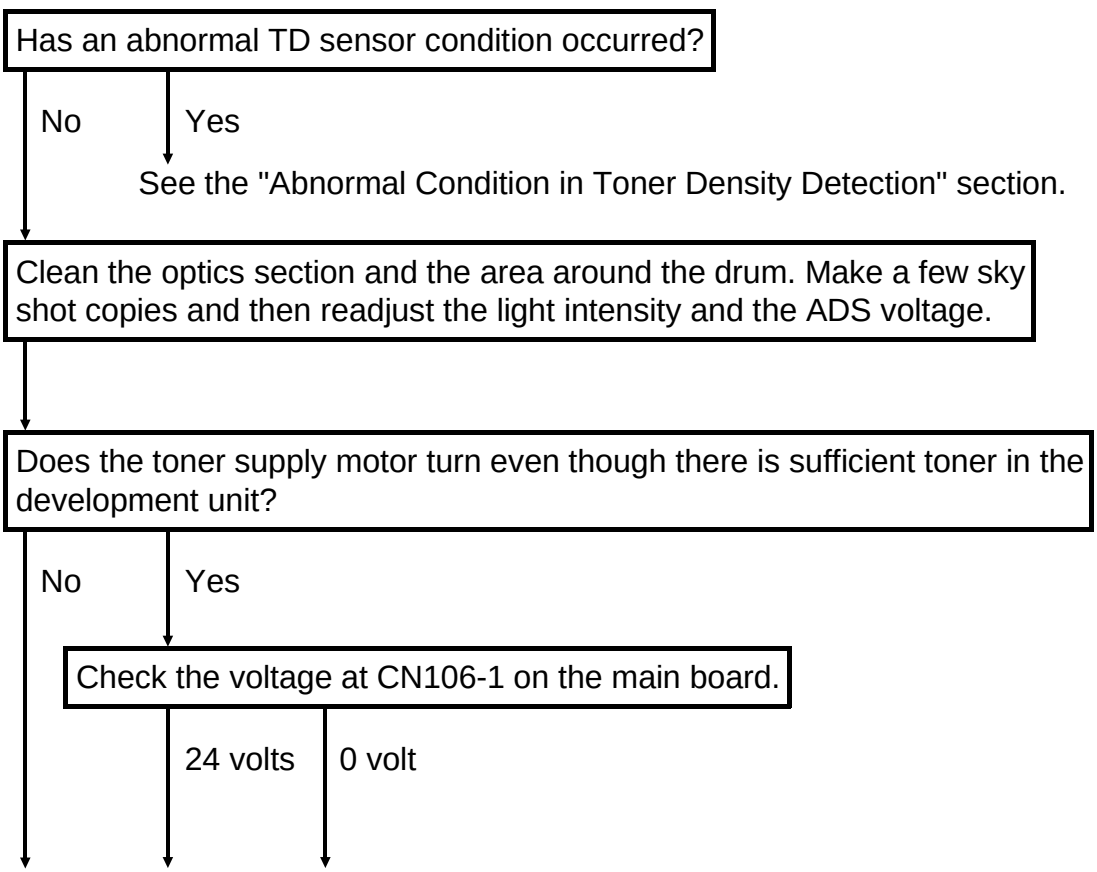

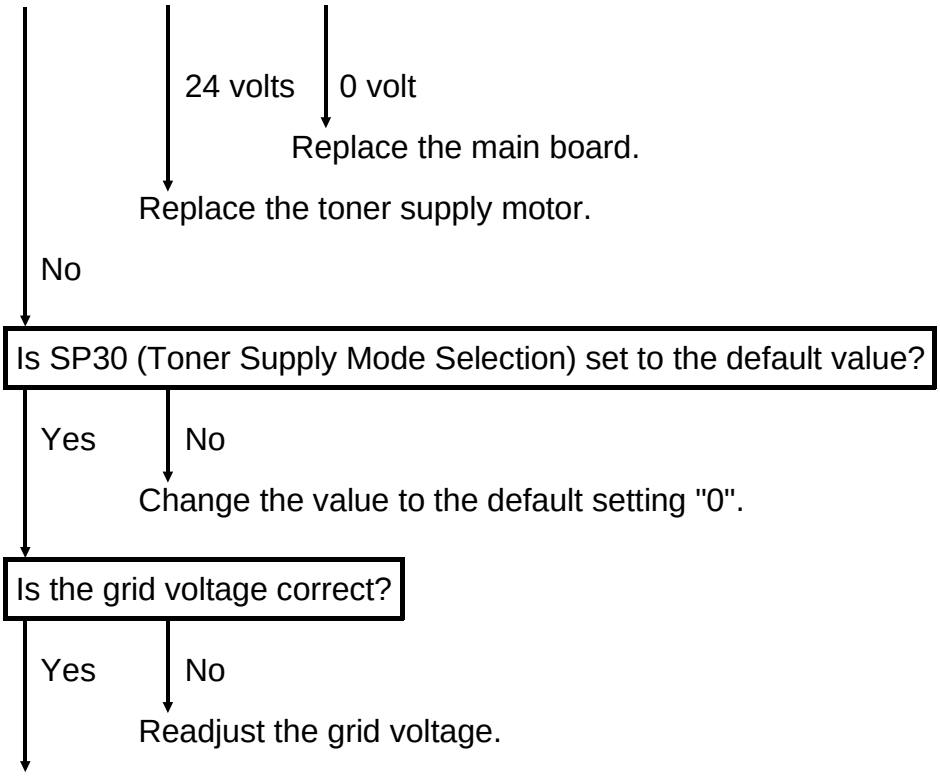

Clean the optics section and around the imaging unit.
Perform the necessary SP modes in order (see Section 4 - Service Remarks for details).

Check the related SP mode settings (SP30, 31, 32, 33, 34, 35, 36, 38, 48, 53, 54 and 62).
Change the settings to lean towards the lighter side.

1.13 TONER DENSITY ON COPIES TOO LOW

- Problem -

1. Light copy
2. Carrier on the copy.
3. Light spots appear in black solid areas.

- Possible Causes -

1. The toner supply motor does not rotate.
2. SP30 (Toner Supply Mode Selection) has been changed from the default setting.
3. The main control board is defective.
4. The charge corona current is too high.
5. Some SP or UP modes have been changed that would lead to this problem.
6. TD sensor defective.

- Action -

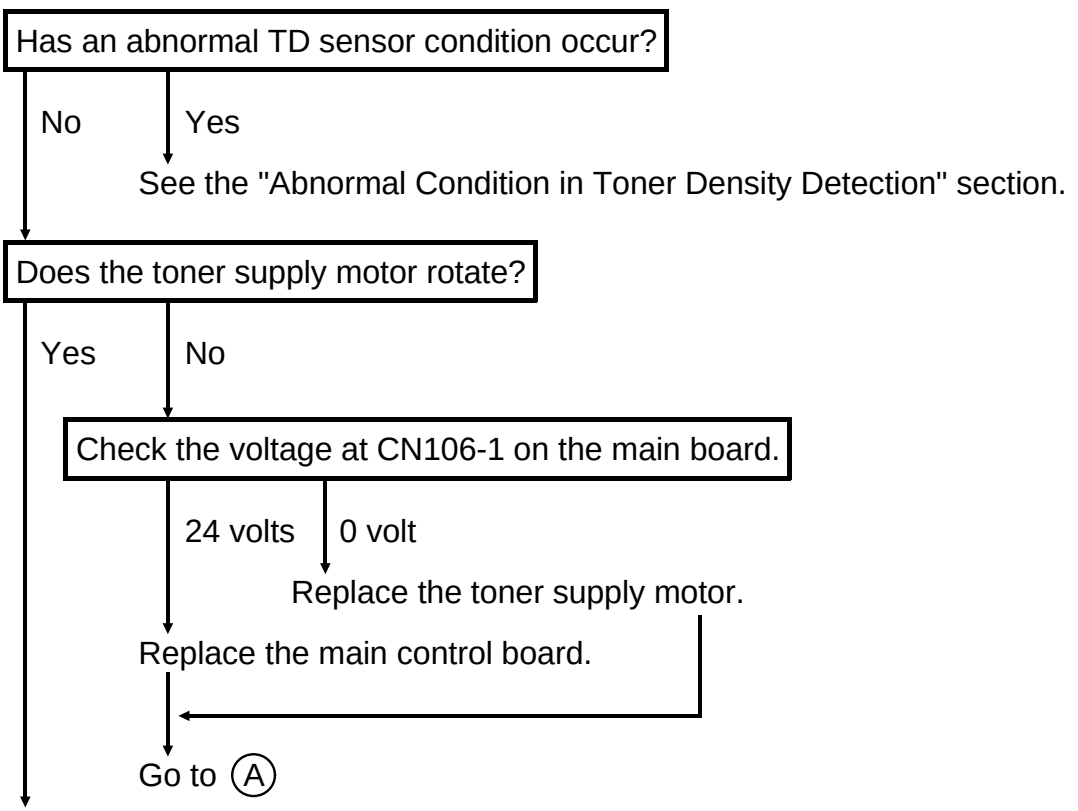

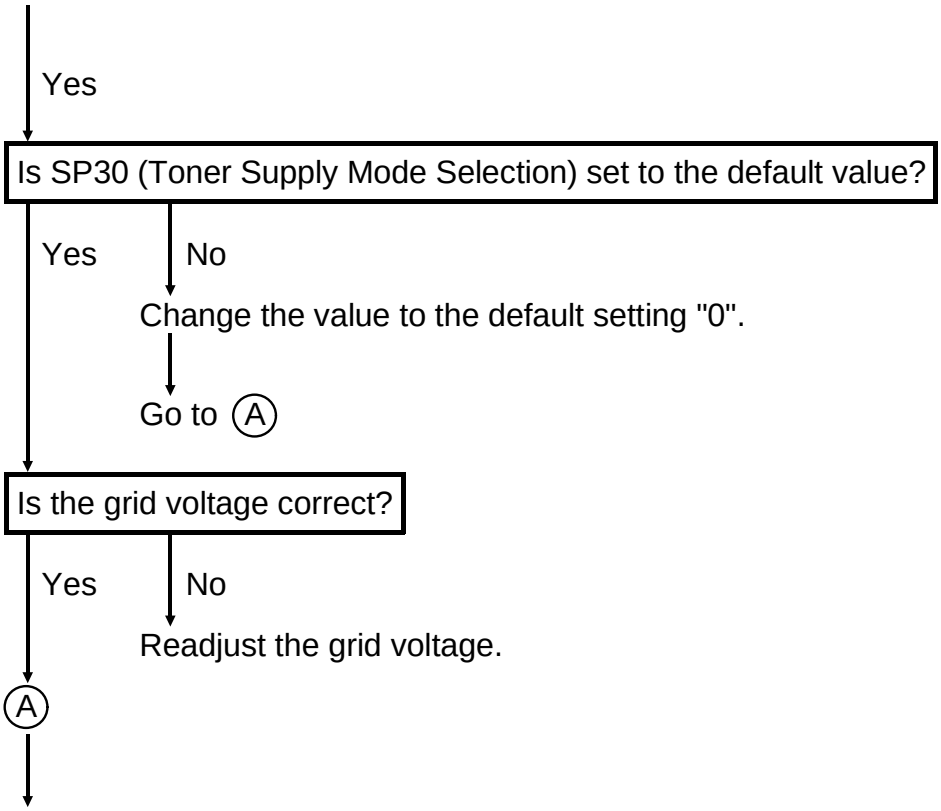

Check the related SP mode settings (SP30, 31, 32, 33, 34, 35, 36, 38, 48, 53, 54 and 62).
Change the settings to lean towards the darker side.

1.14 UNFUSED COPY IMAGE

- Problem -

Solid images rub off easily.

- Possible Causes -

1. The fusing pressure is weak.
2. The fusing temperature is too low.
3. The thermistor is malfunctioning.

- Action -

Adjust the position of the pressure springs to increase the fusing pressure.

No good

Increase the fusing temperature using SP49.

No good

Check the thermistor. If the thermistor is malfunctioning, replace it.

1.15 CREASING PAPER AFTER FUSING

- Problem -

The copy paper is creased.

- Possible Causes -

1. The fusing temperature is too high.
2. The thermistor is malfunctioning.
3. The copier is installed in humid environment.

- Action -

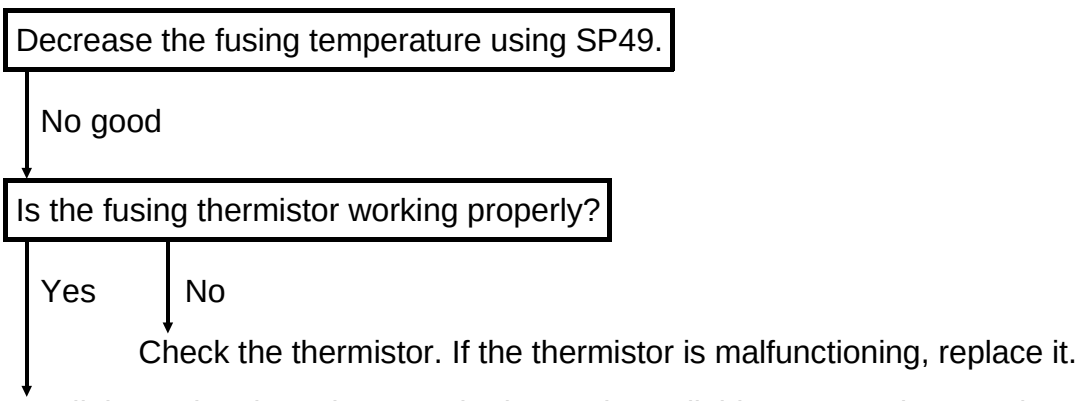

Install the optional tray heater. The heater is available as a service part (see Section 3 for details).

1.16 PAPER MISFEED

- Problem -

1. The Check Paper Path indicator turns on when the main switch is turned on, even if there is no paper in the copier.
2. The Check Paper Path always turns on at the same location when copies are made.

- Possible Causes -

1. Defective sensor
2. Mechanical or electrical malfunction

- Action 1 (Initial misfeed) -

Check which sensor (registration sensor or exit sensor) is defective. Replace the defective sensor. If no sensors are defective, replace the main board.

- Action 2 (Misfeed during copy cycle) -

If the Check Paper Path indicator turns on after the ◇ key is pressed, check whether the paper tray has run out of paper or not.

No

Yes

Load paper into the paper tray

Enter Misfeed Detection OFF mode (SP6) and make a copy to see whether a misfeed occurs.

Misfeed

No misfeed

Check which sensor (registration sensor or exit sensor) is defective. If sensors are not defective, replace the main board.

Check whether a mechanical or electrical malfunction occurs. Replace the defective parts.

1.17 ABNORMAL CONDITION IN TONER DENSITY DETECTION

- Problem -

The Auto ID indicator or the selected manual ID level blinks. (No SC Code is indicated.)

- Definition -

The detected TD sensor output goes below 0.2 volts.

- Possible Causes -

- Defective TD sensor
- Defective main control board
- Loose connector
- Poor connection between the imaging unit and the main copier

- Action -

Check the continuity between the TD sensor harness and CN124 on the main control board. Are they properly connected?

Yes

No → Connect the connector firmly.

Is the TD sensor circuit open?

No

Yes → Replace the TD sensor and developer.

Check the electrical continuity of the harness from the main control board to the TD sensor. Are they connected properly?

Yes

No → Replace the harness.

Check the toner supply mechanisms. Are they working properly?

Yes

No

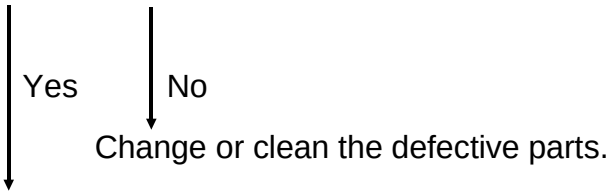
Yes
No
Change or clean the defective parts.
Replace the main control board.

2. SERVICE CALL CONDITIONS

NOTE: 1) E-codes are displayed in the copy counter. The "E" and the "code number" are displayed alternatively.

2) To clear the service call condition, turn the main switch off and on.

3) When E5 service call conditions occur, for safety reasons they cannot be cleared by turning the main switch off/on. The following procedure must be performed to clear these service call conditions.
   1. After repairing the machine, turn on the main switch.
   2. Enter SP mode 97.
   3. Turn the main switch off and on.

CODE #11 — EXPOSURE LAMP ERROR 1

- Definition -

- The feedback signal becomes higher than 4.2 volts (rms) for 1.0 second when the exposure lamp is on.
- The feedback signal becomes higher than 1.0 volt (rms) for 1.0 second when the exposure lamp is off.

- Possible Causes -

- Triac short circuit
- Exposure lamp open
- Thermofuse open

CODE #12 — EXPOSURE LAMP ERROR 2

- Definition -

- The feedback signal falls below 0.5 volt (rms) for 1.0 second when the exposure lamp is on.
- The exposure lamp stays on for longer than 25 seconds.

- Possible Causes -

- Defective ac drive/dc power supply board
- Defective main control board
- Defective power supply circuit

CODE #13 — ZERO CROSS SIGNAL ERROR

- Definition -

The CPU does not receive the zero cross signal within 2.0 seconds, or the interval between zero cross signals is more than 2.0 seconds.

- Possible Causes -

- Defective main control board
- Defective ac drive/dc power supply board
- Zero cross line open
- CN101 on the main control board or CN207 on the ac drive/dc power supply board is not correctly connected.

CODE #21 — SCANNER HOME POSITION ERROR 1

- Definition -

The scanner home position sensor's output remains LOW (de-actuated) for 10 seconds after the main switch is turned on, or the output remains LOW (de-actuated) after the scanner returns during the copy process.

- Possible Causes -

- Defective home position sensor
- Defective scanner drive motor
- Defective main control board
- Defective ac drive/dc power supply board
- Defective scanner drive circuit

CODE #22 — SCANNER HOME POSITION ERROR 2

- Definition -

The scanner home position sensor's output remains HIGH (actuated) for 4.0 seconds after the main switch is turned on, or the output remains HIGH (actuated) for 0.3 seconds after the scanner starts.

- Possible Causes -

- Defective home position sensor
- Defective scanner drive motor
- Defective main control board
- Defective ac drive/dc power supply board
- Defective scanner drive circuit
- F2 on the ac drive/dc power supply board open (blown fuse).

CODE #2A — 4TH/5TH MIRROR HOME POSITION ERROR 1

- Definition -

The 4th/5th mirror home position sensor's output remains LOW for 10 seconds after driving the 4th/5th mirror motor.

- Possible Causes -

- Defective 4th/5th mirror home position sensor
- Defective 4th/5th mirror motor
- Defective 4th/5th mirror drive mechanism

CODE #2B 4TH/5TH MIRROR HOME POSITION ERROR 2

- Definition -

The 4th/5th mirror home position sensor's output remains HIGH for 10 seconds after driving the 4th/5th mirror motor.

- Possible Causes -

- Defective 4th/5th mirror home position sensor
- Defective 4th/5th mirror motor
- Defective 4th/5th mirror drive mechanism
- F2 on the ac drive/dc power supply board open (blown fuse)

CODE #28 — LENS HOME POSITION ERROR 1

- Definition -

The lens home position sensor's output remains LOW (de-actuated) for 10 seconds after the unit moves to the home position.

- Possible Causes -

- Defective lens home position sensor
- Defective lens drive motor
- Defective main control board
- Defective lens drive mechanism

CODE #29 — LENS HOME POSITION ERROR 2

- Definition -

The lens home position sensor's output remains HIGH (actuated) for 10 seconds after the unit leaves the home position.

- Possible Causes -

- Defective lens home position sensor
- Defective lens drive motor
- Defective main control board
- Defective lens drive mechanism

CODE #40 — OPTICS THERMISTOR ERROR

-Definition-

The optics thermistor is open.

- Possible Cause -

- Defective optics thermistor
- Defective main control board
- CN121 on the main control board is not correctly connected.

CODE #42 — HIGH VOLTAGE LEAKAGE

- Definition -

The high voltage supply board detects the leakage and sends the leak signal to the main control board for more than 1 second.

- Possible Causes -

- Transfer charge unit
- High voltage supply board
- Main control board (CN102-1)

CODE #52 — FUSING ERROR 1

- Definition -

The temperature detected by the thermistor does not reach 100°C within 24 (NA) or 35 (EU) seconds after the main switch is turned on.
To clear this error, refer to note 3 at the beginning of this chapter.

- Possible Causes -

- Defective fusing thermistor
- Fusing lamp open
- Defective ac drive/dc power supply board
- Defective main control board
- CN101 on the main control board or CN207 on the ac drive/dc power supply board is not correctly connected.

CODE #53 — FUSING ERROR 2

- Definition -

The temperature detected by the thermistor becomes higher than 255°C.
To clear this error, refer to note 3 at the beginning of this chapter.

- Possible Causes -

- Thermistor short
- Defective ac drive/dc power supply board
- Defective main control board
- Fusing harness shorted
- Triac short

CODE #54 — FUSING ERROR 3

- Definition -

The fusing lamp stays on for longer than 38 (NA) or 57 (EU) seconds while the main motor is off.
To clear this error, refer to note 3 at the beginning of this chapter.

- Possible Causes -

- Main board
- Defective ac drive/dc power supply board

CODE #55 — FUSING ERROR 4

- Definition -

- The temperature value output by the thermistor has not changed at all 16 (NA) or 20 (EU) seconds after the main switch is turned on.
- The temperature change detected by the thermistor is more than 20°C within any one second after the 16 (NA) or 20 (EU) seconds warm up time after the main switch is turned on.
  To clear this error, refer to note 3 at the beginning of this chapter.

- Possible Causes -

- Thermistor open
- Defective main control board
- Defective ac drive/dc power supply board
- Fusing lamp open
- Poor thermistor connection

3. ELECTRICAL COMPONENT DEFECTS

3.1 SENSORS

Component	Condition	Symptom
4th/5th Mirror Home Position Sensor (S1)	Stays HIGH (CN114-2)	Service code E2B is displayed.
	Stays LOW (CN114-2)	Service code E2A is displayed.
ADS Sensor (S2)	Stays HIGH (CN114-5)	The image density will be abnormal. (Dirty background)
	Stays LOW (CN114-5)	The image density will be abnormal. (Light copies)
Tray Paper End Sensor (S3)	Stays HIGH (CN109-6)	The Load Paper indicator lights even if paper is present.
	Stays LOW (CN109-6)	The Load Paper indicator does not light even if there is no paper.
Registration Sensor (S4)	Stays HIGH (CN125-2)	Paper misfeed type A occurs whenever a copy is mode.
	Stays LOW (CN125-2)	The Paper Misfeed B indicator lights even if there is no paper.
By-pass Feed Paper End Sensor (S5)	Stays HIGH (CN125-4)	The Load Paper indicator lights even if paper is placed on the by-pass feed table.
	Stays LOW (CN125-4)	The Load Paper indicator does not light even if there is no paper on the by-pass feed table.
Exit Sensor (S6)	Stays HIGH (CN127-2)	Paper misfeed type C occurs whenever a copy is mode.
	Stays LOW (CN127-2)	The Paper Misfeed C indicator lights even if there is no paper.
Scanner Home Position Sensor (S7)	Stays HIGH (CN120-2)	Service code E22 is displayed.
	Stays LOW (CN120-2)	Service code E21 is displayed.
Lens Home Position Sensor (S8)	Stays HIGH (CN115-2)	Service code E29 is displayed.
	Stays LOW (CN115-2)	Service code E28 is displayed.
Toner Density (TD) Sensor (S9)	Stays HIGH (CN124-5)	The toner near/end condition will not be cleared even if new toner is added.
	Stays LOW (CN124-5)	User code U6 is displayed when installing a new developer. During normal usage, the Manual Image Density or the ADS indicators start blinking.

3.2 SWITCHES

Component	Condition	Symptom
Main Switch (SW1)	OPEN	The copier does not turn on.
	SHORT	The copier does not turn off.
Interlock Switch (SW2)	OPEN	The copier does not turn on.
	SHORT	The copier does not turn off when the upper unit is opened.
Tray Paper Size Switch (SW3)	OPEN	The copier detects the paper tray open condition even if the paper tray unit is closed.
	SHORT	The copier detects the paper tray closed condition even if the paper tray unit is opened.
Right Vertical Guide Switch (SW4)	OPEN	User code U1 is displayed.
	SHORT	The user code U1 will not be displayed even if the right vertical guide is opened.

4. BLOWN FUSE CONDITIONS

FUSE	Rating		Symptom when turning on the Main Switch
	120 V	230 V	
AC Drive/DC Power Supply Board			
F1	15 A/125 V	T6.3 A/250 V	No response
F2	8 A/125 V	T6.3 A/250 V	E2B is displayed
F3	3.15 A/125 V	T3.15 A/250 V	No response
F4	5 A/125 V	T3.15 A/250 V	No response

5. USER CODES

U - code	Contents
U1	Right vertical guide opened
U2	Key counter not set (JP101 is cut)
U4	Optional sorter not set
U6	Developer not installed

SECTION 8

OPTIONS

DOCUMENT FEEDER

(Machine Code: A662)

1. SPECIFICATIONS

Original Size:	Maximum: A3 or 11" x 17" Minimum: A5 Lengthwise or 5 1/2" x 8 1/2"
Original Weight:	52 to 105 g/m^2 (14 to 28 lb)
Original Feed:	Automatic Feed - ADF mode Semi-automatic Feed - SADF mode
Original Tray Capacity:	30 sheets - 80 g/m^2 (20 lb)
Original Set:	Face up, first sheet on top
Original Separation:	Feed roller and friction belt
Original Transport:	One flat belt
Copying Speed:	15 copies/minute (A4 lengthwise or 8 1/2" x 11" lengthwise)
Power Consumption:	45 W
Dimensions (W x D x H):	590 x 443 x 87.5 mm (23.3" x 17.5" x 3.4") (Not including the original table)
Weight:	Approximately 7 kg (15.5 lb)

- Specifications are subject to change without notice.

2. COMPONENT LAYOUT

2.1 MECHANICAL COMPONENTS

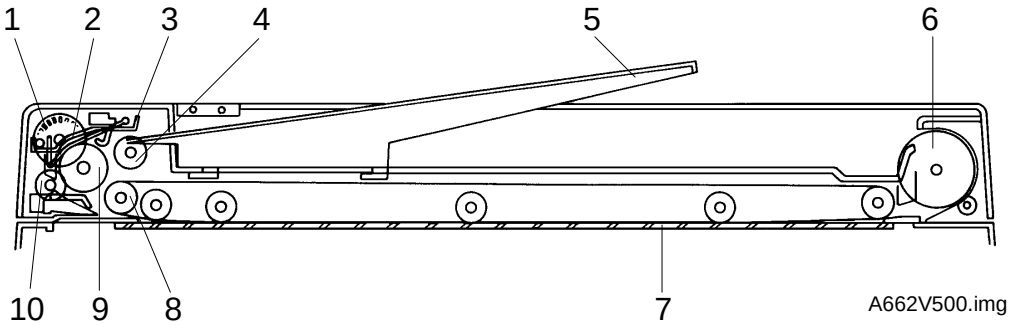

1. Pulse Generator Disk
2. Friction Belt
3. Pick-up Lever
4. Pick-up Roller
5. Original Table
6. Exit Roller
7. Transport Belt
8. Transport Belt Roller
9. Feed Roller
10. Relay Roller

2.2 ELECTRICAL COMPONENTS

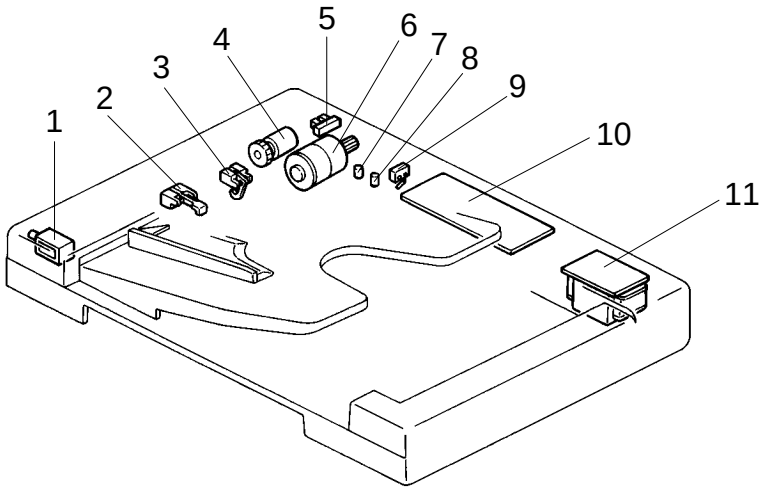

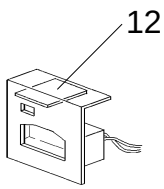

1. Pick-up Solenoid
2. Registration Sensor
3. Original Set Sensor
4. Feed Clutch
5. Pulse Generator Sensor
6. DF Motor
7. Insert Original Indicator
8. SADF Indicator
9. Lift Switch
10. DF Main Board
11. DF Transformer
12. DF Interface Board

3. ELECTRICAL COMPONENT DESCRIPTIONS

Symbol	Name	Function	Index No.
Motor			
M1	DF	Drives all the document feeder components.	6
Solenoid			
SOL1	Pick-up Solenoid	Energizes to press the pick-up lever against the stack of originals in preparation for original feed-in.	1
Clutch			
CL1	Feed Clutch	Turns on to transmit main motor rotation to the feed roller.	4
Switch			
SW1	Lift Switch	Informs the CPU when the DF is lifted and also serves as the misfeed reset switch for the DF.	9
Sensors			
S1	Pulse Generator Sensor	Supplies timing pulses to the DF main board.	5
S2	Original Set Sensor	Informs the copier CPU that originals have been placed and causes the Insert Original indicator to go out.	3
S3	Registration Sensor	Sets original stop timing and checks for original misfeeds.	2
Printed Circuit Board			
PCB1	DF Main Board	Controls all DF functions.	10
PCB2	DF Interface Board	Interfaces between the copier main board and the DF.	12
Transformer			
TR1	DF Transformer	Steps down the wall voltage to 25 volts ac.	11
LEDs			
LED1	SADF Indicator	Informs the operator that the SADF mode is available.	8
LED2	Insert Original Indicator	Turns off when the originals are inserted into the original table.	7

4. POWER DISTRIBUTION

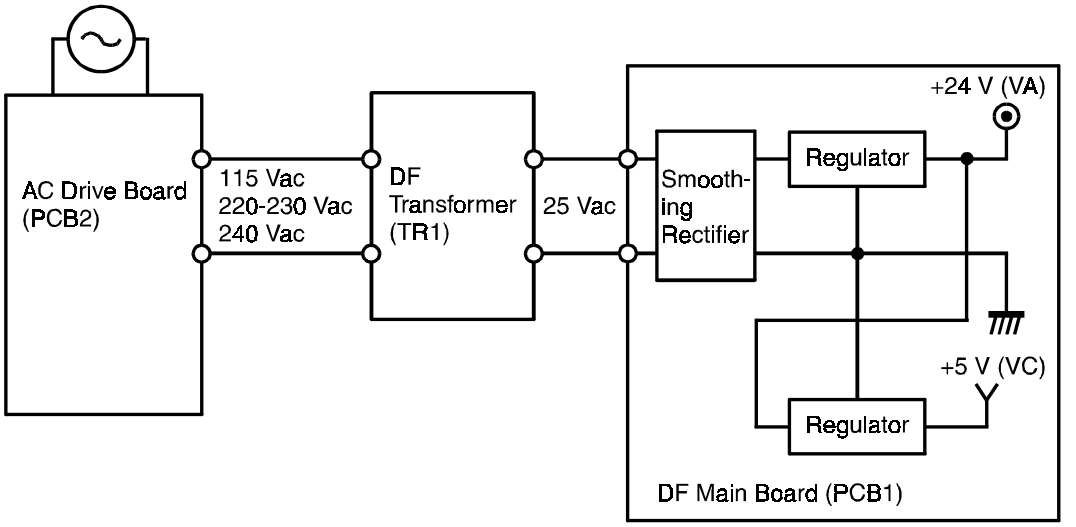

A662D500.wmf

The document feeder uses two dc power levels: +24 volts, and +5 volts.

When the main switch is turned on, the DF transformer receives the wall outlet ac power through the ac drive board and outputs 25 volts ac to the DF main board. Then, the dc power supply circuit on the DF main board converts the 25 volts ac input to +24 volts and +5 volts.

+24 volts is used by the DF motor, the pick-up solenoid, and the feed clutch. +5 volts is used by other electrical components.

5. BASIC OPERATION

When the main switch is turned on, the DF CPU sends the "DF installed" signal to the copier CPU. Receiving this signal, the copier CPU recognizes that the document feeder is installed and sends the "DF confirmed" signal to the DF CPU.

When originals are placed on the original table, the Insert Original indicator turns off and the DF CPU sends the "original set" signal to the copier CPU to inform that the originals have been set.

When the Start key is pressed, the copier CPU sends the "feed-in" signal to the document feeder. On receipt of this signal, the DF CPU energizes the DF motor, then the pick-up solenoid and feed clutch to feed in the bottom sheet of the original stack onto the exposure glass. The pick-up solenoid, and the feed clutch remain energized until the original's leading edge reaches the registration sensor. The DF motor turns off shortly after the original's trailing edge passes the registration sensor. Then, the DF motor pauses and reverses for a moment to align the edge of the original with the scale.

Then the scanner starts to move, (scanner start timing does not depend on the progress of the original through the DF; it starts at a fixed time after the Start key is pressed). When the scanner reaches the return position, the copier CPU sends the "original change" signal to the DF CPU in order to feed out the current original and feed in the next original.

6. INTERFACE CIRCUIT

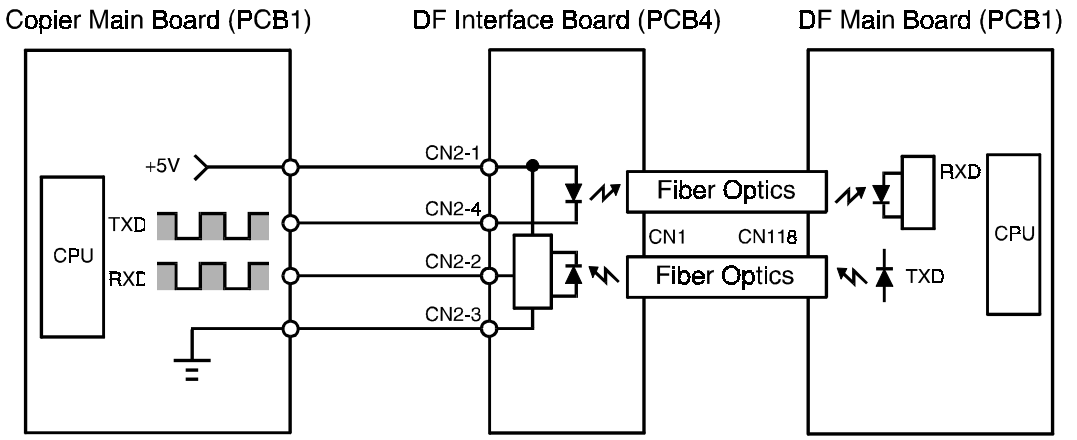

A662D501.wmf

The copier CPU and the DF CPU communicate via the interface board using fiber optics. The interface board changes the optical signals to electrical signals (and vice versa).

7. ORIGINAL FEED

7.1 ORIGINAL PICK-UP MECHANISM

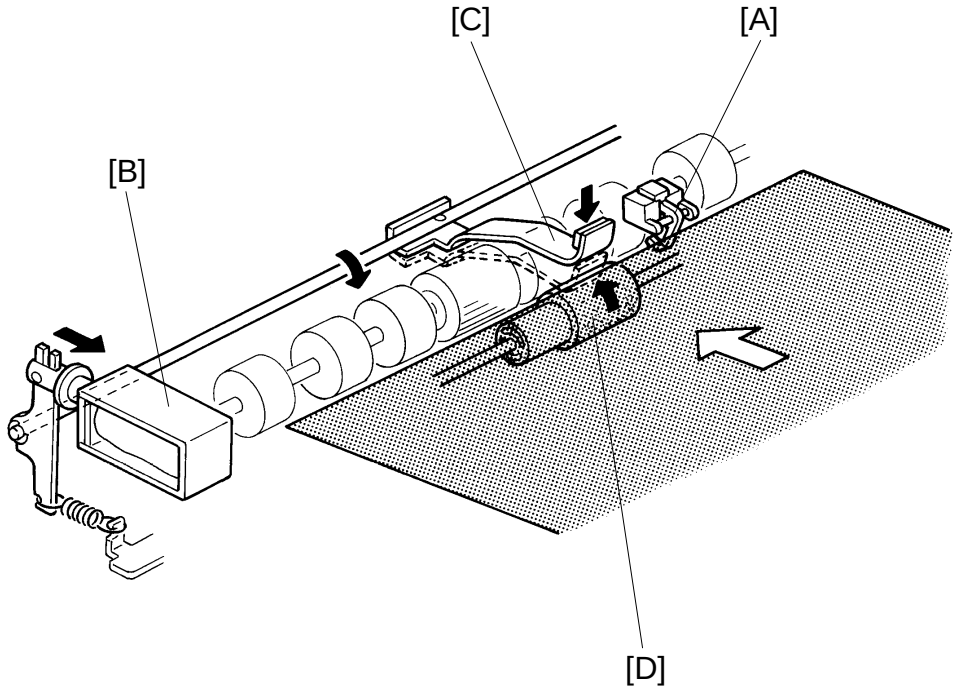

A662D502.img

After setting the originals on the original table, the originals contact the feeler [A] of the original set sensor and cause the feeler to move out of the sensor. The DF CPU then sends the original set signal to the copier CPU to inform it that the document feeder will be used. When the Start key is pressed, the pick-up solenoid [B] is energized. The original stack is then pressed between the pick-up lever [C] and pick-up roller [D]. The rotation of the pick-up roller advances the bottom original.

7.2 ORIGINAL SEPARATION MECHANISM

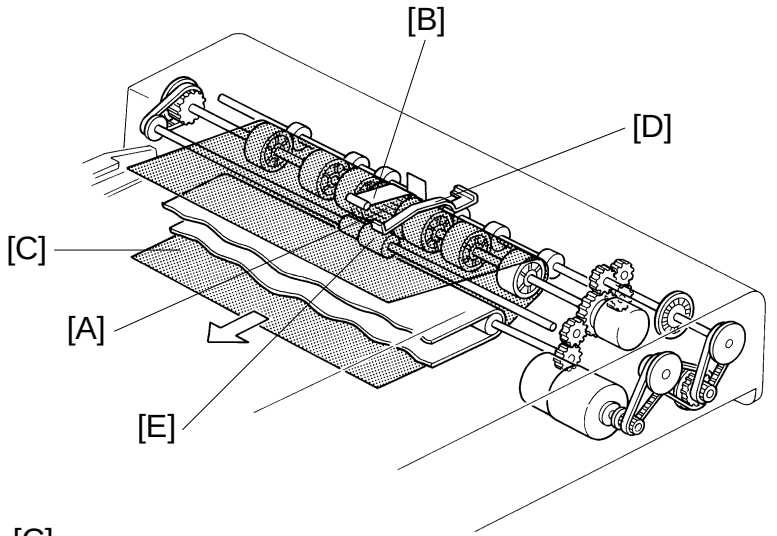

A662D503.img

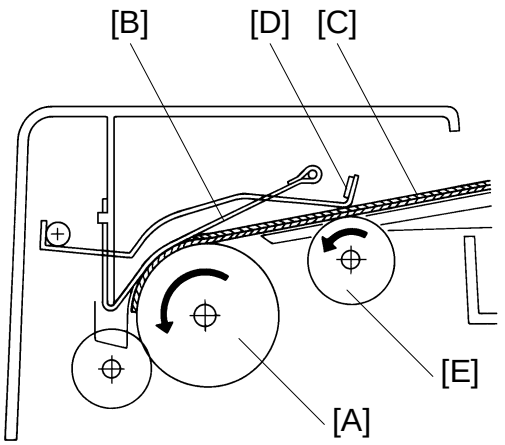

A662D504.img

The feed roller [A] and the friction belt [B] are used to feed in and separate the originals [C]. Only the bottom original is fed because the friction belt prevents any other originals from feeding.

Original feed starts when the pick-up lever [D] presses the original stack and the rotation of the pick-up roller [E] advances the bottom original of the stack. The feed roller moves the original past the friction belt because the driving force of the feed roller is greater than the resistance of the friction belt. The friction belt prevents multiple feeds because the resistance of the friction belt is greater than the friction between original sheets.

7.3 ORIGINAL FEED-IN MECHANISM

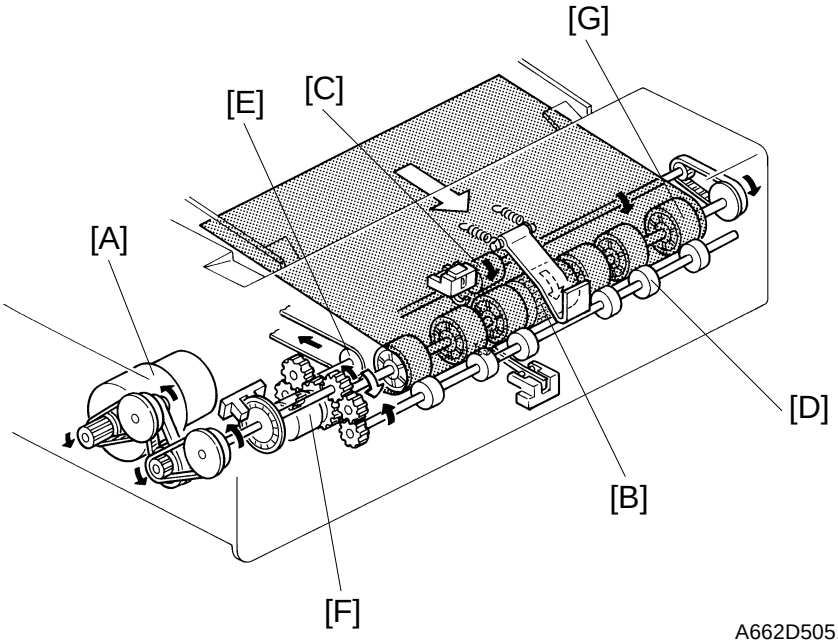

A662D505.img

The DF motor [A] drives the feed roller [B], the pick-up roller [C], the relay rollers [D], and the transport belt roller [E] via timing belts and a gear train. The feed roller and the pick-up roller are controlled by the feed clutch [F], but the relay rollers and the transport roller are directly driven by the DF motor. The idler rollers [G] on the feed roller shaft are free from the shaft.

When the Start key is pressed, the DF motor is energized and the relay rollers and transport belt roller start turning. 100 milliseconds after the DF motor starts turning, the pick-up solenoid and the feed clutch are energized. The pick-up and feed rollers then start turning and carry the original between the relay rollers and the idler rollers. The pick-up solenoid and the feed clutch are de-energized when the original's leading edge passes through the registration sensor.

The DF motor remains energized to deliver the original to the exposure glass until a certain number of pulses (10 to 25 pulses) after the original's trailing edge passes through the registration sensor. Then, the DF motor pauses and reverses for 15 pulses to align the edge of the original with the scale.

To feed the second original, the DF motor starts rotating when the scanner reaches the return position. (The copier CPU sends the original change signal to the DF CPU.) At this time, the transport belt starts carrying the first original on the exposure glass to the exit roller. The timing for when the pick-up solenoid and the feed clutch are energized for the second original depends on the length of the first original detected by the registration sensor.

7.4 ORIGINAL FEED-OUT MECHANISM

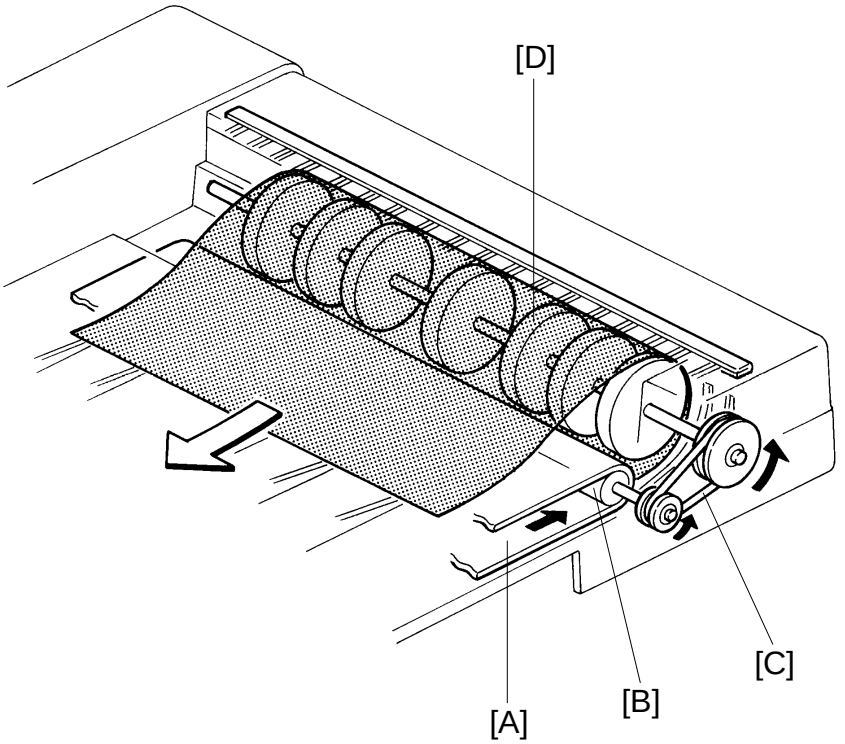

A662D506.img

The exit rollers are driven by the DF motor through a gear train, the transport belt roller, the transport belt [A], the transport belt roller [B], and the exit roller drive belt [C]. When the DF CPU receives the original change signal from the copier CPU, the DF motor starts turning. Simultaneously, the transport belt carries the original to the exit rollers [D] and the exit rollers take over the original feed-out.

7.5 DF MOTOR CIRCUIT

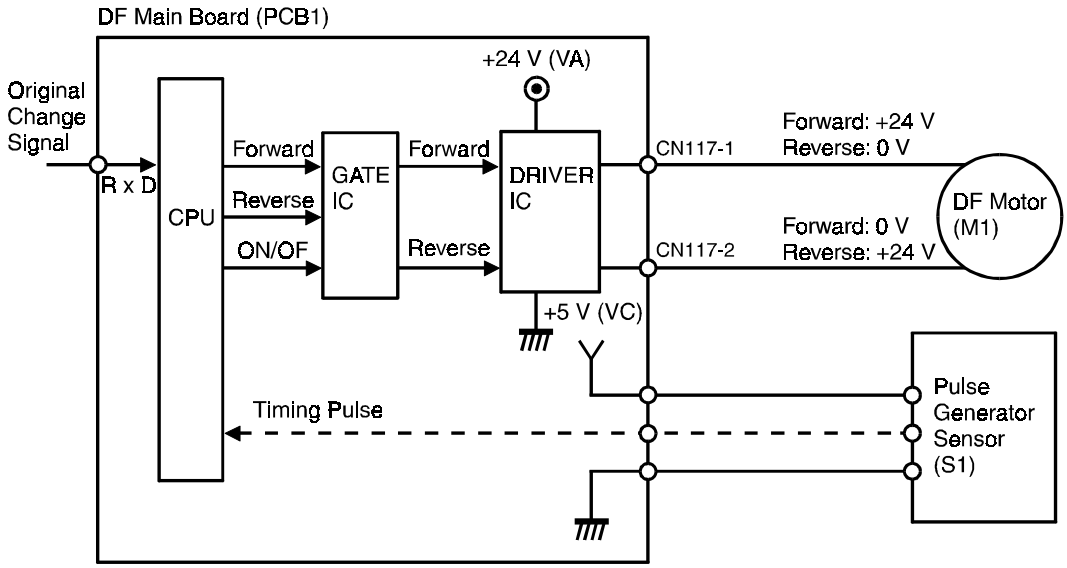

A662D507.wmf

The DF motor is a 24 volt dc motor. When the CPU receives the feed signal from the copier, the CPU outputs the ON signal and the Forward signal to the gate IC. On receipt of the forward signal from the gate IC, the driver IC outputs 24 volts to CN117-1 and 0 volts to CN117-2. This causes the DF motor to start turning in the forward direction.

Within 10 to 25 pulses after the original's trailing edge passes through the registration sensor, the CPU stops sending the ON signal and the Forward signal. The DF motor stops turning. Then the CPU outputs the ON signal and the reverse signal for 15 pulses. Then the driver IC outputs 0 volts to CN117-1 and +24 volts to CN117-2 to reverse the DF motor.

7.6 ORIGINAL FEED AND MISFEED DETECTION TIMING

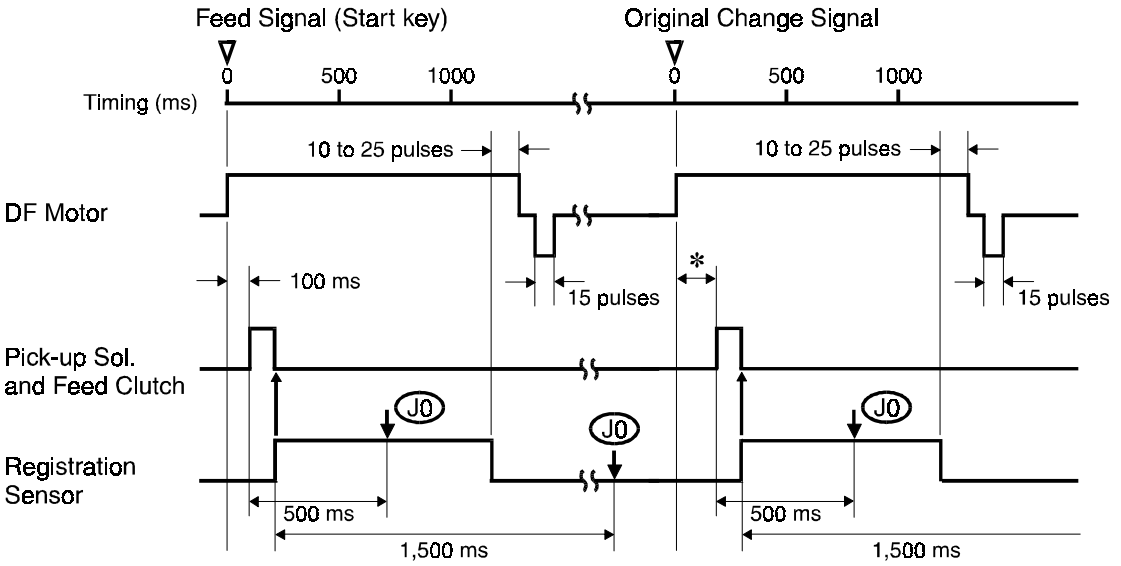

*: The timing depends on the length of the first original.

A662D508.wmf

The above chart shows the original feed timing for the original size of A4 lengthwise or 8.5" x 11" and the misfeed detection timing.

The registration sensor is used for misfeed detection. If the DF CPU detects a misfeed, the DF CPU lights the Original Misfeed indicator and sends the original misfeed signal to the copier CPU. Then the copier CPU lights the Check Paper Path and Misfeed Location (J0) indicators on the operation panel.

When the main switch is turned on, the DF CPU checks the registration sensor output for initial original misfeed.

During original feed-in, the DF CPU performs two kinds of original misfeed detection:

1. Whether the registration sensor is actuated within 500 milliseconds after the pick-up solenoid and the feed clutch turn on.
2. Whether the original has passed through the registration sensor 1,500 milliseconds after the registration sensor has been actuated.

8. SERVICE TABLES

8.1 DIP SWITCHES

DPS 1				Function
1	2	3	4	
0	0	0	0	Normal Setting
1	0	0	1	Free Run
0	0	1	1	Solenoid Test
1	1	0	1	Motor Test
1	1	1	1	All Indicators On

NOTE: All the functions are executed when the DF is closed.

8.2 VARIABLE RESISTORS

VR No.	Function
VR1	Adjusts registration

8.3 FUSE

Fuse No.	Rating	Blown Fuse Condition
F1	F2 A/250 V	DF will not operate.

9. REPLACEMENT AND ADJUSTMENT

9.1 TRANSPORT BELT REPLACEMENT

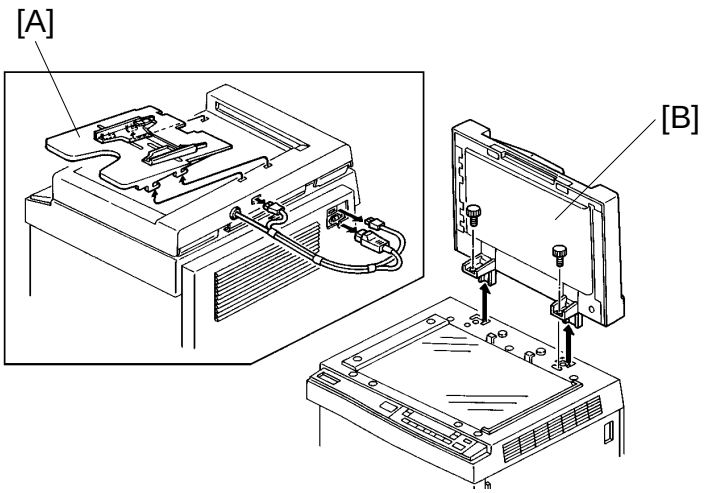

A662R500.img

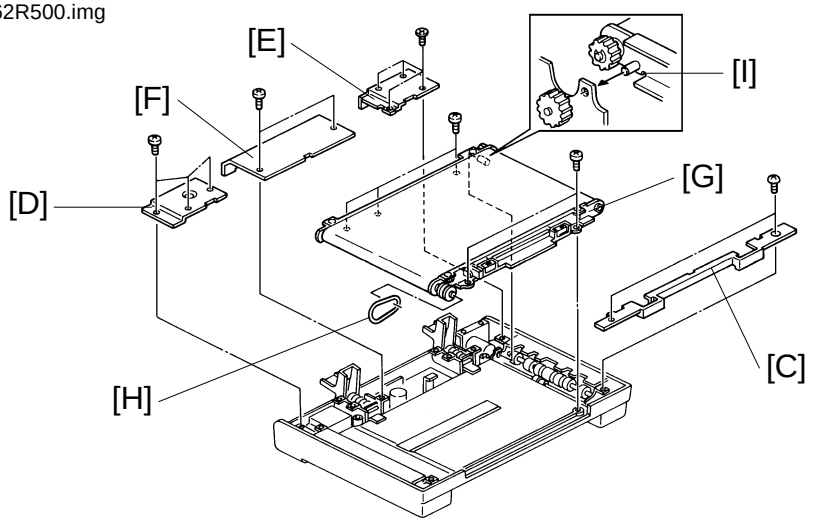

A662R501.img

1. Turn off the main switch.
2. Remove the original table [A].
3. Remove the DF [B] from the copier (2 knob screws, 1 power supply cord, and 1 optics harness).
4. Remove the grip guide [C] (2 screws).
5. Remove the transformer cover [D] (3 screws), DF motor cover [E] (4 screws) and main board cover [F] (2 screws).
6. Remove the transport belt assembly [G] (5 screws and 1 drive belt [H]).

   NOTE: When installing the transport belt assembly, make sure that the positioning pin [I] fits into the DF frame.

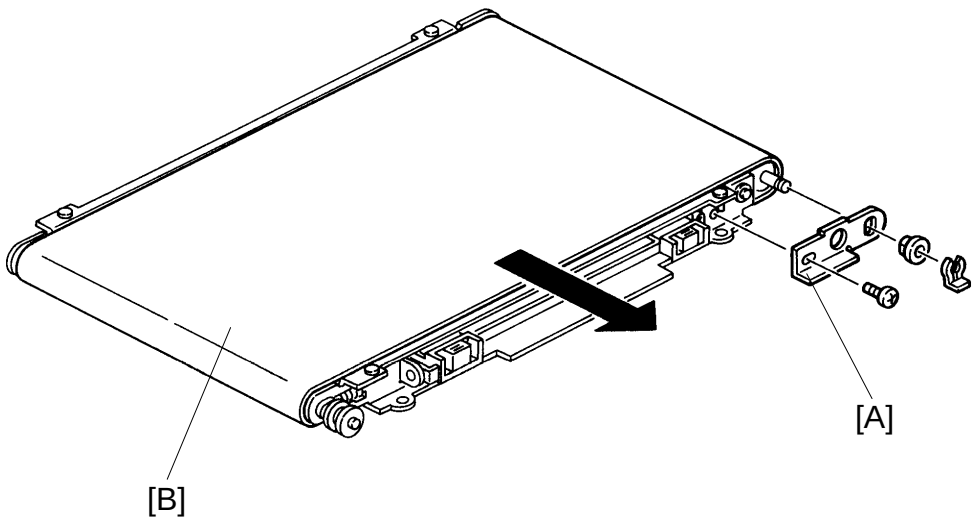

A662R502.img

7. Remove the transport roller holder [A] (1 screw, 1 snap ring and 1 bearing).
8. Pull out the transport belt [B].

NOTE: After reinstalling the transport belt, make sure that the bushings of the transport rollers set correctly and the transport belt turns smoothly.

9.2 FEED-IN UNIT REMOVAL

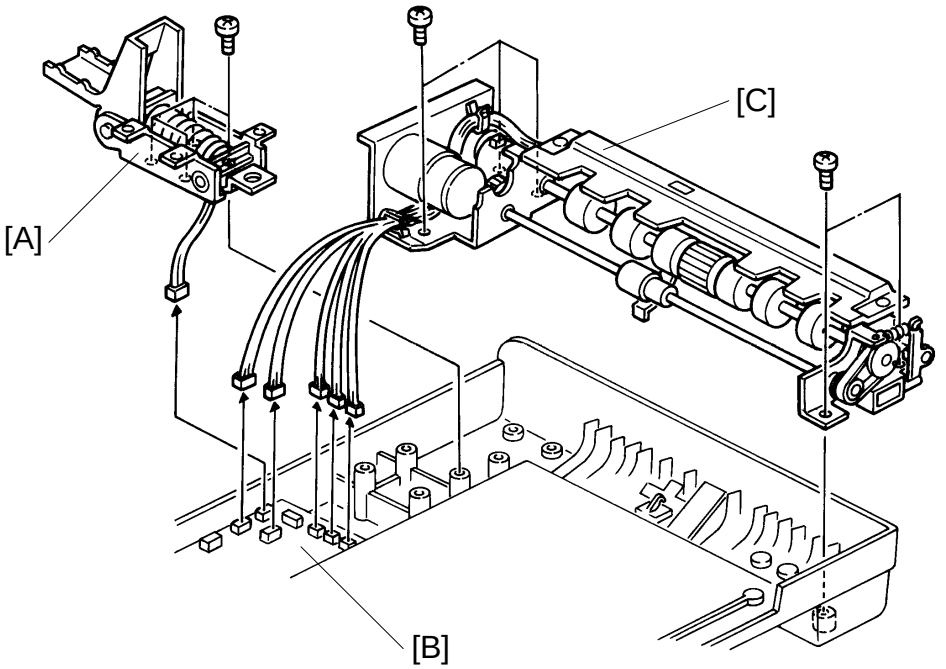

A662R503.img

1. Turn off the main switch.
2. Remove the transport belt assembly. (See Transport Belt Replacement.)
3. Remove the left hinge bracket [A] (4 screws and 1 connector).
4. Disconnect five connectors from the main board [B] (CN111, CN113, CN115, CN116 and CN117).
5. Remove the feed-in unit [C] (5 screws).

   NOTE: When reinstalling the feed-in unit, the harness must be positioned underneath the right hinge bracket.

9.3 PICK-UP ROLLER REPLACEMENT

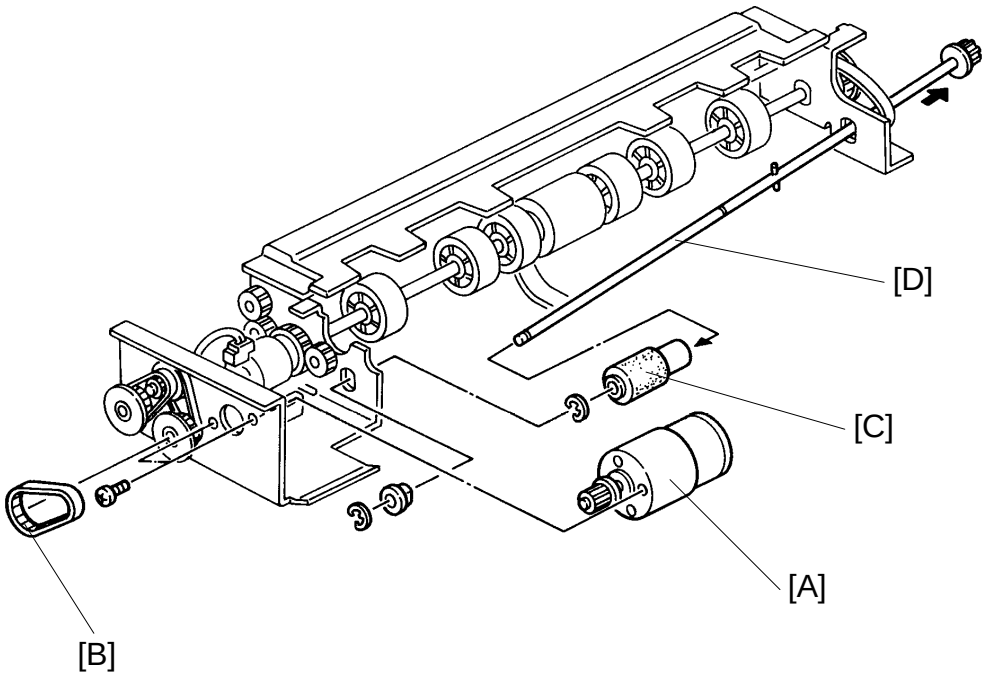

A662R504.img

1. Turn off the main switch.
2. Remove the feed-in unit. (See Feed-in Unit Removal.)
3. Remove the DF motor [A] (2 screws and 1 timing belt [B]).
4. Remove the pick-up roller [C] (2 E-rings and 1 bushing) from the shaft [D].

9.4 FEED ROLLER REPLACEMENT

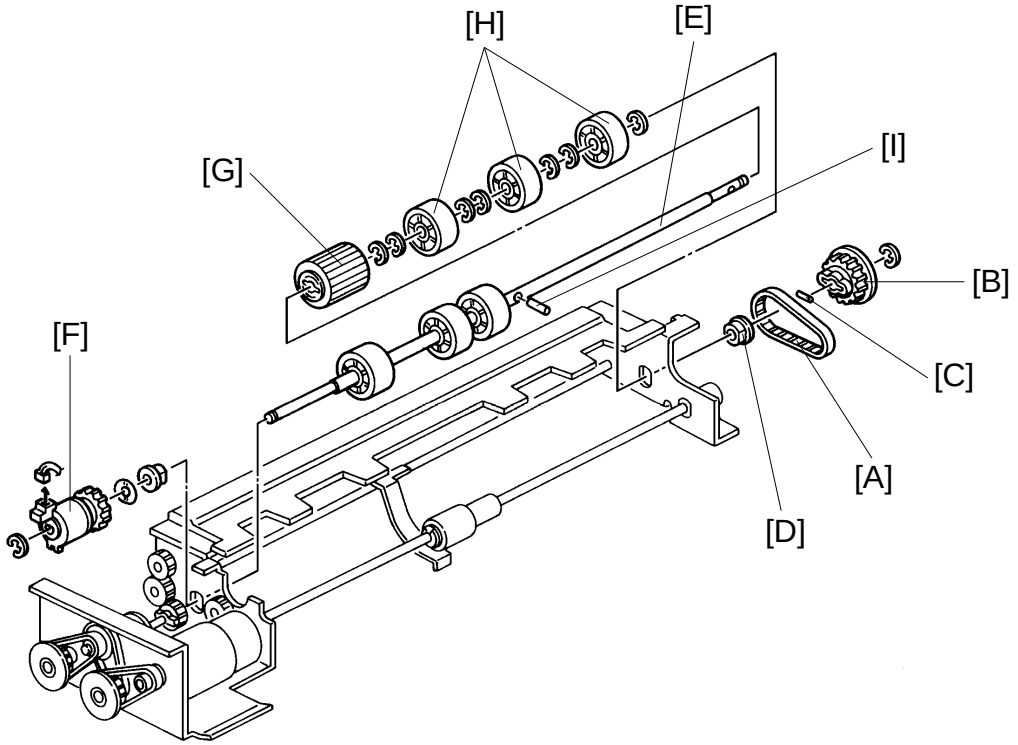

A662R505.img

1. Turn off the main switch.
2. Remove the feed-in unit. (See Feed-in Unit Removal.)
3. Remove the feed roller timing belt [A], feed roller gear [B] (1 E-ring and 1 spring pin [C]) and 1 bushing [D].

   NOTE: Be careful not to lose the spring pin.
4. Slide the feed roller shaft [E] towards the front and remove the feed clutch [F] (1 E-ring and 1 connector).
5. Take out the feed roller shaft (1 spacer and 1 bushing ----- from the rear side).
6. Remove the feed roller [G] from the shaft (3 idler rollers [H], 7 E-rings and 1 spring pin [I]).

   NOTE: Be careful not to lose the spring pin.

9.5 FRICTION BELT REPLACEMENT

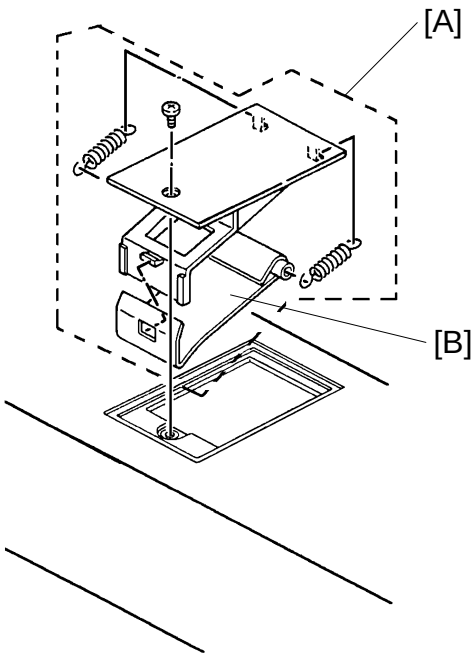

A662R507.img

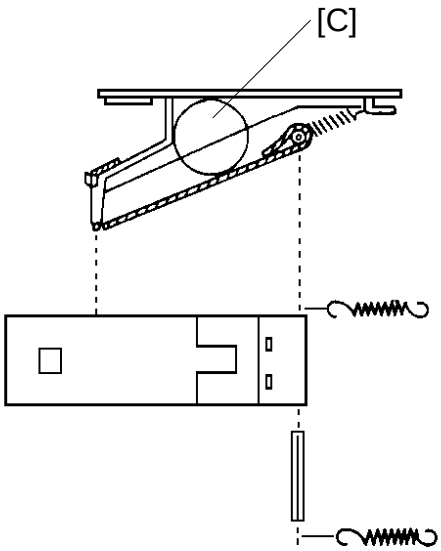

A662R506.img

1. Turn off the main switch.
2. Remove the friction belt assembly [A] (1 screw).
3. Remove the friction belt [B] (2 springs, 1 pin).

NOTE: When installing the friction belt assembly, make sure the feed roller [C] is set in the correct position. (See the illustration.)

9.6 PICK-UP SOLENOID ADJUSTMENT

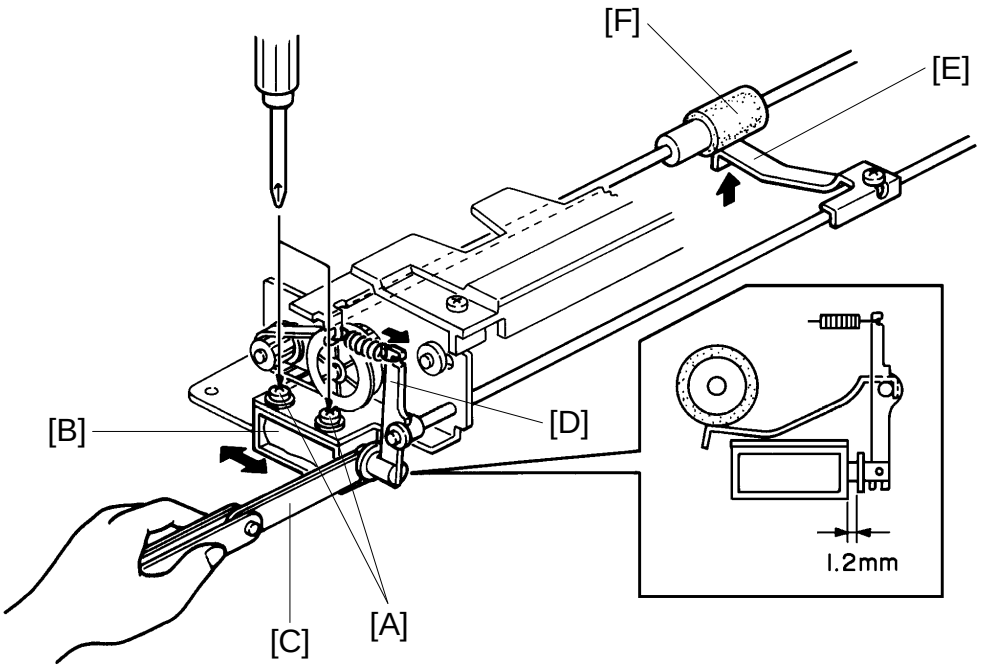

A662R508.img

1. Turn off the main switch.
2. Remove the feed-in unit. (See Feed-in Unit Removal.)
3. Loosen two screws [A] securing the pick-up solenoid [B].
4. Place a 1.2 mm thickness gauge [C] between the plunger and the solenoid.
5. Turn the solenoid lever [D] clockwise until the plunger touches the thickness gauge. Just at this point, tighten two screws.
6. Make sure that the pick-up lever [E] is touching the pick-up roller [F] when the plunger is pushed. If not, repeat steps 3 to 5.
7. Reassemble the DF.
8. Turn on the main switch and check the original feed-in operation.

10-BIN SORTER

(Machine Code: A657)

1. SPECIFICATIONS

Number of Bins: 10 bins

Paper Size for Bins:

Sort/Stack Mode:
Maximum: A3, 11" x 17"
Minimum: A5, 5 1/2" x 8 1/2"

Non-Sort/Stack Mode:
Maximum: A3, 11" x 17"
Minimum: A6 Lengthwise, 5 1/2" x 8 1/2"

Paper Weight: Sort/Stack Mode: 64 to 90 g/m^2 (17 to 24 lb)
Non-Sort/Stack Mode: 52 to 162 g/m^2 (14 to 43 lb)

Bin Capacity:

	Sort/ Stack Mode (All Bins)	Non Sort/ Stack Mode (Top Bin)
A4, 8 1/2" x 11" or less	20	100
B4, 8 1/2" x 14"	15	100
A3, 11" x 17"	10	100

Power Source: +5 volts and +24 volts from the copier

Power Consumption: 15 W

Dimensions (W x D x H): 402 mm x 447 mm x 217 mm
(15.7" x 17.5" x 8.5")

Weight: 7.5 kg (16.5 lb)

2. COMPONENT LAYOUT

- Mechanical Components -

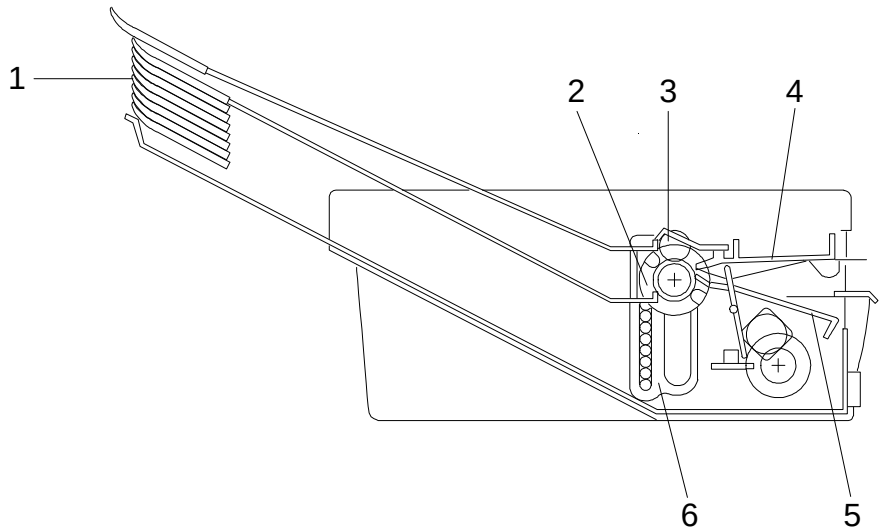

A657V500.wmf

1. Bins
2. Transfer Wheel
3. Exit Roller
4. Upper Paper Guide
5. Lower Paper Guide
6. Bin Guide

- Electrical Components -

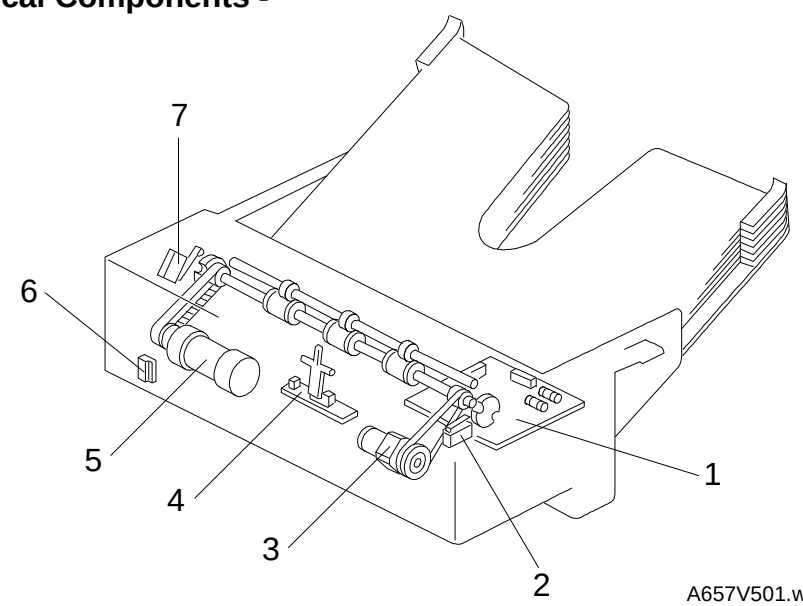

A657V501.wmf

1. Sorter Main Board
2. Wheel Switch
3. Roller Drive Motor
4. Paper Sensor
5. Bin Drive Motor
6. Sorter Switch
7. Bin Home Position Switch

3. ELECTRICAL COMPONENT DESCRIPTIONS

Symbol	Name	Function	Index No.
Motors			
M1	Roller Drive Motor	This dc motor drives the lower exit rollers.	3
M2	Bin Drive Motor	This reversible dc motor moves the bins up or down.	5
Switches			
SW1	Wheel Switch	Detects the rotation of the transfer wheel and stops it in the correct position.	2
SW2	Sorter Switch	This reed switch becomes activated when the sorter is in the proper position (aligned next to the copier). It also works as a jam reset switch for the sorter.	6
SW3	Bin Home Position Switch	Informs the CPU that all the bins are lowered.	7
Sensors			
S1	Paper Sensor	Serves as the misfeed sensor for the sorter and also sets exit roller and bin drive timing.	4
Printed Circuit Boards			
PCB1	Sorter Main Board	Serves as the communication board between the copier main board and the sorter.	1

4. BASIC OPERATION

- Clear Mode -

When the main switch of the copier is turned on, the sorter automatically assumes clear mode. In this mode, all copies are stacked in the first bin. The sorter also assumes clear mode when interrupt mode is selected.

Sorter operation begins when the copier sends the paper feed signal to the selected paper feed station. At this time, the roller drive motor energizes. When the paper exits onto the sorter bin, the paper sensor is de-activated and the roller drive motor is then de-energized. The copier main board monitors the paper sensor through the sorter main board to check for paper misfeeds.

- Sort Mode -

In this mode, all copies of the first original are delivered to separate bins starting from the top. The copies of the second original are delivered to the same bins, but starting from the bottom. The copies of the third original start from the top and so on. At 400 milliseconds after the copy has gone through the paper sensor, the bin drive motor turns on to advance the bins one step.

- Stack Mode -

In this mode, all copies of the first original are delivered to the first bin, all copies of the second original are delivered to the second bin, and so on. At 400 milliseconds after the last copy of the original has gone through the paper sensor, the bin drive motor turns on to advance the bins one step.

5. EXIT ROLLER DRIVE MECHANISM

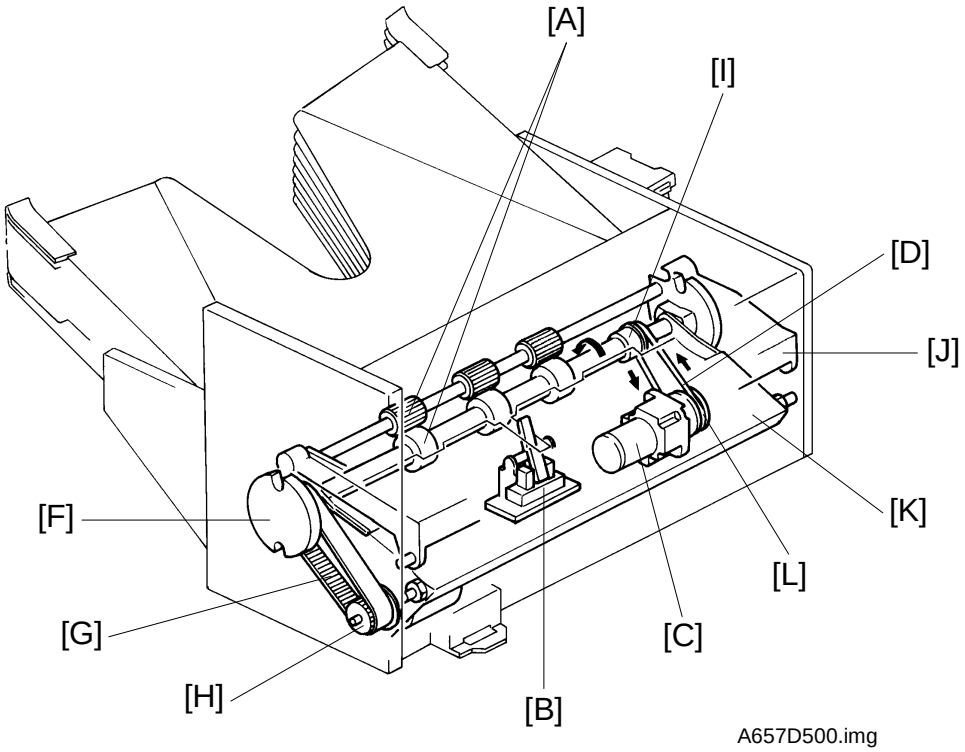

A657D500.img

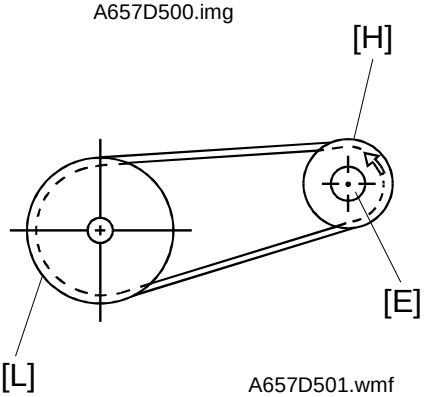

A657D501.wmf

F: Transfer Wheel
G: Bin Drive Belt
H: Bin Drive Pulley
I: Exit Roller Pulley
J: Upper Paper Guide
K: Lower Paper Guide
L: Roller Drive Motor Pulley

The exit rollers [A] take over paper transport from the copier. When the copier sends the paper feed signal to the selected paper feed station, the exit rollers start rotating. The exit rollers continue to rotate for 900 milliseconds after the copy paper has gone through the paper sensor [B].

The roller drive motor [C] rotates the lower exit roller via the roller drive belt [D]. The shaft of the lower exit roller is a cylindrical cavity type which rotates around the transfer wheel shaft [E]. The paper sensor is positioned just in front of the exit rollers. The paper sensor detects misfeeds in the sorter.

6. BIN DRIVE MECHANISM

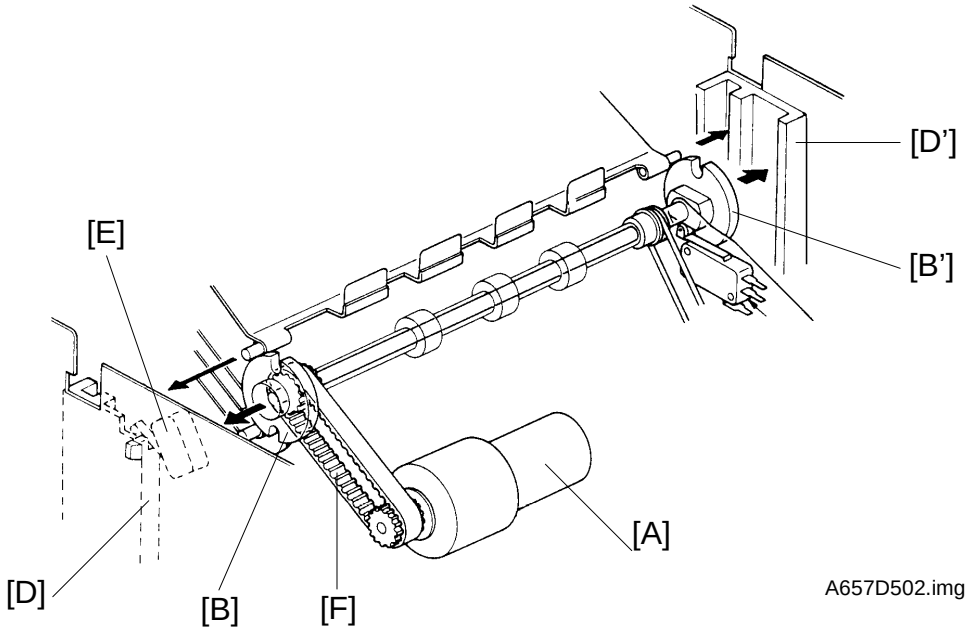

A657D502.img

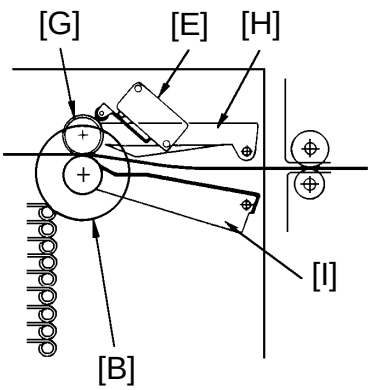

G: Exit Roller
H: Upper Paper Guide
I: Lower Paper Guide

The bin drive mechanism moves the bins up and down to receive copies under the direction of the copier CPU. The main components in this mechanism are the bin drive motor [A], two transfer wheels [B,B'], the wheel switch [C], and the bins themselves.

Pins on either side of each bin are inserted into slots called bin guides [D,D']. The bins slide up and down in the bin guides.
The bins sit on each other with the lower bin resting on the 10th bin (the 10th bin is permanently fixed in position). The upper and lower paper guides pivot up and down depending on the height of the bin to be picked up or released.

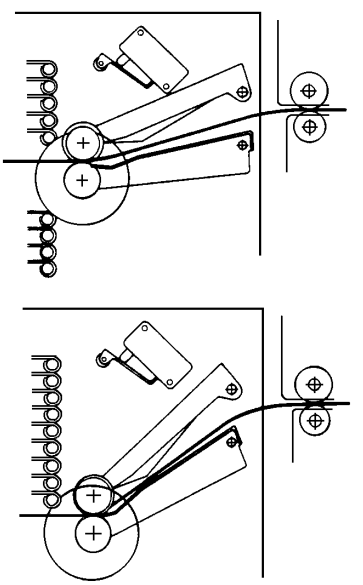

A657D503.img

The bin home position switch [E] informs the CPU when all the bins are lowered.

To move the bins up, the bin drive motor turns clockwise (as viewed from the front). A timing belt [F] turns the transfer wheels.

The transfer wheels have two slots in them 180 degrees apart. As the transfer wheels turn, these slots engage the bins and lift them up. Each time the transfer wheels turn 180 degrees, they raise one bin.

To move the bins down, the CPU reverses the bin drive motor and the above process reverses.

The CPU monitors the position of the bins through pulses generated by the wheel switch and the actuator cam [J].
The actuator cam has two flat sides that are 180 degrees apart and is mounted behind the rear transfer wheel. A pulse is generated each time one of the lobes of the actuator cam passes the wheel switch.

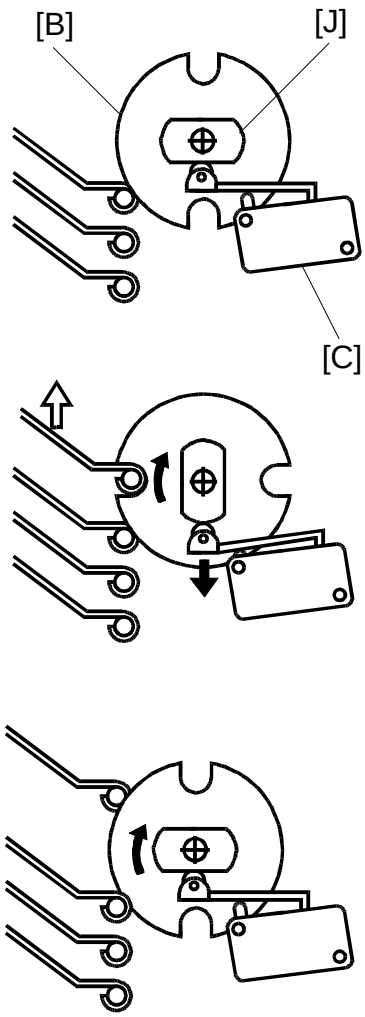

A657D504.wmf

7. MISFEED DETECTION

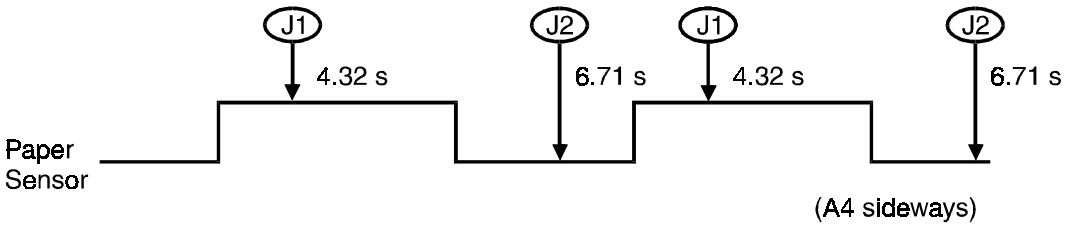

A657D505.wmf

In addition to being used for the exit roller drive timing, the paper sensor checks for misfeeds in the sorter.

J1 - Paper Sensor On Check (A4 Sideways):
The copier CPU checks whether the paper sensor is actuated within 4.32 seconds after the registration clutch turns on.

J2 - Paper Sensor Off Check (A4 Sideways):
The copier CPU also starts a timing cycle to detect the paper sensor off check after the registration clutch turns on. The misfeed detection timing is 6.71 seconds.

In misfeed condition, the "Check Paper Path" and "Misfeed Location" indicators light and copier operation is disabled. To recover the sorter from the misfeed condition, the sorter has to be slid away from the copier, the misfed paper removed, and the sorter returned to its original position.

8. SERVICE TABLES

8.1 FUSE

Fuse No.	Rating	Blown Fuse Condition
F101	T1.0 A/250 V	Sorter will not operate.
F102	T0.5 A/250 V	Sorter will not operate.

9. PREPARATION FOR TRANSPORTATION

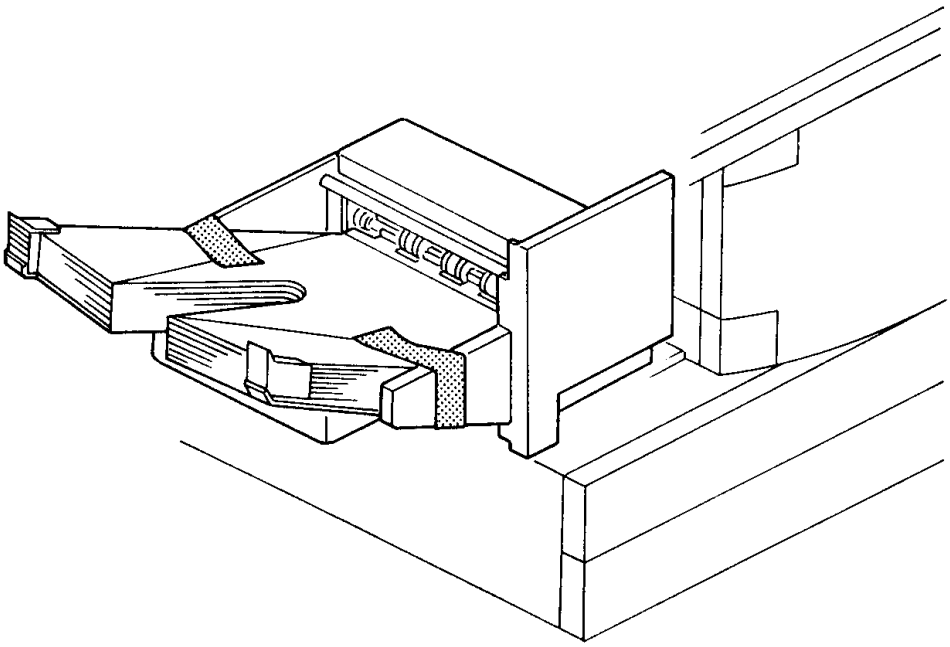

A657R500.img

CAUTION: When removing and transporting the sorter, be careful not to carry it in a vertical position, as the bins will become dislocated.

CAUTION: Before moving the sorter, be sure to prepare it for transportation as follows. The sorter may be badly damaged if it is moved without proper preparation.

1. If the bins are not at the home position, turn on the main switch of the copier to move the bins to the home position.
2. Secure the bins with strips of tape as shown in the illustration.
3. Remove the sorter from the copier. (See the Installation Procedure.)

10. ROLLER DRIVE BELT REPLACEMENT

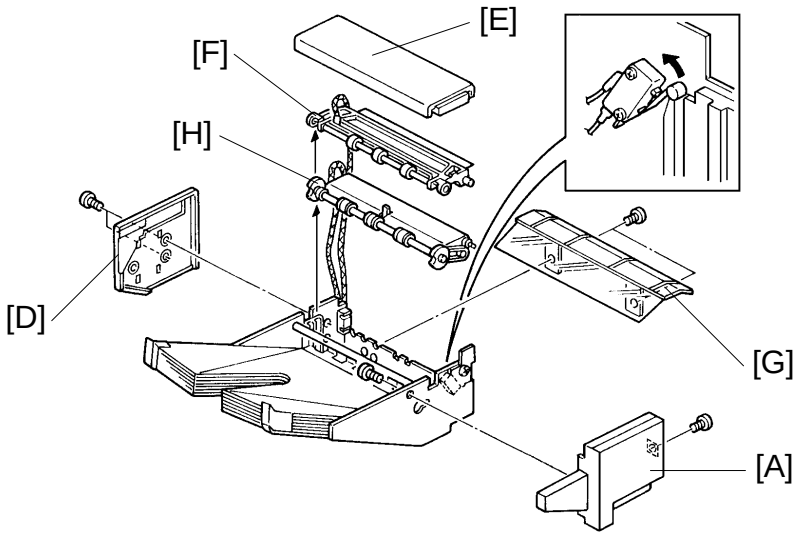

A657R501.img

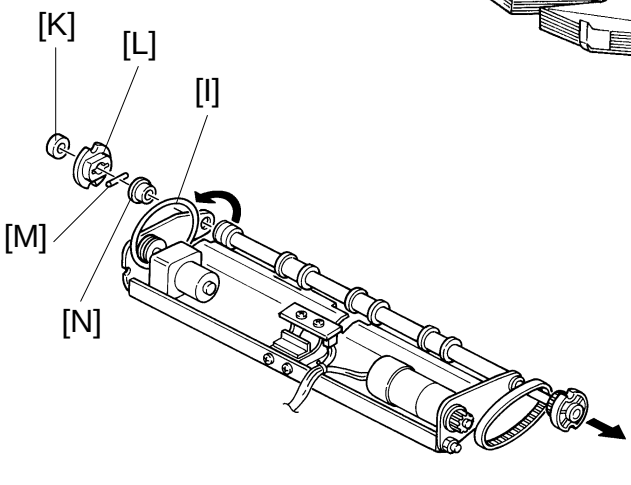

A657R502.img

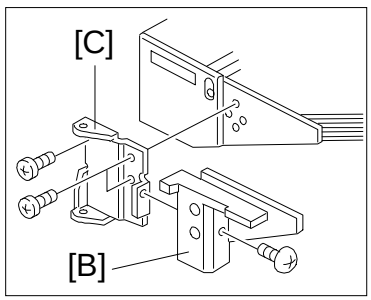

A657R503.wmf

1. Remove the front cover [A] (1 screw).
2. Remove the rear cover [B] (1 screw) and the sorter hinge [C] (2 screws).
3. Remove the rear flat cover [D] (2 screws).
4. Lift off the top cover [E].
5. Lift the upper paper guide [F] up and out of position (1 grounding wire).
6. Remove the entrance guide bracket [G] (2 screws).
7. Lift the lower paper guide [H] out of position and turn it over to remove the roller drive belt [I].

   NOTE: Be careful not to damage the bin home position switch actuator [J] when reassembling.
8. Remove the transfer spacer [K], wheel [L], pin [M], and bushing [N] on both sides of the shaft.
9. Slide the wheel shaft towards the front and replace the roller drive belt.

11. BIN GUIDE LUBRICATION

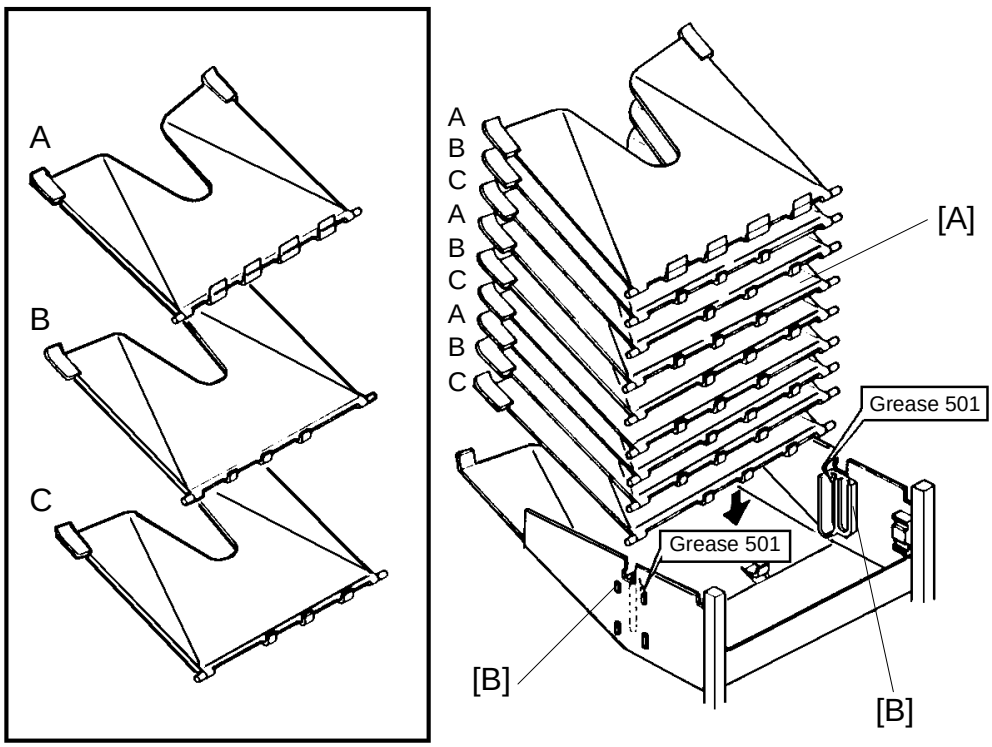

A657R504.img

1. Remove the lower paper guide. (See Roller Drive Belt Replacement.)
2. Remove all bins [A] from the bin guides [B].
3. Apply G501 grease to the grooves of the bin guides.

NOTE: There are three types of bins (types A, B, and C in the above diagram). Therefore, when installing the bins, be sure that they are installed in the correct order.

SECTION 9

APPENDIX
TIMING CHART

COPIER TIMING CHART (A219)

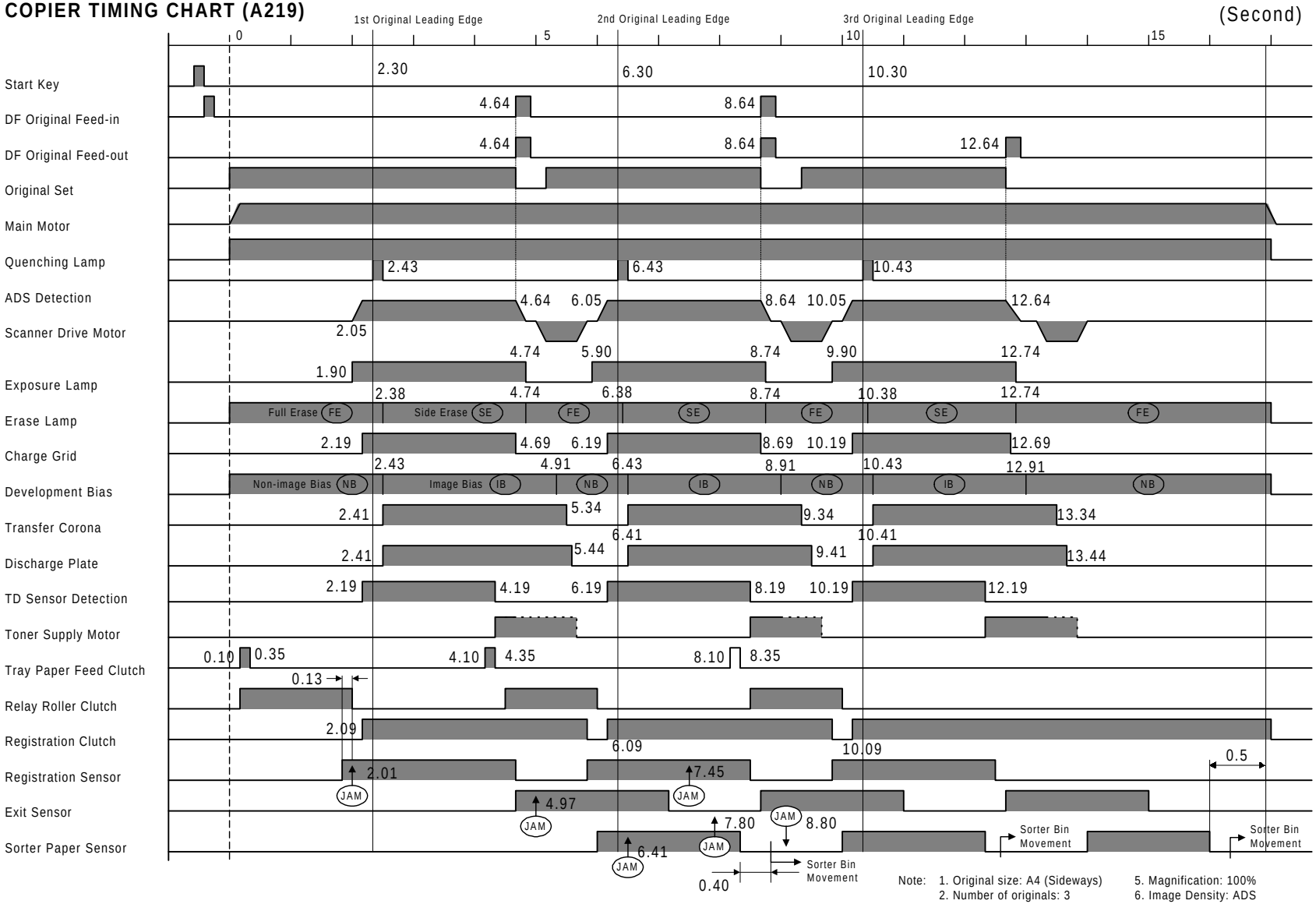

Note:
1. Original size: A4 (Sideways)
2. Number of originals: 3
3. Copy paper size: A4
4. Number of copies: 3
5. Magnification: 100%
6. Image Density: ADS
7. Paper Feed Station: Paper Tray
8. Sorter Mode: Stack Mode

COPIER (A219) ELECTRICAL COMPONENT LAYOUT

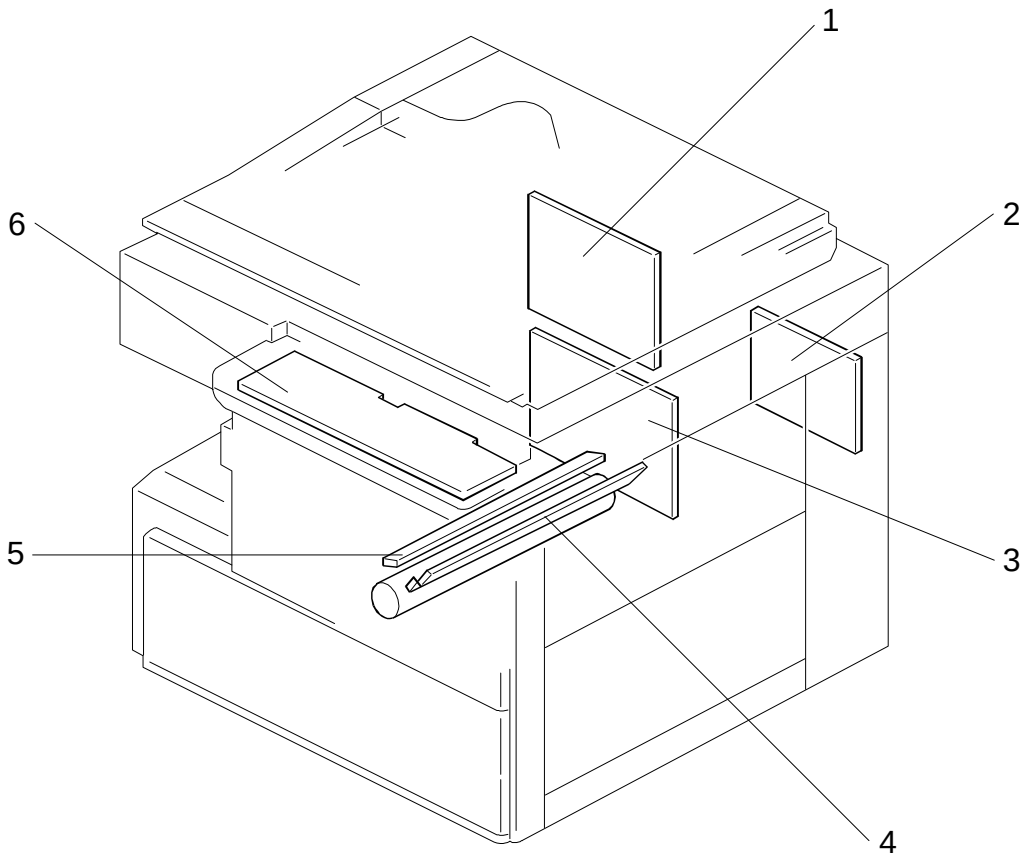

A219S500.wmf

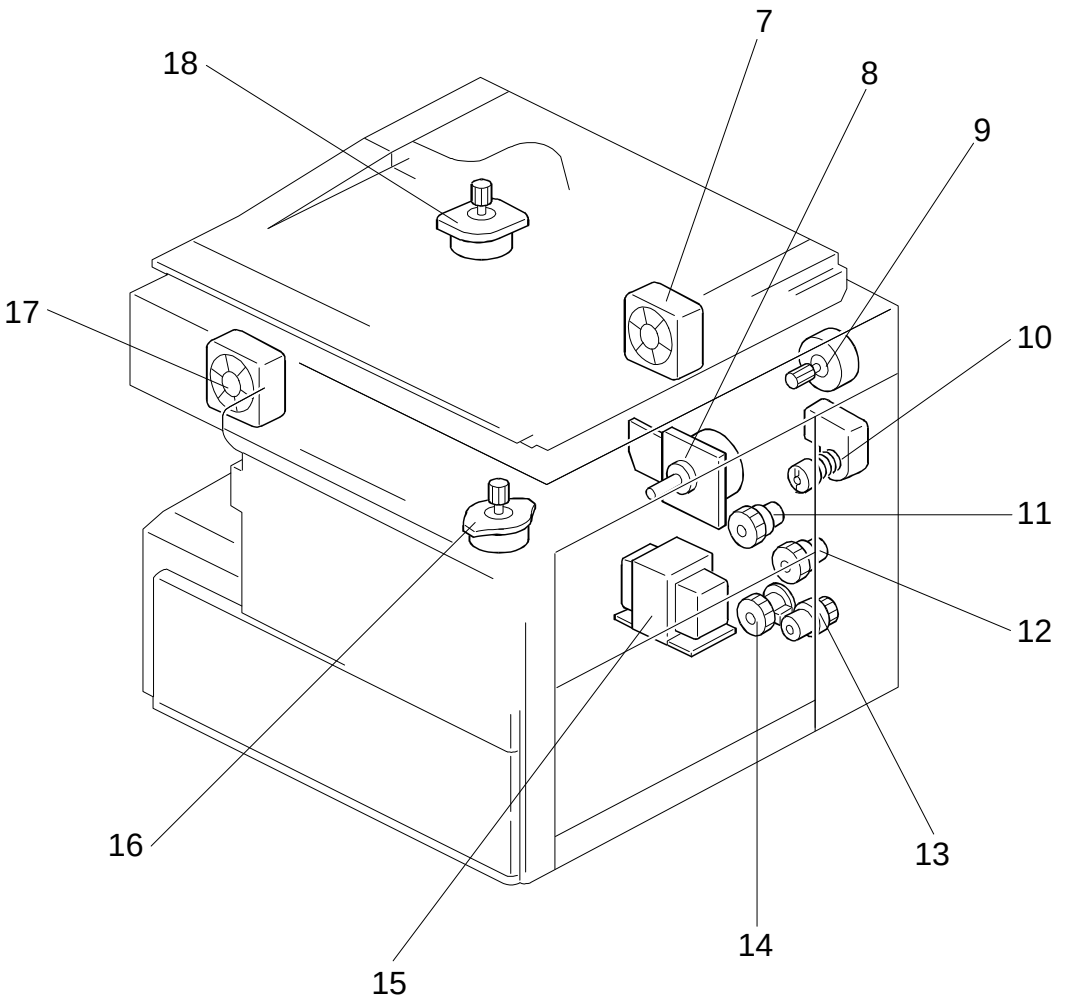

A219S501.wmf

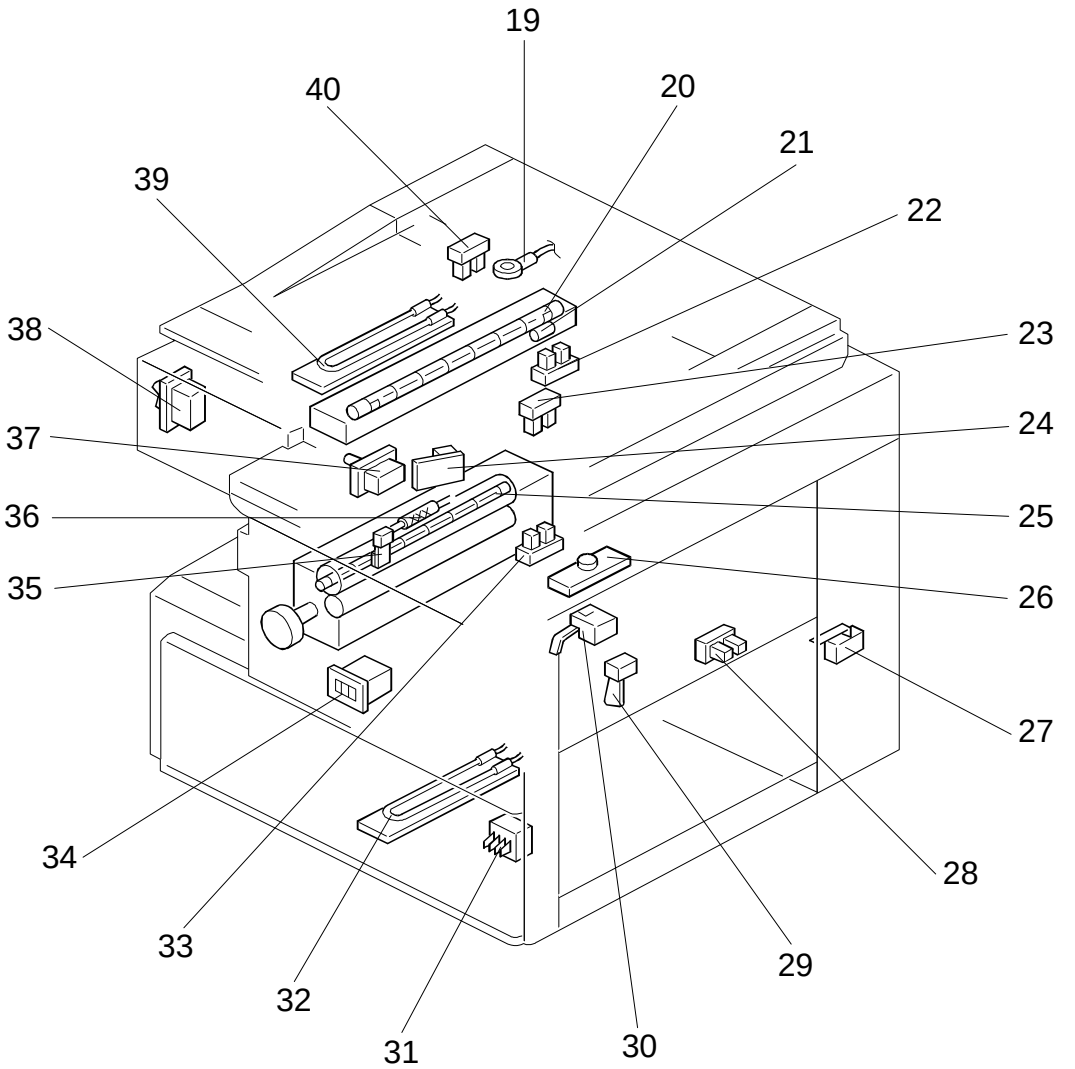

A219S502.wmf

Description	Index No.	P-to-P Location
Main Control Board (PCB1)	1	E1
High Voltage Supply Board - C/G/B/T/S (PCB2)	2	D3
AC Drive/DC Power Supply Board (PCB3)	3	B5
Erase Lamp (L1)	4	D4
Quenching Lamp (L2)	5	D5
Operation Panel Board (PCB4)	6	D2
Exhaust Fan Motor (M7)	7	E8
Main Motor (M1)	8	C5
Scanner Drive Motor (M2)	9	C8
Toner Supply Motor (M5)	10	D8
Registration Clutch (CL4)	11	G5
By-pass Paper Feed Clutch (CL2)	12	G3
Relay Roller Clutch (CL3)	13	G5
Tray Paper Feed Clutch (CL1)	14	G3
Transformer (TR)	15	C2
4th/5th Mirror Motor (M4)	16	D8
Optics Cooling Fan Motor (M6)	17	E8
Lens Motor (M3)	18	D8
Optics Thermistor (TH2)	19	G5
Exposure Lamp (L3)	20	B5
Exposure Lamp Thermofuse (TF1)	21	B4
Lens Home Position Sensor (S8)	22	G7
Exit Sensor (S6)	23	G6
ADS Sensor (S2)	24	G3
Fusing Lamp (L4)	25	B4
Toner Density Sensor (S9)	26	F8
Right Vertical Guide Switch (SW4)	27	G4
Tray Paper End Sensor (S3)	28	G3
By-pass Feed Paper End Sensor (S5)	29	G4
Registration Sensor (S4)	30	G4
Tray Paper Size Switch (SW3)	31	G6
Tray Heater (Option) (H1)	32	B4
4th/5th Mirror Home Position Sensor (S1)	33	G2
Total Counter (CO1)	34	E8
Fusing Thermistor (TH1)	35	G5
Fusing Thermofuse (TF2)	36	B4
Interlock Switch (SW2)	37	B2
Man Switch (SW1)	38	B3
Optics Anti-condensation Heater (Option) (H2)	39	B3
Scanner Home Position Sensor (S7)	40	G7
Key Counter (Not Used) (CO2)	N/A	E8

DF (A662) ELECTRICAL COMPONENT LAYOUT

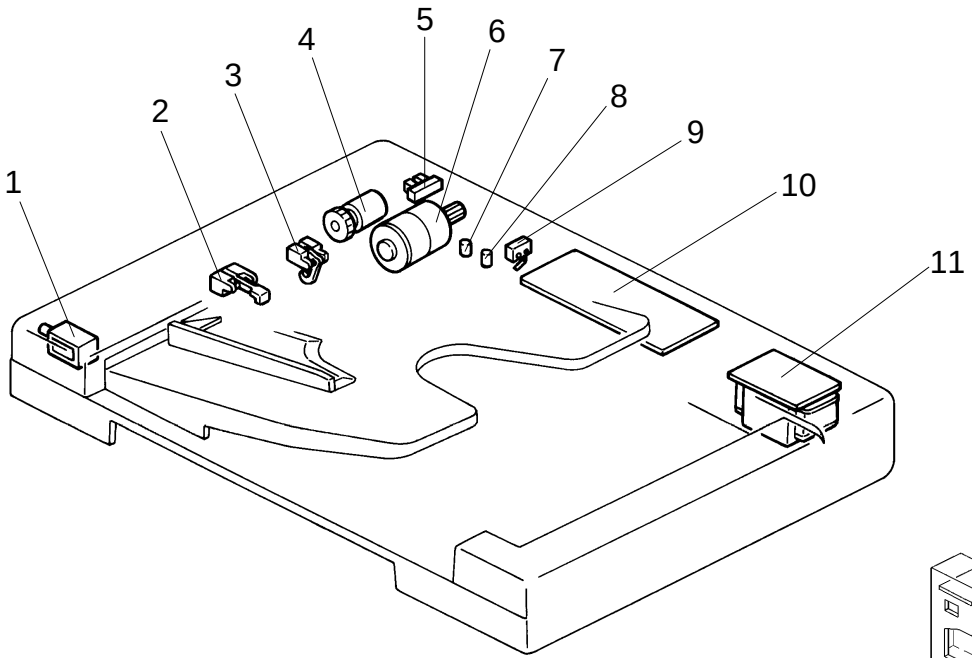

A662S500.img

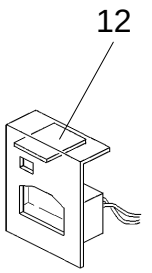

A662S501.img

Description	Index No.	P to P Location
Pick-up Solenoid (SOL1)	1	A7
Registration Sensor (S3)	2	C7
Original Set Sensor (S2)	3	C7
Feed Clutch (CL1)	4	A7
Pulse Generator Sensor (S1)	5	A8
DF Motor (M1)	6	A7
Insert Original Indicator (LED2)	7	A8
SADF Indicator (LED1)	8	A8
Lift Switch (SW1)	9	C6
DF Main Board (PCB1)	10	B8
DF Transformer (TR1)	11	B6
DF Interface Board (PCB2)	12	C8

SORTER (A657) ELECTRICAL COMPONENT LAYOUT

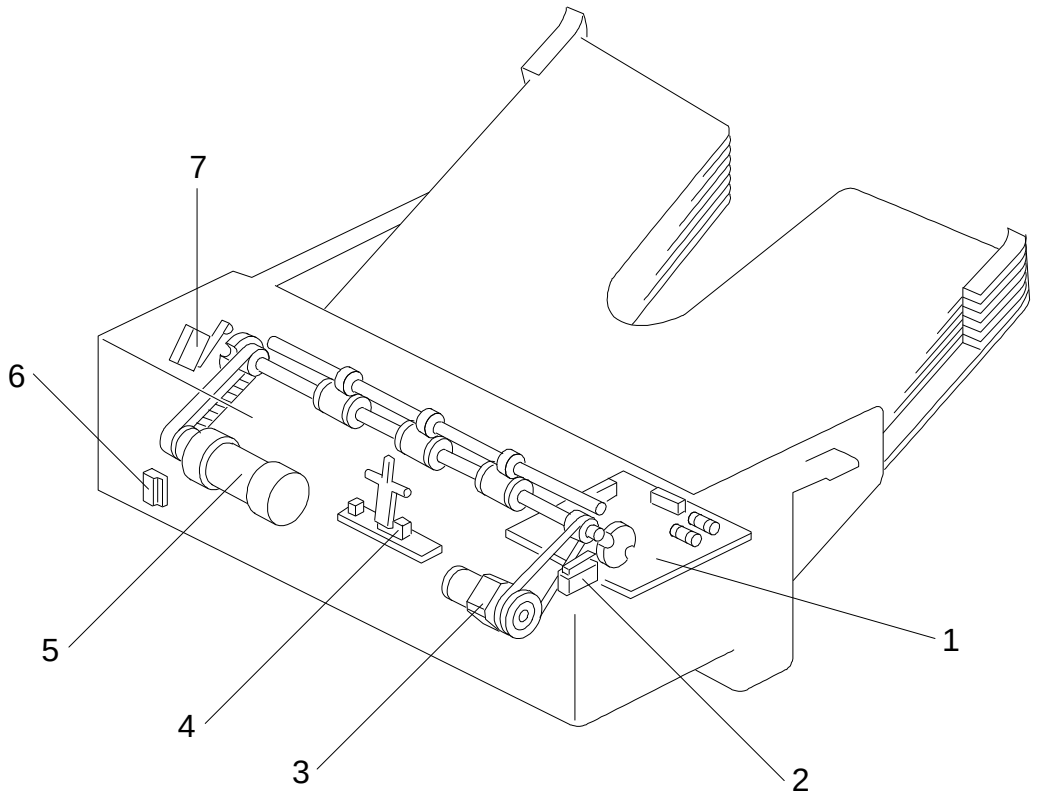

A657S500.wmf

Description	Index No.	P to P Location
Sorter Main Board (PCB1)	1	G1
Wheel Switch (SW1)	2	H2
Roller Drive Motor (M1)	3	H1
Paper Sensor (S1)	4	H2
Bin Drive Motor (M2)	5	H1
Sorter Switch (SW2)	6	H2
Home Position Switch (SW3)	7	H1