SHARP SERVICE MANUAL

CODE: 00ZZ52S/M//-E

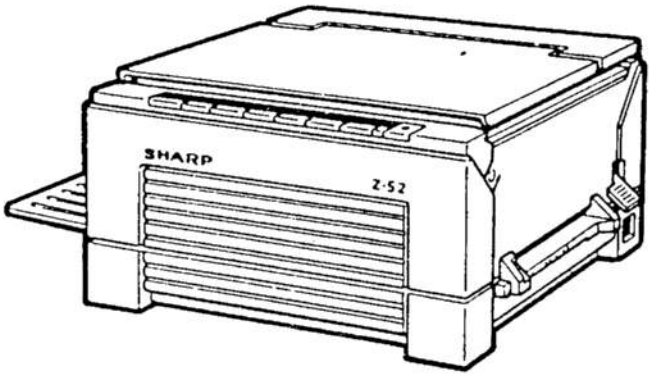

MODEL Z-52

CONTENTS

[1] Basic specification 1
[2] Operation panel and indicator functional description 2
[3] Unpacking and installation 3
[4] Supplies 7
[5] Component location 9
[6] Copy process 13
[7] Paper feed and transport section 17
[8] Optical system 22
[9] Fuser section 28
[10] Others 32
[11] Electrical section 35
[12] Circuit diagram and time chart 37
[13] Actual wiring chart 52

SHARP CORPORATION

This document has been published to be used for after sales service only.
The contents are subject to change without no

[1] BASIC SPECIFICATIONS

Type:
Desktop
Copying system:
Dry-type electrostatic plain paper copier
Kinds of originals:
Sheets, book
Thickness: 30 mm (1.18 inch) maximum with the original cover in use.
Weight: 1.8 kg (4 lbs) maximum
Original size:
A4 maximum
Copy size:
(Cassette feed) (Capacity: 100 sheets)
A4, B5, A5 (56 to 80 g/m^2)
or 8 1/2" x 5/12" x 11" (14.9 lbs to 21.3 lbs)
(Manual feed)
A4 to A6, postcard, business card (52 to 130 g/m^2)
or 8 1/2 x 11" to 8 1/2 x 5 1/2" (13.8 lbs to 34.5 lbs)
Copy speed:
8 copies/minute (all sizes)
First copy:
11 seconds (time required until the copy paper is delivered to the exit tray after depression of the PRINT switch for A4 or letter size paper.)
Warmup time:
25 seconds at rated voltage, room temperature at 20 to 25°C (68° to 77°F), 65%RH.
Multicopying:
1 to 50 copies, countdown LED type, with auto repeat
Magnification ratio:
1 : 1±1%
Exposure system:
Slit exposure by moving table.
Paper feed system:
Cassette and manual feeds
Developing system:
Magnetic brush development (2-component developer)
Fusing system:
Heat roller type
Light source:
Halogen lamp (100V series 200W, 200V series 215W)
Power requirements:
Local supply voltage ±10%.
Power consumption:
1.15 kW maximum, 50 W/h standby (power down mode)
Physical dimensions:
425(W) x 416(D) x 218(H) mm
16-47/64"(W) x 16-25/64"(D) x 8-19/32"(H)
Machine occupation space:
726(W) x 416(D) mm
28.6"(W) x 16.4"(D)
Operating conditions:
Temperature 10 – 30°C
Humidity 20 – 85% RH
Weight:
15 kg (33.1 lbs)
Display Functions:
PRINT: The green lamp turns ON when the copier is ready for copying, turns OFF during the warmup time, and flashes when in the power down mode.
MULTICOPY: Multicopy number displayed on LED, normally 0.
MISFEED: The red lamp flashes when the paper is misfed.
TONER: Flashes when the toner box is empty.
DRUM: ON after 8,000 copies. Starts to flash after 9,000 copies and the machine stops.
Accessories:
Drum cartridge x 1
Semi-universal cassette x 1
Instruction manual x 1
Power supply cord x 1
Options:
Drum cartridge (ZT-50DR)
TD cartridge
Black (ZT-50TD1)
Red (ZT-50TD2)
Blue (ZT-50TD3)
Brown (ZT-50TD4)
Green (ZT-50TD5)
Machine stand (ZT-52D) (From 92/Feb.)
Standard paper (for cassette)
Special paper
Dust cover

The term "TD cartridge" means the "Toner Developer cartridge".

[2] OPERATION PANEL AND INDICATOR FUNCTIONAL DESCRIPTION

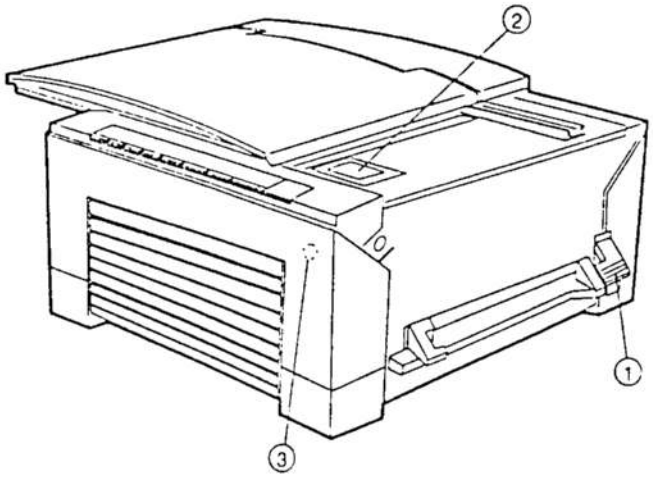

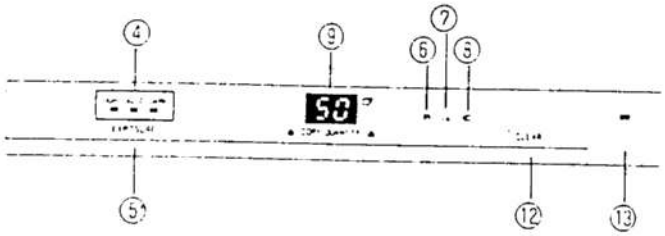

① Power switch and power supply cord
Power is turned on and off using the power lever.

② Upper frame release button
Used to release the frame lock when a misfeed occurs or the drum cartridge has to be replaced.

③ Doorswitch
Used to check the front door position.
If the front cover is opened, the misfeed and multicopy indicator will be reset.

④ Auto exposure control
Selects appropriate exposure rate depending on the contrast and background color of the original.

⑤ Exposure control lever
It has three set positions.
For most originals, set at the center position.
To make the copy darker, move to DARK.
To make the copy lighter, move to LIGHT.

⑥ Misfeed indicator
When a misfeed occurs, this lamp turns ON.

⑦ TD cartridge replacement indicator
The lamp flashes when the TD cartridge needs replacement.

⑧ Drum cartridge replacement indicator
After 8,000 copies, the indicator will start to flash. An additional 1,000 copies can be made. At this time the indicator will stop flashing and stay ON. No additional copies can be made until the Drum cartridge is replaced.

⑨ Multicopy
Copy numbers between 1 and 50 can be entered using the right key (units digit) and the left key (tens digit). When the left key is depressed in the middle of multicopy operation, the number of copies already made is displayed.

⑩ Auto repeat
Upon completion of copying in the multicopy mode, the copy r
ber previously set returns to the copy number set display. Us
the CLEAR key resets the number. One minute after compl
of copying, the number and the auto repeat functions are a
matically cleared.

⑪ Paper feed alarm (P indication)
If a sheet of paper is not transferred to the paper stopper
depression of the PRINT key, or the cassette is empty, "F
displayed in the copy number window. If the COPY NUMBER
or the CLEAR key is depressed or the MANUAL FEED switc
pressed, the "P" indication disappears.
When the copier is opened, the "P" indication is also cancelled

⑫ Clear
Multicopy and auto repeat modes are cleared with the CLE
key. One minute after completion of copy operation, the pr
number and the repeat functions are automatically cleared
the copy exposure control returns to AUTO.

⑬ PRINT key
20 seconds after power is turned on, the READY lamp turns
indicating that the copier is ready for copying. If left unoperated
90 seconds, the copier then goes into the power save mode
the READY lamp changes from ON to flashing. When the PRI
key is pressed while the READY lamp is on, the machine imm
ately starts to copy. When the PRINT key is pressed while
READY lamp is flashing, the power save mode is cancelled,
original table moves to the copy start position, and it starts
copy operation after completion of the warmup cycle. The t
before the copy process starts is dependent on the time in
power save mode, but it will be less than 8 seconds after
depression of the PRINT switch.

[3] UNPACKING AND INSTALLATION

1. Unpacking

(1) Open the carton in the following sequence.

① Cut the tape around the top of the package and open the flaps.

② Remove the upper packing cushion and take out the machine.

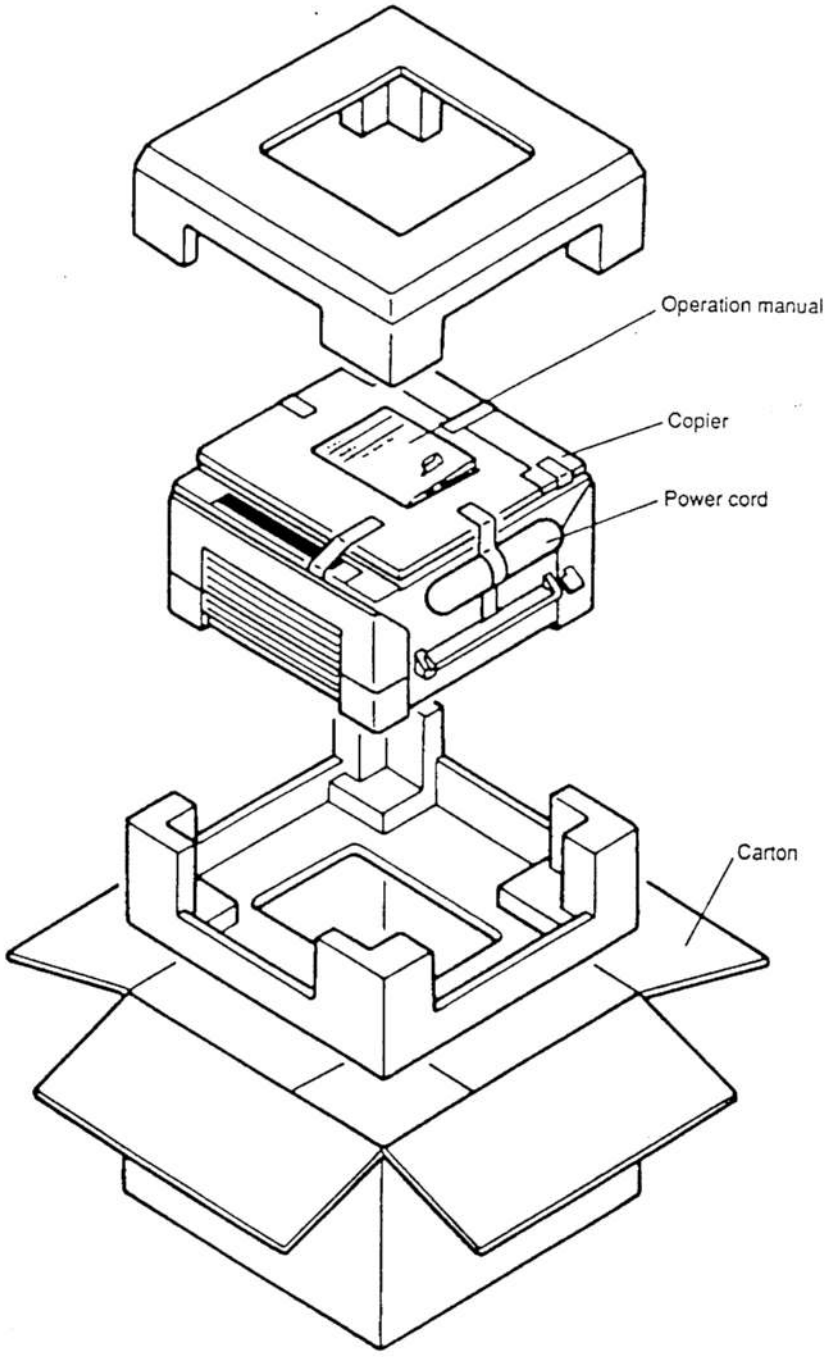

2. Installation

Installation requirements:
Please note the following requirements when installing the copier.

(1) Machine Environment

① Avoid installation in direct sunlight or bright locations near a window.
Direct sunlight may cause the plastic components and the original cover to deform. Frosted glass may also produce the same effect.

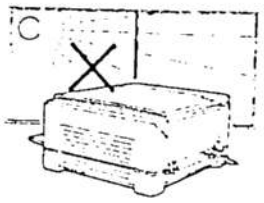

② Avoid installation in a hot, damp place or where rapid changes in humidity occur (for example; near an air conditioner).
This may cause paper to dampen or moisture inside the copier, and may lead to a misfeed and deterioration in copy quality.
The recommended environmental conditions are:
20 to 25 degrees C (68 to 77 degrees F.), 65%±5%RH.
The nominal environment conditions are:
10 to 30 degrees C. (40 to 86 degrees F.), 0 to 85%RH.
If the copier is to be installed in an area of higher temperature the humidity must be lower. Example; If the temperature, is 35 degrees C. (95 degrees F), The humidity should be 65%.

③ Avoid installation in a place where dust or vibration is encountered.
Dust deposit inside of the copier may lead to a deterioration of copy quality or machine trouble.

④ Install the machine on a level surface.
The toner density and copy quality may be affected unless the machine is installed in a level condition.

⑤ Do not install the copier on an unstable or uneven surface. The copier must be placed on a level surface to permit proper functioning.



⑥ Avoid installation in a place where the ventilation or air circulation is poor.

⑦ Never install the copier near inflammable materials or in the presence of ammonia fumes.
Installation near a diazo copy machine may lead to a deterioration of copy quality or a machine malfunction.

⑧ Install the copier near the wall outlet.

(2) Space around the copier

The copier requires at least 10cm of clearance between the rear side and the wall. This space is required for proper cooling fan ventilation. Adequate working space around the machine should also be allowed for ease of operation.

(3) Power source

① The power supply line should have a capacity of more than capable of supplying more than 90% of the rated voltage a load.

② Do not use an extension cord, or operate any other equipr from the same wall outlet.

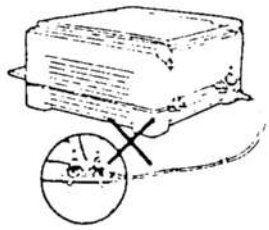

(4) Ground connection

① Use a properly grounded (three prong) wall outlet only.

3. Installation procedure

① Remove the poly bag.

② Open the front cover.
Push the front cover open buttons located at both sides of copier.
Remove tape (F).

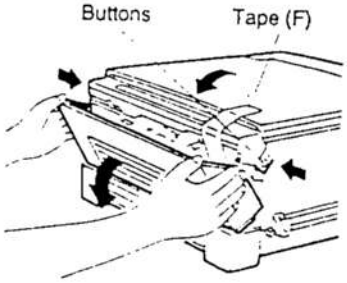

③ Install the drum cartridge (Except USA, Canada)
a. Open the front cover.
b. Open the upper frame.
c. Remove the cover from a new drum cartridge.
d. Push in the drum cartridge all the way, then close the upper frame.

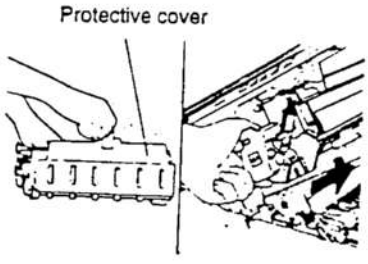

Never expose the drum to direct sunlight or touch the drum surface with your fingers.

④ Open the box containing the TD cartridge.
Remove the TD cartridge from the bag and shake it horizontally four or five times.

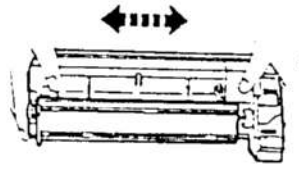

⑤ Remove the cover from the TD cartridge.

- Save the TD cartridge cover. It should be used to seal the TD cartridge if the copier must be shipped for servicing or in case you move.

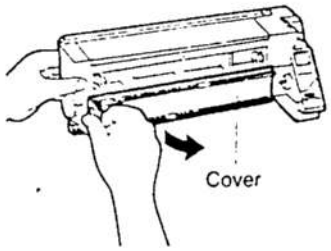

⑥ Slide the TD cartridge in until it locks in place.

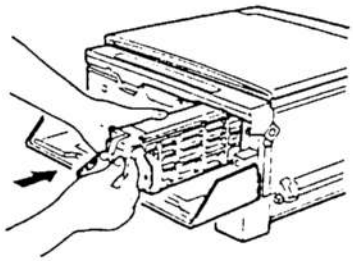

⑦ Close the front cover.

⑧ Remove the paper cassette from the copier bag.

⑨ Fan the copy paper and insert it into the cassette. (Maximum: 100 sheets)

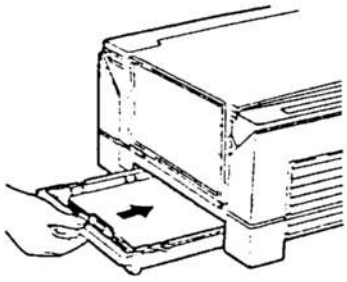

a. Push the pressure plate until it locks in position.

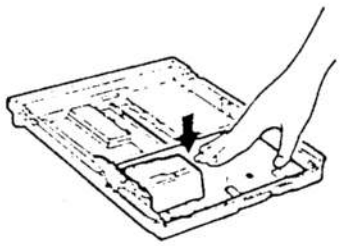

b. Adjust the paper guides in the cassette to the copy paper width and length.

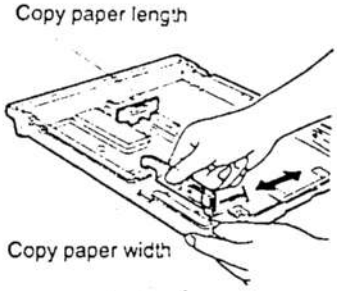

c. Fan the copy paper and insert it into the cassette. Make sure the edges go under the corner hooks.

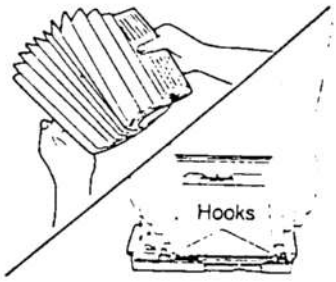

d. Remove the tape over the exit tray.

⑩ Swing the exit tray down.

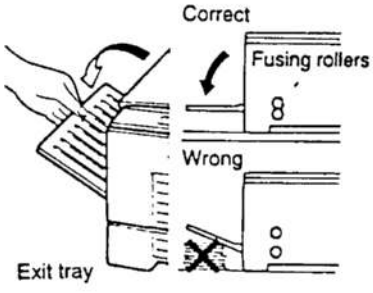

NOTE: Do not place any objects under the exit tray. The exit tray is linked with the fusing rollers inside the copier. When the exit tray is opened, the proper pressure for fusing toner on the paper is applied to the fusing rollers. Consequently, if there is something under the exit tray and the exit tray is not fully opened, a paper jam or faulty fusing many occur during copying.

⑪ Plug the power cord into the copier and then into the nearest outlet.

* After machine installation or TD cartridge replacement, the ready lamp may require a longer period (two minutes or less) before it turns ON.

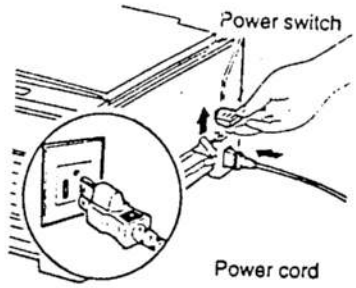

4. How to carry

① Remove the cassette and disconnect the power cord.
Fix the original cover and the front cover with tape as shown below:

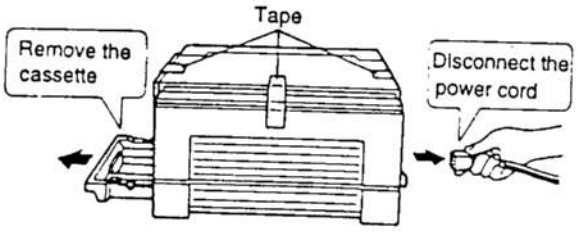

② Lift eh copier by holding the indents for carrying as shown below:
(Note) • Do not carry the copier with the cassette inserted in it.
• Always keep the copier horizontally.

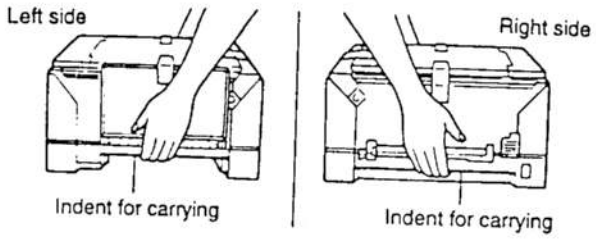

[Note for carrying by car]

- Remove the TD cartridge and put it in the package.
- Place the copier stably in the trunk of the car.
- Do not keep the copier in the trunk for a long time because the temperature in the trunk may rise extremely.
- Avoid extreme vibrations when driving.

4]SUPPLIES

. Drum cartridge, TD cartridge

Name	Description		Product name		* Life Approx.	Storage conditions (temperature and humidity)
Drum cartridge	Drum cartridge x 1 Instructions x 1		ZT-50DR		9,000 copies	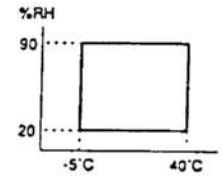
TD cartridge	TD cartridge x 1, (including developer and toner)		For USA	Except USA	*	
		Black	ZT-50TD1	ZT-50DC1		
		Red	ZT-50TD2	ZT-50DC2		
		Blue	ZT-50TD3	ZT-50DC3		
		Brown	ZT-50TD4	ZT-50DC4		

3,000 copies for black (2,700 copies for color) for A4 or letter size with 5% toned area.

* These are estimates only, life will vary depending on actual useage.

)TE: How to identify the lot number

D cartridge)

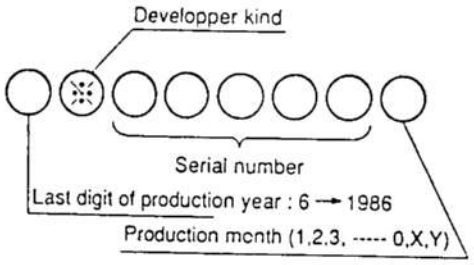

. Black developer (JAPAN)
:. Black developer (EXPORT)
·. Red developer
5. Blue developer
6. Brown developer
0. No classification

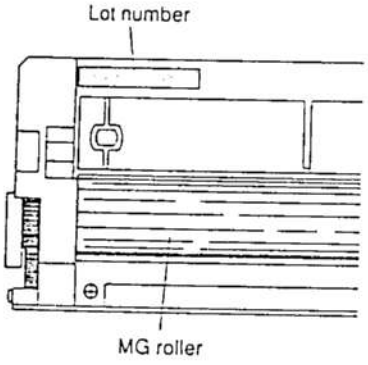

ım cartridge)
ne as TD cartridge.

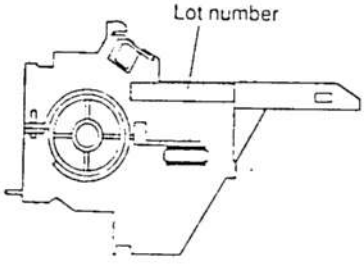

Rear frame side of the drum cartridge

2. Replacing the drum cartridge

① Turn off the power and open the front cover.

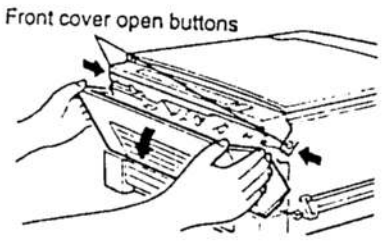

② Press down on the catch and pull out the TD cartridge slowly.

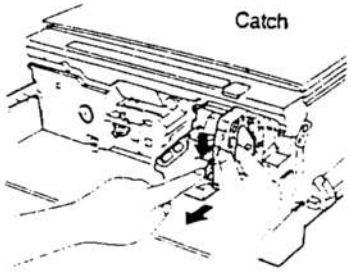

③ Move the original table to the left, and press the upper frame release button to open the copier.

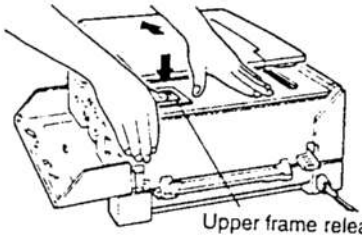

④ Grasp the handle of the drum cartridge and pull the drum cartridge out.

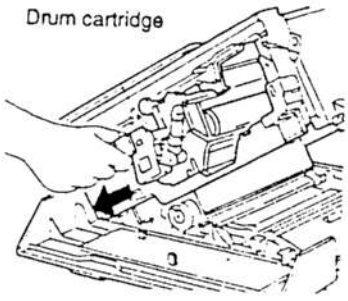

NOTE: The drum cartridge cannot be removed or inserted unless the upper frame is open.

⑤ Remove the protective cover from the new drum cartridge.

⑥ Push in the drum cartridge all the way in, then close the upper frame.

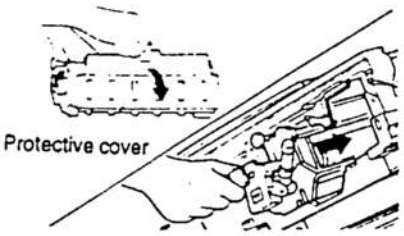

⑦ Insert the TD cartridge, then close the front cover.

⑧ Turn on the power and make sure that the DRUM replacement lamp is extinguished.

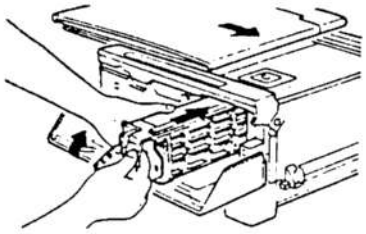

3. TD cartridge replacement

For TD cartridge replacement, refer to the description in "Installation procedure."

[5] COMPONENT LOCATION

1. External

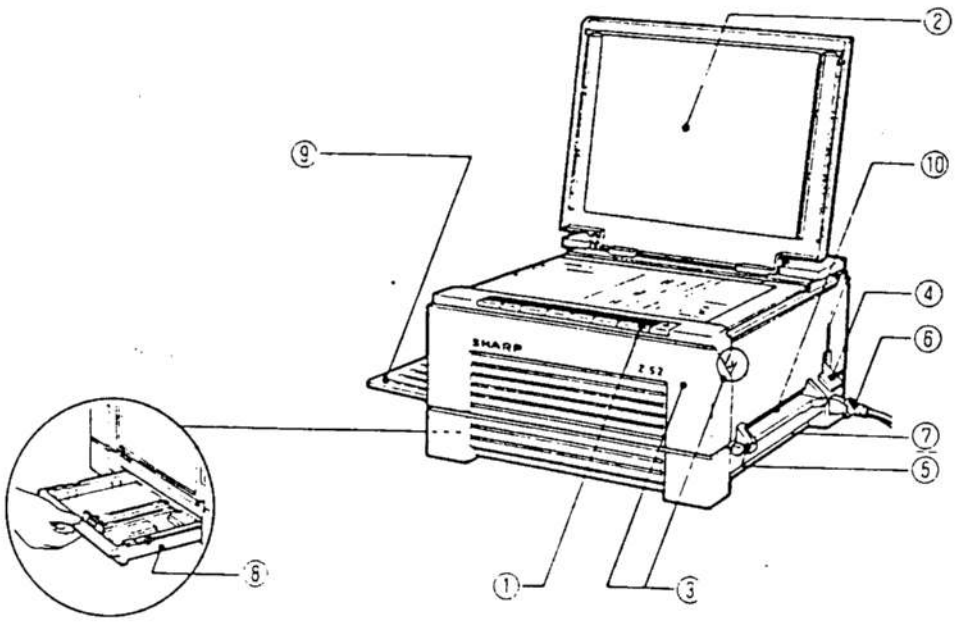

①	Operation panel	②	Original cover	③	Front cover and open buttons (both sides)
④	POWER switch lever	⑤	Manual feed guide	⑥	Power supply cord
⑦	Incent for carrying (paper entry side)	⑧	Cassette	⑨	Exit tray
⑩	Manual feed inlet				

2. Open view

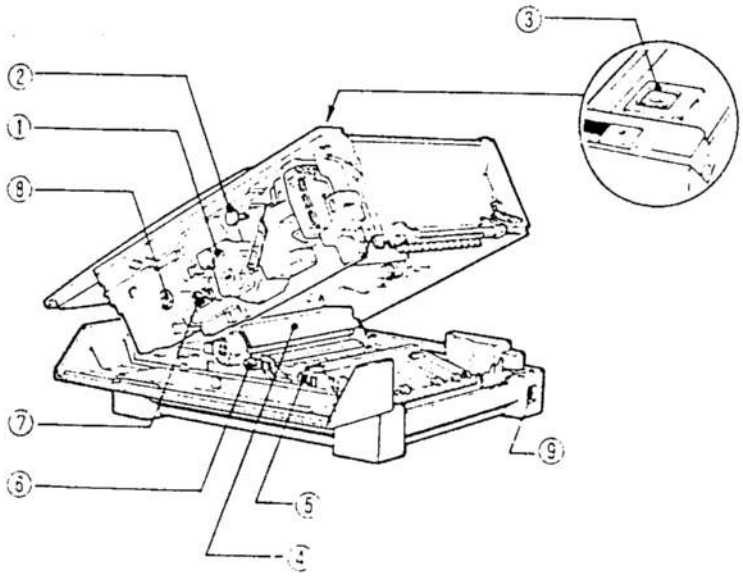

①	Drum cartridge	②	Cleaning lever	③	Upper frame release button (Appears when the front cover is shifted.)
④	Fuser (High temperature)	⑤	Transfer corona unit	⑥	Fuser accessing lever
⑦	Transfer corona cleaner	⑧	Copy exposure balance correction knob	⑨	Power cord inlet

3. Front frame side

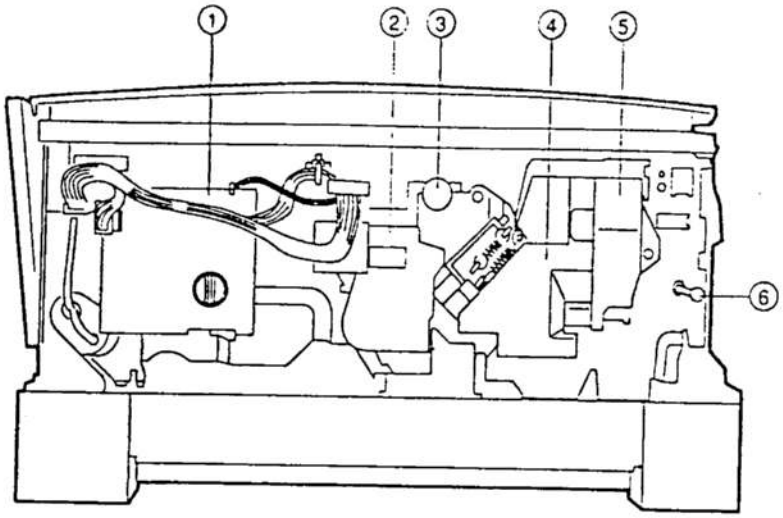

①	CLR PWB	②	Drum cartridge	③	Cleaning lever (in the drum cartridge)
④	Toner collection container	⑤	TD cartridge	⑥	Doorswitch (interlinked for the main switch)

4. Rear frame side

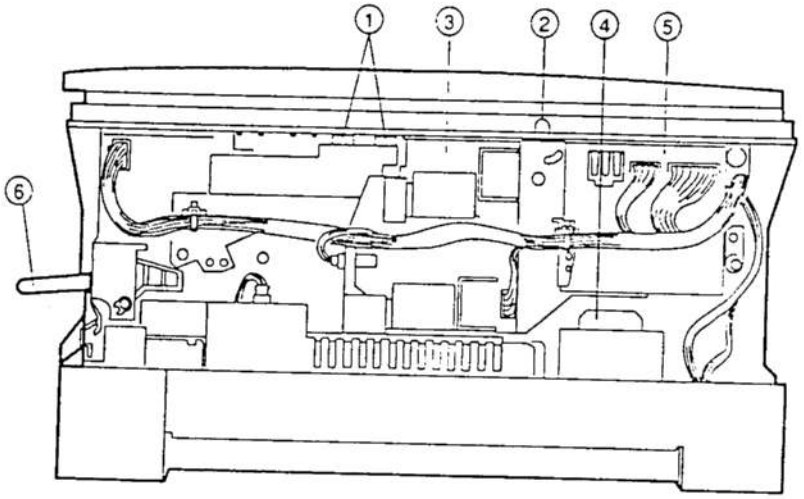

①	Table start position sensor (MS4) and table home/overrun position sensor (MS5)	②	PS sensor lever	③	High voltage transformer unit (MTHVG)
④	Power transformer	⑤	Main PWB	⑥	Power switch lever

5. Cross section

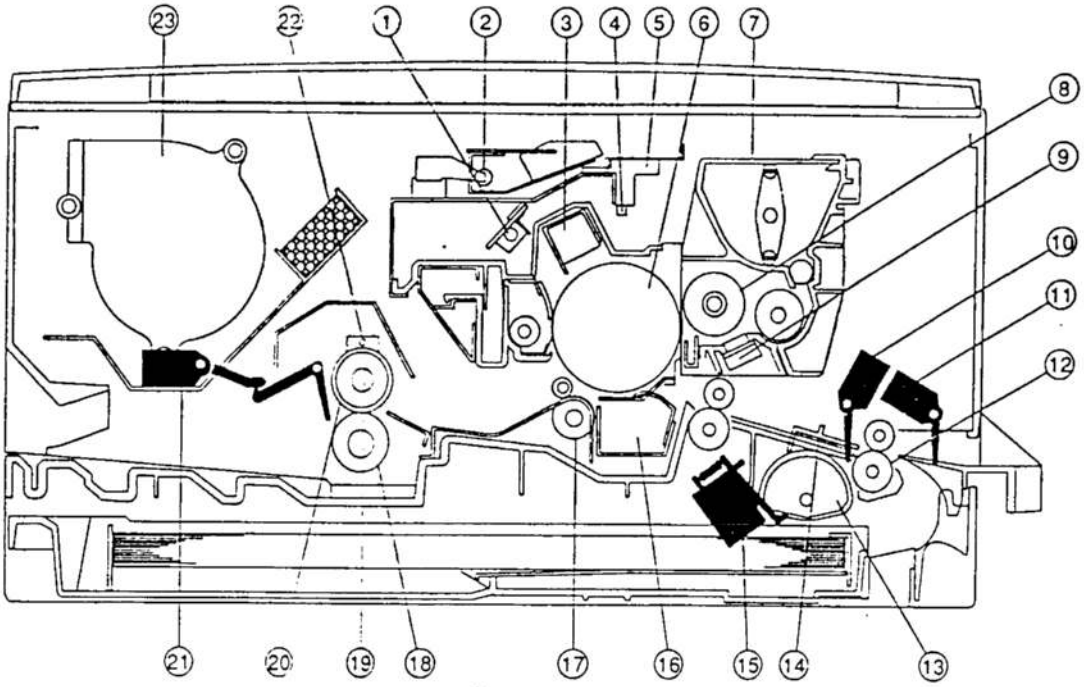

①	Discharge lamp	②	Copy lamp	③	Main corona
④	SELFOC lens	⑤	Auto exposure sensor	⑥	OPC drum
⑦	TD cartridge	⑧	MG roller	⑨	Toner concentration sensor
⑩	Paper entry sensor (MS 1)	⑪	Manual feed paper entry sensor (MS 3)	⑫	Paper feed roller B
⑬	Paper feed roller A	⑭	PS plate	⑮	Cassette paper feed solenoid (PFS)
⑯	Transfer corona	⑰	Separation roller	⑱	Lower heat roller
⑲	Heater lamp	⑳	Upper heat roller	㉑	Paper exit sensor (MS 2)
㉒	Thermistor/thermal fuse/thermal breaker	㉓	Cooling fan (main motor driven)		

6. Switch, sensor, solenoid locations

Name	Type	Function
MS 1	Switch	Paper entry sensor
MS 2	Switch	Paper exit sensor
MS 3	Switch	Manual feed paper entry sensor
MS 4	Microswitch	Table start position sensor
MS 5	Microswitch	Table home/overrun position sensor
MSW	Switch	Power switch
DVSW	Microswitch	Sensor installation of the TD cartridge in the copier. If the TD cartridge is not installed, the machine will not operate because power is not supplied to the main PWB.
Toner sensor	Magnetic sensor	Toner concentration sensor (in the developer cartridge)
AE sensor	Photosensor	Original contrast sensor
Thermistor	Thermistor	Upper heat roller surface temperature sensor
PSF	Solenoid	Cassette paper feed solenoid
TFS	Solenoid	Table feed solenoid
TRS	Solenoid	Table return solenoid

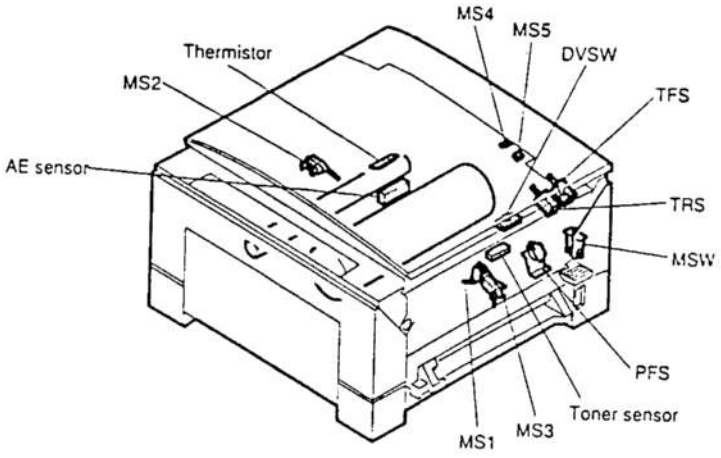

7. Motor, transformer, lamp locations

Symbol	Name	Function
MM	Main motor	Main drive motor also drives the cooling fan.
TM	Toner motor	Toner supply motor
PT	Power transformer	Power transformer
MTHVG	Main and transfer high voltage units	Main corona and transfer corona high voltage supply units
DL	Discharge lamp	For removal of residual charge on the drum surface
CL	Copy lamp	For exposure of original
HL	Heater lamp	For heat roller heating

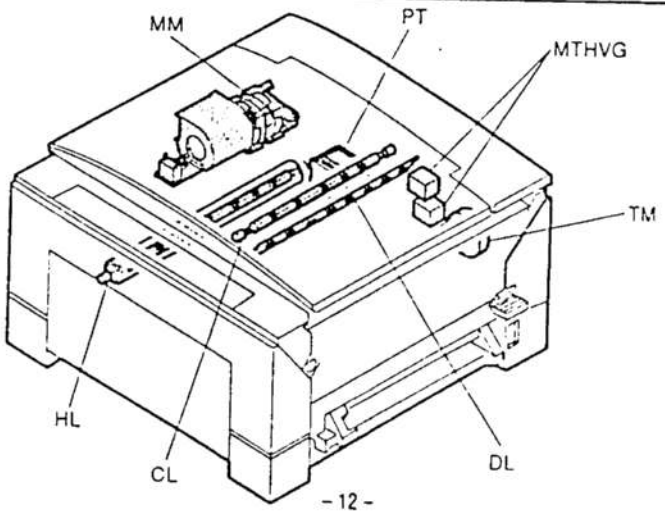

OPY PROCESS

ic copy process

process

ge

negative charge is applied to the opc drum surface by the
na.

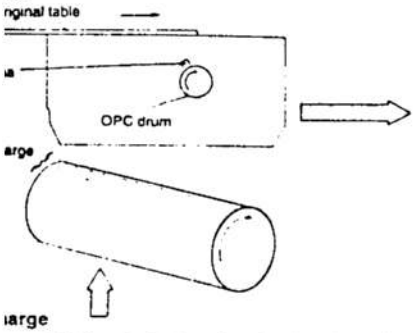

2. Exposure

Light from the copy lamp, reflected from the original, is projected onto the drum surface through the SELFOC lens. The resistance of the OPC layer decreases for the area exposed by the light (corresponding to the light area of the original). The light neutralizes the negative charge. The dark areas of the original do not reflect the light and an electrostatic latent image is formed on the drum surface.

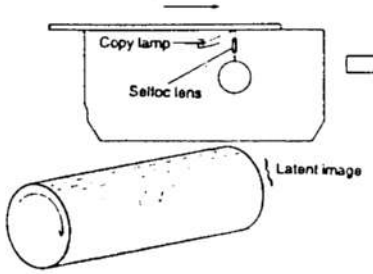

3. Developing

The electrostatic latent image in the drum surface is converted into a visible image by the toner.

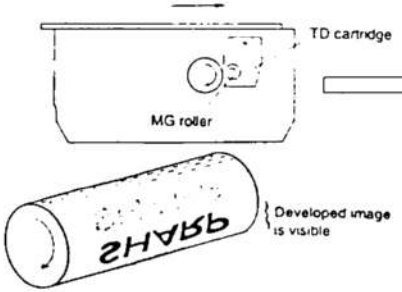

4. Transfer

The visible image on the drum surface is transferred onto the copy paper by applying a negative charge from the transfer corona to the back of the copy paper.

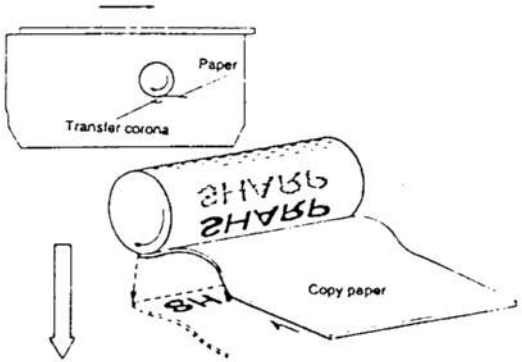

B. Copy process flow

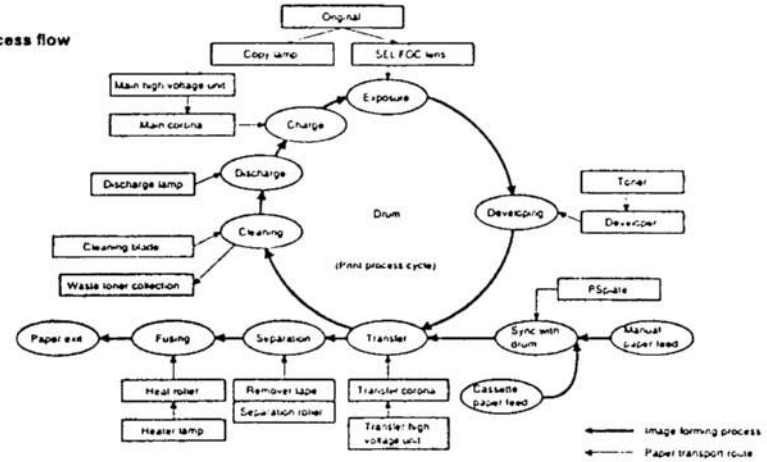

5. Separation

The paper is separated from the drum by the remover tape and the separation roller

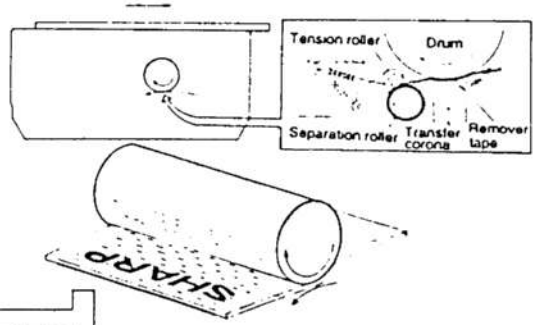

large

large, light from the discharge lamp is projected over the
educe electrical resistance of the OPC layer and remove
al charge to evenly neutralize the drum surface.

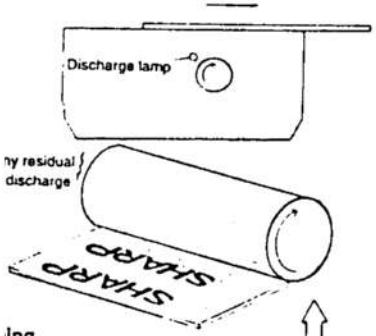

C. Functional diagram

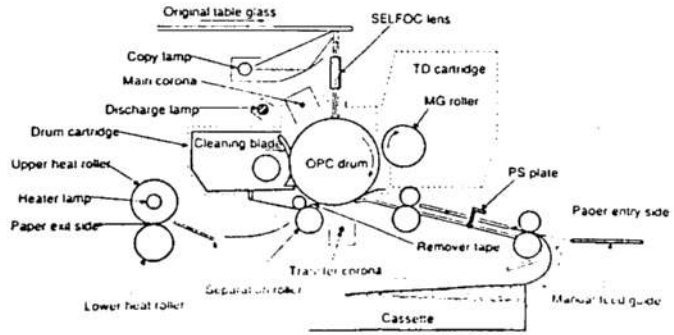

ling

oner on the drum surface is collected by the cleaning blade.

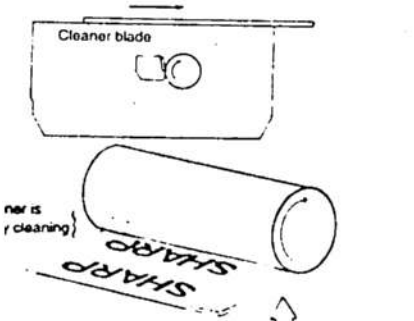

6. Fusing

Through a combination of heat and pressure, the image is fused into the copy paper.

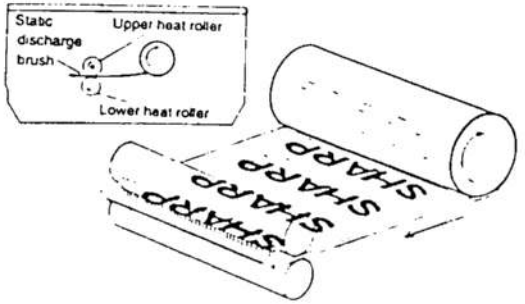

2. Image forming process steps

Image forming:
A charge is applied to the drum surface by the main corona, and the image of the original is exposed by the copy lamp. the charge in a light image area is dissipated according to the degree of density to form a visible image on the drum surface with toner.

Step-1: Optical discharge
Residual charge on the drum surface is removed.

Step-2: Charge
Step-3: Exposure
Latent image is formed on the drum.

Step-4: Developing
Latent image formed on the drum is then developed into a visible image with toner.

Step-5: Transfer
the visible image (toner image) on the drum is transferred onto the copy paper.

Step-6: Cleaning
Residual toner on the drum surface is collected by the cleaning blade.

Step-7: Optical discharge
Residual charge on the drum surface is removed.

3. Description of process

Step-1: Optical discharge (by the discharge lamp)
Prior to charge, light from the discharge lamp is projected over the drum to reduce electrical resistance of the OPC layer and remove any residual charge to evenly neutralize the drum surface. As the electrical resistance is decreased, the positive charge in the aluminium layer moves to neutralize the negative charge present in the OPC layer.

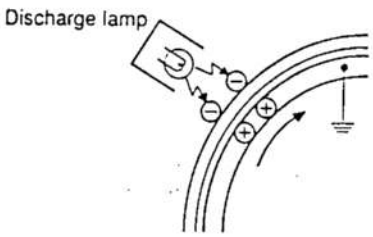

Step-2: Charge
A uniform negative charge is applied over the OPC drum surface by the main corona unit.

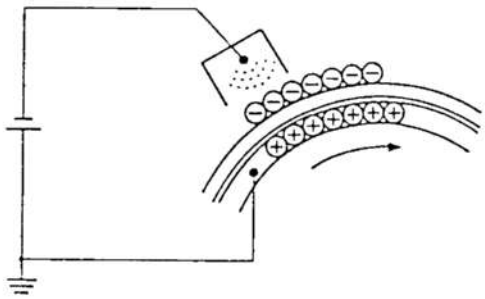

Step-3: Exposure (copy lamp, SELFOC lens)
Light from the copy lamp, reflected from the original, is projected onto the drum surface through the SELFOC lens. The resistance of the OPC layer decreases for an area exposed by the light (corresponding to the light area of the original). The light neutralizes the negative charge. The dark areas of the original do not reflect the light and an electrostatic latent image is formed on the drum surface.

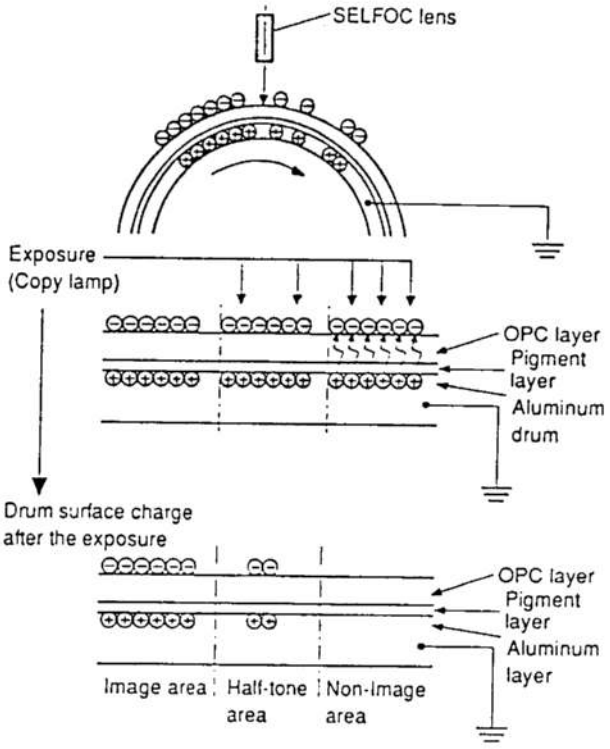

Step-4: Developing (–230V DC bias)
The electrostatic latent image in the drum surface is converted into a visible image by the toner. A bias potential of –230V is applied to the carrier (MG roller) in this two component magnetic brush developing method, and the toner is charged positive through friction with the carrier.

○ : Carrier (magnetized particle)
● : Toner (charge positive by friction)
(N) (S) : Permanent magnet
(provided in five locations)

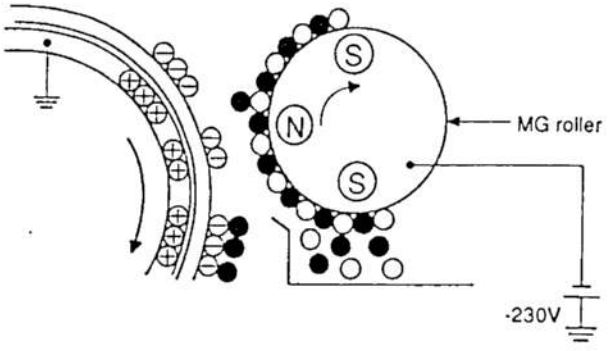

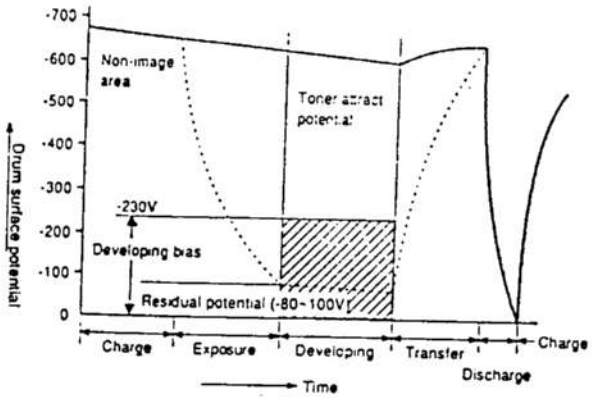

Toner is not attracted to the non-image areas on the drum because of the developing bias. Thus, if the developing bias were to fail, the residual charge would attract the toner so that a background would appear in the non-image areas of the copy.

Step-5: Transfer

The visible image on the drum surface is transferred onto the copy paper by applying a negative charge from the transfer corona to the back of the copy paper.

As the transfer effect is 70 to 80%, 20 to 30% of the image remains on the drum (residual toner) even after the transfer.

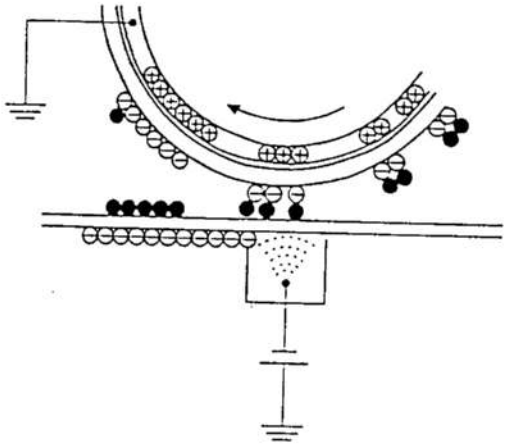

Step-6: Cleaning

Toner remaining on the drum is collected by the cleaner blade and stored in the toner collecting container.

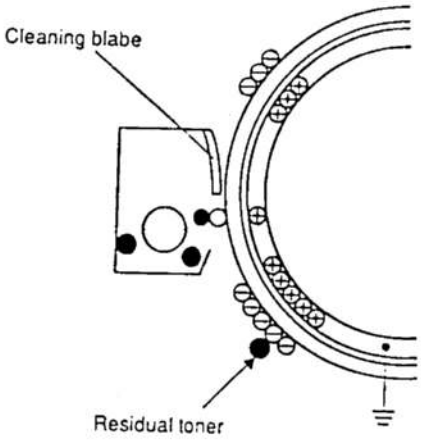

Step-7: Discharge
(same as Step-1)

Step-8: the transferred image is fixed permanently on the copy paper by the action of the fuser unit through a combination of heat and pressure, the toner is fused into the copy paper.

4. Photoconductor

An OPC drum is used for the photoconductor.
(Structure of the OPC drum layers)

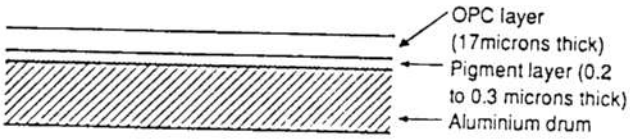

Paper transport route and operational description

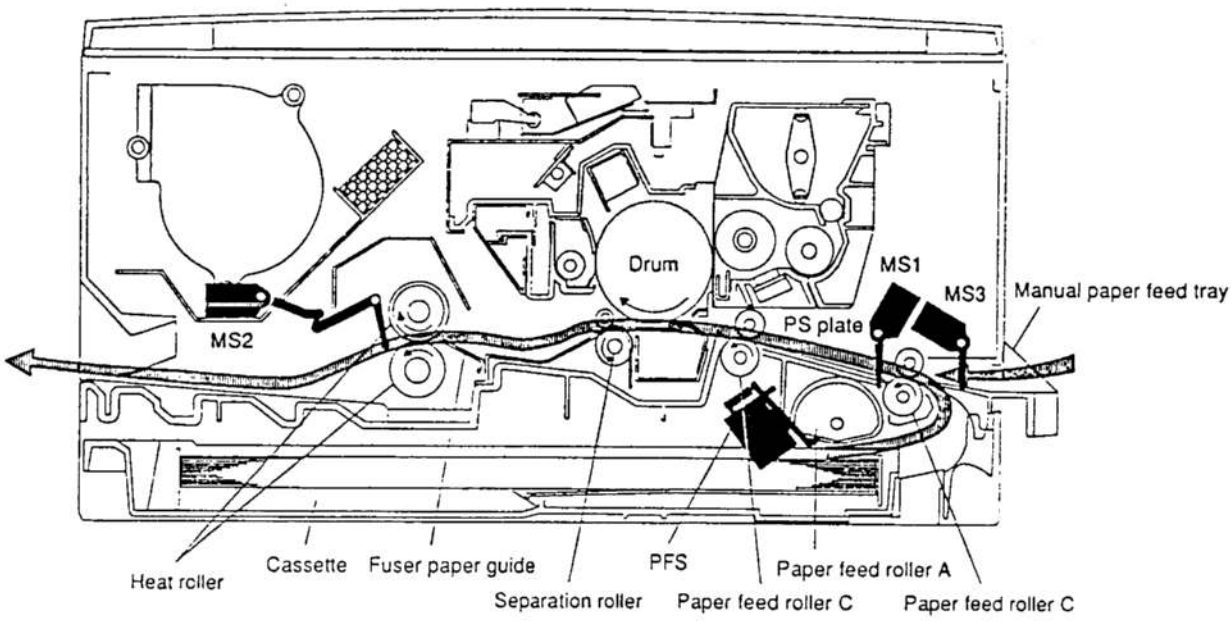

neral Description:

ɔy paper is introduced into the copier in one of two ways, from the ıply of paper in the cassette or manually through the by-pass. The sette holds approximately 100 sheets of copy paper.

ɜ cassette supplied with the copier may be loaded with either 81/2 1" (A4) or 51/2 x 81/2" (A5) copy paper. The Separator Tabs in the sette ensure that only one sheet is fed at a time.

ɜ copy paper is fed out of the cassette by the Paper Feed Roller A. ɜse roller make one rotation for each sheet of paper. The rotation he feed rollers is controlled by the Paper Feed Clutch (a Spring tch) and Paper Feed Solenoid. When the Print Button is ressed, the Main PWB energizes the Paper Feed Solenoid (PFS). en the solenoid arm retracts, it releases the spring clutch and ws the Paper Feed roller A to make one(1) rotation. The rotating ıer Feed Rollers pick up the top sheet of copy paper and start the er moving into the copier.

copy paper is transported to paper feed roller B and trips the er entry sensor MS1. Paper feed roller B continues to rotate until lead edge of the copy paper contacts the paper stopper plate. the sensor block (located on the original table) lifts the paper stopper e and allows the copy paper to continue through the paper guide aper feed roller C. The copy paper passes between the transfer ɔna and the drum and the image is transferred to the copy paper.

remover tape strips the copy paper from the drum and the aration roller transports it to the fuser rollers. The fuser rollers sport the copy paper, actuating the exit sensor MS-2, to the exit

ng manual feed the inserted paper actuates the manual feed er entry sensor MS-3 and the main motor turns ON. The paper is ı transported by paper feed roller B until the lead edge contacts PS plate. The rest of the paper transport operation is the same as ɔribed for the cassette feed. There is no need to push the print ch during the manual feed operation.

following discusses the cassette feed and manual feed opera-

A. Operation during cassette feed

① The illustration below shows the relationship between paper feed roller A, paper feed clutch sleeve, and the paper feed latch locations when the copier is at an initial state before the PRINT key is pressed and after the READY lamp is ON.
(The paper feed latch is in contact with the clutch sleeve protrusion.)

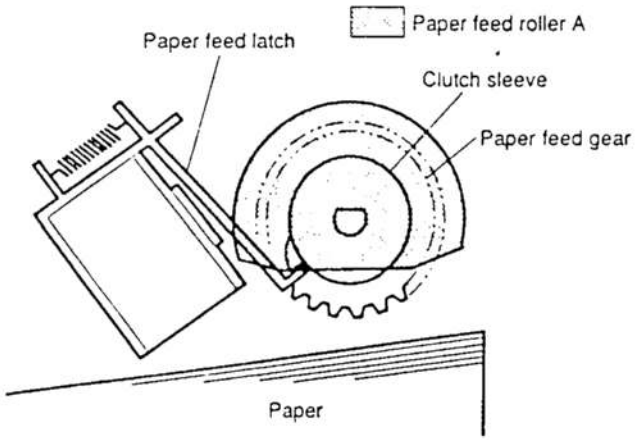

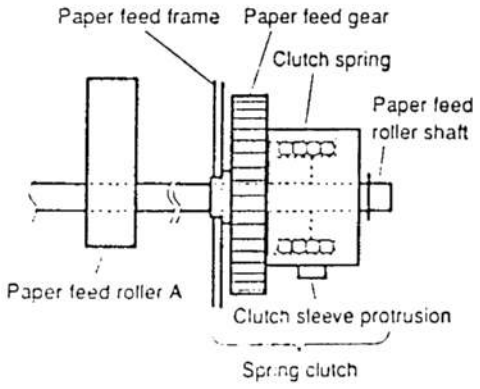

② At the moment the PRINT key is pressed, the drive motor starts to turn the drive gears. The paper feed gear also starts to be driven, but the rotation of the gear is not conveyed to the paper feed roller shaft and the paper feed roller does not rotate because the paper feed latch is holding the clutch sleeve protrusion.

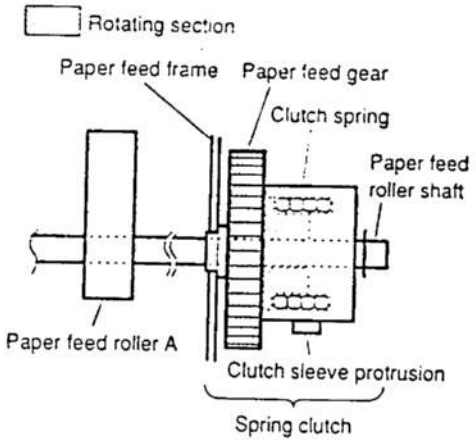

③ 0.9 seconds after the start of the main motor, the paper feed solenoid (PFS) actuates momentarily so that the paper feed latch disengages from the clutch sleeve protrusion. Now, the rotation of the paper feed gear is conveyed to the paper feed roller shaft so that paper feed roller A starts rotating to feed the paper.

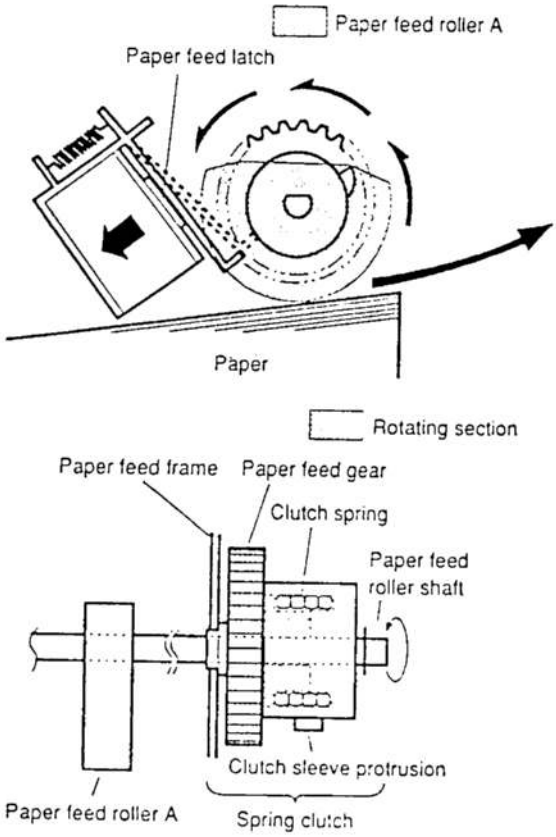

④ After paper feed roller A makes one full turn, the clutch sleeve protrusion is again caught by the paper feed latch so that paper feed roller A stops rotating.

⑤ Meanwhile, the paper fed into the machine is transported to paper feed roller B and the paper entry sensor (MS1). There, the paper is held temporarily by means of the PS plate, in order synchronize with the lead edge of the image on the drum. S paper feed roller B is continues to rotate, the paper will be evenly pressed against the PS plate to correct for any paper feed skew.

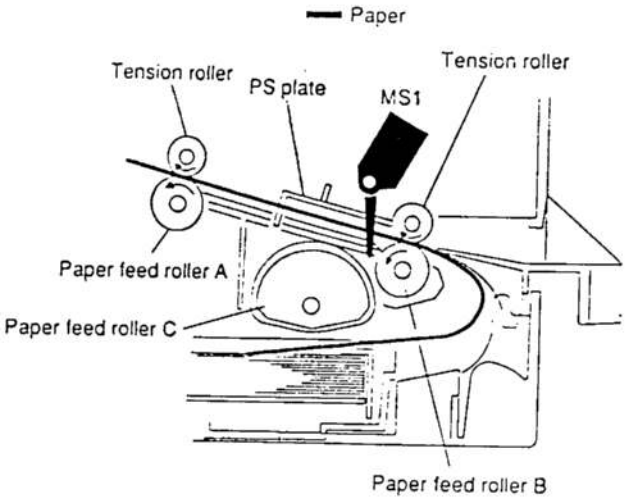

⑥ As the original table starts to move, the PS plate is mechanically raised by the PS sensor lever to allow the paper to continue to the transfer area.

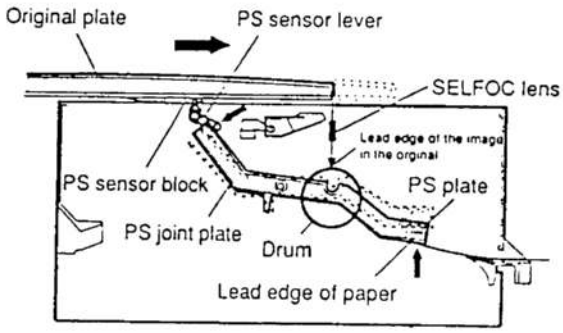

⑦ After the PS plate has been released, the paper is transferred to the transfer unit via paper feed roller C. the paper is separatr from the drum by the remover tape and the separation roller.

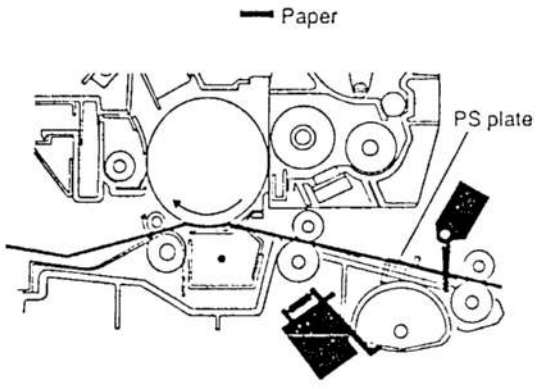

The paper separated from the drum is transported to the exit tray through the fuser paper guide, fuser heat roller, and the paper exit sensor (MS2)
ıe following shows the timing chart for the above operation.

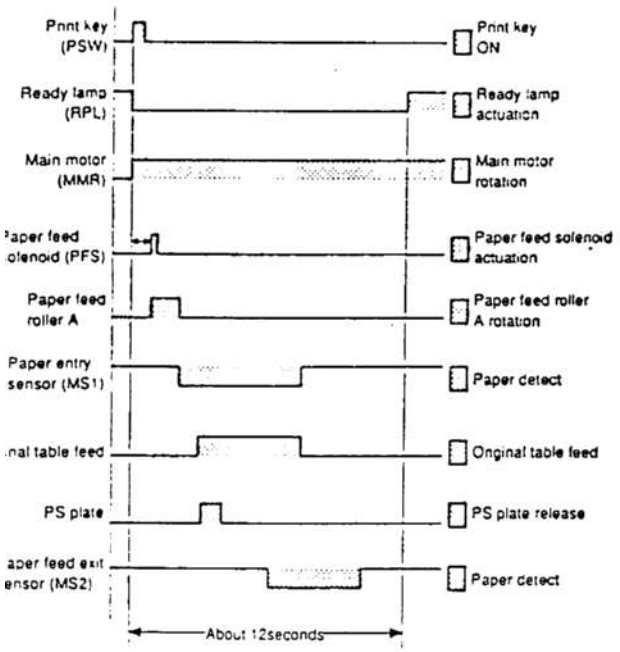

Operation during manual feed

When paper is inserted in the manual paper feed tray, MS3 is actuated and the main motor starts to turn the drive gears.
The paper inserted is then taken up by paper feed roller B and is transported until its lead edge comes in contact with the PS plate.
The rest of the copy paper operation is identical to the cassette feed operation described in: (A-⑤ - ⑧)
e following shows the timing chart for the above operation

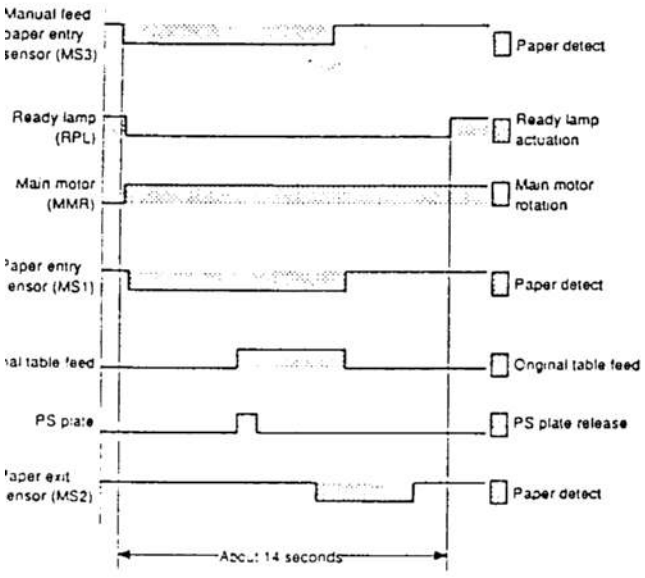

C. condition to establish a paper misfeed

① At power on
If MS1 or MS2 is on at power on.

② Manual paper feed
If the MS1 were to fail to actuate within 3 seconds after the actuation of the MS3.

③ In the course of copying
a. If the paper lead edge does not actuate MS2 within 2.3 seconds from the first actuation of MS5 after the table started to advance.
b. If MS2 is still actuated in 1.4 seconds after the discharge lamp turned off at the last copy in the single copy or multicopy mode.
c. If MS1 is not actuated at the timing that the PFS turns on, during cassette paper feed.

2. Major component removal

A. Paper feed rollers, A, B, C

① Remove the transfer corona unit from the paper feed section. (Refer to [10]-2.)

* This is to prevent the corona wire from being cut during operation.

② Remove the E-ring, the spring clutch unit, and the bearing, and remove paper feed roller A.
(When assembling paper feed roller A, adjustments must be performed referring to [7]-3A.)

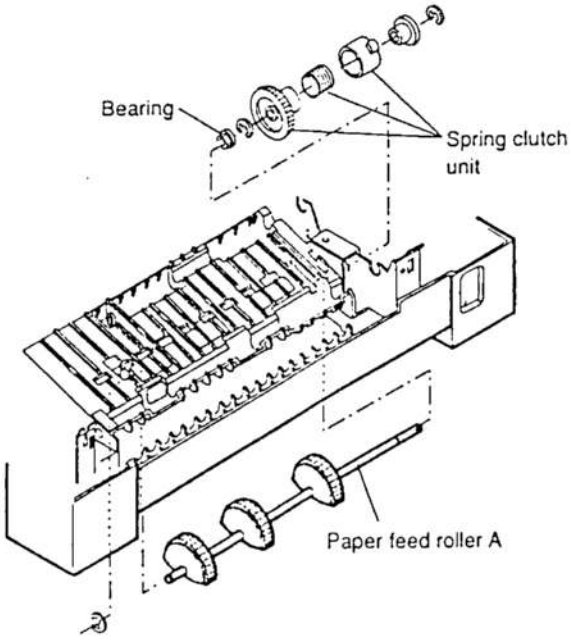

③ Remove the E-ring and the bearing, and remove paper feed roller B.

④ Remove the E-ring, the gear, the pin, the link arm, and the bearing, and remove paper feed roller C.

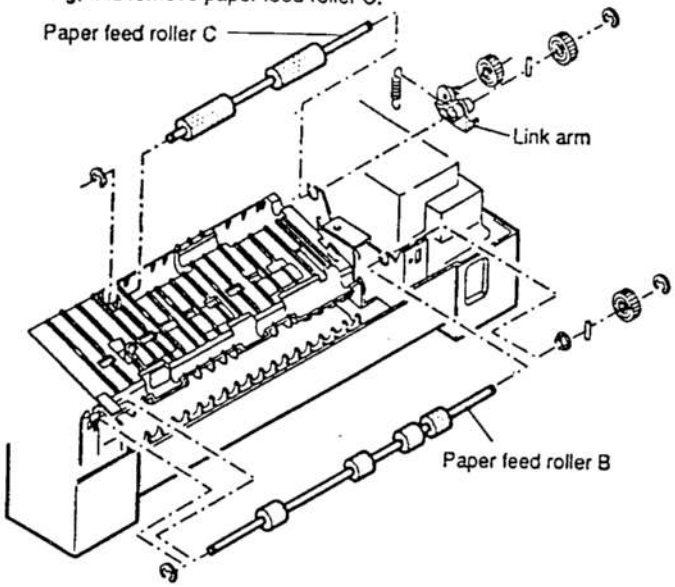

B. Remover tape

① Open the upper frame, then remove the TD cartridge and the drum cartridge.

② Remove the separation unit from the drum cartridge.

CAUTION: Do not expose the drum cartridge to direct sunlight.

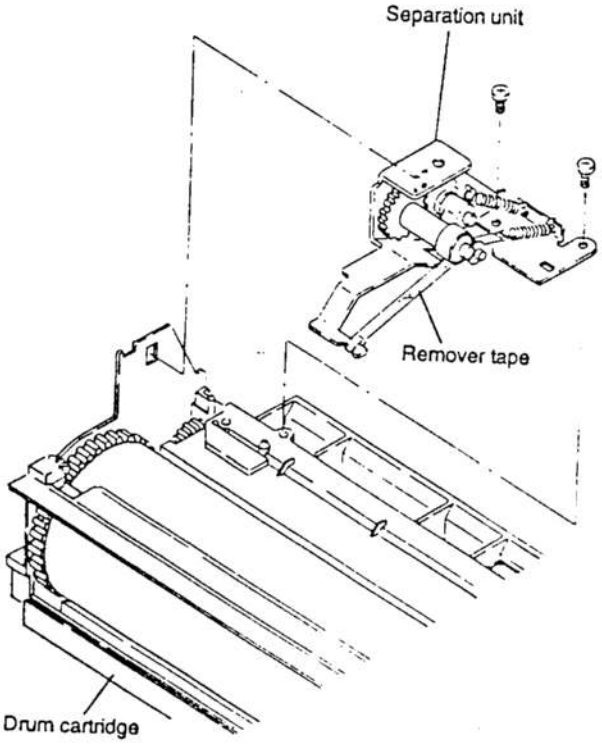

③ Remove the remover tape from the separation unit.

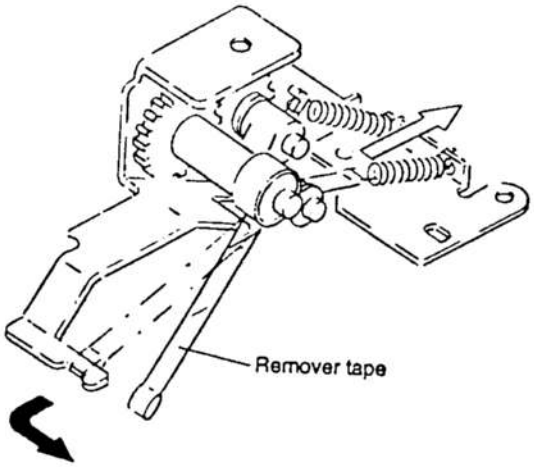

C. Removal of the MS2

① Remove the ACCURIDE fixing screws (2 screws) and remove the table unit.

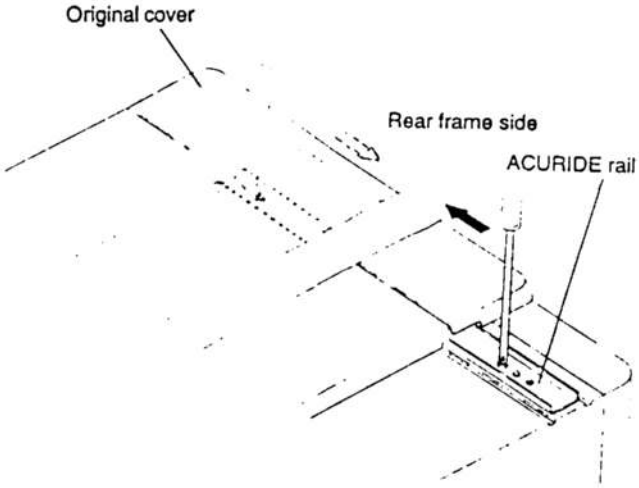

② Remove the covers.

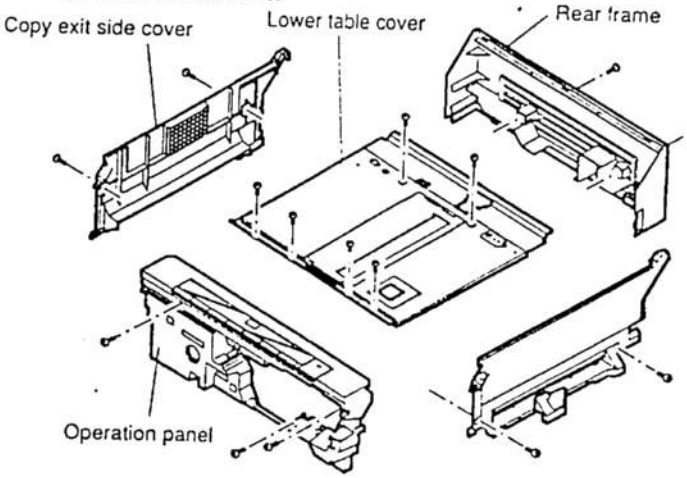

③ Disconnect the following 4 connectors: main PWB 34 pin connector, high voltage PWB 5 pin connector, the FASTON connector and the high voltage PWB 3 pin connector.

④ Remove the 2 screws holding the PWB box assembly in place.

⑤ Remove the 3 screws holding the main motor in place.

I. Adjustments

ı. Paper feed roller A location (angle)

Check procedure)

) Turn gear in the arrow direction unitil the clutch sleeve protrusion comes into contact with the paper feed latch.
Make sure that the lower side of paper feed roller A is parallel to the lower side of the paper feed frame. The tolerance is 0±5°.

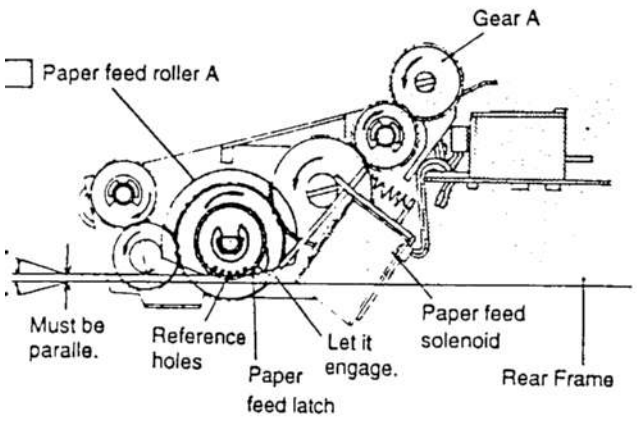

(View of the paper feed unit from the rear frame side)

djustment procedure)

Check the angle of paper feed roller A.

Change the hook position of the clutch spring according to the degree of angular deviation.

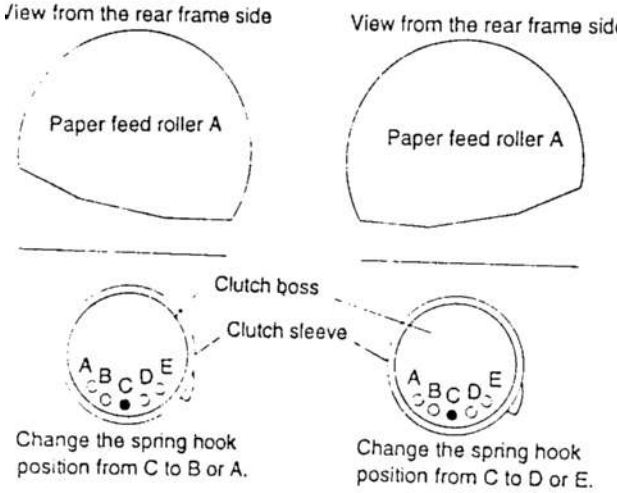

a Remove the spring clutch assy ([7]-2-A).
b Disassemble the spring clutch assy and change the hook position of the spring.

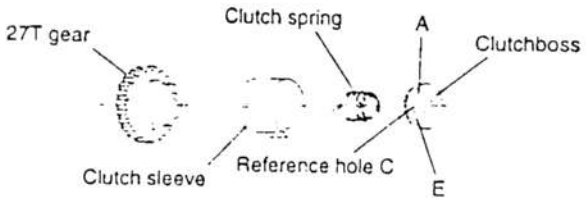

When reassembling the clutch, lube the clutch spring with grease (JKOG-0062FCZZ).

B. Copy lead edge image location

Adjustment is required if the lead edge image is not within –1 to –4mm.

(Adjustment procedure)

① Check the lead edge image location.
Place a scale against the original lead edge guide and make a copy.

② If the image location is more than – 4mm, move the PS sensor block toward arrow direction A. If it is less than – 1 mm, move the block in arrow direction B.

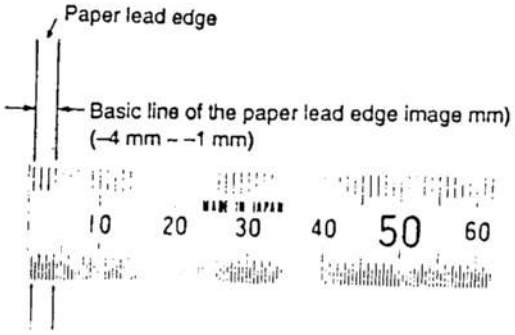

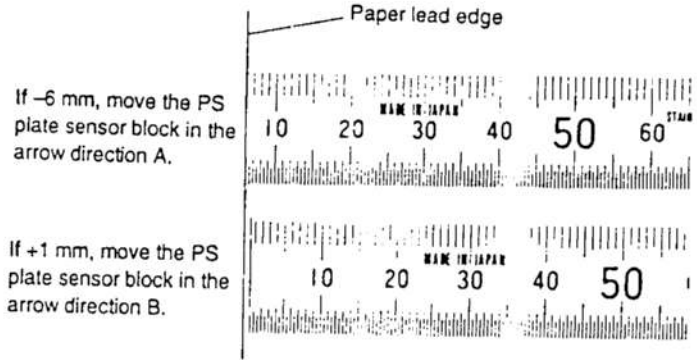

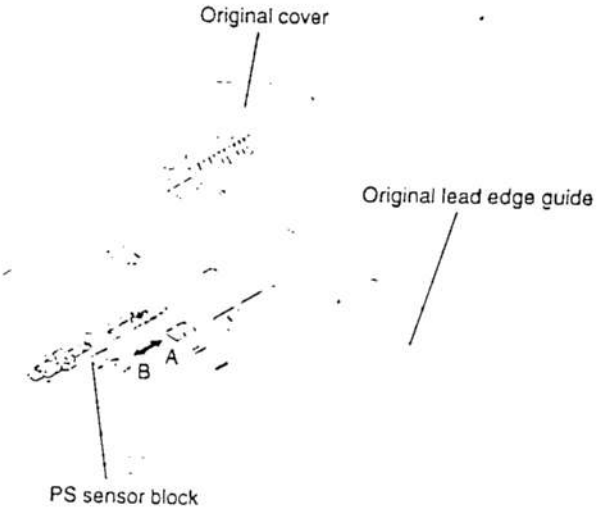

[8] OPTICAL SYSTEM

1. General description

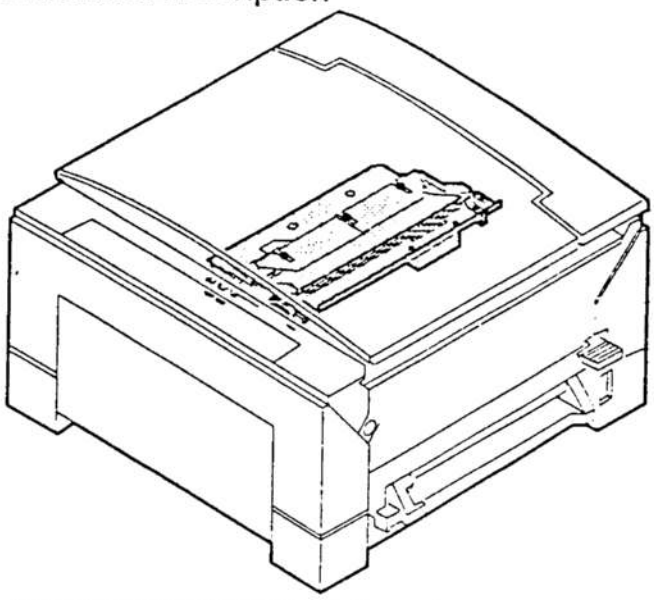

- Light from the copy lamp is directed by a reflector at the original. The optical system of the copier (fiber optics) directs the light reflected from the original and focuses the reflected image on the drum. The intensity of the copy lamp is regulated by the exposure control switch. A photo sensor in the optical system senses the contrast of the original, automatically adjusting the copy lamp intensity. The range of the exposure control is regulated by the copy lamp control PWB. A thermal fuse is mounted to the main reflector for overheat protection. The model is a moving platen copier. The original table moves the original over the stationary optical system. The table movement is accomplished through two clutches, the table feed clutch and the table return clutch. These are spring clutches controlled by the action of the table feed solenoid (TFS) and the table return solenoid (TRS).
  When the table is in motion an adjustable PS sensor block mounted on the table lifts the paper stopper plate which is used for registering the lead edge of the copy paper to the lead edge of the image on the drum.
- A SELFOC lens is used so that the copy lamp light (image) reaches the drum surface in a short distance.
- Moving table method is used for exposure.
- Exposure is controlled by varying the copy lamp voltage.
- A photosensor (diode) is used in the optical system for sensing contrast in the original. As the photosensor receives light reflected from the original, the contrast of the original is determined. the photosensor senses 2mm before the lens, to correct for any delay in the circuit or copy lamp.

General block diagram

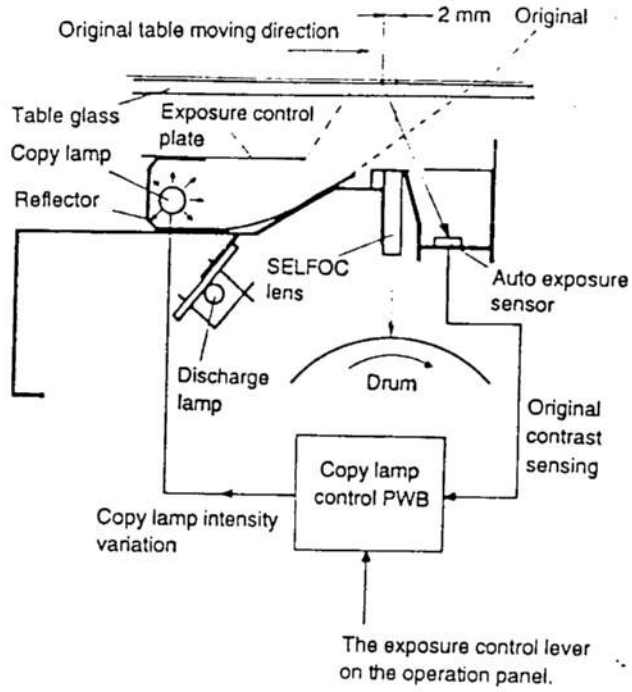

The sensor is installed in the center of the 50 mm slit so that the contrast of the original is sensed within this 50 mm area, (shaded area [ ] in the figure below).
For the original out of this area, the automatic exposure control function will not apply.

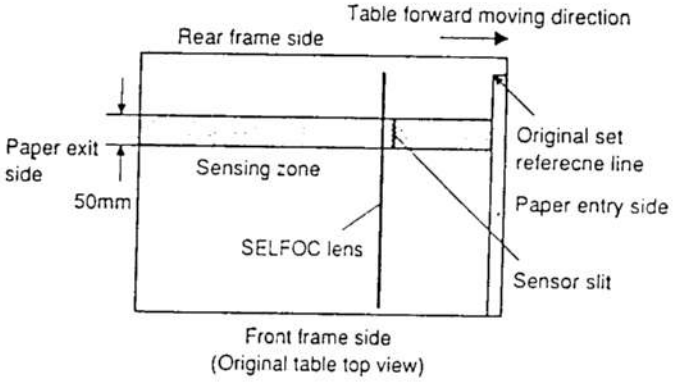

2. Original table

The original must be placed to the right side edge of the table on the rear frame side. An image loss appears in the shadowed area due to paper separation.

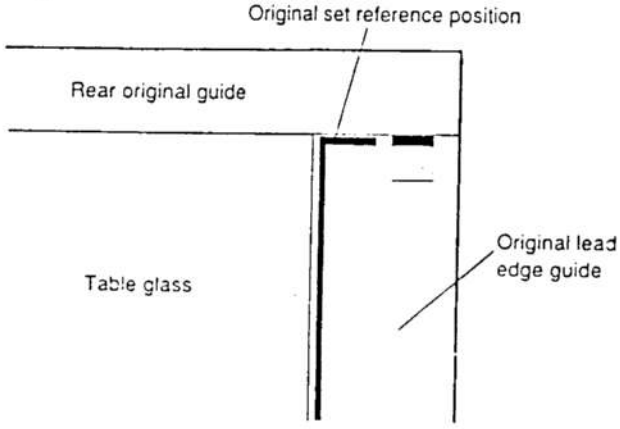

. Void area and image loss

) Void area
Make a copy with the original cover left open. The area of the paper copied white is the void area.

AUTION: Do not look at the exposure lamp while making a copy with the original cover open. This may injure your eyes.

Image loss
Indicates the area of image lost on the copy.

Void area and image loss limits

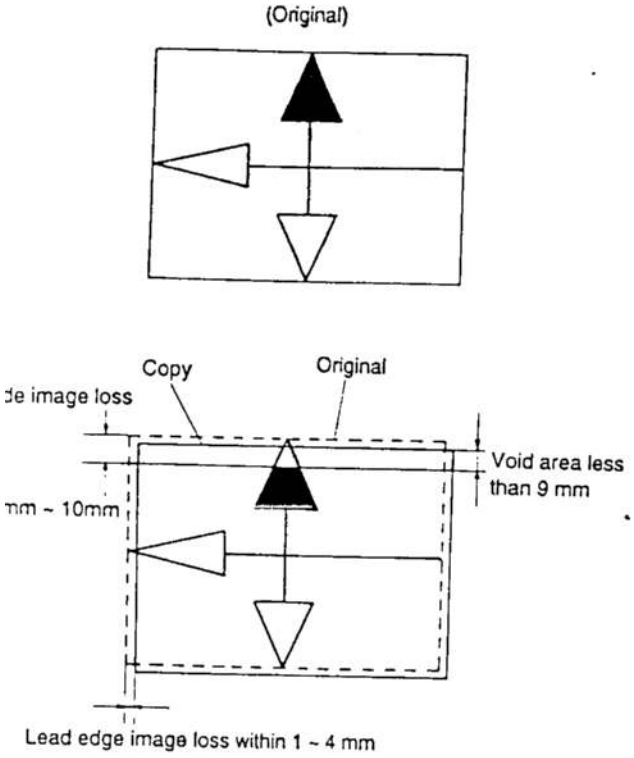

Void area	Lead edge	0mm
	Side	9 mm, max.
Image loss	Lead edge	1 – 4 mm
	Side	3 – 10 mm

Original table driving

original table is driven by the table drive gear train and the ction select solenoids. (TFS, TRS)

Table action

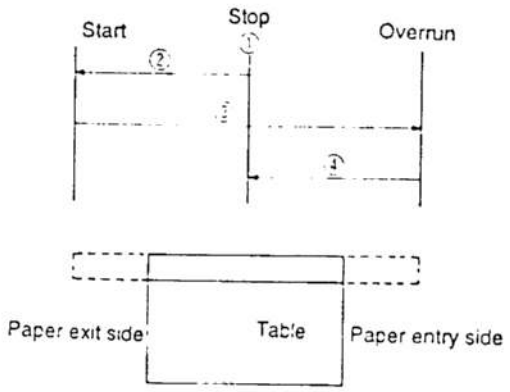

① The table stops in the middle.

② The table moves to the starting position (paper exit side).

③ The table moves towards the paper entry side while exposing the original.

④ Begins to return from the overrun position and stops at the stop position.
In the multicopy mode, the table returns from the overrun position and moves to the start position again.

B. Construct of the table drive unit

(1) Structure of the drive train

The drive train consists of the following components and functional blocks.

- Main motor
- Reduction gear assy
- Table drive assy
- Toner supply clutch assy
- Clutch board

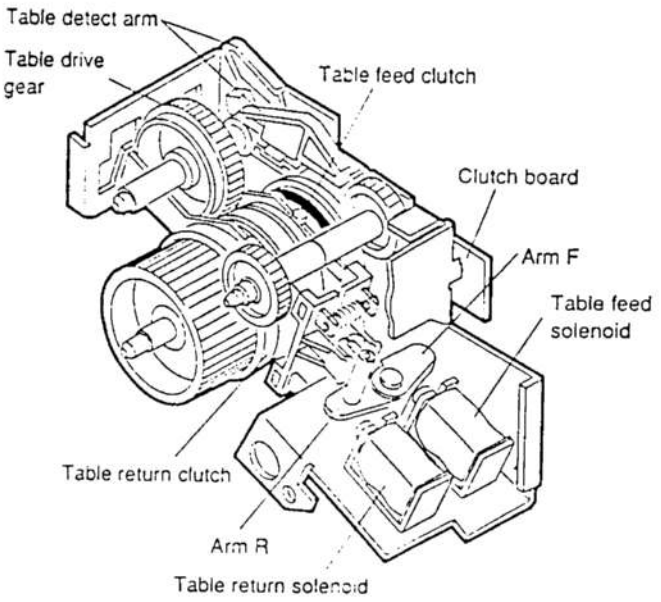

(2) Action

A. Table drive assy

(1) When the table is at rest:
The solenoids are not energized, the feed and return clutches are not engaged, and the rotation of the main motor is not conveyed to the table drive gear.

(2) When the table is moving forward (TFS-ON):
When the table feed solenoid is energized, the linkage presses the table feed sleeve against the feed gear. This engages the table drive gear with the feed gear which transmit rotation from the main motor to move the table forward.

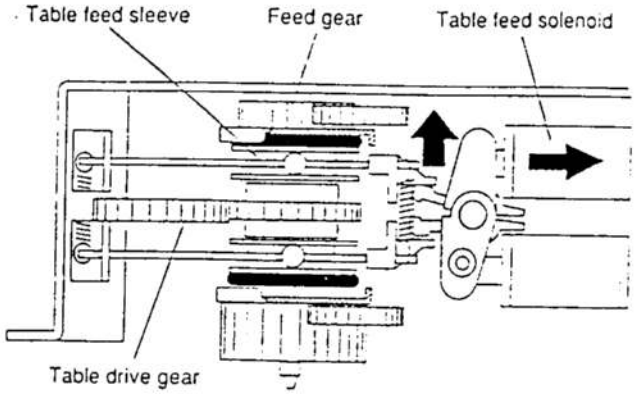

(3) When the table is returning (TRS-ON):
When the table return solenoid is energized, the linkage presses the table return sleeve against the return gear. This engages the table drive gear with the return gear which transmits rotation from the main motor to move the table in the reverse direction.

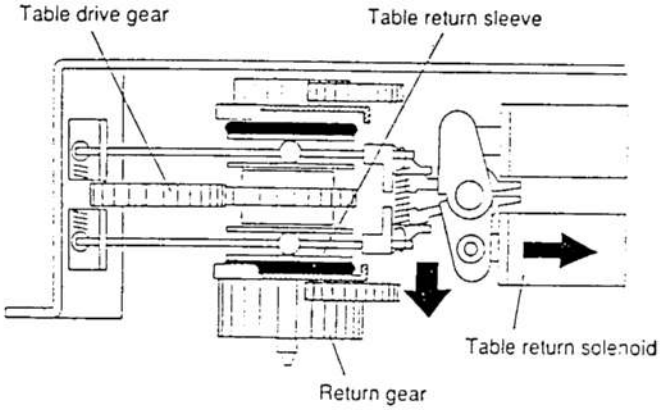

5. Optical system operation

A. Time chart (single copy from cassette)

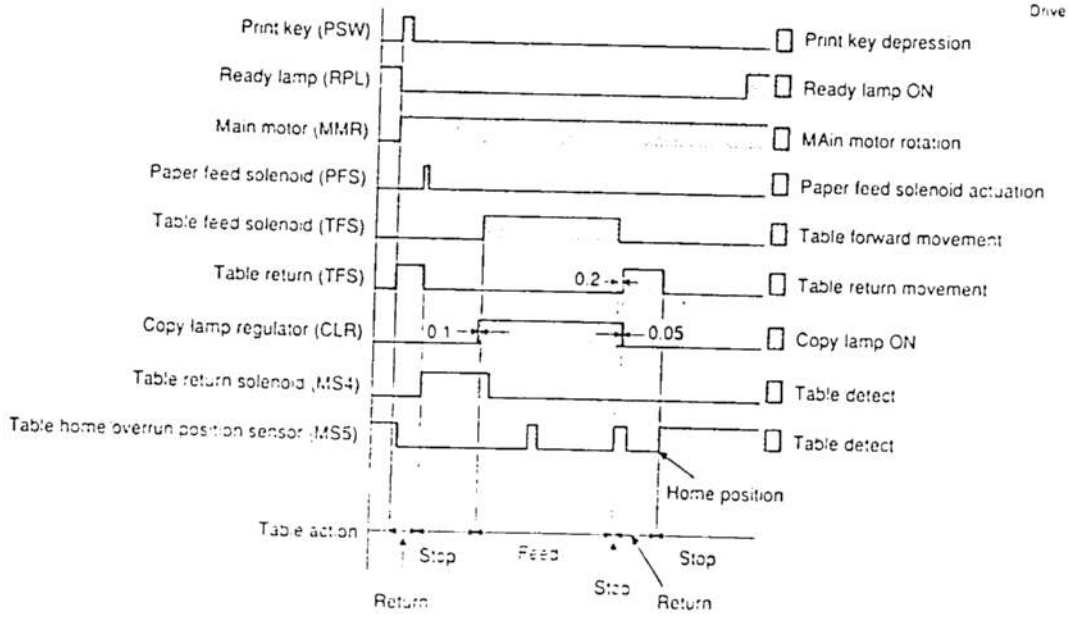

NOTE: If a problem occurs in the table drive system, the "L" status code will be displayed in the multicopy window.

B. Toner supply clutch

(1) When a low toner condition is detected by the TCS, the toner supply solenoid is energized which engages the intermittent g A with the intermittent gear B.

(2) One rotation of the intermittent gear A turns the intermittent gear B by four tooth. $4\frac{4}{5}$ rotations of the intermittent gear A causes the intermittent gear B to make one full turn. One full turn of 29/32T gear results in one full turn of the toner supply roller.

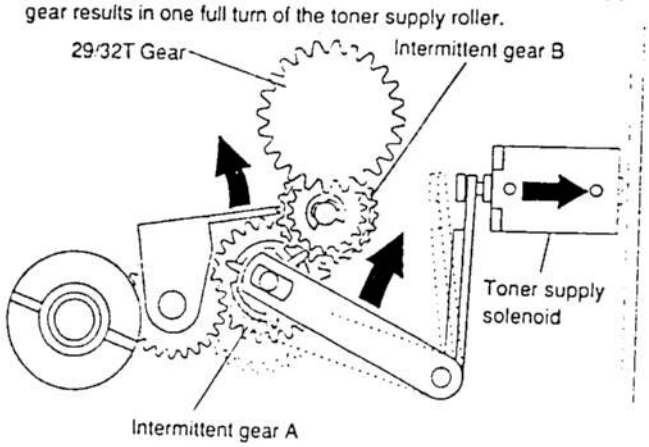

3. Removing the major components

A. Removing the drive train

(1) Remove the table unit and the upper and lower rear covers.

(2) Unfasten the connectors on the clutch board, and remove the screws that secure the drive train.

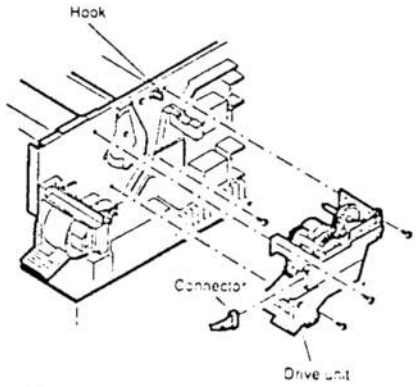

B. Timing explanation

① With the depression of the PRINT key, the main motor starts to rotate. At the same time, the TRS (Table Return Solenoid) is energized to move the table to the start position (paper exit side).

② When the table is sensed by MS4, the table stops (start position).

Start position)

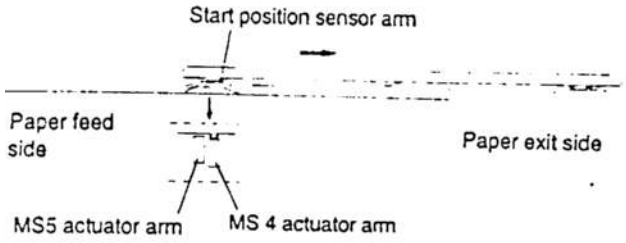

③ Immediately after the copy lamp is turned ON (0.1 second), the TFS (Table Feed Solenoid) is energized. Then, the table starts moving forward and exposure is started for the original.

④ Although MS5 actuates while the table is being advanced, it continues to advance. At the second actuation of MS5, the table stops on the table overrun position (End of paper feed side).

Overrun position)

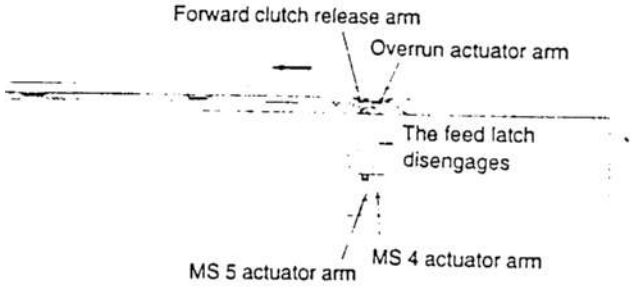

⑤ 0.2 second after the table stops, the TRS energizes so that the table starts to return with the copy lamp extinguished at the same moment.

⑥ When MS5 is actuated during table return motion, the table stops (table home position).

Home position)

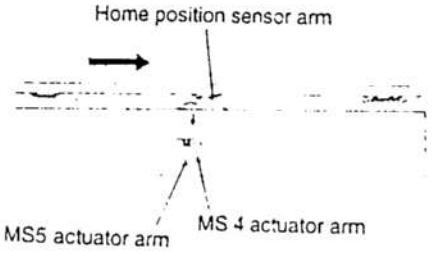

6. Major component removal

A. Copy lamp, thermal fuse

① Disconnect the copier from the wall outlet.

② Remove the two screws that secure the table glass rail, as shown in the figure. Move the table glass in the direction of the arrows to expose the rail mounting screws.

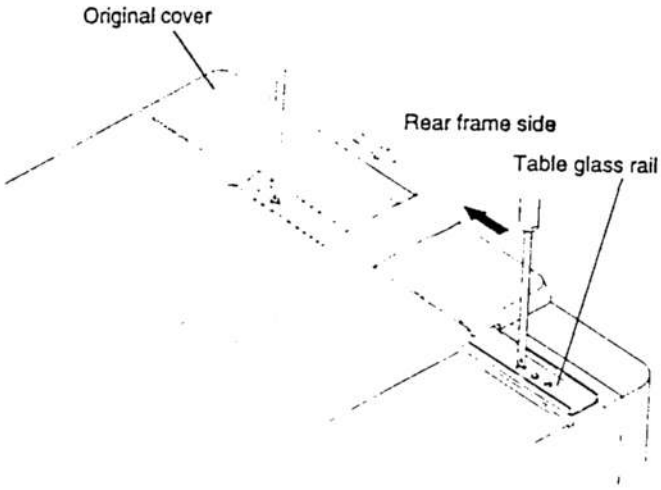

③ Remove the optical unit upper cover.
Slide the cover to the rear frame side to remove.

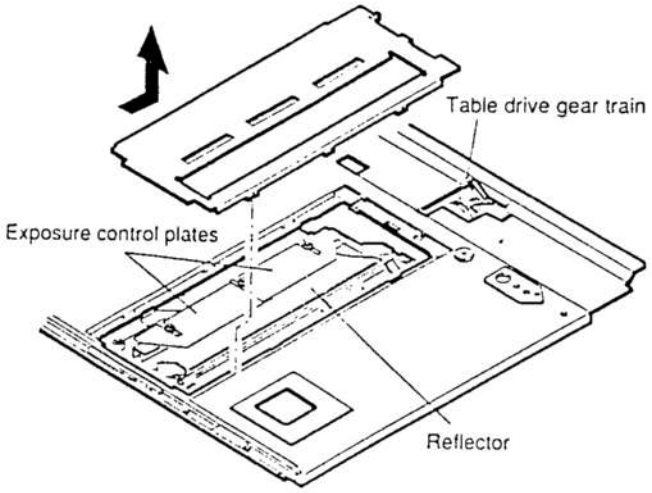

④ Pull the copy lamp electrode on the front frame side in arrow direction A to disengage the lamp from the electrode. Next remove the copy lamp through the clearance between the exposure control plate and the reflector.

NOTE: Change in the exposure control plate location may vary the exposure balance. Check and adjustments of the exposure balance, therefore, are required. (Refer to [8]-7-A.)

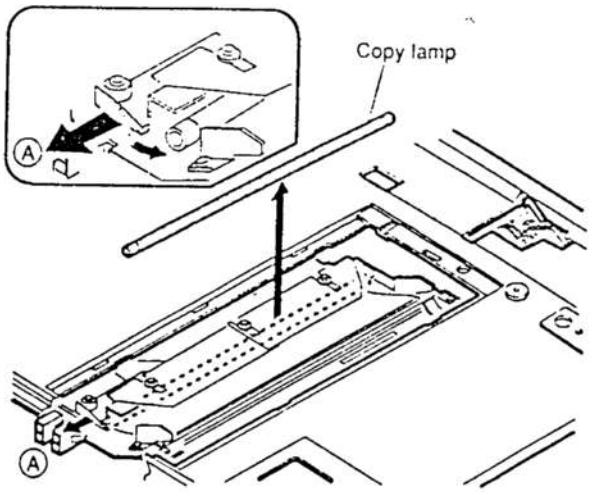

(Installation precautions)

a. Copy lamp
Install the copy lamp so that the protrusion on the lamp points away from the reflector.

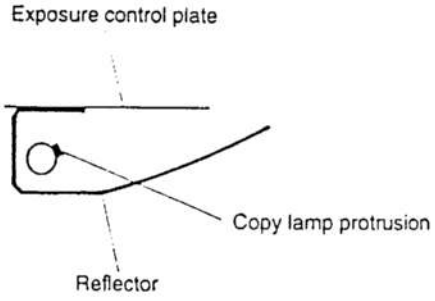

b. Thermal fuse
Install the thermal fuse so that it is in contact with the reflector.

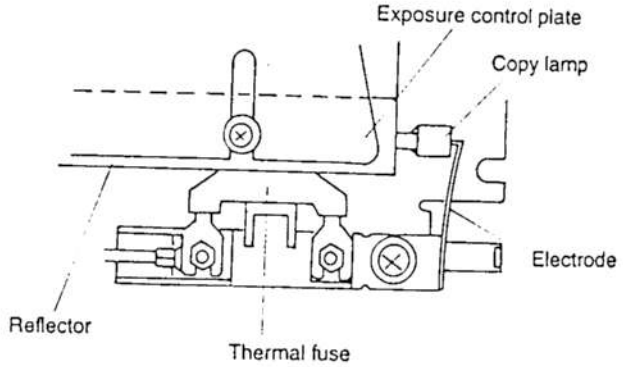

B. Optical unit

① Remove the original table (6-A-①).

② Remove the external panels (operation panel, rear frame s paper entry side, paper exit side, and under the table). (For details, refer to [10]-1.)

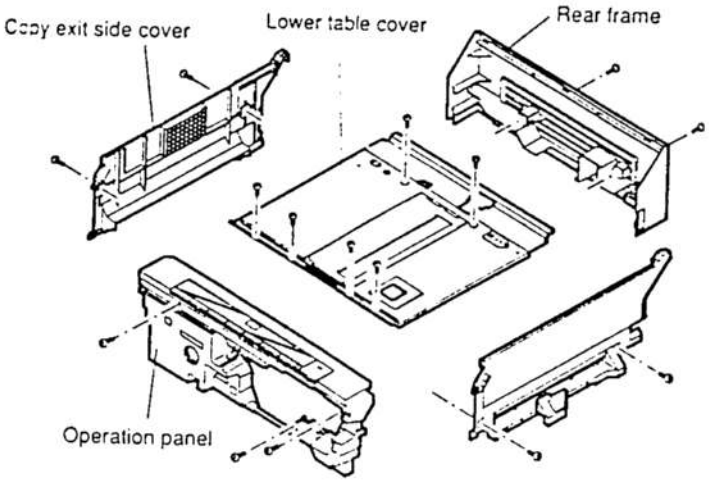

③ Disconnect the connections at three locations and remove the four screws that hold the optical unit, then remove the optical unit.

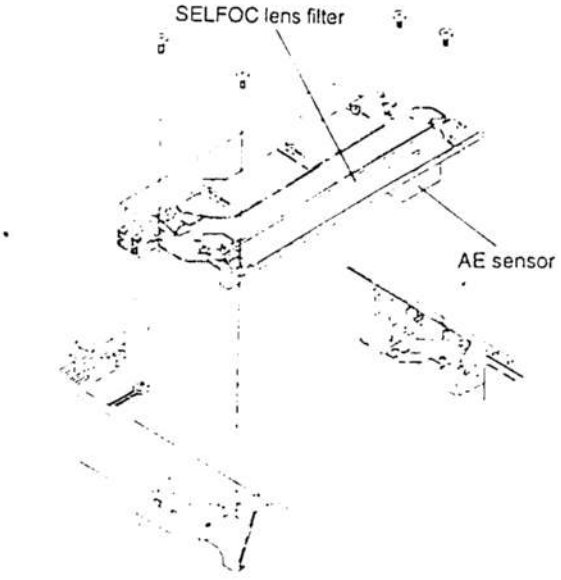

NOTE 1: The lens filter must be cleaned with a soft cloth dampened with water. Never use alcohol.

NOTE 2: Use only alcohol to clean the SELFOC lens.

6. Table drive unit

① Remove the table glass assembly and the rear panel. (Refer to [8]-6-A and [10]-1.)

② Remove the two screws that hold the PWB-box unit.

③ Remove the three screws that hold the table drive unit, disconnect one connector, and one hook.

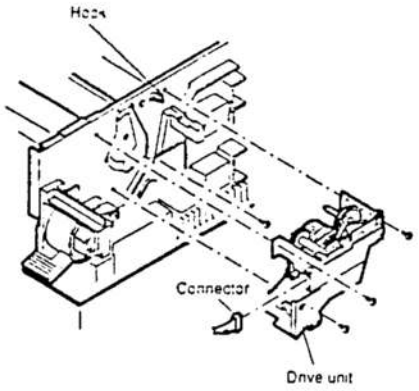

7. Adjustments and precautions

1. Exposure control plate (exposure balance adjustment)

When an uneven exposure occurs between the front and rear frame sides, move the location of the exposure control plates to adjust it. Before the adjustment it is mandatory to check the following to be normal.

Corona wires

TD cartridge

Cleanliness of the optical system

① Make a half-tone copy and check the exposure balance.

Example)

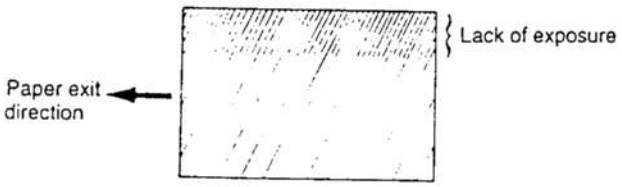

Half-tone copy

② If the copy appears as the above example, move exposure control plate R in arrow direction A to balance the exposure.

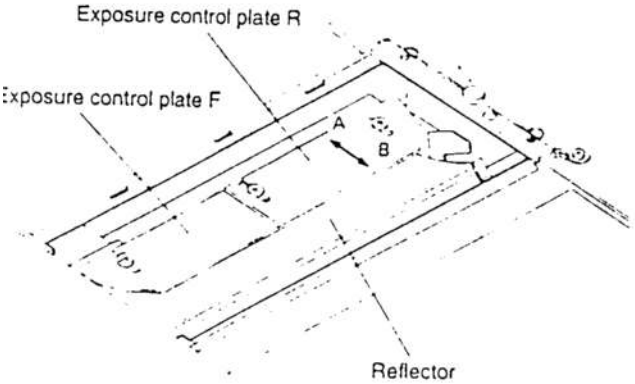

Moving the exposure control plate in arrow direction B causes the exposure control plate in arrow direction B causes the exposure to decrease so that the copy is darker.

1. General description

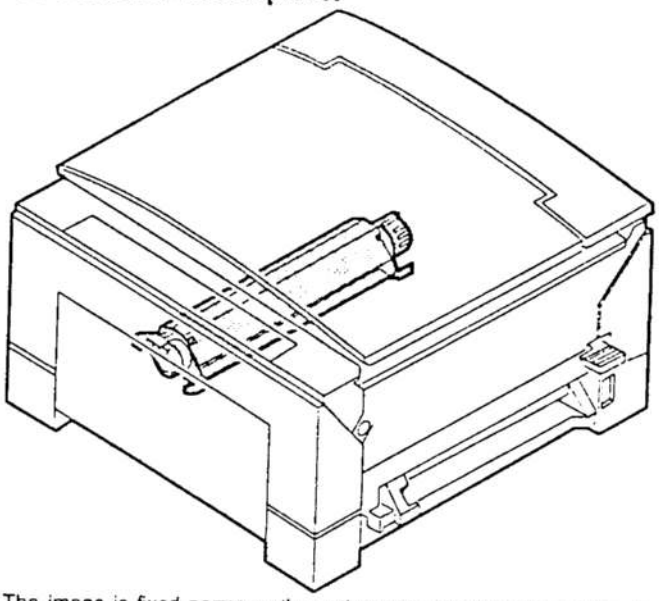

The image is fixed permanently on the copy paper by the action of the fuser. Through a combination of heat and pressure, the image is fused into the copy paper. The Upper Heater Roller contains the heater Lamp, a 950 watt, Halogen Lamp. The temperature of the Heater roller is detected by the Thermistor, which relays this information to the Main PWB. When the temperature is low, the Main PWB energizes the Heater Lamp through a solid state switch called a Triac. The Heater Lamp stays on until the proper temperature is reached.

The heater is protected from overheating by a thermal breaker and a thermal fuse. The thermal breaker is manually resettable. If either the breaker or the fuse opens voltage to the heater lamp is interrupted, an "H" will appear on the display panel and the copier will stop operation.

General block diagram (cross section)

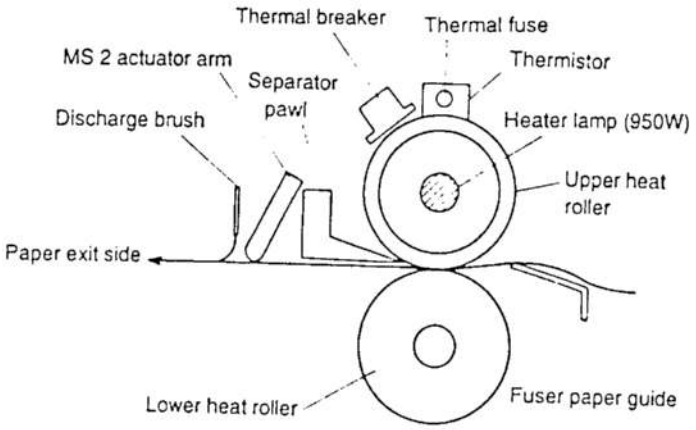

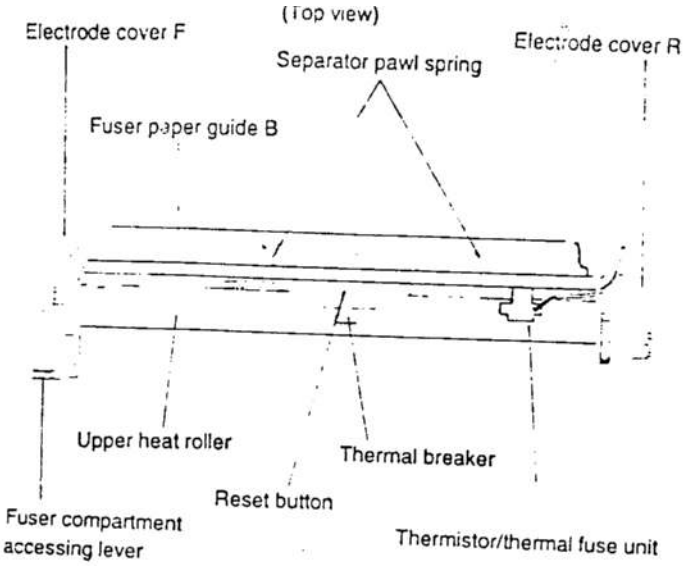

A. Heat roller

A teflon roller is used for the upper heat roller and a silicone rubber roller is used for the lower heat roller for better toner fusing performance and paper separation.

Simple raising of the fuser compartment accessing lever separat the upper heat roller from the lower heat roller for easier misfed paper removal.

B. Separator pawl

Two separator pawls are used on the upper heat roller. The separator pawl is teflon coated to reduce friction with the roller and prevent a smear on the paper caused by the separator pawl.

C. Thermal control

① The heater lamp, thermistor, main PWB, DC power supply PWB, and triac within the power supply unit are used to control the temperature in the fuser unit.

To prevent abnormally high temperature in the fuser unit, a thermal breaker and thermal fuse are used for safety purposes.

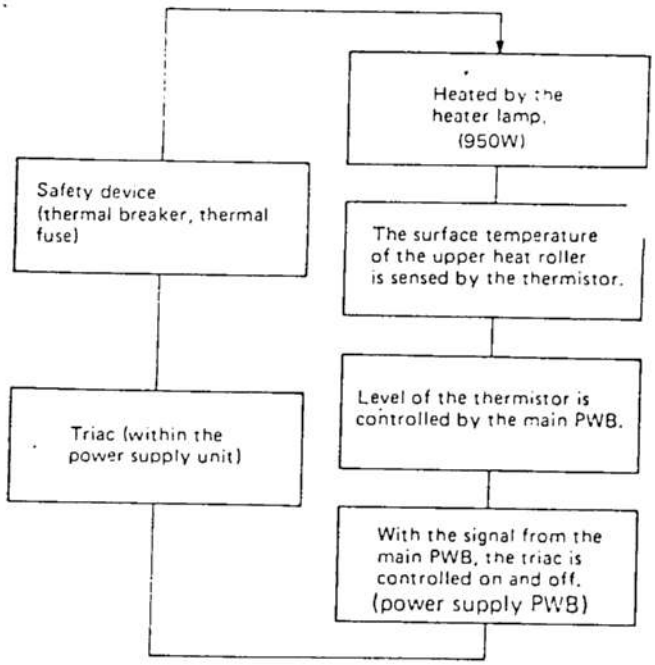

Σ The surface temperature of the upper heat roller is set to 170°C. The surface temperature during the power save mode is set to 100°C.

③ The self-check function comes active when one of the following malfunctions occurs, and an "H" is displayed on the multicopy window.
   a. When the heat roller surface temperature rises above 240°C.
   b. When the heat roller surface temperature drops below 100°C during the copy cycle.
   c. Open thermistor
   d. Open thermal fuse
   e. Open thermal breaker contacts (※)
   (※) When the thermal breaker contacts are open, they have to be reset using the reset button on the thermal breaker. It does not reset automatically.

2. Major component removal

A. Upper heat roller

① Open the upper frame.

② Remove the E-ring and disconnect the two connectors. Remove the boss on the front frame, then the one on the rear frame side (arrow marks a thru d).

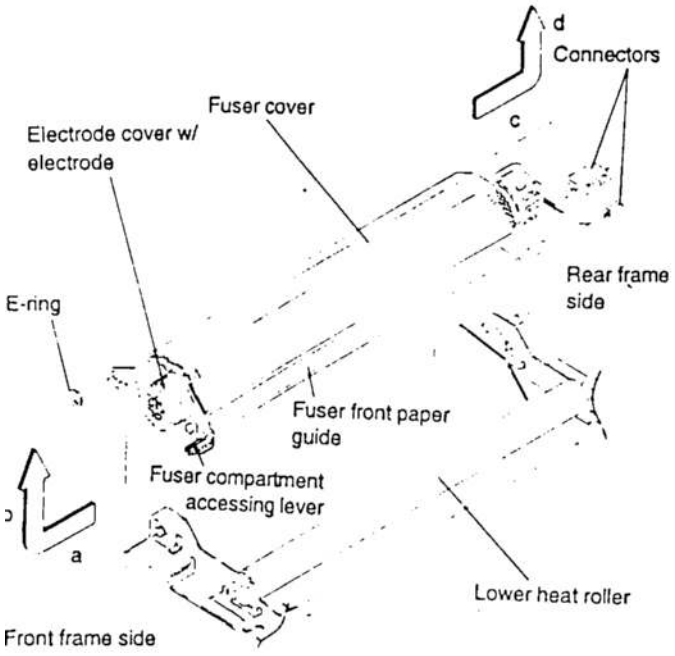

③ Remove the fuser cover, electrode covers F and R, and the heater lamp.

④ To remove the separator pawl from the upper heat roller, hook the protrusion of the separator pawl on the frame, arrow a and b.

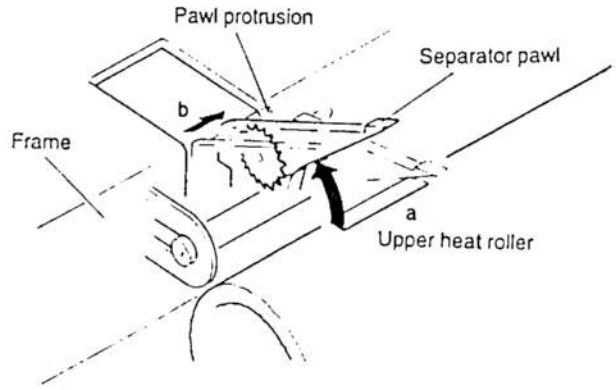

⑤ Remove the roller retainer, gear, bushing, and the upper heat roller.

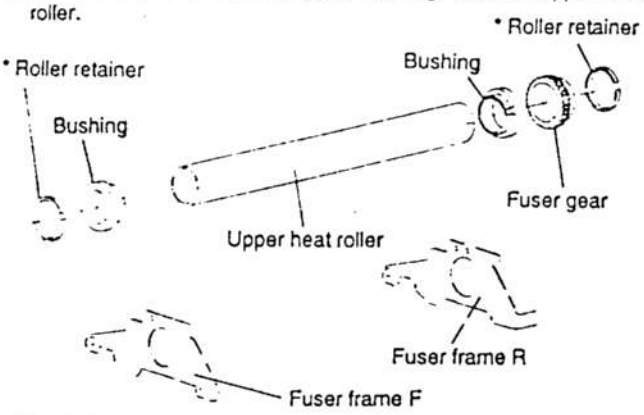

※ Use C-ring pliers to remove the roller retainer.

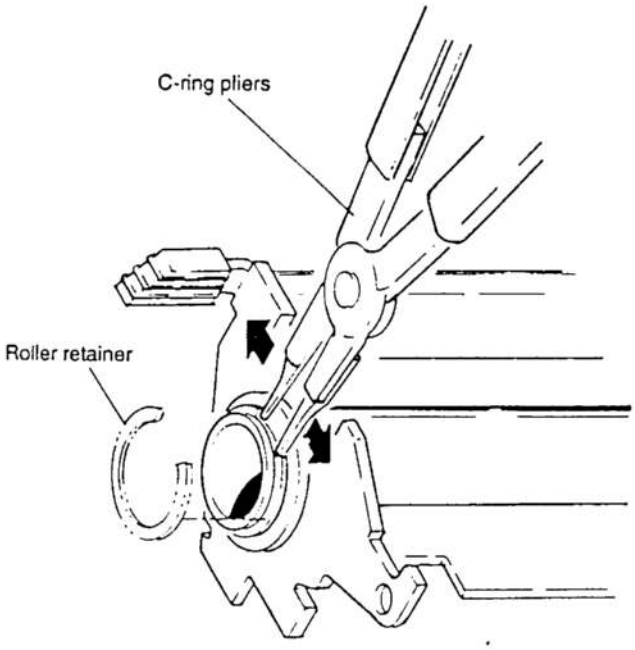

B. Lower heat roller

① Open the upper frame and lift up the fuser compartment access lever. Lift the lower heat roller up to remove it.

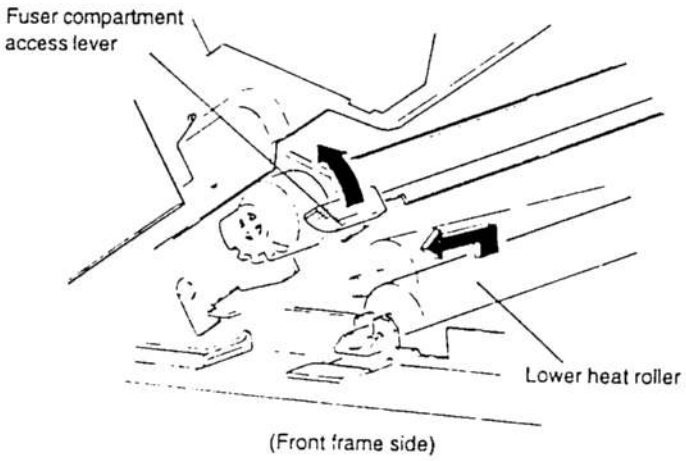

C. Heater lamp

① Remove the heater lamp from the electrode, then carefully slide out the lamp.

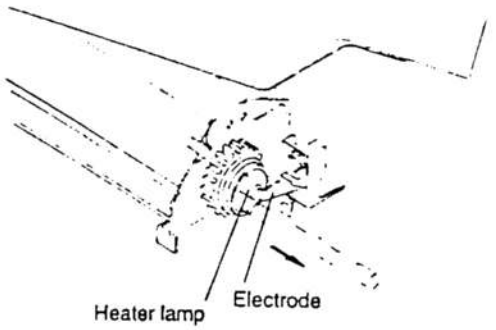

(Rear frame side)

D. Separator pawl

① Remove the upper fuser unit.

② Remove the fuser cover.

③ Remove the tension spring. Rotate the pawl in direction A and match the machined surface of the separator pawl shaft to the guide, then remove it from the notch.

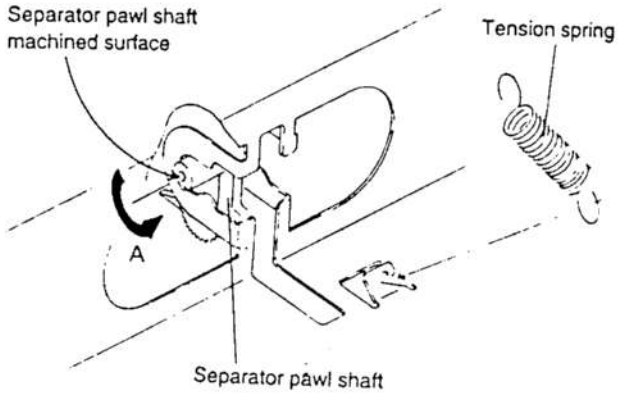

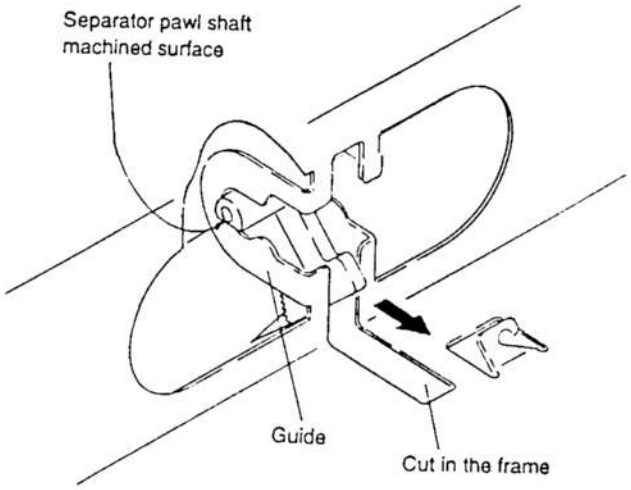

E. Thermal breaker, thermistor (thermal fuse) unit

① Remove the upper fuser unit, and the fuser cover.

② Remove the fuser paper guide B.

③ Remove the screws and HL interface wiring harness then remove the thermal breaker.

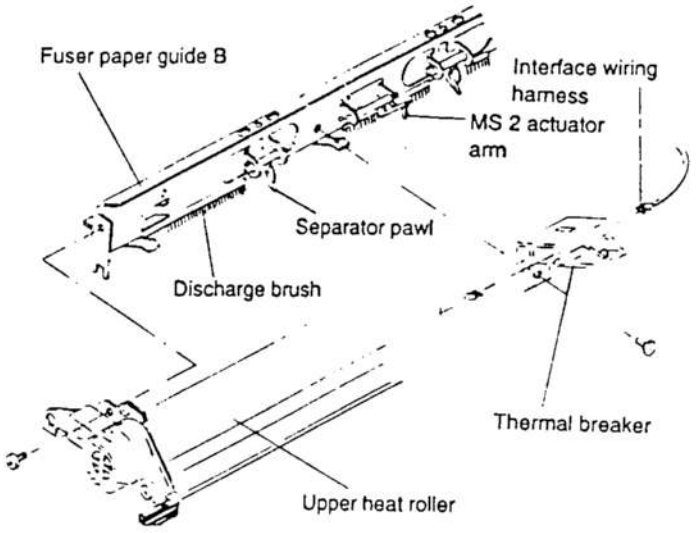

④ Remove the screw on the terminal board side and remove the thermistor/thermal fuse unit.

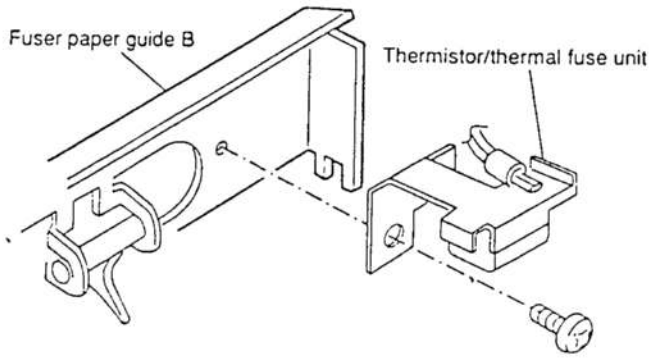

NOTE: Check items after the installation

- Thermal breaker
  Check to see that the gap between the thermal breaker and the heat roller is 1.25 ± 0.25mm when the pressure is released (*).

* Note
A pressure is applied to the roller when the following two conditions are satisfied. Be sure to release the pressure before check.
1. The upper frame is closed.
2. The paper exit tray is put down.

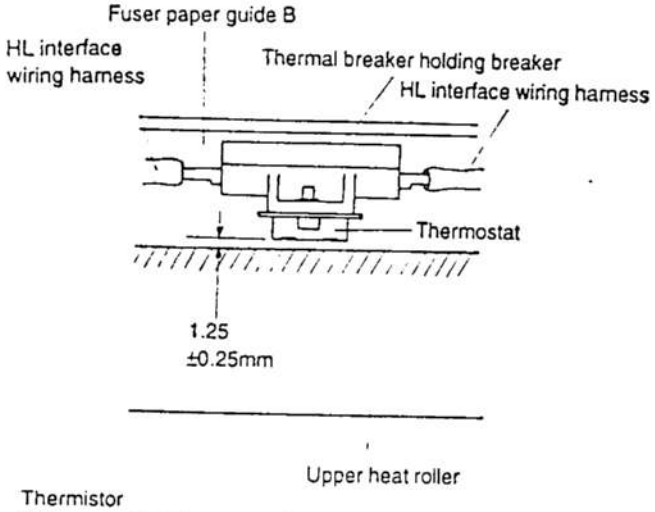

Thermistor
Make sure that the center of the thermistor is in contact with the heat roller.

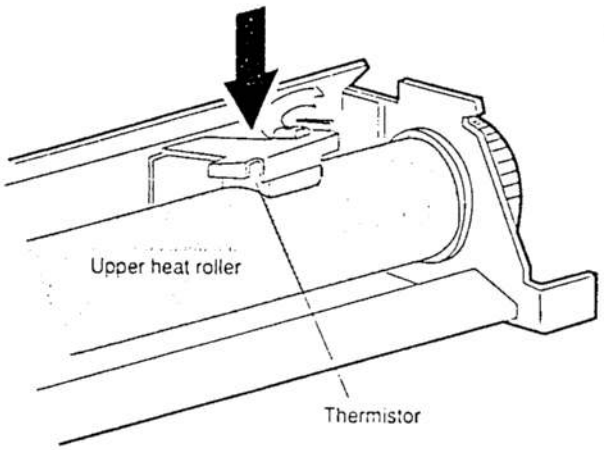

1. Cabinet removal

A. Cabinet

(1) Remove front cabinet ①.
(2) Remove the two screws which are fixing rear cabinet ②. Disengage pawl Ⓐ and the projection in the right cabinet. Disengage three pawls Ⓑ, and remove rear cabinet ② from the body.
(3) Remove the two screws of right cabinet ⑨ and the two screws of left cabinet ④, and remove the right and the left cabinets from the body.
(4) Remove the three screws which are fixing operation cabinet ⑤, disengage pawls Ⓒ in the both sides, and remove operation cabinet ⑤.
(5) Remove two connectors of the operation panel.

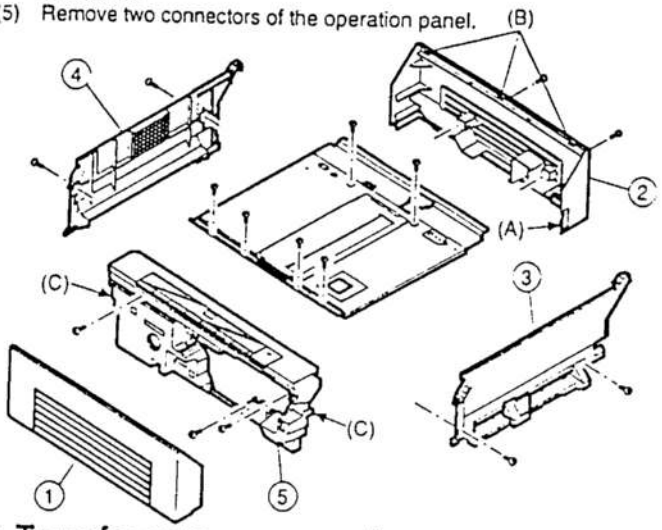

2. Transfer corona removal

(1) Remove the upper frame unit. (Refer to [10]-3. Power unit removal.)
(2) Remove the three screws.
(3) Push pawl Ⓐ with a screwdriver (–) and lift the unit.
(4) Push pawl Ⓑ with a screwdriver (–) and lift the unit.

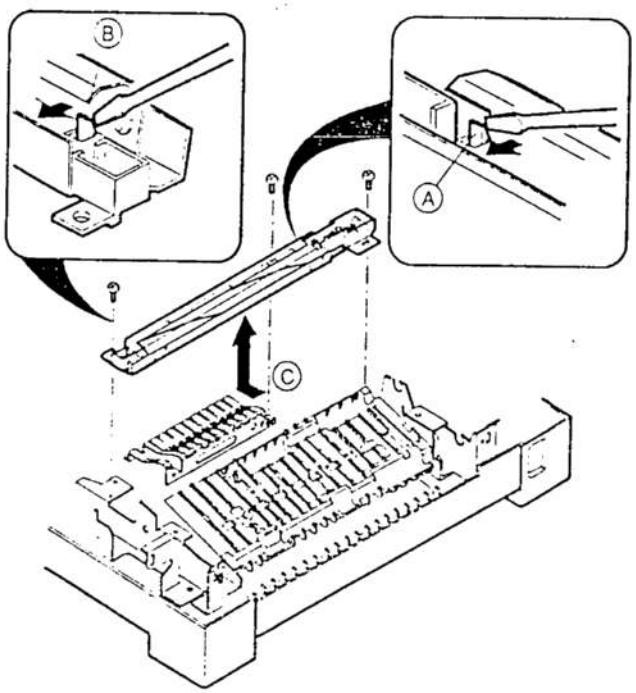

(5) Slide the transfer corona toward paper exit side (arrow Ⓒ) and remove it.

* Be careful not to touch and damage the corona wire.

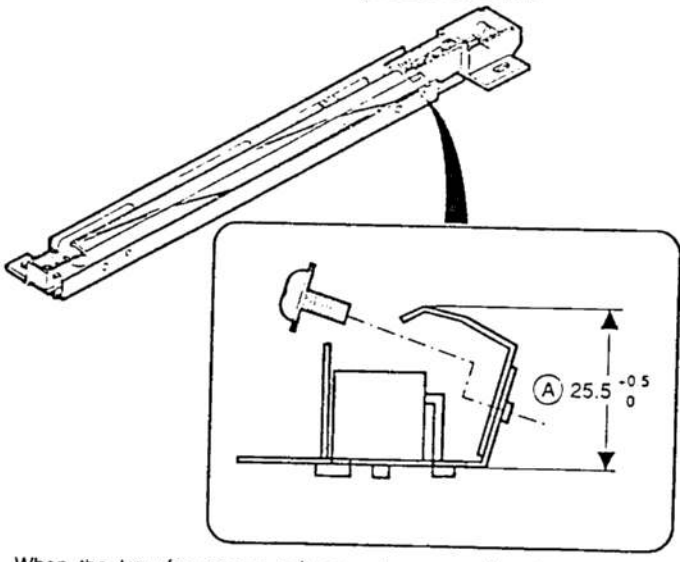

When the transfer corona unit screw is removed and the unit is disassembled or parts are replaced, adjust dimension Ⓐ to be 25.5 - 26.0mm.

3. Power unit removal

(1) Open the front cabinet.
(2) Slide the original table to the paper exit side, push the upper frame release button, and lift upper frame unit ②.
(3) Remove the rear cabinet. (Refer to [10]-1. Cabinet removal.)
(4) Disconnect two connectors ③ from upper frame unit ②. (Refer to Fig. 3)
(5) Remove four screws in torsion bar sections. (Two screws ⑤ in both sides.)
(6) Separate upper frame unit ② from lower frame unit ⑥.

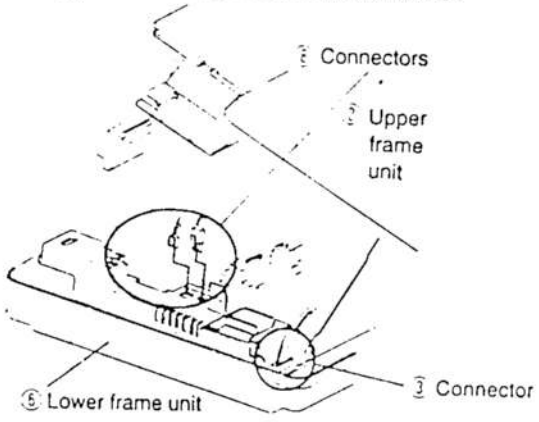

(Fig. 1)

The upper frame unit can be placed on a floor under the above state because the lower portions of the left cabinet and the torsion bars provide enough space to protect the drum.

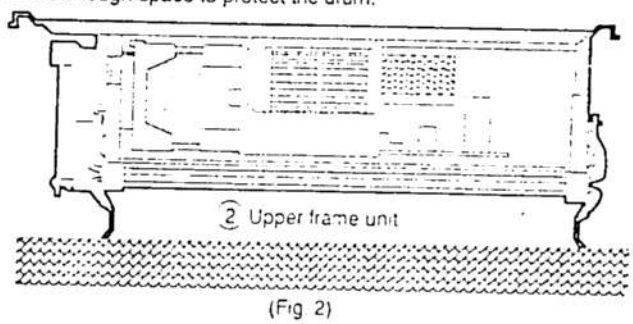

(Fig. 2)

') Remove transfer corona unit ⑦. (Refer to [10]-2, Transfer corona removal.)
') Remove three connectors ⑧ from the paper feed solenoid and the fusing section. (Refer to Fig. 1)
') Remove the four gold-color tapping screws which are fixing the power unit to lower cabinet ⑨.
Remove tap tight screws which are fixing the power unit to the frame chassis, and remove the power unit.
(There is no need to remove the paper feed solenoid.)

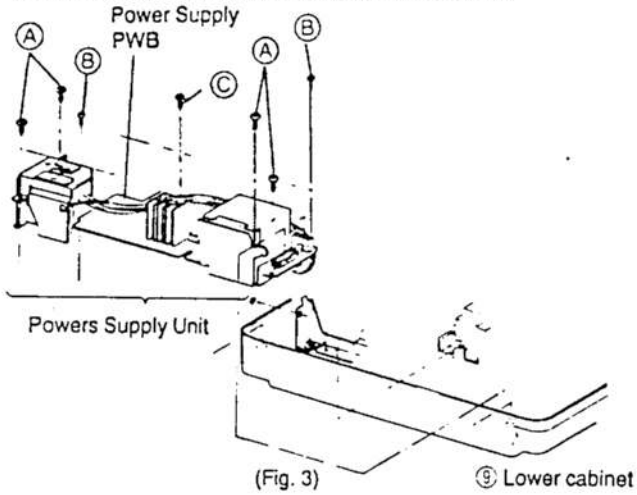

(Fig. 3)

. Drum counter

opy number can be checked on the mechanical counter under the um drive gear.

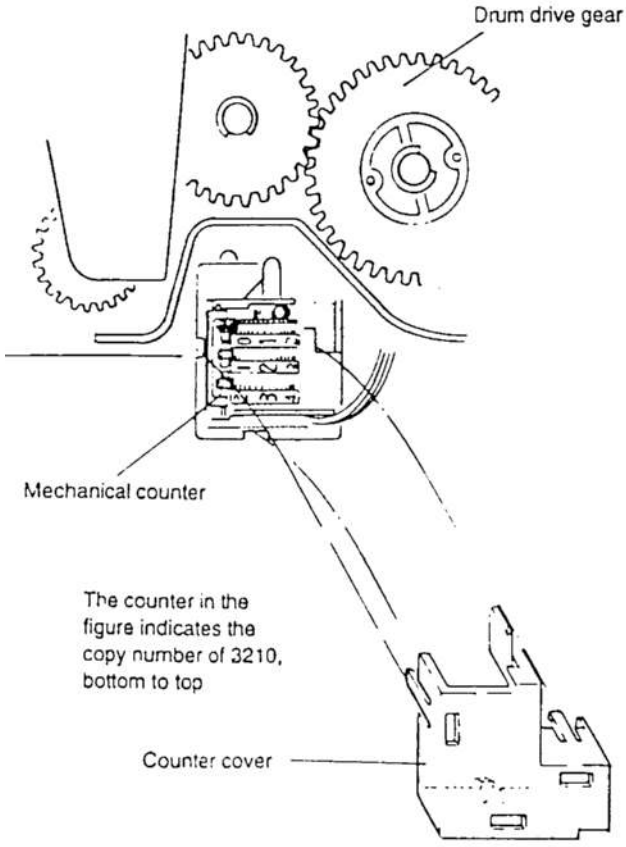

5. Main switch mechanism and precautions

The main power supply can be turned on and off with the POWER switch lever or opening and closing the front cover.

- When the front door is closed, the doorswitch shaft is pushed by the protrusion on the front door which actuates the actuator.

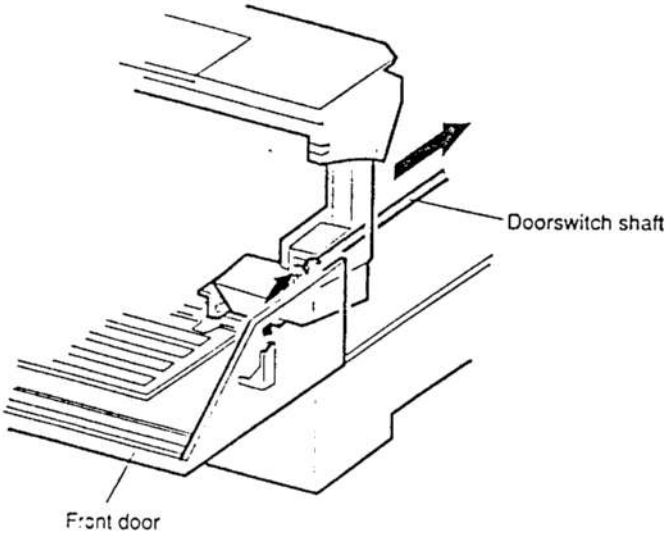

- When the main switch lever is pushed up, the raising part of the cam rides over the actuator. When the front door is closed, the actuator slides towards the rear frame side.

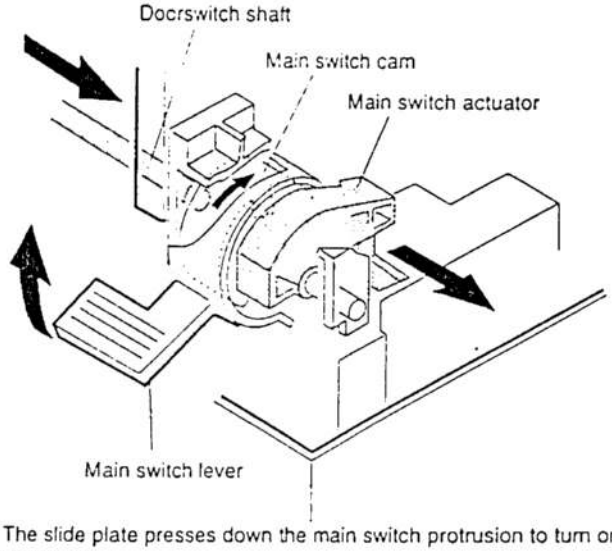

- The slide plate presses down the main switch protrusion to turn on the power.

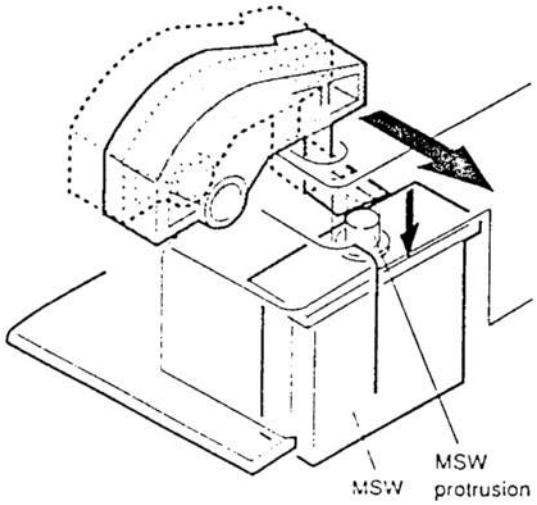

6. Connectors and cables

The connectors and the cables are connected as shown below.

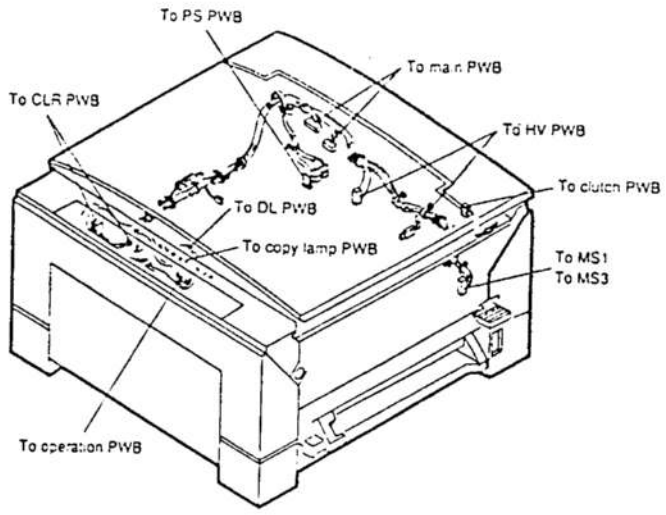

7. Drum cartridge

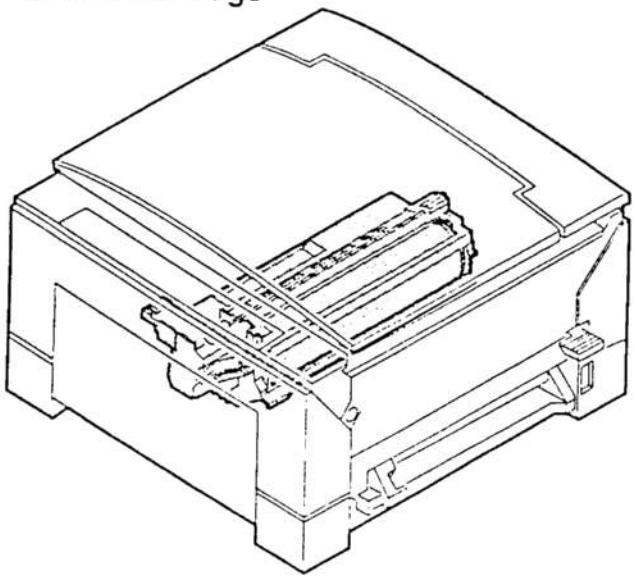

The drum cartridge consists of an OPC drum, main corona, remover tape, cleaning blade, auger rollor and SELFOC lens cleaner. A small tab on the rear frame side of the cartridge is used for resetting the mechanical drum counter. This is a one-time only action and will not reset the counter again though the drum cartridge is removed and reinserted.

Moving the SELFOC lens cleaner lever out and in simultaneously cleans the lens and the main corona wire.

Inside the drum cartridge the cleaner blade is always in contact with the drum. During the copy process the residual image is removed from the drum surface by the blade. The auger roller transports the used toner to the toner collection container located on the front of the TD cartridge.

The remover tape located on the rear frame side of the drum cartridge mechanically strips the paper from the drum and guides it to the separation roller. Due to the copy paper not contacting the drum in this area there is a void of less than 9 mm along the rear frame side of the copy.

NOTE: The drum cartridge is set to factory specifications and is not adjustable in the field. If a problem is suspected replace the entire cartridge.

8. TD cartridge

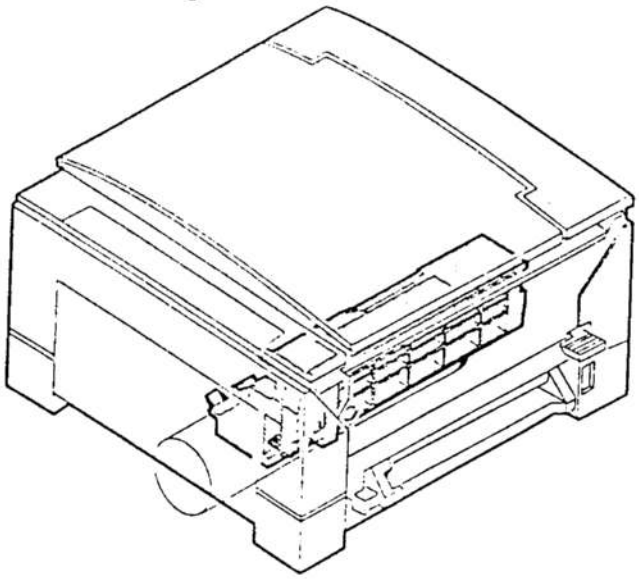

General Description:

The TD cartridge applies toner to the electrostatically charged area of the drum, and develops the latent image on the drum. The Magnetic roller is a rotating aluminum sleeve. At the center of the MG Roller are stationary magnets. These magnets hold and direct the developer. The developer is composed of very fine magnetic filings and is used to transport the Toner from the developer to the drum.

As the MG Roller rotates, it carries Developer and Toner. The Magnetic Field around the MG Roller forms the Developer into a "Magnetic Brush". The height of the Magnetic Brush is determined by the Doctor Blade. The angle of the brush is determined by the position of the magnets in the MG Roller.

The Auger Roller keeps the mixture of Toner and Developer agitated and uniformly mixed. Since the Developer is used as a carrier of Toner, the Developer is not used up, and the volume of Developer remains constant. As the Toner is pulled out of the Developer, the ratio of toner to developer decreases. The Toner Sensor measures this ratio, ad relays this information to the Main PWB which will energize the Toner Motor (TM) when additional Toner is required. The Toner Motor is mounted on the rear frame of the copier.

The Toner Sensor and Bias connect to the Main PWB by a four pin connector located on the rear side of the Unit.

The Bias voltage is used to prevent background by applying a counter balancing charge to the Developer.

NOTE: The TD cartridge is set to factory specifications and is not adjustable in the field. If a problem is suspected replace the entire cartridge.

[1] ELECTRICAL SECTION

Block diagram

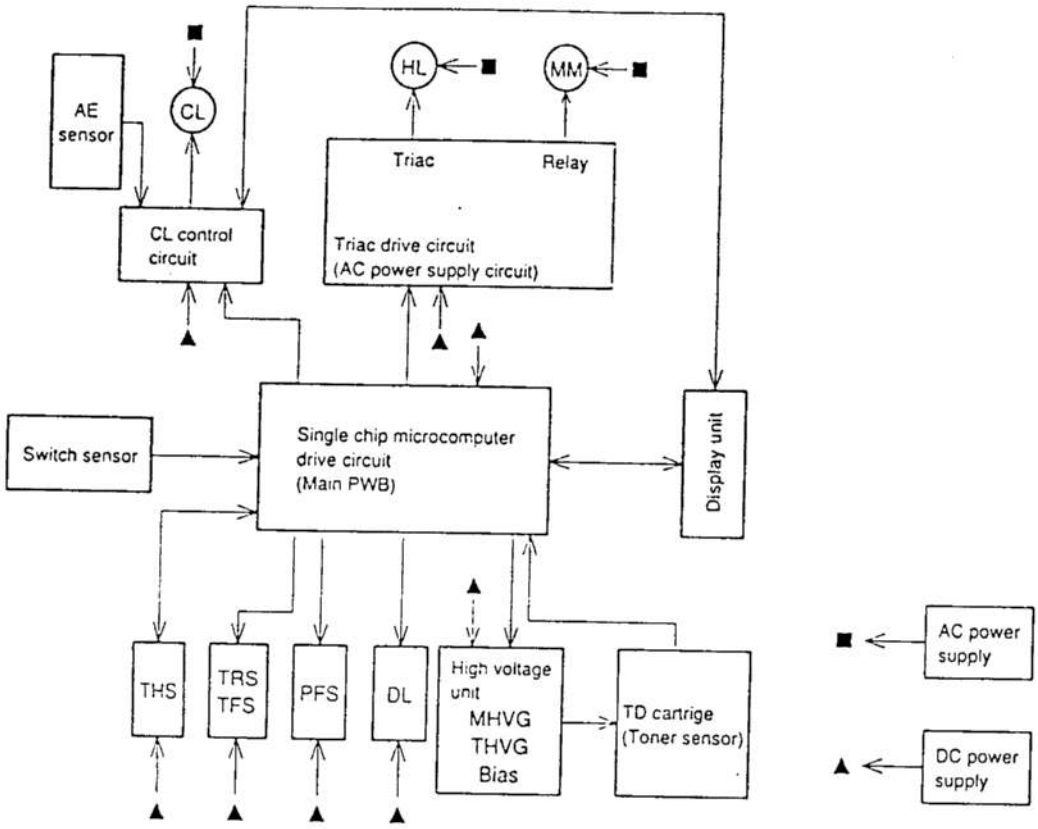

Main PWB block diagram

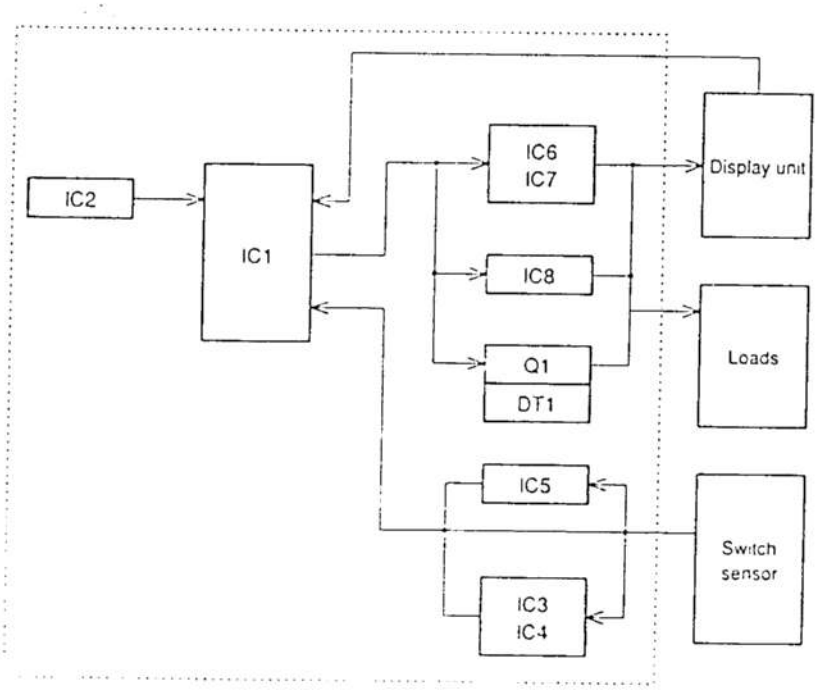

Pin No.	In/Out	Signal name	Description
1	—	—	Pulldown
2	Out	MDL0	Display segment select signal
3	Out	MDL1	
4	Out	MDL2	
5	Out	EXD	Exposure level select signal (DARK)
6	In	WTL	Machine ready temperature detect signal (READY state)
7	In	WTLL	Power down temperature level detect signal (Power down state)
8	In	HT	Heater trouble detect signal L (0V): trouble
9	In	TCS	Toner replenishment needed with a high state of the lower toner signal (+5V) (Tonner supply solenoid)
10	OUT	S0	Switch sensing strobe signal
11	OUT	S1	Switch sensing strobe signal
12	OUT	TFC	Table feed clutch control signal, active high (+5V), to energize the solenoid.
13	OUT	EXN	Exposure level select signal (AUTO)
14	OUT	MHV	Main corona control signal, active high (+5V), to turn on the main corona output.
15	OUT	THV	Transfer corona control signal, active high (+5V), to turn on the copy lamp.
16	OUT	CLR	Copy lamp control signal, active high (+5V), to turn on the copy lamp.
17	OUT	HL	Heater lamp control signal, active high (+5V), to turn on the copy lamp.
18	In	RESET	Reset signal at H (+5V).
19	—	—	Clock pulse
20	—	VD	+5V
21	—	—	Clock pulse
22	—	—	GND (0V)
23	—	—	Pulldown
24	In	KI	Operation panel key input signal, active high (+5V), to turn on the key signal.
25	In	I0	Switch input signal
26	In	I1	
27	Out	MMR	Main motor relay control signal, active high (+5V), to turn on the relay.
28	Out	THS	Toner supply solenoid control signal, active high (+5V), to turn on the relay.
29	Out	DL	Discharge lamp control signal
30	Out	PFS	Paper feed solenoid control signal, active high (+5V), to energize the solenoid.
31	Out	E	Display segment signal
32	Out	F	
33	Out	G	
34	Out	TRC	Table return clutch control signal. Electromagnetic clutch ON at HIGH (+5V)
35	Out	A	Display segment signal
36	Out	B	
37	Out	C	
38	Out	D	
39	—	—	GND (0V)
40	—	—	GND (0V)

[12] Circuit diagram and Time chart

AC POWER SUPPLY CIRCUIT (100V system) 38
AC POWER SUPPLY CIRCUIT (200V system) 39
DC POWER SUPPLY CIRCUIT (100V system) 40
DC POWER SUPPLY CIRCUIT (200V system) 41
POWER SUPPLY P.W.B. 42
MAIN CIRCUIT 43
MAIN P.W.B. 44
CLR CIRCUIT 45
CLR P.W.B. 45
OPERATION CIRCUIT 46
OPERATION P.W.B. 47
TIME CHART 1 PRELIMINARY OPERATION 48
TIME CHART 2 SINGLE COPY A4 (8½ x 11") SIZE, CASSETTE FEED 49
TIME CHART 3 A4 (8½ x 11") SIZE, MANUAL FEED COPY 50
TIME CHART 4 A4 (8½ x 11") SIZE, MULTI COPY 51

PWB location

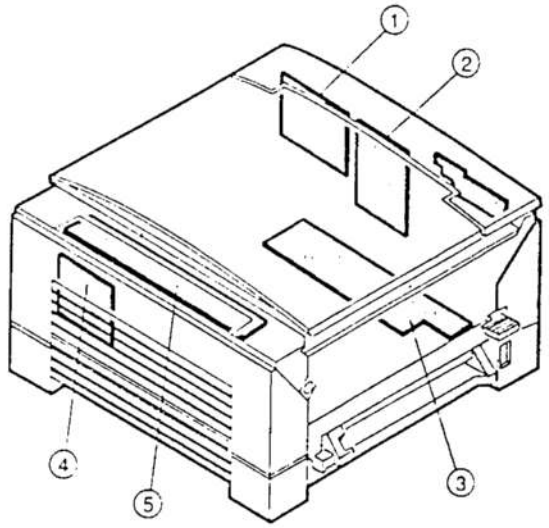

①	Main PWB
②	High voltage PWB
③	Power supply PWB
④	CLR PWB
⑤	Operation PWB

① Main PWB
   a. Control the timing of the copiers electrical circuits.

② High voltage PWB
   a. Supplies high voltage to the main and transfer coronas, ON and OFF timing is controlled by a signal from the main PWB.

③ Power supply PWB
   a. Supplies voltages for the motors, lamps, solenoids, transformers and PWB's.

④ Copy lamp regulator PWB
   a. Turns the copy lamp ON and OFF via signals from the main PWB.
   b. Automatically controls the copy lamp intensity via signals received from the photo sensor in the optical unit.

⑤ Operation PWB
   a. Key control and display signals via the main PWB.

AC POWER SUPPLY CIRCUIT (100V system)

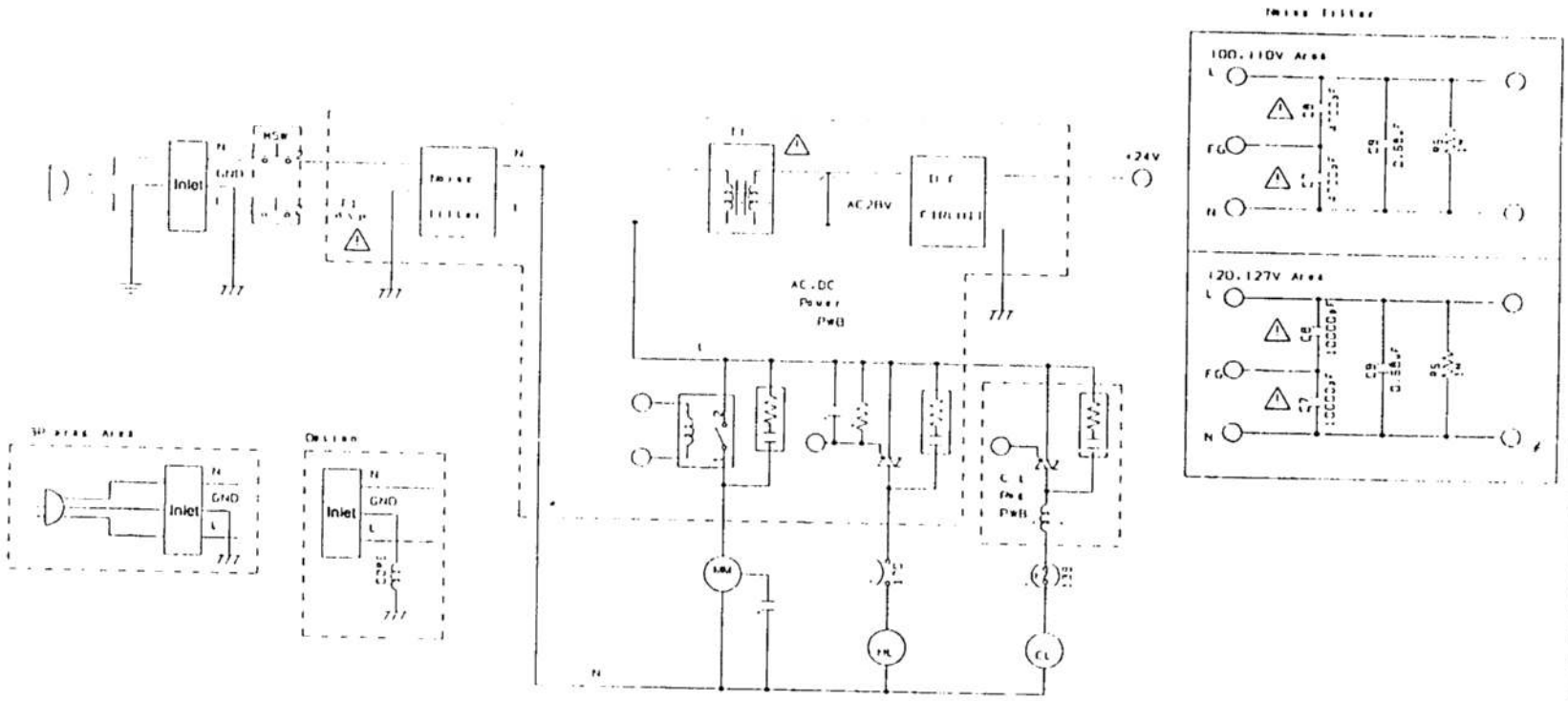

	II	III	CI
100V	20 A	950 W	200W 80 V
110V	20 A	950 W	
120V	15 A	950 W	
127V	15 A	950 W	

AC POWER SUPPLY CIRCUIT (200V system)

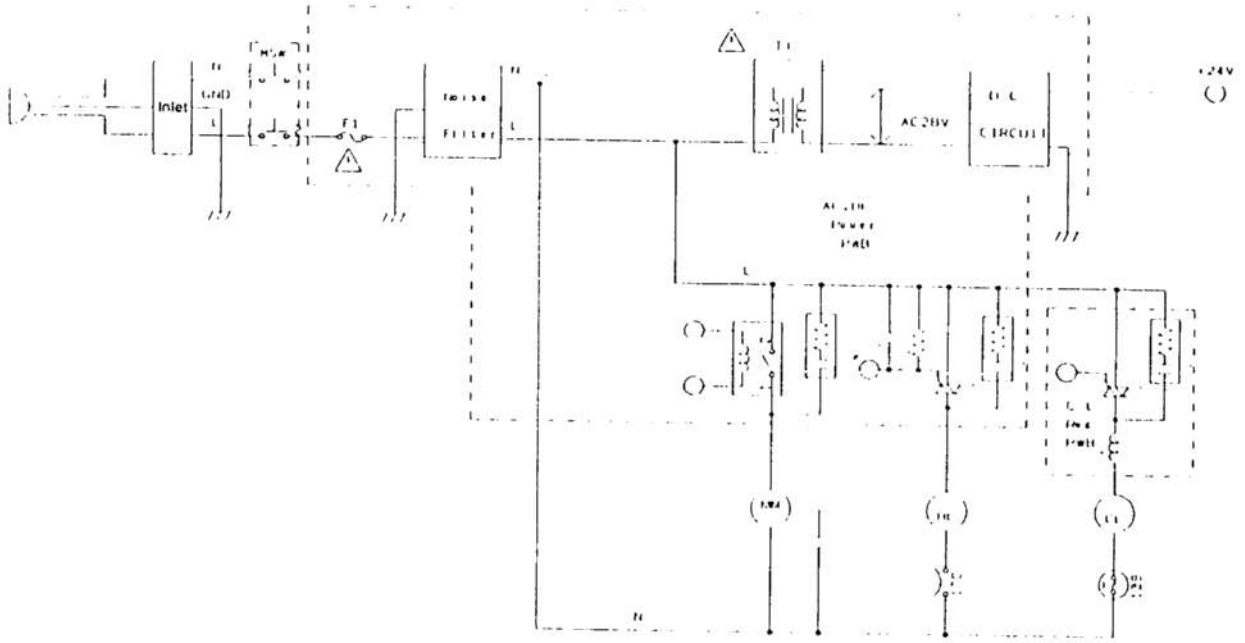

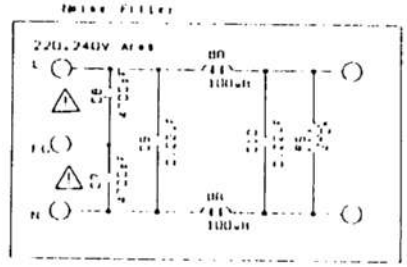

	F1	HL	FL
220V	10 A	950 W	215 W
240V	10 A	950 W	160 V

DC POWER SUPPLY CIRCUIT (100V system)

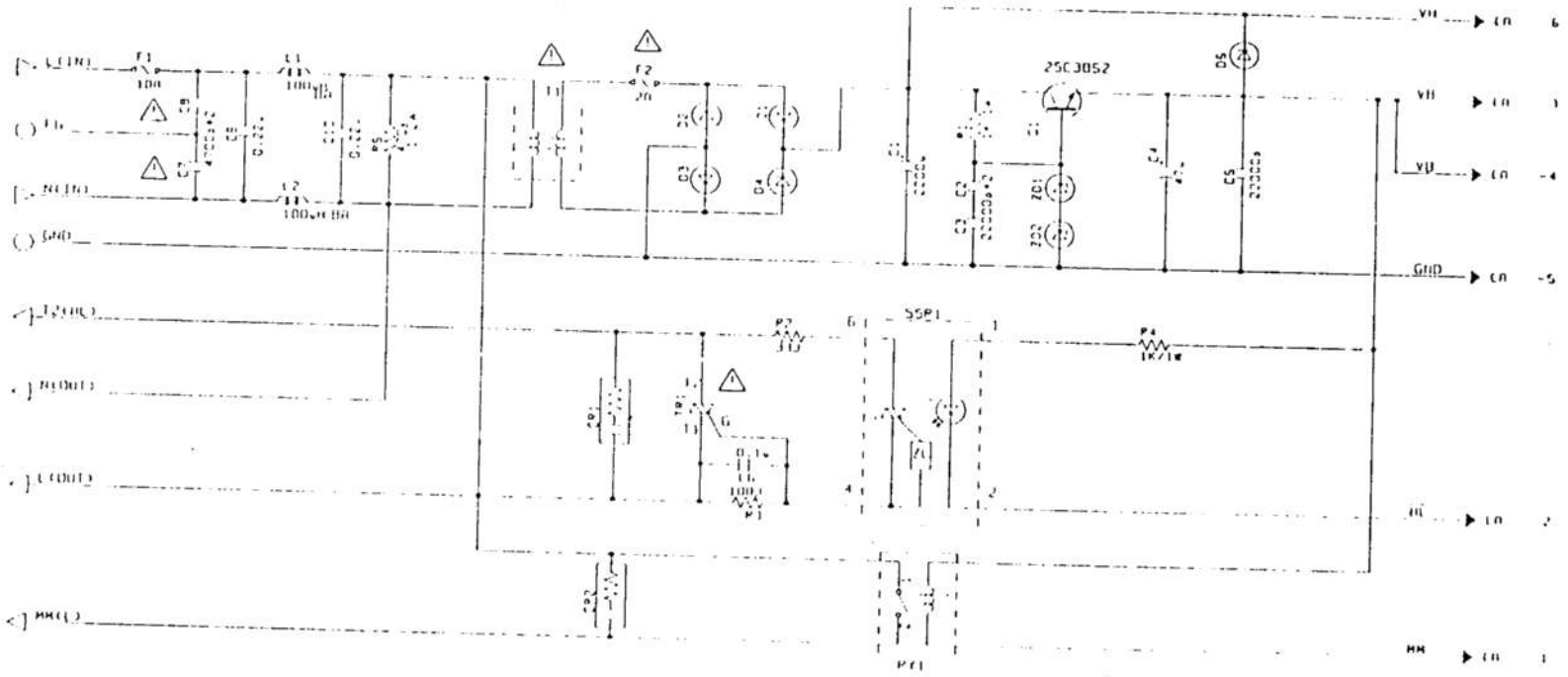

DC POWER SUPPLY CIRCUIT (200V system)

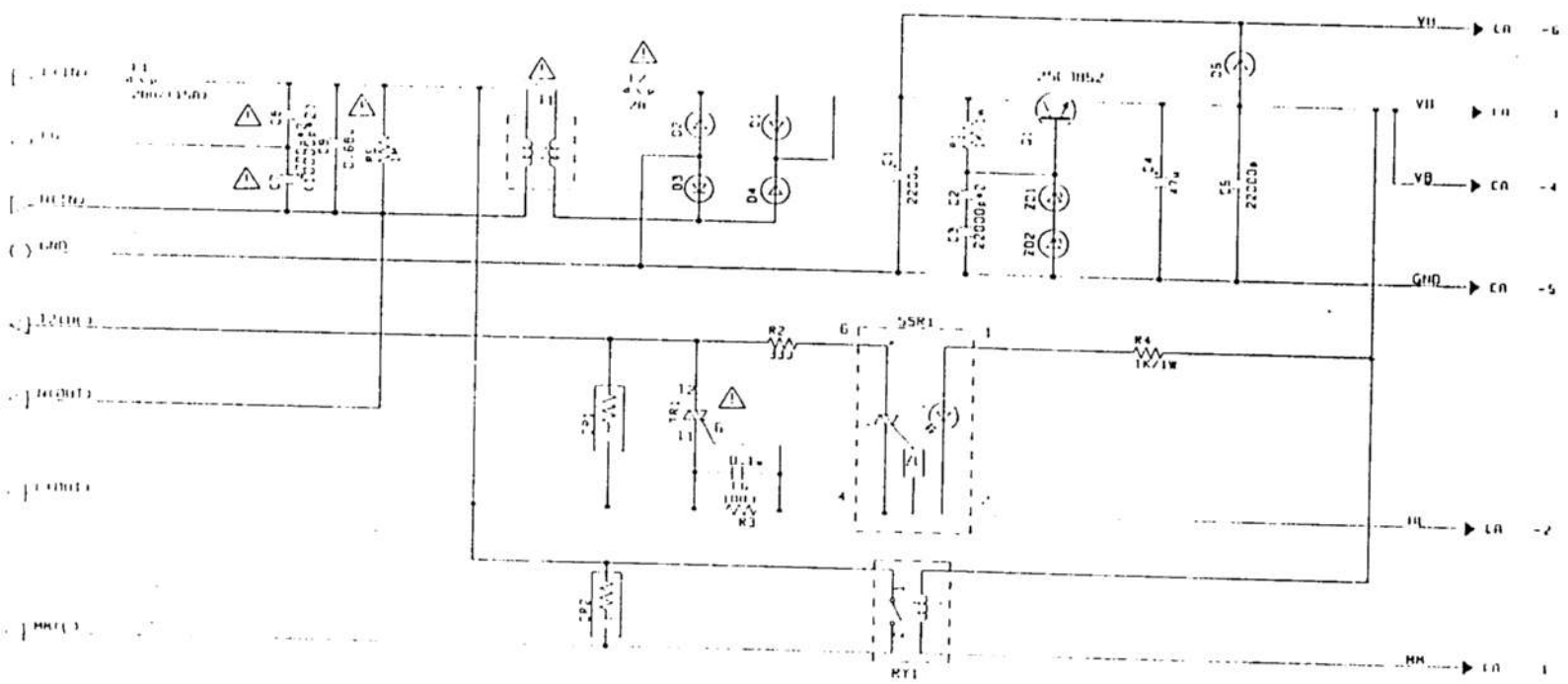

POWER SUPPLY P.W.B.

100V (100V system)

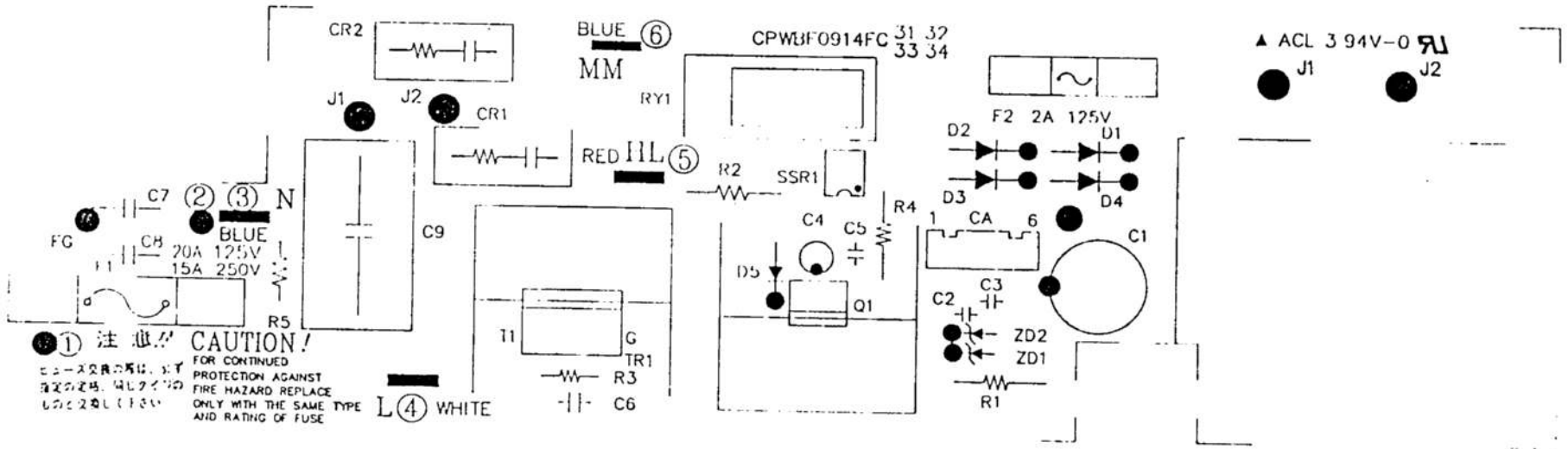

200V (200V system)

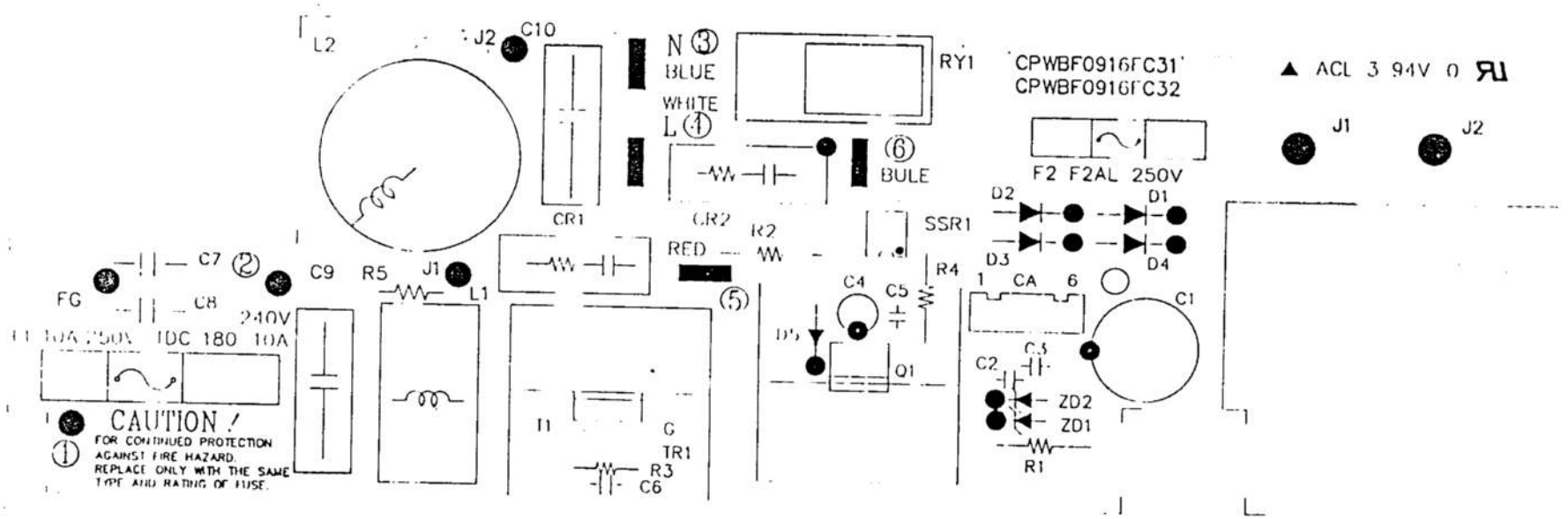

MAIN CIRCUIT

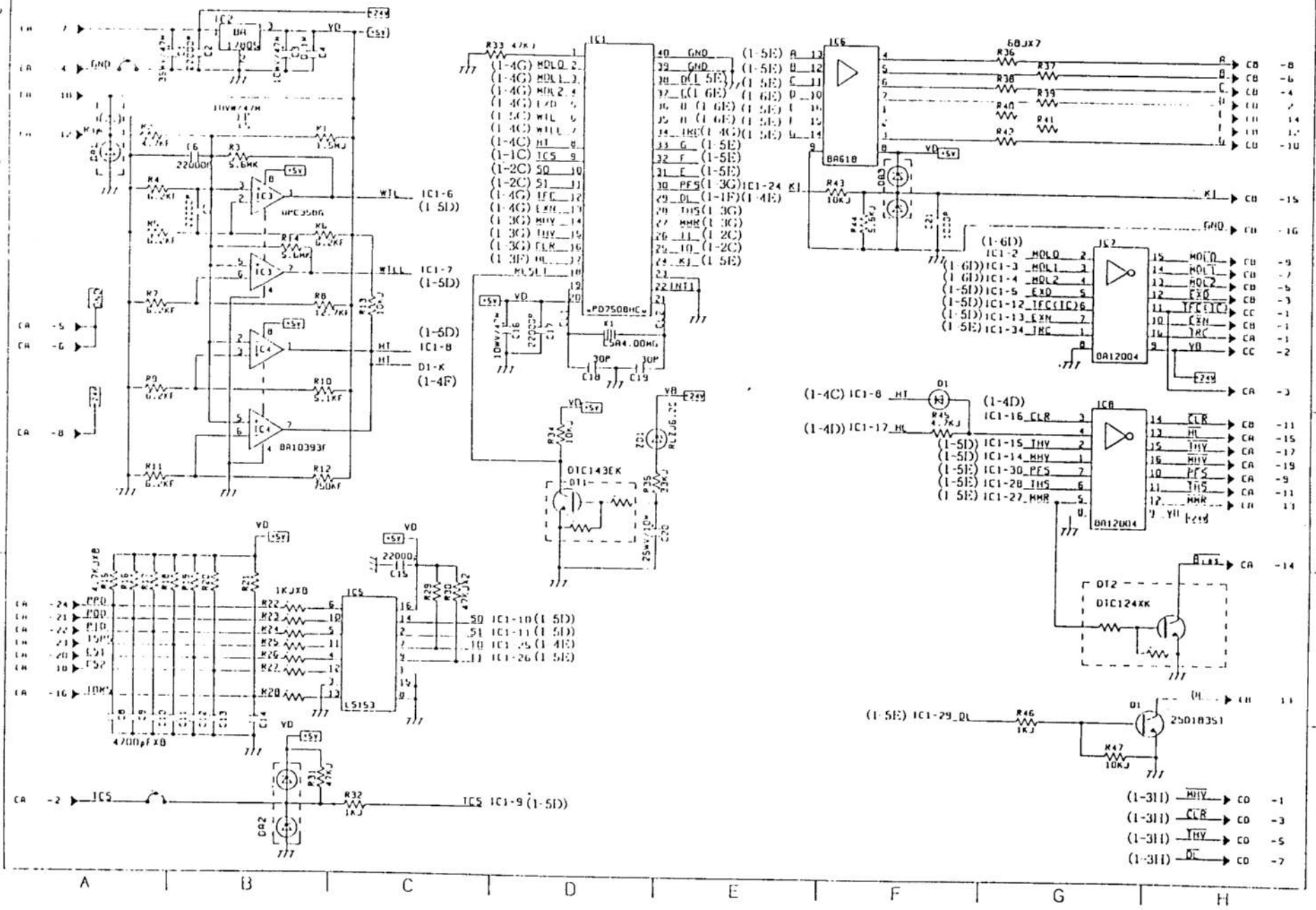

TOP VIEW

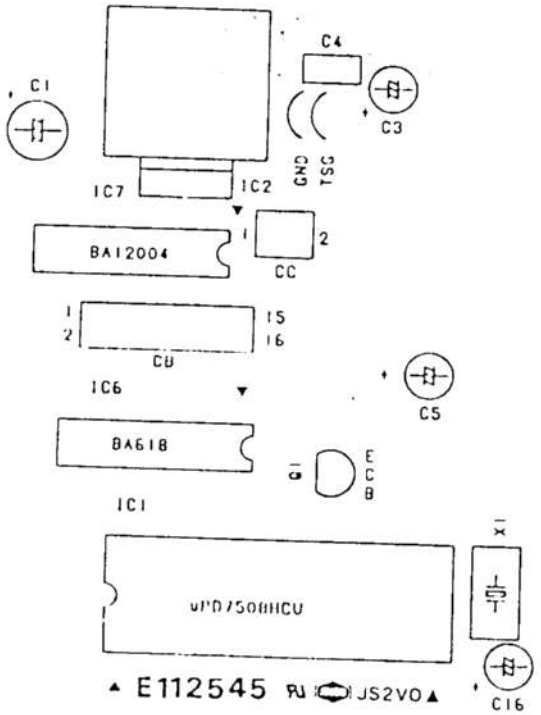

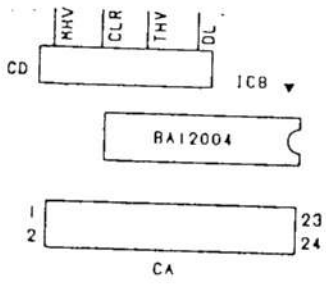

SHARP
FO913FC
MAIN PWB



BOTTOM VIEW

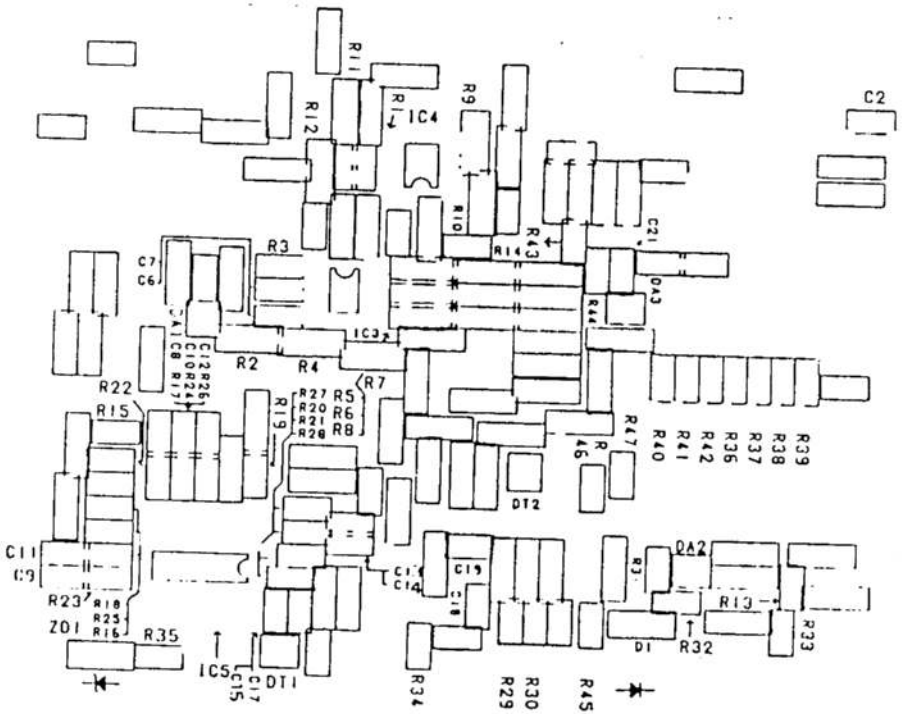

CLR CIRCUIT

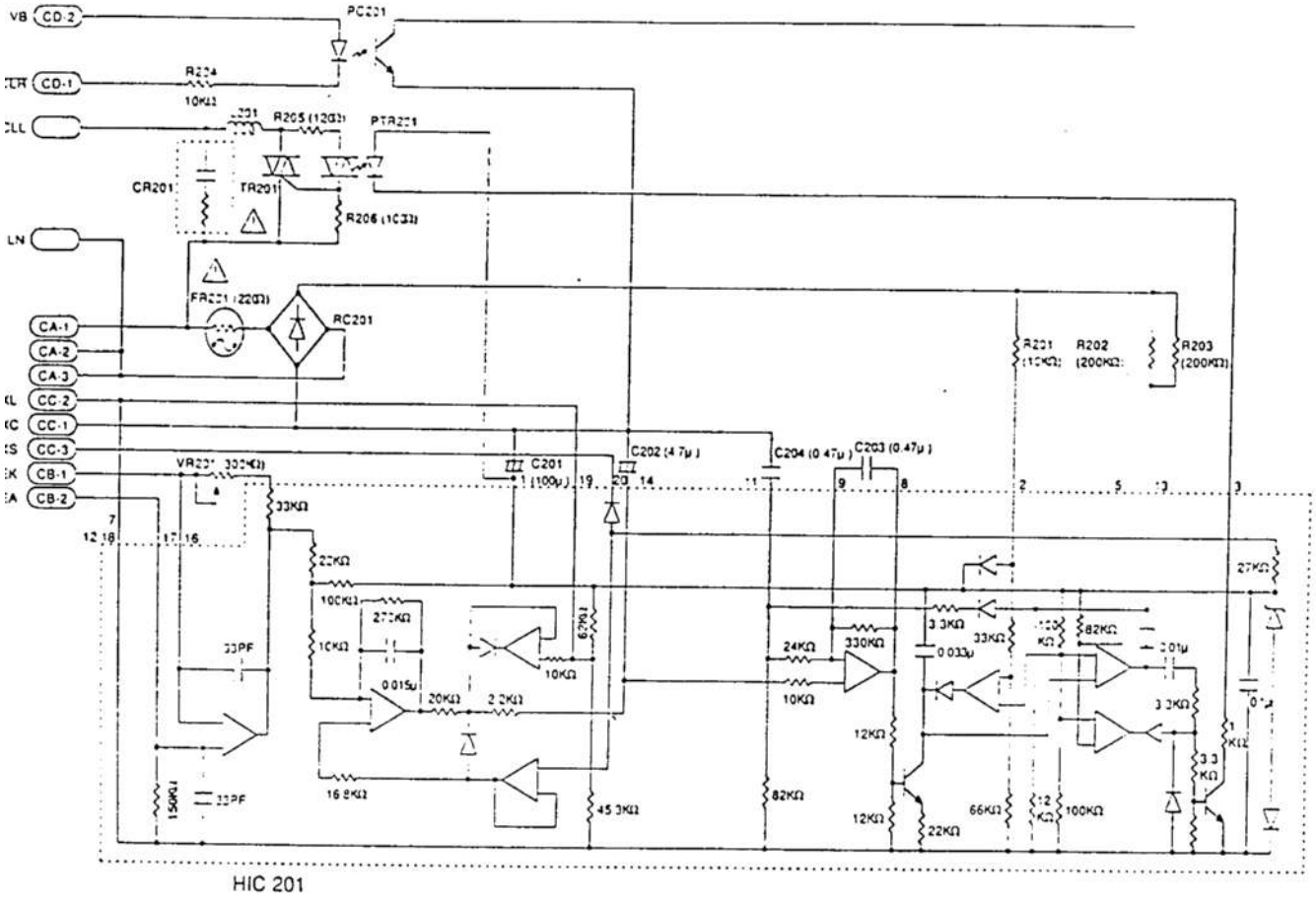

CLR HIC201 INTERNAL CIRCUIT

LR P.W.B.

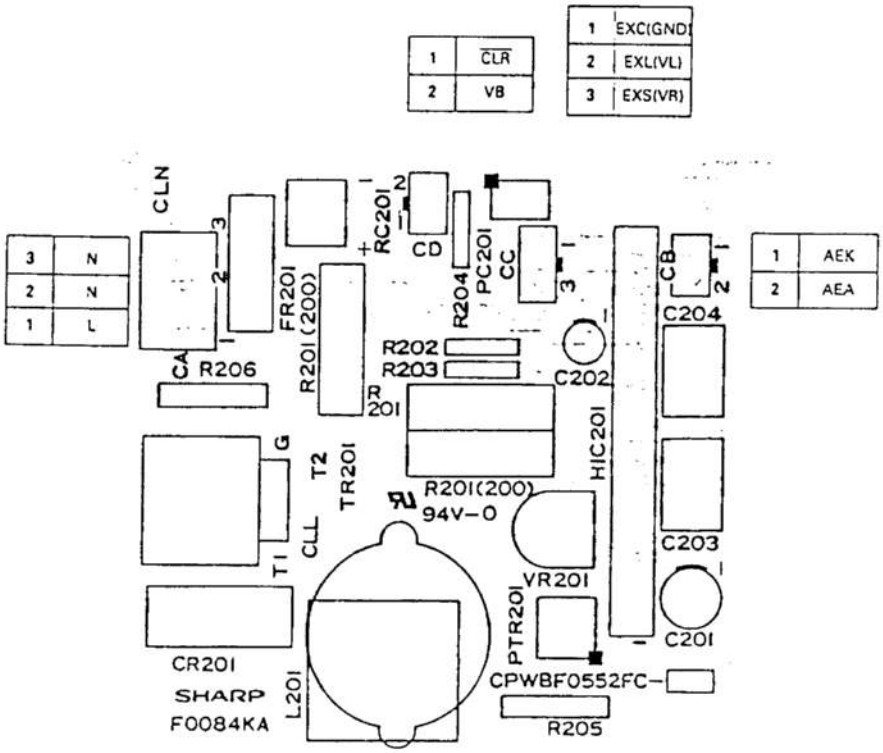

Parts		Standards
[illegible]	[illegible]	[illegible]
	[illegible]	[illegible]
[illegible]	[illegible]	[illegible]
	[illegible]	[illegible]
[illegible]	[illegible]	[illegible]
	[illegible]	[illegible]
[illegible]	[illegible]	[illegible]
	[illegible]	[illegible]
[illegible]	[illegible]	[illegible]
	[illegible]	[illegible]
[illegible]	[illegible]	[illegible]
	[illegible]	[illegible]
[illegible]	[illegible]	[illegible]
	[illegible]	[illegible]
[illegible]	[illegible]	[illegible]
	[illegible]	[illegible]
[illegible]	[illegible]	[illegible]
	[illegible]	[illegible]

OPERATION CIRCUIT

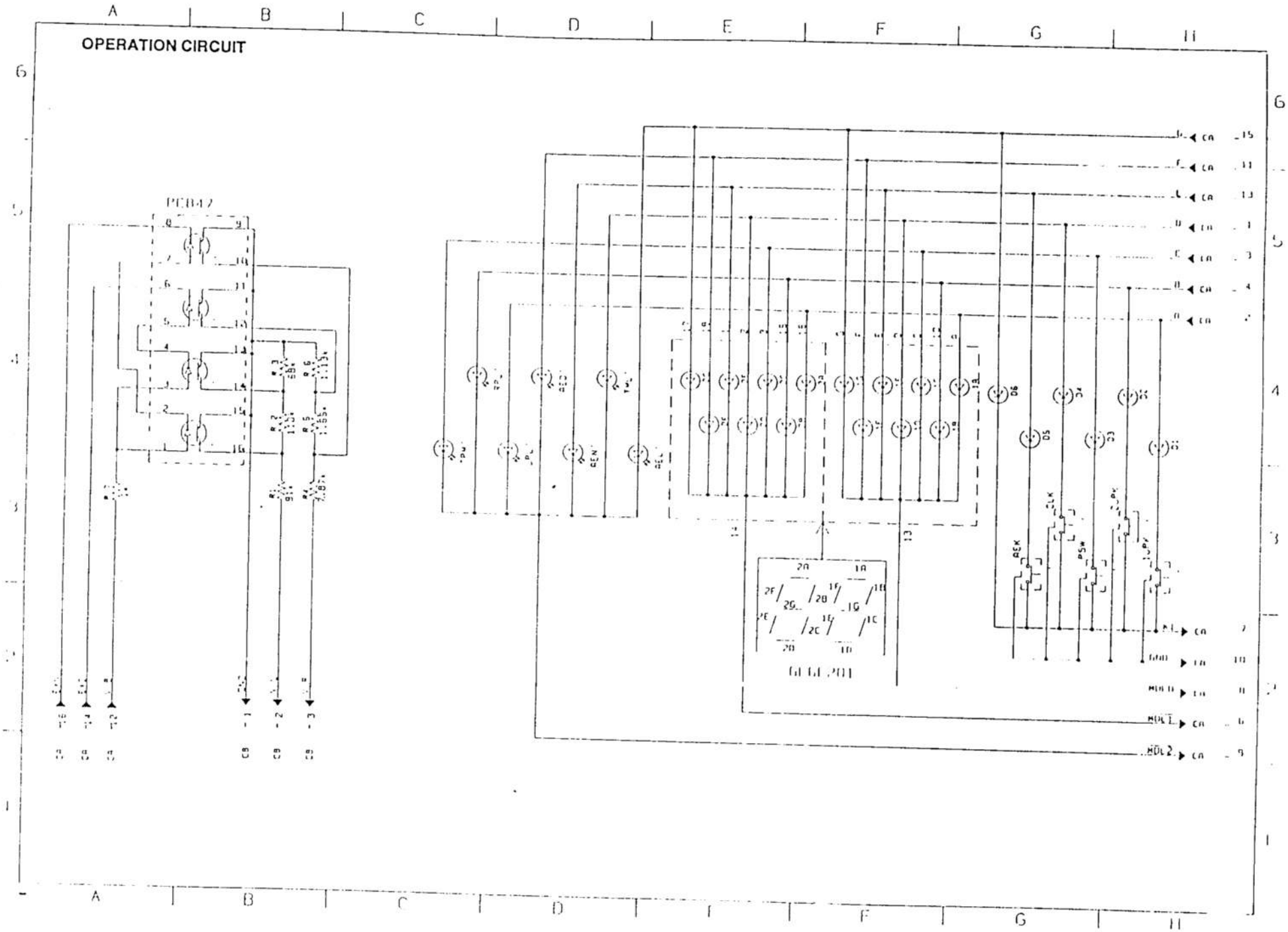

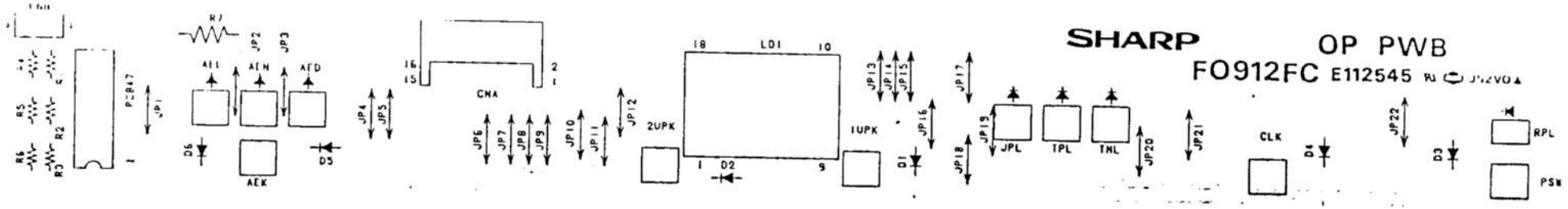
SHARP
OP PWB
FO912FC E112545
RJ
JP1
JP2
JP3
AEL
AEH
AED
AEK
D5
D3
JP4
JP5
JP6
JP7
JP8
JP9
JP10
JP11
JP12
CNA
2UPK
1UPK
LD1
18
10
1
9
D2
D1
JP13
JP14
JP15
JP16
JP17
JP18
JP19
JPL
TPL
THL
JP20
JP21
CLK
D4
JP22
D3
RPL
PSW

TIME CHART 1 PRELIMINARY OPERATION

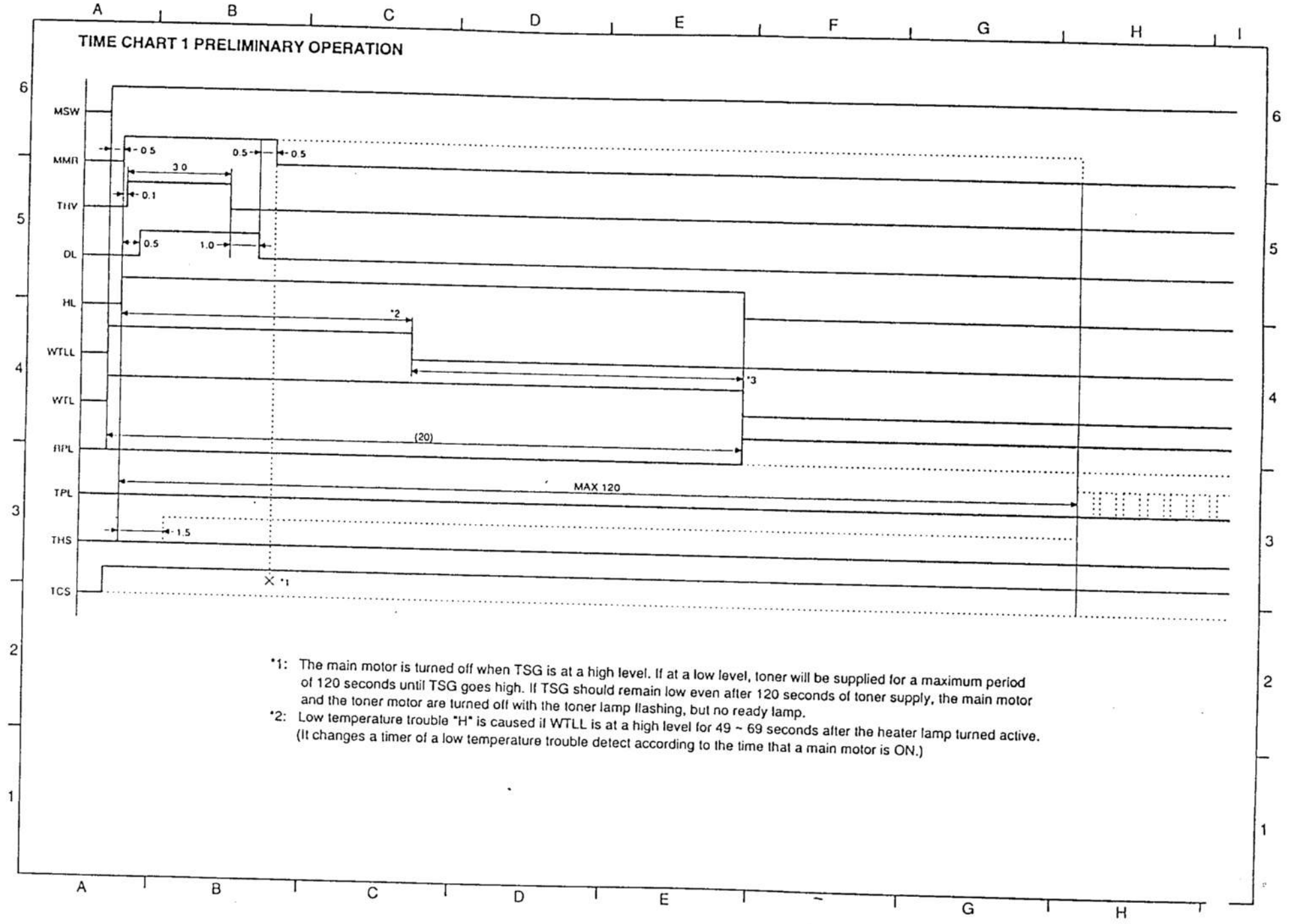

*1: The main motor is turned off when TSG is at a high level. If at a low level, toner will be supplied for a maximum period of 120 seconds until TSG goes high. If TSG should remain low even after 120 seconds of toner supply, the main motor and the toner motor are turned off with the toner lamp flashing, but no ready lamp.

*2: Low temperature trouble "H" is caused if WTLL is at a high level for 49 ~ 69 seconds after the heater lamp turned active. (It changes a timer of a low temperature trouble detect according to the time that a main motor is ON.)

TIME CHART 2 SINGLE COPY A4 (8½ x 11") SIZE, CASSETTE FEED

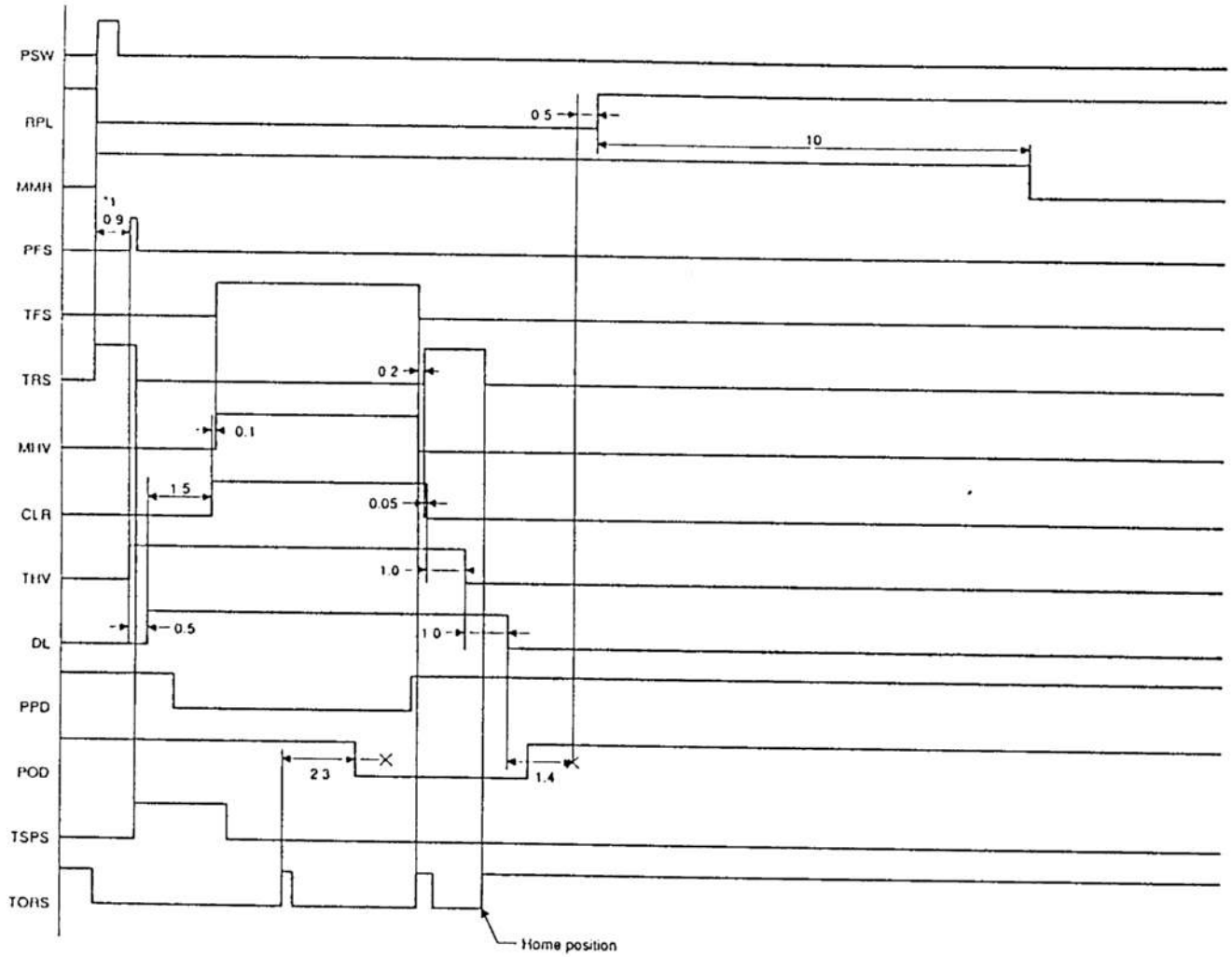

*1: When a high state of WTLL is detected in the auto power save mode (ready lamp flashing), the paper feed solenoid is turned on in 7.6 seconds after the main motor turned on.

TIME CHART 3 A4 (8½ x 11") SIZE, MANUAL FEED COPY

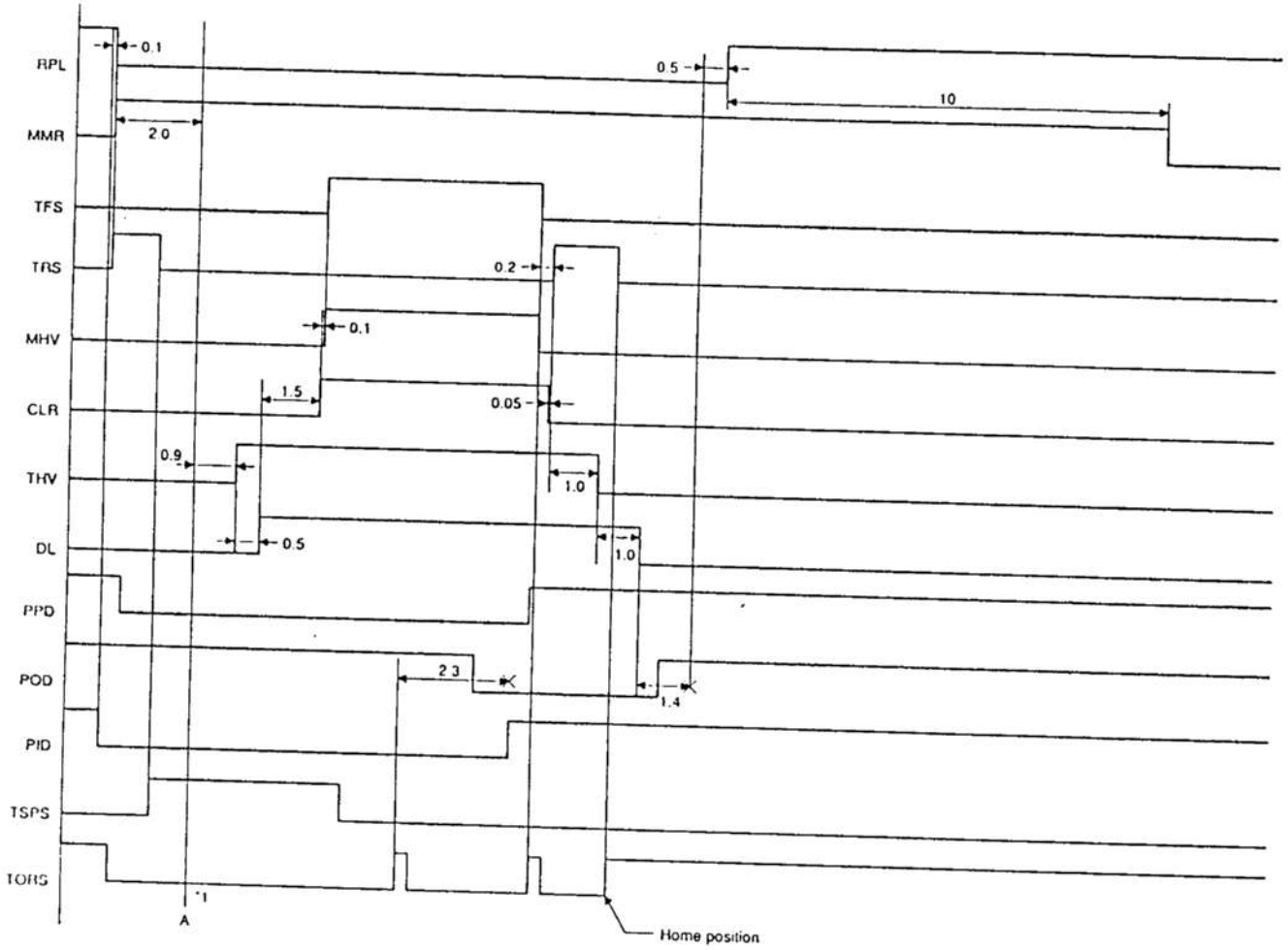

*1: If the PPD should not actuate at the point A and that if it is still off after a lapse of one second, a paper misfeed is established. If turned on, the control proceeds to the procedure after the point A with a lapse of one second.

TIME CHART 4 A4 (8½ x 11") SIZE, MULTI COPY

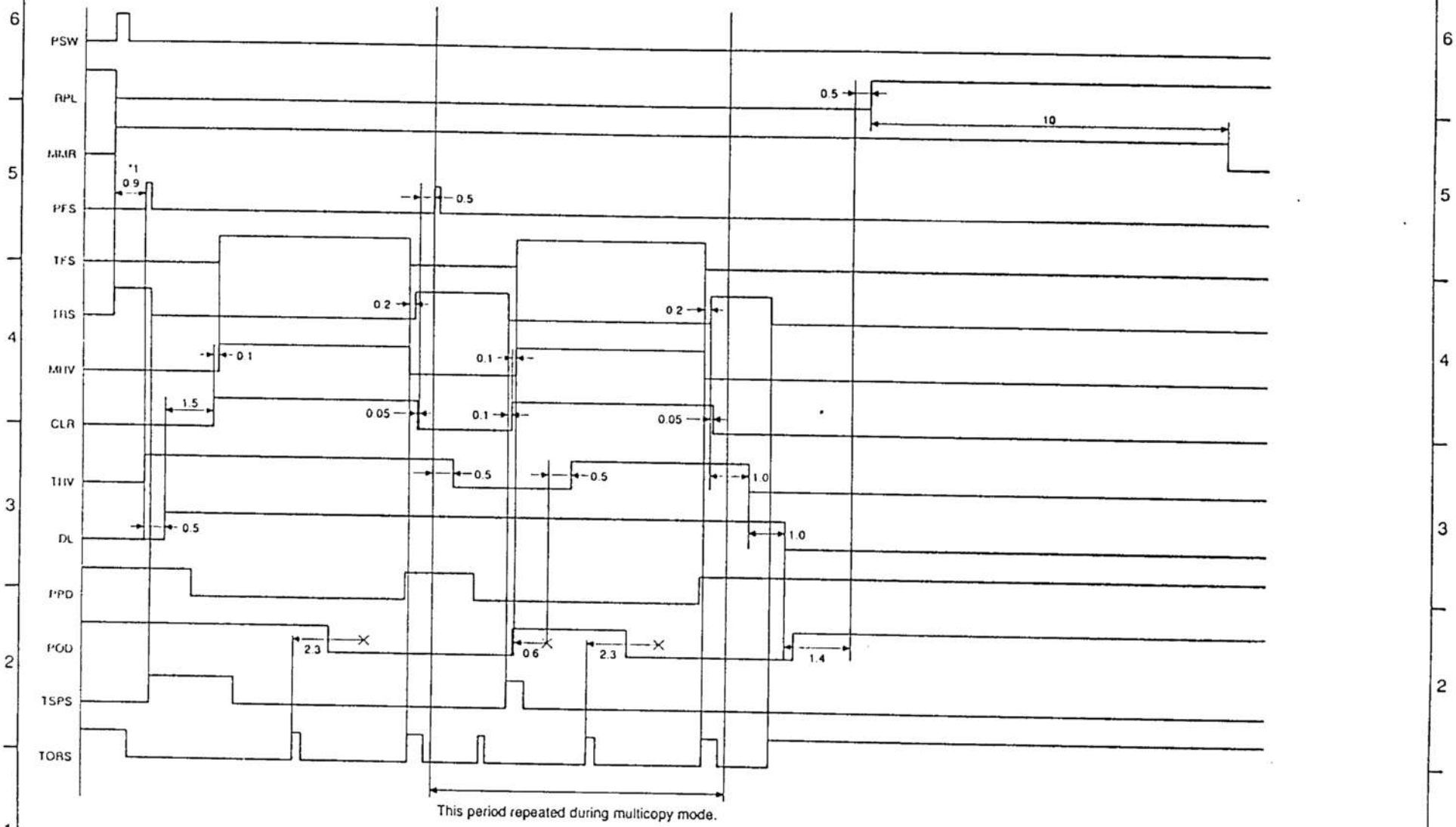

*1: When a high state of WTLL is detected in the auto power save mode (ready lamp flashing), the paper feed solenoid is turned on in 7.6 seconds after the main motor turned on.

[10] Actual wiring chart

