SHARP SERVICE MANUAL

CODE: 00ZZ820S/M//E

COMPACT COPIER

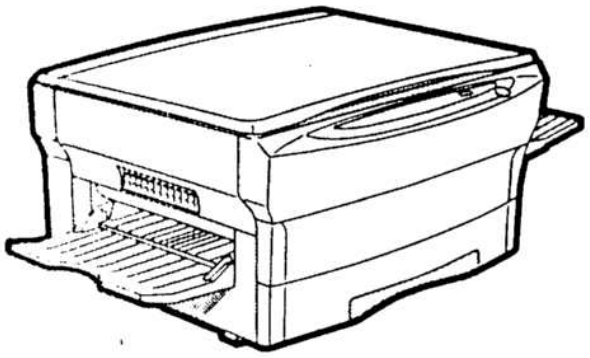

MODEL Z-810 Z-820 Z-830

CONTENTS

[1] GENERAL ..... 1 – 1

[2] SPECIFICATIONS ..... 2 – 1

[3] CONSUMABLE PARTS ..... 3 – 1

[4] EXTERNAL VIEWS AND INTERNAL STRUCTURE ..... 4 – 1

[5] UNPACKING AND INSTALLATION ..... 5 – 1

[6] COPY PROCESS ..... 6 – 1

[7] OPERATIONAL DESCRIPTIONS ..... 7 – 1

[8] DISASSEMBLY AND ASSEMBLY ..... 8 – 1

[9] ADJUSTMENTS ..... 9 – 1

[10] SIMULATION, SELF DIAGNOSTICS ..... 10 – 1

[11] USER PROGRAMS ..... 11 – 1

[12] ELECTRICAL SECTION ..... 12 – 1

Parts marked with "⚠" is important for maintaining the safety of the set. Be sure to replace these parts with specified ones for maintaining the safety and performance of the set.

SHARP CORPORATION

This document has been published to be used for after sales service only.
The contents are subject to change without notice.

CONTENTS

[1] GENERAL

1. General 1-1
2. Target users 1-1
3. Major features 1-1
4. Environment conditions 1-1
5. Basic specification matrix 1-1

[2] SPECIFICATIONS

1. Basic specifications 2-1
2. Operation specifications 2-1
3. Copy performance 2-3
4. Others 2-4

[3] CONSUMABLE PARTS

1. Supply system table 3-1
2. Production control number (lot No.) 3-3

[4] EXTERNAL VIEWS AND INTERNAL STRUCTURE

1. Appearance 4-1
2. Operation panel 4-2
3. Internal 4-3
4. Motors and solenoids 4-4
5. PWB unit 4-5

[5] UNPACKING AND INSTALLATION

1. A word on copier installation 5-1
2. Caution 5-1
3. Installing procedure 5-1

[6] COPY PROCESS

1. Copy process composition 6-1
2. Image forming process steps 6-2
3. Description process 6-3
4. Transition of OPC drums surface potential ... 6-3
5. OPC drum membrance decrease correction .. 6-3

[7] OPERATION DESCRIPTIONS

7-1. Optical system 7-1
7-2. Fuser section 7-3
7-3. Paper feed section and paper transport section 7-5
7-4. New drum cartridge detection system 7-8

[8] DISASSEMBLY AND ASSEMBLY

1. Operation panel 8-1
2. Optical section 8-1
3. Fusing section 8-6
4. Tray paper feed/transport section 8-8
5. Manual paper feed section 8-10
6. Rear frame section 8-13
7. Others 8-15

[9] ADJUSTMENTS

1. Optical section 9-1
2. Copy density adjustment 9-18
3. Others 9-22

[10] SIMULATION

1. Entering the simulation mode 10-1
2. Simulation list 10-2
3. Contents of simulation 10-3
4. Toner save mode setting and cancel 10-9
5. AE level adjustment 10-9
6. Self diag list 10-9

[11] USER PROGRAMS 11-1

[12] ELECTRICAL SECTION

1. Block diagram
   - A. Overall block diagram 12-1
   - B. Main PWB block diagram (load drive block diagram) 12-1
2. Circuit descriptions
   - A. Main PWB 12-2
   - B. Operation panel section 12-12
   - C. DC power operational description 12-12
3. Circuit diagram
   - A. MAIN PWB CIRCUIT 12-15
   - B. OPERATION PWB CIRCUIT 12-22
   - C. DL PWB CIRCUIT 12-25
   - D. BL PWB CIRCUIT 12-26
   - E. SENSOR PWB A/B 12-27
   - F. SENSOR PWB C 12-28
   - G. AC POWER SUPPLY CIRCUIT 12-29
   - H. DC POWER SUPPLY CIRCUIT 12-35
4. ACTUAL WIRING DIAGRAM 12-39
5. TIMING CHART
   - A. Warm-up 12-41
   - B. Tray paper feed 12-41
   - C. Manual multi paper feed 12-42
   - D. Manual single paper feed 12-42

[1] GENERAL

1. General

This model is a personal copier produced with key words of "Comfortable copy. Clear copy, Easy copy" providing high copy performances and copy productivity.

2. Target users

Average monthly copy volume: 400 copies (Max. 800 copies)

3. Major features

① Comfortable copy
- Warm-up time: 0 sec
- First copy time: 8 sec

② Clear copy
- Density adjustment of Manual/Photo modes

③ Easy copy
- The instant jam recovery feature allows a restart immediately after removal of a jam.

④ Basic features
- Fixed magnification ratios 2R + 2E, wide zooming of 70% – 141%
- Continuous copy of 1 – 99 sheets
- Toner save mode (first in the personal class models)
- User simulations which allow the user to set his/hers unique operating environment.

⑤ Measures for environment
- Low ozone, low dust, low noise
- Power saving design: preheat, auto power shut off, max. power consumption of 1.1KW

4. Environment conditions

To assure copy quality and the machine performances, the following environment conditions must be observed.

① Standard condition: Temperature; 20 ~ 25°C,
Humidity; 65±5%RH

② Operational condition

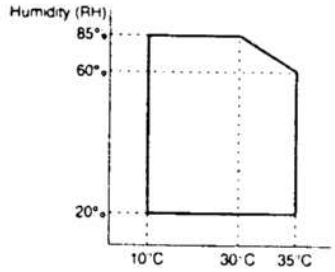

③ Transit condition

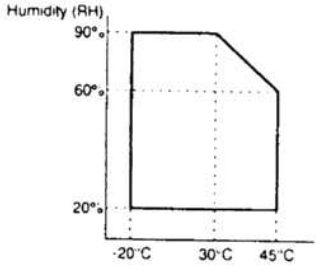

④ Supply storage condition

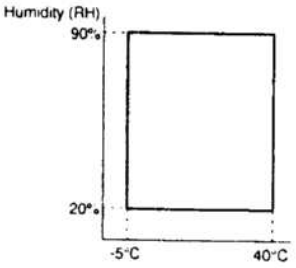

5. Basic specification matrix

Item/Model		Z-810	Z-820	Z-830
		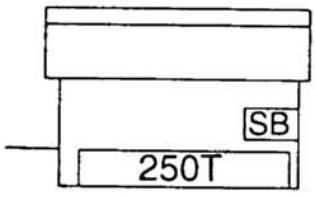	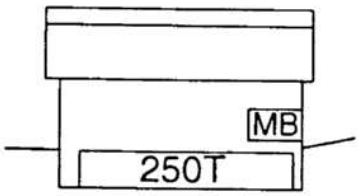	
Max. original size		B4		
Max. copy size		A4		
Multi copy		99		
Paper feed capacity		250 + 1	250 + 50	
Paper exit capacity		50		
Manual paper feed section		Single	Multi	
Copy speed (CPM): A4 landscape	Normal	8	8	10
	Enlargement	8	8	10
	Reduction	8	8	10
First copy time: Paper feed from the tray	Normal mode	8.0sec		
	Pre-heat mode	16.0sec or below		
	Auto power shut-off mode	20.0sec or below		
Warm-up time		0sec		
Exposure mode		Auto/Manual/Photo		
Toner save mode		YES: Can be set or canceled.		
Pre-heat mode		YES: Time can be set or canceled by user programs.		
Auto power shut off		YES: Time can be set by user programs.		

[2] SPECIFICATIONS

1. Basic specifications

Item	Z-810	Z-820	Z-830
Type	Fixed original table (desk top)	←	←
Copy system	Dry, electrostatic transfer system	←	←
Segment (Class)	Personal copier	←	←
Target user (Copy volume)	Monthly average 400 copies (Max. 800 copies)	←	←
External dimensions (W × D × H)	500 × 467 × 260	←	←
Weight	19.1 kg	19.6 kg (43.3 lbs)	←

2. Operational specifications

Section, item			Details	Z-810	Z-820	Z-830
Paper feed section		Paper feed system		1 tray (250-sheet) + single manual feed	1 tray (250-sheet) + multi manual feed (50-sheet)	←
	AB series	Tray paper feed section	Paper size	A4, B5, A5: All landscape feed	←	←
			Paper weight	56 – 80g/m^2	←	←
			Paper feed capacity	250 sheets	←	←
			Kinds	Standard paper, specified paper, recycled paper	←	←
			Remark	User adjustment of paper guide available	←	←
		Single manual paper feed section	Paper size	A4, B5, A5, B6, A6 Post card: All landscape feed	—	—
			Paper weight	52 – 130g/m^2	—	—
			Paper feed capacity	–	—	—
			Kind	Standard paper, specified paper, recycled paper, second original paper, OHP, label, postcard	—	—
			Remark	User adjustment of paper guide available	—	—
		Multi manual paper feed section	Paper size	–	A4, B5, A5, B6, A6, postcard: All landscape feed	←
			Paper weight	–	52 – 130 g/m^2	←
			Paper feed capacity	–	50 sheets (Postcard: 20 sheets)	←
			Kinds	–	Standard paper, specified paper, recycled paper, second original paper, OHP, label, postcard, (single copy only except for standard paper, specified paper, recycled paper, post card)	←
			Remark	–	Fordable, user adjustment of paper guide available	←

Section, item			Details	Z-810	Z-820	Z-830
	Inch series	Tray paper feed section	Paper size	8-1/2″ × 14″, 8-1/2″ × 11″, 8-1/2″ × 5-1/2″: All landscape feed	←	←
			Paper weight	15 ~ 21 lbs	←	←
			Paper feed capacity	250 sheets	←	←
			Kinds	Standard paper, specified paper, recycled paper	←	←
			Remark	User adjustment of paper guide available	–	–
		Single manual paper feed section	Paper size	8-1/2″ × 14″, 8-1/2″ × 11″, 8-1/2″ × 5-1/2″: All landscape feed	–	–
			Paper weight	14 ~ 34.5 lbs	–	–
			Paper feed capacity	–	–	–
			Kinds	Standard paper, specified paper, recycled paper, second original paper, OHP, label, postcard	–	–
			Remark	User adjustment of paper guide available	–	–
		Multi manual paper feed section	Paper size	–	8-1/2″ × 14″, 8-1/2″ × 11″, 8-1/2″ × 5-1/2″: All landscape feed	←
			Paper weight	–	14 ~ 34.5 lbs	←
			Paper feed capacity	–	50 sheets	←
			Kinds	–	Standard paper, specified paper, recycled paper, second original paper, OHP, label, postcard, (single copy only except for standard paper, specified paper, recycled paper, post card)	←
			Remark	–	Fordable, user adjustment of paper guide available	←
Paper exit section		Paper exit tray capacity		50 sheets	←	←
Original table		Original reference position		Left center	←	←
		Max. original size		B4 (10″ × 14″)	←	←
		Original kinds		Sheet, book, solid body	←	←
Optical section		Exposure system		Slit exposure by moving the optical system (with fixed original table)	←	←
		Lens specifications		Structure: 1 group 3 pcs./Brightness: F8/Focal distance: 174 m	←	←
		Exposure mode		Auto, manual, photo	←	←
		Copy lamp	Type	Halogen lamp	←	←
			Voltage	100 V series: 80 V 200 V series: 160 V	←	←
			Power consumption	200 W	←	←
Image forming		Photoconductor	Type	OPC	←	←
			Life	12K	←	←
		Charger	Charging system	Saw teeth charging system	←	←
			Transfer system	(–) DC corontron system	←	←
			Separation system	(+) DC corontron system	←	←
		Developing	Developing system	Dry, 2-component, magnetic brush system	←	←
		Cleaning	Cleaning system	Pressed to the fixed blade.	←	←

Section, item		Details	Z-810	Z-820	Z-830
Fusing section	Fusing system		Heat roller system	←	←
	Upper heat roller	Type	Teflon roller	←	←
	Lower heat roller	Type	Silicon rubber roller	←	←
	Heater lamp	Type	Halogen lamp	←	←
		Voltage	100 V/110 V/120 V/ 127 V/230 V	←	←
		Power consumption	800 W	←	←
Electrical section	Power source	Voltage	100V, 110V, 120V, 127V, 230V (220 - 240V)	←	←
		Frequency	50/60 Hz common	←	←
	Power consumption	MaX.	1.1KW	←	←
		Average (during copying)	390 Wh/H (*1)	←	←
		Average (stand-by)	60 Wh/H (*1)	←	←
		Pre-heat mode	35 Wh/H (*1)	←	←
		Auto power shut-off mode	5 Wh/H (*1)	←	←

*1: May be fluctuated by the use environment and the input voltage.

3. Copy performance

Item		Details	Z-810	Z-820	Z-830
Copy magnification	Fixed magnification ratios		2R + 2E (AB series: 141, 115, 100, 81, 70%) (Inch series: 141, 129, 100, 78, 70%)	←	←
	Zooming magnification ratios		70 ~ 141% (72 steps in increment of 1%)	←	←
Manual steps (manual, photo)			5 steps	←	←
Copy speed	First copy time	Tray paper feed	8.0 sec (Pre-heat mode: 16sec or below/Auto power-shut-off mode: 20sec or below)	←	←
		Manual paper feed	8.0 sec (Pre-heat mode: 16sec or below/Auto power-shut-off mode: 20sec or below)	←	←
AB series: A4 (Landscape)	Copy speed (CPM)	Normal	8	←	10
		Enlargement	8	←	10
		Reduction	8	←	10
B5 (Landscape)	Copy speed (CPM)	Normal	8	←	10
		Enlargement	8	←	10
		Reduction	8	←	10
Inch series 8-1/2" x 14" (Landscape)	Copy speed (CPM)	Normal	8	←	10
		Enlargement	8	←	10
		Reduction	8	←	10
8-1/2" x 11" (Landscape)	Copy speed (CPM)	Normal	8	←	10
		Enlargement	8	←	10
		Reduction	8	←	10
Max. continuous copy quantity			99		

Item		Details	Z-810	Z-820	Z-830
Void	Void area	Lead edge	1 ~ 4 mm	←	←
		Rear edge	About 4mm or less	←	←
	Image loss	Lead edge	Normal 3mm or less; Enlargement 2.5mm or less; Reduction 5mm or less	←	←
		Rear edge	Normal 4mm or less; Enlargement 4mm or less; Reduction 4mm or less	←	←
		Side voide (Both side)	Normal 3 mm or less; Enlargement 4 mm or less; Reduction 4 mm or less	←	←
Warm-up time			0 sec (*2)	←	←
Paper jam recovery time			0 sec	←	←

*2: Time in the above table shows the time interval from the power ON to the ready lamp ON.
Even though, therefore, the START button is pressed immediately after turning on the power, it takes a little time to start copying.

4. Others

Item		Remark	Z-810	Z-820	Z-830
Additional features	Toner save mode	User simulation allows to set and cancel.	Available	←	←
	Pre-heat mode	User simulation allows to set and cancel.	Available	←	←
	Auto power shut-off mode	User simulation allows to set and cancel.	Available	←	←
	Mono-color (Red, black)		Available	←	←
Accessories					

Destination	Japan	SEC	SECL	SEEG	SUK	SCA	A8 series agents	Inch series agents
Tray (Universal)	○ Installed when shipping.	○ Installed when shipping.	○ Installed when shipping.	○ Installed when shipping.	○ Installed when shipping.	○ Installed when shipping.	○ Installed when shipping.	○ Installed when shipping.
Drum cartridge	○ Installed when shipping.	○ Installed when shipping.	○ Installed when shipping.	○ Installed when shipping.	○ Installed when shipping.	○ Installed when shipping.	○ Installed when shipping.	○ Some areas.
Developing cartridge	○	○	×	○	○	○	× Packed together for some areas.	× Packed together for some areas.
Original cover (without SPF)	Standard provision	Standard provision	Standard provision	Standard provision	Standard provision	Standard provision	Standard provision	Standard provision
Power cord	○	○	○	○	○	○	○	○
Charger cleaning jig	○	○	○	○	○	○	○	○
Operation manual	Japanese	Special English	General English	GG: German BG: None	General English	General English	Example: English/ French/ Arabic	Example: English/ Spanish
Warranty card (Registration card*)	○	○	○	×	○ (SCNZ common)	×	×	×
MSDS sheet	×	○	○	×	○	×	×	×
Dust cover	×	×	×	×	×	×	Packed together for some areas.	Packed together for some areas.
POP label	×	English Attached when shipping.	×	×	×	×	×	×

* Note 1: Operation manual unit contents (Operation manual, warranty, MSDS sheet, dust cover, other printed matters → Refer to Note 2.)
* Note 2: Other printed matters
Japan: Photoconductor cartridge replacement card,
Sheet for holding photoconductor cartridge replacement cards
SEC: Service address label
* Note 3: Registration card name
SEC: Registration card (One year warranty)
SUK: On-site warranty registration sheet

[3] CONSUMABLE PARTS

1. Supply system table

SEC, SECL:

No.	Name	Content	Life	Outside product name	Package
1	Developing cartridge (Black)	Toner/developer cartridge × 1 (Toner; 170g, developer; 165g)	4K	ZT-81TD1	5
2	Developing cartridge (Red)	Toner/developer cartridge × 1 (Toner; 155g, developer; 165g)	3K	ZT-81TD2	5
3	Developing cartridge (Blue)	Toner/developer cartridge × 1 (Toner; 155g, developer; 165g)	3K	ZT-81TD3	5
4	Drum cartridge	Drum cartridge × 1 (Drum × 1) (Cleaner blade × 1) (Toner reception seal × 1) (Main charger × 1)	12K	ZT-81DR	5

(Note) No.4 "Drum cartridge" is a completely assembled unit and component parts are not supplied as service parts.
The words printed on the individual box are in English and French.

SEEG, SUK, SCA:

No.	Name	Content	Life	Outside product name	Package
1	Developing cartridge (Black)	Toner/developer cartridge × 1 (Toner; 170g, developer; 165g)	4K	ZT-81TD1	5
2	Developing cartridge (Red)	Toner/developer cartridge × 1 (Toner; 155g, developer; 165g)	3K	ZT-81TD2	5
3	Developing cartridge (Blue)	Toner/developer cartridge × 1 (Toner; 155g, developer; 165g)	3K	ZT-81TD3	5
4	Drum cartridge	Drum cartridge × 1 (Drum × 1) (Cleaner blade × 1) (Toner reception seal × 1) (Main charger × 1)	12K	ZT-81DR	5

(Note) No.4 "Drum cartridge" is a completely assembled unit and component parts are not supplied as service parts.
The words printed on the individual box are in English, German, French and Spanish.

SCNZ, South and Central America, Asia, Agents:

No.	Name	Content	Life	Outside product name	Package
1	Developing cartridge (Black)	Toner/developer cartridge × 1 (Toner; 170g, developer; 165g)	4K	ZT-81TD1	5
2	Developing cartridge (Red)	Toner/developer cartridge × 1 (Toner; 155g, developer; 165g)	3K	ZT-81TD2	5
3	Developing cartridge (Blue)	Toner/developer cartridge × 1 (Toner; 155g, developer; 165g)	3K	ZT-81TD3	5
4	Drum cartridge	Drum cartridge × 1 (Drum × 1) (Cleaner blade × 1) (Toner reception seal × 1) (Main charger × 1)	12K	ZT-81DR	5

(Note) No.4 "Drum cartridge" is a completely assembled unit and component parts are not supplied as service parts.
Since the print on the individual box for SEEG, SUK and SCA is the same, the bar code (EAN code) and the green mark are included in the print.

SRH, China:

No.	Name	Content	Life	Outside product name	Package
1	Developing cartridge (Black)	Toner/developer cartridge × 1 (Toner; 170g, developer; 165g)	4K	ZT-81TD1	5
2	Developing cartridge (Red)	Toner/developer cartridge × 1 (Toner; 155g, developer; 165g)	3K	ZT-81TD2	5
3	Developing cartridge (Blue)	Toner/developer cartridge × 1 (Toner; 155g, developer; 165g)	3K	ZT-81TD3	5
4	Drum cartridge	Drum cartridge × 1 (Drum × 1) (Cleaner blade × 1) (Toner reception seal × 1) (Main charger × 1)	12K	ZT-81DR	5

(Note) No.4 "Drum cartridge" is a completely assembled unit and component parts are not supplied as service parts.
The words printed on the individual box are in English, German, French and Spanish.

Saudi Arabia:

No.	Name	Content	Life	Outside product name	Package
1	Developing cartridge (Black)	Toner/developer cartridge × 1 (Toner; 170g, developer; 165g)	4K	ZT-81TD1	5
2	Developing cartridge (Red)	Toner/developer cartridge × 1 (Toner; 155g, developer; 165g)	3K	ZT-81TD2	5
3	Developing cartridge (Blue)	Toner/developer cartridge × 1 (Toner; 155g, developer; 165g)	3K	ZT-81TD3	5
4	Drum cartridge	Drum cartridge × 1 (Drum × 1) (Cleaner blade × 1) (Toner reception seal × 1) (Main charger × 1)	12K	ZT-81DR	5

(Note) No.4 "Drum cartridge" is a completely assembled unit and component parts are not supplied as service parts.
Since the print on the individual box for SEEG, SUK and SCA is the same, the bar code (EAN code) and the green mark are included in the print.

2. Production control number (lot No.) identification

<Developing cartridge>

The label on the developing cartridge shows the date of production.

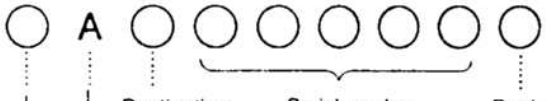

Division	No
Japan Black option	1
Overseas Black option	2
Japan Red option	3
Overseas Red option	4
Japan Blue option	5
Overseas Blue option	6
Overseas production packed together(*)	2

*Same pack for SMF production : 8
2K cartridge for same pack for
SEC/SECL/SCA : 7

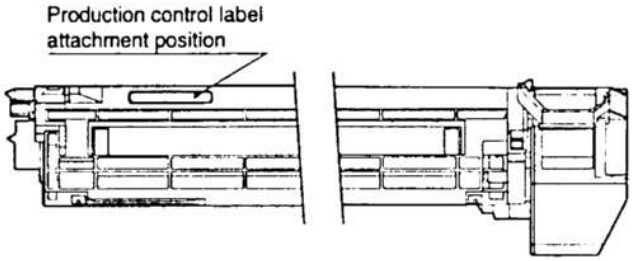

<Drum cartridge>

The label on the drum cartridge shows the date of production.

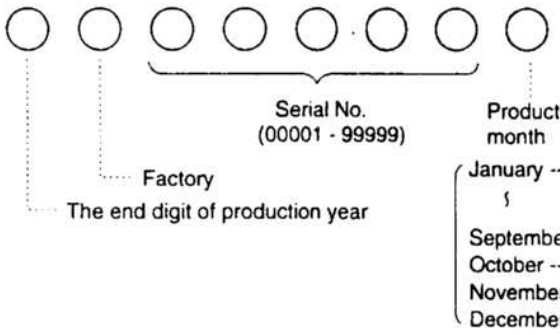

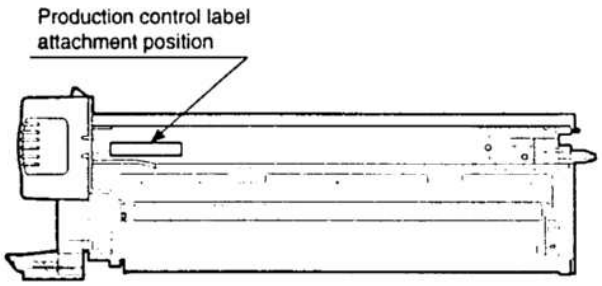

Packed together with the machine	Pale green/Pink
Option	Orange

[4] EXTERNAL VIEWS AND INTERNAL STRUCTURES

1. Appearance

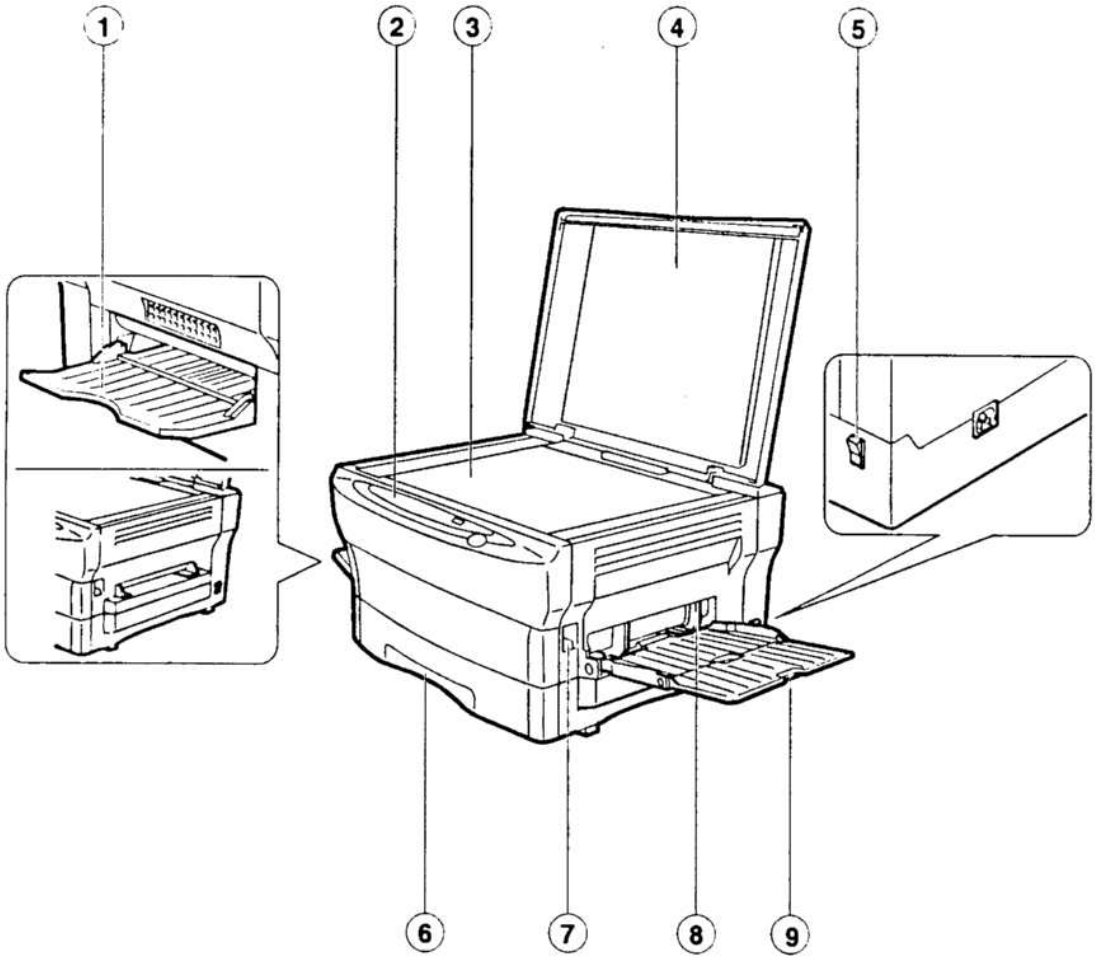

①	Exit tray	②	Operation panel	③	Document glass
④	Document cover	⑤	Power switch	⑥	Paper tray
⑦	Release lever	⑧	Bypass tray guides	⑨	Bypass tray

2. Operation panel

Z-810

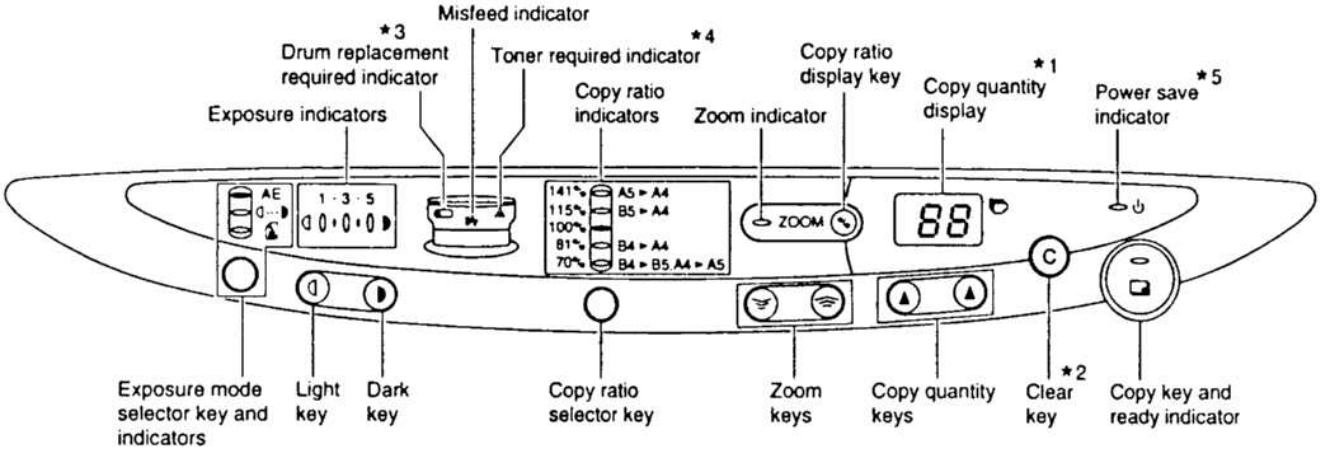

Z-820/Z-830

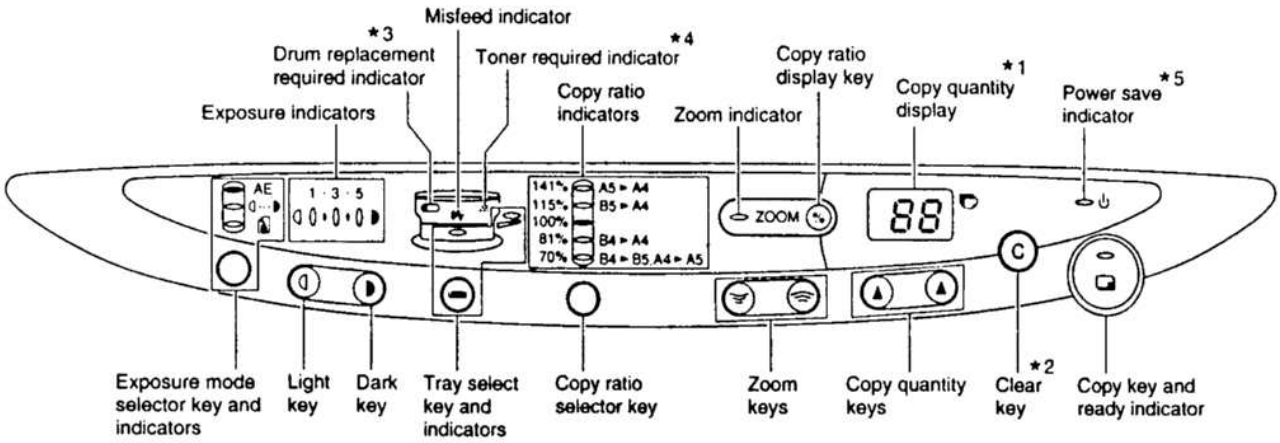

*1 When the copy ratio display key or a zoom key is pressed, the copy ratio will appear in the copy quantity display.

*2 To display the total number of copies, press the clear (Ⓒ) key for approximately 5 seconds when "0" is displayed in the copy quantity display.

Inch system

Copy ratio indicators

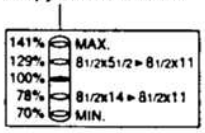

*3 Drum replacement required indicator

When 11,000 copies are made after installing the photoconductor cartridge, this lamp lights up. When 1,000 copies are made after that, the lamp blinks to stop the machine.

The remaining life of the photoconductor cartridge is displayed on the COPY QUANTITY display in 2 digits × 3 times (6 digits in total) by pressing and holding the clear key for more than 5 sec in the simulation mode.

*4 Toner required indicator

When toner density does not reach the specified level, the developer replacement lamp lights up and the warning display is shown. If the developer cartridge is not replaced after that, when about 10 copies are made, the lamp blinks and the ready lamp goes off, stopping the machine.

*5 Power save indicator

Lights up: In the energy save (pre-heat) mode.

Blinks: During resetting from the energy save mode, immediately after turning on the power

Goes off: Completes resetting from the energy save mode and the fusing temperature is in the perfect ready state.

Combination of the above lamps (O = ON, ● = OFF)

Lamp	Immediately after power ON	Ready	Copying
Power save indicator	Blink	●	●
Ready indicator	O	O	●
Other indicator	O	O	●

Lamp	Energy save mode (During pre-heating)	Energy save mode (During auto power shut-off)	During resetting from the energy save mode	Copying is started during resetting from the energy save mode
Power save indicator	O	O	Blink	Blink
Ready indicator	O	●	O	●
Other indicator	O	●	O	●

3. Internal

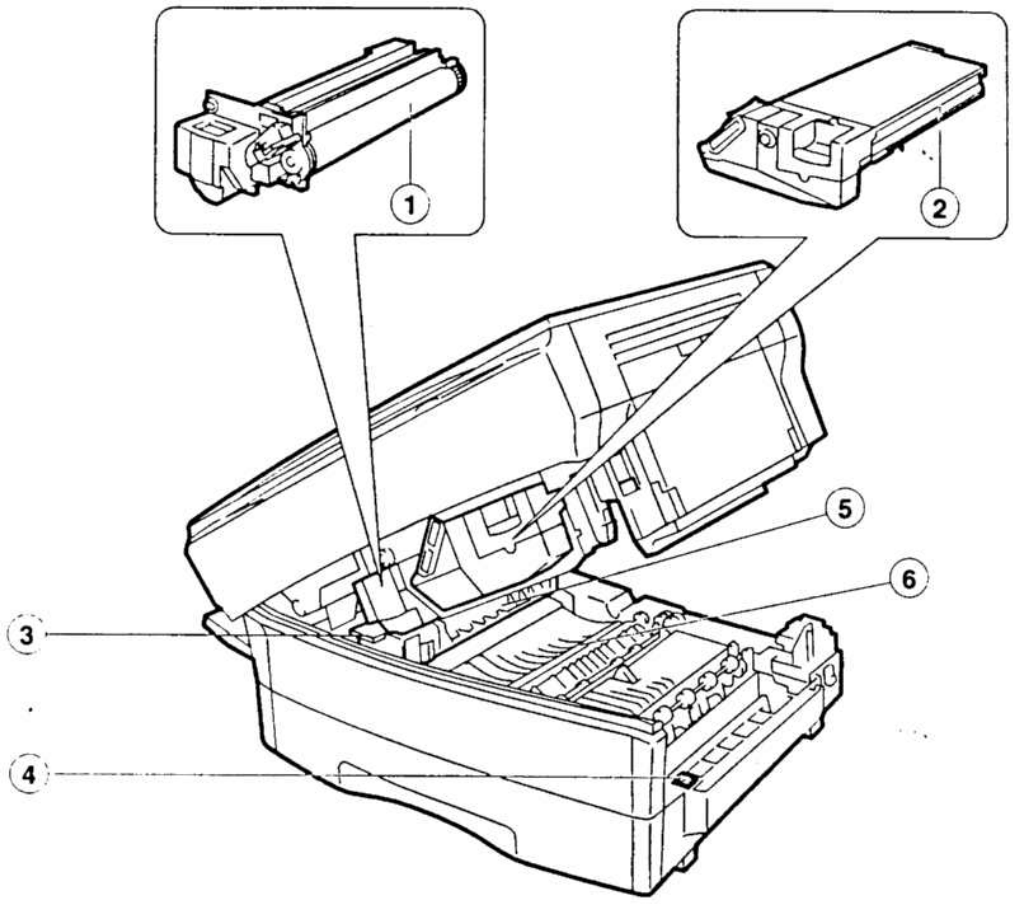

①	Drum cartridge	②	TD cartridge	③	Fusing unit lever
④	Transfer corona cleaner	⑤	Fusing unit	⑥	Transfer corona

4. Motors and solenoids

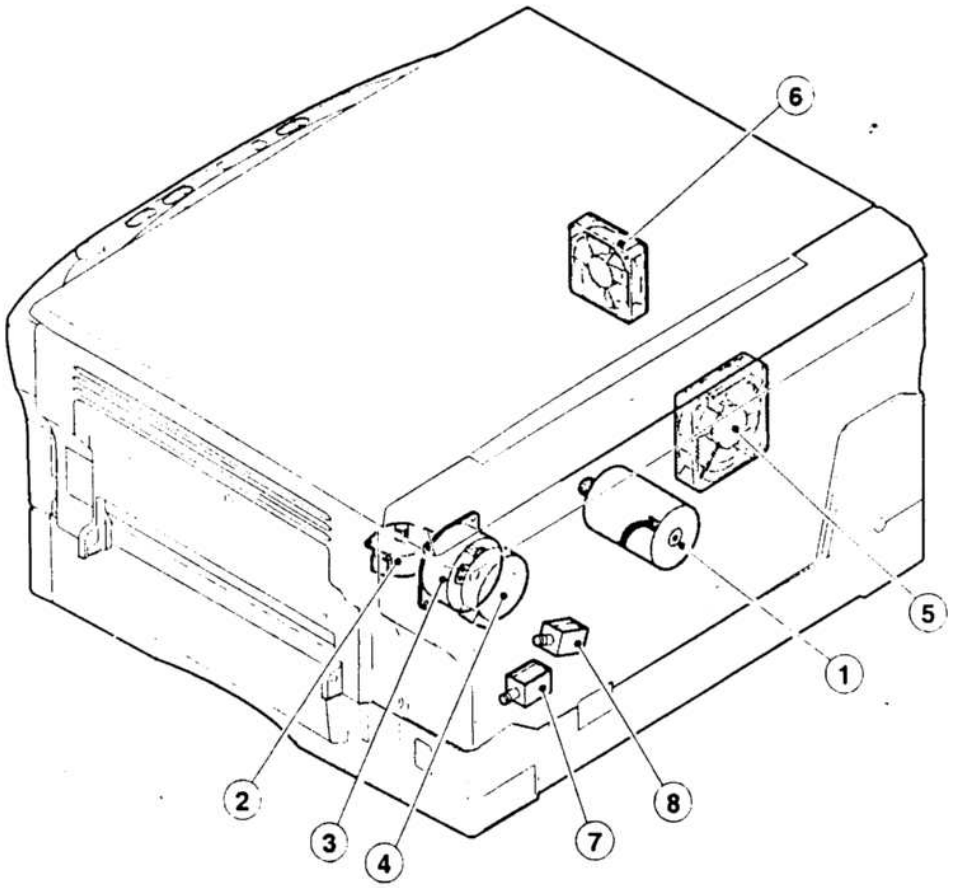

No.	Part name	Function, operation
①	Main motor	Drives the copier.
②	Lens motor	Drives the optical lens.
③	Mirror motor	Drives the optical mirror base.
④	Toner motor	Supplies toner.
⑤	Cooling fan motor	Cools the optical section.
⑥	Exhaust fan motor	Cools the inside of the machine.
⑦	Tray paper feed/paper transport roller solenoid	Presses the take-up roller and rotates the transport roller.
⑧	Resist roller solenoid	Rotates the resist roller.

5. PWB unit

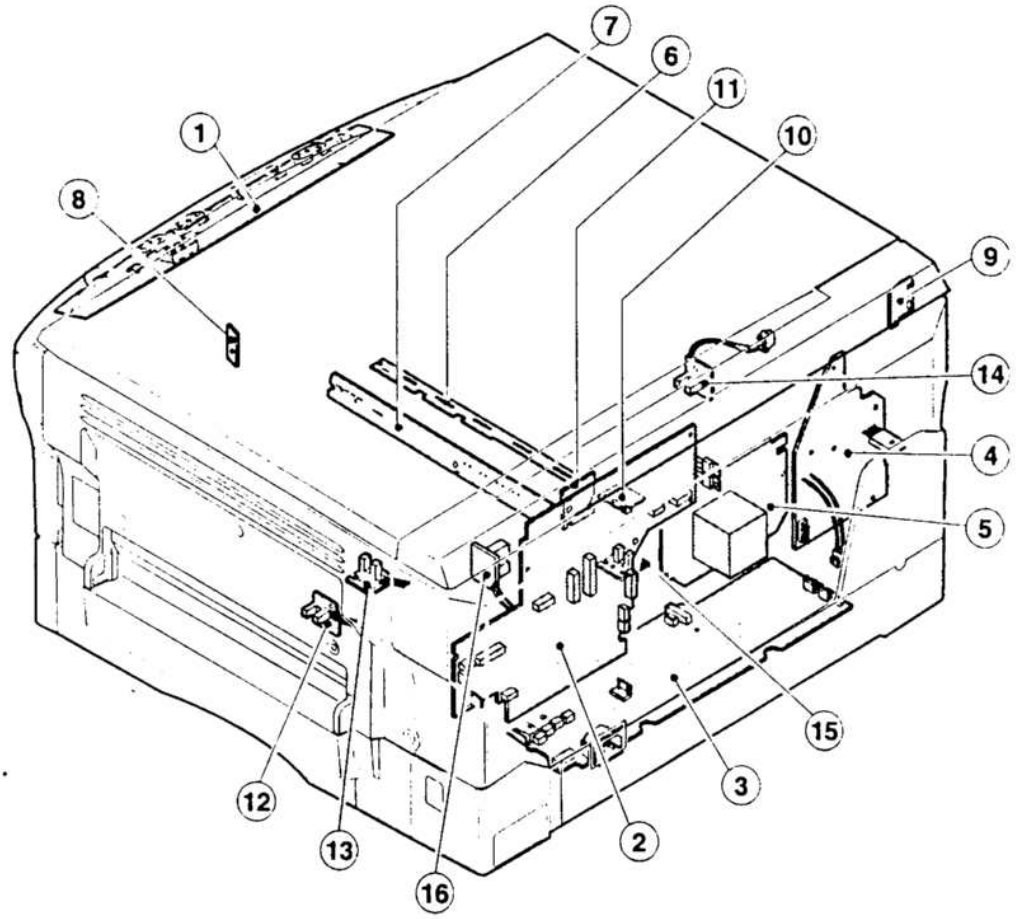

No.	Name	Kind	Function	Output
①	Operation PWB	Differs depending on the function and the destination.	Operation input/display	—
②	Main PWB	Differs depending on the function and the destination.	Copier control	—
③	AC PWB	Differs depending on the function and the destination.	AC power input	—
④	DC power PWB	100V/200V	DC power supply	—
⑤	High voltage PWB	Common	Process high voltage/developing bias/MC grid bias voltage supply	—
⑥	Discharge lamp PWB	Common	Discharge lamp ON	—
⑦	Blank lamp PWB	Common	Blank lamp ON	—
⑧	AE sensor PWB	Common	AE sensor control	—
⑨	Mirror home position sensor PWB	Common	Mirror home position detection	Home position "H"
⑩	Main motor rotation sensor PWB	Common	Main motor rotation detection	"H" when interrupted by the encoder.
⑪	Lenz home position sensor PWB	Common	Lens home position detection	Home position "H"
⑫	PPD1 sensor PWB	Common	Paper transport sensor 1	"L" when paper is passed.
⑬	PPD2 sensor PWB	Common	Paper transport sensor 2	"L" when paper is passed.
⑭	POD sensor PWB	Common	Paper exit sensor	"L" when paper is passed.
⑮	PUIS sensor PWB	Common	New drum cartridge sensor	"H" at an instance when rotating by insertion of a new cartridge.
⑯	Developer cartridge sensor PWB	Common	Developer cartridge presence detection	"H" when the developer cartridge is inserted.

[5] UNPACKING AND INSTALLATION

1. A word on copier installation

Improper installation may damage the copier. Please note the following during initial installation and whenever the copier is moved.

1. Be sure to use a correctly rated power supply and to ground the copier.
   - For this copier's power supply requirements, see the name plate located on the back of the unit.
2. Do not plug the copier into an outlet used by other appliances.

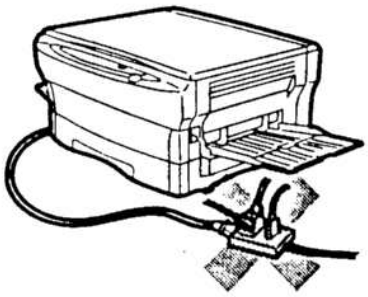

3. Do not install your copier in areas that are:
   - damp, humid, or very dusty;
   - exposed to direct sunlight;
   - poorly ventilated;
   - subject to extreme temperature or humidity changes, e.g., near an air conditioner or heater.

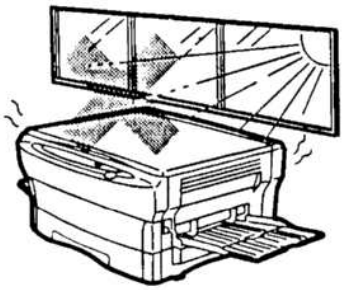

4. Place the copier on a firm, level surface.

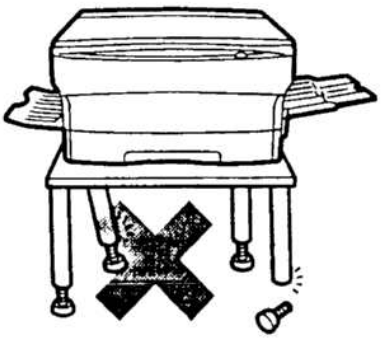

2. Cautions

1. Do not expose the photoconductive drum to direct sunlight, and do not touch the photoconductive drum. Scratches or smudges on the drum will cause dirty copies.
2. The fusing area is hot. Exercise care in this area.

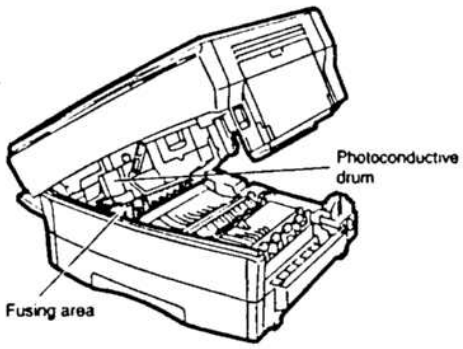

Never use the oils and greases which are not listed in this material.

3. Installing procedure

• Unpacking

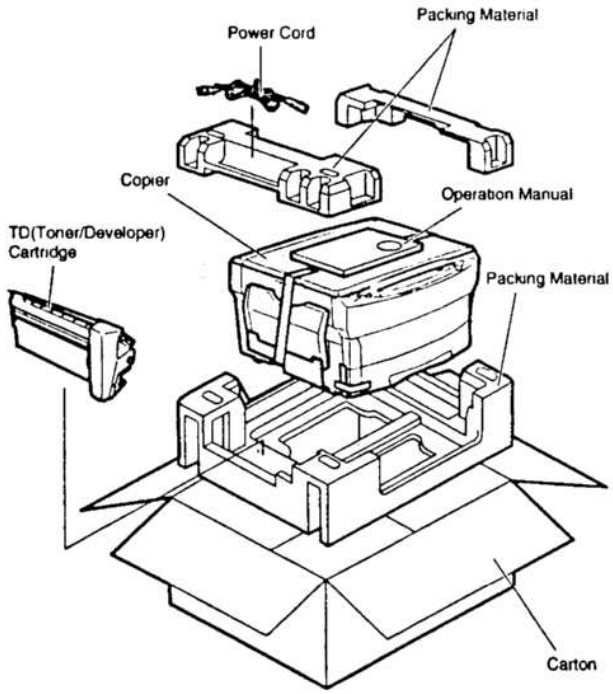

• Set up

1. Remove the copier from the bag.
2. Remove all pieces of tape from the copier and remove the corrugated cardboard from under the exit tray.

   NOTE: Do not place any objects under the exit tray. If there is something under the exit tray and the exit tray is not fully opened during copying, a paper misfeed or improper fusing may occur.
3. Open the document cover, unfold the bypass tray, and remove all pieces of protective packing material.

   * Z-810
   The Z-810 copier is not equipped with the bypass tray.

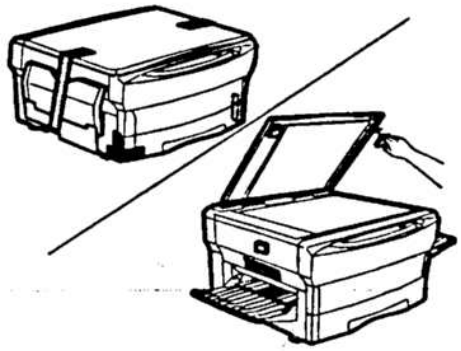

4. Remove the two screws from the right and left sides of the copier by inserting a coin or a suitable object into the slot of the screws.

   NOTE: If the screws are not removed, the copier will malfunction.

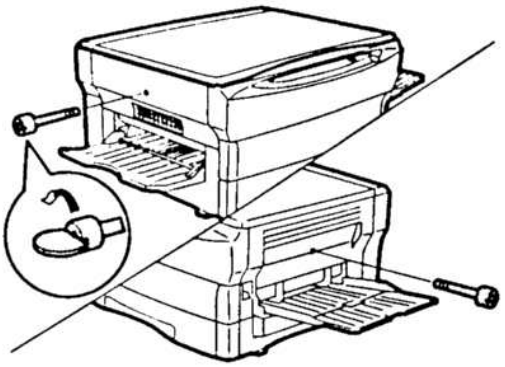

5. Press the release lever to open the copier.
6. Remove the TD (Toner/Developer) cartridge from the bag.

   NOTE: TD cartridges are sold separately in some areas.

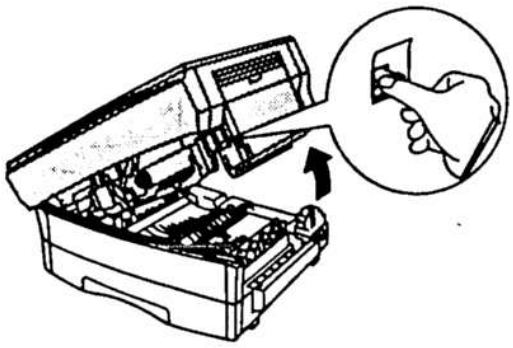

7. Shake the TD cartridge horizontally four or five times.
8. Remove the cover from the TD cartridge.

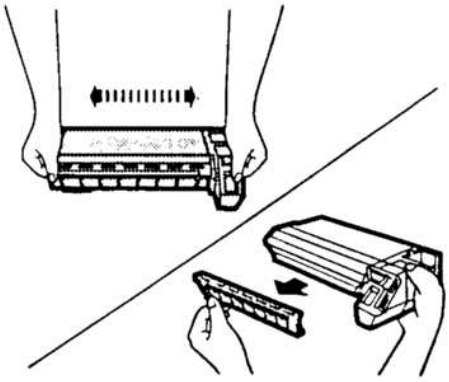

9. Slide the TD cartridge in until it locks in place.
10. Gently push down the upper half of the copier to close it.
    - To do this, place both your hands on the middle of the right-hand side of the document cover.

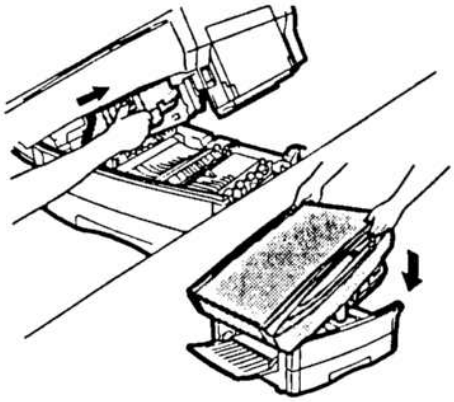

11. Pull out the paper tray, remove the pressure plate lock, load copy paper into the tray, and push the paper tray firmly back into the copier.
    - If the pressure plate lock is not removed, paper will misfeed.

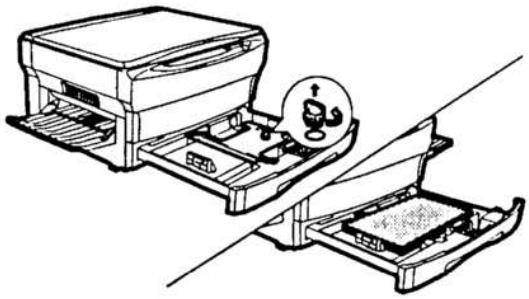

12. Plug the power cord into the copier and then plug the other end into the nearest outlet.

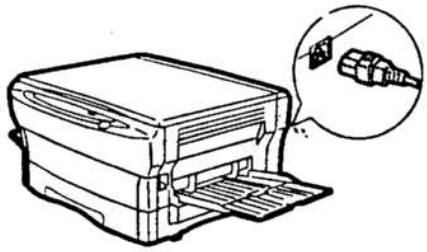

[6] COPY PROCESS

An OPC drum is used for the photoconductor.
(Structure of the OPC drum layers)

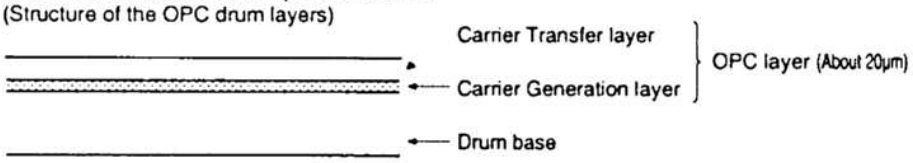

1. Copy process composition

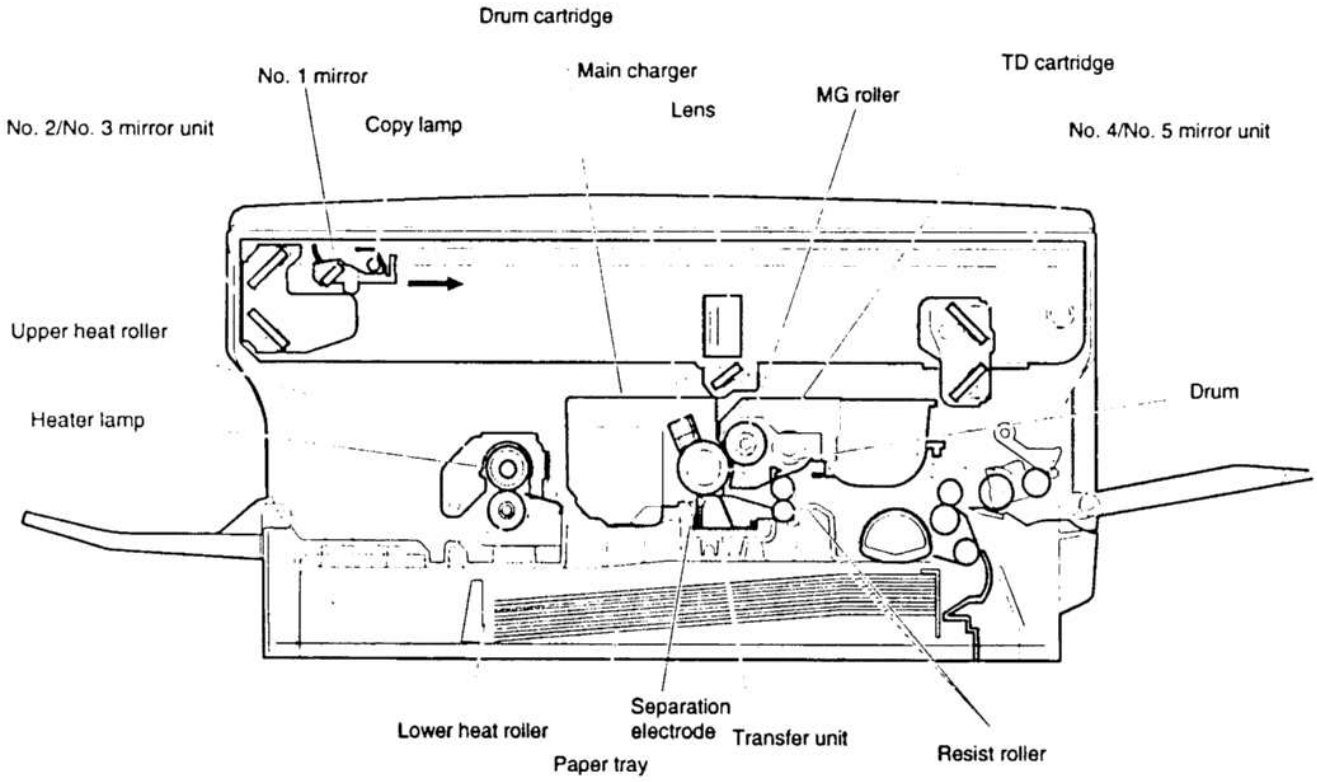

Copy process flow

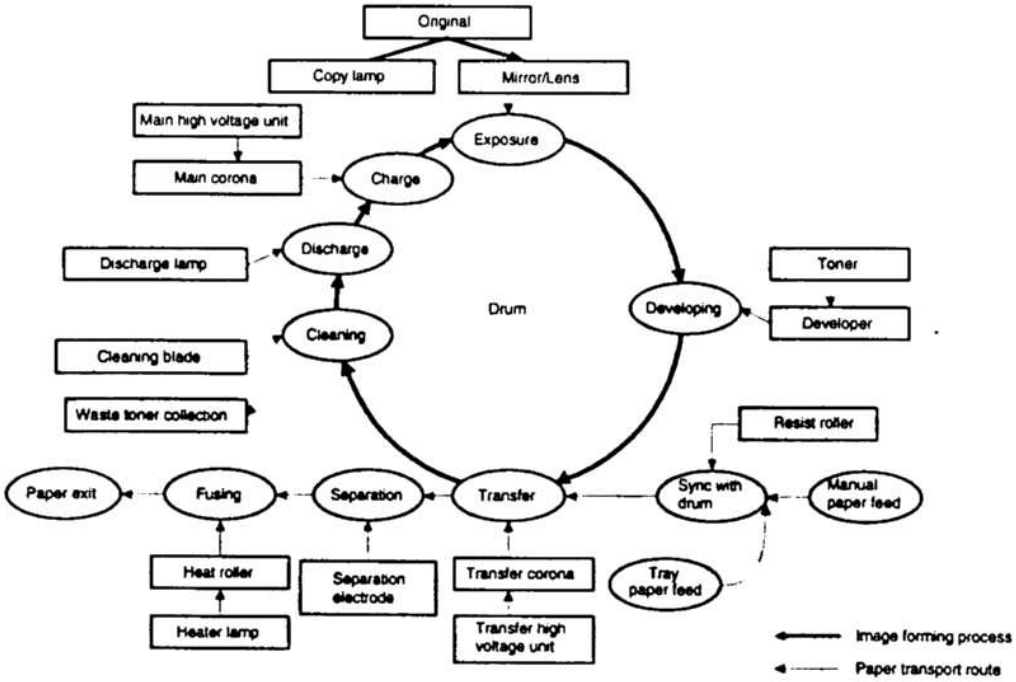

2. Image forming process steps

Image forming:

A charge is applied to the drum surface by the main corona, and the image of the original is exposed by the copy lamp. The charge in a light exposed image area is dissipated according to the degree of light intensity. Toner is attracted to the charge areas on the drum and the toner forms a visible image on the drum surface.

Step-1: Optical discharge

Residual charge on the drum surface is removed.

Step-2: Charge

Even negative charge is given to the drum surface.

Step-3: Exposure

Latent image is formed on the drum.

Step-4: Developing

Latent image formed on the drum is then developed into a visible image with toner.

Step-5: Transfer

The visible image (toner image) on the drum is transferred onto the copy paper.

Step-6: Cleaning

Residual toner on the drum surface is collected by the cleaning blade.

Step-7: Optical discharge

Residual charge on the drum surface is removed.

3. Description of process

Step-1: Optical discharge (by the discharge lamp)

Prior to charge, light from the discharge lamp is projected over the drum to reduce electrical resistance of the OPC layer and remove any residual charge to evenly neutralize the drum surface. As the electrical resistance is decreased, the positive charge in the aluminium layer moves to neutralize the negative charge present in the OPC layer.

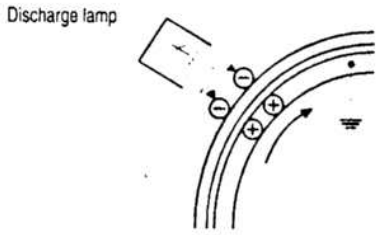

Step-2: Charge

A uniform negative charge is applied over the OPC drum surface by the main corona unit.

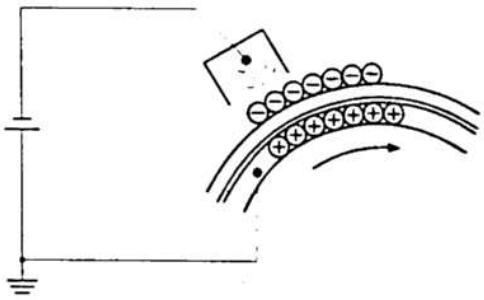

Step-3: Exposure (Copy lamp, mirror, lens)

The original image is projected through the mirror and the lens to the OPC drum by the copy lamp.

In the area where light is projected (light section of the original), the resistance in the OPC layer reduces to discharge negative charges, resulting in an electrostatic latent image on the drum surface.

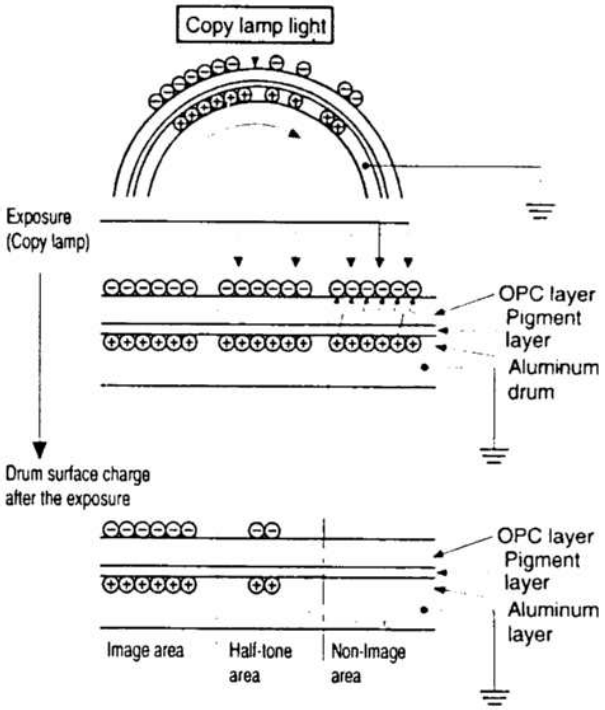

Step-4: Developing (–150V DC bias)

The electrostatic latent image in the drum surface is converted into a visible image by the toner. A bias potential of –150V is applied to the carrier (MG roller) in this two component magnetic brush developing method, and the toner is charged positive through friction with the carrier.

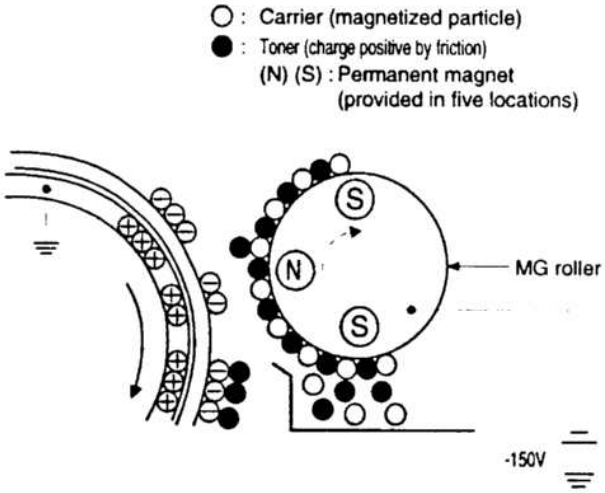

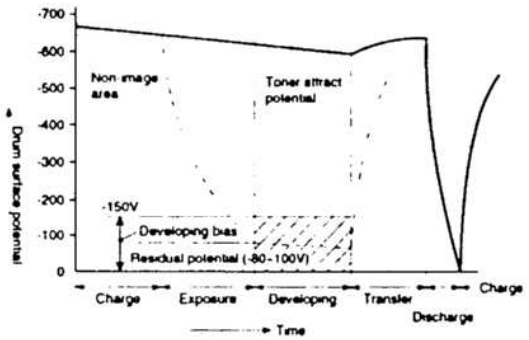

Toner is not attracted to the non-image areas on the drum because of the developing bias. Thus, if the developing bias were to fail, the residual charge would attract the toner so that a background would appear in the non-image areas of the copy.

Step-5: Transfer

The visible image on the drum surface is transferred onto the copy paper by applying a negative charge from the transfer corona to the back of the copy paper.

As the transfer effect is 70 to 80%, 20 to 30% of the image remains on the drum (residual toner) even after the transfer.

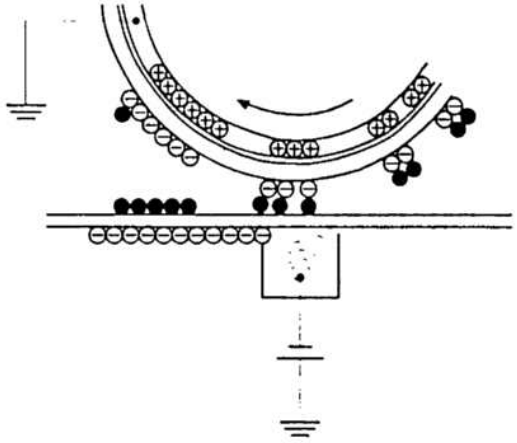

Step-6: Cleaning

Toner remaining on the drum is collected by the cleaner blade and stored in the toner collecting container.

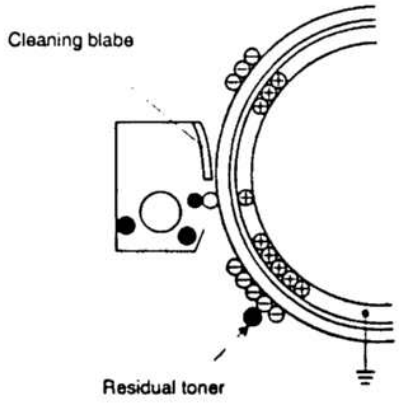

Step-7: Discharge

(same as Step-1)

Step-8:

The transferred image is fixed permanently on the copy paper by the action of the fuser unit through a combination of heat and pressure, the toner is fused into the copy paper.

4. Transition of OPC drum surface potential

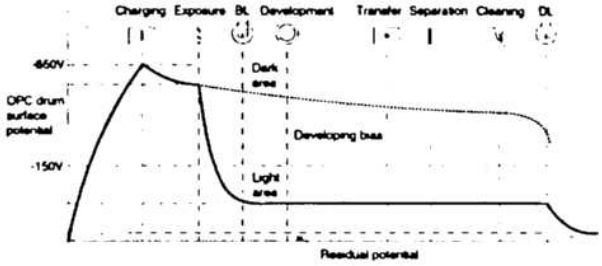

5. OPC drum membrane decrease correction

The sensitivity falls due to the OPC drum membrane decrease. To correct this, the copy lamp light quantity is adjusted, preventing against deterioration in copy quantity.

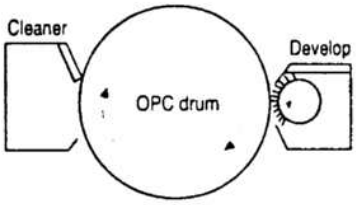

The CTL layer of the OPC drum is worn down by use.

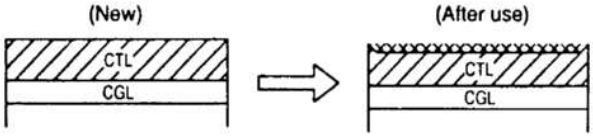

1. Setting procedure

For setting, use Sim 26-11.

(1) Set value: 1 ~ 5

Set value	Content
0	OPC drum membrane decrease correction is not performed.
1	For every 3,000 copies, the copy lamp voltage is increased by 0.33 V (0.66 V in 200 V series).
2	For every 3,000 copies, the copy lamp voltage is increased by 0.66 V (1.32 V in 200 V series).
3	For every 3,000 copies, the copy lamp voltage is increased by 0.99 V (1.98 V in 200 V series).
4	For every 3,000 copies, the copy lamp voltage is increased by 1.32 V (2.64 V in 200 V series).
5	For every 3,000 copies, the copy lamp voltage is increased by 1.65 V (3.30 V in 200 V series).

Change in the copy lamp voltage when the set value is "1" (in 100 V series).

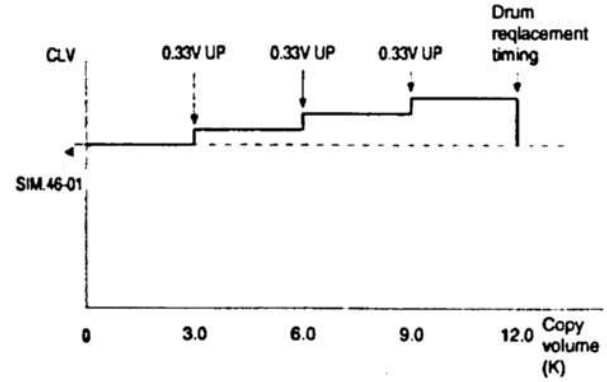

[7] OPERATION DESCRIPTIONS

7-1. Optical system

1. General descriptions

- The optical system is composed of the fixed focus lens and six mirrors.
  Since the fixed focus lens is employed, No.4/No. 5 mirror base is moved as well as the lens to change the distance between the document and the drum (OID, Original Image Distance) for reduction and enlargement.
  To move the lens and No.4/No. 5 mirror unit, the stepping motor is driven by the signal from the main control PWB to allow zooming of 0.70 to 1.41 with 1% increment.
- Exposure is adjusted by changing the voltage of the copy lamp. The optical unit is provided with the AE sensor for detection of the original density to adjust the light quantity of the copy lamp according to the original density.
- For exposure, the slit exposure system is employed where the light source is moved. (The original table is fixed.)

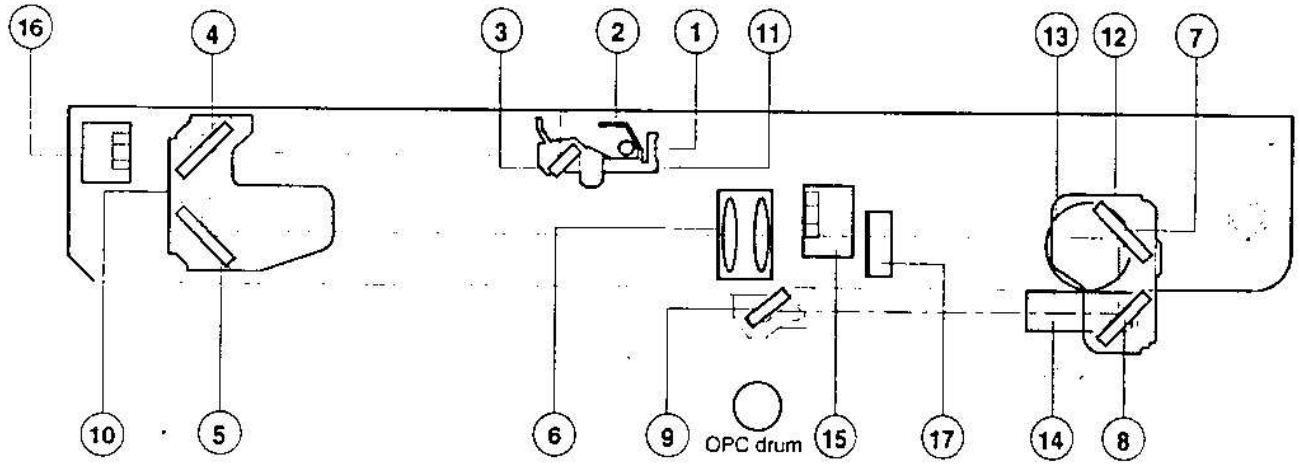

①	Copy lamp	②	Reflector	③	No. 1 mirror
④	No. 2 mirror	⑤	No. 3 mirror	⑥	Lens
⑦	No. 4 mirror	⑧	No. 5 mirror	⑨	No. 6 mirror
⑩	No. 2/No. 3 mirror unit	⑪	Copy lamp unit	⑫	No. 4/No. 5 mirror unit
⑬	Mirror motor	⑭	Lens/No. 4/No.5 mirror unit drive motor	⑮	Lens home position sensor
⑯	Mirror home position sensor	⑰	Auto exposure sensor		

(1) Original table

The original table is fixed, and originals are set to the left frame side as the reference.

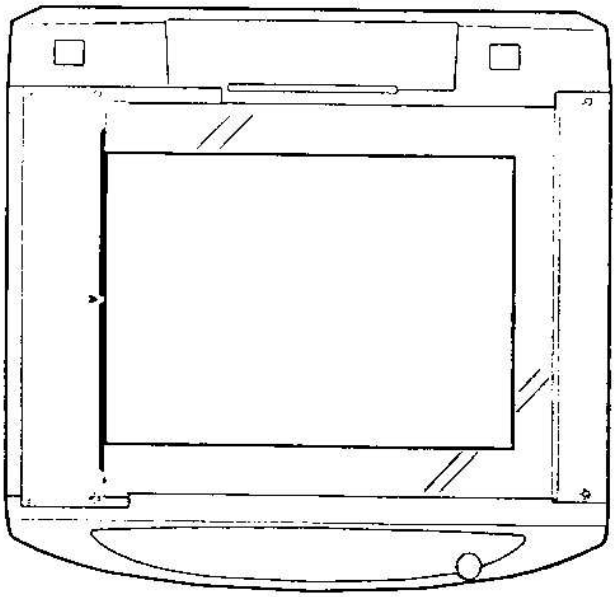

(2) Copy lamp

100V system (200W)
200V system (200W)

(3) Mirror

Six mirrors are used.

No. 1 mirror is provided in the copy lamp, No. 2/3 mirrors at the No.2/3 mirror unit, No. 4/5 mirrors at the No. 4/5 mirror unit. The No.2/3 mirror unit is scanned during copying. The No.4/5 mirror unit is moved to change the distance between the original and the photoconductor during zoom copying.

(4) Lens (Fixed focus lens)

- Construction (One group 3 lenses)
- Brightness (F8)
- Focus (174mm)

(5) Lens home position sensor (LHPS)

This sensor is used to sense the lens position. The sensor output signal serves as the basic signal to control the copy magnification ratio.

(6) Lens base

The lens is mounted to this lens base. It is moved in the paper feed direction in reduction copying, and in the paper exit direction in enlargement copying.

(7) Lens drive shaft

This shaft is to control the optical axis of the lens in zoom copying. The lens follows on the slide base shaft.

(8) Lens drive wire

The wire is used to drive the lens base and the 4/5 mirror base.

(9) No. 4/5 mirror base

The No. 4/5 mirror is installed to this base. It is moved in zoom copying in order to fit the distance between the original and the photoconductor.

(10) Mirror motor

The mirror motor is a stepping motor, and used to move the copy lamp unit and the No. 2/3 mirror base in order to obtain the rpm corresponding to each magnification ratio.

(11) Mirror home position sensor (MHPS)

Used to sense the home position of the copy lamp unit. This sensor is a photo transmission type sensor.

(12) No. 2/3 mirror base

The No. 2/3 mirrors are attached to this base. The mirror base is scanned by the mirror motor.

(13) Copy lamp unit

This is composed of No. 1 mirror, the thermal fuse, the copy lamp, the exposure adjustment plate, and the reflector, and is scanned by the mirror motor.

(14) Thermal fuse

The thermal fuse is closely attached to the reflector in order to prevent against abnormal temperature rise in the optical system. In case of abnormal temperature rise, the power for the copy lamp is turned off.

100V system (142°C)
200V system (142°C)

(15) Reflector

Light from the copy lamp is reflected onto the original.

(16) Exposure adjustment plates

Three exposure adjustment plates are attached to the copy lamp unit to adjust the exposure balance in the front and the rear frame direction.

(17) Mirror base drive wire

This wire is used to transmit the drive power of the mirror motor to the copy lamp unit and the No. 2/3 mirror base to scan the mirror base.

(18) Lens drive motor

This is a stepping motor, which is used to move the lens and the No. 4/5 mirror base.

(19) AE sensor

The original density is detected with the intensity of the copy lamp light reflected from the original. The measurement area is the mirror base scan area of about 100mm at the center.

The element is a photo diode.

2. Basic operations

(Relationship among the original, the lens and the image in each magnification ratio)

Normal copy: The distance between the surface of original on the table glass and the lens is made equal to the distance between the lens and the exposure surface of the photoconductor to make the original and the image equal to each other.

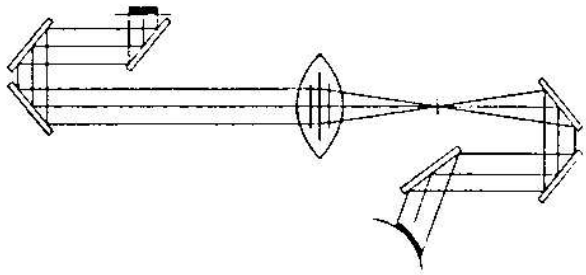

Enlargement copy: The lens is nearer to the original when compared with the normal copy to shorten the distance between the original surface and the lens.
The No. 4/5 mirror base is positioned further away from the lens to increase the distance between the lens and the exposure surface of the photoconductor.
The distance between the original and the exposure surface of the photoconductor is greater than that in the normal copy.

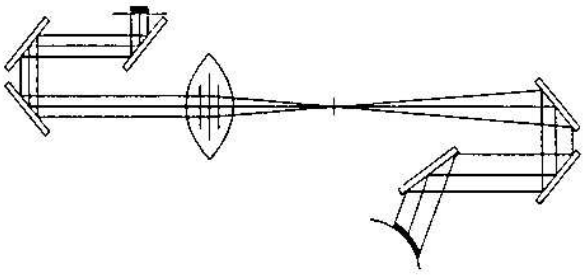

Reduction copy: When compared with the normal copy, the lens comes closer to the photoconductor to increase the distance between the original and the lens.
The distance between the lens and the exposure surface of the photoconductor is decreased.
The No. 4/5 mirror base is positioned further away from the lens.
The distance between the original and the exposure surface of the photoconductor is longer than that in the normal copy.

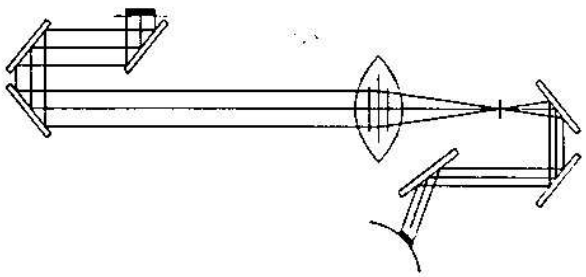

The mirror base scan speed (mirror motor rpm) is changed to zoom.

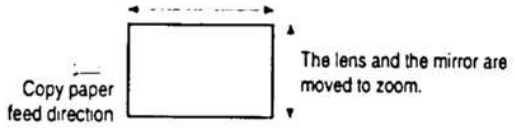

The mirror scan speed is changed to zoom.

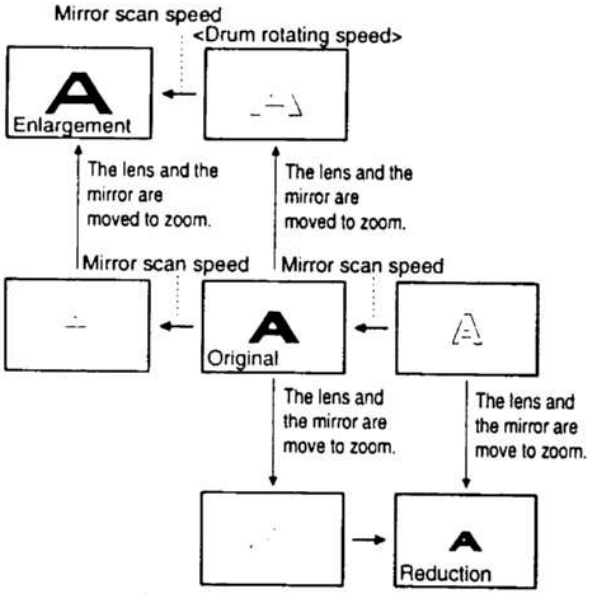

(Copy lamp control in each copy density)

- Manual density copy mode

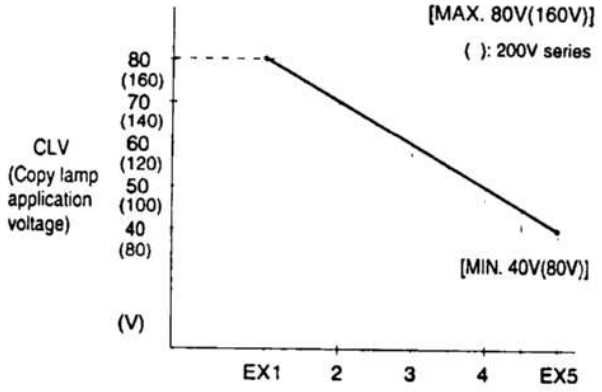

Execute SIM 46-01 to determine the copy lamp applying voltage (CLV) at EX1, EX3, and EX5.

When the voltages at EX1.0 and EX3.0 are determined, the voltage at EX2.0 is calculated by dividing the difference by two. When the voltages at EX3.0 and EX5.0 are determined, the voltage at EX4.0 is calculated by dividing the difference by two.

The copy lamp applying voltage at each exposure level is determined by varying the ON period duty of the copy lamp lighting control signal.

- Photo density copy mode

  The control method in this mode is the same as that in the manual density copy mode. The image density is obtained by decreasing the grid bias voltage of the charger. In order to provide good reproduction of half-tone, however, the ON period duty of the copy lamp lighting signal is made shorter than that in the manual density mode. (The applying voltage becomes lower.)

7-2. Fuser section

General description

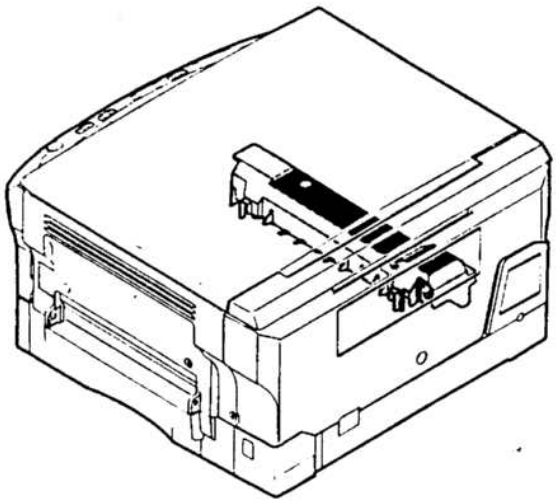

General block diagram (cross section)

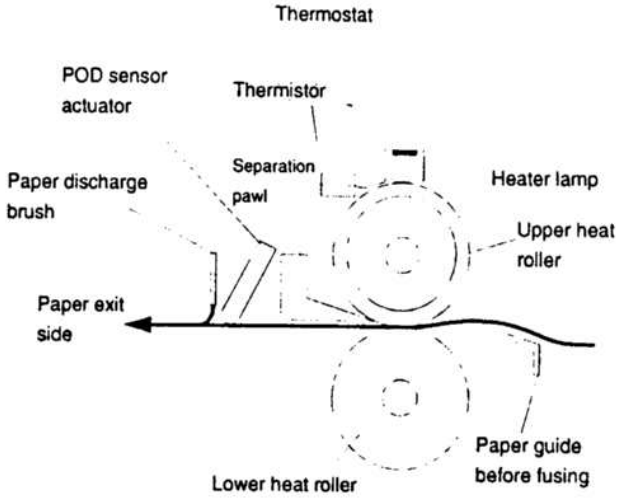

(Top view)

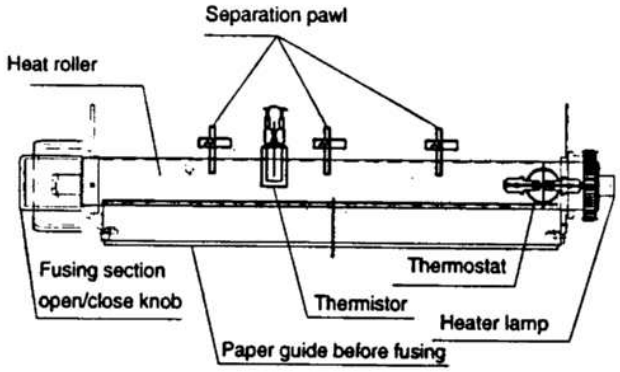

A. Heat roller

A teflon roller is used for the upper heat roller and a silicone rubber roller is used for the lower heat roller for better toner fusing performance and paper separation.

Simple raising of the fuser compartment accessing lever separates the upper heat roller from the lower heat roller for easier misfed paper removal.

B. Separator pawl

Three separator pawls are used on the upper heat roller. The separator pawls are teflon coated to reduce friction with the roller and prevent a smear on the paper caused by the separator pawl.

C. Thermal control

① The heater lamp, thermistor, main PWB, DC power supply PWB, and triac within the power supply unit are used to control the temperature in the fuser unit.
To prevent against abnormally high temperature in the fuser unit, a thermal breaker and thermal fuse are used for safety purposes.

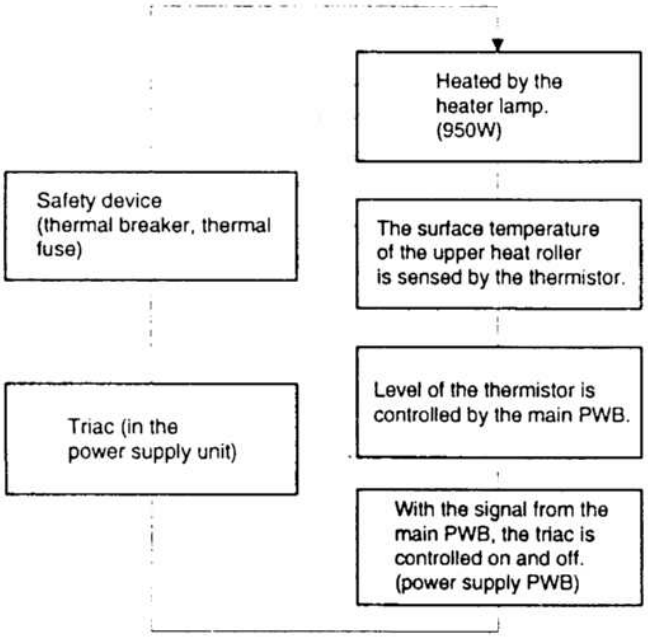

② The surface temperature of the upper heat roller is set to 185 ~ 165°C. The surface temperature during the power save mode is set to 120°C.

③ The self-check function comes active when one of the following malfunctions occurs, and an "H" is displayed on the multicopy window.

a. When the heat roller surface temperature rises above 240°C.
b. When the heat roller surface temperature drops below 140°C during the copy cycle.
c. Open thermistor
d. Open thermal fuse
e. When the temperature does not reach 185°C within 27 sec after supplying the power.

D. Fusing resistor

Fusing resistor

This model is provided with a fusing resistor in the fusing section to improve transfer efficiency.

General descriptions are made in the following.

General descriptions

Since the upper heat roller is conductive when copy paper is highly moistured and the distance between the transfer unit and the fusing unit is short, the transfer current leaks through the copy paper, the upper heat roller and the discharging brush as shown in the figure below.

Without fusing resistor

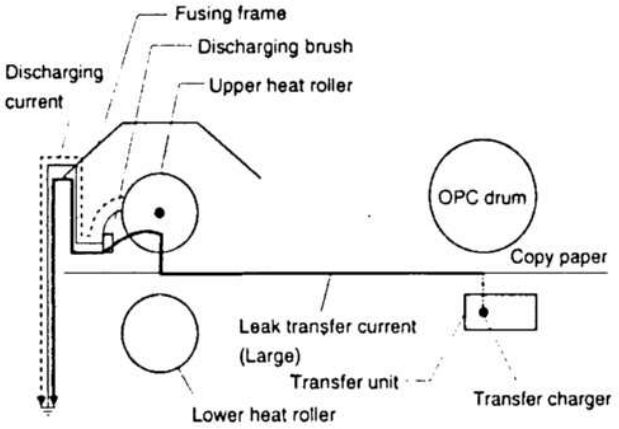

With fusing resistor

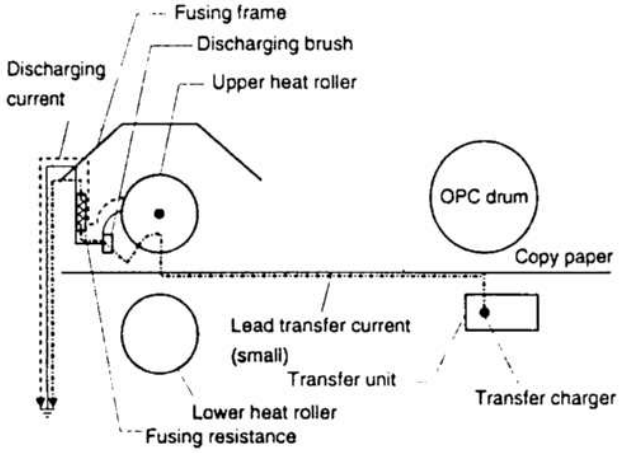

7-3. Paper feed section and paper transport section

Paper transport path and general operations

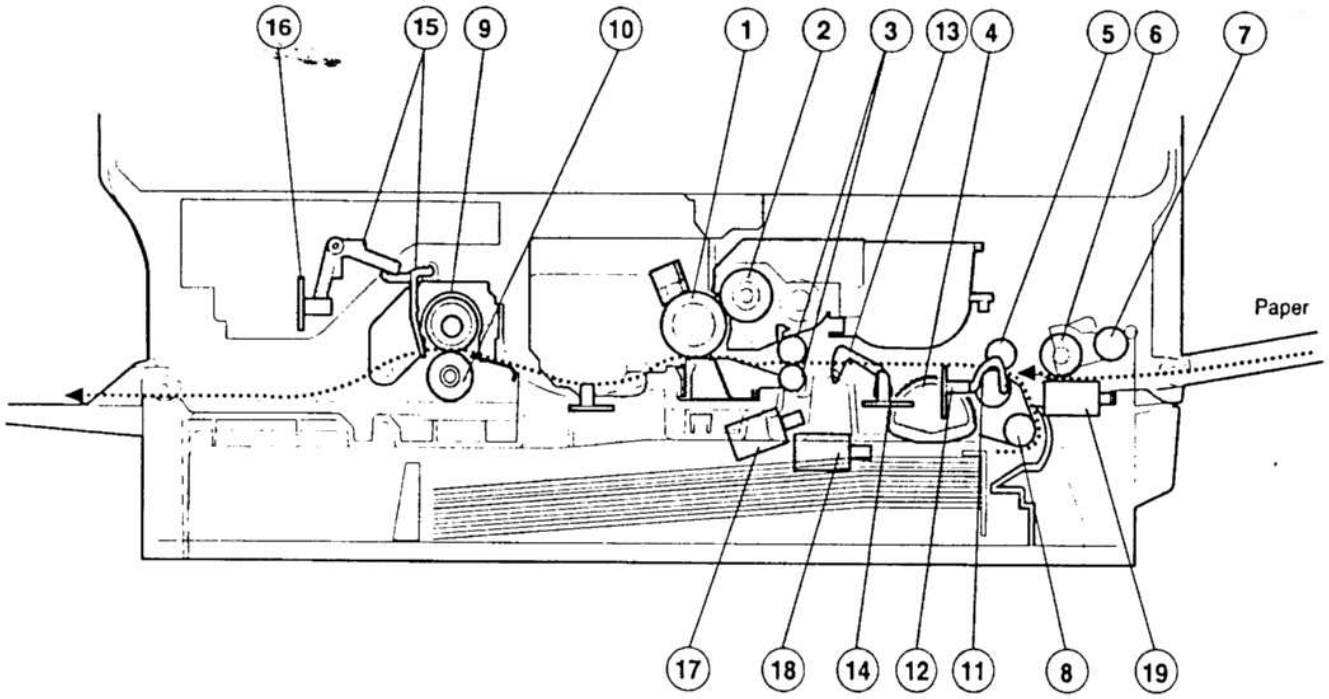

①	OPC drum	②	MG roller	③	Resist roller
④	Pick-up roller	⑤	Transport roller	⑥	Manual transport roller
⑦	Manual paper feed roller	⑧	Transport roller	⑨	Upper heat roller
⑩	Lower heat roller	⑪	PPD1 sensor actuator	⑫	PPD1 sensor PWB
⑬	PPD2 sensor actuator	⑭	PPD2 sensor PWB	⑮	POD sensor actuator
⑯	POD sensor PWB	⑰	Resist roller solenoid	⑱	Tray paper/paper transport roller solenoid
⑲	Manual paper feed solenoid				

Paper feed is made in two ways; the tray paper feed and the manual paper feed. The tray is of universal-type, and has the capacity of 250 sheets. The front loading system allowed to attached or remove the tray to or from the front cabinet.

The general descriptions on the tray paper feed and the manual paper feed are given below.

A. Tray paper feed operation

① The figure below shows the positions of the pick up roller, the paper feed clutch sleeve, and the paper feed latch in the initial state without pressing the COPY button after lighting the ready lamp.

The paper feed latch is in contact with the projection of the clutch sleeve.

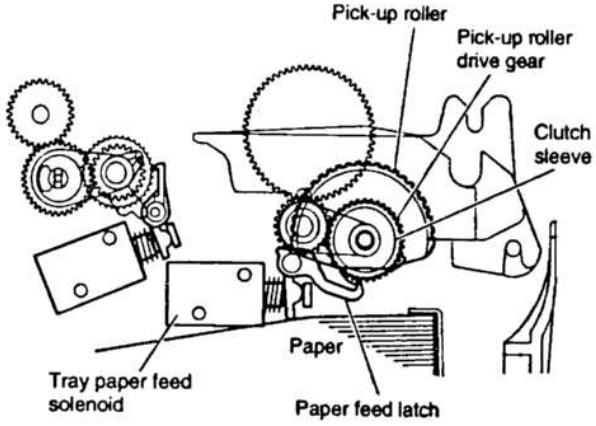

② When the COPY button is pressed, the main drive motor starts rotating to drive each drive gear.

The pick up drive gear also is driven at that time. Since, however, the paper feed latch is in contact with the projection of the clutch sleeve, rotation of the drive gear is not transmitted to the pick up roller, which does not rotate therefore.

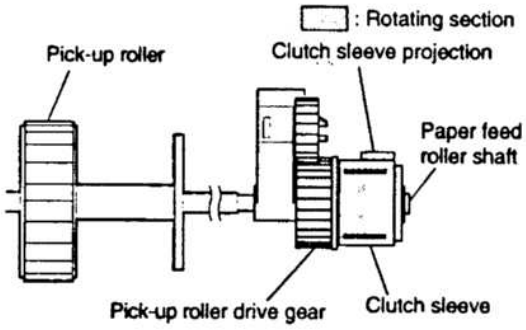

③ After 0.15sec from when the main motor start rotating, the tray paper feed solenoid (PFS) turns on at a moment.

This disengages the paper feed latch from the projection of the clutch sleeve, transmitting rotation of the pick up drive gear to the pick up roller shaft, rotating the pick up roller to feed the paper.

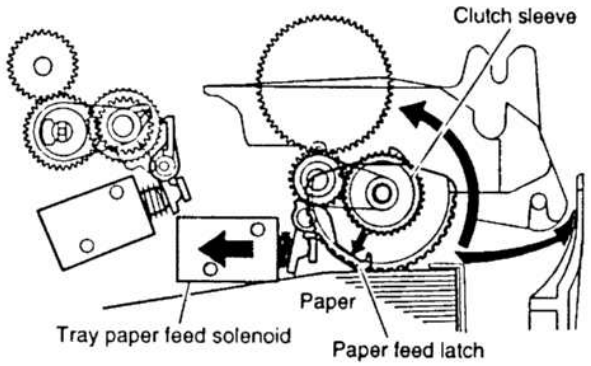

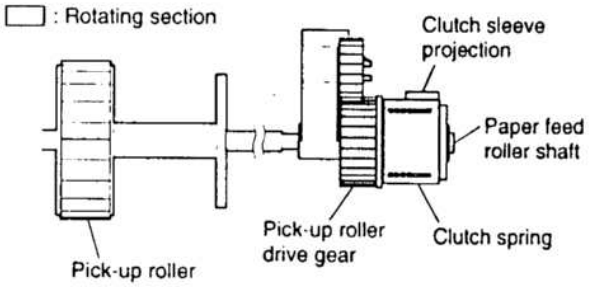

④ After one rotation of the pick up roller, the paper feed latch is brought in contact with the projection of the clutch sleeve, stopping rotation of the pick up roller.

⑤ On the other hand, the paper fed is passed through the paper entry detection switch (PPD1), the transport roller, and PPD2 to the resist roller. Then the paper is temporarily stopped to make synchronization with the lead edge of the image on the drum.

Since the transport roller keeps rotating at that time, the lead edge of the paper is evenly pressed on the resist roller, preventing against skew feeding.

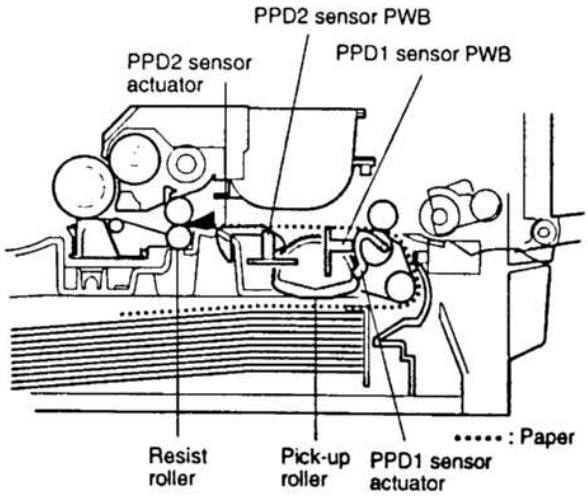

⑥ To release the resist roller, the resist roller solenoid is turned on by the paper start signal to disengage the resist start latch from the clutch sleeve projection, transmitting rotation of the resist drive gear to the resist roller shaft. Thus the paper is transported by the resist roller.

⑦ After the resist roller starts rotating, the paper is passed through the pre-transfer roller to the transfer section. Images are transferred on the paper, which is separated from the OPC drum by the drum curve and the separation section.

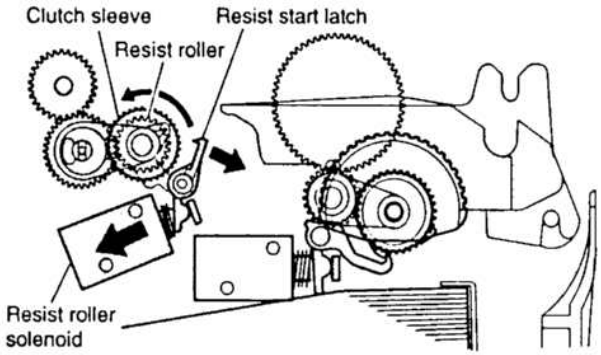

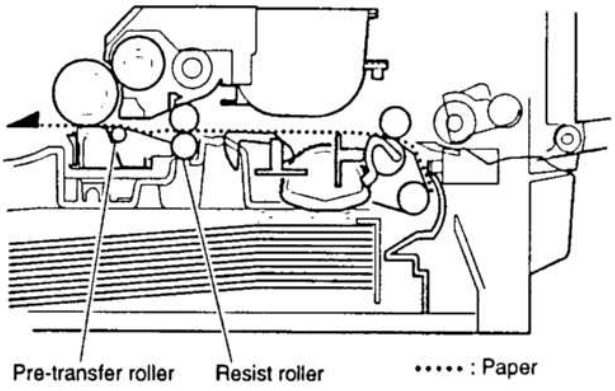

⑧ The paper separated from the drum is passed through the fusing paper guide, the heat roller (fusing section), POD (paper out detector) to the copy tray.

The figure below shows the time chart of the above operations.

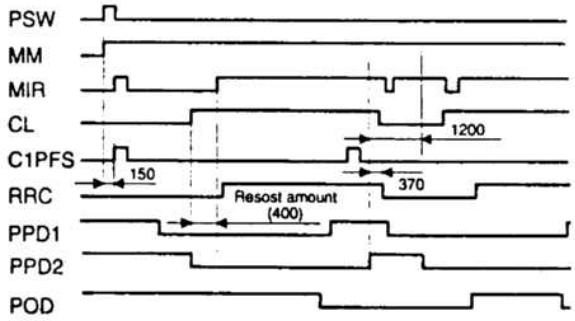

B. Manual multi paper feed operation

① Before paper feed operation, the manual paper feed solenoid (MPFS) is turned OFF as shown in the figure below.

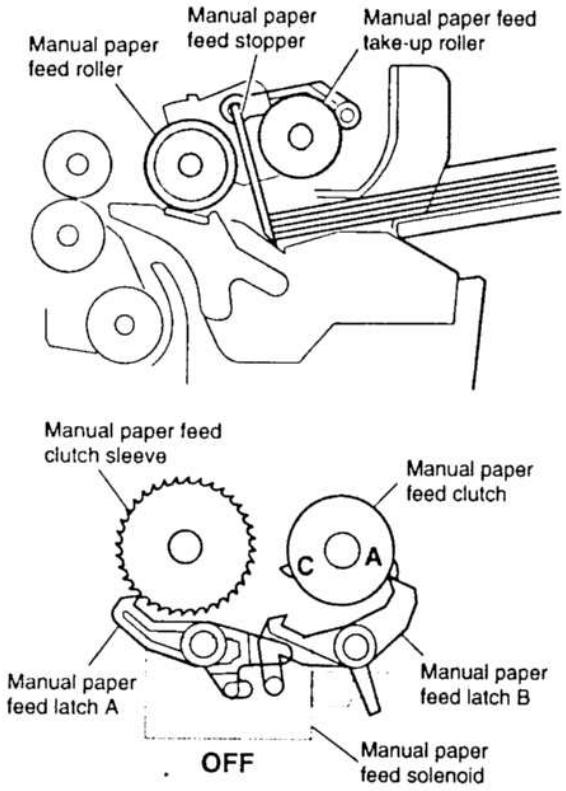

② When the PRINT button is pressed, the manual paper feed solenoid (MPFS) turns on to disengage the manual paper feed latch A from the manual paper feed clutch sleeve A, rotating the manual paper feed roller and the manual take-up roller. At the same time, the manual paper feed stopper opens and the manual take-up roller is pressed to the upper of tha paper to start paper feeding.

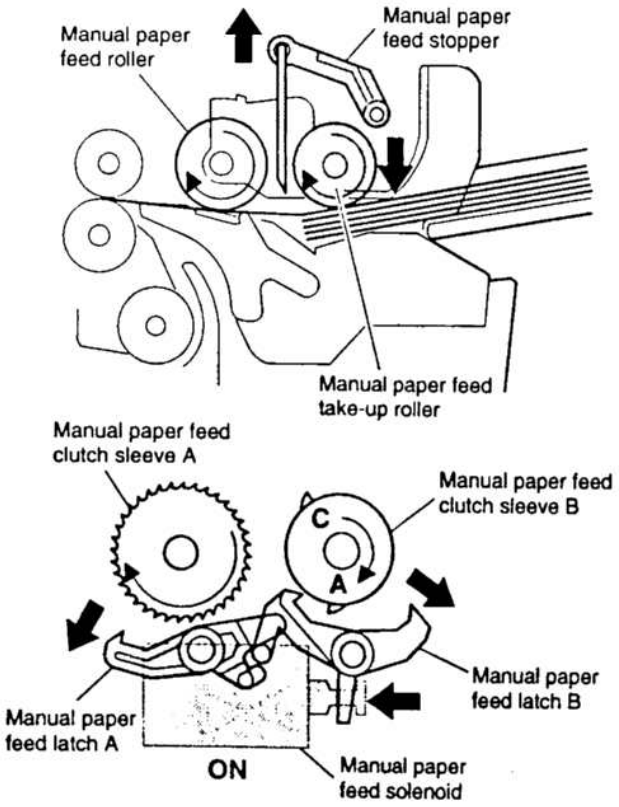

③ When pawl C of the manual paper feed clutch sleeve is hung on the manual feed latch, the manual feed stopper falls and the manual take-up roller rises. At that time, the manual paper feed roller is rotating.

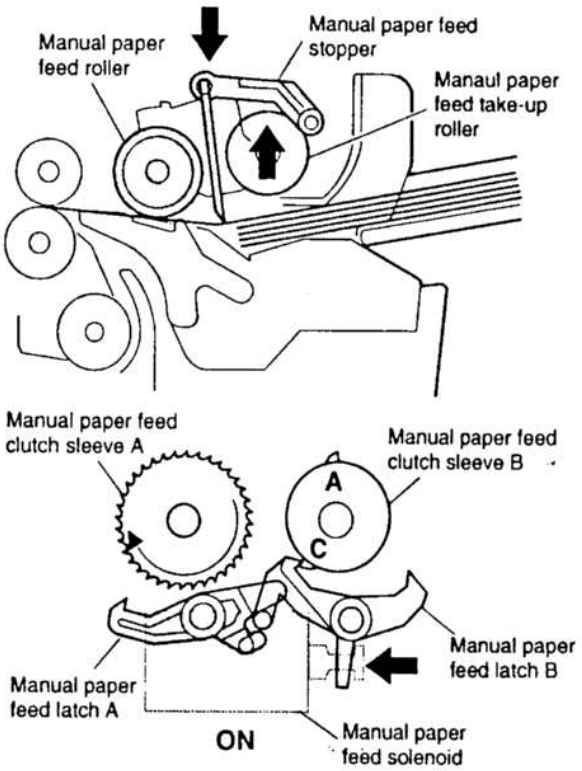

④ The lead edge of the transported paper is pressed on the resist roller by the transport roller. Then the paper is stopped temporarily to make synchronization with the lead edge of the image on the OPC drum.

Apply a proper resistance to the manual paper feed solenoid, then turn it off.

Since the transport roller keeps rotating at that time, the lead edge of the paper is evenly pressed on the resist roller, preventing against skew feeding.

The operations hereinafter are the same as the paper feed operations from the tray. (Refer to A-⑤ ~ ⑧.)

C. Conditions of occurrence of paper misfeed

(1) When the power is turned on:

PPD or POD is ON when the power is turned on.

(2) Copy operation

a. PPD1 jam
1) PPD1 does not turn off within 4 sec after turning on the resist roller.

b. PPD2 jam
1) PPD2 is off immediately after turning on the resist roller.
2) PPD2 does not turn off within 1.2 sec after turning off the resist roller.

C. POD jam
1) POD does not turn on within 2.9 sec after turning on the resist roller.
2) POD does not turn off within 1.5 sec ~ 2.7 sec after turning off PPD2.

7-4. New drum cartridge detection system

1. General

This model employs the automatic counter clear system where the counter is automatically cleared when a new drum cartridge is inserted for replacement of the old one.

The general descriptions on the operation are given below.

2. Outline of the drum cartridge

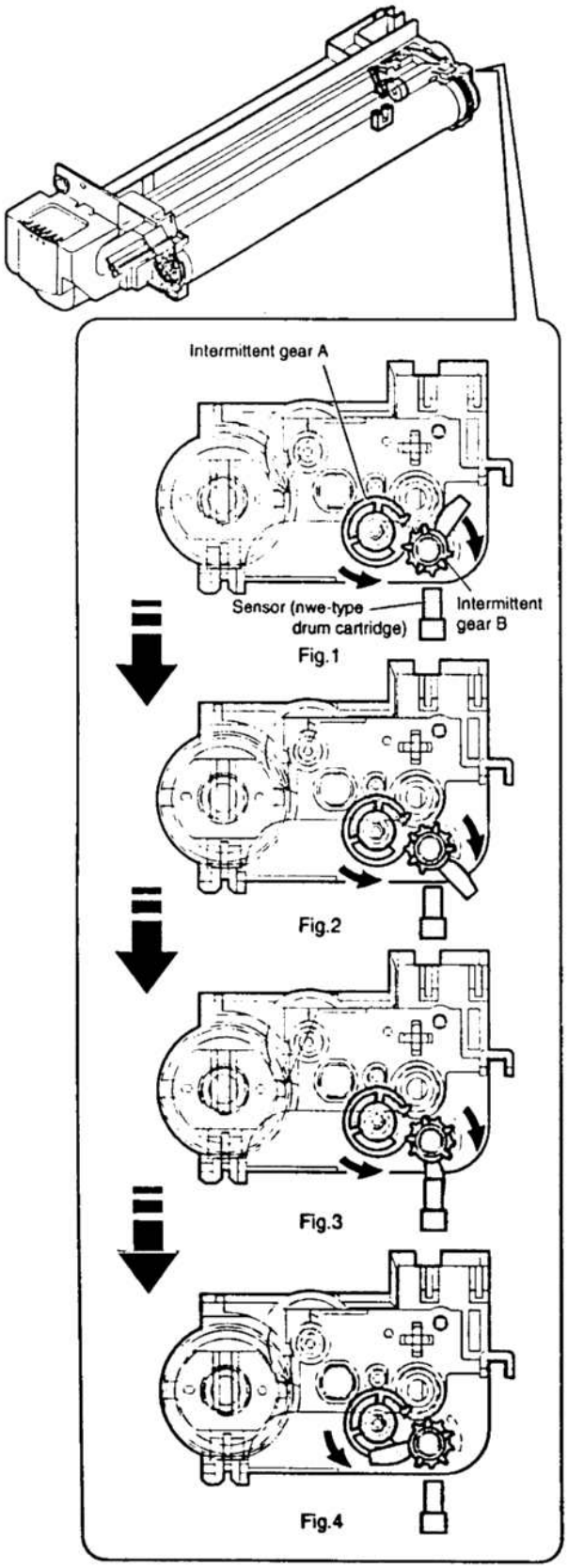

3. Outline of operations

(1) When intermittent gear A turns one rotation, the teeth of intermittent gear B is engaged with the teeth of intermittent gear A, rotating intermittent gear B. The position of intermittent gear B is shifted from Fig.1 to Fig. 2.

(2) At the second rotation of intermittent gear A, intermittent gear B is shifted from Fig. 2 to Fig. 3 to turn on the new drum cartridge sensor, recognizing the new drum cartridge.

(3) At the third rotation of intermittent gear A, intermittent gear B is shifted from Fig. 3 to Fig. 4, completing the operation. After completion of the operation, though intermittent gear A rotates, the teeth of intermittent gear B are not engaged with the teeth of intermittent gear A, and intermittent gear B does not rotate.

[8] DISASSEMBLY AND ASSEMBLY

1. Operation panel
2. Optical section
3. Fusing section
4. Tray paper feed/transport section
5. Multi manual paper feed section
6. Rear frame section

1. Operation panel

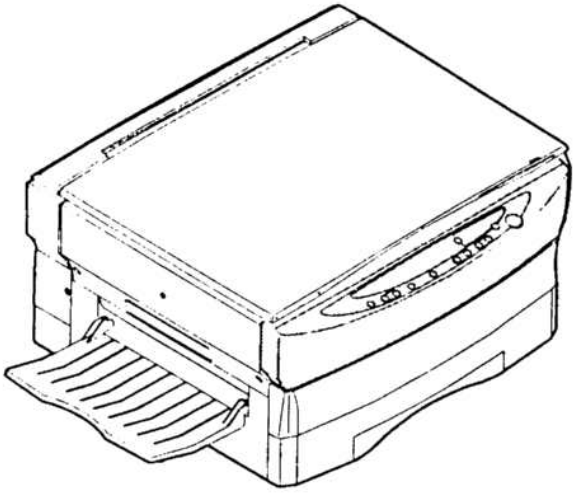

A. List

No.	Part name	Ref. page
1	Operation panel unit	8-1
2	Operation PWB	8-1

B. Disassembly procedure

① Remove four screws and the harness, and remove the operation panel unit.

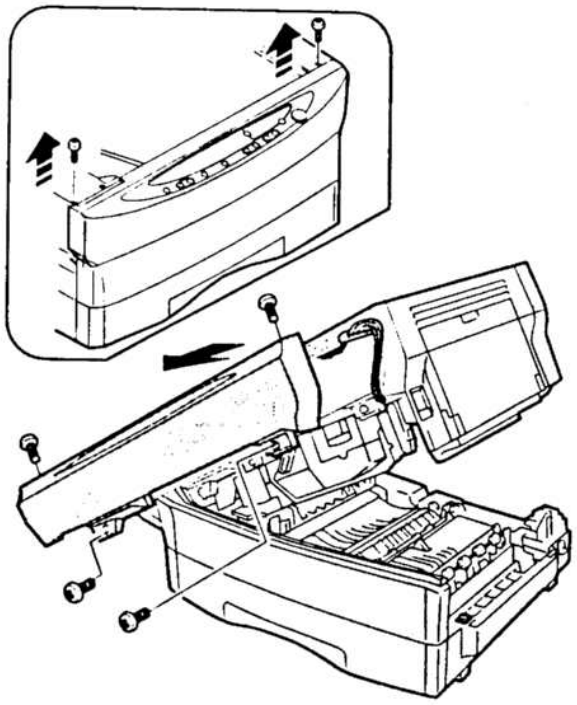

② Remove five screws, and remove the PWB holder.

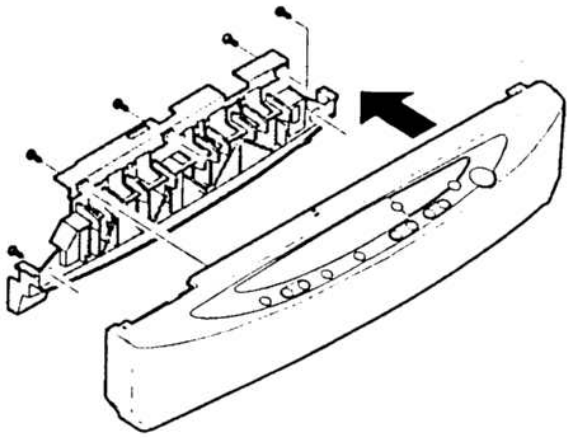

③ Remove five screws, and remove the operation PWB.

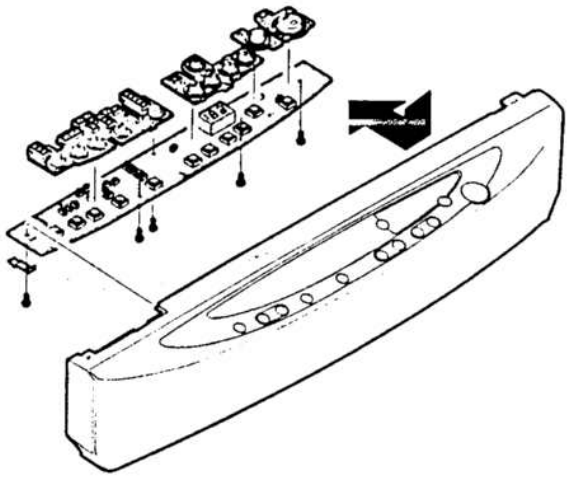

C. Assembly procedure

Reverse the disassembly procedure.

2. Optical section

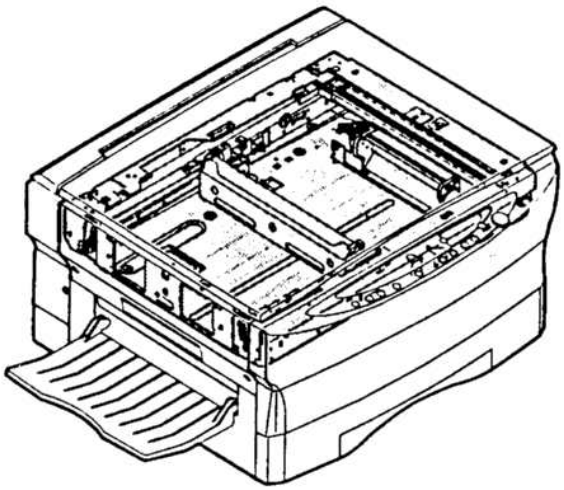

A. List

No.	Part name	Ref. page
1	Copy lamp unit	8-2
2	Copy lamp	8-2
3	AE sensor PWB	8-3
4	Lens unit	8-2
5	No. 2/3 mirror unit	8-3
6	No. 4/5 mirror unit	8-3
7	Mirror home position sensor PWB	8-3
8	Lens home position sensor PWB	8-3

B. Disassembly procedure

① Remove the parts as shown below.

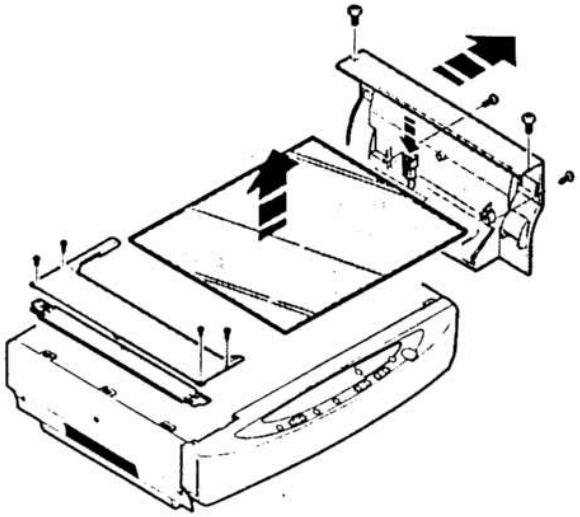

② Remove two screws and the connector, and remove the copy lamp unit.

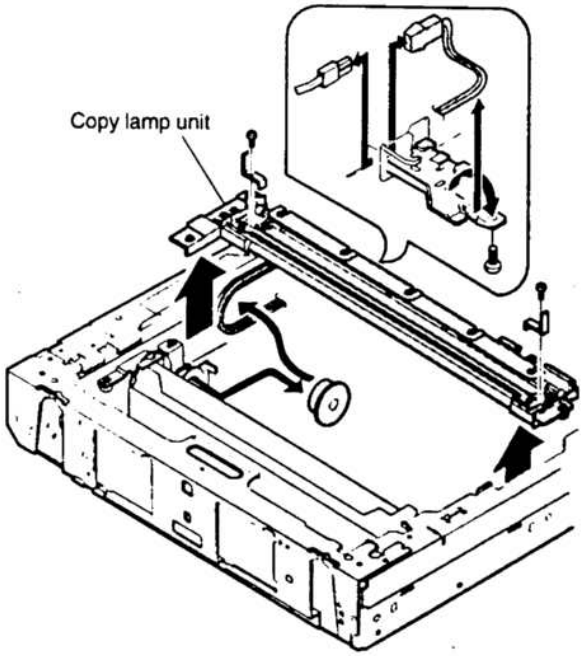

③ Remove the copy lamp.

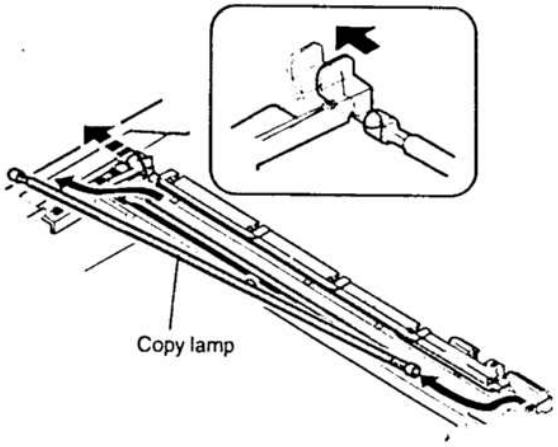

④ Remove the E-ring and the shaft and the lens drive wire, and remove the lens unit.

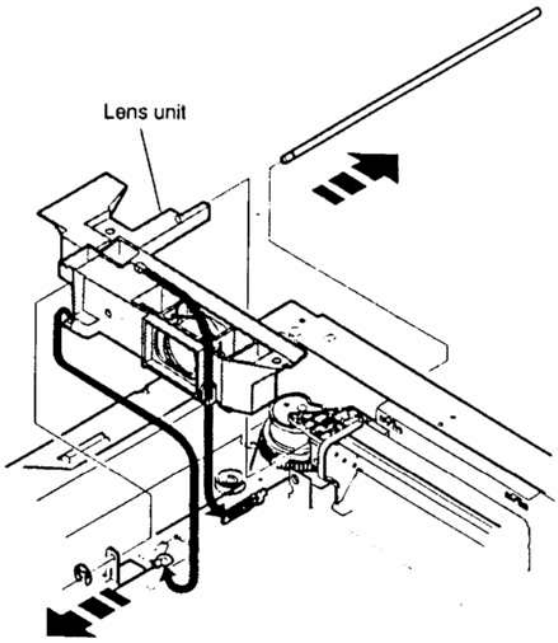

⑤ Remove the mirror base drive wire, and remove No. 2/3 mirror unit.

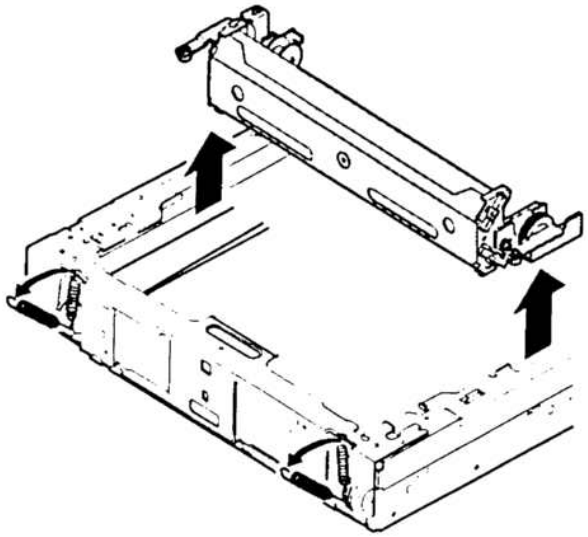

⑥ Remove one screw and the spring, pull out the shaft, and remove No. 4/5 mirror unit.

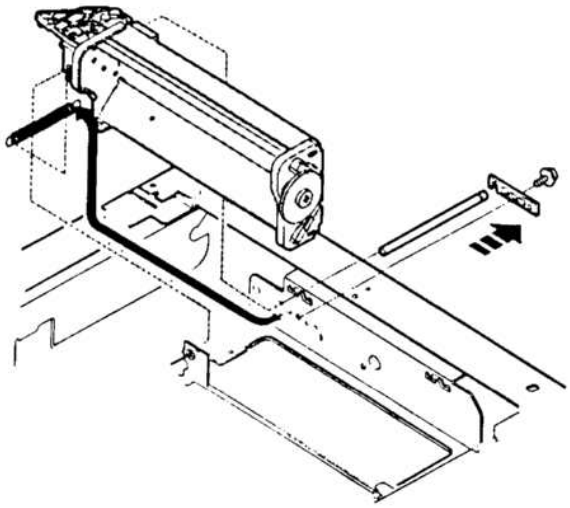

⑦ Remove one screw, and remove the mirror home position sensor.

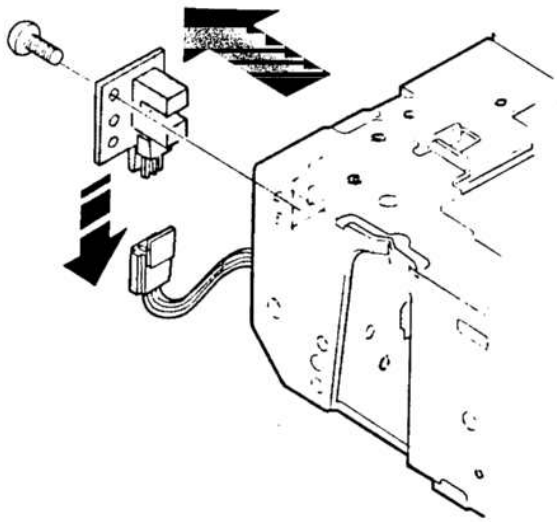

⑧ Remove one screw, and remove the lens home position sensor.

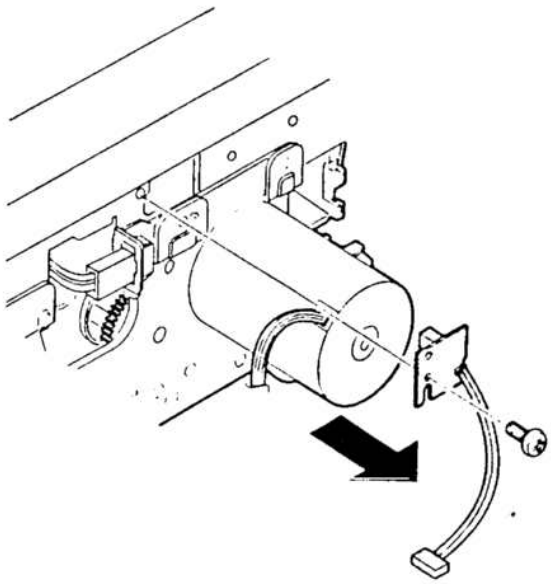

⑨ Remove one screw, and remove the AE holder.

⑩ Remove one screw, and remove the AE sensor PWB.

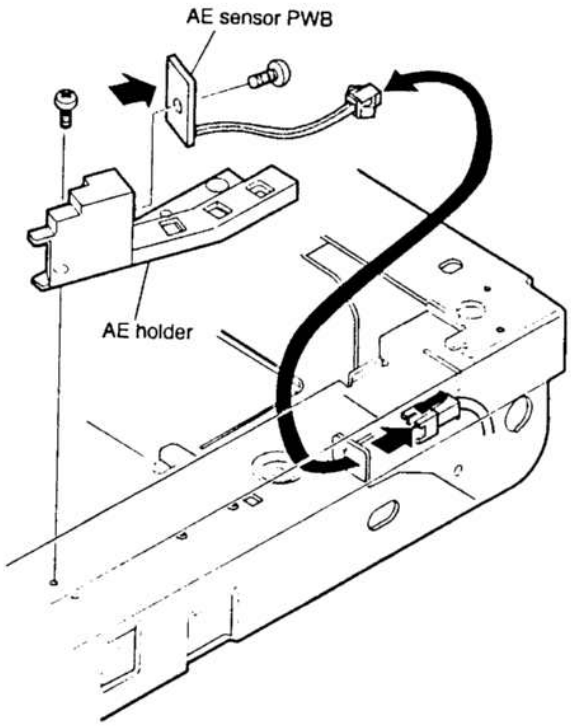

C. Assembly procedure

Basically reverse the disassembly procedure.

The mirror base drive wire and the lens drive wire stretching methods are described below.

a. Mirror base drive wire stretching

① Hook the metal fixture of the mirror base drive wire on the projection of the optical base plate.

② Pass the wire through the external groove of the double pulley. (At that time, check that No. 2/3 mirror unit is in contact with the mirror base positioning plate.)

③ Hold so that the winding pulley groove is up, and wind the mirror base drive wire 8 turns.

④ Put the 7th turn of the mirror base drive wire in the winding pulley groove and fix with a screw.

⑤ Pass the wire under Mo. 2/3 mirror unit plate and wind it around pulley A.

⑥ Pass the wire through the internal groove of the double pulley, and pass through pulley B.

⑦ Hook the spring hook on the optical base plate.

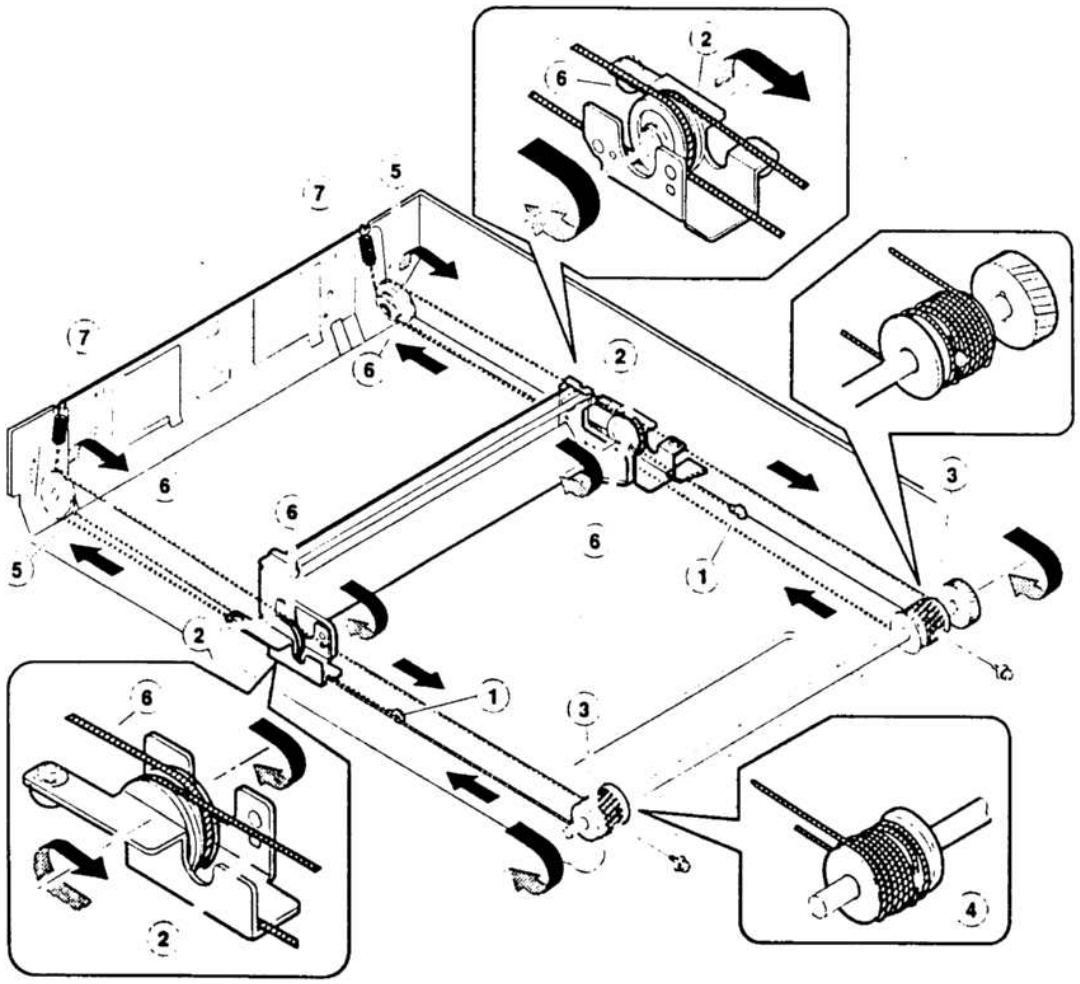

* After installing the mirror base drive wire, be sure to perform horizontal image distortion adjustment.

b. Lens drive wire stretching

① Manually move the lens carriage unit to fit the lens base edge with the center of marking on the optical base plate.

② Under the above state, fit zooming cam hole and drive gear hole and the optical base plate hole (by inserting a pin) and insert the zooming cam drive gear into the shaft.

③ Stretch the lens drive wire.

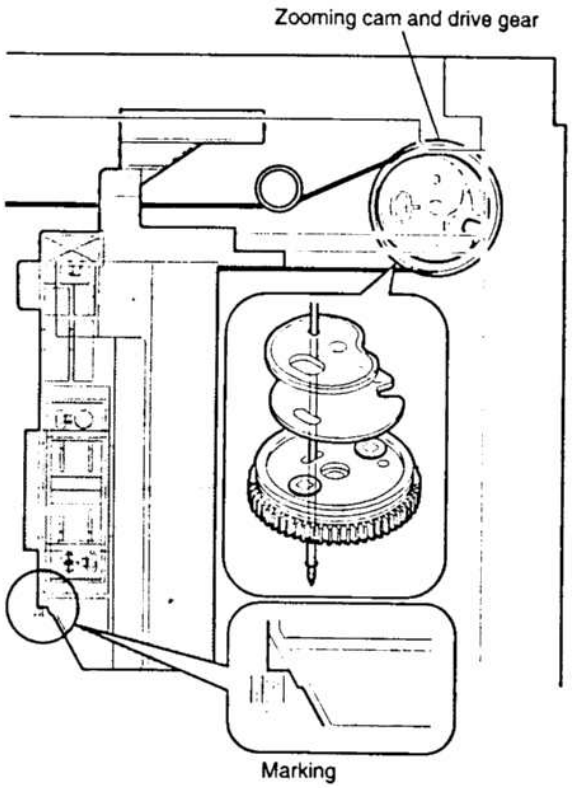

* After installing the lens drive wire, be sure to perform the focus adjustment.

Normal: Change the position of No. 4/5 mirror unit drive lever to adjust.

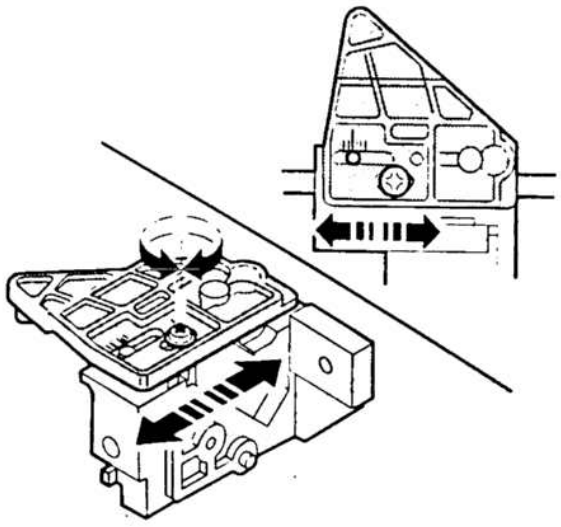

Enlargement/Reduction: Change the position of the zooming cam to adjust.

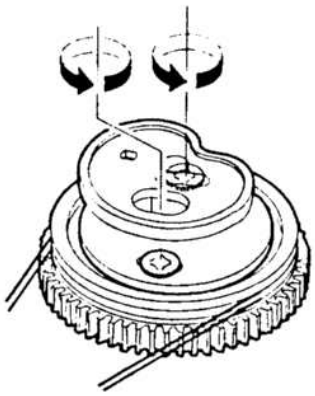

D. Lubrication and greasing

① Apply grease to the lens unit driving section.

Grease name: White grease (X5-6020)

Part code: UKOG-0158FCZZ

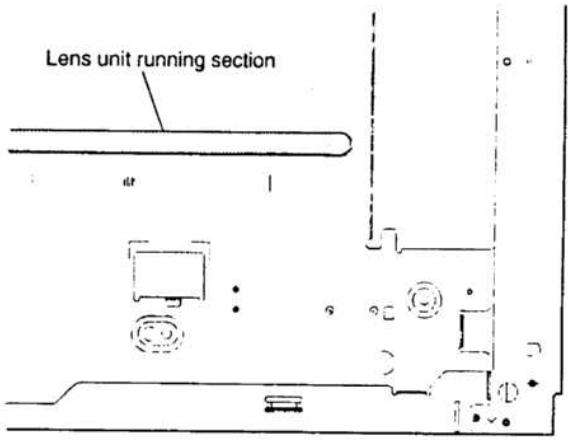

② Apply grease to the lens unit and No. 4/5 mirror unit drive section.

Grease name: Floil grease (Floil G-484)

Part code: UKOG-0238FCZZ

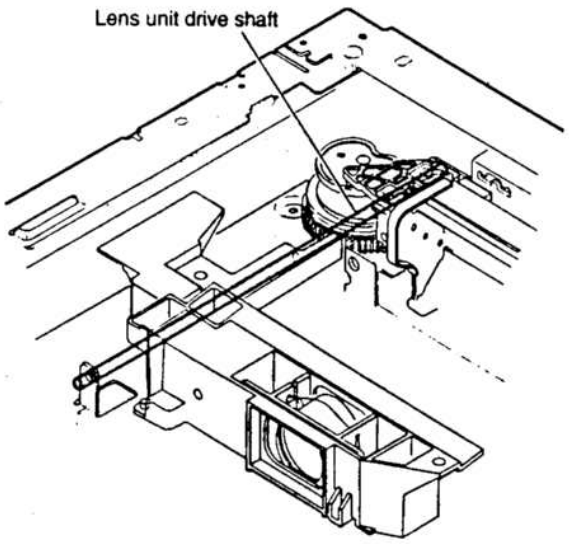

③ Apply grease to the copy lamp unit driving section.

Grease name: White grease (X5-6020)

Part code: UKOG-0158FCZZ

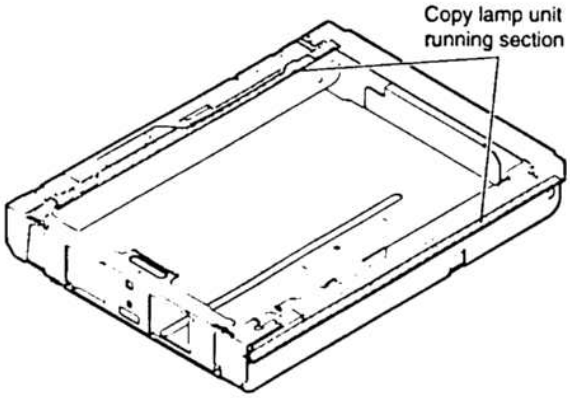

④ Apply grease to No. 2/3 mirror unit driving section.

Grease name: White grease (X5-6020)

Part code: UKOG-0158FCZZ

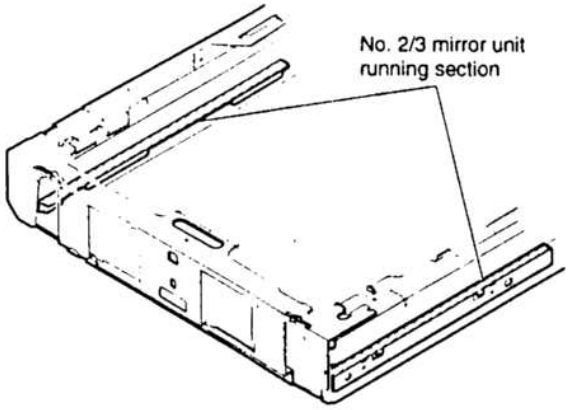

3. Fusing section

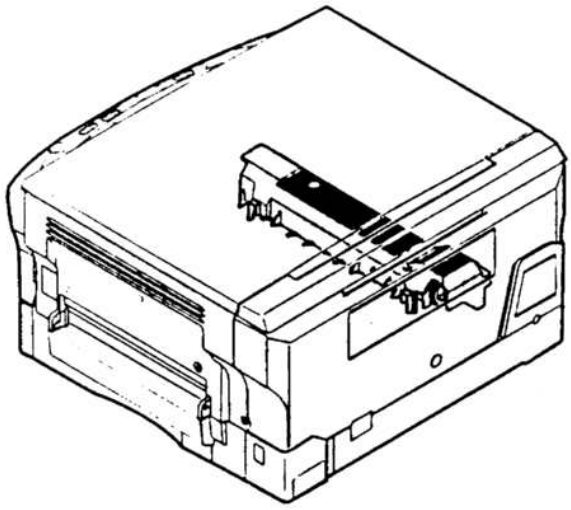

A. List

No.	Part name	Ref. page
1	Fusing upper unit	8-6
2	Heater lamp	8-7
3	Thermostat unit	8-7
4	Thermistor	8-7
5	Upper heat roller	8-7
6	Separation pawl	8-8
7	Lower heat roller	8-8
8	Cleaning roller	8-8

B. Disassembly procedure

① Loosen the blur screw, and remove the fusing upper unit, and remove the cover.

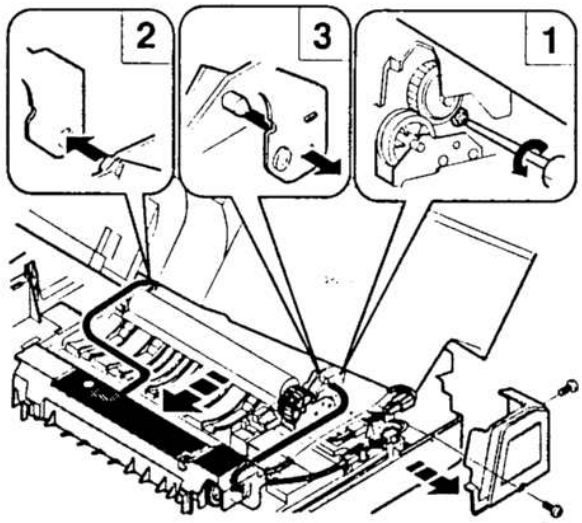

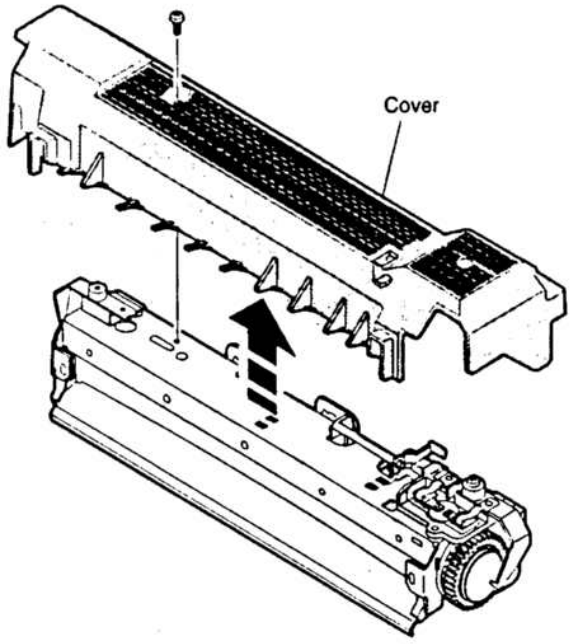

② Remove the left plate spring, and remove the heater lamp.

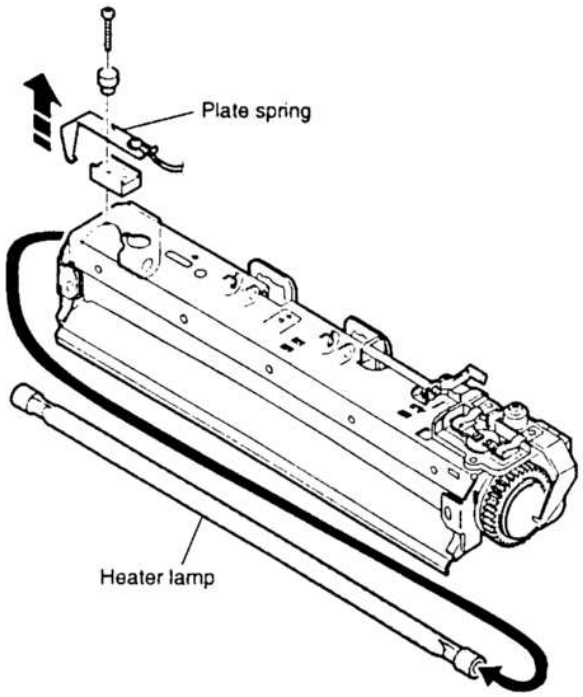

③ Remove two screws, and remove the thermostat.

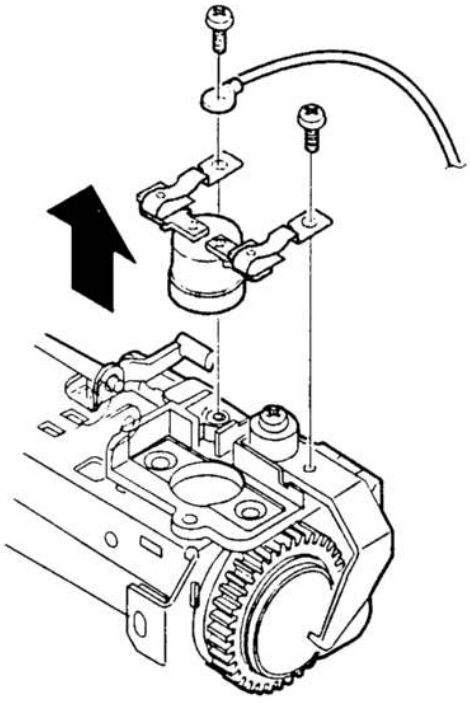

④ Remove one screw and the fixing band, and remove the thermistor.

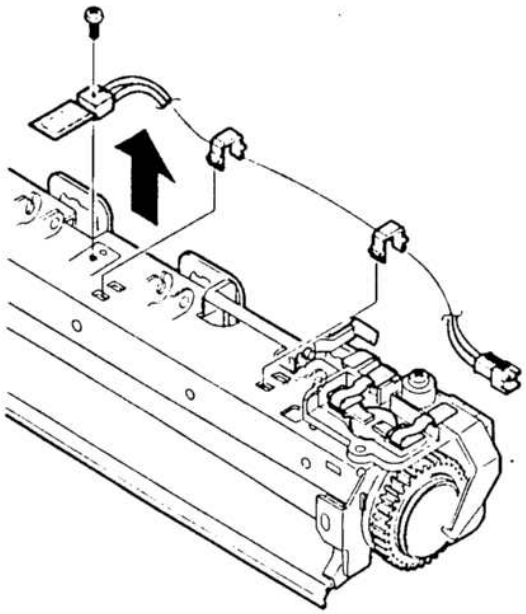

⑤ Remove the spring, and the separation pawl.

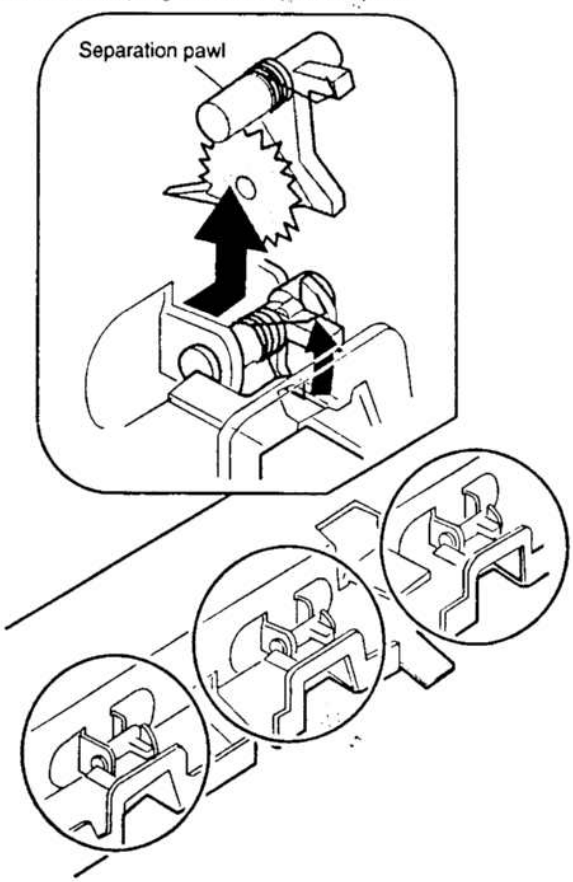

⑥ Remove the plate spring of the heater lamp on the right side.

⑦ Remove C-ring on the left side and the bearing, and remove the upper heat roller.

⑧ Remove C-ring on the right side, and remove the gear and the bearing.

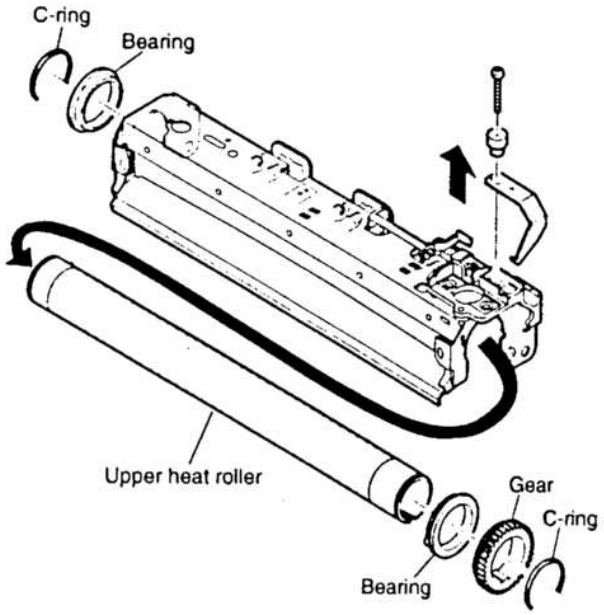

⑨ Remove the lower heat roller.

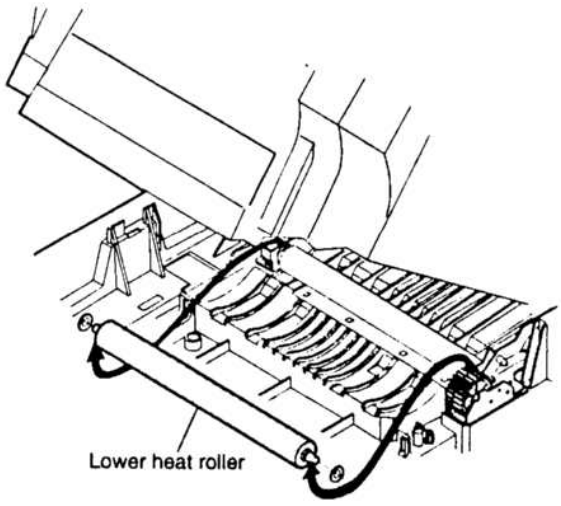

⑩ Remove the cleaning roller.

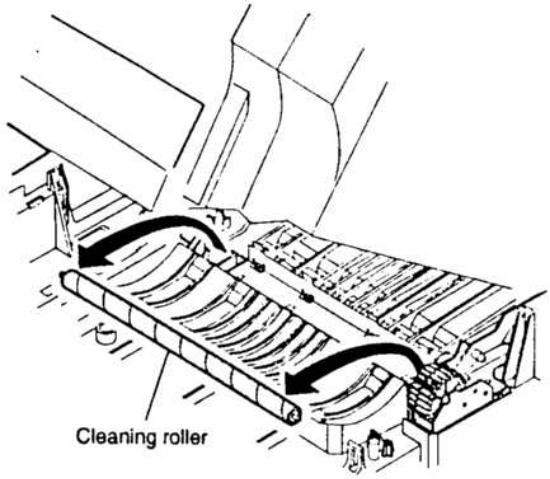

C. Assembly procedure

Reverse the disassembly procedure.

D. Lubrication and greasing

Apply grease to the U section of the lower heat roller bearing.

Grease name: Floil grease (Floil: GU2)

Part code: UKOG-0255FCZZ

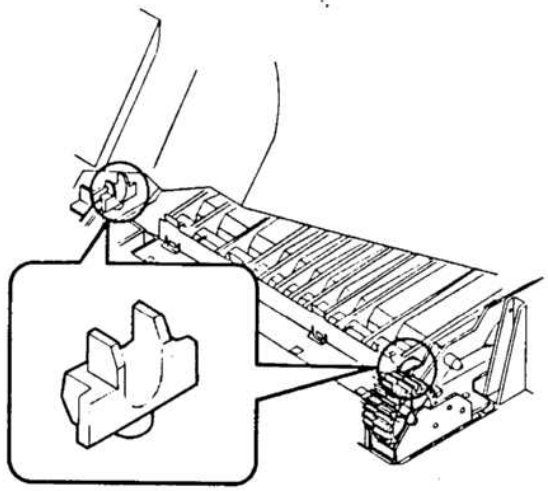

4. Tray paper feed/transport section

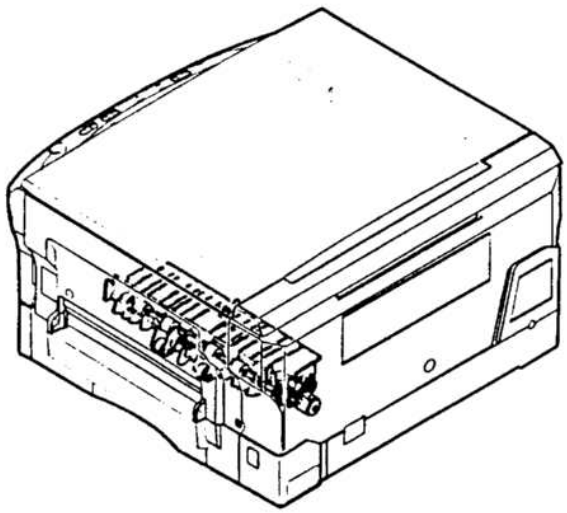

A. List

No.	Part name	Ref. page
1	Paper feed roller ass'y	8-9
2	PPD1 sensor PWB	8-9
3	PPD2 sensor PWB	8-9

B. Disassembly procedure

① Remove three screws and the harness, and remove the tray paper feed unit (paper transport unit).

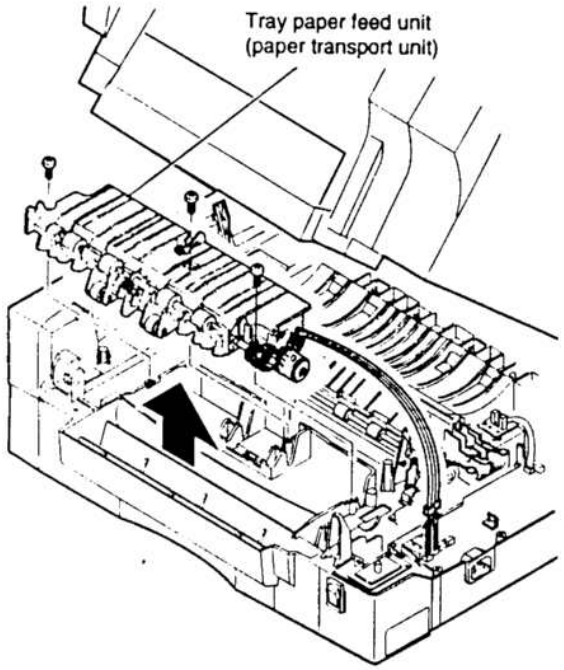

② Remove E-ring, and remove the clutch unit.

③ Remove E-ring and the spring, and remove the paper feed link arm and the bearing.

④ Remove the paper feed roller unit from the tray paper feed unit (paper transport unit).

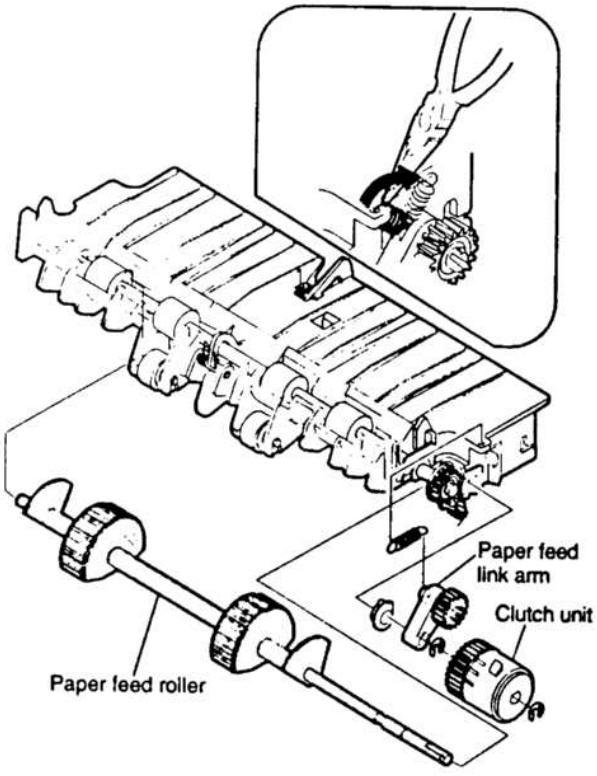

⑤ Remove PPD1 sensor PWB.

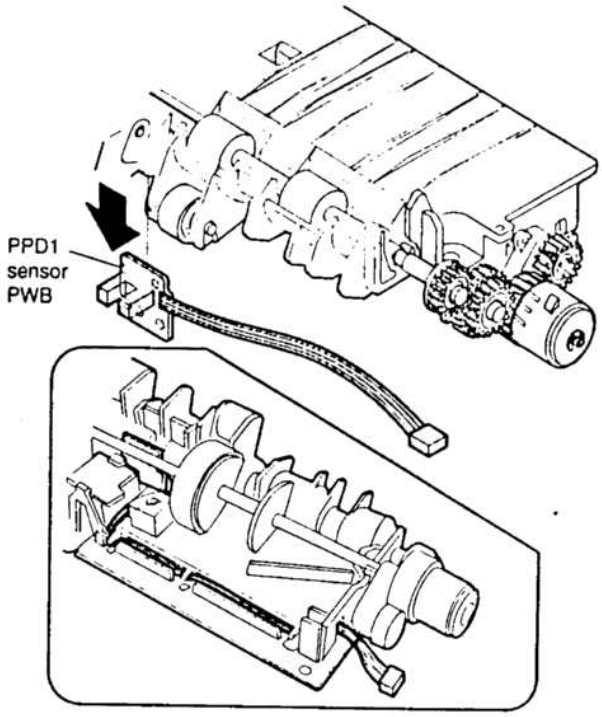

⑥ Remove PPD2 sensor PWB.

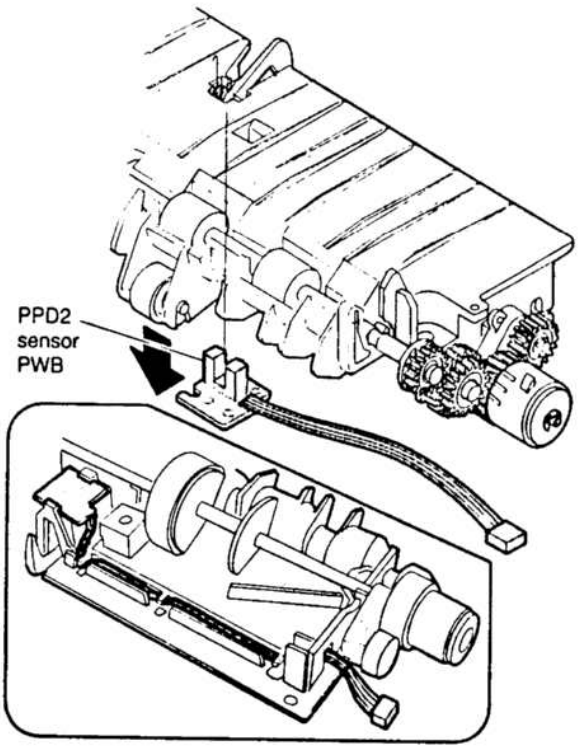

C. Assembly procedure

Reverse the disassembly procedure.

5. Manual paper feed section

* Descriptions are based on the multi manual paper feed unit.

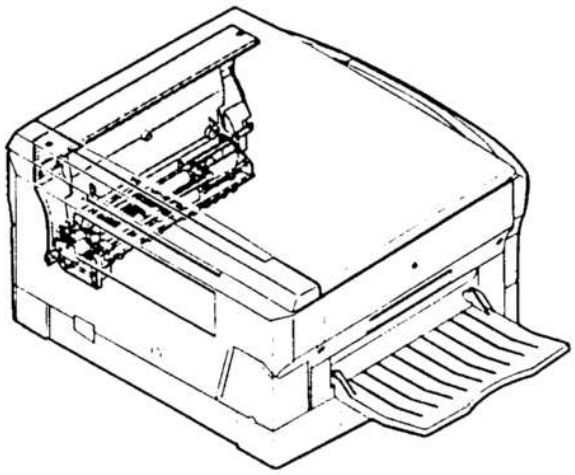

A. List

No.	Part name	Ref. page
1	Paper feed roller	8-11
2	Pick-up roller	8-11
3	Spring clutch A	8-11
4	Spring clutch B	8-12
5	Multi field solenoid	8-12

B. Disassembly procedure

① Remove four screws and the harness, and remove the multi paper feed unit.

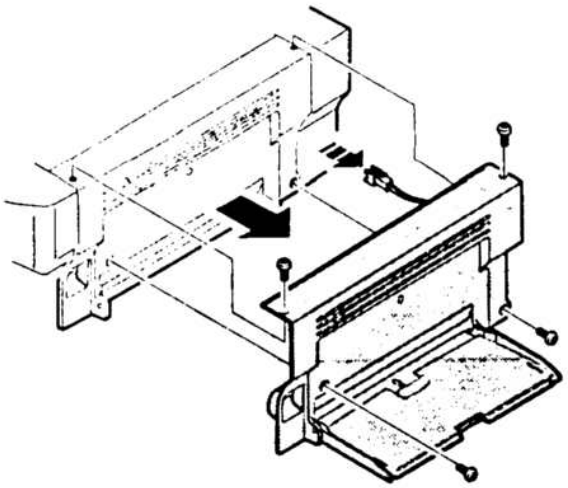

② Remove two screws and the spring, and remove the arm hinge, arm B, stopper, and arm A.

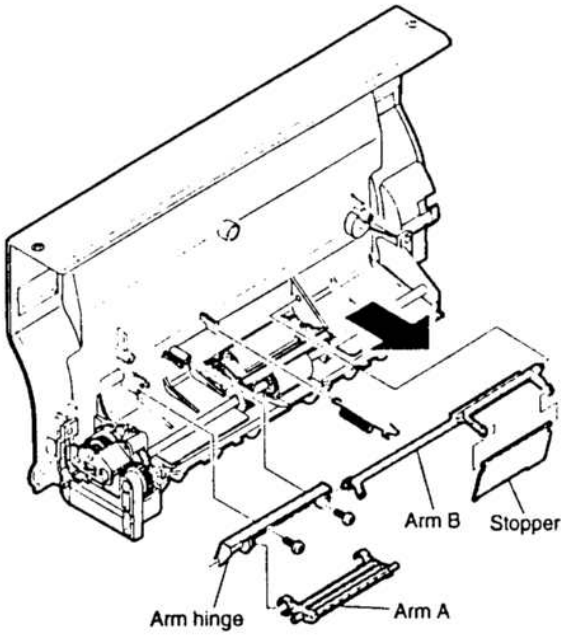

③ Remove four screws, and remove the paper feed unit.

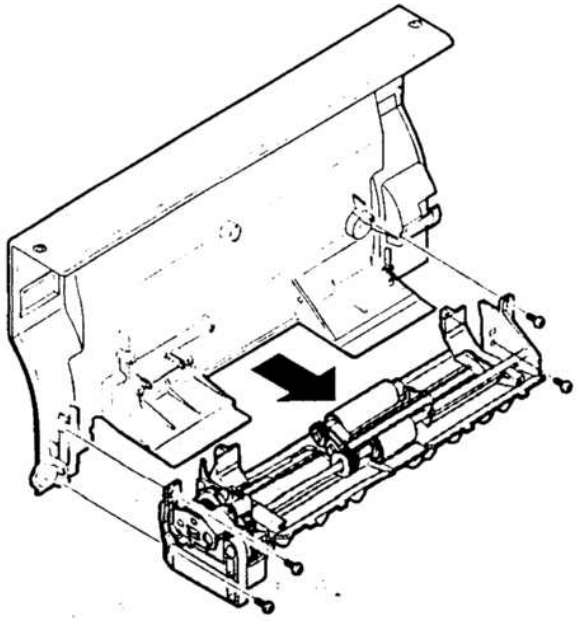

④ Remove the parts as shown below.

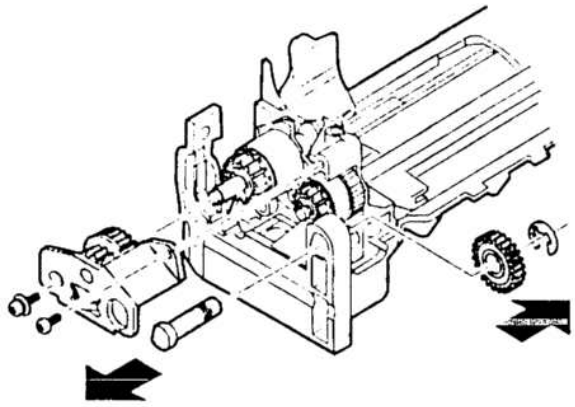

⑤ Remove the paper feed roller.

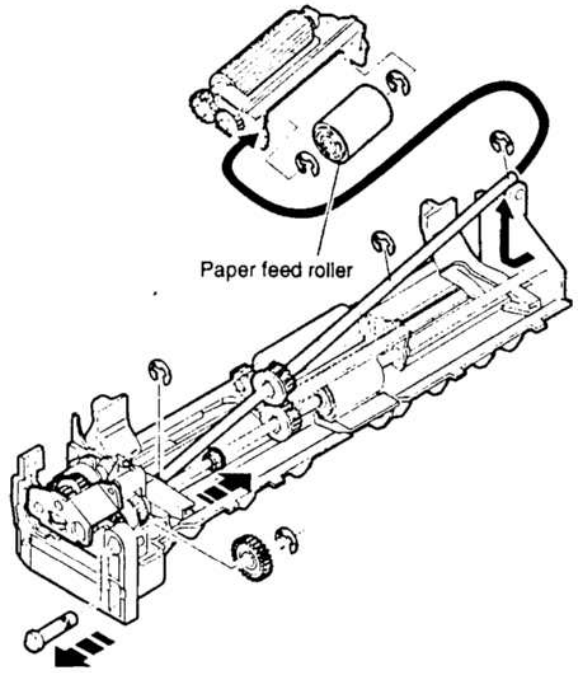

⑥ Remove the pick-up roller.

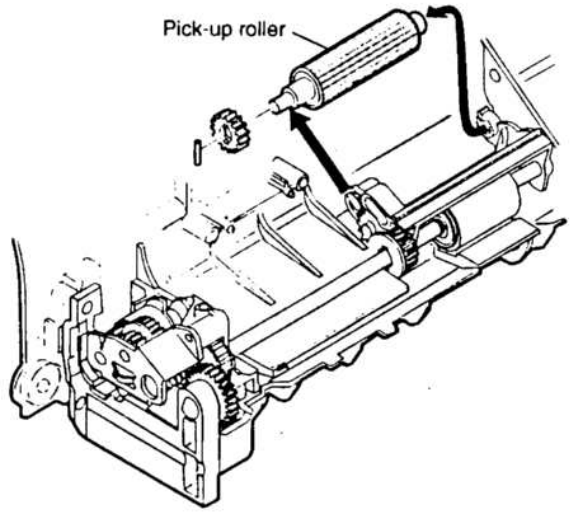

⑦ Remove the parts of spring clutch A as shown below.

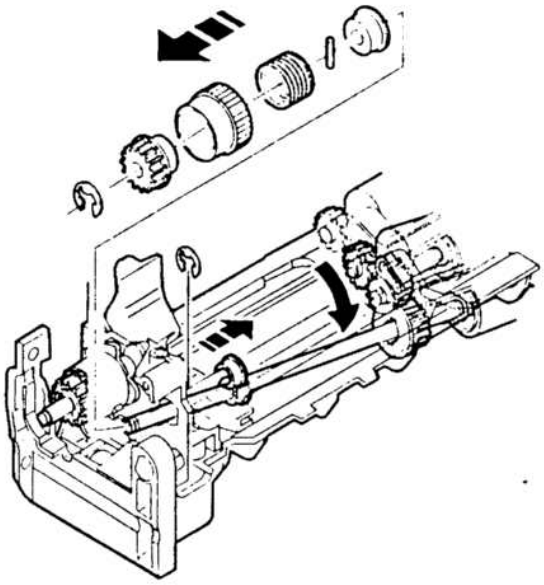

⑧ Remove two screws, and remove the bracket.

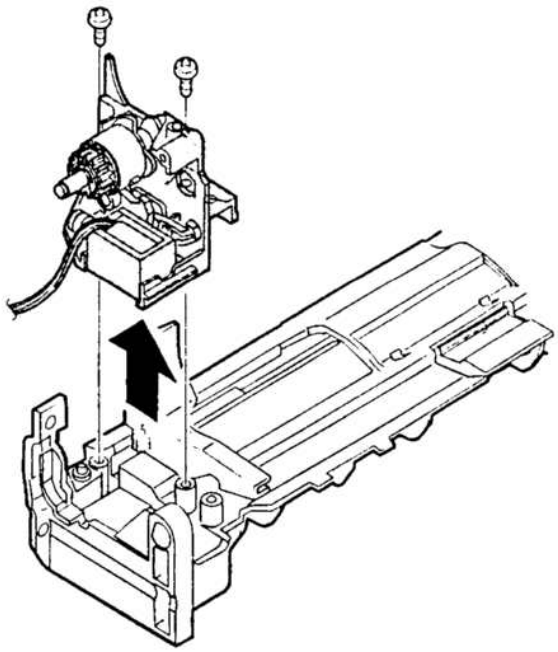

⑨ Remove the parts of spring clutch B as shown below.

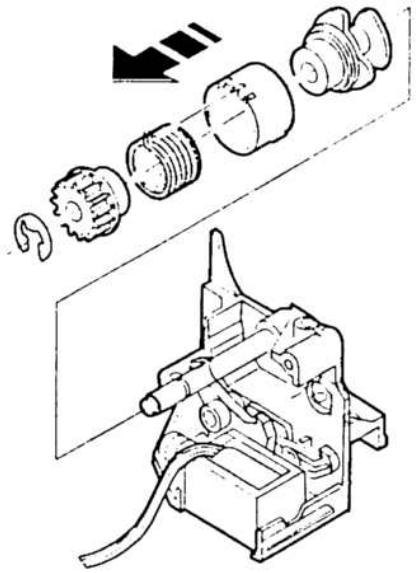

⑩ Remove one screw, and remove the multi field solenoid.

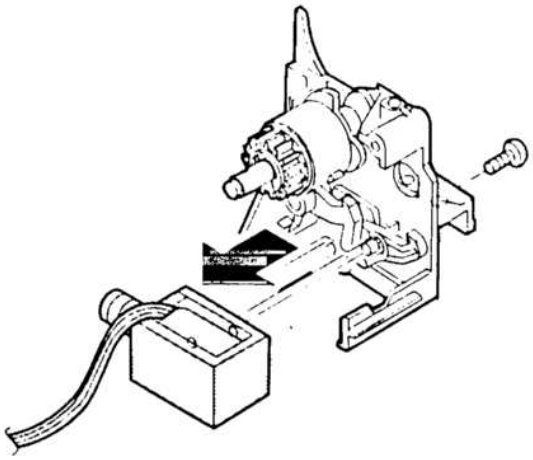

C. Assembly procedure

Reverse the disassembly procedure.

D. Note for assembly

① Be careful of the installing direction of the paper feed roller.

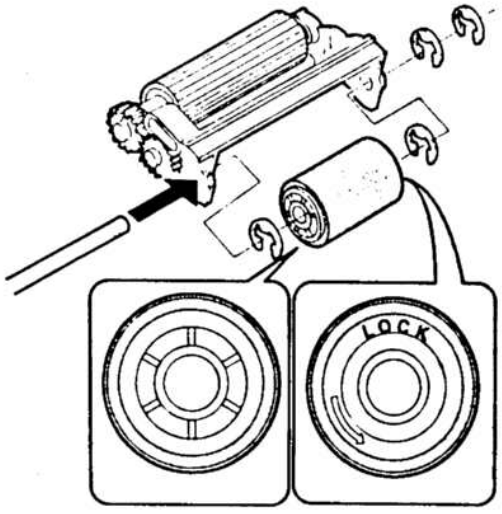

② Be careful of the insertion position of the spring when installing spring clutch B.

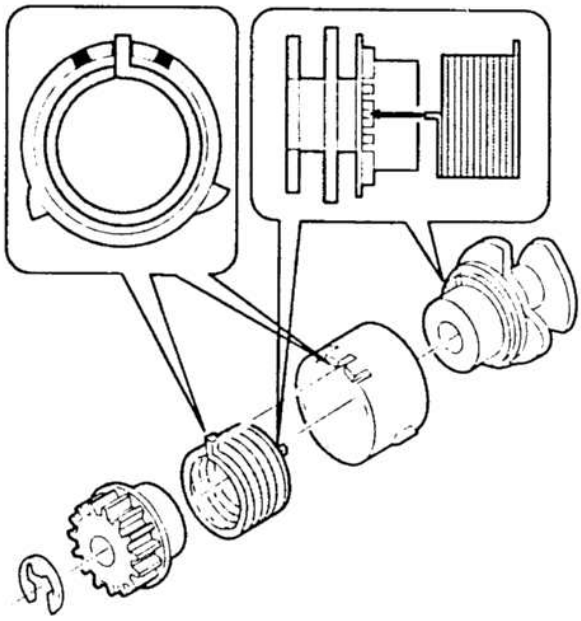

* Insert the hook into the initial position where it was before disassembly.

③ After assembly of the unit, rotate the gear section and check that the stopper and arm B are at the initial positions.

E. Lubrication and greasing

① Apply grease to the cam boss of spring clutch A.

Grease name: Floil grease (Floil G-484)

Part code: UKOG-0238FCZZ

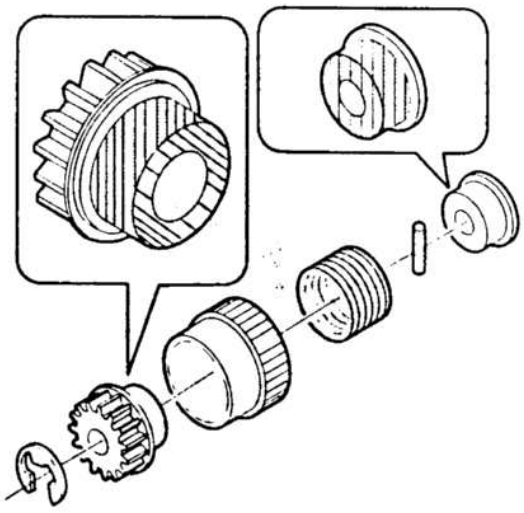

② Apply grease to the engagement section of the pick-up roller.

Grease name: Floil grease (Floil G-484)

Part code: UKOG-0238FCZZ

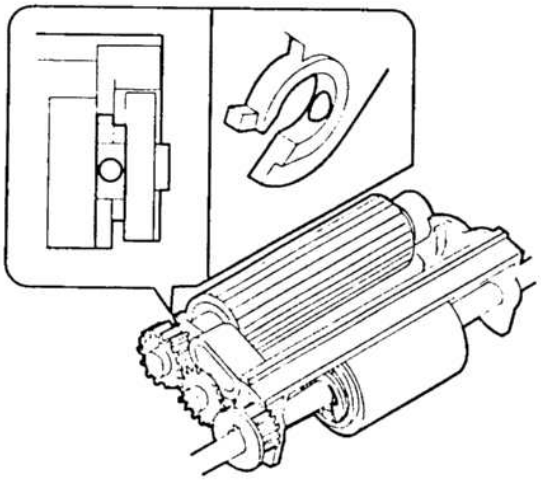

③ Apply grease to the gearing of arm C.

Grease name: Floil grease (Floil G-484)

Part code: UKOG-0238FCZZ

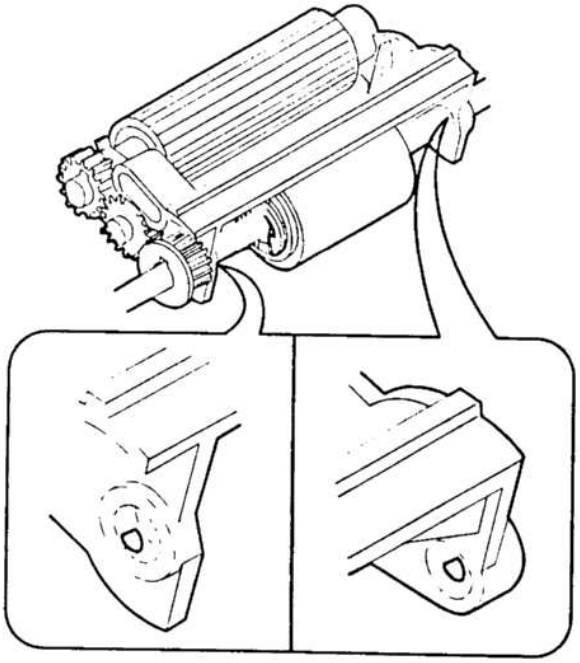

6. Rear frame section

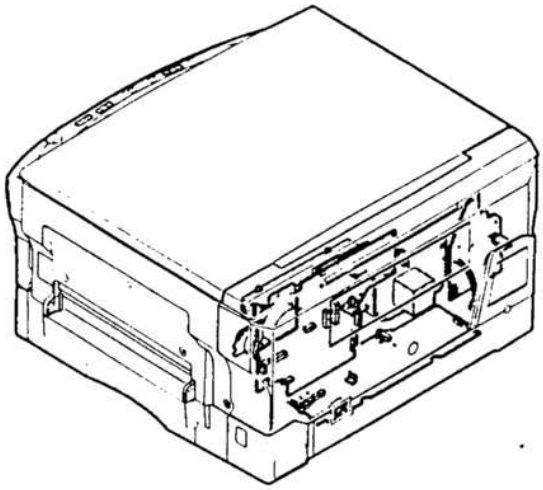

A. List

No.	Part name	Ref. page
1	Main PWB unit	8-13
2	High voltage PWB unit	8-14
3	AC PWB unit	8-14
4	DC PWB unit	8-14
5	Drive unit	8-15

B. Disassembly procedure

① Remove one screw and the harness, and remove the main PWB unit.

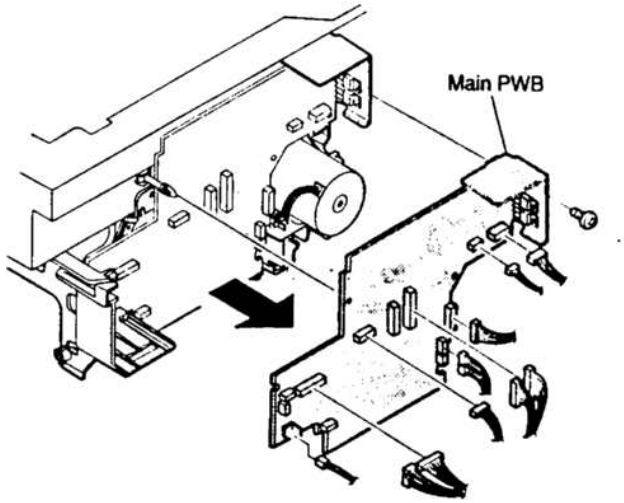

② Remove two screws and the harness, and remove the DC PWB unit.

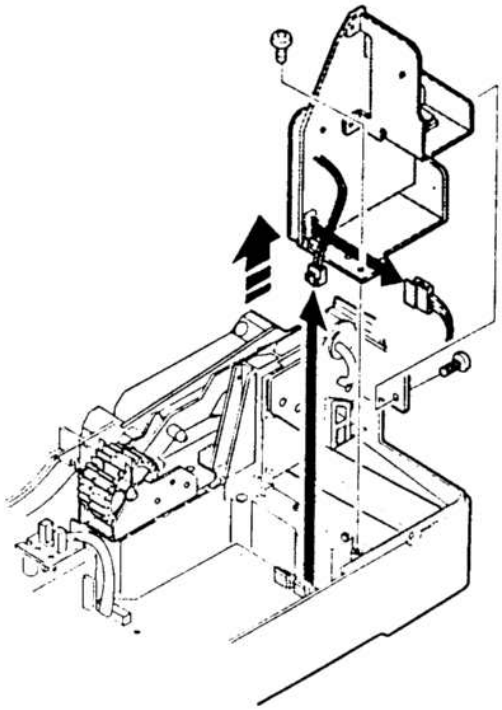

③ Remove one screw and the harness, and remove the high voltage PWB unit.

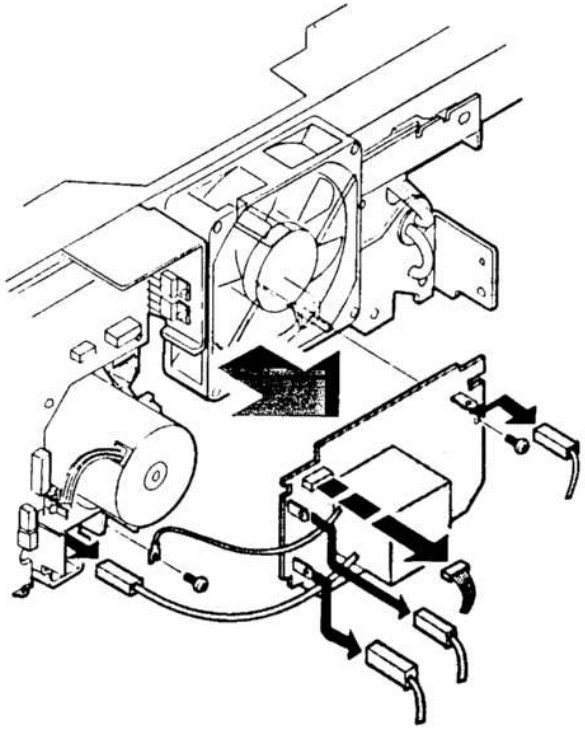

④ Remove four screws, and remove the cover.

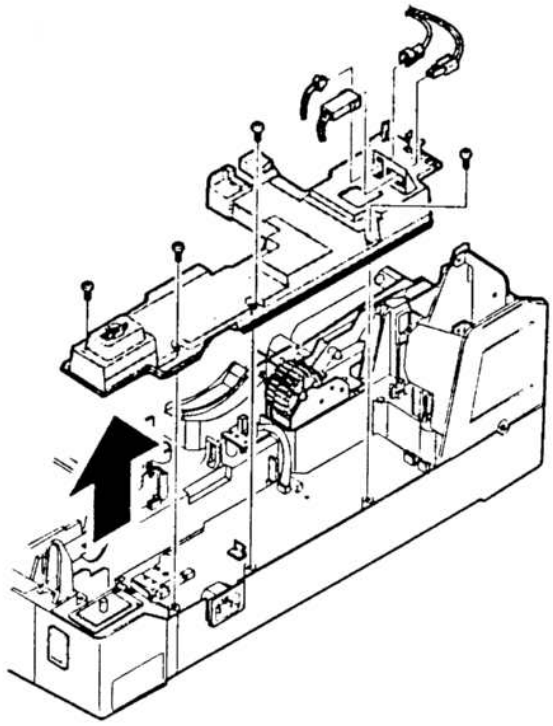

⑤ Remove two screws and the harness, and remove the AC PWB unit.

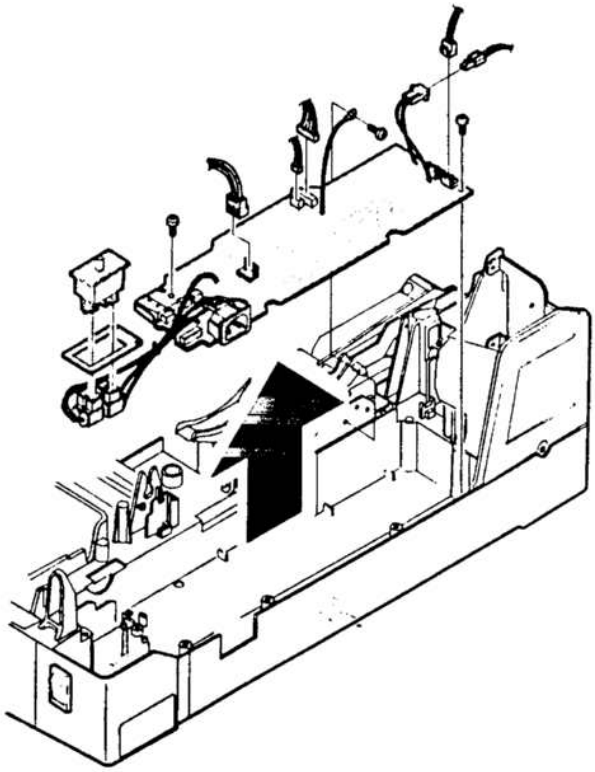

⑥ Remove three screws, and remove the socket unit.

⑦ Remove the five screws and the harness, and remove the drive unit.

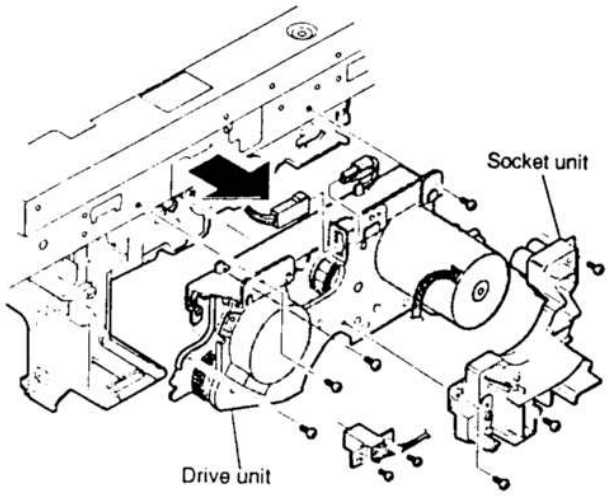

C. Assembly procedure

Reverse the disassembly procedure.

D. Note for assembly

① Treat the wire neatly and eliminate pinching of the wire.

② Do not mistake the transfer charger connector with the separation electrode connector for insertion.

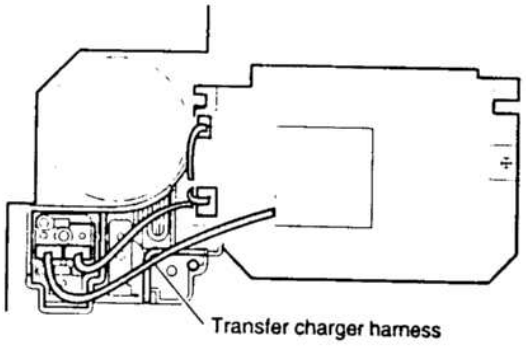

7. Others

A. OC matt attachment procedure

① Put the OC matt to the reference position as shown below and remove the duplex tape.

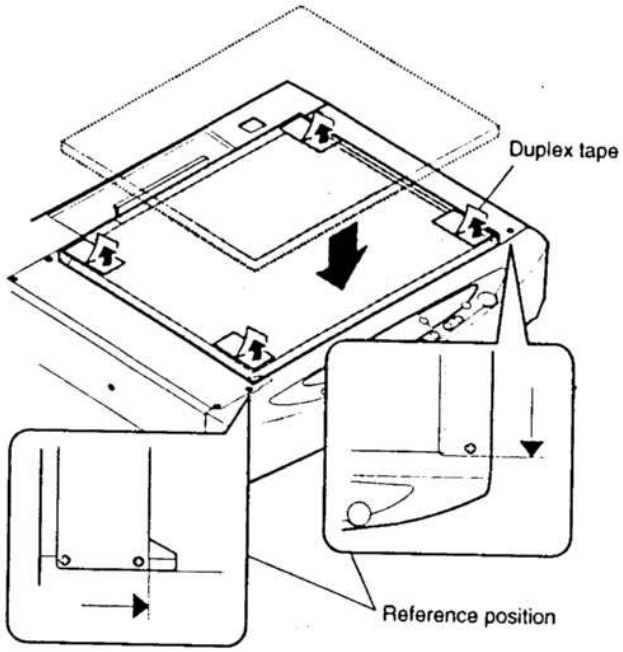

② Tilt down the OC cover, and attach the OC matt.

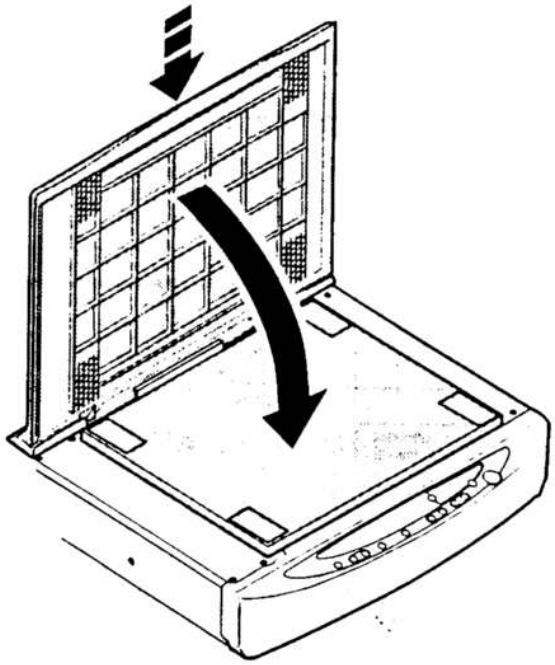

[9] ADJUSTMENTS

1. Optical section

A. Adjustments list

Classification	No.	Adjustment content			Adjustment value/ Standard value	Necessary special tool	Ref. page
Parts installation position	(1)	Mirror	a	No. 4/5 mirror unit right angle adjustment	—	—	9-4
			b	No. 4/5 mirror unit drive cam position adjustment	—	—	9-5
Copy picture quality	(2)	Image distortion adjustment	a	Horizontal image distortion adjustment	—	—	9-5
			b	Vertical image distortion adjustment		—	9-8
	(3)	Copy image center adjustment			0 ± 2.0 mm	—	9-9
	(4)	Focus adjustment			*	—	9-10
	(5)	Copy magnification ratio adjustment	a	Vertical copy magnification ratio adjustment	100 ± 1.0%	—	9-11
			b	Horizontal copy magnification ratio adjustment	100 ± 1.0%	—	9-12
	(6)	Uniformity adjustment			—	—	9-14
	(7)	Image loss, void area adjustment	a	Copy image position adjustment	—	—	9-14
			b	Lead edge void area adjustment	1 ~ 4	—	9-17
				Rear edge void area adjustment	4 mm or less	—	9-17

* For details, refer to the "Ref. page."

B. Notes and precautions

Be sure to follow the following precautions when performing adjustments.

1) Observe the sequence of procedures shown in the flowchart below.
2) Adjustments can be started midway in the flowchart only if all the previous items have been properly adjusted.
3) If the content of an adjustment item in the flowchart is changed, all the following items must ge adjusted accordingly.
4) "Sim" in the flowchart stands for "Simulation."

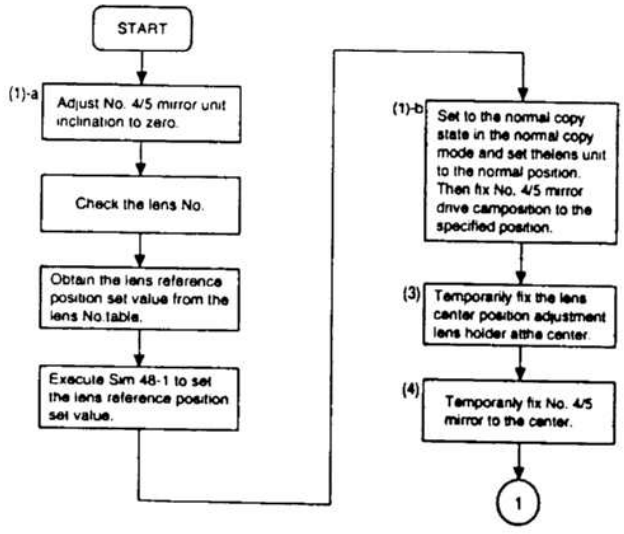

* Lens display value and simulation input value

Lens No.	18	17	16	15	14	13	12	11	10	9	8	7	6	5	4	3	2	1	0	−1
Sim48-1	36	38	40	41	43	45	47	48	50	52	53	55	57	59	60	62	64	65	67	69

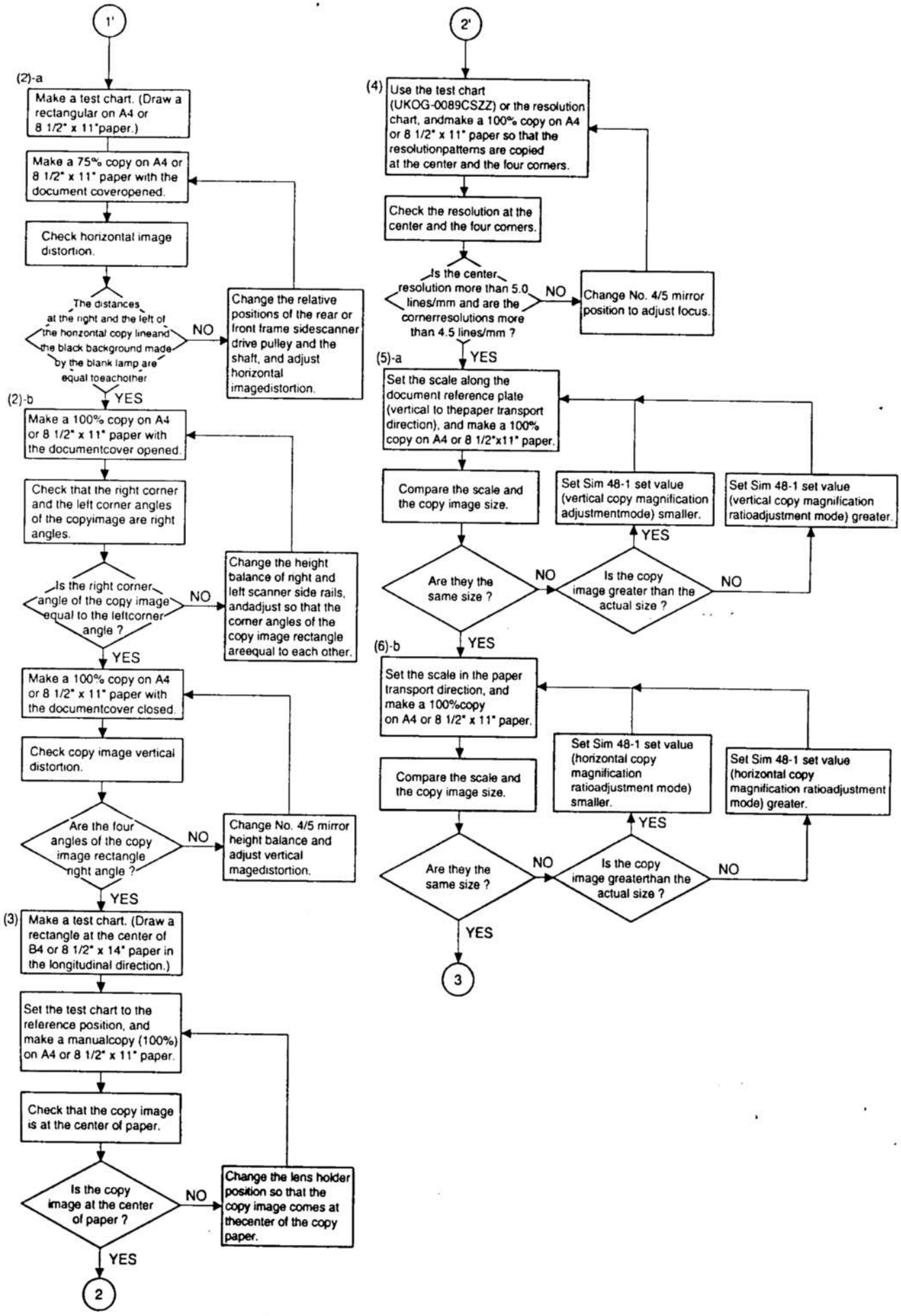
1'
(2)-a
Make a test chart. (Draw a rectangular on A4 or 8 1/2" x 11"paper.)
Make a 75% copy on A4 or 8 1/2" x 11" paper with the document coveropened.
Check horizontal image distortion.
The distances at the right and the left of the honzontal copy lineand the black background made by the blank lamp are equal toeachother
NO
Change the relative positions of the rear or front frame sidescanner drive pulley and the shaft, and adjust horizontal imagedistortion.
YES
(2)-b
Make a 100% copy on A4 or 8 1/2" x 11" paper with the documentcover opened.
Check that the right corner and the left corner angles of the copyimage are right angles.
Is the right corner angle of the copy image equal to the leftcorner angle ?
NO
Change the height balance of right and left scanner side rails, andadjust so that the corner angles of the copy image rectangle areequal to each other.
YES
Make a 100% copy on A4 or 8 1/2" x 11" paper with the documentcover closed.
Check copy image vertical distortion.
Are the four angles of the copy image rectangle right angle ?
NO
Change No. 4/5 mirror height balance and adjust vertical magedistortion.
YES
(3)
Make a test chart. (Draw a rectangle at the center of B4 or 8 1/2" x 14" paper in the longitudinal direction.)
Set the test chart to the reference position, and make a manualcopy (100%) on A4 or 8 1/2" x 11" paper.
Check that the copy image is at the center of paper.
Is the copy image at the center of paper ?
NO
Change the lens holder position so that the copy image comes at thecenter of the copy paper.
YES
2
2'
(4)
Use the test chart (UKOG-0089CSZZ) or the resolution chart, andmake a 100% copy on A4 or 8 1/2" x 11" paper so that the resolutionpatterns are copied at the center and the four corners.
Check the resolution at the center and the four corners.
Is the center resolution more than 5.0 lines/mm and are the cornerresolutions more than 4.5 lines/mm ?
NO
Change No. 4/5 mirror position to adjust focus.
YES
(5)-a
Set the scale along the document reference plate (vertical to thepaper transport direction), and make a 100% copy on A4 or 8 1/2"x11" paper.
Compare the scale and the copy image size.
Set Sim 48-1 set value (vertical copy magnification adjustmentmode) smaller.
Set Sim 48-1 set value (vertical copy magnification ratioadjustment mode) greater.
YES
Are they the same size ?
NO
Is the copy image greater than the actual size ?
NO
YES
(6)-b
Set the scale in the paper transport direction, and make a 100%copy on A4 or 8 1/2" x 11" paper.
Compare the scale and the copy image size.
Set Sim 48-1 set value (horizontal copy magnification ratioadjustment mode) smaller.
Set Sim 48-1 set value (horizontal copy magnification ratioadjustment mode) greater.
YES
Are they the same size ?
NO
Is the copy image greaterthan the actual size ?
NO
YES
3

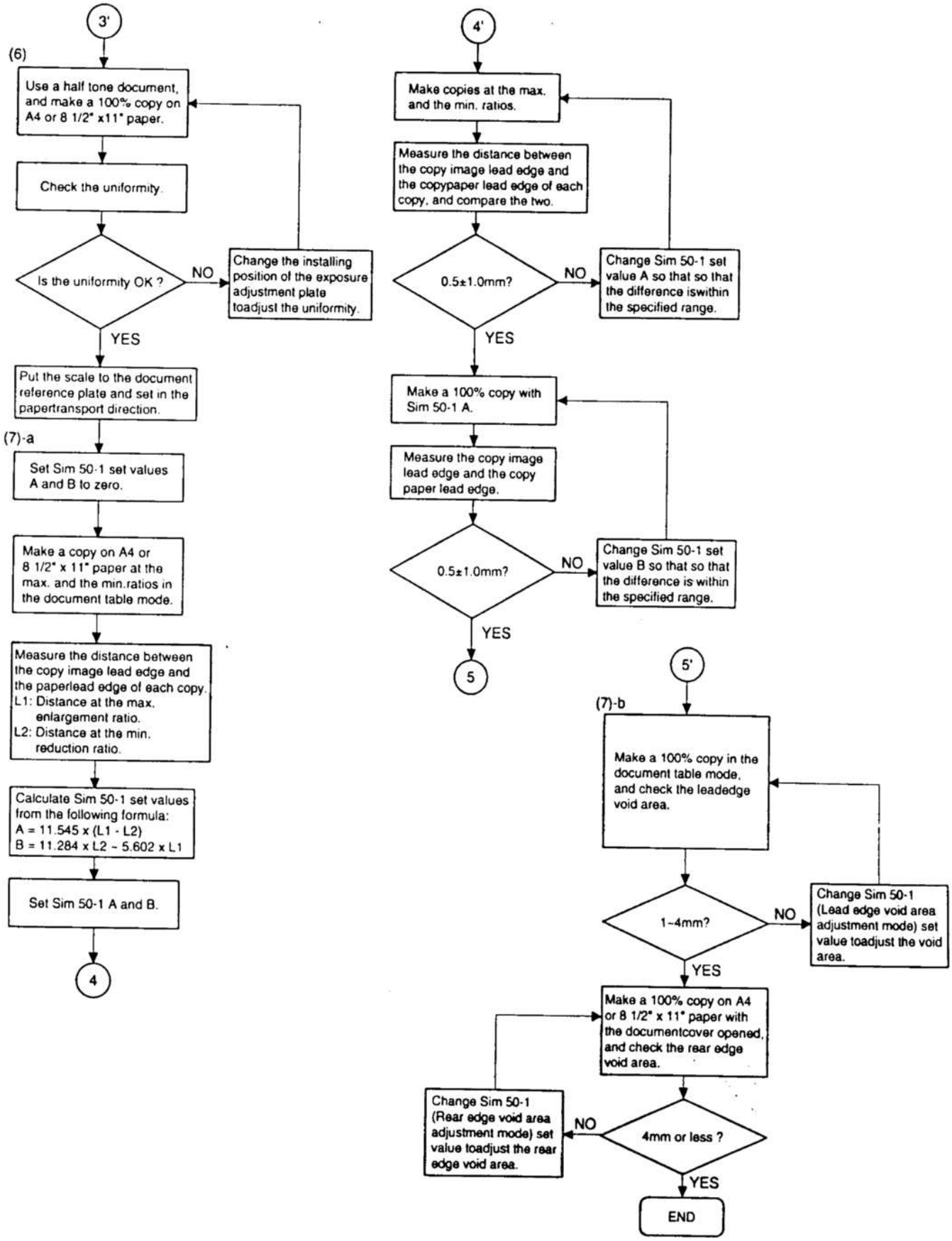
3'
(6)
Use a half tone document, and make a 100% copy on A4 or 8 1/2" x11" paper.
Check the uniformity.
Is the uniformity OK ?
NO
Change the installing position of the exposure adjustment plate toadjust the uniformity.
YES
Put the scale to the document reference plate and set in the papertransport direction.
(7)-a
Set Sim 50-1 set values A and B to zero.
Make a copy on A4 or 8 1/2" x 11" paper at the max. and the min.ratios in the document table mode.
Measure the distance between the copy image lead edge and the paperlead edge of each copy.
L1: Distance at the max. enlargement ratio.
L2: Distance at the min. reduction ratio.
Calculate Sim 50-1 set values from the following formula:
A = 11.545 x (L1 - L2)
B = 11.284 x L2 - 5.602 x L1
Set Sim 50-1 A and B.
4
4'
Make copies at the max. and the min. ratios.
Measure the distance between the copy image lead edge and the copypaper lead edge of each copy, and compare the two.
0.5±1.0mm?
NO
Change Sim 50-1 set value A so that so that the difference iswithin the specified range.
YES
Make a 100% copy with Sim 50-1 A.
Measure the copy image lead edge and the copy paper lead edge.
0.5±1.0mm?
NO
Change Sim 50-1 set value B so that so that the difference is within the specified range.
YES
5
5'
(7)-b
Make a 100% copy in the document table mode, and check the leadedge void area.
1~4mm?
NO
Change Sim 50-1 (Lead edge void area adjustment mode) set value toadjust the void area.
YES
Make a 100% copy on A4 or 8 1/2" x 11" paper with the documentcover opened, and check the rear edge void area.
4mm or less ?
NO
Change Sim 50-1 (Rear edge void area adjustment mode) set value toadjust the rear edge void area.
YES
END

C. Adjustment contents

(1) Mirror

The following are adjustment items of the mirror unit.

* No. 4/5 mirror unit right angle adjustment
* No. 4/5 mirror unit drive cam position adjustment

a. No. 4/5 mirror unit right angle adjustment

I. Summary

By setting the optical axis of the copier body and that of the lens in parallel with each other, copy image distortion due to the lens can be reduced.

The horizontal angle of the lens unit side shaft is changed by changing the position of the lens unit side shaft fixing plate.

This adjustment is performed not by checking a copy image, but by visual measurement with the mark on the optical unit base as the reference. The copy image distortion must be adjusted not only in this adjustment but also in the mirror parallelism adjustment.

II. Purpose

The purpose of this adjustment is to reduce copy image distortion due to the lens by setting the optical axis of the copier body and the optical axis of the lens in parallel with each other.

III. Note

The copy image distortion adjustment is completed by making a copy and adjusting parallelism of the mirror.

For that purpose, this adjustment must have been properly performed.

IV. Cases when the adjustment is required

1) When the lens or the lens unit is disassembled or its part is replaced.
2) When the copy image is distorted as follows:

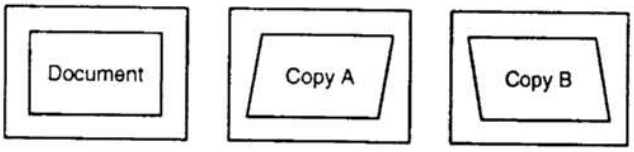

V. Necessary tools

* Screwdriver (+)
* Scale

VI. Adjustment procedure

1) Remove the right side cabinet (manual paper feed cabinet) and the document reference plate, and remove the document glass.

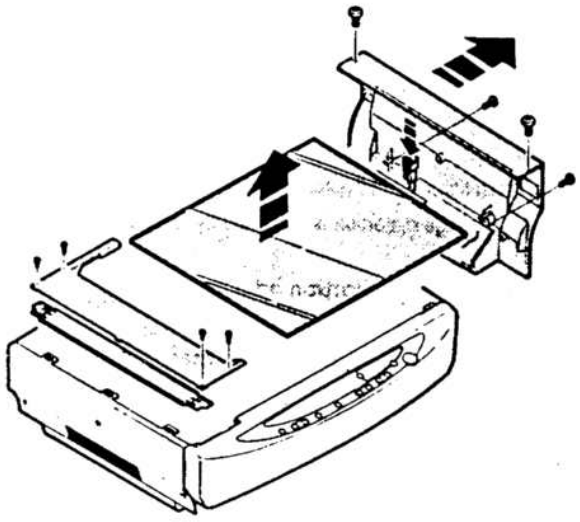

2) Remove the optical unit cover.

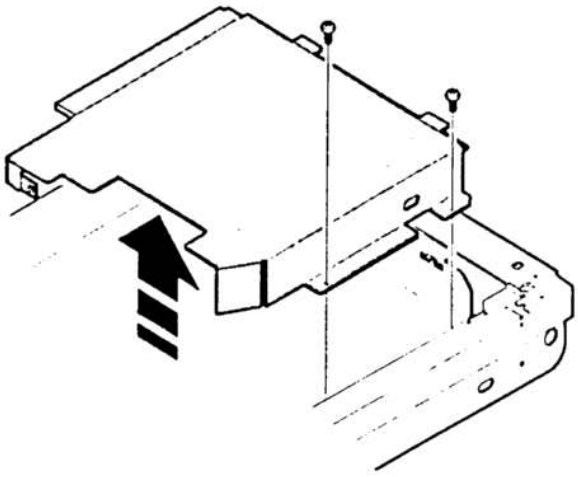

3) Loosen the fixing screw of the No. 4/5 mirror unit slide shaft fixing plate.
4) Fix so that No. 4/5 mirror unit slide shaft fixing plate is at the position as shown in the figure below.
5) Move No. 4/5 mirror unit slide shaft fixing plate in the directions of A and B, and fix it so that No. 4/5 mirror unit side is in parallel with the optical unit frame side plate.
Use the scale to check parallelism.

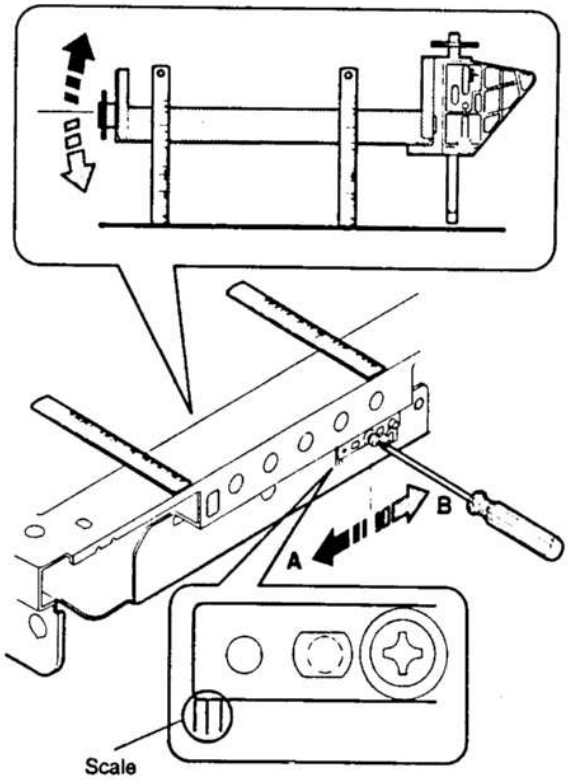

b. No. 4/5 mirror unit drive cam position adjustment

I. Summary

The copy magnification ratio and focus are properly adjusted by matching the lens unit movement and the No. 4/5 mirror movement.

This adjustment is performed by changing the relative positions of the lens unit drive gear and the no. 4/5 mirror unit drive cam.

II. Purpose

The purpose of this adjustment is to adjust the relative positions of the lens unit drive gear and the No. 4/5 mirror unit drive cam and to adjust the copy magnifications ratio and the focus.

III. Note

IV. Cases when the adjustment is required

1) When the lens and the No. 4/5 mirror drive section are disassembled or its part is replaced.
2) When the focus is improper though the copy magnification ratio is proper, or vice versa.

V. Necessary tools

* Screwdriver (+)

VI. Adjustment procedure

1) Set the copy magnification ratio to 100%, and set the lens unit to the position for 100% copy magnification ratio.
2) Remove the right side cabinet (manual paper feed unit) and the document reference plate.
3) Remove the document glass.

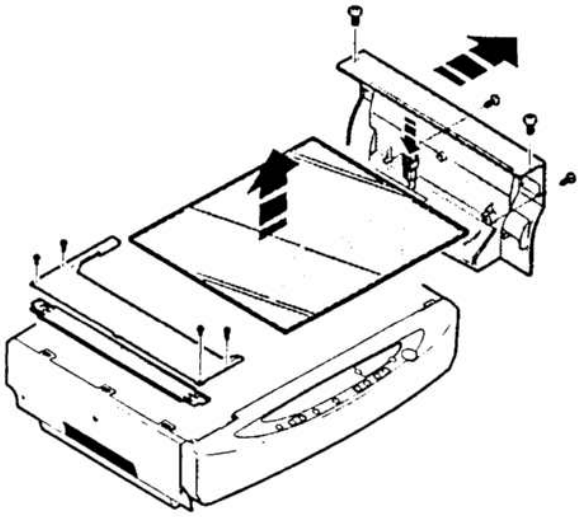

4) Remove the optical unit cover.

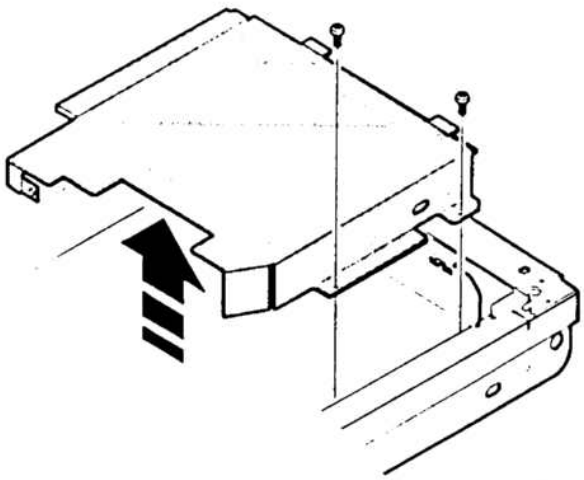

5) Loosen the No 4/5 mirror unit drive can fixing screw without moving the lens unit drive gear.



6) Turn the No. 4/5 mirror unit drive cam without moving the lens unit drive gear so that the cam position hole is fit with the reference hole in the optical unit frame.
7) Pass the pin through the No. 4/5 mirror unit drive cam positioning hole and fix so that the cam does not turn.

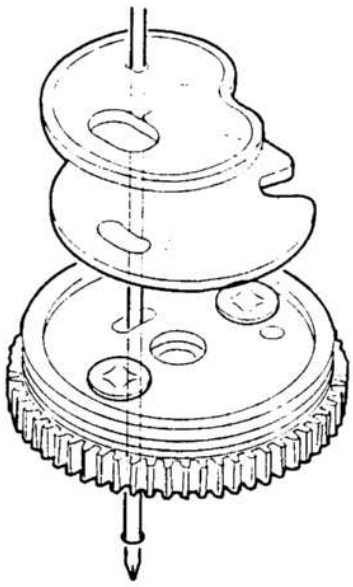

8) Tighten the cam fixing screw to fix the No. 4/5 mirror unit drive cam to the lens unit drive gear without moving the lens unit drive gear.
9) Remove the pin which was fixed to the frame in procedure 7).

(2) Image distortion adjustment

There are following two types of image distortion.

* Horizontal image distortion
* Vertical image distortion

Image distortion is generated mainly by insufficient parallelism of the mirror and misalignment of the lens optical axis.

In this model, image distortion is adjusted by adjusting parallelism of each mirror.

a. Horizontal image distortion adjustment

I. Summary

This adjustment is to adjust horizontal image distortion by setting the horizontal optical axis of the copier and the horizontal optical axis of each mirror in parallel with each other. The relative positions of the front frame and the scanner unit drive pulley of the frame are changed to perform the above adjustment.

Install the No. 1 and No. 2 scanner units to the specified positions, adjust the mechanical horizontal parallelism, and perform the final adjustment while making copies.

II. Purpose

The purpose of this adjustment is to reduce horizontal image distortion by setting the horizontal optical axis of the copier and the No. 1 and No. 2 scanner unit horizontal optical axis in parallel with each other.

III. Note

Before starting this adjustment, the following items must have been completed. If not, this adjustment cannot reduce image distortion.

* The lens unit right angle adjustment must have been completed.
* The No. 4/5 mirror unit right angle adjustment must have been completed.

IV. Cases when the adjustment is required

1) When the copy lamp unit and No.2/3 mirror unit are disassembled or their part is replaced.
2) When the copy lamp unit and No.2/3 mirror unit drive section is disassembled or its part is replaced.
3) When the copy image is distorted as shown below:

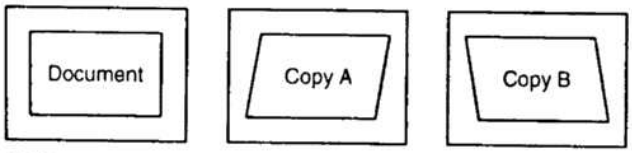

V. Necessary tools

* Screwdriver (+)
* Hex wrench
* Scale
* Test chart for distortion adjustment (Make a chart shown below by yourself.)
  Draw a rectangle on a paper (B4 or 8 1/2" x 14") as shown below.
  Be sure to make four right angles.

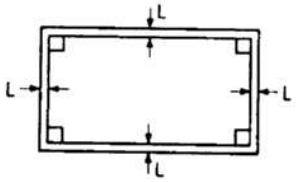

L = 10mm

VI. Adjustment procedure

1) Remove the right cabinet (manual paper feed unit), the document reference plate.
2) Remove the document glass.

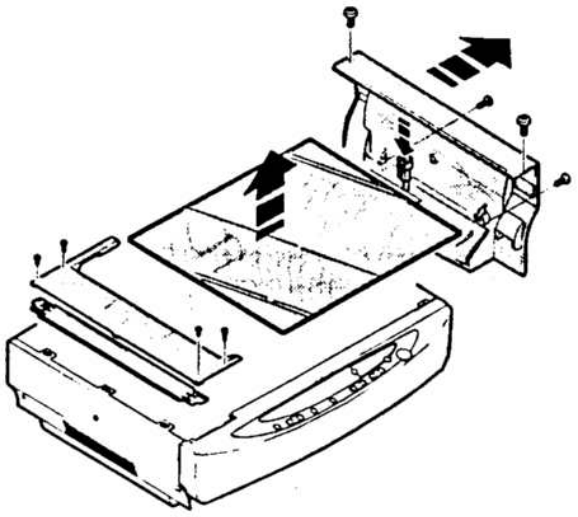

3) Loosen the fixing screw of the copy lamp unit wire.

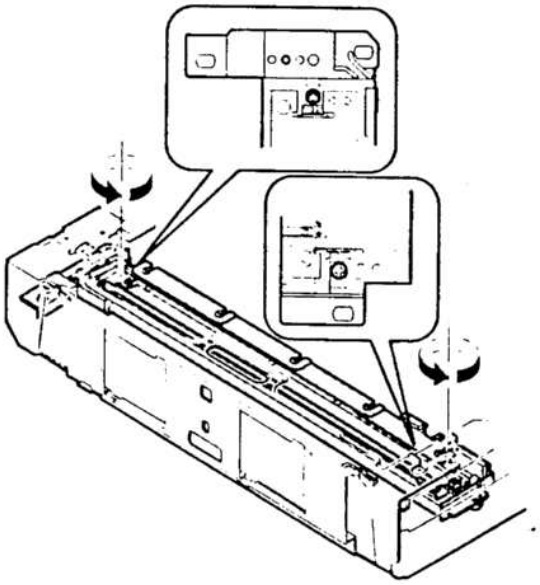

4) Manually turn the copy lamp unit/No.2/3 mirror unit drive gear to bring No.2/3 mirror unit into contact with No.2/3 mirror unit positioning plate. When No.2/3 mirror unit makes contact with No.2/3 mirror unit positioning plate in the rear frame side simultaneously, the mechanical parallelism of No.2/3 mirror unit is proper.
   If one side of No.2/3 mirror unit makes contact with No.2/3 mirror unit positioning plate and the other side does not, the parallelism is improper.
   If the parallelism is improper, perform the procedure of step 5).

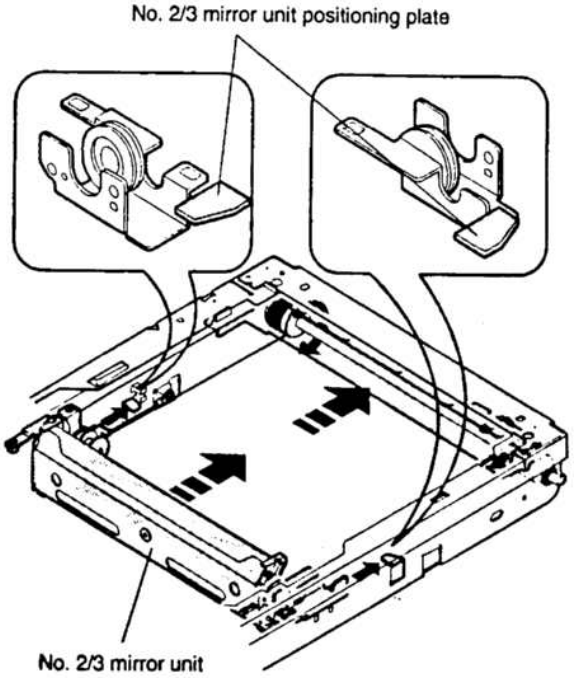

5) Loosen the copy lamp unit/No.2/3 mirror unit drive pulley setscrew in the side where No.2/3 mirror unit does not make contact with No.2/3 mirror unit positioning plate.

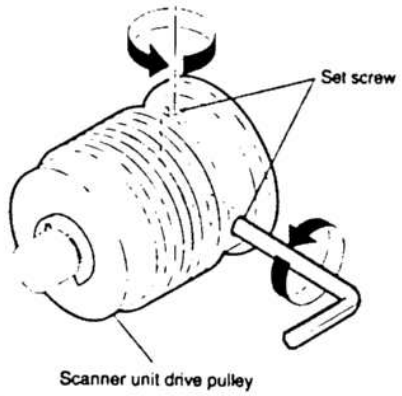

6) Without moving the copy lamp unit/No.2/3 mirror unit drive pulley shaft, manually turn the copy lamp unit/No.2/3 mirror unit drive pulley in the same side of the loosened setscrew. When it makes contact with No.2/3 mirror unit positioning plate, tighten and fix the setscrew.

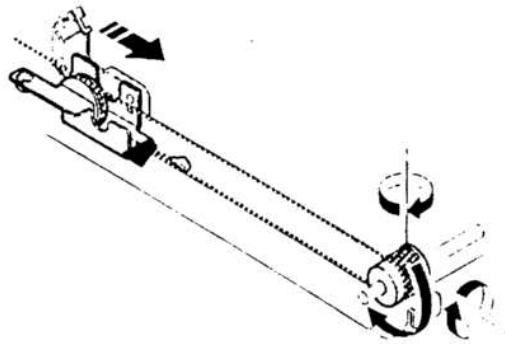

7) Manually turn the copy lamp unit/No.2/3 mirror unit drive gear to bring No.2/3 mirror unit into contact with the positioning plate, and perform the procedure of step 4). Repeat procedures of steps 4) to 7) until the parallelism of No.2/3 mirror unit is properly set.

8) With No.2/3 mirror unit positioning plate in contact with No.2/3 mirror unit, bring the copy lamp unit into contact with the optical unit right frame. Under the above condition, put the scale on the copy lamp unit projection to check parallelism and fix the copy lamp unit to the drive wire.

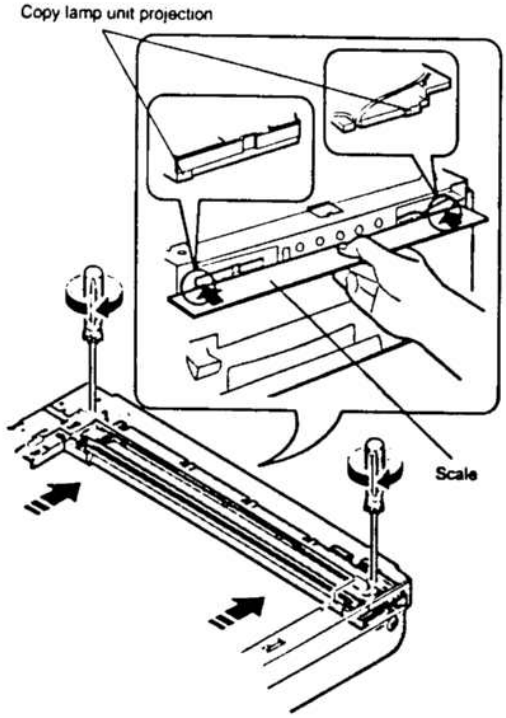

Procedures 1) to 8) are for adjustment of mechanical horizontal parallelism. The copy lamp unit and No.2/3 mirror are fixed to the specified positions and the mechanical horizontal parallelism of No.2/3 mirror is adjusted.

Then the optical horizontal parallelism must be adjusted in the following procedures.

9) Set the image distortion check chart on the document table, and make a reduction copy (75%) on an A4 or 11" x 8 1/2" paper with the document cover open.

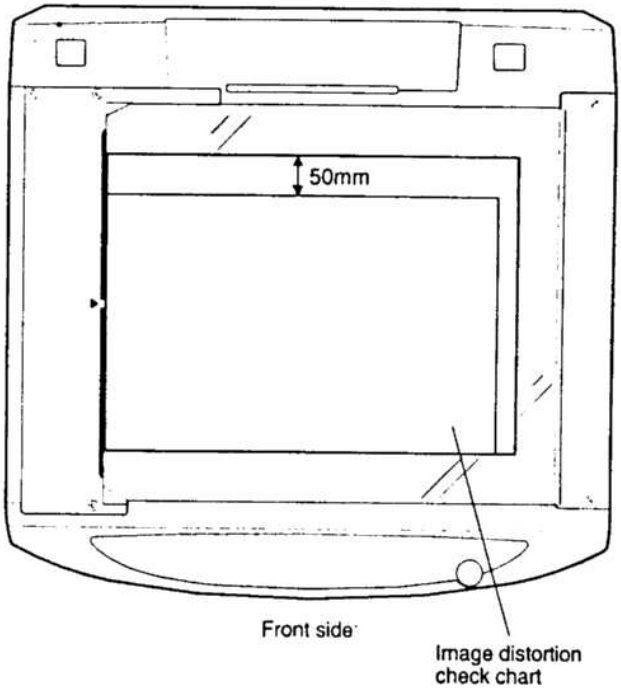

10) Check the horizontal image distortion.

If LL = LR, there is no horizontal distortion

LL and LR: Distance between the copy image horizontal line and theedge of the black background.

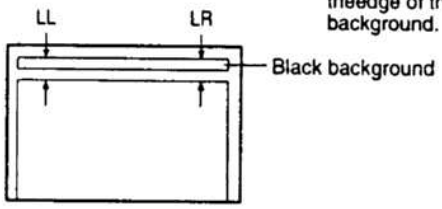

11) If LL is not equal to LR, perform the following procedure.

Loosen the setscrew of the copy lamp unit/No.2/3 mirror unit drive pulley in the front or the rear frame.

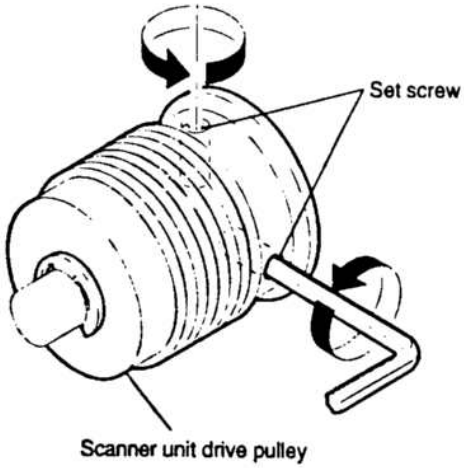

12) Without moving the copy lamp unit/No.2/3 mirror unit drive pulley shaft, manually turn the copy lamp unit/No.2/3 mirror unit drive pulley whose setscrew was loosened, and adjust the parallelism of copy lamp unit/No.2/3 mirror unit.

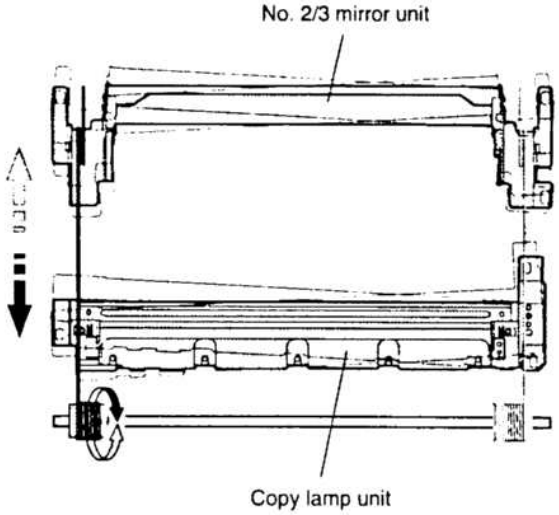

13) Tighten the set screw of the copy lamp unit/No.2/3 mirror unit drive pulley.

14) Check the image distortion in the same manner as step 10).

Repeat procedures 11) to 14) until horizontal image distortion is eliminated.

›. Vertical image distortion adjustment

I. Summary

This adjustment is to adjust parallelism of the vertical optical axis of the copier and that of each mirror to eliminate vertical image distortion.

For adjusting vertical image distortion, the overall adjustment and the right-left balance adjustment must be performed independently.

The overall adjustment is performed by changing the height of No.4/5 mirror unit in the front frame side. The right-left balance adjustment is performed by changing the right-left balance of No.2/3 scanner unit rail.

The right-left balance adjustment must be performed in advance to the overall adjustment.

II. Purpose

The purpose of this adjustment is to set parallelism of the vertical optical axis of the copier and that of No.4/5 mirror unit and No.2/3 mirror unit to eliminate vertical image distortion.

III. Note

Before performing this adjustment, the following adjustments must have been completed.

If not, this adjustment cannot be performed properly.

* No.4/5 mirror unit right angle adjustment
* Horizontal image distortion adjustment

IV. Cases when the adjustment is required

1) When No.4/5 mirror unit is disassembled or its part is replaced.
2) When the copy lamp unit/No.2/3 mirror unit drive section is disassembled or its part is replaced.
3) When the copy image is distorted as follows:

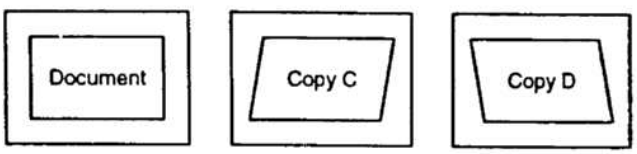

V. Necessary tools

* Screwdriver (+)
* Screwdriver (–)
* Scale
* Test chart for distortion adjustment (Make by yourself.)
  Draw a rectangle on A4 or 8 1/2" x 11" paper as shown below:
  Be sure to make four right angles.

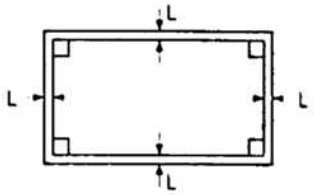

L = 10mm

VI. Adjustment procedure

1) Set the test chart for image distortion adjustment on the document glass, and make a normal copy on a paper of A4 or 8 1/2" x 11".
2) Check image distortion in the right and the left sides.

   If the both vertical lines are in parallel with each other, the right-left distortion balance is proper. (However, there may be some distortion.)

   If all the four angles are right angles, there in no distortion and the following procedures are not required.

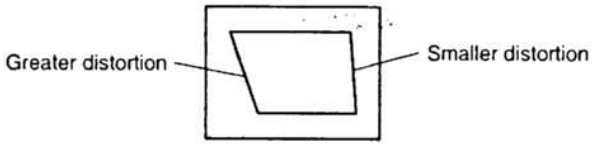

3) If the right-left distortion balance is improper, loosen the fixing screw of No.2/3 mirror unit rail to change and adjust the right-left balance of No.2/3 mirror unit rail.

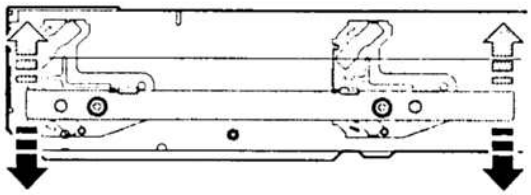

(Note)

This procedure is to have the balance between the right image distortion and the left image distortion, which does not mean to eliminate the image distortion. Change the height of No.2/3 mirror unit rail in the greater distortion side.
If the distortion in the lead edge side (when viewed in the paper transport direction) is greater, change the height of the left rail of No.2/3 mirror unit.
If the distortion in the rear edge side (when viewed in the paper transport direction) is greater, change the height of the right rail of No.2/3 mirror unit.

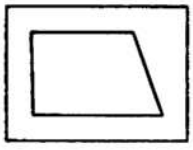

Change the height of the right side of the rail.

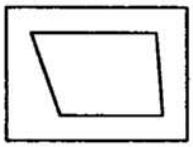

Change the height of the left side of the rail.

4) Change the height of the roller in No.4/5 mirror unit front frame side to adjust the vertical image distortion.

If the copy image is tilting as shown in sample (X) below, lower No.4/5 mirror unit. If it is tilting as shown in sample (Y) below, lift No.4/5 mirror unit.

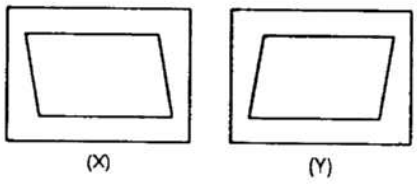

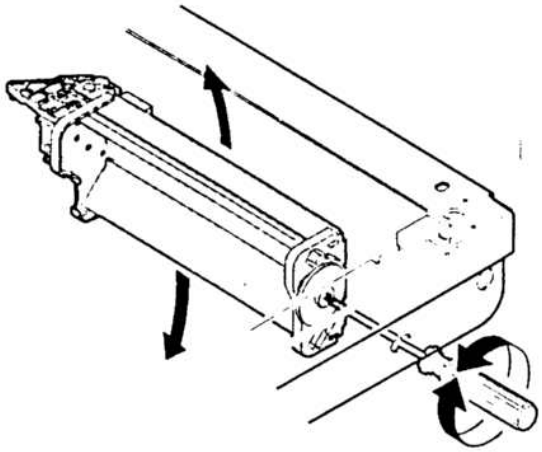

5) Make a copy to check the vertical image distortion.

If the four angles are right angles, the adjustment is completed.

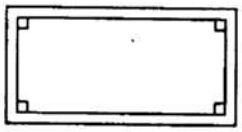

Repeat procedures 4) and 5) until the vertical image distortion is eliminated.

(Note) If a vertical image distortion is not eliminated with procedure 4), change the overall height of No.2/3 mirror unit rail. Then repeat procedures 1) to 5).

VII. Troubles caused by improper adjustment

(3) Copy image center position adjustment

I. Summary

The optical axis is changed by changing the lens holder position to optically align the document table and the vertical position of the copy image on the copy paper.

When the lens holder position is changed, the lens position in the front and the rear frame direction is changed to change the optical axis.

As a result, the document table is optically aligned with the copy image on the copy paper.

II. Purpose

The purpose of this adjustment is to set the copy image center at the vertical center of the copy paper.

III. Note

Before performing this adjustment, the following adjustment must have been completed. If not, this adjustment cannot be performed properly.

* No.4/5 mirror unit right angle adjustment
* Image distortion adjustment

IV. Cases when the adjustment is required

1) When the lens unit is disassembled or its part is replaced.
2) When the copy image is shifted from the vertical center of the paper.

V. Necessary tool

* Screwdriver (+)
* Scale
* Test chart for center position adjustment (Make a chart shown below by yourself.)
  Draw a line in the paper transport direction at the center of A4 or 8 1/2" x 11" paper.

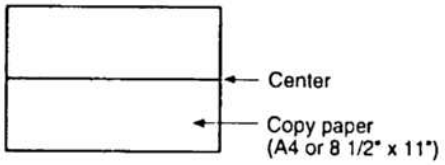

VI. Adjustment procedure

1) Set the test chart for center position adjustment at the document reference position.
2) Make a normal copy (100%) in the manual paper feed mode on A4 or 8 1/2" x 11" paper.
3) Check that the image of the line is at the center of the paper.

(Standard: 0±2.0mm)

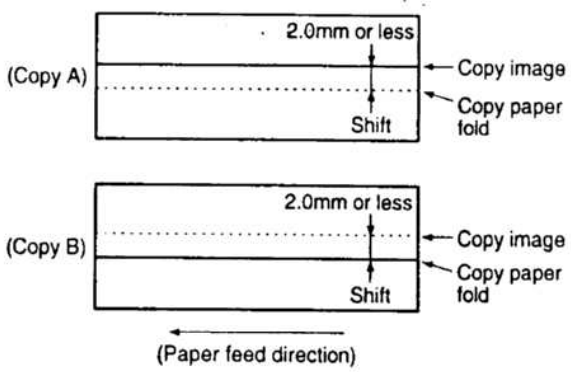

4) If the image of the line is not at the center of the paper, perform the following procedure.
5) Remove the right side cabinet (manual paper feed unit) and the document reference plate.
6) Remove the document glass.

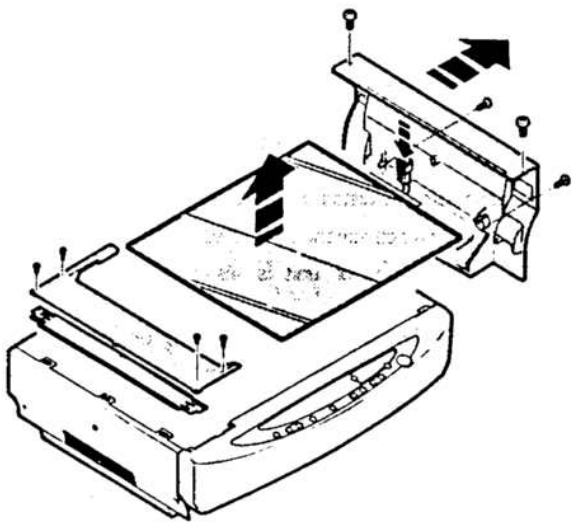

7) Remove the optical unit cover.

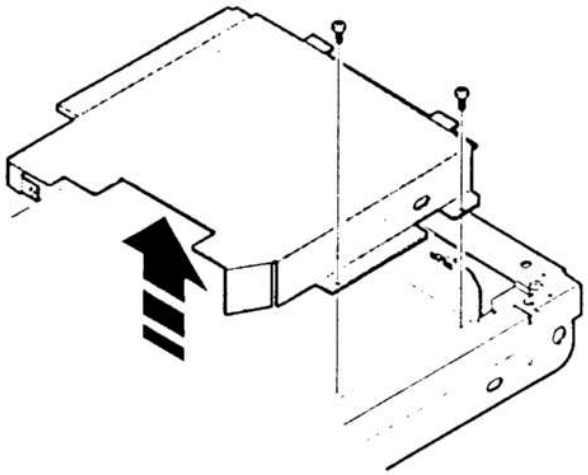

8) Loosen the lens rail fixing screw, and slide the lens rail back and forth.

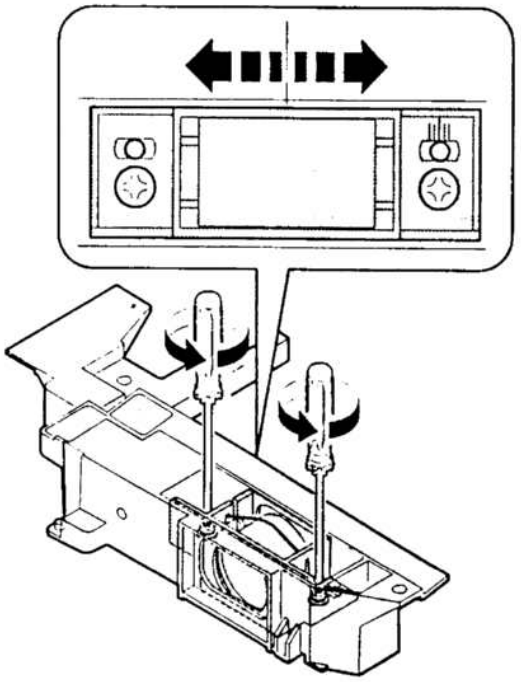

9) Make a copy and check that the image line is at the center of the paper. If not, repeat the procedures 1) to 9) until the image line comes at the center of the paper.

(4) Focus adjustment (Resolution adjustment)

I. Summary

The distance between the document and the photoconductor drum is changed by changing No.4/5 mirror unit drive lever position to adjust the focus.

II. Purpose

The purpose of this adjustment is to correct the lens variations and the optical section dimensional variations to have good copy images with a proper focus.

III. Note

Before performing this adjustment, the following adjustment must have been completed. If not, this adjustment cannot be performed properly.

* Image distortion adjustment

IV. Cases when the adjustment is required

1) When the lens or the mirror unit is disassembled or any one of their parts is replaced.
2) When the copy lamp unit/No.2/3 mirror unit drive section is disassembled or its part is replaced.
3) When a cop image of improper focus is obtained.

V. Necessary tools

* Screwdriver (+)
* Test chart (One with the resolution adjustment chart)

VI. Adjustment procedures

1) Set the test chart on the document table.
2) Make a normal copy (100%) on A4 or 8 1/2" x 11" paper.
3) Check that resolutions at the copy paper center and the four angles are as shown in the table below:

(Standard) (Unit: lines/mm)

	Copy center	Corner
Normal (100%)	5.0	4.5
Enlargement	5.0	4.5
Reduction	3.6	3.2

(Copy)

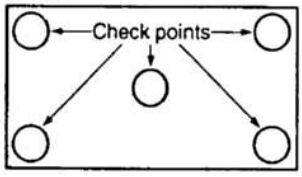

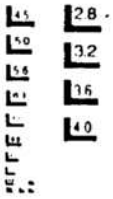

If any resolution is out of the above specifications, perform the following procedures.

4) Remove the right cabinet (manual paper feed unit) and the document reference plate.
5) Remove the document glass.

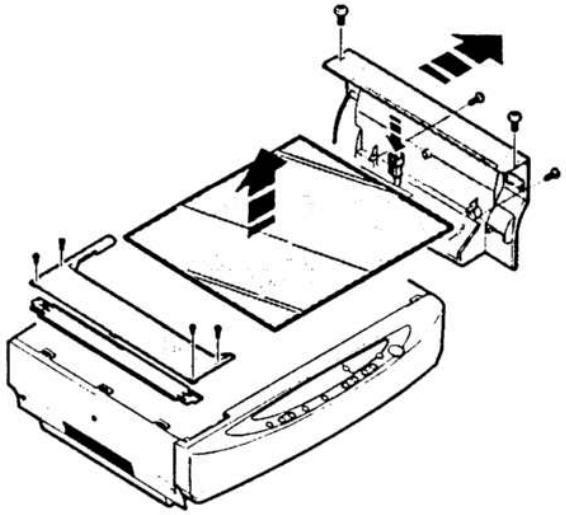

6) Remove the optical unit cover.

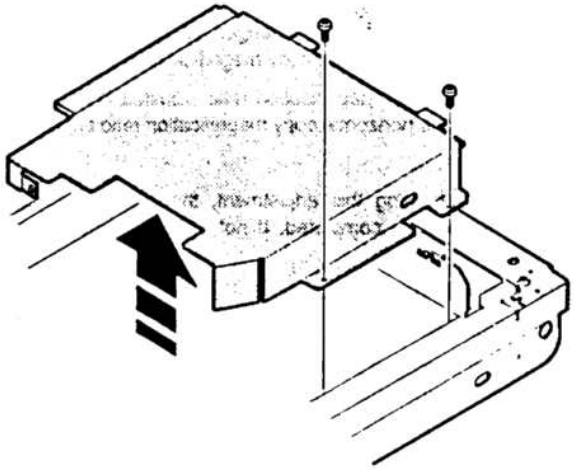

7) Loosen the fixing screw of No.4/5 mirror unit drive lever to change the position of No.4/5 mirror unit drive lever or No.4/5 mirror unit.

In this case, do not shake No.4/5 mirror unit, just change its position.

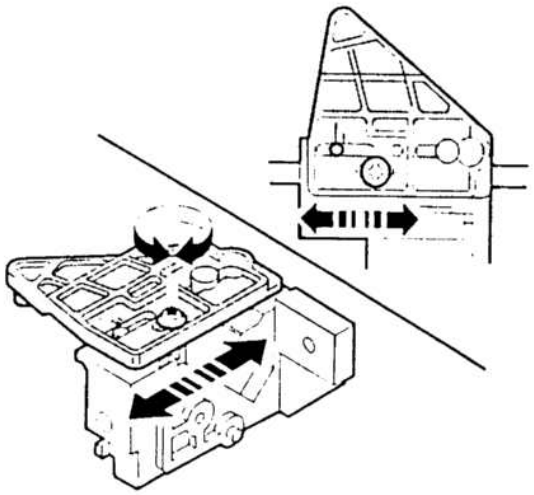

* In zooming, the adjustment is made by changing the relative positions of the gear and the cam.

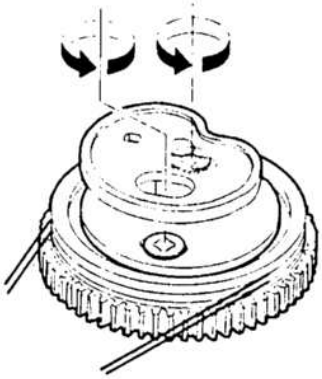

8) Make a copy and check that the resolutions are in the specified range.

If any resolution is out of the specified range, repeat procedures 1) to 8).

(5) Copy magnification ratio adjustment

The copy magnification ratio adjustment must be performed in the vertical direction and in the horizontal direction.

Firstly perform the vertical copy magnification ratio adjustment, then perform the horizontal copy magnification ratio adjustment.

a. Vertical copy magnification ratio adjustment

I. Summary

The lens home position is changed voluntarily with simulations 48-1 to adjust the vertical copy magnification ratio.

The vertical copy magnification ratio adjusted in this procedure is used for the horizontal copy magnification ratio adjustment.

II. Note

Before performing this adjustment, the following adjustments must have been completed. If not, this adjustment cannot be performed properly.

* Image distortion adjustment
* Focus adjustment

The vertical magnification ratio adjustment must be performed in advance to the horizontal copy magnification ratio adjustment. Never reverse the sequence. (The horizontal copy magnification ratio is based on the vertical copy magnification ratio.)

III. Cases when the adjustment is required

1) When the lens and the mirror unit are disassembled or the part is replaced.
2) When the copy lamp unit/No.2/3 mirror unit drive section is disassembled or the part is replaced.
3) When the main PWB is replaced.
4) When the RAM in the main PWB is replaced.
5) When "U2" trouble occurs.
6) When the position of the lens home position sensor is changed.
7) When the lens home position sensor is replaced.
8) When the copy image distortion adjustment is performed.
9) When the center position of copy image is adjusted.
10) When the focus is adjusted.

VI. Necessary tools

* Screwdriver (+)
* Scale

V. Adjustment procedure

1) Set the scale vertically on the document table. (Use a long scale for precise adjustment.)

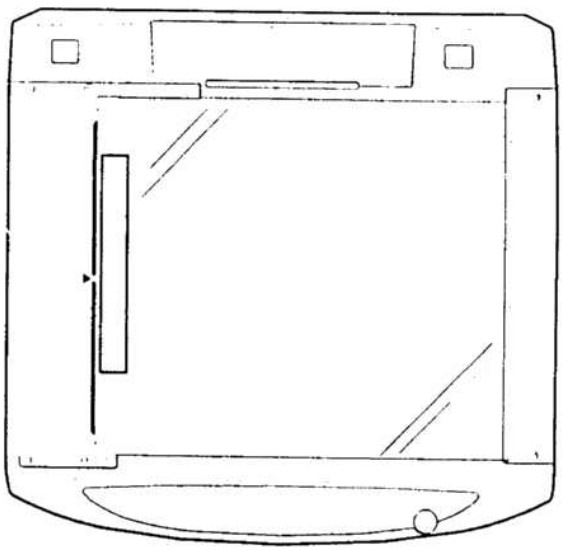

2) Set the copy magnification ratio to 100%.
3) Make a copy on A4 or 8½" x 11" paper.
4) Measure the length of the copied scale image.

(When a 100mm scale is used as the original.)

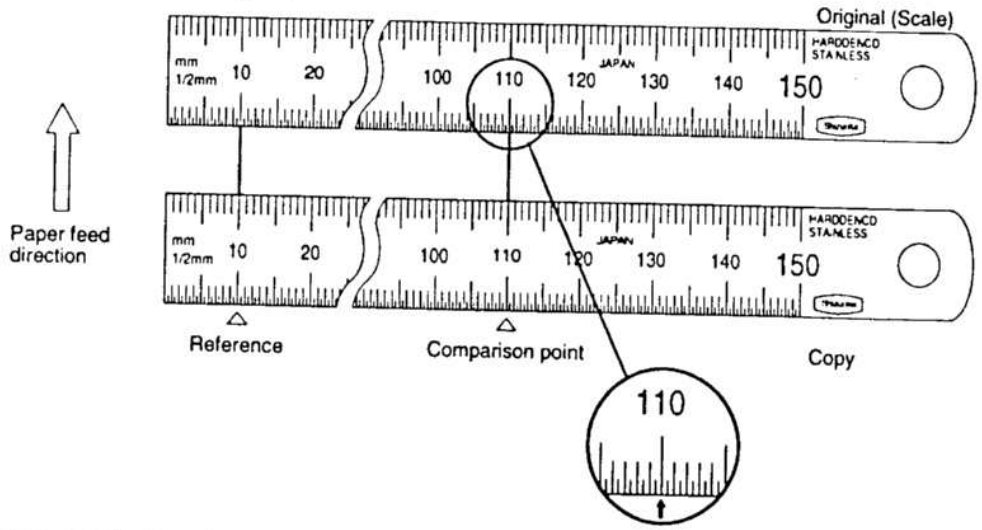

5) Calculate the vertical copy magnification ratio.

$$\text{Vertical copy magnification ratio} = \frac{\text{Copy image size}}{\text{Original size}} \times 100\ (\%)$$

6) Check that the actual copy magnification ratio is within the specified range (100 ±0.8%).

   If it is out of the specified range, perform the following procedures.

   The set vertical copy magnification ratio will be displayed in the copy quantity display.

7) Execute simulations 48-1 and select the vertical copy magnification ratio adjustment mode.

   The set vertical copy magnification ratio will be displayed in the COPY QUANTITY display.

   This simulation allows the vertical copy magnification ratio adjustment and the horizontal copy magnification ratio adjustment. Selection is made by the density select key.

Vertical copy magnification ratio adjustment	Auto density lamp ON
Horizontal copy magnification ratio adjustment	Auto/Manual density lamp ON

8) Enter a new vertical copy magnification ratio with the numeric key and press PRINT button. The above procedure changes the lens home position and the vertical copy magnification ratio.

   When the copy magnification ratio is set to a larger value, the actual copy magnification ratio becomes larger.

   When the copy magnification ratio is set to a smaller value, the actual copy magnification ratio becomes smaller.

Repeat procedures 1) to 8) until the vertical copy magnification ratio in the normal (100%) copy mode is within the specified range.

b. Horizontal copy magnification ratio adjustment (Zoom copy)

I. Summary

Scanning speed is changed with simulations 48-1 to adjust the horizontal copy magnification ratio.

II. Note

Before performing this adjustment, the following adjustments must have been completed. If not, this adjustment cannot be performed properly.

* Image distortion adjustment
* Focus adjustment
* Vertical copy magnification adjustment

III. Cases when the adjustment is required

1) When the lens and the mirror unit are disassembled or the part is replaced.
2) When the scanner unit drive section is disassembled or the part is replaced.
3) When the main PWB is replaced.
4) When the RAM in the main PWB is replaced.
5) When "U2" trouble occurs.
6) When the copy image distortion adjustment is performed.
7) When the center position of copy image is adjusted.
8) When the focus is adjusted.

IV. Necessary tools

* Screwdriver (+)
* Scale

V. Adjustment procedure

1) Set the scale on the document table as shown below. (Use a long scale for precise adjustment.)

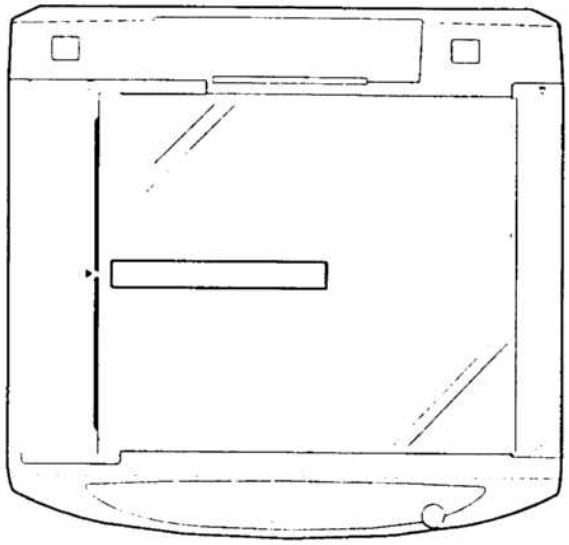

2) Set the copy magnification ratio to 100%.
3) Make a copy on A4 or 8½" x 11" paper.
4) Measure the length of the copied scale image.

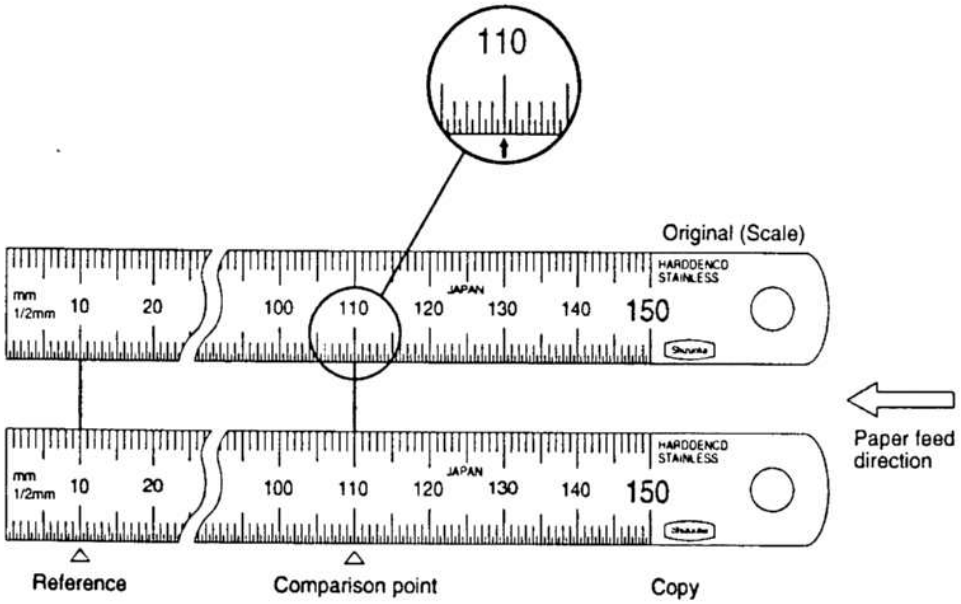

5) Calculate the horizontal copy magnification ratio.

Horizontal copy magnification ratio = $\frac{\text{Copy image size}}{\text{Original size}}$ x 100 (%)

6) Check that the actual copy magnification ratio is within the specified range (100 ±0.8%).

If it is out of the specified range, perform the following procedures.

7) Execute simulations 48-1, and select the horizontal copy magnification ratio adjustment mode.

The set horizontal copy magnification ratio will be displayed in the COPY QUANTITY display.

This simulation allows the vertical copy magnification ratio adjustment and the horizontal copy magnification ratio adjustment.

Selection is made by the density select key.

Vertical copy magnification ratio adjustment	Auto density lamp ON
Horizontal copy magnification ratio adjustment	Auto/Manual density lamp ON

8) Enter a new horizontal copy magnification ratio with the copy quantity set key and press COPY button. The above procedure changes the lens home position and the horizontal copy magnification ratio.

When the copy magnification ratio is set to a larger value, the actual copy magnification ratio becomes larger.

When the copy magnification ratio is set to a smaller value, the actual copy magnification ratio becomes smaller.

Repeat procedures 1) to 8) until the horizontal copy magnification ratio in the normal (100%) copy mode is within the specified range.

(6) Uniformity adjustment

I. Summary

The uniformity adjustment is performed by changing the exposure plate position attached to No.1 scanner unit.

The above procedure changes the balance of light quantity radiated onto the document.

II. Purpose

The purpose of this adjustment is to have uniform copy density.

III. Note

When this adjustment is performed, the exposure will be changed. Therefore, the copy density adjustment must be performed after this adjustment. Also, this adjustment must be performed always before the copy density adjustment.

IV. Cases when the adjustment is required

1) When the reflector is replaced.
2) When the copy lamp is replaced.
3) When the exposure adjustment plate is disassembled or replaced.
4) In maintenance

V. Necessary tools

* Screwdriver (+)
* A4 or 8 1/2" x 11" paper
* Half-tone paper of A4 or 8 1/2" x 11" or larger

VI. Adjustment procedure

1) Set a half-tone paper of A4 or 8 1/2" x 11" on the document table.
2) Set the exposure level to the min. level in the photo mode, and make a copy on A4 or 8 1/2" x 11" paper.
3) Check the uniformity. If there is any unevenness, perform the following procedures.
4) Move the exposure adjustment plate of the lighter copy section towards Y or move the exposure adjustment plate of the darker copy section towards X.

(Example)

If a copy shown below is made, move the front frame side of the sub exposure adjustment plate in the direction of X to adjust the exposure balance.

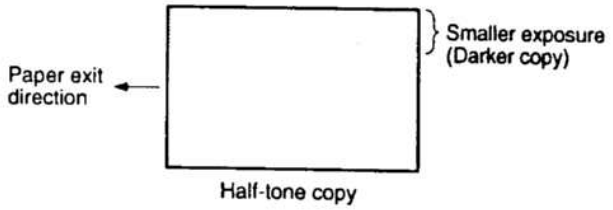

[Fig. 1]

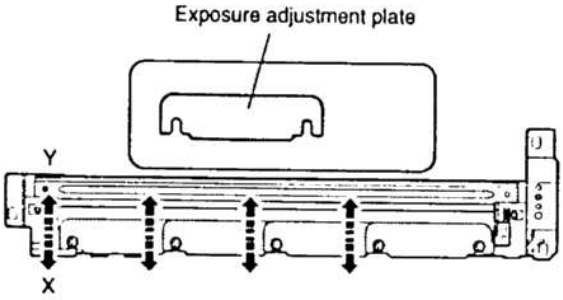

5) Make a copy in the same manner as procedure 2), and check the uniformity.

Repeat procedures 1) to 5) until proper uniformity is obtained.

VII. Troubles caused by improper adjustment

(7) Image loss/void area adjustment

The image loss/void area adjustment is performed by the combination of the copied image position adjustment on the copy paper and the void area adjustment.

Since the image loss and the void area are closely related each other, they must be adjusted simultaneously.

(Definitions of image loss and void area)

Void area: Empty (white) area on a copy paper (without toner on it)

Image loss: The quantity (length) of an image lost on a copy paper.

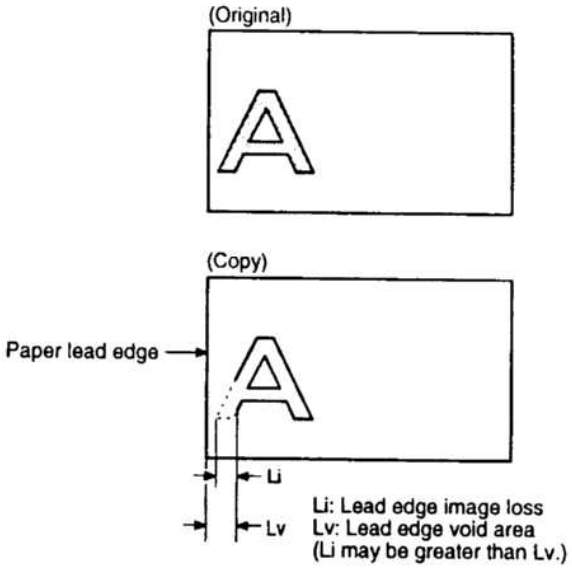

a. Copy image position adjustment

I. Summary

In order to adjust the copy image position on a copy paper, the lead edge position of an image on the photoconductor for the lead edge position of a document on the document table is changed with simulations 50-1, and the relative position of the paper to the image position on the photoconductor is changed.

After adjusting the copy image position with the above procedure, the M.C grid OFF timing for the lead edge position of an image on the photoconductor is changed with simulations 50-1 to adjust the void area.

II. Purpose

The purpose od this adjustment is to improve separation in the photoconductor section and in the fuser section and reduce dirt on the fuser section pawl by obtaining the max. effective copy area and the proper void area.

III. Note

If the proper void area is not obtained, the separation ability in the photoconductor section may be degraded and dirt on the fuser section pawl may be increased.

Before performing this adjustment, the following adjustments must have been completed. If not, this adjustment cannot be performed properly.

* Adjustment of paper pressure against the SPF resist roller (Sim 51-2 set value must be properly set.)
* Adjustment of the copy image position on the copy paper (Sim 50-1 set value must be properly set.)

IV. Cases when the adjustment is required

1) When the optical section is disassembled or its part is replaced (including the scanner home position sensor).
2) When the SPF unit is disassembled or its part is replaced.
3) When the main PWB is replaced.
4) When the RAM in the main PWB is replaced.
5) When "U2" trouble occurs.
6) When the resist roller unit is disassembled or replaced.
7) When the blank lamp is replaced.

V. Necessary tools

* Screwdriver
* Scale
* Test chart

VI. Adjustment procedures

(Copy image position adjustment)

1) Execute simulations 50-1 and select the copy image position adjsutment (set values A and B).

This simulation allows the copy image position adjustment and the lead edge/rear edge void amount adjustment. Selection is made by the density select key.

Set value	Display lamp	Exposure level 1	Exposure level 3	Exposure level 5
A	Auto density lamp	Lead edge void	Set value A	Rear edge void
B	Auto/Manual density lamp		Set value B	

This simulations is to adjust the copy image position for the paper. One of the set adjustment values is displayed on the COPY QUANTITY display.

Adjustment value A:

Corresponds to the time interval from the scanner unit starting and the scanner home position sensor OFF to reaching at the lead edge of the document. That is, this is the value used to determine the optical document lead edge reference position, and it must be fit with the edge section of the document reference plate.
If this value is improper, when the copy magnification ratio is changed, the copy image lead edge position for the copy paper edge will fluctuate.

Adjustment value B:

Corresponds to the time interval from the scanner unit starting and the scanner home position sensor OFF to the resist roller ON.
According to this value, the paper feed timing for the image on the photoconductor drum is changed and the copy image position on the copy paper is also changed.
When the set value is changed by "1," the position of the copy image on the copy paper is changed by about 0.123 mm.

When the set value is made greater, the copy image position for the copy paper moves backward. When the set value is made greater, the copy image position for the copy paper moves forward.

2) Press the scale onto the document alignment plate and set it horizontally as shown below:

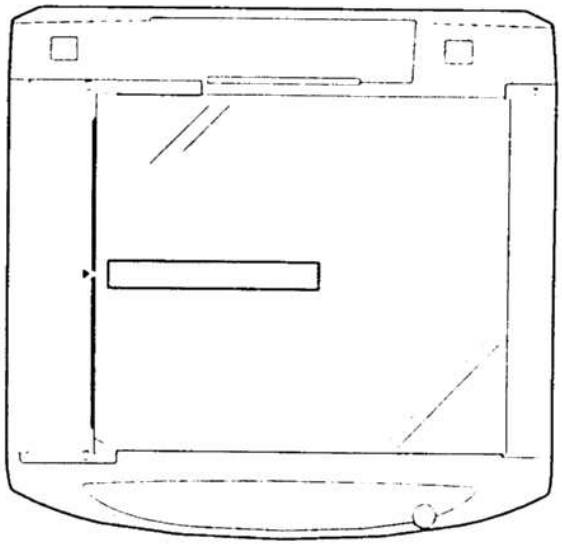

3) Set to "0" for the adjustment value A and B. Then make a copy in the 70% and 141% mode.
4) Measure the distance from the paper lead edge to the copy image lead edge of each copied papers.

L1: Distance (mm) from 141% copied paper lead edge to the copy image lead edge

L2: Distance (mm) from 70% copied paper lead edge to the copy image lead edge

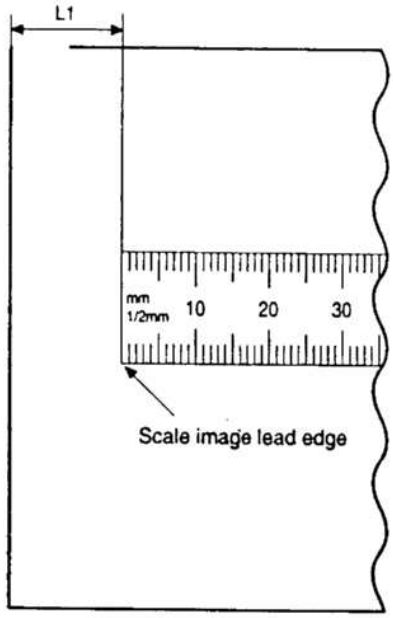

Enlargement copy (x 1.41)

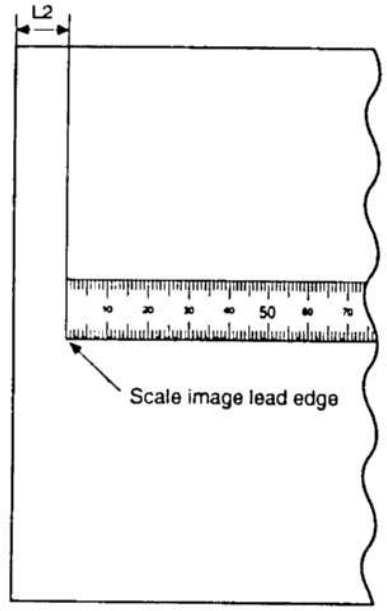

Reduction copy (x 0.70)

5) Enter the measure values in procedure 4) into the formula below to calculate adjustment value A and adjustment value B.

   A = 11.545 x (L1 – L2)

   B = 11.284 x L2 – 5.602 x L1

6) Set the adjustment values obtained in procedure 5).

7) Make a copy in the 70% and 141% mode.

8) Measure the distance from the paper lead edge to the copy image lead edge of each copied papers (141% and 70%), and calculate the average value.

9) Check that the difference between the distance from the copy paper lead edge to the copy image lead edge of 141% copy and that of 70% copy is in the range of 0.5 ± 1.0 mm.

   If the difference is out of the above range, change adjustment value A and repeat procedures 3) ~ 9) until the difference is within the above range.

   If adjustment value A is improper, the copy image lead edge position fluctuates in proportion to the copy magnification ratio.

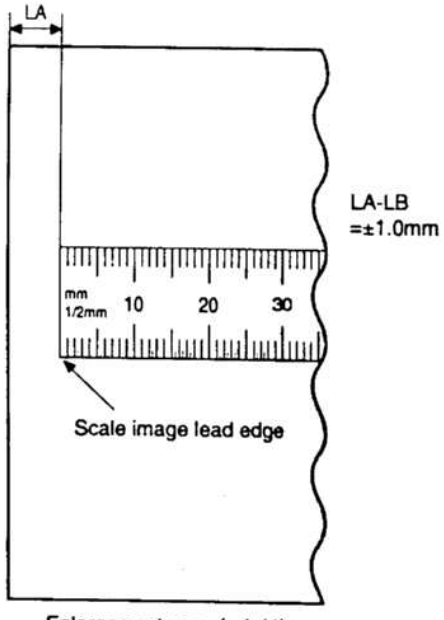

Enlargement copy (x 1.41)

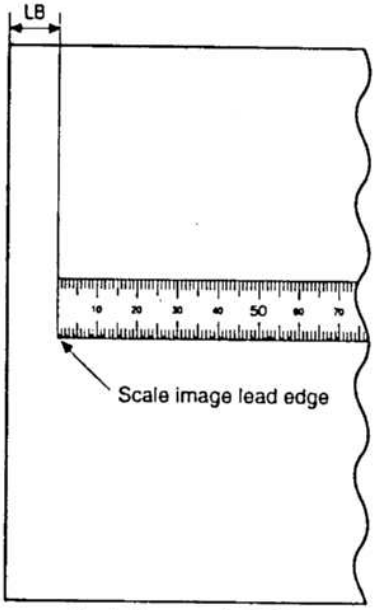

Reduction copy (x 0.70)

10) Make a 100% copy, and check that the copy image lead edge is in the range of 0.5 ±1.0 mm from the paper lead edge position reference.

    If it is out of the above range, change adjustment value B and repeat procedure 10) until it is within the above range.

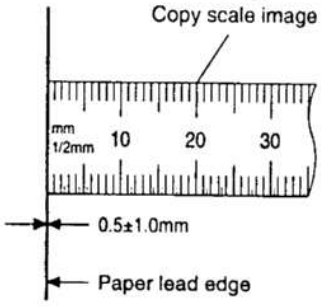

b. Void area adjustment

I. Summary

After adjustment of the copy image position with Sim 50-1, select the mode of Sim 50-1 to adjust the void area.

The adjustment is performed by changing the time interval from the mirror motor ON to the main corona grid ON.

On the other hand, the rear edge void area is adjusted by varying the OFF timing of the main corona grid after the PPD2 detects the rear edge of paper and turns off.

This simulation allows the copy image position adjustment and the lead edge/rear edge void amount adjustment. Selection is made by the density select key.

Set value	Display lamp	Exposure level 1	Exposure level 3	Exposure level 5
A	Auto density lamp	Lead edge void	Set value A	Rear edge void
B	Auto/Manual density lamp		Set value B	

II. Purpose

The purpose od this adjustment is to improve separation in the photoconductor section and in the fuser section and reduce dirt on the fuser section pawl by obtaining the max. effective copy area and the proper void area.

III. Note

If the proper void area is not obtained, the separation ability in the photoconductor section may be degraded and dirt on the fuser section pawl may be increased.

Before performing this adjustment, the following adjustment must have been completed. If not, this adjustment cannot be performed properly.

* Adjustment of paper pressure against the resist roller (Sim 51-2 set value must be properly set.)
* Adjustment of copy image position (Sim 50-1, A, B, set values must be properly set.)

IV. Cases when the adjustment is required

1) When the optical section is disassembled or its part is replaced (including the scanner home position sensor).
2) When the main PWB is replaced.
3) When the RAM in the main PWB is replaced.
4) When "U2" trouble occurs.
5) When the resist roller unit is disassembled or replaced.

V. Necessary tools

* Screwdriver
* Scale
* Test chart
* Black background document

VI. Adjustment procedure

(Lead edge void area adjustment)

1) Put a scale and B4 or 8½" × 14" paper on the document table.

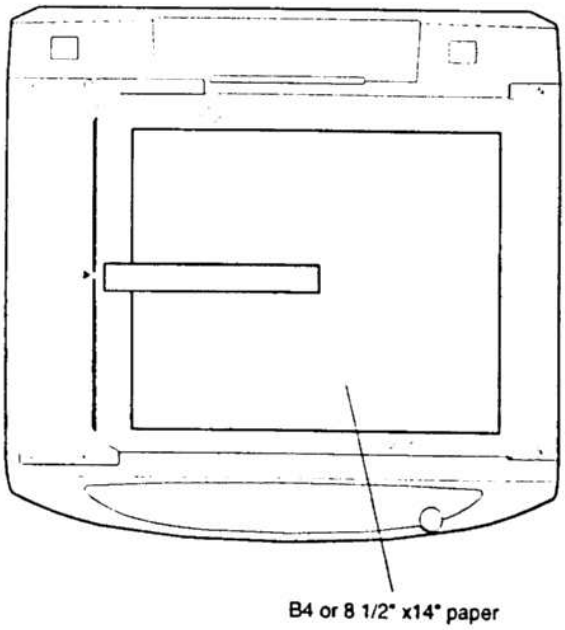

2) Execute simulations 50-1 to set to the lead edge void adjustment mode.

   The set adjustment value is displayed on the COPY QUANTITY display.

3) With the document cover open, make several copies at 100%.
4) Measure the lead edge void area of each copy.

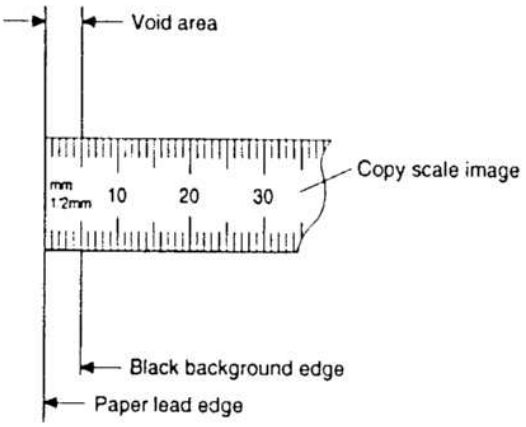

5) If the lead edge void area is within the specified range, the adjustment is completed.

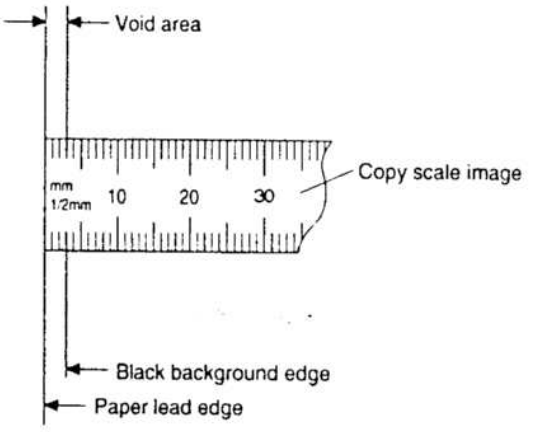

Standard: 1~4 mm

If the void area is outside the specified range, change the set value of simulations 50 and repeat procedures 3) to 5).

When the set value is changed by "1," the void area is changed by about 0.123 mm.
When the set value is made greater, the void area becomes greater, and vise versa.

(Rear edge void area adjustment)

1) Set a scale and A4 or 8 1/2" x 11" paper on the document table as shown below:

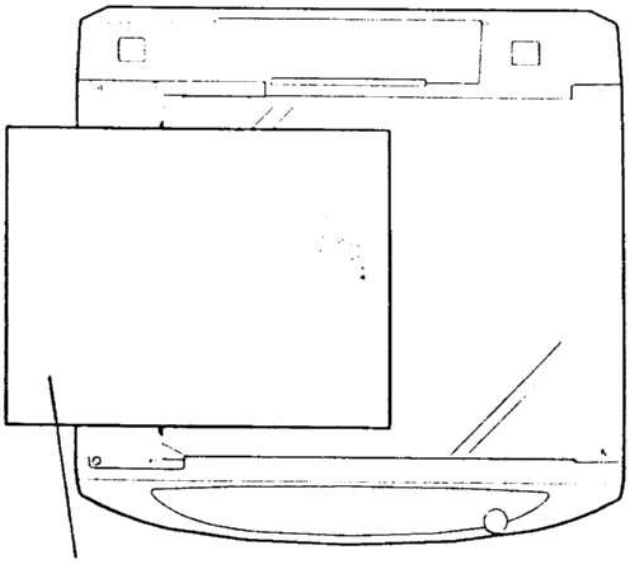

2) Execute simulations 50-1, and set to the rear edge void adjustment mode.

3) With the document cover open, make a copy at 100%.

4) Measure the end edge void area of each copy.

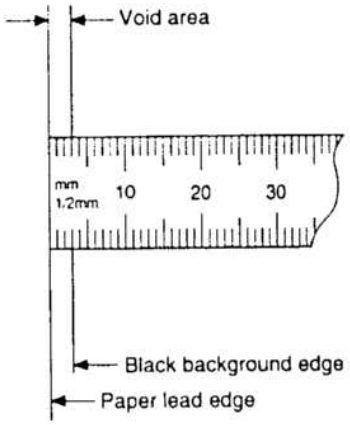

5) If the rear edge void area is within the specified range, the adjustment is completed.

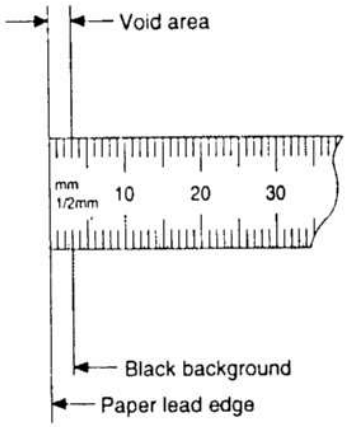

Standard: 4 mm or less

If the void area is outside the specified range, change the set value of simulations 50-1 and repeat procedures 3) to 5).

When the set value is changed by "1," the void area is changed by about 0.176 mm.
When the set value is made greater, the void area becomes greater, and vise versa.

2. Copy density adjustment

(1) Copy density adjustment timing

The copy density adjustment must be performed in the following cases:

* When maintenance is performed.
* When the high voltage unit output current or voltage is adjusted.
* When the developing bias voltage is adjusted.
* When the copy lamp is replaced.
* When the optical section is cleaned.
* When any part of the optical section is replaced.
* When the optical section is disassembled.
* When the OPC drum is replaced.
* When the AE sensor is replaced.
* When the main control PWB is replaced.
* When the EEPROM on the main control PWB is replaced.
* When memory trouble (U*) occurs.
* When any part of the copy lamp control circuit is replaced.
* When the AC power PWB is replaced.

(2) Note for copy density adjustment

1) Perform the following items before the copy density adjustment.

* Clean the optical section.
* Clean the AE sensor.
* Clean or replace the charger wire, the saw teeth blade, and the grid.
* Check that the high voltage section voltage and the developing bias voltage are in the specified range.

2) Note

* The auto mode copy density adjustment must be performed after the manual mode copy density adjustment. Never reverse the sequence.

(3) Necessary tools

* Test chart (UKOG-0162FCZZ, UKOG-0089CSZZ, or KODAC GRAY SCALE.
* A4 (8 1/2" x 11") white paper

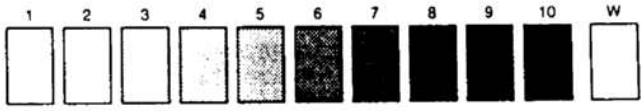

Test chart comparison

UKOG-0162FCZZ DENSITY No.	1	2	3	4	5	6	7	8	9	10	W
UKOG-0089CSZZ DENSITY No.	0.1		0.2		0.3				0.5	1.9	0
KODAK GRAY SCALE		1		2		3		4		19	A

SHARP CORPORATION
MADE IN JAPAN

(4) Copy density adjustment mode

There are following two modes of the copy density adjustment.

1. Auto copy density adjustment:

   When the adjustment is made at exposure level 3 of each copy mode, the max. (exposure level 5) and the min. (exposure level 1) are automatically calculated.

   The operation panel displays in each mode as follows:

Copy mode		Lighting lamp	Exposure level 3
Manual mode	Non-toner save mode	Manual density lamp	* Center exposure level setting
	Toner save mode	Manual/Photo density lamp	* Center exposure level setting
Photo copy mode	Non-toner save mode	Photo density lamp	* Center exposure level setting

2. Manual copy density adjustment

   The adjustment is performed at exposure level 3 of each copy mode, and adjustments at exposure levels 5 and 1 are made according to the automatically calculated value.

   The operation panel displays in each mode as follows:

Copy mode		Lighting lamp	Copy density level (Exposure level)	
Manual mode	Non-toner save mode	Manual density lamp	1	5
	Toner save mode	Toner save lamp	1	5
Auto copy mode	Non-toner save mode	Auto density lamp	1	5
	Toner save mode	Auto/Photo density lamp	1	5
Photo copy mode	Non-toner save mode	Photo density lamp	1	5

* For the copy density adjustment in this document, refer to "2. Manual copy density adjustment."

(5) Copy density adjustment procedure

The copy density adjustment is performed by changing the exposure level at each copy mode in Sim 46-01. The exposure level is changed by changing the copy lamp voltage.

The copy density adjustment must be performed for five copy modes. Selection of the modes is made with the exposure mode select key.

A. Test chart (UKOG-0162FCZZ) setting

1) Set the test chart and several sheet of B4 (14" x 8 1/2") paper on the document glass as shown in the figure below. The detection range of the AE sensor is about 108.5mm wide at the center of the document glass. Adjust so that the white paper comes to the detection range.

   Do not cover the shaded section with the test chart.

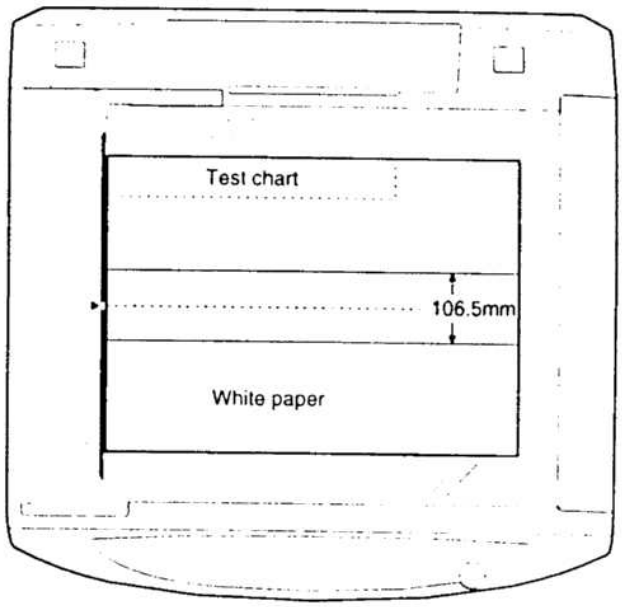

2) Close the document cover and perform Sim 47.

B. Manual copy mode (Non-toner save mode) copy density adjustment

(1) Execute Sim 46-1.

Exposure level 3 of the manual exposure level is displayed on the operation panel exposure display.

The set value is displayed on the copy quantity display.

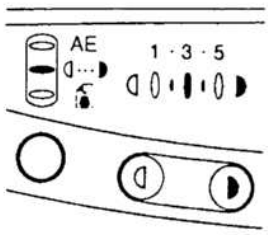

(2) Make a copy.

Check that "5" of the exposure test chart (SHARP GRAY CHART) is slightly copied.

(When too light): Make the displayed value on the copy quantity display smaller.

(When too dark): make the displayed value on the copy quantity display greater.

* The value is adjustable in the range of 1 – 99.

* When the value is changed by 1, the voltage is changed by about 0.33V.

(3) Press the exposure select key to increase the brightness to set to exposure level 1. The exposure level is automatically entered according to the value which was entered for exposure level 3.

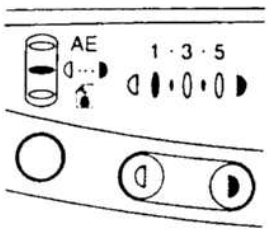

(4) Make a copy.

Check that "7" of the exposure test chart (SHARP GRAY CHART) is slightly copied.

(When too light): Make the displayed value on the copy quantity display smaller.
(When too dark): make the displayed value on the copy quantity display greater.

* The value is adjustable in the range of 1 - 99.
* When the value is changed by 1, the voltage is changed by about 0.33V.

(5) Press the exposure key to decrease the exposure to set to exposure level 5. The exposure level is automatically entered according to the value which was entered for exposure level 3.

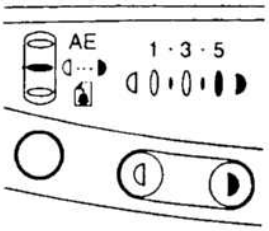

(6) Make a copy.

Check that "2" of the exposure test chart (SHARP GRAY CHART) is clearly copied.

(When too light): Make the displayed value on the copy quantity display smaller.
(When too dark): make the displayed value on the copy quantity display greater.

* The value is adjustable in the range of 1 - 99.
* When the value is changed by 1, the voltage is changed by about 0.33V.

C. Manual copy mode (Toner save mode) copy density adjustment

(1) Press the exposure mode select key to set to the toner save mode.

The operation panel displays the toner save mode at the same time. When exposure level 3 is displayed, the value is displayed on the copy quantity display.

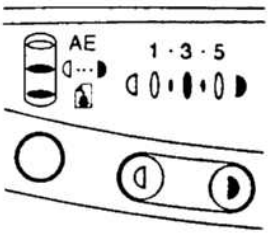

(2) Adjust at exposure level 3, 1, and 5 similarly with the manual mode (non-toner save mode).

D. Photo copy mode copy density adjustment

(1) Press the exposure mode select key to set to the photo mode.

The operation panel displays the photo mode. When exposure level 3 is displayed, the value is displayed on the copy quantity display.

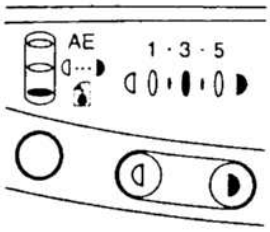

(2) Adjust at exposure level 3, 1, and 5 similarly with the manual mode (non-toner save mode).

E. Auto copy mode (Non-toner save mode) copy density adjustment

(1) Press the exposure select key to set to the auto exposure mode.

Exposure level 1 of auto exposure mode is displayed on the operation panel, and the value is displayed on the copy quantity display.

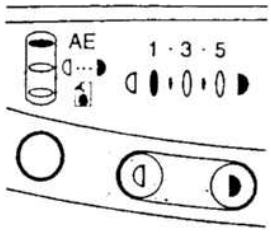

(2) Check that "10" is displayed on the copy quantity display.

(3) Press the exposure key to decrease exposure level to set to exposure 5.

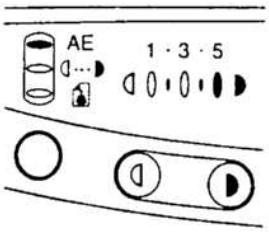

(4) Make a copy.

Check that "4" of the exposure test chart (SHARP GRAY CHART) is slightly copied.

(When too light): Make the value displayed on the copy quantity display smaller.
(When too dark): Make the value displayed on the copy quantity display greater.

F. Auto copy mode (Toner save mode) copy density adjustment

(1) Press the exposure select key to set to the auto exposure mode.

Exposure level 1 of auto exposure mode is displayed on the operation panel, and the value is displayed on the copy quantity display.

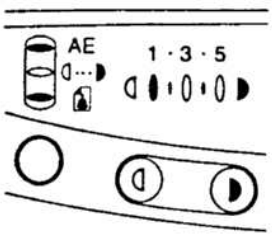

(2) Adjust at exposure level 3, 1, and 5 similarly with the auto copy mode (non-toner save mode).

(6) Copy density adjustment table

Copy mode		Mode display	Exposure level	Test chart copy density
Manual	Non-toner save mode	Manual	3	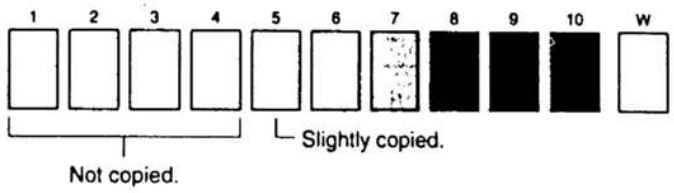
			1	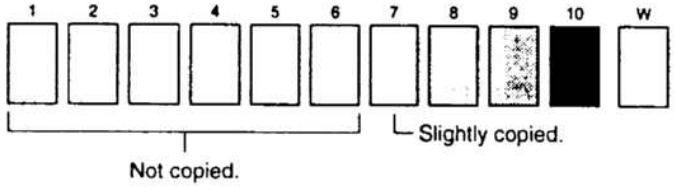
			5	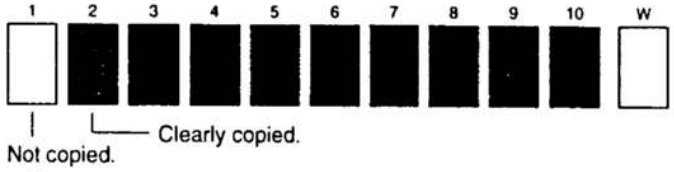
	Toner save mode	Manual/Photo	3	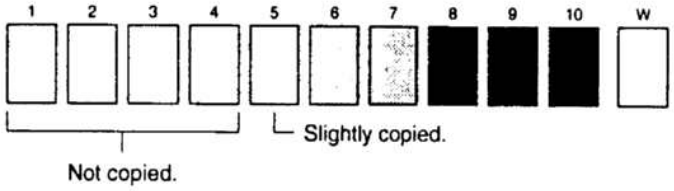
			1	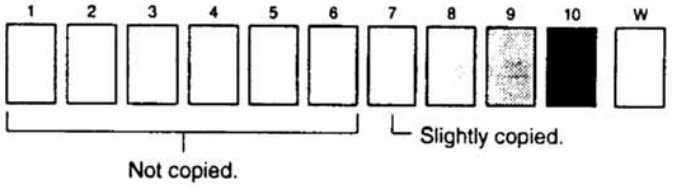
			5	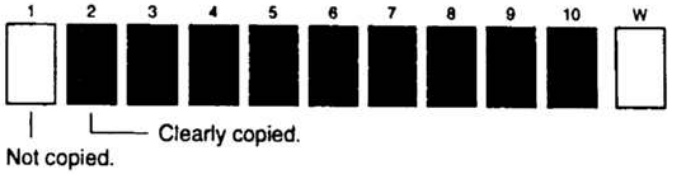
Photo	—	Photo	3	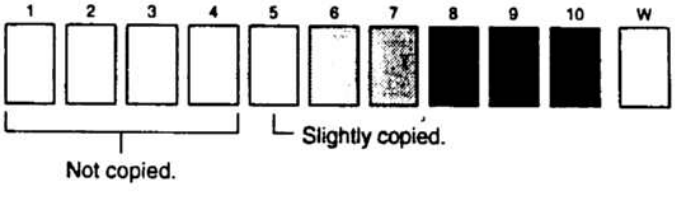

Copy mode		Mode display	Exposure level	Test chart copy density
Photo	—	Photo	1	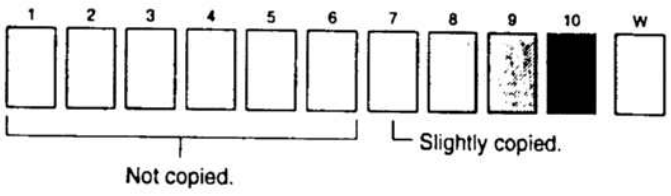
			5	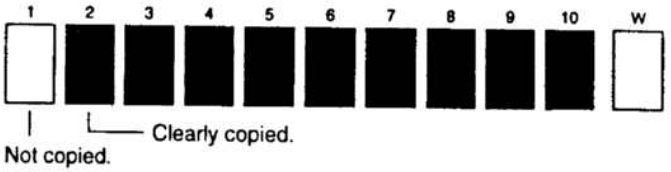
Auto	Non-toner save mode	Auto	1	Check that "10" is displayed on the copy quantity display.
			5	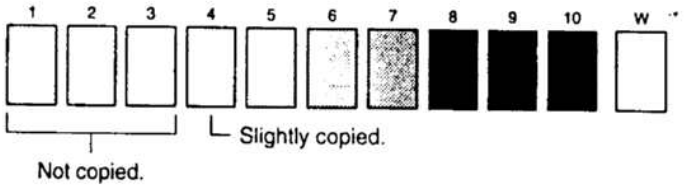
Auto	Toner save mode	Auto/Photo	1	Check that "10" is displayed on the copy quantity display.
			5	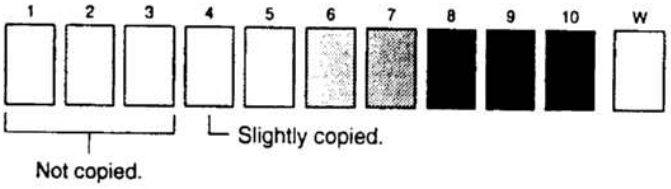

3. Others

1) Tray off center adjustment

I. Purpose

This adjustment is to put the copy image at the center of paper in the vertical direction.

II. Note

This adjustment must be performed only after the following adjustments have been properly performed.

* No. 4/5 mirror unit right angle adjustment is completed.
* The copy image center adjustment is completed.

III. Necessary tools

* Screwdriver (+)
* Scale
* Test chart for center position adjustment (Make a test chart as shown below.)
  Draw a line in the paper transport direction at the center of A4 or 8 1/2" x 11" paper.

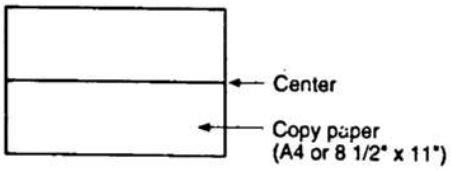

IV. Adjustment procedure

1) Set the center position adjustment test chart to the document reference plate.
2) Use the tray paper feed and make a 100% copy on A4 or 8 1/2" x 11" paper.
3) Check that the copied line is at the center of the copy paper.
   (Standard: 0 ±2.0mm)

(Standard: 0±2.0mm)

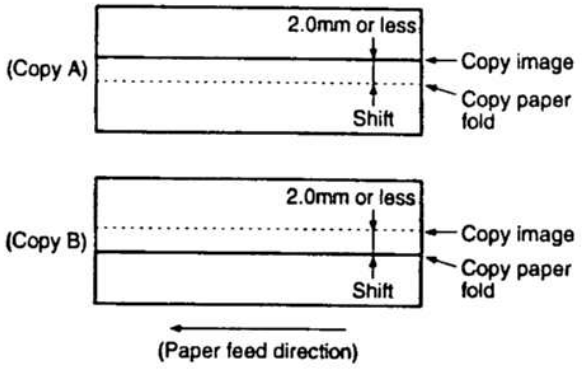

4) If the copied line is not in the specified range, perform the following procedure.

5) Pull out the tray, and loosen the off center adjustment screw.

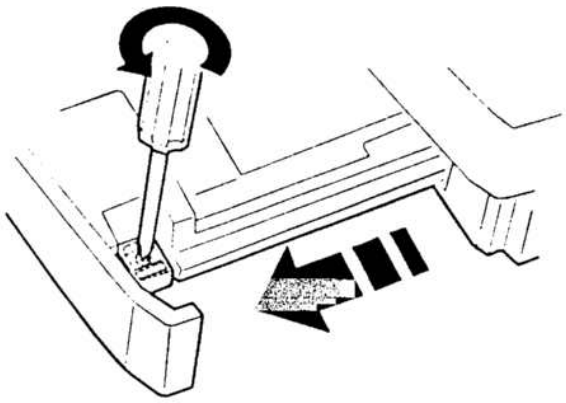

6) Slide the off center adjustment screw back and forth.

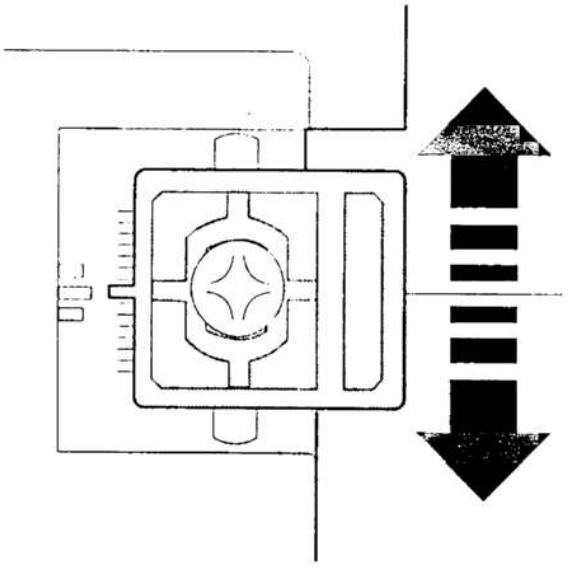

7) Make a copy and check that the copied line is at the center of the copy paper. Repeat procedures 1) - 7) until the copied line comes in the specified range.

(2) DV bias adjustment

① Set the digital multi meter range to DCV 300V.

② Connect the test rod to the left pin (+ side) of the high voltage PWB resistor and the chassis (GND).

③ Execute Sim 8-1.

(The DV bias voltage is outputted for 30 sec.)

④ Adjust the DV bias adjustment volume to set the output voltage to −150±10V.

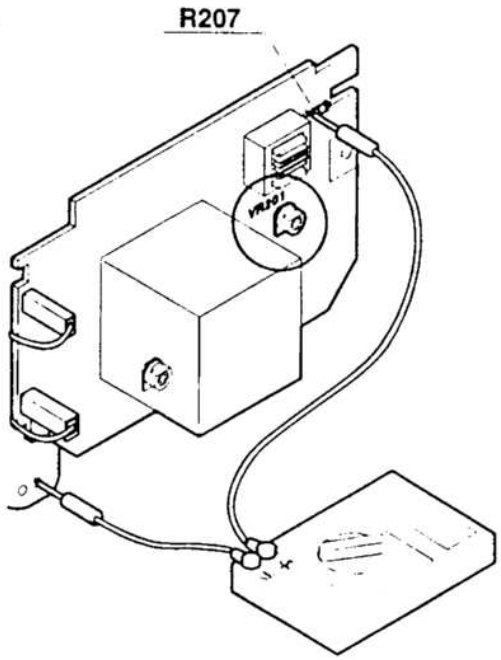

(3) Main charger

① Set the digital multi meter range to DC700V or above.

② Put the test rod to the GB (+ side) of the high voltage PWB and the chassis (GND).

③ Execute Sim 8-2. (The main charger and the transfer charger are turned on for 30 sec.)

④ Adjust the adjustment volume so that the output voltage is as shown below.

Mode	Adjustment value
Manual mode	−650 ±13 V
Photo mode	−500 ±10 V*
Toner save mode	−400 ± 8 V*

* By adjusting the manual mode, the value is automatically obtained.

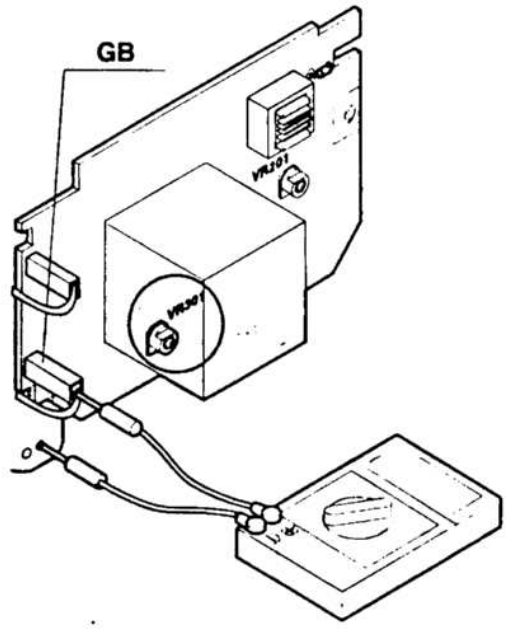

[10] SIMULATION LIST

1. Entering the simulation mode

Press the clear key → the exposure mode selector key → the clear key → the exposure mode selector key inthis sequence to enter the serviceman simulation mode. Press the clear key to cancel the simulation mode.

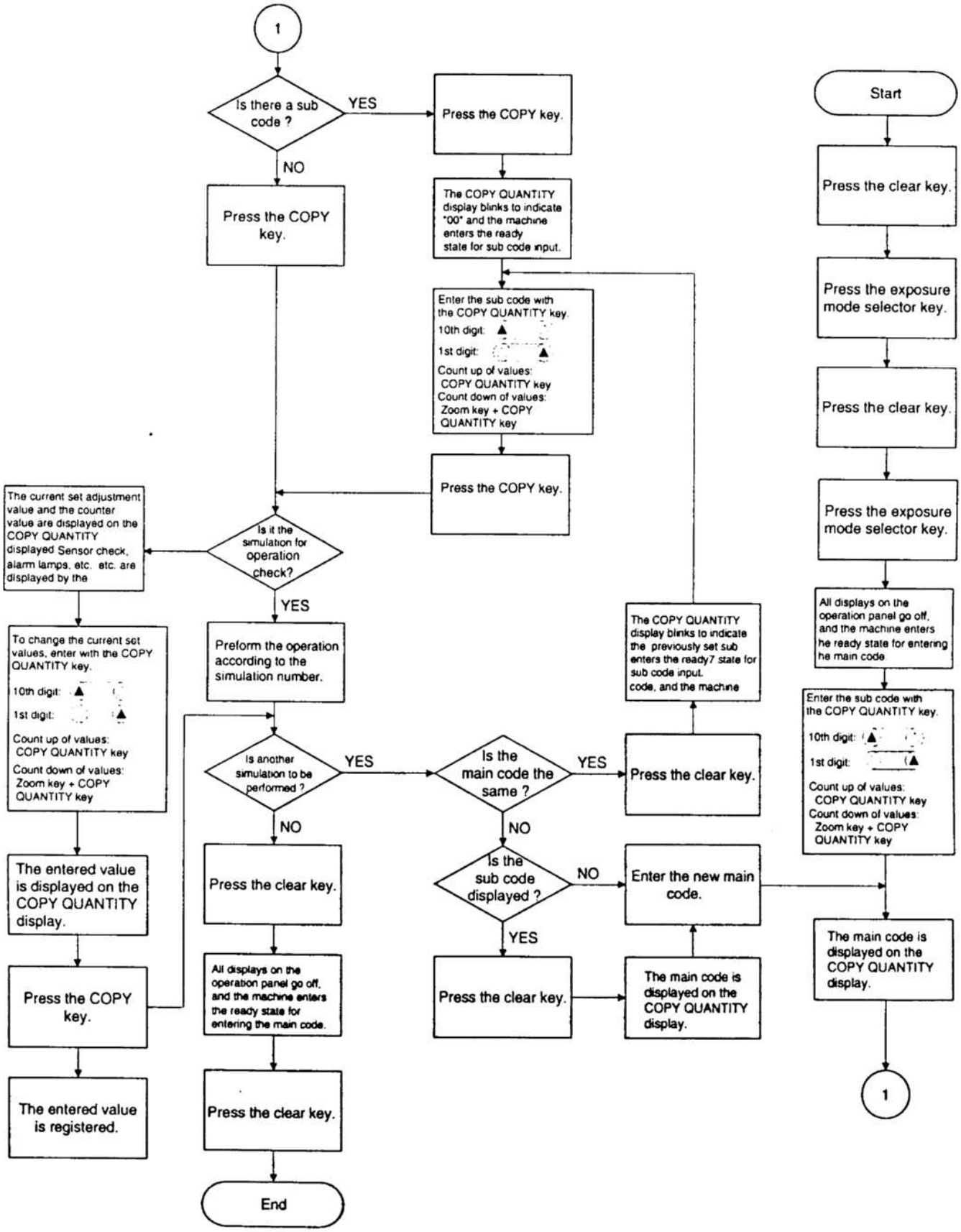

2. Simulation list

Main code	Sub code	Content
1	1	Mirror base operation check, optical system sensor status display
1	2	Optical system sensor status display
1	3	Lens, No. 4/5 mirror operation check
1	4	Lens, No. 4/5 mirror aging
5	1	Operation panel display check
5	2	Heater lamp check
5	3	Copy lamp check
5	4	Discharge lamp check
5	5	Blank lamp check
7	1	JAM aging
7	6	Intermittent aging
8	1	Developing bias check
8	2	Main charger/transfer charger output check (Manual copy mode)
8	3	Main charger/transfer charger output check (Photo copy mode)
8	4	Main charger/transfer charger output check (Toner save mode)
10	—	Toner motor operation check
14	—	Cancel of trouble other than U2 trouble
16	—	Cancel of U2 trouble
22	5	Total counter display
22	12	Drum counter display
24	7	Drum counter clear
25	1	Main motor operation check
26	1	Manual mode (single/multi) setting
26	6	Destination setting
26	7	Machine conditions setting
26	11	Exposure adjustment value setting for OPC drum membrane decrease correction
26	20	Rear edge void setting
30	1	Paper sensor status display
43	1	Fusing temperature setting
43	4	Fusing temperature in multi copy
46	1	Exposure level adjustment (Note 1)
47	—	AE sensor characteristics measurement
48	1	Vertical/horizontal copy magnification ratio adjustment and zooming exposure correction setting (Note 1)
50	1	Lead edge image position adjustment and void adjustment (lead edge/rear edge) (Note 1)
51	2	Resist amount adjustment (Note 1)

* In the simulation mode (except for the aging mode):
  While pressing % key, press the 1-digit up key, and the key will be the 1-digit down key.
  While pressing % key, press the 10-digit up key, and the key will be the 10-digit up key.

(Note 1) When the simulation mode is canceled by pressing the clear key while copying, be sure to check that the lens is stationary (Ready lamp ON) before pressing the clear key.

(Reason) If the clear key is pressed during the lens is moving (normal → zooming, zooming → normal, zooming → zooming), the magnification ratio displayed on the operation panel does not correspond to the lens stop position, resulting in copying of a different magnification ratio than that displayed on the operation panel.
If the clear key is erroneously pressed during the lens is moving, turn OFF/ON the power to initialize the lens.

. Contents of simulations

<table>
<tr><th>Main code</th><th>Sub code</th><th>Content</th></tr>
<tr><td>1</td><td>1</td><td>Scanner unit and its control circuit operation check
(Operation/procedure)
1. Execute this simulation to detect the mirror and the lens home positions.
<table>
<tr><th>Sensor name</th><th>Display lamp</th></tr>
<tr><td>Mirror home position sensor (MHPS)</td><td>: Drum replacement required indicator</td></tr>
<tr><td>Lens home position sensor (LHPS)</td><td>: Toner required indicator</td></tr>
</table>
2. Press the COPY key, and the machine will scan at the speed corresponding to the currently set magnification ratio.
The magnification ratio can be voluntarily set with the magnification ratio select key and the zoom key.</td></tr>
<tr><td></td><td>2</td><td>Optical unit sensors and detectors and the related circuits operation check
(Operation/procedure)
ON/OFF state of the sensors and detectors in the optical unit can be monitored with the operation panel lamps.
<table>
<tr><th>Sensor name</th><th>Display lamp</th></tr>
<tr><td>Mirror home position sensor (MHPS)</td><td>: Drum replacement required indicator</td></tr>
<tr><td>Lens home position sensor (LHPS)</td><td>: Toner required indicator</td></tr>
</table></td></tr>
<tr><td></td><td>3</td><td>Lens unit and the control circuit operation check
(Operation/procedure)
The lens unit moves continuously to the following positions of magnification ratios and stops at each position for 0.5sec.
The copy magnification ratio corresponding to each stop position is displayed on the copy magnification ratio display.
AB series: 100% → 81% → 70% → 141% → 115%
Inch series: 100% → 78% → 70% → 141% → 129%</td></tr>
<tr><td></td><td>4</td><td>Optical unit and the control circuit operation check
(Operation/procedure)
Operation of simulation 1-3 is repeated continuously. (Aging)</td></tr>
<tr><td>5</td><td>1</td><td>Operation panel display lamp and the control circuit operation check
(Operation/procedure)
Every time when the COPY key is pressed, half of the display lamps on the operation panel light up alternatively.
<table>
<tr><td>1</td><td>Copy key/Power save key/Copy quantity display/Zoom indicator</td></tr>
<tr><td>2</td><td>Copy ratio indicator (AB series: 141%, 115%, 100%, 81%, 70% Inch series: 141%, 129%, 100%, 78%, 70%)
Tray paper feed indicator/Manual paper feed indicator/Drum replacement required indicator/Misfeed indicator
Toner required indicator/Exposure indicator (1, 3, 5)/Exposure mode indicator (Auto/Manual/Photo)</td></tr>
</table></td></tr>
<tr><td></td><td>2</td><td>Heater lamp and the control circuit operation check
(Operation/procedure)
The heater lamp repeats ON (500ms) and OFF (500ms) 5 times.</td></tr>
<tr><td></td><td>3</td><td>Copy lamp and the control circuit operation check
(Operation/procedure)
The copy lamp lights up for 5 sec.</td></tr>
<tr><td></td><td>4</td><td>Discharge lamp and the control circuit operation check
(Operation/procedure)
The discharge lamp lights up for 30 sec.</td></tr>
<tr><td></td><td>5</td><td>Blank lamp and the control circuit operation check
(Operation/procedure)
The blank lamps light up from the outside in sequence and all the lamps light up for 10 sec.</td></tr>
<tr><td>8</td><td>1</td><td>Developing bias voltage check
(Operation/procedure)
The developing bias voltage is outputted for 30 sec.
Check that the output is −150±10V. If not, adjust.</td></tr>
<tr><td></td><td>2</td><td>Main charger, transfer charger voltage check (Manual copy mode)
(Operation/procedure)
The main charger and the transfer charger unit are turned on for 30 sec in the manual copy mode.
Check that the output is −650±13V. If not, adjust.</td></tr>
</table>

<table>
<tr><th>Main code</th><th>Sub code</th><th>Content</th></tr>
<tr><td rowspan="2">8</td><td>3</td><td>Main charger, transfer charger voltage check (Phot copy mode)
(Operation/procedure)
The main charger and the transfer charger are turned on for 30 sec in the photo copy mode.
Check that the output is –400±10V. If not, adjust.</td></tr>
<tr><td>4</td><td>Main charger, transfer charger voltage check (Toner save mode)
(Operation/procedure)
The main charger and the transfer charger are turned on for 30 sec in the toner save copy mode.
Check that the output is –500±8V. If not, adjust.</td></tr>
<tr><td>10</td><td></td><td>Toner motor and the control circuit operation check
(Operation/procedure)
The toner motor is turned on for 30 sec.</td></tr>
<tr><td>14</td><td></td><td>Cancel of trouble other than U2
(Operation/procedure)
After canceling the trouble, the simulation is automatically canceled.</td></tr>
<tr><td>16</td><td></td><td>Cancel of U2 trouble
(Operation/procedure)
After canceling the trouble, the simulation is automatically canceled.</td></tr>
<tr><td rowspan="2">22</td><td>5</td><td>Total count value check
(Operation/procedure)
The total count value is displayed in 2 digits × 3 times on the COPY QUANTITY display repeatedly. There is a blank between displays. The display after the longest blank shows the top digits.
(Example)
[00] → [31] → [46]
In the above case, the value is 3,146.</td></tr>
<tr><td>12</td><td>Drum (CRU) counter value check
(Operation/procedure)
The CRU drum counter value installed is checked.
(Example)
[00] → [31] → [46]
In the above case, the value is 3,146.</td></tr>
<tr><td>24</td><td>7</td><td>Drum counter clear
When this simulation is executed, the drum counter will be "0."</td></tr>
<tr><td>25</td><td>1</td><td>Main motor and the control circuit operation check
(Operation/procedure)
The main motor is operated and the developing bias is turned on for 30 sec.</td></tr>
<tr><td rowspan="2">26</td><td>1</td><td>Manual paper feed section setting
(Operation/procedure)
When this simulation is executed, the currently set bypass code number is displayed. Enter the code number corresponding to the bypass and press the COPY key to set the bypass.
<table>
<tr><th>Code No.</th><th>Bypass</th></tr>
<tr><td>0</td><td>Single bypass</td></tr>
<tr><td>1</td><td>Multi bypass</td></tr>
</table></td></tr>
<tr><td>6</td><td>Destination setting
(Operation/procedure)
When this simulation is executed, the currently set destination code number is displayed.
Enter the code number corresponding to the destination and press the COPY key to set the destination.
<table>
<tr><th>Code No.</th><th>Destination</th></tr>
<tr><td>0</td><td>Inch series</td></tr>
<tr><td>1</td><td>AB series</td></tr>
</table></td></tr>
</table>

<table>
<tr><th>Main code</th><th>Sub code</th><th>Content</th></tr>
<tr><td>26</td><td>7</td><td>Machine conditions check
(Operation/procedure)
When this simulation is executed, the current set machine conditions are displayed.
<table>
<tr><th>Power voltage</th><th>Lighting lamp</th></tr>
<tr><td>100 V</td><td>Auto density lamp</td></tr>
<tr><td>120 V</td><td>Auto/Manual density lamp</td></tr>
<tr><td>200 V</td><td>Auto/Manual/Photo density lamp</td></tr>
</table>
<table>
<tr><th>Version</th><th>Lighting lamp</th></tr>
<tr><td>SHARP</td><td>None</td></tr>
<tr><td>OEM</td><td>JAM lamp ON</td></tr>
</table>
<table>
<tr><th>Copy speed (CPM)</th><th>COPIES MADE display</th></tr>
<tr><td>8 CPM</td><td>8</td></tr>
<tr><td>10 CPM</td><td>10</td></tr>
</table></td></tr>
<tr><td></td><td>11</td><td>Exposure adjustment value setting for OPC drum membrane decrease correction
(Operation/procedure)
When this simulation is executed, the currently set adjustment value for the OPC drum membrane decrease correction is displayed.
1. Set value: 0 - 5
<table>
<tr><th>Set value</th><th>Content</th></tr>
<tr><td>0</td><td>Without photoconductor drum membrane decrease correction</td></tr>
<tr><td>1</td><td>For every 3,000 copies, the copy lamp voltage is increased by 0.33V (0.66V in 200V series).</td></tr>
<tr><td>2</td><td>For every 3,000 copies, the copy lamp voltage is increased by 0.66V (1.32V in 200V series).</td></tr>
<tr><td>3</td><td>For every 3,000 copies, the copy lamp voltage is increased by 0.99V (1.98V in 200V series).</td></tr>
<tr><td>4</td><td>For every 3,000 copies, the copy lamp voltage is increased by 1.32V (2.64V in 200V series).</td></tr>
<tr><td>5</td><td>For every 3,000 copies, the copy lamp voltage is increased by 1.65V (3.30V in 200V series).</td></tr>
</table>
2. Default value: 8 CPM machine: 4/10 CPM machine: 3
3. OPC drum membrane decrease correction counter clear
Execution of Sim 24-7 will clear the counter.</td></tr>
<tr><td></td><td>20</td><td>Rear edge void selection
(Operation/procedure)
When this simulation is executed, the currently set rear edge void setting (the code number) is displayed.
Enter the code number corresponding to the desired setting, and press the COPY key to set it.
<table>
<tr><th>Code No.</th><th>Rear edge void setting YES/NO</th></tr>
<tr><td>0</td><td>With rear edge void</td></tr>
<tr><td>1</td><td>Without rear edge void</td></tr>
</table></td></tr>
<tr><td>30</td><td>1</td><td>Paper fed sensor, detector and the control circuit operation check
(Operation/procedure)
ON/OFF of the paper feed sensors and detectors can be monitored with the operation panel lamps.
<table>
<tr><th>Sensor name</th><th>Display lamp</th></tr>
<tr><td>Paper pass detector (PPD1)</td><td>Toner required indicator</td></tr>
<tr><td>Resist front detector (PPD2)</td><td>Misfeed indicator</td></tr>
<tr><td>Paper exit detector (POD)</td><td>Drum replacement required indicator</td></tr>
</table></td></tr>
</table>

<table>
<tr><th>Main code</th><th>Sub code</th><th>Content</th></tr>
<tr><td>43</td><td>1</td><td>Fusing temperature setting
(Operation/procedure)
When this simulation is executed, the currently set temperature (the code number) is displayed.
Enter the code number corresponding to the desired temperature and press the COPY key to set it.
<table><tr><th>Code No.</th><th>Set temperature (°C)</th></tr><tr><td>0</td><td>170</td></tr><tr><td>1</td><td>175</td></tr><tr><td>2</td><td>180</td></tr><tr><td>3</td><td>185</td></tr><tr><td>4</td><td>190</td></tr><tr><td>5</td><td>195</td></tr></table>Default: 0 (170°C)</td></tr>
<tr><td></td><td>4</td><td>Fusing temperature setting in multi copy
(Operation/procedure)
To prevent against temperature rise in the machine in multi copy, the fusing temperature is automatically changed from the set value of SIM 43-1 to the set value of this simulation after 20 copies.
Therefore, the set temperature in this simulation must be set to a lower level than that of SIM 43-1.
<table><tr><th>Code No.</th><th>Set temperature (°C)</th></tr><tr><td>0</td><td>160</td></tr><tr><td>1</td><td>165</td></tr><tr><td>2</td><td>170</td></tr><tr><td>3</td><td>175</td></tr><tr><td>4</td><td>180</td></tr><tr><td>5</td><td>185</td></tr></table>Default: 1 (165°C)</td></tr>
<tr><td>46</td><td>1</td><td>Copy density adjustment
(Outline)
Used to adjust the copy density in each copy mode.
Exposure adjustment is made by changing the copy lamp applying voltage.
There are two kinds of adjustment points as follows:
1. The adjustment is performed at exposure level 3 in each copy mode. The copy density (exposure) is voluntarily adjusted and the max. and min. exposure levels are automatically calculated.
2. To change the max. or min. level, the adjustment is performed in exposure level 1 or 5 in each copy mode. The copy exposure gradient (exposure gradient) can be voluntarily adjusted.
(Operation/procedure)
When this simulation is executed, the machine performs warm-up,a nd the currently set exposure level is displayed on the COPIES MADE display.
When the COPY key is pressed, the entered value and the max. and min. values calculated according to the entered value are registered and a copy is made.
Select exposure level 1 or 5 with the copy exposure key. By entering the adjustment value with the numeric key, the exposure level can be independently changed.
When the COPY key is pressed, the entered set value is registered and a copy is made.
When the clear key is pressed, the entered set value is registered and the simulation is terminated.
Also when the copy density select key is pressed, the above set value can be registered.
For selection of each copy mode, use the density select key.
Copy density (center) adjustment mode
<table><tr><th>Copy mode</th><th></th><th>Lighting lamp</th><th>Exposure level 3</th></tr><tr><td rowspan="2">Manual copy mode</td><td>Non-toner-save mode</td><td>Manual density lamp</td><td>* Center exposure setting</td></tr><tr><td>Toner save mode</td><td>Manual/Photo density lamp</td><td>* Center exposure setting</td></tr><tr><td>Photo copy mode</td><td>Non-toner-save mode</td><td>Photo density lamp</td><td>* Center exposure setting</td></tr></table></td></tr>
</table>

<table>
<tr><th>Main code</th><th>Sub code</th><th>Content</th></tr>
<tr><td>46</td><td>1</td><td>Copy density adjustment mode
<table>
<tr><th colspan="2">Copy mode</th><th>Lighting lamp</th><th colspan="2">Copy density level (Exposure level)</th></tr>
<tr><td rowspan="2">Manual copy mode</td><td>None-toner-save mode</td><td>Manual density lamp</td><td>1</td><td>5</td></tr>
<tr><td>Toner save mode</td><td>Manual/Photo density lamp</td><td>1</td><td>5</td></tr>
<tr><td rowspan="2">Auto copy mode</td><td>None-toner-save mode</td><td>Auto density lamp</td><td>1 (*3)</td><td>5</td></tr>
<tr><td>Toner save mode</td><td>Auto/Photo density lamp</td><td>1 (*3)</td><td>5</td></tr>
<tr><td>Photo copy mode</td><td>Non-toner save mode</td><td>Photo density lamp</td><td>1</td><td>5</td></tr>
</table>
*1: Exposure level (Entered value of the COPIES MADE display) → Copy lamp change value for one count
100V series: 0.33V change for one count
200V series: 0.66V change for one count
*2: Exposure level (Entered value of the COPIES MADE display) → Copy lamp applying voltage conversion formula
*3: Default: 10
<table>
<tr><th>Specification</th><th>Mode</th><th>Conversion formula</th></tr>
<tr><td rowspan="5">100V series</td><td>AE mode</td><td>Entered value /3 + 50 = Copy lamp applying voltage (V)</td></tr>
<tr><td>Manual mode</td><td>Entered value /3 + 50 = Copy lamp applying voltage (V)</td></tr>
<tr><td>AE mode (toner save mode)</td><td>Entered value /3 + 44 = Copy lamp applying voltage (V)</td></tr>
<tr><td>Manual mode (toner save mode)</td><td>Entered value /3 + 46 = Copy lamp applying voltage (V)</td></tr>
<tr><td>Photo mode</td><td>Entered value /3 + 40 = Copy lamp applying voltage (V)</td></tr>
<tr><td rowspan="5">200V series</td><td>AE mode</td><td>(Entered value /3 + 50) × 2 = Copy lamp applying voltage (V)</td></tr>
<tr><td>Manual mode</td><td>(Entered value /3 + 50) × 2 = Copy lamp applying voltage (V)</td></tr>
<tr><td>AE mode (toner save mode)</td><td>(Entered value /3 + 44) × 2 = Copy lamp applying voltage (V)</td></tr>
<tr><td>Manual mode (toner save mode)</td><td>(Entered value /3 + 46) × 2 = Copy lamp applying voltage (V)</td></tr>
<tr><td>Photo mode</td><td>(Entered value /3 + 40) × 2 = Copy lamp applying voltage (V)</td></tr>
</table></td></tr>
<tr><td>47</td><td></td><td>AE sensor characteristics setting
(Outline)
When the copy lamp is lighted at the specified voltage, the AE sensor input value is read and the AE sensor gain is set.
(Operation/procedure)
When this simulation is executed, the mirror base initializes and moves to the measurement point and stays there. The currently set value is displayed on the copy quantity display. The ready lamp lights up.
When the COPY key is pressed, the copy lamp lights up at the specified voltage interval and the AE sensor input value is read and displayed and stored. At that time, the AE sensor gain is automatically adjusted. If the jam lamp lights up at that time, it indicates the occurrance of read error.</td></tr>
<tr><td>48</td><td>1</td><td>Vertical/horizontal copy magnification ratio adjustment and zooming exposure correction setting
(1) Change the lens home position to perform the following adjustment.
(2) Change the scanner scan speed to perform the following adjustment.
(3) Perform the exposure correction setting in zooming.
(Operation/procedure)
When this simulation is performed, the machine warms up and the currently set value is displayed on the copy quantity display.
<table>
<tr><td>Vertical copy magnification ratio adjustment</td><td>Auto exposure lamp ON (Exposure 3)</td></tr>
<tr><td>Horizontal copy magnification ratio adjsutment</td><td>Auto/Manual exposure lamp ON</td></tr>
<tr><td>Zooming exposure correction</td><td>Auto exposure lamp ON (Exposure 1)</td></tr>
</table>
A: Vertical and horizontal copy magnification ratio adjustment
Every time when the exposure select key is pressed, the display of setting is switched.
Enter the adjustment value with the numerical key. Press the copy key to store the entered value and make a copy.
Press the clear key to store the entered value and terminate the simulation.
When the set value is increased by 1, the ratio is increased by 0.1%.
When the set value is decreased by 1, the ratio is decreased by 0.1%.
B. Zooming exposure correction
Zooming exposure correction is performed only when the magnification ratio is 130% or more. The correction is executed by increasing the copy lamp voltage. The set value is in 10 steps (0 – 9) as shown in the table below.
<table>
<tr><th>Set value</th><th></th><th>0</th><th>1</th><th>2</th><th>3</th><th>4</th><th>5</th><th>6</th><th>7</th><th>8</th><th>9</th></tr>
<tr><td rowspan="2">Copy lamp correction voltage</td><td>100 V series</td><td>No correction</td><td>0.3 V UP</td><td>0.6 V UP</td><td>0.9 V UP</td><td>1.2 V UP</td><td>1.5 V UP</td><td>1.8 V UP</td><td>2.1 V UP</td><td>2.4 V UP</td><td>2.7V UP</td></tr>
<tr><td>200 V series</td><td>No correction</td><td>0.6 V UP</td><td>1.2 V UP</td><td>1.8 V UP</td><td>2.4 V UP</td><td>3.0 V UP</td><td>3.6 V UP</td><td>4.2 V UP</td><td>4.8 V UP</td><td>5.4V UP</td></tr>
</table>
Default: 0 (No correction)</td></tr>
</table>

<table>
<tr><th>Main code</th><th>Sub code</th><th>Content</th></tr>
<tr><td>50</td><td>1</td><td>Copy paper image position adjustment
(Operation/procedure)
When this simulation is executed, the machine performs warm-up and the currently set value is displayed on the COPY QUANTITY display.
There are two sets of set values (A, B). Every time when the density select key is pressed, the set density is switched.
When the exposure level is set to 1 in set value A, the lead edge void adjustment value is displayed on the copy quantity display. When the exposure level is set to 5, the rear edge void adjustment value is displayed.
Enter the set value with the numerical key, and press the copy key to store the entered value and make a copy.
Press the clear key to store the entered value and terminate the simulation.
When the set value is increased by 1, the void amount is increased by 0.176 mm.
In this mode, the adjustment can be performed by ignoring the rear edge void NO setting in the simulation.
<table><tr><th>Set value</th><th>Display lamp</th><th>Exposure level 1</th><th>Exposure level 3</th><th>Exposure level 5</th></tr><tr><td>A</td><td>Auto exposure lamp</td><td>Lead edge void</td><td>Set value A</td><td>Rear edge void</td></tr><tr><td>B</td><td>Auto/Manual exposure lamp</td><td></td><td>Set value B</td><td></td></tr></table>Set both set values A and B to 0, make copies at 70% and 141%, measure the shift between the copy lead edge and the copy image. Enter the value to the formula below to obtain the set values of A, B, and C.
L1 = Shift between the paper lead edge and the copy image in 141% copy [mm]
L2 = Shift between the paper lead edge and the copy image in 70% copy [mm]
A = 11.545 (L1 - L2)
"A" corresponds to the time from start of the scanner unit to reaching the original lead edge image position.
If this value is not proper, a variation my be caused between the copy image lead edge and the paper lead edge in some copy magnification ratios.
B = 11.284 × L2 – 5.602 × L1
"B" corresponds to the time from start of the scanner unit to reaching the optical original lead edge reference position and turning on the resist roller (RRC).
This set value relates to the timing of paper feed for the image position on the drum and the relative positions of the paper and the image position. When this value is increased, the transport timing is delayed.
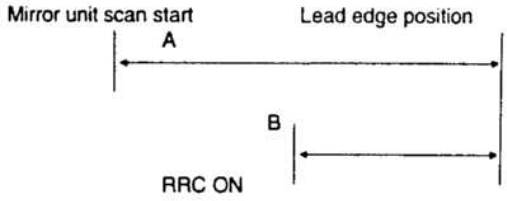
</td></tr>
<tr><td>51</td><td>2</td><td>Resist amount adjustment
(Outline)
Used to adjust the contact pressure between the resist roller and paper.
The set value is adjusted when the paper and image positions are varied.
(Operation/procedure)
When this simulation is executed, the machine performs warm-up and the currently set value is displayed on the COPY QUANTITY display.
Enter the set value with the numeric key, press the COPY key to store it and to make a copy.
When the clear key is pressed, the entered set value is set and the simulation is terminated.
Standard set value: 14 (140ms), 1 step: 10ms
<table><tr><td>Tray paper feed mode</td><td>Auto exposure lamp ON</td></tr><tr><td>Multi manual paper feed mode</td><td>Auto/Manual exposure lamp ON</td></tr></table></td></tr>
</table>

4. Toner save mode setting and cancel

Use the density select key to set to "Manual" and keep pressing the density key again for 5 sec, and the mode display will change from "Manual" to "Photo" (blinking) and the currently set level is displayed on the exposure level display. Under this state, adjust the density adjustment key to set to the toner save mode or cancel it.

Press the left key: Level "1" is lighted and the toner save mode is set.

Press the right key: Level "5" is lighted, and the toner save mode is canceled.

When the density select key is pressed after adjustment, the mode display stops blinking but remains lit to lighting to show that the setting is completed.

5. AE level adjustment

Select "PHOTO" with the exposure select key, and keep pressing the exposure select key for about 5 sec. The mode display will be changed from "PHOTO" to "AUTO" (blinking). The currently set level is displayed on the exposure level display. Under this state, operate the exposure adjustment key to adjust the auto exposure level. When the auto exposure level is adjusted, the exposure levels in the manual mode and the photo mode are also shifted accordingly.

After completion of the adjustment, press the exposure select key, and the blinking mode display will be lighted, ending the AE level setting.

Set value: 0 – 4

Default: 2

6. Self diag list

Main code	Sub code	Section	Content	Details
H2	00	Fusing section	Fusing thermistor open detection	The fusing thermistor is open.
H3	00	Fusing section	Heat roller abnormally high temperature detection	The fusing temperature rises above 240°C.
H4	00	Fusing section	Heat roller abnormally low temperature detection	The fusing temperature does not reach 185°C within 27 sec of turning on the power, or the fusing temperature keeps at 140°C.
L1	00	Optical section	Mirror base feed trouble	When the mirror base is fed for the specified time (0.6 sec) in mirror initializing after turning on the power, the mirror home position sensor (MHPS) does not turn OFF. Or when the mirror base is fed for the specified time (about 0.6 sec) after start of copy return, the mirror home position sensor (MHPS) does not turn OFF.
L3	00	Optical section	Mirror base return trouble	When the mirror base is returned for the specified time (0.6 sec) in mirror initializing after turning on the power, the mirror home position sensor (MHPS) does not turn ON. Or when the mirror base is returned for the specified time (about 0.6 sec) after start of copy return, the mirror home position sensor (MHPS) does not turn ON.
L4	01	Drive section	Main motor lock detection	When the main motor encoder pulse is not detected for 100msec.
L5	00	Optical section	Lens shift trouble	When the lens home position sensor (LHPS) does not change in lens initializing after turning on the power. When the lens home position sensor (LHPS) does not change in lens initializing by auto clear.
U2	01	Main PWB	Memory change	When the counter check sum value stored in the EEPROM is abnormal.
	04	Main PWB	EEPROM serial communication trouble	When a communication trouble occurs with the EEPROM.

Displays for the other troubles]

Main code	Sub code	Content
CH blink	None	Developer cartridge not installed
P blink	None	Tray/multi paper feed tray paper jam/paper empty

[11] USER PROGRAMS

The user programs allow the parameters of certain functions to be set, changed, or cancelled as desired.

1. Press and hold the light (◐) and dark (◑) keys simultaneously for more than 5 seconds until all the trouble indicators* blink and "– –" appears in the copy quantity display.

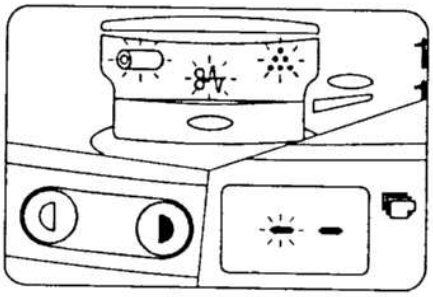

* The trouble indicators are the ▭, ⚠, and ∴ indicators.

2. Enter a program number using the left copy quantity (▲) key.

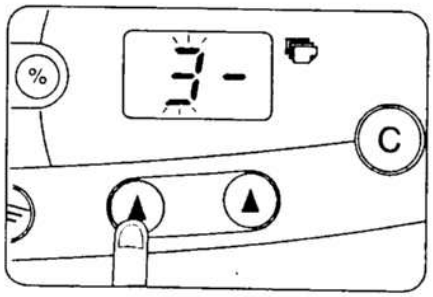

- The selected program number will blink in the copy quantity display.
- If a mistake is made in steps 2 to 4, press the clear (Ⓒ) key. You will return to this step.

Program name	Program No.
Auto clear time	1
Preheat mode	2
Auto power shut-off mode	3

3. Press the copy (▭) key.

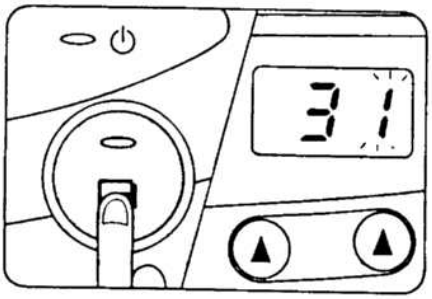

- **The entered program number will be steadily lit on the left side of the copy quantity display and the currently selected parameter number for the program will blink on the right side.**

4. Select the desired parameter using the right copy quantity (▲) key.

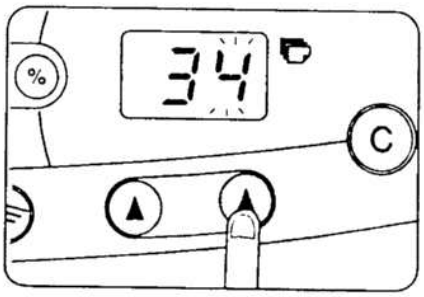

- The entered parameter number will blink on the right of the copy quantity display.

Program name	Parameters		
Auto clear time	0 → OFF	1 → 30 sec.	* 2 → 60 sec.
	3 → 90 sec.	4 → 120 sec.	
Preheat mode	0 → OFF	1 → 30 sec.	2 → 60 sec.
	* 3 → 90 sec.	4 → 120 sec.	
Auto power shut-off mode	0 → 2 min.	* 1 → 5 min.	2 → 15 min.
	3 → 30 min.	4 → 60 min.	5 → 120 min.

Factory default settings are indicated with an asterisk (*).

5. Press the copy (▭) key.

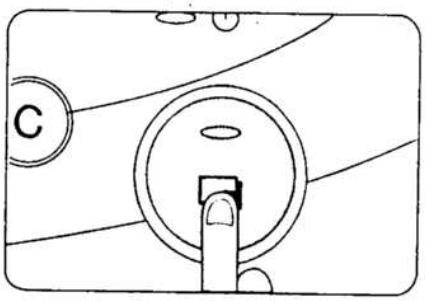

- The right-hand number in the copy quantity display will be steadily lit and the entered value will be stored.

6. To continue with other user programs, press the clear (Ⓒ) key and then repeat steps 2 to 5. To exit the user program mode, press the light (◐) or dark (◑) key.

- All the trouble indicators will go out.

Copy count remaining for drum cartridge replacement

To find out how many more copies can be made before the 12,000 mark is reached, follow the procedure described below.

1. **Press and hold the light (◐) and dark (◑) keys simultaneously for more than 5 seconds until all the trouble indicators* blink and "– –" appears in the copy quantity display.**

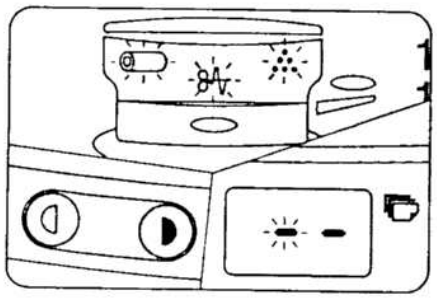

The trouble indicators are the ◎, ⚠, and ⚠ indicators.

Press the clear key for more than 5 seconds to find out how many more copies can be made.

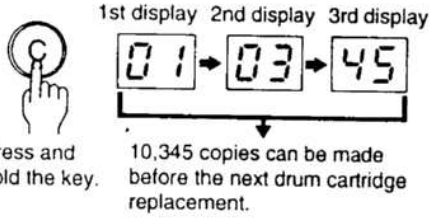

Press the light (◐) or dark (◑) key.

[12] ELECTRICAL SECTION

1. Block diagram

A. Overall block diagram

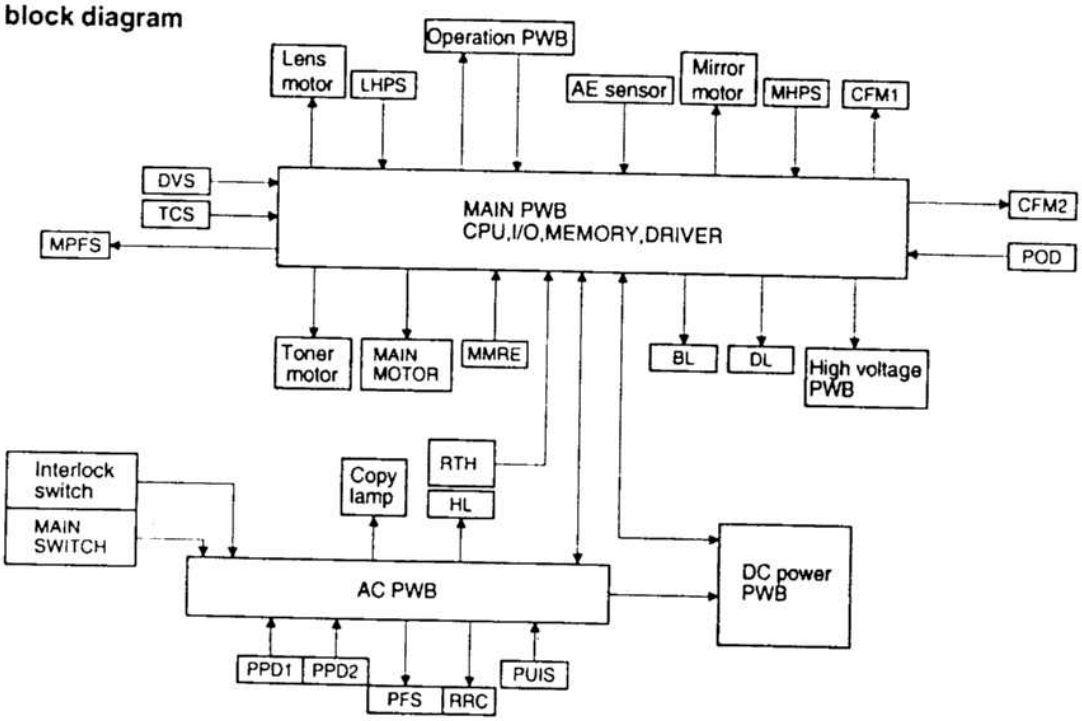

B. Main PWB block diagram (load drive block diagram)

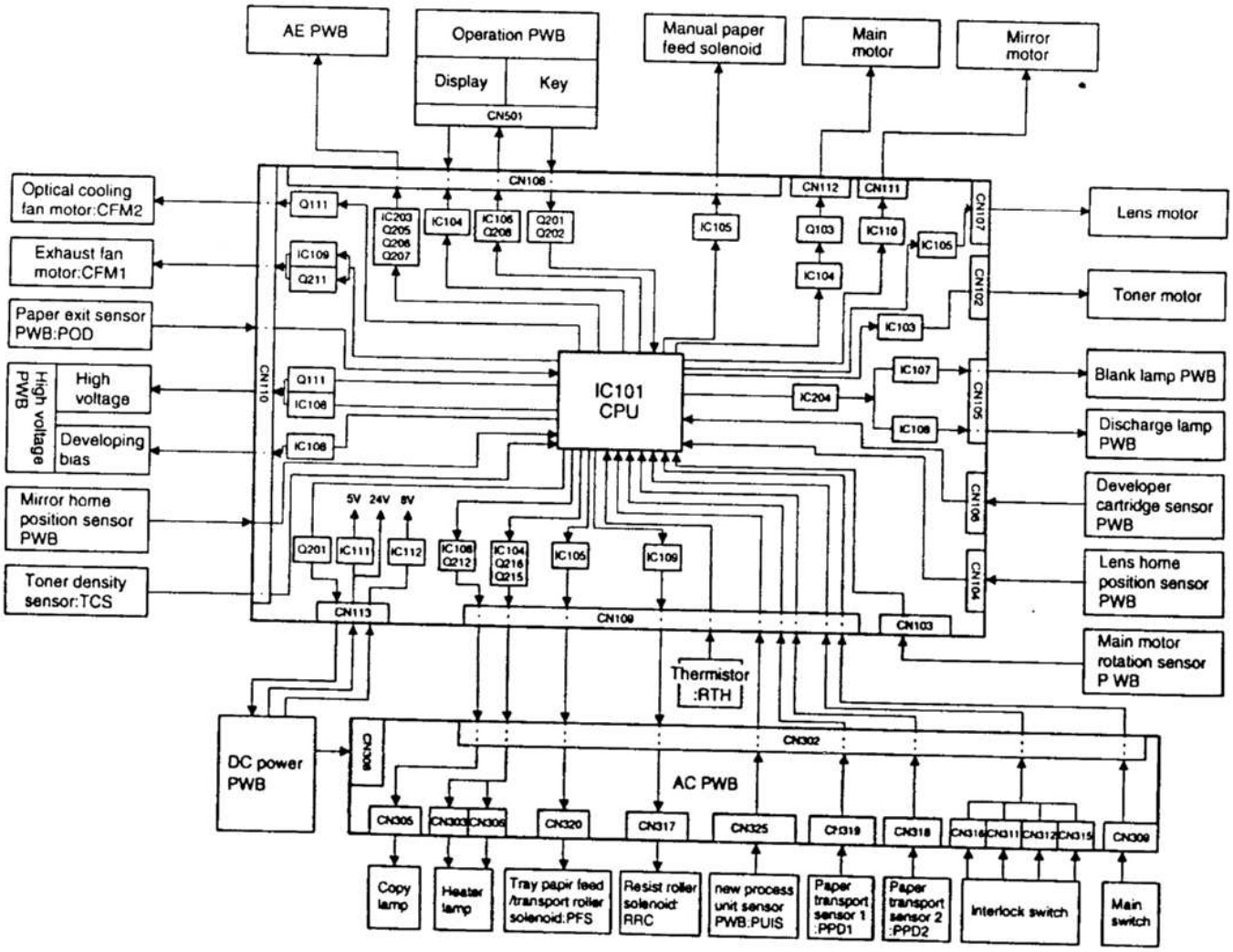

2. Circuit descriptions

A. Main PWB

1) CPU (IC101) TMP90CM38F (TMP90PM38F)

General

The TMP90CM38F is a high-performance 8-bit micro-controller developed for use in control of various devices.

In the TMP90CM38F, the 8-bit CPU, ROM, RAM, the A/D convertor, the multi-function timer, the event counter, the general-purpose serial interface, the pattern generation, the stepping motor controller are integrated into one chip. In addition, its memory can be extended up to 31kbyte with the program memory and the data memory.

The TMP90PM38F includes the one-time PROM. By writing programs into the one-time PROM, it performs the same operation with the TMP90CM38F.

Pin arrangement

The figure below shows pin arrangement of the TMP90CM38F/ TMP90PM38F.

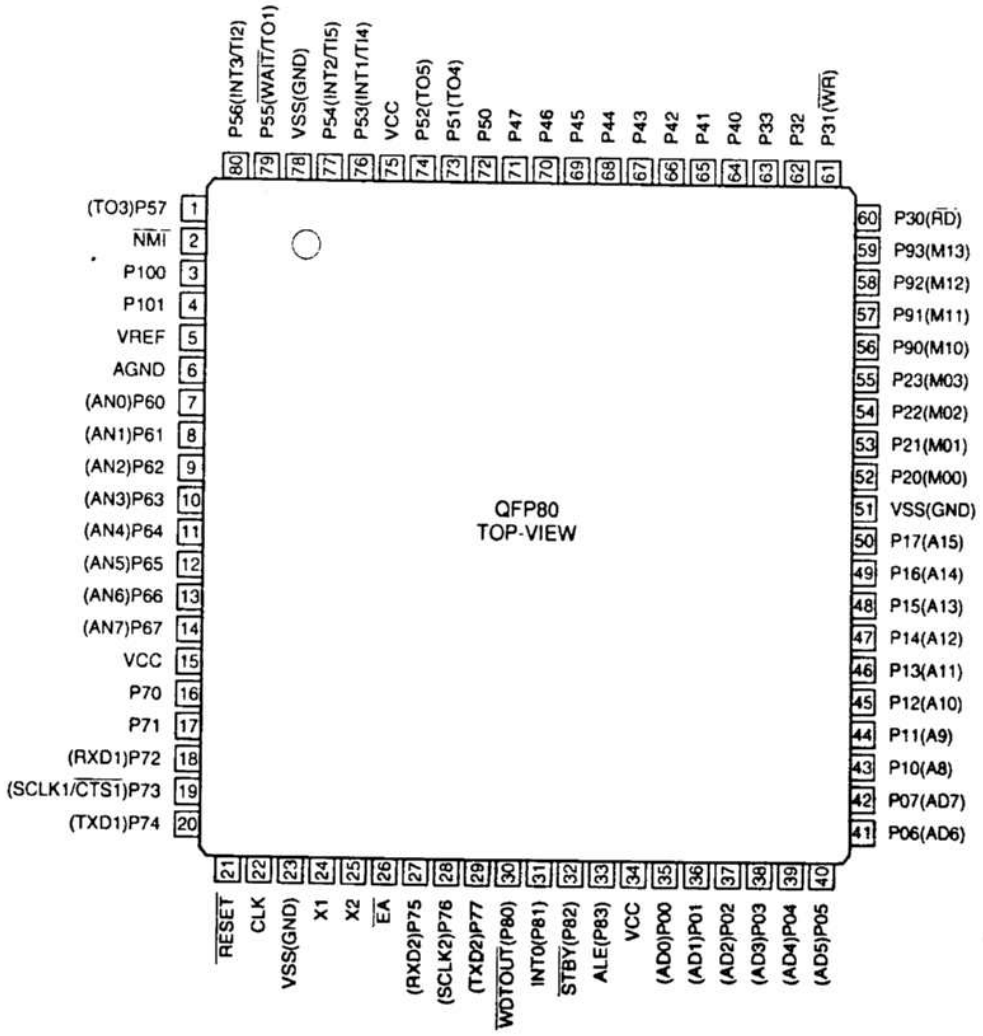

Pin arrangement (Flat package)

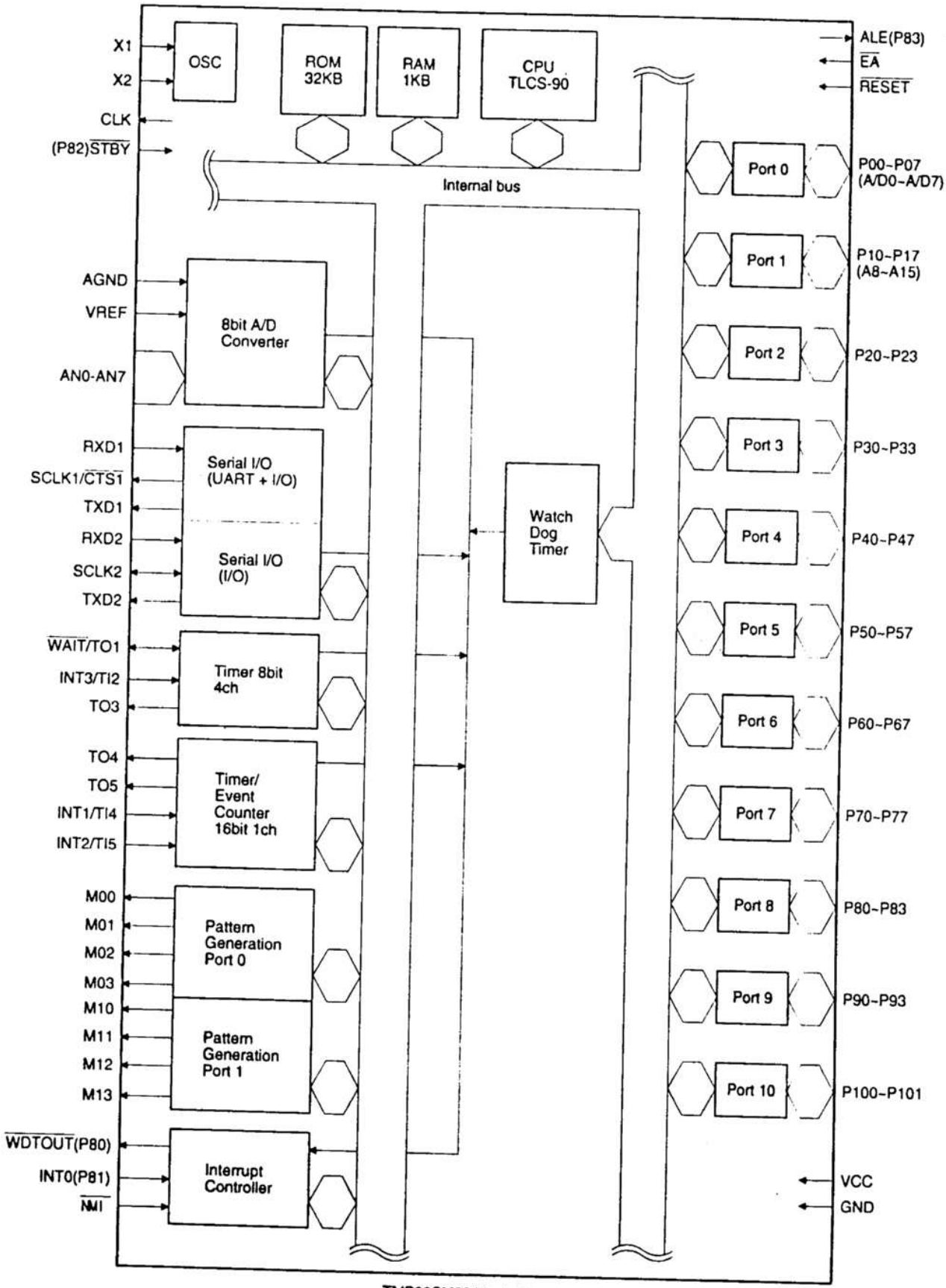

TMP90CM38 block diagram

CPU signal table

CPU TMP90CM38F (TMP90PM38F)

Pin No	Pin name	Input/Output	Signal code	Specifications	Logic
1	P57 (TO3)	Output	HL	Heater lamp	—
2	NMI	Interruption request input	FWS	Zero-cross signal	—
3	P100	Output	TMa	Toner supply motor a	—
4	P101	Output	TMb	Toner supply motor b	—
5	AVCC	—	—	5V	—
6	AVSS	—	—	GND	—
7	P60 (AN0)	ANALOG input	POF	Power off detection	—
8	P61 (AN1)	ANALOG input	RTH	Fusing thermistor	—
9	P62 (AN2)	ANALOG input	CLV	Copy lamp voltage	—
10	P63 (AN3)	ANALOG input	AES	AE sensor	—
11	P64 (AN4)	—	—	NC (Pull-down)	—
12	P65 (AN5)	Input	TCS	Toner sensor	Toner over: LOW
13	P66 (AN6)	Input	RTHO	Thermistor open	Open: LOW
14	P67 (AN7)	Input	LHPS	Lens home position sensor	Home position: HIGH
15	VCC	—	—	5V	—
16	P70	Input	PUIS	New drum cartridge sensor	PUIS is ON: HIGH
17	P71	Input	PPD1	Paper transport sensor 1	PPD1 is ON: LOW
18	P72 (RXD1)	—	—	NC (Pull-down)	—
19	P73 (SCLK1/CTS1)	Input	PPD2	Paper transport sensor 2	PPD2 is ON: LOW
20	P74 (TXD)	Output	GBP	Main charger grid (PHOTO)	—
21	RESET	—	RESET	Reset	—
22	CLK	—	—	NC	—
23	VSS	—	—	GND	—
24	X1	—	X1	Cera-lock	—
25	X2	—	X2	Cera-lock	—
26	EA	—	—	5V	—
27	P75 (RXD2)	Output	STB	Serial/parallel output signal	—
28	P76 (SCLK2)	Output	SCLK	Serial/parallel clock	—
29	P77 (TXD2)	Output	TXD	Serial/parallel data	—
30	(P80)/WDTOUT	Output	CFM2	Cooling fan motor (Optical)	—
31	(P81)/INT0	Input	POD	Paper exit sensor	POO is ON: LOW
32	(82)/STBY	Input	PSW	Print switch	Print SW ON: HIGH
33	(P83) ALE	—	—	NC (Pull-down)	—
34	VCC	—	—	5V	—
35	P00 (AD0)	Output	DSEG0	Display segment 0	—
35	P01 (AD1)	Output	DSEG1	Display segment 1	—
35	P02 (AD2)	Output	DSEG2	Display segment 2	—
35	P03 (AD3)	Output	DSEG3	Display segment 3	—
35	P04 (AD4)	Output	DSEG4	Display segment 4	—
35	P05 (AD5)	Output	DSEG5	Display segment 5	—
35	P06 (AD6)	Output	DSEG6	Display segment 6	—
35	P07 (AD7)	Output	DSEG7	Display segment 7	—
43	P10 (A8)	Input	KI0	Key input 0	Key in: LOW
44	P11 (A9)	Input	KI1	Key input 1	Key in: LOW
45	P12 (A10)	Output	CFM1	Exhaust fan motor	—
46	P13 (A11)	Output	CFM1CNT	Exhaust fan motor high/low	—
47	P14 (A12)	Output	DVBIAS	Developing bias	—
48	P15 (A13)	Output	MTHV	Charging/transfer	—
49	P16 (A14)	Input/Output	SDA	EEPROM data line	—
50	P17 (A15)	Output	SCL	EEPROM clock line	—
51	VSS	—	—	GND	—
52	P20 (M00)	STM1 CONTROL output	LEMT0	Lens motor excitement 0	—
52	P21 (M01)	STM1 CONTROL output	LEMT1	Lens motor excitement 1	—
52	P22 (M02)	STM1 CONTROL output	LEMT2	Lens motor excitement 2	—
52	P23 (M03)	STM1 CONTROL output	LEMT3	Lens motor excitement 3	—
52	P90 (M10)	STM2 CONTROL output	MRMT0	Mirror motor excitement 0	—
52	P91 (M11)	STM2 CONTROL output	MRMT1	Mirror motor excitement 1	—
52	P92 (M12)	STM2 CONTROL output	MRMT2	Mirror motor excitement 2	—
52	P93 (M13)	STM2 CONTROL output	MRMT3	Mirror motor excitement 3	—
60	P30 (RD)	Output	ZCEN	Zero-cross enable	—
61	P31 (WR)	Output	GBN	Main charger grid (normal)	—
62	P32	Output	GOFF	Main charger grid (OFF)	—
63	P33	Output	PSL	Power save lamp	—
64	P40	Output	MDL0	Display common 0	—
65	P41	Output	MDL1	Display common 1	—
66	P42	Output	MDL2	Display common 2	—
67	P43	Output	MDL3	Display common 3	—
68	P44	Output	MDL4	Display common 4	—
69	P45	Output	SWPE	SW power enable	—
70	P46	Input	DVS	DV unit set detection	Developer cartridge installed : HIGH
71	P47	Output	PR	Power relay	—
72	P50	Input	CHK	Checker terminal	—
73	P51 (TO4)	Output	RRC	Resist roller clutch	—
74	P52 (TO5)	TIMER output	CL-PWM	Copy lamp ON trigger	—
75	VCC	—	—	5V	—
76	P53 (INT1/TI4)	Interruption request input	MMRE	Main motor encoder	—
77	P54 (INT2/TI5)	Interruption request input	MHPS	Optical system home position	Home position: HIGH
78	VSS	—	—	GND	—
79	P55 (/WAIT/TO1)	Output PWM	MMPWM	Main motor PWM	—
80	P56 (INT3/TI2)	—	—	NC (Pull-down)	

(2) Serial/parallel conversion IC (IC204)

■ General

The NJU3713 is a serial/parallel conversion IC which converts 12-bit serial data into parallel data, and serves as an output port extension device of the CPU. It is connected to the CPU with three signal lines.

Serial input from the DATA pin is up to 5MH. The input data are passed through the serial input/parallel output shift register, the parallel data latch circuit, and the output driver, and are outputted.

■ Pin arrangement

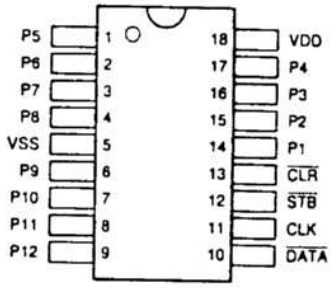

NJU3713G			
Pin No.	12BIT	Serial-parallel load	
14	PORT1	BL0	Blank lamp 0
15	PORT2	BL1	Blank lamp 1
16	PORT3	BL2	Blank lamp 2
17	PORT4	N.C	—
1	PORT5	MRPS	Mirror power LOW
2	PORT6	DL	Discharge lamp
3	PORT7	C1PFS	Cassette 1 paper feed solenoid
4	PORT8	MPFS	Multi paper feed solenoid
6	PORT9	N.C	—
7	PORT10	AEG0	AE sensor gain select 0
8	PORT11	AEG1	AE sensor gain select 1
9	PORT12	AEG2	AE sensor gain select 2

■ Block diagram

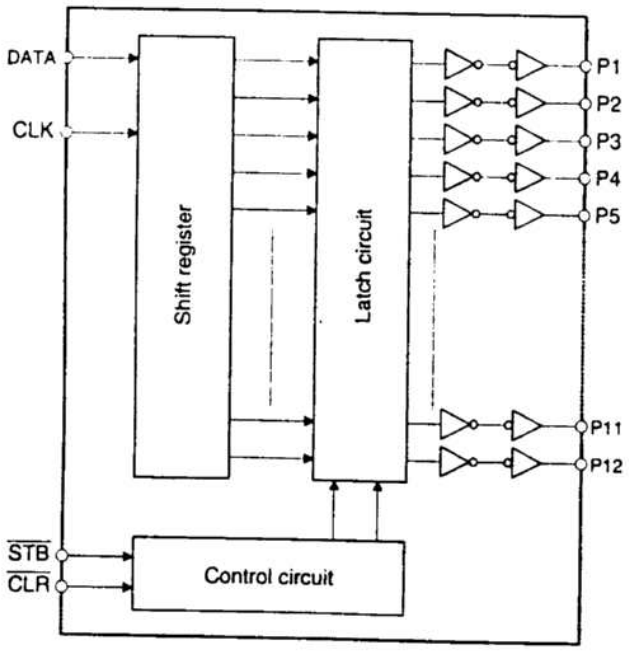

(3) Start/stop control circuit

This circuit detects ON/OFF state of the power and controls start/stop of each circuit. A voltage of 5V is generated by the main PWB, producing each power voltage (VB = +24V, VBS=8V power output) in the DC power section.

After the power voltage reaches the specified level, the operation of each circuit is started. Before the voltage falls below the specified level, the circuit operation is stopped to prevent against malfunction.

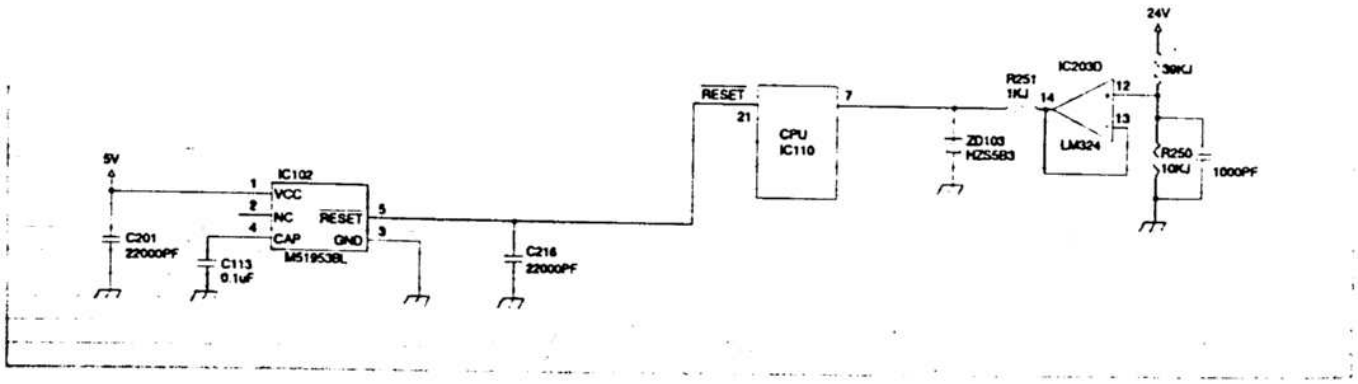

(4) Heater lamp control circuit

1. General

The heater lamp control circuit detects the heat roller surface temperature from the thermistor, and converts it into a voltage level, which is delivered to the CPU analog input pin.

The CPU converts the analog voltage into a digital signal level, compares it with the set value of simulation, and turn on/off the heater lamp depending on the level, maintaining the heat roller surface temperature at a constant level.

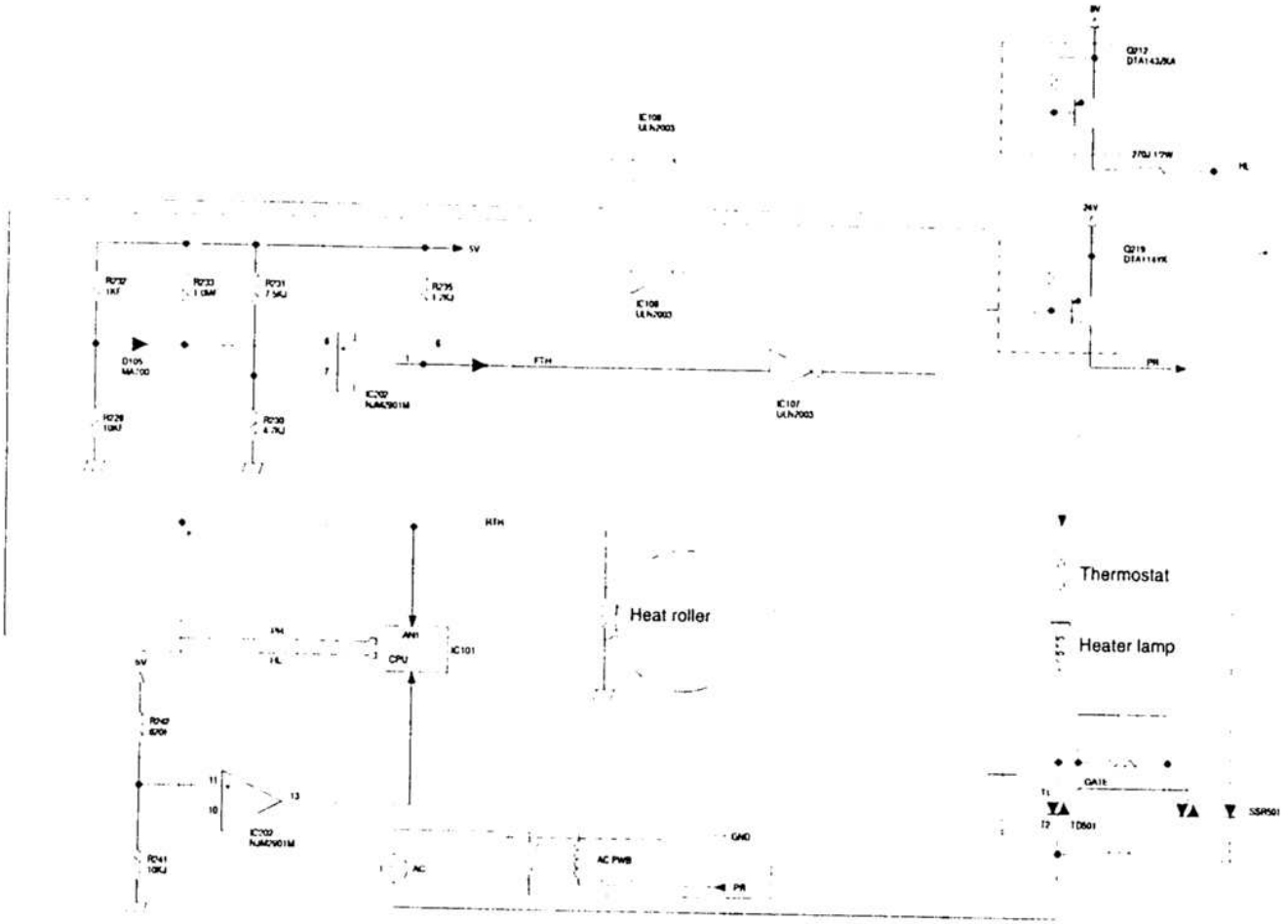

The lower the heat roller surface temperature is, the higher the thermistor resistance is, and vice versa.

Therefo.ɜ, the lower the heat roller surface temperature is, the higher the thermistor pin voltage is, and vice versa. The thermistor pin voltage is inputted to the CPU analog port, and the CPU uses this input voltage level to control ON/OFF of the heater lamp.

[High temperature preventing circuit in case of CPU hung-up]

At IC202 7 pin, +5V is divided by the resistor. At IC202 6 pin, the thermistor pin voltage is inputted.

When, therefore, the voltage at 6 pin falls below the voltage at 7 pin (when the heat roller surface temperature is about 220°C ~ 230°C), IC202 1 pin becomes HIGH, pulling the HL signal to GND level via IC107. As a result, the heater lamp ON signal is not generated. (IC202 output 1 pin is normally at LOW.)

[When the heat roller surface temperature falls below the set level]

a. When the thermistor pin voltage is higher than the set level, the output signal HL from the CPU becomes HIGH.

b. The CL signal is passed through IC108, TR, and Q212 to the solid state relay (SSR). When, therefore, the HL signal is HIGH, the internal triac turns ON.

c. When the internal triac turns ON, a pulse is applied to the external triac gate, flowing a current from the power through the heater lamp to the triac, turning on the heater lamp.

[When the heat roller surface temperature rises above the set level]

a. Since the thermistor pin voltage is lower than the set level, the output signal HL from the CPU becomes LOW.

b. The HL signal is LOW, the SSR is turned OFF, the external triac is turned OFF, and the heater lamp is turned OFF.

(5) Driver circuit (Solenoid)

1. General

It is impossible for the control signal of each load from the CPU to directly drive the load. The control signal is passed through the driver IC then to each load.

2. Operation

The driver circuit is composed of two transistors, forming a Darlington circuit.

In this circuit, a great drive current is obtained from a small input current (CPU output current). When the driver input voltage is HIGH (+5V), the transistor turns ON, flowing a current in the arrow direction to drive the load. When the driver is ON, the driver output pin voltage is 0V.

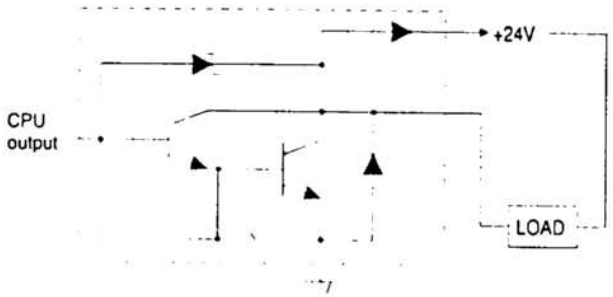

(6) Stepping motor drive circuit

1. General

This driver circuit drives the lens drive motor.

A: Stepping motor phase A coil drive signal

B: Stepping motor phase B coil drive signal

$\overline{A}$: Stepping motor phase A coil drive signal

$\overline{B}$: Stepping motor phase B coil drive signal

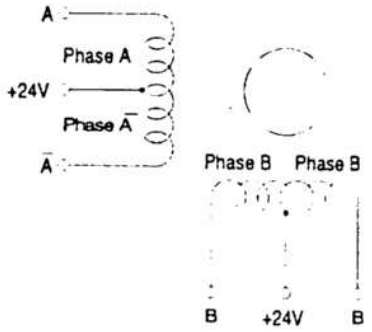

Stepping motor time chart

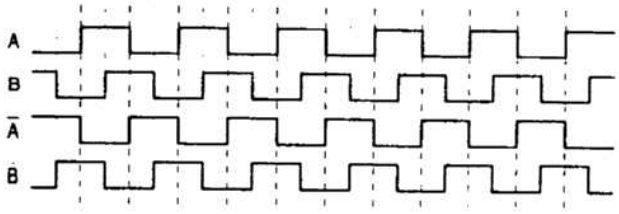

Drive signal	Lens drive
A	LEMT0
B	LEMT1
$\overline{A}$	LEMT2
$\overline{B}$	LEMT3

(7) AE (Automatic Exposure) sensor circuit

The AE sensor circuit is composed of the AE sensor PWB which includes the photo diode and the I-V converting circuit, and the amplifier circuit on the control PWB.

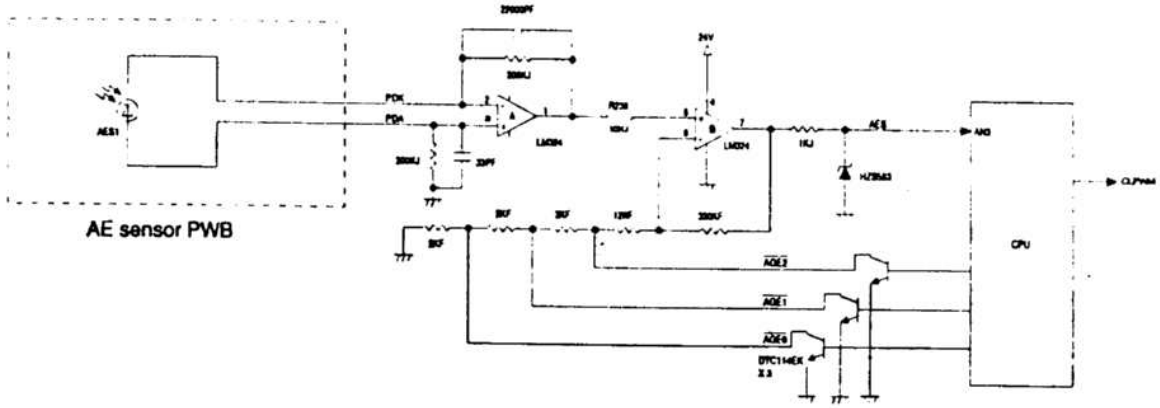

Operation amplifier A performs I-V conversion of the original density level (a minute current). Operation amplifier B amplifies the output of operation amplifier A to the suitable level to input to the CPU.

When SIM 47 is executed, the AE gain signal (AEG0 – AEG2) are switched to automatically set the amplifying level.

The AE operation is performed by the software in the control PWB. When an incident light enters the sensor, a voltage according to the light intensity is inputted to the CPU, which compares the input voltage and the copy lamp applying voltage to control the copy lamp voltage so that the exposure level meets the original density.

(8) Toner supply motor drive circuit

The IC103 controls the toner supply motor. Pseudo-AC waveforms are produced from the pulse signals (TMa, TMb) from the CPU to drive the toner supply motor.

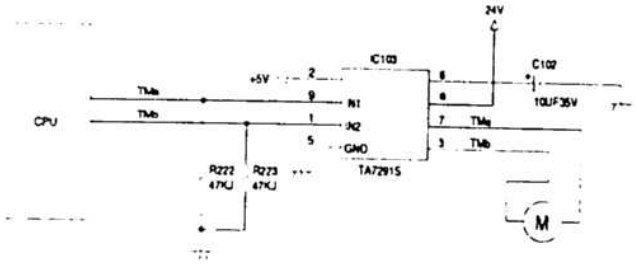

Internal circuit

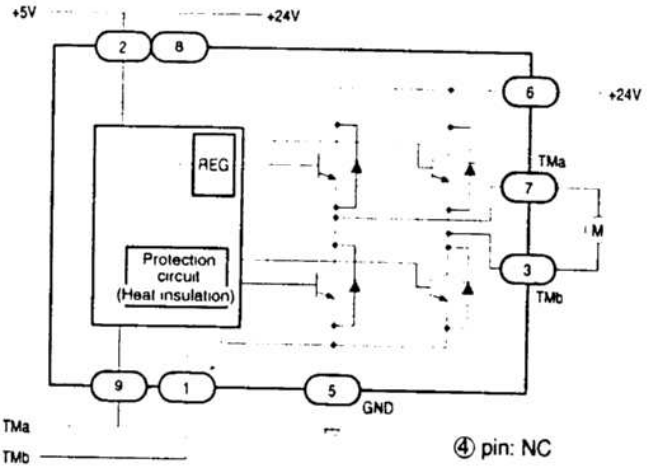

④ pin: NC

(9) Reset IC (IC102)

1. General

The reset IC (M51953 BL) is a semiconductor integrated circuit which is most suitable to detect the power voltage and reset various types of logic circuits including the CPU.

Since it includes the delay circuit, delay time is obtained simply by adding an external capacitor.

Pin connection (Top view)

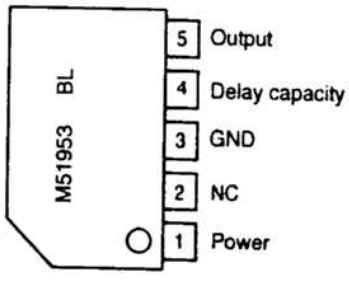

External view 5PS

2. Operation

- After turning on the power, and after td (30msec) time from when the voltage exceeds 4.25V, the output becomes HIGH. "td" is set by the external capacitor (C106).

Block diagram

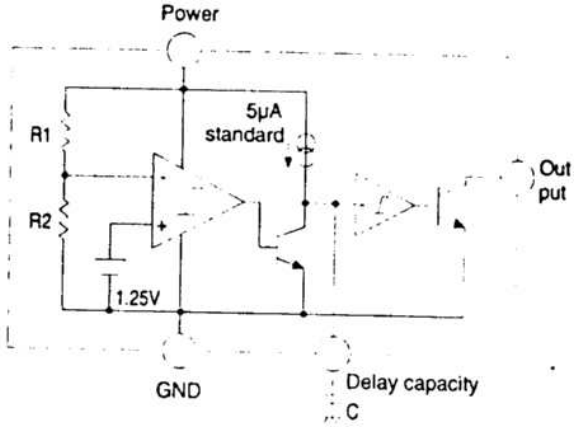

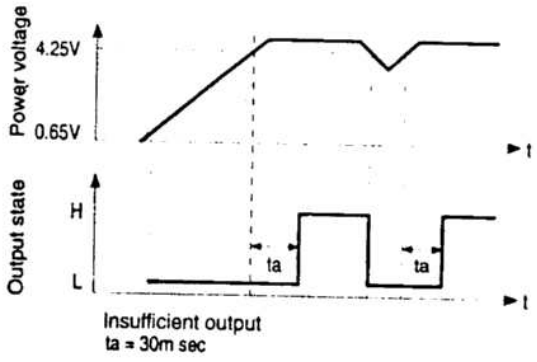

Insufficient output
ta = 30m sec

(10) Copy lamp control section

The output of transformer T301 in the AC PWB described later is monitored by the CPU to detect the variation in the AC power voltage, controlling the phase of copy lamp applying voltage and maintaining the voltage at a constant level.

The variation in the copy lamp exposure amount is adjusted by changing the time from the zero-cross point ((a) in Fig. 2) to V4 rising edge (b) to control the copy lamp voltage.

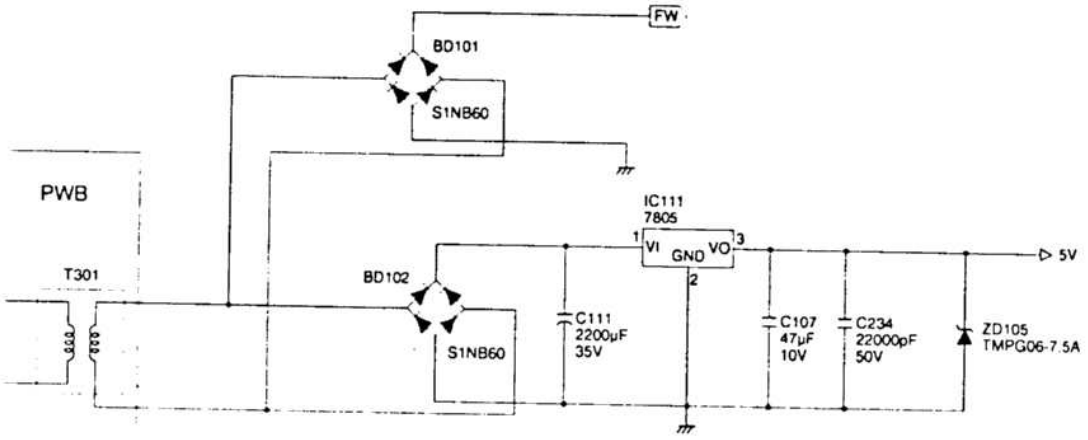

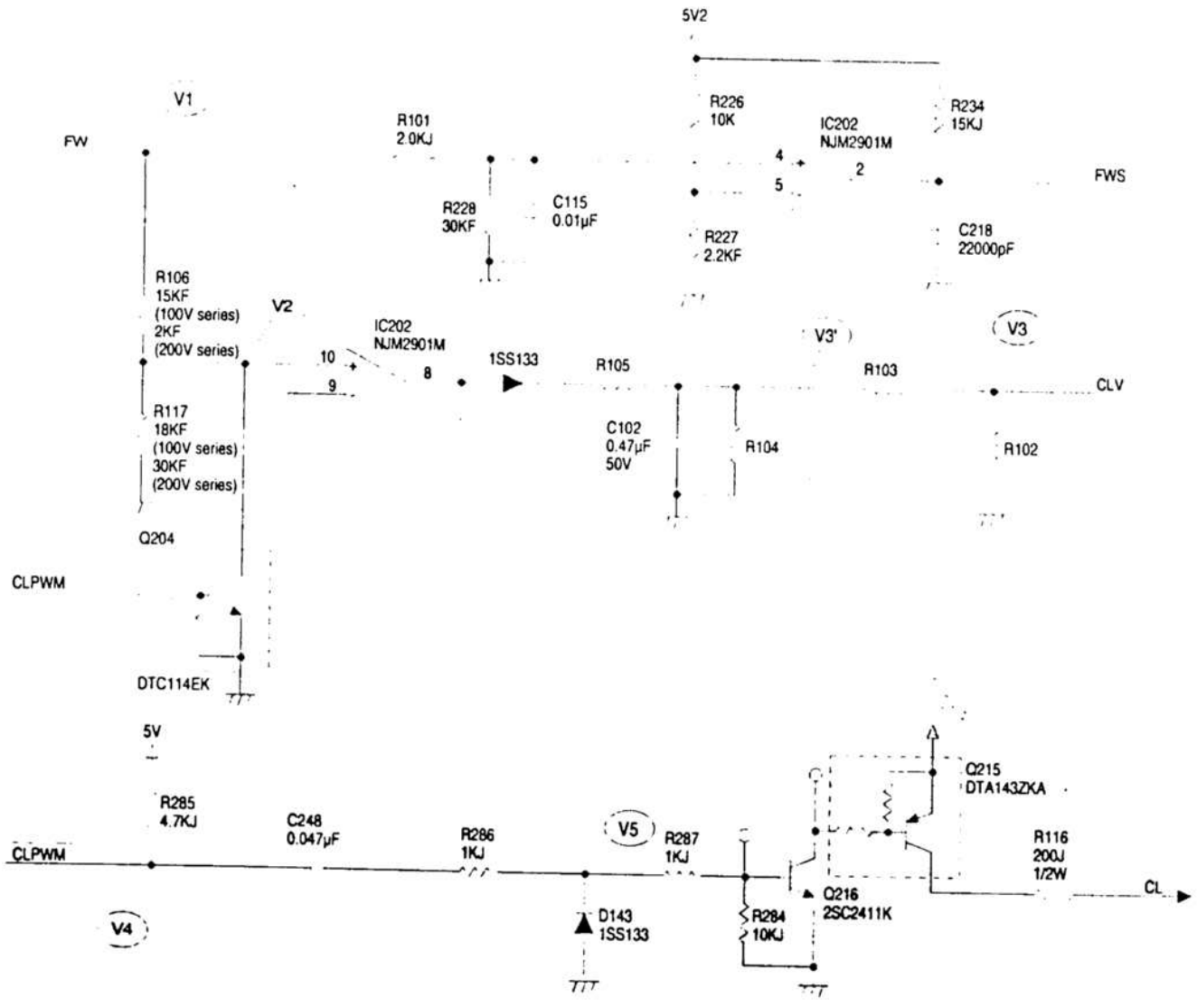

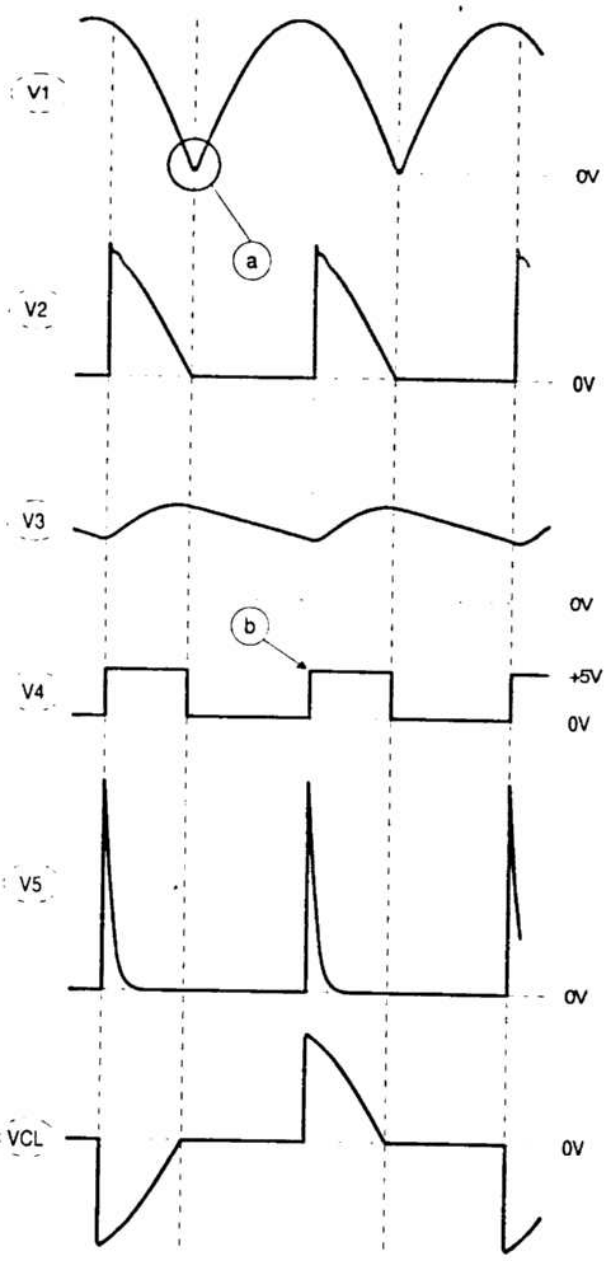

* At rising of the CLPWM signal (V4), the coy lamp is switched by the triac. The trigger signal CI is sent to the triac to turn on the lamp. Then the lamp is turned off at the zero-cross point of V1 waveform.

The CPU reads the control voltage level (QV) corresponding to the change in the copy lamp voltage

The CLV produces the waveform equivalent to the copy lamp voltage waveform which disables the full-rectified waveform of AC input during the pulse ON time. The waveform is converted to the DC level by the low pass filter composed of C102 and R105, and inputted to the CPU. The relationship between the CLV and the pulse ON time is shown in the figure below.

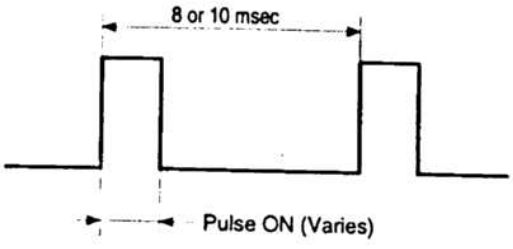

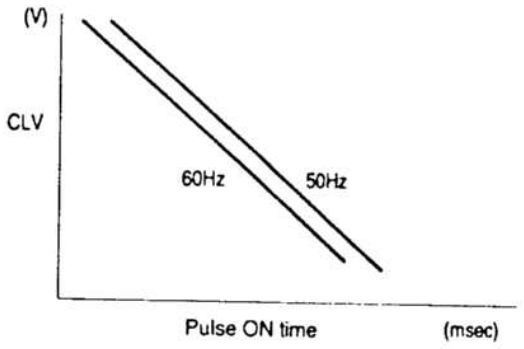

CPU output (CLPWM)

- The shorter the pulse ON time is, the higher the CLV is, and vice versa.
- The pulse ON time rises at the zero-cross timing of AC and is driven with duty.
- Positive pulses the copy lamp ON signal are generated by C248 (C253) at falling of the CPU output and inputted to the photo triac through the 2-stage transistors.

(11) Power section

This model is provided with the auto shut-off mode. The power section is also designed for it. When the power switch of the copier is turned on and the AC power is supplied, AC waveforms for +5V power are generated in the secondary side of transformer T301. The AC waveforms are full-wave-rectified and smoothed by diode BD102 on the main PWB side, and 5V is generated by 3-terminal regulator of IC111. The 5V power is supplied to the CPU.

When the CPU is actuated by the 5V power, it starts the switching power to output the SWPEN signal (CPU output: LOW). The switching power outputs voltages of 24V and VBS with this signal. BVS is stabilized by IC112 to become a voltage with stable BV, and is used for LED display. 24V is supplied to the motor and the solenoid, and supplied also to the 3-terminal power for 5V through D144.

When the CPU turns off SWPEN to enter the auto power shut-off mode, 24V and VBS output falls near zero, virtually turning off.

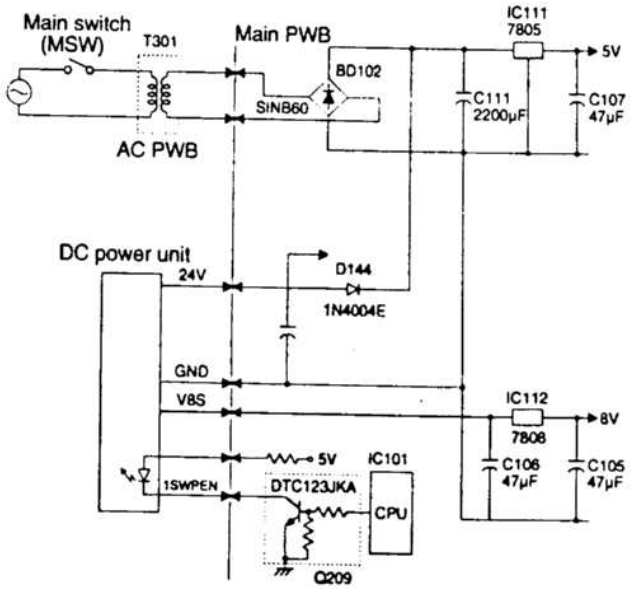

(12) Main motor drive circuit

The encoder signal for the main motor is inputted to the CPU, where operation process is performed. Then the CPU delivers the PWM signal to control the main motor.

The PWM signal (MM-PWM) from the CPU is applied to the gate of FETQ103 through the driver IC104 and transistor Q214, flowing a current through the main motor. When the PWM signal is ON (LOW),

Q214 is OFF and the base voltage of transistor Q213 becomes zero. Electric charge of the FET gate is passed through resistor R273, diode D142, and transistor Q213 to turn off the FET, cutting a current to the motor.

At the moment the FET is turned off, the main motor current passes through D140 (D155) to return.

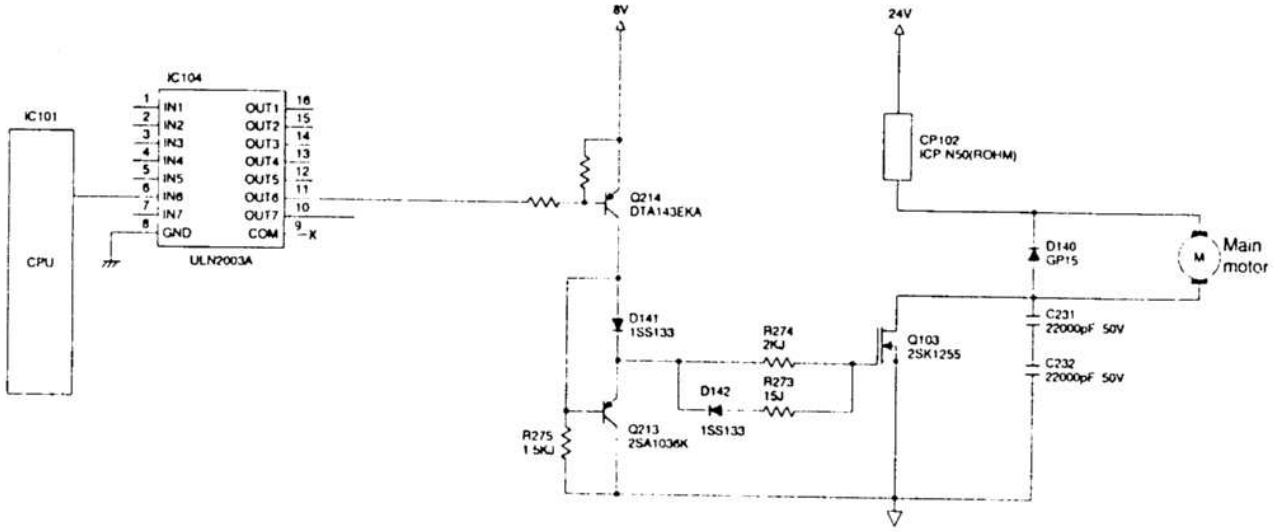

(13) Mirror motor circuit

A stepping motor is used as the mirror motor. To drive the mirror motor, IC110 constant-current chopper control IC (SLA7024) is used. The drive signal is outputted from the CPU to IC110 to drive the mirror motor by excitement in phase 1-2.

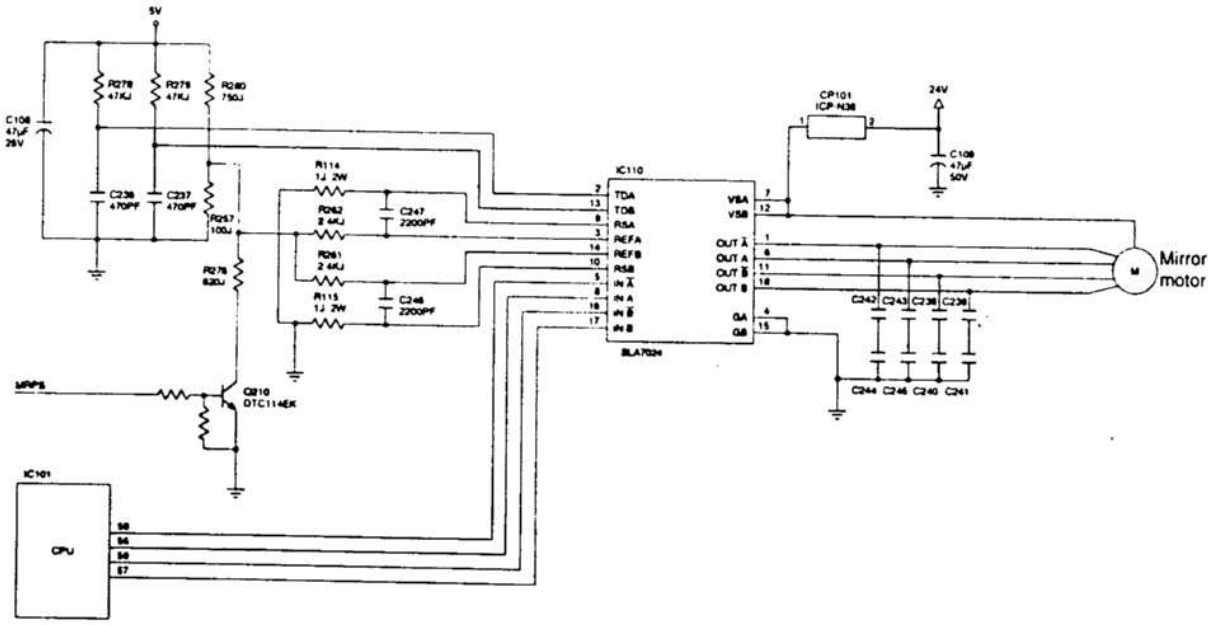

B. Operation panel section

(1) General

The operation circuit is composed of the display matrix circuit and the key matrix circuit.

LED display: Turns on each LED with DSEG0 - DSEG7 and MDL0 - MDL4 signals.

By turning on/off signals DSEG0 - DSEG7 according to timing of MDL0 - MDL4, the LED display at the intersection point of matrix is turned on.

Key detection: Key detection is made by the signal matrix of DSEG0 - DSEG7 and K10 - K11.

When all the MDL signals are off during switching of the MDL signals, DSEG0 - DSEG7 are selected. By turning on the transistor at the last step in the main PWB when the key is pressed, the input state of K10 or K11 is judged to detect ON/OFF of the key.

For selection of DSEG, two signals are switched at one time during MDL is off.

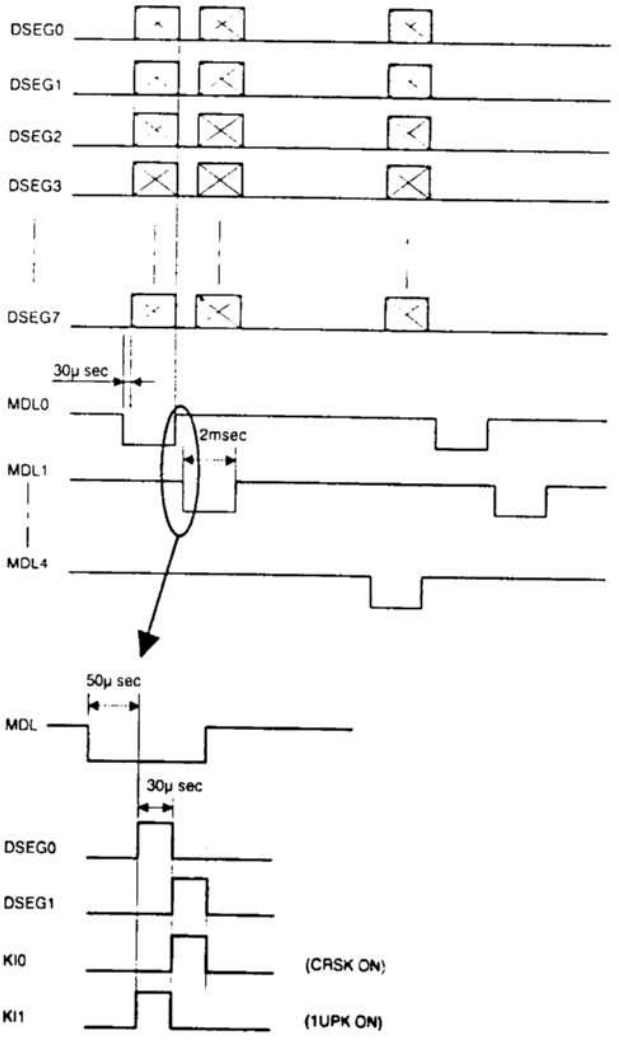

(2) Display circuit section

This circuit is controlled by the data signal and the control signal from the main control signal.

<Block diagram>

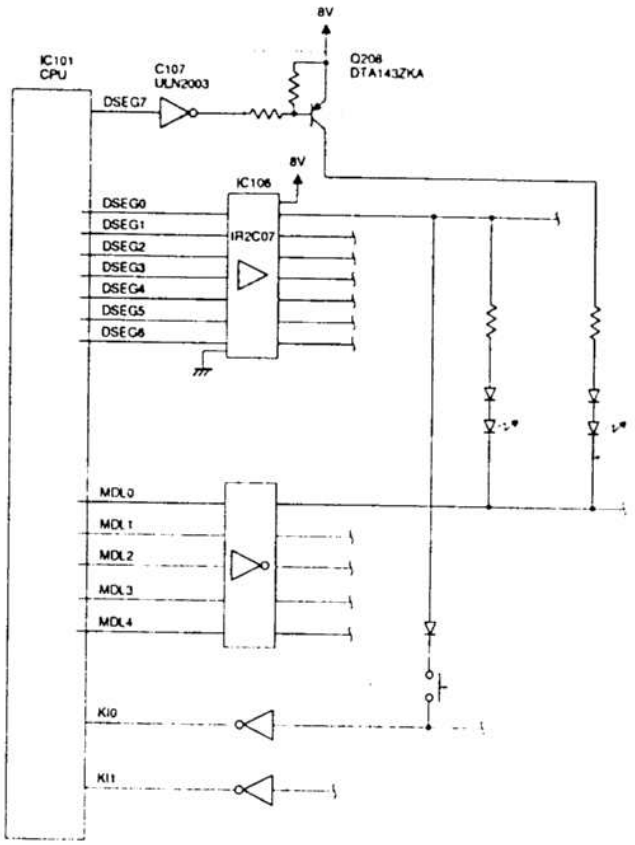

C. DC power operational description

(1) General

When the specified AC input is applied to this power, two DC voltages of +24V (VB) and +14V (V8S) are provided. (V8S is made to 8V stabilization power by the 3-terminal regulator in the main PWB.)

The DC power employs the pseudo-resonance self-excitement flyback convertor system with the hybrid IC STR-F6514 (100V series) and STR-F6523 (200V series).

Fig. 1 shows the block diagram of the power section.

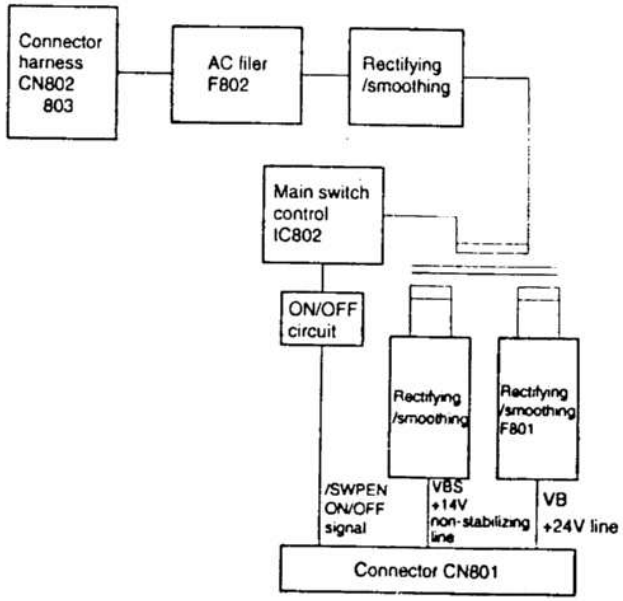

(2) AC input section (filter, etc.)

The input filter is of LC filter in one-step composition, and reduces common mode noises and normal mode noises from the AC line. The across-the-line capacitor, the line bypass capacitor, and the common mode choke coil are provided on the AC PWB. the line bypass capacitors (C805, C806) and across-the-line capacitor C807 (100V series only) are provided on the power PWB.

The fuse (F802) in the AC line protects the circuit against an abnormal current caused by blow-off or melt-down in the circuit.

(3) Rectifying and smoothing

This section converts the AC power into DC outputs (instable state). Rectifying and smoothing are made by diode bridge DB801, cement resistor R822, and smoothing capacitor C814.

Cement resistor R822 limits a rush current caused by charging of smoothing capacitor C814 when the AC power is turned on.

(4) Main switching circuit section

The instable DC output is turned ON/OFF by the FET transistor in the hybrid IC (IC802) with the transformer T801 as the load. During the ON period of the FET transistor, energy is charged in transformer T801. During OFF period of the FET transistor, energy is discharged to the secondary side of transistor T801.

C809 is a resonance capacitor which makes LC resonance of the inductance in the primary winding of transformer T801 and capacitor C809. When the drain voltage of the FET transistor approaches near 0V, the FET transistor is turned on to reduce power loss.

To take timing to turn on the FET transistor, delay of time constant of resistors R815 and R812 and capacitors C813 and C812 is used.

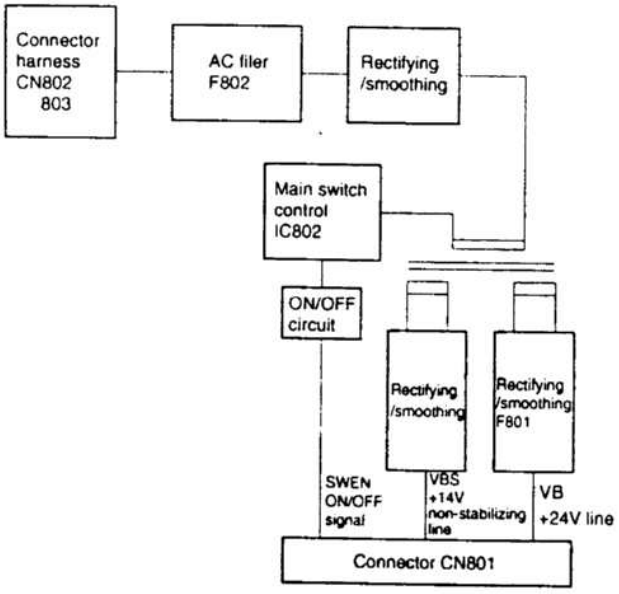

(5) Hybrid IC (IC802) pin functions

The figure below shows the block diagram of hybrid IC (IC802).

STR-F6515 block diagram

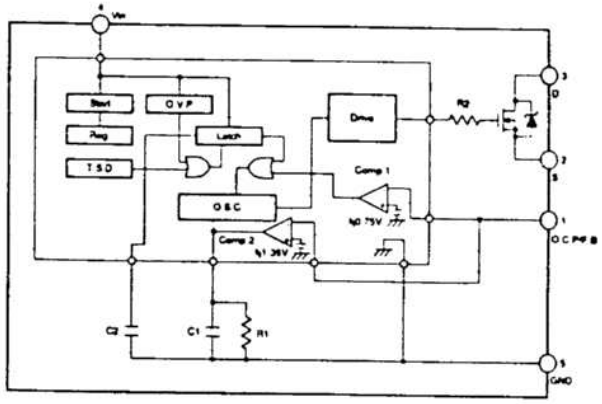

Pin functions

Pin No.	Code	Name	Function
1	OCP/F.B.	OCP and feedback pin	Protection of an overcurrent and constant-voltage control signal input
2	S	Source pin	MOS FET source
3	D	Drain pin	MOS FET drain
4	VIN	VIN pin	Power voltage of the control circuit grounding
5	GND	GND pin	GND

Other functions

Code	Function
OVP	Built in the overvoltage protection circuit.
TSD	Built in the overheating protection circuit.

1) VIN pin (No. 4 pin), start circuit

The start circuit detects the VIN pin voltage to start or stop the operation of hybrid IC (IC802).

When the AC power is turned on, capacitor C808 is charged through starting resistors R810 and R811. When the VIN pin voltage reaches 16V (TYP), the control circuit stops the operation.

After the control circuit is actuated, the voltage of auxiliary winding of transformer T801 is rectified and smoothed to provide the power.

2) OCP/FB pin (No. 1 pin), oscillator, constant-voltage control circuit

The oscillator utilizes charging and discharging of C1 built in the hybrid IC (IC802) and capacitor C812, generating pulse signals to turn ON/OFF the FET transistor. The constant-voltage control is performed by determining the OFF time of the FET transistor by the delay time determined by the time constant of resistors R815 and R812 and capacitors C813 and C812. The ON time control varies the pulse width of the oscillator directly.

The OCP/FB pin voltage is biased by the current of photo coupler PC801 so that the detected voltage of shunt regulator IC801 on the secondary side of the power is constant. As a result, the ON time of the FET transistor is controlled to stabilize the VB output.

The voltage drop of R816 and R817 connected between the FET transistor source pin (2 pin) and the GND pin (5 pin) to detect the drain current of the FET transistor. The threshold voltage of overcurrent detection is about 0.75V (TYP).

3. CIRCUIT DIAGRAM

A. MAIN PWB CIRCUIT 12-15
B. OPERATION PWB CIRCUIT 12-22
C. DL PWB CIRCUIT 12-25
D. BL PWB CIRCUIT 12-26
E. SENSOR PWB A/B 12-27
F. SENSOR PWB C 12-28
G. AC POWER SUPPLY CIRCUIT 12-29
H. DC POWER SUPPLY CIRCUIT 12-35

4. ACTUAL WIRING DIAGRAM

..... 12-39

5. TIMING CHART

A. Warm-up 12-41
B. Tray paper feed 12-41
C. Manual multi paper feed 12-42
D. Manual single paper feed 12-42

When the output voltage falls below the specified level under overload state, the voltage in the additional winding of the primary side also falls accordingly to fall the VIN pin voltage below the operation start voltage. Therefore, the VIN pin voltage rises again and starts operation at the operation start voltage, performing intermittent operations.

3) Overheat protection circuit

When the frame temperature of hybrid IC (IC802) exceeds 150°C (TYP), this circuit actuates the latch circuit.

When the latch circuit is actuated, the oscillation output is kept LOW to stop the power circuit. At that time, the VIN pin voltage rises and falls between 10V (TYP) and 16V (TYP).

4) Overvoltage protection circuit

When the VIN pin voltage exceeds 22.0V (TYP), this circuit actuates the latch circuit.

It basically functions to protect against an overvoltage of the VIN pin in the control circuit. Since, however, the VIN pin voltage is supplied from the transformer additional winding and it is proportional to the output voltage, it operates also against an overcurrent in the primary side when the control circuit is opened.

(6) Secondary side rectifying/smoothing output circuit

The output from the transformer is passed through the rectifying diode and the smoothing diode to be outputted. The component parts numbers of the VB (+24V) are rectifying diode D802, and smoothing capacitors C803 and C804. The component parts numbers of the VBS (+14V) are diode D801 and smoothing capacitor C802.

As stated above, the VB (+24V) is used to stabilize the output as the master circuit. The VBS uses the 3-terminal regulator of +8V in the main PWB. Therefore, the instable voltage is in the range of 12.0V - 16.0V.

(7) Power ON/OFF circuit

This circuit turns OFF the switching power control IC (IC802) by the signal from the main PWB. In the auto shut-down mode, oscillation of the switching power is stopped to reduce power consumption.

When the /SWPEN signal is HIGH (+5V), the switching power is turned on. When LOW, OFF (stopped.)

The VIN pin voltage of control IC (IC802) is decreased to the oscillation stop level by the /SWPEN signal through the photo coupler (PC801), and the OCP/FB pin voltage is raised to the oscillation stop voltage, stopping the control IC (IC802).

A. メイン基板回路-1　　A. MAIN PWB CIRCUIT-1

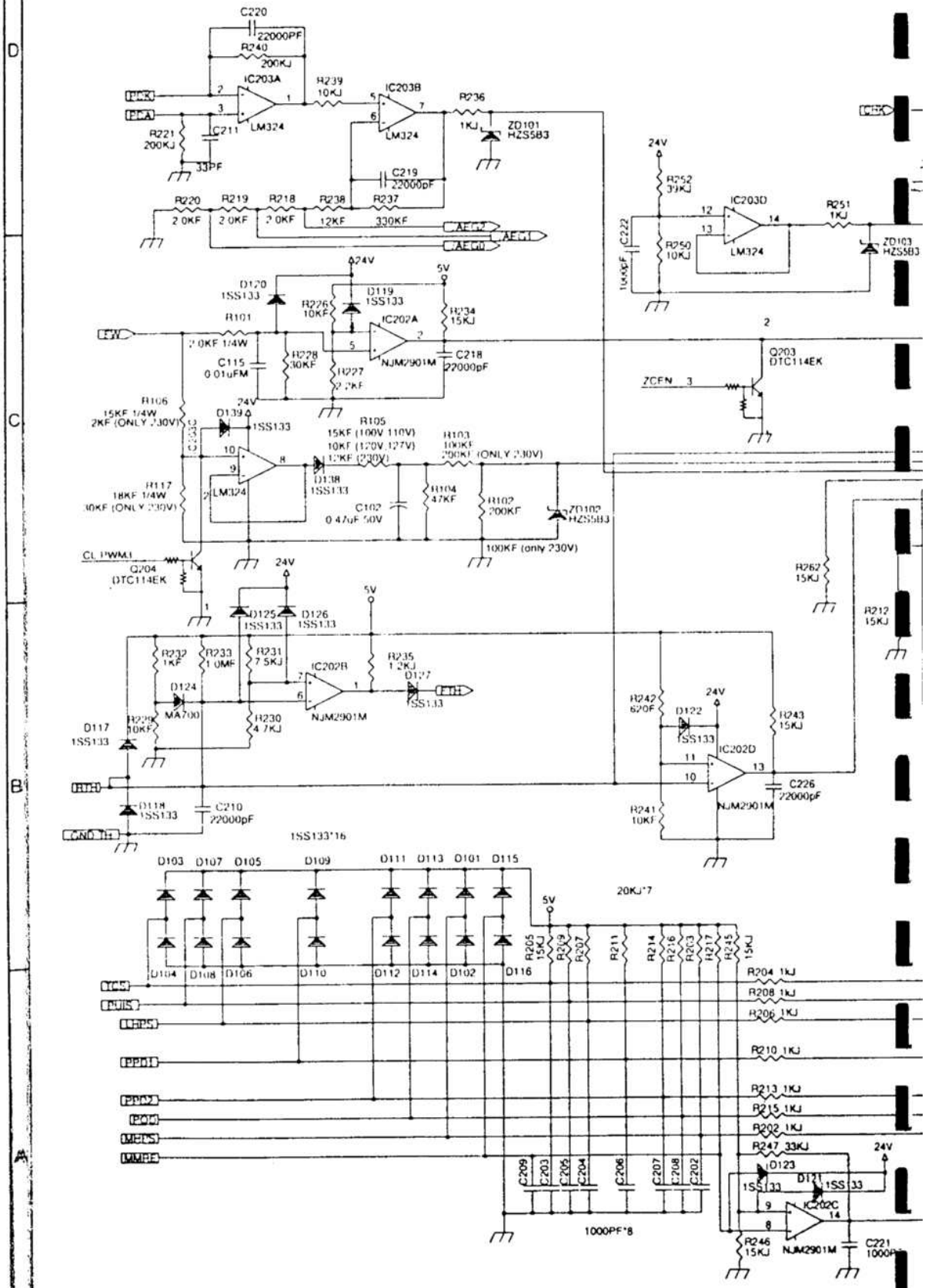

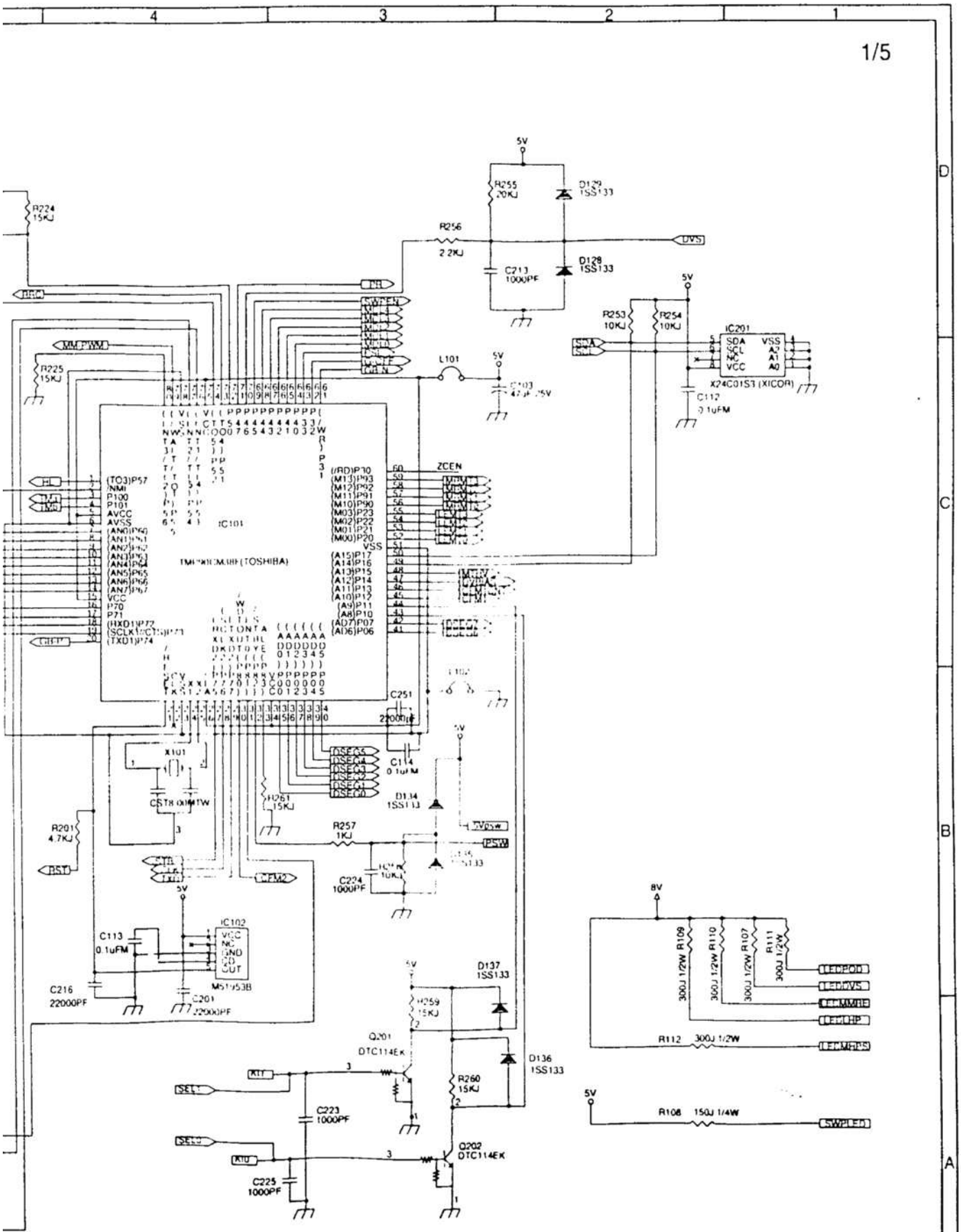
1/5
5V
R255 20KJ
D129 1SS133
R256 2.2KJ
DVS
C213 1000PF
D128 1SS133
R224 15KJ
R225 15KJ
R253 10KJ
R254 10KJ
IC201
SDA
SCL
NC
VCC
VSS
A2
A1
A0
X24C01S3 (XICOR)
C112 0.1uFM
L101
C103 47uF/5V
IC101
TMP90CM38F(TOSHIBA)
ZCEN
C251 22000pF
C114 0.1uFM
X101
CST8.00MTW
R261 15KJ
D134 1SS133
R257 1KJ
PSW
C224 1000PF
R201 4.7KJ
RST
IC102
C113 0.1uFM
C216 22000PF
C201 22000PF
M51953B
D137 1SS133
R259 15KJ
Q201 DTC114EK
D136 1SS133
R260 15KJ
C223 1000PF
Q202 DTC114EK
C225 1000PF
8V
300J 1/2W R109
300J 1/2W R110
300J 1/2W R107
300J 1/2W R111
R112 300J 1/2W
R108 150J 1/4W
SWPLED