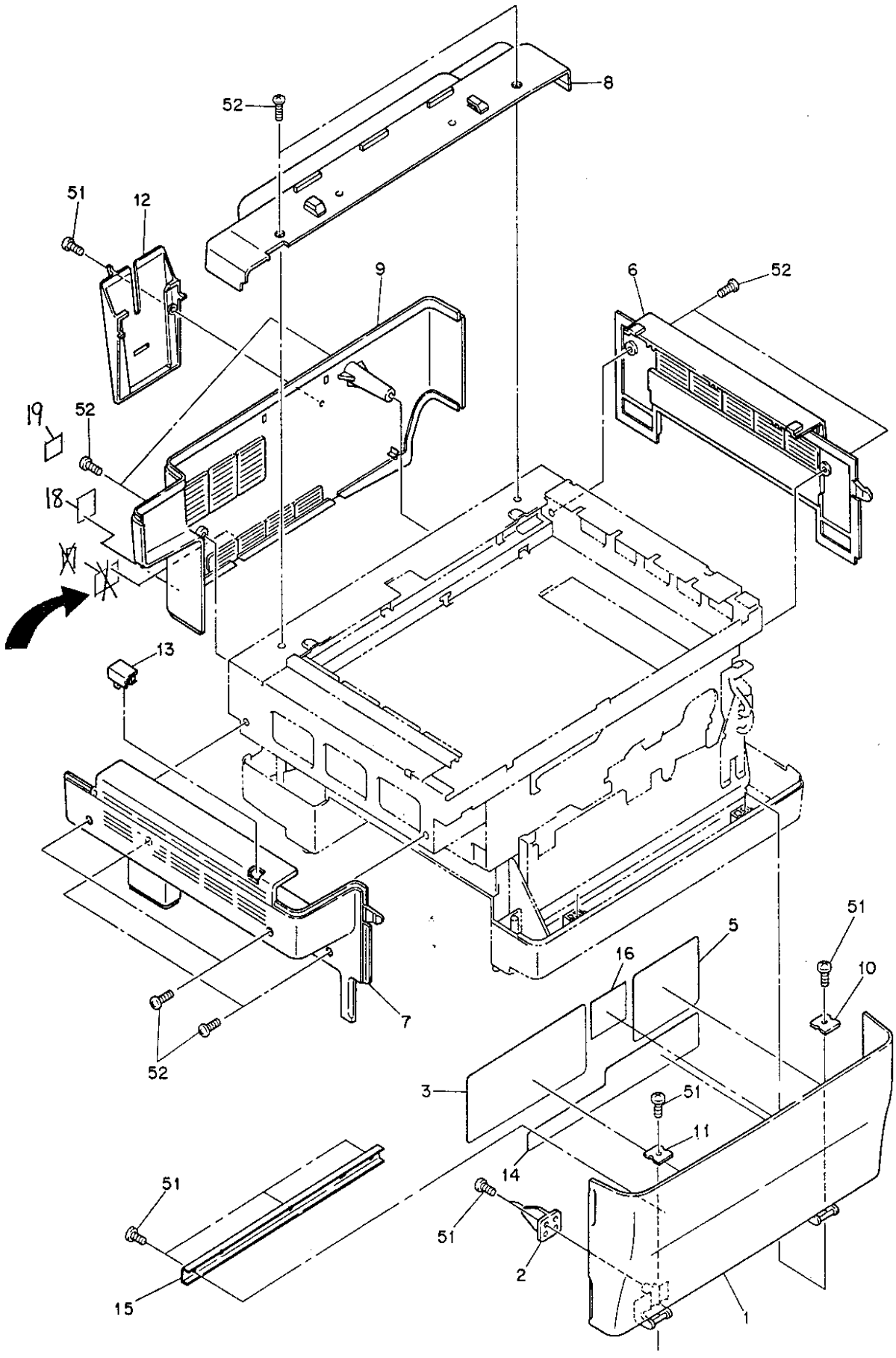

TOSHIBA

ITEM NO.	PARTS NO.	PARTS NAME	Q'TY / PAGE	Q'TY / PACK	SPE PRICE IN NONE	P	I	R	BSI NO.	TO	FROM	SERIAL NO.	REMARKS
1A	4402 861250	F-COV-F-1360	1	1/PP					F97C852				1360
1B	4402 861350	F-COV-F-1370	1	1/PP					F97C852				1370
2	4402 843500	ACTR-SW-DOOR	1	1/P									
3	4402 841670	LBL-INST-TNR1	1	1/KP									
5	4402 841960	LBL-INST-TNR2	1	1/KP									
6	4402 841620	COVER-RIGHT-U	1	1/PP									
7	4402 841610	COVER-LEFT	1	1/PP									
8	4402 841640	COVER-TOP	1	1/PP									
9	4402 841650	COVER-REAR	1	1/PP									
10	4407 686030	PLATE-HINGE	1	1/P									
11	4407 686960	PLATE-HINGE-L	1	1/P									
12	4400 553270	MANUAL-POKET	1	1/PP									
13	4402 841750	CAP-COVER-LEFT	1	1/P									
14	4402 841590	LBL-INST-TNR3-E	1	5/KP									FOR EUROPE
15	4402 841570	BRKT-FRONT-COV	1	1/P									
16	4402 844590	LBL-MEMORY-F120	1	5/KP									
18A	4400 945700	LABEL-CANADA	1	5/P									NAD
19B	4402 090460	LABEL-CE	1	5/P									FOR EUROPE
51	4842 040846	PTBR30*08MSZN3A	8	50/P									
52	4842 040684	TBID3006MSCR3C	10	50/P									
11	4407 686960	PLATE-HINGE-L	1	1/P									

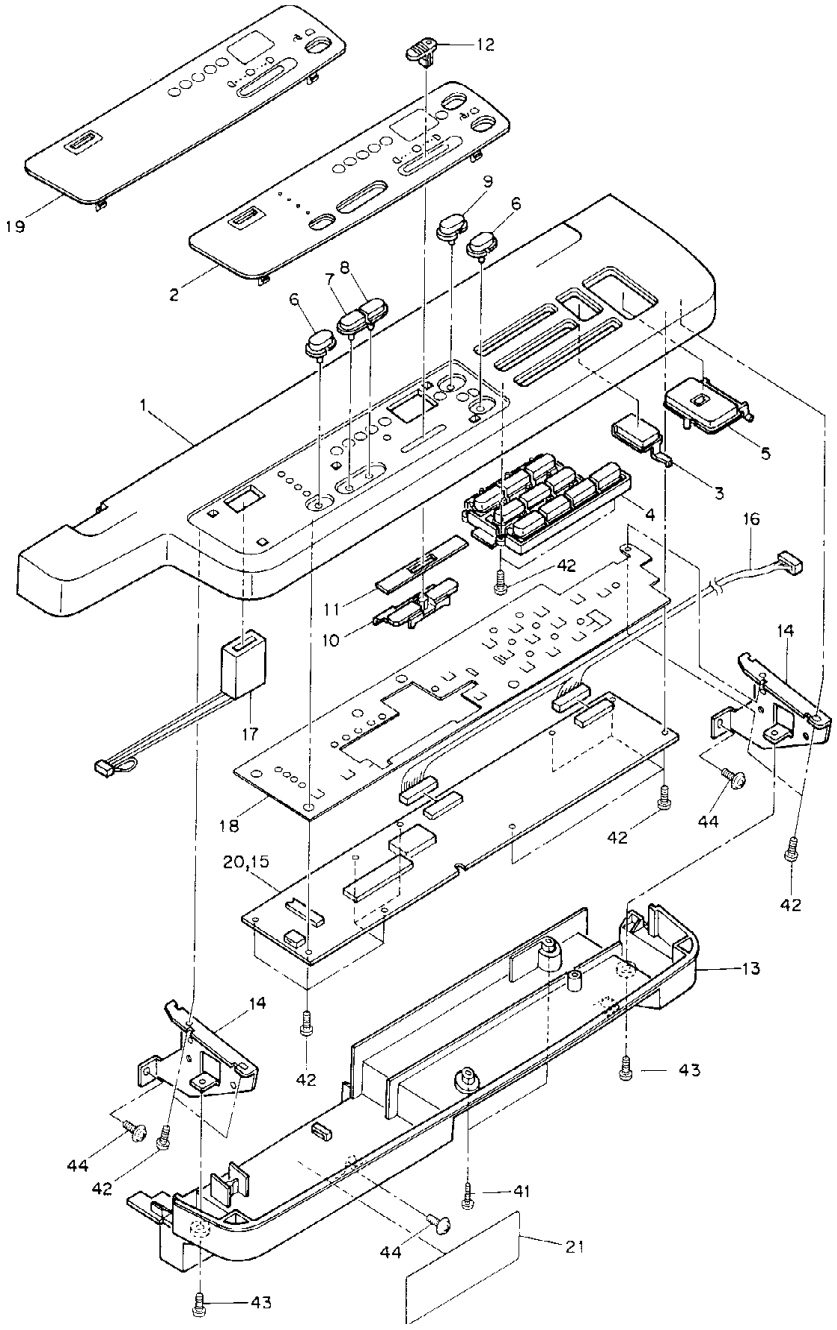
12
19
9
6
2
7
8
6
1
5
3
4
16
42
11
10
14
17
18
44
42
20,15
42
13
14
43
44
42
41
44
21
43

ITEM NO.	PARTS NO.	PARTS NAME	Q'TY / PAGE	Q'TY / PACK	SPE PRICE IN NONE	P	I	R	BSI NO.	TO	FROM	SERIAL NO.	REMARKS
1	4402 842100	COV-CONP	1	1/PP									
2A	4402 861900	PANEL-DSP-1370U	1	1/KP					F97C852				1370 NAD
2B	4402 861910	PANEL-DSP-1370E	1	1/KP					F97C852				1370 OTHERS
3	4402 842150	KEYTOP-C/S	1	1/D									
4	4402 842160	KEYTOP-TEN	1	1/D									
5	4402 842170	KEYTOP-PRINT	1	1/D									
6A	4402 862000	KEYTOP-FNC	1	1/P					F97C852				1360
6B	4402 862000	KEYTOP-FNC	2	1/P					F97C852				1370
7	4402 862010	KEYTOP-65	1	1/P					F97C852				1370
8	4402 862020	KEYTOP-141	1	1/P					F97C852				1370
9	4402 862030	KEY-TOP-DSP	1	1/P					F97C852				1370
10	4402 842250	ARM-SLIDE-V	1	1/P									
11	4402 842260	BLIND-SLIDE-V	1	1/P									
12	4402 862040	KNOB-SLIDE	1	1/P					F97C852				
13	4402 842300	COV-IN	1	1/PP									
14	4402 842310	BRKT-CONP	2	1/P									
15	4402 858050	PWA-F-PNL-121	1	1/SB									1370
16	4402 858600	WH-PNL-121	1	1/P									
17	4400 357700	CTR-E650B-523	1	1/D									
18	4402 842350	SHIELD-MYLAR	1	1/P									
19	4402 861800	PANEL-DSP-1360	1	1/KP					F97C852				1360
20	4402 858110	PWA-F-PNL-120	1	1/SB									1360
21	4400 553200	LBL/W-DRUM	1	1/KP									
41	4842 040848	PTBR30*12MSZN3A	2	50/P									
42	4842 040495	PTBR30*06MSZN3A	15	50/P									
43	4842 040692	TZPAN3008MSZN3L	2	50/P									
44	4842 040690	TZPAN3006MSZN3L	3	50/P									

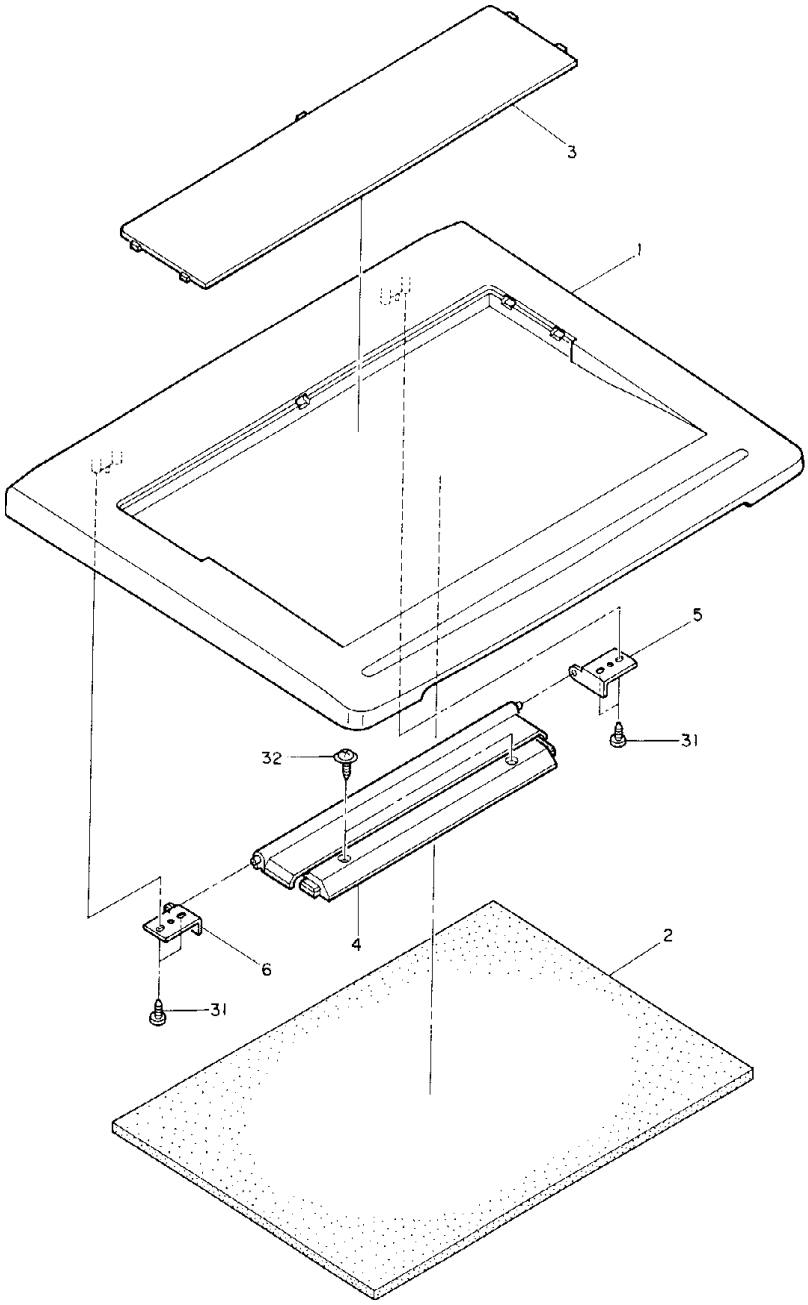
3
1
5
31
32
4
6
31
2

ITEM NO.	PARTS NO.	PARTS NAME	Q'TY / PAGE	Q'TY / PACK	SPE PRICE IN NONE	P	I	R	BSI NO.	TO	FROM	SERIAL NO.	REMARKS
1	4402 841810	COVER-PLATEN	1	1/PP									
2	4402 841830	SHEET-PLATEN-JU	1	1/KP									
3	4402 841840	TOP-POCKET	1	1/PP									
4	4402 841850	HINGE-PLATEN	1	1/P									
5	4402 841870	BKT-HINGE-R	1	1/P									
6	4402 841880	BKT-HINGE-L	1	1/P									
31	4842 040846	PTBR30*08MSZN3A	4	50/P									
32	4842 040704	TZPAN4012MSZN3L	2	50/P									

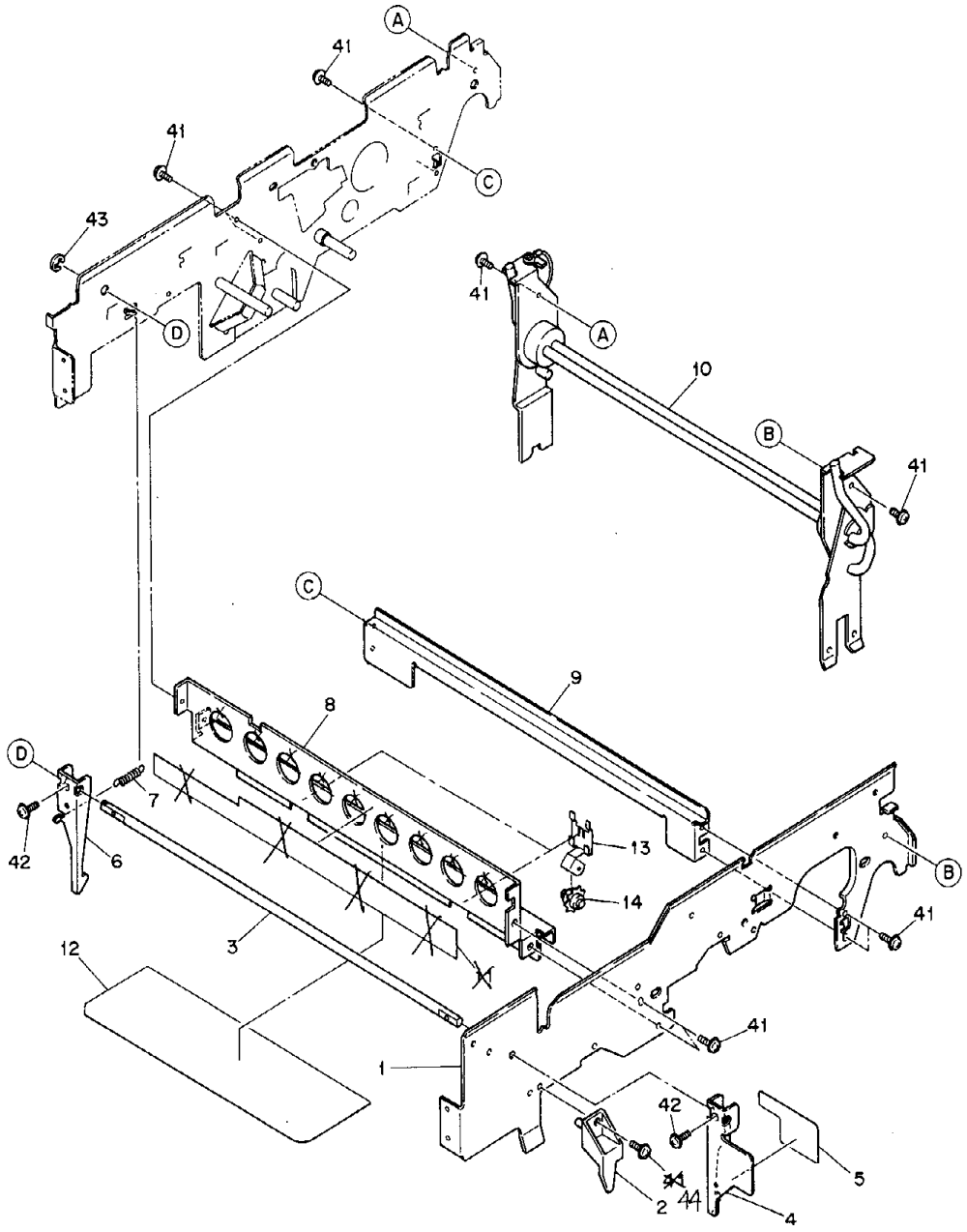
A
41
41
C
43
41
A
10
B
41
D
C
9
8
D
7
42
6
13
14
B
41
12
3
41
1
42
5
41
2
44
4

ITEM NO.	PARTS NO.	PARTS NAME	Q'TY / PAGE	Q'TY / PACK	SPE PRICE IN NONE	P	I	R	BSI NO.	TO	FROM	SERIAL NO.	REMARKS
1	4402 843020	FRAME-UP-F	1	N/A***									
2	4402 843860	ACTR-SW-SHELL	1	1/P									
3	4402 843330	SHAFT-ARM-LOCK	1	1/P									
4	4402 843340	ARM-LOCK-F	1	1/P									
5	4402 843950	LABEL-ARM-LOCK	1	5/P									
6	4402 843350	ARM-LOCK-R	1	1/P									
7	4402 843960	SPE-ARM-LOCK	1	5/P									
8	4402 847230	GUIDE-CLN	1	1/P									
9	4402 843140	GUIDE-DEV	1	1/P									
10	4402 843200	ASM-BAR-TORSION	1	1/P									
12	4402 844080	MYLAR-GUIDE-CL2	1	5/KP									
13	4402 844210	SPL-ROL-GUIDE	2	1/P									
14	4402 844220	ROLLER-GUIDE-CL	2	1/P									
41	4842 040690	TZPAN3006MSZN3L	10	50/P									
42	7640 300851	ZPAN30*08MSZN3A	2	50/P									
43	7405 005031	ERR050SKZN3A	1	50/P									
44	4842 040692	TZPAN3008MSZN3L	1	50/P									

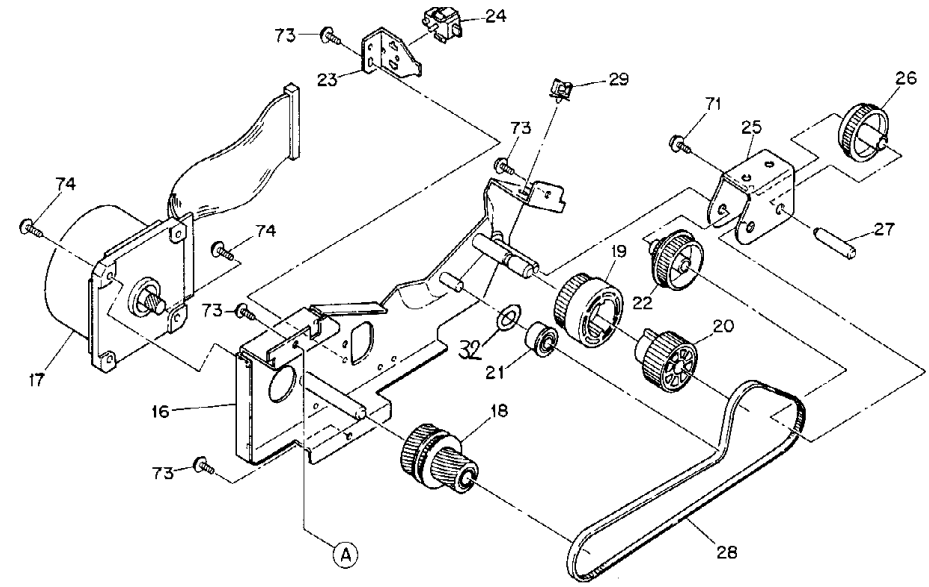
73
24
23
29
71
26
25
73
74
74
27
19
73
22
20
32
21
17
16
18
73
A
28

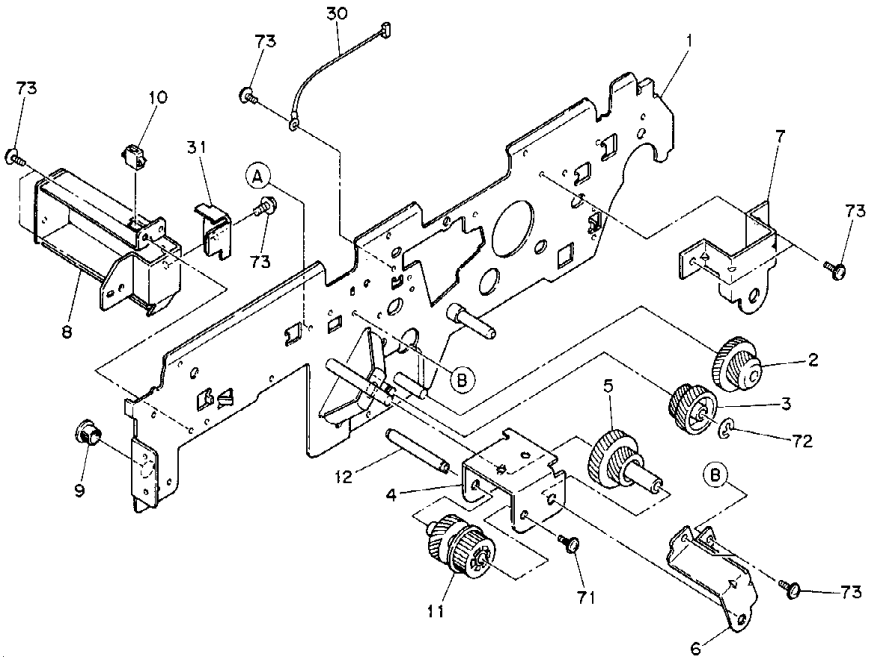
30
73
1
73
10
31
A
7
73
73
8
B
2
5
3
72
9
12
4
B
11
71
73
6

TOSHIBA

ITEM NO.	PARTS NO.	PARTS NAME	Q'TY / PAGE	Q'TY / PACK	SPE PRICE IN NONE	P	I	R	BSI NO.	TO	FROM	SERIAL NO.	REMARKS
1	4402 844270	K-FRAME-U-R	1	N/A***									
2	4402 853110	GEAR-0.8-Z32-20	1	1/P									
3	4402 853100	GEAR-0.8-Z28-20	1	1/P									
4	4402 853010	BRKT-ARM-FUSER	1	1/P									
5	4402 853020	GEAR-0.8-Z35-20	1	1/P									
6	4402 853170	BRKT-SFT-ARM-FU	1	1/P									
7	4402 853160	BRKT-DRIVE-DEV	1	1/P									
8	4402 844230	BRKT-COV-R	1	1/P									
9	4843 390803	CLP/W-OCB-375	1	5/P									
10	4843 306486	J-0-175694-3	1	5/P									
11	4402 853030	GEAR-20/0.8-Z28	1	1/P									
12	4402 853040	STUD-6-41-M3	1	1/P									
16	4402 853080	K-FRAME-DRIVE	1	1/P									
17	4402 858800	M/DC-MAIN-121	1	1/C									
18	4402 852860	K-PLY/T-3M-MTR	1	1/P									
19	4402 852880	K-PLY/T-3M-DEV	1	1/P									
20	4402 852900	GEAR-Z26-DEV	1	1/P									
21	4400 353370	PLY-TENSION-F	1	1/P									
22	4402 852910	PLY/T-3M-30-FED	1	1/P									
23	4402 853180	BRKT-FULL-SW	1	1/P									
24	4402 859600	SP-CS3A-B2BA	1	1/D									
25	4402 853200	BRKT-ARM-FEED	1	1/P									
26	4402 852960	GEAR-0.8-Z37	1	1/P									
27	4402 852970	STUD-6-26-M3	1	1/P									
28	4402 852920	BLT/T-73133-4	1	1/P									
29	4843 390887	CLP/W-WS-1U	1	5/P									
30	4402 842890	THMS-DRUM-121	1	1/C									
31	4402 844260	BRKT-COV-R-SUB	1	1/P									
32	4348 141020	WASHER	1	10/P									
71	7640 300851	ZPAN30*08MSZN3A	2	50/P									
72	7405 005031	ERR050SKZN3A	1	50/P									
73	4842 040690	TZPAN3006MSZN3L	12	50/P									
74	4842 040696	TZPAN3012MSZN3L	2	50/P									

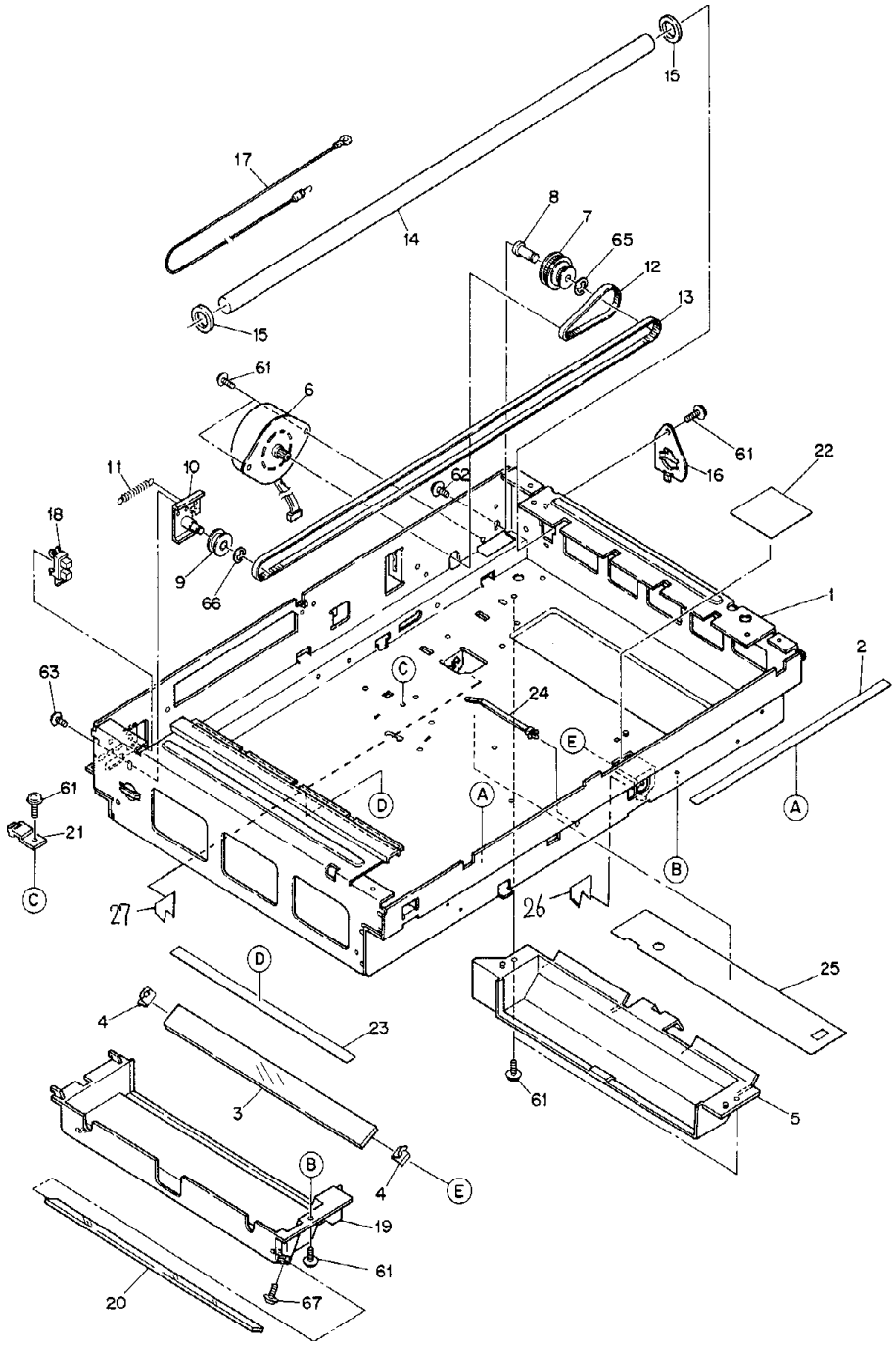
15
17
14
8
7
65
12
13
15
61
6
61
16
22
11
10
62
18
9
66
1
2
63
C
24
E
61
D
A
A
21
B
C
27
26
D
25
4
23
3
61
5
B
4
E
19
61
20
67

ITEM NO.	PARTS NO.	PARTS NAME	Q'TY / PAGE	Q'TY / PACK	SPE PRICE IN NONE	P	I	R	BSI NO.	TO	FROM	SERIAL NO.	REMARKS
1	4402 851520	BASE-OPT	1	N/A***									
2	4402 852990	SHEET-CRG	1	5/KP									
3	4402 851550	MIRROR-6-120	1	1/C									
4	4402 851560	SPL-MIRROR1-R/6	2	5/P									
5	4402 851470	COVER-OPT-L	1	1/PP									
6	4402 858910	K-M/P-SCN-121	1	1/C									
7	4402 851680	PLY/T-25/39	1	1/P									
8	4402 851690	STUD-PLY/T-OPT	1	1/P									
9	4402 851780	K-PLY/T-ADJ-OPT	1	1/P									
10	4402 851750	K-BRKT-BLT-ADJ	1	1/P									
11	4363 271330	SPE-063-080-235	1	5/P									
12	4402 851710	BLT/T-2M-75-4	1	1/P									
13	4402 851700	BLT/T-2M-475-4	1	1/P									
14	4402 851660	SHAFT-SCAN-120	1	1/P									
15	4402 850700	FELT-OPT-121	2	1/P									
16	4402 851810	BRKT-SHAFT-SCAN	1	1/P									
17	4402 851730	WIRE/R-SCAN-120	1	1/P									
18	4402 842620	SZ-HOME-121	1	1/P									
19	4402 851490	COV-OPT-L-SLIT	1	1/PP									
20	4402 851480	GLASS-DUSTPROOF	1	1/S									
21	4402 850570	HLDR-CABLE-OPT	1	1/P									
22	4402 851300	SEAL-HOLE-OPT	1	5/P									
23	4402 851370	TAPE-WHITE-120	1	1/KP									
24B	4407 737310	BAND-SG-130	1	5/P									1370
25	4402 852790	SEAL-BASE-OPT	1	1/KP									
26	4402 851250	SEAL-MIRROR6-F	1	5/P									
27	4402 851260	SEAL-MIRROR6-R	1	5/P									
61	4842 040690	TZPAN3006MSZN3L	7	50/P									
62	4842 040724	TPPAN4006MSZN3L	1	50/P									
63	7640 300851	ZPAN30*08MSZN3A	1	50/P									
65	7405 007031	ERR070SKZN3A	1	50/P									
66	7405 005031	ERR050SKZN3A	1	50/P									
67	4842 040846	PTBR30*08MSZN3A	1	50/P									

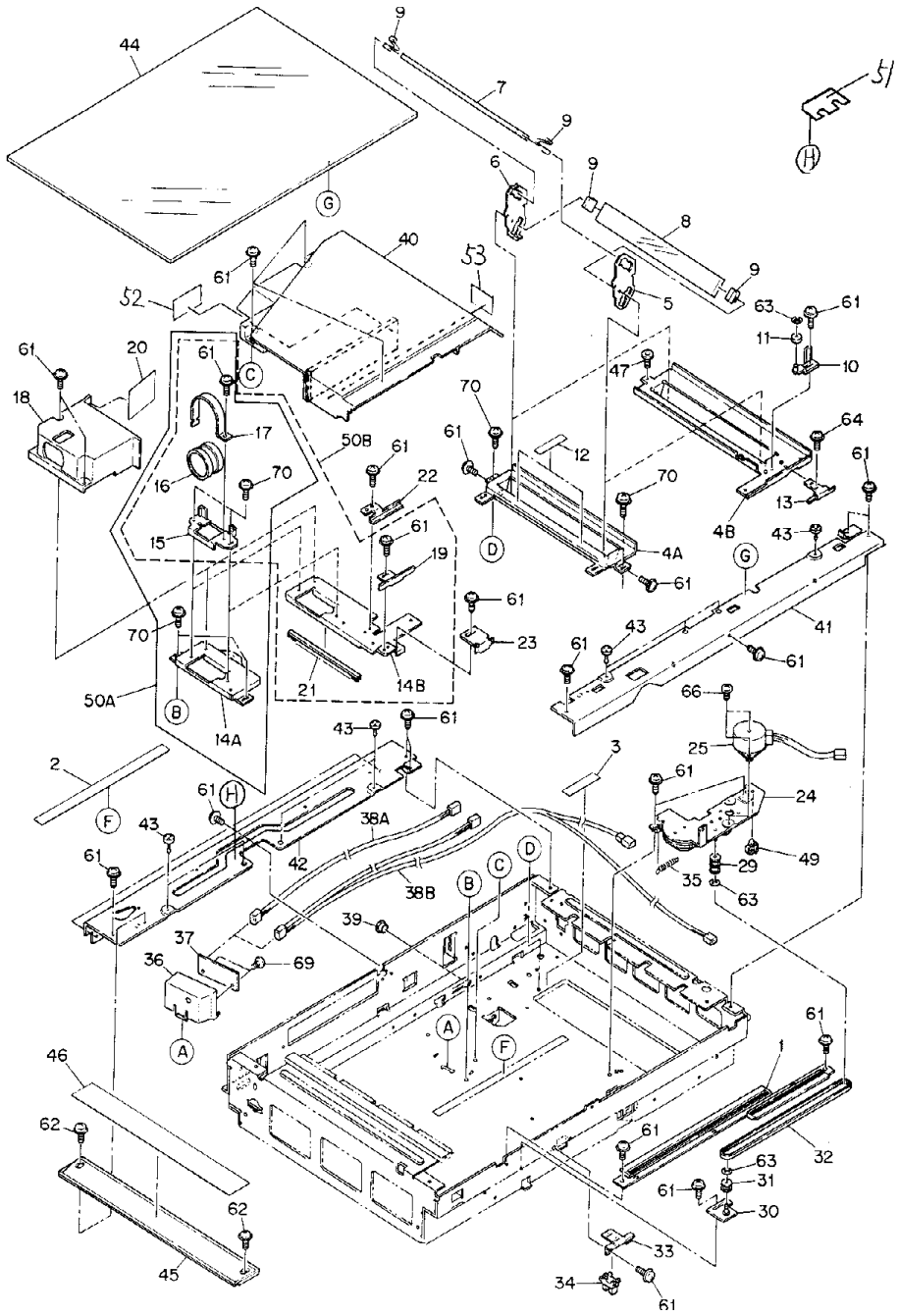
44
9
7
9
51
H
6
9
8
G
40
53
61
52
5
9
63
61
11
10
61
20
61
C
47
18
17
70
64
61
12
50B
61
22
70
16
70
13
61
15
61
19
D
4A
4B
43
G
61
61
70
23
43
41
61
61
21
14B
50A
B
14A
66
43
61
25
2
3
61
24
61
H
F
43
38A
42
49
29
35
63
61
38B
B
C
D
39
37
36
69
A
A
F
61
46
1
62
61
32
63
31
61
30
62
33
45
34
61

TOSHIBA

ITEM NO.	PARTS NO.	PARTS NAME	Q'TY / PAGE	Q'TY / PACK	SPE PRICE IN NONE	P	I	R	BSI NO.	TO	FROM	SERIAL NO.	REMARKS
1B	4402 851580	GUIDE-L/M	1	1/P									1370
2B	4402 851530	SHEET-LENS	1	5/KP									1370
3B	4402 851540	SHEET-MIRROR	1	5/P									1370
4A	4402 856330	BASE-CRG3-1340	1	N/A***									1360
4B	4402 852620	K-CRG3	1	1/P									1370
5	4402 852060	HOLDER-MIR4/5-F	1	1/P									
6	4402 852130	HOLDER-MIR4/5-R	1	1/P									
7	4402 852070	MIRROR-4-120	1	1/C									
8	4402 852080	MIRROR-5-120	1	1/S									
9	4402 852090	SPL-MIRROR4/5	4	5/P									
10B	4402 852630	K-BKT-LINK-CRG3	1	1/P									1370
11B	4402 852260	RLR-LINK-CRG3	1	1/P									1370
12	4402 851310	SEAL-CRG3	2	5/P									
13B	4402 852120	PL-GUIDE-CRG3	1	1/P									1370
14A	4402 856340	BASE-LENS-1340	1	N/A***									1360
14B	4402 852150	K-BASE-LENS	1	N/A***									1370
15	4402 852250	BRKT-LENS	1	N/A***									
16	4402 852180	LENS-155-6.7	1	N/A***									
17	4402 852200	BAND-LENS	1	N/A***									
18	4402 852210	COVER-LENS	1	1/P									
19B	4402 852220	PLATE-H/P-L/M	1	N/A***									1370
20B	4402 851320	SEAL-COV-LENS	1	5/P									1370
21B	4402 851340	BRUSH-BASE-LENS	1	N/A***									1370
22B	4402 852230	PL-GUIDE-LENS	1	1/P									1370
23B	4402 852240	PLATE-BELT-LENS	1	1/P									1370
24B	4402 851910	K-DRIVE-L/M	1	1/P									1370
25B	4402 858820	K-M/P-CAM-121	1	1/C									1370
29B	4402 852000	PLY/T-16-Z20	1	1/P									1370
30B	4402 852710	K-IDLE-L/M	1	1/P									1370
31B	4402 852740	PLY/T-16	1	1/P									1370
32B	4402 852010	BLT/T-2M-242-4	1	1/P									1370
33B	4402 851890	BRKT-SENSOR-L/M	1	1/P									1370
34B	4402 842620	SZ-HOME-121	1	1/P									1370
35B	4402 852750	SPE-CRG3	1	5/P									1370
36	4402 851830	BLK-AES-120	1	1/P									
37	4402 858020	PWA-F-AES-121	1	1/SB									
38A	4402 858710	WH-AES-120	1	1/P									1360
38B	4402 858610	WH-ZOOM-121	1	1/P									1370
39	4843 390803	CLP/W-OCB-375	1	5/P									
40	4402 851590	COVER-OPT-U	1	1/PP									
41	4402 851620	STAY-GLASS-F	1	1/P									
42	4402 851630	STAY-GLASS-R	1	1/P									
43	4400 831600	CUSH-GLASS	8	5/P									
44	4402 851400	GLASS-395-266-4	1	1/S									
45	4402 851280	K-PLT-GLASS-ORG	1	1/PP									
46A	4402 851430	LBL-SCALE-UC	1	1/KP									USA SIZE
46B	4402 851440	LBL-SCALE-EUR	1	1/KP									EUR SIZE
47B	4402 852360	BOLT-CRG3	1	10/P									1370
49B	4408 363830	CLP/W-UAMS-05-2	1	5/P									1370
50A	4402 854700	ASM-LENS-1340-S	1	1/C									1360
50B	4402 854710	ASM-LENS-1350-S	1	1/C									1370
51	4402 852390	SHEET-STAY-GLAS	1	5/P									
52B	4402 852760	MYL-COV-OPT-U	1	5/P									1370
53A	4402 850720	SEAL-COV-OPT-U	1	5/P									1360
61A	4842 040690	TZPAN3006MSZN3L	17	50/P									1360
61B	4842 040690	TZPAN3006MSZN3L	28	50/P									1370
62	7043 300813	BID30*08MSCR1AI	2	50/P									
63B	7405 002531	ERR025SKZN3A	2	50/P									1370
64B	4842 040920	TPAN30*04MSZN3A	1	50/P									1370
66B	4842 040665	TPAN3006MSZN3L	2	50/P									1370
68B	7405 003031	ERR030SKZN3A	3	50/P									1370
69	4842 040846	PTBR30*08MSZN3A	2	50/P									
70A	4842 040710	TPPAN3006MSZN3L	6	50/P									1360
70B	4842 040710	TPPAN3006MSZN3L	2	50/P									1370

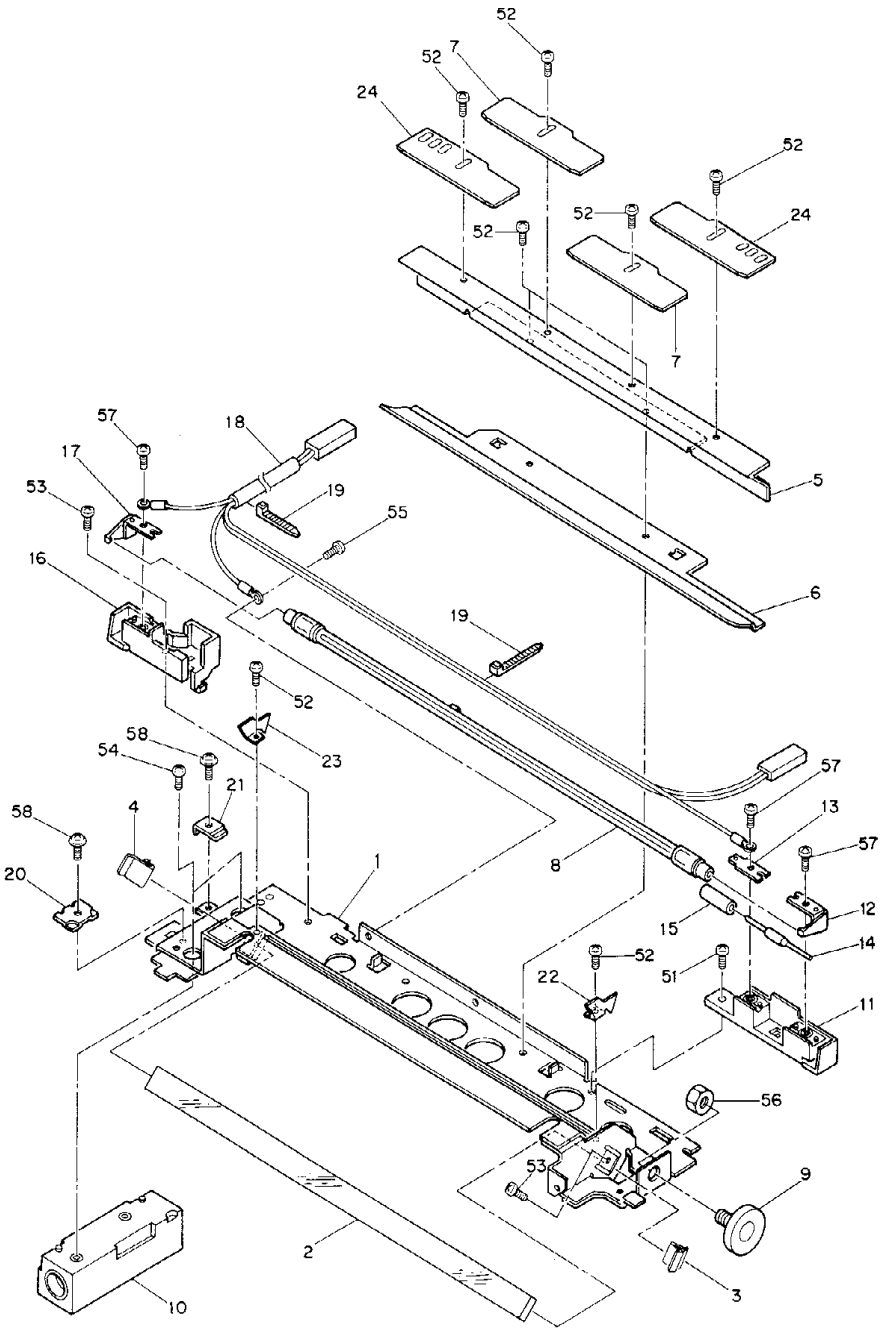
52
7
52
24
52
24
52
52
7
5
57
18
17
53
19
55
16
6
19
52
58
54
23
57
21
58
4
13
57
20
1
8
12
15
14
52
22
51
11
56
53
9
2
3
10

ITEM NO.	PARTS NO.	PARTS NAME	Q'TY / PAGE	Q'TY / PACK	SPE PRICE IN NONE	P	I	R	BSI NO.	TO	FROM	SERIAL NO.	REMARKS
1	4402 852490	K-BASE-CRG1	1	1/PP									
2	4402 852540	MIRROR-1-120	1	1/S									
3	4402 852580	SPL-MIRROR1-F	1	5/P									
4	4402 851560	SPL-MIRROR1-R/6	1	5/P									
5	4402 852560	REFLECTOR-U-120	1	1/PP									
6	4402 852570	REFLECTOR-L-120	1	1/PP									
7	4402 852590	PLATE-ADJ-EXPO	2	1/P									
8A	4402 859020	LP-92-250W	1	1/S									100V SERIES
8B	4402 859030	LP-184-250W	1	1/S									200V SERIES
9	4400 328270	BRG-DR22	1	1/P									
10	4400 326500	K-SLIDER-CRG1	1	1/P									
11	4400 327810	HOLDER-BLADE-F	1	1/P									
12	4400 326400	BLADE-LAMP-EXPF	1	1/P									
13	4400 327800	BLADE-FUSE-EXP	1	1/P									
14	4400 321200	K-FU/T-091G4	1	1/P									
15	4400 358440	TUBE/I-TFE-523	1	5/P									
16	4402 852660	HOLDER-BLADE-R	1	1/P									
17	4400 326440	BLADE-LAMP-EXPR	1	1/P									
18A	4402 858420	WH-EXPO-121	1	1/P									100V SERIES
18B	4402 858520	WH-EXPO-121E	1	1/P									200V SERIES
19	4346 754010	SKB-BAND-1	2	5/P									
20	4402 851720	PLATE-BELT-120	1	1/P									
21	4402 851800	PLATE-WIRE-120	1	1/P									
22	4402 851380	REFL-SIDE-F	1	1/P									
23	4402 851390	REFL-SIDE-R	1	1/P									
24	4402 852610	PL-ADJ-EXPO-FR	2	1/P									
51	7040 300611	PAN30*06MSZN3A	1	50/P									
52	7040 300411	PAN30*04MSZN3A	8	50/P									
53	7040 301011	PAN30*10MSZN3A	2	50/P									
54	7640 300651	ZPAN30*06MSZN3A	2	50/P									
55	4842 040480	THPAN3006MSZN3L	1	50/P									
56	7360 600011	6/0NUT60MSZN3A	1	50/P									
57	7040 300660	PAN30*06BSDG	3	50/P									
58	7640 300851	ZPAN30*08MSZN3A	2	50/P									

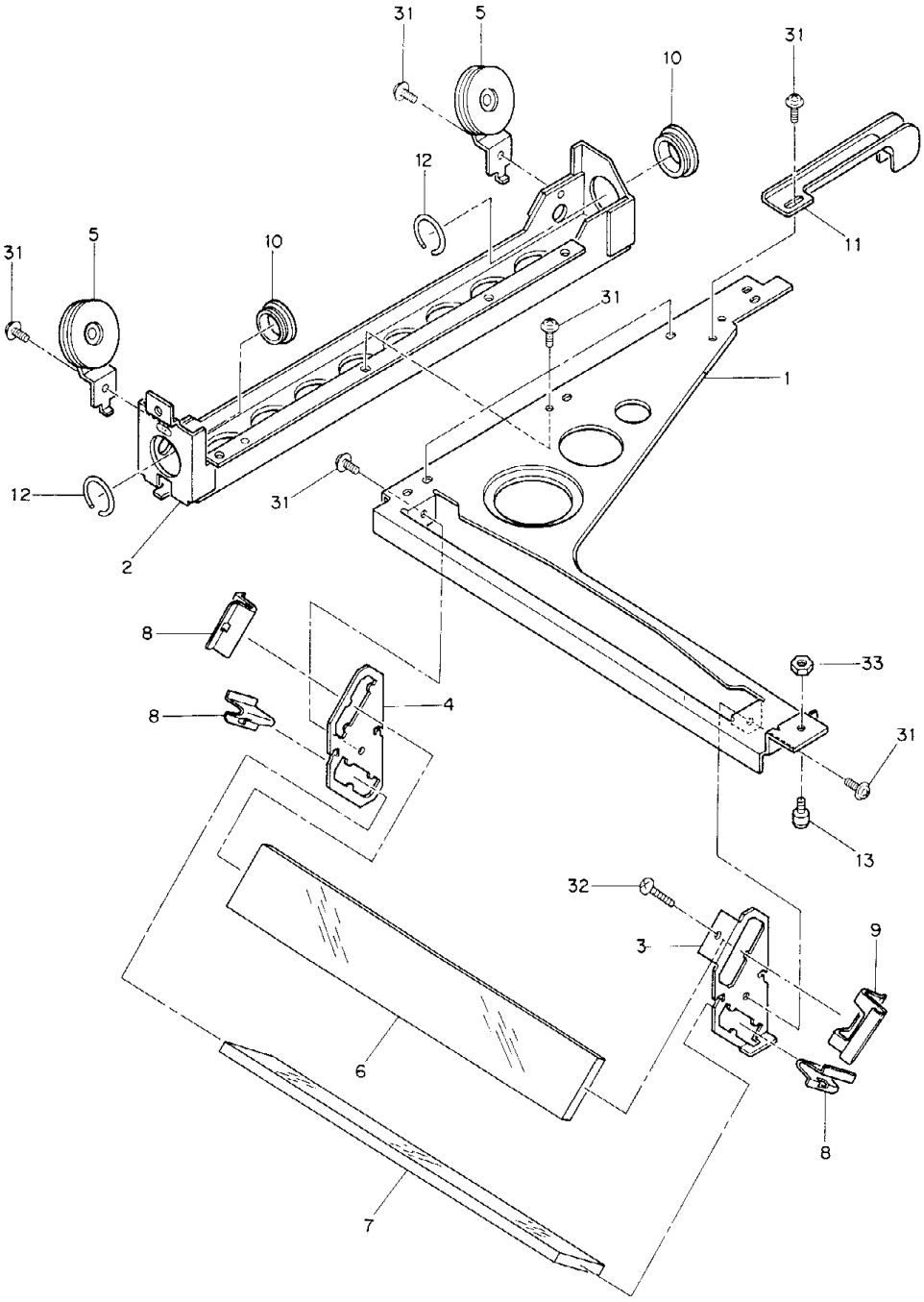

TOSHIBA

ITEM NO.	PARTS NO.	PARTS NAME	Q'TY / PAGE	Q'TY / PACK	SPE PRICE IN NONE	P	I	R	BSI NO.	TO	FROM	SERIAL NO.	REMARKS
1	4402 852290	BASE-CRG2	1	N/A***									
2	4402 852300	GUIDE-CRG2	1	1/P									
3	4402 852370	HLDER-MIR2/3-F	1	1/P									
4	4402 852320	HLDER-MIR2/3-R	1	1/P									
5	4402 852330	K-PLY/Z-WIRE	2	1/P									
6	4402 852400	MIRROR-2-120	1	1/C									
7	4402 852410	MIRROR-3-120	1	1/C									
8	4402 852420	SPL-MIRROR2/3	2	1/P									
9	4402 852440	SPL-MIRROR2-F	1	1/P									
10	4400 327110	BUSH-CRG2	2	1/P									
11	4400 329240	GUIDE-CABLE-V	1	1/P									
12	4400 329610	RING-CRG2-V	2	5/P									
13	4400 328470	FOOT-CRG	1	1/P									
14	4402 851560	SPL-MIRROR1-R/6	1	5/P									
31	4842 040690	TZPAN3006MSZN3L	8	50/P									
32	7040 301211	PAN30*12MSZN3AI	1	50/P									
33	7360 300011	6/0NUT30MSZN3A	1	50/P									

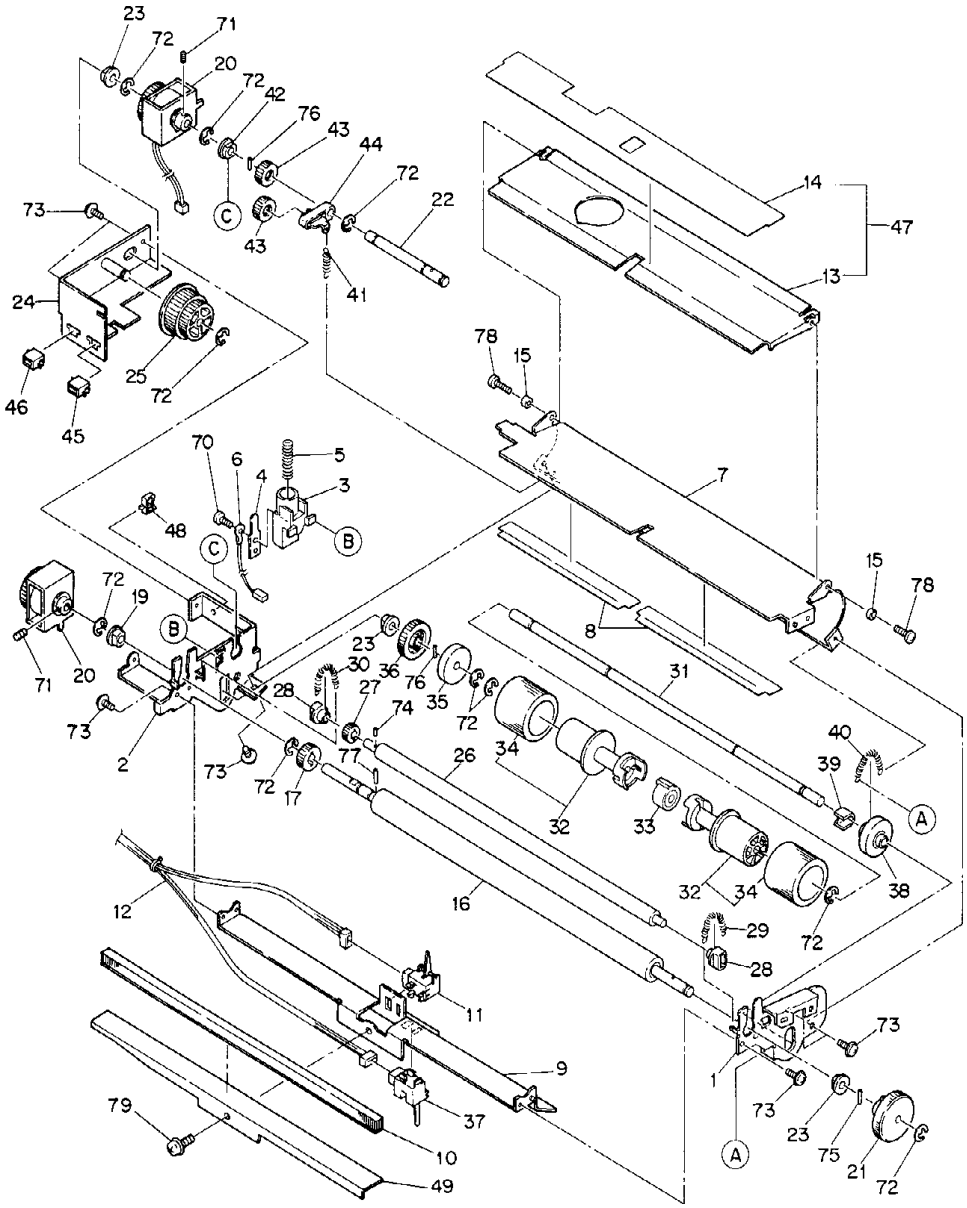
23
72
71
20
72
42
76
43
44
72
22
C
43
41
73
24
25
72
46
45
14
47
13
78
15
70
6
4
5
3
B
48
C
7
15
78
72
19
B
8
71
20
23
30
36
76
35
72
31
28
27
74
73
2
73
72
17
77
26
34
40
39
A
32
33
32
34
38
72
12
16
29
28
11
73
9
1
73
23
75
21
72
A
79
37
10
49

TOSHIBA

ITEM NO.	PARTS NO.	PARTS NAME	Q'TY / PAGE	Q'TY / PACK	SPE PRICE IN NONE	P	I	R	BSI NO.	TO	FROM	SERIAL NO.	REMARKS
1	4402 845710	FRAME-FEED-F	1	1/P									
2	4402 845750	FRAME-FEED-R	1	1/P									
3	4402 843700	TERMINAL-BIAS	1	1/P									
4	4402 843710	PLT-BIAS	1	1/P									
5	4400 532330	SPC-BIAS-240	1	5/P									
6	4402 858690	WH-DEV-BIAS-121	1	1/P									
7	4402 844810	K-GUIDE-P-L	1	1/KP									
8	4402 844850	MYLAR-GUIDE-L	2	5/KP									
9	4402 845860	STAY-FEED	1	1/P									
10	4402 845040	BRUSH-ALIGN-L	1	1/S									
11	4402 842640	SZ-RGT-121	1	1/C									
12	4402 858640	WH-FED-121	1	1/P									
13	4402 843110	GUIDE-PAPER-U	1	N/A***									
14	4402 843130	MYLAR-GUIDE-U	1	N/A***									
15	4350 120890	CLR-030*0030F	2	5/P									
16	4402 844410	ROLLER-ALIGN-L	1	1/KP									
17	4402 845180	GEAR-Z30-0.5	1	1/P									
19	4407 734980	BUSH-6-GCB	1	5/P									
20	4402 858980	CLT-30E-CW-30	2	1/D									
21	4402 845890	KNOB-RGT	1	1/P									
22	4402 845340	SHAFT-CLT-FEED	1	1/P									
23	4400 802070	BUSH-6L	3	5/P									
24	4402 844440	BKT-CLH-FEED-1	1	1/P									
25	4402 845080	GEAR-Z27-Z35	1	1/P									
26	4402 844460	ROLLER-ALIGN-U	1	1/KP									
27	4402 845190	GEAR-Z20-0.5	1	1/P									
28	4402 845260	BUSH-ALIGN-U	2	5/P									
29	4402 845830	SPE-ROL-RGT-F	1	5/P									YELLOW
30	4402 845840	SPE-ROL-RGT-R	1	5/P									BLACK
31	4402 845140	SHAFT-ROL-FEED	1	1/P									
32	4402 845130	K-ROLL-FEED	2	1/P									
33	4402 833100	CLUTCH-6-R	1	1/D									
34	4402 845120	ROL-FEED-120	2	1/P									
35	4402 845770	ROL-GUIDE-FED-R	1	1/P									
36	4402 845380	GEAR-Z25-0.8	1	1/P									
37	4402 842630	SZ-P-EMP-121	1	1/C									
38	4402 845760	ROL-GUIDE-FED-F	1	1/P									
39	4407 972860	STOP-RING-6.5	1	5/P									
40	4402 845780	SPE-ROL-FEED-F	1	5/P									
41	4402 845790	SPE-ROL-FEED-R	1	5/P									
42	4402 845930	BUSH-CLT	1	5/P									
43	4402 845360	GEAR-Z15-0.8	2	1/P									
44	4402 845920	ARM-JOINT-CLT	1	1/P									
45	4843 308158	J-6-175694-2	1	1/P									BLACK
46	4843 306485	J-D-175694-2	1	5/P									WHITE
47	4402 843100	K-GUIDE-P-U	1	1/PP									
49	4402 846040	BRKT-BRUSH-ALN	1	1/P									
50	4402 844450	STUD-6-23-M3	1	5/P									
70	4842 040846	PTBR30*08MSZN3A	1	50/P									
71	4842 011063	9HSS30/05MSFB	2	50/P									
72	7405 005031	ERR050SKZN3A	9	50/P									
73	4842 040665	TPAN3006MSZN3L	7	50/P									
74	4842 904018	HPIN20/06SUSH7	1	50/P									
75	4842 904020	HPIN20/12SUSH7	1	10/P									
76	4407 403790	NPIN2-8	2	10/P									
77	4842 904035	HPIN20/10SUSH7	1	50/P									
78	4842 040666	TPAN3008MSZN3L	2	50/P									
79	4842 040690	TZPAN3006MSZN3L	1	50/P									
80	7043 300613	BID30*06MSCR1AI	1	50/P									

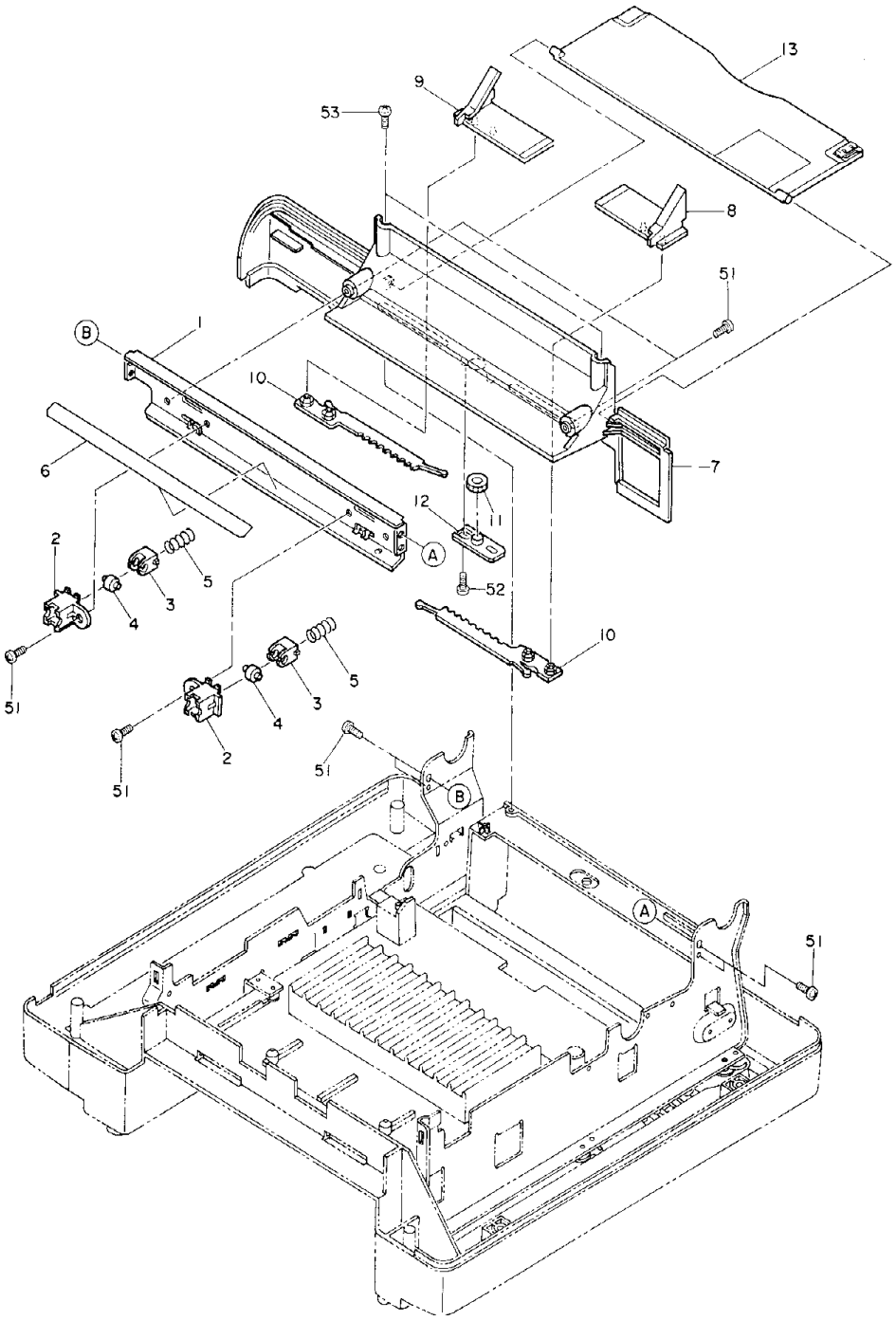

TOSHIBA

ITEM NO.	PARTS NO.	PARTS NAME	Q'TY / PAGE	Q'TY / PACK	SPE PRICE IN NONE	P	I	R	BSI NO.	TO	FROM	SERIAL NO.	REMARKS
1	4402 843150	STAY-DEV-PUSH	1	1/P									
2	4402 843900	HOLDER-DEV	2	1/P									
3	4402 843910	PUSHER-DEV	2	1/P									
4	4402 843920	ROLLER-PUSHER	2	5/P									
5	4402 844120	SPC-STAY-PUS-DN	2	5/P									
6	4402 843870	MYLAR-STAY	1	5/KP									
7	4402 841630	COVER-RIGHT-L	1	1/PP									
8	4402 845600	GUIDE-BYPASS-F	1	1/P									
9	4402 845610	GUIDE-BYPASS-R	1	1/P									
10	4402 845620	RACK-BYPASS	2	1/P									
11	4402 845660	PINION-08-14	1	5/P									
12	4402 845630	K-PLT-ADJUST	1	1/P									
13A	4402 841900	K-COV-BYPASS-LT	1	1/PP									LT SIZE
13B	4402 841910	K-COV-BYPASS-A4	1	1/PP									A4 SIZE
51	4842 040690	TZPAN3006MSZN3L	8	50/P									
52	7120 300611	12PAN3006MSZN3A	1	50/P									
53	4842 040846	PTBR30*08MSZN3A	2	50/P									

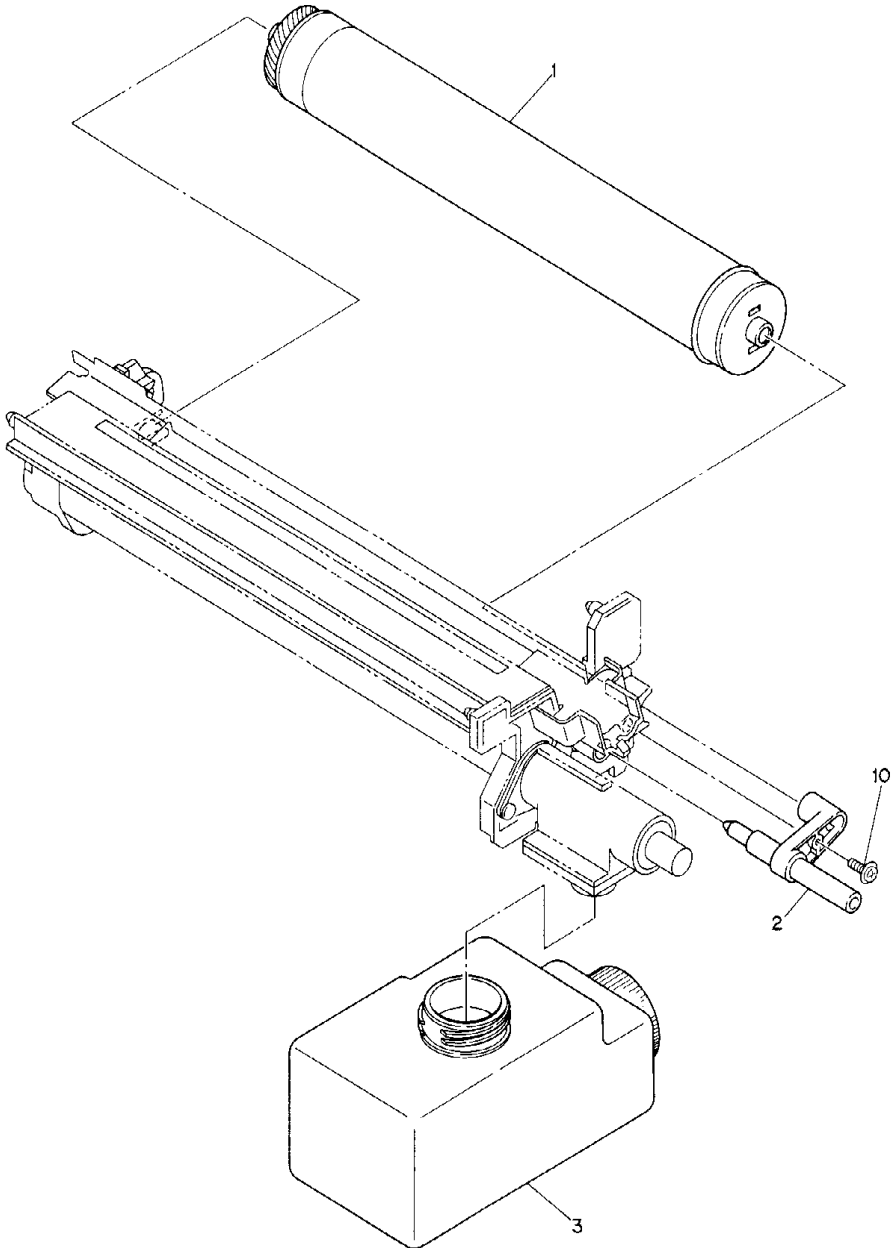
1
10
2
3

ITEM NO.	PARTS NO.	PARTS NAME	Q'TY / PAGE	Q'TY / PACK	SPE PRICE IN NONE	P	I	R	BSI NO.	TO	FROM	SERIAL NO.	REMARKS
1	6608 4569	OD-1350	1	SUPPLY									
2	4402 849420	DRUM-SHAFT	1	1/P									
3A	6608 4575	TB-1350	1	SUPPLY									10QTY/SET
3B	6608 4576	TB-1350E	1	SUPPLY									FOR EUR.
10	4842 040714	TPPAN3010MSZN3L	1	50/P									

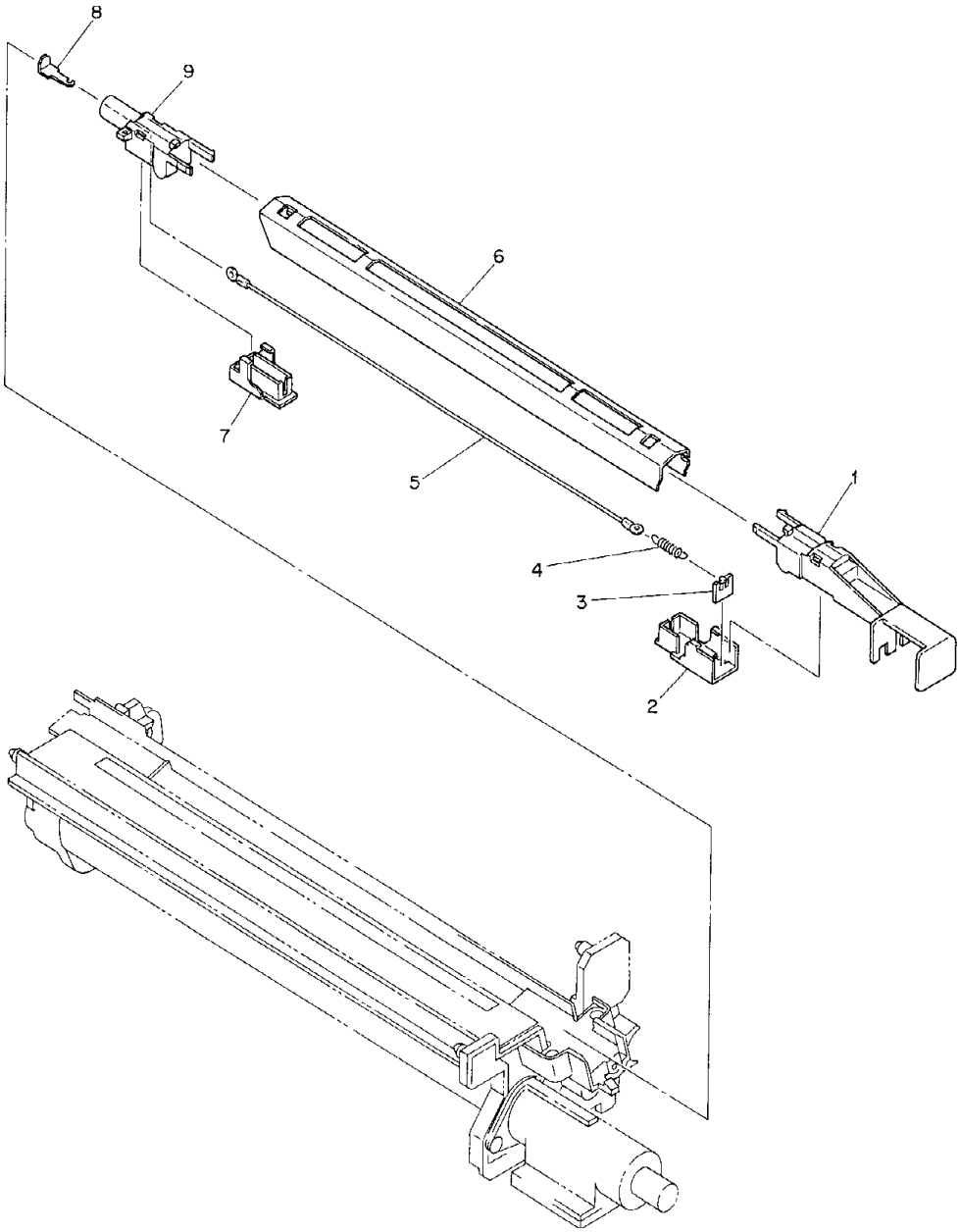
8
9
6
7
5
1
4
3
2

ITEM NO.	PARTS NO.	PARTS NAME	Q'TY / PAGE	Q'TY / PACK	SPE PRICE IN NONE	P	I	R	BSI NO.	TO	FROM	SERIAL NO.	REMARKS
0	4402 849300	ASM-CH-M	1	1/C									
1	4402 849310	TERMINAL-F-M	1	1/P									
2	4402 849340	LID-F-M	1	1/P									
3	4407 682120	HANGER-WIRE	1	1/P									
4	4407 402190	SPRING-TENS-CH	1	5/P									
5	4402 849370	WIRE-CH-263	1	5/S									
6	4402 849330	CASE-CH-M	1	1/P									
7	4402 849350	LID-R-M	1	1/P									
8	4402 849360	PLT-CONNECT-M	1	1/P									
9	4402 849320	TERMINAL-R-M	1	1/P									
0	4402 849300	ASM-CH-M	1	1/C									

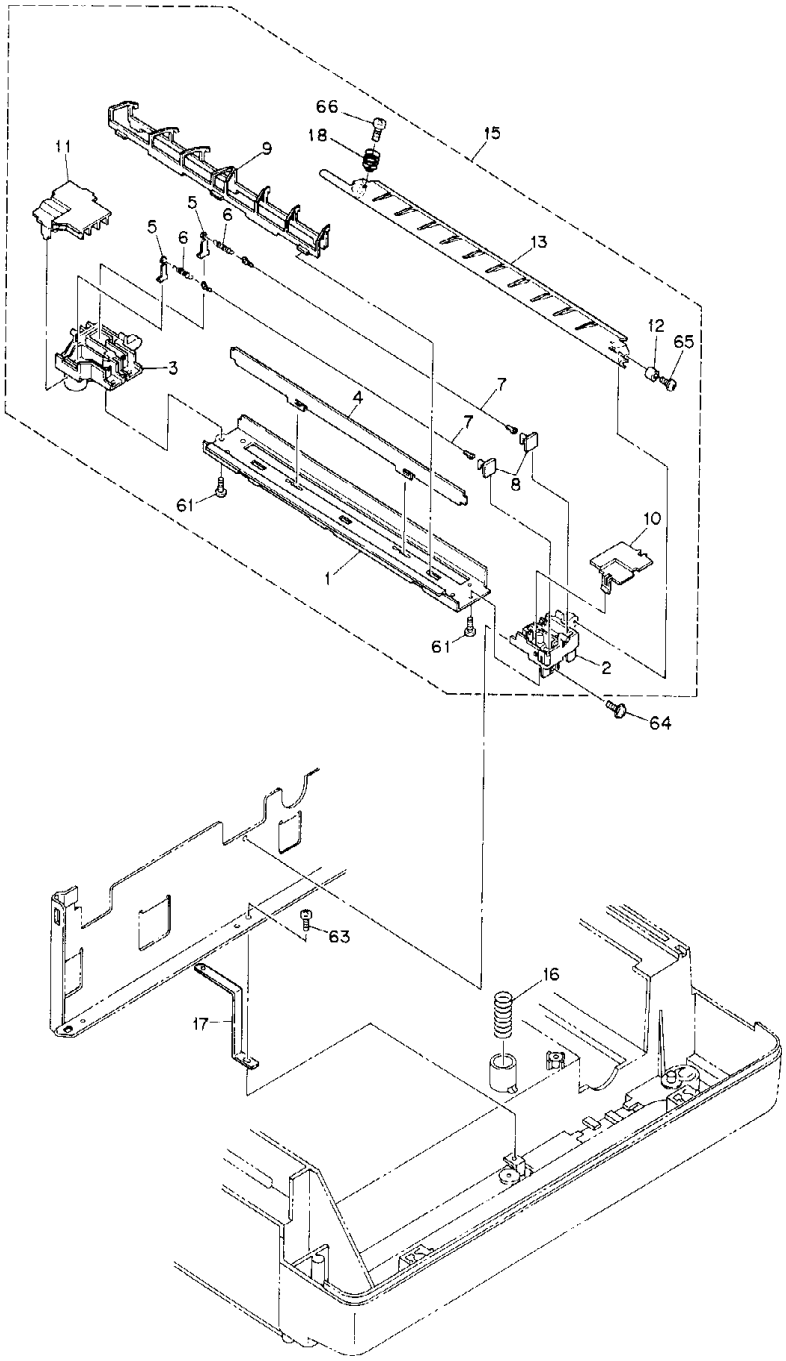

TOSHIBA

ITEM NO.	PARTS NO.	PARTS NAME	Q'TY / PAGE	Q'TY / PACK	SPE PRICE IN NONE	P	I	R	BSI NO.	TO	FROM	SERIAL NO.	REMARKS
1	4402 849030	CASE-CH-TR	1	1/P									
2	4402 849010	TERMINAL-F	1	1/P									
3	4402 849020	TERMINAL-R	1	1/P									
4	4402 849050	PLATE-CH-TR	1	1/P									
5	4402 849060	PLT-CONNECT-TR	2	5/P									
6	4407 402190	SPRING-TENS-CH	2	5/P									
7	4402 849370	WIRE-CH-263	2	5/S									
8	4400 768230	HANGER-WIRE-H	2	1/P									
9	4402 849380	SUPPORTOR-N	1	1/P									
10	4402 849080	LID-F	1	1/P									
11	4402 849090	LID-R	1	1/P									
12	4350 120890	CLR-030*0030F	1	5/P									
13	4402 849460	GUIDE-PAPER-LOW	1	1/P									
15	4402 849000	ASM-CH-TR	1	1/C									
16	4402 849400	SPC-CH-TR	1	5/P									
17	4402 843730	PLT-EARTH-TR	1	1/P									
18	4402 849470	SPC-BIAS-G-U	1	5/P									
61	4842 040846	PTBR30*08MSZN3A	2	50/P									
63	4842 040692	TZPAN3008MSZN3L	1	50/P									
64	4842 040694	TZPAN3010MSZN3L	1	50/P									
65	7120 300811	12PAN3008MSZN3A	1	50/P									
66	7040 300611	PAN30*06MSZN3A	1	50/P									

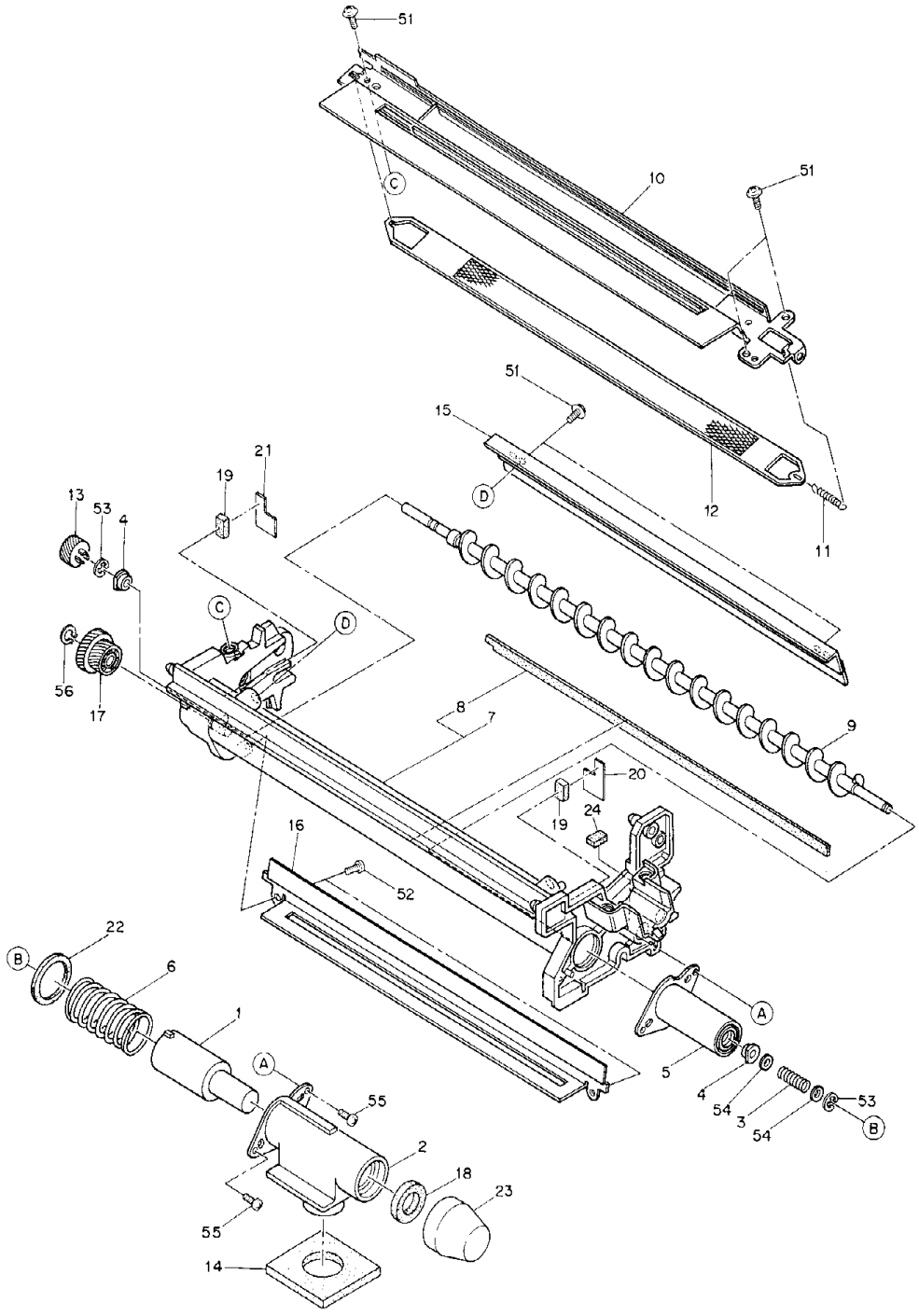
51
10
51
51
15
D
12
11
21
19
13
53
4
C
D
56
17
8
7
9
20
19
24
16
52
22
B
6
1
A
55
2
18
23
55
14
5
4
54
3
54
53
B
A

TOSHIBA

ITEM NO.	PARTS NO.	PARTS NAME	Q'TY / PAGE	Q'TY / PACK	SPE PRICE IN NONE	P	I	R	BSI NO.	TO	FROM	SERIAL NO.	REMARKS
0	4402 850100	ASM-CLEANER	1	1/C									
1	4402 850230	PUSHER-NOZZLE	1	1/P									
2	4402 850250	NOZZLE-CLN-OUT	1	1/P									
3	4402 850480	SPC-AUG120	1	5/P									
4	4407 683340	BUSH-4	2	5/P									
5	4402 850240	NOZZLE-CLN-IN	1	1/P									
6	4402 850260	SPC-1.0-22.5	1	1/P									
7	4402 850110	K-FRM-CLN	1	1/PP									
8	4402 850340	SEAL-U-CL	1	5/P									
9	4402 850220	K-AUGER-CLN-120	1	1/P									
10	4402 850140	PLATE-ROOF	1	1/P									
11	4400 537630	SPE-GR	1	5/P									
12	4402 850150	GRID-120	1	1/KP									
13	4402 850400	GEAR-15-0.8	1	1/P									
14	4402 850460	SEAL-CL-NOZZLE	1	1/P									
15	4409 832880	BL-1350D	1	10/S									
16	4402 850190	K-BLADE-REC	1	1/S									
17	4402 850410	GEAR-25-18	1	1/P									
18	4402 850330	SEAL-NOZZLE	1	5/P									
19	4402 850500	SEAL-CL-U	2	5/P									
20	4402 850520	SEAL-CL-F-L	1	5/P									
21	4402 850530	SEAL-CL-R-L	1	5/P									
22	4402 850540	SEAL-NOZZLE-IN	1	5/P									
23	4402 850550	CAP-CLN-U-TNR	1	1/P									
24	4402 850590	SEAL-STOP-DRUM	1	5/P									
51	7640 300651	ZPAN30*06MSZN3A	5	50/P									
52	4842 040846	PTBR30*08MSZN3A	2	50/P									
53	7405 003031	ERR030SKZN3A	2	50/P									
54	7400 104011	1HWAS040MSZN3A	2	50/P									
55	4842 040847	PTBR30*10MSZN3A	2	50/P									
56	7403 006039	CRR/S060SKFB	1	50/P									

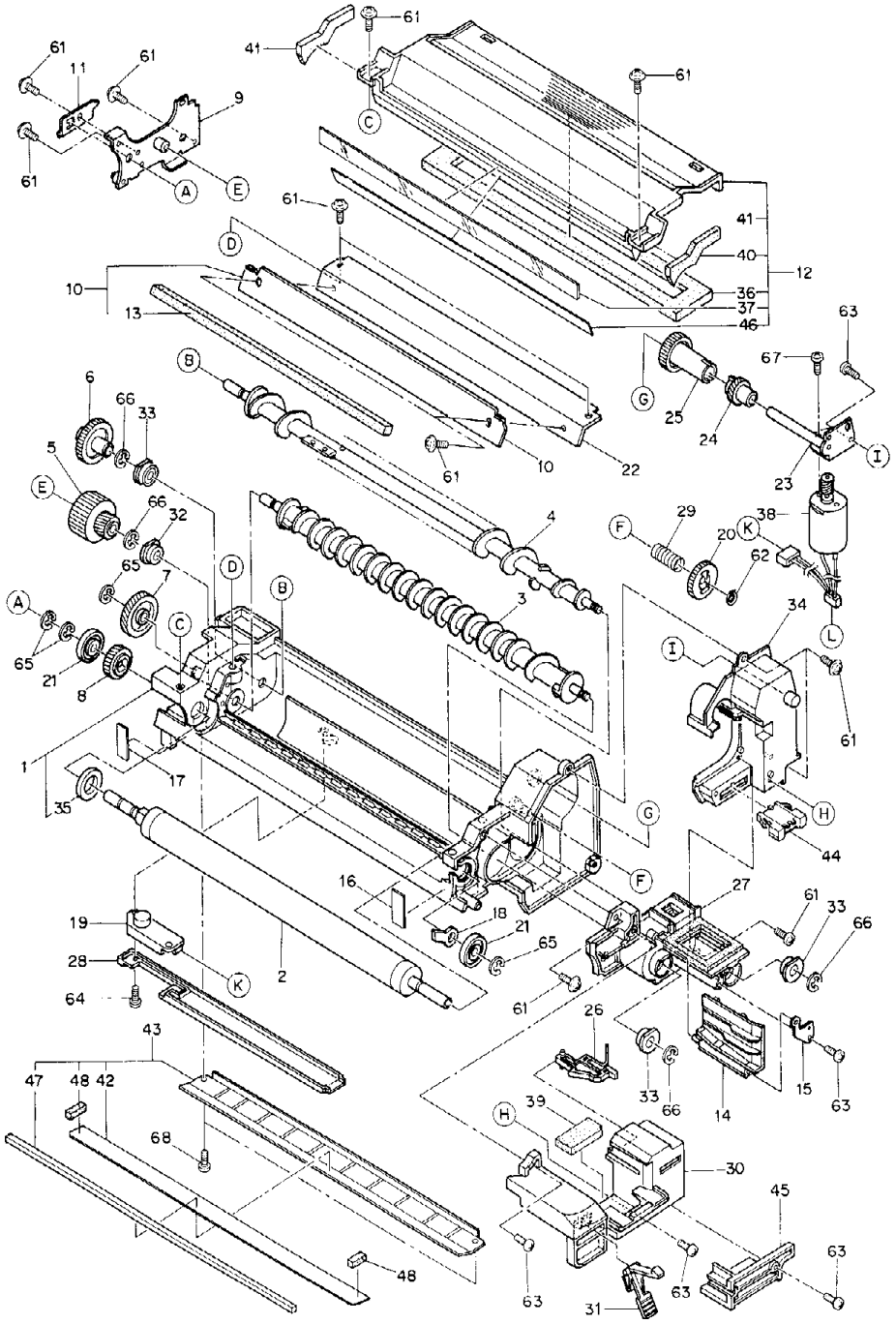

TOSHIBA

ITEM NO.	PARTS NO.	PARTS NAME	Q'TY / PAGE	Q'TY / PACK	SPE PRICE IN NONE	P	I	R	BSI NO.	TO	FROM	SERIAL NO.	REMARKS
0A	4402 849800	ASM-DEVELOPER-U	1	1/C									W/O-I12-USA
0B	4402 849810	ASM-DEVELOPER	1	1/C									W/O-I12-EUR
1	4402 849870	K-CASING-DEV	1	1/C									
2	4402 849840	MG-ROLL-120	1	1/C									
3	4402 847800	MIXER-1-120	1	1/P									
4	4402 847760	K-MIXER-2-120	1	1/P									
5	4402 847820	GEAR-26-14	1	1/P									
6	4402 847830	GEAR-26	1	1/P									
7	4402 847840	GEAR-28	1	1/P									
8	4402 847850	GEAR-21	1	1/P									
9	4402 848280	K-PLATE-DEV	1	1/P									
10	4402 847670	K-DOCTOR-120	1	1/P									
11	4402 847890	SPL-MG	1	1/P									
12	4402 849860	K-COV-DEV	1	1/S									
13	4402 848750	SEAL-DC	1	5/P									
14	4402 848300	LID-NOZZLE-D	1	1/P									
15	4402 848390	PLT-LID-TNR	1	5/P									
16	4402 848000	SEAL-SIDE-F	1	5/P									
17	4402 848010	SEAL-SIDE-R	1	5/P									
18	4402 848020	BUSH-DEV	1	5/P									
19	4402 859550	SNR-ATC-121	1	1/D									
20A	4402 848530	GEAR-CPG-TNR-U	1	1/P									U.S.A/CANADA
20B	4402 848080	GEAR-CPG-TNR	1	1/P									FOR EUROPE
21	4402 848100	ROLL-GUIDE-120	2	1/P									
22	4402 848110	BRKT-DOCTOR	1	1/P									
23	4402 848200	K-BRKT-T-MOT	1	1/P									
24	4402 848150	WHEEL-Z30-JOINT	1	1/P									
25	4402 847690	GEAR-Z26-JOINT	1	1/P									
26	4402 848220	HOOK-TNR-B	1	1/P									
27	4402 847710	K-NOZ-DEV-120	1	1/P									
28	4402 848260	COVER-ATS	1	1/P									
29	4402 848290	SPC-CPG-TNR	1	5/P									
30	4402 848310	COV-DEV-F	1	1/P									
31	4402 848330	HOOK-TNR-A	1	1/P									
32	4407 728150	BUSH-6	1	5/P									
33	4400 541340	K-BUSH-6-10	3	1/P									
34	4402 848090	COV-T-MOT	1	1/P									
35	4402 848830	SEAL-DEV-SL	1	5/P									
36	4402 848230	SEAL-COV-DEV	1	1/P									
37	4402 847990	BLADE-DEV-SL	1	5/P									
38	4402 858840	K-M/DC-TNR-121	1	1/C									
39	4402 848780	SEAL-COV-DEV-F	1	5/P									
40	4402 848980	SEAL-COV-DEV-F	1	5/P									
41	4402 848990	SEAL-COV-DEV-R	1	5/P									
42	4402 848910	MYLAR-GUIDE-DEV	1	5/KP									
43	4402 848900	K-GUIDE-PAPER-D	1	1/P									
44	4843 308027	J53358-0810	1	10/P									
45B	4402 848970	COV-DEV-CNCT	1	1/P									200V SERIES
46	4402 847660	BLADE-DEV-SL2	1	5/KP									
47	4402 848880	SEAL-GUIDE-CR	1	5/P									
48	4402 848870	SEAL-DEV-GP	2	5/P									
49	4402 848670	SHEET-DEV	1	1/KP									
50	4402 849850	SEAL-SL	1	5/P									
51	4402 849830	LBL-DEV	1	10/P									
61	7640 300851	ZPAN30*08MSZN3A	12	50/P									
62	7403 004039	CRR/S040SKFB	1	50/P									
63	4842 040846	PTBR30*08MSZN3A	6	50/P									
64	7043 300664	BID30*06BSCR3CI	1	50/P									
65	7405 005031	ERR050SKZN3A	4	50/P									
66	7405 004031	ERR040SKZN3A	4	50/P									
67	7040 260411	PAN26*04MSZN3AI	1	50/P									
68	4842 040495	PTBR30*06MSZN3A	2	50/P									

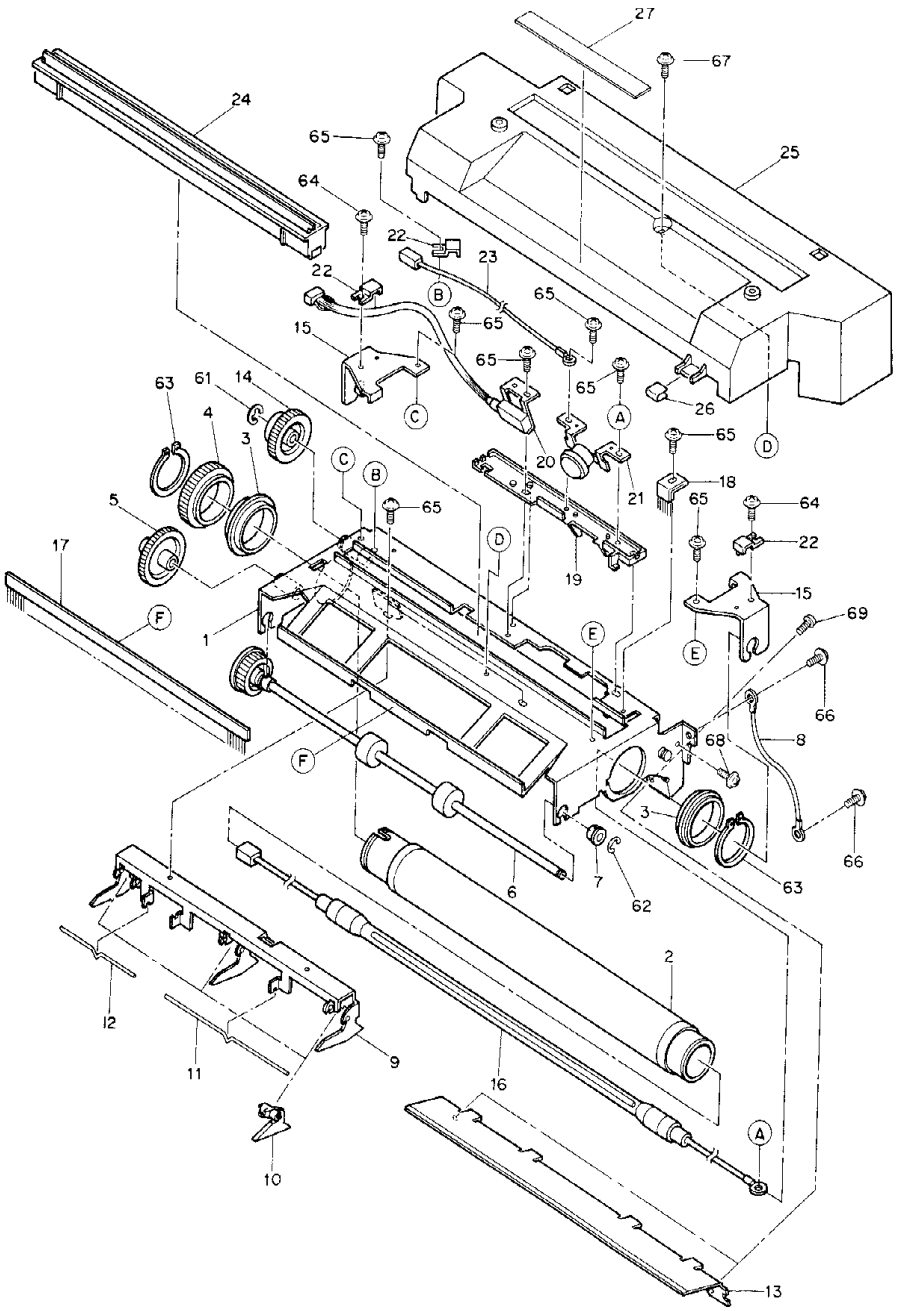
27
67
24
65
25
64
22
23
22
B
65
15
65
65
65
63
61
14
C
A
26
4
3
20
65
D
C
B
21
18
5
65
65
64
17
D
22
19
15
69
F
1
E
E
66
68
8
F
3
66
7
63
6
62
2
12
11
9
16
A
10
13

TOSHIBA

ITEM NO.	PARTS NO.	PARTS NAME	Q'TY / PAGE	Q'TY / PACK	SPE PRICE IN NONE	P	I	R	BSI NO.	TO	FROM	SERIAL NO.	REMARKS
1	4402 846400	K-BRKT-FUSER-U	1	1/P									
2	4409 832830	HR-1350-U	1	1/S									
3	4400 536140	BUSH-HR-24	2	1/P									
4	4400 536180	GEAR-32	1	1/P									
5	4402 846630	GEAR-27	1	1/P									
6	4402 846760	ASM-ROL-U-EXIT	1	1/KP									
7	4400 536230	BUSH-4-7	1	5/P									
8	4402 858480	WH-EARTH-121	1	1/P									
9	4402 846830	BRKT-SCRAPER	1	1/P									
10	4400 536240	SCRAPER-FU	3	4/P									
11	4400 536420	SPR-SCRAPER-R	1	1/P									
12	4407 674190	SPR-SCRAPER	1	5/P									
13	4402 846650	GUIDE-FUSER	1	1/P									
14	4402 846640	GEAR-25	1	1/P									
15	4402 846670	HOLDER-LAMP	2	1/P									
16A	4402 859000	HTR-115-900W	1	1/S									100V SERIES
16B	4402 859010	HTR-230-900W	1	1/S									200V SERIES
17	4402 846810	BRUSH-EXIT-120	1	1/KP									
18	4402 846800	BRUSH-FUSER-120	1	1/C									
19	4402 846780	HLD-BL-THERM	1	1/P									
20	4402 842840	THMS-HTR-121-N	1	1/C									
21	4402 859350	K-THRMO-121E	1	1/C									
22	4400 345540	CLAMP-HARNESS	3	5/P									
23A	4402 858400	WH-HTR-121	1	1/P									100V SERIES
23B	4402 858490	WH-HTR-121E	1	1/P									200V SERIES
24	4409 832970	BL-1350H	1	10/S									
25	4402 846510	COVER-FUSER	1	1/PP									
26	4402 846540	LABEL-FUSER	1	5/P									
27	4400 536490	LABEL-HOT	1	5/P									
61	7405 005031	ERR050SKZN3A	1	50/P									
62	7405 003031	ERR030SKZN3A	1	50/P									
63	7403 024039	CRR/S240SKFB	2	50/P									
64	4842 040690	TZPAN3006MSZN3L	2	50/P									
65	7640 300851	ZPAN30*08MSZN3A	9	50/P									
66	4842 040480	THPAN3006MSZN3L	2	50/P									
67	7640 300651	ZPAN30*06MSZN3A	1	50/P									
68	4842 040665	TPAN3006MSZN3L	1	50/P									
69	7640 300821	ZPAN30*08MSZN3A	2	50/P									

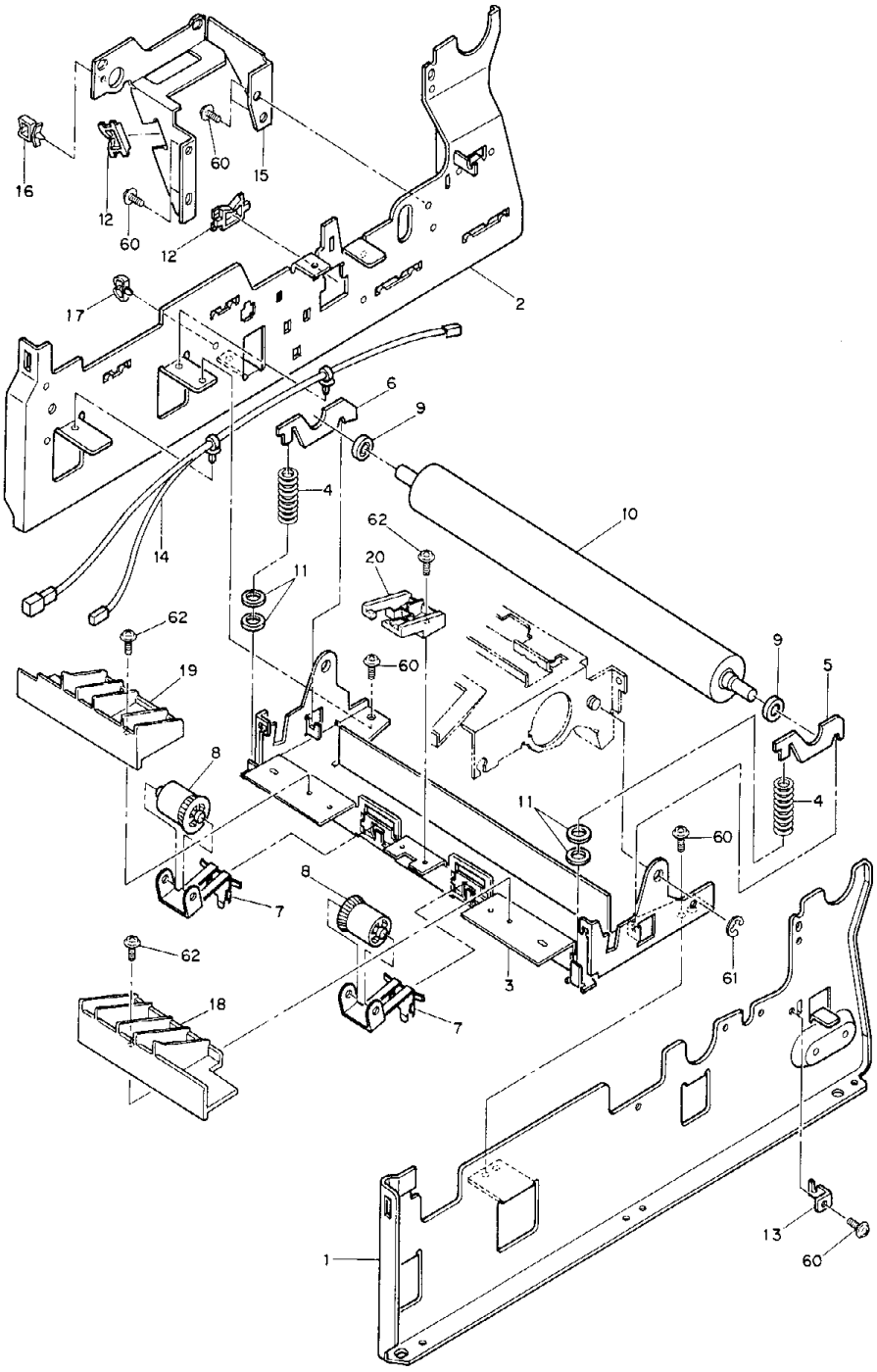
16
60
15
12
60
12
17
2
6
9
4
62
10
14
11
20
62
9
5
19
60
8
11
4
60
8
7
62
61
3
18
7
13
1
60

ITEM NO.	PARTS NO.	PARTS NAME	Q'TY / PAGE	Q'TY / PACK	SPE PRICE IN NONE	P	I	R	BSI NO.	TO	FROM	SERIAL NO.	REMARKS
1	4402 844660	FRAME-LOW-F	1	1/P									
2	4402 846100	K-FRAME-L-R	1	1/P									
3	4402 846860	BASE-FUSER	1	1/P									
4	4402 846490	SPC100-120-0262	2	5/P									
5	4402 846730	BRKT-ARM-FUS-F	1	1/P									
6	4402 846740	BRKT-ARM-FUS-R	1	1/P									
7	4402 846580	SPL-EXIT-ROL-L	2	1/P									
8	4407 674240	IDLER-L-EXIT	2	1/P									
9	4402 846590	BRG-1260-HR	2	1/P									
10	4409 824720	HR-1210-L	1	1/S									
11	7400 106011	1HWAS060MSZN3A	4	50/P									
12	4843 390942	BD/W-EDS-2	2	10/P									
13	4402 843880	PLT-SPRING	1	1/P									
14	4402 858780	WH-FUSER-121	1	1/P									
15	4402 845910	BKT-FEED-DRIVE	1	1/P									
16	4843 390855	CLP/W-LWS-2U	1	5/P									
17	4364 478290	CLP-UAMS-05-0	1	10/P									
18	4402 847100	GUIDE-FU-EN-1	1	1/P									
19	4402 847110	GUIDE-FU-EN-2	1	1/P									
20	4402 847120	GUIDE-FU-EN-3	1	1/P									
21	4843 391378	CLP/W-MN-2	1	5/P									
60	4842 040690	TZPAN3006MSZN3L	7	50/P									
61	7405 005031	ERR050SKZN3A	1	50/P									
62	4842 040692	TZPAN3008MSZN3L	3	50/P									

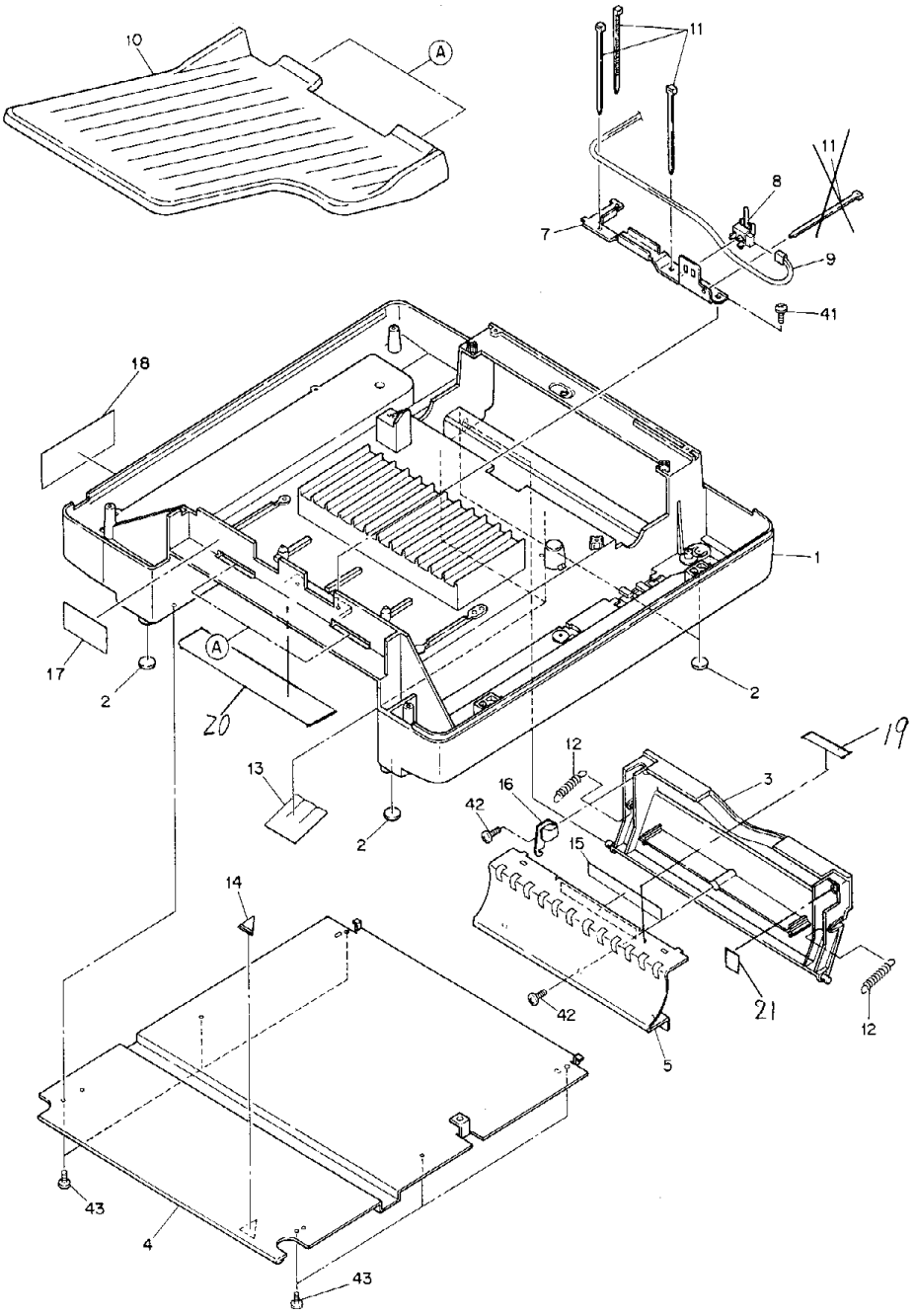
10
A
11
11
8
7
9
41
18
1
17
2
A
20
2
19
12
13
16
42
3
2
15
14
42
21
12
5
43
4
43

ITEM NO.	PARTS NO.	PARTS NAME	Q'TY / PAGE	Q'TY / PACK	SPE PRICE IN NONE	P	I	R	BSI NO.	TO	FROM	SERIAL NO.	REMARKS
1	4402 843620	FRAME-BASE	1	N/A***									
2	4400 531060	FOOT-13-518	4	10/P									
3	4402 843640	COVER-FEED-TURN	1	1/PP									
4	4402 843850	PLT-BASE	1	1/P									
5	4402 843690	GUIDE-TURN	1	1/P									
7	4402 846910	BRKT-EXIT-SW	1	1/P									
8	4402 842650	SZ-EXIT-121	1	1/C									
9	4402 858730	WH-EXIT-SW-121	1	1/P									
10	4402 841970	TRAY	1	1/PP									
11	4346 754010	SKB-BAND-1	3	5/P									
12	4402 844290	SPE-COV-315	2	5/P									
13	4402 844030	MYLAR-NAIL	2	5/P									
14	4402 844100	LBL-LINE-LIMIT	1	5/P									
15	4402 843940	LBL-COV-FEED	1	5/P									
16	4402 844130	SPL-EARTH-FEED	1	1/P									
17B	4402 840990	LABEL-CAUTION	1	5/P									1370
18	4402 840980	LBL-SERVICE	1	5/P									
19	4402 841400	LBL-COV-OPEN	1	5/P									
20	4402 844300	LBL-FRAME-BASE	1	1/KP									
21	4402 844350	MYLAR-COV-FEED	1	5/P									
41	4842 040846	PTBR30*08MSZN3A	1	50/P									
42	4842 040495	PTBR30*06MSZN3A	2	50/P									
43	4842 040847	PTBR30*10MSZN3A	6	50/P									

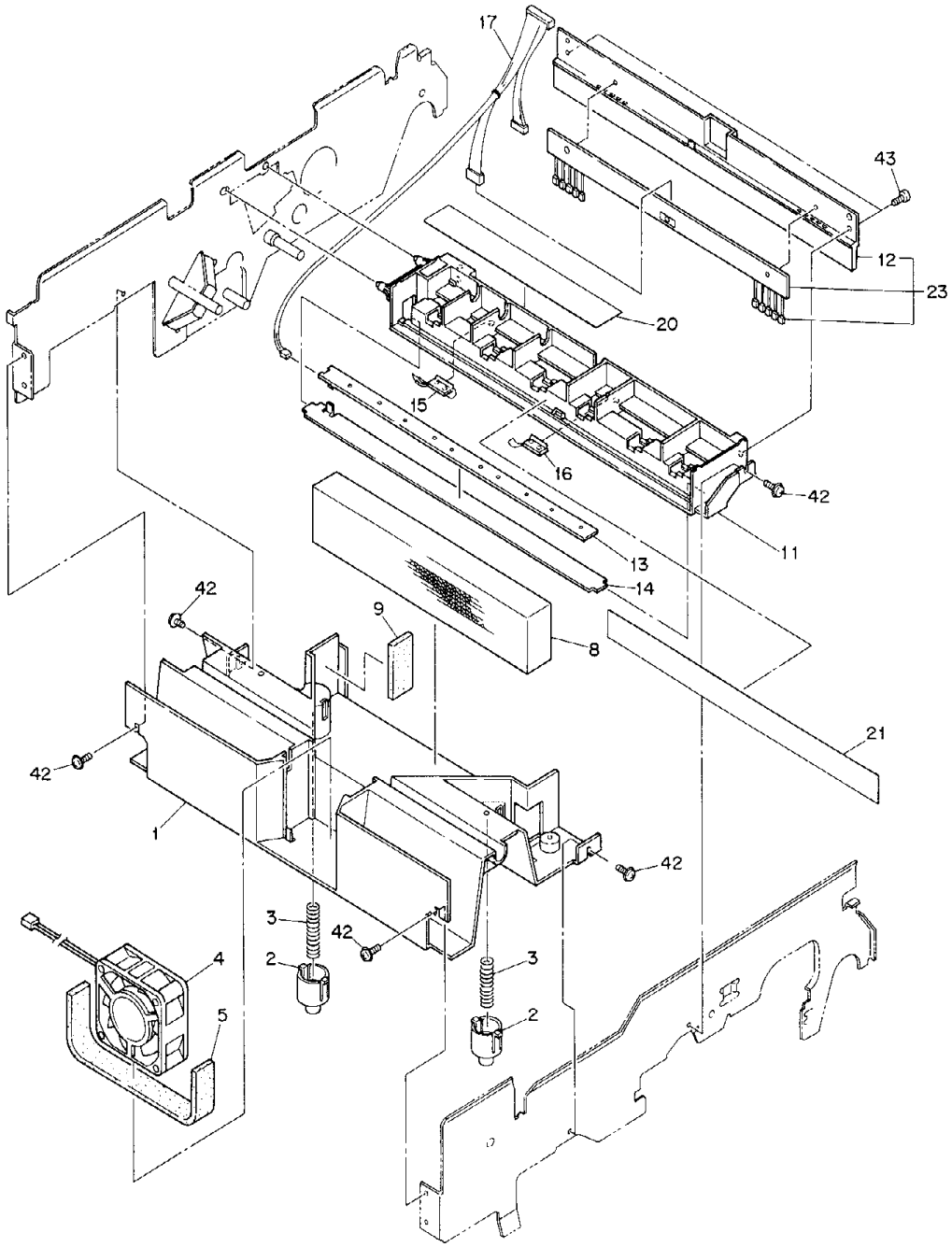
17
43
12
23
20
15
16
42
11
13
14
42
9
8
21
42
1
42
3
42
2
4
5
3
2

ITEM NO.	PARTS NO.	PARTS NAME	Q'TY / PAGE	Q'TY / PACK	SPE PRICE IN NONE	P	I	R	BSI NO.	TO	FROM	SERIAL NO.	REMARKS
1	4402 843370	DUCT-FAN	1	1/P									
2	4402 843530	PUSHER-FELT	2	1/P									
3	4402 843790	SPC900-080-0340	2	5/P									
4	4402 858940	FAN-DC-121	1	1/D									
5	4402 843520	SEAL-FAN	1	1/P									
8	4402 843380	FILTER-U-121	1	1/C									
9	4402 844040	SEAL-DUCT	1	5/P									
11	4402 849280	K-HOLD-DCH	1	1/PP									
12A	4402 859570	HOLDER-DCH-121	1	1/P									1370
13	4402 858170	PWA-F-ERS-121	1	1/SB									
14	4402 849170	COV-LAMP-ERS	1	1/PP									
15	4402 849190	SPL-GRID-BIAS	1	1/P									
16	4402 849180	SPL-CH-M	1	1/P									
17A	4402 858720	WH-OPT-120	1	1/P									1360
17B	4402 858620	WH-OPT-121	1	1/P									1370
21	4402 849640	MYLAR-WALL-DCH	1	5/KP									
23B	4402 859560	ASM-DCH-121	1	1/C									1370
42	4842 040690	TZPAN3006MSZN3L	5	50/P									
43	7040 260511	PAN26*05MSZN3AI	2	50/P									

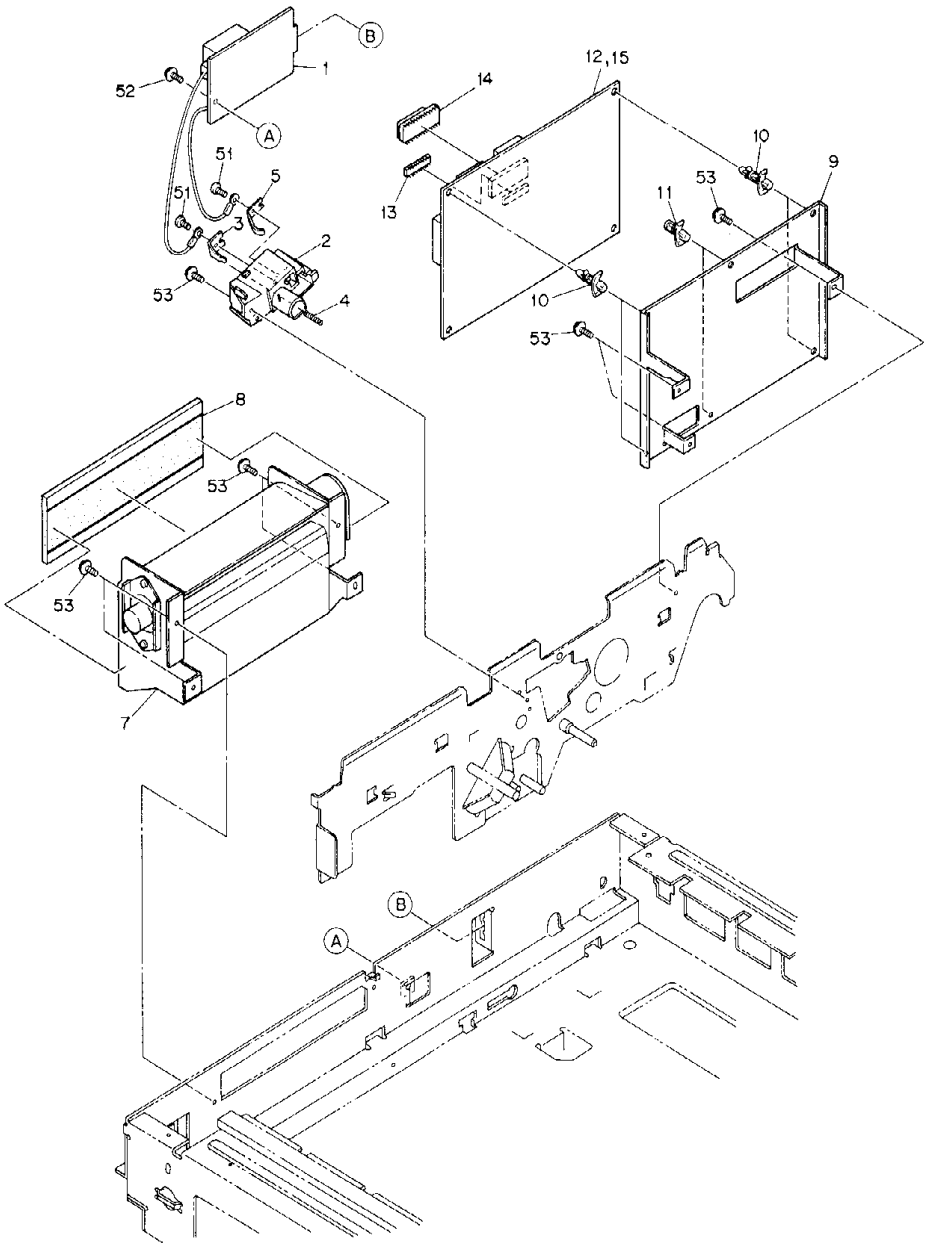
B
1
52
A
51
5
51
3
2
53
4
12,15
14
13
10
9
53
11
10
53
8
53
53
7
B
A

ITEM NO.	PARTS NO.	PARTS NAME	Q'TY / PAGE	Q'TY / PACK	SPE PRICE IN NONE	P	I	R	BSI NO.	TO	FROM	SERIAL NO.	REMARKS
1	4402 858880	PS-HVT-M-121	1	1/C									
2	4402 849210	TERMINAL-M-CH	1	1/P									
3	4402 849260	PLT-TERM-M	1	1/P									
4	4402 849240	SPC-TERM-M	1	5/P									
5	4402 849220	SPL-BIAS-GRID	1	1/P									
7	4402 858920	FAN-DC-OPT-121	1	1/C									
8	4402 851360	FILTER-OPT-120	1	1/P									
9	4402 843590	BRKT-PWB-LGC	1	1/P									
10	4843 390869	PWZ-SPLS-4U	4	5/P									
11	4843 390859	PWZ-SPS-4U	2	5/P									
12A	4402 861050	PWA-F-LGC-1360U	1	1/SB					F97C852				1360 NAD
12B	4402 842510	PWA-F-LGC-120M	1	1/SB					F97C852				1360 OTHERS
13A	4402 861160	PRA-T123E2-U01S	1	1/S					F97C852				NAD
13B	4402 859970	PRA-T121E2-E03S	1	1/S					F97C852				OTHERS
14	4402 861120	PRA-123M-03	1	1/S					F97C852				
15A	4402 861080	PWA-F-LGC-1370U	1	1/SB					F97C852				1370 NAD
15B	4402 842500	PWA-F-LGC-121M	1	1/SB					F97C852				1370 OTHERS
51	4842 040495	PTBR30*06MSZN3A	2	50/P									
52	4842 040480	THPAN3006MSZN3L	1	50/P									
53	4842 040690	TZPAN3006MSZN3L	8	50/P									
12A	4402 861050	PWA-F-LGC-1360U	1	1/SB					F97C852				1360 NAD

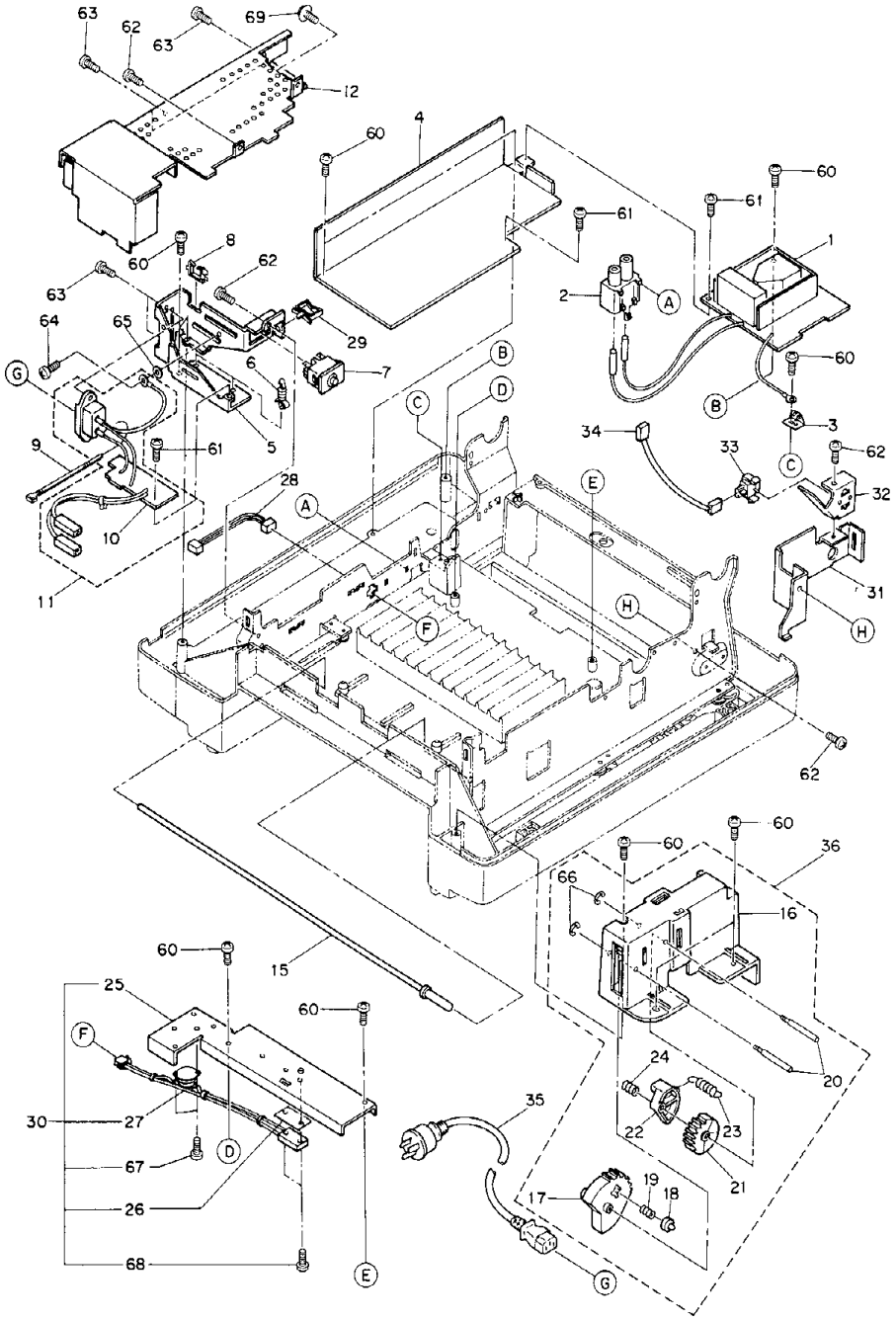
63
62
63
69
12
60
4
60
61
61
1
2
A
60
8
62
63
64
65
29
6
7
G
B
D
C
5
9
61
28
A
10
11
34
33
3
62
C
32
E
31
H
H
F
62
60
60
36
66
16
15
60
25
60
F
24
20
30
27
35
22
23
D
67
21
19
17
18
26
68
E
G

TOSHIBA

ITEM NO.	PARTS NO.	PARTS NAME	Q'TY / PAGE	Q'TY / PACK	SPE PRICE IN NONE	P	I	R	BSI NO.	TO	FROM	SERIAL NO.	REMARKS
1	4402 859500	PS-HVT-T-121	1	1/C									
2	4402 849130	ASM-TERMINAL-TR	1	1/P									
4A	4402 861140	PS-ACC-123U	1	1/C					F97C852	004A1			100V SERIES
4A1	4402 864550	PS-ACC-121-U	1	1/C		C	E	H	F98B171		004A		100V SERIES
4B	4402 858870	PS-ACC-121-E	1	1/C					F97C852				200V SERIES
5	4402 843560	BRKT-SW-INLET	1	1/P									
6	4843 390871	PWZ-SPLS-7U	2	5/P									
7	4402 859230	SP-FA1L-AA22	1	1/D									
8	4843 390942	BD/W-EDS-2	1	10/P									
9	4346 754010	SKB-BAND-1	1	5/P									
10A	4402 858070	PWA-F-FUS-121U	1	N/A***									100V SERIES
10B	4402 858080	PWA-F-FUS-121E	1	N/A***									200V SERIES
11A	4402 859330	K-INLT-FUS-121U	1	1/C									100V SERIES
11B	4402 859340	K-INLT-FUS-121E	1	1/C									200V SERIES
12	4402 843890	BRKT-ACC	1	1/P									
15	4402 843750	K-SFT-SW-MAIN	1	1/P									
16	4402 843420	CASE-SW-MAIN	1	N/A***									
17	4402 843430	KNOB-SW-MAIN	1	N/A***									
18	4400 532930	CAP-SW	1	N/A***									
19	4402 844090	SPC-MSW-120	1	N/A***									
20	4402 843470	SHAFT-CAM	2	N/A***									
21	4402 843440	CAM-SW-DOOR	1	N/A***									
22	4402 843450	CAM-SW-SHELL	1	N/A***									
23	4402 843480	SPE050-040-0155	1	N/A***									
24	4402 843410	SPC045-035-0115	1	N/A***									
25X	4402 843980	BRKT-DH	1	1/P									AUD
25Y	4402 843980	BRKT-DH	1	1/P									MF-1350U
25Z	4402 843980	BRKT-DH	1	1/P									MF-1350E
26X	4402 859390	SHEET-PTC-121	1	5/P									AUD
26Y	4402 859390	SHEET-PTC-121	1	5/P									MF-1350U
26Z	4402 859390	SHEET-PTC-121	1	5/P									MF-1350E
27X	4402 859190	K-PTC-230-121	1	1/C									AUD
27Y	4402 859180	K-PTC-120-121	1	1/C									MF-1350U
27Z	4402 859190	K-PTC-230-121	1	1/C									MF-1350E
28X	4402 858430	WH-DAMPHTR-121	1	1/P									AUD
28Y	4402 858430	WH-DAMPHTR-121	1	1/P									MF-1350U
28Z	4402 858430	WH-DAMPHTR-121	1	1/P									MF-1350E
29	4843 390854	CLP/W-LWS-1U	1	5/P									
30X	4402 844150	ASM-BKT-DH-230	1	1/D									AUD
30Y	4402 844140	ASM-BKT-DH-120	1	1/P									MF-1350U
30Z	4402 844150	ASM-BKT-DH-230	1	1/D									MF-1350E
31	4402 844180	BRKT-COV-SW-1	1	1/P									
32	4402 844190	BRKT-COV-SW-2	1	1/P									
33	4402 859600	SP-CS3A-B2BA	1	1/D									
34	4402 858770	WH-U-COV-121	1	1/P									
35A	4408 425350	CBL/P-INLET-UC	1	1/P									NAD
35B	4400 395940	CBL/P-INLET-EUR	1	1/P									MJD
35C	4400 494790	CBL/P-INLET-UK	1	1/P									UKD
35D	4400 494940	CBL/P-INLET-AU	1	1/P									AUD
35E	4400 358250	CBL/P-INLET-ST	1	1/P									SAD
35F	4400 395940	CBL/P-INLET-EUR	1	1/P									ASD
36	4402 843400	ASM-SW-MAIN	1	1/C									
37	4402 844320	PLT-BIAS-L	1	1/P									
38	4402 844330	SPC051-040-0120	1	5/P									
60	4842 040846	PTBR30*08MSZN3A	10	50/P									
61	4842 040480	THPAN3006MSZN3L	3	50/P									
62	4842 040690	TZPAN3006MSZN3L	4	50/P									
63	7040 300611	PAN30*06MSZN3A	4	50/P									
64	7040 400660	PAN40*06BSDG	1	50/P									
65	7402 004032	0TWAS040SKZN3A	1	50/P									
66	7405 002031	ERR020SKZN3A	2	50/P									
67	4842 040665	TPAN3006MSZN3L	2	50/P									
68	7040 401011	PAN40*10MSZN3AI	2	50/P									
69	4842 040711	TPPAN3008MSZN3A	1	50/P									

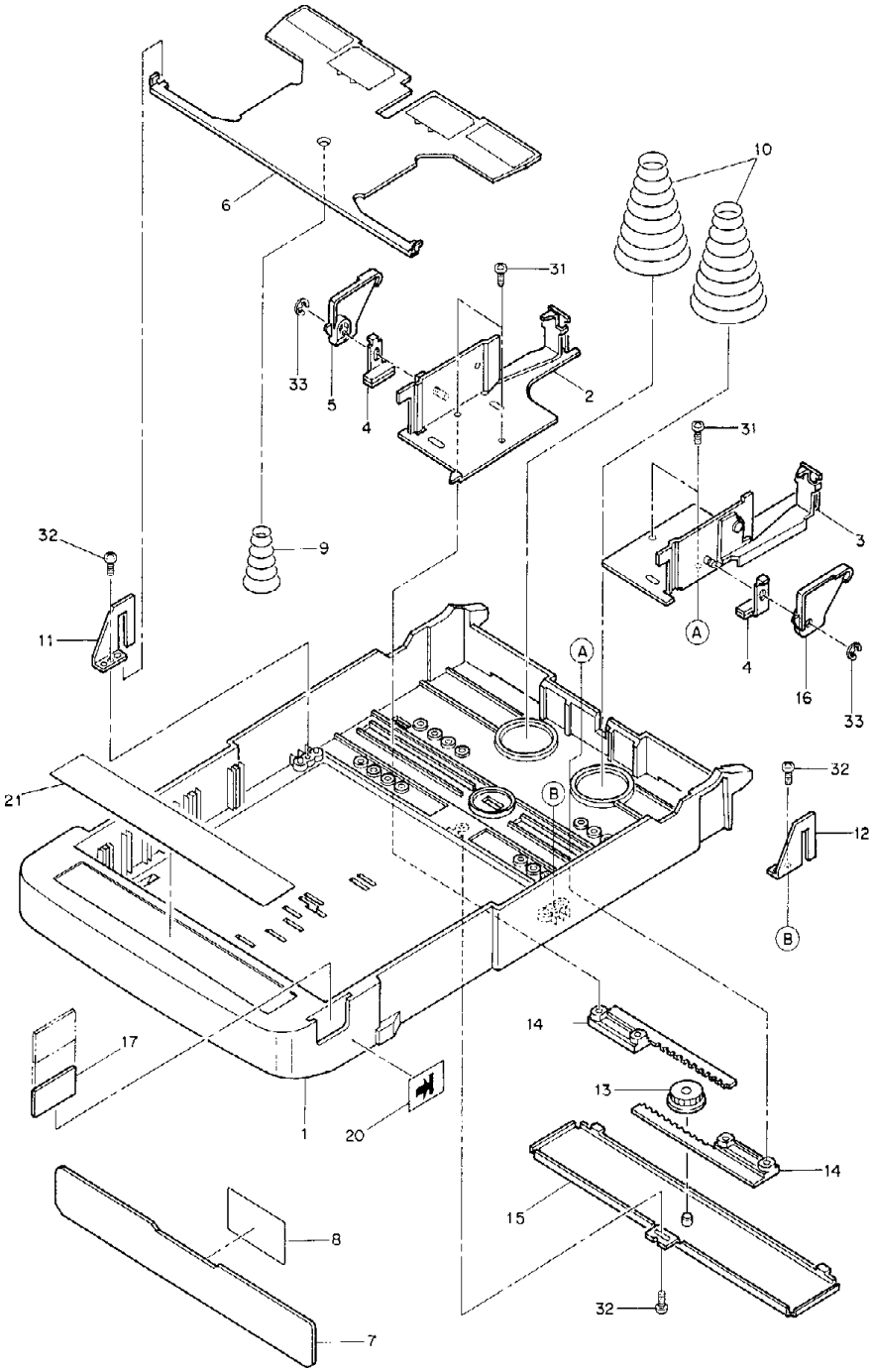
6
10
31
33
5
4
2
31
3
32
9
11
A
4
16
33
21
B
32
12
B
14
17
13
1
20
14
15
8
32
7

ITEM NO.	PARTS NO.	PARTS NAME	Q'TY / PAGE	Q'TY / PACK	SPE PRICE IN NONE	P	I	R	BSI NO.	TO	FROM	SERIAL NO.	REMARKS
1	4402 846110	CST-120	1	1/PP									
2	4402 844500	K-WALL-ADJ-F	1	1/P									
3	4402 844510	K-WALL-ADJ-R	1	1/P									
4	4402 844560	K-STOP-WALL-S	2	1/P									
5	4402 845570	LEVER-CST-F	1	1/P									
6	4402 846150	K-PLATE-CST-121	1	1/P									
7	4400 556130	BACK-PLATE	1	1/P									
8	4402 845450	LABEL-LIMIT-T	1	5/P									
9	4407 678600	SPC-CONE-Z-D	1	1/P									
10	4402 846170	SPC-CONE-121	2	1/P									
11	4407 678420	BKT-CST-PLATE-F	1	1/P									
12	4407 678430	BKT-CST-PLATE-R	1	1/P									
13	4407 726480	PINION-18-395	1	1/P									
14	4407 678190	RACK-SIDE-WALL	2	1/P									
15	4402 845530	K-COVER-BTM-CST	1	1/PP									
16	4402 845580	LEVER-CST-R	1	1/P									
17	4402 845690	LBL-SIZE-CST-UC	1	5/P									
20	4402 845700	LBL-ARROW-CST	1	5/P									
21	4402 841100	LBL-INST-CST-T	1	5/KP									
31	7120 300611	12PAN3006MSZN3A	4	50/P									
32	4842 040495	PTBR30*06MSZN3A	3	50/P									
33	7405 003031	ERR030SKZN3A	2	50/P									

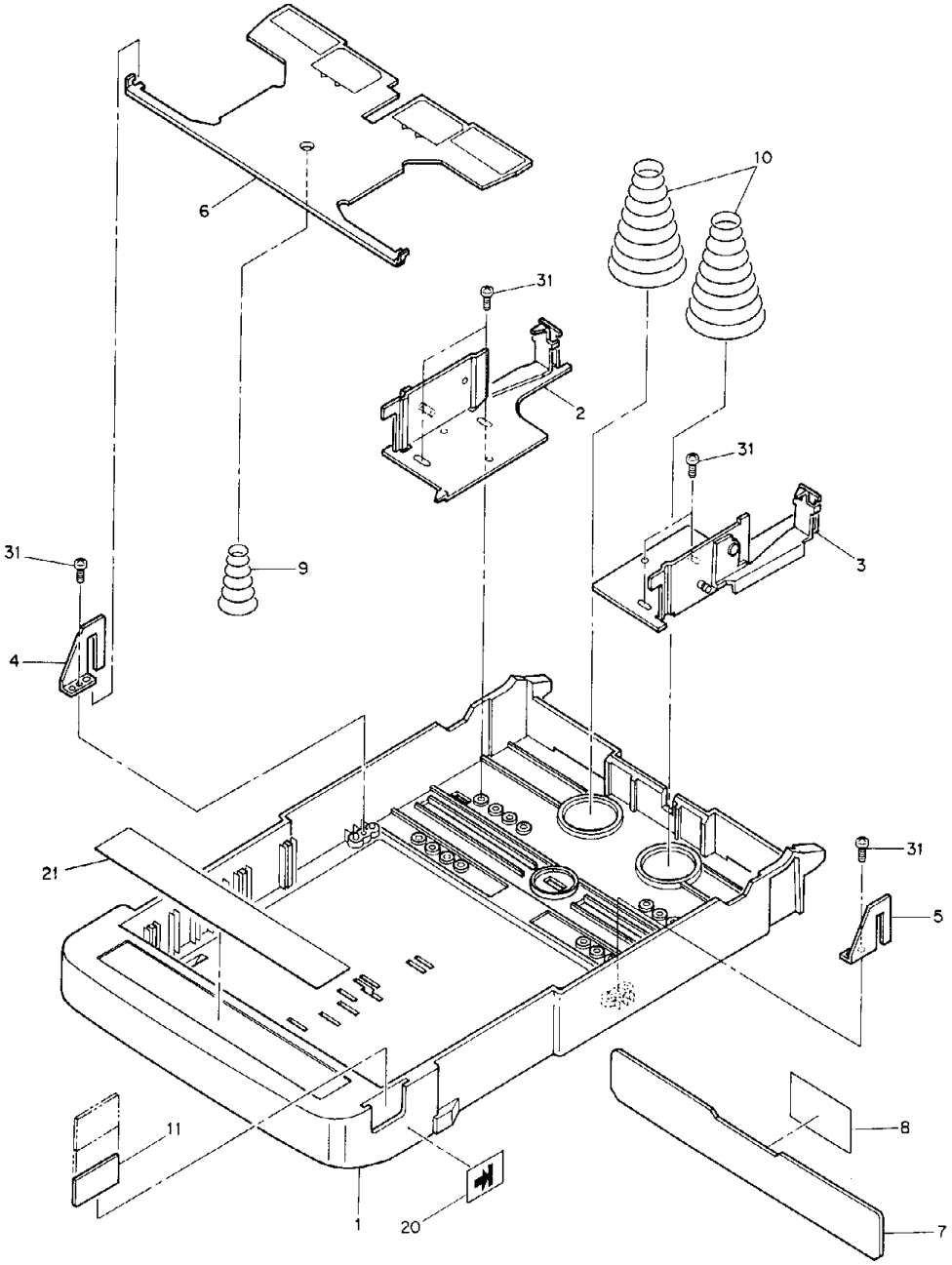
6
10
31
2
31
3
31
9
4
21
31
5
11
8
1
20
7

ITEM NO.	PARTS NO.	PARTS NAME	Q'TY / PAGE	Q'TY / PACK	SPE PRICE IN NONE	P	I	R	BSI NO.	TO	FROM	SERIAL NO.	REMARKS
1	4402 846110	CST-120	1	1/PP									
2	4402 844500	K-WALL-ADJ-F	1	1/P									
3	4402 844510	K-WALL-ADJ-R	1	1/P									
4	4407 678420	BKT-CST-PLATE-F	1	1/P									
5	4407 678430	BKT-CST-PLATE-R	1	1/P									
6	4402 846150	K-PLATE-CST-121	1	1/P									
7	4400 556130	BACK-PLATE	1	1/P									
8	4402 845450	LABEL-LIMIT-T	1	5/P									
9	4407 678600	SPC-CONE-Z-D	1	1/P									
10	4402 846170	SPC-CONE-121	2	1/P									
11	4402 845680	LBL-SIZE-CST-EU	1	5/P									
20	4402 845700	LBL-ARROW-CST	1	5/P									
21	4402 841100	LBL-INST-CST-T	1	5/KP									
31	4842 040495	PTBR30*06MSZN3A	6	50/P									

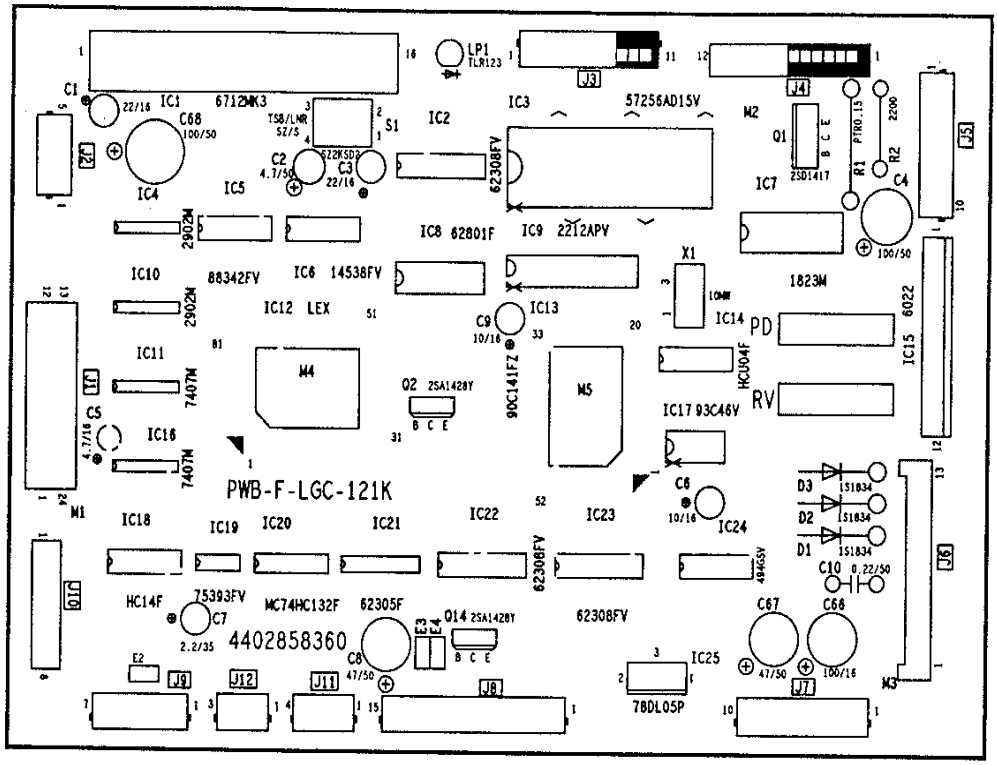
PWB-F-LGC-121K
4402858360
IC1 6712MK3
IC2
IC3 57256AD15V
IC4
IC5
IC6 14538FV
IC7
IC8 62801F
IC9 2212APV
IC10 88342FV
IC11
IC12 LEX
IC13
IC14 PD
IC15 6022
IC16
IC17 93C46V
IC18
IC19
IC20
IC21
IC22
IC23
IC24
IC25 78DL05P
HC14F 75393FV
MC74HC132F 62305F
62308FV
62308FV
90C141FZ
HCU04F
1823M
M1
M2
M3
M4
M5
X1
LP1 TLR123
S1
Q1 2SD1417
Q2 2SA1428Y
Q14 2SA1428Y
D1 1S1834
D2 1S1834
D3 1S1834
C1 22/16
C2 4.7/50
C3 22/16
C4 100/50
C5 4.7/16
C6 10/16
C7 2.2/35
C8 47/50
C9 10/16
C10 0.22/50
C66 100/16
C67 47/50
C68 100/50
R1 PTR0.15
R2 2200
J1
J2
J3
J4
J5
J6
J7
J8
J9
J10
J11
J12
E2
E3
E4

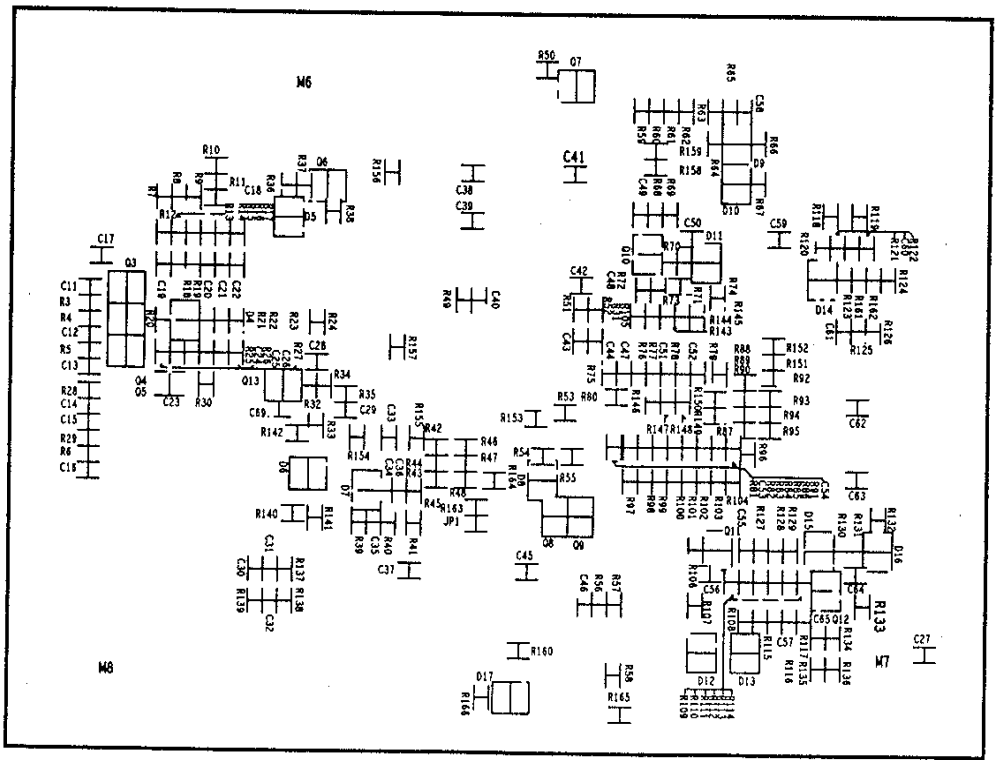
M6
M7
M8
C41
C38
C39
C40
C42
C43
C45
C62
C63
C64
C65
C27
R133
JP1
Q3
Q4
Q5
Q6
Q7
Q8
Q9
Q10
Q11
Q12
Q13
D5
D6
D7
D9
D10
D11
D12
D13
D14
D15
D16
D17

TOSHIBA

ITEM NO.	PARTS NO.	PARTS NAME	Q'TY / PAGE	Q'TY / PACK	SPE PRICE IN NONE	P	I	R	BSI NO.	TO	FROM	SERIAL NO.	REMARKS
0A	4402 842510	PWA-F-LGC-120M	1	1/SB									1360
0B	4402 842500	PWA-F-LGC-121M	1	1/SB									1370
1	4402 858370	PWB-F-LGC-121K	1	N/A***									
2	4402 858970	HT-SINK-120	1	1/P									
4A	4402 859150	JUMPER-W-7.5	1	10/P									1360
4B	4402 859150	JUMPER-W-7.5	2	10/P									1370
11	4843 113784	IC-STK6712BMK3	1	1/S									
12B	3040 274687	IC-TD62308FTP2	1	1/S									1370
14	4843 113438	IC-LM2902M(EL)	1	5/S									
15	4843 112761	IC-MB88342PF	1	5/S									
16	4843 112458	IC-MC14538BFL	1	5/S									
17	4843 114935	IC-LB1823M-TPT2	1	1/S									
18	3040 277105	IC-TD62801F	1	5/S									
20	4843 113438	IC-LM2902M(EL)	1	5/S									
21	4843 112762	IC-DM7407M	1	5/S									
22	3040 709198	TC140G12AF-0125	1	1/S									
23	3040 571093	TMP90CM40AF2507	1	1/S									
24	3040 485645	IC-TC74HCU04AF	1	1/S									
25	4843 112956	IC-SLA6022	1	1/S									
26	4843 112762	IC-DM7407M	1	5/S									
28	3040 485629	IC-TC74HC14AFTP	1	5/S									
29	3040 349270	IC-TA75393F	1	5/S									
30	4843 112766	IC-MC74HC132FL	1	5/S									
31	3040 274647	IC-TD62305F(TP2	1	5/S									
32	3040 274687	IC-TD62308FTP2	1	1/S									
33	3040 274687	IC-TD62308FTP2	1	1/S									
34	4843 112636	IC-UPC494GS	1	1/S									
35	3040 376602	IC-TA78DL05AP	1	5/S									
51	3036 868550	Q-2SD1417	1	5/S									
52	3036 548970	Q-2SA1428-Y	1	5/P									
53	3036 335471	Q-2SC2712-Y-85R	1	5/P									
54	3036 335471	Q-2SC2712-Y-85R	1	5/P									
55	3036 335471	Q-2SC2712-Y-85R	1	5/P									
56	3036 541131	Q-2SA1162YTE85R	1	5/P									
57	3036 014012	Q-RN2401(TE85R)	1	5/P									
58	3036 004012	Q-RN1401(TE85R)	1	5/P									
59	3036 014012	Q-RN2401(TE85R)	1	5/P									
60	3036 004012	Q-RN1401(TE85R)	1	5/P									
61	3036 004012	Q-RN1401(TE85R)	1	5/P									
62	3036 004012	Q-RN1401(TE85R)	1	5/P									
63	3036 541131	Q-2SA1162YTE85R	1	5/P									
64	3036 548970	Q-2SA1428-Y	1	5/P									
81	3037 568277	D-1S1834(LC6)	1	5/P									
82	3037 568277	D-1S1834(LC6)	1	5/P									
83	3037 568277	D-1S1834(LC6)	1	5/P									
84	3037 151102	D-1SS193(TE85R)	1	5/P									
85	3037 238212	D-02CZ3.3X-85R	1	5/P									
87	3037 238422	D-02CZ5.1Y-85R	1	5/P									
88	3037 238212	D-02CZ3.3X-85R	1	5/P									
89	3037 151102	D-1SS193(TE85R)	1	5/P									
90	3037 151102	D-1SS193(TE85R)	1	5/P									
91	3037 150651	D-1SS184(TE85R)	1	5/P									
92	3037 238212	D-02CZ3.3X-85R	1	5/P									
93	3037 151102	D-1SS193(TE85R)	1	5/P									
94	3037 238422	D-02CZ5.1Y-85R	1	5/P									
95	3037 150651	D-1SS184(TE85R)	1	5/P									
96	3037 151102	D-1SS193(TE85R)	1	5/P									
97	3037 151102	D-1SS193(TE85R)	1	5/P									
121	4843 250421	X-CST10.0MTW	1	5/S									
131	3038 601100	LP-TLR123	1	5/P									
141	4843 321564	SKT-CLC10280101	1	5/S									IC3
142	4843 321562	SKT-CLC10180101	1	1/S									IC9
151	4843 410402	CE-04W1C220M	1	10/P									
152	4843 410787	CE-04W1H4R7M	1	5/P									
153	4843 410402	CE-04W1C220M	1	10/P									
154	4843 406674	CE-04W1H101M	1	10/P									
155	4843 410397	CE-04W1C4R7M	1	10/P									
157	4843 410413	CE-04W1V2R2M	1	10/P									
158	4843 411175	CE04W1H470M-F	1	10/P									
159	4843 410400	CE-04W1C100M	1	10/P									
160	4843 410279	CQ921M1H224K	1	10/P									

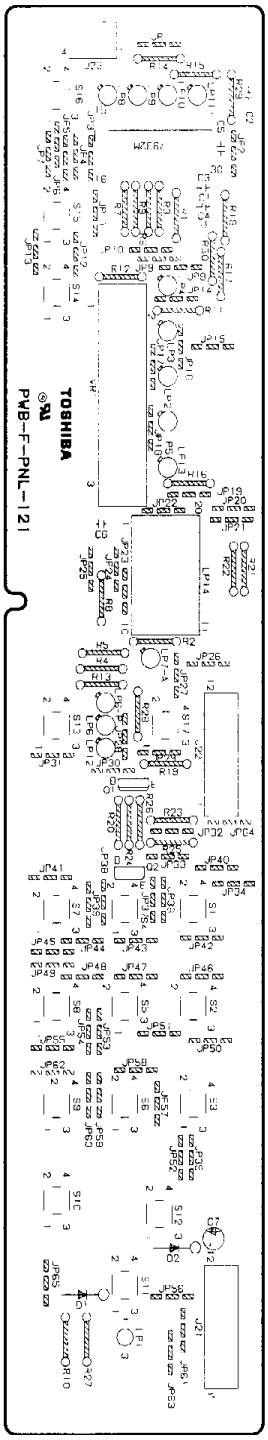
TOSHIBA
PWB-F-PNL-121

ITEM NO.	PARTS NO.	PARTS NAME	Q'TY / PAGE	Q'TY / PACK	SPE PRICE IN NONE	P	I	R	BSI NO.	TO	FROM	SERIAL NO.	REMARKS
0A	4402 858110	PWA-F-PNL-120	1	1/SB									1360
0B	4402 858050	PWA-F-PNL-121	1	1/SB									1370
1	4402 858250	PWB-F-PNL-121	1	N/A***									
11	4843 114645	IC-LC7932	1	1/S									
41	3036 548970	Q-2SA1428-Y	1	5/P									
42	3036 548970	Q-2SA1428-Y	1	5/P									
71	3037 249660	1S1588(TP3)	1	5/P									
72	3037 249660	1S1588(TP3)	1	5/P									
91	4843 194481	LED-SPR-39MVWF	1	5/P									GREEN/RED
92	4843 194553	LED-SLR-342YC3F	1	5/P									YELLOW
93	4843 194553	LED-SLR-342YC3F	1	5/P									YELLOW
94	4843 194554	LED-SLR-342VC3F	1	5/P									RED
95	4843 194554	LED-SLR-342VC3F	1	5/P									RED
96	4843 194552	LED-SLR-342MC3F	1	5/P									GREEN
97B	4843 194552	LED-SLR-342MC3F	1	5/P									1370/GREEN
98B	4843 194552	LED-SLR-342MC3F	1	5/P									1370/GREEN
99B	4843 194552	LED-SLR-342MC3F	1	5/P									1370/GREEN
100B	4843 194552	LED-SLR-342MC3F	1	5/P									1370/GREEN
101B	4843 194552	LED-SLR-342MC3F	1	5/P									1370/GREEN
102	4843 194552	LED-SLR-342MC3F	1	5/P									GREEN
103	4843 194554	LED-SLR-342VC3F	1	5/P									RED
104	4400 816520	LED-LB-403MB2	1	1/S									
131	4843 412280	CKM-ECCZ1H330JG	1	10/P									
132	4843 412280	CKM-ECCZ1H330JG	1	10/P									
133	4843 412280	CKM-ECCZ1H330JG	1	10/P									
134	4843 412280	CKM-ECCZ1H330JG	1	10/P									
135	4400 334400	CKM-DD305-104TP	1	10/P									
136	4400 334400	CKM-DD305-104TP	1	10/P									
137	4843 412281	CE-04C1C100M	1	10/P									
151A	4843 231891	SP-SKHHAJ	13	5/S									1360
151B	4843 231891	SP-SKHHAJ	17	5/S									1370
171	4843 073037	RV-SS302N00A10K	1	1/D									
201	4843 028563	RD1/4LA100HJ	1	10/P									
202	4843 028563	RD1/4LA100HJ	1	10/P									
203	4843 028563	RD1/4LA100HJ	1	10/P									
204	4843 028563	RD1/4LA100HJ	1	10/P									
205	4843 028563	RD1/4LA100HJ	1	10/P									
206	4843 028563	RD1/4LA100HJ	1	10/P									
207	4843 028563	RD1/4LA100HJ	1	10/P									
208	4843 028563	RD1/4LA100HJ	1	10/P									
209	4843 028563	RD1/4LA100HJ	1	10/P									
210	4843 028561	RD1/4LA082HJ	1	10/P									
211	4843 028559	RD1/4LA068HJ	1	10/P									
212	4843 028563	RD1/4LA100HJ	1	10/P									
213	4843 028561	RD1/4LA082HJ	1	10/P									
214B	4843 028561	RD1/4LA082HJ	1	10/P									1370
215B	4843 028561	RD1/4LA082HJ	1	10/P									1370
216	4843 028563	RD1/4LA100HJ	1	10/P									
217	4843 028579	RD1/4LA470HJ	1	10/P									
218	4843 028579	RD1/4LA470HJ	1	10/P									
219	4843 028595	RD1/4LA2.2KJ	1	10/P									
220	4843 028595	RD1/4LA2.2KJ	1	10/P									
221	4843 028595	RD1/4LA2.2KJ	1	10/P									
222	4843 028595	RD1/4LA2.2KJ	1	10/P									
223	4843 028567	RD1/4LA150HJ	1	10/P									
224	4843 028595	RD1/4LA2.2KJ	1	10/P									
225	4843 028567	RD1/4LA150HJ	1	10/P									
226	4843 028595	RD1/4LA2.2KJ	1	10/P									
227	4843 028563	RD1/4LA100HJ	1	10/P									
228	4843 028561	RD1/4LA082HJ	1	10/P									
229	4843 028579	RD1/4LA470HJ	1	10/P									
230	4843 028579	RD1/4LA470HJ	1	10/P									
261	4843 308015	J-53325-1210	1	5/P									
262	4843 308015	J-53325-1210	1	5/P									
263	4843 305047	J-53015-0410	1	5/P									
281	4407 782660	JUMPER-WIRE-10	55	10/P									

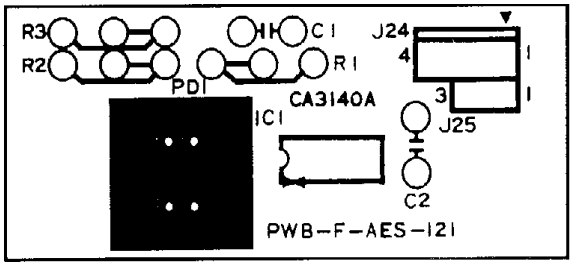

TOSHIBA

ITEM NO.	PARTS NO.	PARTS NAME	Q'TY / PAGE	Q'TY / PACK	SPE PRICE IN NONE	P	I	R	BSI NO.	TO	FROM	SERIAL NO.	REMARKS
0	4402 858020	PWA-F-AES-121	1	1/SB									
1	4402 858220	PWB-F-AES-121	1	N/A***									
11	4407 418360	IC-CA3140E	1	5/S									
21	4843 171300	PHD-S4797-01	1	1/C									
31	4843 410262	CQ921M1H102K	1	10/P									
32	4407 942000	CZ-308F104Z50	1	10/P									
51	4843 070888	RD1/6L-027KJ	1	10/P									
52	4843 070890	RD1/6L-039KJ	1	10/P									
53	4843 070906	RD1/6L-820KJ	1	10/P									
81	4843 306779	J-0-175489-3	1	5/P									
0	4402 858020	PWA-F-AES-121	1	1/SB									

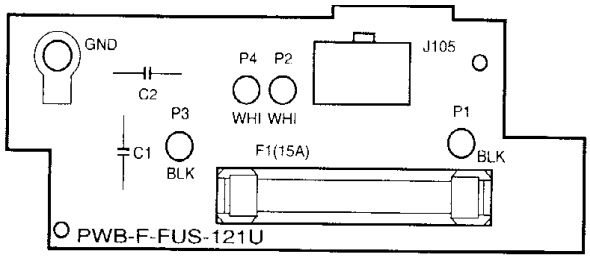

100V SERIES

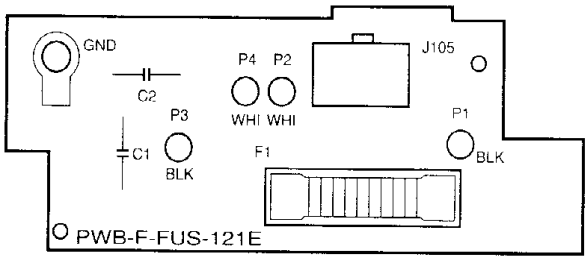

200V SERIES

TOSHIBA

ITEM NO.	PARTS NO.	PARTS NAME	Q'TY / PAGE	Q'TY / PACK	SPE PRICE IN NONE	P	I	R	BSI NO.	TO	FROM	SERIAL NO.	REMARKS
0A	4402 858070	PWA-F-FUS-121U	1	N/A***									100V SERIES
0B	4402 858080	PWA-F-FUS-121E	1	N/A***									200V SERIES
1A	4402 858330	PWB-F-FUS-121U	1	N/A***									100V SERIES
1B	4402 858340	PWB-F-FUS-121E	1	N/A***									200V SERIES
2A	4843 510601	FH-SN-5051	2	1/P									100V SERIES
2B	4407 966760	FUSE/CLIP-MINI	2	5/P									200V SERIES
11A	4843 500040	FU-CES6-15A	1	5/P									100V SERIES
11B	4408 217550	FUSE-S506-6.3A	1	5/P									200V SERIES
21	4843 412436	CKM-45E2B472MY	1	10/P									
22	4843 412436	CKM-45E2B472MY	1	10/P									
31	4402 859250	LUG/T-F9032	1	5/P									
41	4843 306538	J-53265-0220	1	5/P									



ITEM NO.	PARTS NO.	PARTS NAME	Q'TY / PAGE	Q'TY / PACK	SPE PRICE IN NONE	P	I	R	BSI NO.	TO	FROM	SERIAL NO.	REMARKS
0	4402 858170	PWA-F-ERS-121	1	1/SB									
1	4402 858350	PWB-F-ERS-121	1	N/A***									
31	4407 406520	LAMP-12V-150MA	6	5/C									
51	4843 308005	J-53325-0210	1	5/P									

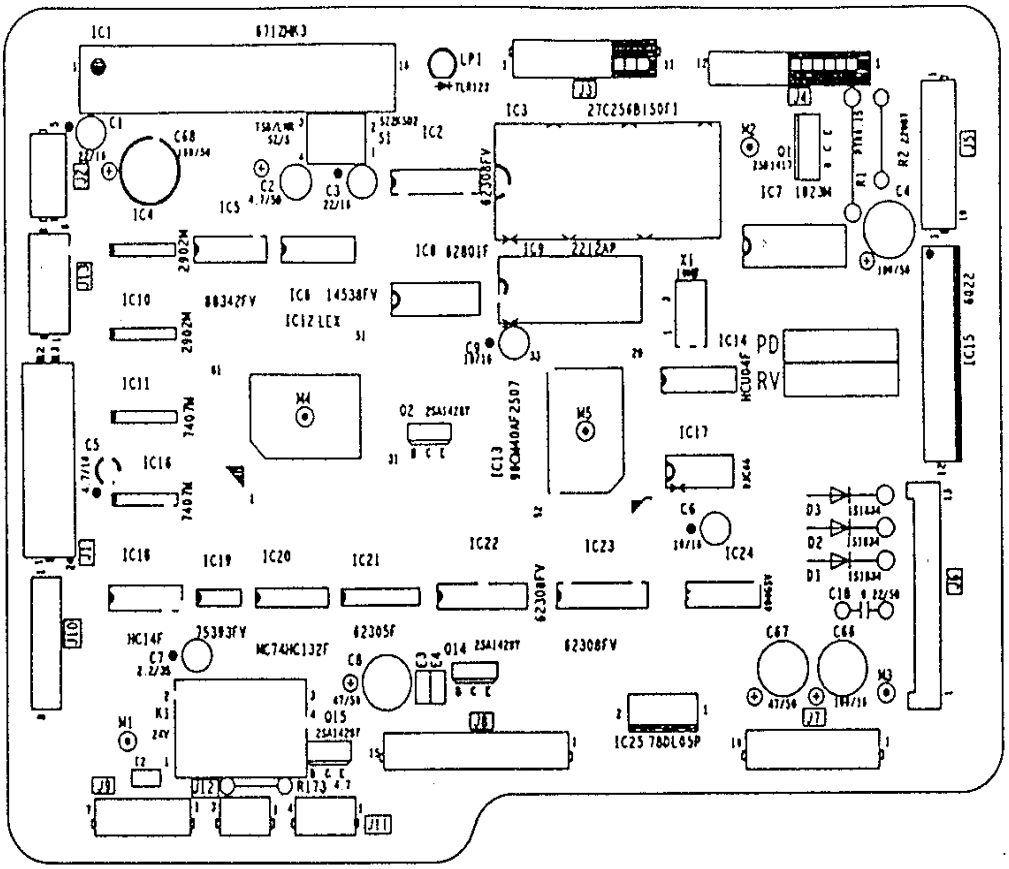

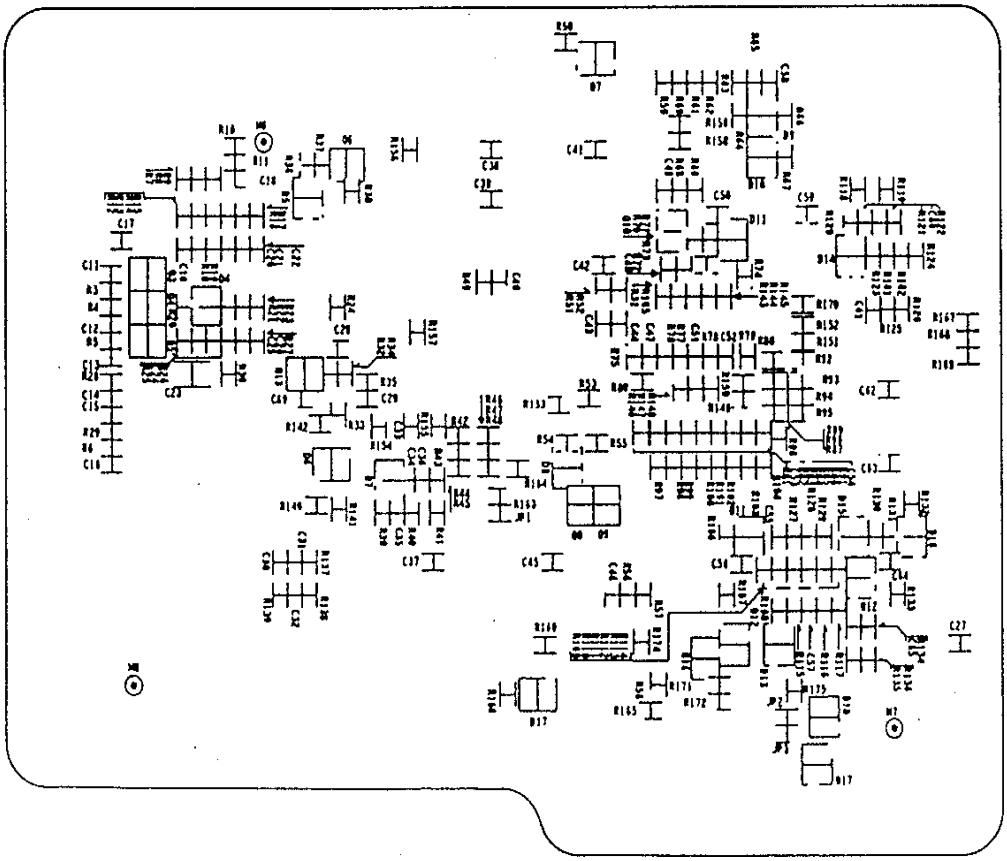

TOSHIBA

ITEM NO.	PARTS NO.	PARTS NAME	Q'TY / PAGE	Q'TY / PACK	SPE PRICE IN NONE	P	I	R	BSI NO.	TO	FROM	SERIAL NO.	REMARKS
0A	4402 861050	PWA-F-LGC-1360U	1	1/SB					F97C852				1360 NAD
0B	4402 861080	PWA-F-LGC-1370U	1	1/SB					F97C852				1370 NAD
1	4402 861020	PWB-F-LGC-123	1	N/A***					F97C852				
2	4402 859150	JUMPER-W-7.5	1	10/P					F97C852				
3	4402 858970	HT-SINK-120	1	1/P					F97C852				
4	4843 321564	SKT-CLC10280101	1	5/S					F97C852				IC3
5	4843 321562	SKT-CLC10180101	1	1/S					F97C852				IC9
11	4843 113784	IC-STK6712BMK3	1	1/S					F97C852				
14	4843 113438	IC-LM2902M(EL)	1	5/S					F97C852				
15	4843 112761	IC-MB88342PF	1	5/S					F97C852				
16	4843 112458	IC-MC14538BFL	1	5/S					F97C852				
17	4843 114935	IC-LB1823M-TPT2	1	1/S					F97C852				
18	3040 277105	IC-TD62801F	1	5/S					F97C852				
20	4843 113438	IC-LM2902M(EL)	1	5/S					F97C852				
21	4843 112762	IC-DM7407M	1	5/S					F97C852				
22	3040 709198	TC140G12AF-0125	1	1/S					F97C852				
23	3040 571093	TMP90CM40AF2507	1	1/S					F97C852				
24	3040 485645	IC-TC74HCU04AF	1	1/S					F97C852				
25	4843 112956	IC-SLA6022	1	1/S					F97C852				
26	4843 112762	IC-DM7407M	1	5/S					F97C852				
28	3040 485629	IC-TC74HC14AFTP	1	5/S					F97C852				
29	3040 349270	IC-TA75393F	1	5/S					F97C852				
30	4843 112766	IC-MC74HC132FL	1	5/S					F97C852				
31	3040 274647	IC-TD62305F(TP2	1	5/S					F97C852				
32	3040 274687	IC-TD62308FTP2	1	1/S					F97C852				
33	3040 274687	IC-TD62308FTP2	1	1/S					F97C852				
34	4843 112636	IC-UPC494GS	1	1/S					F97C852				
35	3040 376602	IC-TA78DL05AP	1	5/S					F97C852				
51	3036 868550	Q-2SD1417	1	5/S					F97C852				
52	3036 548970	Q-2SA1428-Y	1	5/P					F97C852				
53	3036 335471	Q-2SC2712-Y-85R	1	5/P					F97C852				
54	3036 335471	Q-2SC2712-Y-85R	1	5/P					F97C852				
55	3036 335471	Q-2SC2712-Y-85R	1	5/P					F97C852				
56	3036 541131	Q-2SA1162YTE85R	1	5/P					F97C852				
57	3036 014012	Q-RN2401(TE85R)	1	5/P					F97C852				
58	3036 004012	Q-RN1401(TE85R)	1	5/P					F97C852				
59	3036 014012	Q-RN2401(TE85R)	1	5/P					F97C852				
60	3036 004012	Q-RN1401(TE85R)	1	5/P					F97C852				
61	3036 004012	Q-RN1401(TE85R)	1	5/P					F97C852				
62	3036 004012	Q-RN1401(TE85R)	1	5/P					F97C852				
63	3036 541131	Q-2SA1162YTE85R	1	5/P					F97C852				
64	3036 548970	Q-2SA1428-Y	1	5/P					F97C852				
65	3036 548970	Q-2SA1428-Y	1	5/P					F97C852				
81	3037 568277	D-1S1834(LC6)	1	5/P					F97C852				
82	3037 568277	D-1S1834(LC6)	1	5/P					F97C852				
83	3037 568277	D-1S1834(LC6)	1	5/P					F97C852				
84	3037 151102	D-1SS193(TE85R)	1	5/P					F97C852				
85	3037 238212	D-02CZ3.3X-85R	1	5/P					F97C852				
87	3037 238422	D-02CZ5.1Y-85R	1	5/P					F97C852				
88	3037 238212	D-02CZ3.3X-85R	1	5/P					F97C852				
89	3037 151102	D-1SS193(TE85R)	1	5/P					F97C852				
90	3037 151102	D-1SS193(TE85R)	1	5/P					F97C852				
91	3037 150651	D-1SS184(TE85R)	1	5/P					F97C852				
92	3037 238212	D-02CZ3.3X-85R	1	5/P					F97C852				
93	3037 151102	D-1SS193(TE85R)	1	5/P					F97C852				
94	3037 238422	D-02CZ5.1Y-85R	1	5/P					F97C852				
95	3037 150651	D-1SS184(TE85R)	1	5/P					F97C852				
96	3037 151102	D-1SS193(TE85R)	1	5/P					F97C852				
97	3037 151102	D-1SS193(TE85R)	1	5/P					F97C852				
98	3037 150651	D-1SS184(TE85R)	1	5/P					F97C852				
111	4843 250421	X-CST10.0MTW	1	5/S					F97C852				
121	4843 200872	KP-AJ3212	1	1/C					F97C852				
131	3038 601100	LP-TLR123	1	5/P					F97C852				
141	4843 410402	CE-04W1C220M	1	10/P					F97C852				
142	4843 410787	CE-04W1H4R7M	1	5/P					F97C852				
143	4843 410402	CE-04W1C220M	1	10/P					F97C852				
144	4843 406674	CE-04W1H101M	1	10/P					F97C852				
145	4843 410397	CE-04W1C4R7M	1	10/P					F97C852				
147	4843 410413	CE-04W1V2R2M	1	10/P					F97C852				
148	4843 411175	CE04W1H470M-F	1	10/P					F97C852				
149	4843 410400	CE-04W1C100M	1	10/P					F97C852				

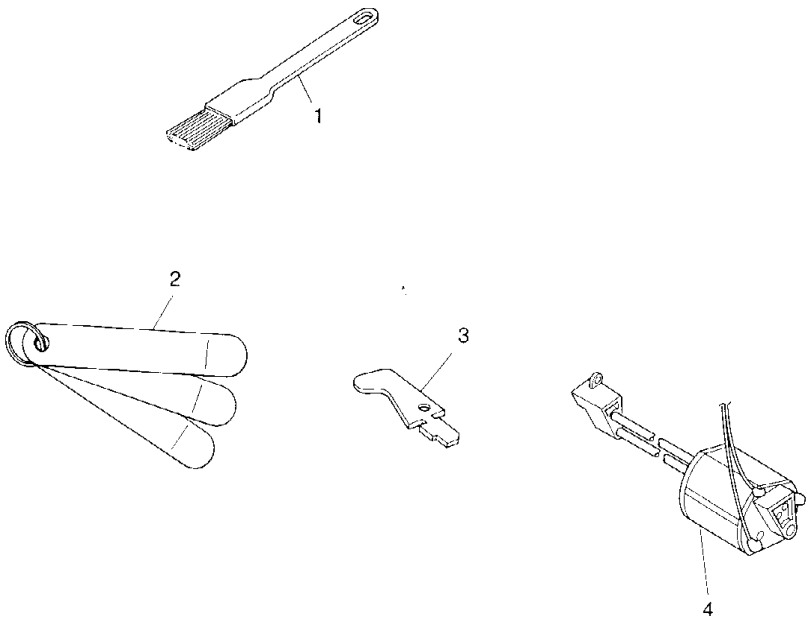
1
2
3
4

ITEM NO.	PARTS NO.	PARTS NAME	Q'TY / PAGE	Q'TY / PACK	SPE PRICE IN NONE	P	I	R	BSI NO.	TO	FROM	SERIAL NO.	REMARKS
1	4400 545330	BRUSH-518	1	1/P									
2	4402 048100	ASM-JIG-DOC-180	1	1/P									
3	4407 915730	JIG-SW-F-COV	1	1/P									
4	4402 853600	ASM-JIG-DRUM	1	1/C									

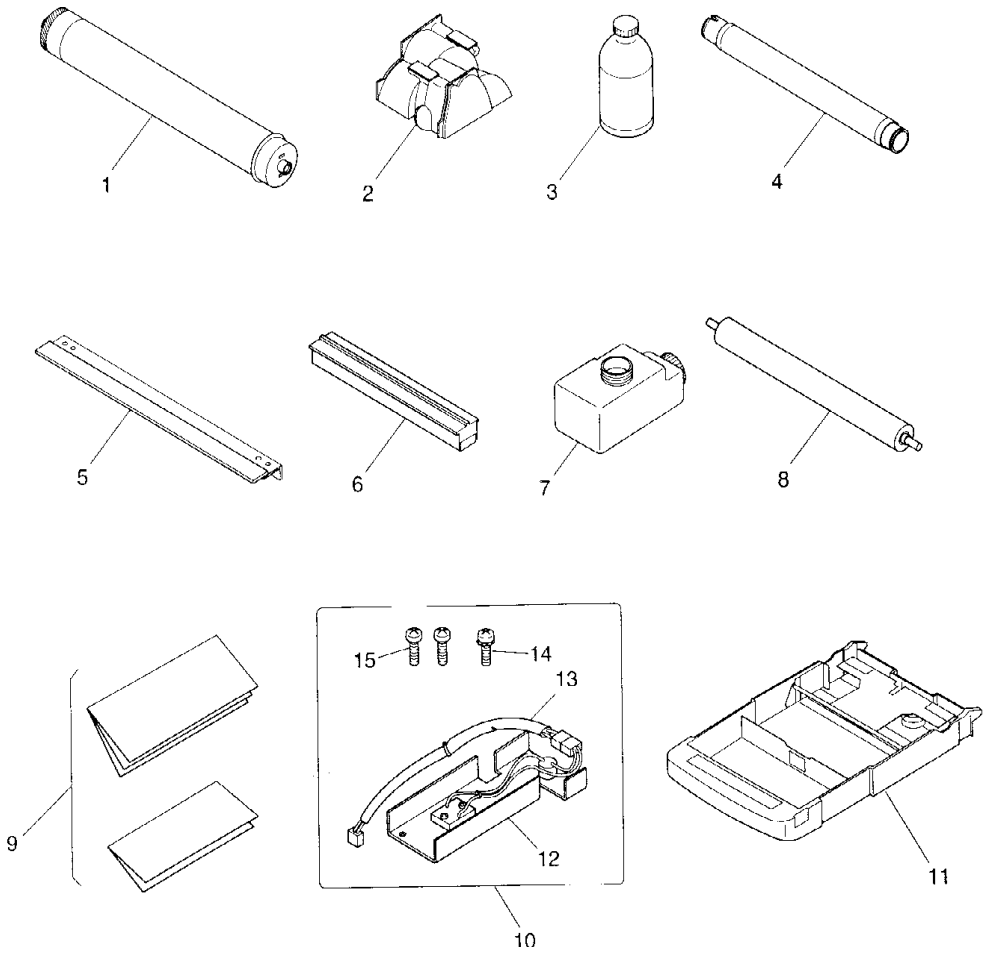

TOSHIBA

ITEM NO.	PARTS NO.	PARTS NAME	Q'TY / PAGE	Q'TY / PACK	SPE PRICE IN NONE	P	I	R	BSI NO.	TO	FROM	SERIAL NO.	REMARKS
1	6608 4569	OD-1350	1	SUPPLY									
2A	6608 4566	T-1350	1	SUPPLY									4QTY/SET
2B	6608 4567	T-1350E	1	SUPPLY									FOR EUR.
3	6608 4568	D-1350	1	SUPPLY									
4	4409 832830	HR-1350-U	1	1/S									
5	4409 832880	BL-1350D	1	10/S									
6	4409 832970	BL-1350H	1	10/S									
7A	6608 4575	TB-1350	1	SUPPLY									10QTY/SET
7B	6608 4576	TB-1350E	1	SUPPLY									FOR EUR.
8	4409 824720	HR-1210-L	1	1/S									
9A	6608 4578	KM-1350EN	1	SUPPLY									ENGLISH
9B	6608 4579	KM-1350GE	1	SUPPLY									GERMAN
9C	6608 4580	KM-1350FR	1	SUPPLY									FRENCH
9D	6608 4581	KM-1350SP	1	SUPPLY									SPANISH
9E	6608 4582	KM-1350IT	1	SUPPLY									ITALIAN
10A	6608 4616	MF-1350U	1	SUPPLY									100V SERIES
10B	6608 4617	MF-1350E	1	SUPPLY									200V SERIES
11A	6608 4570	KC-1350L	1	SUPPLY									USA SIZE
11B	6608 4571	KC-1350A	1	SUPPLY									EUR SIZE
12A	4402 844140	ASM-BKT-DH-120	1	1/P									MF-1350U
12B	4402 844150	ASM-BKT-DH-230	1	1/D									MF-1350E
13	4402 858430	WH-DAMPHTR-121	1	1/P									MF-1350U,E
14	4842 040480	THPAN3006MSZN3L	1	50/P									MF-1350U,E
15	4842 040847	PTBR30*10MSZN3A	2	50/P									MF-1350U,E

ITEM NO.	PARTS NO.	PARTS NAME	Q'TY / PAGE	Q'TY / PACK	SPE PRICE IN NONE	P	I	R	BSI NO.	TO	FROM	SERIAL NO.	REMARKS
150	4843 410279	CQ921M1H224K	1	10/P					F97C852				
151	4843 410731	CTP-M1B1H682KT	1	10/P					F97C852				
152	4843 410731	CTP-M1B1H682KT	1	10/P					F97C852				
153	4843 410731	CTP-M1B1H682KT	1	10/P					F97C852				
154	4843 410862	CTP-K1F1E104ZT	1	10/P					F97C852				
155	4843 410862	CTP-K1F1E104ZT	1	10/P					F97C852				
156	4843 410862	CTP-K1F1E104ZT	1	10/P					F97C852				
157	4843 412139	CTP-M1F1H104ZT	1	10/P					F97C852				
158	4843 410862	CTP-K1F1E104ZT	1	10/P					F97C852				
159	4843 410721	CTP-M1B1H102KT	1	10/P					F97C852				
160	4843 410862	CTP-K1F1E104ZT	1	10/P					F97C852				
161	4843 410862	CTP-K1F1E104ZT	1	10/P					F97C852				
162	4843 410862	CTP-K1F1E104ZT	1	10/P					F97C852				
163	4843 412581	CTP-M5B1E224KT	1	10/P					F97C852				
164	4843 412580	CTP-M1B1H223KT	1	10/P					F97C852				
165	4843 410862	CTP-K1F1E104ZT	1	10/P					F97C852				
166	4843 410723	CTP-M1B1H152KT	1	10/P					F97C852				
167	4843 412139	CTP-M1F1H104ZT	1	10/P					F97C852				
168	4843 410862	CTP-K1F1E104ZT	1	10/P					F97C852				
169	4843 410725	CTP-M1B1H222KT	1	10/P					F97C852				
170	4843 412139	CTP-M1F1H104ZT	1	10/P					F97C852				
171	4843 410862	CTP-K1F1E104ZT	1	10/P					F97C852				
172	4843 410733	CTP-M1B1H103KT	1	10/P					F97C852				
173	4843 410862	CTP-K1F1E104ZT	1	10/P					F97C852				
174	4843 410862	CTP-K1F1E104ZT	1	10/P					F97C852				
175	4843 410862	CTP-K1F1E104ZT	1	10/P					F97C852				
176	4843 410862	CTP-K1F1E104ZT	1	10/P					F97C852				
177	4843 412139	CTP-M1F1H104ZT	1	10/P					F97C852				
178	4843 410862	CTP-K1F1E104ZT	1	10/P					F97C852				
179	4843 410862	CTP-K1F1E104ZT	1	10/P					F97C852				
180	4843 410862	CTP-K1F1E104ZT	1	10/P					F97C852				
181	4843 412139	CTP-M1F1H104ZT	1	10/P					F97C852				
182	4843 410862	CTP-K1F1E104ZT	1	10/P					F97C852				
183	4843 410725	CTP-M1B1H222KT	1	10/P					F97C852				
184	4843 410725	CTP-M1B1H222KT	1	10/P					F97C852				
185	4843 412139	CTP-M1F1H104ZT	1	10/P					F97C852				
186	4843 410862	CTP-K1F1E104ZT	1	10/P					F97C852				
187	4843 410862	CTP-K1F1E104ZT	1	10/P					F97C852				
188	4843 410862	CTP-K1F1E104ZT	1	10/P					F97C852				
189	4843 410862	CTP-K1F1E104ZT	1	10/P					F97C852				
190	4843 410862	CTP-K1F1E104ZT	1	10/P					F97C852				
191A	4843 410862	CTP-K1F1E104ZT	1	10/P					F97C852				1360 NAD
191B	4843 410725	CTP-M1B1H222KT	1	10/P					F97C852				1370 NAD
192	4843 410862	CTP-K1F1E104ZT	1	10/P					F97C852				
193	4843 410862	CTP-K1F1E104ZT	1	10/P					F97C852				
194	4843 410862	CTP-K1F1E104ZT	1	10/P					F97C852				
195	4843 410862	CTP-K1F1E104ZT	1	10/P					F97C852				
196	4843 410862	CTP-K1F1E104ZT	1	10/P					F97C852				
197	4843 410862	CTP-K1F1E104ZT	1	10/P					F97C852				
198	4843 410862	CTP-K1F1E104ZT	1	10/P					F97C852				
199	4843 410862	CTP-K1F1E104ZT	1	10/P					F97C852				
200	4843 410862	CTP-K1F1E104ZT	1	10/P					F97C852				
201	4843 412139	CTP-M1F1H104ZT	1	10/P					F97C852				
202	4843 410862	CTP-K1F1E104ZT	1	10/P					F97C852				
203	4843 410862	CTP-K1F1E104ZT	1	10/P					F97C852				
204	4843 410862	CTP-K1F1E104ZT	1	10/P					F97C852				
205	4843 410721	CTP-M1B1H102KT	1	10/P					F97C852				
206	4843 411173	CE04W1C101M-F	1	10/P					F97C852				
207	4843 411175	CE04W1H470M-F	1	10/P					F97C852				
208	4843 406674	CE-04W1H101M	1	10/P					F97C852				
209	4843 410702	CTP-M1CH1H300KT	1	10/P					F97C852				
231	4843 076056	RN-2/1PTR15JF	1	10/P					F97C852				
232	4843 075264	RD-1/2P222JT	1	10/P					F97C852				
233	4843 072155	RTP-2B2A471JDT	1	10/P					F97C852				
234	4843 072155	RTP-2B2A471JDT	1	10/P					F97C852				
235	4843 072155	RTP-2B2A471JDT	1	10/P					F97C852				
236	4843 072153	RTP-2B2A331JDT	1	10/P					F97C852				
237	4843 072157	RTP-2B2A681JDT	1	10/P					F97C852				
238	4843 072157	RTP-2B2A681JDT	1	10/P					F97C852				
239	4843 072157	RTP-2B2A681JDT	1	10/P					F97C852				
240	4843 072169	RTP-2B2A682JDT	1	10/P					F97C852				

ITEM NO.	PARTS NO.	PARTS NAME	Q'TY / PAGE	Q'TY / PACK	SPE PRICE IN NONE	P	I	R	BSI NO.	TO	FROM	SERIAL NO.	REMARKS
241	4843 072160	RTP-2B2A122JDT	1	10/P					F97C852				
242	4843 072157	RTP-2B2A681JDT	1	10/P					F97C852				
243	4843 072157	RTP-2B2A681JDT	1	10/P					F97C852				
244	4843 072157	RTP-2B2A681JDT	1	10/P					F97C852				
245	4843 072156	RTP-2B2A561JDT	1	10/P					F97C852				
246	4843 072156	RTP-2B2A561JDT	1	10/P					F97C852				
247	4843 072156	RTP-2B2A561JDT	1	10/P					F97C852				
248	4843 072064	RTP-2B2A394JDT	1	10/P					F97C852				
249	4843 072169	RTP-2B2A682JDT	1	10/P					F97C852				
250	4843 072176	RTP-2B2A273JDT	1	10/P					F97C852				
251	4843 072156	RTP-2B2A561JDT	1	10/P					F97C852				
252	4843 072156	RTP-2B2A561JDT	1	10/P					F97C852				
253	4843 072156	RTP-2B2A561JDT	1	10/P					F97C852				
254	4843 072069	RTP-2B2A105JDT	1	10/P					F97C852				
255	4843 072059	RTP-2B2A154JDT	1	10/P					F97C852				
256	4843 072171	RTP-2B2A103JDT	1	10/P					F97C852				
257	4843 072054	RTP-2B2A563JDT	1	10/P					F97C852				
258	4843 072153	RTP-2B2A331JDT	1	10/P					F97C852				
259	4843 072153	RTP-2B2A331JDT	1	10/P					F97C852				
260	4843 072061	RTP-2B2A224JDT	1	10/P					F97C852				
261	4843 072147	RTP-2B2A101JDT	1	10/P					F97C852				
262	4843 072159	RTP-2B2A102JDT	1	10/P					F97C852				
264	4843 072163	RTP-2B2A222JDT	1	10/P					F97C852				
265	4843 072167	RTP-2B2A472JDT	1	10/P					F97C852				
266	4843 072159	RTP-2B2A102JDT	1	10/P					F97C852				
267	4843 072167	RTP-2B2A472JDT	1	10/P					F97C852				
268	4843 072165	RTP-2B2A332JDT	1	10/P					F97C852				
269	4843 072175	RTP-2B2A223JDT	1	10/P					F97C852				
270	4843 072167	RTP-2B2A472JDT	1	10/P					F97C852				
271	4843 072160	RTP-2B2A122JDT	1	10/P					F97C852				
272	4843 072167	RTP-2B2A472JDT	1	10/P					F97C852				
273	4843 072167	RTP-2B2A472JDT	1	10/P					F97C852				
274	4843 072167	RTP-2B2A472JDT	1	10/P					F97C852				
275	4843 072167	RTP-2B2A472JDT	1	10/P					F97C852				
276	4843 072159	RTP-2B2A102JDT	1	10/P					F97C852				
277	4843 072160	RTP-2B2A122JDT	1	10/P					F97C852				
278	4843 072160	RTP-2B2A122JDT	1	10/P					F97C852				
279	4843 072167	RTP-2B2A472JDT	1	10/P					F97C852				
280	4843 072153	RTP-2B2A331JDT	1	10/P					F97C852				
281	4843 072167	RTP-2B2A472JDT	1	10/P					F97C852				
282	4843 072167	RTP-2B2A472JDT	1	10/P					F97C852				
283	4843 072165	RTP-2B2A332JDT	1	10/P					F97C852				
284	4843 072145	RTP-2B2A680JDT	1	10/P					F97C852				
285	4843 072167	RTP-2B2A472JDT	1	10/P					F97C852				
286	4843 072167	RTP-2B2A472JDT	1	10/P					F97C852				
287	4843 072167	RTP-2B2A472JDT	1	10/P					F97C852				
288	4843 072167	RTP-2B2A472JDT	1	10/P					F97C852				
289	4843 072167	RTP-2B2A472JDT	1	10/P					F97C852				
290	4843 072167	RTP-2B2A472JDT	1	10/P					F97C852				
291	4843 072167	RTP-2B2A472JDT	1	10/P					F97C852				
292	4843 072167	RTP-2B2A472JDT	1	10/P					F97C852				
293	4843 072164	RTP-2B2A272JDT	1	10/P					F97C852				
294	4843 072161	RTP-2B2A152JDT	1	10/P					F97C852				
295	4843 072150	RTP-2B2A181JDT	1	10/P					F97C852				
296	4843 072167	RTP-2B2A472JDT	1	10/P					F97C852				
297	4843 072167	RTP-2B2A472JDT	1	10/P					F97C852				
298	4843 072167	RTP-2B2A472JDT	1	10/P					F97C852				
299	4843 072065	RTP-2B2A474JDT	1	10/P					F97C852				
300	4843 072167	RTP-2B2A472JDT	1	10/P					F97C852				
301	4843 072057	RTP-2B2A104JDT	1	10/P					F97C852				
302	4843 072167	RTP-2B2A472JDT	1	10/P					F97C852				
303	4843 072159	RTP-2B2A102JDT	1	10/P					F97C852				
304	4843 072167	RTP-2B2A472JDT	1	10/P					F97C852				
305	4843 072167	RTP-2B2A472JDT	1	10/P					F97C852				
306	4843 072167	RTP-2B2A472JDT	1	10/P					F97C852				
307	4843 072167	RTP-2B2A472JDT	1	10/P					F97C852				
308	4843 072147	RTP-2B2A101JDT	1	10/P					F97C852				
309	4843 072167	RTP-2B2A472JDT	1	10/P					F97C852				
310	4843 072167	RTP-2B2A472JDT	1	10/P					F97C852				
311	4843 072167	RTP-2B2A472JDT	1	10/P					F97C852				
312	4843 072167	RTP-2B2A472JDT	1	10/P					F97C852				

ITEM NO.	PARTS NO.	PARTS NAME	Q'TY / PAGE	Q'TY / PACK	SPE PRICE IN NONE	P	I	R	BSI NO.	TO	FROM	SERIAL NO.	REMARKS
313	4843 072167	RTP-2B2A472JDT	1	10/P					F97C852				
314	4843 072167	RTP-2B2A472JDT	1	10/P					F97C852				
315	4843 072167	RTP-2B2A472JDT	1	10/P					F97C852				
316	4843 072167	RTP-2B2A472JDT	1	10/P					F97C852				
317	4843 072167	RTP-2B2A472JDT	1	10/P					F97C852				
318	4843 072167	RTP-2B2A472JDT	1	10/P					F97C852				
319	4843 072167	RTP-2B2A472JDT	1	10/P					F97C852				
320	4843 072167	RTP-2B2A472JDT	1	10/P					F97C852				
321	4843 072167	RTP-2B2A472JDT	1	10/P					F97C852				
322	4843 072167	RTP-2B2A472JDT	1	10/P					F97C852				
323	4843 072167	RTP-2B2A472JDT	1	10/P					F97C852				
324	4843 072167	RTP-2B2A472JDT	1	10/P					F97C852				
325	4843 072167	RTP-2B2A472JDT	1	10/P					F97C852				
326	4843 072159	RTP-2B2A102JDT	1	10/P					F97C852				
327	4843 072167	RTP-2B2A472JDT	1	10/P					F97C852				
328	4843 072167	RTP-2B2A472JDT	1	10/P					F97C852				
329	4843 072167	RTP-2B2A472JDT	1	10/P					F97C852				
330	4843 072167	RTP-2B2A472JDT	1	10/P					F97C852				
331	4843 072167	RTP-2B2A472JDT	1	10/P					F97C852				
332	4843 072167	RTP-2B2A472JDT	1	10/P					F97C852				
333	4843 072167	RTP-2B2A472JDT	1	10/P					F97C852				
334	4843 072167	RTP-2B2A472JDT	1	10/P					F97C852				
335	4843 072147	RTP-2B2A101JDT	1	10/P					F97C852				
336	4843 072167	RTP-2B2A472JDT	1	10/P					F97C852				
337	4843 072167	RTP-2B2A472JDT	1	10/P					F97C852				
338	4843 072057	RTP-2B2A104JDT	1	10/P					F97C852				
339	4843 072165	RTP-2B2A332JDT	1	10/P					F97C852				
340	4843 072171	RTP-2B2A103JDT	1	10/P					F97C852				
341	4843 072169	RTP-2B2A682JDT	1	10/P					F97C852				
342	4843 072167	RTP-2B2A472JDT	1	10/P					F97C852				
343	4843 072065	RTP-2B2A474JDT	1	10/P					F97C852				
344	4843 072147	RTP-2B2A101JDT	1	10/P					F97C852				
345	4843 072162	RTP-2B2A182JDT	1	10/P					F97C852				
346	4843 072167	RTP-2B2A472JDT	1	10/P					F97C852				
347	4843 072167	RTP-2B2A472JDT	1	10/P					F97C852				
348	4843 072171	RTP-2B2A103JDT	1	10/P					F97C852				
349	4843 072171	RTP-2B2A103JDT	1	10/P					F97C852				
350	4843 072177	RTP-2B2A333JDT	1	10/P					F97C852				
351	4843 072173	RTP-2B2A153JDT	1	10/P					F97C852				
352	4843 072173	RTP-2B2A153JDT	1	10/P					F97C852				
353	4843 072175	RTP-2B2A223JDT	1	10/P					F97C852				
354	4843 072175	RTP-2B2A223JDT	1	10/P					F97C852				
355	4843 072173	RTP-2B2A153JDT	1	10/P					F97C852				
356	4843 072171	RTP-2B2A103JDT	1	10/P					F97C852				
357	4843 072175	RTP-2B2A223JDT	1	10/P					F97C852				
358	4843 072175	RTP-2B2A223JDT	1	10/P					F97C852				
359	4843 072167	RTP-2B2A472JDT	1	10/P					F97C852				
360	4843 072167	RTP-2B2A472JDT	1	10/P					F97C852				
361	4843 072162	RTP-2B2A182JDT	1	10/P					F97C852				
362	4843 072169	RTP-2B2A682JDT	1	10/P					F97C852				
363	4843 072167	RTP-2B2A472JDT	1	10/P					F97C852				
364	4843 072175	RTP-2B2A223JDT	1	10/P					F97C852				
365	4843 072167	RTP-2B2A472JDT	1	10/P					F97C852				
366	4843 072167	RTP-2B2A472JDT	1	10/P					F97C852				
367	4843 072153	RTP-2B2A331JDT	1	10/P					F97C852				
368	4843 072150	RTP-2B2A181JDT	1	10/P					F97C852				
369	4843 072057	RTP-2B2A104JDT	1	10/P					F97C852				
373	4843 072147	RTP-2B2A101JDT	1	10/P					F97C852				
374	4843 072147	RTP-2B2A101JDT	1	10/P					F97C852				
375	4843 072147	RTP-2B2A101JDT	1	10/P					F97C852				
376	4843 072147	RTP-2B2A101JDT	1	10/P					F97C852				
377	4843 072147	RTP-2B2A101JDT	1	10/P					F97C852				
378	4843 072147	RTP-2B2A101JDT	1	10/P					F97C852				
379	4843 072167	RTP-2B2A472JDT	1	10/P					F97C852				
380	4843 072167	RTP-2B2A472JDT	1	10/P					F97C852				
382	4843 072167	RTP-2B2A472JDT	1	10/P					F97C852				
383	4843 072147	RTP-2B2A101JDT	1	10/P					F97C852				
384	4843 072167	RTP-2B2A472JDT	1	10/P					F97C852				
385	4843 072167	RTP-2B2A472JDT	1	10/P					F97C852				
386	4843 072147	RTP-2B2A101JDT	1	10/P					F97C852				
387	4843 072147	RTP-2B2A101JDT	1	10/P					F97C852				

ITEM NO.	PARTS NO.	PARTS NAME	Q'TY / PAGE	Q'TY / PACK	SPE PRICE IN NONE	P	I	R	BSI NO.	TO	FROM	SERIAL NO.	REMARKS
388	4843 072167	RTP-2B2A472JDT	1	10/P					F97C852				
389	4843 072167	RTP-2B2A472JDT	1	10/P					F97C852				
390	4843 072171	RTP-2B2A103JDT	1	10/P					F97C852				
391	4843 072178	RTP-2B2A393JDT	1	10/P					F97C852				
392	4843 072055	RTP-2B2A683JDT	1	10/P					F97C852				
393	4843 072167	RTP-2B2A472JDT	1	10/P					F97C852				
394	4843 072167	RTP-2B2A472JDT	1	10/P					F97C852				
395	4843 072167	RTP-2B2A472JDT	1	10/P					F97C852				
396	4843 072167	RTP-2B2A472JDT	1	10/P					F97C852				
397	4843 072159	RTP-2B2A102JDT	1	10/P					F97C852				
399	4843 072167	RTP-2B2A472JDT	1	10/P					F97C852				
400	4843 072147	RTP-2B2A101JDT	1	10/P					F97C852				
401	4843 072164	RTP-2B2A272JDT	1	10/P					F97C852				
402	4843 072159	RTP-2B2A102JDT	1	10/P					F97C852				
403	4843 028531	RD1/4LA4.7HJ	1	10/P					F97C852				
521	4843 307784	J-53313-2415	1	5/P					F97C852				
522	4843 306193	J-0-175487-5	1	5/P					F97C852				
523A	4843 306191	J-0-175487-3	1	5/P					F97C852				1360 NAD
523B	4843 306199	J-1-175487-1	1	5/P					F97C852				1370 NAD
524A	4843 308042	J-53401-0610	1	10/P					F97C852				1360 NAD
524B	4843 308048	J-53401-1210	1	10/P					F97C852				1370 NAD
525	4843 306198	J-1-175487-0	1	5/P					F97C852				
526	4843 304935	J-53052-1310	1	5/P					F97C852				
527	4843 306198	J-1-175487-0	1	5/P					F97C852				
528	4843 306203	J-1-175487-5	1	5/P					F97C852				
529	4843 306195	J-0-175487-7	1	5/P					F97C852				
530	4843 308044	J-53401-0810	1	5/P					F97C852				
531	4843 306192	J-0-175487-4	1	5/P					F97C852				
532	4843 306191	J-0-175487-3	1	5/P					F97C852				
533	4843 306194	J-0-175487-6	1	5/P					F97C852				
541	4843 072180	RTP-2B2A00	1	10/P					F97C852				
701	4842 040665	TPAN3006MSZN3L	2	50/P					F97C852				

ITEM NO.	PARTS NO.	PARTS NAME	Q'TY / PAGE	Q'TY / PACK	SPE PRICE IN NONE	P	I	R	BSI NO.	TO	FROM	SERIAL NO.	REMARKS
161	4843 410731	CTP-M1B1H682KT	1	10/P									
162	4843 410731	CTP-M1B1H682KT	1	10/P									
163	4843 410731	CTP-M1B1H682KT	1	10/P									
164	4843 410862	CTP-K1F1E104ZT	1	10/P									
165	4843 410862	CTP-K1F1E104ZT	1	10/P									
166	4843 410862	CTP-K1F1E104ZT	1	10/P									
167	4843 412139	CTP-M1F1H104ZT	1	10/P									
168	4843 410862	CTP-K1F1E104ZT	1	10/P									
169	4843 410721	CTP-M1B1H102KT	1	10/P									
170	4843 410862	CTP-K1F1E104ZT	1	10/P									
171	4843 410862	CTP-K1F1E104ZT	1	10/P									
172	4843 410862	CTP-K1F1E104ZT	1	10/P									
173	4843 412581	CTP-M5B1E224KT	1	10/P									
174	4843 412580	CTP-M1B1H223KT	1	10/P									
175	4843 410862	CTP-K1F1E104ZT	1	10/P									
176	4843 410723	CTP-M1B1H152KT	1	10/P									
177	4843 412139	CTP-M1F1H104ZT	1	10/P									
178	4843 410862	CTP-K1F1E104ZT	1	10/P									
179	4843 410725	CTP-M1B1H222KT	1	10/P									
180	4843 412139	CTP-M1F1H104ZT	1	10/P									
181	4843 410862	CTP-K1F1E104ZT	1	10/P									
182	4843 410733	CTP-M1B1H103KT	1	10/P									
183	4843 410862	CTP-K1F1E104ZT	1	10/P									
184	4843 410862	CTP-K1F1E104ZT	1	10/P									
185	4843 410862	CTP-K1F1E104ZT	1	10/P									
186	4843 410862	CTP-K1F1E104ZT	1	10/P									
187	4843 412139	CTP-M1F1H104ZT	1	10/P									
188	4843 410862	CTP-K1F1E104ZT	1	10/P									
189	4843 410862	CTP-K1F1E104ZT	1	10/P									
190	4843 410862	CTP-K1F1E104ZT	1	10/P									
191	4843 412139	CTP-M1F1H104ZT	1	10/P									
192	4843 410862	CTP-K1F1E104ZT	1	10/P									
193	4843 410725	CTP-M1B1H222KT	1	10/P									
194	4843 410725	CTP-M1B1H222KT	1	10/P									
195	4843 412139	CTP-M1F1H104ZT	1	10/P									
196	4843 410862	CTP-K1F1E104ZT	1	10/P									
197	4843 410862	CTP-K1F1E104ZT	1	10/P									
198	4843 410862	CTP-K1F1E104ZT	1	10/P									
199	4843 410862	CTP-K1F1E104ZT	1	10/P									
200	4843 410862	CTP-K1F1E104ZT	1	10/P									
201	4843 410725	CTP-M1B1H222KT	1	10/P									
202	4843 410862	CTP-K1F1E104ZT	1	10/P									
203	4843 410862	CTP-K1F1E104ZT	1	10/P									
204	4843 410862	CTP-K1F1E104ZT	1	10/P									
205	4843 410862	CTP-K1F1E104ZT	1	10/P									
206	4843 410862	CTP-K1F1E104ZT	1	10/P									
207	4843 410862	CTP-K1F1E104ZT	1	10/P									
208	4843 410862	CTP-K1F1E104ZT	1	10/P									
209	4843 410862	CTP-K1F1E104ZT	1	10/P									
210	4843 410862	CTP-K1F1E104ZT	1	10/P									
211	4843 412139	CTP-M1F1H104ZT	1	10/P									
212	4843 410862	CTP-K1F1E104ZT	1	10/P									
213	4843 410862	CTP-K1F1E104ZT	1	10/P									
214	4843 410862	CTP-K1F1E104ZT	1	10/P									
215	4843 410721	CTP-M1B1H102KT	1	10/P									
216	4843 411173	CE-04W1C101M-F	1	10/P									
217	4843 411175	CE04W1H470M-F	1	10/P									
218	4843 406674	CE-04W1H101M	1	10/P									
219	4843 410702	CTP-M1CH1H300KT	1	10/P									
251	4843 076056	RN-2/1PTR15JF	1	10/P									
252	4843 075264	RD-1/2P222JT	1	10/P									
253	4843 072155	RTP-2B2A471JDT	1	10/P									
254	4843 072155	RTP-2B2A471JDT	1	10/P									
255	4843 072155	RTP-2B2A471JDT	1	10/P									
256	4843 072153	RTP-2B2A331JDT	1	10/P									
257	4843 072157	RTP-2B2A681JDT	1	10/P									
258	4843 072157	RTP-2B2A681JDT	1	10/P									
259	4843 072157	RTP-2B2A681JDT	1	10/P									
260	4843 072169	RTP-2B2A682JDT	1	10/P									
261	4843 072160	RTP-2B2A122JDT	1	10/P									
262	4843 072157	RTP-2B2A681JDT	1	10/P									

ITEM NO.	PARTS NO.	PARTS NAME	Q'TY / PAGE	Q'TY / PACK	SPE PRICE IN NONE	P	I	R	BSI NO.	TO	FROM	SERIAL NO.	REMARKS
263	4843 072157	RTP-2B2A681JDT	1	10/P									
264	4843 072157	RTP-2B2A681JDT	1	10/P									
265	4843 072156	RTP-2B2A561JDT	1	10/P									
266	4843 072156	RTP-2B2A561JDT	1	10/P									
267	4843 072156	RTP-2B2A561JDT	1	10/P									
268	4843 072064	RTP-2B2A394JDT	1	10/P									
269	4843 072169	RTP-2B2A682JDT	1	10/P									
270	4843 072176	RTP-2B2A273JDT	1	10/P									
271	4843 072156	RTP-2B2A561JDT	1	10/P									
272	4843 072156	RTP-2B2A561JDT	1	10/P									
273	4843 072156	RTP-2B2A561JDT	1	10/P									
274	4843 072069	RTP-2B2A105JDT	1	10/P									
275	4843 072059	RTP-2B2A154JDT	1	10/P									
276	4843 072171	RTP-2B2A103JDT	1	10/P									
277	4843 072054	RTP-2B2A563JDT	1	10/P									
278	4843 072153	RTP-2B2A331JDT	1	10/P									
279	4843 072153	RTP-2B2A331JDT	1	10/P									
280	4843 072061	RTP-2B2A224JDT	1	10/P									
281	4843 072147	RTP-2B2A101JDT	1	10/P									
282	4843 072159	RTP-2B2A102JDT	1	10/P									
284	4843 072163	RTP-2B2A222JDT	1	10/P									
285	4843 072167	RTP-2B2A472JDT	1	10/P									
286	4843 072159	RTP-2B2A102JDT	1	10/P									
287	4843 072167	RTP-2B2A472JDT	1	10/P									
288	4843 072165	RTP-2B2A332JDT	1	10/P									
289	4843 072175	RTP-2B2A223JDT	1	10/P									
290	4843 072167	RTP-2B2A472JDT	1	10/P									
291	4843 072160	RTP-2B2A122JDT	1	10/P									
292	4843 072167	RTP-2B2A472JDT	1	10/P									
293	4843 072167	RTP-2B2A472JDT	1	10/P									
294	4843 072167	RTP-2B2A472JDT	1	10/P									
295	4843 072167	RTP-2B2A472JDT	1	10/P									
296	4843 072159	RTP-2B2A102JDT	1	10/P									
297	4843 072160	RTP-2B2A122JDT	1	10/P									
298	4843 072160	RTP-2B2A122JDT	1	10/P									
299	4843 072167	RTP-2B2A472JDT	1	10/P									
300	4843 072153	RTP-2B2A331JDT	1	10/P									
301	4843 072167	RTP-2B2A472JDT	1	10/P									
302	4843 072167	RTP-2B2A472JDT	1	10/P									
303	4843 072165	RTP-2B2A332JDT	1	10/P									
304	4843 072145	RTP-2B2A680JDT	1	10/P									
305	4843 072167	RTP-2B2A472JDT	1	10/P									
306	4843 072167	RTP-2B2A472JDT	1	10/P									
307	4843 072167	RTP-2B2A472JDT	1	10/P									
308	4843 072167	RTP-2B2A472JDT	1	10/P									
309	4843 072167	RTP-2B2A472JDT	1	10/P									
310	4843 072167	RTP-2B2A472JDT	1	10/P									
311	4843 072167	RTP-2B2A472JDT	1	10/P									
312	4843 072167	RTP-2B2A472JDT	1	10/P									
313	4843 072164	RTP-2B2A272JDT	1	10/P									
314	4843 072161	RTP-2B2A152JDT	1	10/P									
315	4843 072150	RTP-2B2A181JDT	1	10/P									
316	4843 072167	RTP-2B2A472JDT	1	10/P									
317	4843 072167	RTP-2B2A472JDT	1	10/P									
318	4843 072167	RTP-2B2A472JDT	1	10/P									
319	4843 072065	RTP-2B2A474JDT	1	10/P									
320	4843 072167	RTP-2B2A472JDT	1	10/P									
321	4843 072057	RTP-2B2A104JDT	1	10/P									
322	4843 072167	RTP-2B2A472JDT	1	10/P									
323	4843 072159	RTP-2B2A102JDT	1	10/P									
324	4843 072167	RTP-2B2A472JDT	1	10/P									
325	4843 072167	RTP-2B2A472JDT	1	10/P									
326	4843 072167	RTP-2B2A472JDT	1	10/P									
327	4843 072167	RTP-2B2A472JDT	1	10/P									
328	4843 072147	RTP-2B2A101JDT	1	10/P									
329	4843 072167	RTP-2B2A472JDT	1	10/P									
330	4843 072167	RTP-2B2A472JDT	1	10/P									
331	4843 072167	RTP-2B2A472JDT	1	10/P									
332	4843 072167	RTP-2B2A472JDT	1	10/P									
333	4843 072167	RTP-2B2A472JDT	1	10/P									
334	4843 072167	RTP-2B2A472JDT	1	10/P									

ITEM NO.	PARTS NO.	PARTS NAME	Q'TY / PAGE	Q'TY / PACK	SPE PRICE IN NONE	P	I	R	BSI NO.	TO	FROM	SERIAL NO.	REMARKS
335	4843 072167	RTP-2B2A472JDT	1	10/P									
336	4843 072167	RTP-2B2A472JDT	1	10/P									
337	4843 072167	RTP-2B2A472JDT	1	10/P									
338	4843 072167	RTP-2B2A472JDT	1	10/P									
339	4843 072167	RTP-2B2A472JDT	1	10/P									
340	4843 072167	RTP-2B2A472JDT	1	10/P									
341	4843 072167	RTP-2B2A472JDT	1	10/P									
342	4843 072167	RTP-2B2A472JDT	1	10/P									
343	4843 072167	RTP-2B2A472JDT	1	10/P									
344	4843 072167	RTP-2B2A472JDT	1	10/P									
345	4843 072167	RTP-2B2A472JDT	1	10/P									
346	4843 072159	RTP-2B2A102JDT	1	10/P									
347	4843 072167	RTP-2B2A472JDT	1	10/P									
348	4843 072167	RTP-2B2A472JDT	1	10/P									
349	4843 072167	RTP-2B2A472JDT	1	10/P									
350	4843 072167	RTP-2B2A472JDT	1	10/P									
351	4843 072167	RTP-2B2A472JDT	1	10/P									
352	4843 072167	RTP-2B2A472JDT	1	10/P									
353	4843 072167	RTP-2B2A472JDT	1	10/P									
354	4843 072167	RTP-2B2A472JDT	1	10/P									
355	4843 072147	RTP-2B2A101JDT	1	10/P									
356	4843 072167	RTP-2B2A472JDT	1	10/P									
357	4843 072167	RTP-2B2A472JDT	1	10/P									
358	4843 072057	RTP-2B2A104JDT	1	10/P									
359	4843 072165	RTP-2B2A332JDT	1	10/P									
360	4843 072171	RTP-2B2A103JDT	1	10/P									
361	4843 072169	RTP-2B2A682JDT	1	10/P									
362	4843 072167	RTP-2B2A472JDT	1	10/P									
363	4843 072065	RTP-2B2A474JDT	1	10/P									
364	4843 072147	RTP-2B2A101JDT	1	10/P									
365	4843 072162	RTP-2B2A182JDT	1	10/P									
366	4843 072167	RTP-2B2A472JDT	1	10/P									
367	4843 072167	RTP-2B2A472JDT	1	10/P									
368	4843 072171	RTP-2B2A103JDT	1	10/P									
369	4843 072171	RTP-2B2A103JDT	1	10/P									
370	4843 072177	RTP-2B2A333JDT	1	10/P									
371	4843 072173	RTP-2B2A153JDT	1	10/P									
372	4843 072173	RTP-2B2A153JDT	1	10/P									
373	4843 072175	RTP-2B2A223JDT	1	10/P									
374	4843 072175	RTP-2B2A223JDT	1	10/P									
375	4843 072173	RTP-2B2A153JDT	1	10/P									
376	4843 072171	RTP-2B2A103JDT	1	10/P									
377	4843 072175	RTP-2B2A223JDT	1	10/P									
378	4843 072175	RTP-2B2A223JDT	1	10/P									
379	4843 072167	RTP-2B2A472JDT	1	10/P									
380	4843 072167	RTP-2B2A472JDT	1	10/P									
381	4843 072162	RTP-2B2A182JDT	1	10/P									
382	4843 072169	RTP-2B2A682JDT	1	10/P									
383	4843 072167	RTP-2B2A472JDT	1	10/P									
384	4843 072175	RTP-2B2A223JDT	1	10/P									
385	4843 072167	RTP-2B2A472JDT	1	10/P									
386	4843 072167	RTP-2B2A472JDT	1	10/P									
387	4843 072153	RTP-2B2A331JDT	1	10/P									
388	4843 072150	RTP-2B2A181JDT	1	10/P									
389	4843 072057	RTP-2B2A104JDT	1	10/P									
393	4843 072147	RTP-2B2A101JDT	1	10/P									
394	4843 072147	RTP-2B2A101JDT	1	10/P									
395	4843 072147	RTP-2B2A101JDT	1	10/P									
396	4843 072147	RTP-2B2A101JDT	1	10/P									
397	4843 072147	RTP-2B2A101JDT	1	10/P									
398	4843 072147	RTP-2B2A101JDT	1	10/P									
399	4843 072167	RTP-2B2A472JDT	1	10/P									
400	4843 072167	RTP-2B2A472JDT	1	10/P									
401	4843 072167	RTP-2B2A472JDT	1	10/P									
402	4843 072167	RTP-2B2A472JDT	1	10/P									
403	4843 072147	RTP-2B2A101JDT	1	10/P									
404	4843 072167	RTP-2B2A472JDT	1	10/P									
405	4843 072167	RTP-2B2A472JDT	1	10/P									
406	4843 072147	RTP-2B2A101JDT	1	10/P									
407	4843 072147	RTP-2B2A101JDT	1	10/P									
408	4843 072167	RTP-2B2A472JDT	1	10/P									

ITEM NO.	PARTS NO.	PARTS NAME	Q'TY / PAGE	Q'TY / PACK	SPE PRICE IN NONE	P	I	R	BSI NO.	TO	FROM	SERIAL NO.	REMARKS
409	4843 072167	RTP-2B2A472JDT	1	10/P									
410	4843 072171	RTP-2B2A103JDT	1	10/P									
411	4843 072178	RTP-2B2A393JDT	1	10/P									
412	4843 072055	RTP-2B2A683JDT	1	10/P									
413	4843 072167	RTP-2B2A472JDT	1	10/P									
414	4843 072167	RTP-2B2A472JDT	1	10/P									
415	4843 072167	RTP-2B2A472JDT	1	10/P									
416	4843 072167	RTP-2B2A472JDT	1	10/P									
417	4843 072159	RTP-2B2A102JDT	1	10/P									
418	4843 072159	RTP-2B2A102JDT	1	10/P									
419	4843 072167	RTP-2B2A472JDT	1	10/P									
431	4843 307784	J-53313-2415	1	5/P									
432	4843 306193	J-0-175487-5	1	5/P									
433A	4843 306191	J-0-175487-3	2	5/P									1360
433B	4843 306199	J-1-175487-1	1	5/P									1370
434A	4843 308042	J-53401-0610	1	10/P									1360
434B	4843 308048	J-53401-1210	1	10/P									1370
435	4843 306198	J-1-175487-0	1	5/P									
436	4843 304935	J-53052-1310	1	5/P									
437	4843 306198	J-1-175487-0	1	5/P									
438	4843 306203	J-1-175487-5	1	5/P									
439	4843 306195	J-0-175487-7	1	5/P									
440	4843 308044	J-53401-0810	1	5/P									
441	4843 306192	J-0-175487-4	1	5/P									
442B	4843 306191	J-0-175487-3	1	5/P									1370
443	4843 306194	J-0-175487-6	1	5/P									
461	4842 040665	TPAN3006MSZN3L	2	50/P									
462	4843 072180	RTP-2B2A00	1	10/P									