TOSHIBA

SERVICE HANDBOOK 1550

PLAIN PAPER COPIER

PAPER FEEDING UNIT MY-1004

Click the Page Only button to close the overview area of the window.

Click the Bookmarks and Page button to open the Contents and display bookmarks created for the document. Click a bookmark's name to go to the Page marked by that bookmark.

Click the Thumbnails and Page button to open the overview area and display thumbnail images of each document page. Click a thumbnail to go to the page marked by that thumbnail.

Copyright TOSHIBA CORPORATION 1995
ALL RIGHTS RESERVED

GENERAL PRECAUTIONS REGARDING THE INSTALLATION AND THE SERVICE OF THE 1550/MY-1004

1. Transportation/Installation

- When transporting/installing the copier, using two persons, be sure to use the positions as indicated below.
  The copier is fairly heavy and weighs approximately 35 kg (76.8 lb), therefore pay full attention when handling it.

4 portions

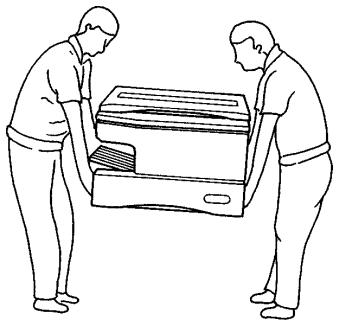

2. Installation

- Be sure to use a dedicated outlet with AC 115V/15A (220V, 240V/10A) or more for its power source.
- The copier must be grounded for safety.
  Never ground it to a gas pipe or a water pipe.
- Select a suitable place for installation.
  Avoid excessive heat, high humidity, dust, vibration and direct sunlight.
- To insure adequate working space for the copying operation, keep a minimum clearance of 80 cm (31.5") on the left, 80 cm (31.5") on the right and 10 cm (3.9") in the rear.

3. Service of Machines

- Basically, be sure to turn the main switch off and unplug the power cord during service.
- Be sure not to touch high temperature sections such as the exposure lamp, the fuser unit, the damp heater and their periphery.
- Be sure not to touch high-voltages sections such as the chargers and the high-voltage transformer.
- Be sure not to touch rotating/operating sections such as gears, belts, pulleys, etc.
- When servicing the machines with the main switch turned on, be sure not to touch live sections such as the lamp terminal etc.
- Use suitable measuring instruments and tools.

4. **Main Service Parts for Safety**
   - The thermofuse, thermistor, fuse, breaker and door switch, etc. are particularly important for safety. Be sure to handle/install them properly.

5. **Notice Labels**
   - Be sure to check the rating plate and the notice labels such as “Unplug the power cord during service”, “Hot area”, etc. to see if there is any dirt on their surface or if they are properly stuck to the copier during servicing.

6. **Disposition of Consumable Parts/Packing Materials**
   - Regarding the recovery and disposal of the copier, consumable parts and packing materials, it is recommended to follow the relevant local regulations or rules.

7. **When parts are disassembled, reassembly is basically the reverse of disassembly unless otherwise noted in this manual or other related documents. Be careful not to reassemble small parts such as screws, washers, pins, E-rings, toothed washers in the wrong places.**

8. **Basically, the machine should not be operated with any parts removed or disassembled.**

1. ADJUSTMENT ITEMS

1.1 Error Code Table

When the “CLEAR PAPER” or “CALL SERVICE” symbol is flashing, pressing the “CLEAR/STOP” key and the “8” key simultaneously causes one of the following error codes to be displayed while the keys are pressed.

(1) Paper misfeeding in the copier paper path

Error code	Content	Remarks
E01	Paper misfeeding inside the copier	Bypass misfeeding is also included. (Bypass feeding LED comes ON.)
E02	Paper misfeeding in the neighborhood of the fuser	
E03	Paper misfeeding inside the copier when the power is turned on.	
E05	Non-arrival-at-aligning-switch misfeeding	After the paper fed from PFU has passed the transport roller or fed from PPC?

(2) Paper misfeeding in the paper feeding section

Error code	Content	Remarks
E14	Lower cassette paper misfeeding (PFU)	Paper does not arrive at the transport roller.

(3) Paper misfeeding in the ADF transport path

Error code	Content	Remarks
E71	Misfeeding in the ADF original feeding section	
E72	Midfeeding in the ADF original transport section	
E73	Misfeeding in the ADF original exiting section	
E75	2 in 1 (2nd-original misfeeding in the feeding section)	

(4) Paper misfeeding in the sorter transport path

Error code	Content	Remarks
E81	Paper delaying jam in the sorter transport path	Paper does not arrive at the entrance sensor.
E82	Paper staying jam in the sorter transport path.	Paper stays at the entrance sensor.

(5) Service call for the copier's drive system

Error code	Content	Remarks
C01	Abnormal operation of the main motor	

(6) Service call for the optical system

Error code	Content	Remarks
C21	Optical system initialization error	Scanning, lens or mirror abnormal operation.
C22	Optical system initialization error	When the lens is moved in the paper exit direction at the time of the start of initialization,and only if it is not detected by the switch.
C26	Blown exposure lamp detection	

(7) Service call for the process system



Error code	Content	Remarks
C32	Easy setup (UA mode) error	

(8) Fuser unit related

Error code	Content	Remarks
C41	Abnormal thermistor or broken heater when the power is turned on.	
C43	Abnormal thermistor during warming up.	
C44	Heater breakage after the copier becomes ready.	

(9) Communication related service call

Error code	Content	Remarks
C54	Abnormal communication between the sorter and the main CPU	
C55	Abnormal communication between ADF and the main CPU	

(10) ADF related

Error code	Content	Remarks
C71	Locked ADF main motor	ADF jam LED is flashed.
C72	Maladjusted aligning sensor detection	ADF jam LED is flashed.
C73	Faulty EEROM initialization	ADF jam LED is flashed .

(11) Sorter related service call

Error code	Content	Remarks
C81	Abnormal paper transport motor	
C82	Abnormal bin-moving motor	
C83	Upper limit error	
C84	Lower limit error	
C85	Home sensor error	
C88	Copy-removal sensor error	

(12) Service call for other abnormalities

Error code	Content	Remarks
C94	Faulty optical system initialization in special modes (CH, AJ).	The content is similar to C21 error.

1.2 Self-Diagnostic Mode

Keys pressed simultaneously	Mode	Description	Clearing	Indication
0+1	All control-panel LEDs ON mode	All LEDs on the control panel come on.	"Clear/Stop" key	—
0+2	Aging mode	Aging	"09"	AG
0+3	Test mode	Motor test and input/output check (including initialization)	"09"	CH
0+4	Test mode	Motor test and input/output check	"09"	CH
0+5	Adjustment mode	Various adjustments	"09"	AJ
0+6	Forced ready mode	Forces the copier to become ready.	—	—
0+7	Aging mode	Aging (with ADF)	"09"	AG
0+8	Setting mode	System changing and setting defaults and PM counter	"09"	AD

Note: How to access each mode:

While pressing the two keys for the mode to access (ex. "0" and "5" for the adjustment mode), turn on the main (power) switch.

<Procedure>

• All control-panel LEDs ON mode (01) :



• Aging mode (02) :

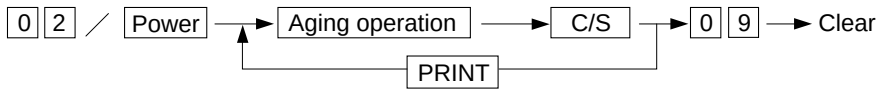

• Test mode (03 or 04) :

For this mode, refer to the "Input/Output Check" on page 1-6.

• Adjustment mode (05) :

For this mode, refer to the "Adjustment Mode" on page 1-9.

• Forced ready mode (06) :

Power → 0 6 → Forced ready status

Note: This mode should be used only when checking paper feeding operation.

• Setting mode (08) :

For this mode, refer to “Setting Mode” on page 1-12.

Self-diagnostic mode progress diagram :

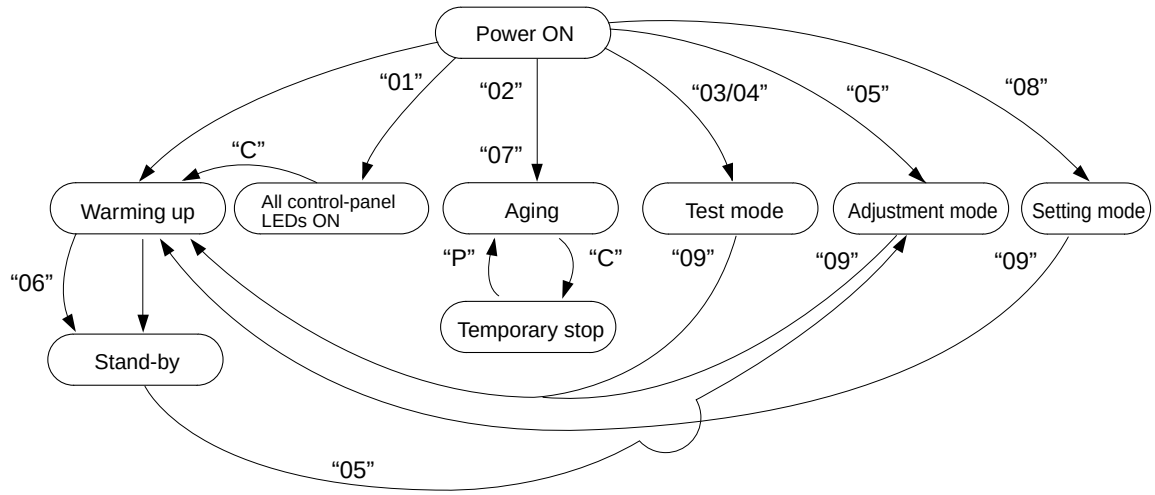

“P” : Press PRINT.
“C” : Press CLEAR/STOP.

1.2.1 Input check (Test mode 03/04)

In the 03 or 04 test mode, you can check the status of each of the following input signals by pressing the corresponding keys.

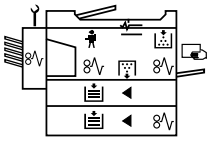

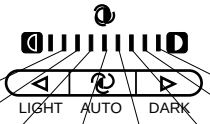

Input value	EXP1	EXP2	EXP3	EXP4	EXP5	EXP6	EXP7	EXP8
1	—	—	—	—	PFU cover switch (open)	Developer unit switch (none)	Main motor PLL (NG)	—
2	—	CTR-CNT (No CTR)	HTR-RDY (Not ready)	—	—	—	—	—
3	EMP-SW (No paper)	EXIT-SW (Paper present)	TNR-FUL (Normal)	DF-CNT (No DF)	S-CNT (No sorter)	MRR-HOM (Home position)	LNS-HOM (Home position)	CRG-HOM (Home position)
4	—	—	—	—	SIZ03 (OFF)	SIZ02 (OFF)	SIZ01 (OFF)	SIZ00 (OFF)
5	RGT-SW (Paper present)	CST2 (No cassette)	EMP-SW2 (No paper)	FED-SW (Paper present)	SIZ13 (OFF)	SIZ12 (OFF)	SIZ11 (OFF)	SIZ10 (OFF)
6	—	—	Paper width sensor 2 (ON)	Paper width sensor 1 (ON)	Empty sensor (ON)	Open sensor (ON)	Exit sensor (ON)	Aligning sensor (ON)
7	—	—	Removal sensor (ON)	Limit sensor (ON)	Bin-home sensor (ON)	One-rotation sensor (ON)	Paper-on-tray sensor (ON)	Entrance sensor (ON)

* ( ) means that LEDs come on.

<Procedure>

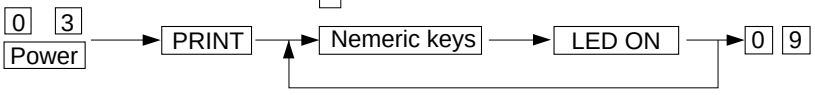

1.2.2 Output check mode (Test mode 03/04)

In the 03 or 04 test mode, you can check the status of each of the output signals by entering the following corresponding code.

Code	Function		Code	Function	Group
1	Main motor	ON	11	Main motor	①
2	Feed roller clutch (copier)		12	Feed roller clutch (copier)	
3	Aligning roller clutch (copier)		13	Aligning roller clutch (copier)	
6	Toner motor		16	Toner motor	
7	Optics fan		17	Optics fan	
8	Exit fan		18	Exit fan	
9	Pick-up roller clutch (copier)		19	Pick-up roller clutch (copier)	
10	Total counter	Increases at each “P” key press.			②
*1 20	Scanning motor	At 1st “P” key press, scans forward and backward at 2nd press.			
21	Lens motor	At 1st “P” key press, moves to 50% position and to 200% position at 2nd press.			
22	Mirror motor	At 1st “P” key press, moves to 50% position and to 200% position at 2nd press.			
30	HVT-M	At 1st “P” key press, comes on and goes off at 2nd press.			③
31	HVT-TR				
32	HVT-AC				
33	Exposure lamp	If forced on for 5 sec., it goes off.			
61	PFU motor (PFU)	ON	71	PFU motor (PFU)	①
62	Pick-up roller clutch (PFU)		72	Pick-up roller clutch (PFU)	
63	Feed roller clutch (PFU)		73	Feed roller clutch (PFU)	
64	Aligning roller clutch (PFU)		74	Aligning roller clutch (PFU)	
80	DF independent aging	At 1st “P” key press, starts and stops at 2nd press.			③
82	DF pick-up roller rotation	At 1st “P” key press, comes on and stops at 2nd press.			
83	DF aligning roller				
84	DF transport belt rotation				
85	DF pick-up roller rotation/Weight solenoid				
86	DF weight solenoid				
87	DF clutch				
90	Sorter transport motor				
91	Sorter bin motor				
92	Sorter aging without paper	At 1st “P” key press, starts and goes off at 2nd press.			

*1: Scanning motor rotates at the preset reproduction ratio.

<Operation procedure>

Group 1

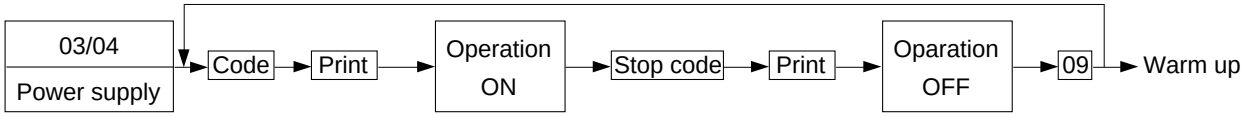

Group 2

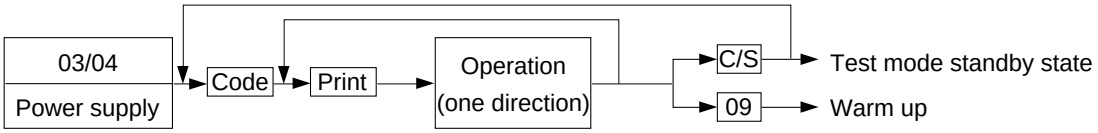

Group 3

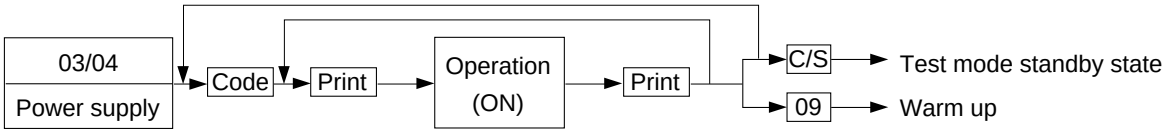

1.2.3 Adjustment mode (AJ: 05)

In this adjustment mode, the following items can be adjusted or modified. (Refer to the adjustment code list.) The adjustment mode can be accessed by turning on the power while pressing the “0” and “5” keys simultaneously.

Code	Description	Allowable input value	Initial value *1	Content
*2 0	Automatic auto-toner adjustment	—	—	Set to 24.
1	Manual exposure 100%	0~255	128	The larger, the lighter.
2	Manual exposure 154%	0~255	128	The larger, the lighter.
3	Manual exposure 50%	0~255	128	The larger, the lighter.
4	Manual exposure 200%	0~255	128	The larger, the lighter.
5	Auto-exposure 100%	0~255	128	The larger, the lighter.
6	Auto-exposure 154%	0~255	128	The larger, the lighter.
7	Auto-exposure 50%	0~255	128	The larger, the lighter.
8	Auto-exposure 200%	0~255	128	The larger, the lighter.
9	Exposure (light) Inclination	0~255	255	The larger, the lighter at the light side.
10	Exposure (dark) Inclination	0~255	0	The larger, the lighter at the dark side.
14	Photo exposure 100%	0~255	128	The larger, the lighter.
15	Photo exposure 154%	0~255	128	The larger, the lighter.
16	Photo exposure 50%	0~255	128	The larger, the lighter.
17	Photo exposure 200%	0~255	128	The larger, the lighter.
21	Lengthwise reproduction ratio adjustment	0~15	8	Each increase by “1” causes the lenthwise reproduction ratio to increase by 0.1%
25	Eraser LED timing adjustment 100%	0~15	8	Each increase by “1” causes the erased position by LED to shift approx. 1mm toward the trailing edge of the paper. But the image position relative to the paper does not change. (with original surface as reference)
26	Eraser LED timing adjustment 200%			
27	Eraser LED timing adjustment 50%			

Code	Description	Allowable input value	Initial value *1	Content
30	Eraser LED leading edge margin adjustment	0~15	8	Each increase by “1” causes the erased position by LED to shift 1mm toward the trailing edge. (with paper surface as reference)
31	Eraser LED trailing edge margin adjustment			
35	Margin on the leading edge	0~15	0	0: No margin 1–15: Margin present (approx. 1mm/step)
36	Margin on the trailing edge			
38	Grid bias adjustment	0~255	128	The larger, the larger output.
39	Transfer transformer adjustment	0~255	128	The larger, the larger output.
40	Separation transformer adjustment	0~255	128	The larger, the larger output.
42	Grid bias adjustment (photo)	0~255	121	The value should be 121.
*3 49	Automatic auto-exposure adjustment	—	—	
53	Leading edge (copier; 100%)	0~15	8	Each increase by “1” causes the image to shift 0.80mm toward the paper leading edge.
54	Leading edge (copier; 200%)			
55	Leading edge (copier; 50%)			
56	Leading edge (bypass feeding)			
57	Leading edge position (PFU)			
60	Lens position adjustment (100%)	0~40	20	Each increase by “1” moves toward the exit side.
61	Mirror position adjustment (100%)			
62	Enlargement correction (200%)			
63	Enlargement error ratio (200%)			
64	Reduction correction (50%)			
65	Reduction error ratio (50%)			
80	Aligning value (PFU)	0~31	8	Each increase by “1” causes the paper to bend more. Short size: A4/A5-R,LT/ST-R B5: for B5 only The adjustment sequence must be 82→89→81→83→80.
81	Aligning value (short size)	0~31	16	
82	Aligning value (copier)	0~31	8	
83	Aligning value (B5)	0~31	16	
84	ADF aligning amount	0~15	8	Each decrease by “1” causes the original stop position to shift about 1mm toward the original scale.
87	ADF original-to-original gap (2 in 1 mode)	0~15	8	Each increase by “1” causes the gap between the originals to increase about 1mm.
89	Aligning value (middle size)	0~31	16	Each increase by “1” causes the paper to bend more Middle size: A4-R/B5-R/FOLIO, LG,LT-R
90	Auto-toner adjustment	0~255	128	Shows the adjustment value of the auto toner sensor.
*4 97	ADF EEPROM initialization	—	—	
*4 98	ADF aligning sensor automatic adjustment	—	—	

*1: The initial value signifies the value set by the NV-RAM initialization program and not the value set at the time of shipping from the factory.

<Procedure>

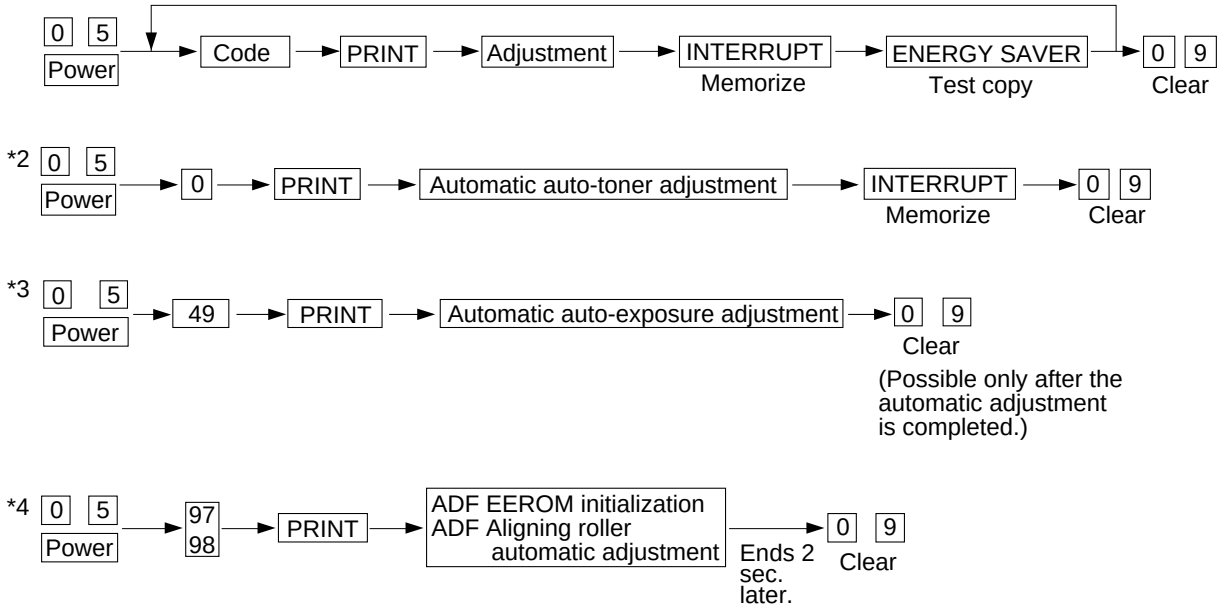
0 5
Power
Code
PRINT
Adjustment
INTERRUPT
Memorize
ENERGY SAVER
Test copy
0 9
Clear
*2 0 5
Power
0
PRINT
Automatic auto-toner adjustment
INTERRUPT
Memorize
0 9
Clear
*3 0 5
Power
49
PRINT
Automatic auto-exposure adjustment
0 9
Clear
(Possible only after the automatic adjustment is completed.)
*4 0 5
Power
97
98
PRINT
ADF EEROM initialization
ADF Aligning roller automatic adjustment
Ends 2 sec. later.
0 9
Clear

1.2.4 Setting mode (08)

In this mode, it is possible to set or modify the various modes shown in the following setting code list.

Code	Description	Allowable input value	Initial value	Content
2	Size indication by the carriage	0, 1	1	0: None; 1: Available
4	Automatic sort mode	0~3	0	0: None; 1, 2: Sort; 3: Group
7	Access control mode	0, 1	0	0: None; 1: Available
8	Version	0~2	Each version	0: EUR; 1: UC; 2: JPN
9	ACT selection (reproduction ratio in the direction of copy movement)	0, 1	0: EUR 1: UC	0: 100%; 1: 101%
10	Timer mode (auto reset)	0~10	3 (45 sec.)	0: None; 1: 15 sec. 2: 30sec.; 3: 45 sec. 4: 60 sec.; N: N ×15 sec.
11	Auto power saving	0~15	0	0: None; 1: 30 sec. 2: 60 sec.; 3: 90 sec. 4: 120 sec.; 5: 150 sec. 6: 3 min.; 7: 4 min. 8: 5 min.; 9: 7 min. 10: 10 min.; 11: 15 min. 12: 20 min.; 13: 30 min. 14: 45 min.; 15: 60 min.
12	Maximum number of copies	0~3	0	0: Max. 999 copies 1: Max. 99; 2: Max. 9 3: Max. 500
13	Paper feeding retry	0,1	0	0: Retry; 1: No retry
14	Cassette priority selection	0~4	0	0: A4/LT 3: Copier; 4: PFU
15	Exposure priority selection	0~2	0	0: Auto; 1: Manual 3: Photo mode
16	A3-size double counting	0,1	0	0: Single count; 1: Double count
17	Bypass auto start	0,1	0	0: Manual start; 1: Auto start
19	Sorter priority selection	0~3	0	0: Non-sort; 1, 2: Sort; 3: Group
20	Pre-run ON/OFF	0~15	0	0: OFF 1~15: N ×10 sec.

Code	Description	Allowable input value	Initial value	Content
21	Auto cassette change	0,1	1	0: None; 1: Available
22	ADF mode	0~5	0	0: Manual; 1: APS 2: AMS; 3: 2 in 1+AMS 4: 2 in 1+APS 5: 2 in
23	Thick paper selection at bypass pre-running	0,1	0	0: None; 1: Available
27	ADF's APS mode	0~2	0: UC 1: EUR	0: Detection for each original; 1: Detection for 1st original only; 2: Prevents copying blank originals
28	Pressing PRINT after suspension of APS/AMS	0~2	0	0: 1st copying possible 1: 2nd Copying possible 2: Copying not possible
37	Default sorter key selection	0,1	0	0: Normal; 1: Sort default
38	Heater temperature during power saving	0~7	0	0: Heater off; 1: 120°C 2: 130°C; 3: 140°C 4: 150°C; 5: 160°C 6: 170°C; 7: 180°C
44	All clearing after copying	0,1	0	0: None; 1: Available
51	Easy set-up method (UA mode)	0,1	0	0: No; 1: Yes
52	Quick copy mode	0,1	0: EUR 1: UC	0: None; 1: Available
53	Broken exposure lamp detection	0~2	0	0: All exposure modes 1: Auto only; 2: None
54	Coin-vender mode	0,1	0	0: None; 1: Available
58	Reproduction-ratio display time	0~15	0	2+0.2×N sec.
59	LG size	0,1	0	0: 14 inch; 1: 13 inch
62	AMS copy stop switching	0,1	0	0: No stop; 1: Temporary stop
63	DF key selection order switching	0,1	0: EUR 1: UC	0: APS → AMS → 2in1 + AMS → 2in1 + APS → 2in1 0: APS → AMS → 2in1 + AMS
69	PM counter setting	0~999,999	0	0: No PM counter; Other than 0: When set value ≦ code 79, PM call occurs.
79	Current PM counter value	0~999,999	0	

<Procedure>

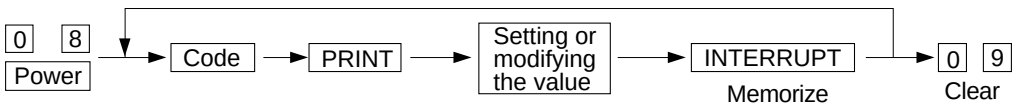

Code	Description	Allowable input value	Initial value	Content
89	Heater abnormal counter	0~7	0	

Error code	Code 89 Value	Timing of the error	Cause of the error
C41	1	When the power is turned on	Abnormal thermistor (disconnection) or broken heater
	2		
C43	4	During warming up	Abnormal thermistor (disconnection)
	5		Broken heater
C44	6	After the finish of warming up	Abnormal thermistor (disconnection)
	7		Broken heater
Absent (normal)	0	---	---

- When the power is the turned on, if an abnormality occurs, the C41 “CALL SERVICE” symbol will flash, and the value of the setting mode code 89 will be counted up.
- When the Code 89 value is 0~1, rewarming up is performed by turning on the machine again.
  If the value is 2 or more, “CALL SERVICE” symbol will flash immediately.
- If an abnormality occurs during warming up or the standby mode, C43 or C44 “CALL SERVICE” symbol will flash immediately, and the value of the setting mode code 89 depends on the conditions present at the time of the occurrence.

1.3.A Installing the Carriage Drive Wire

(1) Set the wire so that its spherical terminal is placed in the hole of the wire take-up pulley.

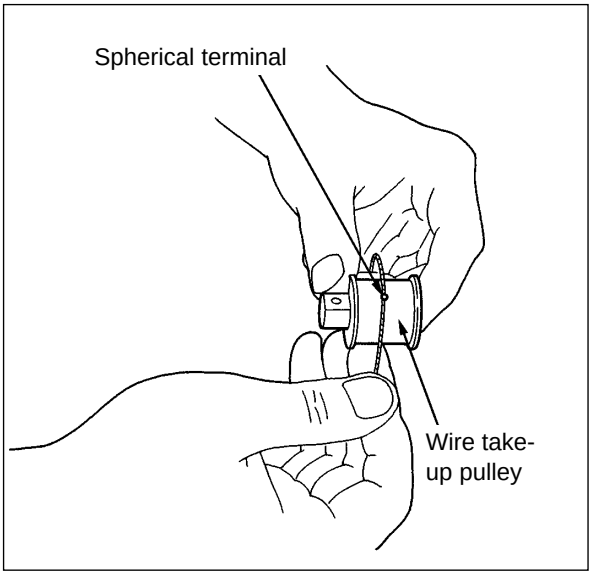

(2) Using the wire holder jig, wrap the wire on the take-up pulley, 3-1/4 turns of the fixture-side end and 5-1/4 turns of the other end.

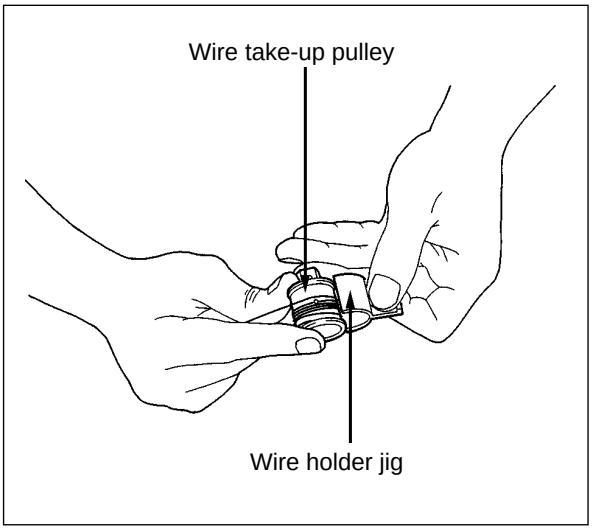

(3) Wrap the wires on the front and rear sides, as shown and fasten them with screws.

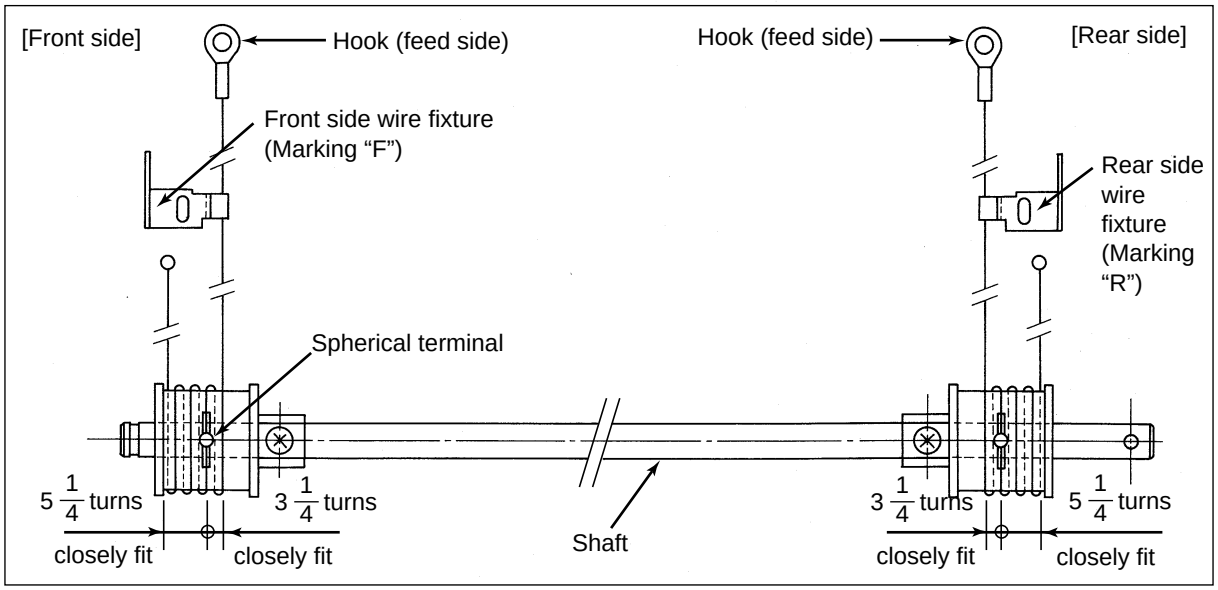

(4) Install carriage 2.

(5) As shown on figure , attach the wires.

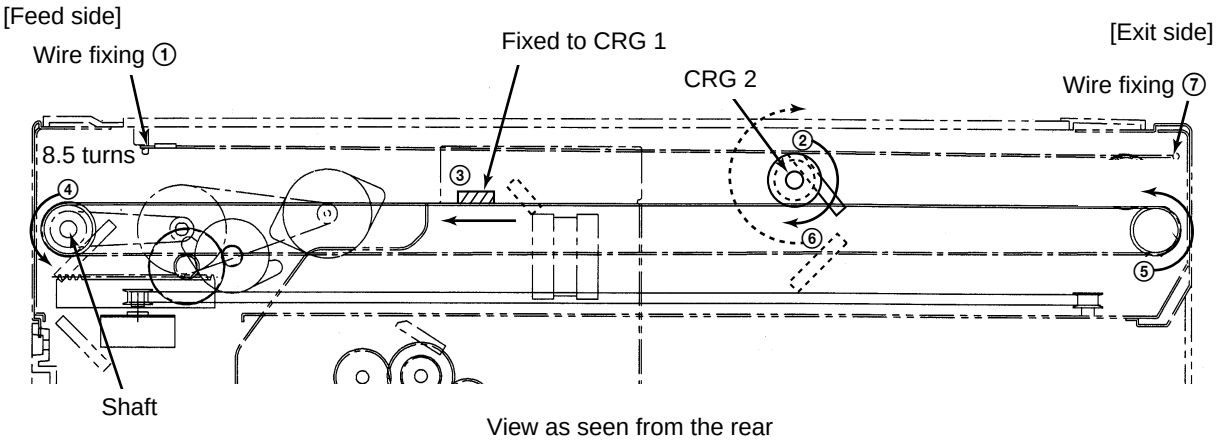

1.3.B Adjusting the Carriage Wire Tension

After having removed the wire, adjust the tension of the wire with the adjustment screw so that the exit side leaf spring will be deflected as shown in the drawing below.

Also, always adjust the positions of the carriage 1 and 2 after finishing the tension adjustment.

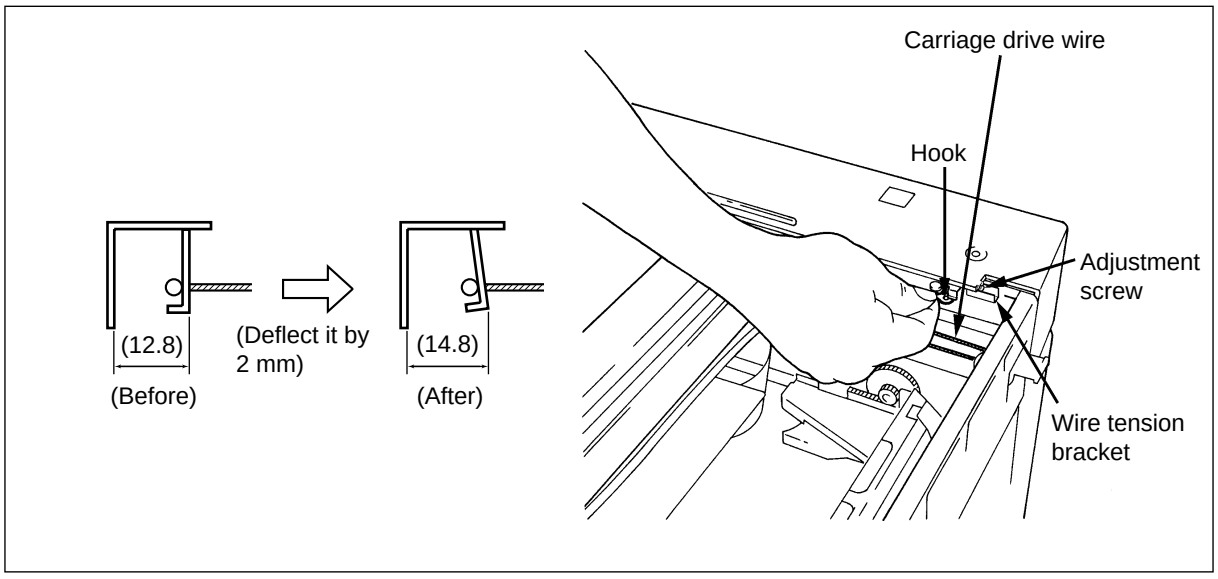

1.4 Position Adjustment of Carriage 1 and 2

(1) While pushing carriage 2 to exit side, tighten the screw on the front.

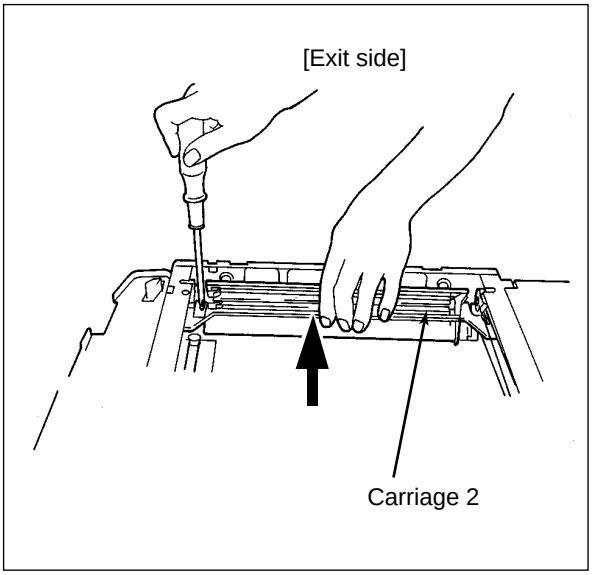

(2) Fasten carriage 1 to the wire: Each screw on the front and rear should be tightened temporarily.

(3) While pushing carriage 1 to the exit side (carriage 2), tighten the screws ..... on the front and rear.

Note: Move carriages 1 and 2 to the exit side by rotating the shaft and check to make sure that the claws of both carriages (two for each) touch the inside surface of the frame at the same time.

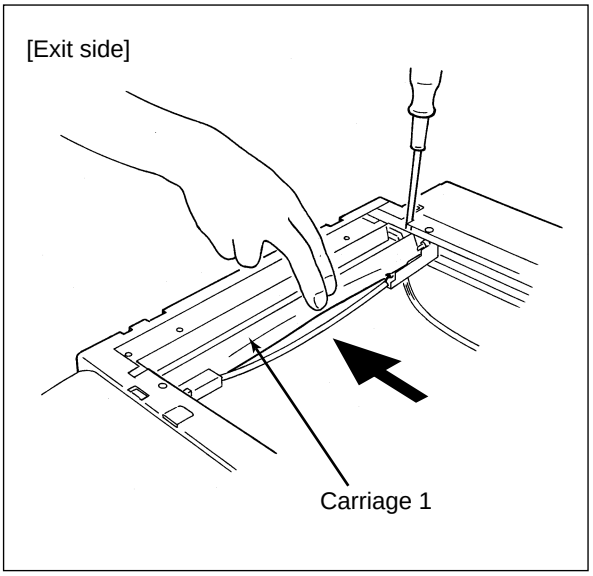

1.5 Light Distribution Adjustment

(1) Remove the glass holder (2 screws) and then the original glass.

(2) Move light-distribution adjustment plate ① - ③ in the direction of the arrow (⬅), depending on the amount of uneven light distribution. Adjustment should be made so that the image becomes darker evenly.

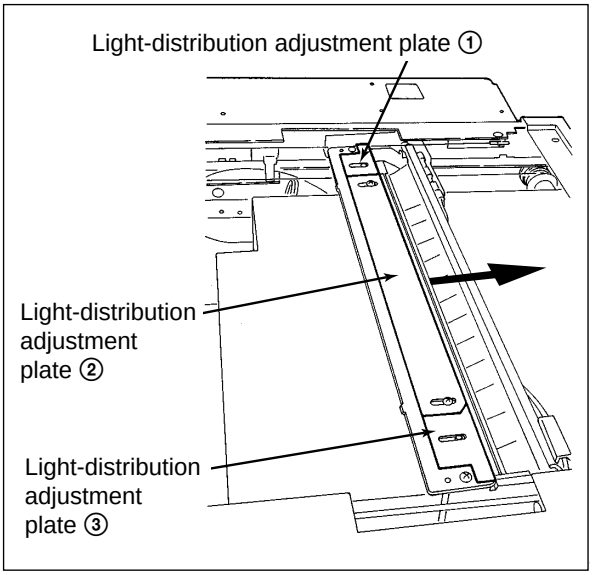

(3) Move light-distribution adjustment plates ① and ② in the direction of the arrow.
(When the rear side is darker)

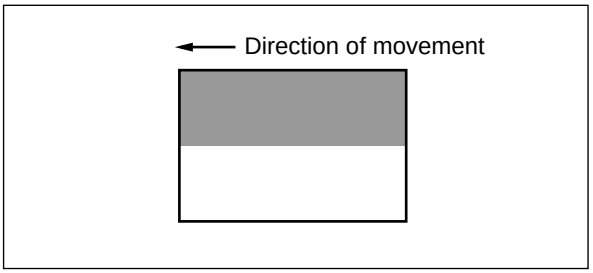

(4) Move light-distribution adjustment plates ② and ③ in the direction of the arrow.
(When the front side is darker)

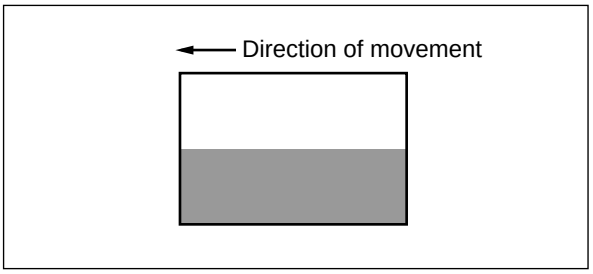

As a result of the above adjustment, there is a possibility that under-exposure or over-exposure may occur; make exposure adjustment if necessary.

1.6 Image Slanting and Image Distortion Adjustment

(1) Image slanting adjustment

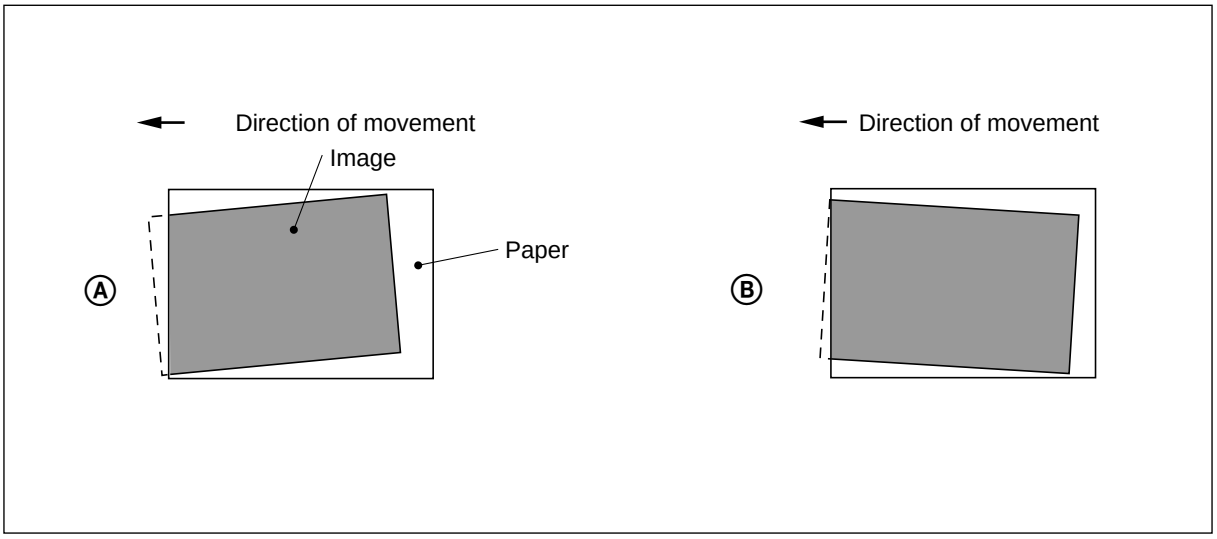

After making a copy with the original aligned correctly with the original scale, if the copy image is slanting, adjustment should be made by moving the front side of the original scale.

Slanting as in Ⓐ:

Adjust the original scale in the direction of the arrow (➡).

Slanting as in Ⓑ:

Adjust the original scale in the direction of the arrow (⇢).

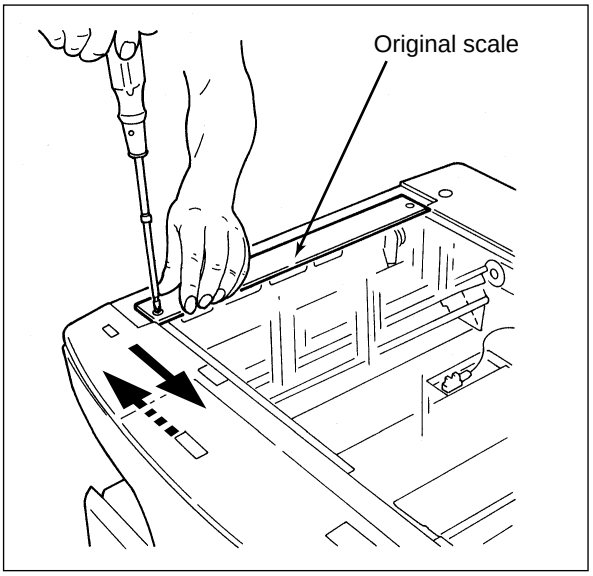

(2) Image distortion adjustment

Step 1

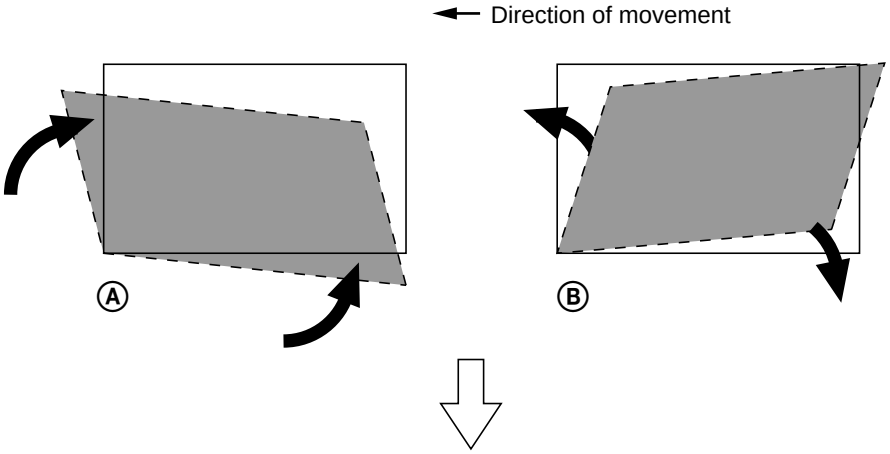

Step 2

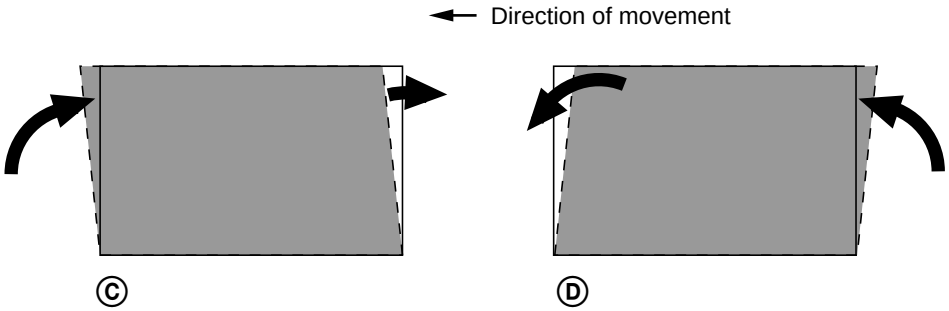

<Adjustment procedure>

After removing the original glass, make adjustment using the following procedure:

Step 1: If the image is distorted as in Ⓐ or Ⓑ, make adjustment in the direction of copy movement using the mirror 2's adjustment screw to make the image as in Ⓒ or Ⓓ:

In the case of Ⓐ: Rotate the adjustment screw in the direction of tightening (clockwise).

In the case of Ⓑ: Rotate the adjustment screw in the direction of loosening (counter-clockwise).

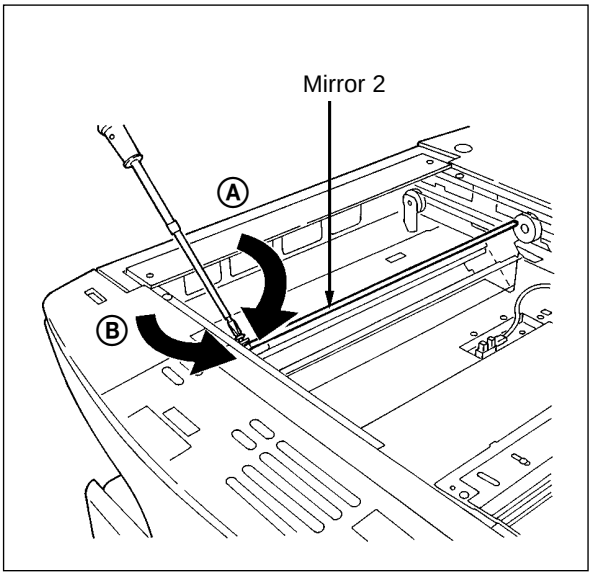

Step 2: If the image is distorted as in Ⓒ or Ⓓ, using the mirror unit's adjustment screw, make adjustment in the direction perpendicular to that of copy movement to make the image normal:

In the case of Ⓒ: Rotate the adjustment screw in the direction of tightening (clockwise).

In the case of Ⓓ: Rotate the adjustment screw in the direction of loosening (counter-clockwise.)

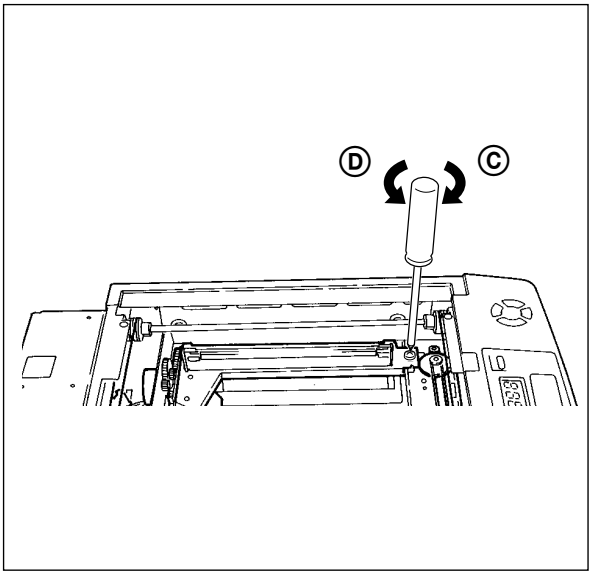

1.7 Mirror and Lens Adjustment

Checking and adjustment regarding the mirrors and the lens should be made by using the following procedure:

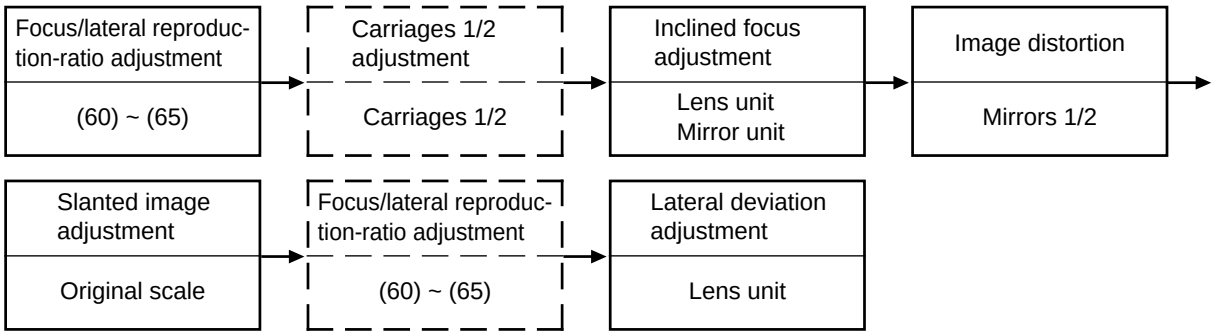

Note: Do adjustment steps in the dotted-line boxes, as required.

Focus/lateral reproduction-ratio adjustment AJ: Codes 60 - 65

When the lens is replaced or when the focus or the lateral reproduction ratio is not correct, the following adjustment data need to be re-entered:

		Allowable input value	Center value
Lens position data (100%)	(AJ"05" mode, code 60)	0~40	20
Mirror position data (100%)	(AJ"05" mode, code 61)	0~40	20
Lens position data (200%)	(AJ"05" mode, code 62)	0~40	20
Mirror position data (200%)	(AJ"05" mode, code 63)	0~40	20
Lens position data (50%)	(AJ"05" mode, code 64)	0~40	20
Mirror position data (50%)	(AJ"05" mode, code 65)	0~40	20

Adjustment should be done as follows:

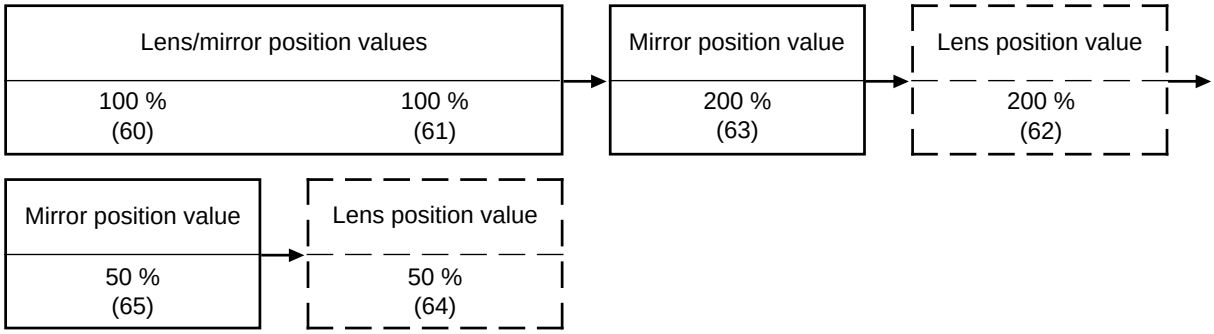

Normally, adjustment steps in the dotted-line boxes are unnecessary.

[A] 100% focus and lateral reproduction-ratio adjustment

(1) Make an actual-sized copy and check for the correct focus and lateral reproduction ratio; if adjustment is necessary, re-enter adjustment data as described below:

ⓐ If the focus is inadequate and lateral reproduction ratio is smaller:
Enter a smaller mirror-position value (code 61).

ⓑ If the focus is inadequate and the lateral reproduction ratio is enlarged:
Enter a larger mirror-position value (code 61).

ⓒ If the focus is adequate but the lateral reproduction ratio is reduced:
Enter a larger lens-position value (code 60).

ⓓ If the focus is adequate but the lateral reproduction ratio is increased:
Enter a smaller lens-position value (code 60).

Notes: 1. Moving either the lens or the mirror changes both the focus and the lateral reproduction ratio. However, the lens-position value mainly changes the lateral reproduction ratio and the mirror position value mainly changes the focus.

2. First adjust the focus, then the lateral reproduction ratio and check the focus again.
3. If the lateral reproduction ratio is not precisely adjusted (within ±0.5%), the focus cannot be correctly adjusted either.
4. The focus in the center of the image has more margin than that of any of the four corners of the image due to the characteristics of the lens.
5. For 200% and 50% reproduction ratios, adjustment of the normal focus (mirror position) makes the lateral reproduction ratio optimal, making it unnecessary to be adjusted.

[B] 200% focus and lateral reproduction-ratio adjustment

(1) Make a 200% copy and check for the correct focus and lateral reproduction ratio.

(2) When the focus and the lateral reproduction ratio are inadequate, re-enter the values of codes 62 and 63 in the AJ "05" mode in the same way as for 100%.

[C] 50% focus and lateral reproduction ratio adjustment

(1) Make a 50% copy and check for the correct focus and lateral reproduction ratio.

(2) When the focus and the lateral reproduction ratio are inadequate, re-enter the values of codes 64 and 65 in the AJ "05" mode in the same way as for 100 %.

1.8 Adjustment of Lateral Misplacement of the Lens Unit

The lens unit has adjustable mechanism.

However, as the adjustment is performed at the time of shipping from the factory, no further adjustment is needed.

1.9 Exposure Adjustment

(1) While pressing keys "0" and '5" simultaneously, turn the power supply ON. The display shows "AJ" and indicates that the machine is in adjustment mode.

(2) Press the automatic exposure key to set the machine to manual exposure, and then select the center step.

(3) Adjust the exposure in accordance with the procedure shown in the chart below.

Adjustment sequence	Exposure mode	Reproduction ratio	Adjustment code
1	Manual exposure	100%	1
2	Automatic adjustment of automatic exposure	50 ~ 200%	49
*3	Light (max.)	100% or appropriate reproduction ratio	9
*4	Dark (min.)		10
5	Manual photo exposure	100%	14

* Make adjustment only when requested by the user.

When individual adjustment is required for manual, automatic and manual photo exposure in response to a request from the user, follow procedure (4).

① Adjustment of 100% manual exposure

Sequence	Operation	Display after operation (typical)
1-1	Input code "1" using the digital keys , and press the "Print" key.	120
1-2	[When density is high] Increase the numerical value, using the "Zoom" key. (Note 2) [When density is low] Reduce the numerical value, using the "Zoom" key. (Note 2)	(Note 1) 129 — Zone A 180
1-3	Press the "Interrupt" key and enter the numerical value in the memory.	AJ
1-4	Press the “Energy saver” key and make a test copy (one)	
1-5	If the image of the test copy is not satisfactory, repeat operations 1-1 through 1-4.	

Note 1. Zone A: When the "Zoom" key is pressed, it increases (or decreases) in increments of one.
2. The numerical value in Zone A can be changed by using the digital keys as well as the "Zoom" key.
3. As adjustment of 154%, 50% and 200% manual exposure has already been performed, readjustment is not required. However, if individual adjustment is requested by the user, conduct the relevant adjustment in accordance with procedure (4), described later.

② Automatic adjustment of automatic exposure

Sequence	Operation	Display after operation (typical)
2-0	Be sure to adjust manual exposure (100%) beforehand. (Note1)	Refer to ①
2-1	Place the adjustment chart on the original glass. (Note 2)	AJ
2-2	Enter code 49 using the digital keys and then press the Print key. * During automatic adjustment, the carriage will shift and the lens and mirror will move in accordance with the reproduction ratio. The exposure lamp will flash four times. * End of automatic adjustment is indicated by return of the display to test mode.	169 ↓ 199 AJ

Note 1. As automatic adjustment of automatic exposure is performed on the basis of manual exposure, be sure to conduct manual exposure beforehand.
2. Use white Ledger or A3 copy paper as the test chart.
3. When adjustment must be performed in accordance with the user's request, perform by referring to (4), to be described later.
4. Avoid opening the original cover, pressing keys on the control panel or turning the power OFF, during automatic adjustment.

When changing the variable width of the key for manual exposure in accordance with the user's request, carry out ③ and ④, described below.

③ Changing the amount of variation in the light image density

Sequence	Operation
3-1	Input code "9" using the digital keys and press the "Print" key.
3-2	Use the "Zoom" key to increase the value to lighten the image (and vice versa).
3-3	Press the "Interrupt" key to store the value.
3-4	Press the "Energy saver" key and make a test copy.
3-5	If the image density of the test copy is not satisfactory, repeat operations 3-1 through 3-4.

④ Changing the amount of variation in the dark image density.

Sequence	Operation
4-1	Input code "10" using the digital keys and press the "Print" key.
4-2	Use the "Zoom" key to increase the value to lighten the image (and vice versa).
4-3	Press the "Interrupt" key to store the value.
4-4	Press the "Energy saver" key and make a test copy.
4-5	If the image density of the test copy is not satisfactory, repeat operations 4-1 through 4-4.

⑤ 100% manual photo exposure adjustment

Sequence	Operation	Display after operation (typical)
5-1	Input code “14” using the digital keys, and press the “Print” key.	128
5-2	[When density is high] Increase the numerical value, using the “Zoom” key. [When density is low] Decrease the numerical value, using the “Zoom” key.	138 118
5-3	Press the “Interrupt” key and store the numerical value in the memory.	AJ
5-4	Press the “Energy saver” key and make a test copy.	
5-5	If the image density of the test copy is not satisfactory, repeat operations 5-1 through 5-4.	

(4) Adjust exposure in accordance with the procedures shown in the charts below, if requested by the user for separate adjustment of manual/auto-exposure.

Adjustment sequence	Exposure mode	Reproduction ratio	Adjustment code
1	Manual exposure center	100%	1
2		154%	2
3		50%	3
4		200%	4
5	Automatic exposure	100%	5
6		154%	6
7		50%	7
8		100%	8
9	Light (max.)	100 % or appropriate ratio	9
10	Dark (min.)		10
11	Manual photo exposure	100%	14
12		154%	15
13		50%	16
14		200%	17

① Perform the 100% manual exposure adjustment (3)- ①.

② 154% manual exposure adjustment

Sequence	Operation	Display after operation (typical)
2-1	Input code “2” using the digital keys, and press the “Print” key.	130
2-2	[When density is high] Increase the numerical value, using the “Zoom” key. [When density is low] Decrease the numerical value, using the “Zoom” key.	149 126
2-3	Press the “Interrupt” key and store the numerical value in the memory.	AJ
2-4	Press the “Energy saver” key and make a test copy.	
2-5	If the image density of the test copy is not satisfactory, repeat operations 2-1 through 2-4.	

③ 50% manual exposure adjustment

Sequence	Operation	Display after operation (typical)
3-1	Input code “3” using the digital keys, and press the “Print” key.	103
3-2	[When density is high] Increase the numerical value, using the “Zoom” key. [When density is low] Decrease the numerical value, using the “Zoom” key.	109 096
3-3	Press the “Interrupt” key and store the numerical value in the memory.	AJ
3-4	Press the “Energy saver” key and make a test copy.	
3-5	If the image density of the test copy is not satisfactory, repeat operations 3-1 through 3-4.	

④ 200% manual exposure adjustment

Sequence	Operation	Display after operation (typical)
4-1	Input code “4” using the digital keys, and press the “Print” key.	175
4-2	[When density is high] Increase the numerical value, using the “Zoom” key. [When density is low] Decrease the numerical value, using the “Zoom” key.	186 166
4-3	Press the “Interrupt” key and store the numerical value in the memory.	AJ
4-4	Press the “Energy saver” key and make a test copy.	
4-5	If the image density of the test copy is not satisfactory, repeat operations 4-1 through 4-4.	

⑤ 100% automatic exposure adjustment

Sequence	Operation	Display after operation (typical)
5-1	Input code “5” using the digital keys, and press the “Print” key.	115
5-2	[When density is high] Increase the numerical value, using the “Zoom” key. [When density is low] Decrease the numerical value, using the “Zoom” key.	127 107
5-3	Press the “Interrupt” key and store the numerical value in the memory.	AJ
5-4	Press the “Energy saver” key and make a test copy.	
5-5	If the image density of the test copy is not satisfactory, repeat operations 5-1 through 5-4.	

⑥ 154% automatic exposure adjustment

Sequence	Operation	Display after operation (typical)
6-1	Input code “6” using the digital keys, and press the “Print” key.	127
6-2	[When density is high] Increase the numerical value, using the “Zoom” key. [When density is low] Decrease the numerical value, using the “Zoom” key.	139 113
6-3	Press the “Interrupt” key and store the numerical value in the memory.	AJ
6-4	Press the “Energy saver” key and make a test copy.	
6-5	If the image density of the test copy is not satisfactory, repeat operations 6-1 through 6-4.	

⑦ 50% automatic exposure adjustment

Sequence	Operation	Display after operation (typical)
7-1	Input code “7” using the digital keys, and press the “Print” key.	094
7-2	[When density is high] Increase the numerical value, using the “Zoom” key. [When density is low] Decrease the numerical value, using the “Zoom” key.	087 103
7-3	Press the “Interrupt” key and store the numerical value in the memory.	AJ
7-4	Press the “Energy saver” key and make a test copy.	
7-5	If the image density of the test copy is not satisfactory, repeat operations 7-1 through 7-4.	

⑧ 200% automatic exposure adjustment

Sequence	Operation	Display after operation (typical)
8-1	Input code “8” using the digital keys, and press the “Print” key.	141
8-2	[When density is high] Increase the numerical value, using the “Zoom” key. [When density is low] Decrease the numerical value, using the “Zoom” key.	149 133
8-3	Press the “Interrupt” key and store the numerical value in the memory.	AJ
8-4	Press the “Energy saver” key and make a test copy.	
8-5	If the image density of the test copy is not satisfactory, repeat operations 8-1 through 8-4.	

⑨ When changing the variable width of the key for manual exposure at the user’s request, change the amount of variation in the light/dark image density in (3)- ③ and ④.

⑩ Perform the 100% manual photo exposure adjustment in (3)- ⑤.

⑪ 154% manual photo exposure adjustment

Sequence	Operation	Display after operation (typical)
11-1	Input code “15” using the digital keys, and press the “Print” key.	128
11-2	[When density is high] Increase the numerical value, using the “Zoom” key. [When density is low] Decrease the numerical value, using the “Zoom” key.	138 118
11-3	Press the “Interrupt” key and store the numerical value in the memory.	AJ
11-4	Press the “Energy saver” key and make a test copy.	
11-5	If the image density of the test copy is not satisfactory, repeat operations 11-1 through 11-4.	

⑫ 50% manual photo exposure adjustment

Sequence	Operation	Display after operation (typical)
12-1	Input code “16” using the digital keys, and press the “Print” key.	128
12-2	[When density is high] Increase the numerical value, using the “Zoom” key. [When density is low] Decrease the numerical value, using the “Zoom” key.	138 118
12-3	Press the “Interrupt” key and store the numerical value in the memory.	AJ
12-4	Press the “Energy saver” key and make a test copy.	
12-5	If the image density of the test copy is not satisfactory, repeat operations 12-1 through 12-4.	

⑬ 200% manual photo exposure adjustment

Sequence	Operation	Display after operation (typical)
13-1	Input code “17” using the digital keys, and press the “Print” key.	128
13-2	[When density is high] Increase the numerical value, using the “Zoom” key. [When density is low] Decrease the numerical value, using the “Zoom” key.	138 118
13-3	Press the “Interrupt” key and store the numerical value in the memory.	AJ
13-4	Press the “Energy saver” key and make a test copy.	
13-5	If the image density of the test copy is not satisfactory, repeat operations 13-1 through 13-4.	

1.10 Checking and Adjustment of Grid Bias/Transfer/Separation Output

Checking and adjustment of grid bias/transfer/separation output is necessary when the high-voltage transformer is replaced.

At adjustment mode "05"
- "38" grid bias (Black)
- "39" transfer charger
- "40" separation charger

Notes: 1. A digital tester with an input resistance of 10 MΩ or more should be used.

<Adjustment procedure>

1. Take out the process unit, and then remove the developer unit, main charger unit and drum.
2. Remove the main blade.
3. Using the drum shaft, install the adjustment jig in the cleaner unit and then set the main charger unit.

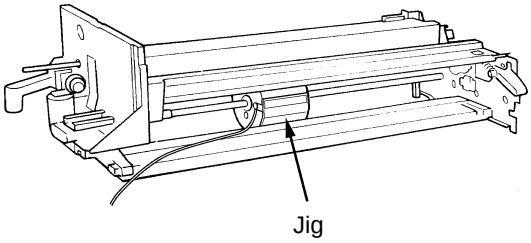

4. Set the process unit into the copier and fasten the earth wire of the jig to the machine frame with a screw. Then connect the black (WH) side of the jig's 3P-connector to the (–) terminal and the red (WH) side to the (+) terminal of the digital tester, respectively.
5. Push down the upper unit. (Be careful not to allow the jig's cord to be pinched).

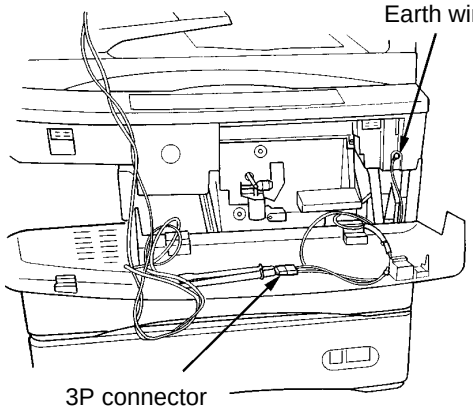

For measuring the transfer/separation values

6. Turn on the door switch forecefully.

Note: When measuring the grid bias*, route the (+) terminal of the digital tester through the charger cleaning shaft gap on the front side of the process unit and contact the charger plate spring with the (+) terminal.

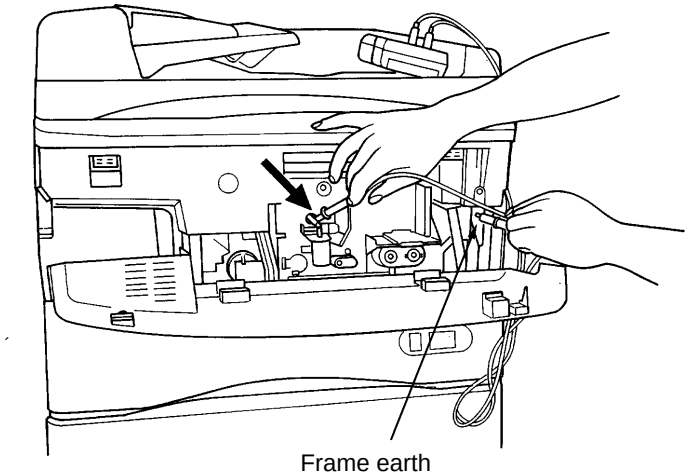

For measuring the grid bias

7. Setting of digital tester
   - In the case of grid bias: Set at 1000 VDC range
   - In the case of transfer: Set at 2 VDC range
   - In the case of separation: Set at 2 VAC range

8. [0] [5] [Power] → [AJ]

9. [Code] → [Print] → [128]
   (38,39,40 or 42)

10. Check voltage value using digital tester
    - *Grid bias: –692 ±5 V (Black)
    - Transfer: –586 ±20mV
    - Separation: AC514 ±21mV (effective value displayed)
      AC464 ±18mV (average value displayed)

11. When adjustment is required

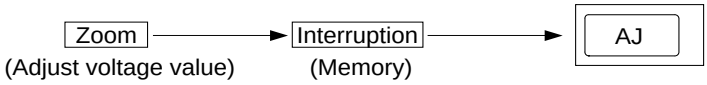

Note: When voiding occurs on a halftone copy, reduce the separation output.
When deficiency in separation from the drum occurs, or the user uses thin paper frequently, increase the separation output. Be careful to avoid over-increasing or over-decreasing separation output.

1.11 Checking and Adjustment of Developer Bias Output

<Adjustment procedure>

(Use code 40 in test mode 05.)

1. Remove the process unit.
2. How to connect digital tester to the machine
   - Connect (+) terminal of digital tester to bias connector (OUT 5)
   - Connect (–) common terminal of digital tester to machine frame.
   - Set digital tester to 1000 VDC range.

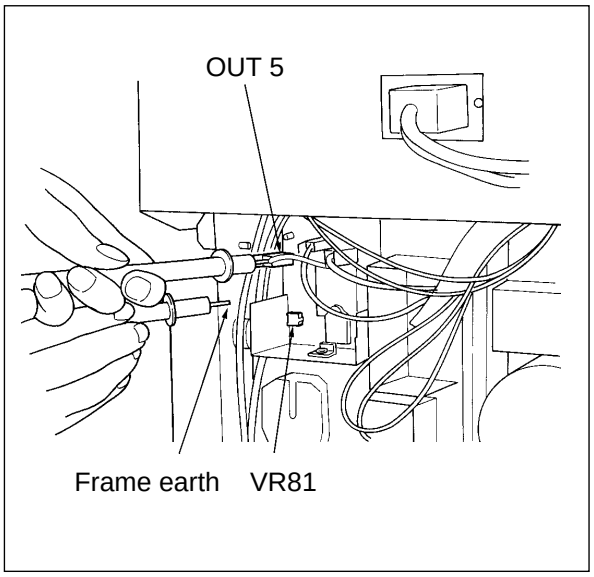

3. [0] [5] [Power] → [AJ]

4. [4] [0] → [Print] → [128]

5. Check voltage value using digital tester.
   –DC200 V ±5 V

6. If adjustment is required, perform adjustment through VR81 (Bias). (Do not touch the zoom keys and the digital keys.)

7. [C/S] → [AJ]
   (Output stop)

Note: If an overall misty effect is observed, even though exposure is sufficient, increase bias output through VR81 (Bias). However, when bias output is over-increased, the image contrast declines, causing a generation of bias leakage, and the carrier tends to stick to the drum easily.

1.12 Drum-to-Sleeve Gap Adjustment

No adjustment is necessary since the guide contacting method is adopted for this machine.

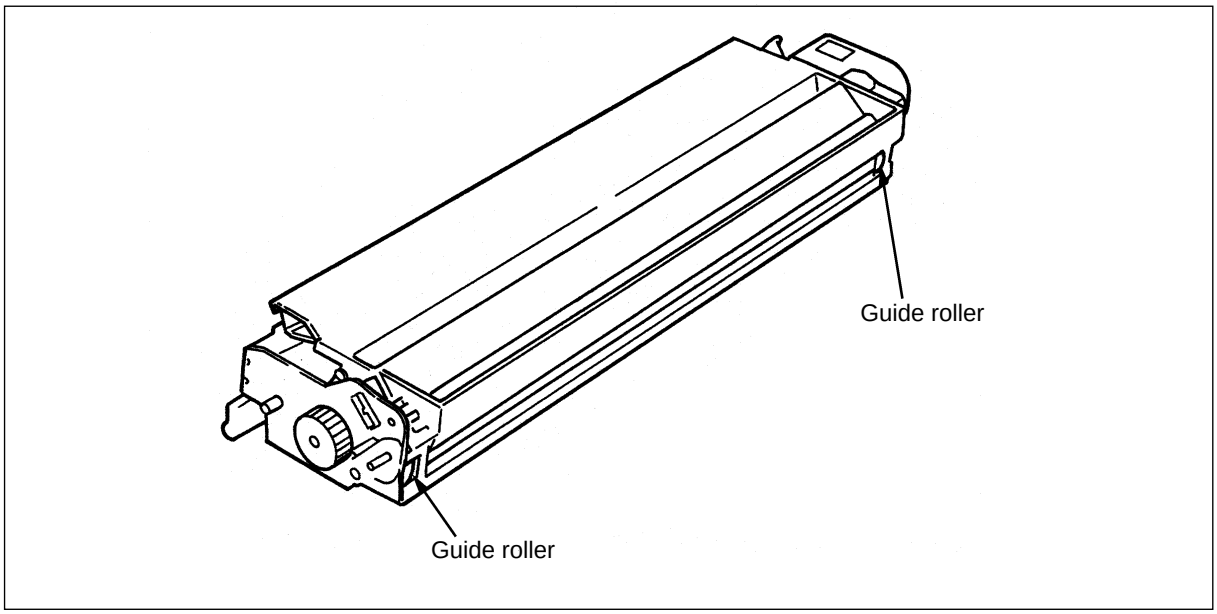

1.13 Development Pole Adjustment

(1) Take out the developer unit from the process unit.

(2) Adjustment should be made using the adjuster plate on the rear side:

After loosening the fixing screw of the adjuster plate, move and adjust it, using the adjustment mark as a guide. Note, however, that since the pole position was adjusted using a special jig at the factory, it should be adjusted only when necessary. When its fixing screw needs to be loosened for reasons of disassembly, etc., the initial position of the adjuster plate should be remembered or marked for later reassembly.

However, whenever the magnetic roller is replaced, the adjustment of the pole-position height (H) shall be made first.

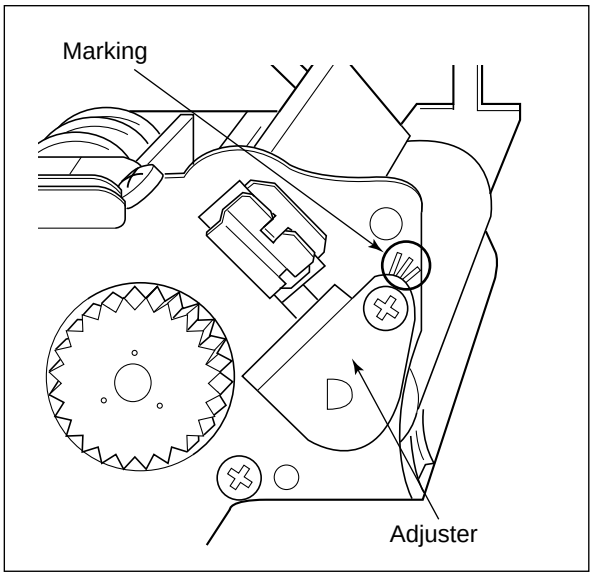

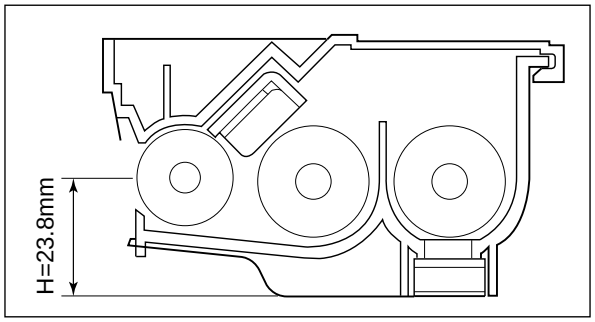

1.14 Doctor-to-Sleeve Gap

Jig to be used: Doctor sleeve jig

Procedure:

(1) Remove the developer unit from the process unit.
(2) Remove the top cover and then the developer material.
(3) Remove the charge unit and the drum.
(4) Reinstall the developer unit from which the developer material is removed.
(5) Pull down the developer unit pressure lever to make a pressurized condition.

Adjustment method:

(1) Make sure jig step “0.45” can be inserted between the sleeve and the leveler and moves smoothly between the front and rear, and also jig step “0.55” cannnot be inserted.
(2) Adjust the gap between the sleeve and the leveler with jig step “0.50” by tightening the two leveler adjustment screws twice if necessary. After the adjustment, make sure using the same method specified above that jig step “0.45” can be inserted smoothly and jig step “0.55” cannot be inserted.

Doctor sleeve jig, Step "0.45"

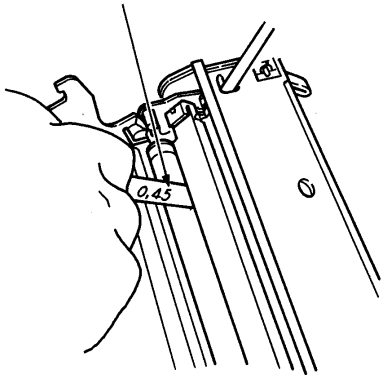

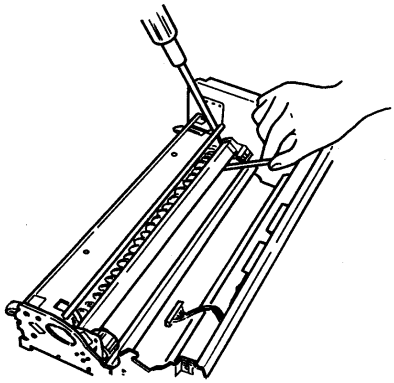

Notes: 1. When checking or adjusting the gap, make the process unit level.
2. When checking or adjusting the gap, align the marking position of the sleeve to the position of the leveler.
3. When installing the developer-unit top cover, after having inserted the leaf spring hook, fasten it firmly.
4. After reinstalling the top cover, check that the rubber seal is placed over the side seals correctly.

1.15 Auto-Toner Sensor Adjustment

After the developer material is replaced, the auto-toner sensor needs to be adjusted.

<Procedure> (Code “0” in the 05 adjustment mode)

1. [0] [5] [Power] → [AJ]

2. [0] → [Print] → (Example) [19]

3. Approx. 3 minutes later → (Example) [24]

   If the value is not 24, make adjustment with zoom keys.

4. [INTERRUPT] → [AJ] → [0] [9]

5. Install the toner cartridge.

1.16 Adjustment for Scanning Motor Speed, Aligning Amount and Lead Edge Position

Adjustment precedure:

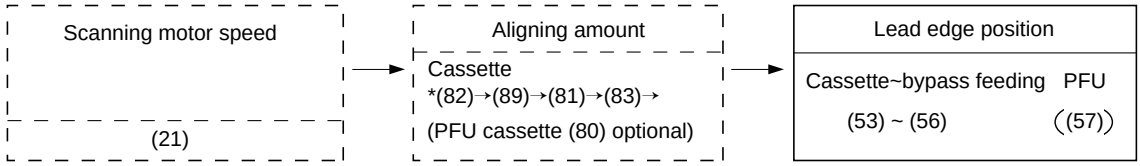

Note: Normally, Adjustments in the dotted-line boxes are unnecessary.
First of all adjust code 82 because the adjustment amount is based on it.

1.16.1 Scanning motor adjustment

(Check and adjustment of the reproduction ratio in the direction of copy movement)

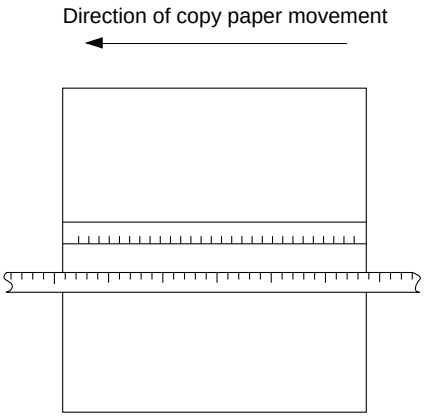

1. Place a ruler on the glass and make a 100% A4-size copy.
2. Two or three minutes later, compare the copied ruler and the actual one.
3. If necessary, make adjustment as follows:



* Larger values make the copy to be enlarged.

1.16.2 Aligning amount adjustment

If necessary, you can extend the feed roller life by increasing the aligning amount.

<Procedure> (Use codes 82/89/81/83/80 in the test mode “05”)

1. 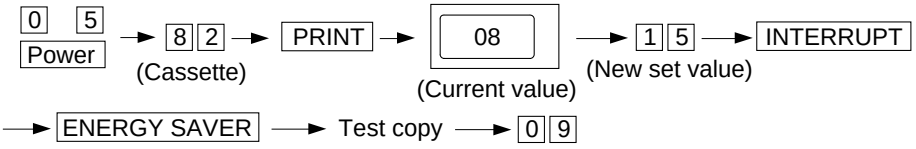

Code #		Copy size
82	Cassette	A3(LD)
89		A4-R(LT-R)
81		A4(LT)
83		B5
80	PFU	A4

Notes

- There is no need to do this for machines which do not use B5-sized paper.
- There is no need to do this for machines which are equipped with a PFU.

2. Check the copy for any image void and if there is any, reduce the new value likes “15” → “14” → “13” ... until no image void occurs. Check for no paper misfeeding with the new value.

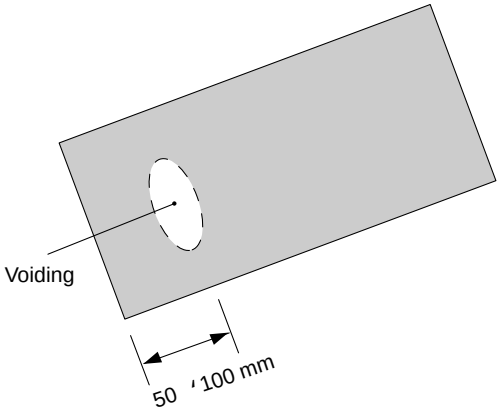

1.16.3 Lead edge adjustment

Since incorrect lead-edge position can also occur due to paper quality, feed roller surface condition, etc, first check these itmes before starting adjustment.

Note: The lead edge position of each paper source can be adjusted independently. However, if adjustment for bypass feeding is necessary, make adjustment in order of the cassette → bypass.

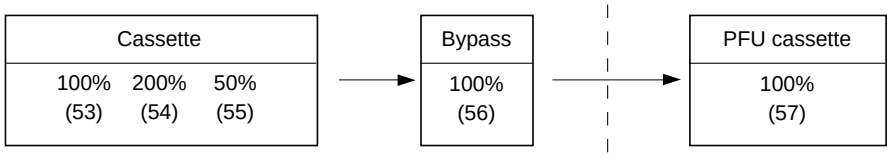

<Procedure> (Use the appropriate codes in the “05” test mode.)

Example: Adjustment for the cassette (100%)

1. 0 5 Power → AJ → ENERGY SAVER → Test copy for checking the lead edge position

2. 5 3 → PRINT → (Example) 11

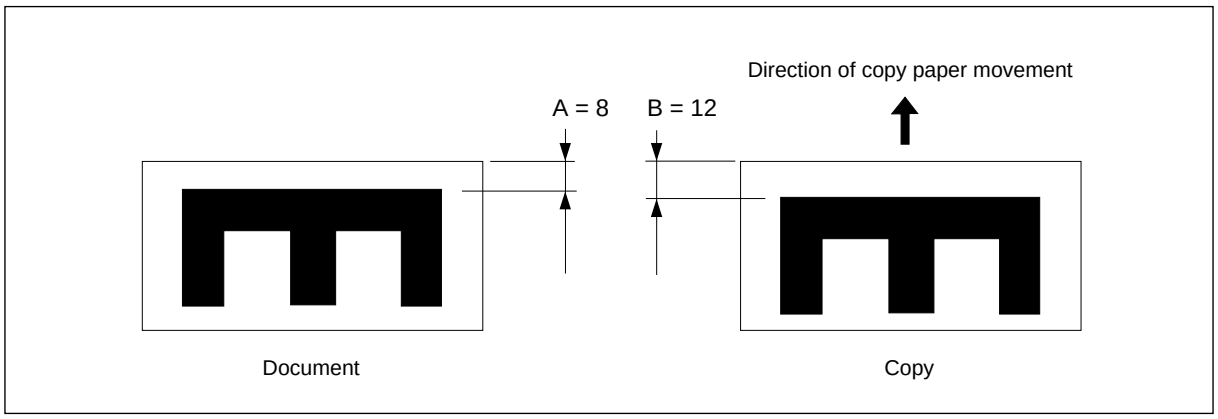

3. Calculate the new set value:

$$\text{New value= Current value} + \frac{A-B}{0.8} = 11 + \frac{8-12}{0.8} = 11-5 = 6$$

4. [6] → [6]

5. [INTERRUPT] → [AJ]

6. Repeat step 2 onward for manual feeding and PFU cassette.

7. Press keys [0] and [9] simultaneously to clear the test mode.

1.17 Registering/Changing ID Codes (Access control mode)

When ID codes are registered, copies are classified according to each ID code. To make copies, a registered ID code must be entered using numeric keys.

<Preparation for using the access control mode>

[0] [8] [Power] → [7] → [PRINT] → [1] → [INTERRUPT] → [Power OFF]

<Registration of the ID code>

- Up to 10 ID codes can be registered. Input a number with three figures.
- Normally, the copier will not start unless one of the ID codes registered is keyed in.

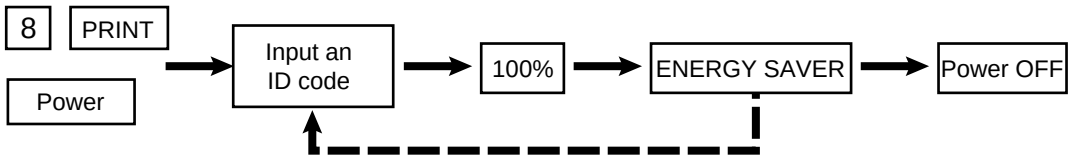

<Confirmation of the counter value at every code>

- Copy quantity can be recorded at every codes.
- The counter value is 000000 ~ 999999.

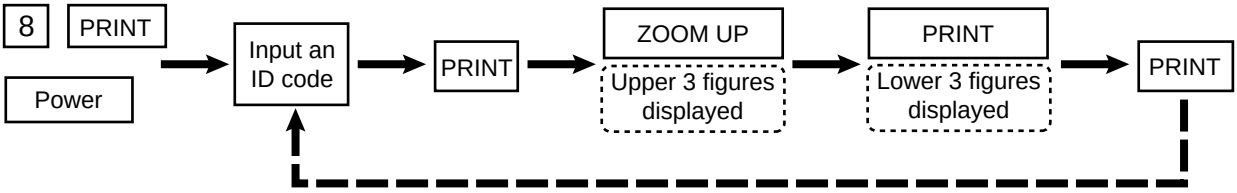

<ID code list display>

- It is possible to display codes registered in order.

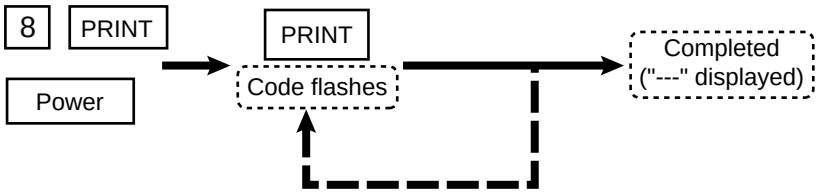

<Deletion of the registered ID code>

- Registered codes can be deleted one by one.

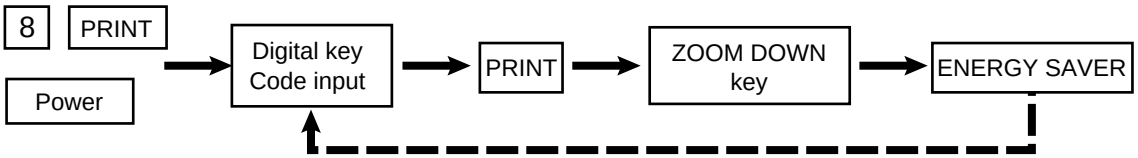

<Change of the counter value>

- The counter value can be changed.
- For example the counter value of 012345 is changed to 123456.

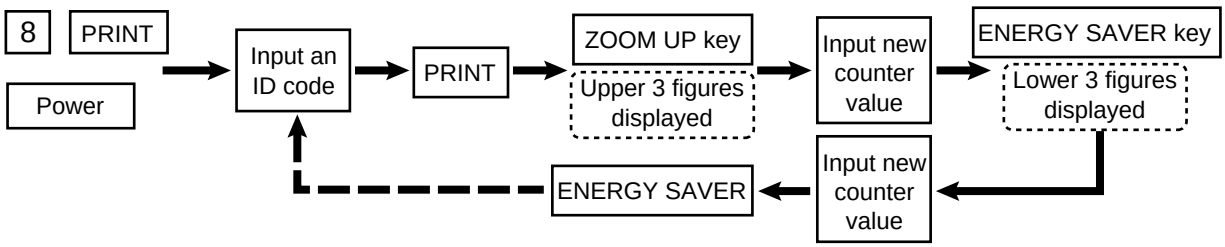

1.18 User Exposure-Adjustment Mode

This mode allows the user to perform some of the exposure adjustment modes if he desires to do so. The user can adjust the following three modes:

- Manual exposure 100% (05 mode, code 1)
- Auto exposure 100% (05 mode, code 5)
- Photo exposure 100% (05 mode, code 14)

A. Auto exposure adjustment (AJ5)

(1) Press the auto-exposure key to make the auto-exposure LED to come on.

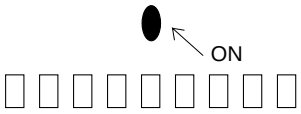

(2) While pressing the auto-exposure key, press the ZOOM UP (or ZOOM DOWN) key, and the light MAX (or dark MAX) LED flashes.

(3) Each time the light MAX (or dark MAX) LED flashes, the AJ value is increased (or decreased) by 2.

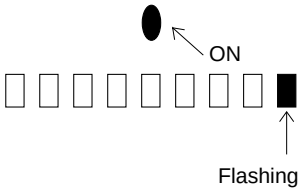

(4) When you release one of the keys you pressed simultaneously, the display goes back to step (1), completing the adjustment.

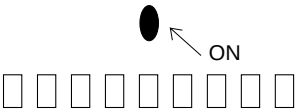

B. Manual exposure adjustment 100% (AJ1)

(1) Press the auto-exposure key to make the center LED of the manual exposure to come on.

(2) Steps (2)–(4) are same as for the auto exposure adjustment.

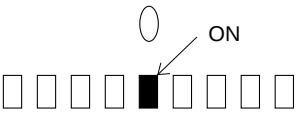

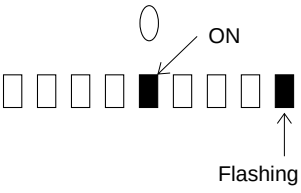

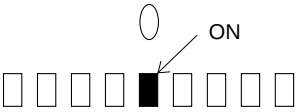

C. Photo exposure adjustment 100% (AJ14)

(1) Press the PHOTO key to make the photo LED and the manual exposure center LED to come on.

(2) While pressing the PHOTO key, press the ZOOM UP (or ZOOM DOWN) key, and the light MAX (or dark MAX) LED flashes.

(3) Steps (3)–(4) are the same as for the auto exposure adjustment.

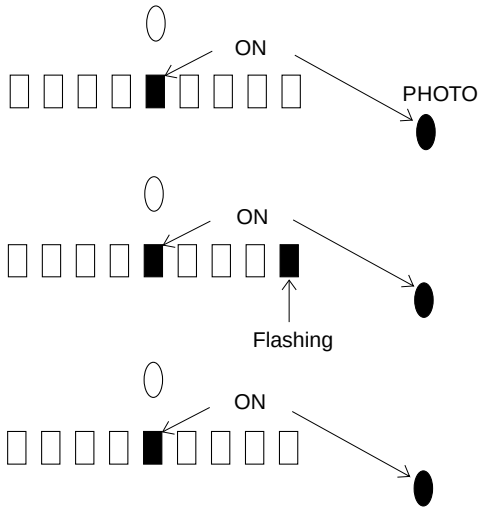

2. PERIODICAL MAINTENANCE

Inspection every 60,000 copies

(1) Preparation
   1) Ask the key operator about the present machine conditions and note them down.
   2) Before starting the maintenance work, make and retain a few sample copies for later comparison.
   3) Turn off the power switch and disconnect the power cord plug.

(2) The period inspection should be conducted in accordance with the PERIODIC INSPECTION CHECK LIST shown below. Perform the inspection by referring to the figures, as well as to the explanations in the Service Manual when necessary.

(3) After the inspection has been completed, plug in the machine and turn the power switch on, and confirm the general operation of the machine by making a few copies and comparing them to those made previously.

Inspection and over-haul every 180,000 copies

(1) Replace all the cosumables.

(2) Check to see if there is any damage to parts of the drive section (gear, pulley, timing belt, etc.). Replace parts on principle if damaged.

(3) Check to see if there is any damage or peeling of adhered parts (tape, Mylar, etc.). Replace any affected parts.

(4) Check to see if all the switches and sensors operate properly. Replace them if they are not operating properly.

(5) Clean the inside of the machine thoroughly.

2.1 Periodic Inspection Check List

Symbols used in the Periodic Inspection Check List

Cleaning	Lubrication	Replacement	Date	
(A) Cleaning with alcohol (D) Cleaning with a slightly damp cloth (P) Cleaning with Pit Clean (RC60) ◯ Cleaning with soft pad, cloth, or cleaner (vacuum cleaner)	(V) Vacuoline (H) Heavy-medium oil (L) Laune 40 **Application** (SI) Silicone oil (M) Molytherm (W) White grease (Molycoat)	(20) Every 20,000 copies (40) Every 40,000 copies (60) Every 60,000 copies Same thereafter (△) Replace in event of deformation or other damage	Customer's Name Machine No. Inspector Remarks	

PERIODIC INSPECTION CHECK LIST

*K=1,000

Section	Item to check	Clean at 60*K copies	Lubricate at 60*K copies	Replace at × *K copies	Check while ON	Remarks
Cleaner	1 Entire Unit	○				
	2 Main blade	○		⑥⓪	○	*1 (See page 2-6)
	3 Toner bag			②⓪		Key operator item
	4 Recovery blade	○				*2
	5 Drum bushings	○				
Drum	10 Drum shaft	○				
	11 Drum	○		⑥⓪ or more		*3
Original table	12 Glass	Ⓐ				
	13 Original cover	Ⓐ				
Optical system	20 Mirror 1	○ or Ⓐ				
	21 Mirror 2	○ or Ⓐ				
	22 Mirror 3	○ or Ⓐ				
	23 Mirror 4	○ or Ⓐ				
	24 Mirror 5	○ or Ⓐ				
	25 Mirror 6	○ or Ⓐ				
	26 Slit glass	○ or Ⓐ				(both sides)
	27 Reflector	○ or Ⓐ				
	28 Lens	○ or Ⓐ				
	29 Exposure lamp			△	○	
	30 Auto exposure sensor	○			○	
	31 Reproduction ratio mechanism (mirrors)				○	
	32 Reproduction ratio mechanism (lens)				○	
	33 Sliding sheets (front/rear)	Ⓐ		△		
	34 Air filter	○		△		Replace when heavily stained
	35 Ozone filter	○		⑥⓪		
Chargers	40 Charger case	○		△		
	41 LED eraser array	○				
	42 Charger wire	○		⑥⓪ △	○	
	43 Terminal contact	○				Use sandpaper as required
	44 Grid	Ⓐ		⑥⓪		
	45 Discharge lamp	○				
Developer unit	50 Entire unit	○				
	51 Developer material			⑥⓪		*4
	52 Rubber seal	○		△		

*K=1,000

Section	Item to check	Clean at 60*K copies	Lubricate at 60*K copies	Replace at × *K copies	Check while ON	Remarks
Paper feeding section	60 Pick-up roller	Ⓐ		△		
	61 Paper feed roller	Ⓐ		△		
	62 Separation roller	Ⓐ		△		
	63 Aligning roller	Ⓐ	Ⓢ	△		*10
	64 Paper guide	○				
	65 Brush	○		△		
	66 Transport guide section	○				
	67 Transport roller (left)	Ⓐ	Ⓢ	△		MY-1004 *9
	68 Transport roller (right)	Ⓐ	Ⓢ	△		MY-1004 *9
Fuser unit	70 Teflon roller (upper)	Ⓟ		⑫⓪		*5
	71 Heat roller entrance guide	Ⓟ				
	72 Rubber roller (lower)	Ⓟ		⑱⓪		*6
	73 Cleaning felt roller			⑥⓪		*7
	74 Thermistor	○ or Ⓟ		△		
	75 Scrapers (for heat rollers)	Ⓟ		△		*8
	76 Heat roller exit guide	Ⓟ				
	77 Exit roller	Ⓐ				
	78 Cleaning blade	○				
Drive system	80 Drive gear (teeth)		Ⓢ			
	81 Stad of drive gear		Ⓢ			
Sorter kit	82 Shaft and bushing		Ⓢ			*11

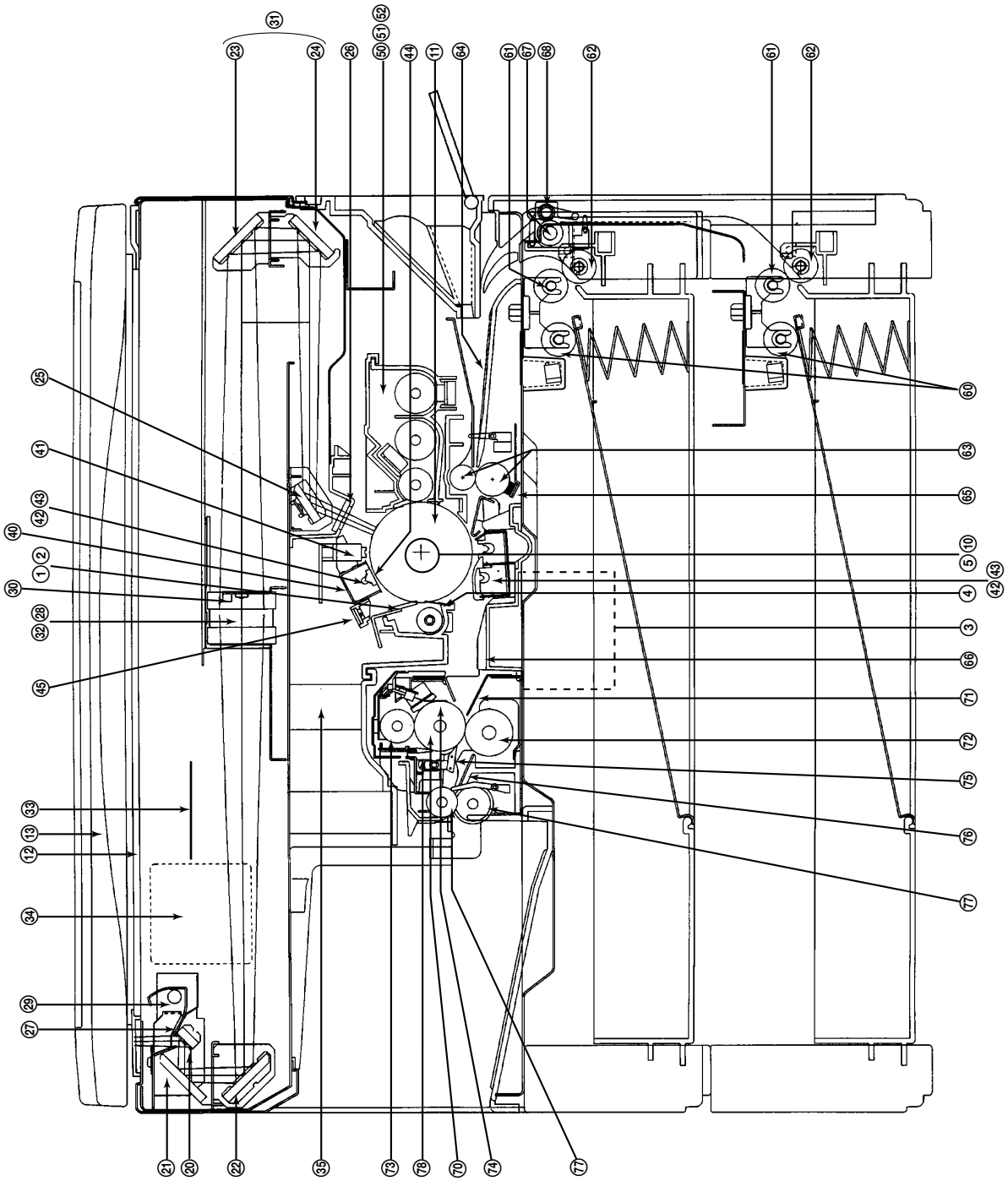
31
23
24
26
50
51
52
44
11
64
61
67
68
62
61
62
25
41
43
42
40
2
1
30
28
32
45
60
63
65
10
5
43
4
42
3
66
71
72
75
76
77
33
13
12
34
29
27
21
20
22
35
73
78
70
74
77

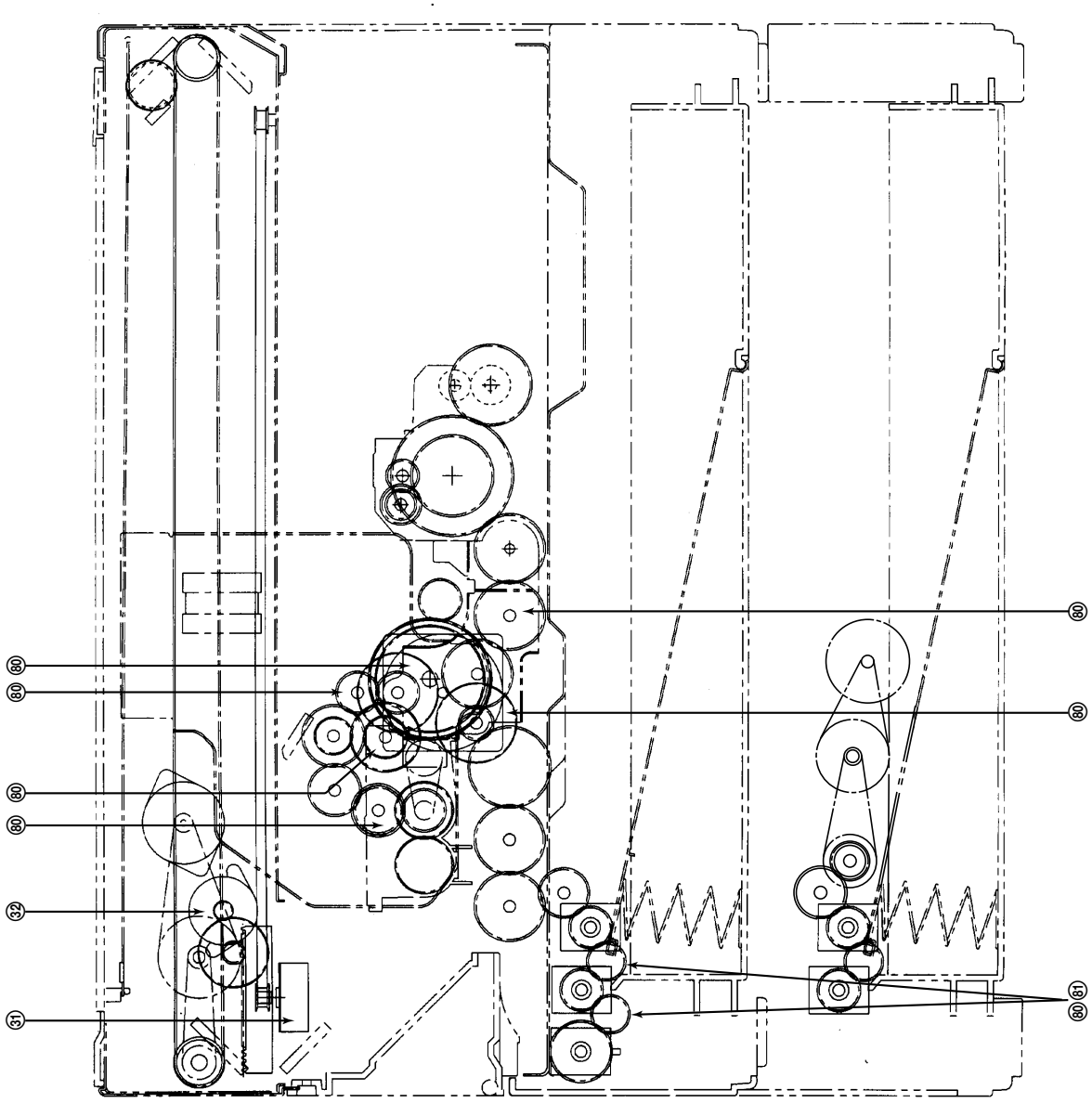
80
80
80
80
80
80
32
31
80
81

Remarks in the PERIODIC INSPECTION CHECK LIST:

*1. Main blade

If poor cleaning occurs even before the replacement number of copies are made due to the adhesion of paper dust, etc., since the blade edge may have been damaged, replace the main blade as required. Cleaning the edge with a dry cotton can damage it, so wipe the edge lightly using a soft cloth soaked with alcohol; be sure to check for no adhesion of cloth fibers.

*2. Recovery blade

If the edge of the recovery blade is damaged, replace the blade.

*3 Drum

Refer to paragraph 3.2.

*4 Developer material

When the developer material is replaced, be sure to check the auto-toner sensor.

*5 Teflon roller
*6. Rubber roller

} Refer to paragraph 3.5.

*7. Cleaning felt roller

Refer to paragraph 3.3.

*8. Scraper

Scraper whose tip is damaged should be replaced. If you try to scrape off the toner firmly caked on the tip forcefully, it may easily be damaged. So replace scrapers if their tip is heavily stained.

*9. Transport roller

When oiling the transport roller, after having disassembled and cleaned the roller, apply a drop of silicone oil, and then while turning the bushing to spread the oil, insert it.

*10.Aligning roller

After disassembling the upper or lower aligning roller for cleaning, apply one drop of silicone oil to the inside of the bushing (sliding portion of the aligning roller).

When reassembly has been accomplished, rotate the roller to facilitate the spreading of the oil.



*11.Shaft and bushing

After having disassembled and cleaned the sorter kit roller, apply a drop of silicone oil to the shaft and the shaft interior, reassemble the roller, and then rotate it to spread the oil. This oiling is performed as a countermeasure to abnormal noise.

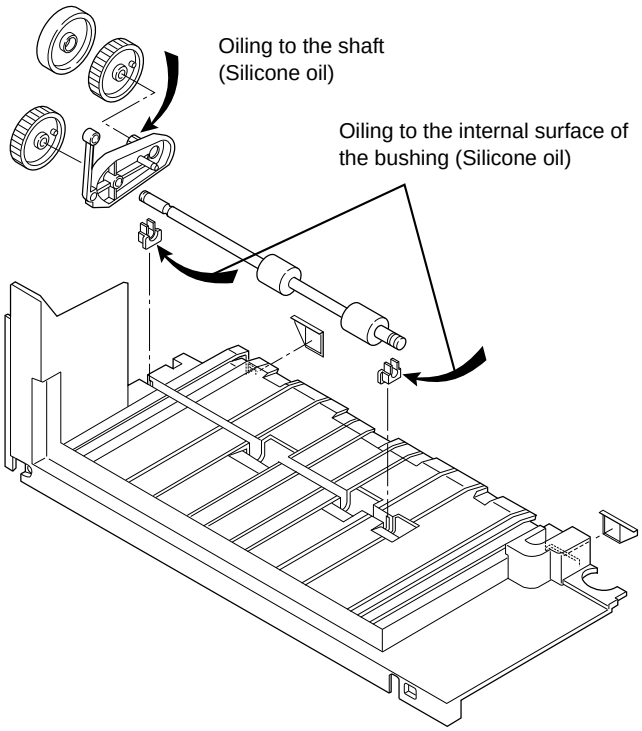

2.2 Oiling Cycle Table

No.*	Item to be oiled	Type of oil	Oiling cycle Number of copies × 1000
63	Aligning roller	Silicone oil	60
67	Transport roller (left)	Silicone oil	60
68	Transport roller (right)	Silicone oil	60
80	Drive gears (teeth)	Silicone oil	60
81	Stad of drive gear	Silicone oil	60
82	Shaft and bushing	Silicone oil	60

* Numbers correspond with those in the PERIODIC INSPECTION CHECK LIST.
Note: Do not give any oil to rollers, belts and belt pulleys.



2.3 Supplies/Parts Replacement Schedule

No.*	Parts name	Code name	Replacement cycle (Number of copies x 1000)	**Parts List Page/item No.
2	Main blade	PS-BL1550D	60	P17, I34
3	Toner bag	PS-TB1550 PS-TB1550E (for Europe)	20	P6, I38
11	Drum	PS-OD1550	60 or more	P14, I1
35	Ozone filter	—	60	P3, I7
42	Charger wire	—	60	P15, I8/P16, I9
44	Grid	—	60	P15, I13
51	Developer material	PS-ZD1550	60	—
70	Teflon roller (upper)	PS-HR1550U	120	P19, I2
72	Rubber roller (lower)	PS-HR2510L	180	P20, I5
73	Cleaning felt roller	PS-SR1550H	60	P19, I12

* Numbers correspond with those in the PERIODIC INSPECTION CHECK LIST.
** Refer to SERVICE PARTS LIST ED-1550.

2.4 Jig List

Door switch jig	**P100, I1
Drum jig	**P100, I2
Wire holder jig	**P100, I3
Doctor sleeve jig	**P100, I4

** Refer to SERVICE PARTS LIST ED-1550.

3. PRECAUTIONS FOR STORING AND HANDLING SUPPLIES

3.1 Precautions for Storing Toshiba Supplies

A. Toner and Developer

Toner and developer should be stored in a place where the ambient temperature is below 35°C (95°F) and should also be protected against direct sunlight during transportation.

B. OPC Drum

Similarly to the toner and developer, OPC drums should be stored in a dark place where the ambient temperature is below 35°C. Be sure to avoid those places where drums may be subjected to high humidity, chemicals and/or their fumes.

C. Cleaning Blade and Cleaning Felt

These items should be stored in a flat place where the ambient temperature is below 35°C and should also be protected against high humidity, chemicals and/or their fumes.

D. Heat Roller and Pressure Roller

Avoid those places where heat rollers may be subjected to high humidity, chemicals and/or their fumes.

E. Copy Paper

Avoid storing copy paper in a place where the humidity is high.

After a package is opened, be sure to place and store it in a storage bag.

3.2 Inspecting and Cleaning OPC Drum

A. Precautions for Handling

(1) Use of gloves

If fingerprints or oils adhere to the drum surface (which degrades the characteristics of the photoconductor), this affects the quality of the copy image; therefore, do not touch the drum surface with your bare hands.

(2) Removing and reinstalling drums

Since the OPC drum surface is very sensitive, be sure to handle the drum carefully when installing and removing it so as not damage its surface.

Be sure to apply patting powder (lubricant) to the entire surface of the drum before installing the drum into the machine.

Notes:

1. Application of the patting powder is to reduce the friction between the drum and cleaning blade. If the application of patting powder is neglected, the drum and cleaning blade may be damaged.
2. When paper fibers adhere to the cleaning blade edge, they may reduce the cleaning efficiency and, in addition, may damage the blade and the drum. So, if any fibers are found adhering to the blade, be sure to remove them carefully using a soft pad.

3. Installation of Machine and Storage of Drum

   Avoid installing the machine in such places where it may be subjected to high temperature, high humidity, chemicals and their fumes.

   Do not leave drums in a bright place for a long time, otherwise the drum will fatigue and will not produce sufficient image density immediately after being installed in the machine. However, this effect may decrease as time elapses.

4. Cleaning the Drum

   At periodic maintenance calls, wipe clean the entire surface of the drum using the designated cleaning cotton or soft pad. Use sufficiently thick cleaning cotton so as not to scratch the drum surface inadvertently with your fingertips or nails. Also, remove your ring and wrist-watch before starting cleaning work to prevent accidental damage to the drum.

   Be sure not to use other organic solvents or silicone oil as they will have an undesirable effect on the drum.

5. Repairing Scratches on OPC Surface

   If a scratch exists on the OPC surface through which the aluminium substrate can be seen, no copy image will be produced on this area and, in addition, the cleaning blade will be damaged so replacement with a new drum will be necessary.

6. Collecting Used OPC Drums

   For disposition of used OPC drums, it is recommended to proceed according to the corresponding regional environmental regulations.

3.3 Checking and Replacing Cleaning Felt Roller

(1) Precautions for Handling

Never allow solvents such as thinner, etc. to adhere to the cleaning felt roller.

(2) Poor Heat-Roller Cleaning and Countermeasures

Poor heat-roller cleaning should be judged by the deposited toner on the roller. When the felt roller has heavy toner deposits, the heat-roller surface may be stained with toner. If this happens, replace the cleaning felt roller.

The cleaning felt roller will be gradually degraded due to subjection to the heat from the heat roller over a long period of time; therefore, replace it preferably after about 60,000 copies have been made.

3.4 Checking Drum Cleaning Blade

(1) Precautions for Handling

Pay attention to the following points as the cleaning blade life is determined by its edge condition:

1. Do not allow a hard object to hit on or rub against the blade edge. Do not rub the edge with a cloth.
2. Do not leave oil (or fingerprints, etc.) on the edge.
3. Do not put solvents such as thinner, etc. on the edge.
4. Do not deposit dirt such as paper fibers, etc. on the blade.
5. Do not place the blade near a heat source.

3.5 Checking and Cleaning Upper and Lower Heat Rollers

(1) Precautions for Handling

- Upper Heat Roller

1. Do not leave oil (fingerprints, etc.) on the heat roller.
2. Be extremely careful not to allow a hard object to hit on or rub against the roller because the thin Teflon layer coated on the alminum substrate is easily damaged and, if damaged, will result in poor drum cleaning.

- Lower Pressure Roller

1. Do not leave oil (fingerprints, etc.) on the roller surface.

(2) Checking

1. Check for staining and damage to the heat roller and clean or replace if necessary.
2. Clean the separation claws and check for chipped claws.
3. Check cleaning condition of cleaning felt.
4. Check the thermistor for proper contact with the heat roller.
5. Check the fused condition of the toner image.
6. Check the heat rollers for proper rotation.

(3) Cleaning Procedure for Heat Rollers

When the heat roller becomes dirty, it will cause paper jamming. In that case, wipe the roller surface clean with cotton soaked in alcohol or heat-roller cleaner “RC60” which contains silicone oil. For a better cleaning effect, clean the roller while it is still warm.

Note: Be careful not to rub against the Teflon-coated surface with your fingernails or hard objects because it is easily damaged. Do not use silicone oil on the upper heat roller.

4. TROUBLESHOOTING

(1) C21 Optical system initialization errors

① Turn the power supply ON/OFF, then visually check that the following units are initialized.

C21

Q1: Does the carriage function? (Follow "YES" if the carriage functions even slightly, or sounds as if it is trying to function.)

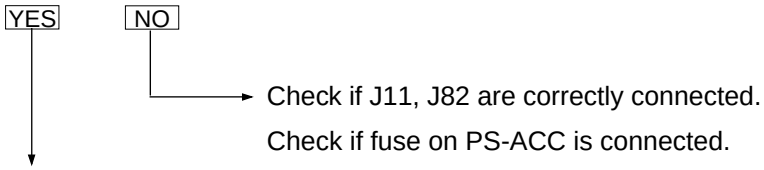

Q2: Is carriage initialization normal?

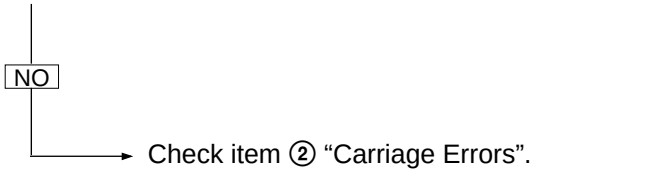

Q3: Is the Service Call message displayed after the lens and mirror move?

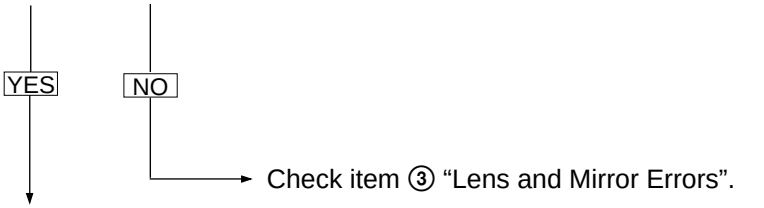

Q4: Use the TEST MODE CH (0 4) command code 21 or 22 to move the lens and mirror to the paper-exit position (enlargement position), then turn the power supply ON and OFF again. When the power is turned ON again, do the lens and/or mirror make an out-of-step noise at the home position?

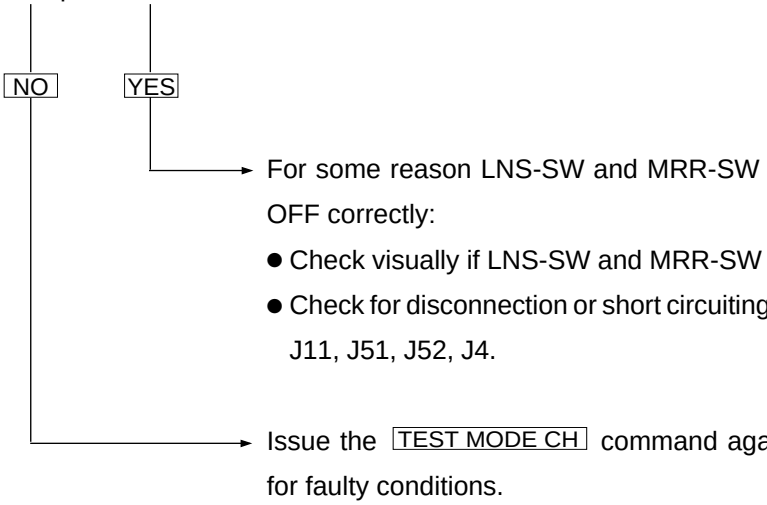

② Carriage errors

Remove the glass and move the carriage to the paper-feed end, then turn ON the power supply and check the following:

Q1: Is there a loud noise after the carriage hits the home position?

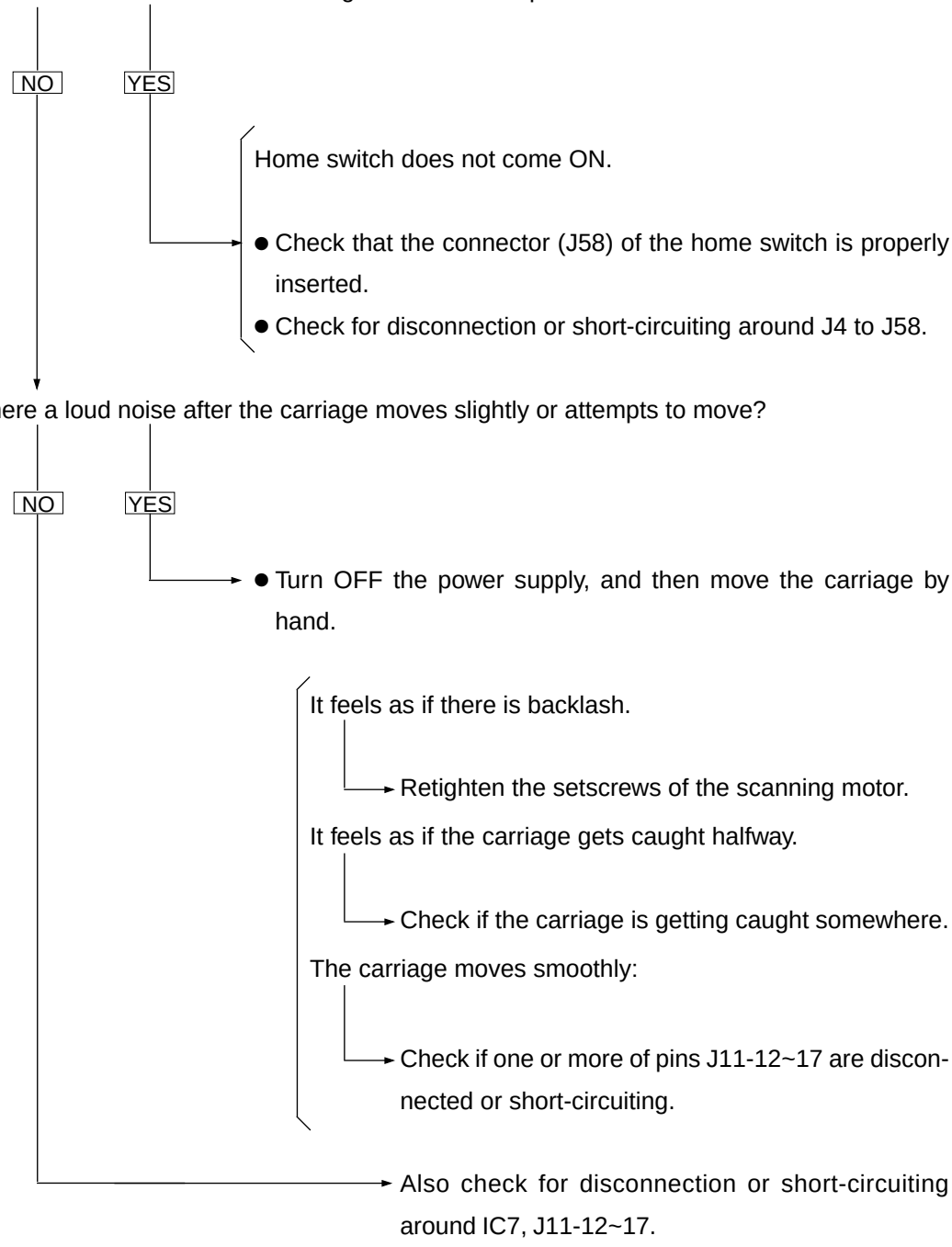

③ Lens and mirror errors

Q1: Are the lens and mirror completely inoperable without any out-of-step noise being heard?

YES

- Check if J11 is correctly connected.
- Check if J81, J80 and J83 are correctly connected.

NO

Remove the glass and lens cover.

Press “0” and “4” keys to select TEST MODE CH. Using TEST CODE 21 (LNS-MTR), 22 (MRR-MTR), move the lens motor and mirror motor to check that they operate smoothly.

- Should it stop halfway as if caught and an out-of-step noise be heard, check the mechanism.
- The out-of-step noise is heard but there is no movement.

Rotate the motor gears by hand to move the mirror or lens slightly, and carry out the operation test again.

If the out-of step noise is heard again but there is no movement.

LNS-MTR → Check for disconnection or short-circuiting around pins 18 through 22 of J11 and J82.

MMR-MTR → Check for disconnection or short-circuiting around pins 1 through 5 of J11 and J81, and J79.

(2) C41, C43, C44 Thermistor disconnection

● Open the rear cover, pull out the power supply plug and check the following:

① Are any of the connector terminals of J7 and J64 pulled out or discounted?

② Is either the thermostat of the heater or the heater lamp disconnected?

Check the above, and if necessary carry out repairs.

Then connect digital tester between pins 1 and 6 of J7 on PWA-LGC and turn ON the power supply.

Q1: Does the heater come ON?

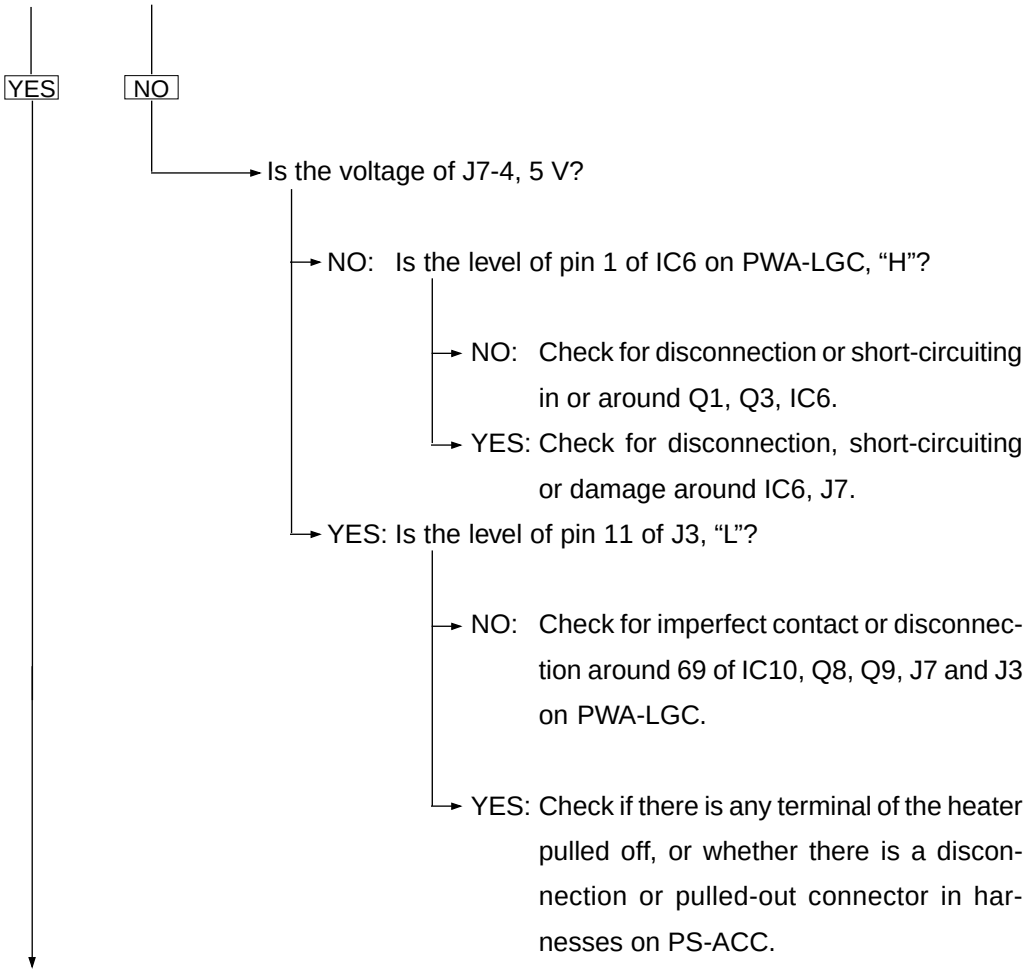

Check the next question (Q2).

Q2: Does the voltage displayed on the tester remain at 0 V?

NO

YES → Turn off the main switch and unplug, and disconnect the heater on PS-ACC.

Turn on the main switch (check that the heater is OFF). After checking that the fuser unit is hot, check the following:

① Check that J7-5 is greater than 2.5 V and less than 5V.

② Check that J7-6 is greater than 0 V and gradually drops over a period of time.

③ Pull out J7, then test for continuity between 5 and 6 pins of J7 on harness, to check if the thermistor is disconnected.

④ Check for disconnection or short-circuiting around R7, R8, R170, R28, R25, R26, R27, R29 on PWA-LGC.

Q3: Does the heater lamp remain ON even when the voltage displayed on the tester rises above 2.5 V?

NO

YES → Turn off the main switch and unplug, and disconnect the heater on PS-ACC.

Turn on the main switch (check that the heater is OFF). After checking that the fuser unit is hot, check the following:

① Check for damage, disconnection or short-circuiting around IC6, Q1, Q3 on PWA-LGC.

② With the signal lines harness of the SSR pulled out, does the heater go OFF when the door switch is forcibly turned ON and the power supply turned ON? If NO, the SSR may be damaged. Replace the SSR and check again.

Move the connectors and harnesses of J7 and the relay, and check that the voltage displayed on the tester does not drop intermittently.

(3) C01 Main motor lock

- Using code 1 of TEST MODE CH, turn ON the main motor.
- Check ON/OFF condition of LED on main motor.
  - ① When the LED is OFF:
    - Check if the connector of J531 and J532 on main motor is disconnected.
    - Check if fuse on PS-ACC is blown.
  - ② When the LED is ON and does not flicker:
    - Check that the main motor makes no unusual noise when it rotates.
    - Check for disconnection or short-circuiting around main motor and J10-4, R69, 105, IC10-55 on PWA-LGC, and the harness that runs from J10 to main motor.