TOSHIBA

SERVICE MANUAL
SORTER
MG-1003



Click the Page Only button to close the overview area of the window.

Click the Bookmarks and Page button to open the Contents and display bookmarks created for the document. Click a bookmark's name to go to the Page marked by that bookmark.

Click the Thumbnails and Page button to open the overview area and display thumbnail images of each document page. Click a thumbnail to go to the page marked by that thumbnail.

Copyright TOSHIBA CORPORATION 1995
ALL RIGHTS RESERVED

General Precautions for Installation/Servicing/Maintenance

1. When installing the Sorter MG-1003 to the Plain Paper Copier, be sure to follow the instructions described in the “Unpacking/Set-Up Procedure for the MG-1003” booklet which comes with each unit of the MG-1003.
2. The MG-1003 should be installed by an authorized/qualified person.
3. Before starting installation, servicing or maintenance work, be sure to unplug the copier first.
4. The MG-1003 is supplied with power from the copier.
5. Use suitable measuring instruments and tools.
6. When servicing or maintaining the MG-1003, be careful about the rotating or operating sections such as gears, pulleys, sprockets, cams belts, etc.
7. When parts are disassembled, reassembly is basically the reverse of disassembly unless otherwise noted in this manual or other related materials. Be careful not to assemble small parts such as screws, washers, pins, E-rings, toothed washers to the wrong places.
8. Basically, the machine should not be operated with any parts removed or disassembled.
9. Delicate parts for preventing safety hazard problems (such as thermofuses, door switches, sensors, etc. if any) should be handled/installed /adjusted correctly.
10. During servicing or maintenance work, be sure to check the serial No. plate and other cautionary labels (if any) to see if they are clean and firmly fixed. If not, take appropriate actions.
11. For the recovery and disposal of used MG-1003s, consumable parts and packing materials, it is recommended that the relevant regulations/rules should be followed.

How to lift the Sorter MG-1003

Be sure to hold the sorter in the positions as indicated in Fig. A.
Do NOT hold as in Fig. B.

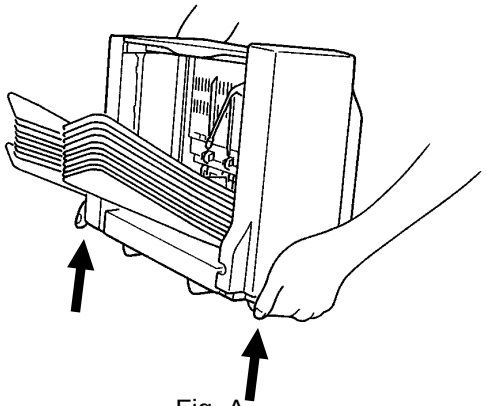

Fig. A.

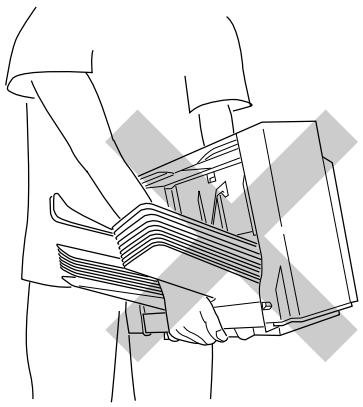

Fig. B.

ⓒ Copyright 1995 TOSHIBA CORPRATION

1. PRODUCT SPECIFICATIONS

Model name MG-1003

Type ..... Suspended type

Paper transport method ..... Roller transporting

Paper sorting method ..... Bin moving method

Acceptable paper

Mode	Number of sets	Number of Sheets	Acceptable size of paper
Non-Sort	1	60	A3, LD, B4, LG, FOLIO, COMP 50~127g/m^2
	1	100	A4, LG, ST-R, A5-R, LT, B5, A4-R, LT-R, B5-R 50~127g/m^2
Sort	10	15/bin	A3, B4, LD, LG 50~127g/m^2
Group	10	15/bin	
Sort	10	30/bin	A4, A4R, B5, B5R, A5R, LT, LTR, FLO, STR 50~127g/m^2
Group	10	20/bin	

Note: Special paper such as OHP, drawing paper, labels, etc. can be used only in the non-sort mode.

Number of bins ..... 1~10 (bin 1 doubles the non-sort bin)

Power source used ..... DC24V±10% (supplied from the copier)

Power consumption ..... 30W or less (average, in-rush current not included)

Use environment

Temperature ..... 10~30°C

Humidity ..... 20~85%RH

Weight ..... 6.8 kg aprox.

Dimension ..... 335(W) x 483(D) x 315(H) mm

2. NAMES OF MAIN COMPONENTS

2.1 Front Side View

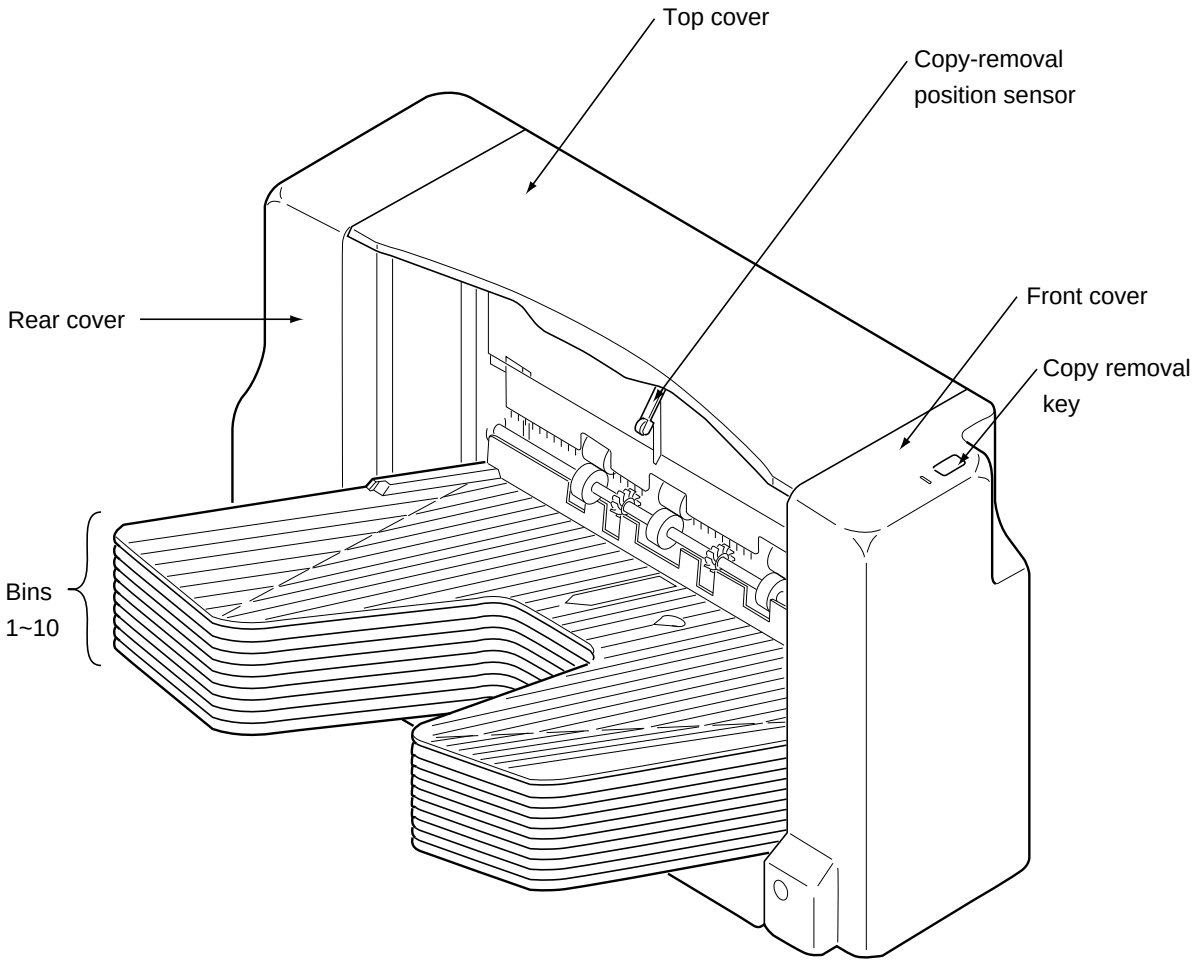

2.2 Front Side View (with Covers Removed)

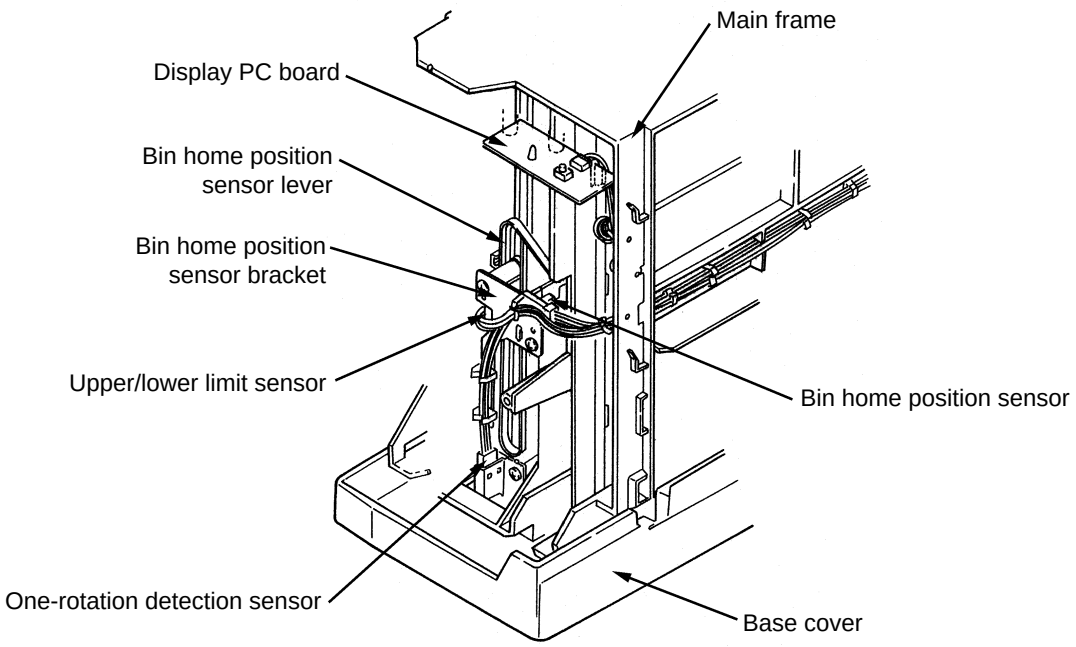

2.3 Rear Side View (with Covers Removed)

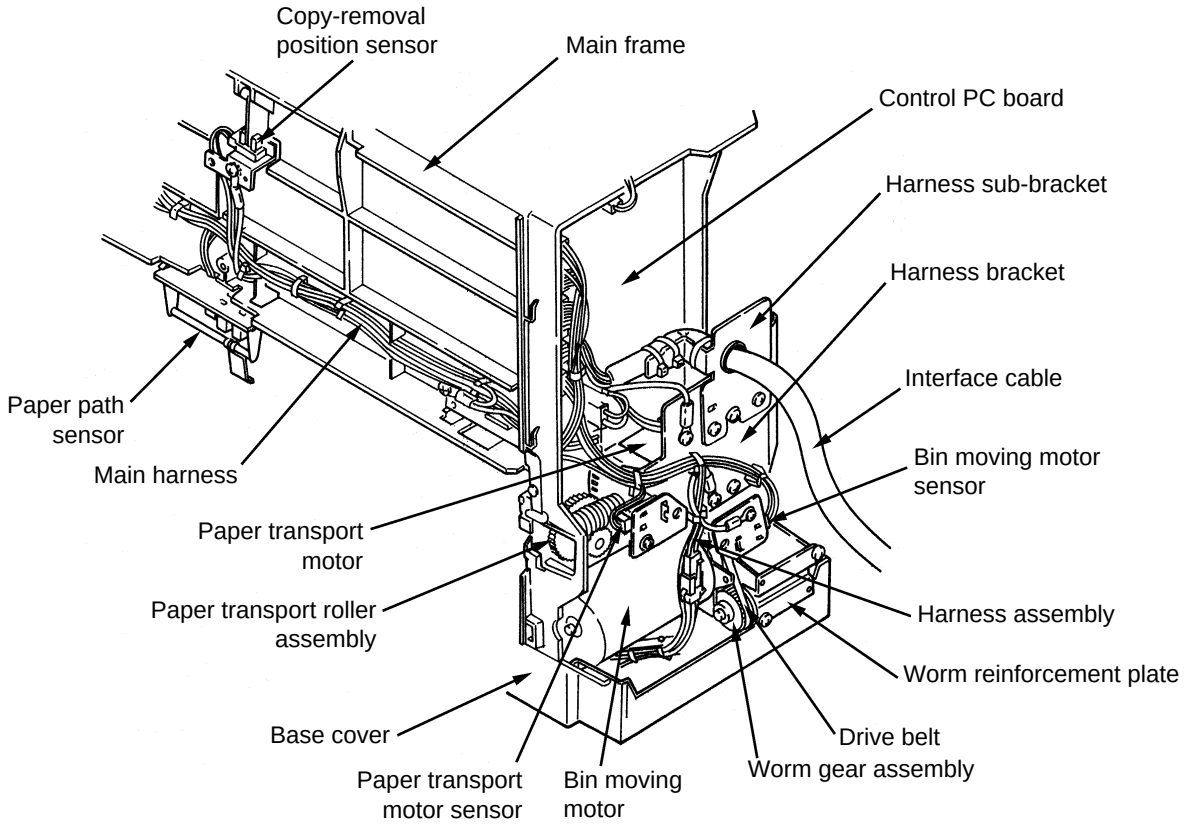

3. EXPLANATION OF OPERATION

3.1 Non-sort Mode (Cascade Mode)

(1) When the sorter receives a paper exit signal (EXIT) from the copier, the paper transport motor starts rotating.
The copy exited from the copier is transported and exited by the paper transport roller into the top bin. (Fig. 1-1)

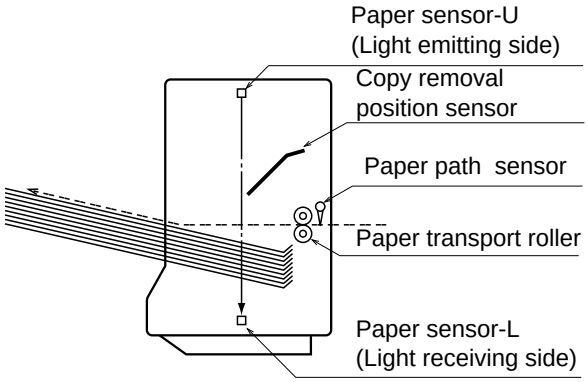

Fig. 1-1

(2) When the preset number of copies exiting from the copier exceeds the limit number of the top bin, the sorter goes into the cascade mode; a fixed time after the last sheet of the limit number passes the paper path sensor, the top bin (bin 1) moves up. (Fig. 1-2)

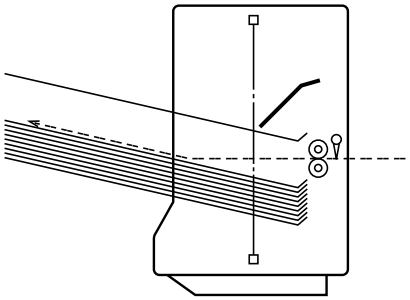

Fig. 1-2

(3) When the limit number of sheets exit into each bin, the bin moves up. This operation continues until the last bin.

(4) The exiting of sheets into the last bin continues until a signal indicating the last sheet is received from the copier.

(5) When a signal to reset the copy run signal (C-RUN) is received from the copier, the paper transport motor stops rotating.

3.2 Sort Mode

(1) When the sorter receives a paper exit signal (EXIT) from the copier, the paper transport motor starts rotating.
The copy exited from the copier is transported and exited by the paper transport roller into the top bin. (Fig. 2-1)

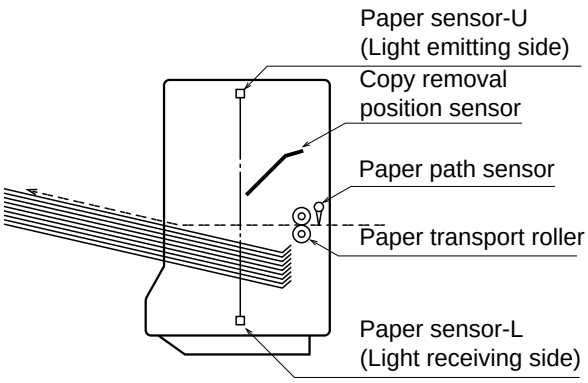

Fig. 2-1

(2) A fixed timer after the sheet passes the paper path sensor, the bin moves up (or down). (Fig. 2-2 and Fig. 2-3)

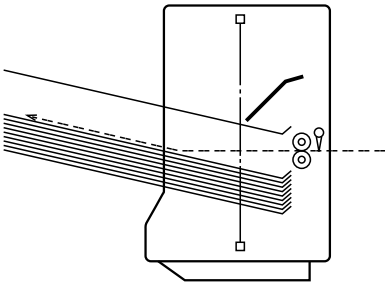

Fig. 2-2

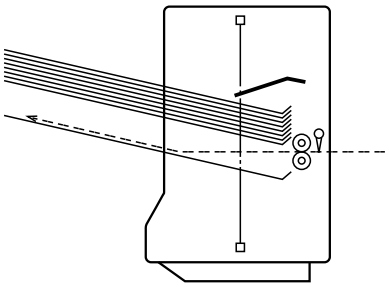

Fig. 2-3

(3) After that, operation in step (2) is repeated until a signal indicating the last sheet (C-END) is received from the copier.

(4) For the sheet for which the sorter has received the last sheet signal (C-END), the sorter does not move the bin when its passage over the paper path sensor is detected; a fixed time after passage of the next sheet is detected, the sorter changes its moving direction to continue sorting.

(5) After that, operation in steps (2), (3) and (4) is repeated.

(6) When the sorter receives a signal to reset the copy run signal (C-RUN), the paper transport motor stops rotating.

3.3 Group Mode

(1) When the sorter receives a paper exit signal (EXIT) from the copier, the paper transport motor starts rotating. The sheet exited from the copier is transported and exited by the paper transport roller into the top bin. (Fig. 3-1)

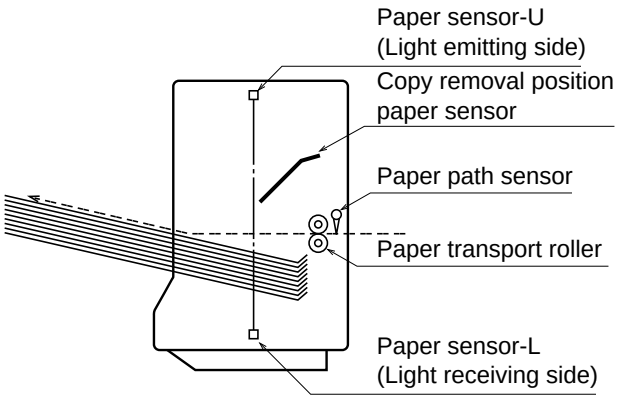

Fig. 3-1

(2) Sheets continue exiting into the same bin until the sorter receives a last-sheet signal(C-END) from the copier.
A fixed time after the sheet for which the last-sheet signal was received passes the paper path sensor, the bin is moved up. (Fig. 3-2)

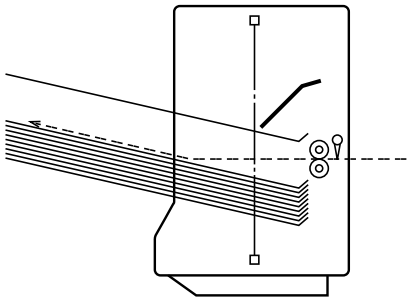

Fig. 3-2

(3) After that, the procedure in step (2) is continued until a reset signal for the copy run signal (C-RUN) is received from the copier.

(4) When a signal to reset the copy run signal (C-RUN) is received from the copier, the paper transport motor stops rotating.

3.4 Copy Removal Mode

(1) When a copy removal signal (AUT-REM) is received from the copier or when the copy removal key is pressed, the bins move to the copy removal position. (Fig. 4-1)

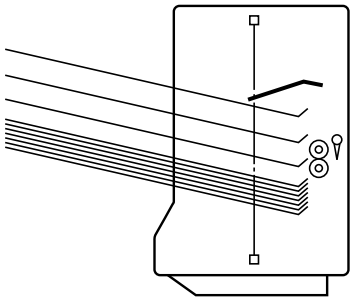

Fig. 4-1

(2) When copies are removed from the bins, the sorter moves up other bins until the copy removal position sensor detects the presence of paper.
(Fig. 4-2 and Fig. 4-3)

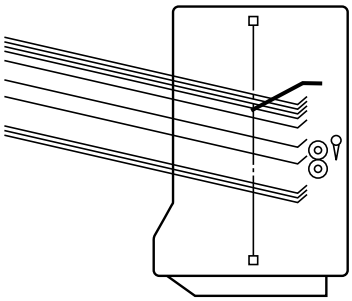

Fig. 4-2

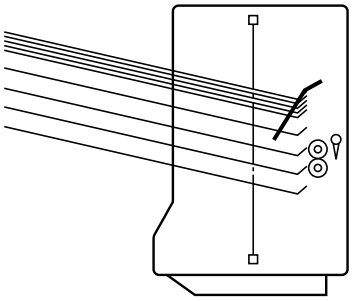

Fig. 4-3

(3) When all sheets on the bins are removed, the bins are initialized. (Fig. 4-4)

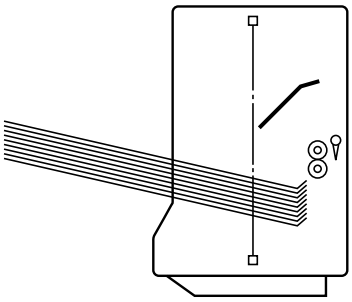

Fig. 4-4

* When ADF is used, the copy removal signal is automatically sent from the copier.

4. MECHANICAL EXPLANATION

4.1 Paper Transport Mechanism

The drive force of the paper transport motor is transmitted to the paper transport roller through gears.

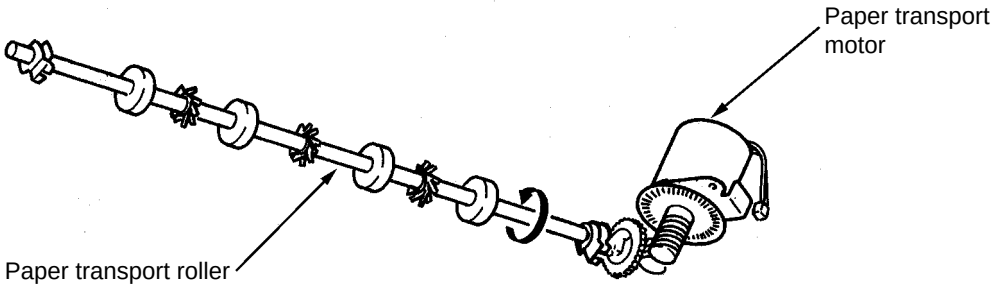

4.2 Bin Up/Down Moving Mechanism

Since this sorter is of a bin moving type, a bin designated moves to the paper transport position and copy sheets exit into the designated bin.

The drive force of the bin moving motor is transmitted through a timing belt and gears to the spiral cam ①. At the same time, it is also transmitted through a drive shaft to the spiral cam ②.

The bins are moved up or down by changing the rotation direction of the motor.

The bins are stopped at the preset position by one-rotation detection sensor tab attached to the spiral cam ②.

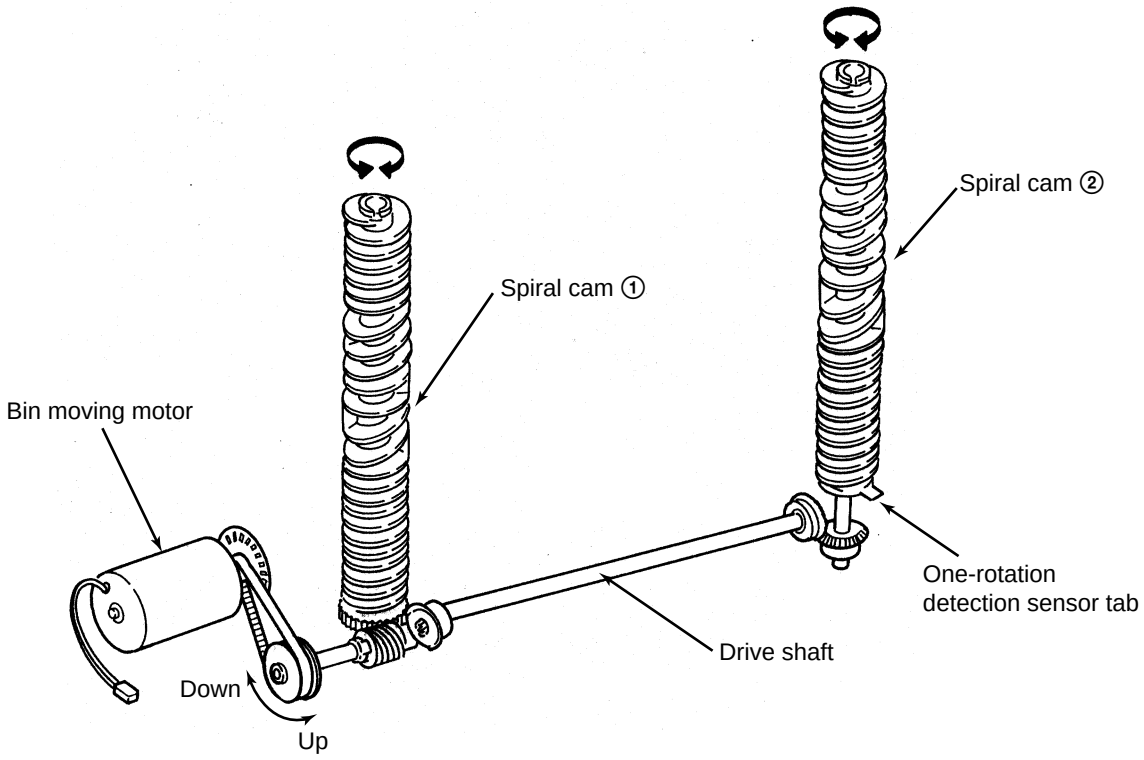

5. NAMES AND FUNCTIONS OF MAIN ELECTRICAL PARTS

5.1 Sensors and Switches

Symbol	Name	Function	Remarks
SEN1	Paper path sensor	Detects paper when its lead edge is sent to the paper transport roller.	Photo-interrupter
SEN2	Bin home position sensor	Detects the bin home position.	Photo-interrupter
SEN3	One-rotation detection sensor	Detects the bin stop position.	Photo-interrupter
SEN4	Copy removal position sensor	Detects the paper removal position.	Photo-interrupter
SEN5	Paper sensor-L and -U	Detects the paper presence on the tray.	Transmission type
SEN6	Bin moving motor sensor	Detects bin moving motor rotation.	Photo-interrupter
SEN7	Paper transport motor sensor	Detects paper transport motor rotation.	Photo-interrupter
SEN8	Upper/lower limit sensor	Detects the bin limit positions.	Photo-interrupter

5.2 Motors

Symbol	Name	Operation and function	Remarks
M1	Paper transport motor	Drives the paper transport roller.	DC brush motor
M2	Bin moving motor	Drives the spiral cams that move up and down the bins.	DC brush motor

5.3 Electrical Parts Location

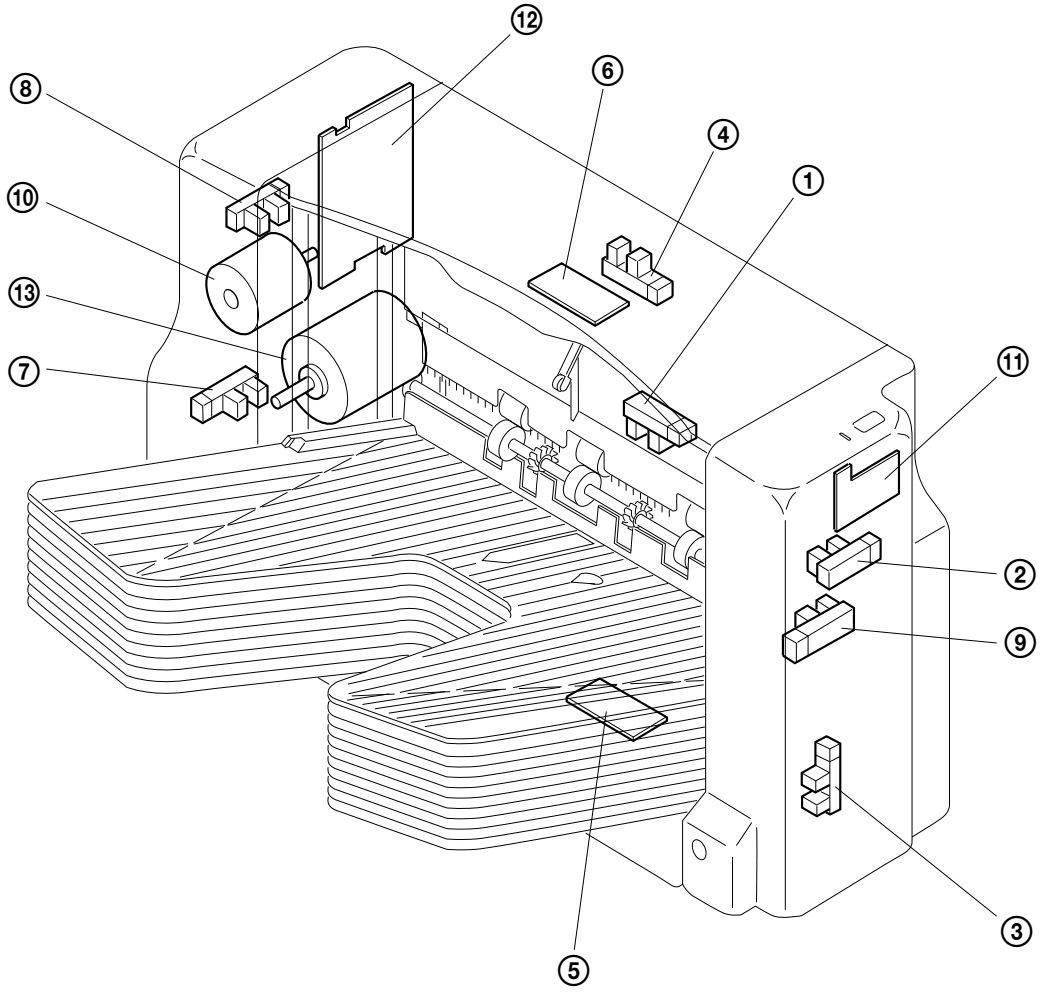

NO	Symbol	Description
①	SEN1	Paper path sensor
②	SEN2	Home position sensor
③	SEN3	One-rotation detection sensor
④	SEN4	Copy-removal position sensor
⑤	SEN5	Paper sensor-L (Print wiring board assembly)
⑥	SEN5LD	Paper sensor-U (LED)
⑦	SEN6	Bin moving motor sensor
⑧	SEN7	Paper transport motor sensor
⑨	SEN8	Upper/Lower limit sensor
⑩	M1	Paper transport motor
⑪	PBA-OPPANEL-T	Print wiring board assembly for display
⑫	PBA-CONTROL-T	Print wiring board assembly for control
⑬	M2	Bin moving motor

6. BLOCK DIAGRAM FOR TRANSMISSION/RECEPTION OF SIGNALS

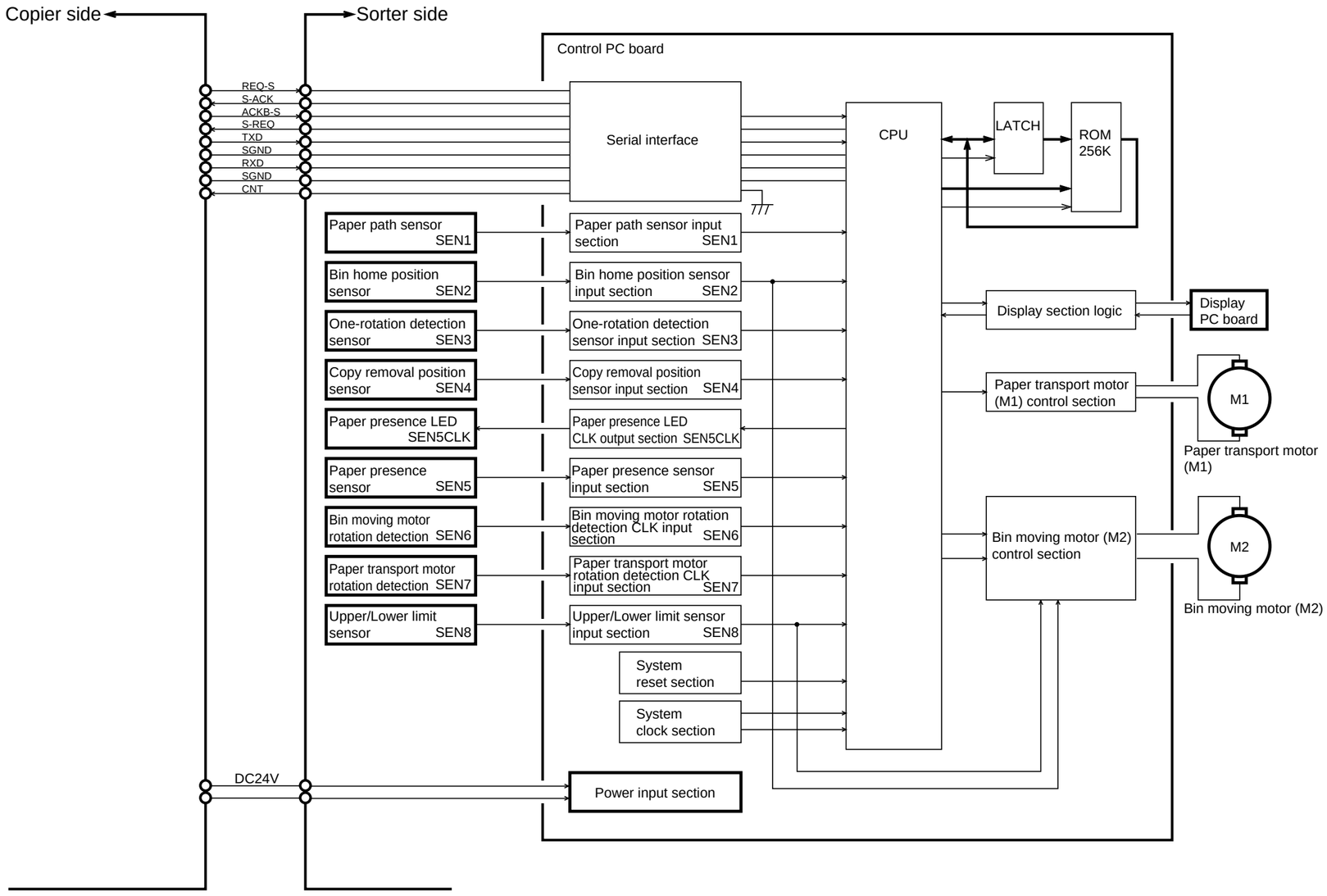

7. INTERFACE SIGNALS

The sending and receiving of signals between the copier and the sorter is conducted by using the six lines as show below:

REQ1 ..... Communication request signal (form the copier to the sorter)
REQ2 ..... Communication request signal (from the sorter to the copier)
ACK1 ..... Communication request response signal (from the sorter to the copier)
ACK2 ..... Communication request response signal (from the copier to the sorter)
S-TXD ..... Data sent from the copier to the sorter
S-RXD ..... Data sent from the sorter to the copier

Since data transmission between the copier and the sorter (S-TXD and S-RXD) is conducted by means of serial transmission, it is not possible to check for the correct data transmission in the field.

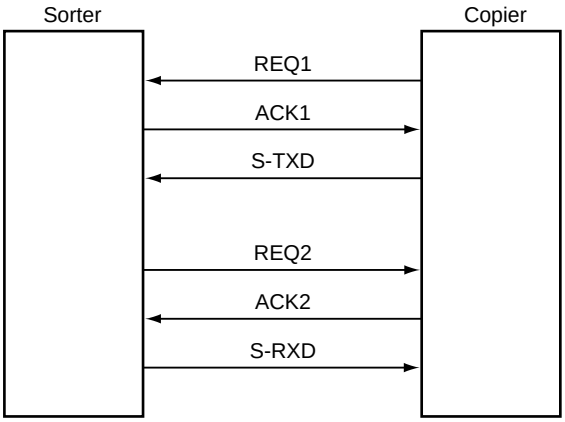

8. OPERATION FLOW CHART

8.1 Non-Sort/Cascade Mode

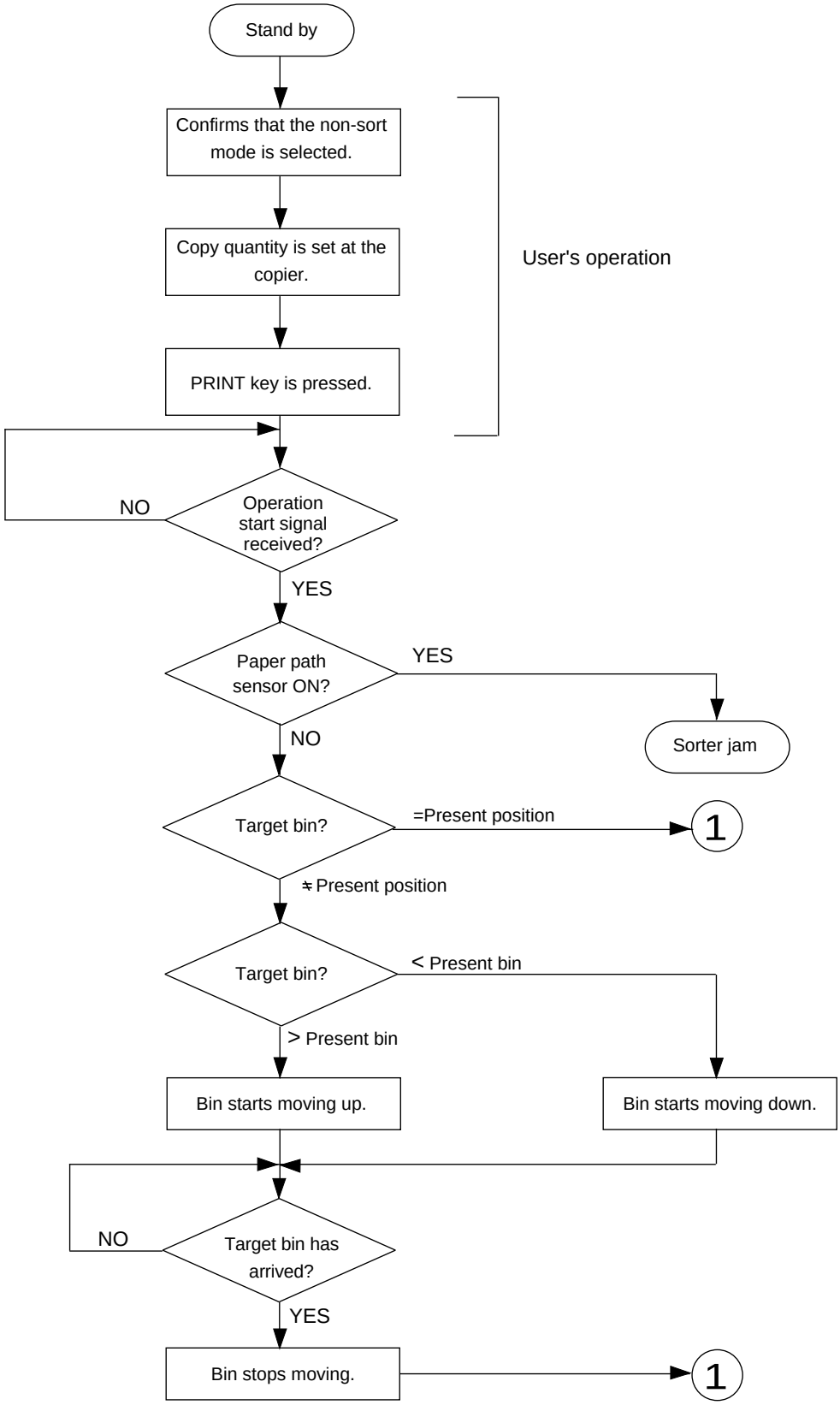

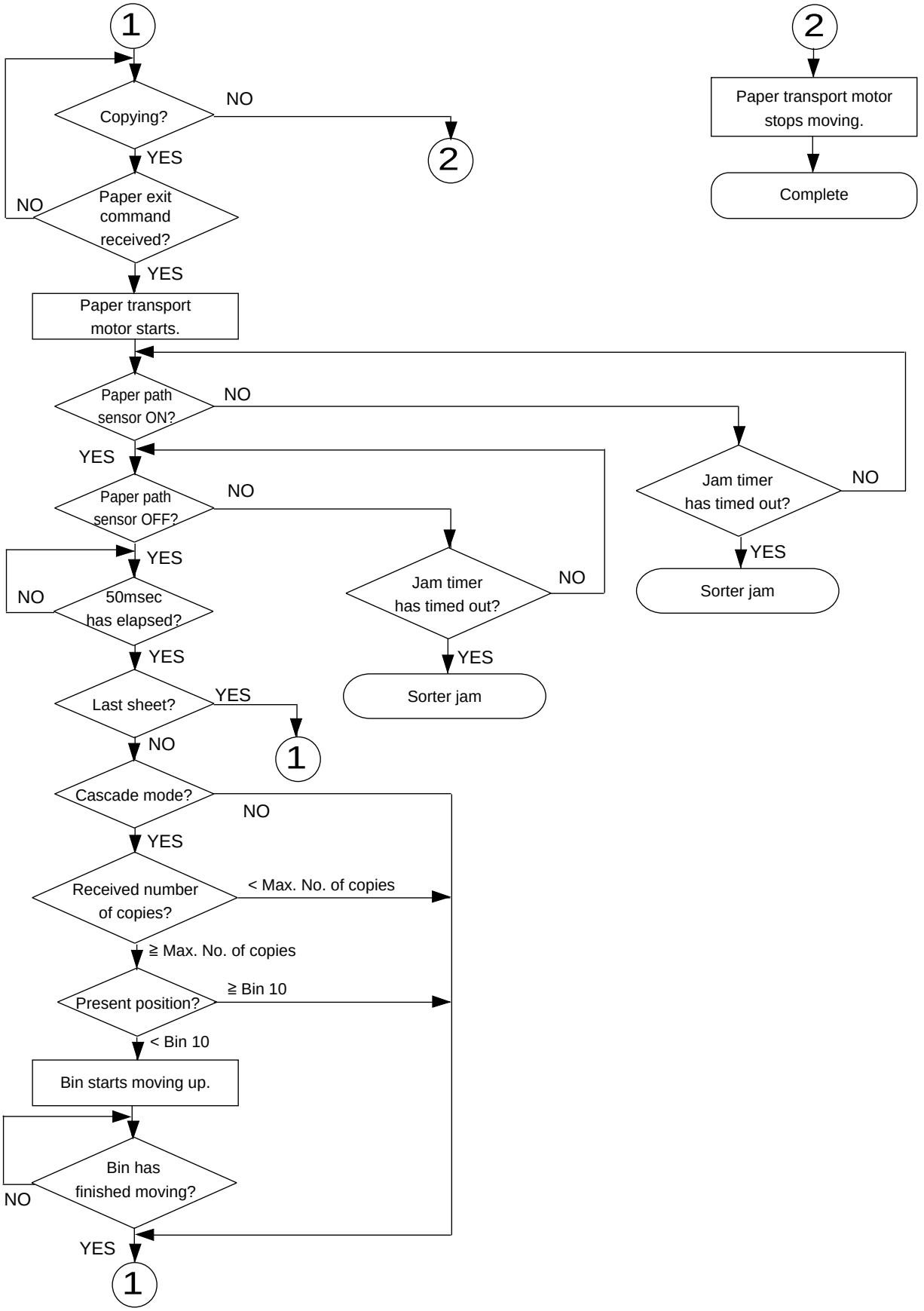
1
Copying?
NO
2
YES
NO
Paper exit command received?
YES
Paper transport motor starts.
Paper path sensor ON?
NO
YES
Paper path sensor OFF?
NO
YES
NO
50msec has elapsed?
YES
Last sheet?
YES
1
NO
Cascade mode?
NO
YES
Received number of copies?
< Max. No. of copies
≧ Max. No. of copies
Present position?
≧ Bin 10
< Bin 10
Bin starts moving up.
NO
Bin has finished moving?
YES
1
Jam timer has timed out?
NO
YES
Sorter jam
Jam timer has timed out?
NO
YES
Sorter jam
2
Paper transport motor stops moving.
Complete

8.2 Sort Mode

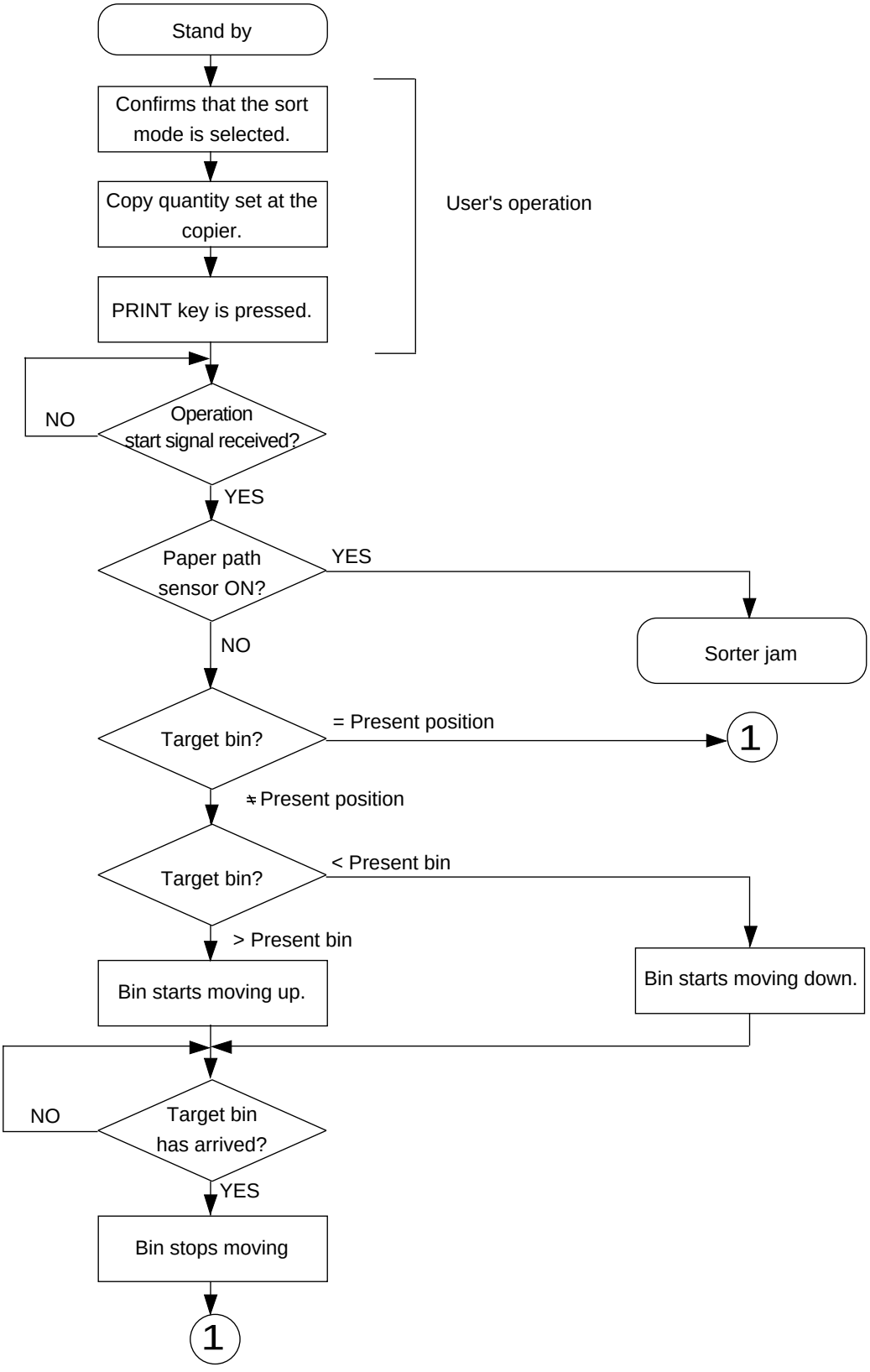
Stand by
Confirms that the sort mode is selected.
Copy quantity set at the copier.
PRINT key is pressed.
User's operation
NO
Operation start signal received?
YES
Paper path sensor ON?
YES
Sorter jam
NO
Target bin?
= Present position
1
≠ Present position
Target bin?
< Present bin
> Present bin
Bin starts moving up.
Bin starts moving down.
NO
Target bin has arrived?
YES
Bin stops moving
1

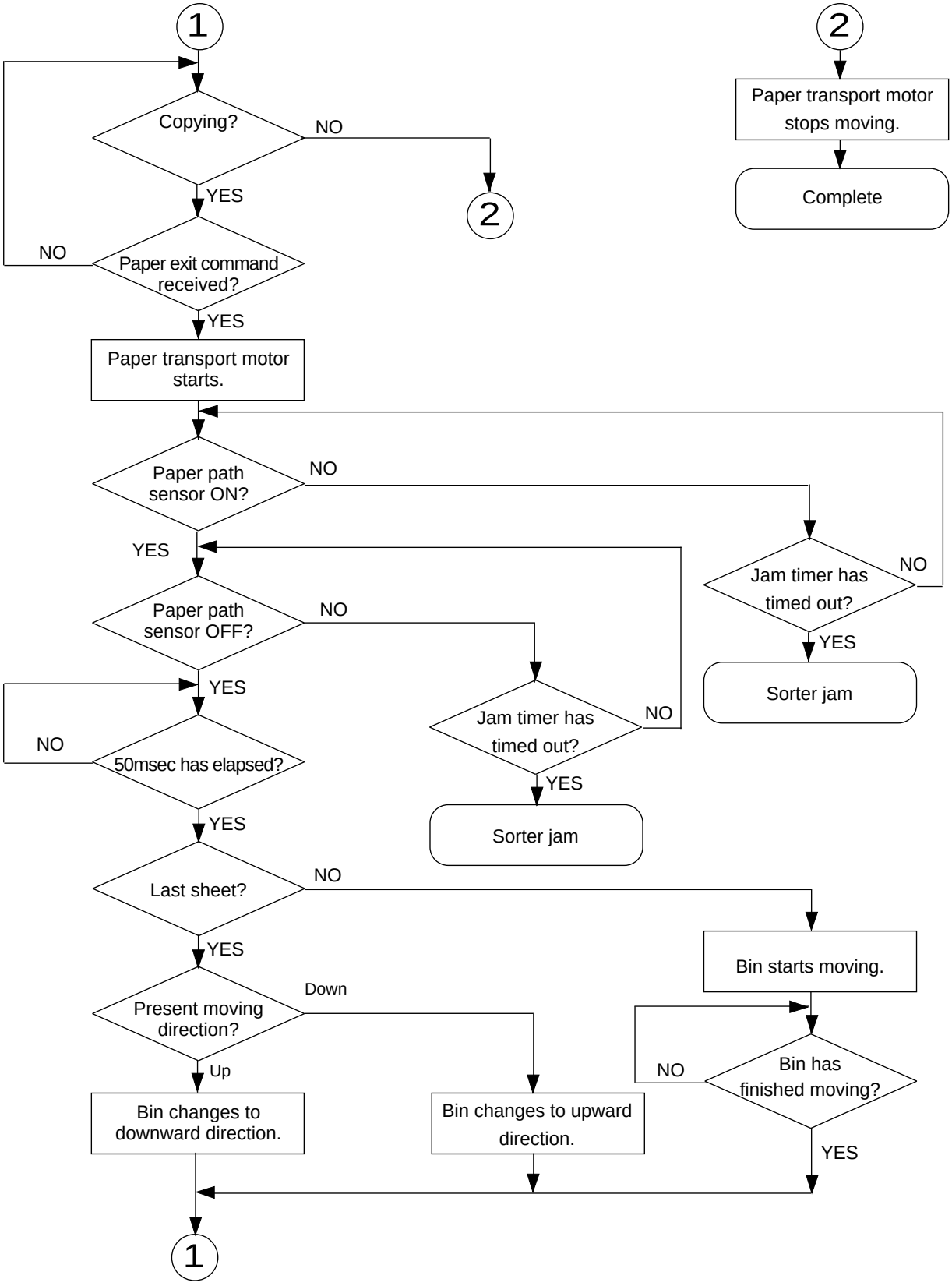
1
Copying?
NO
YES
2
NO
Paper exit command received?
YES
Paper transport motor starts.
Paper path sensor ON?
NO
YES
Jam timer has timed out?
NO
YES
Sorter jam
Paper path sensor OFF?
NO
YES
Jam timer has timed out?
NO
YES
Sorter jam
NO
50msec has elapsed?
YES
Last sheet?
NO
YES
Bin starts moving.
Present moving direction?
Down
Up
Bin changes to downward direction.
Bin changes to upward direction.
NO
Bin has finished moving?
YES
1
2
Paper transport motor stops moving.
Complete

8.3 Group Mode

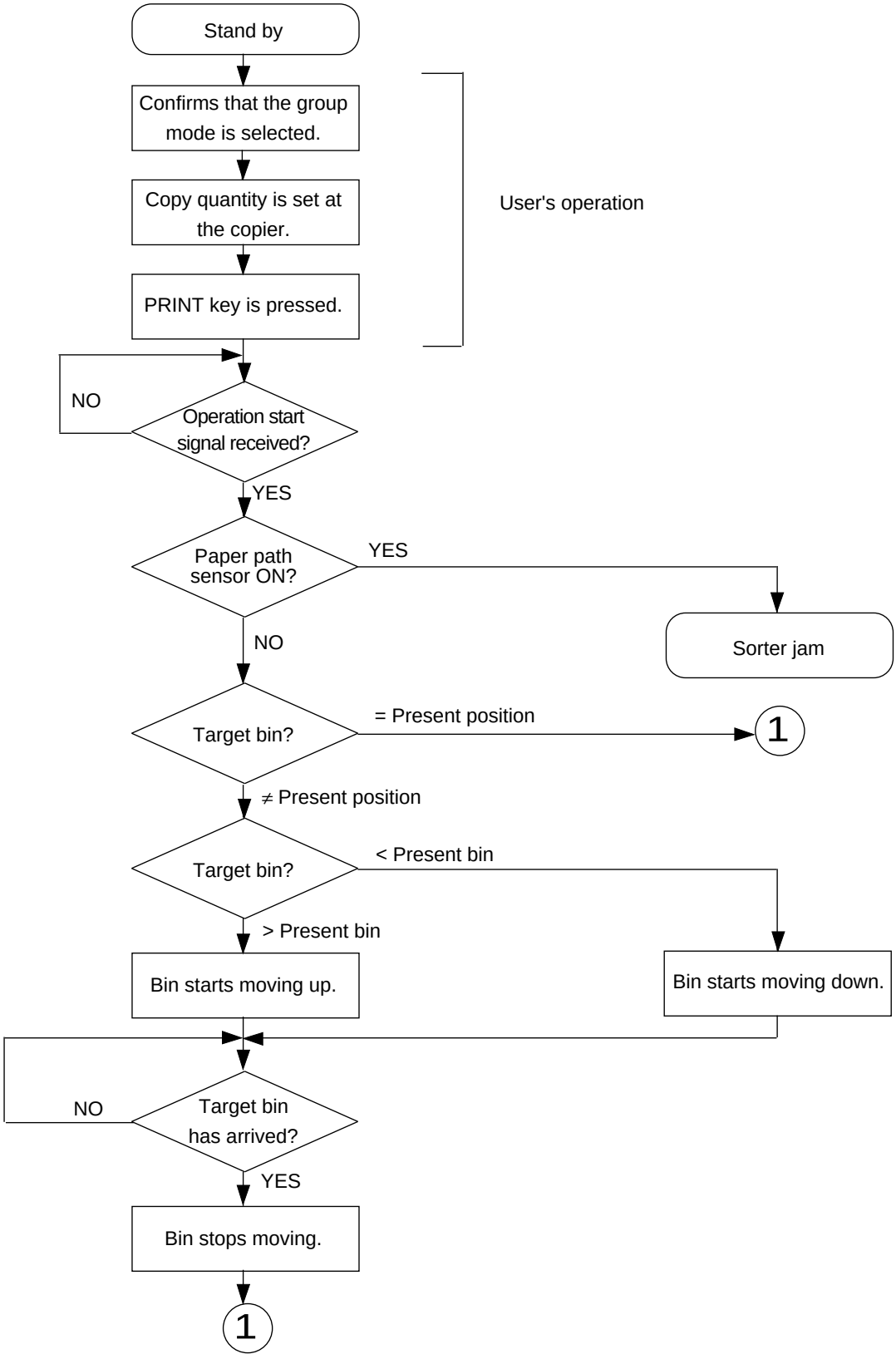

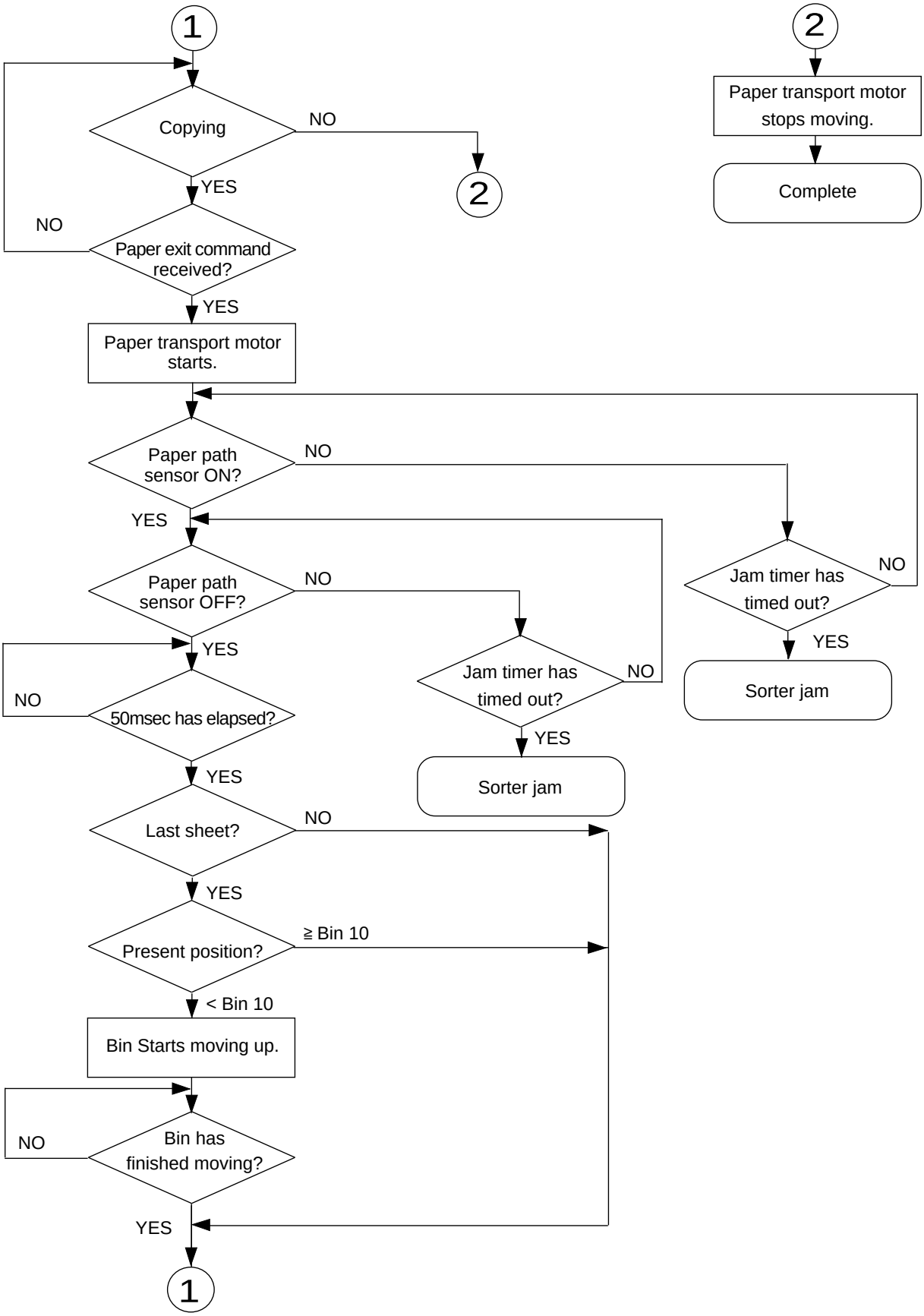
1
Copying
NO
YES
2
NO
Paper exit command received?
YES
Paper transport motor starts.
Paper path sensor ON?
NO
YES
Paper path sensor OFF?
NO
YES
NO
50msec has elapsed?
YES
Last sheet?
NO
YES
Present position?
≧ Bin 10
< Bin 10
Bin Starts moving up.
NO
Bin has finished moving?
YES
1
Jam timer has timed out?
NO
YES
Sorter jam
Jam timer has timed out?
NO
YES
Sorter jam
2
Paper transport motor stops moving.
Complete

8.4 Copy Removal Mode

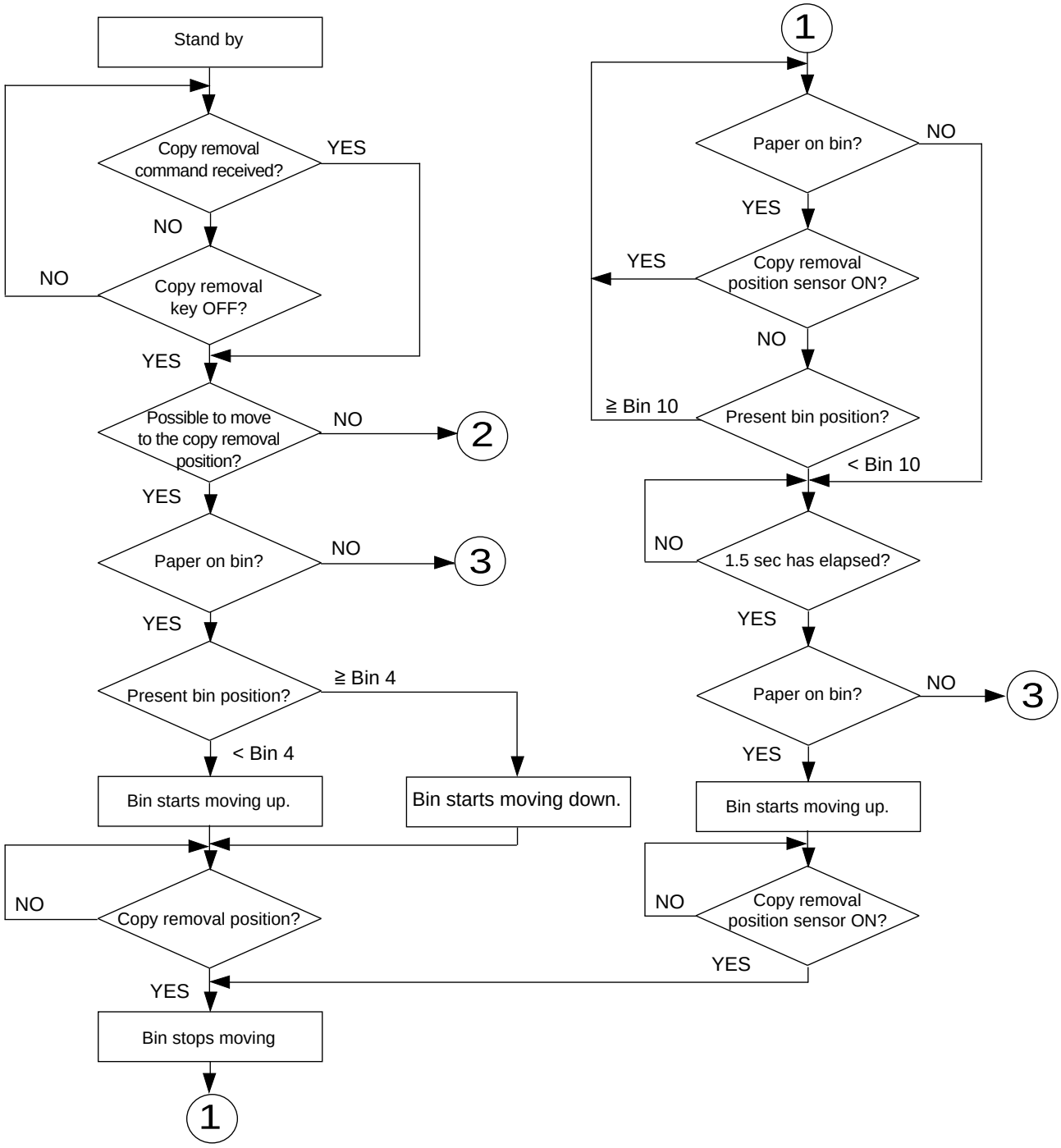

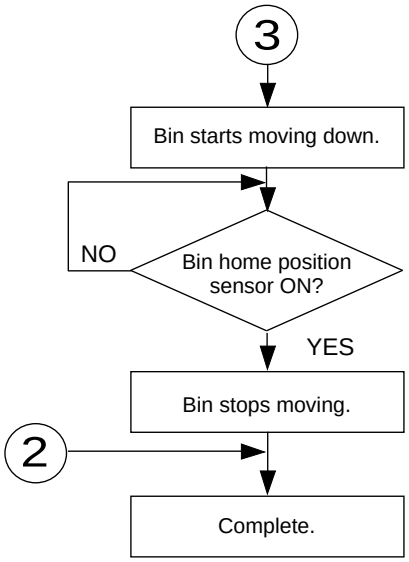
3
Bin starts moving down.
NO
Bin home position sensor ON?
YES
Bin stops moving.
2
Complete.

9. EXPLANATION OF CIRCUIT OPERATION

9.1 Reset Circuit

This is a reset circuit.

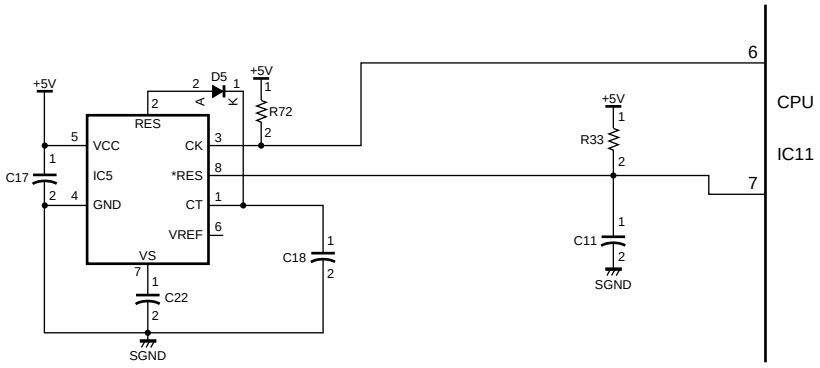

It is a circuit for generating reset signals for CPU and consists for IC5 and its peripheral circuits.

IC5 has all reset functions concentrated on it and performs such functions as power-on resetting at the time of power on, resetting when +5V drops abnormally as well as watch-dog timer function.

After the power is turned on, when the power line (+5V line) becomes approx. 0.8V, IC5 starts functioning, making its pin 8 L level to reset CPU. This reset state is maintained until a fixed time after the power line has reached approx. 4.3V. The reset hold time is determined by the capacitance of C18, approx. 100msec in this circuit. After the reset hold time expires, pin 8 of IC5 becomes H level, clearing the reset state. This causes CPU to start its operation.

Furthermore, when the power line voltage drops to approx. 4.2V, pin 8 of IC5 also becomes L level and maintains the reset state as long as the power supply voltage is below 4.3V. The reset state is cleared approx. 100 msec after the power supply voltage has recovered to 4.3V.

Pin 3 of IC5 provides a clock signal input terminal for a watch dog timer and uses the signal output from pin 6 of CPU. While CPU is functioning normally, this clock signal is a regular pulse signal of a 5-msec period with a duty of 50%. But when an abnormal condition such as a CPU runaway occurs, the clock signal ceases to be output. IC5 always monitors this clock signal and when it stops being generated, a fixed time later IC5 makes pin 8 L level to produce a reset signal. The clock monitoring time is also determined by the capacitance of C18 and the same length of 100 msec as the hold time for power-on resetting.

9.2 Sensor Input Circuit

[a] Paper sensor (SEN5) Circuit

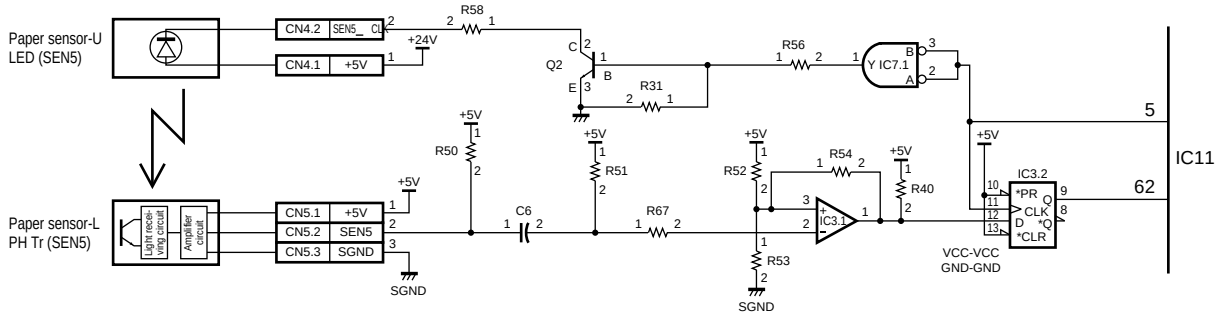

This circuit is for detecting whether or not paper is present on the bin. CN4 has a light emitting PC board connected and CN5 has a light receiving PC board connected.

(1) Light Emitting Circuit

The signal output from IC11-pin 5 of CPU at a certain period of time is fed to IC7-pin 2 and pin 3 and an inverted output is then input to the base of Q2. This makes Q2 turned on, causing LED to emit light.

(2) Light Receiving Circuit on the Control PC Board

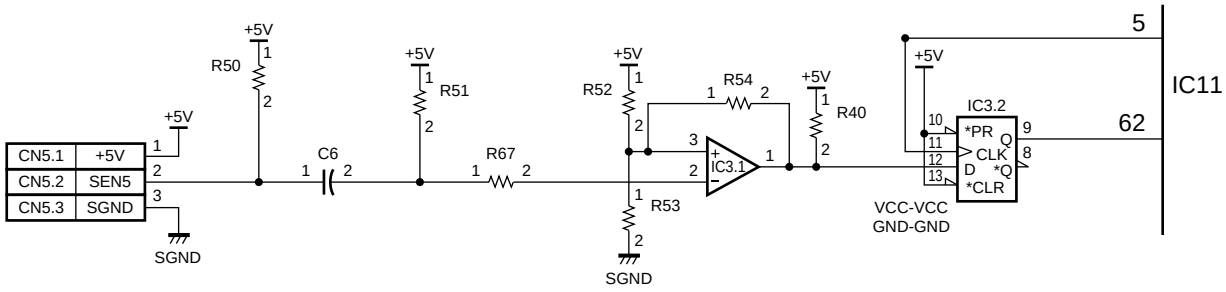

The signal produced from the light emitting PC board has its negative half cut off to become a DC current and has its waveform shaped by the comparator (IC9). The comparator then converts the signal into a digital signal. (The comparator's threshold value is approx. 3.8V.)

The digital signal produced from the comparator is latched by a flip-flop (IC3). When the input to CLK (pin 11) of the flip-flop (IC3) rises, if D (pin 12) is H level, it is decided that there is no paper and output Q (pin 9) produces H level (+5V). If D (pin 12) is 0 level, it is decided that there is paper and output Q (pin 9) produces L level signal (0V).

[b] Bin home position sensor (SEN2) circuit
Paper path sensor (SEN1) circuit
One-rotation detection sensor (SEN3) circuit
Copy removal position sensor (SEN4) circuit
Upper/lower limit sensor (SEN8) circuit

(1) The bin home position sensor (SEN2) circuit is to detect whether or not the “1” bin is at the paper exit position.

The sensor is of a transmission type (photo-interrupter) and incorporates an LED and a photo-transistor. Its output is normally at L level (0V) as the light is not interrupted.

When the top bin reaches the 1st bin position, the light from LED is cut off, causing the photo-transistor's output to become H level (+5V). This H level output is then fed to CN10-pin 10 and is then inverted by IC12 to L level (0V) which is input to IC11-pin 59.

(2) The paper path sensor (SEN1) circuit is to detect that the sheet exiting from the copier has entered the sorter's entrance section. The operation after this detection is the same as for the bin home position sensor, the signal then being fed to IC11-pin 60.

(3) The one-rotation detection sensor (SEN3) circuit is to detect whether the top bin is at the correct position for sheet exiting or copy removal.

The sensor is of a transmission type (photo-interrupter) and incorporates an LED and a photo-transistor. Normally, since the light is interrupted, its output level is L level (0V).

When the one-rotation detection sensor tab of spiral cam reaches its stop position, the light from the LED is cut off, causing the photo-transistor's output to become H level (+5V). This H level output is fed to CN10-pin 13 and its signal is then input to IC11-pin 72.

(4) The copy removal position sensor (SEN4) circuit is to detect whether or not the top bin is at the copy removal position when copies are to be removed.

The sensor is of a transmission type (photo-interrupter) and incorporates and LED and a photo-transistor. Normally, since the light is cut off, its output level is H level (+5V).

When the top bin reaches the copy removal position, the light from the LED is permitted to pass through, causing the photo-transistor's output to become L level (0V).

This L level output is then fed to CN10-pin 3 and is then inverted by IC12 to H level (+5V) which is input to IC11-pin 61.

In addition, by connecting CN10-pin 1 to IC11-pin 63 and monitoring the level of CN10, it is normally maintained at a value in the neighborhood of 1.2V but in the open condition it becomes H level (+5V).

(5) The upper/lower limit sensor (SEN8) circuit is to detect when the bins arrive at the upper or lower limit position due to a bin overrun or runaway.

The sensor is of a transmission type (photo-interrupter) and incorporates an LED and a photo-transistor. Normally, since the light is cut off, its output level is L level (0V).

When the bins arrive at the upper or lower limit position, the light from the LED is permitted to pass through, the photo-transistor's output becomes H level (+5V).

This H level output is then fed to CN3-pin 2 and is then inverted by IC12 to L level (0V) which is input to IC11-pin 56.

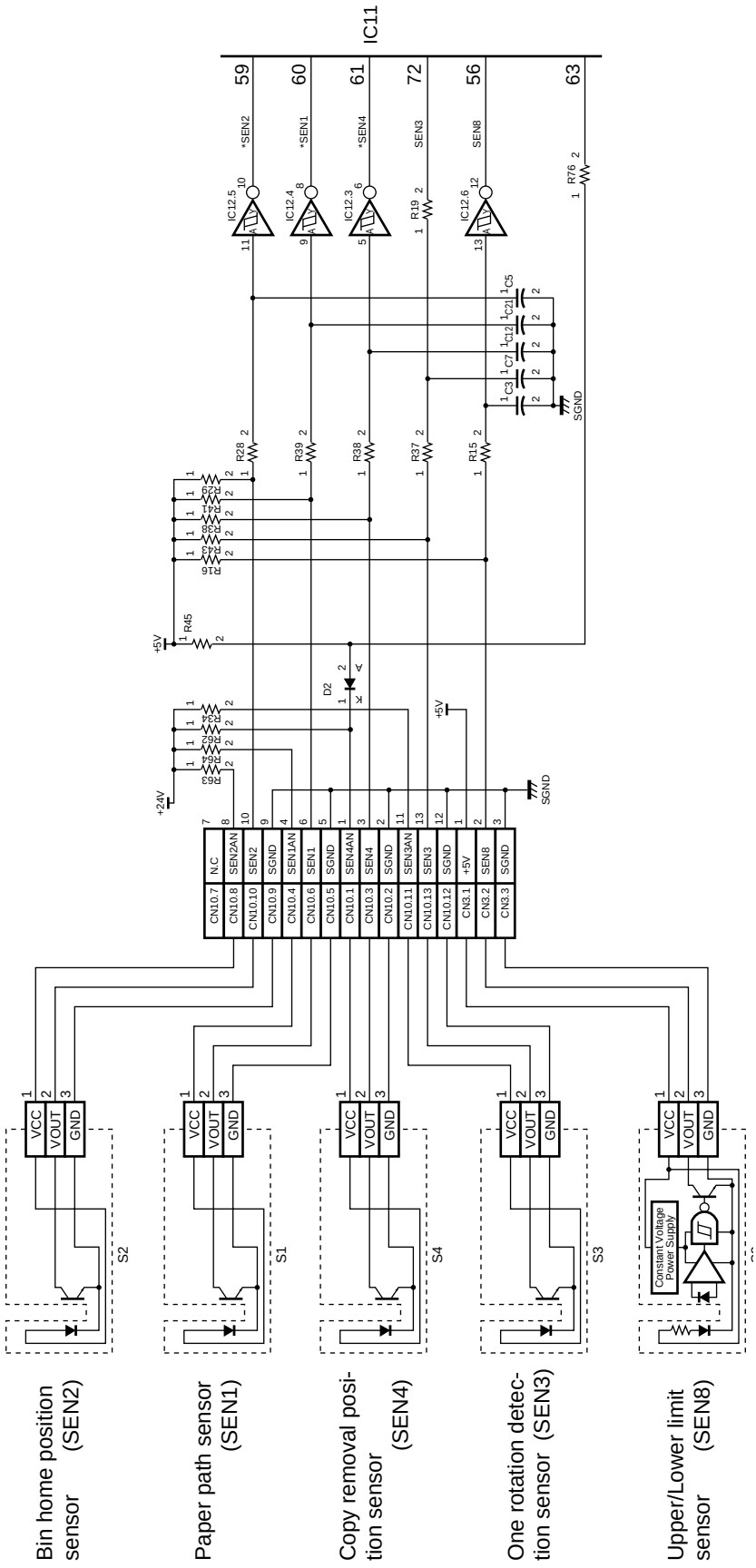
IC11
59
60
61
72
56
63
*SEN2
*SEN1
*SEN4
SEN3
SEN8
IC12.5
IC12.4
IC12.3
IC12.6
R19
R76
C5
C21
C12
C7
C3
SGND
R28
R39
R38
R37
R15
R29
R41
R38
R43
R16
R45
+5V
D2
R34
R62
R64
R63
+24V
N.C
SEN2AN
SEN2
SGND
SEN1AN
SEN1
SGND
SEN4AN
SEN4
SGND
SEN3AN
SEN3
SGND
+5V
SEN8
SGND
CN10.7
CN10.8
CN10.10
CN10.9
CN10.4
CN10.6
CN10.5
CN10.1
CN10.3
CN10.2
CN10.11
CN10.13
CN10.12
CN3.1
CN3.2
CN3.3
VCC
VOUT
GND
S2
S1
S4
S3
Constant Voltage Power Supply
Bin home position sensor (SEN2)
Paper path sensor (SEN1)
Copy removal position sensor (SEN4)
One rotation detection sensor (SEN3)
Upper/Lower limit sensor (SEN8)

[c] Paper transport motor rotation detection sensor (SEN7) and Bin moving motor rotation detection sensor (SEN6) input circuit.

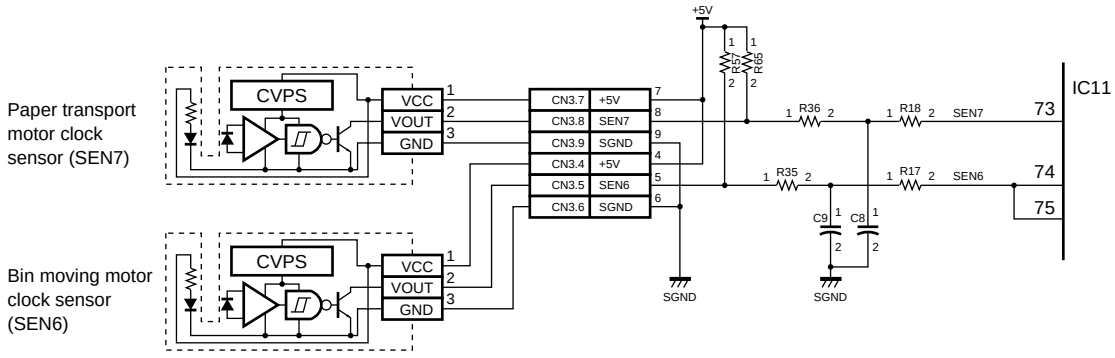

CVPS: Constant Voltage Power Supply

These are sensors for detecting the rotations of the bin moving motor and the paper transport motor, respectively. They consist of a photo-interrupter incorporating an amplifier and a slitted disc mounted to the motor shaft, permitting a pulse signal to be obtained corresponding to the rotations of the motor. Using the frequency of this pulse signal, the rotational speed of the motor can be detected and the amount of its rotation can also be detected by counting the pulses.

9.3 Motor Control Circuit

[a] Paper transport motor drive circuit

This is a motor drive circuit for transporting the sheets exited from the copier into the sorter. The drive signal (ON at L level) output from the CPU is fed at H level through an inverter (IC4) to the gate of MOSFET (Q5), causing Q5 to be turned on which in turn drives the motor in a counterclockwise (CCW) direction.

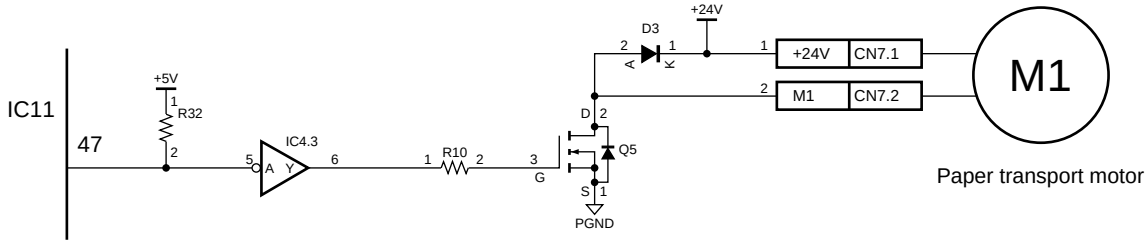

[b] Bin moving motor (M2) drive circuit

This is a circuit which controls the rotation/stop and rotation direction of the bin moving motor. It consists of a logic IC and power MOSFETs (Q6 - Q9).

The rotation, stop and rotation direction of the motor is controlled by having the logic outputs of pins 18 and 19 of the CPU properly combined. Pin 48 of the CPU is a PWM output for speed control.

First, the motor is caused to rotate in the normal direction as follows: When CPU's pin 18 is made L level, pin 19 H level, pin 48 H level and IC10's pins 5 and 1 made H level, respectively, both IC10's pin 11 and IC4's pin 4 become H level, causing Q7 and Q8 to be turned on. On the other hand, since IC10's pin 8 is L level and IC4's pin 2 is L level, causing Q6 and Q9 to be turned off. Therefore, current flows through a path of +24V → Q7 → CN8.1 → motor → CN8.2 → Q8 → GND to rotate the motor clockwise (CW) as seen from its output shaft.

Under this condition, if CPU's pin 48 (PWM signal) is made L level, IC10's pin becomes L level, causing Q7 to be turned off which in turn cuts off current from +24V. But due to the inductance in the motor coils, a regenerating current continues to flow through a path of GND → Q8's flywheel diode → CN8.2 → motor → CN8.1 → Q9 → GND, causing the motor to reduce its speed. The motor speed is controlled by adjusting PWM's H/L duty and pulse-controlling the power supply to the motor.

For reverse rotation, when CPU's pins 18 and 19 are made L level and IC10's pins 5 and 1 are made H level, IC10's pin 8 is made H level and IC4's pin 2 is made L level, causing Q6 and Q9 to be turned on and Q7 and Q8 to be turned off, which in turn causes current to flow from +24V→ Q6 → CN8.2 → motor → CN8.1 → Q9 → GND which is reverse to the direction of clockwise rotation. This makes the motor rotate counterclockwise (CCW). For speed control, the same method is used as for clockwise rotation.

To stop the motor, if CPU's pin 18 is made H level, IC10's pins 8 and 11 becomes L level and IC4's pins 4 and 2 become H level, causing Q6 and Q7 to be turned off and Q8 and Q9 on. This in turn causes both terminals of the motor to short-circuit, thus bringing it into a braking mode where a strong braking force is generated to make the motor stop.

Also, when the bins reach the limit, the limit detection signal and the bin home detection signal are combined to control the stop signal of the motor:

At the upper limit, since only the limit detection sensor is detected, the limit detection signal becomes L level and the home detection signal becomes H level, causing IC6's pin 11 to be L level and IC6's pin 3 to be H level. This makes Q7 to be turned off, making the motor stop its rotation.

At the lower limit, since both the limit detection sensor and the bin home detection sensor are detected, both the limit detection signal and the home detection signal become L level. This causes IC6's pin 3 to be L level and IC6's pin 11 to be H level, making Q6 to be off, which in turn causes the motor to stop rotating.

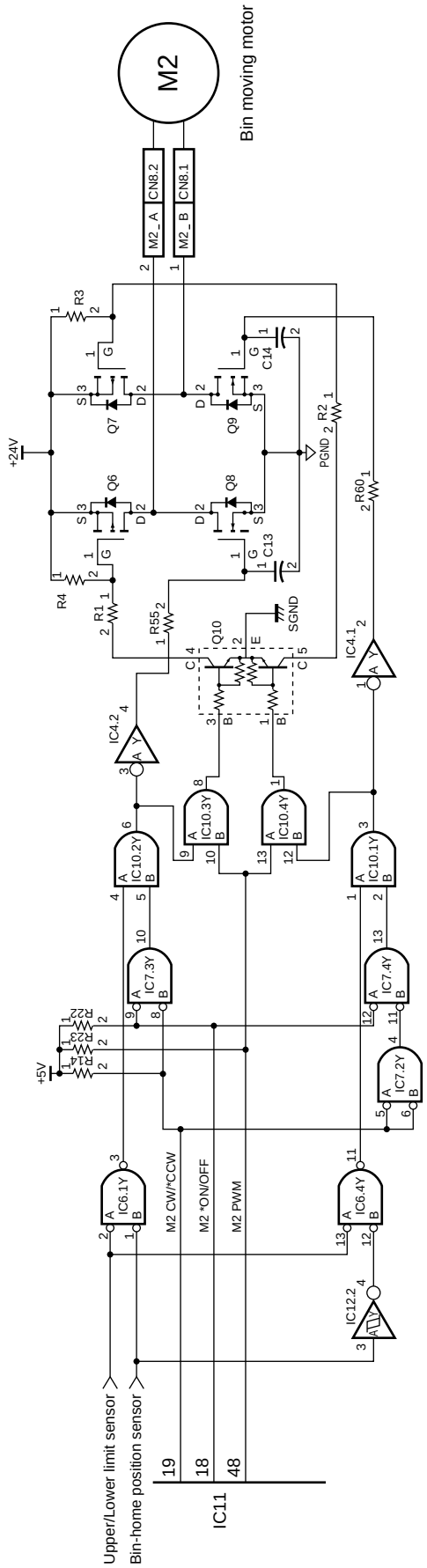
M2
Bin moving motor
M2_A
CN8.2
M2_B
CN8.1
+24V
R3
R4
R1
R2
R60
R55
Q6
Q7
Q8
Q9
Q10
C13
C14
SGND
PGND
IC4.1
IC4.2
IC10.1Y
IC10.2Y
IC10.3Y
IC10.4Y
IC7.3Y
IC7.4Y
IC7.2Y
IC6.1Y
IC6.4Y
IC12.2
+5V
M2 CW/*CCW
M2 *ON/OFF
M2 PWM
Upper/Lower limit sensor
Bin-home position sensor
IC11
19
18
48

9.4 Other Circuits

[a] Display panel (OPPANEL-T) drive circuit

This is a circuit for facilitating user operation.

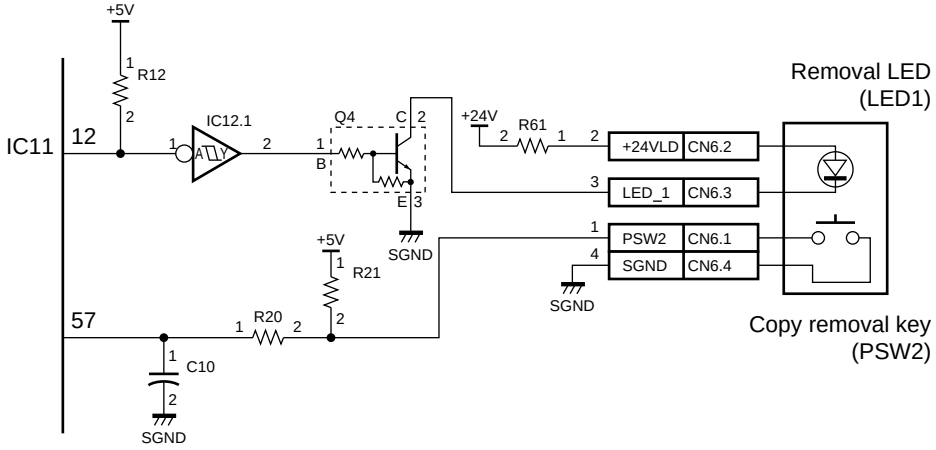

(1) Input circuit for the copy-removal switch

This is a circuit for allowing the sorter to go into the copy removal detections mode. When the switch is on, an L level signal is fed to CPU's pin 57.

(2) Output circuit for the copy removal LED

This is a control circuit for the copy removal LED in the copy removal mode. When CPU's pin 12 is made L level, an output inverted by IC12 is fed to Q4's base, causing Q4 to be turned on, which in turn causes the LED to light.

[b] DIP switch circuit

This is a circuit for setting up operation modes when the sorter is operated independently.

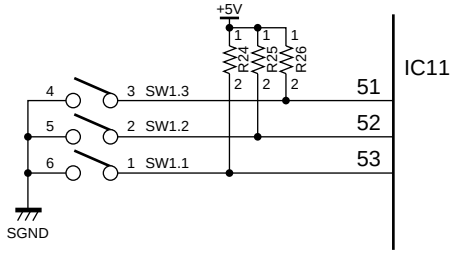

When SW's 1.1 - 1.3 are turned on, IC11's pins 53, 52 and 51 become L level.

[c] Power circuit

This is a circuit for providing DC power supplied from the copier to CPU, logic ICs, etc.

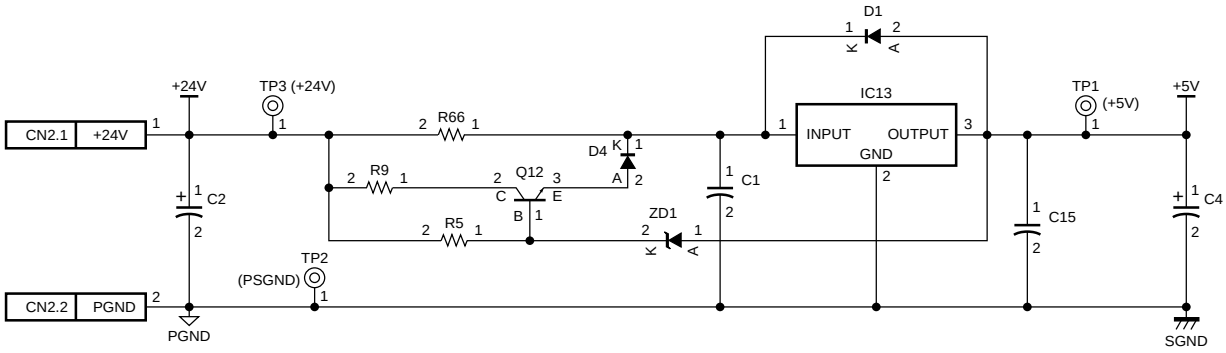

The voltage of DC 24V supplied from the copier drops through R66 and R9 and is stabilized into DC 5V by a 3-terminal regulator (IC13) and supplied to CPU, logic ICs, etc. C4/C15 and C2/C1 are noise-eliminating and smoothing capacitors for DC5V and DC24V, respectively.

10. EXPLANATION OF INPUT/OUTPUT SIGNALS

10.1 Communication Signals between the Copier and the Sorter

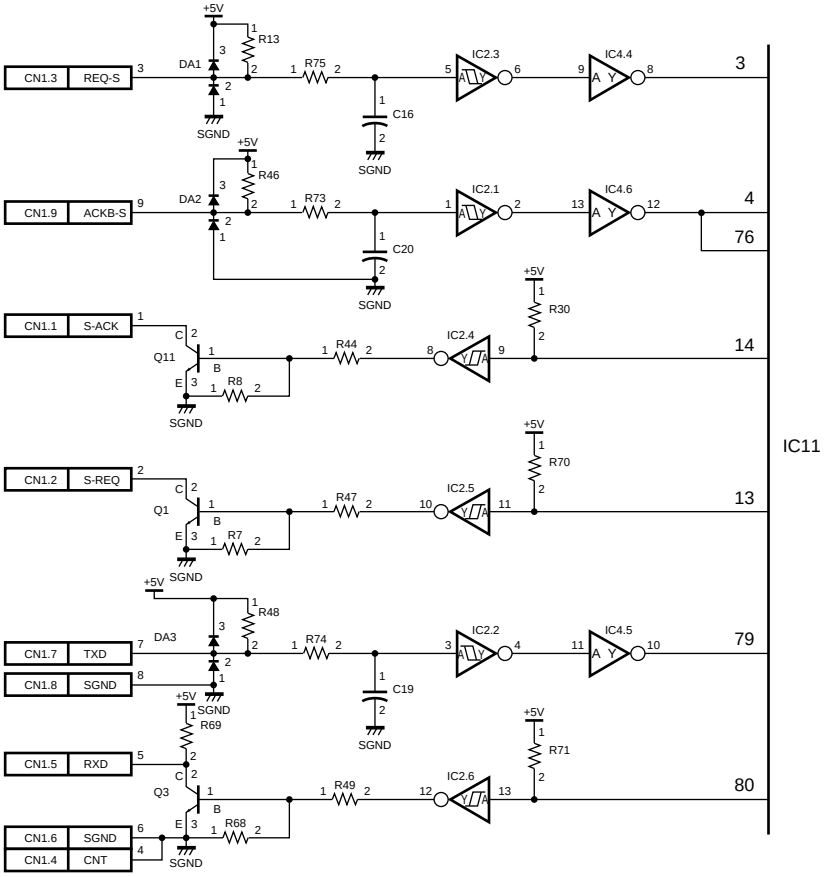

Six types of communication signals are used between the copier and the sorter: Sorter input signals are REQ-S, ACKB-S and RXD. Sorter output signals are S-REQ, S-ACK and TXD.

(1) REQ-S and ACKB-S signals

These are input signals from the copier and take L level (0V) or H level (5V). The logic at the connector (CN1) and that at the input port of CPU are the same.

(2) S-ACK and S-REQ signals

These are output signals from the sorter and take L level (0V) or H level (5V). The logic at the connector (CN1) and that at the output port of CPU are the same.

10.2 Various Sensor Input Signals

(1) Input signals for bin home position, paper path, copy-removal position, one-rotation detection and uppler/lower limit sensors

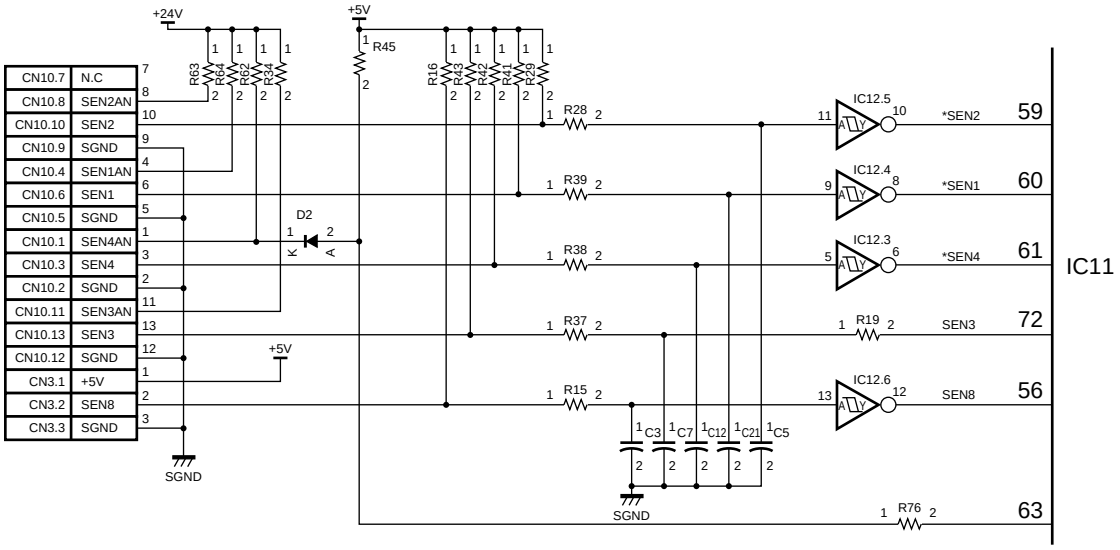

The above circuit is an input circuit for signals from the various sensors and its logic is as shown in the table below:

	Connector level: 5V ("1")	Connector level: 0V (“0”)
SEN2: Bin home position sensor	Bins at home position	Bins not at home position
SEN1: Paper path sensor	Copies present at sorter entrance	No paper at sorter entrance
SEN4: Copy-removal position sensor	Copies not at removal position	Copies at removal position
SEN3: One-rotation detection sensor	Bin position suitable for paper exiting	Bin position not suitable for copy removal
SEN8: Upper/Lower limit detection sensor	Bins at upper or lower limit	Bins not at upper or lower limit

(2) Input signals for paper transport motor and bin moving motor clock sensors

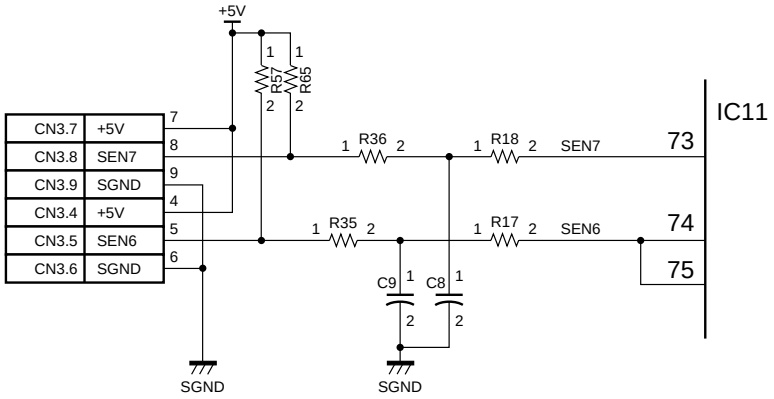

This is a circuit to detect the rotations of the paper transport motor and bin moving motor. Pulse signals corresponding to the number of rotations are input to the CPU port.

10.3 Presence of Paper Detection Signal

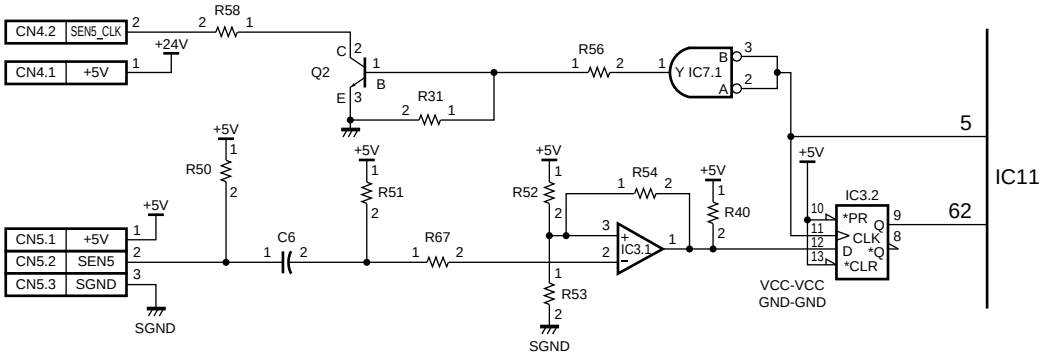

This is a sensor for detecting the presence of paper on the bin. When the CPU's port level is L level (0V), this means that there is paper on the tray.

10.4 Paper transport Motor Drive Signal

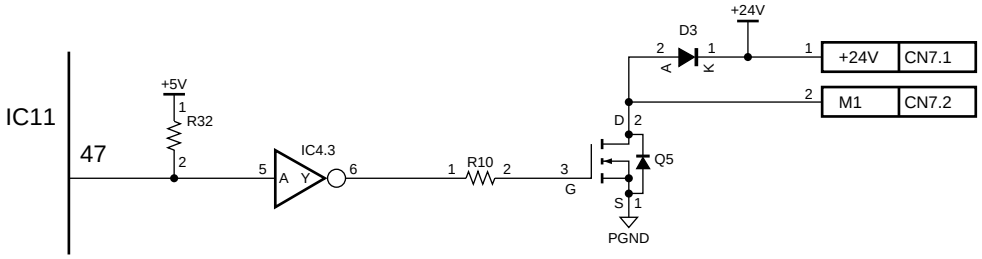

This is a signal to drive the transport motor. When the CPU's port level is L level (0V), the motor is turned on to rotate.

10.5 Bin Moving Motor Drive Signal

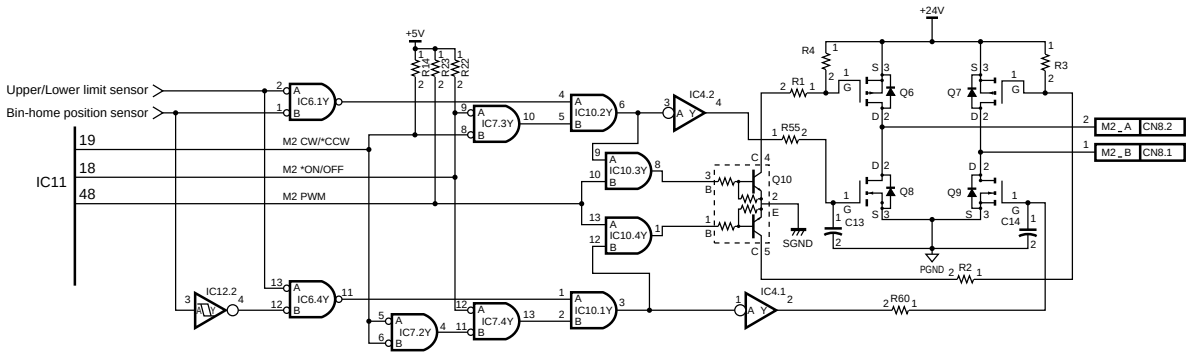

This is a signal for driving the bin moving motor. Its output level is shown in the table below:

ON/OFF IC11-pin 18	CW/CCW IC11-pin 19	PWM Signal	Limit signal		Gate Q6 Signal	Gate Q7 Signal	Gate Q8 Signal	Gate Q9 Signal	CN8 Pin 1	CN8 Pin 2	Operation
			Upper	Lower							
H	-	-	-	-	H	H	H	H	0V	0V	Stops
L	H	H	H	H	L	H	L	H	0V	24V	Rotates CW
L	L	H	H	H	H	L	H	L	24V	0V	Rotates CCW
L	-	L	H	H	H	H	-	-	0V	0V	Stops
L	L	H	H	L	H	H	H	H	0V	0V	Stops
L	H	H	L	H	H	H	H	H	0V	0V	Stops

Note: - : Either "1" or "0" is OK.

Voltage values from CN8-1 and CN8-2 are approximate values.

10.6 Display Panel Section

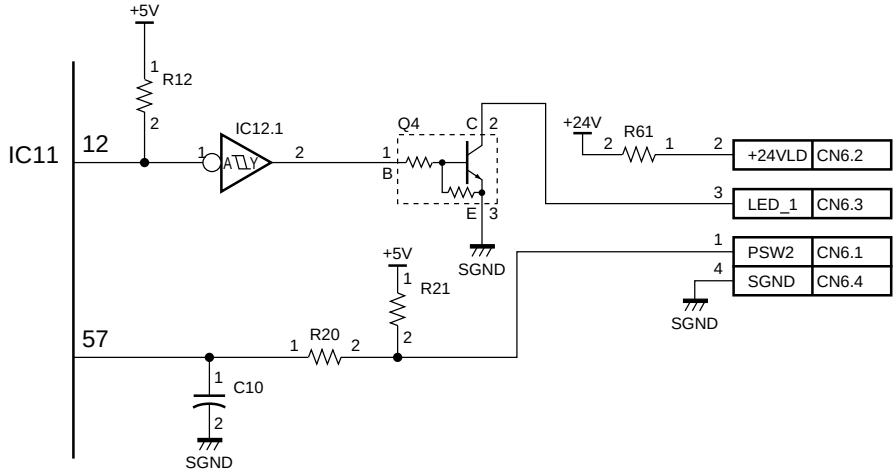

(1) Copy-removal LED drive signal

This is a display LED drive signal for the copy removal mode. When the CPU port level is L level (0V), the LED is turned on.

(2) Copy-removal key input signal

This key is for starting the copy removal mode. When the key is pressed, an L level signal is input to the CPU port.

11. STANDARD SETTINGS FOR DIP SWITCHES

11.1 Location of DIP Switches and Copy Removal LED

The DIP switches are located on the control panel as shown in Fig. 1.

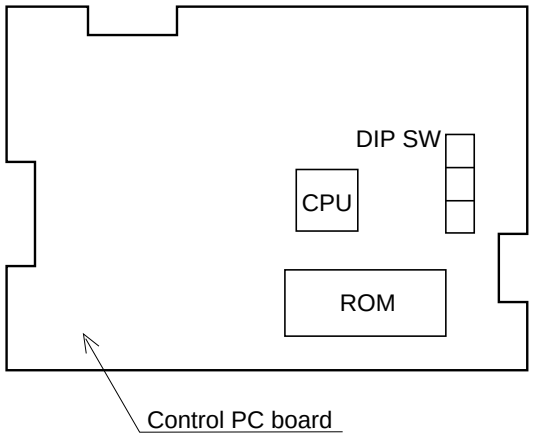

Fig. 1 Location of the DIP switches

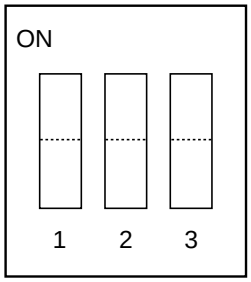

Fig. 2 DIP switch

The copy-removal LED is located on the front cover of the sorter, as shown in Fig. 3.

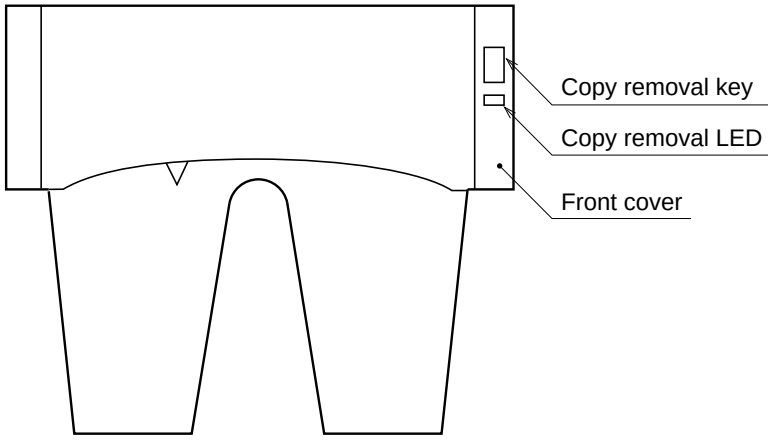

Fig. 3 Location of the copy removal LED

11.2 Setting the DIP Switches

Table 1 shows the various operation modes obtained by setting the DIP switches:

Table 1 Settings of DIP switches

No.	DIP switch status			Operation mode
	1	2	3	
1	OFF	OFF	OFF	Normal mode (communication possible)
2	ON	OFF	OFF	Paper feeding test mode for non-sorting
3	OFF	ON	OFF	Paper feeding test mode for sorting
4	ON	ON	OFF	Paper feeding test mode for grouping
5	OFF	OFF	ON	Loading operation test mode
6	ON	OFF	ON	Aging test mode with no paper fed
7	OFF	ON	ON	Tray moving down mode
8	ON	ON	ON	Tray moving up mode

11.3 Explanation of Each Mode

To make each operation mode effective, the DIP switches must be set before the power is turned on. Changing the status of the DIP switches after the power has been turned on does not take any effect.

(1) Normal mode (communication possible)

After setting the DIP switches as shown in Table 1, No.1, when the power is turned on, communication with the copier becomes possible. The operation is performed based on the I/F communication spec.

(2) Non-sort paper feeding test mode

After setting the DIP switches as shown in Table 1, No. 2, turning on the power switch makes this test mode possible. The operation is performed as follows:

Power on
↓
Bin initialization
↓
Copy -removal key is turned ON.
↓
Paper transport motor starts driving.
↓
Copies exit in the top bin when the paper path sensor is turned ON.
↓
Copy-removal key is turned ON.
↓
Paper transport motor stops rotating.
↓
Complete.

(3) Paper Feeding test mode for sorting

After setting the DIP switches as shown in Table 1, No. 3, turning on the power switch makes this test mode possible. The operation is performed as follows:

Power on
↓
Bin initialization
↓
Copy-removal key is turned ON.
↓
Paper transport motor starts driving.
↓
Paper exiting starts when the paper path sensor is turned ON.
↓
Bins start moving when the paper path sensor is turned OFF (moving up and down for the number of bins set by the push switch).
↓
Copy-removal key is turned ON.
↓
Paper transport motor stops rotating.
↓
Copy-removal mode starts.
↓
After all copies are taken out, the copy-removal mode finishes.
↓
Bin initialization
↓
Complete.

SEP. 1995 ⓒ TOSHIBA CORP.

(4) Paper Feeding test mode for grouping

After setting the DIP switches as shown in Table 1, No. 4, turning on the power switch makes this test mode possible. The operation is performed as follows:

Power on
↓
Bin initialization
↓
Copy-removal key is turned ON.
↓
Paper transport motor starts driving.
↓
Paper exiting starts when the paper path sensor is turned ON.
↓
Bins move after the set number of copies has exited.
↓
Copy-removal key is turned ON.
↓
Paper transport motor stops rotating.
↓
Copy-removal mode starts.
↓
After all copies are taken out, the copy-removal mode finishes.
↓
Bin initialization
↓
Complete.

(5) Loading operation test mode

After setting the DIP switches as shown in Table 1, No. 5, turning on the power switch makes this test mode possible. The operation is performed as follows:

Power on
↓
Bin initialization
↓
Copy-removal key is turned ON.
↓
Paper transport motor starts driving (with no speed control).
↓
Copy-removal key is turned ON.
↓
Paper transport motor stops rotating.
↓
Copy-removal key is turned ON.
↓
Bin moving motor starts driving (moving up and down between 1 to 10 bins with no speed control).
↓
Copy-removal key is turned ON.
↓
Bin moving motor stops.
↓
Copy-removal key is turned ON.
↓
Copy-removal LED lights.
↓
Copy-removal key is turned ON.
↓
Copy-removal LED goes OFF.
↓
Complete.

SEP. 1995 ⓒ TOSHIBA CORP.

(6) Aging test mode with no paper fed

After setting the DIP switches as shown in Table 1, No. 6, turning on the power switch makes this test mode possible. In this mode, sheets of A4 widthwise paper is fed at a fixed rate and exit into bins 1 - 10 in the same way as sorting.

The operation is performed as follows:

Power on
↓
Bin initialization
↓
Copy-removal key is turned ON.
↓
Aging operation starts.
↓
Copy-removal key is turned ON.
↓
Aging operation stops.
↓
Complete.

(7) Tray moving down mode

After setting the DIP switches as shown in Table 1, No. 7, turning on the power switch makes this test mode possible.

The operation is performed as follows:

Power on (If you turn on the power switch while pressing the push switch, the sorter operates at half its normal speed.)

↓

Copy-removal key is pressed and held ON.

↓

Bins start moving down.

↓

Bins stop moving down if the copy-removal key is turned off or when the lower limit is detected.

↓

Complete.

(8) Tray moving up mode

After setting the DIP switches as shown in Table 1, No. 8, turning on the power switch makes this test mode possible.

The operation is performed as follows:

Power on (If you turn on the power switch while pressing the push switch, the sorter operates at half its normal speed.)

↓

Copy-removal key is pressed and held ON.

↓

Bins start moving up.

↓

Bins stop moving up if the copy-removal key is turned OFF or when the upper limit is detected.

↓

Complete.

SEP. 1995 ⓒ TOSHIBA CORP.

12. DISASSEMBLY AND ADJUSTMENT

12.1 Disassembly and Reassembly of Main Parts

(1) Removing the front cover

a) Remove the screw ⓐ.

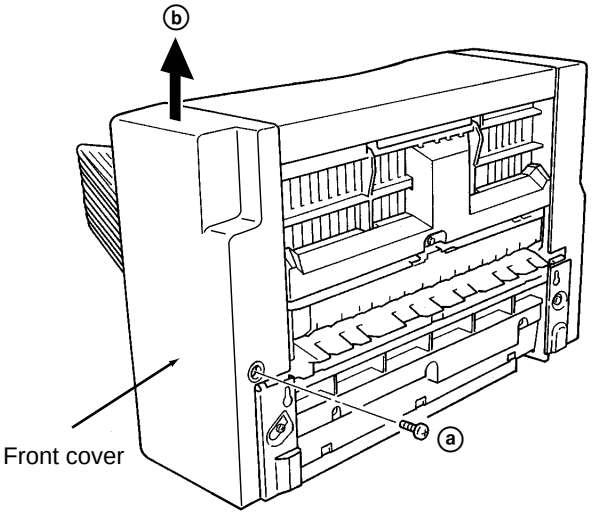

b) Lifting the cover upward (arrow ⓑ), remove it in the order of ⓒ and ⓓ.

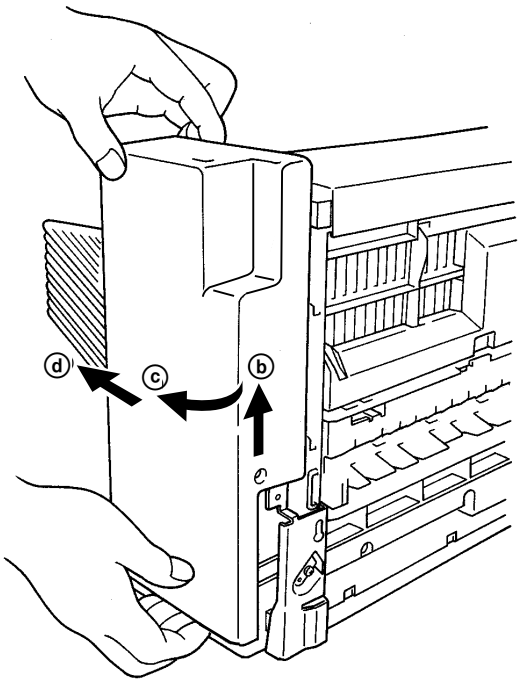

c) Disconnect the connector from the display PC board.

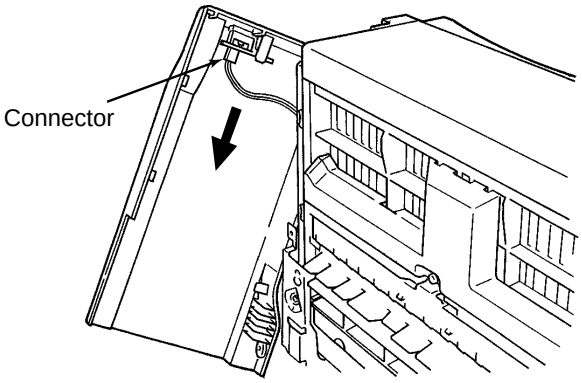

(2) Removing the rear cover

a) After removing the screw ⓐ, take out the rear cover in the order of ⓑ - ⓓ.

b) Pull out the interface cable through the rear cover.

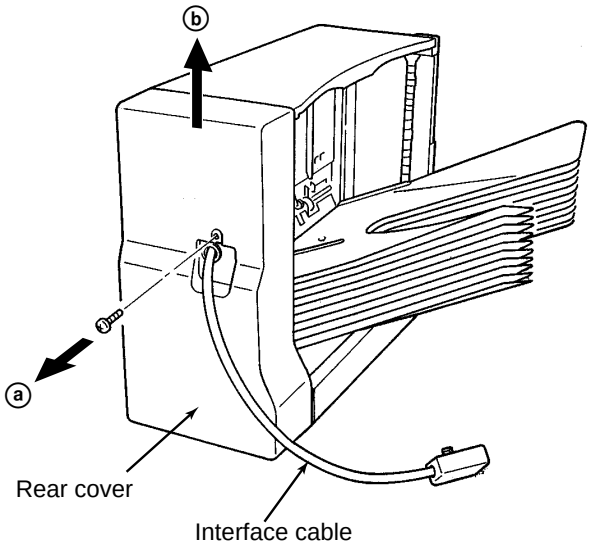

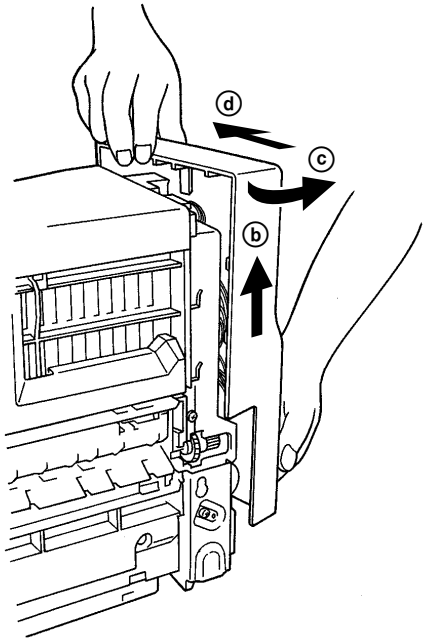

(3) Removing the top cover

a) After removing the front and rear covers, disconnect the connector from the PC board.

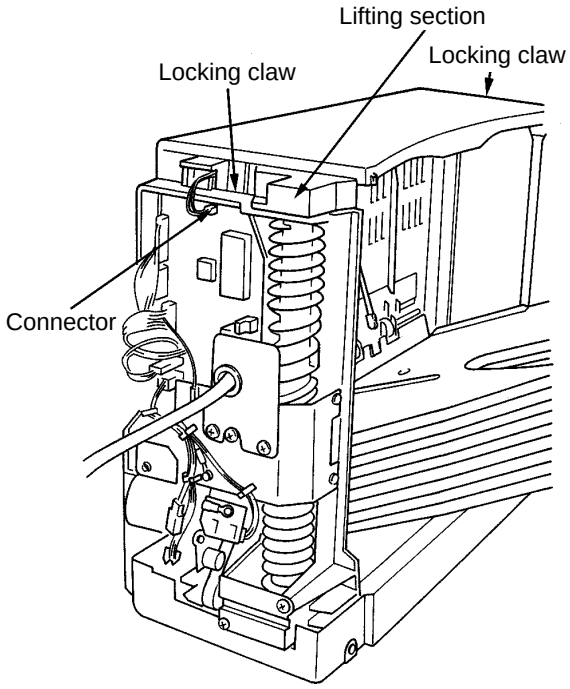

b) Hold the parts of the top cover indicated with arrows, lift it up while releasing the 2 locking claws.

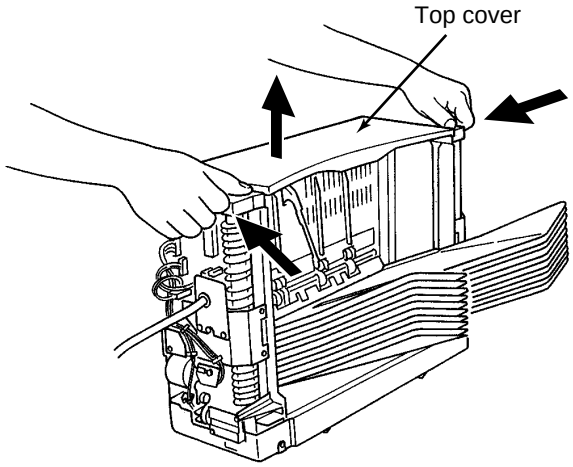

(4) Removing the Harness Cover

a) Remove the screw ⓐ.

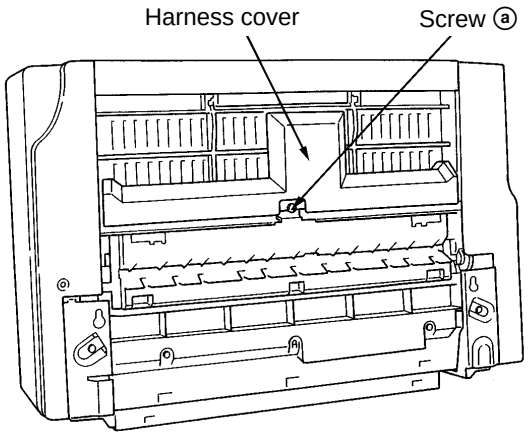

b) Pull the harness cover down (arrow ⓑ) to have its two dowels disengaged from the main frame.

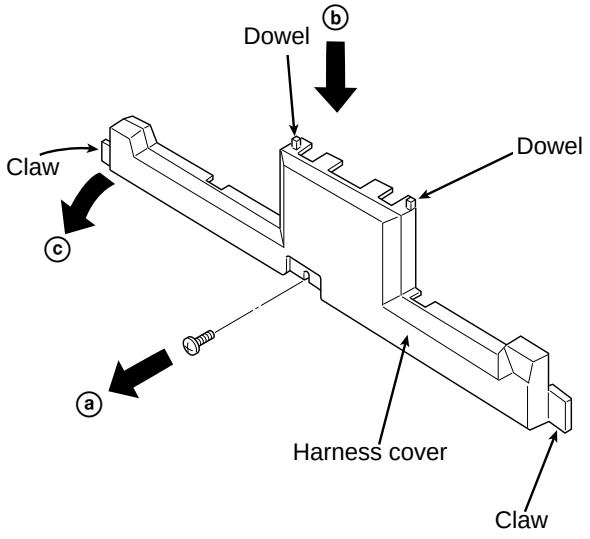

c) By bowing the harness cover slightly, disengage its front claw ⓒ from the main frame hole and take out the harness cover.

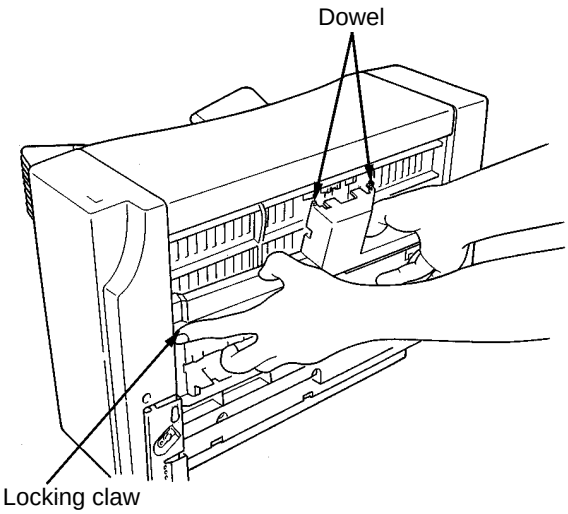

(5) Removing the Paper transport roller

a) Removing the screw ⓐ, take out the harness cover.

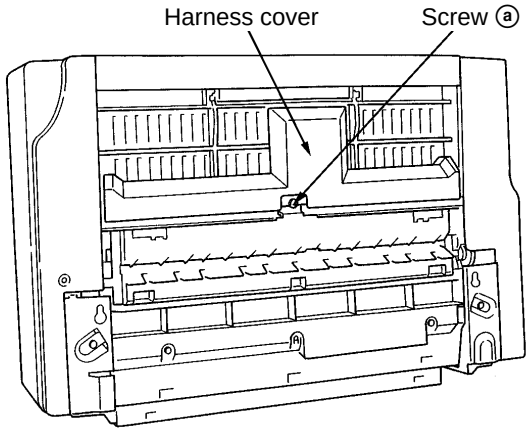

b) By bending the two claws in the direction of the arrow ⓑ, remove the connection guide in the direction of the arrow ⓒ.

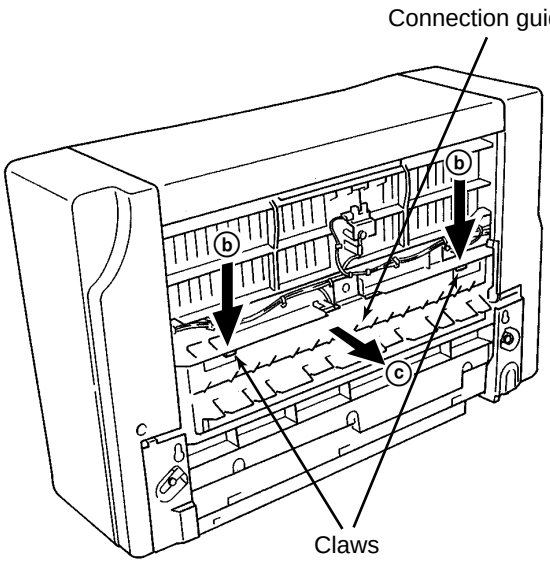

c) By flexing the one-touch claw (arrow ⓓ), pull put the paper transport roller toward you.

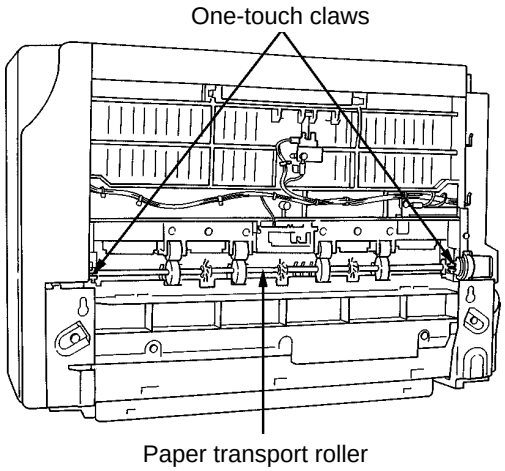

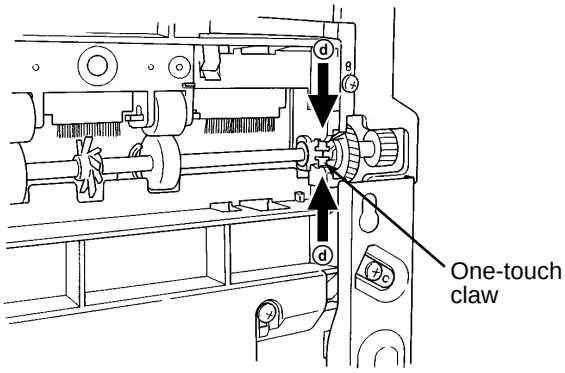

Rear side

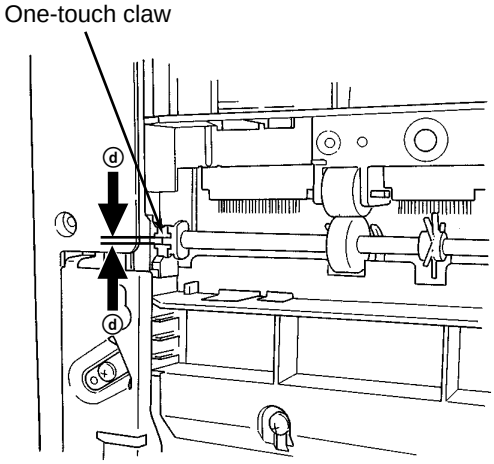

Front side

12.2 Replacing the Spiral Cams and the Bins

(1) Removing the spiral cams and bins

a) Remove the front and rear covers.

b) Remove the top cover (also pull out its connector).

c) Remove the copy-removal position sensor lever.

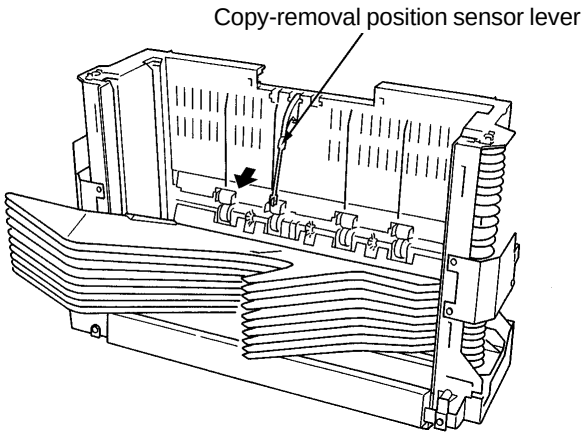

d) Remove the HP-LIM lever from the bin collar.

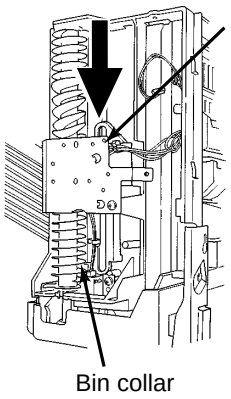

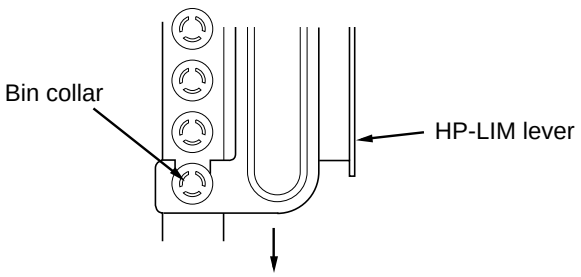

e) After loosening the tension pulley, take out the timing belt for the bin moving motor.

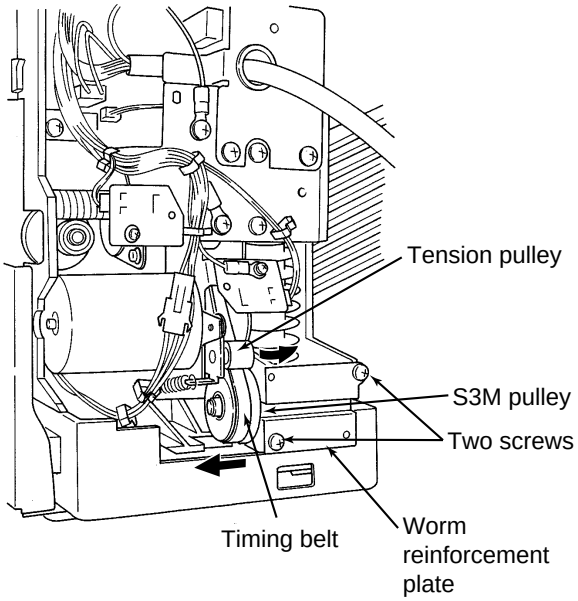

f) After removing the worm reinforcement plate (2 screws), take out the worm gear.

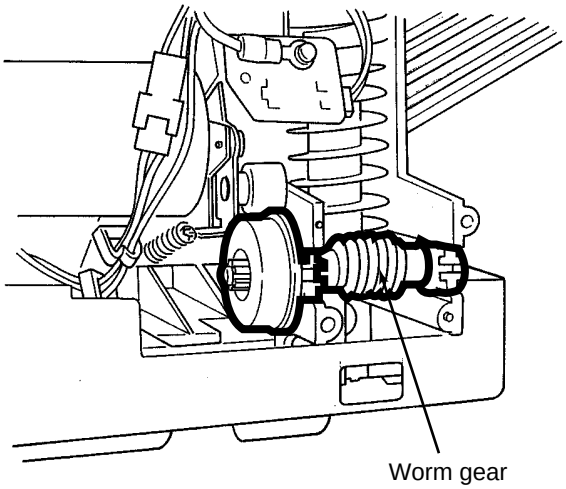

g) Rotate the spiral cam by hand to move up the bins and remove them.

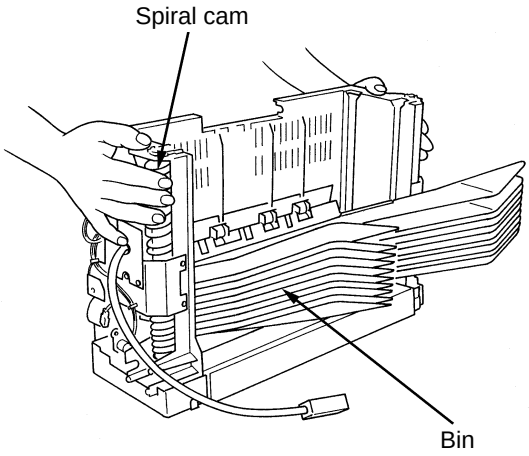

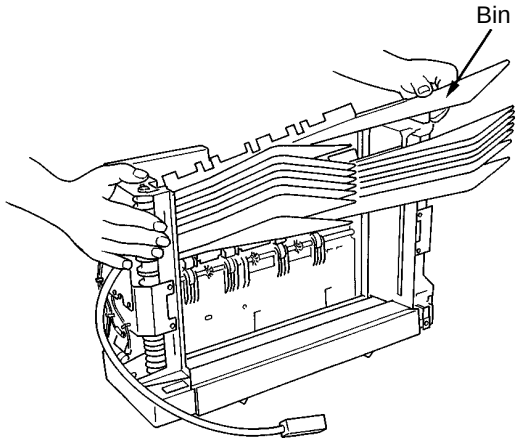

h) Remove the brackets on the front (3 screws) and rear (4 screws).

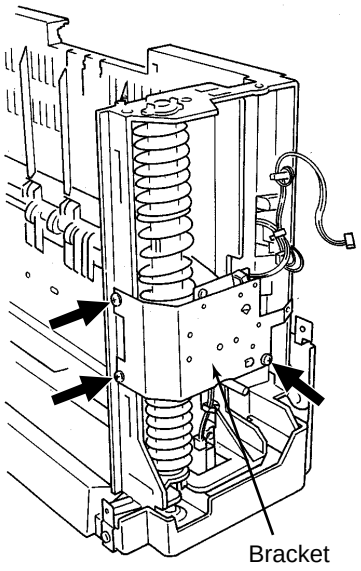

Front side

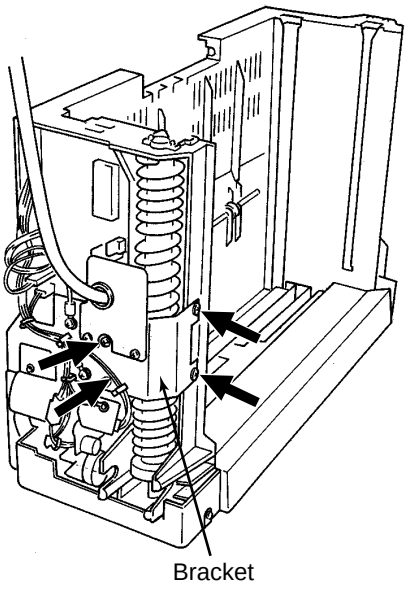

Rear side

i) Remove the front and rear cam bushings, then loosening the claws of one-touch bushings, take out the front and rear spiral cam assemblies.

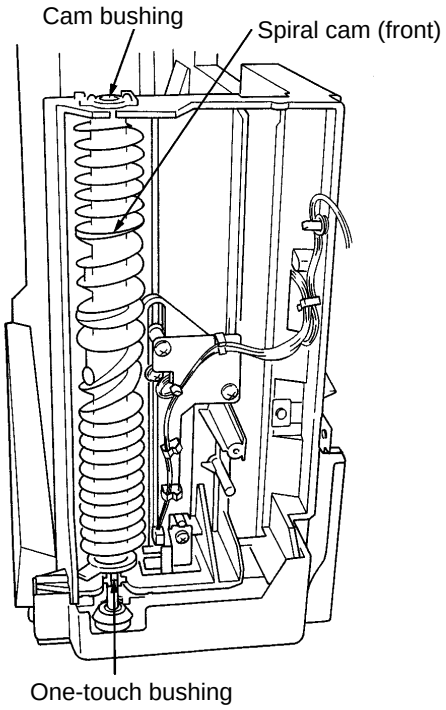

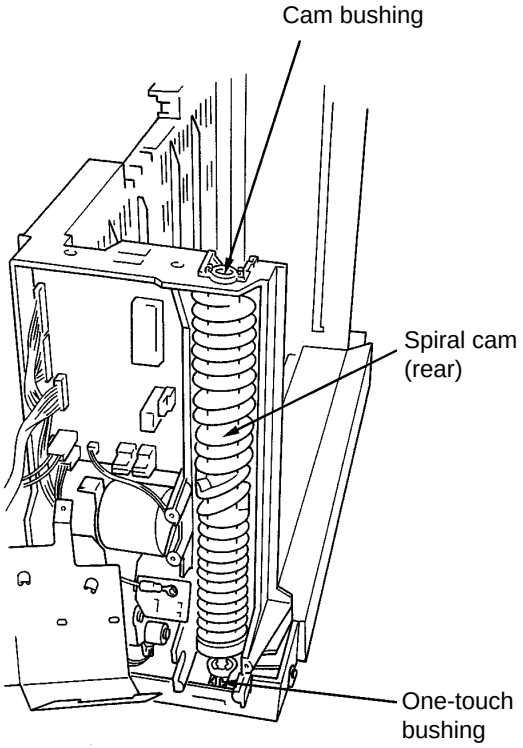

(2) Reassembling the spiral cams and bins

a) Install the rear spiral cam first. The front spiral cam should be assembled in phase with the rear one as follows:

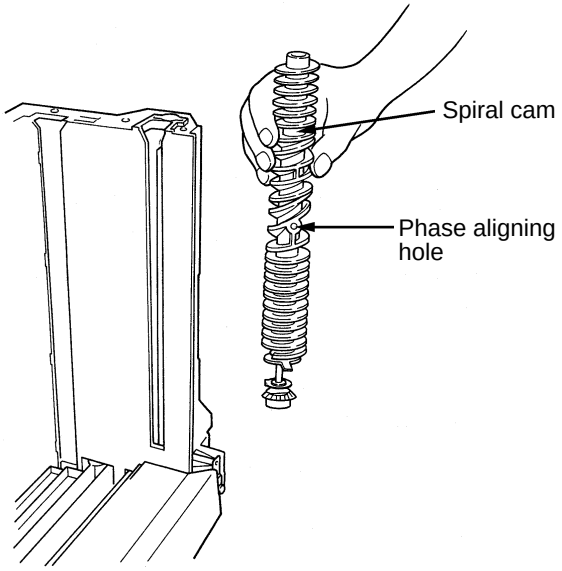

The phase should be aligned using the holes in the center of the spiral cams. Install the front spiral cam so that the holes with the same shape (round or square) of the front and rear spiral cams should face outward and that when you look through from the front hole, the rear hole can be seen.

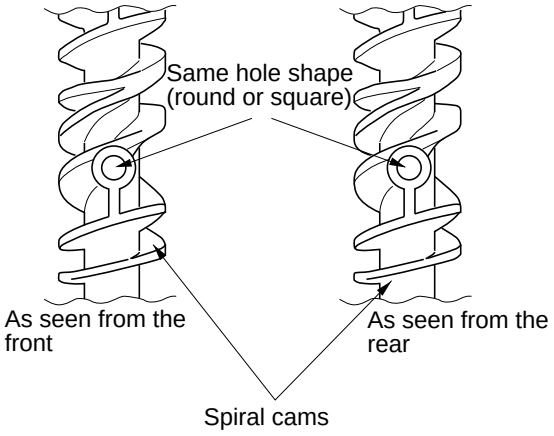

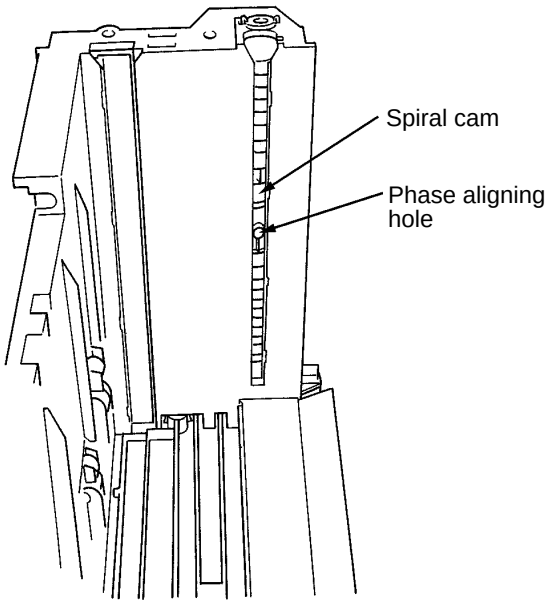

Front side

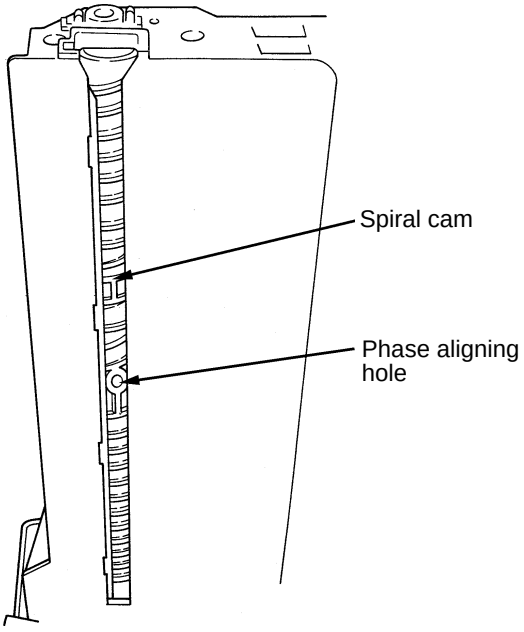

Rear side

Note: Make sure that the holes in the center of the spiral cams are of the same type (see the above illustration). Also check that when you look through from the front hole, the rear hole can be seen.

b) By rotating either the front or rear spiral cam in the direction of the bins moving down, allow them to engage the cams one by one.

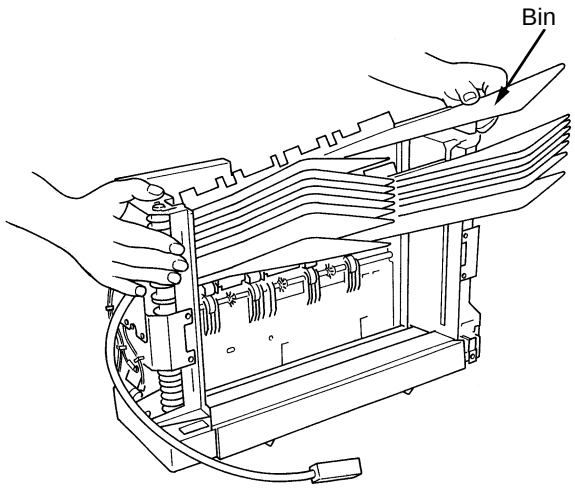

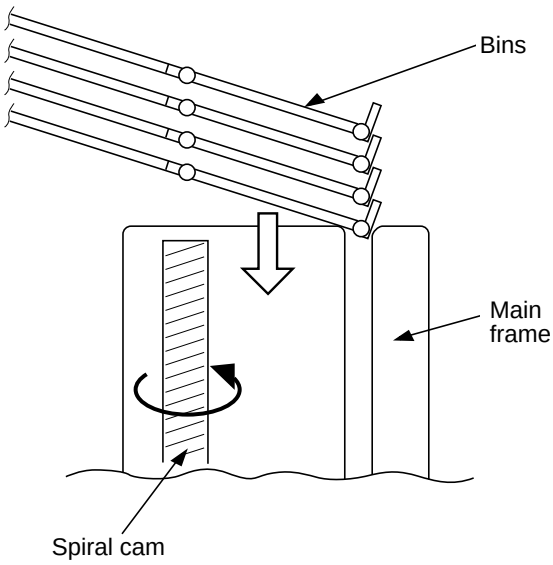

c) When the bins come to the home position, attach the HP-LIM lever to the bin collar.

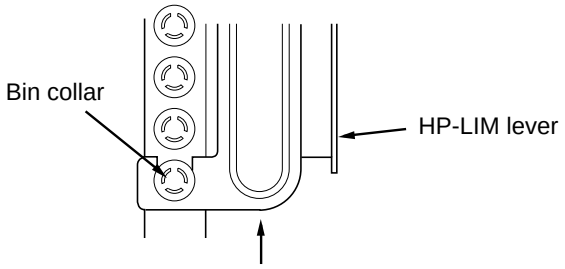

d) For reassembly, reverse the procedure of disassembly.

12.3 Replacing the Discharge Brush

a) Place the bins at the home position.
b) Remove the two screws.

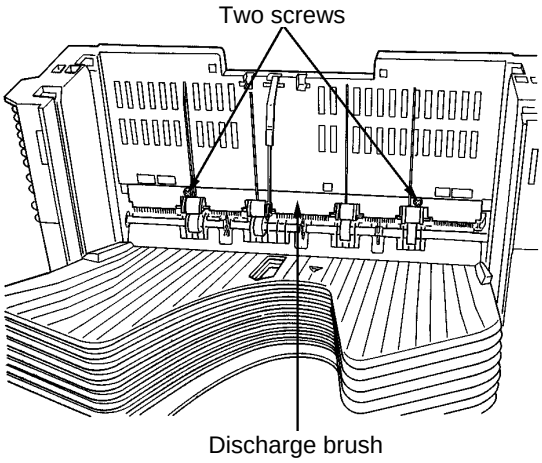

c) Remove the discharge brush from the main frame.

12.4 Removing the Interface Cable Assembly

a) After removing the rear cover (1 screw), pull out the cable through the cover.

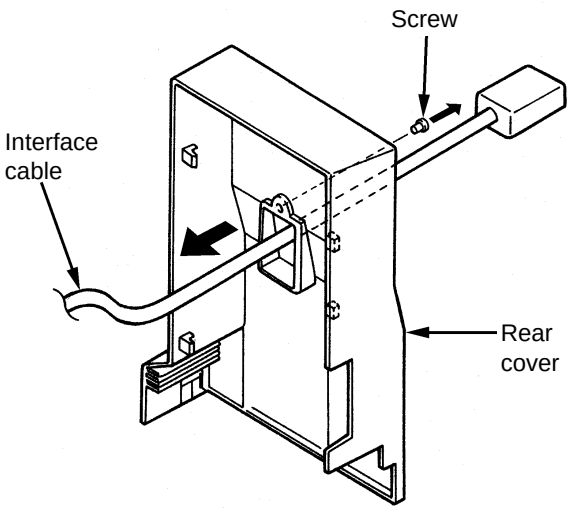

b) Remove the ground terminal (A section: 1 toothed washer and screw).
c) Remove the harness's sub-bracket (2 screws B).

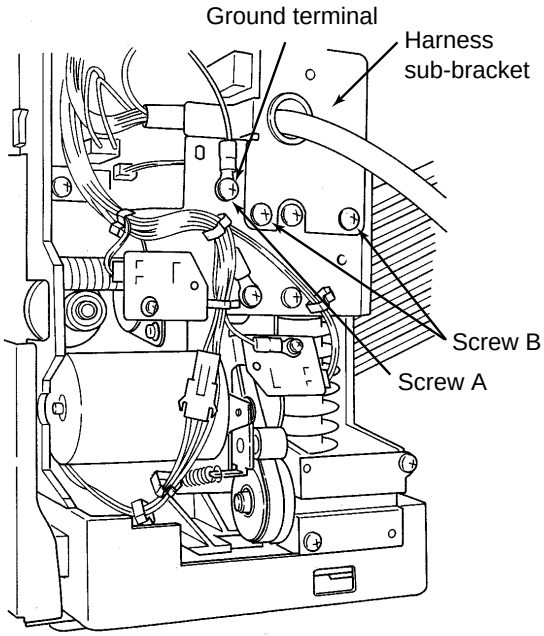

d) Pull out the two connectors from the control PC board.

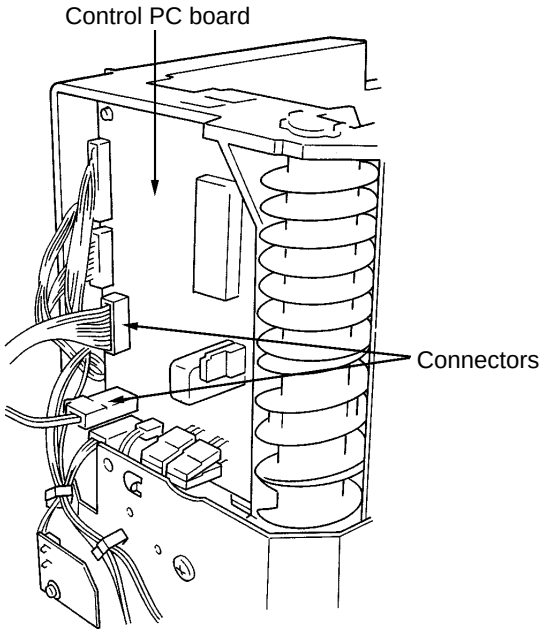

12.5 Removing the Control PC Board

a) Remove the rear cover.
b) Remove the interface cable.
c) Pull out all connectors from the control PC board.

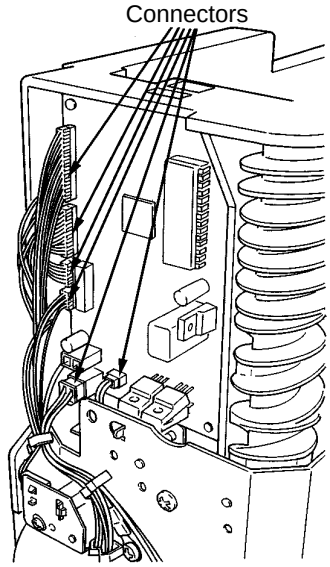

d) Remove the two screws fastening the control PC board.

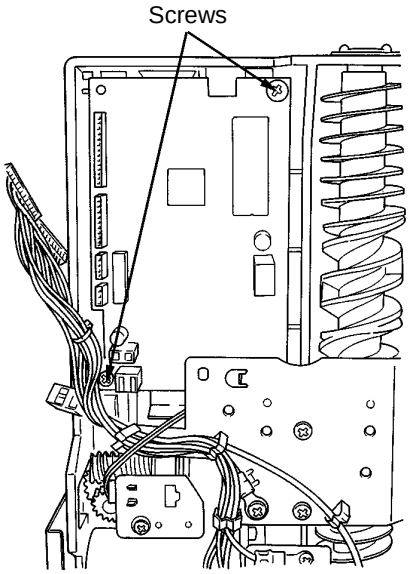

e) Remove the control PC board.

Note: When removing the control PC board, make sure that the power is cut off.

12.6 Removing the Motor Unit (Paper Transport Motor and Bin Moving Motor)

a) Remove the rear cover.
b) Remove the timing belt, worm-gear reinforcement plate and worm gear.
c) Remove the interface cable.
d) As shown below, disconnect the sensor connectors, ground terminal, etc.

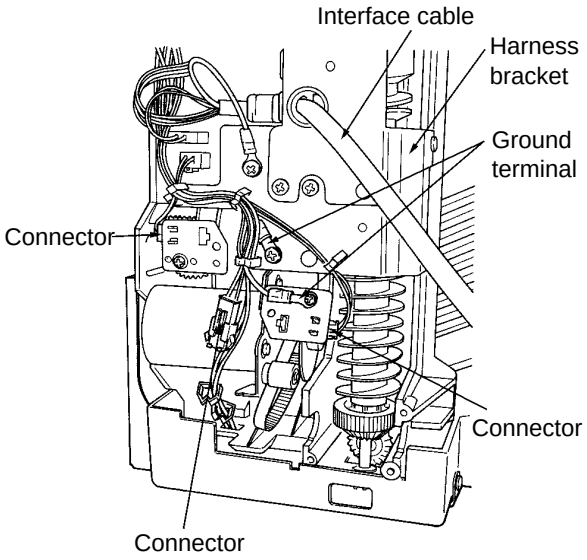

e) Remove the harness bracket (4 screws).

f) Disconnect the connector of the paper transport motor from the control PC board. After removing the three screws, take out the motor unit.

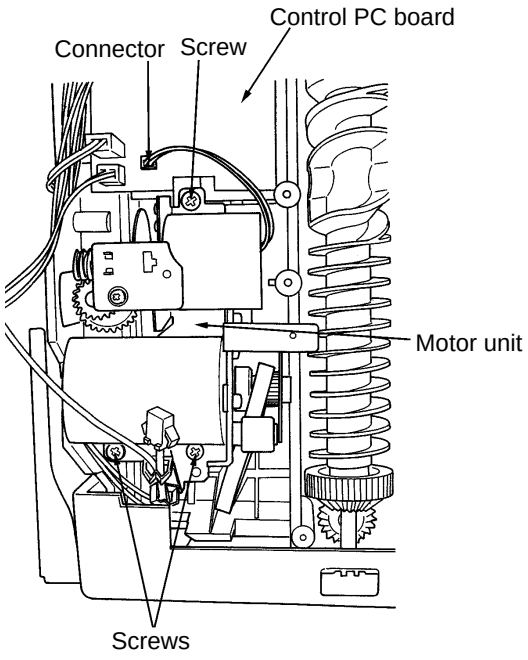

g) Remove the harness located under the transmission type sensor from the mini-clamp of the motor bracket.
h) After removing two setscrews, take out the bin moving motor by removing the two screws.

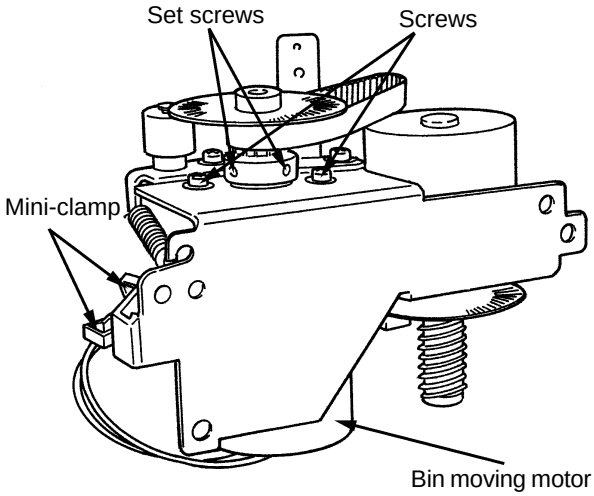

i) After removing three screws and two setscrews, take out the paper transport motor.

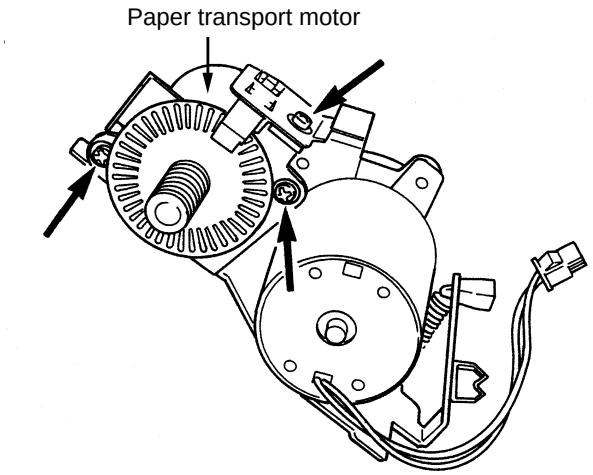

12.7 Removing the Clock Detection Sensors of the Paper Transport Motor and Bin Moving Motor

a) Remove the rear cover.
b) Pull out the connector from each of the two sensors.
c) Remove one screw and the paper transport motor sensor can be taken out.
d) Remove the ground terminal, toothed washer and M3 screw which are fastened together and the bin moving motor sensor can be taken out.
e) Remove the sensors from the sensor brackets.

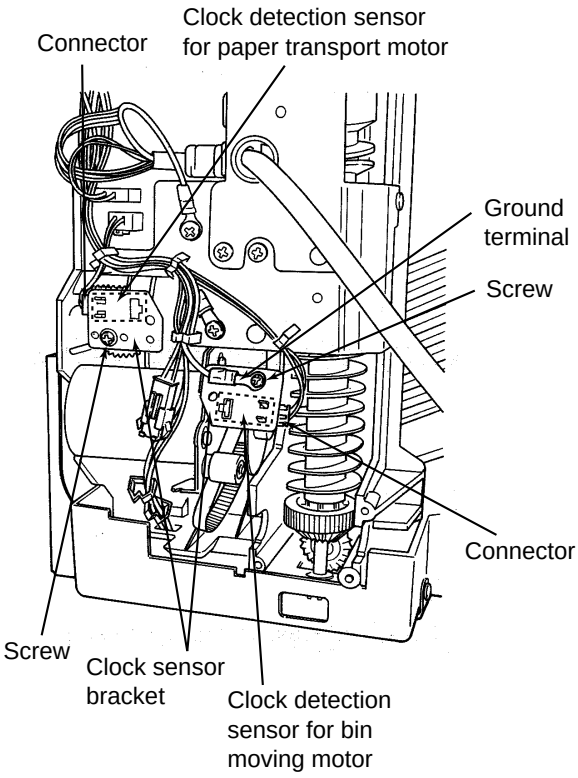

12.8 Bin-Home Position Sensor and Upper/Lower Limit Sensor

a) Remove the front cover.
b) After removing three screws, take out the harness bracket.
c) Pull out the connector from the sensor and remove the harness from the mini-clamp.
d) After removing two screws, take out the HP-LIM sensor bracket.
e) Take out the bin-home position sensor and the upper/lower limit sensor.

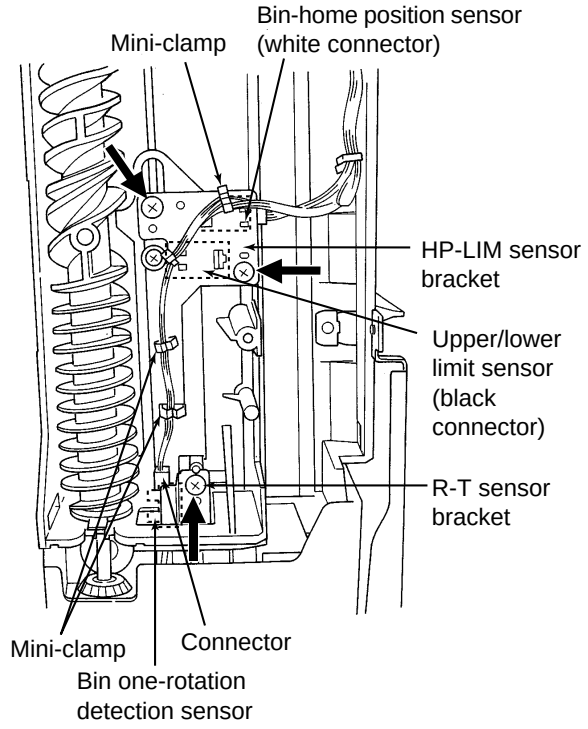

Note: Since the bin home position sensor is of a different type from the upper/lower limit sensor, make sure not to reverse them. However, even if you did, the connector won't get inserted.

12.9 Removing the One-Rotation Detection Sensor

a) Remove the front cover.
b) Pull out the sensor connector.
c) Remove the R-T sensor bracket (1 screw).
d) Remove the sensor.

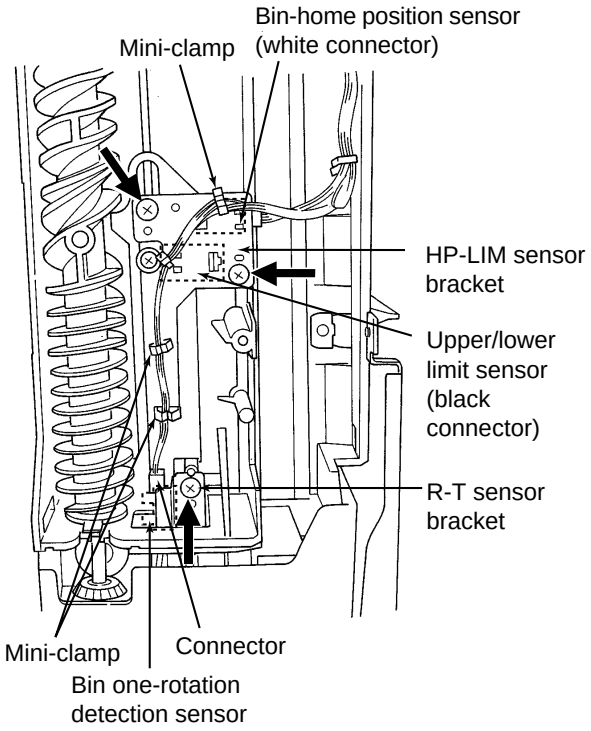

12.10 Removing the Copy-Removal Position Sensor and Paper Path Sensor

a) Remove the harness cover (1 screw).
b) After removing the copy-removal position sensor bracket (1 screw), take out the sensor.
c) Remove the connection guide by disengaging its two claws.
d) Remove the paper path sensor holder unit by disengaging its two claws.
e) Remove the paper path sensor.

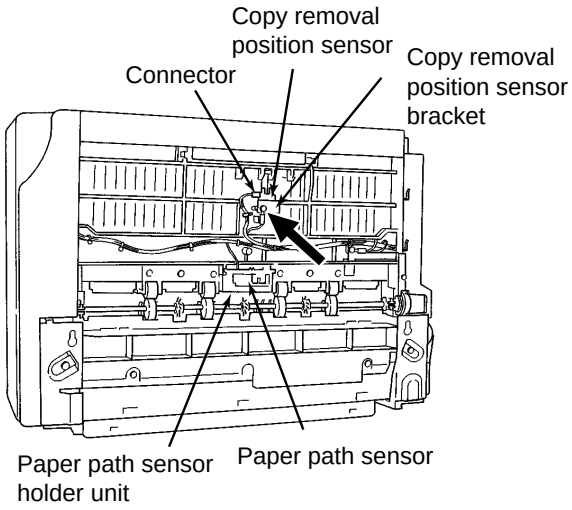

Note: Since the copy-removal position sensor is of a different type from the paper path sensor, make sure not to reverse them. However, even if you did, the connector won't get inserted.

12.11 Removing the Paper Sensor (upper)

a) Remove the COVER-TOP-U (pull out its connector from the PC board).
b) Remove the COVER-TOP-L (4 screws).

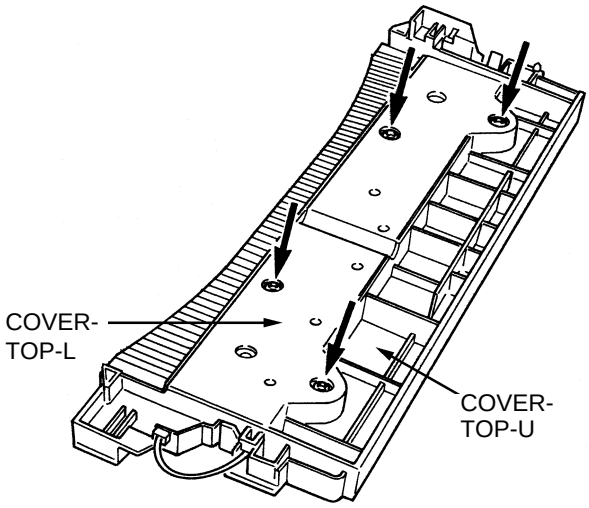

c) Remove the paper sensor-U from the COVER-TOP-L

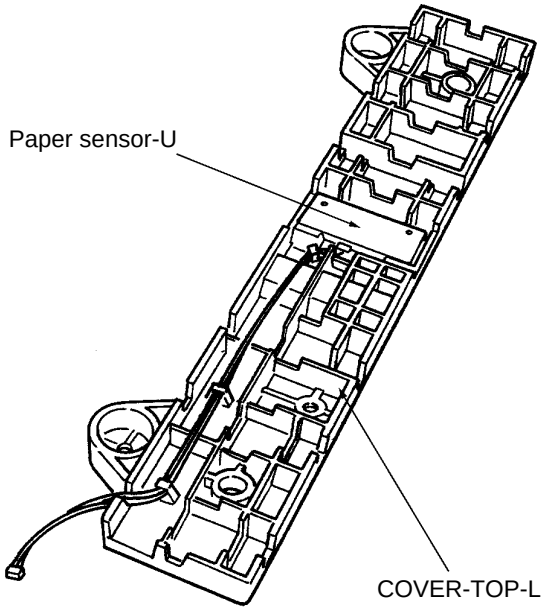

12.12 Removing the Paper Sensor (lower)

a) Place the sorter on its upside down.
b) Remove the COV-SENSOR (1 screw).
c) Pull out the connector

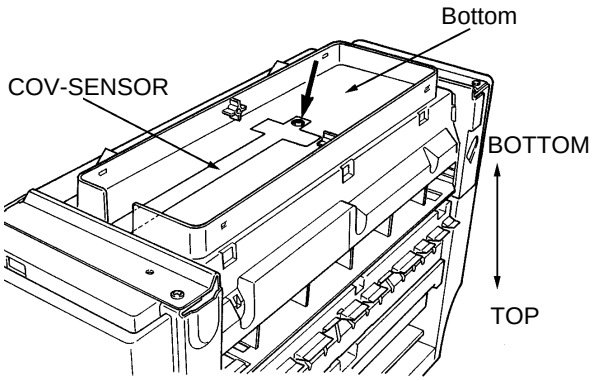

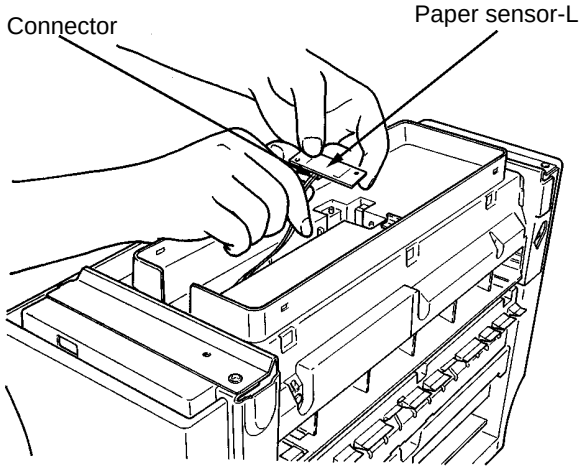

13. ADJUSTMENT

13.1 Drive Belt Tension Adjustment

(1) Remove the rear cover

(2) After loosening the screw, make sure that the tension bracket assembly moves smoothly.

(3) The tension is automatically adjusted by the spring.

(4) Tighten the screw to fasten the bracket assembly.

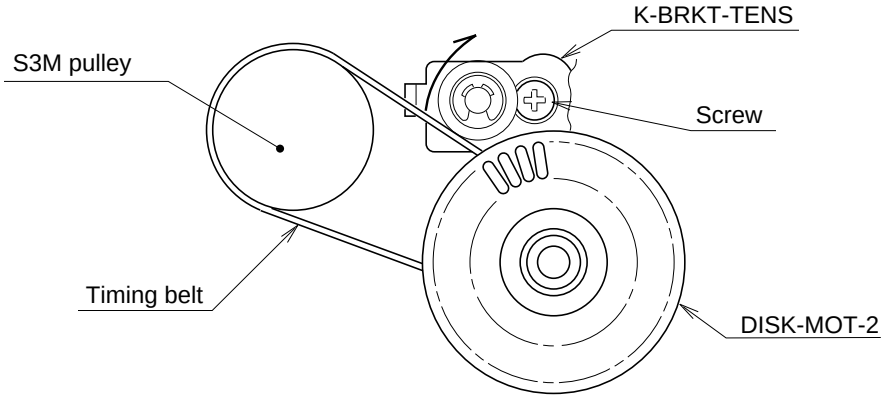

14. MAINTENANCE

14.1 Troubleshooting

[A] The sorter does not operate (except when a jam has occurred)

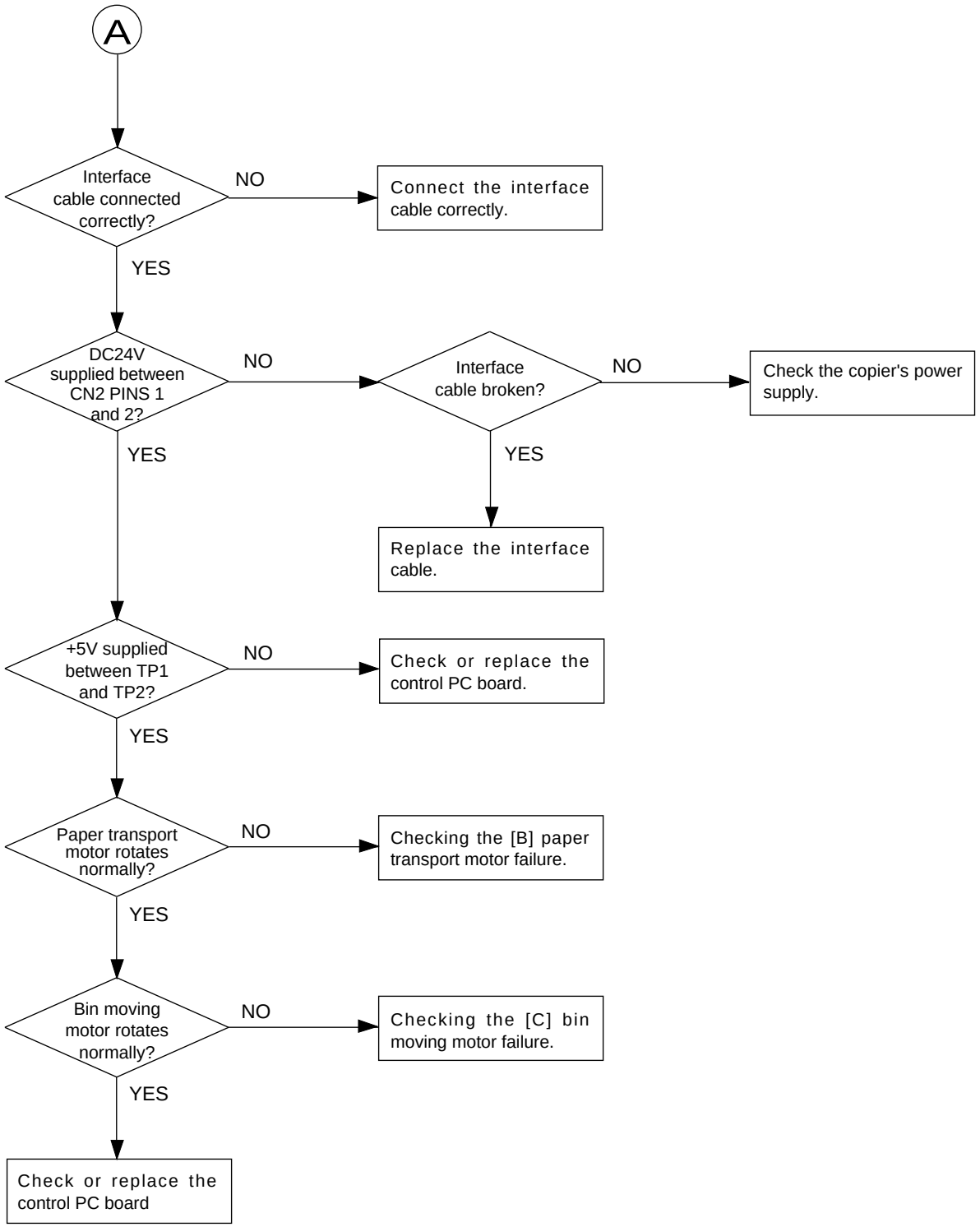

[B] Paper transport motor failure

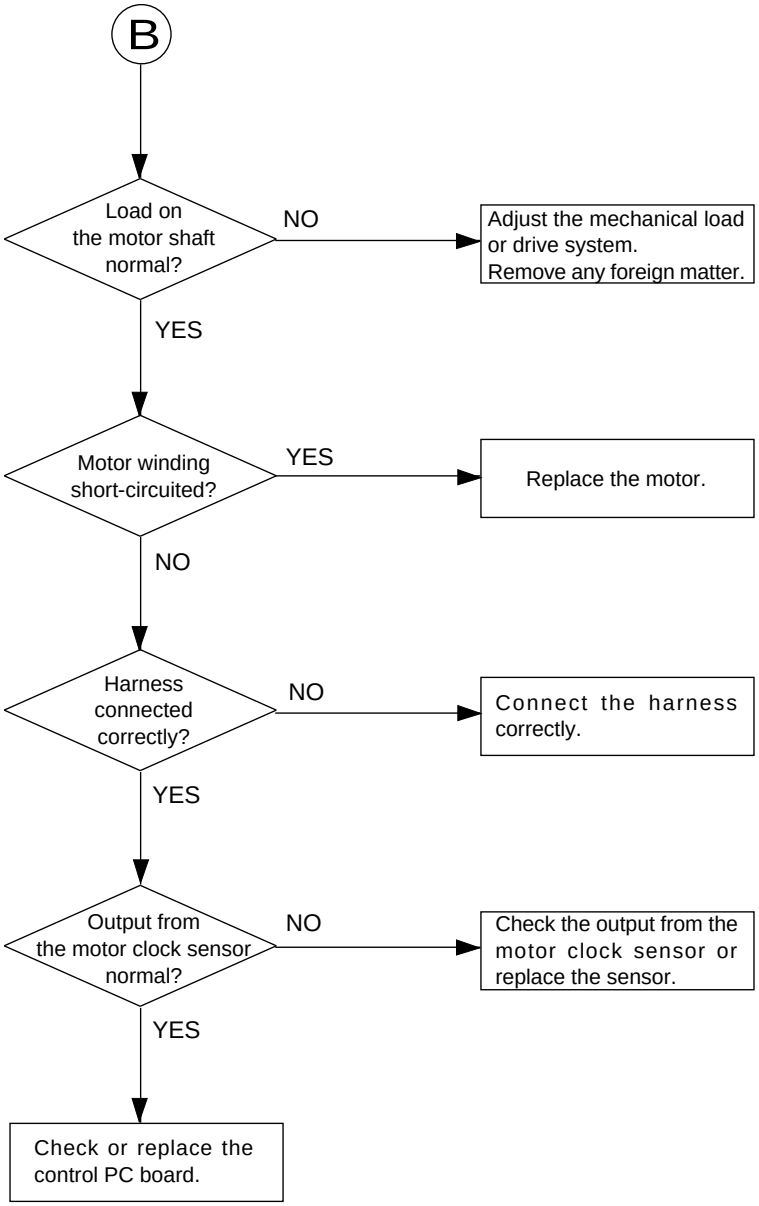

[C] Bin moving motor failure

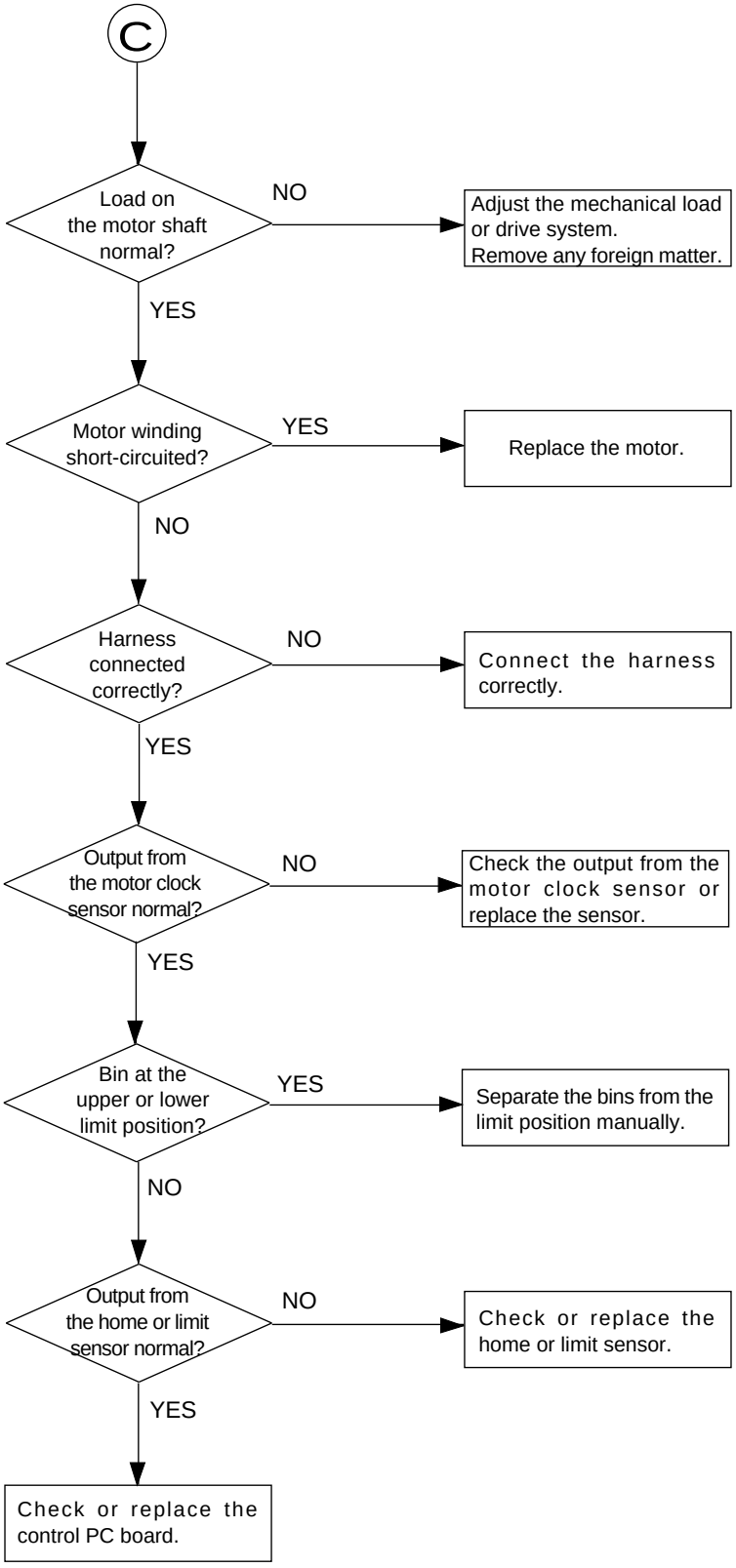

[D] Communication failure

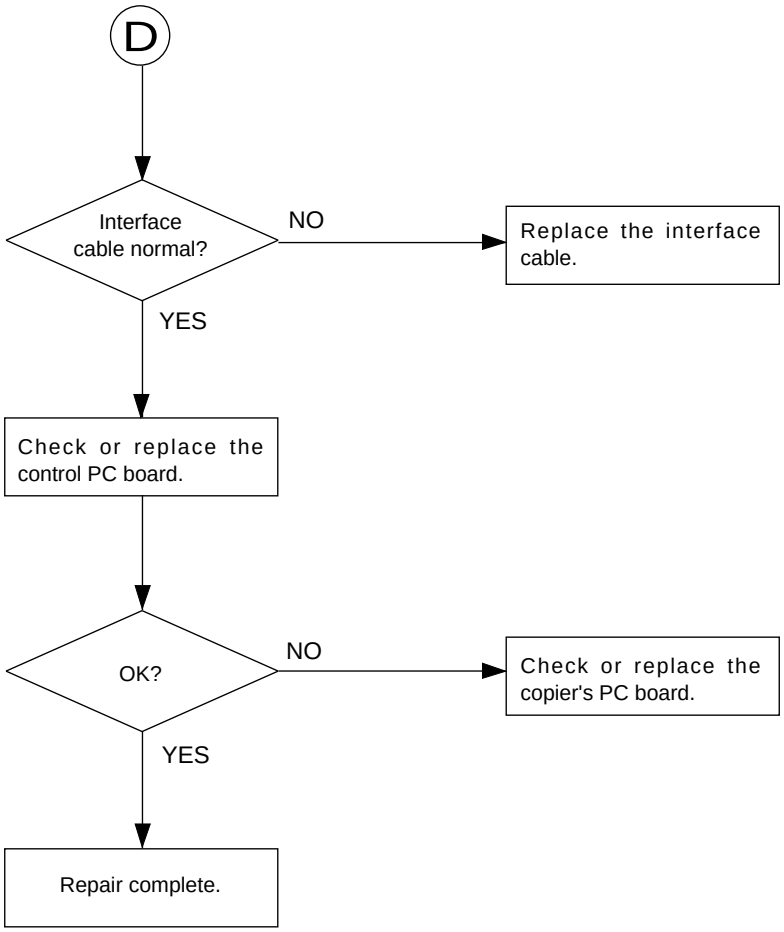

14.2 Maintenance Items

	Part name/position	Number of copies for maintenance	Remarks
Cleaning	<sensor section>		Wipe with a dry cloth.
	Bin home position sensor	15OK copies	
	One-rotation detection sensor	15OK copies	
	Copy-removal position sensor	15OK copies	
	Bin moving motor sensor	15OK copies	
	Paper transport motor sensor	15OK copies	
	Upper/Lower limit sensor	15OK copies	
	Paper path sensor	15OK copies	
	Paper sensor-U (upper)	15OK copies	
	Paper sensor-L (lower)	15OK copies	Wipe U-SEN Mylar with alcohol.
	<Roller section> Paper transport roller (sorter exit section)	15OK copies	Wipe with alcohol.
Lubrication	Tray up/down drive worm gear section	15OK copies*	Apply grease as per the Instruction Sheets.
	Paper transport motor worm gear section	15OK copies	
	Other section to be greased	15OK copies	
Adjustment	Bin moving motor tension pulley (timing belt)	15OK copies*	First loosen the screw then tighten it.

* Indicates the number of copies made in sorting or grouping.

(1) Items to be greased:
Refer to the listings on the following pages. Grease should be applied to the shaded parts shown in the illustrations.

(2) Specified Grease:
Molycoat EM50L

(3) Areas not to be greased:
Any parts located on the paper path or parts where paper is accomodated should not be deposited with any kinds of grease or oil. Also, timing belts should not be deposited with any oils.

Caution: While applying grease, be careful not deposit grease to the parts mentioned above inadvertently.

No.	Parts to be greased	Grease to be used	Remarks
1	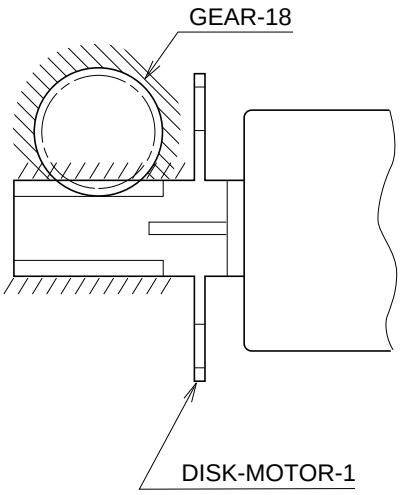	Molycoat grease EM-50L Amount to be applied: 30 mg	While rotating the gear, lubricate the gear teeth.
2	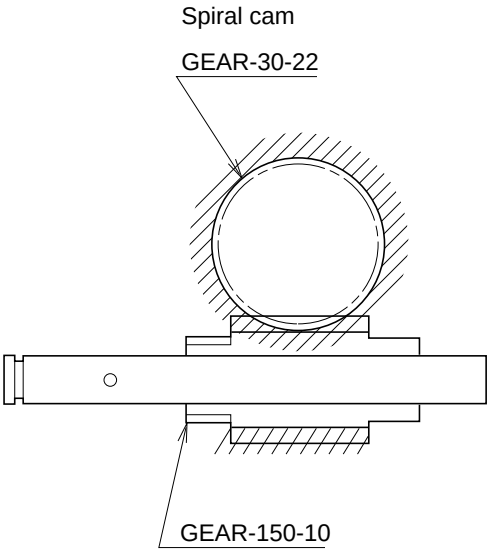	Molycoat grease EM-50L Amount to be applied: 30 mg	While rotating the gear, lubricate the gear teeth.

No.	Parts to be greased	Grease to be used	Remarks
3	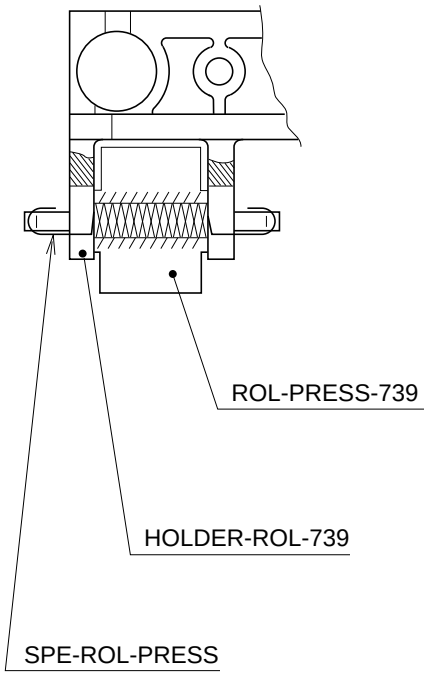	Molycoat grease EM-50L Amount to be applied: 10 mg (4 rollers)	Lubricate the inside face of ROL-PRESS-739 and SPE-ROL-PRESS sliding faces. Be careful not to deposit the outside face of ROL-PRESS-739 with grease.
4	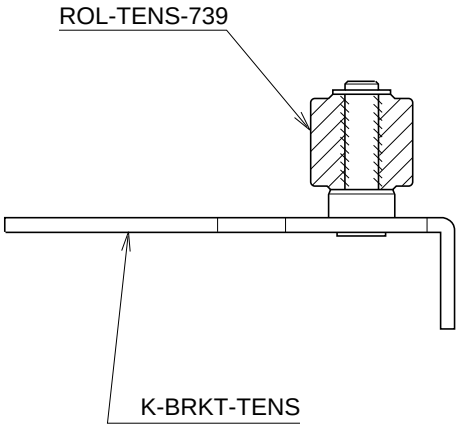	Molycoat grease EM-50L Amount to be applied: 10 mg	Lubricate the inside face of ROL-TENS-739. Be careful not to deposit the outside face of ROL-TENS-739 with grease.

15. TIMING CHARTS

15.1 Non-Sort Mode (Making 120 copies, A4 size)

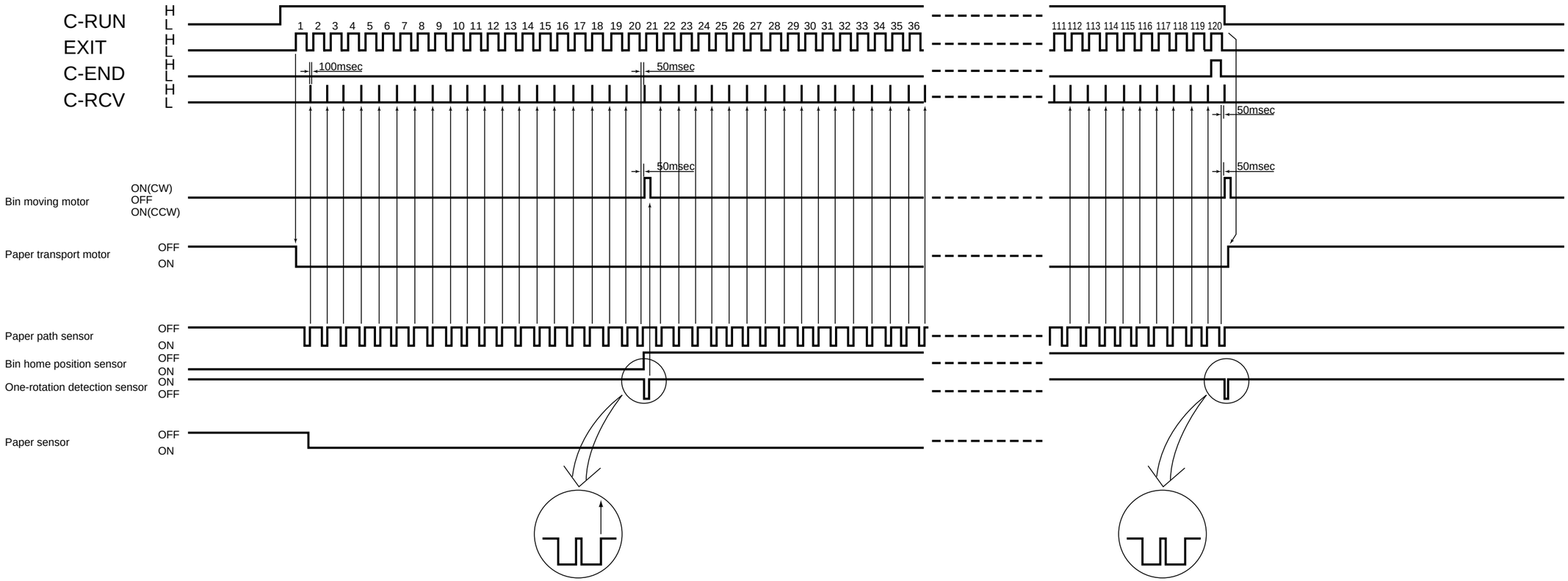

15.2 Sort Mode (Making 4 sets of copies from 2 originals)

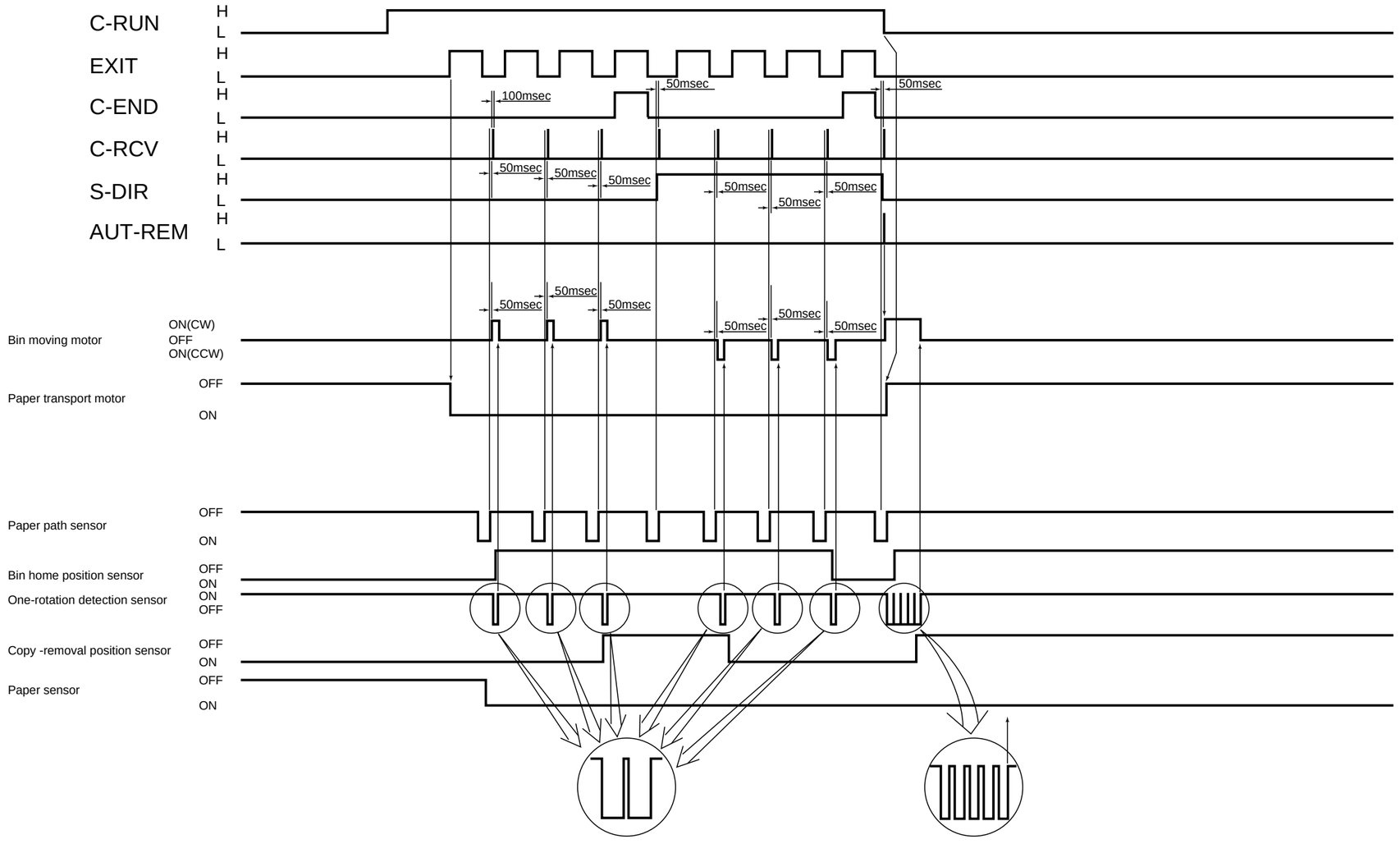

15.3 Group Mode (Making 2 copies of each of 3 originals)

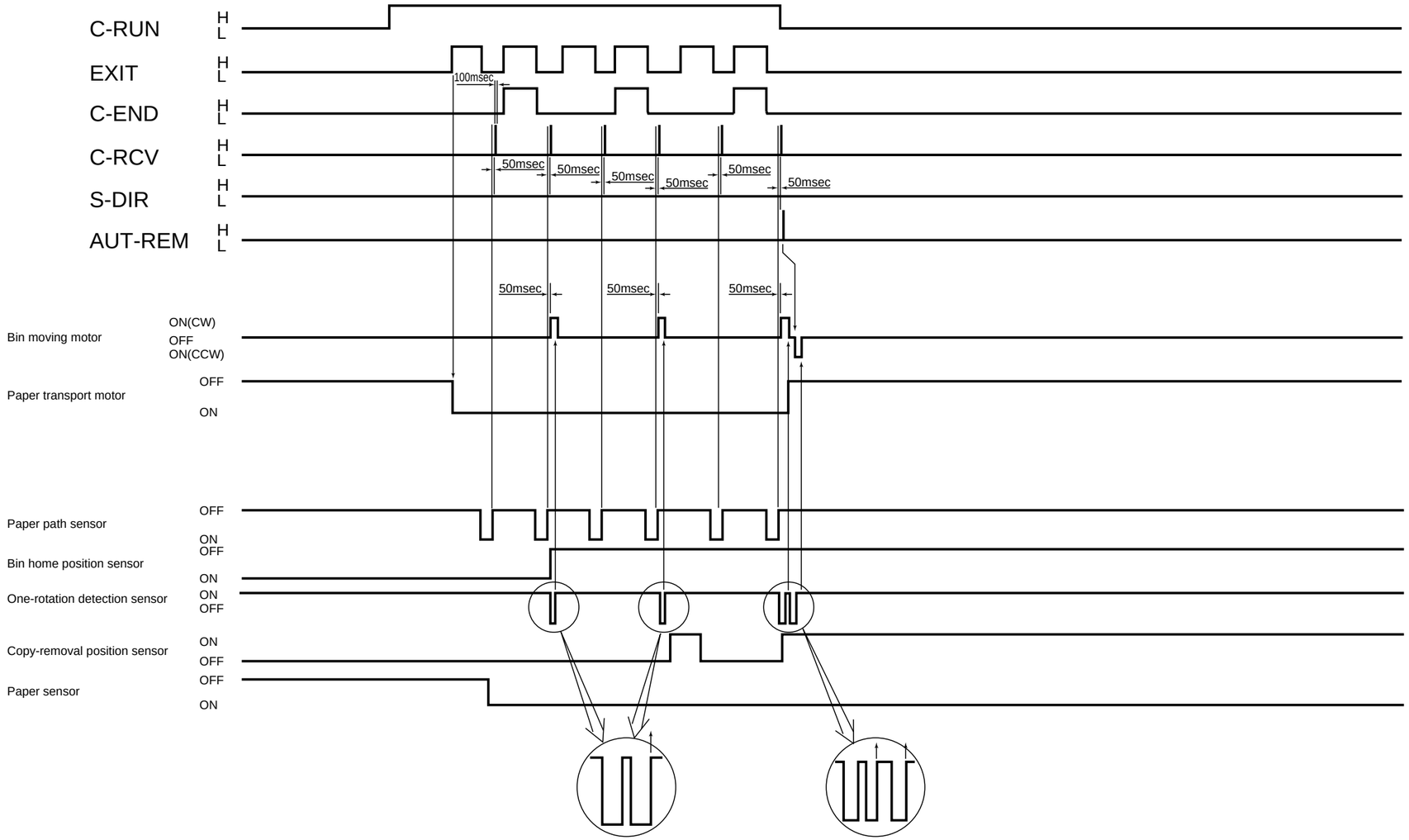

15.4 Copy Removal Mode (After copying 10 sets of copies from 2 originals by sort mode)

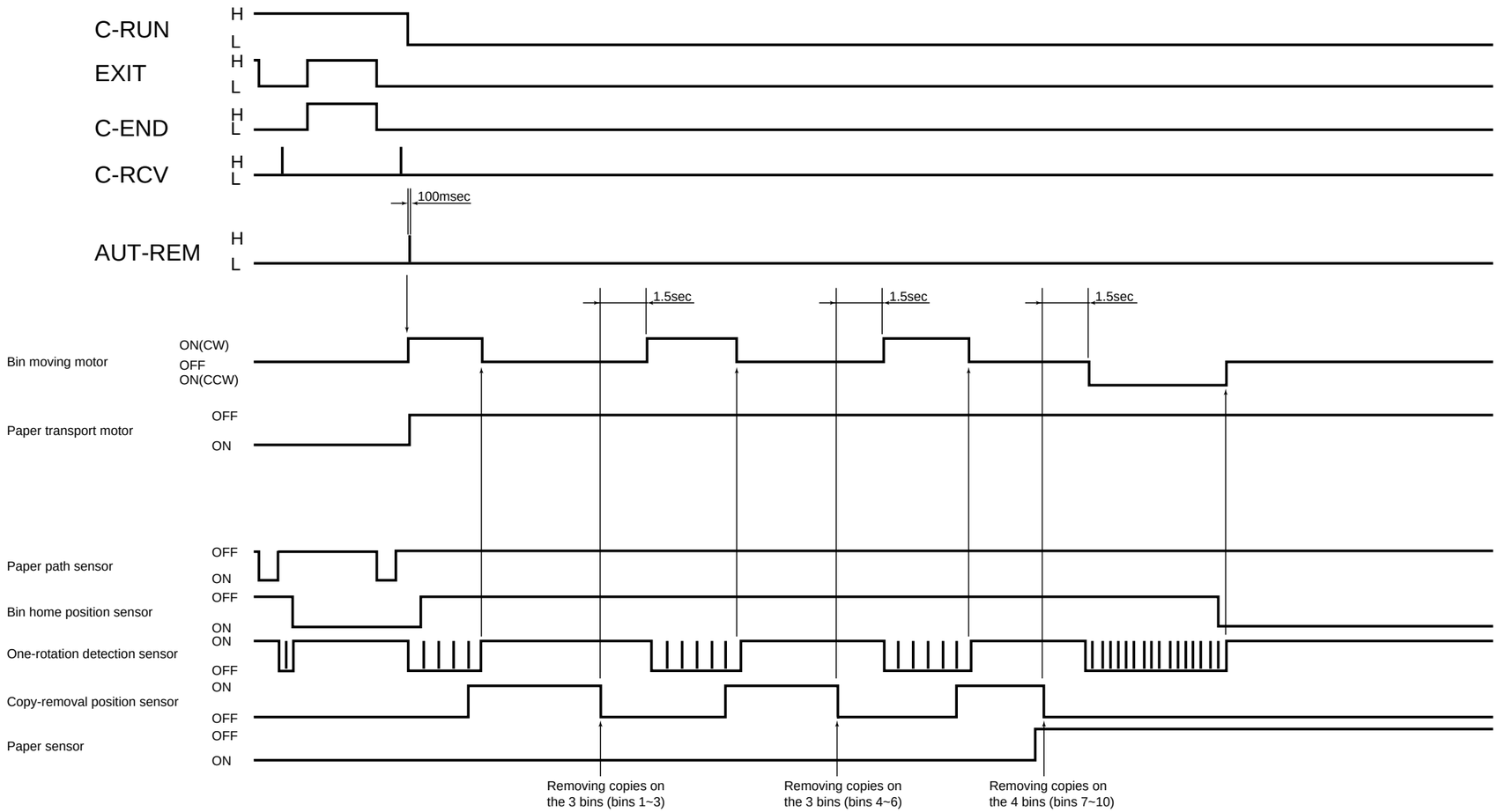

16. HARNESS CONNECTION DIAGRAM

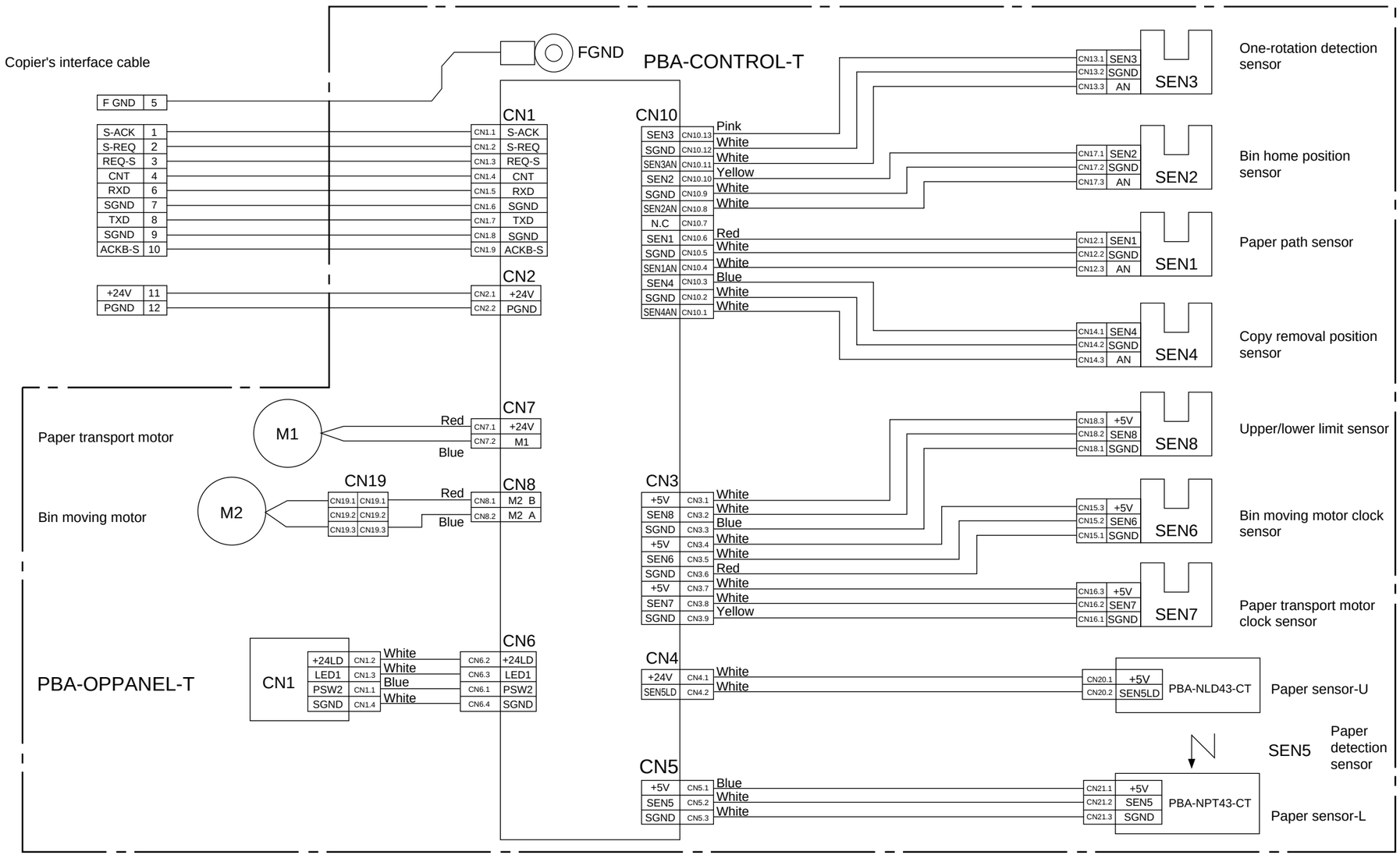

17. CONTROL PC BOARD CIRCUIT

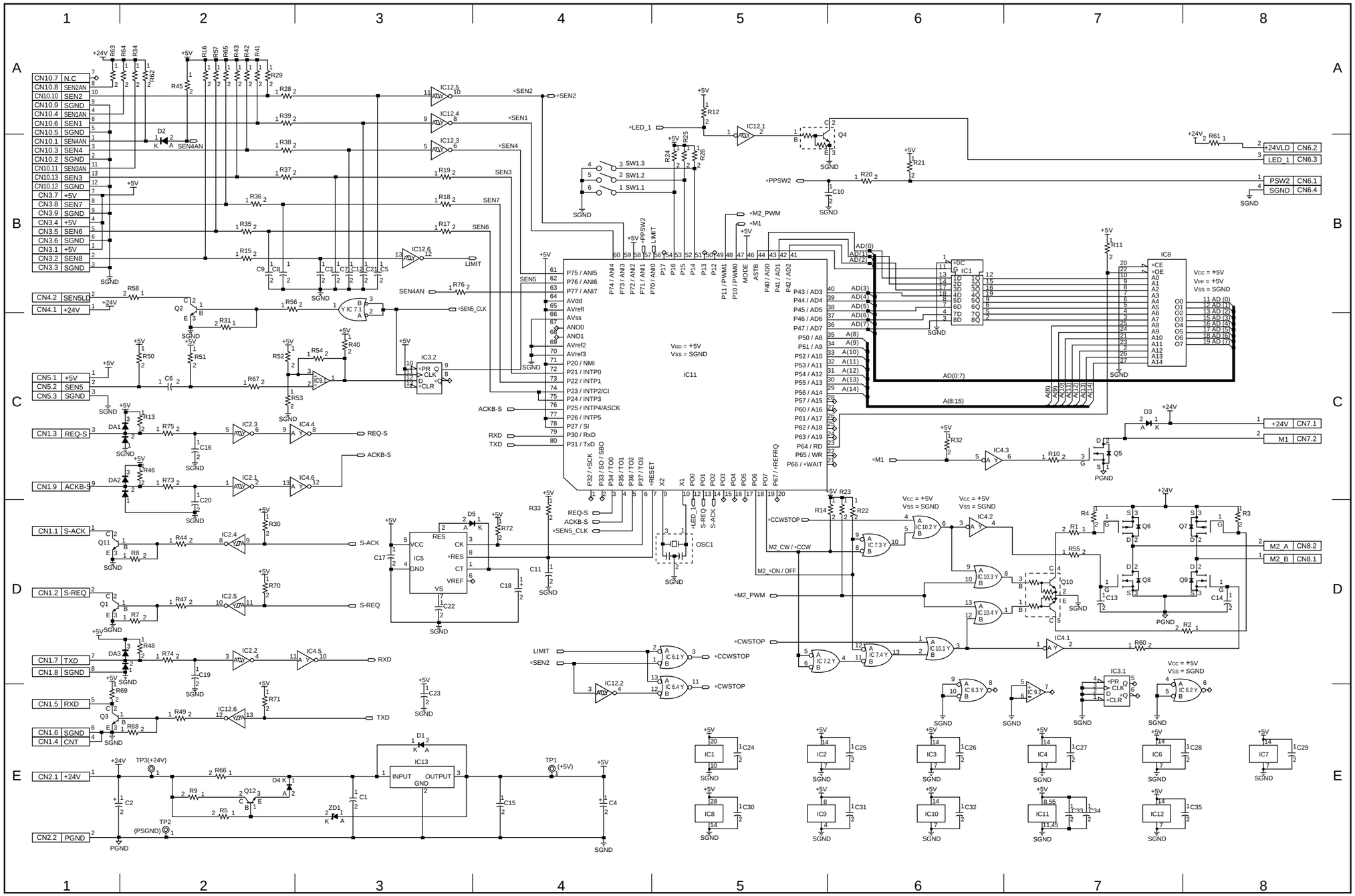

18. UNPACKING/SET-UP INSTRUCTIONS

18.1 Unpacking Procedure

Open the carton and take out the accessory package and packing materials.
The following parts are included in the accessory package:

① 10-bin sorter ..... 1 pc.
② Sorter mounting pins ..... 2 pcs.
③ Sorter fixing materials ..... 1 pc.
④ Fixing screw ..... 1 pc.

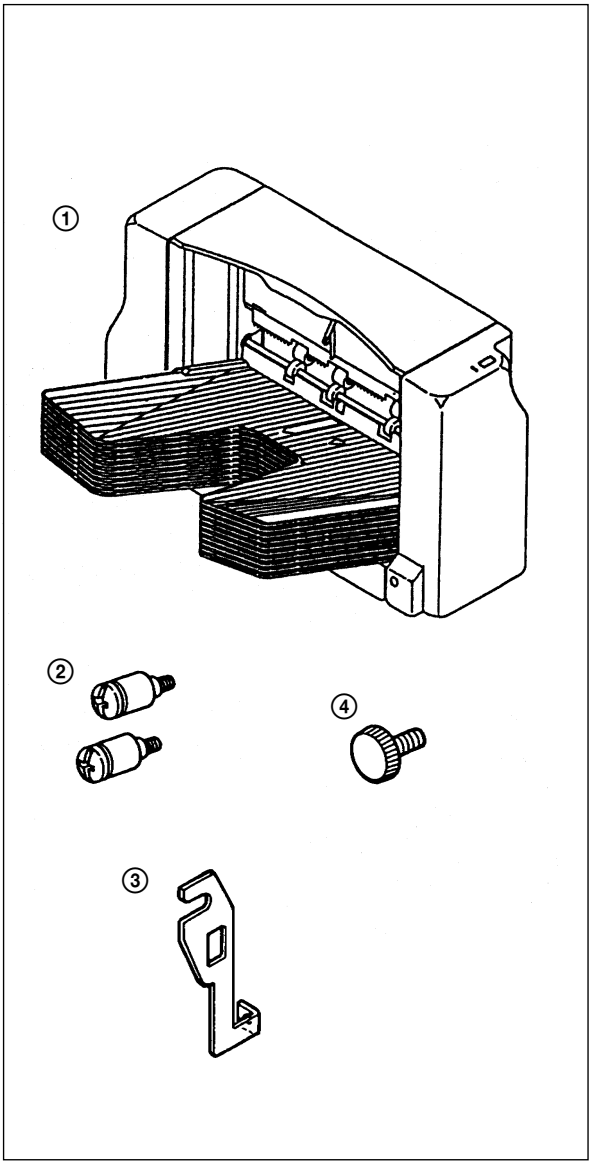

18.2 Setup Procedure

Note: Be sure to turn off and ulplug the copier.

According to the application PPC models, there is possibility of changing these figures.

1. Referring to the “Unpacking/Setup Instructions for the Sorter Kit”, install the sorter kit to the copier.

   Note: The “Unpacking/Setup Instructions for the Sorter Kit” is included in the sorter kit carton.

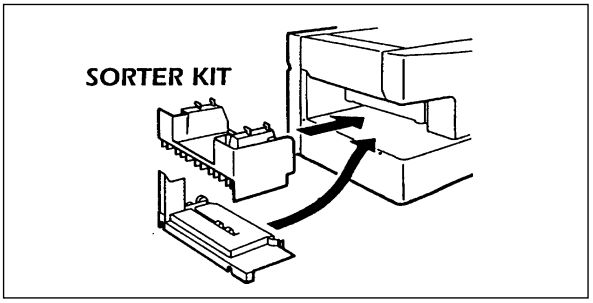

2. Install the two sorter mounting pins to the exit side of the copier.

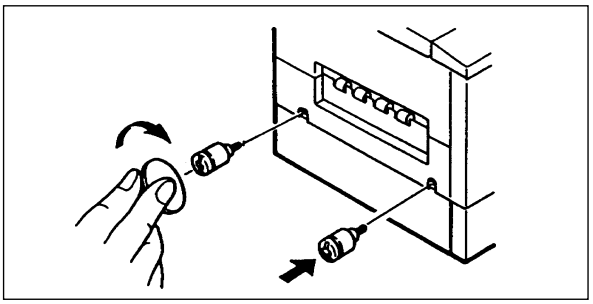

3. Hook the mounting sections (front and rear) of the sorter onto the sorter mounting pins as shown and install the sorter fully to the copier.

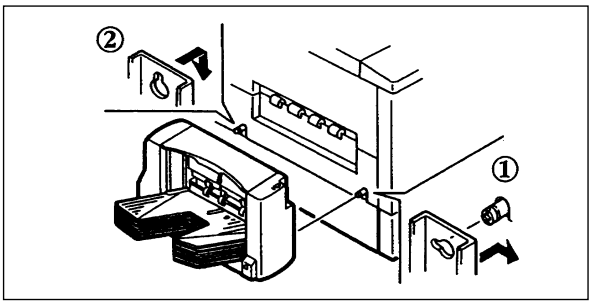

4. Cut off the “window” part marked with a sorter mark, which is located on the rear side of the copier.

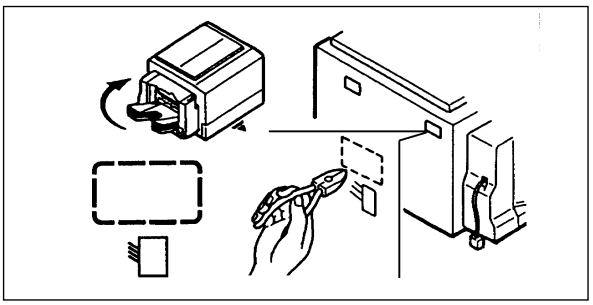

5. Connect the sorter connector to the connector marked with the sorter mark on the rear side of the copier.

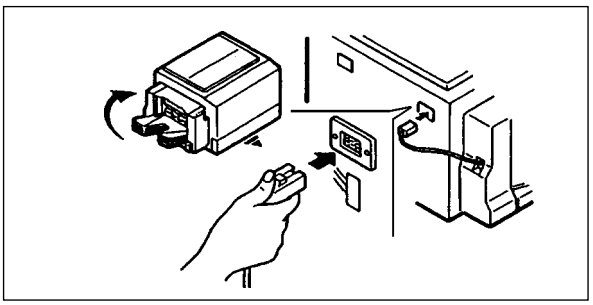

6. Attach the sorter fixing plate to the sorter mounting pins.
   Fix the plate to the sorter using the provided screw.

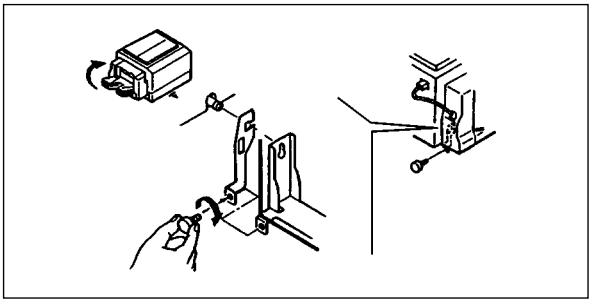

7. End.

