TOSHIBA

# SERVICE MANUAL
## AUTOMATIC DOCUMENT FEEDER

# MR-2004



Click the Page Only button to close the overview area of the window.

Click the Bookmarks and Page button to open the Contents and display bookmarks created for the document. Click a bookmark's name to go to the Page marked by that bookmark.

Click the Thumbnails and Page button to open the overview area and display thumbnail images of each document page. Click a thumbnail to go to the page marked by that thumbnail.

Copyright TOSHIBA CORPORATION 1995
ALL RIGHTS RESERVED

## 1. SPECIFICATIONS OF THE MR-2004

| | |
|---|---|
| Model Name | MR-2004 |
| Number of Originals | Up to 30 originals (A4/64~80 g/m$^2$ or Letter/17~22 lb.) can be set at a time. |
| Feeding Speed | Approx. 15 originals/minute (A4 or Letter, side feeding) when installed on the 1550 |
| Acceptable Original Size | Minimum : A5-R or Statement-R<br>Maximum : A3 or Ledger<br>Paper weight : 60~90 g/m$^2$ 16~24 lb. |
| Power Source | Supplied from the copier |
| Power Consumption | 60 W |
| Dimensions | W548×D469×H125mm<br>W21.6”×D18.5”×H4.9” (excluding the original feed tray) |
| Weight | Approx. 7.5 kg or 16.5 lb. |

Specifications are subject to change without notice.

## 2. CONSTRUCTION OF THE MR-2004

The automatic document feeder (ADF) consists mainly of the feed section, transport section, exit section and control section, as shown below.

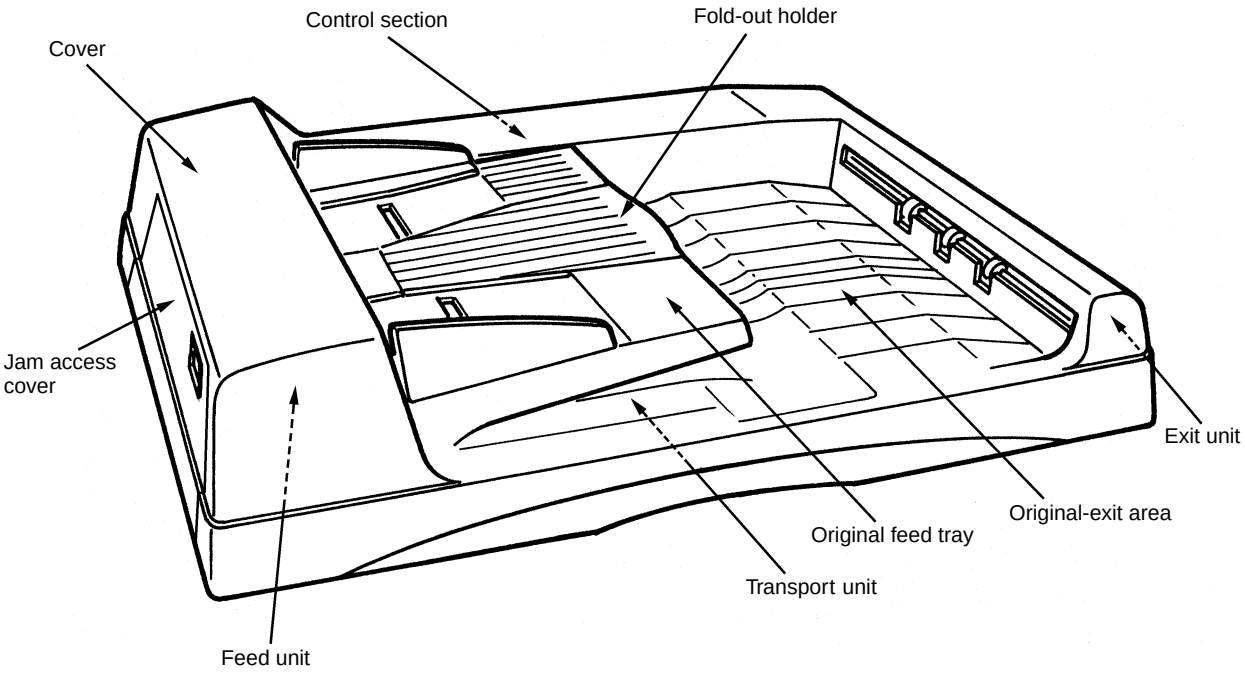


| | Mechanical | Electrical |
|---|---|---|
| Feed unit | • Jam access cover<br>• Aligning rollers<br>• Feed roller<br>• Separation roller | • Drive motor<br>• Empty sensor<br>• Aligning sensor<br>• Size sensor<br>• Weight solenoid |
| Transport unit | • Transport belt<br>• Belt rollers<br>• Belt holding rollers | • ADF set switch |
| Exit unit | • Exit cover<br>• Exit roller | • Exit sensor |
| Control section | ——— | • PC board |
| Other | • Cover<br>• Hinges | ——— |

# 3. FRONT SECTION AND DRIVE SYSTEM DIAGRAMS

## 3.1 Front Section Diagram

* : Feed unit
** : Exit unit
*** : Transport unit

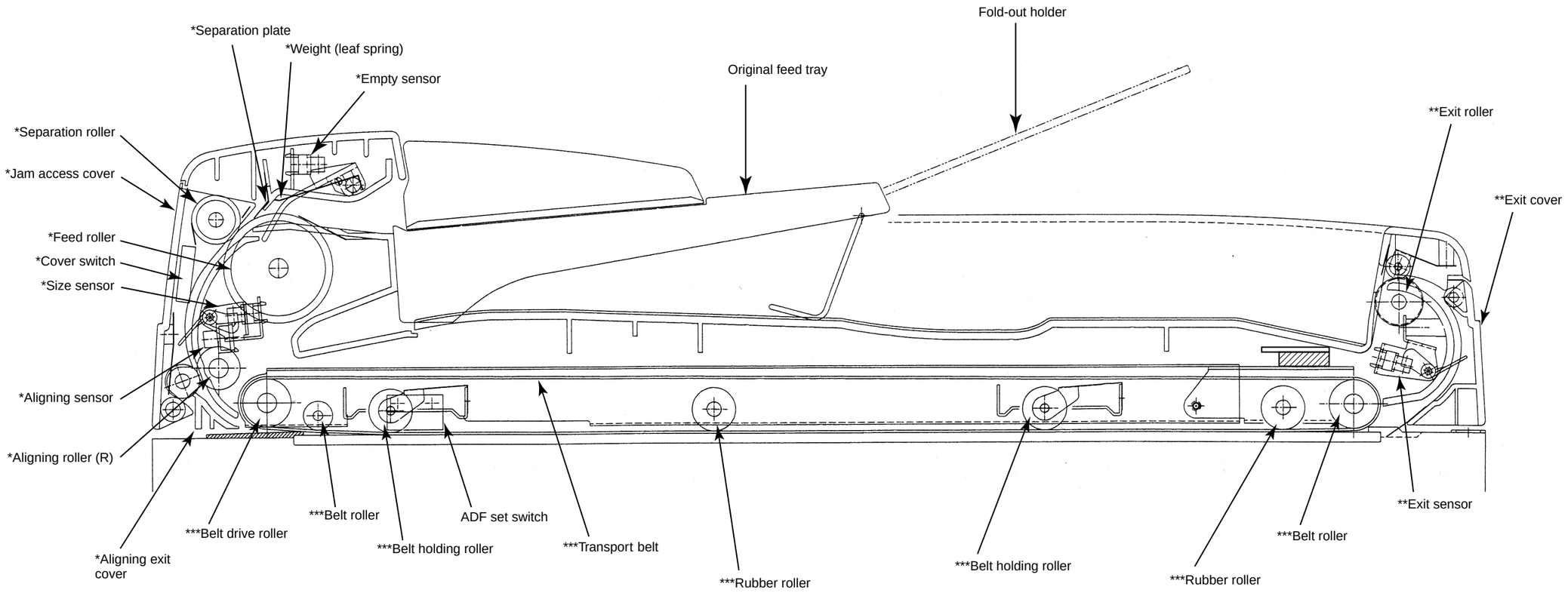

### 3.2 Drive System Diagram

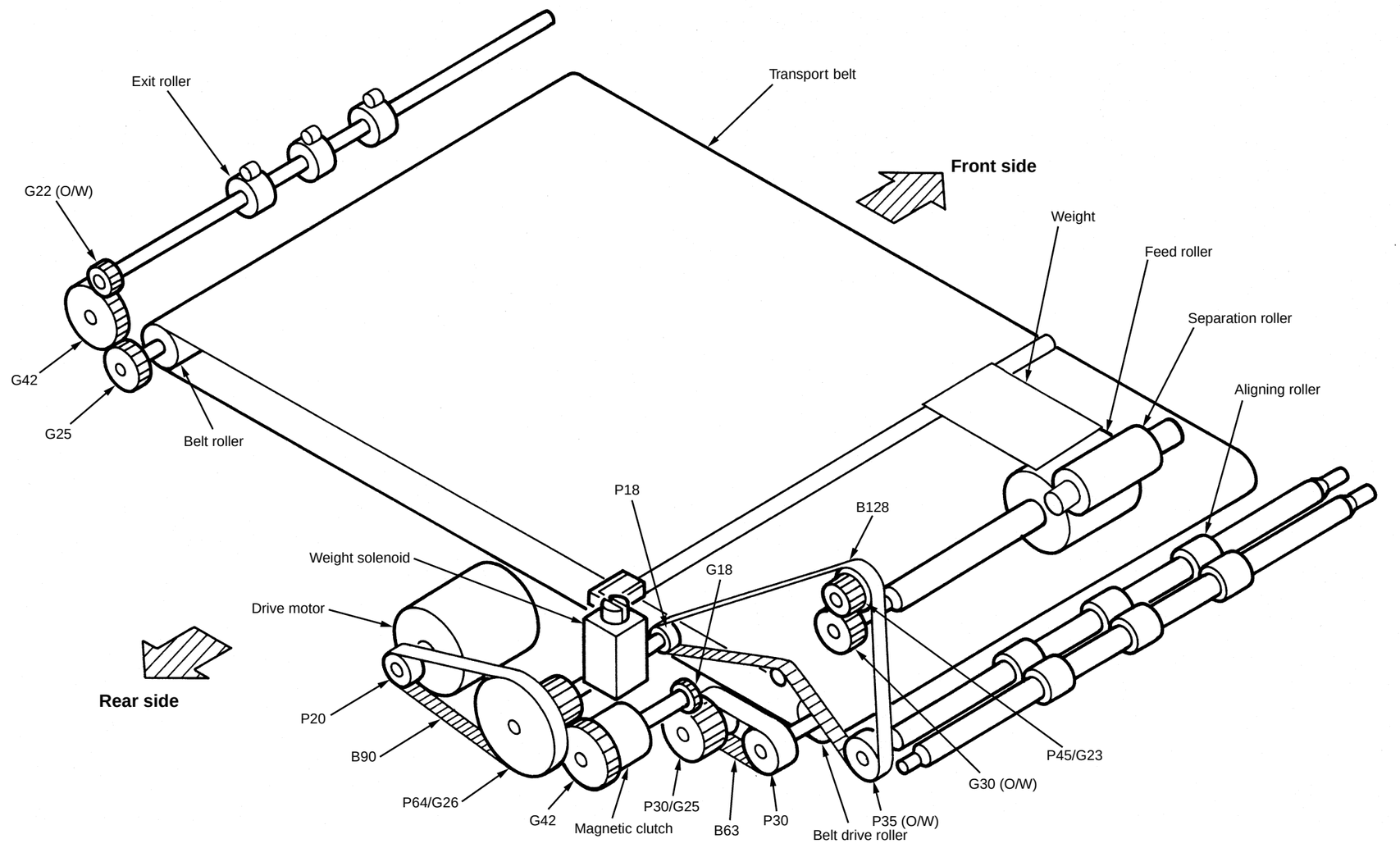

# 4. EXPLANATION OF OPERATION SEQUENCE

## 4.1 Feeding/Exiting of Originals

(1) Single-side original mode

In the operation sequence of feeding originals until they are discharged (feeding originals → separation → aligning → transport → stopping the originals → starting copying → finishing copying → exiting the originals), the operation until the originals are delivered to the transport section is described in A, B, D and E in the following pages.

(2) 2 in 1 mode

In the operation sequence of feeding originals through discharging them (feeding the 1st original → separation → aligning → transporting → feeding the 2nd original → separation → aligning → joining the 1st and 2nd originals → transporting → stopping the originals → starting copying → finishing copying → discharging the originals), the sequence until they are delivered to the transport section is described in A, B, C, D and E in the following pages.

(3) Detailed operation steps

| Operation step | Operation explanation |
|---|---|
| A. Setting originals<br>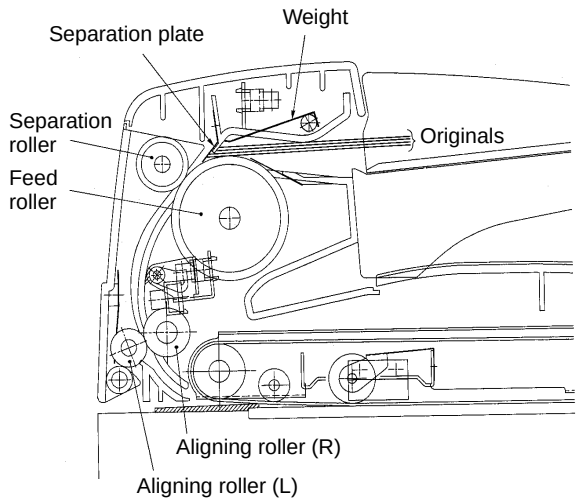<br> | • Originals are set on the original feed tray.<br>• Drive motor<br>• Weight solenoid } OFF<br>• Feed roller<br>• Aligning roller } Stationary |
| B. Pressing PRINT up to aligning<br>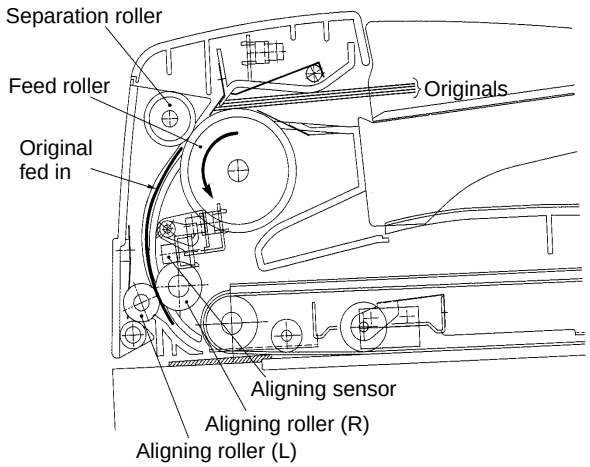<br> | • PRINT is pressed.<br>• The electromagnetic clutch is turned on. The drive motor rotates clockwise (as seen from the rear) → Dummy paper exiting is performed.<br>• The electromagnetic clutch is turned off. The drive motor stops rotating.<br>• The weight solenoid is turned on.<br>• The drive motor is rotated again (counterclockwise).<br>• The feed roller rotates in the direction of the arrow.<br>• The lowermost of the originals that are set is fed in.<br>• The separation roller and the feed roller send the single original to the aligning roller. The aligning sensor is turned on. About 10 milliseconds later, the weight solenoid is turned off.<br>• About 10 milliseconds after the aligning sensor was turned on, the drive motor stops (pulse controlled).<br>• The drive motor is turned on and after the original is pre-fed about 10 milliseconds by the aligning roller, the drive motor is turned off. |

| Operation step | Operation explanation |
|---|---|
| C. During 2 in 1 copying, after the first original is aligned until the first and the second originals are joined:<br>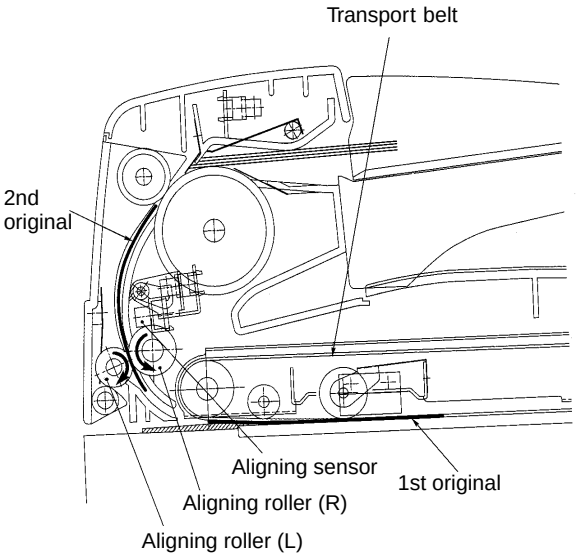<br> | • The electromagnetic clutch is turned on. The drive motor is energized in a clockwise direction (as seen from the rear) to drive the transport belt.<br>• The trailing edge of the first original passes the aligning sensor to turn it off.<br>• About 100 milliseconds after the aligning sensor is turned off, the motor and the clutch are turned off → The first original stops.<br>• The weight solenoid is turned on.<br>• The drive motor is rotated (counterclockwise).<br>• The second original is sent out to the aligning roller. The aligning sensor is turned on. About 10 milliseconds later, the weight solenoid is turned off.<br>• About 10 milliseconds after the aligning sensor was turned on, the drive motor stops rotating (pulse controlled).<br>• The drive motor is turned on, the second original is transported by the aligning roller and after it is joined with the first original, the drive motor is turned off. |

| Operation step | Operation explanation |
|---|---|
| D. After aligning to positioning for exposure<br>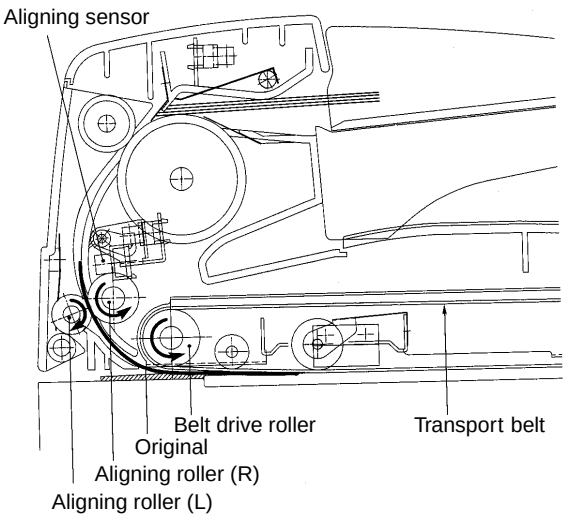<br> | • Electromagnetic clutch is turned on. The drive motor is energized (clockwise) and drives the aligning roller and transport belt.<br>(During 2 in 1 copying, two originals are transported at the same time.)<br>• The trailing edge of the original (for 2 in 1 copying, the trailing edge of the second original) passes the aligning sensor and turns it off.<br>• About 100 milliseconds after the sensor is turned off, the motor and the clutch are turned off → The original is stopped (exposure position). |
| E. Exiting of originals<br>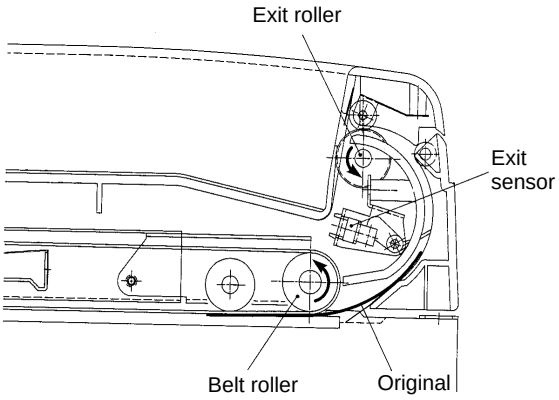<br> | • The electromagnetic clutch is turned on. The drive motor is rotated clockwise, sending the original into the exiting section.<br>• About 100 milliseconds after the exit sensor is turned off, the drive motor is turned off.<br>• The original is stacked in the exit section. |

## 4.2 Description of Automatic Document Feeder Operation

(1) Single-side copying operation

① When originals are set on the original feed tray, the empty sensor detects the presence of the originals and the ORG-RDY signal is sent out to the copier.

② When the ADF receives the ORG-IN signal from the copier, it sets the DF-ACT signal and starts replacing the originals. However, in the feeding of originals immediately after the power switch is turned on or after the ADF is opened and then closed, the operation in step ③ (dummy original exiting) is performed before feeding originals starts. Otherwise, control skips to step ④ (feeding originals).

③ Since an original may have been left on the glass, the electromagnetic clutch is turned on and the drive motor is rotated in reverse to start dummy original exiting. A fixed time later, the drive motor is turned off and the dummy original exiting is completed.

④ A fixed time after the weight solenoid is turned on, the drive motor is rotated in the normal direction to start feeding originals. When the leading edge of the original reaches the aligning sensor, the counting of motor clock pulses starts and after a fixed number of pulses is counted, the drive motor is turned off.

⑤ The drive motor is then rotated in reverse to start a two-step pre-feeding operation. At the same time, the status of the size/width sensor is stored and the size measuring counter and the PRE-STP signal set timing counter are started. When a fixed number of motor clock pulses is counted, the drive motor is stopped.

⑥ The electromagnetic clutch is energized and the drive motor is rotated in reverse to send out the original onto the glass. When the PRE-STP signal set timing counter counts a fixed number of motor clock pulses, a PRE-STP signal is output.

⑦ When the aligning sensor detects the trailing edge of the original, size measuring is completed. With this measurement and the status of the size/width sensor stored in step ⑤, the original size is detected and the DF-ACT signal is reset. At the same time, the original stop counter and the ORG-STP signal set timing counter start counting.

⑧ After the ORG-STP signal set timing counter counts a fixed number of motor clock pulses, an ORG-STP signal is output.

⑨ After the original stop counter counts a fixed number of motor clock pulses, the drive motor is stopped, thus completing the setting of the original at the exposure position.

⑩ If the empty sensor is on, the PRE-FED signal is set and a fixed time after the weight solenoid is turned on, the drive motor is rotated in the normal direction to start original pre-feeding.

⑪ When the leading edge of the original reaches the aligning roller, a fixed number of motor clock pulses is counted to stop the drive motor.

⑫ The drive motor is rotated in reverse to start the two-step pre-feeding. At the same time, the status of the size/width counter is stored and the size measuring counter and the PRE-STP signal set timing counter start counting. When a fixed number of motor clock pulses is counted, the drive motor is turned off and the ADF goes into standby status. When it receives the next ORG-IN signal, step ⑥ onward is repeated.

(2) 2 in 1 operation

① When originals are set on the original feed tray, the empty sensor detects the presence of the originals and the ORG-RDY signal is sent out to the copier.

② When the ADF receives the ORG-IN signal from the copier, it sets the DF-ACT signal and starts replacing the originals. However, in the feeding of originals immediately after the power switch is turned on or after the ADF is opened and then closed, the operation in step ③ (dummy original exiting) is performed before feeding originals starts. Otherwise, control skips to step ④ (feeding originals).

③ Since an original may have been left on the glass, the electromagnetic clutch is turned on and the drive motor is rotated in reverse to start dummy original exiting. A fixed time later, the drive motor is turned off and the dummy original exiting is completed.

④ A fixed time after the weight solenoid is turned on, the drive motor is rotated in the normal direction to start feeding originals. When the leading edge of the original reaches the aligning sensor, the counting of motor clock pulses starts and after a fixed number of pulses is counted, the drive motor is turned off.

⑤ The drive motor is then rotated in reverse to start a two-step pre-feeding operation. At the same time, the status of the size/width sensor is stored and the size measuring counter is started. When a fixed number of motor clock pulses is counted, the drive motor is stopped.

⑥ The electromagnetic clutch is energized and the drive motor is rotated in reverse to send out the first original to a point before the exposure position.

⑦ When the aligning sensor detects the trailing edge of the original, size measuring is completed. With this measurement and the status of the size/width sensor stored in step ⑤, the original size is detected and memorized. At the same time, the first original stop counter starts counting.

⑧ After the first original stop counter counts a fixed number of motor clock pulses, the drive motor stops rotating.

⑨ A fixed time after the PRE-FED signal is set and the weight solenoid is turned on, the drive motor is rotated in the normal direction to start feeding the second original. When its leading edge reaches the aligning sensor, a fixed number of motor clock pulses is counted to stop the drive motor.

⑩ The drive motor is rotated in reverse to start the two-step pre-feeding. At the same time, the status of the size/width counter is stored and the size measuring counter and the PRE-STP signal set timing counter start counting. When a fixed number of motor clock pulses is counted, the drive motor is turned off.

⑪ The electromagnetic clutch is turned on and the drive motor is rotated in reverse to send out two originals onto the glass. When the PRE-STP signal set timing counter counts a fixed number of motor clock pulses, a PRE-STP signal is output.

⑫ When the aligning sensor detects the trailing edge of the original, the size measuring is completed and with this measurement and the status of the size/width sensor stored in step ⑩, the size of the original is detected. After this size and that of the first original stored in step ⑦ are compared, the larger size is output. The DF-ACT and PRE-FED signals are then reset. At the same time, the original stop counter and the ORG-STP signal set timing counter start counting.

⑬ After the ORG-STP signal set timing counter counts a fixed number of motor clock pulses, an ORG-STP signal is output.

⑭ After the original stop counter counts a fixed number of motor clock pulses, the drive motor is stopped and the setting of the originals in the exposure position is completed. The ADF then goes into a standby status.

⑮ When the next ORG-IN signal is received, the electromagnetic clutch is turned on and the drive motor is rotated in reverse. This causes the two originals to exit and then step ④ onward is repeated.

# 5. NAMES AND FUNCTIONS OF ELECTRICAL PARTS

*Go to* **Harness Connection Diagram**

## 5.1 Functions of Electrical Parts

(1) Motor

| Symbol | Name | Function | Remarks |
|---|---|---|---|
| MOT | MOT<br>(Drive motor) | Driving of feed roller, aligning roller, transport belt and exit roller | DC brush motor |

(2) Solenoid and clutch

| Symbol | Name | Function | Remarks |
|---|---|---|---|
| WGTSL | WGTSOL<br>(Electromagnetic solenoid) | Lifting up and down of weight plate spring | Electromagnetic solenoid |
| CLU | CLU<br>(Electromagnetic clutch) | Transmitting of drive of transport belt and exit roller | Electromagnetic clutch |

(3) Sensors

| Symbol | Name | Function | Remarks |
|---|---|---|---|
| EMPS | EMP-SNS<br>(Empty sensor) | Original detection sensor for originals on original feed tray | Semiconductor sensor |
| REGS | REG-SNS<br>(Aligning sensor) | Original detection sensor for aligning | Semiconductor sensor |
| SIZES1 | SIZE-SNS1<br>(Size sensor 1) | Original width detection sensor 1 | Semiconductor sensor |
| SIZES2 | SIZE-SNS2<br>(Size sensor 2) | Original width detection sensor 2 | Semiconductor sensor |
| EXITS | EXIT-SNS<br>(Exit sensor) | Original detection sensor at exit section | Semiconductor sensor |
| COVER | COVER-SW<br>(Cover switch) | Detection switch for opening/closing feed side | Reed switch |
| SET | SET-SW<br>(ADF set switch) | Detection switch for opening/closing ADF unit | Reed switch |
| MCLK | MCLK-SNS<br>(Motor clock sensor) | Sensor for counting motor clock pulses | Semiconductor sensor |

## 5.2 Electrical Parts Location Diagram

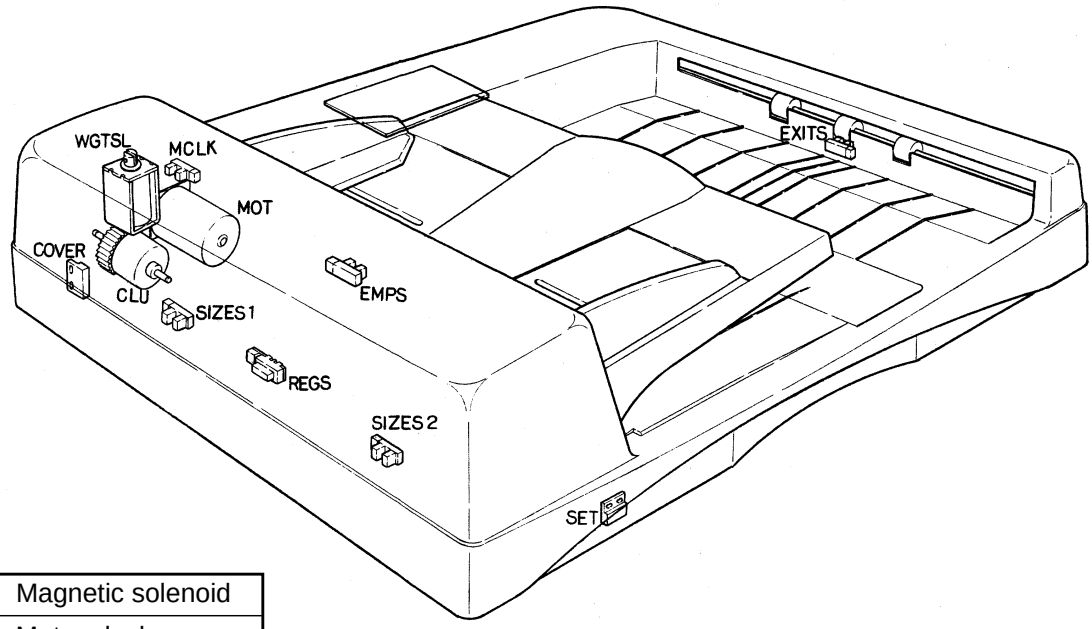


| | |
|---|---|
| WGTSL | Magnetic solenoid |
| MCLK | Motor clock sensor |
| COVER | Cover switch |
| CLU | Magnetic clutch |
| MOT | Drive motor |
| SIZES1 | Size sensor 1 |
| EMPS | Empty sensor |
| REGS | Aligning sensor |
| SIZES2 | Size sensor 2 |
| SET | ADF set switch |
| EXITS | Exit sensor |

## 5.3 Block Diagram for Electrical Signals

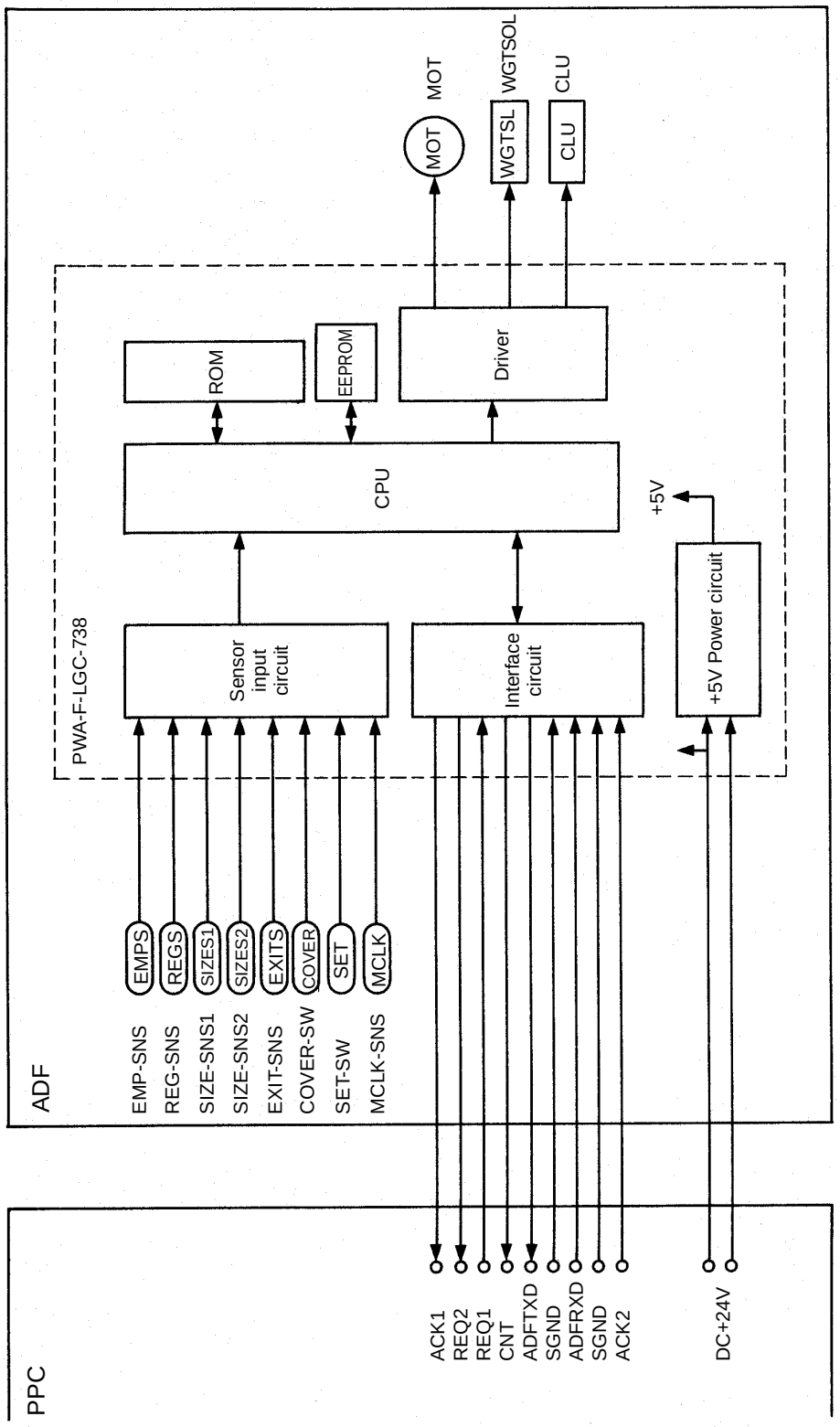

## 6. DESCRIPTION OF INTERFACE SIGNALS

The sending and receiving of signals between the copier and the ADF is conducted by using the six lines as shown below:

REQ1 ..... Communication request signal (from the copier to the ADF)
REQ2 ..... Communication request signal (from the ADF to the copier)
ACK1 ..... Communication request response signal (from the ADF to the copier)
ACK2 ..... Communication request response signal (from the copier to the ADF)
DF-TXD ..... Data sent from the copier to the ADF
DF-RXD ..... Data sent from the ADF to the copier

Since data transmission between the copier and the ADF (DF-TXD and DF-RXD) is conducted by means of serial transmission, it is not possible to check for the correct data transmission in the field.

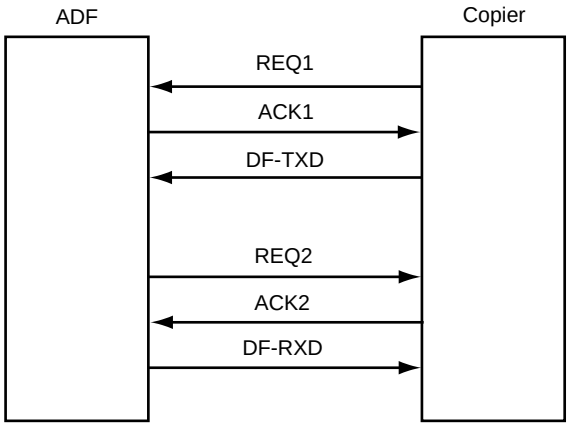

## 7. CONTENTS OF ORIGINAL JAMS AND ADF ERRORS

(1) Type of jams

① Jams at feed section: Jams in the feed side from the start of feeding until the aligning sensor is turned on.

② Jams at transport section: Jams on the transport path while the original passes the aligning sensor, or jams on the transport path from the start of two-step pre-feeding until the exit sensor is turned on.

③ Jams at exit section: Jams in the exit section while the original passes the exit sensor.

(2) Type of errors

① Error due to the drive motor locked

② Error due to the aligning sensor misadjusted

③ Error due to the defective initialization of EEPROM

(3) Jam timers

| Section | Function | No. of pulses | Timer value (msec.) |
|---|---|---|---|
| Feed section | From the start of the feed roller rotation until the aligning sensor is turned on | — | 1000 |
| Transport section | From turning on the aligning sensor until it is turned off | 4318 | Approx. 2200 |
| | From the start of two-step pre-feeding until the exit sensor is turned on | Note | Note |
| Exit section | From turning on the exit sensor until it is turned off | 4318 | Approx. 2200 |

Distance moved for 1 pulse = 0.15 mm/pulse

Note: Distance from the aligning roller to the exit sensor = 541.45 mm (3610 pulses) ..... ①
Jam detection margin = 100 mm (667 pulses, approx. 330 msec.) ..... ②
The leading edge of the original fed is pulse-controlled from the aligning roller onward and after it is transported the distance of ①+②, if the exit sensor is not turned on, it is determined that a jam has occurred (non-arrival at exit sensor).

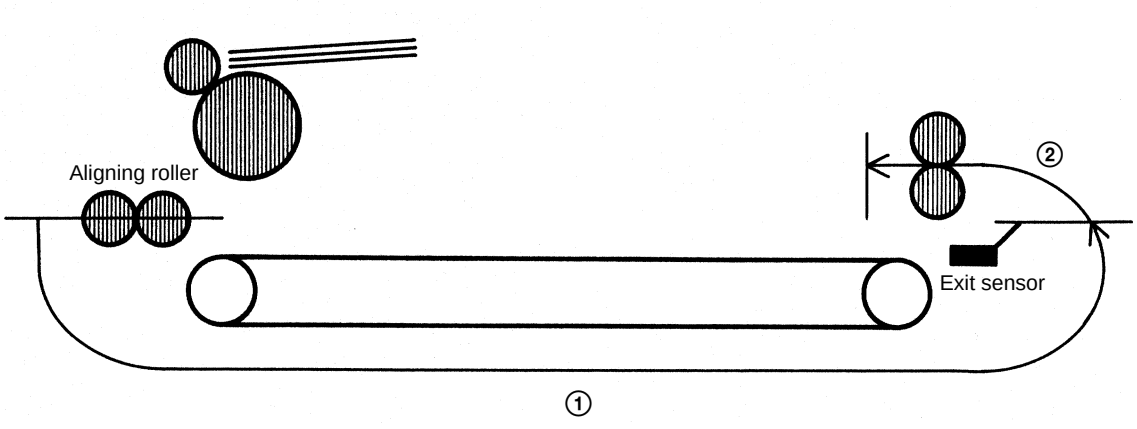

## 8. DETECTION OF ORIGINAL SIZES

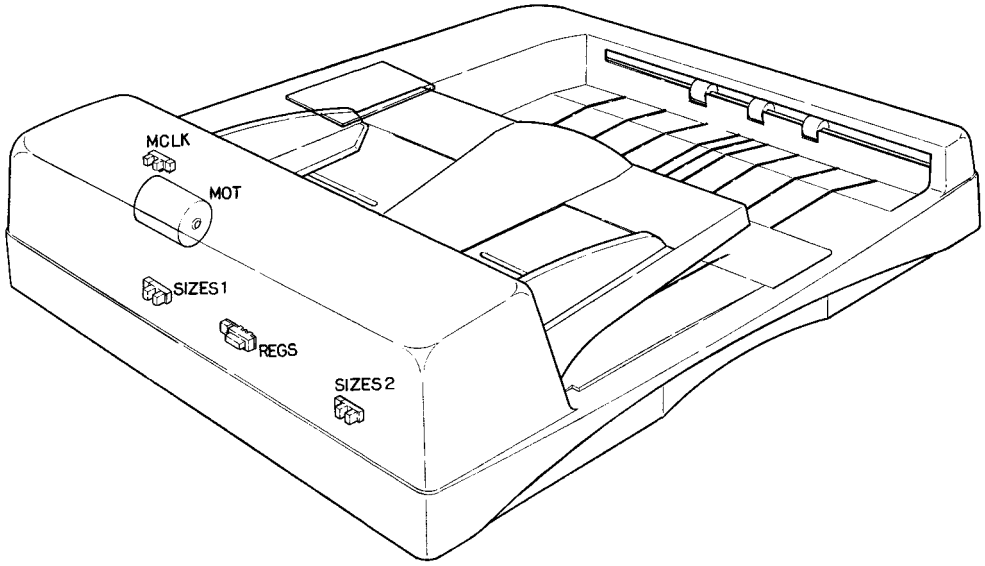


The size of originals is determined by both the number of pulses generated until the original passes the aligning sensor and its width roughly detected by the size sensor 1.

(1) Each time the ADF feeds in an original, it detects its size and lets the copier know the lengthwise feed and widthwise directions in millimeters, respectively.

(2) Method of detecting the size of originals
The length of the original is measured by using the number of drive motor clock pulses generated from the start of original transporting (when the aligning roller starts rotating) until the aligning sensor is turned off (when the trailing edge of the original passes the sensor). Since A4 widthwise and A5 lengthwise cannot be distinguished by the length in the feed direction alone, the size sensor 1 is used roughly to know the width of the original, permitting its size to be determined (for A4 widthwise, the size sensor 1 is turned on).

Note that the size sensor 2 is used to distinguish between A4 widthwise and Letter widthwise. A4 widthwise is 210 mm and Letter widthwise is 216 mm, respectively, in the feed direction. Since the difference is only 6 mm, judgement would be difficult. So the size sensor 2 is additionally used to distinguish between A4 and Letter sizes. The size sensor 2 is turned on for A4 lengthwise which is 297 mm and off for Letter lengthwise which is 279 mm.

For U.S.A. and Canada

| Size sensor 1 | Size sensor 2 | Range (mm) | Original size |
|---|---|---|---|
| OFF | OFF | ~129 | Irregular size |
| OFF | OFF | 130~150 | ST |
| OFF | OFF | 151~205 | Irregular size |
| OFF | OFF | 206~226 | ST-R |
| OFF | OFF | 227~248 | Irregular size |
| OFF | OFF | 249~267 | B5-R |
| OFF | OFF | 268~269 | Irregular size |
| OFF | OFF | 270~289 | LT-R |
| OFF | OFF | 290~307 | A4-R |
| OFF | OFF | 308~319 | Irregular size |
| OFF | OFF | 320~340 | FOLIO |
| OFF | OFF | 341~345 | Irregular size |
| OFF | OFF | 346~366 | LG |
| OFF | OFF | 367~ | Irregular size |
| ON | ON/OFF | ~171 | Irregular size |
| ON | OFF | 172~192 | B5 |
| ON | ON/OFF | 193~199 | Irregular size |
| ON | ON | 200~226 | A4 |
| ON | OFF | 200~226 | LT |
| ON | ON/OFF | 227~345 | Irregular size |
| ON | OFF | 346~366 | COMPUTER |
| ON | ON/OFF | 367~413 | Irregular size |
| ON | ON | 414~426 | A3 |
| ON | OFF | 427~442 | LEDGER |
| ON | ON/OFF | 443~ | Irregular size |

For Europe

| Size sensor 1 | Size sensor 2 | Range (mm) | Original size |
|---|---|---|---|
| OFF | OFF | ~137 | Irregular size |
| OFF | OFF | 138~158 | A5 |
| OFF | OFF | 159~199 | Irregular size |
| OFF | OFF | 200~220 | A5-R |
| OFF | OFF | 221~246 | Irregular size |
| OFF | OFF | 247~267 | B5-R |
| OFF | OFF | 268~273 | Irregular size |
| OFF | OFF | 274~288 | LT-R |
| OFF | OFF | 289~307 | A4-R |
| OFF | OFF | 308~319 | Irregular size |
| OFF | OFF | 320~340 | FOLIO |
| OFF | OFF | 341~345 | Irregular size |
| OFF | OFF | 346~366 | LG |
| OFF | OFF | 367~ | Irregular size |
| ON | ON/OFF | ~171 | Irregular size |
| ON | OFF | 172~192 | B5 |
| ON | ON/OFF | 193~199 | Irregular size |
| ON | ON | 200~226 | A4 |
| ON | OFF | 200~226 | LT |
| ON | ON/OFF | 227~353 | Irregular size |
| ON | OFF | 354~374 | B4 |
| ON | ON/OFF | 375~413 | Irregular size |
| ON | ON | 414~426 | A3 |
| ON | OFF | 427~442 | LEDGER |
| ON | ON/OFF | 443~ | Irregular size |

The size sensor 2 is used only for distinguishing A4 from Letter.
(Although the sensor is also on for A3, it is ignored.)

(3) Outline of operation

① Drive motor clock pulses are counted from the start of original transporting until the aligning sensor is turned off. In addition, the status of the size sensor 1 is detected for determining the original size.

② After the original size has been determined, the size data of the feed direction and the widthwise size data created by inferring from that of the feed direction are sent out to the copier.

# 9. FLOW CHARTS

## 9.1 Power ON Up to Ready

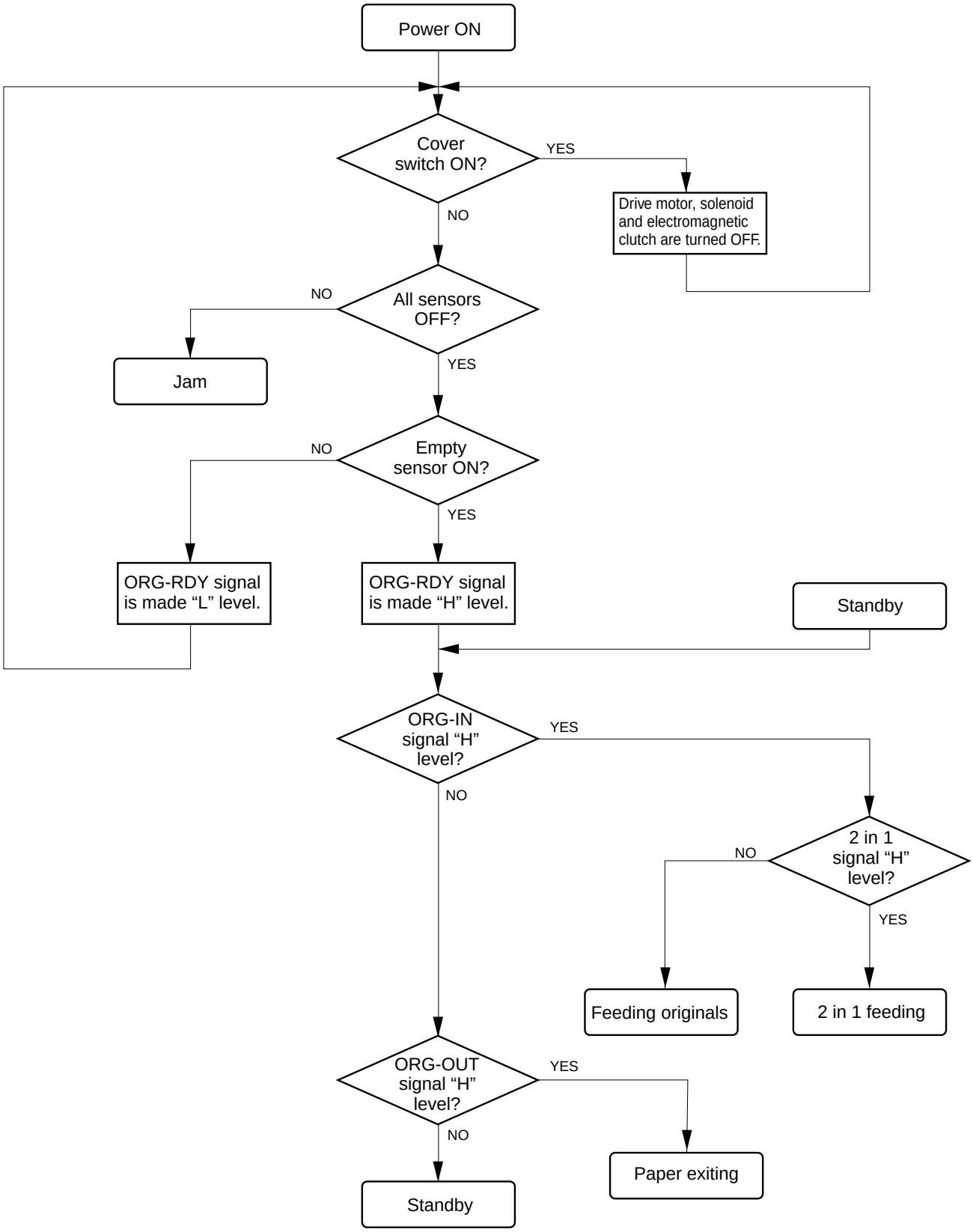

## 9.2 Feeding Operation

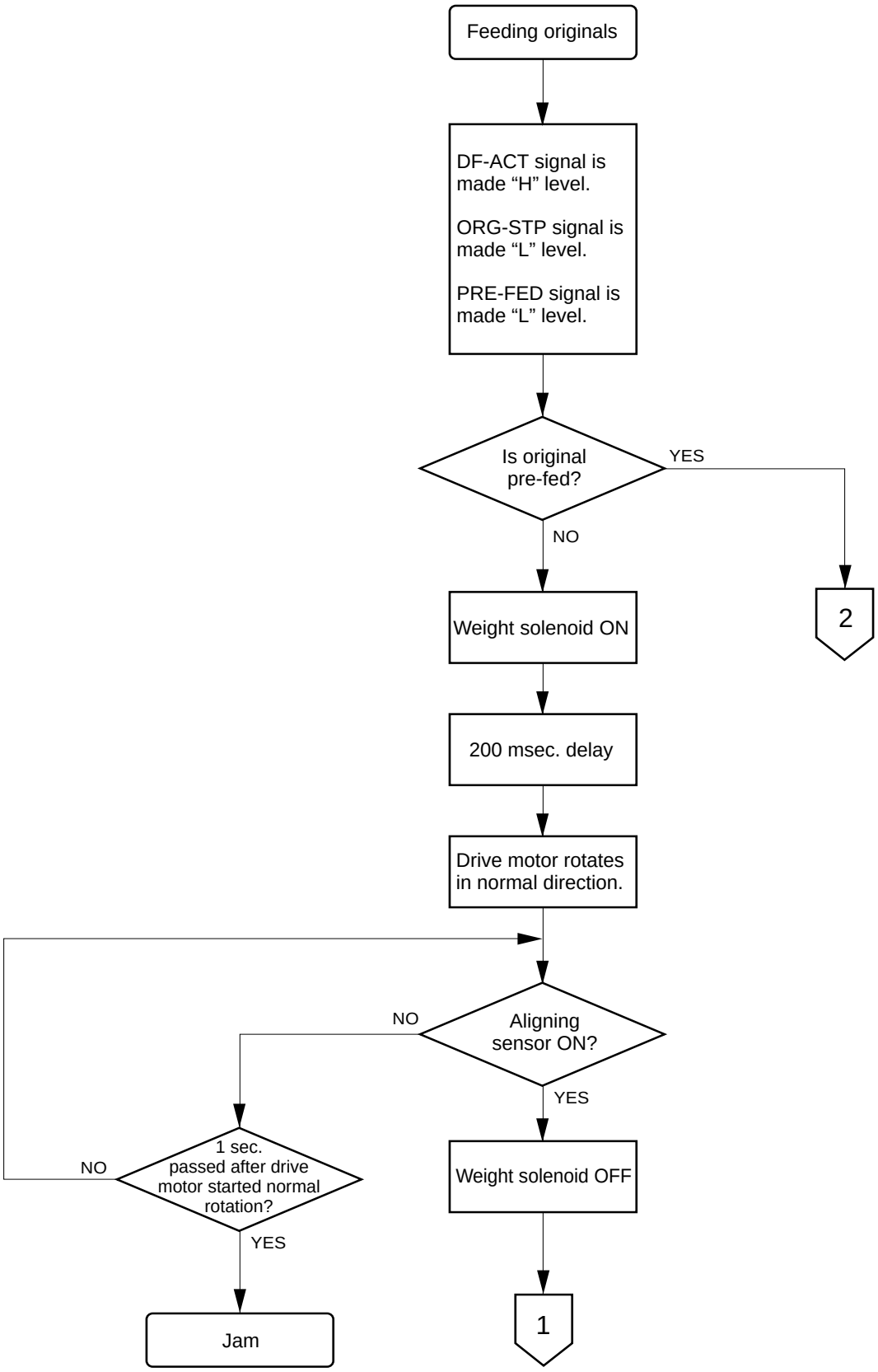

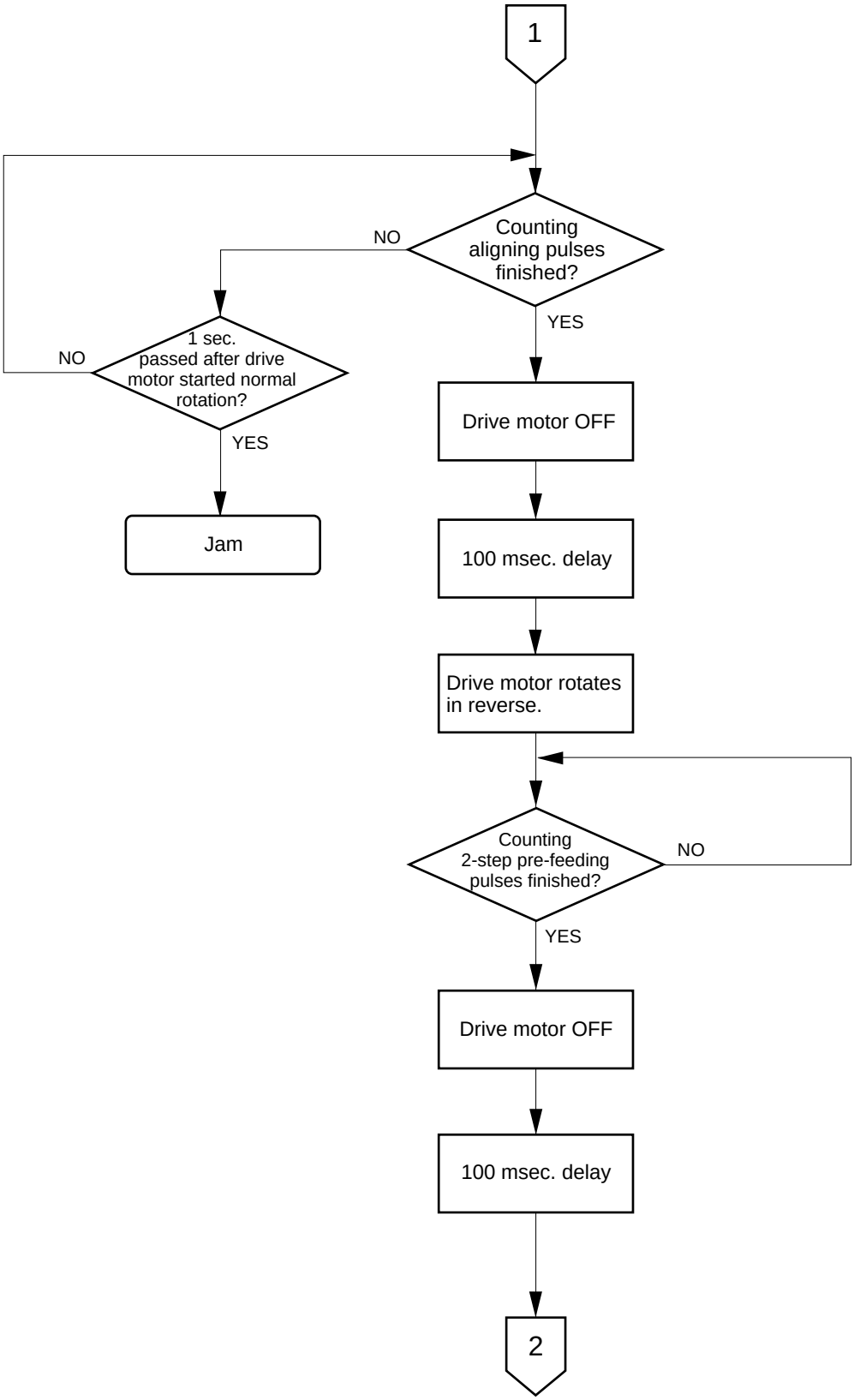
1
Counting aligning pulses finished?
NO
YES
1 sec. passed after drive motor started normal rotation?
NO
YES
Jam
Drive motor OFF
100 msec. delay
Drive motor rotates in reverse.
Counting 2-step pre-feeding pulses finished?
NO
YES
Drive motor OFF
100 msec. delay
2

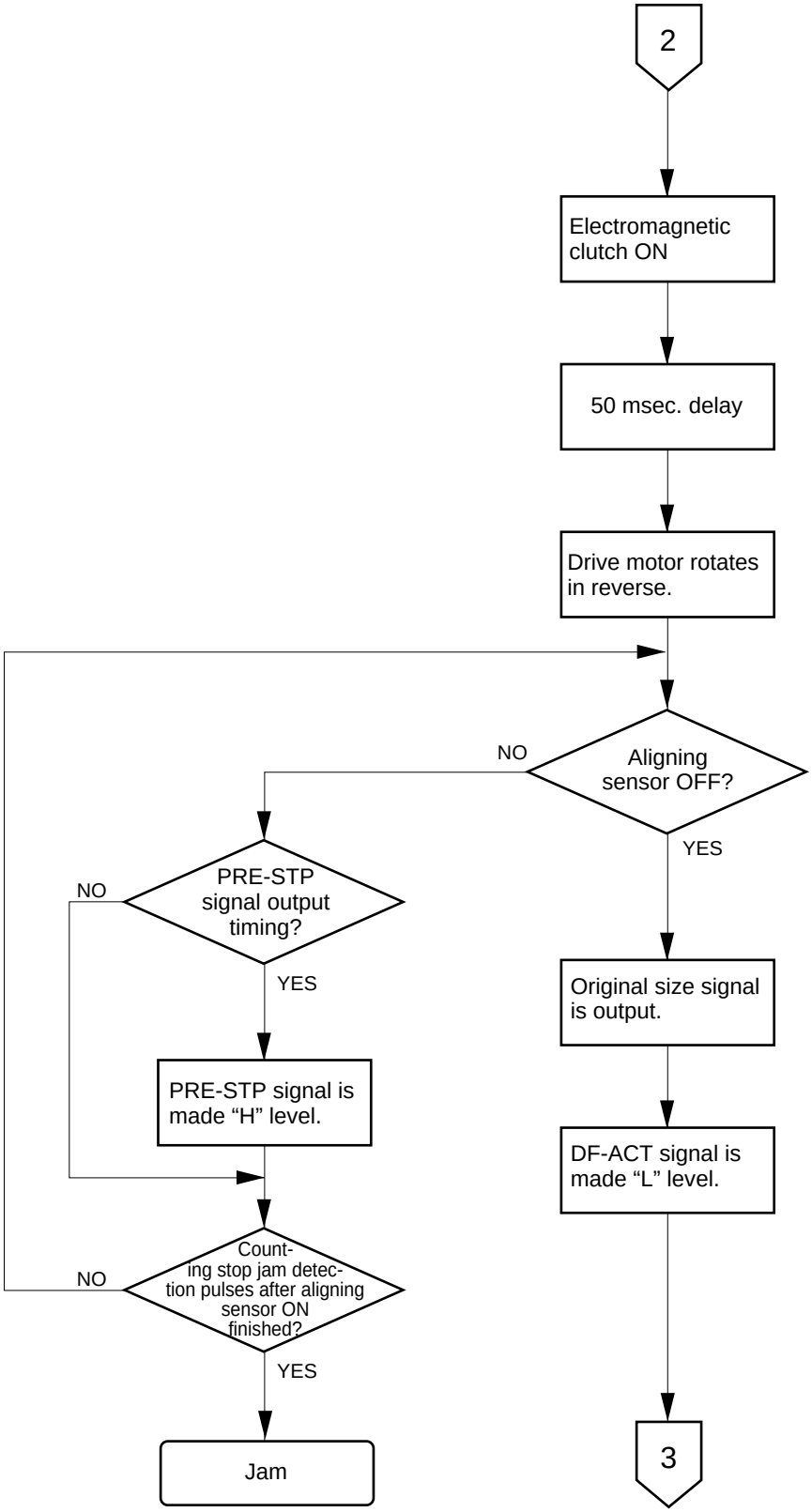
2
Electromagnetic clutch ON
50 msec. delay
Drive motor rotates in reverse.
Aligning sensor OFF?
NO
YES
PRE-STP signal output timing?
NO
YES
PRE-STP signal is made “H” level.
Original size signal is output.
DF-ACT signal is made “L” level.
Count-ing stop jam detec-tion pulses after aligning sensor ON finished?
NO
YES
Jam
3

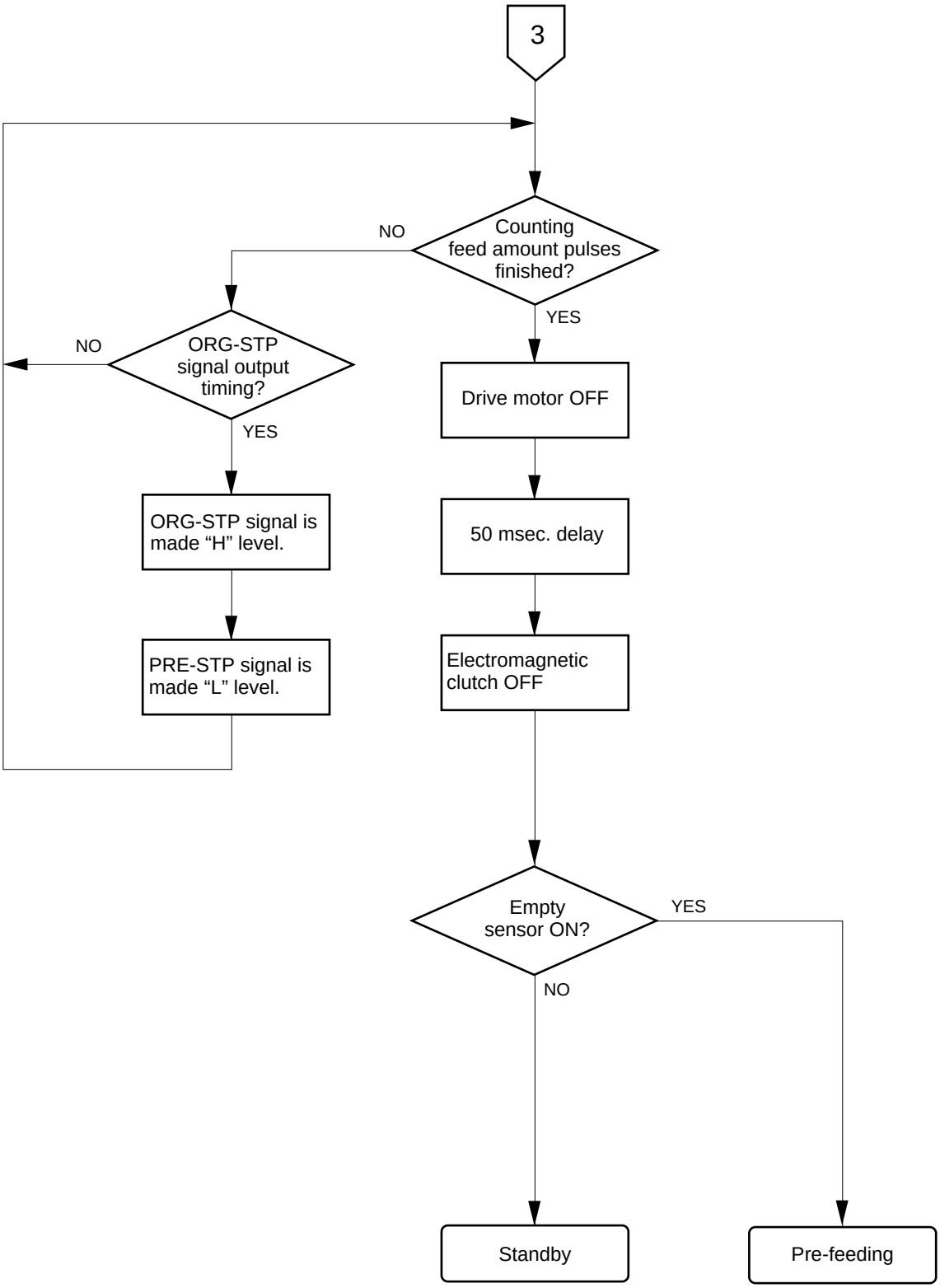
3
Counting feed amount pulses finished?
NO
YES
ORG-STP signal output timing?
NO
YES
Drive motor OFF
ORG-STP signal is made “H” level.
50 msec. delay
PRE-STP signal is made “L” level.
Electromagnetic clutch OFF
Empty sensor ON?
YES
NO
Standby
Pre-feeding

### 9.3 Pre-feeding Operation

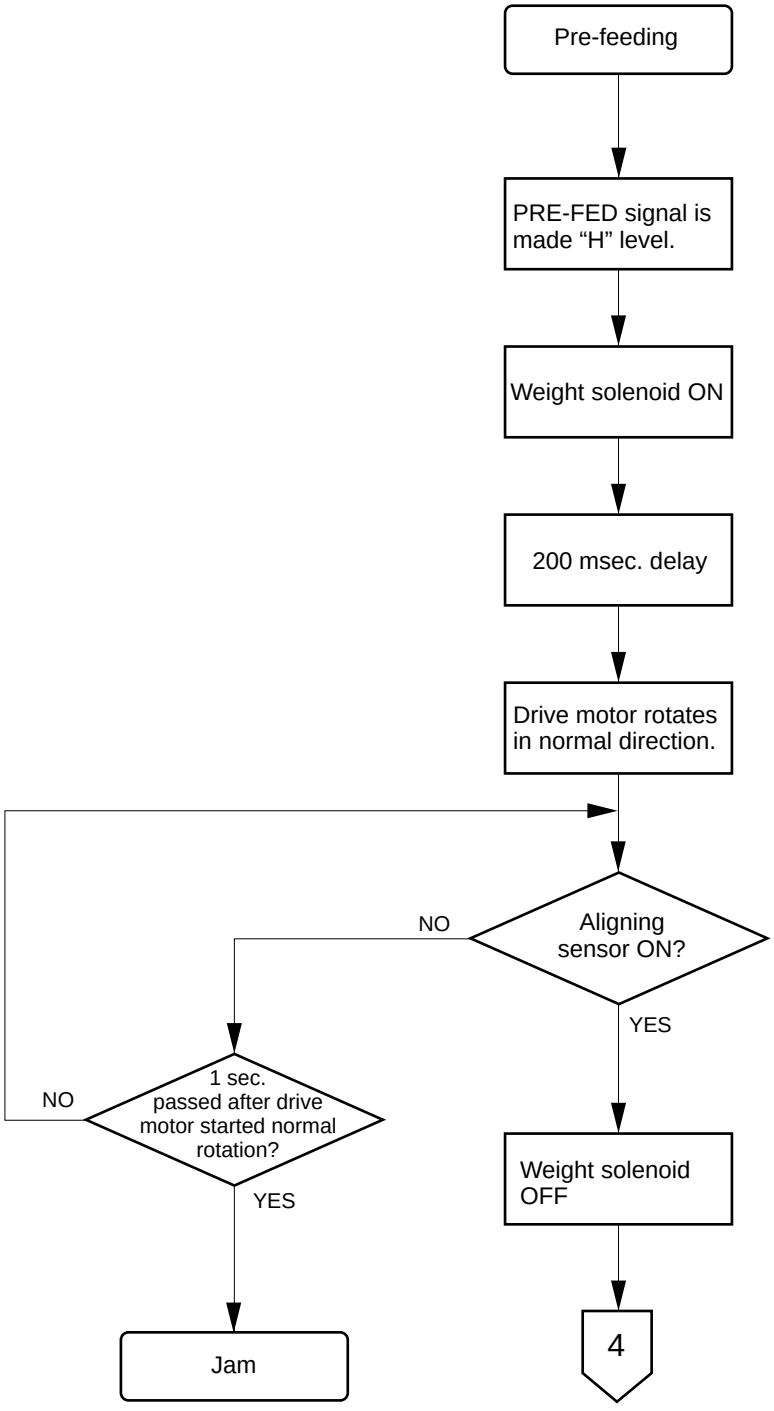

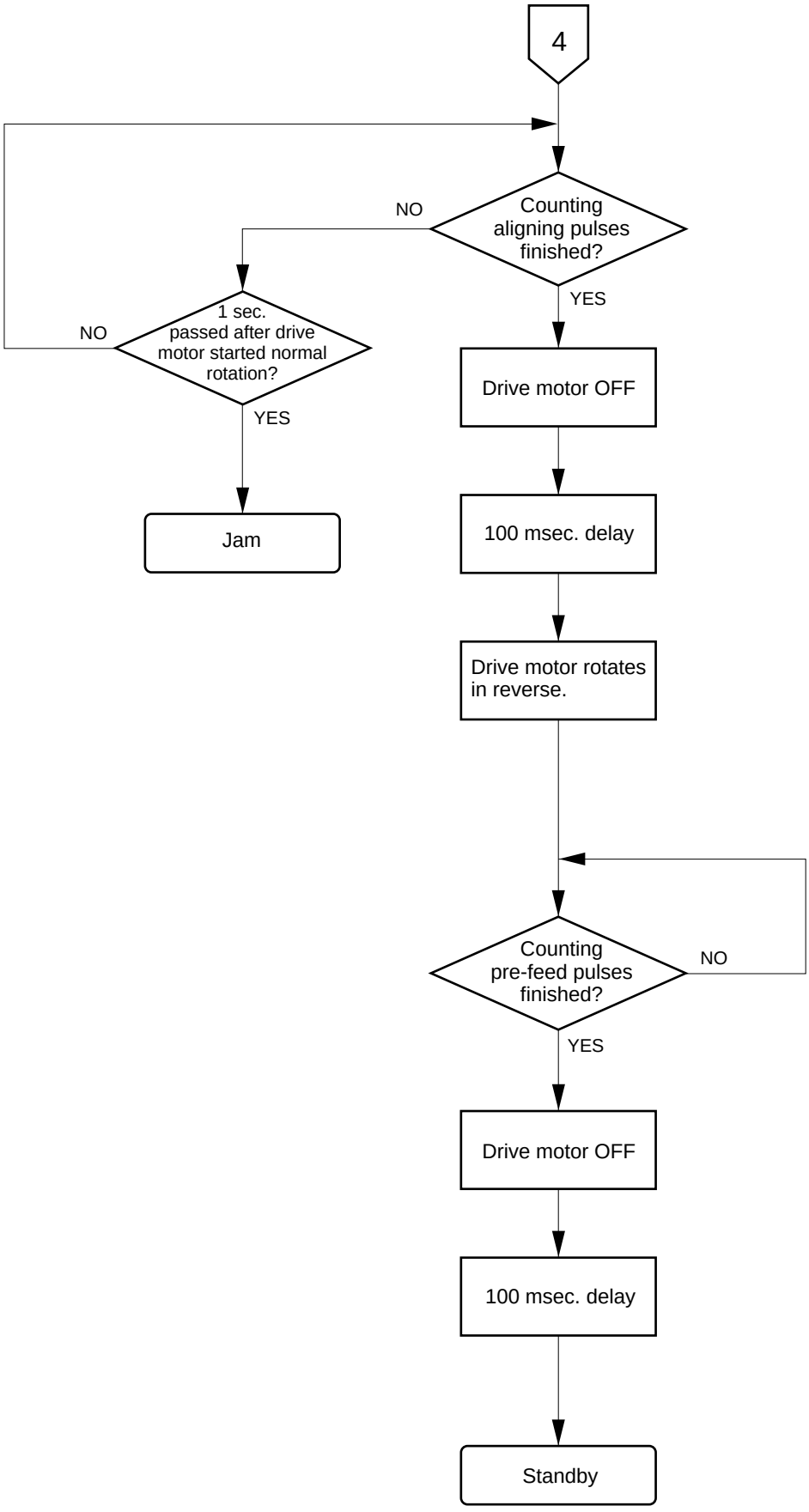
4
Counting aligning pulses finished?
NO
YES
1 sec. passed after drive motor started normal rotation?
NO
YES
Jam
Drive motor OFF
100 msec. delay
Drive motor rotates in reverse.
Counting pre-feed pulses finished?
NO
YES
Drive motor OFF
100 msec. delay
Standby

### 9.4 2 in 1 Feeding Operation

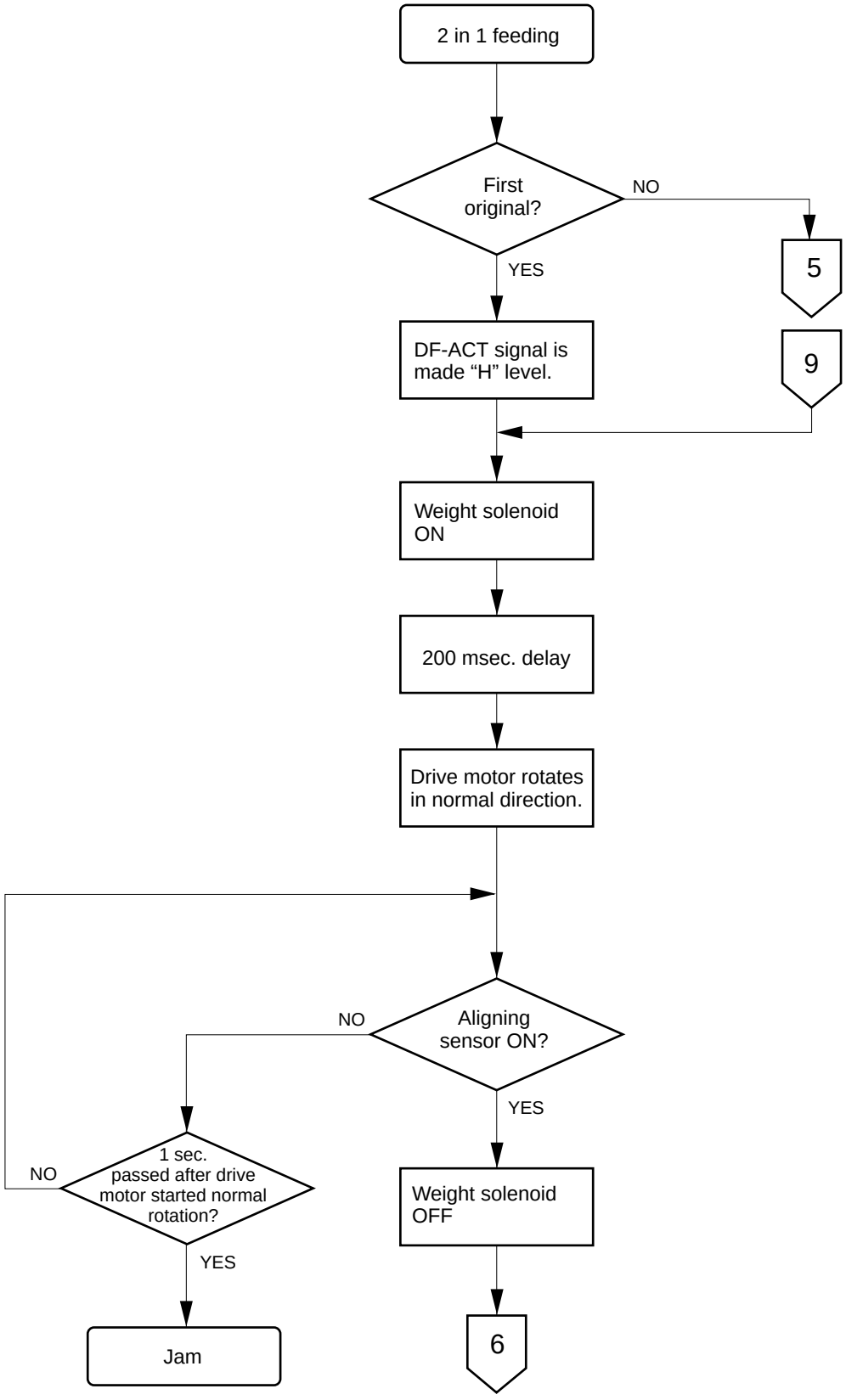

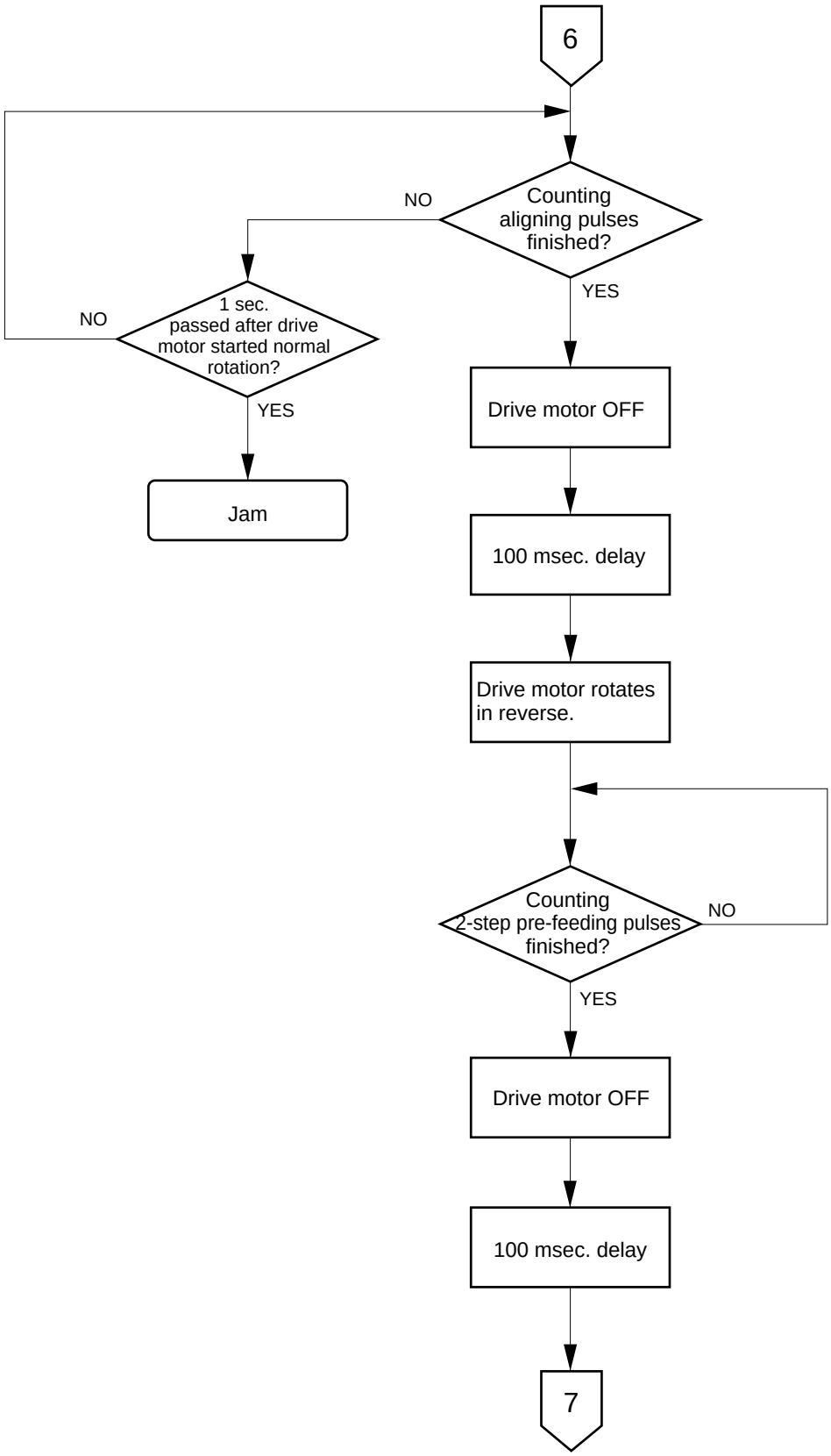
6
Counting aligning pulses finished?
NO
YES
1 sec. passed after drive motor started normal rotation?
NO
YES
Jam
Drive motor OFF
100 msec. delay
Drive motor rotates in reverse.
Counting 2-step pre-feeding pulses finished?
NO
YES
Drive motor OFF
100 msec. delay
7

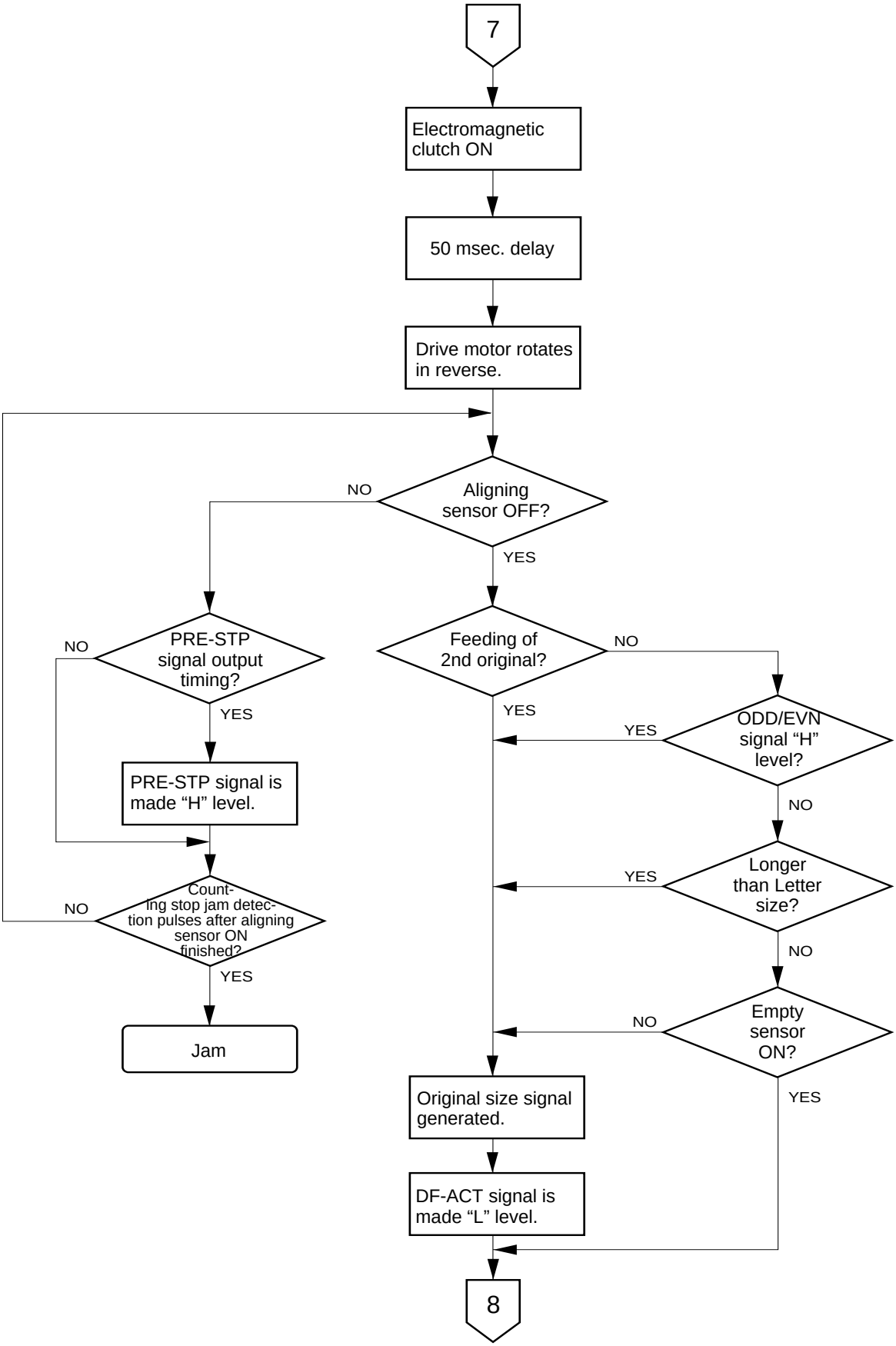
7
Electromagnetic clutch ON
50 msec. delay
Drive motor rotates in reverse.
Aligning sensor OFF?
NO
YES
PRE-STP signal output timing?
NO
YES
PRE-STP signal is made “H” level.
Count-ing stop jam detec-tion pulses after aligning sensor ON finished?
NO
YES
Jam
Feeding of 2nd original?
NO
YES
ODD/EVN signal “H” level?
YES
NO
Longer than Letter size?
YES
NO
Empty sensor ON?
NO
YES
Original size signal generated.
DF-ACT signal is made “L” level.
8

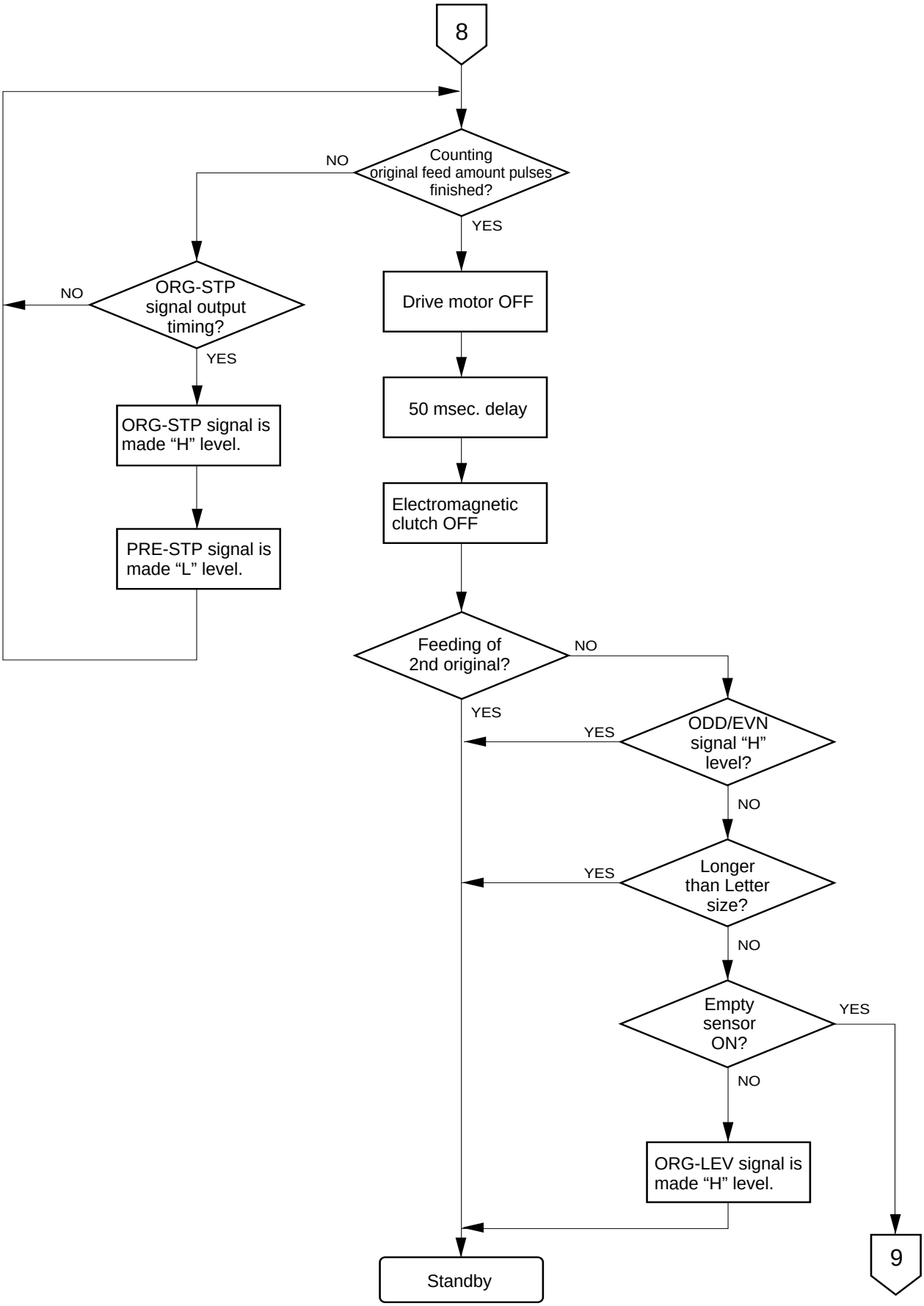
8
Counting original feed amount pulses finished?
NO
YES
ORG-STP signal output timing?
NO
YES
ORG-STP signal is made “H” level.
PRE-STP signal is made “L” level.
Drive motor OFF
50 msec. delay
Electromagnetic clutch OFF
Feeding of 2nd original?
NO
YES
ODD/EVN signal “H” level?
YES
NO
Longer than Letter size?
YES
NO
Empty sensor ON?
YES
NO
ORG-LEV signal is made “H” level.
Standby
9

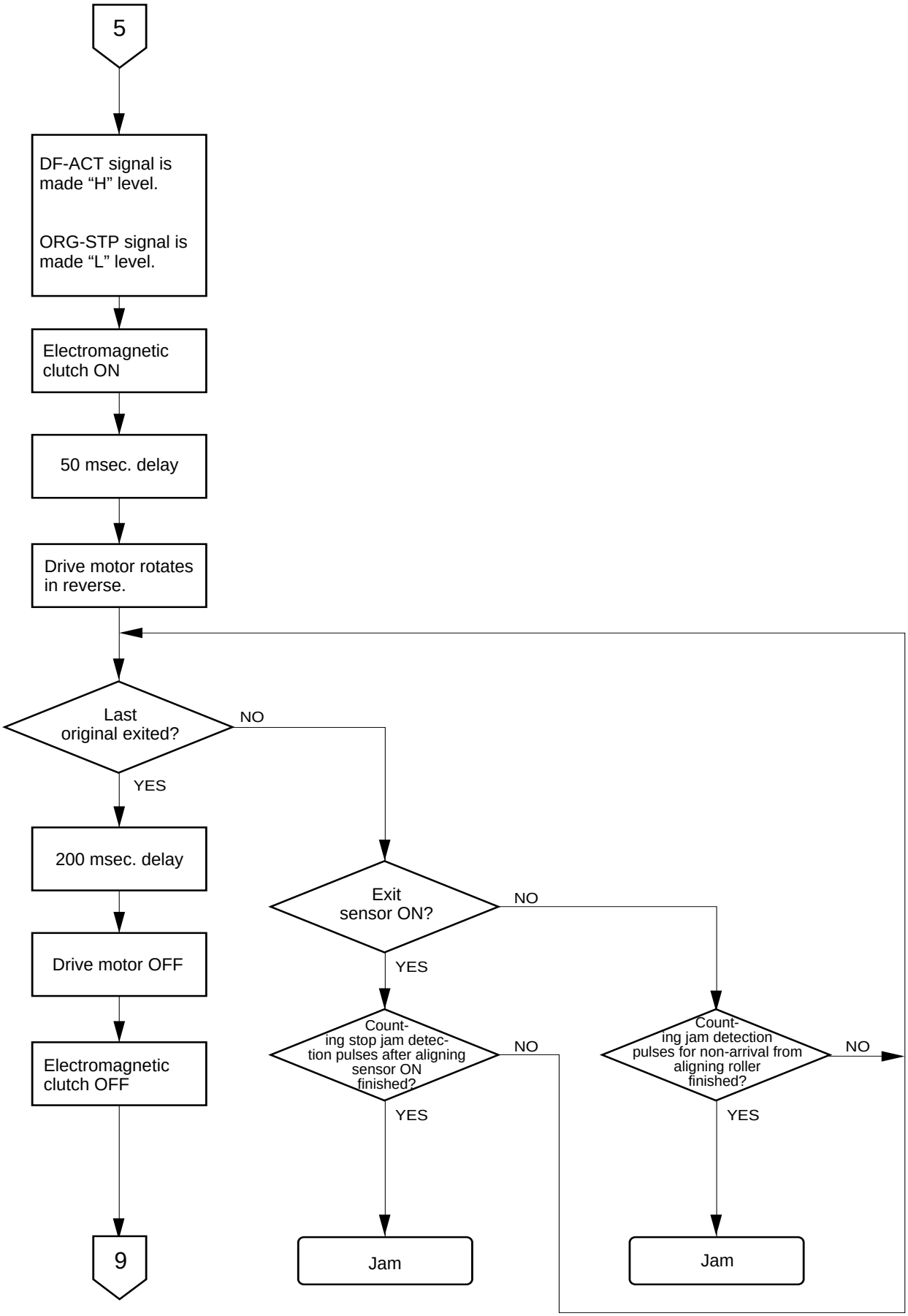
5
DF-ACT signal is made “H” level.
ORG-STP signal is made “L” level.
Electromagnetic clutch ON
50 msec. delay
Drive motor rotates in reverse.
Last original exited?
NO
YES
200 msec. delay
Drive motor OFF
Electromagnetic clutch OFF
9
Exit sensor ON?
NO
YES
Count-ing stop jam detec-tion pulses after aligning sensor ON finished?
NO
YES
Jam
Count-ing jam detection pulses for non-arrival from aligning roller finished?
NO
YES
Jam

### 9.5 Original Exiting

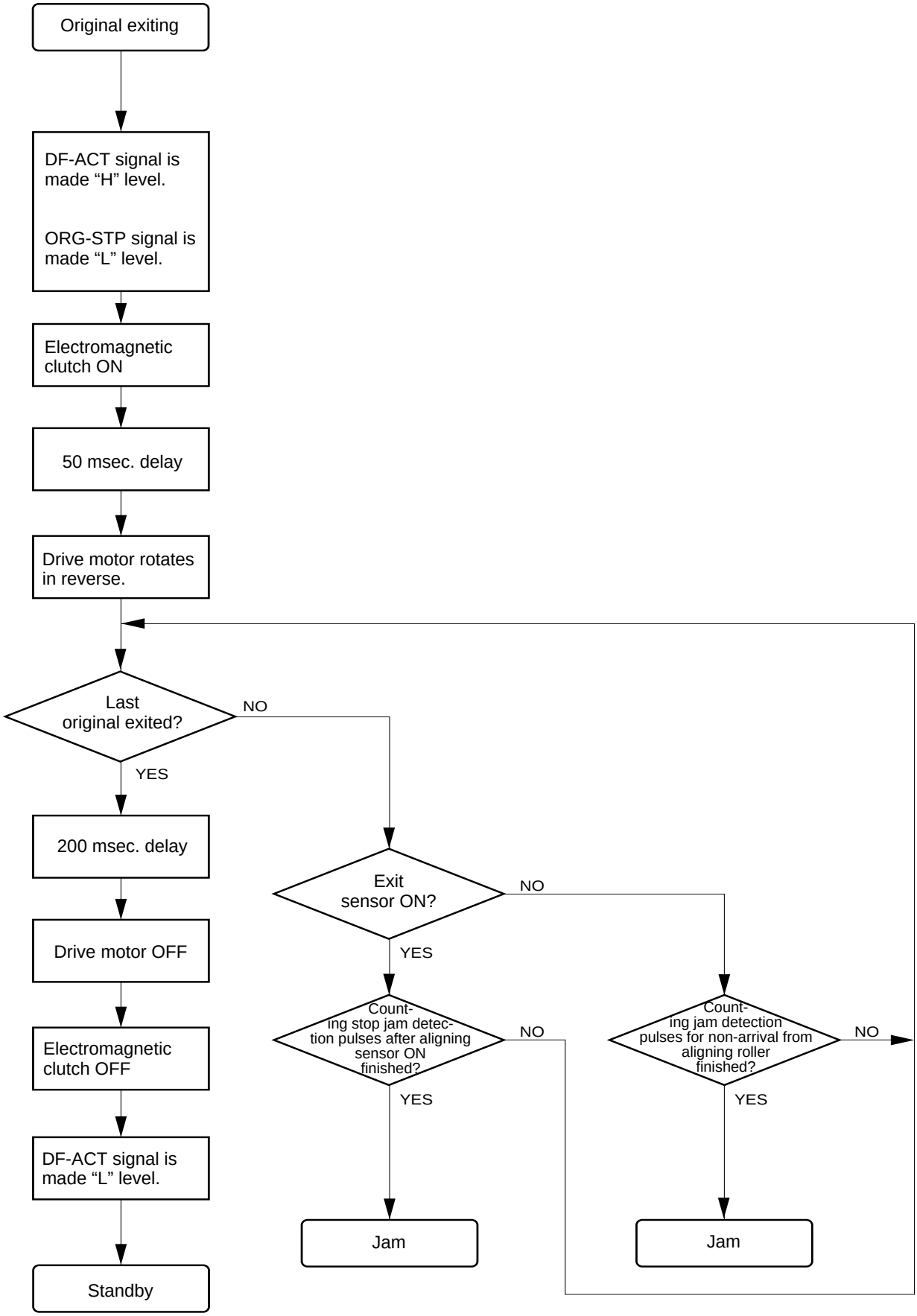

## 9.6 Original Jamming

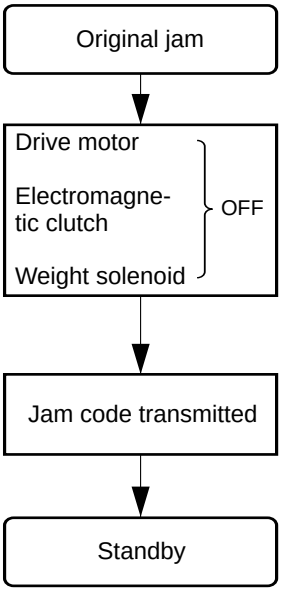

# 10. TIMING CHART

## 10.1 Feeding Three A4-sized Sheets

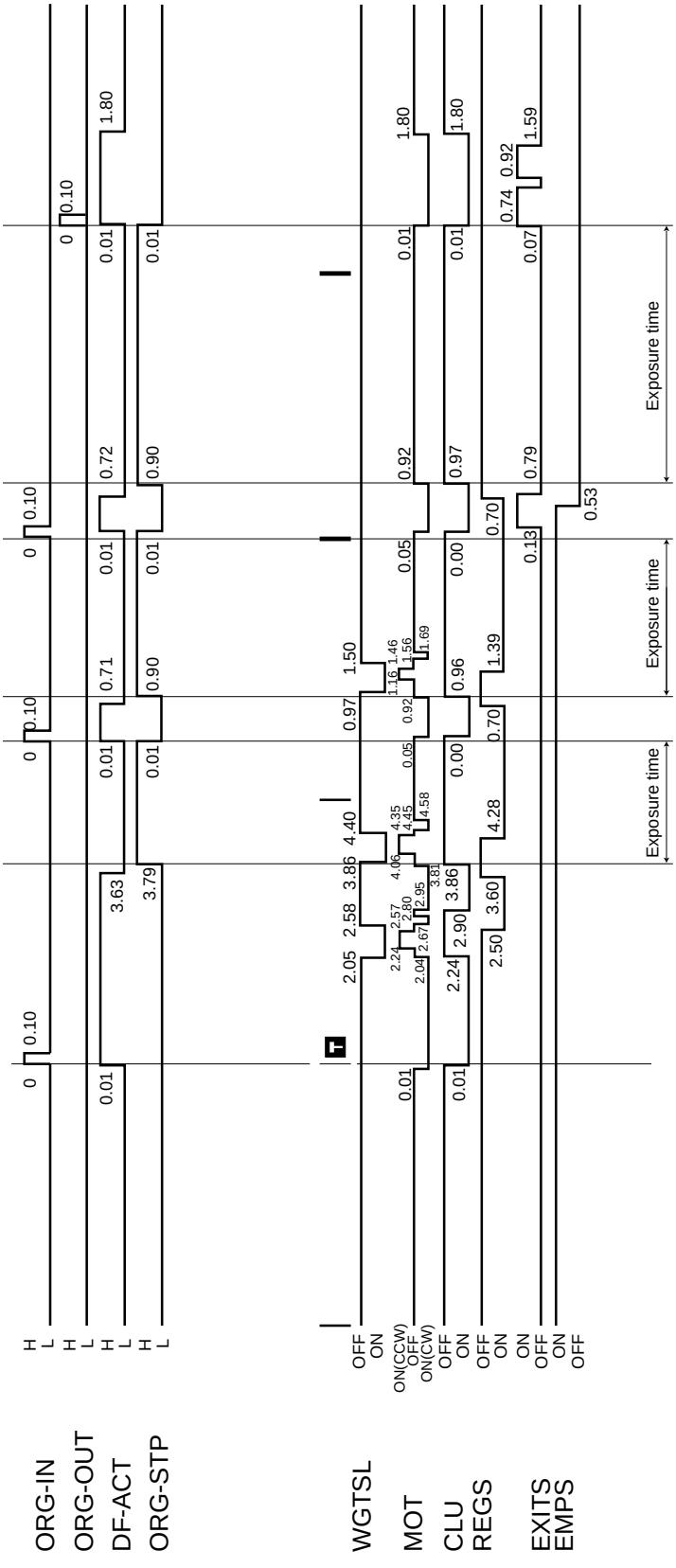

## 10.2 Feeding Two A3-sized Sheets

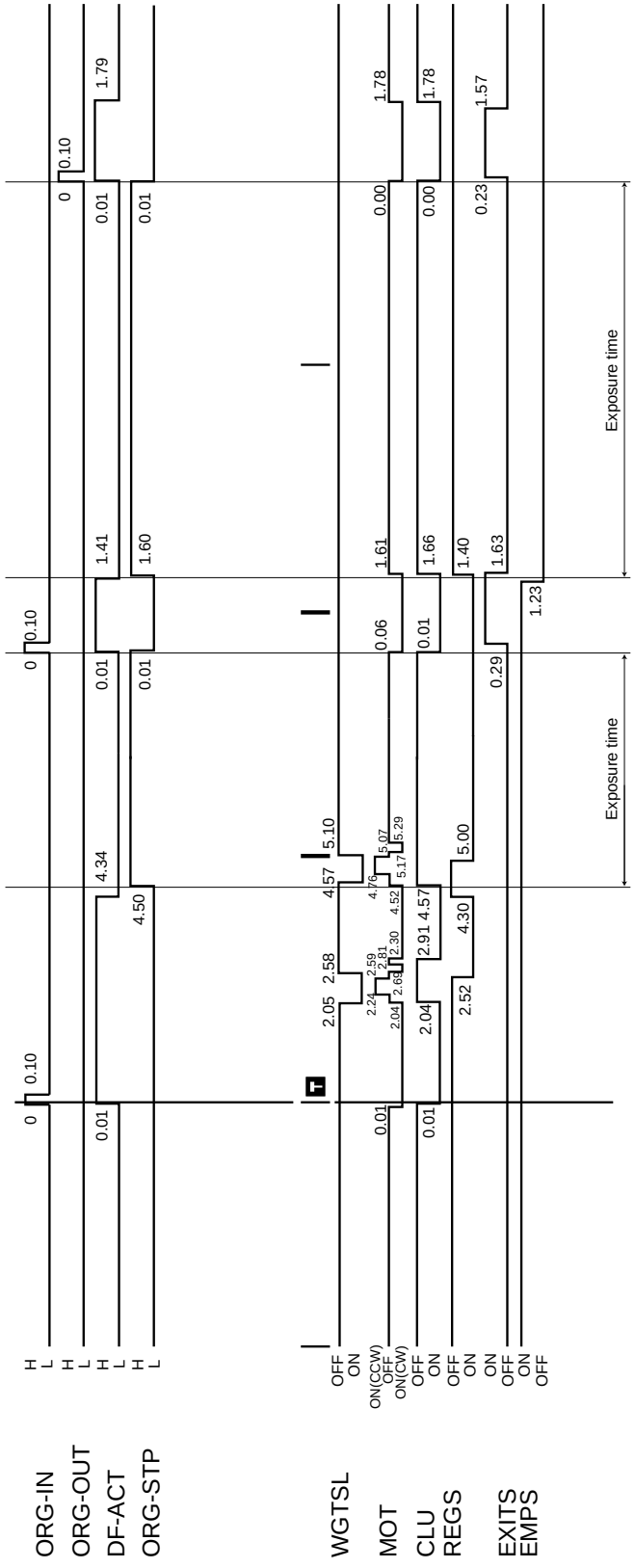

## 10.3 Feeding Four A4-sized Sheets in 2 in 1 Mode

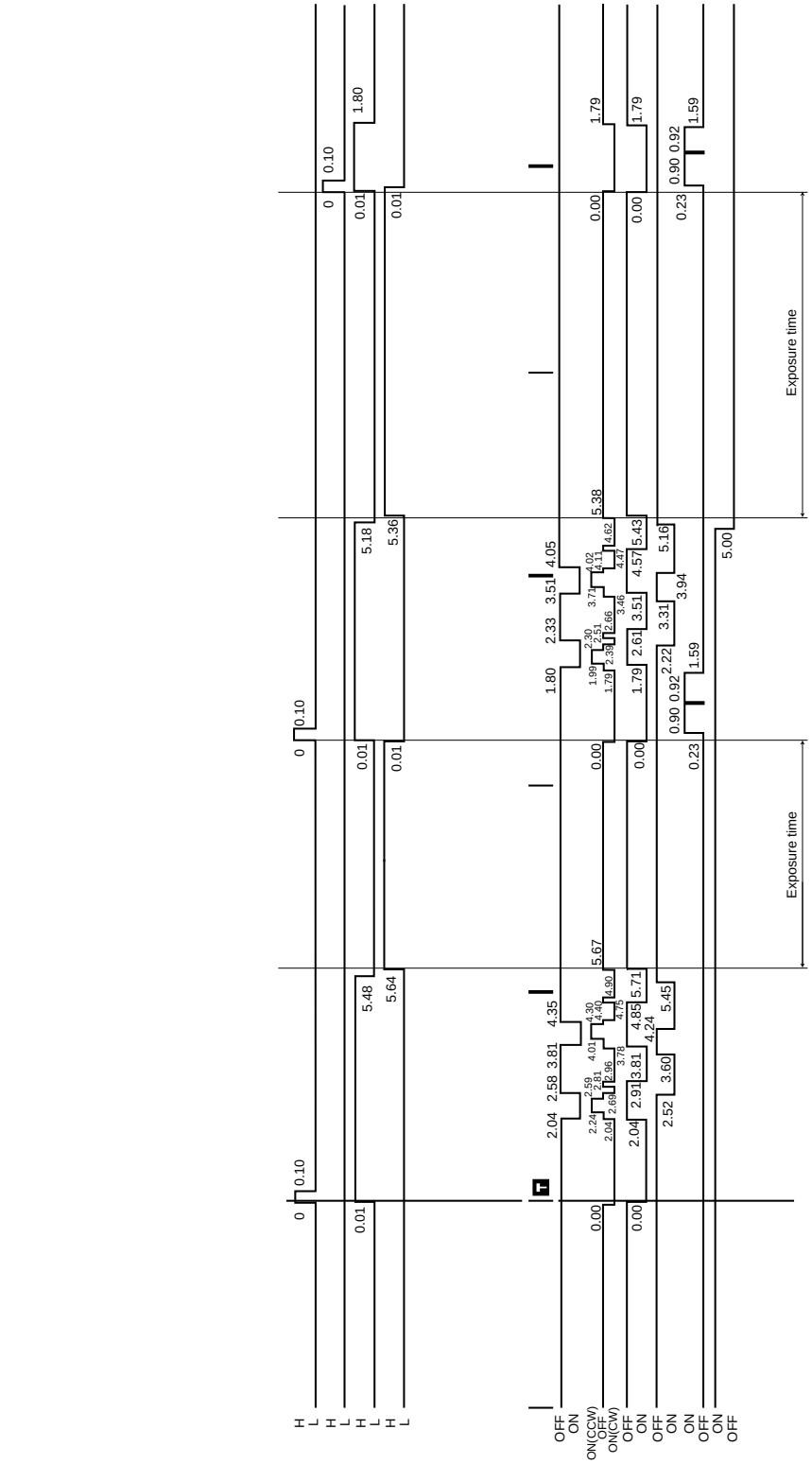

# 11. EXPLANATION OF CIRCUITS

## 11.1 Input Circuit for the Aligning Sensor

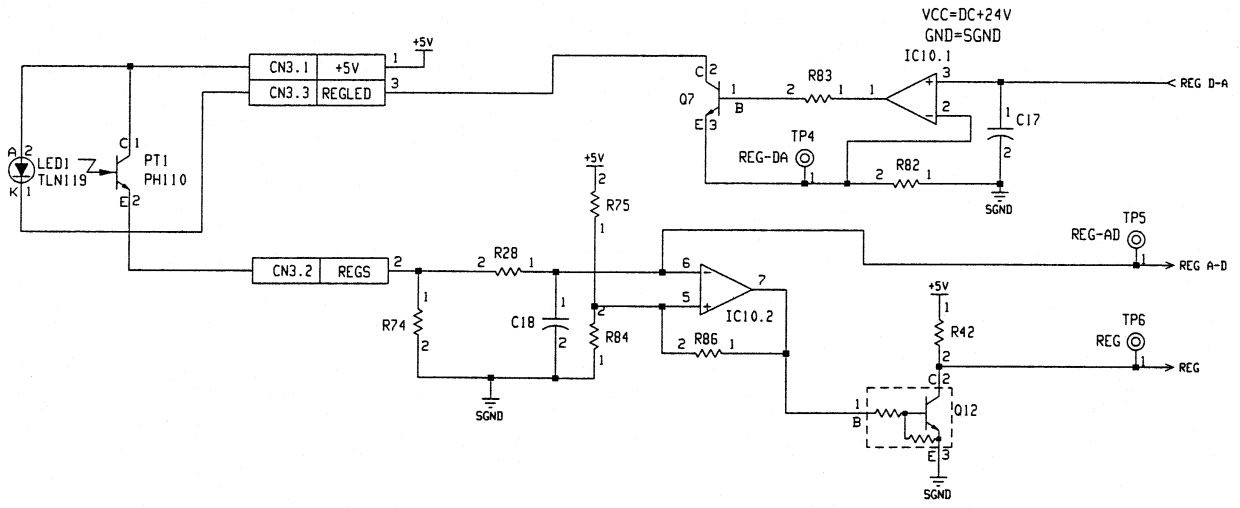


This is an input circuit for the aligning sensor. It consists of a voltage-current conversion circuit for adjusting the light amount of infrared LEDs and a voltage comparison circuit which compares the output voltage of phototransistors (PT1) with the reference voltage for converting the voltage to digital signals.

A mirror-reflective type sensor, the aligning sensor consists of a pair of light-emitting elements (infrared LEDs) whose optical axis is in the same direction as that for the light-receiving elements (PT1). On the axis extended from each element, a mirror is provided. When there is no original between each element, the ultrared light beam emitted from the LED is reflected at PT1 with a high reflectance. On the other hand, when an original is present, the light beam to the mirror and the reflected light from the mirror are shielded, causing the ultrared light entering into PT1 to become extremely small.

When much light enters into PT1 (when no original is present), optical current flowing through PT1 increases, causing the voltage at IC10–pin 6 to increase due to voltage drop by R74. IC10 is an op amp and comprises a voltage comparator circuit. It compares the reference voltage applied to pin 5 (non-inverting input terminal) and the signal voltage at pin 6 (inverting input terminal). When the voltage at pin 6 is higher, the output (IC10–pin 7) becomes L level. Conversely, when the light entering into PT1 is small (an original is present), the voltage at IC10–pin 6 becomes lower, resulting in IC10–pin 7 becoming H level. In the above circuit, Q12 is a level shifter which converts the output voltage level of IC10 from 24V to 5V. R28 and C18 comprise a noise filter.

In addition, in order to restrict variance in the sensitivity of sensors, this circuit is equipped with an automatic sensitivity adjustment function. This function, by maintaining the PT1 voltage at a fixed value for all machines when no original is present, eliminates variance in the sensitivity of sensors occurring due to difference in machines. The PT1 voltage is adjusted by varying the intensity of the ultrared light emitted from the LEDs.

For automatic sensitivity adjustment, when the adjustment mode for sensor sensitivity is selected, the PT1 output voltage (analog value) is measured at the A-D input terminal of CPU. So that the PT1 output voltage becomes a preset voltage, the D-A output voltage is varied and using the voltage-current conversion circuit consisting of IC10, Q7, R82, etc., LED current is adjusted. This D-A output voltage is a value unique to each machine and is memorized in EEPROM (IC5).

### 11.2 +5V Power Circuit

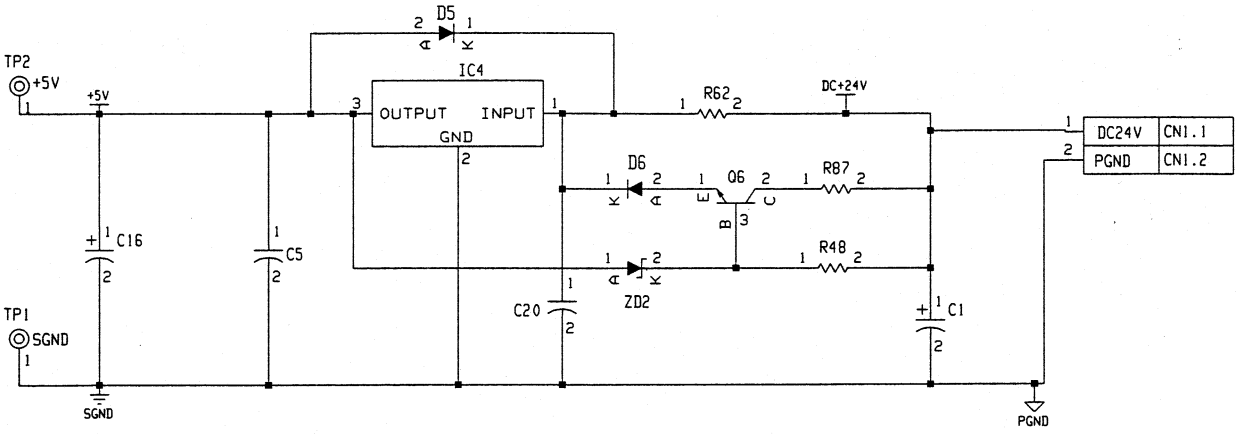


This is a circuit which generates DC +5V voltage supplied to CPUs, logic ICs, etc. DC +24V supplied from CN1 is dropped to +5V by a 3-terminal regulator IC4. In this circuit, R62 and R87 are protective resistors which compensate for the power loss occurring due to the generation of +5V. When current consumption for the +5V line is approx. 80 mA or less, the power loss is compensated for by R62 and IC4 but when the consumption current value exceeds 80 mA, the input voltage at IC4–pin 1 decreases due to voltage drop in R62. When the emitter voltage of Q6 becomes 0.6V lower than its base voltage, Q6 starts conducting and by making excess current flow through R87, shares a part of the power loss.

In this way, by varying the protective resistance value with the magnitude of consumption current, the heat caused by the power loss is distributed and dissipated.

## 11.3 DC Motor Drive Circuit

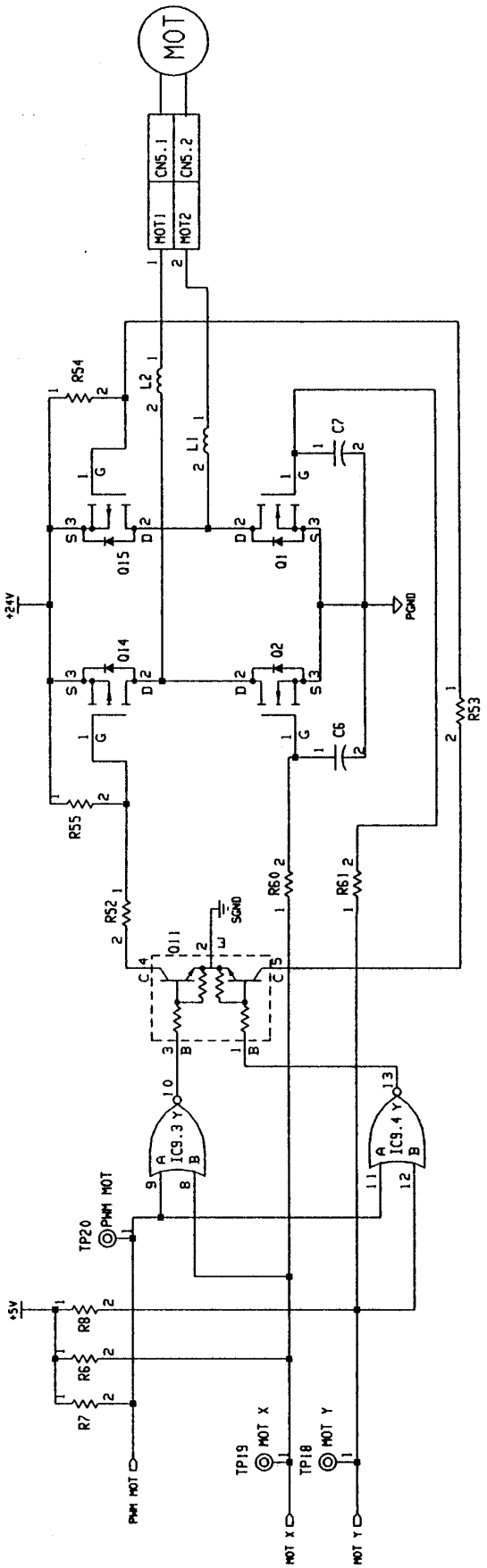

This is a DC motor drive circuit which consists of an H bridge having four power MOSFETs and a logic circuit for generating gate signals.

CPU generates three types of outputs: MOT X signal, MOT Y signal and PWM signal. The MOT X and MOT Y signals control the four modes of the motor: Motor rotation direction (CW, CCW), turning off the motor and regeneration breaking, as shown in Table 11-1.

The PWM signal is a motor speed control signal. While CPU always monitors the motor rotation speed, this signal controls the power supplied to the motor by varying the duty cycle of pulse signal with approx. 25 kHz. When the motor speed is lower than the set number of rotations, the ratio (duty cycle) of “0” (ON) becomes a high pulse. When the motor speed becomes higher, the duty cycle is decreased. When the PWM signal is “1” (off), both Q14 and Q15 become off, cutting off DC 24V to the motor. But due to the inductance of the motor rotor, current circulates from GND through the diodes included in Q1 and Q2, preventing the motor current from being shut off.

When both MOT X and MOT Y are “1”, Q14 and Q15 are turned off and Q1 and Q2 are turned on, causing both terminals of the motor to be short-circuited which in turn results in regeneration breaking.

L1, L2, C6 and C7 are coils and capacitors, respectively, for reducing switching noise.

**Table 11-1 Motor drive logic**

| MOT X | MOT Y | PWM | Q14 | Q15 | Q2 | Q1 | Status of the motor |
|---|---|---|---|---|---|---|---|
| 0 | 0 | 0 | ON | ON | OFF | OFF | Braking |
| 0 | 1 | 0 | ON | OFF | OFF | ON | CW (transport operation) |
| 1 | 0 | 0 | OFF | ON | ON | OFF | CCW (feed operation) |
| 1 | 1 | 0 | OFF | OFF | ON | ON | Braking |
| 0 | 0 | 1 | OFF | OFF | OFF | OFF | Idling (standstill) |
| 0 | 1 | 1 | OFF | OFF | OFF | ON | Idling |
| 1 | 0 | 1 | OFF | OFF | ON | OFF | Idling |
| 1 | 1 | 1 | OFF | OFF | ON | ON | Braking |

# 12. EXPLANATION OF INPUT/OUTPUT SIGNALS

## 12.1 REQ1, ACK2 and ADFRXD Signals

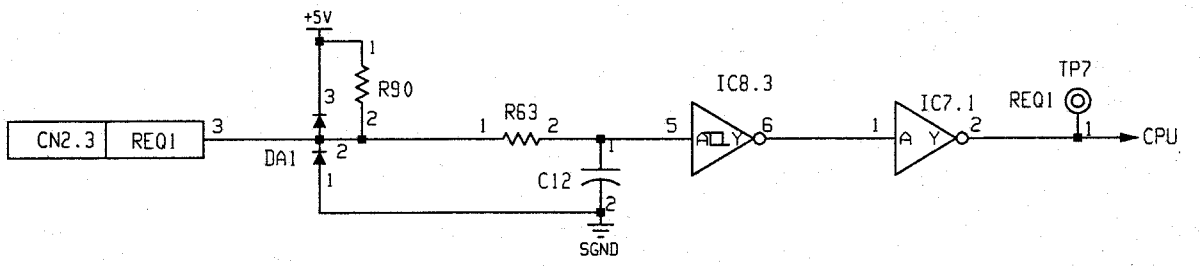


This is an input circuit for communication with the copier. 5V and 0V signify “1” and “0”, respectively, allowing the logic at the connectors to be the same as that at the input port of CPU.

## 12.2 ACK1, REQ2 and ADFTXD Signals

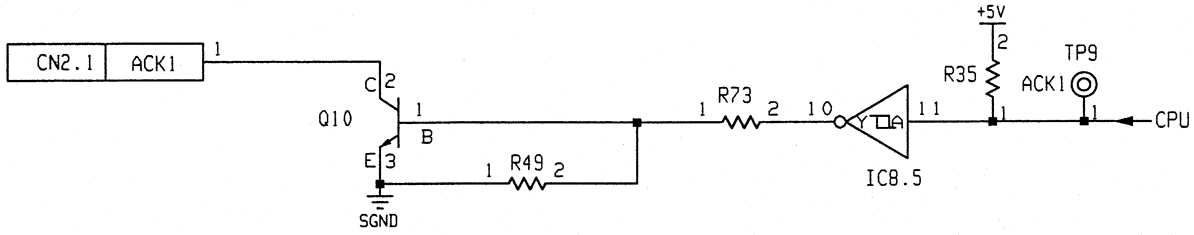


This is an output circuit for communication with the copier. 5V and 0V signify “1” and “0”, respectively, allowing the logic at the connectors to be the same as that at the output port of CPU.

## 12.3 Input Circuit for Each Sensor

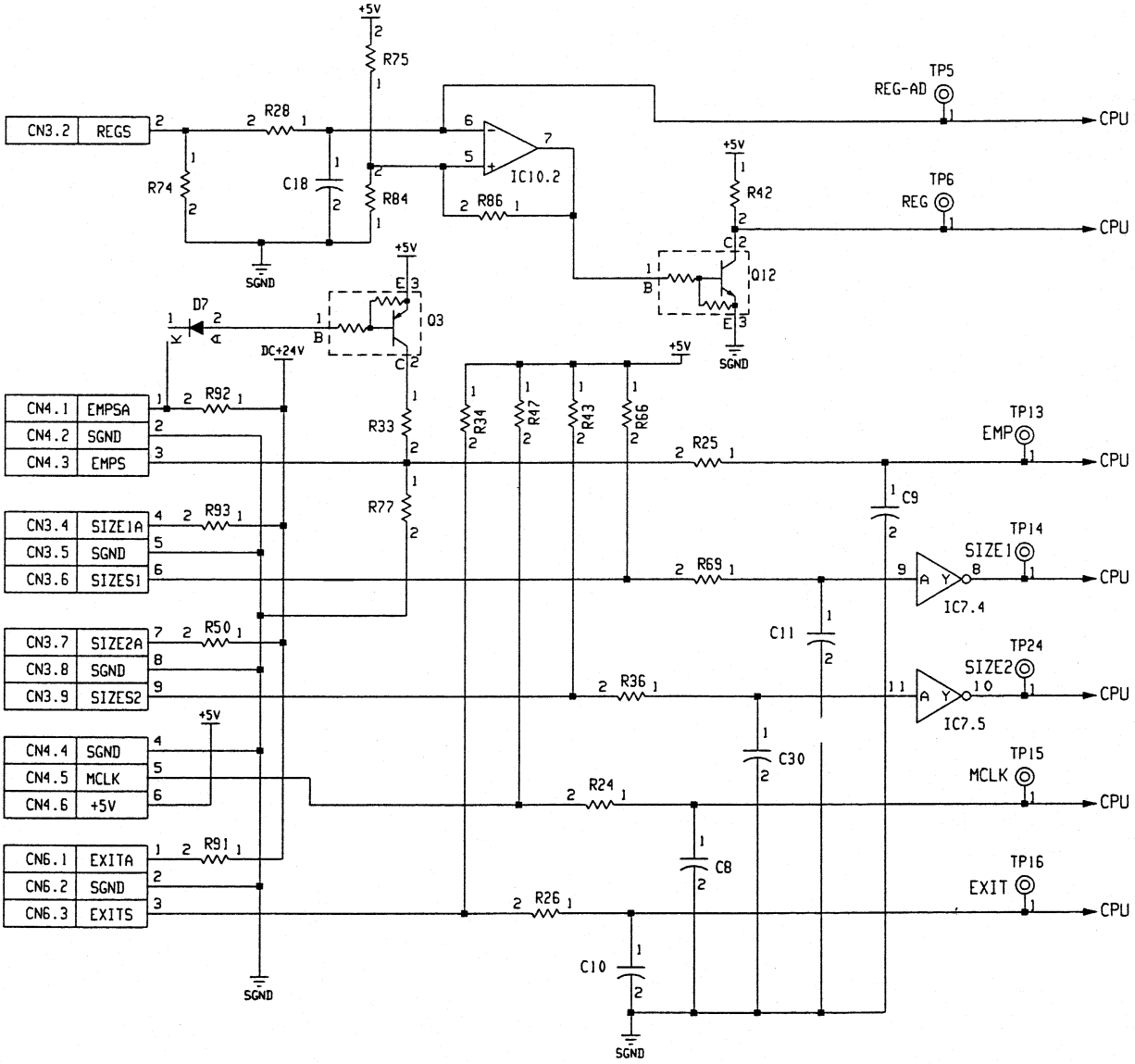


This is an input circuit form each sensor. The signal logic is as shown in the table below:

| Sensor name | Connector level 5V (“1”) | Connector level 0V (“0”) |
|---|---|---|
| EMPS (empty sensor) | An original is present. | No original is present. |
| REGS (aligning sensor) | No original is present. (Connector voltage is 3V or over.) | An original is present. (Connector voltage is less than 3V.) |
| SIZES1 (Size sensor 1) | An original is present.* | No original is present.* |
| SIZES2 (Size sensor 2) | An original is present.* | No original is present.* |
| MCLK (motor clock sensor) | The optical path is cut off. | The optical path is open. |
| EXITS (exit sensor) | An original is present. | No original is present. |

* The logic at the CPU input port of SIZES1 and SIZES2 is reverse to that at the connectors.

## 12.4 DC Motor Output Circuit

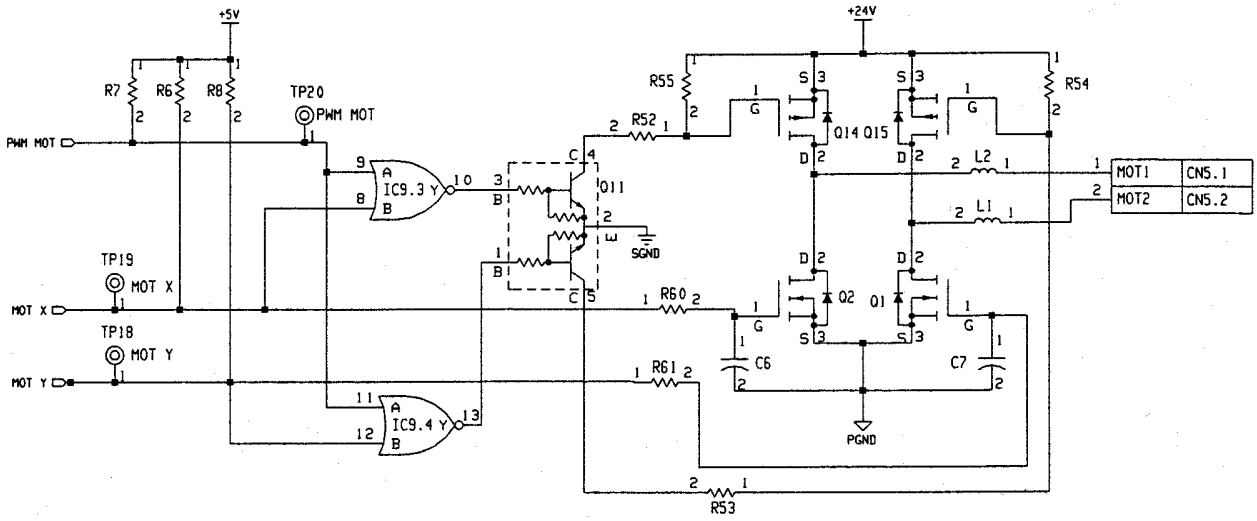


This is a DC motor output circuit. The following table shows the signals and their output levels.

| MOT X | MOT Y | PWM | CN5-1 voltage | CN5-2 voltage | Motor status |
|---|---|---|---|---|---|
| 0 | 0 | 0 | 24V | 24V | Braking |
| 0 | 1 | 0 | 24V | 0V | CW rotation (transport operation) |
| 1 | 0 | 0 | 0V | 24V | CCW rotation (feeding operation) |
| 1 | 1 | 0 | 0V | 0V | Braking |
| 0 | 0 | 1 | Z | Z | Idle rotation (stop) |
| 0 | 1 | 1 | Z (0V) | 0V | Idle rotation |
| 1 | 0 | 1 | 0V | Z (0V) | Idle rotation |
| 1 | 1 | 1 | 0V | 0V | Braking |

(1) Logic: 0 = 0V, 1 = 5V

(2) Z shows a high impedance status.

(3) The values in parentheses show the status of the motor being connected.

## 12.5 Output Circuits for Clutch and Solenoid

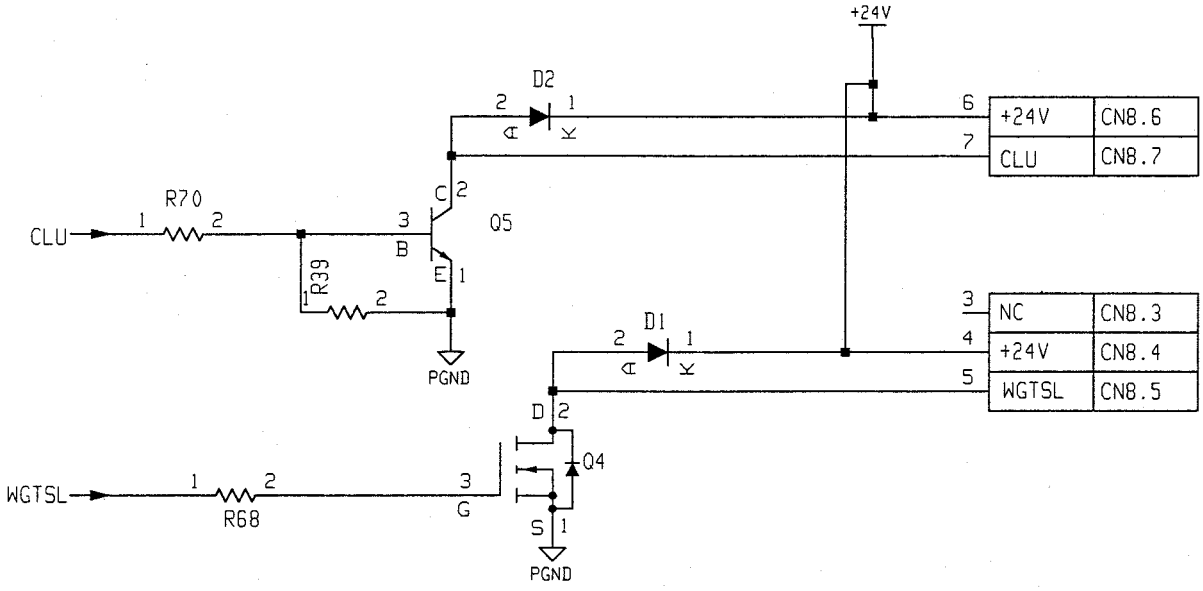


These are drive circuits for the clutch and the solenoid, respectively. For each circuit, when the input signal is “1” (5V), an ON status is available.

## 12.6 Open Switch Input Circuit

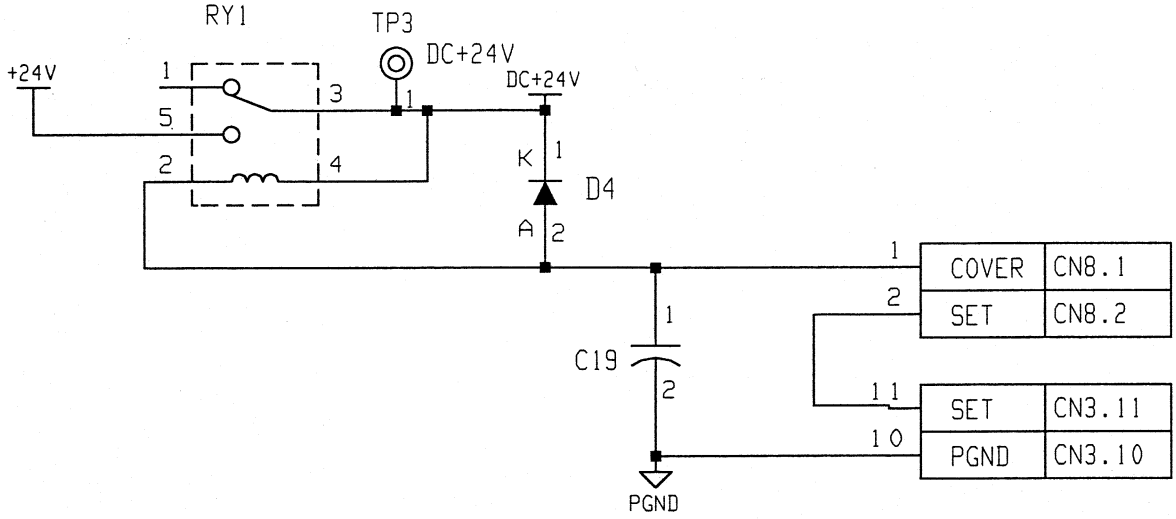


When both reed switches are turned on, the relay coil is energized, permitting the +24V power to be supplied to the drive circuit.

The voltage at CN4.7 is 0V when both switches are on and is 24V when either or both switches are off.

# 13. DISASSEMBLY AND ADJUSTMENT

## 13.1 Transport Unit

(1) Remove the four clips holding the transport unit.

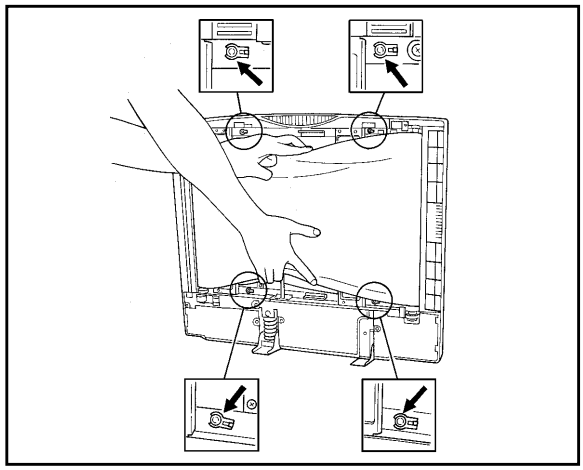

(2) Pull out the transport unit toward you to disengage the belt for driving.

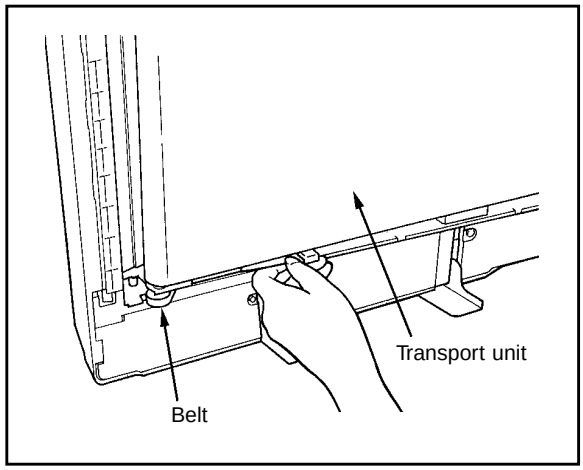


**Note:** After fixing the clip, move the knob section to the side of the frame.

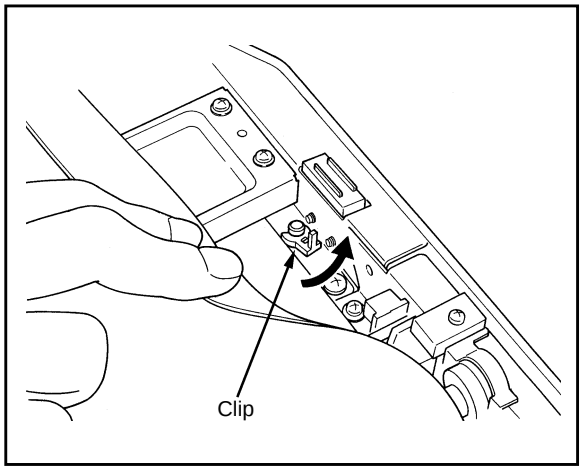

## 13.2 Transport Belt

(1) Remove the transport unit.

(2) Remove the two screws (front and rear) holding the belt tension plate.

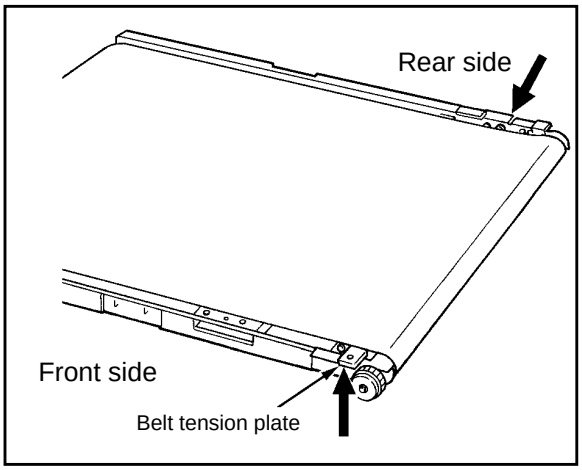


(3) Rotate the belt tension plate toward you to loosen the transport belt.

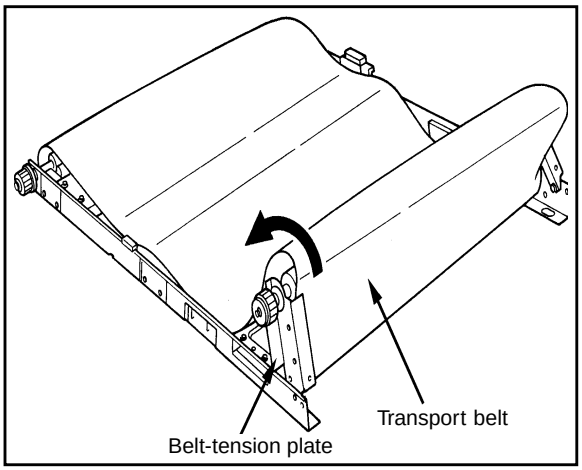


(4) Remove the transport belt.

**Note:** During reassembly, the edge of the transport belt should be inside the side frame of the transport unit. After reassembly, check that the belt is not deviated to one side (should be on the center).

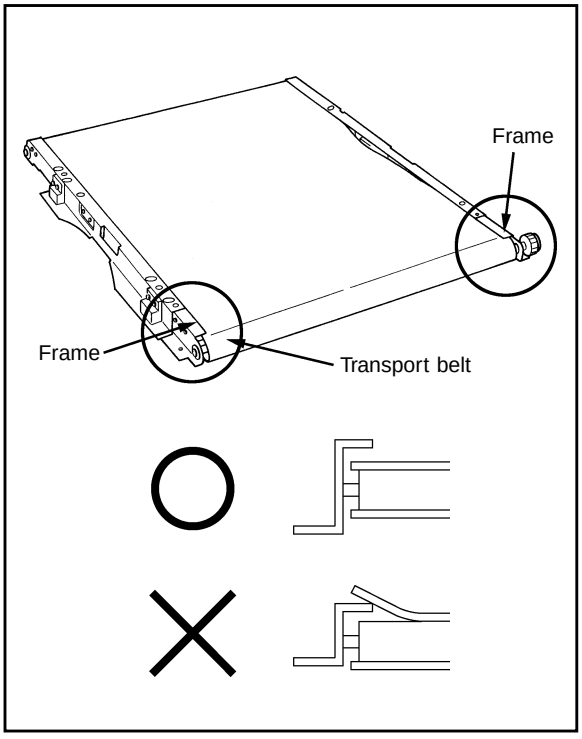

### 13.3 Belt Holding Roller/Brush

(1) Remove the transport belt.

**Belt holding roller**

(1) Replace the belt tension roller on the feed side after removing the rubber roller on the feed side. The belt tension roller on the exit side should be replaced by having the belt tension plate inclined. (There is no need to remove the rubber roller.)

**Note:** During the replacement of the belt tension roller, never remove the side frame of the transport unit. (Do not remove the screws which are fastening the side frame except when replacing the side frame.)

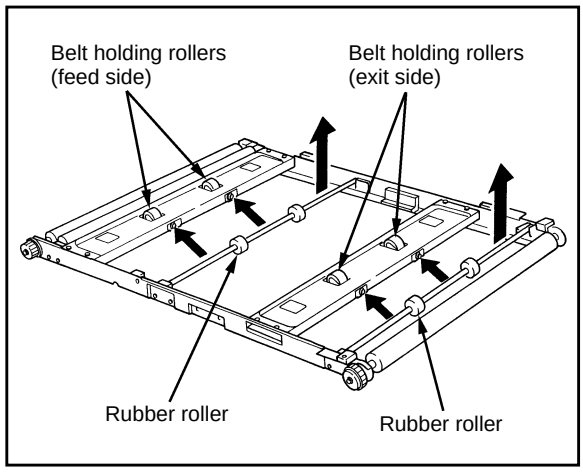


**Brush**

(1) Remove two screws and take out the brush holding bracket.

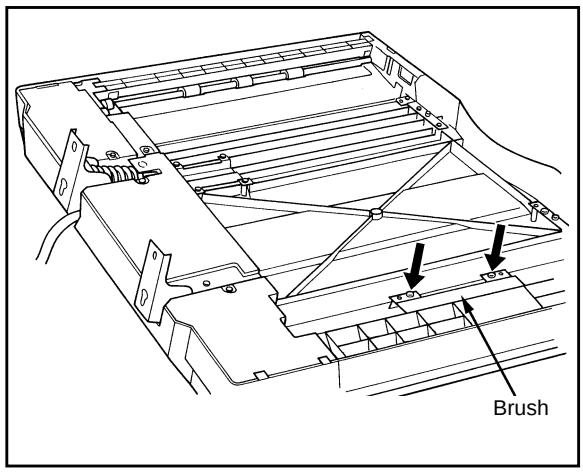


### 13.4 Original Feed Tray

(1) Remove two M4 screws and take out the tray in an upward direction.

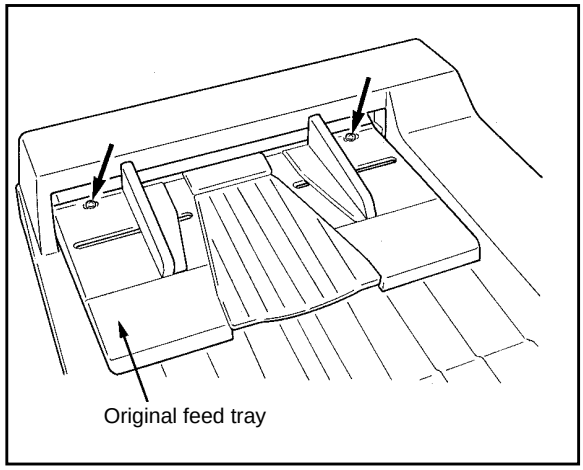

## 13.5 Feed Unit

(1) Remove the original feed tray.

(2) Disconnect one connector at the rear and remove two screws, then move the ADF unit toward the rear to take it out in an upward direction.

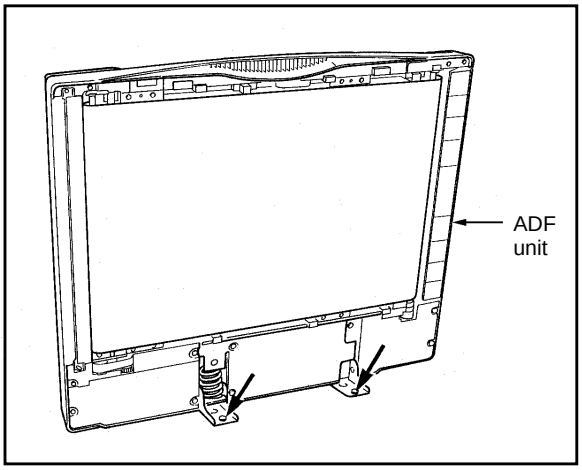


(3) Place the entire unit upside down and remove its cover (4 screws).

**Note:** (M4×8)

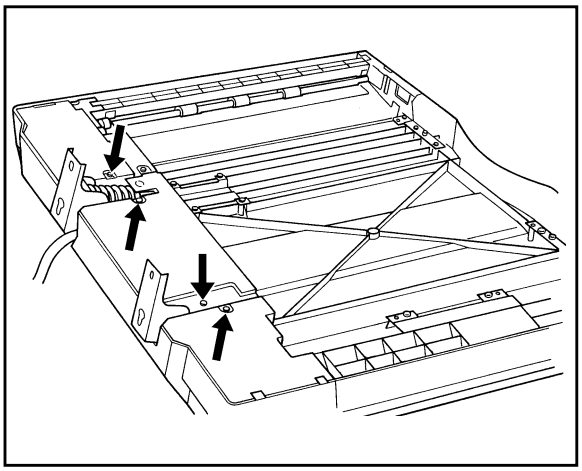

(4) Remove four connectors from the PC board and disconnect the earth on the left hinge portion.

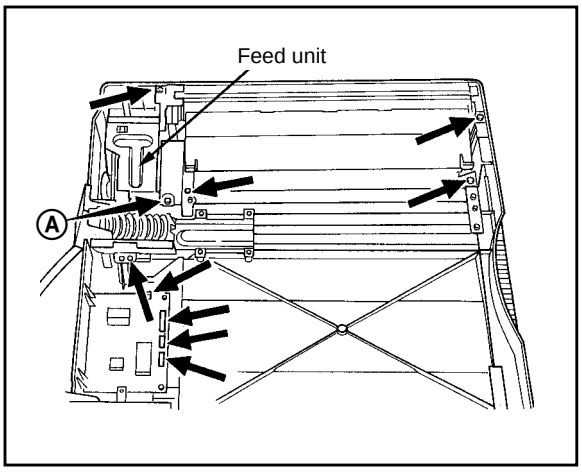

(5) Remove five screws and take out the feed unit.

**Note:** (M4×12) .. 4 pieces

(M4×8) .... 1 piece Ⓐ

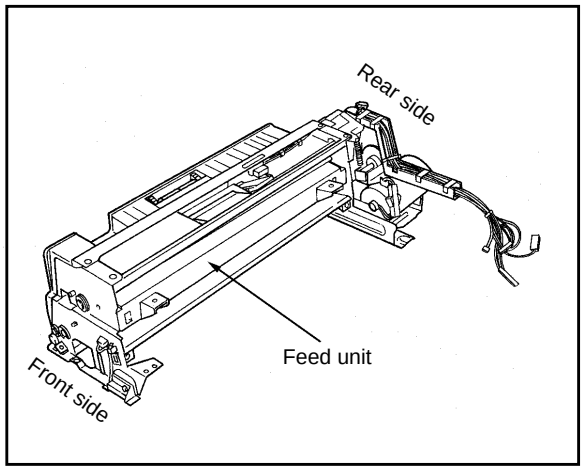


### 13.6 Harness Guide

(1) Remove the feed unit.

(2) Remove the clips (at 9 places) for the harness guide and disconnect four connectors.

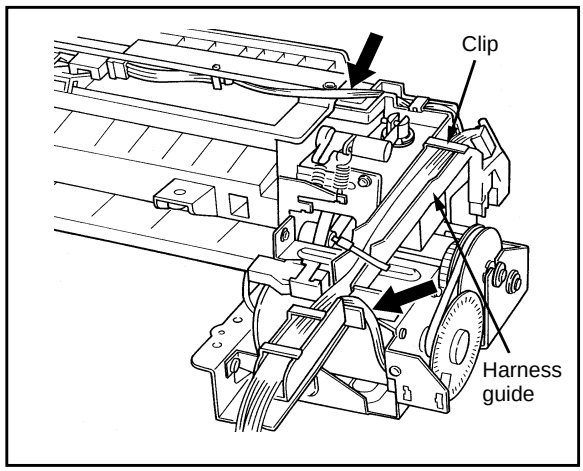


(3) Remove three screws and take out the harness guide.

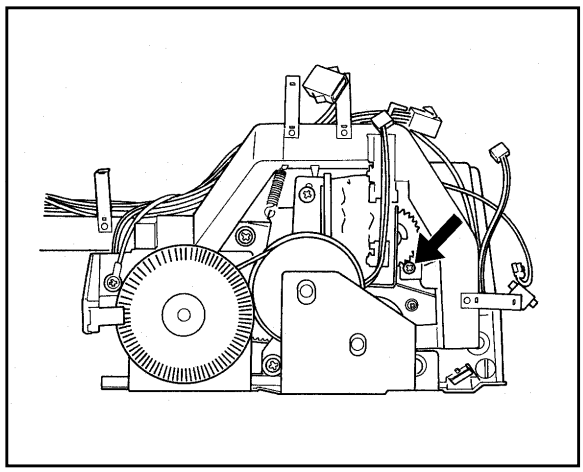

### 13.7 Weight Solenoid

(1) Remove the feed unit.

(2) Remove the harness guide.

(3) Remove the spring from the solenoid arm.

(4) Remove the screw fastening the solenoid to the side surface of the frame.

(5) When two screws are removed, the solenoid can be taken out.

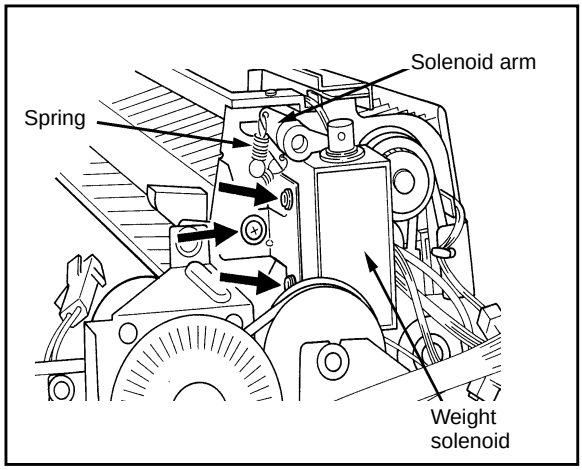


### 13.8 Drive Motor Unit (Drive Motor)

(1) Remove the screw holding clock sensor bracket and disconnect the sensor from the connector.

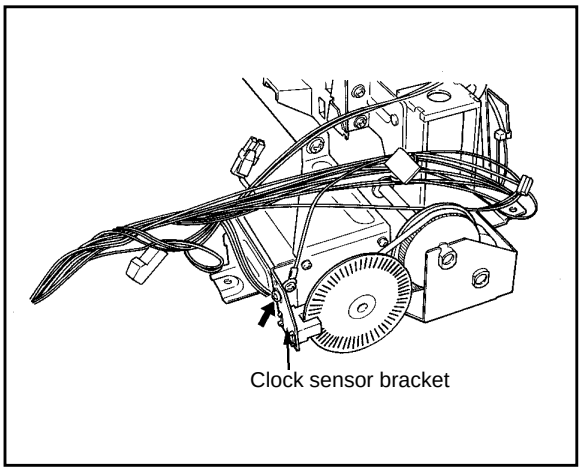


(2) Remove four screws and take out the drive motor unit.

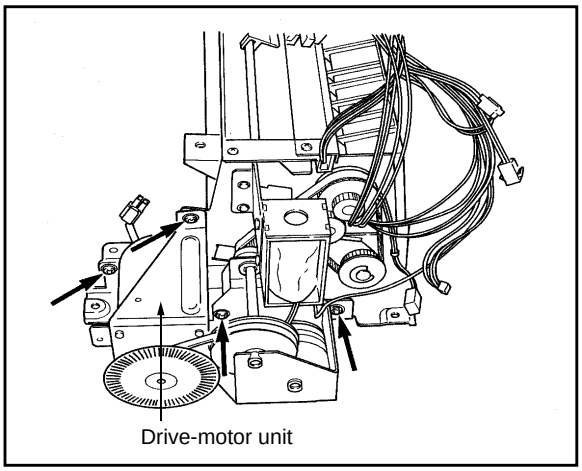

(3) To remove the drive motor, loosen two setscrews, remove the clock pulley and four M3 screws and the motor can be taken out.

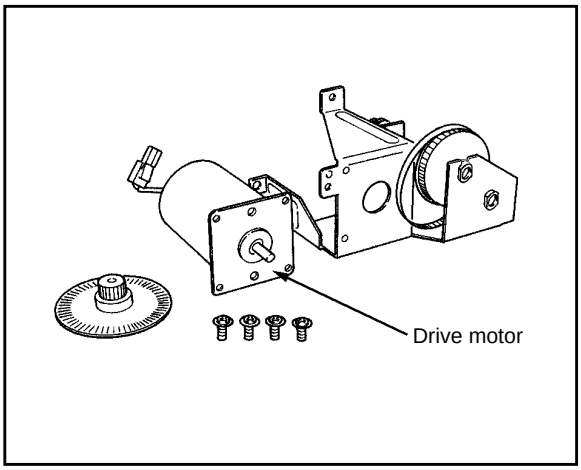


### 13.9 Electromagnetic Clutch

(1) Remove the drive motor unit.

(2) Remove two E-rings and one bushing (rear side) and pull out the drive shaft upwards.

(3) Remove an E-ring and pull out the gear and its pin, then remove an E-ring and two bushings. Then slide the clutch toward the rear and pull it out upwards.

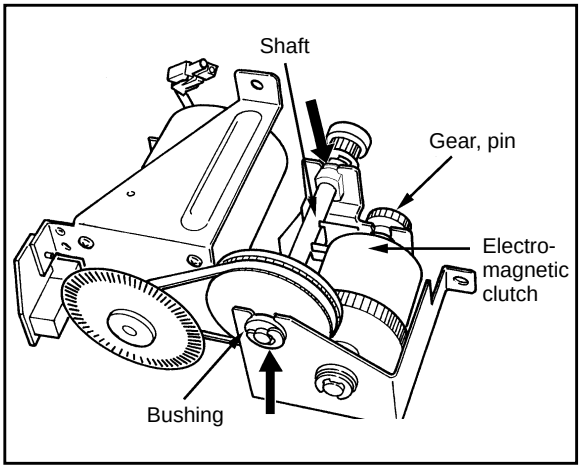


### 13.10 Jam Access Cover

(1) Remove the feed unit.

(2) When two shouldered screws (front and rear) are removed, the jam access cover can be taken out.

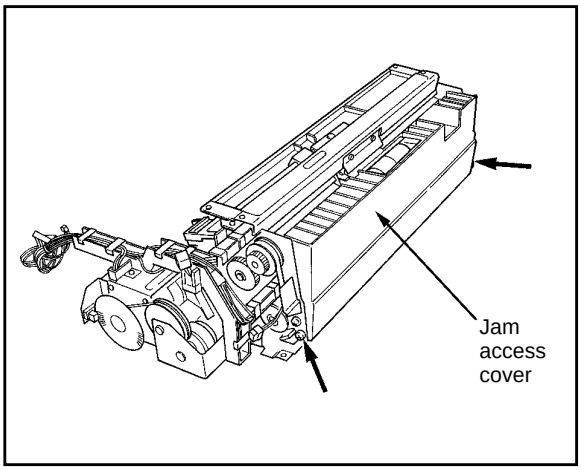

### 13.11 Separation Unit

(1) Open the jam access cover.

(2) Remove two screws and take out the separation unit.

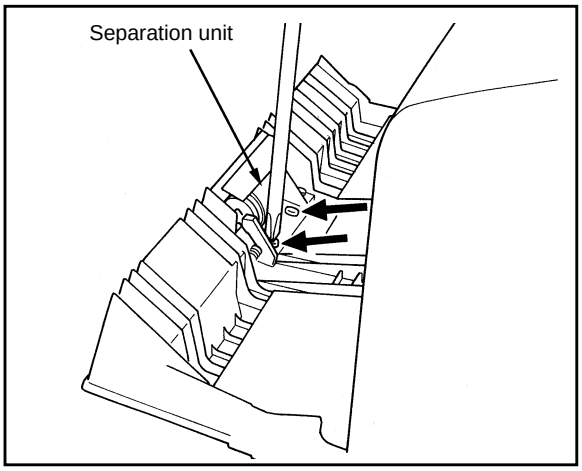


**Separation pressure adjustment**

By changing the position of hooking the spring, 4-step adjustment is possible:

5N : Large separation pressure
4N : Medium separation pressure
3N : Small separation pressure

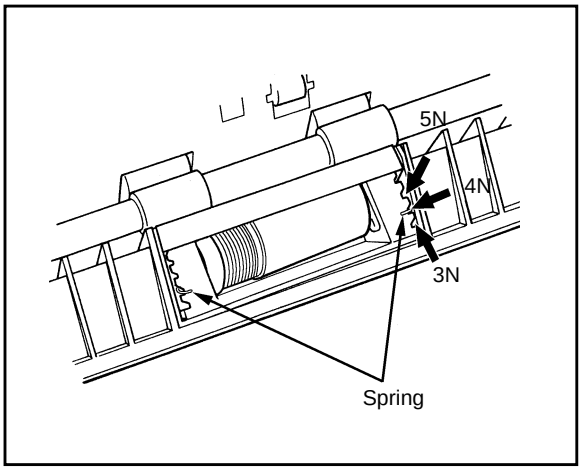


### 13.12 Separation Plate

(1) Open the jam access cover.

(2) Remove two screws.

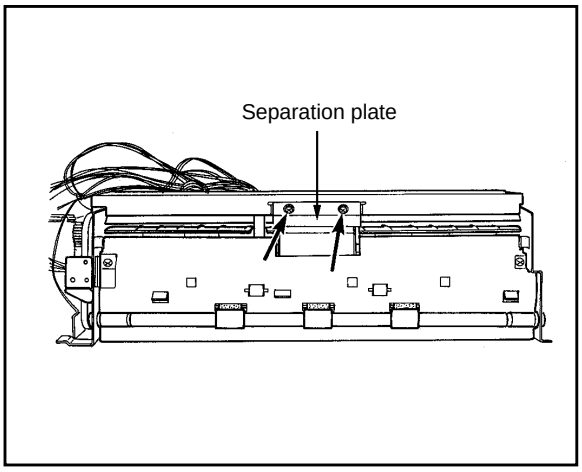

**Separation plate adjustment**

Make adjustment so that the gap between the feed roller and the separation plate is 0.5 mm.

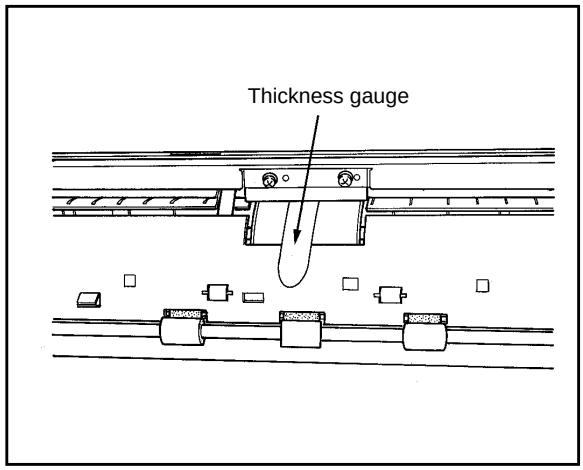


## 13.13 Aligning Roller (L)

(1) Remove the jam access cover.

(2) Remove an E-ring and bushing from the front and rear sides.

(3) Slide the aligning roller (L) to pull it out.

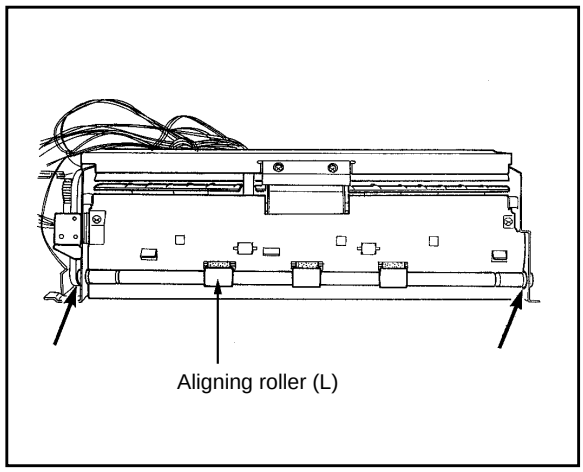


## 13.14 Aligning Sensor and Size Sensors 1 and 2

(1) Remove the feed unit.

(2) Remove four screws and take out the entrance guide.

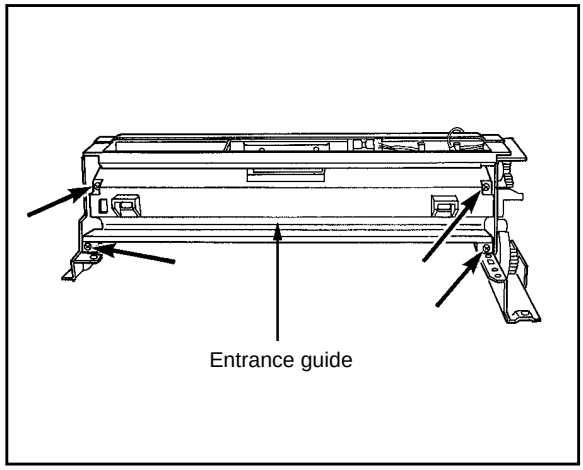

(3) Remove each screw and then disconnect the sensor from the connector.

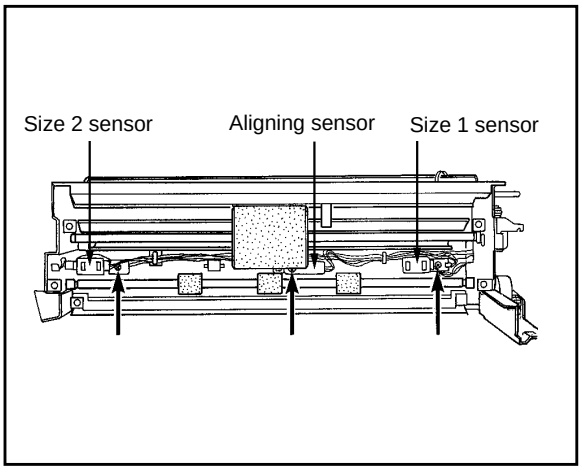


## 13.15 Feed Roller and Aligning Roller (R)

(1) Remove the feed unit.

(2) Remove the weight solenoid.

(3) Take out the drive motor unit.

(4) Remove the upper guide.

(5) Remove the aligning sensor and size sensors 1 and 2.

(6) Remove four screws and then the aligning guide.

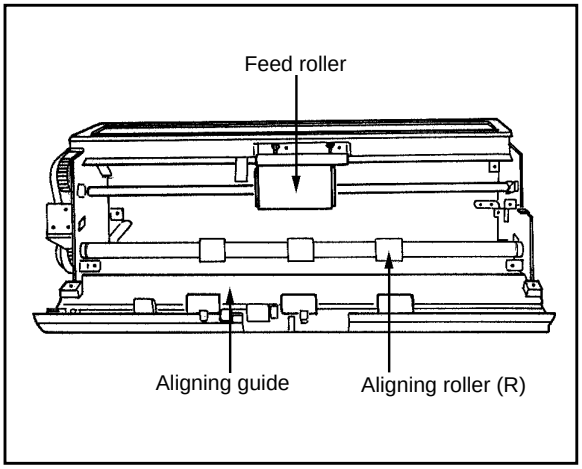


**Feed roller**

(1) Remove an E-ring and take out the one-way gear.

(2) Remove an E-ring, bushing and idle gear from the front and rear sides.

(3) Slide the feed roller to pull it out.

**Aligning roller (R)**

(1) Remove an E-ring and take out the one-way pulley.

(2) Remove an E-ring and bushing from the front and rear sides.

(3) Slide the aligning roller (R) to pull it out.

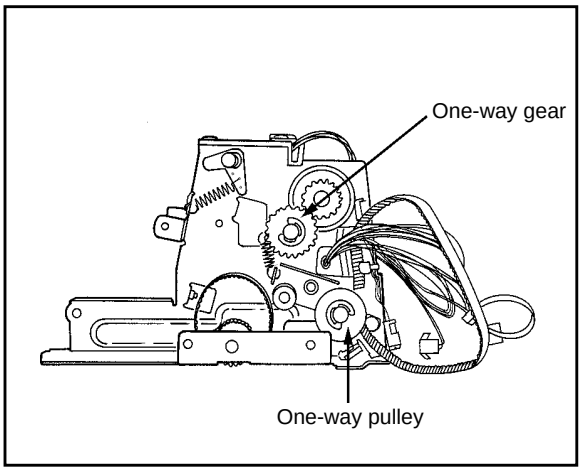

### 13.16 Exit Unit

(1) Remove the ADF unit.

(2) Place the entire unit upside down and remove two covers.

(3) Disconnect one connector.

(4) Remove three screws.

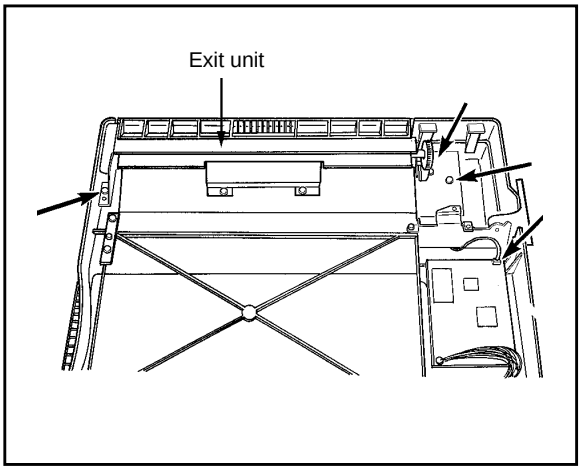


### 13.17 Exit Cover

(1) Remove the exit unit.

(2) Remove each spring from the front and rear sides.

(3) Take out one screw (front) and remove the cover.

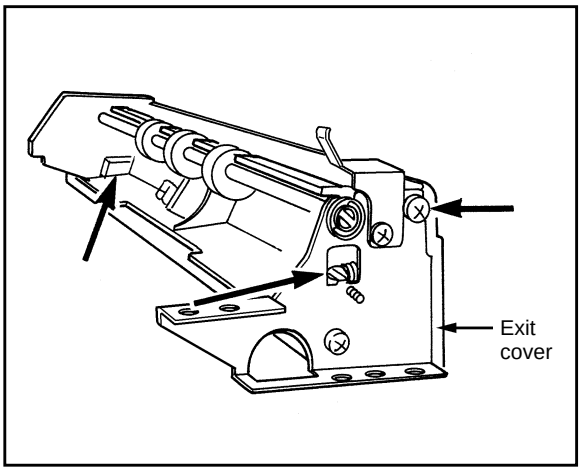


### 13.18 Exit Roller

(1) Remove the exit unit.

(2) Remove the exit cover.

(3) Take out an E-ring and remove the gear.

(4) Remove the tension spring of the gear.

(5) Pull out the pierce ring and remove the one-way gear and bushing ---- at the rear side.

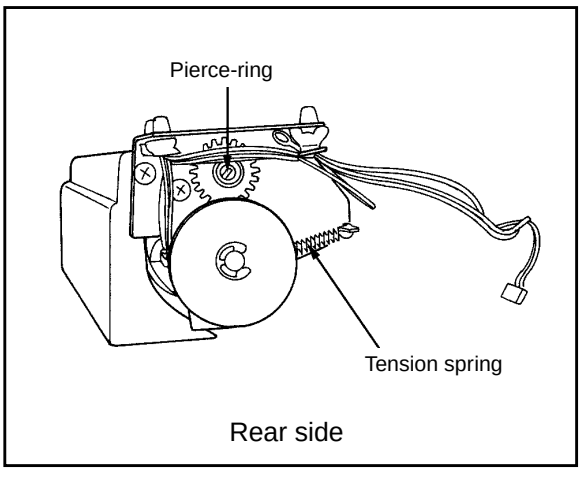

(6) Pull out the pierce ring and remove the bushing. When two screws and the front frame are removed, the exit roller can be taken out ---- at the front side.

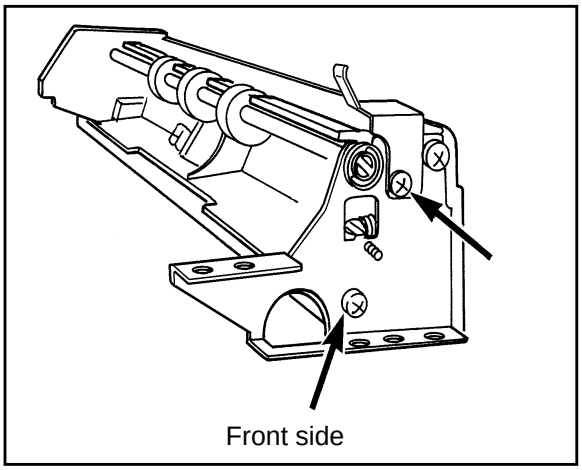


### 13.19 Exit Sensor

(1) Remove the exit unit.

(2) Remove one screw and disconnect the sensor from the connector.

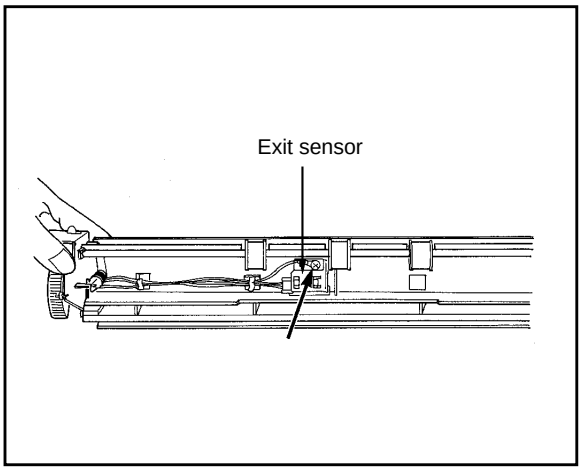


### 13.20 PC Board

(1) Remove the ADF unit.

(2) Place the entire unit upside down and remove its cover.

(3) Disconnect connectors (7 places).

(4) Remove two screws.

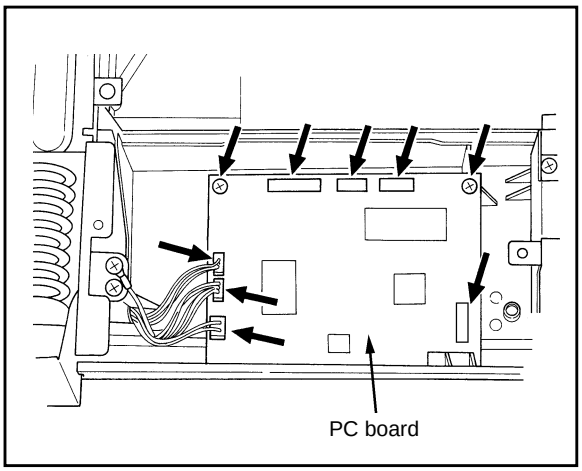

### 13.21 Skew Adjustment

(1) Please confirm the installation as shown (RIGHT HINGE).

**Note:** Install the screw on the center of scale.

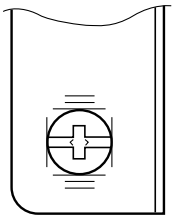

**RIGHT HINGE**

(2) Place the test original face up in the tray, press PRINT to make a copy.

Check that the copy isn't skew.

(3) If not, loosen the two screws on hinges and adjust the position of RIGHT HINGE. Repeat the procedure until the copy isn't skew.

**Note:** After the adjustment, tighten the two screws of LEFT and RIGHT HINGE without fail.

**Image Inclination**

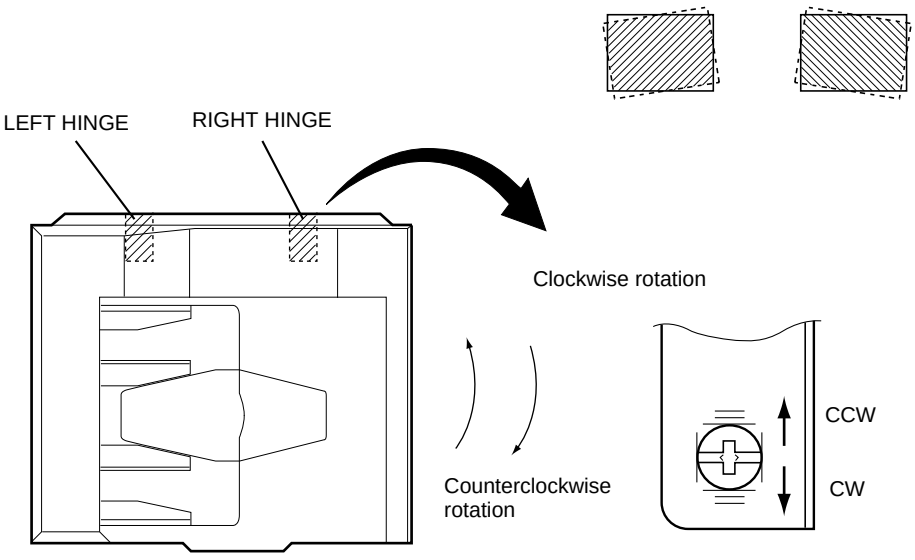

## 13.22 EEPROM Initialization, Aligning Sensor Adjustment and Test Mode

(1) EEPROM initialization and aligning sensor adjustment

Whenever the logic PC board or aligning sensor is replaced, it is necessary to initialize the EEPROM and adjust the aligning sensor.
At that time, use the PPC keys (Adjustment mode: 05).
If the adjustment is not performed, errors (paper jam etc.) may occur.
Refer to the Service Manual for the PPC.

(2) Test mode

The independent test modes below can be performed by pressing PPC keys (output check: 03/04).
Refer to the Service Manual for the PPC.

* Independent aging
* Feed roller rotation
* Aligning roller rotation
* Transport belt rotation
* Feed roller rotation + Weight solenoid operation
* Weight solenoid operation
* Clutch operation

### 13.23 Adjustment of the Height of the Transport Unit

(1) Remove the transport unit and place it on the original glass of the PPC.

(2) Loosen four fixing screws, and adjust the height of the transport unit so that the spacers (L), (R) touch the glass and there is contact between the magnetic catches and the magnetic plates.
Retighten the screws pushing the magnetic catch up. (In order to eliminate the play of the magnetic catch)

(3) After finishing the adjustment above, reinstall the transport unit to the ADF unit.

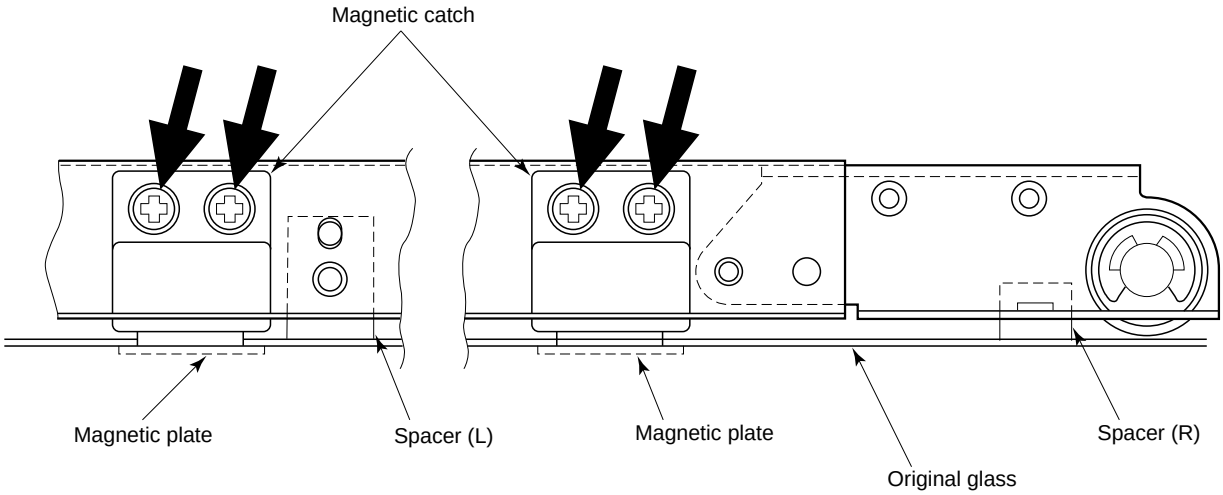

# 14. TROUBLESHOOTING AND MAINTENANCE OF THE ADF

## 14.1 Mechanical Troubleshooting

(1)

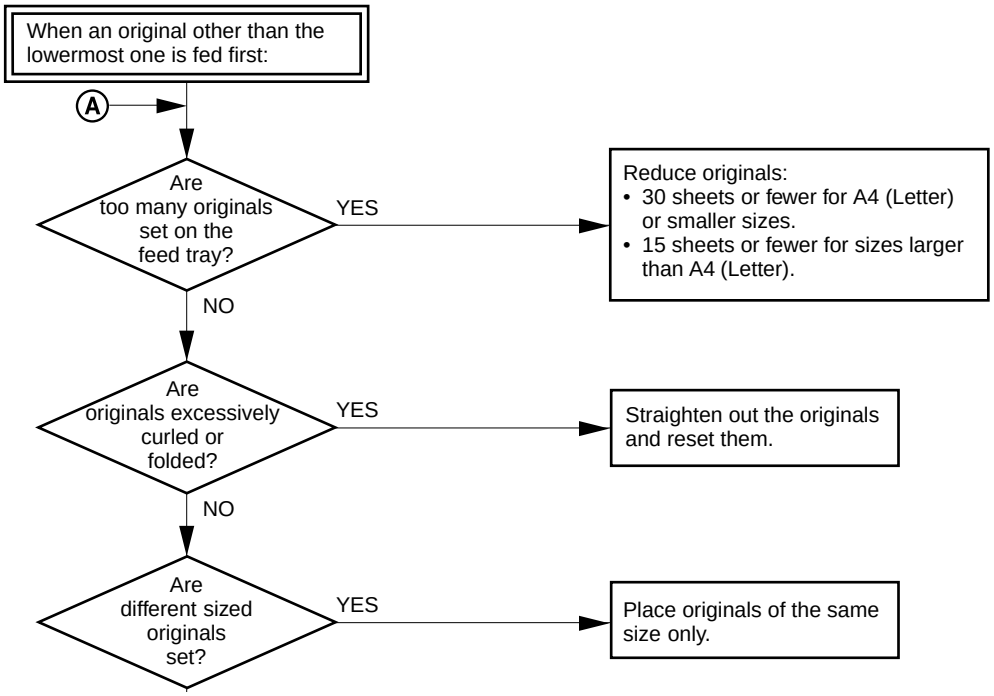


(2)

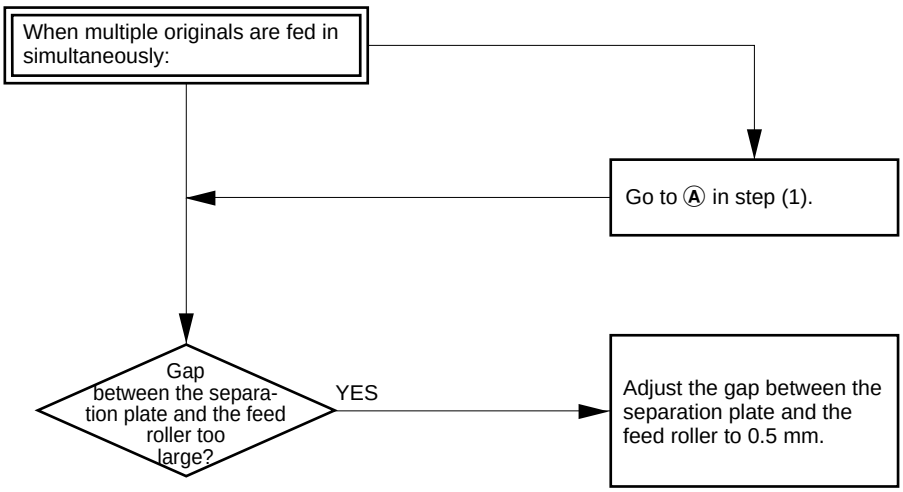

(3)

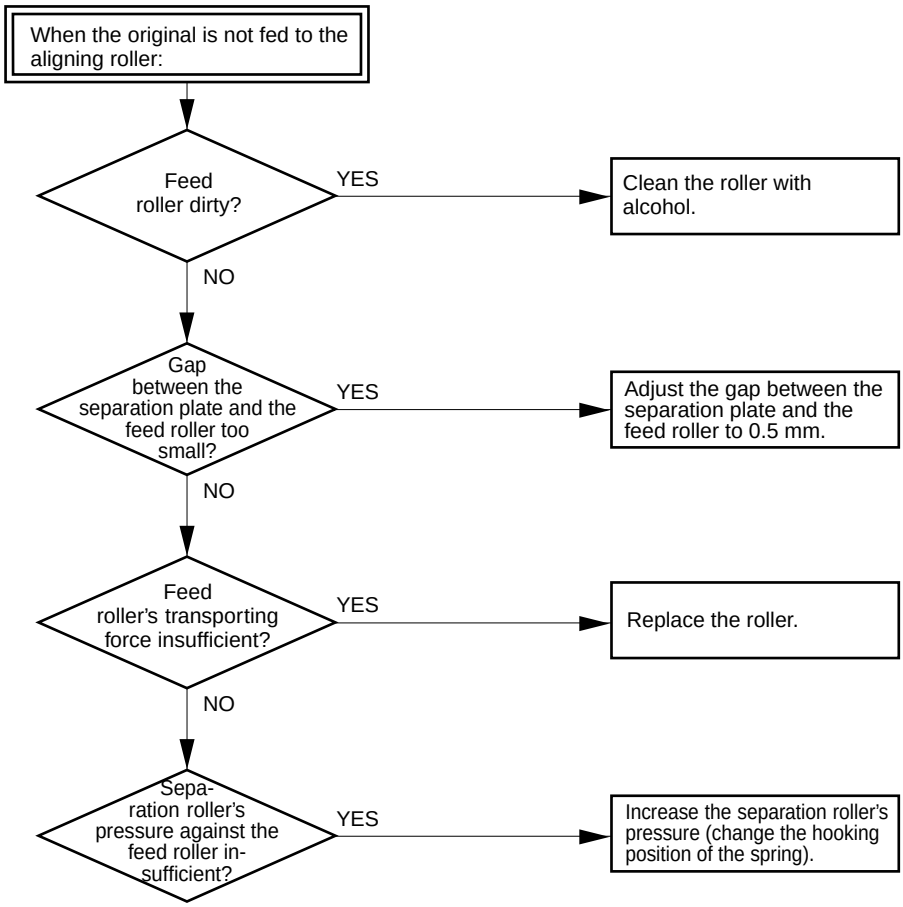
When the original is not fed to the aligning roller:
Feed roller dirty?
YES
Clean the roller with alcohol.
NO
Gap between the separation plate and the feed roller too small?
YES
Adjust the gap between the separation plate and the feed roller to 0.5 mm.
NO
Feed roller's transporting force insufficient?
YES
Replace the roller.
NO
Sepa-ration roller's pressure against the feed roller in-sufficient?
YES
Increase the separation roller's pressure (change the hooking position of the spring).

(4)

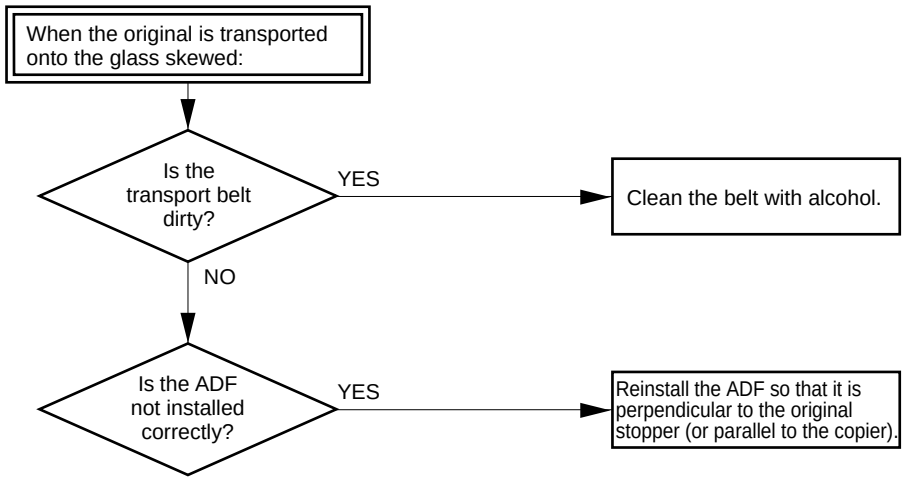
When the original is transported onto the glass skewed:
Is the transport belt dirty?
YES
Clean the belt with alcohol.
NO
Is the ADF not installed correctly?
YES
Reinstall the ADF so that it is perpendicular to the original stopper (or parallel to the copier).

(5)

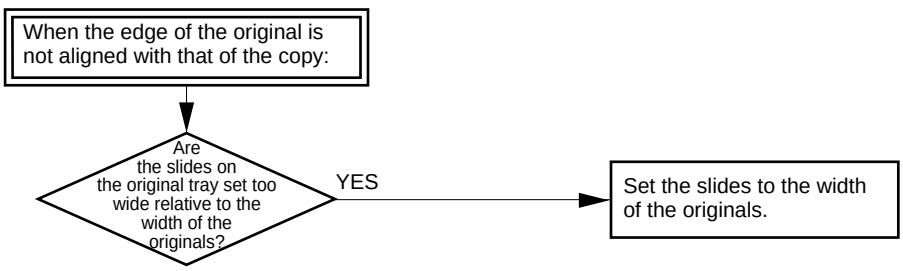
When the edge of the original is not aligned with that of the copy:
Are the slides on the original tray set too wide relative to the width of the originals?
YES
Set the slides to the width of the originals.

## 14.2 Electrical Troubleshooting

(1) ADF Does Not Operate (except when a jam occurs or the cover is open).

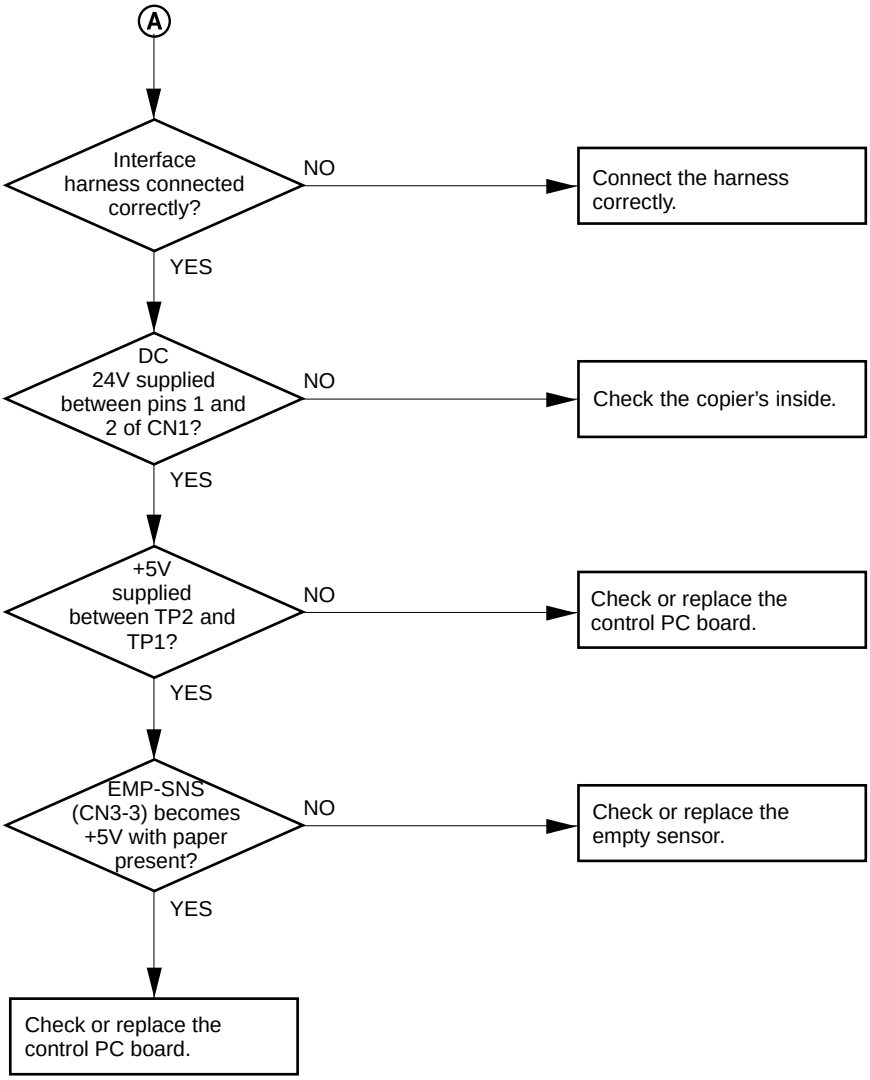

(2) Motor Error

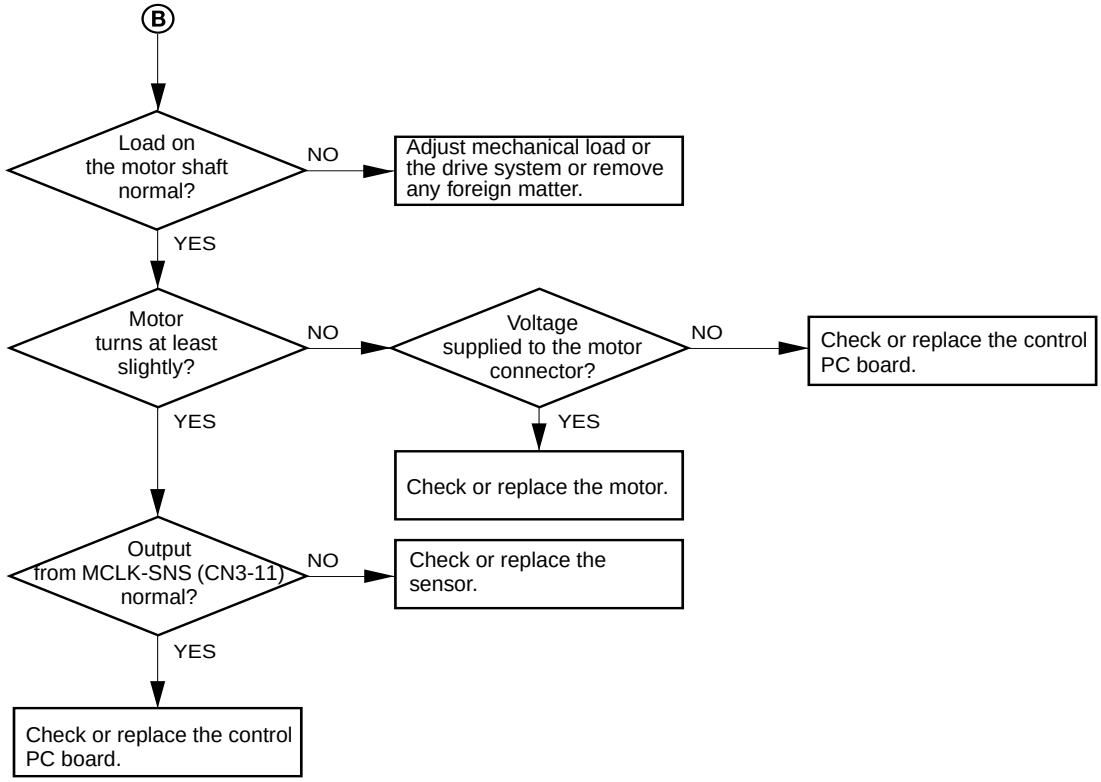


(3) Communication Error

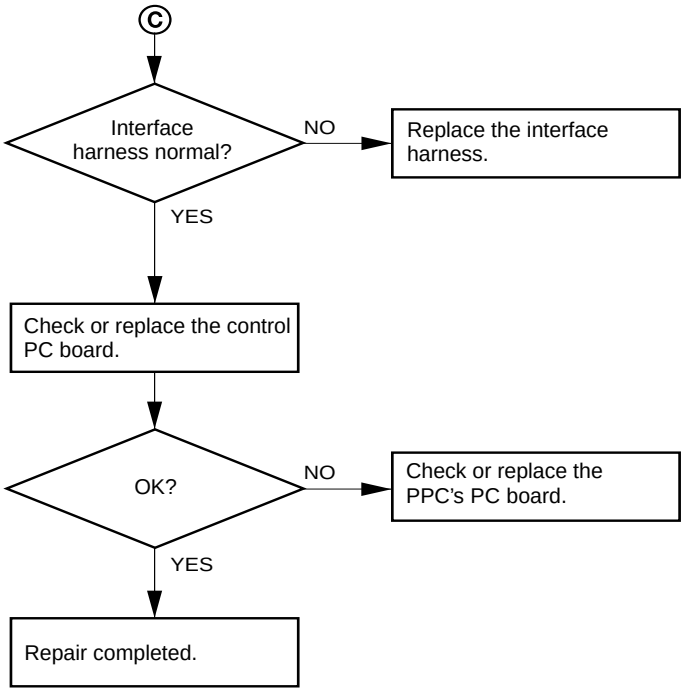

(4) Size Detection Failure

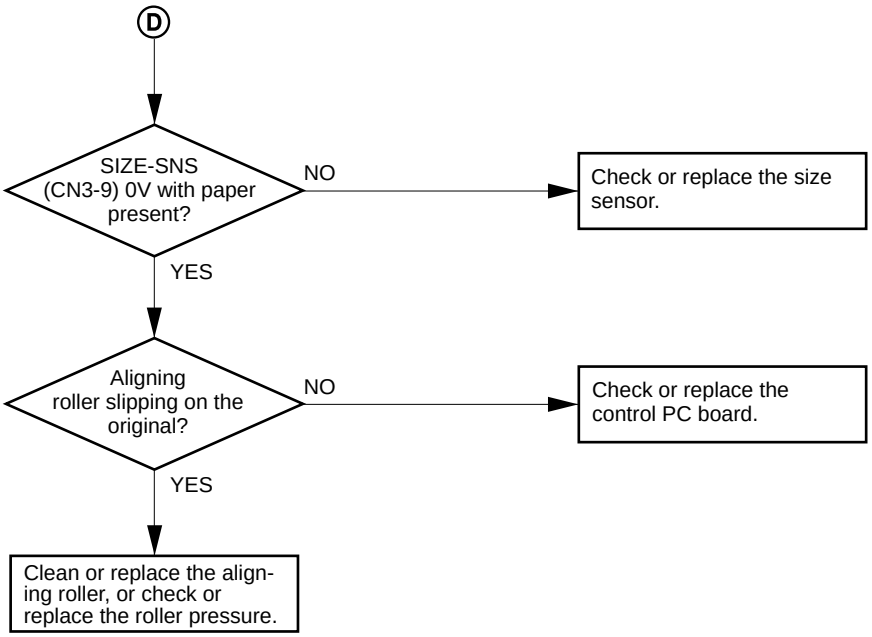


(5) Original's Pre-fed Stop Position Failure

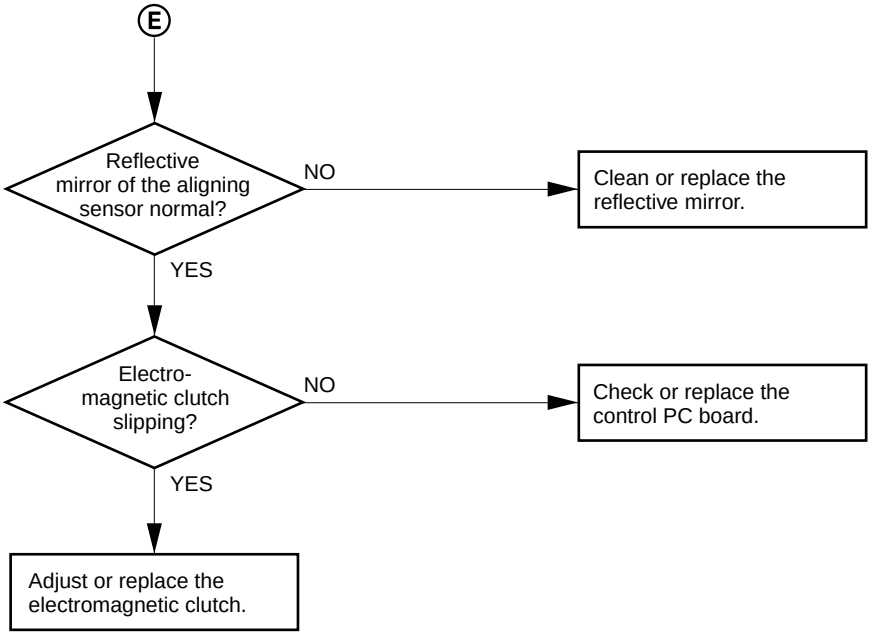

### 14.3 Periodic Maintenance

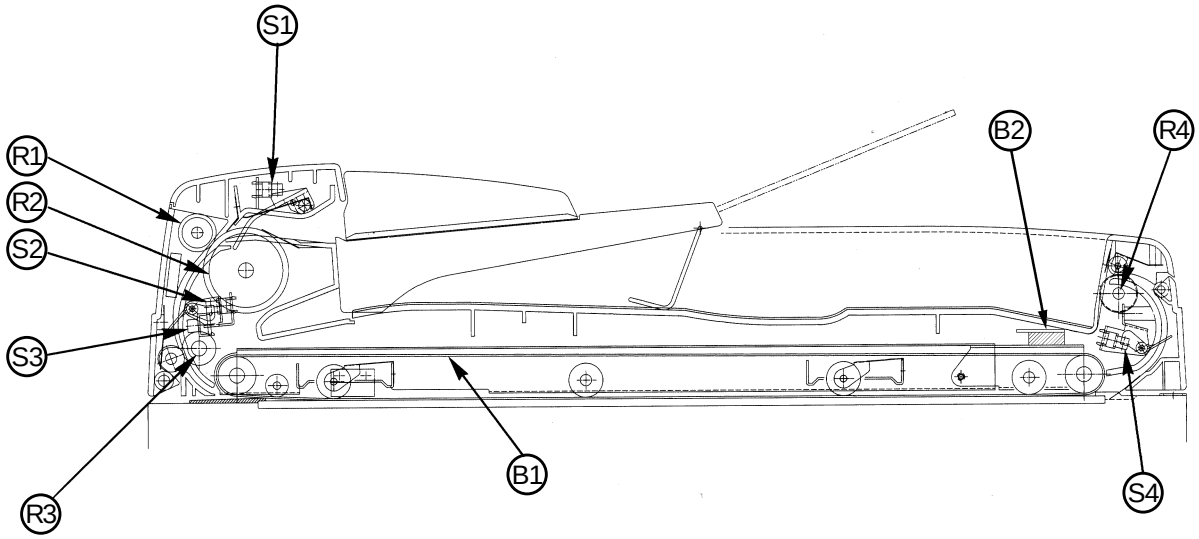


| | Parts to check | 500K | 30K | *Page, item No. |
|---|---|---|---|---|
| R1 | Separation roller | Replace | C1 | P1, I43 |
| R2 | Feed roller | | C1 | P1, I7 |
| R3 | Aligning roller | | C1 | P1, I8 |
| R4 | Exit roller | | C1 | P3, I4 |
| B1 | Transport belt | | C1 | P5, I26 |
| B2 | Brush | | C2 | P6, I14 |
| S1 | Empty sensor | | C2 | P1, I17 |
| S2 | Size sensor | | C2 | P1, I17 |
| S3 | Aligning sensor | | C2 | P1, I12 |
| S4 | Exit sensor | | C2 | P3, I9 |

Notes : K = 1,000 copies

C1 : Cleaning (Isopropylalcohol)

C2 : Cleaning (Cloth)

* Refer to SERVICE PARTS LIST MR-2004.

# 15. UNPACKING AND SETUP ADJUSTMENT

## A. Unpacking

Open the carton and take out the accessory package and other packing materials.

The following parts are included in the accessory package:

① Automatic document feeder ..... 1 pc.
② Original feed tray ..... 1 pc.
③ Hinges ..... 2 pcs.
④ Screws for fastening the hinges (M4×10) ..... 2 pcs.
⑤ BID screws (M4×10) ..... 2 pcs.
⑥a Flat magnet plate ..... 1 pc.
⑥b Recessed magnet plate ..... 1 pc.
⑦ FLT screws (M4×10) ..... 2 pcs.
⑧ Setup instruction ..... 1 pc.

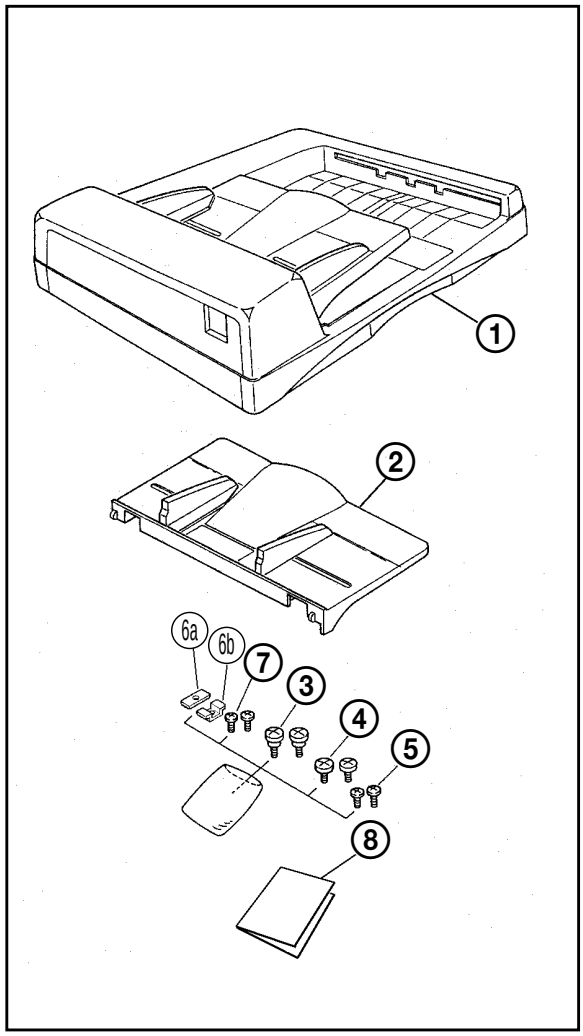

## B. Setup Procedure

**Note:** Be sure to turn off and unplug the copier.

1. Remove the two blind covers located on the control panel and install the magnetic plates supplied with the FLT screws with also supplied.

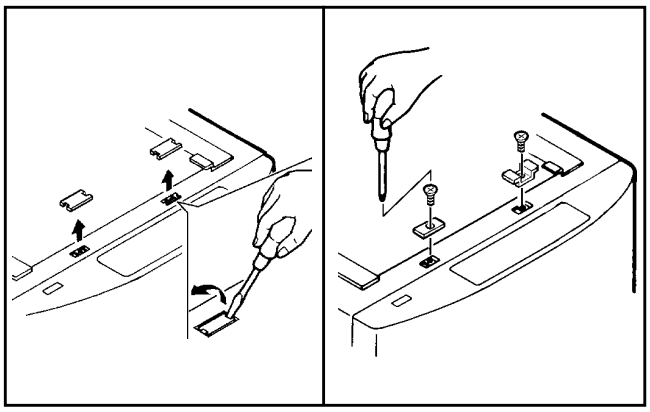

2. Install the two hinge screws supplied in the holes on the rear side of the top cover.

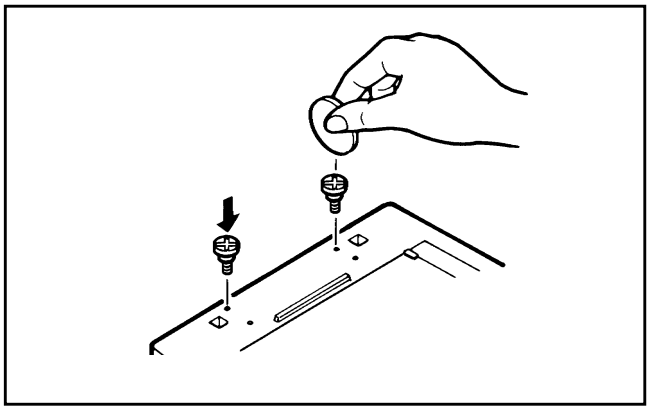

3. Holding the ADF and aligning the holes in the ADF bracket with the two hinges, place the ADF slowly onto the top cover. Then move the ADF forward (toward the front) and fasten it with the two screws (M4×10) supplied.

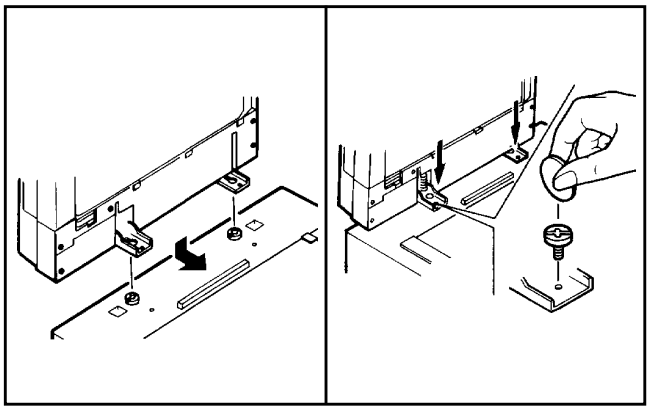

4. Cut off the “window” for the connector section marked “ADF” on the rear side.

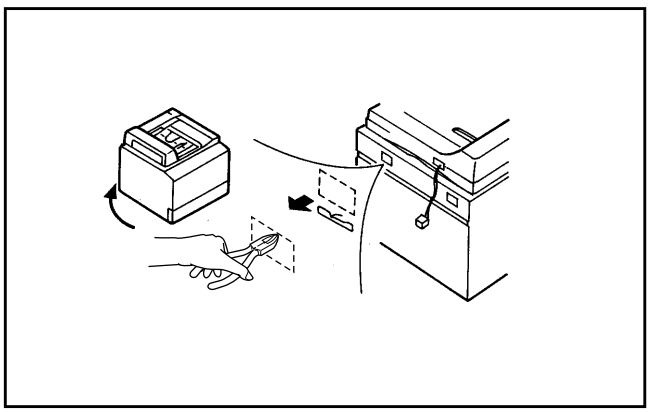

5. Connect the ADF's connector to the connector section marked “ADF”.

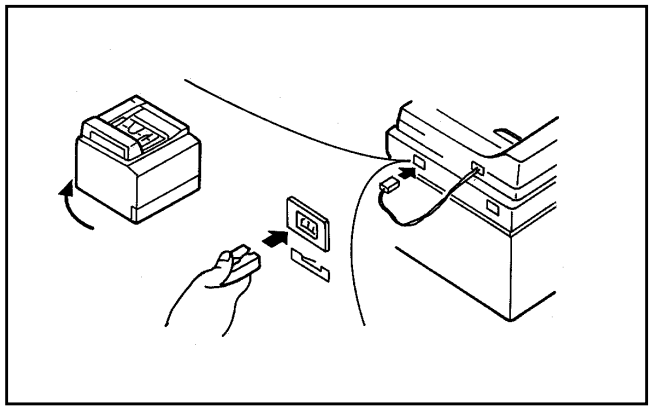

6. Remove the tape holding the original exit aligning bar on the reverse side of the original feed tray. Also remove the tape on the top side.

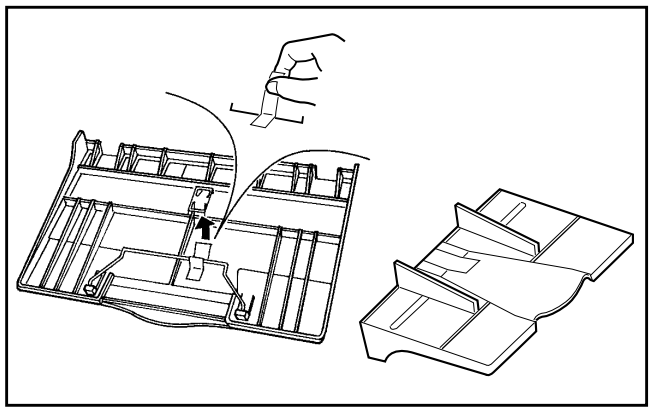

7. Remove the two screws fastened to the ADF, install the original feed tray and move it so that the screws are in the center of the ADF holes, then tighten the screws temporarily.

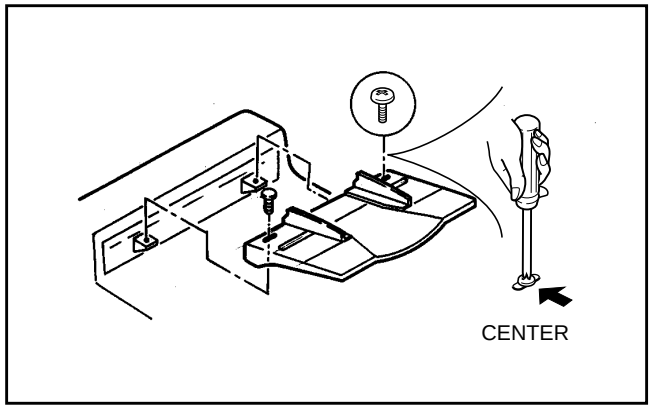


7-1. Adjustment of Skew (Image Inclination)

(1) Please confirm the installation as shown (RIGHT HINGE).

**Note:** Install the screw on the center of scale.

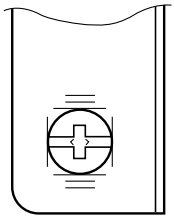

**RIGHT HINGE**

(2) Place the test original face up in the tray, press PRINT to make a copy.

Check that the copy isn't skew.

(3) If not, loosen the two screws on hinges and adjust the position of RIGHT HINGE. Repeat the procedure until the copy isn't skew.

**Note:** After the adjustment, tighten the two screws of LEFT and RIGHT HINGE without fail.

**Image Inclination**

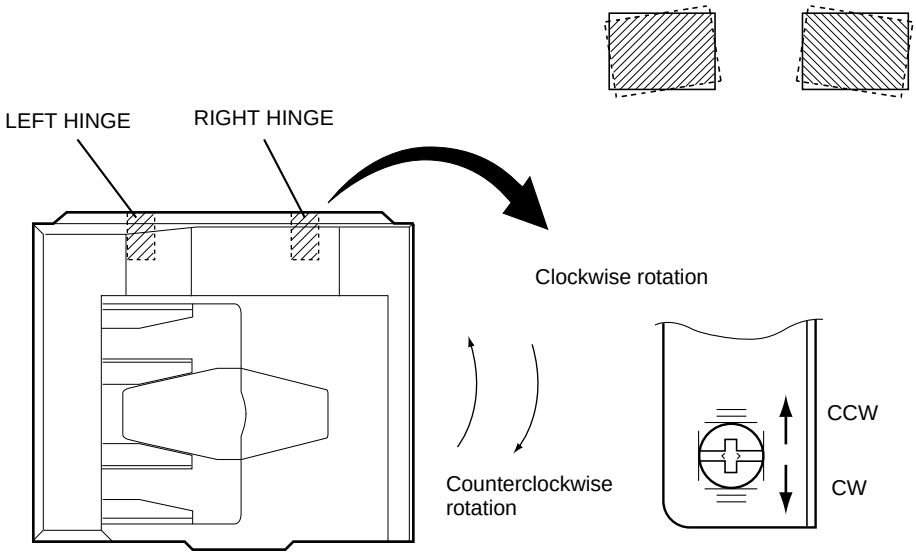


8. Make a test original as shown: First draw a center line on an A4 sized copy paper.

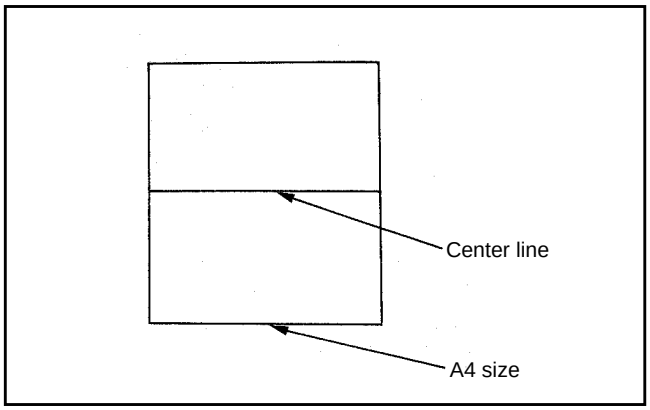

9. Place the test original on the original feed tray with the center line side facing upward and align the side guides to the sides of the original.

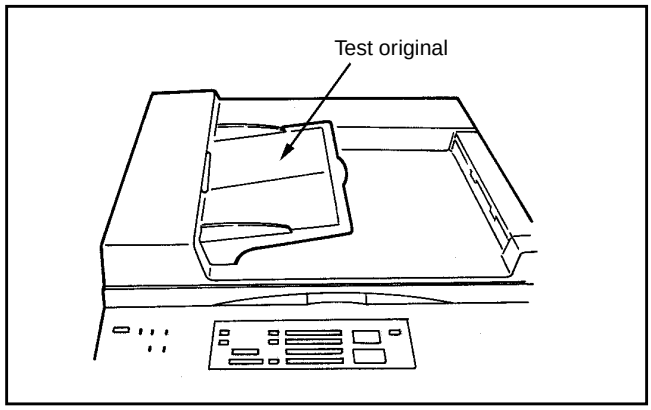


10. Press the PRINT key to make a copy. Fold the copy in half and check that the center line is in the center of the copy: If it is not, adjust the original feed tray until the center line is copied in the center. After adjustment, tighten the two screws securely to fasten the original feed tray.

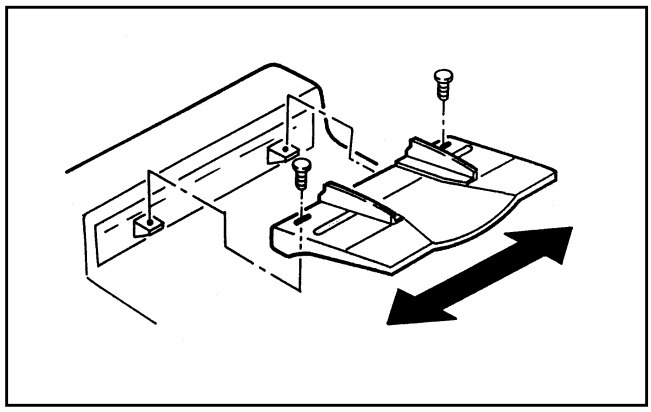

**C. Leading-edge Position Adjustment for ADF**

If the original fed from the ADF has not stopped in the preset position, make adjustment using the following procedure:

1. While pressing the “0” and “5” keys on the copier’s control panel simultaneously, turn on the power switch.
2. After confirming that “AJ” is shown on the display, key in “8” and “4” and press the PRINT key.
3. To make the original stop at a position nearer to the feed side of the ADF, key in a number smaller than the one shown now and press the INTERRUPT key. If you want to stop the original at a position nearer to the exit side of the ADF, key in a number larger than the one shown now and press the INTERRUPT key.

   (1 step: Approx. 0.8 mm adjustable Allowable input values: 0 ~ 15)
4. With an original set on the original feed tray, if you press the ENERGY SAVER key, an original is fed in and copied.
5. After adjustment is completed, press the “0” and “9” keys simultaneously to go into the normal copy mode.

**D. Adjustment for Gap between Originals in 2 in 1 Mode**

In the 2 in 1 mode, to adjust the gap between the two originals fed from the ADF, use the following procedure (adjustment procedure):

1. While pressing the “0” and “5” keys simultaneously, turn on the power switch.
2. After confirming that “AJ” is shown on the display, key in “8” and “7” and press the PRINT key.
3. To make the gap between the originals, key in a number smaller than the one shown now. If you want to increase the gap, key in a number larger than the one shown now. Then press the INTERRUPT key.

   1 step: Approx. 1 mm  Allowable input value: 0 ~ 15
4. After setting an original on the original feed tray, if you press the ENERGY SAVER key, the original is fed in and copied.
5. After adjustment is completed, press the “0” and “9” keys simultaneously to go into the normal copy mode.

# 16. PC BOARD ASSEMBLIES

## 16.1 PWA-F-LGC-738

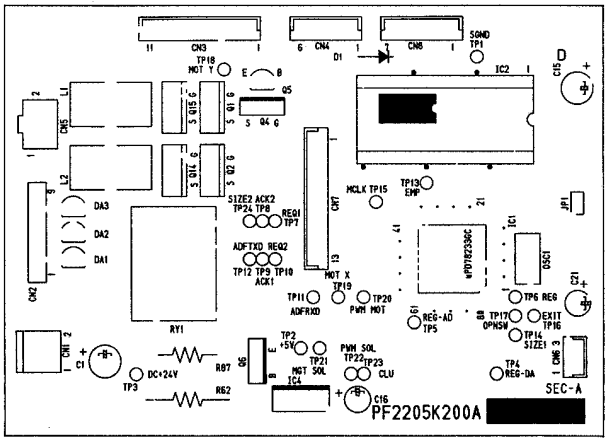


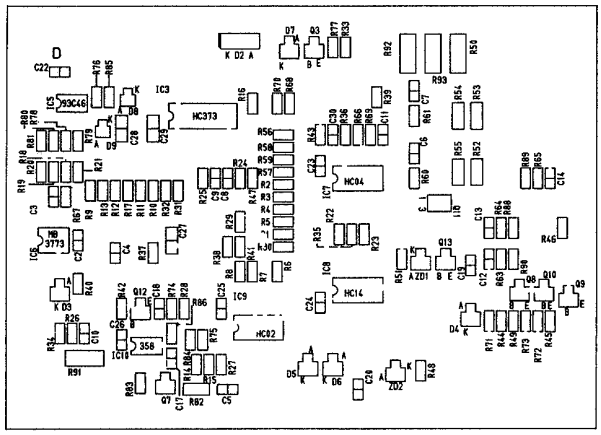

## 16.2 PWA-F-RGT-738

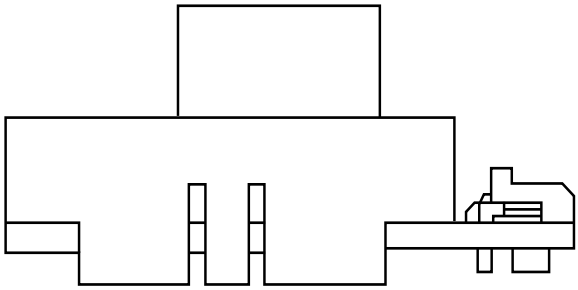

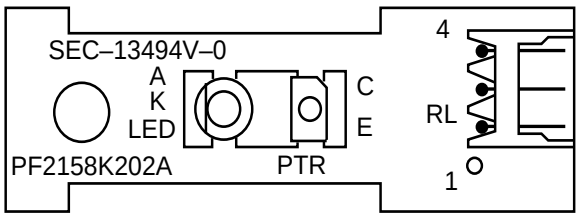

# 17. CIRCUIT DIAGRAMS/WIRE HARNESS CONNECTION DIAGRAMS

## 17.1 General Circuit Diagram

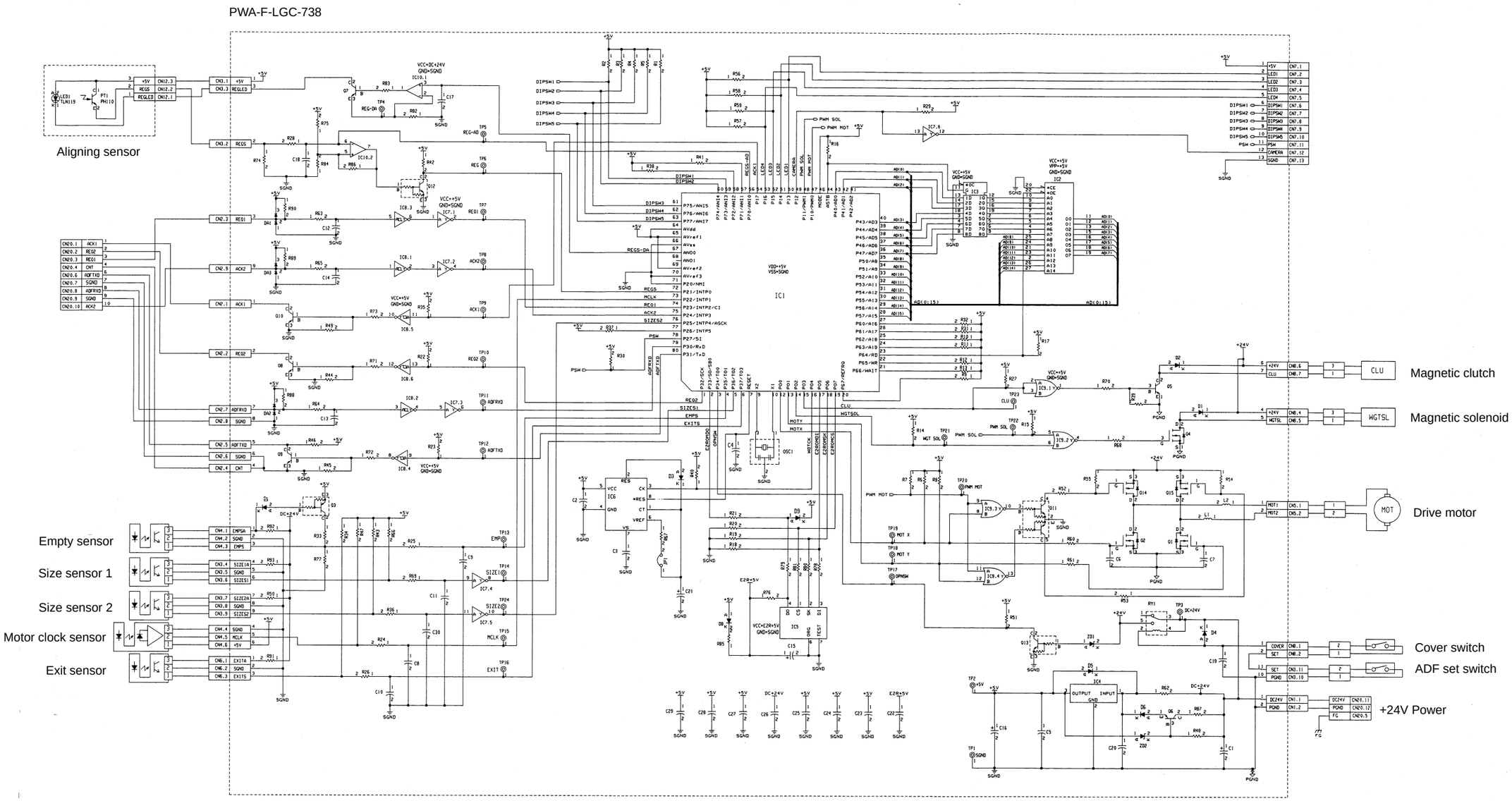

## 17.2 Control PC Board Circuit (PWA-F-LGC-738)

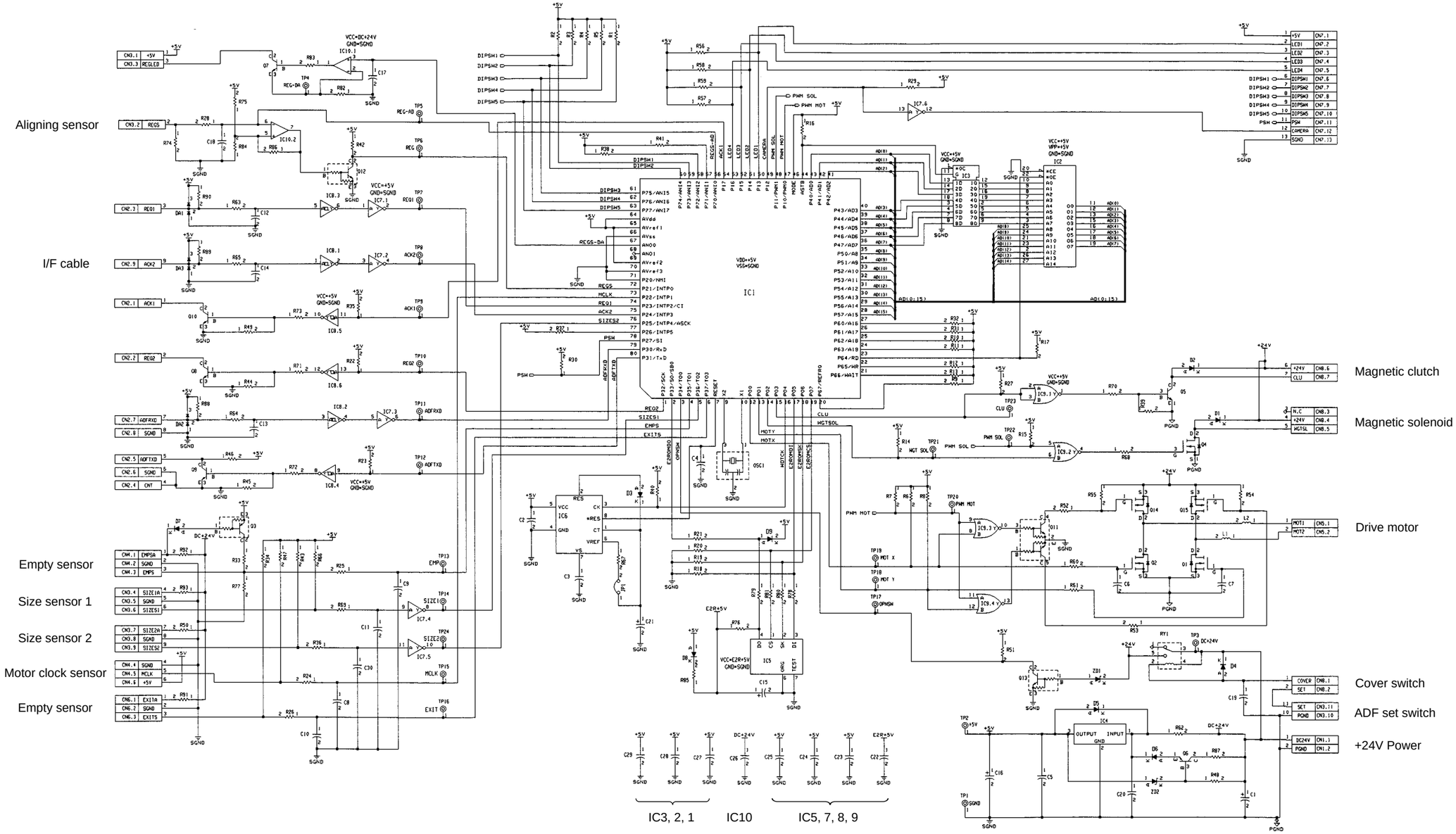

## 17.3 Harness Connection

*Go to* **Function of Electrical Parts**

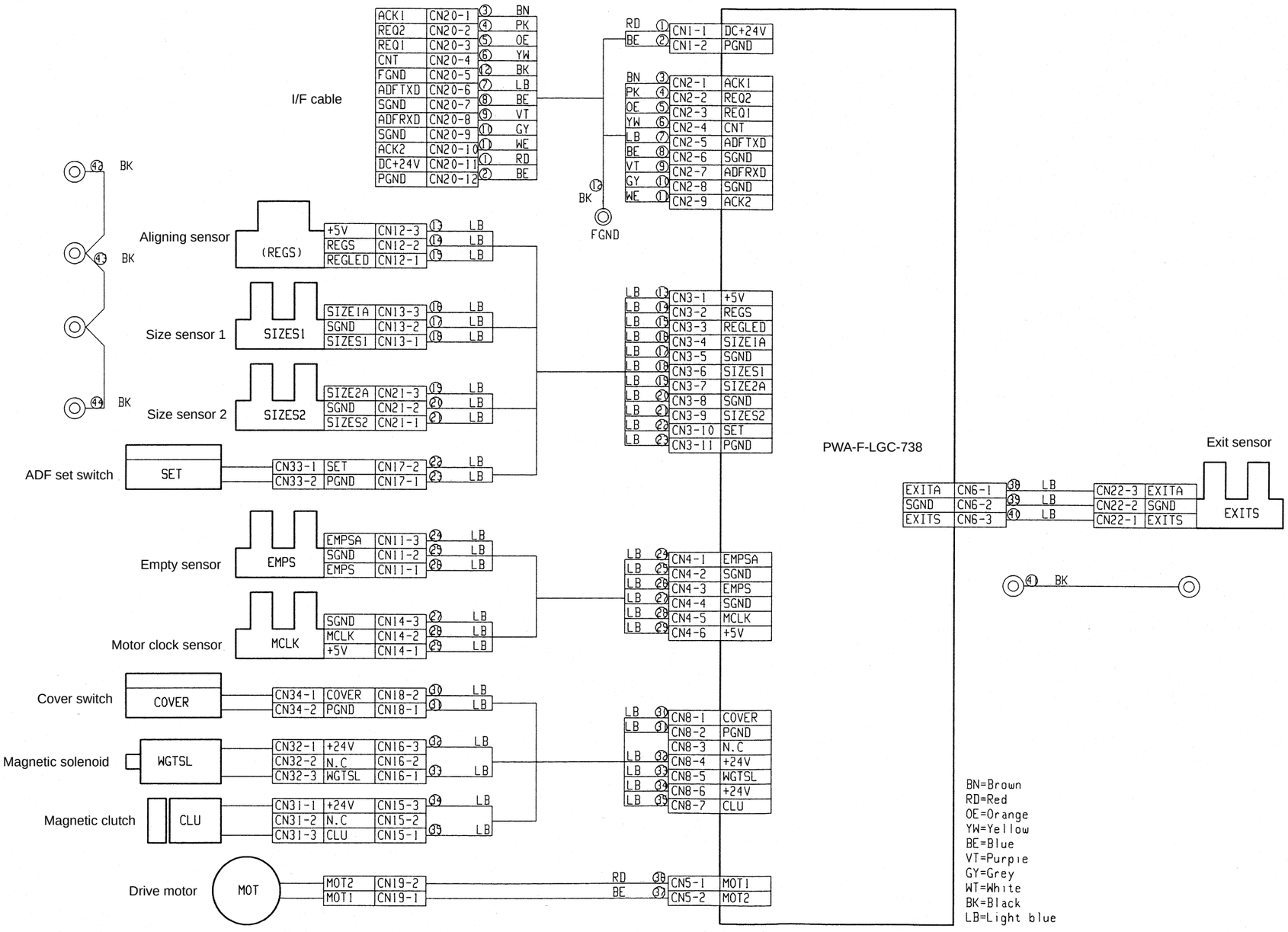

## 18. AFFIXING POSITIONS FOR MYLAR SHEETS AND RUBBER PARTS

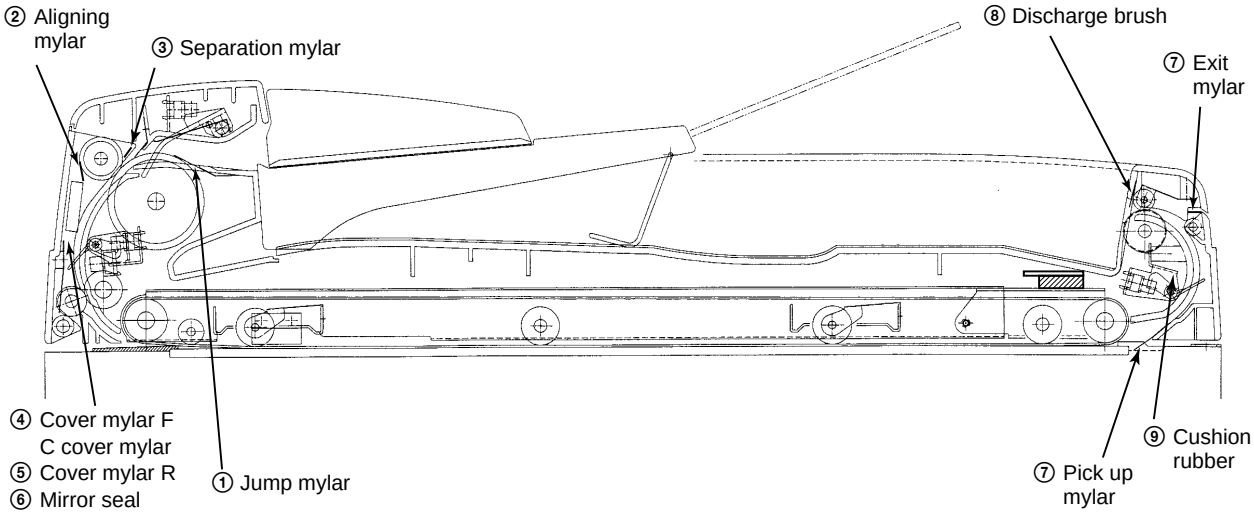


**Note:** Before affixing mylar sheets and rubber parts, clean the affixing surfaces.

### ① Jump mylar

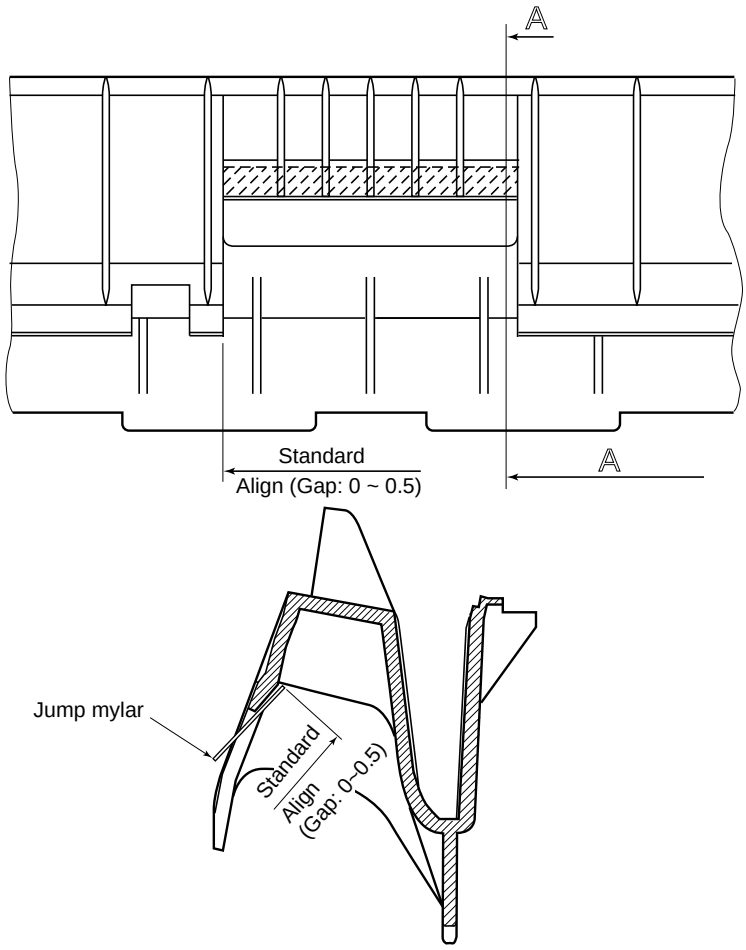


A–A Sectional view

② **Aligning mylar**

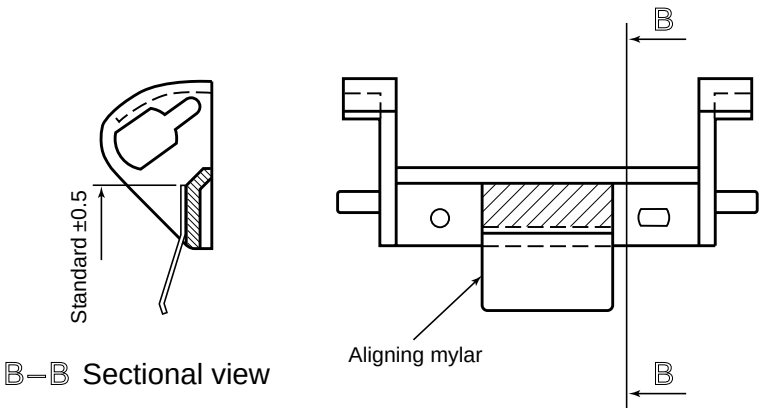


③ **Separation mylar**

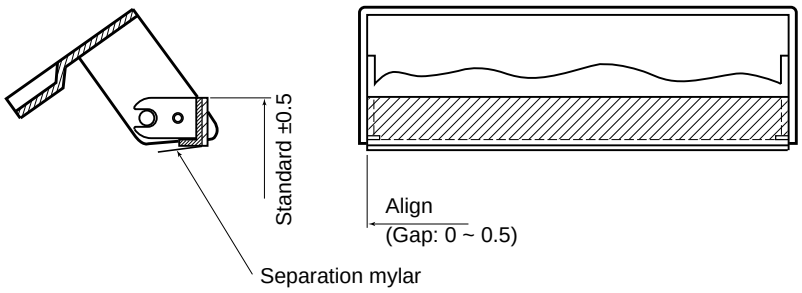

④ **Cover mylar F and C cover mylar**

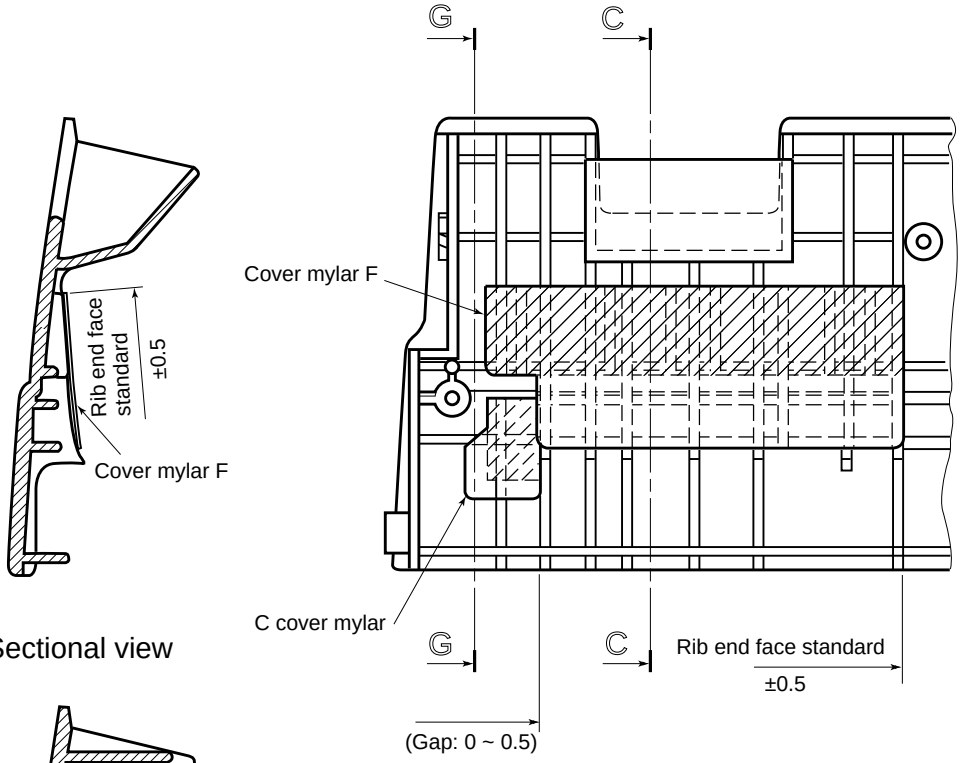


ℂ–ℂ Sectional view

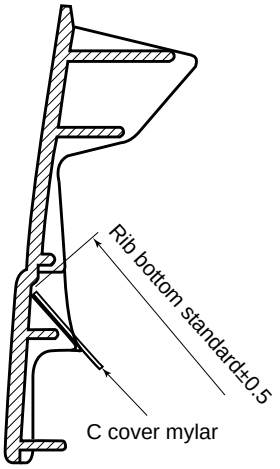


ℂ–ℂ Sectional view

⑤ **Cover mylar R**

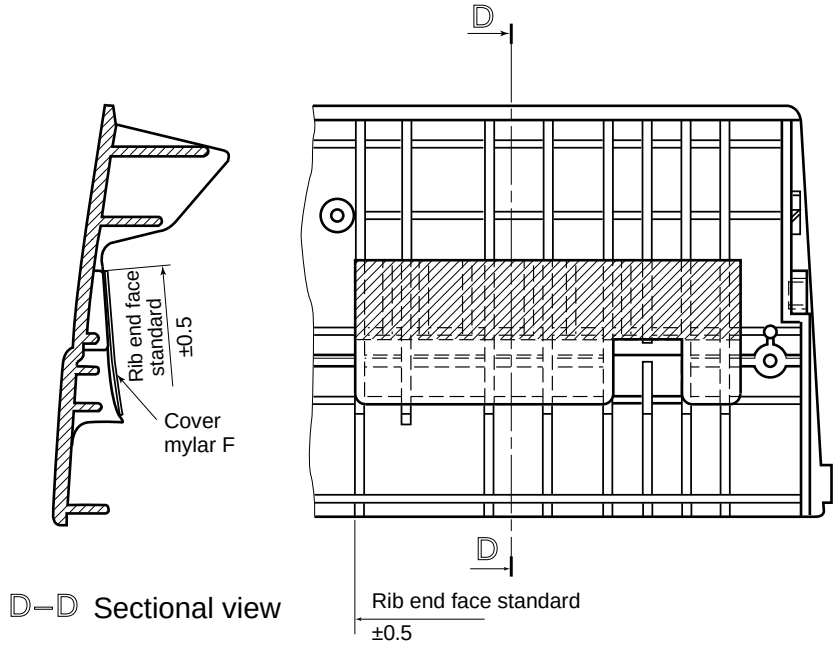


D–D Sectional view

⑥ **Mirror seal**

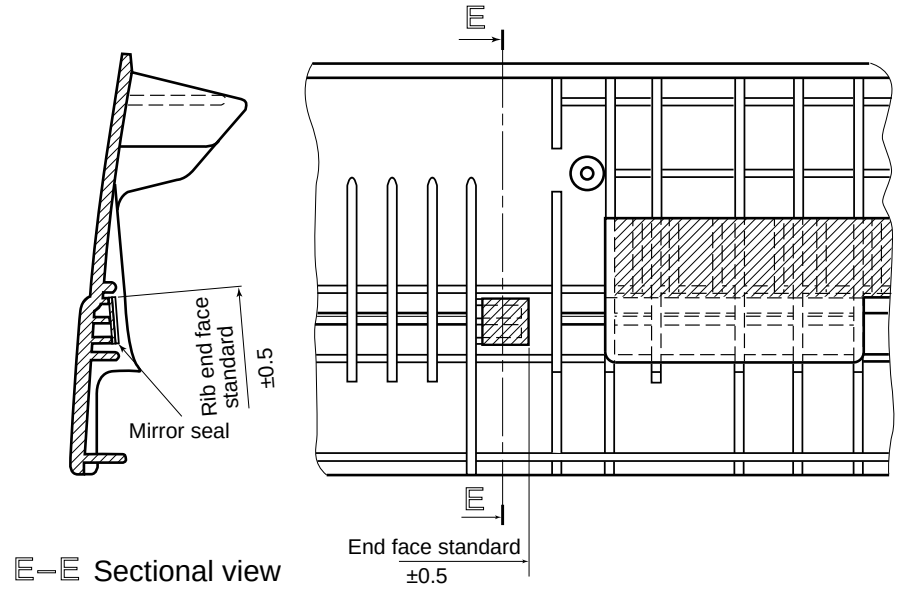


E–E Sectional view

## ⑦ Exit mylar and pick up mylar

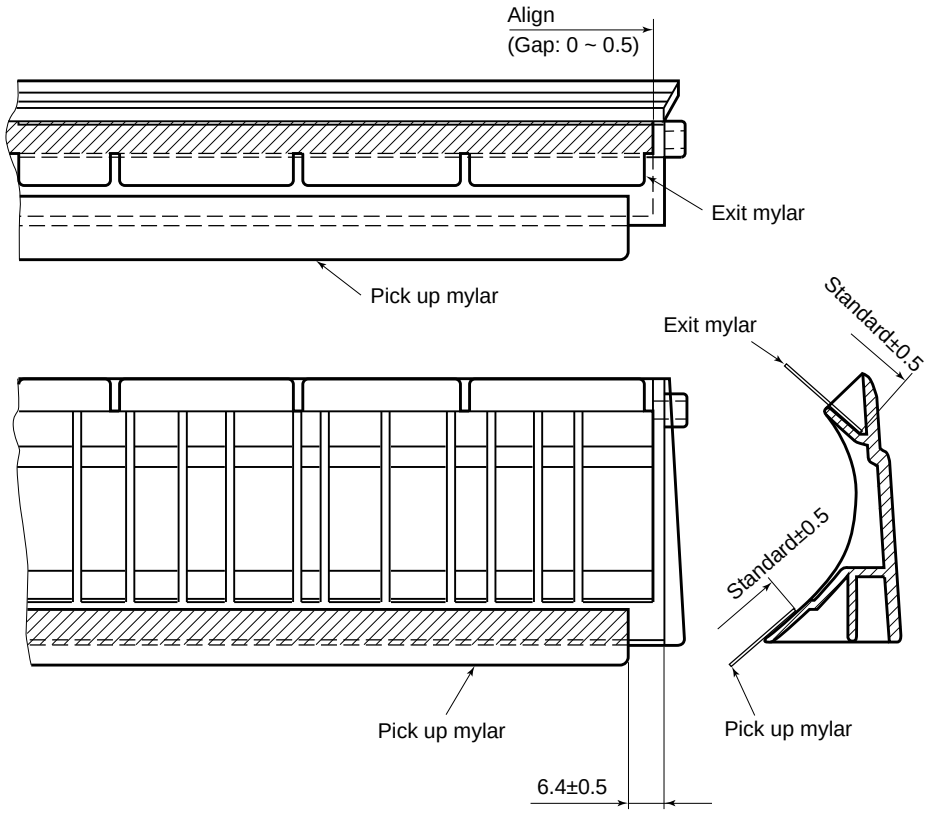

### ⑧ Discharge brush

Apply it to the shaded portion (recess) as shown in the drawing below.

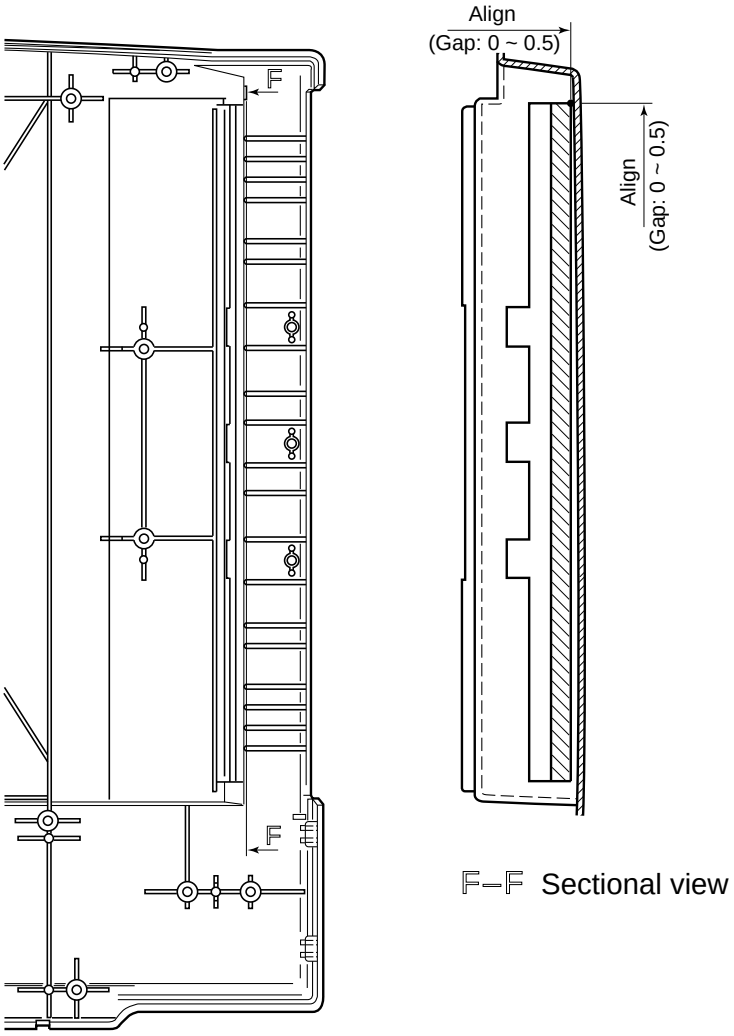


F–F Sectional view

### ⑨ Cushion rubber

