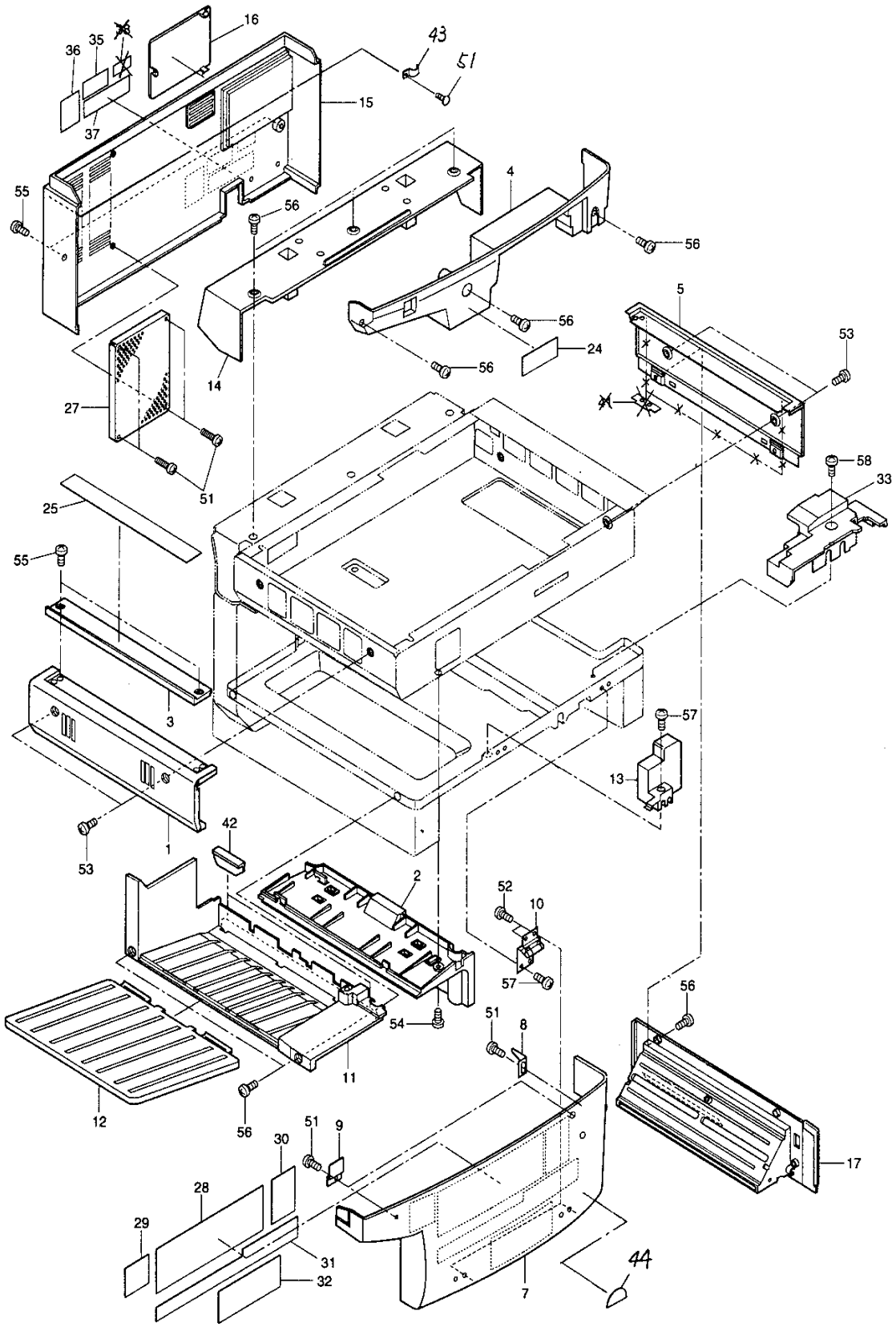
16
36
35
37
43
51
15
55
56
4
56
5
56
24
53
56
14
27
51
58
33
25
55
3
57
13
1
53
42
2
52
10
57
56
54
51
8
11
12
56
51
9
30
17
28
29
31
32
7
44

TOSHIBA

ITEM NO.	PARTS NO.	PARTS NAME	Q'TY / PAGE	Q'TY / PACK	SPE PRICE IN NONE	P	I	R	BSI NO.	TO	FROM	SERIAL NO.	REMARKS
1	4400 667880	K-COV-LEFT-OPT	1	1/PP									
2	4400 660960	COVER-LEFT-U	1	1/PP									
3	4400 665220	PLATE-GLASS-ORG	1	1/PP									
4	4400 661780	COVER-IN-F-U	1	1/PP									
5	4400 667910	K-COV-RIGHT-OPT	1	1/PP									
7	4402 901560	F-COVER-FRONT	1	1/PP					F97I037				
8	4400 661040	PUSHER-SW-D	1	1/P									
9	4400 661050	PLT-MGN-CATCH	2	1/P									
10	4400 661060	K-HINGE-COV-F	2	1/P									
11	4400 664460	COVER-LEFT-L	1	1/PP									
12	4400 661270	TRAY-140	1	1/PP									
13	4400 664440	COV-FUS-F	1	1/PP									
14	4400 661100	COVER-TOP-R	1	1/PP									
15	4400 661120	COVER-REAR	1	1/PP									
16	4400 661280	COV-POCKET-INST	1	1/P									
17	4402 901750	COVER-RIGHT-L	1	1/PP					F97I037				
24	4400 660500	LABEL-DRUM-140	1	5/P									
25A	4400 665280	LABEL-SCALE-U	1	1/KP									USA SIZE
25B	4400 665290	LABEL-SCALE-E	1	1/KP									EUR SIZE
27	4400 661790	GUARD-ACC	1	1/PP									
28	4400 660480	LBL-INST-TNR	1	1/KP									
29	4400 661860	LBL-SHELL-LOCK	1	5/P									
30A	4400 660590	LBL-INST-TNR-E	1	5/P					F97I037				EUR
30B	4400 660590	LBL-INST-TNR-E	1	5/P									FOR EUR
30Z	4402 901620	LBL-INST-TNR141	1	5/P					F97I037				OTHERS
31B	4402 841590	LBL-INST-TNR3-E	1	5/KP									FOR EUR
32B	4400 660520	LBL-PM-140	1	1/KP									FOR EUR
33	4400 664400	COVER-FEED-F	1	1/P									
35A	4400 740530	LABEL-FCC	1	10/KP									TAD
35G	4402 860770	LBL-C-TICK-MARK	1	5/P					F97I037				AUD
36B	4400 945700	LABEL-CANADA	1	5/P									CSD
37	4402 840980	LBL-SERVICE	1	5/P									
42	4400 662970	K-PLATE-EXIT	2	1/P									
43B	4400 683560	SPL-SHIELD	1	1/P									200V SERIES
44A	4401 910990	LBL-ENERGY-T	1	5/P					F97I037				TAD
51A	4842 040495	PTBR30*06MSZN3A	8	50/P									100V SERIES
51B	4842 040495	PTBR30*06MSZN3A	9	50/P									200V SERIES
52	7043 300613	BID30*06MSCR1AI	4	50/P									
53	4842 040684	TBID3006MSCR3C	4	50/P									
54	4842 040370	TBID3006MSZN3L	1	50/P									
55	7043 400813	BID40*08MSCR1AI	4	50/P									
56	4842 041794	TBIDS-40*08-CP	11	50/P									
57	4401 787160	SCREW-M4-7-R	5	10/P									
58	4842 041800	SCREW-M4-7-R	1	50/P									

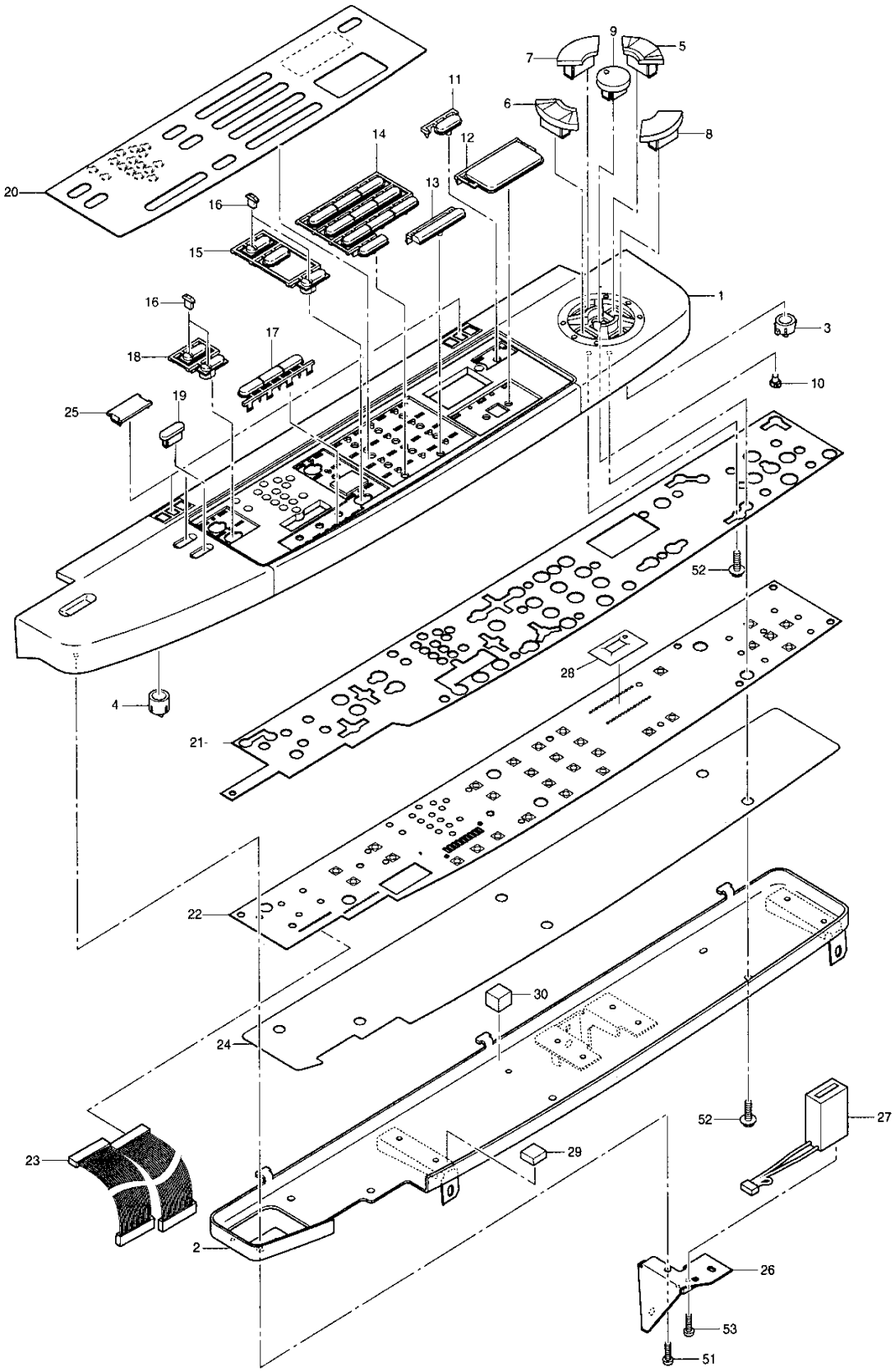
1
2
3
4
5
6
7
8
9
10
11
12
13
14
15
16
16
17
18
19
20
21
22
23
24
25
26
27
28
29
30
51
52
52
53

ITEM NO.	PARTS NO.	PARTS NAME	Q'TY / PAGE	Q'TY / PACK	SPE PRICE IN NONE	P	I	R	BSI NO.	TO	FROM	SERIAL NO.	REMARKS
1A	4400 683610	F-COV-CONP-U	1	1/PP									TAD
1B	4400 683610	F-COV-CONP-U	1	1/PP									CSD
1C	4400 683620	F-COV-CONP-E	1	1/PP									EUD
1D	4400 683620	F-COV-CONP-E	1	1/PP									MJD
1E	4400 683620	F-COV-CONP-E	1	1/PP									MFD
1F	4400 683620	F-COV-CONP-E	1	1/PP									UKD
1G	4400 683630	F-COV-CONP-AU	1	1/PP									AUD
1H	4400 683630	F-COV-CONP-AU	1	1/PP									TWD
1I	4400 683630	F-COV-CONP-AU	1	1/PP									SAD
1J	4400 683630	F-COV-CONP-AU	1	1/PP									ASD
2	4400 661900	K-STAY-CONPANE	1	1/P									
3	4400 662550	COVER-LED-L	6	1/P									
4	4400 661620	COVER-LED-OPT	5	1/P									
5	4400 683640	KEY-M-UP	1	1/P									
6	4400 683650	KEY-M-DOWN	1	1/P									
7	4400 662530	KEY-ZOOM-UP	1	1/P									
8	4400 662540	KEY-ZOOM-DOWN	1	1/P									
9	4400 661330	KEY-CENTER	1	1/P									
10	4400 661630	COVER-LED-C	1	1/P									
11	4400 661390	KEY-DISP	1	1/P									
12	4400 661610	KEY-PRINT	1	1/P									
13	4400 661600	KEY-CL	1	1/P									
14	4400 662590	KEY-TEN	1	1/P									
15	4400 662580	KEY-D/P-C-I/M	1	1/P									
16	4400 661640	COVER-LED-KEY	4	1/P									
17	4400 661380	KEY-EXPO	1	1/P									
18	4400 662570	KEY-E/S-INT	1	1/P									
19	4400 662500	KEY-OPTION	2	1/P									
20A	4400 661360	PANEL-DSP-140U	1	1/KP									TAD
20B	4400 661360	PANEL-DSP-140U	1	1/KP									CSD
20C	4400 661370	PANEL-DSP-140E	1	1/KP									EUD
20D	4400 661370	PANEL-DSP-140E	1	1/KP									MJD
20E	4400 661370	PANEL-DSP-140E	1	1/KP									MFD
20F	4400 661370	PANEL-DSP-140E	1	1/KP									UKD
20G	4400 661350	PANEL-DSP-140AU	1	1/KP									AUD
20H	4400 661350	PANEL-DSP-140AU	1	1/KP									TWD
20I	4400 661350	PANEL-DSP-140AU	1	1/KP									SAD
20J	4400 661350	PANEL-DSP-140AU	1	1/KP									ASD
21	4400 662660	SHEET-PNL-140	1	1/KP									
22	4400 677000	PWA-F-PNL-140	1	1/SB									
23	4400 678000	K-WH-PNLUNT-140	1	1/P									
24	4400 661950	SHEET-CONPANE	1	1/KP									
25	4400 728110	COVER-PNL-MG	2	1/P									
26	4400 661940	BRKT-CONP-CTR	1	1/P									
27	4400 679470	CTR-E650B-140	1	1/C									
28	4400 661670	MYLAR-PNL	1	5/P									
29	4400 662640	SEAL-KEY-4	1	5/P									
30	4400 662650	SEAL-KEY-8	1	5/P									
51	4842 040370	TBID3006MSZN3L	3	50/P									
52	4842 040495	PTBR30*06MSZN3A	14	50/P									
53	7043 300613	BID30*06MSCR1AI	1	50/P									

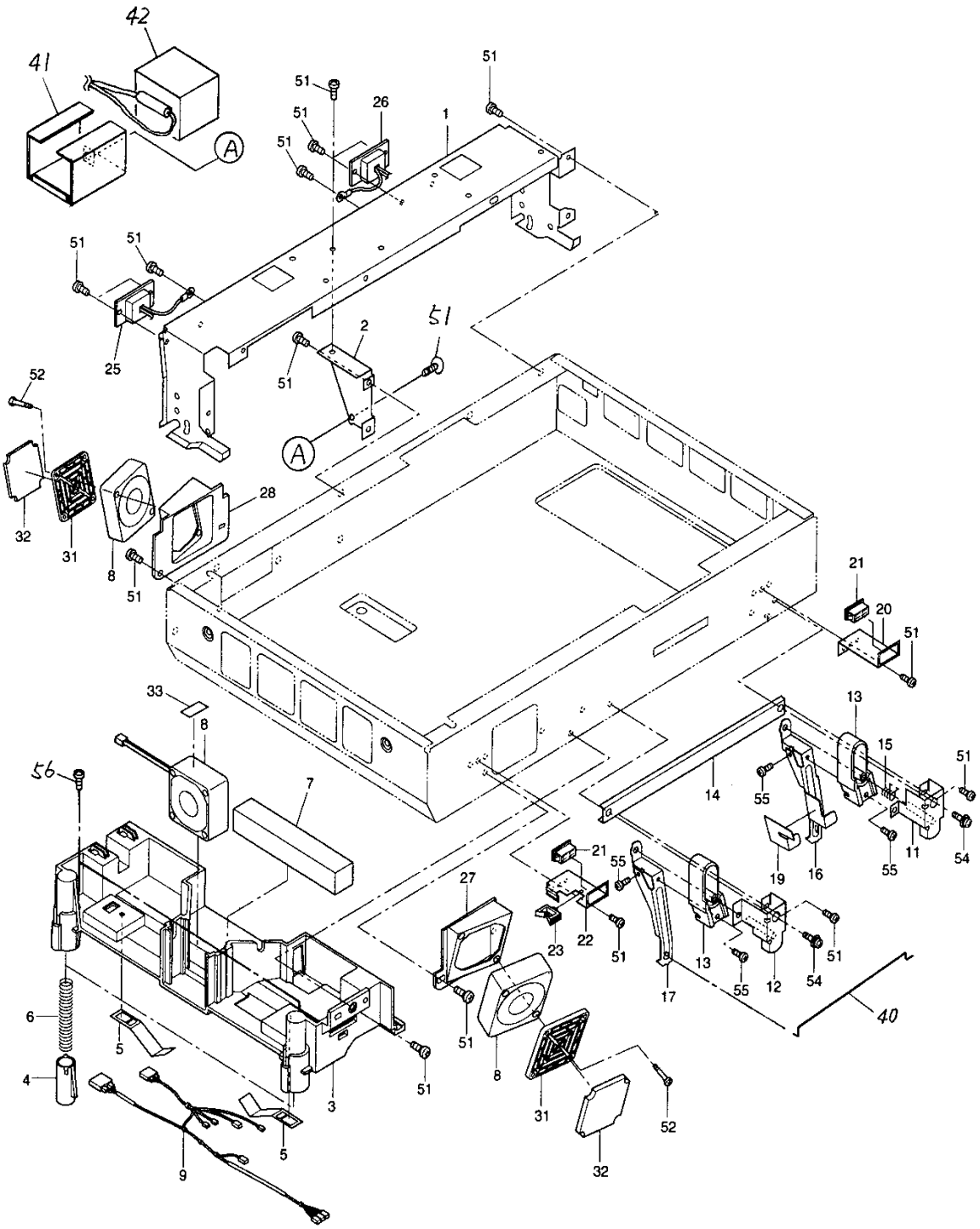
42
41
A
51
26
1
51
51
51
51
25
2
51
51
52
A
28
32
31
8
51
21
20
51
33
8
13
15
51
56
7
14
55
11
54
19
16
55
21
55
27
23
22
51
13
51
17
55
12
54
40
6
5
51
8
4
3
51
31
52
5
9
32

TOSHIBA

ITEM NO.	PARTS NO.	PARTS NAME	Q'TY / PAGE	Q'TY / PACK	SPE PRICE IN NONE	P	I	R	BSI NO.	TO	FROM	SERIAL NO.	REMARKS
1	4402 903150	BRKT-OPT	1	N/A***									
2	4400 665050	STAY-BRKT-OPT	1	1/P									
3	4400 663370	DUCT-FAN-140	1	1/PP									
4	4400 663430	PUSHER-FUSER	2	1/P									
5	4400 663420	SPL-DUCT-SCRAP	2	1/P									
6	4400 663710	SPC-DUCT-FUSER	2	5/P									
7	4400 685600	FILTER-U-140	1	1/C									
8	4400 678750	FAN-DC-EXIT-140	3	1/D									
9	4400 677890	K-WH-LGCPNL-140	1	1/P									
11	4400 682160	K-BRKT-LOCK-U-R	1	1/P									
12	4400 682170	K-BRKT-LOCK-U-L	1	1/P									
13	4400 682490	HOLDER-LVR-LOCK	2	1/P									
14	4400 682180	STAY-LOCK-ARM	1	1/P									
15	4400 682190	SPA180-SWICF-LK	1	1/P									
16	4400 683470	LEVER-LOCK-R	1	1/P									
17	4400 683480	LEVER-LOCK-L	1	1/P									
19	4400 682090	LABEL-LOCK-CLM	1	5/P									
20	4400 682290	BRKT-MGN-CA-R	1	1/P									
21	4400 682300	MGN-CATCH-22S	2	1/P									
22	4400 682050	BRKT-MGN-CA-L	1	1/P									
23	4842 700421	JOT-EDS-1208U	1	5/P									
25	4400 677760	WH-I/F-SRT-140	1	1/P									
26	4400 677770	WH-I/F-DF-140	1	1/P									
27	4400 682390	DUCT-FAN-OPT-F	1	1/P									
28	4400 666400	DUCT-FAN-OPT-R	1	1/P									
31	4400 666420	COV-FILTER-FAN	2	1/P									
32	4400 666440	FILTER-FAN-60	2	1/KP									
33	4400 663590	SHEET-DUCT-FAN	1	5/P									
40C	4400 683490	LINK-LEV-LOCK	1	1/P									EUD
40D	4400 683490	LINK-LEV-LOCK	1	1/P									MJD
40E	4400 683490	LINK-LEV-LOCK	1	1/P									MFD
40F	4400 683490	LINK-LEV-LOCK	1	1/P									UKD
41H	4402 802370	HLDR-CONDENSER	1	1/P									TWD
42H	4400 817530	K-CONDENSER-306	1	1/D									TWD
51H	4842 040370	TBID3006MSZN3L	26	50/P									TWD
51Z	4842 040370	TBID3006MSZN3L	25	50/P									OTHERS
52	7120 403511	12PAN4035MSZN3A	2	50/P									
54	4402 807030	SCREW-SOCKET	2	10/P									
55	4842 040685	TBID3008MSZN3A	4	50/P									
56	4842 040495	PTBR30*06MSZN3A	2	50/P									

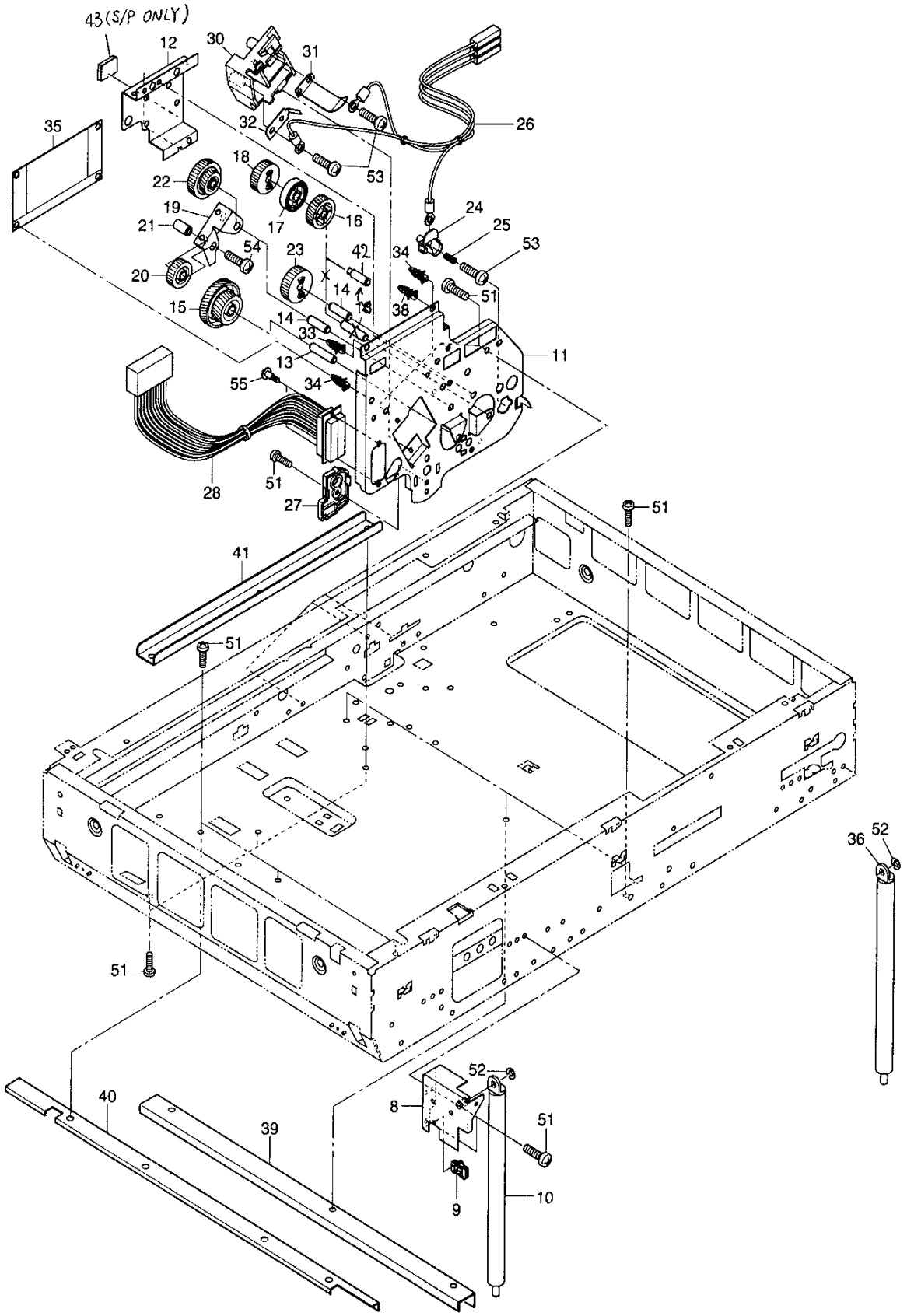
43(S/P ONLY)
12
30
31
26
32
53
35
18
22
19
21
17
16
24
25
53
54
23
42
34
20
14
51
15
38
14
33
11
13
55
34
28
51
27
51
41
51
36
52
51
52
40
8
51
39
9
10

ITEM NO.	PARTS NO.	PARTS NAME	Q'TY / PAGE	Q'TY / PACK	SPE PRICE IN NONE	P	I	R	BSI NO.	TO	FROM	SERIAL NO.	REMARKS
8	4400 682210	K-BRKT-BLC-L	1	1/P									
9	4842 700421	JOT-EDS-1208U	1	5/P									
10	4400 682000	BALANCER-140L	1	1/P									
11	4400 664230	FRAME-SUB-R	1	N/A***									
12	4400 664220	BRKT-DRIVE-D/D	1	1/P									
13	4400 664160	STUD-DRIVE-D/D	2	1/P						013 1 042			
13 1	4400 664160	STUD-DRIVE-D/D	1	1/P		D	-	J	F97K079		013	CLK7	
14	4400 664180	STUD-DRV-IDLE	2	1/P									
15	4400 664120	G08H-40/G08H-24	1	1/P									
16	4400 664140	GR-10H025-87-06	1	1/P									
17	4400 664150	JOINT-DEV	1	1/P									
18	4400 664130	GR-10S023-85-06	1	1/P									
19	4400 664210	ARM-DRIVE-D/D	1	1/P									
20	4400 664100	GR-10S020-75-06	1	1/P									
21	4400 664170	STUD-GEAR-23	1	1/P									
22	4400 664110	G10S-30/G08H-21	1	1/P									
23	4400 664280	GR-10S025-85-06	1	1/P									
24	4400 664260	TERMINAL-DEV-BI	1	1/P									
25	4400 664270	SPC078-065-0230	1	5/P									
26	4400 677800	WH-HVT-M-140	1	1/P									
27	4400 664250	BLOCK-DRUM-TR	1	1/P									
28	4400 678110	K-WH-LGCCLN-140	1	1/P									
30	4400 664310	TERMINAL-HVT-CH	1	1/P									
31	4400 664320	SPL030-S304-BIS	1	1/P									
32	4400 664330	PL-TERMINAL-HVT	1	1/P									
33	4843 390868	PWZ-SPLS-3U	1	5/P									
34	4843 390872	PWZ-SPLS-8U	2	5/P									
35A	4400 678510	PS-LRG-JU0411Y	1	1/C									100V SERIES
35B	4400 678520	PS-LRG-CE0411Y	1	1/C									200V SERIES
36	4400 682010	BALANCER-140R	1	1/P									
38	4843 390858	PWZ-SPS-3U	1	5/P									
39	4400 665210	STAY-BASE-OPT	1	1/P									
40	4400 665980	STAY-BASE-OPT-2	1	1/P									
41	4400 665970	STAY-BASE-OPT-3	1	1/P									
42	4400 664080	STUD-DRIVE-DEV	1	1/P		C	B	D	F97K079		013	CLK7	
43	4400 676080	SPACER-DRV-D/D	1	5/P		F	-	D	F97K079				1st Lot ONLY
51	4842 040370	TBID3006MSZN3L	20	50/P									
52	7405 005031	ERR050SKZN3A	2	50/P									
53	4842 040846	PTBR30*08MSZN3A	3	50/P									
54	7043 300613	BID30*06MSCR1AI	1	50/P									
55	4402 807030	SCREW-SOCKET	2	10/P									

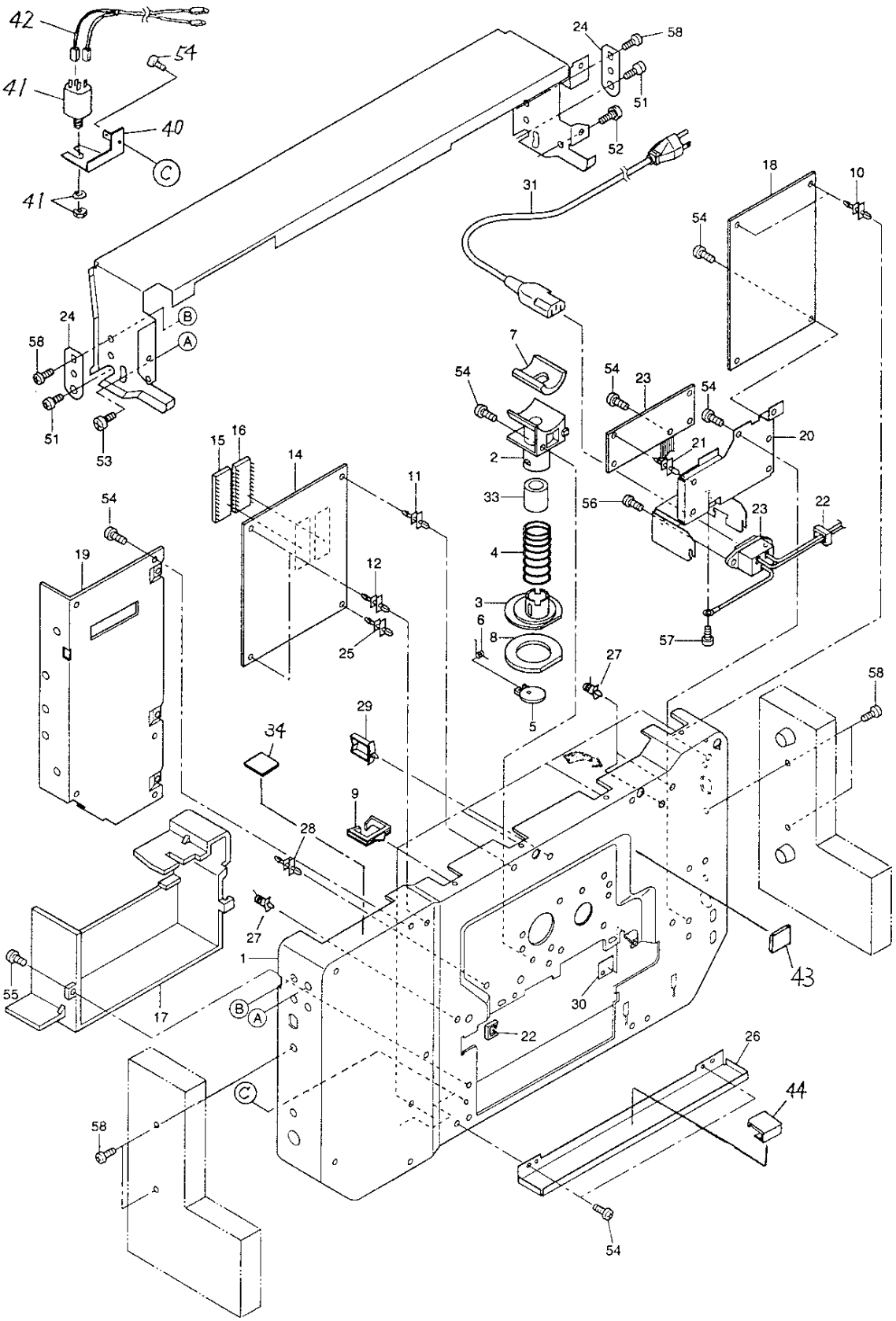
42
54
41
40
C
41
24
58
51
52
31
18
10
54
24
58
B
A
51
53
7
54
54
23
54
20
21
2
33
56
23
22
15
16
14
11
54
19
12
4
3
6
8
25
57
27
58
29
34
5
9
28
27
1
55
17
B
A
30
22
43
26
C
44
58
54

TOSHIBA

ITEM NO.	PARTS NO.	PARTS NAME	Q'TY / PAGE	Q'TY / PACK	SPE PRICE IN NONE	P	I	R	BSI NO.	TO	FROM	SERIAL NO.	REMARKS
1	4402 903100	FRAME-REAR	1	N/A***						001 1			
1 1	4402 903080	FRAME-REAR-141	1	N/A***		C	-	E	F98C214		001	CLK7	
2	4400 663630	NOZZLE-BTL-IN	1	1/P									
3	4400 663640	NOZZLE-SLIDE	1	1/P									
4	4400 663690	SPC260-100-0480	1	5/P									
5	4400 663650	LID-NOZZLE	1	1/P									
6	4400 663660	SPR-03-2.5-7.25	1	5/P									
7	4400 663670	SEAL-NZL	1	1/P									
8	4400 663680	SEAL-BLT-TNR	1	1/P									
9	4400 808280	EDS-1717U	5	5/P									
10	4843 390870	PWZ-SPLS-6U	2	5/P									
11	4843 390871	PWZ-SPLS-7U	1	5/P									
12	4843 390873	PWZ-SPLS-10U	2	5/P									
14	4402 906020	PWA-F-LGC-141	1	1/SB					F97I037				
15	4402 906400	PRA-T141M-02	1	1/S					F97I037				IC13
16A	4402 906270	K-SRAM-T141U-S	1	1/S					F97I037				IC9,USA
16B	4402 906280	K-SRAM-T141E-S	1	1/S					F97I037				IC9,EUR
17	4400 663620	COVER-BTL-IN	1	1/P						017 1			
17 1	4400 682480	COVER-BTL-IN	1	1/P		E	-	J	F97K091		017		
18	4400 679450	ASM-HVT-140	1	1/C									
19A	4400 679880	PS-ACC-140U	1	1/C									100V SERIES
19B	4400 679890	PS-ACC-140E	1	1/SB									200V SERIES
20	4400 663180	BRKT-INLET	1	1/P									
21	4843 390869	PWZ-SPLS-4U	3	5/P									
22	4843 390941	BD/W-EDS-1	1	10/P									
23A	4400 678450	K-INLT-FUS-140U	1	1/C									100V SERIES
23B	4400 678460	K-INLT-FUS-140E	1	1/C									200V SERIES
24	4400 663190	STOPPER-BRKT	2	1/P									
25	4843 390869	PWZ-SPLS-4U	1	5/P									
26	4400 663390	TRAY-FRAME-R	1	1/P									
27	4843 390860	PWZ-SPS-6U	2	5/P						027 1			
27 1	4843 390860	PWZ-SPS-6U	3	5/P		D	D	E	F98C214		027	CLK7	
28	4843 390859	PWZ-SPS-4U	1	5/P									
29	4843 390889	CLP/W-WS-3U	1	5/P									
30	4400 663270	MYLAR-HOT	1	5/P									
31A	4400 358210	CBL/P-INLET-UC	1	1/P									100V SERIES
31C	4400 395940	CBL/P-INLET-EUR	1	1/P									EUD
31D	4400 395940	CBL/P-INLET-EUR	1	1/P									MJD
31E	4400 395940	CBL/P-INLET-EUR	1	1/P									MFD
31F	4400 494790	CBL/P-INLET-UK	1	1/P									UKD
31G	4400 358230	CBL/P-INLET-AU	1	1/P									AUD
31I	4402 906470	CBL/P-INLET-CN	1	1/P					F97I037				CND
31J	4400 395940	CBL/P-INLET-EUR	1	1/P									ASD
33	4400 663700	SEAL-NOZ-BTL-V	1	10/P									
34	4400 682460	SEAL-FAN-OPT-R	1	5/P									
40H	4400 683570	BRKT-FILT-140	1	1/P									TWD
41H	4402 322610	FL-VU-215F3-M	1	1/D									TWD
42H	4402 907040	WH-AC-NF-140T	1	1/P									TWD
43	4400 664090	CUS-STD-DEV	1	5/P		A	B	D	F97K079			CLK7	
51	4400 663380	SCREW-FULCRUM	2	10/P									
52	4400 682310	SCREW-M4-8-R	1	10/P									
53	4400 682360	SCREW-M4-8-L	1	10/P									
54H	4842 040370	TBID3006MSZN3L	11	50/P									TWD
54Z	4842 040370	TBID3006MSZN3L	10	50/P									OTHERS
55	4842 041794	TBID-40*08-CP	1	50/P									
56	7043 300613	BID30*06MSCR1AI	2	50/P									
57	4842 040117	THPAN4006MSZN3L	1	50/P									
58	4842 040687	TBID4008MSZN3A	6	50/P									

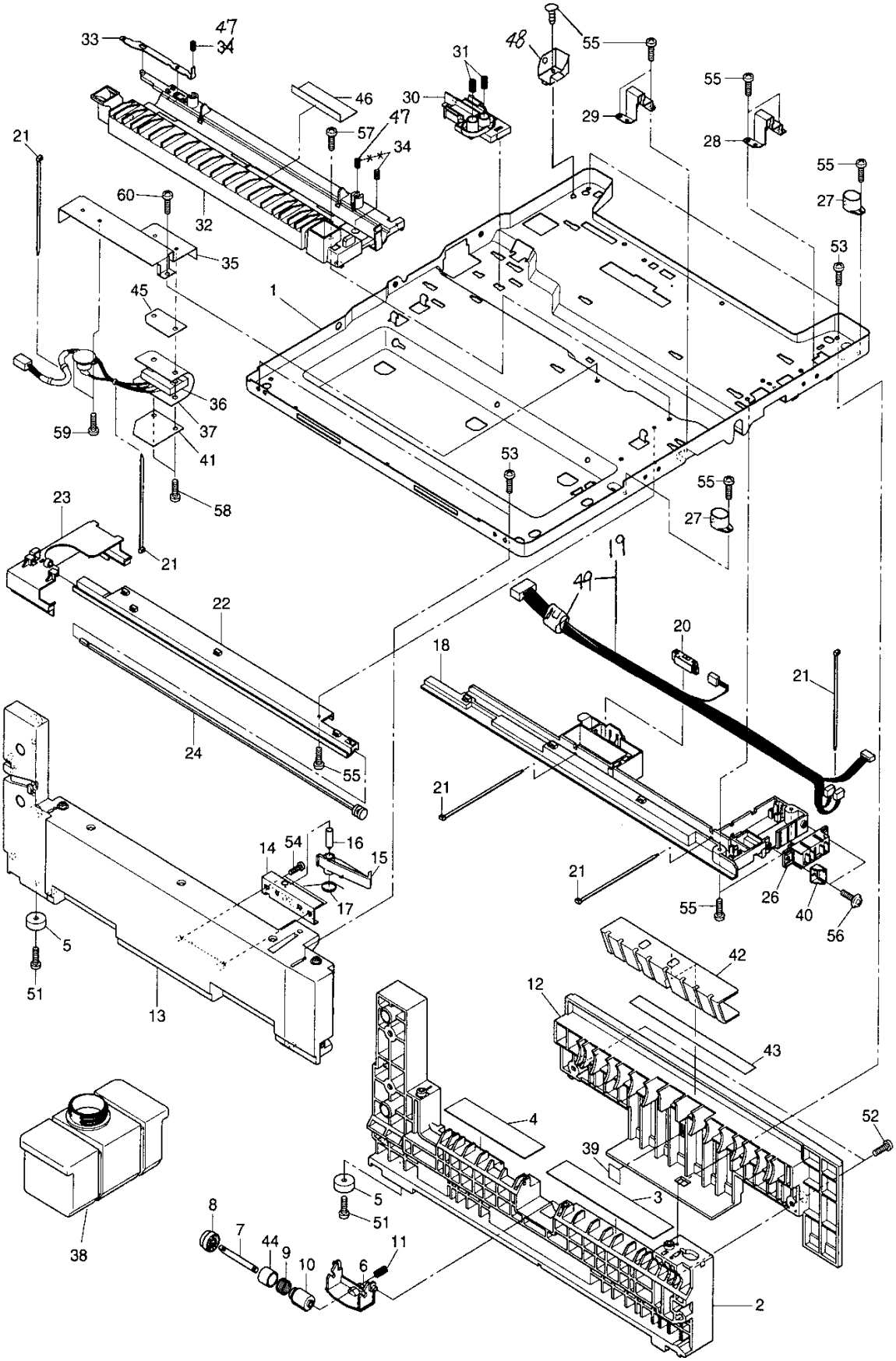
33
47
34
31
48
55
46
30
29
55
57
47
34
28
21
60
32
55
27
35
53
45
1
36
37
59
41
53
55
58
27
23
21
19
49
22
20
18
21
24
55
21
14
54
16
15
21
17
55
26
40
56
5
51
13
42
12
43
4
52
39
3
5
51
8
7
44
9
10
6
11
38
2

TOSHIBA

ITEM NO.	PARTS NO.	PARTS NAME	Q'TY / PAGE	Q'TY / PACK	SPE PRICE IN NONE	P	I	R	BSI NO.	TO	FROM	SERIAL NO.	REMARKS
1A	4402 903050	FRAME-BASE	1	N/A***									
1B	4400 684800	FRAME-BASE	1	N/A***									TSF PROD.
2	4400 663140	K-FOOT-R	1	1/PP									
3	4400 682700	K-MYLAR-FOOT-F	1	1/KP									
4	4400 682710	K-MYLAR-FOOT-R	1	1/KP									
5	4402 811990	FOOT-8-20	2	1/P									
6	4400 682880	HOLDER-SHAFT-S	1	1/P									
7	4400 669850	K-SHAFT-SPT	1	1/P									
8	4400 669940	ARBOR-SPT	1	1/P									
9	4401 784210	SPR-1.0-15.60RF	1	5/P									
10	4400 669910	K-ROLL-SPT	1	1/P									
11	4400 670090	SPC073-050-0251	1	1/P									
12	4400 661760	COVER-FEED	1	1/PP									
13	4400 663280	K-FOOT-L	1	1/PP									
14	4400 662120	BRKT-RCHT-FOOT	1	1/P									
15	4400 662130	RCHT-FOOT-L	1	1/P									
16	4400 662140	STUD-RCHT-FOOT	1	1/P									
17	4400 682480	COVER-BTL-IN	1	1/P						017 1			
17 1	4400 662160	SPR-RCHT-FOOT	1	1/P		E	-	J	F97K091		017		
18	4400 663520	RAIL-BTL-R	1	1/P									
19	4400 678080	K-WH-LGCFED-140	1	1/P						019 1			
19 1	4402 906600	K-WH-LGCFED-140	1	1/P		E	B	D	F97K094		019		
20	4400 678910	SNSR-PS-R11L1-B	1	1/D									
21	4407 527950	SKB-1M	5	5/P									
22	4400 663970	RAIL-BTL-L	1	1/P									
23	4400 663510	HOLDER-BOTTLE	1	1/P									
24	4400 663540	SHAFT-HLDR-BTL	1	1/P									
26	4402 816610	SP-ESE-15404	1	1/C									
27	4400 682080	GUIDE-BLC-P	2	1/P									
28A	4400 664410	BRKT-LOCK-L-R	1	1/P									
28B	4400 682070	BRKT-LOCK-L-L	1	1/P									TSF PROD.
29	4400 664420	BRKT-LOCK-L-L	1	1/P									
30	4400 674900	TERMINAL-HVT-TR	1	1/P									
31	4400 674980	SPC034-045-0123	2	5/P									
32	4400 674630	GUIDE-CH-TR	1	1/P									
33	4400 674650	PL-GUIDE-BIAS	1	1/P									
34	4400 674660	SPC068-080-0209	1	1/P									
35H	4400 674680	BRKT-D-HTR	1	1/P									AUD
36H	4400 678980	K-PTC-230-140-L	1	1/C									AUD
37H	4400 679260	SHEET-PTC-140	1	5/KP									AUD
38A	6608 4860	PS-TB1550E	1	SUPPLY									EUR
38B	6608 4859	PS-TB1550	1	SUPPLY									OTHERS
39	4400 663260	MYLAR-COV-FEED	1	5/P									
40	4400 663720	GUARD-SIZE-SW	1	1/P									
41	4400 674690	MYLAR-PTC-140	1	5/P									
42	4400 670690	GUIDE-FED-IN-3	1	1/P									
43	4400 682930	TAPE-COV-FEED	1	5/KP									
44	4400 670330	COVER-SPE/ARBOR	1	1/P									
45H	4400 679680	MYLAR-D-HTR-140	1	5/P									AUD
46H	4400 674740	SEAL-D-HTR	1	5/P									AUD
47	4400 674290	SPC068-080-0173	2	1/P									
48	4402 902690	HOLDER-FEED-U	1	1/P					F97I037				
49	4843 524166	FLD-TFC16-8-13	1	1/P		F	B	D	F97K094				
51	4842 040849	PTBR40*08MSZN3A	2	50/P									
52	7043 400813	BID40*08MSCR1AI	2	50/P									
53	4842 040687	TBID4008MSZN3A	4	50/P									
54	4842 040846	PTBR30*08MSZN3A	2	50/P									
55	4401 791080	SCREW-MR-M3-6	10	50/P									
56	4842 040847	PTBR30*10MSZN3A	2	50/P									
57	4401 787160	SCREW-M4-7-R	1	10/P									
58H	7043 401011	BID40*10MSZN3AI	2	50/P									AUD
59H	7043 300411	BID30*04MSZN3A	2	50/P									AUD
60H	4842 041800	SCREW-M4-7-R	1	50/P									AUD

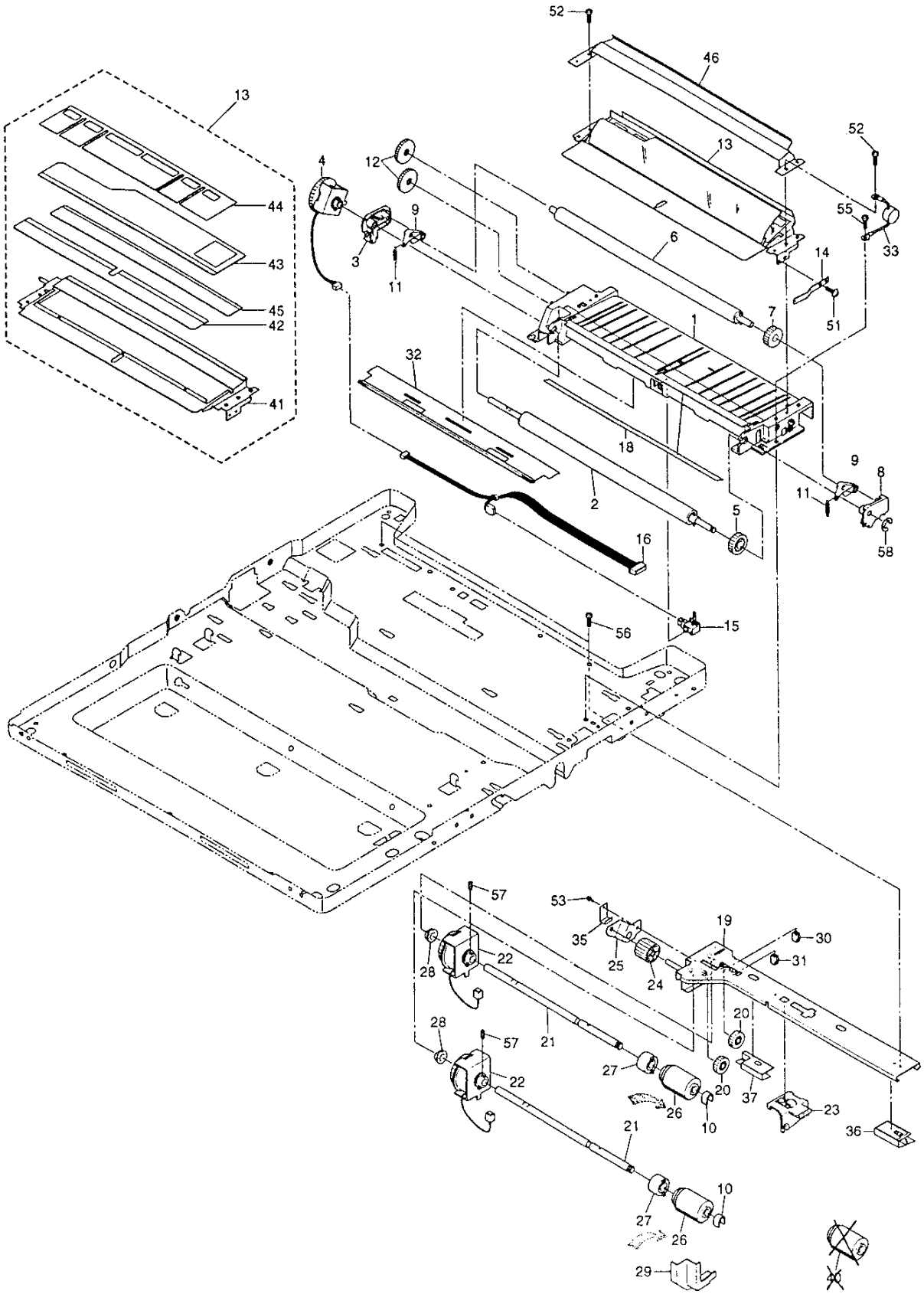
52
46
13
52
13
44
43
45
42
41
4
12
9
3
11
6
55
33
14
51
7
1
32
18
2
5
9
8
11
58
16
56
15
57
53
35
25
24
19
30
31
28
22
21
20
27
26
10
37
23
36
29

ITEM NO.	PARTS NO.	PARTS NAME	Q'TY / PAGE	Q'TY / PACK	SPE PRICE IN NONE	P	I	R	BSI NO.	TO	FROM	SERIAL NO.	REMARKS
1	4400 669620	K-FRAME-FEED-U	1	1/P									
2	4400 682990	K-ROLL-RGT-L	1	1/KP									
3	4400 682910	BUSH-RGT-R	1	1/P									F96H744
4	4400 678700	CLT-30E-CW-40	1	1/D									
5	4402 813120	GEAR-20-1.0	1	1/P									
6	4400 669720	K-ROLL-RGT-U	1	1/KP									
7	4402 813190	GEAR-15-1.0	1	1/P									
8	4400 682900	BUSH-RGT-F	1	1/P									
9	4400 682940	LEVER-FEED-U	2	1/P									
10	4407 972860	STOP-RING-6-5	3	5/P									
11	4400 682950	SPE053-080-0152	2	5/P									
12	4400 669680	GR-10S30-50-06	2	1/P									
13	4402 902600	K-GUIDE-FEED-U	1	1/C					F97I037				
14	4400 670220	SPL-ROL-ALIGN	1	1/P									
15	4402 842640	SZ-RGT-121	1	1/C									
16	4400 678050	K-WH-RGTUNT-140	1	1/P									
18	4402 901790	MYLAR-FEED-U141	1	1/KP					F97I037				
19	4400 670550	K-BASE-FEED-L	1	1/P									
20	4400 669860	GR-10S18-60-06	2	1/P									
21	4400 669870	SHAFT-PICK/FEED	2	1/P									
22	4400 678690	CLT-30E-CW-20	2	1/D									
23	4400 682790	HOLDER-SHAFT-F	1	1/P									
24	4400 670050	GR-10S24-210-06	1	1/P									
25	4400 670040	BRKT-GEAR-24	1	1/P									
26	4400 669960	K-ROL-PICK/FEED	2	1/P						026 1			
26 1	4400 682770	K-ROL-PICK/FEED	2	1/P		E	B	J	F98B184		026	1ST LOT	
27	4402 833110	CLUTCH-6-L	2	1/P									
28	4407 734980	BUSH-6-GCB	2	5/P									
29	4400 670610	COVER-FEED-L	1	1/P									
30	4843 306485	J-0-175694-2	1	5/P									
31	4843 308158	J-6-175694-2	1	1/P									
32	4400 682840	K-BKT-BRUSH-ALN	1	1/C									
33	4400 679630	K-VARISTER-140F	1	1/P									
34	4400 670350	SPE051-060-0130	1	5/P									
35	4400 670630	HOLDER-COV-CLT	1	1/P									
36	4400 670950	K-GUIDE-FED-F	1	1/C									
37	4400 670960	K-GUIDE-FED-R	1	1/C									
41	4402 902610	K-GUIDE-FEED	1	1/PP					F97I037				
42	4400 682760	MYLAR-FEED-U	1	1/KP									
43	4402 902660	MYLAR-FEED-SFB	1	1/KP					F97I037				
44	4402 902650	MYLAR-FEED-M	1	1/KP					F97I037				
45	4402 902640	MYLAR-FEED-SUB	1	1/KP					F97I037				
46	4402 902680	GUIDE-FEED-S-U	1	1/P					F97I037				
51	4842 040370	TBID3006MSZN3L	1	50/P									
52	4842 040846	PTBR30*08MSZN3A	18	50/P									
53	4842 040690	TZPAN3006MSZN3L	1	50/P									
55	4842 041794	TBIDS-40*08-CP	1	50/P									
56	4842 041799	SCREW-MR-M3-6	2	50/P									
57	4842 011062	9HSS30/04MSFB	2	50/P									
58	7405 004031	ERR040SKZN3A	1	50/P									

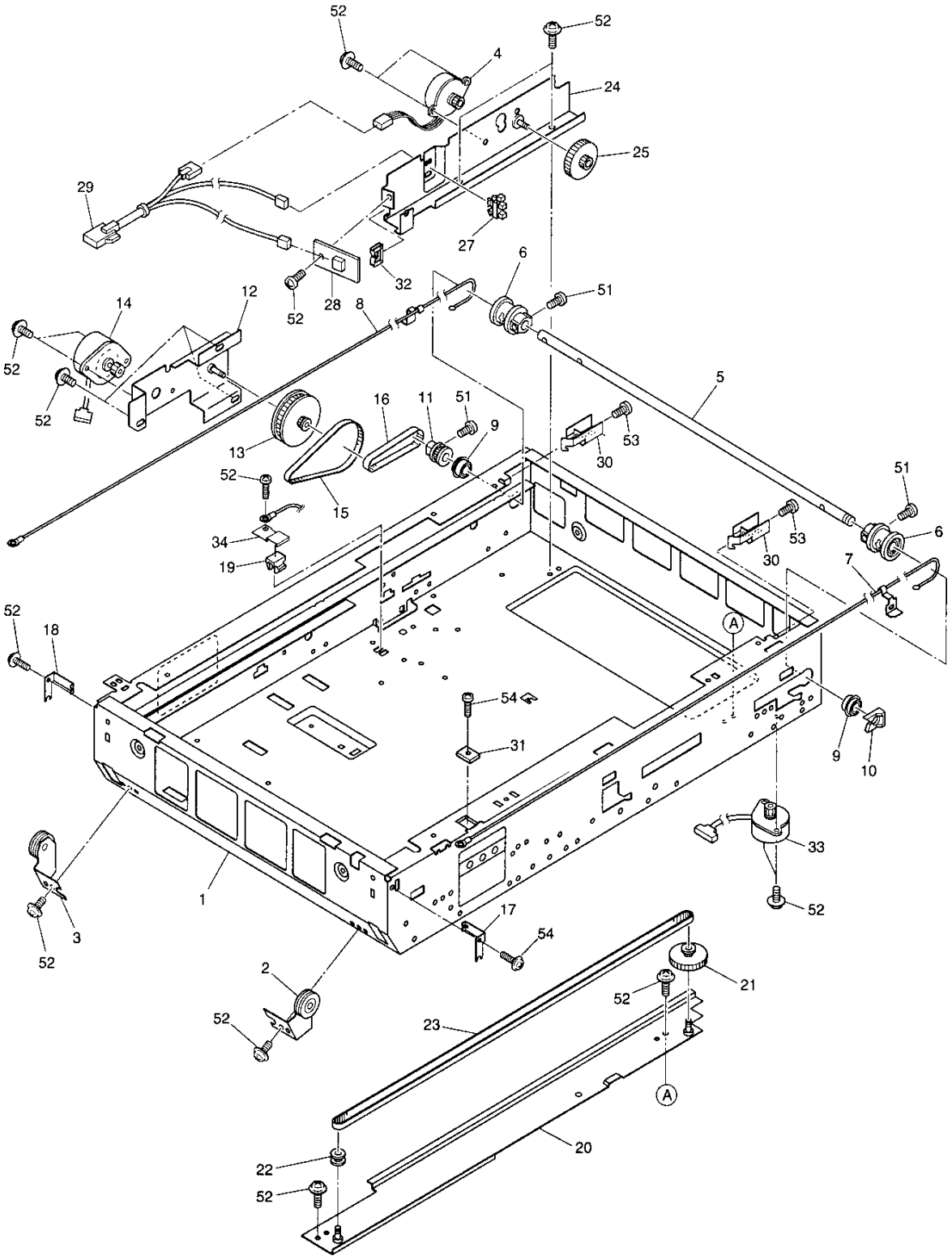
52
52
4
24
25
29
27
6
51
32
28
52
8
12
14
52
52
5
16
11
51
9
13
53
30
52
15
51
34
53
6
19
30
7
52
18
A
54
31
9
10
33
1
52
3
52
17
54
2
21
52
52
23
A
20
22
52

ITEM NO.	PARTS NO.	PARTS NAME	Q'TY / PAGE	Q'TY / PACK	SPE PRICE IN NONE	P	I	R	BSI NO.	TO	FROM	SERIAL NO.	REMARKS
1	4402 903130	K-BASE-OPT-141	1	N/A***									
2	4400 665450	K-BKT-SCAN-F	1	1/P									
3	4400 665470	K-BKT-SCAN-R	1	1/P									
4	4400 665900	K-M/P-L/M-140	2	1/C									
5	4400 665510	SHAFT-DRIDE-SCN	1	1/P									
6	4400 665770	KIT-PLY-WIRE	1	1/P									2PC./1PACK
7	4400 665550	WIRE-SCAN-F	1	1/P									
8	4400 665610	WIRE-SCAN-R	1	1/P									
9	4408 510800	BRG-688ZZNR	2	1/P									
10	4400 336190	STOP-RING-8	1	5/P									
11	4400 665600	PLY/T-2GT027F08	1	1/P									
12	4400 665660	K-BRKT-MOT-SCAN	1	1/P									
13	4400 665700	K-PLY/T-66-18	1	1/P									
14	4400 665720	K-M/P-SCN-140	1	1/C									
15	4400 665740	BLT/T-2GT112X40	1	1/P									
16	4400 665750	BLT/T-2GT077X40	1	1/P									
17	4400 665350	SPL-WIRE-SCAN-F	1	1/P									
18	4400 665360	SPL-WIRE-SCAN-R	1	1/P									
19	4400 667550	HLDR-CABLE-OPT	1	1/P									
20	4400 665810	K-BKT-DRV-LENS	1	1/P									
21	4400 665860	G05S-70/P2GT016	1	1/P									
22	4400 665870	PLY/T-2GT016F06	1	1/P									
23	4400 665890	BLT/T-2GT465X40	1	1/P									
24	4400 666010	K-BRKT-MOT-MRR	1	1/P									
25	4400 666070	G10S-10/G05S-70	1	1/P									
27	4400 678850	SZ-HOME-140	1	1/C									
28	4400 677240	PWA-F-AES-140	1	1/C									
29	4400 677850	K-WH-OPTUNT-140	1	1/P									
30	4400 667640	BRKT-WIRE-TENS	2	1/P									
31	4400 665520	MAGNET-DF-SNSR	1	1/P									
32	4843 391367	BD/W-EDS-0607M	1	5/P									
33	4400 665920	K-M/P-LNS-140	1	1/C									
34	4400 667570	BRKT-HLDR-CABLE	1	1/P									
51	7040 301011	PAN30*10MSZN3A	3	50/P									
52	4842 040370	TBID3006MSZN3L	17	50/P									
53	7040 301211	PAN30*12MSZN3AI	2	50/P									
54	7044 250665	FLT25*06BSNI3EI	1	50/P									

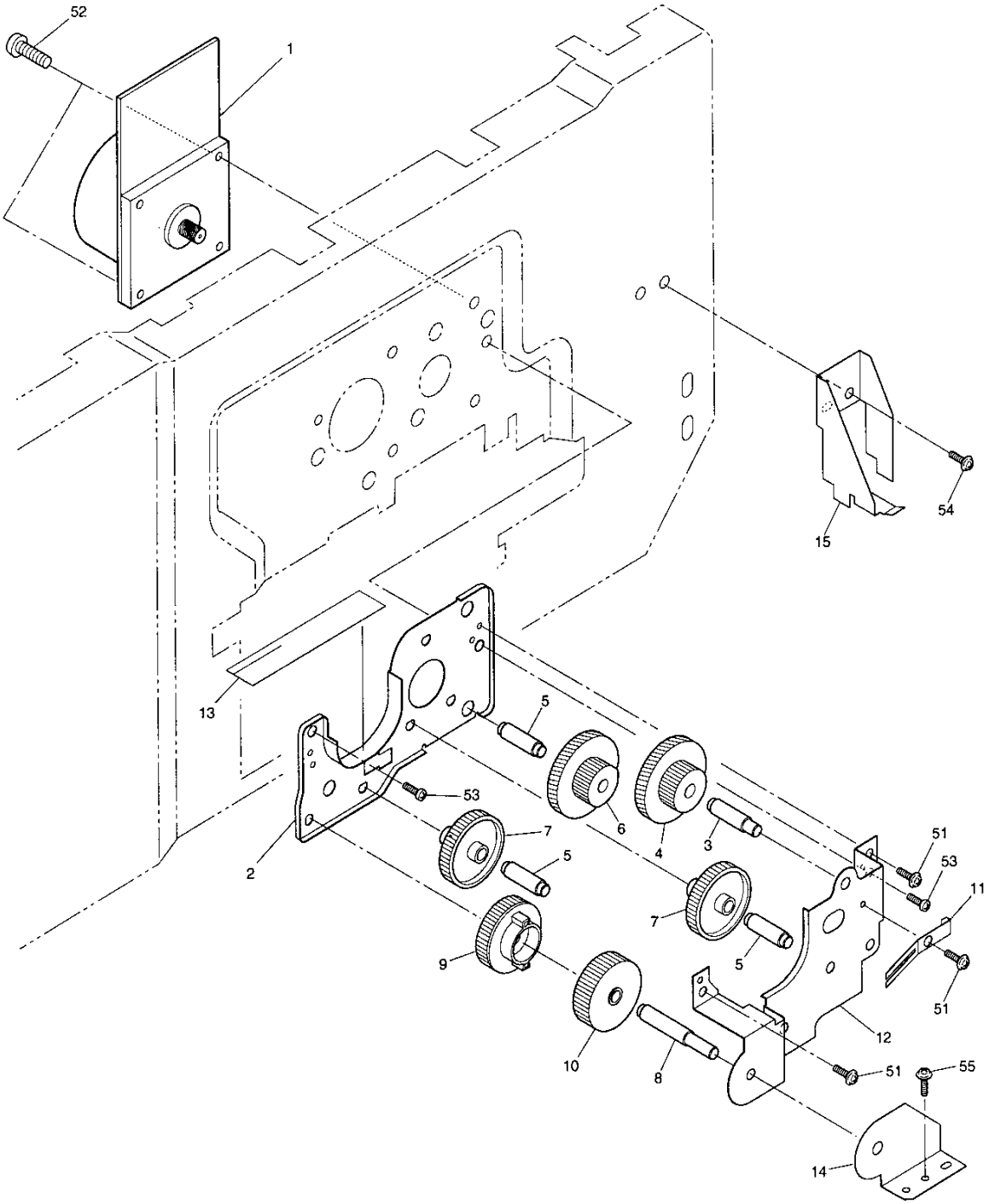

TOSHIBA

ITEM NO.	PARTS NO.	PARTS NAME	Q'TY / PAGE	Q'TY / PACK	SPE PRICE IN NONE	P	I	R	BSI NO.	TO	FROM	SERIAL NO.	REMARKS
1	4400 678600	M/DC-MAIN-140	1	1/C									
2	4400 663820	FRAME-DRIVE-R	1	1/P									
3	4400 663840	STUD-DRIVE-D/L	1	1/P									
4	4400 663830	G05H-75/G10S-20	1	1/P									
5	4400 663870	STUD-DRIVE	3	1/P									
6	4400 663850	G05H-75/G10S-16	1	1/P									
7	4400 663860	GR-10S34-65-06	2	1/P									
8	4400 663900	STUD-DRIVE-FUS	1	1/P									
9	4400 663880	GR-10S34-75-06	1	1/P									
10	4400 663890	GR-10S34-105-06	1	1/P									
11	4400 663910	SPL-DRUM-EARTH	1	1/P									
12	4400 663810	FRAME-DRIVE-F	1	1/P									
13	4400 663960	MYLAR-DRIVE-L	1	5/P									
14	4400 668850	BRKT-LOCK-FUSER	1	1/P									
51	4842 040370	TBID3006MSZN3L	3	50/P									
52	4842 040696	TZPAN3012MSZN3L	2	50/P									
53	4842 040687	TBID4008MSZN3A	2	50/P									
55	4842 041800	SCREW-M4-7-R	1	50/P									

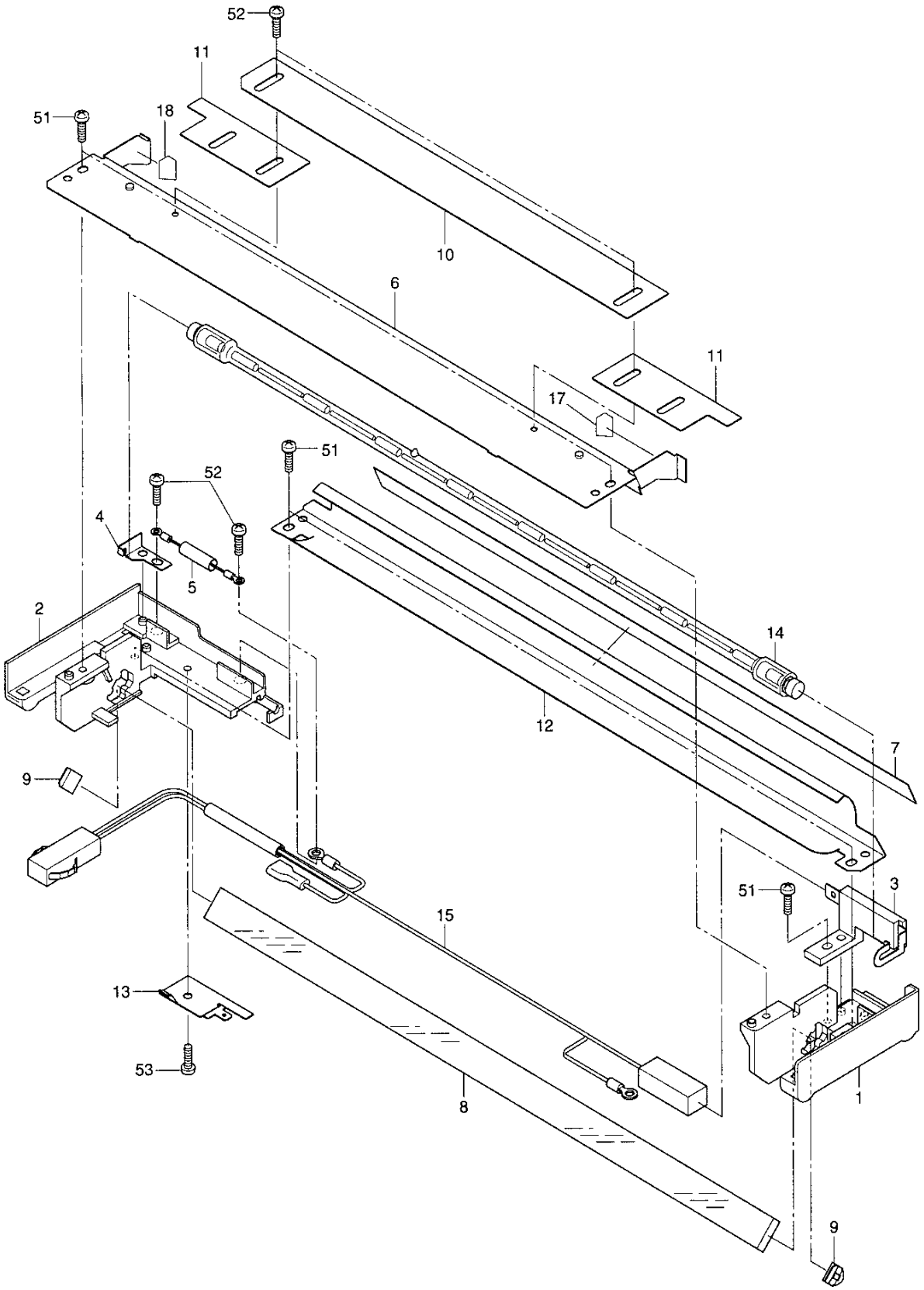

TOSHIBA

ITEM NO.	PARTS NO.	PARTS NAME	Q'TY / PAGE	Q'TY / PACK	SPE PRICE IN NONE	P	I	R	BSI NO.	TO	FROM	SERIAL NO.	REMARKS
1	4400 667620	K-HLDR-CRG1-F	1	1/P									
2	4400 667630	K-HLDR-CRG1-R	1	1/P									
3	4400 667240	K-BLD-LAMP-EXPF	1	1/P									
4	4400 667300	BLADE-LAMP-EXPR	1	1/P									
5	4400 678400	K-FU/T-EXPO-140	1	1/D									
6	4400 667350	STAY-CRG1	1	1/P									
7	4400 667360	TAPE-REF-SUB	1	1/KP									
8	4400 667380	MIRROR-1-140	1	1/C									
9	4400 667400	SPL-MIRROR1	2	1/P									
10	4400 667420	PLATE-ADJ-EXPO	1	1/P									
11	4400 667430	PL-ADJ-EXPO-FR	2	1/P									
12	4400 667540	K-REFLECTOR-140	1	1/PP									
13	4400 667560	STOPPER-WH-CRG1	1	1/P									
14A	4400 679140	LP-92-300W-140	1	1/S									100V SERIES
14B	4400 679150	LP-184-300W-140	1	1/S									200V SERIES
15	4400 677410	WH-EXPO-140	1	1/P									
17	4400 667450	REFL-SIDE-F	1	5/P									
18	4400 667460	REFL-SIDE-R	1	5/P									
51	4842 040846	PTBR30*08MSZN3A	5	50/P									
52	7040 300411	PAN30*04MSZN3A	4	50/P									
53	4842 040495	PTBR30*06MSZN3A	1	50/P									

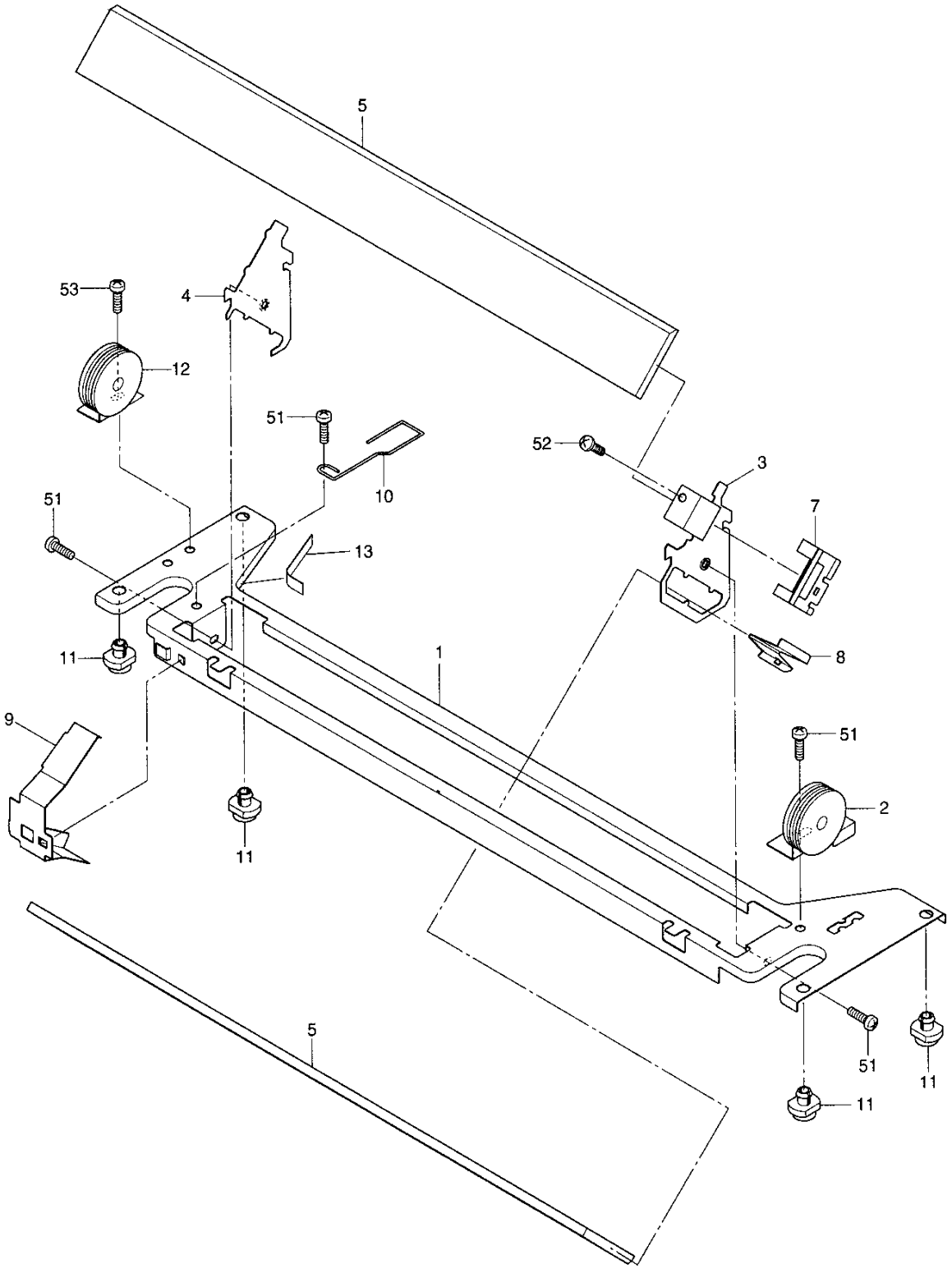
5
53
4
12
51
10
52
3
7
51
13
11
1
8
9
51
2
11
5
51
11
11

ITEM NO.	PARTS NO.	PARTS NAME	Q'TY / PAGE	Q'TY / PACK	SPE PRICE IN NONE	P	I	R	BSI NO.	TO	FROM	SERIAL NO.	REMARKS
1	4400 666820	BASE-CRG2	1	1/P									
2	4400 666860	K-BKT-BRG-CRG2F	1	1/P									
3	4400 665950	HLDR-MIR-2/3-F	1	1/P									
4	4400 665940	HLDR-MIR2/3-R	1	1/P									
5	4400 666950	MIRROR-2-140	2	1/C									
7	4400 666940	SPL-MIRROR2-F	1	1/P									
8	4400 667030	SPL-MIRROR3-F	1	1/P									
9	4400 667000	SPL-MIR2/3-R	1	1/P									
10	4400 667020	GUIDE-CABLE	1	1/P									
11	4400 802090	FOOT-CRG	4	5/P									
12	4400 666880	K-BKT-BRG-CRG2R	1	1/P									
13	4400 666910	MYLAR-CRG2	1	5/P									
51	4842 040370	TBID3006MSZN3L	4	50/P									
52	4401 962790	SCREW-MIR-M3-10	1	10/P									
53	7040 300411	PAN30*04MSZN3A	1	50/P									

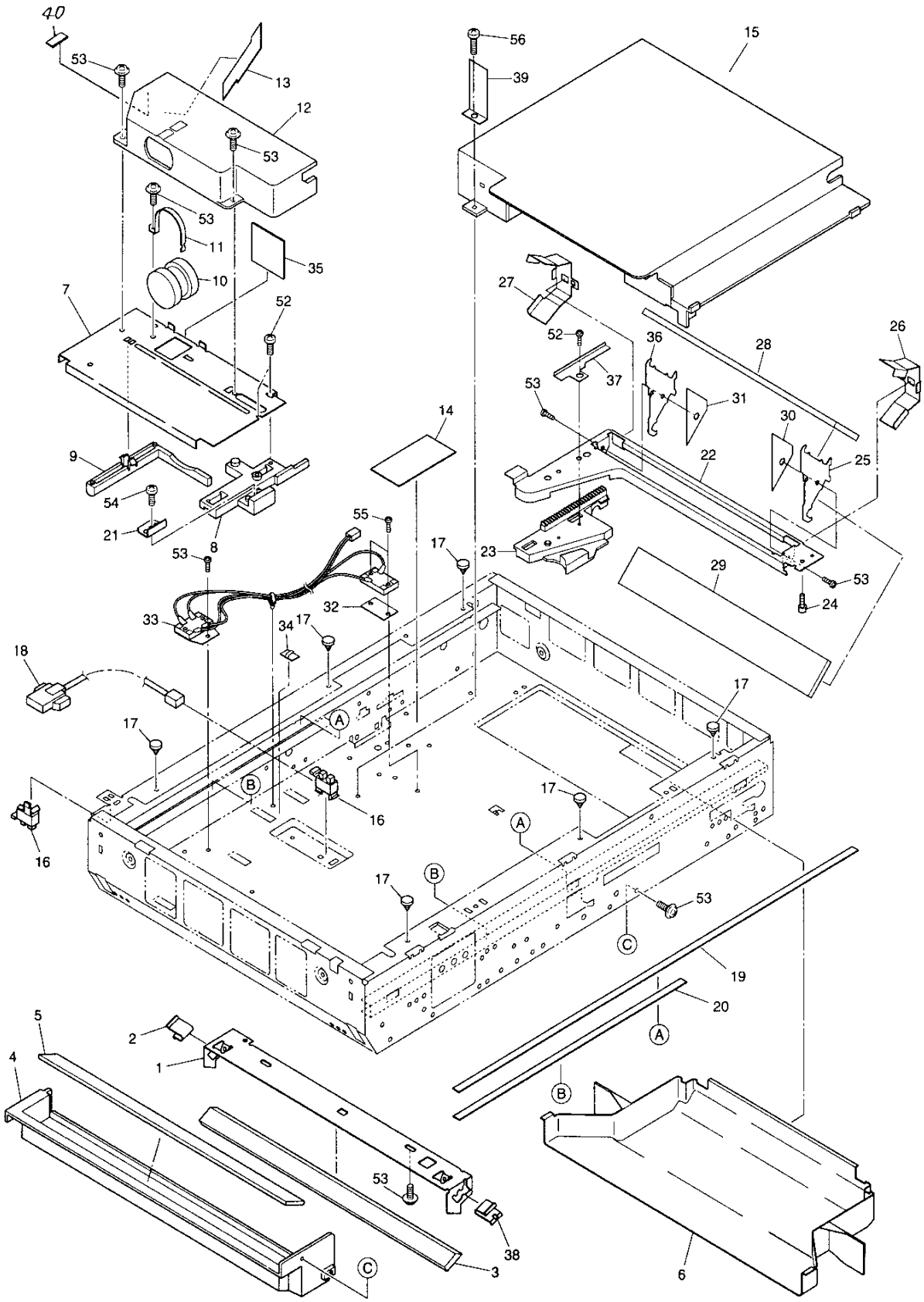
40
53
13
12
53
53
11
35
10
7
52
9
54
21
8
53
55
33
34
17
32
18
17
16
16
17
A
B
17
A
17
B
53
C
19
20
A
B
5
2
1
4
53
38
3
C
6
56
39
15
27
52
36
28
26
37
53
31
30
14
22
25
17
23
29
53
24

TOSHIBA

ITEM NO.	PARTS NO.	PARTS NAME	Q'TY / PAGE	Q'TY / PACK	SPE PRICE IN NONE	P	I	R	BSI NO.	TO	FROM	SERIAL NO.	REMARKS
1	4400 665390	BRKT-MIRROR-6	1	1/P									
3	4400 665370	MIRROR-6-140	1	1/C									
4	4400 667940	COV-OPT-L-SLIT	1	1/P									
5	4400 665200	GLASS-SLIT	1	1/C									
6	4400 665170	COVER-OPT-L	1	1/PP									
7	4400 666220	BASE-LENS	1	1/P									
8	4400 666250	GUIDE-BASE-LENS	1	1/P									
9	4400 666260	FOOT-BASE-LENS	1	1/P									
10	4400 666290	LENS-180-8.0	1	1/C									
11	4400 666280	BAND-LENS	1	1/P									
12	4400 666380	COVER-LENS	1	1/PP									
13	4400 666390	MYLAR-LENS	1	1/KP									
14	4400 665070	MYLAR-BASE-OPT	1	1/P									
15	4400 665140	K-COV-OPT-U	1	1/PP									
16	4400 678850	SZ-HOME-140	2	1/C									
17	4400 831600	CUSH-GLASS	6	5/P									
18	4400 677860	WH-LNS-SW-140	1	1/P									
19	4400 665620	SHEET-CRG1	2	1/KP									
20	4400 665630	SHEET-CRG2	2	1/KP									
21	4400 666350	STOP-BELT-LENS	1	1/P									
22	4400 666520	BASE-CRG3	1	1/P									
23	4400 666530	GUIDE-BASE-CRG3	1	1/P									
24	4400 328470	FOOT-CRG	1	1/P									
25	4400 666620	HLDR-MIR4/5	1	1/P									
26	4400 666700	SPL-MIR4/5-F	1	1/P									
27	4400 666710	SPL-MIR4/5-R	1	1/P									
28	4400 666660	MIRROR-4-140	1	1/C									
29	4400 666670	MIRROR-5-140	1	1/C									
30	4400 666610	SHEET-MIR4/R-F	1	1/P									
31	4400 666600	SHEET-M1R4/5-R	1	1/P									
32H	4402 859390	SHEET-PTC-121	1	5/P									AUD
33H	4400 678940	K-PTC-230-140-U	1	1/C									AUD
34	4407 685930	HOLDER-WH	1	5/P									
35	4400 666300	FILTER-OPT	1	1/C									SERVICE ONLY
36	4400 666650	HLDR-MIR4/5-R	1	1/P									
37	4400 666560	K-PLATE-CRG3	1	1/P									
38	4400 665310	SPL-MIRROR6-R	2	1/P									
39	4400 670920	BRKT-COV-OPT-U	1	1/P									
40	4400 666360	SEAL-LENS-MYLAR	1	1/P									
52	4842 040846	PTBR30*08MSZN3A	4	50/P									
53H	4842 040370	TBID3006MSZN3L	9	50/P									AUD
53Z	4842 040370	TBID3006MSZN3L	8	50/P									OTHERS
54	4842 040495	PTBR30*06MSZN3A	1	50/P									
55H	4842 040750	TBID4012MSZN3L	2	50/P									AUD
56	4842 040666	TPAN3008MSZN3L	1	50/P									

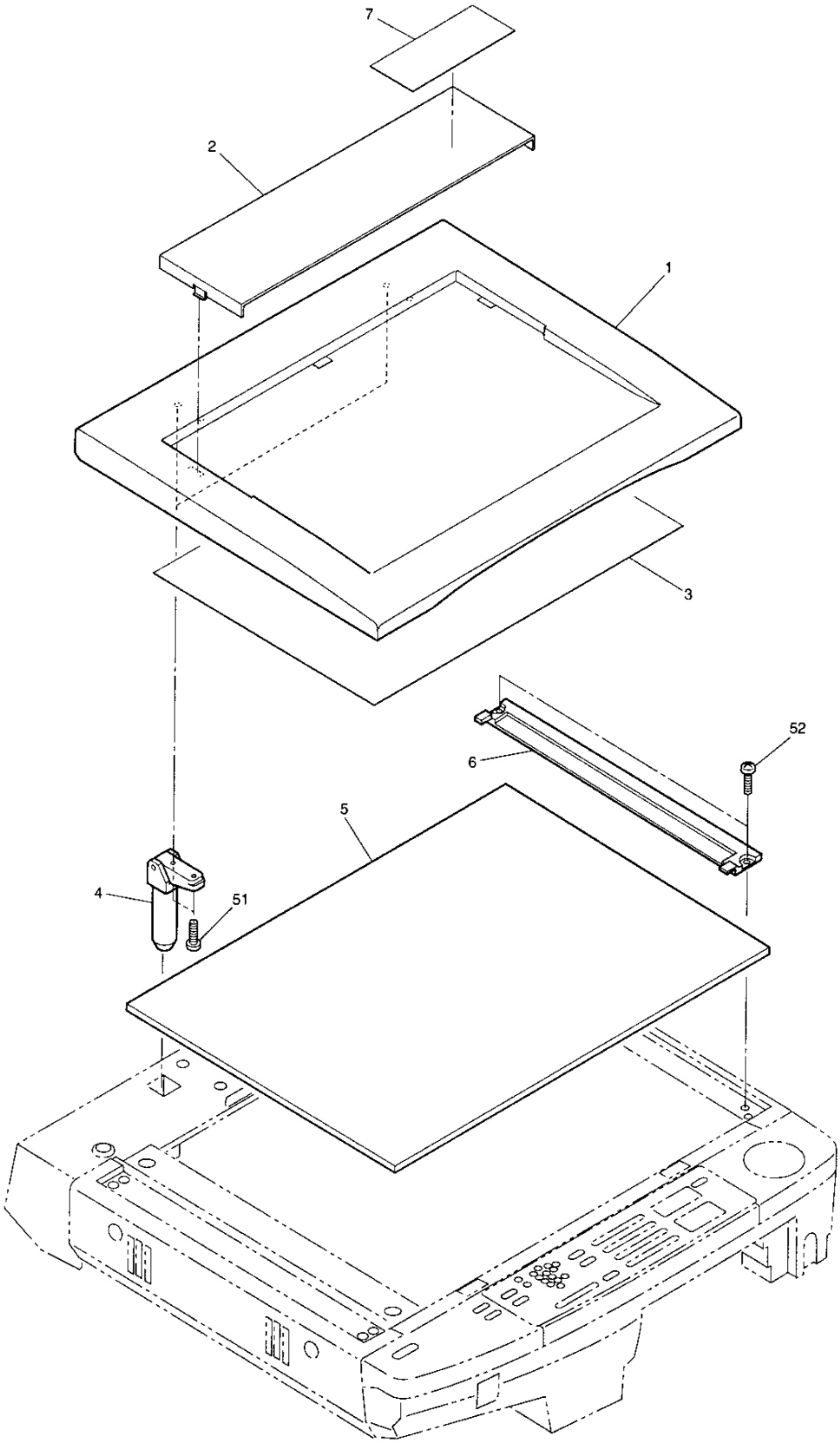

TOSHIBA

ITEM NO.	PARTS NO.	PARTS NAME	Q'TY / PAGE	Q'TY / PACK	SPE PRICE IN NONE	P	I	R	BSI NO.	TO	FROM	SERIAL NO.	REMARKS
1	4400 683510	COVER-PLATEN	1	1/PP									
2	4400 683520	POCKET-PLATEN	1	1/PP									
3	4400 661730	SHEET-PLATEN	1	1/KP									
4	4400 683500	HINGE-PLATEN-S	2	1/P									
5	4400 665320	GLASS-447-338-4	1	1/S									
6	4400 665300	PLATE-GLASS	1	1/PP									
7A	4400 660540	LBL-INST-1550UC	1	1/KP									SERVICE ONLY
7B	4400 660550	LBL-INST-1550GF	1	1/KP									SERVICE ONLY
7C	4400 660560	LBL-INST-1550SI	1	1/KP									SERVICE ONLY
51	4842 040867	PTBR40*14MSZN3A	4	50/P									
52	7043 400813	BID40*08MSCR1AI	2	50/P									

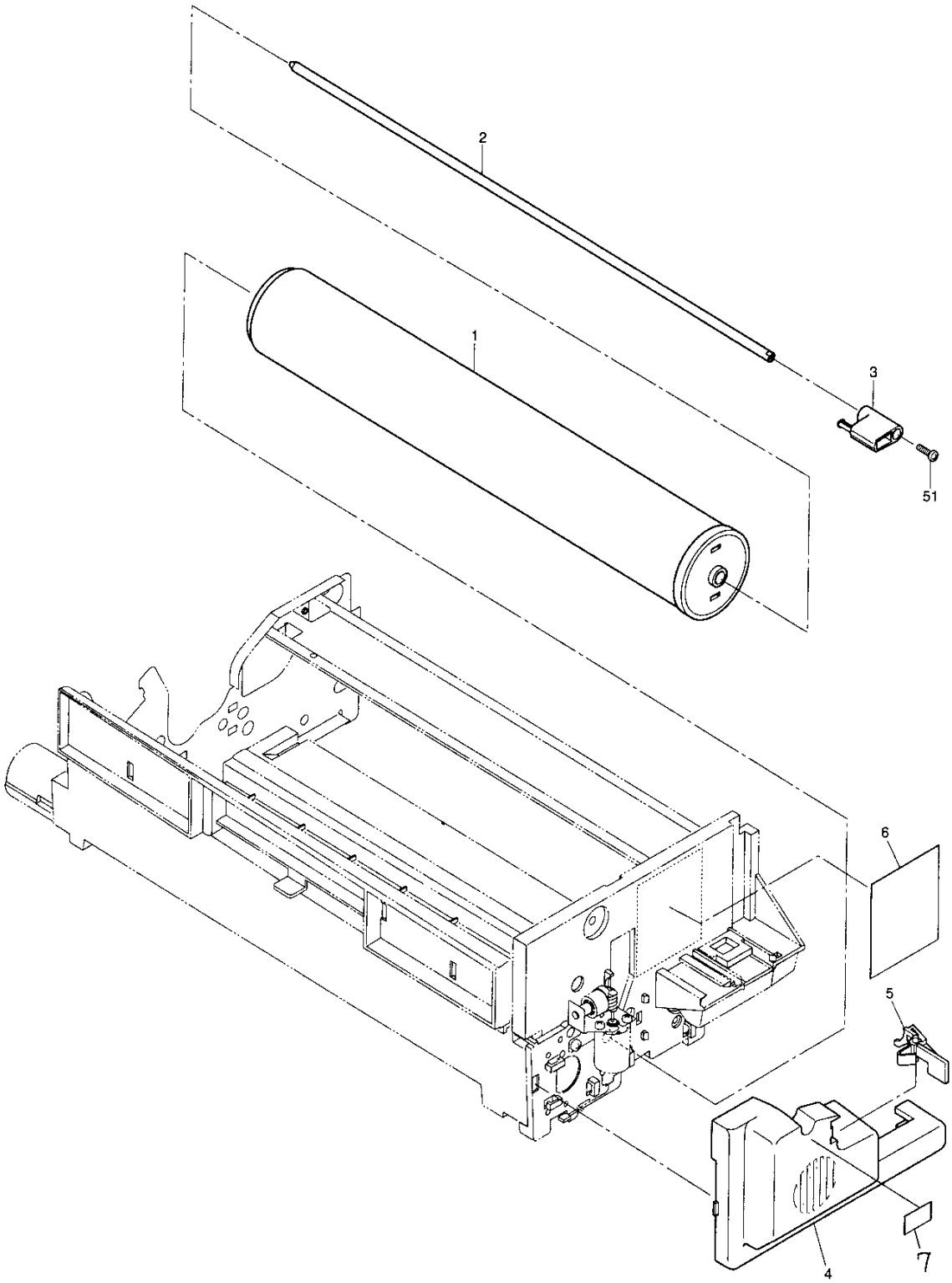
2
1
3
51
6
5
4
7

ITEM NO.	PARTS NO.	PARTS NAME	Q'TY / PAGE	Q'TY / PACK	SPE PRICE IN NONE	P	I	R	BSI NO.	TO	FROM	SERIAL NO.	REMARKS
1	6608 4854	ASM-OD1550	1	SUPPLY									
2	4400 674150	SHAFT-DRUM-140	1	1/P									
3	4400 674160	HANDLE-SFT-DRUM	1	1/P									
4	4400 671910	COVER-PRC-F	1	1/P									
5	4400 671920	HOOK-PRC-F	1	1/P									
6	4400 660510	LBL-MEMORY-140	1	5/P									
7	4400 662630	LBL-ARROW-ARM	1	5/P									
51	7043 300613	BID30*06MSCR1AI	1	50/P									

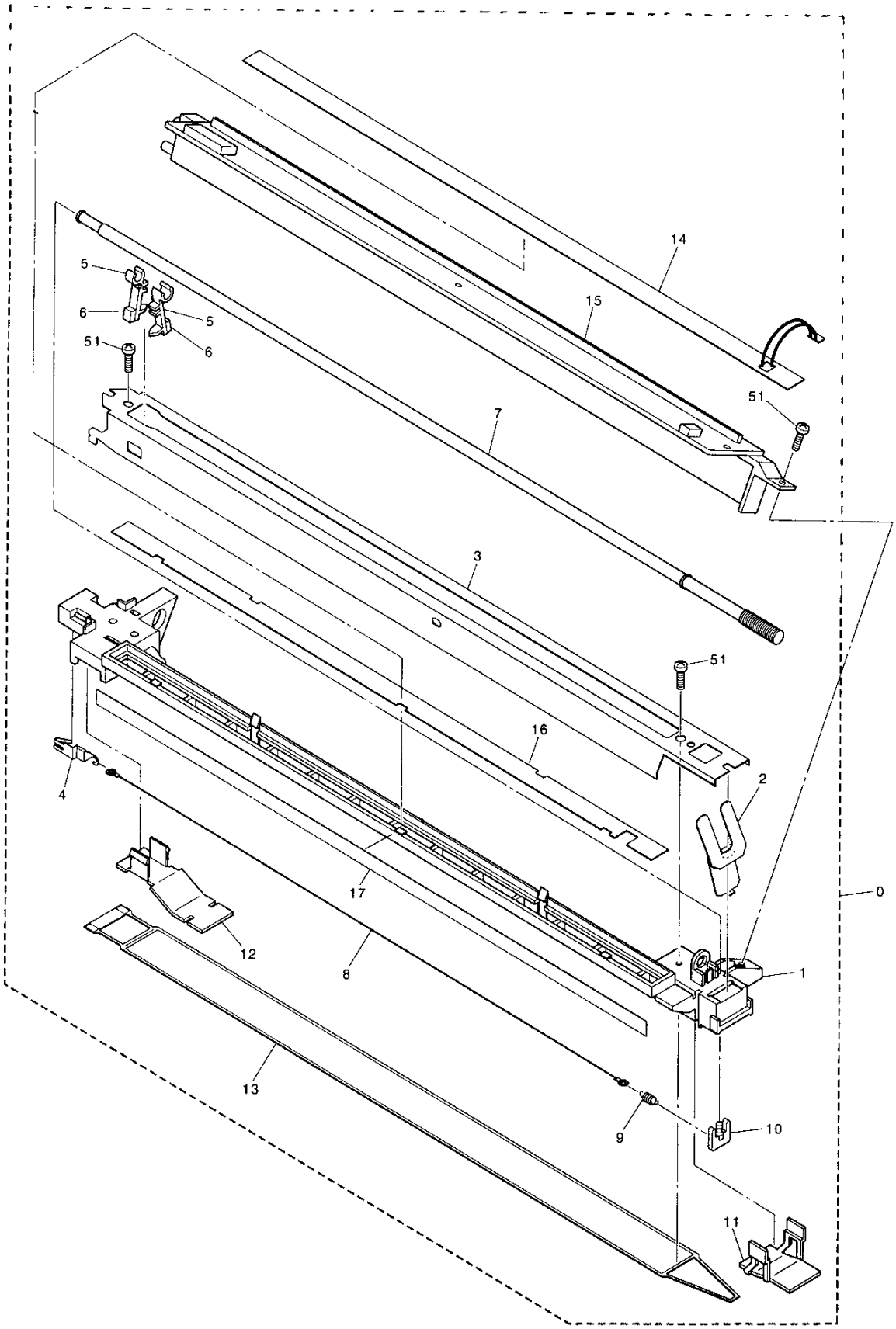
14
5
15
6
5
6
51
51
7
3
51
16
2
4
0
17
12
8
1
13
9
10
11

ITEM NO.	PARTS NO.	PARTS NAME	Q'TY / PAGE	Q'TY / PACK	SPE PRICE IN NONE	P	I	R	BSI NO.	TO	FROM	SERIAL NO.	REMARKS
0	4400 674400	ASM-CHARGER-M	1	1/C		F	-	J	F97K084				
1	4400 674510	HOLDER-M-ERS	1	1/P									
2	4400 674470	SPL030-S631-GRD	1	1/P									
3	4400 674430	CASE-CH-M	1	1/P									
4	4400 674440	SPL030-S304-CHM	1	1/P									
5	4400 674540	HLDR-PAD-WIRE-M	2	1/P									
6	4400 674850	PAD-CLN-WIRE	2	5/P									
7	4400 674550	SFT-WIRE-CLN-M	1	1/P									
8	4400 674790	WIRE-CH-060*353	1	5/S									
9	4407 402190	SPRING-TENS-CH	1	5/P									
10	4401 764730	HANGER-WIRE-TR	1	1/P									
11	4400 674450	LID-MAIN-F	1	1/P									
12	4400 674460	LID-MAIN-R	1	1/P									
13	4400 674520	GRID-140	1	1/KP									
14	4400 678710	ASM-ERS-140	1	1/S									
15	4400 679180	ASM-DCH-140	1	1/C									
16	4400 674560	MYLAR-ERS	1	1/KP									
17	4400 674570	MYLAR-CH-SCREEN	1	1/KP									
51	4842 040846	PTBR30*08MSZN3A	3	50/P									

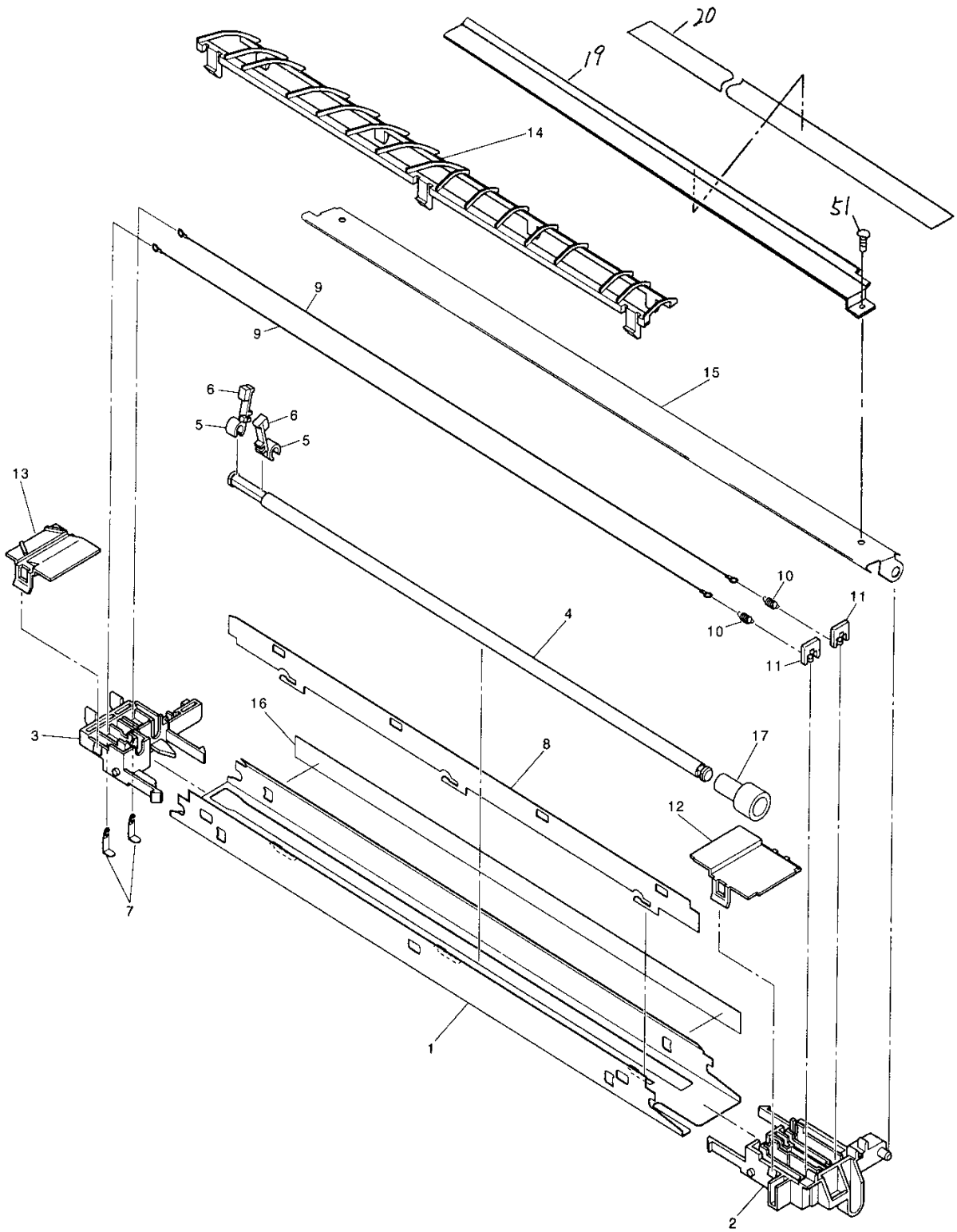
20
19
14
51
9
9
15
6
5
6
5
13
10
11
10
11
4
16
8
17
3
12
7
1
2

ITEM NO.	PARTS NO.	PARTS NAME	Q'TY / PAGE	Q'TY / PACK	SPE PRICE IN NONE	P	I	R	BSI NO.	TO	FROM	SERIAL NO.	REMARKS
0	4400 674010	ASM-CHARGER-TR	1	1/C									
1	4400 674720	CASE-CH-TR	1	1/P									
2	4400 674210	TERMINAL-TR-F	1	1/P									
3	4400 674770	TERMINAL-TR-R	1	1/P									
4	4400 674840	SHAFT-WIRE-CLN	1	1/P									
5	4400 674820	HLDR-PAD-WIRE	2	1/P									
6	4400 674850	PAD-CLN-WIRE	2	5/P									
7	4400 674750	HANGER-WIRE-140	2	1/P									
8	4400 674240	PL-SEP-CH-140	1	1/P									
9	4400 674790	WIRE-CH-060*353	2	5/S									
10	4407 402190	SPRING-TENS-CH	2	5/P									
11	4401 764730	HANGER-WIRE-TR	2	1/P									
12	4400 674800	LID-TR-F	1	1/P									
13	4400 674810	LID-TR-R	1	1/P									
14	4400 915340	SUPPORTER-176	1	1/P									
15	4400 674260	GUIDE-CH-ENT	1	1/P									
16	4400 674250	SHEET-CH-TR	1	1/KP									
17	4400 674870	KNOB-SHAFT-WIRE	1	1/P									
19	4400 674370	GUIDE-CH-ENT-U	1	1/P									
20	4400 674380	MYLAR-CH-ENT-U	1	1/KP									
51	4842 040370	TBID3006MSZN3L	1	50/P									

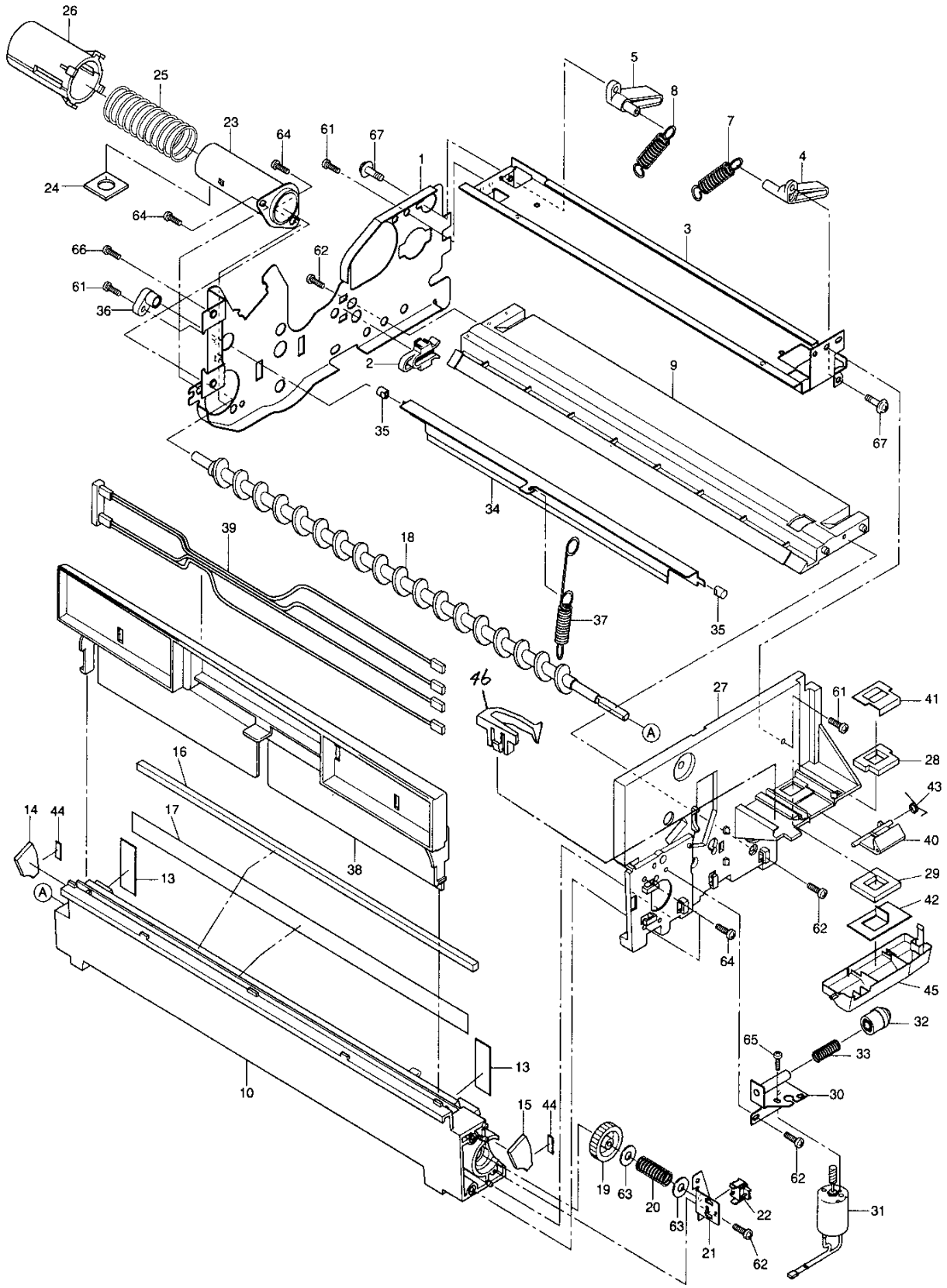
26
25
23
64
61
67
1
5
8
7
4
24
64
66
62
61
36
3
2
9
35
67
34
39
18
37
35
46
27
61
41
16
28
14
44
17
43
40
38
13
29
42
62
64
45
32
65
33
13
30
10
15
44
62
19
63
20
63
22
31
21
62

ITEM NO.	PARTS NO.	PARTS NAME	Q'TY / PAGE	Q'TY / PACK	SPE PRICE IN NONE	P	I	R	BSI NO.	TO	FROM	SERIAL NO.	REMARKS
1	4400 671400	FRAME-PRC-R	1	1/P									
2	4400 672600	GUIDE-MG-SFT	1	1/P									
3	4400 671410	STAY-PRC-U	1	1/P									
4	4400 672560	PUSHER-DEV-F	1	1/P									
5	4400 672570	PUSHER-DEV-R	1	1/P									
7	4400 672630	SPE080-100-0262	1	1/P									
8	4400 672640	SPE080-080-0234	1	1/P									
9	4400 671420	STAY-PRC-L	1	1/P									
10	4400 671120	K-FRAME-CLN	1	1/P									
13	4400 671500	SEAL-CL-SIDE	2	5/P									
14	4400 671790	SEAL-CL-SIDE-F2	1	5/P									
15	4400 671550	SEAL-CL-SIDE-R2	1	5/P									
16	4400 671800	SEAL-CL-ROOF	1	1/KP									
17	4400 671590	K-BLADE-REC	1	1/S									
18	4400 671480	AUGER-CLN	1	1/P									
19	4400 671490	GR-08S025-50-04	1	1/P									
20	4402 850480	SPC-AUG120	1	5/P									
21	4400 671470	BRKT-SW-FULL	1	1/P									
22	4402 859600	SP-CS3A-B2BA	1	1/D									
23	4400 671140	K-NOZZLE-CLN-IN	1	1/P									
24	4400 671540	SEAL-NOZZLE-1	1	5/P									
25	4400 671530	SPC260-100-0700	1	1/P									
26	4400 671520	NOZZLE-CLN-OUT	1	1/P									
27	4400 671930	FRAME-PRC-F	1	1/PP									
28	4400 671730	SEAL-PRC-F-U	1	5/P									
29	4400 671740	SEAL-PRC-F-L	1	5/P									
30	4400 671690	K-BKT-TNR-MOT	1	1/P									
31	4400 678650	K-M/DC-TNR-140	2	1/C									
32A	4400 671820	G05H-32-125-06U	1	1/P									TAD
32B	4400 671820	G05H-32-125-06U	1	1/P									CSD
32C	4400 671650	G05H-32-125-06E	1	1/P									EUD
32D	4400 671650	G05H-32-125-06E	1	1/P									MJD
32E	4400 671650	G05H-32-125-06E	1	1/P									MFD
32F	4400 671650	G05H-32-125-06E	1	1/P									UKD
32G	4400 671820	G05H-32-125-06U	1	1/P									AUD
32H	4400 671820	G05H-32-125-06U	1	1/P									TWD
32I	4400 671820	G05H-32-125-06U	1	1/P									SAD
32J	4400 671820	G05H-32-125-06U	1	1/P									ASD
33	4400 671880	SPC080-070-0230	1	5/P									
34	4409 847890	BL-1550D	1	10/S									
35	4400 671620	PIN-BLADE-CLN	2	5/P									
36	4400 671610	HLDR-PIN-BLADE	1	1/P									
37	4400 671600	SPE077-070-0299	1	1/P									
38	4400 671640	DUCT-CLN	1	1/P									
39	4400 678140	K-WH-CLNUNT-140	1	1/P									
40	4400 671940	HOOK-TNR-140	1	1/P									
41	4400 671750	MYLAR-PRC-F-U	1	5/P									
42	4400 671760	MYLAR-PRC-F-L	1	5/P									
43	4400 671710	SPR055-4.0-4.17	1	1/P									
44	4400 671860	SEAL-CL-SIDE-3	2	5/P									
45	4400 671870	TRAY-TNR-PRC	1	1/P									
46	4400 671950	HOOK-CART-140	1	1/P									
61	4842 040370	TBID3006MSZN3L	3	50/P									
62	4842 040846	PTBR30*08MSZN3A	5	50/P									
63	7400 104011	1HWAS040MSZN3A	2	50/P									
64	7043 300813	BID30*08MSCR1AI	4	50/P									
65	7040 300411	PAN30*04MSZN3A	1	50/P									
66	4842 040685	TBID3008MSZN3A	2	50/P									
67	4402 807030	SCREW-SOCKET	2	10/P									

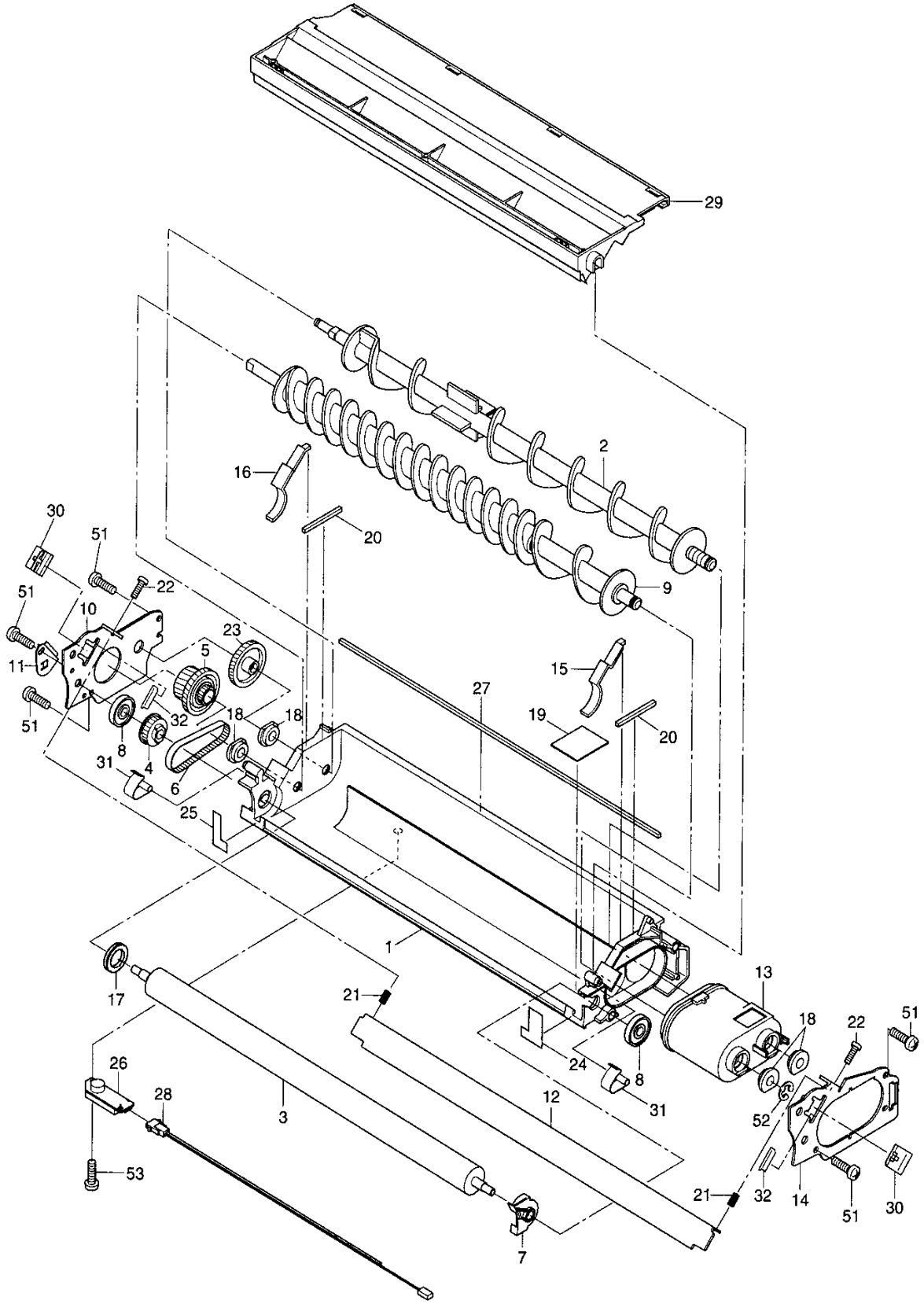
29
2
16
20
30
51
22
51
10
23
5
11
15
27
19
20
51
32
18
18
8
4
31
6
25
1
13
17
21
18
22
51
24
8
26
28
3
12
31
52
53
21
32
14
51
30
7

TOSHIBA

ITEM NO.	PARTS NO.	PARTS NAME	Q'TY / PAGE	Q'TY / PACK	SPE PRICE IN NONE	P	I	R	BSI NO.	TO	FROM	SERIAL NO.	REMARKS
0	4400 672080	ASM-DEV-UNIT	1	1/C									
1	4400 672130	K-CASE-DEV-140	1	N/A***									
2	4400 672140	K-MIXER-2-140	1	1/P									
3	4400 672400	MG-ROLL-140	1	1/C									
4	4400 672470	PLY/T-2GT028F06	1	1/P									
5	4400 672480	PLY-H20-H33-P20	1	1/P									
6	4400 672420	BLT/T-2GT051Z40	1	1/P									
7	4400 672580	BUSH-MG-ROL-F	1	1/P									
8	4400 672500	ROL-GUIDE-21.08	2	1/P									
9	4400 672680	MIXER-1-140	1	1/P									
10	4400 672660	PLATE-DEV-R	1	1/P									
11	4400 672590	ADJUSTER-MG	1	1/P									
12	4400 672150	K-DOCTOR-140	1	1/P									
13	4400 672160	K-COV-FRONT-DEV	1	1/P									
14	4400 672650	PLATE-DEV-F	1	1/P									
15	4400 672720	SEAL-MG-R-F	1	1/P									
16	4400 672730	SEAL-MG-R-R	1	1/P									
17	4400 672740	SEAL-MG-S-R	1	1/P									
18	4407 728150	BUSH-6-GCB	4	5/P									
19	4400 672840	MYLAR-DEV-CASE	1	1/KP									
20	4400 672810	SEAL-CASE-SIDE	2	5/P									
21	4400 672520	SPC060-065-0130	2	1/P									
22	4400 672800	SCREW-DOCTOR	2	10/P									
23	4400 672450	GR-08H033-43-06	1	1/P									
24	4400 672820	SEAL-MYLAR-S-F	1	5/P									
25	4400 672830	SEAL-MYLAR-S-R	1	5/P									
26	4402 859550	SNR-ATC-121	1	1/D									
27	4400 672770	SEAL-COV-DEV1	1	1/KP									
28	4400 678160	WH-DEV-ATS-140	1	1/P									
29	4400 672120	K-COV-DEV-140	1	1/S									
30	4400 672880	SPL025-S631-DCT	2	1/P									
31	4400 672850	SPL030-S631-DCF	2	1/P									
32	4400 672950	SPACER-PL-DEV	2	5/P									
51	7043 300613	BID30*06MSCR1AI	5	50/P									
52	7405 004031	ERR040SKZN3A	1	50/P									
53	7043 300664	BID30*06BSCR3CI	1	50/P									

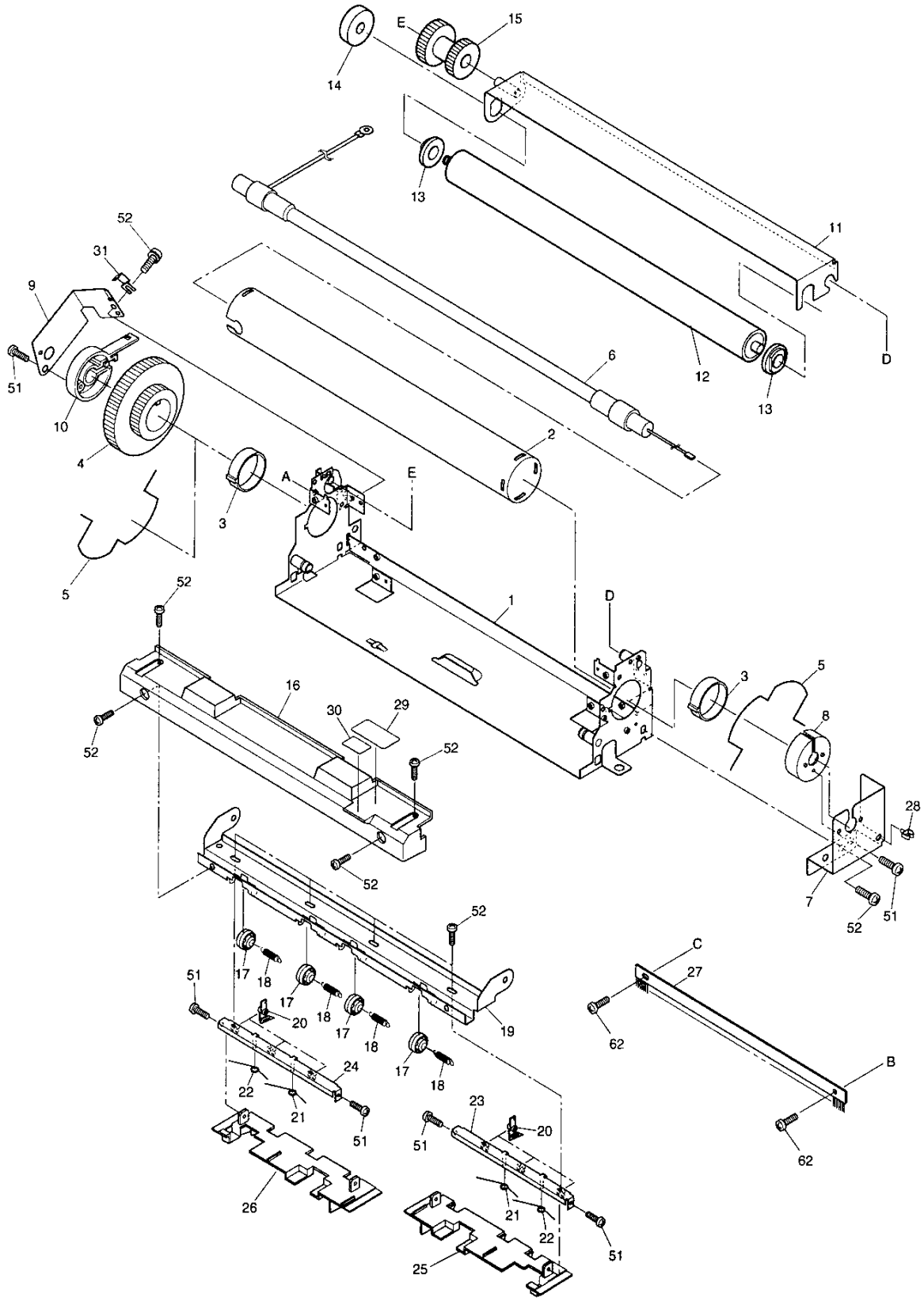
E
15
14
13
11
D
12
13
52
31
9
51
10
4
6
2
A
E
3
5
52
1
D
16
30
29
52
52
52
3
5
8
28
7
52
51
52
C
27
62
B
62
51
17
18
17
18
17
18
17
18
20
19
24
22
21
51
26
51
23
20
21
22
51
25

TOSHIBA

ITEM NO.	PARTS NO.	PARTS NAME	Q'TY / PAGE	Q'TY / PACK	SPE PRICE IN NONE	P	I	R	BSI NO.	TO	FROM	SERIAL NO.	REMARKS
1	4400 668100	K-FRAME-FUS-140	1	1/P									
2	4409 849370	HR-1550-U	1	1/S									
3	4400 669090	BUSH-ROLL-HEAT	2	5/P									
4	4400 669080	GEAR-60-40-H/R	1	1/P									
5	4400 668200	RING-STOP-HR	2	5/P									
6A	4400 679850	HTR-140-900WL-U	1	1/S									100V SERIES
6B	4400 679860	HTR-140-900WL-E	1	1/S									200V SERIES
7	4400 668240	BRKT-HLD-LAMP-F	1	1/P									
8	4400 668480	COVER-HR-F	1	1/P									
9	4400 668250	BRKT-HLD-LAMP-R	1	1/P									
10	4400 668490	COVER-HR-R	1	1/P									
11	4400 668370	K-BRKT-HOLD-CLN	1	1/P									
12	4409 847880	SR-1550H	1	1/S									
13	4402 211540	BUSH-6-4	2	5/P									
14	4400 668270	GEAR-Z15-CLN	1	1/P									
15	4400 668280	GEAR-19-14-IDLE	1	1/P									
16	4400 669110	COVER-SCRAPER	1	1/P									
17	4400 663470	ROLLER-EXIT-U	4	1/P									
18	4400 663460	SPE-0.3-2.8	4	1/P									
19	4400 668410	BRKT-SCRAPER	1	1/P									
20	4400 668420	K-SCRAPER-140	6	6/P									
21	4400 668950	SPR-0.7-14.5	2	5/P									
22	4400 668960	SPR-0.7-26.5	2	5/P									
23	4400 668930	BKT-SCRAPER-R	1	1/P									
24	4400 668940	BKT-SCRAPER-L	1	1/P									
25	4400 669020	GUIDE-SCR-R	1	1/P									
26	4400 669030	GUIDE-SCR-L	1	1/P									
27	4402 801770	BRUSH-EXIT-F170	1	1/KP									
28	4843 391176	CLP/W-UAMS05L	1	5/P									
29	4400 668830	LBL-HOT-140	1	5/P									
30	4400 668840	SHEET-FUS-140	1	5/P									
31	4400 345540	CLAMP-HARNESS	1	5/P									
51	4842 040846	PTBR30*08MSZN3A	7	50/P									
52	4842 040370	TBID3006MSZN3L	9	50/P									
53	4400 325930	PIN-BKT-CON-H	1	10/P									

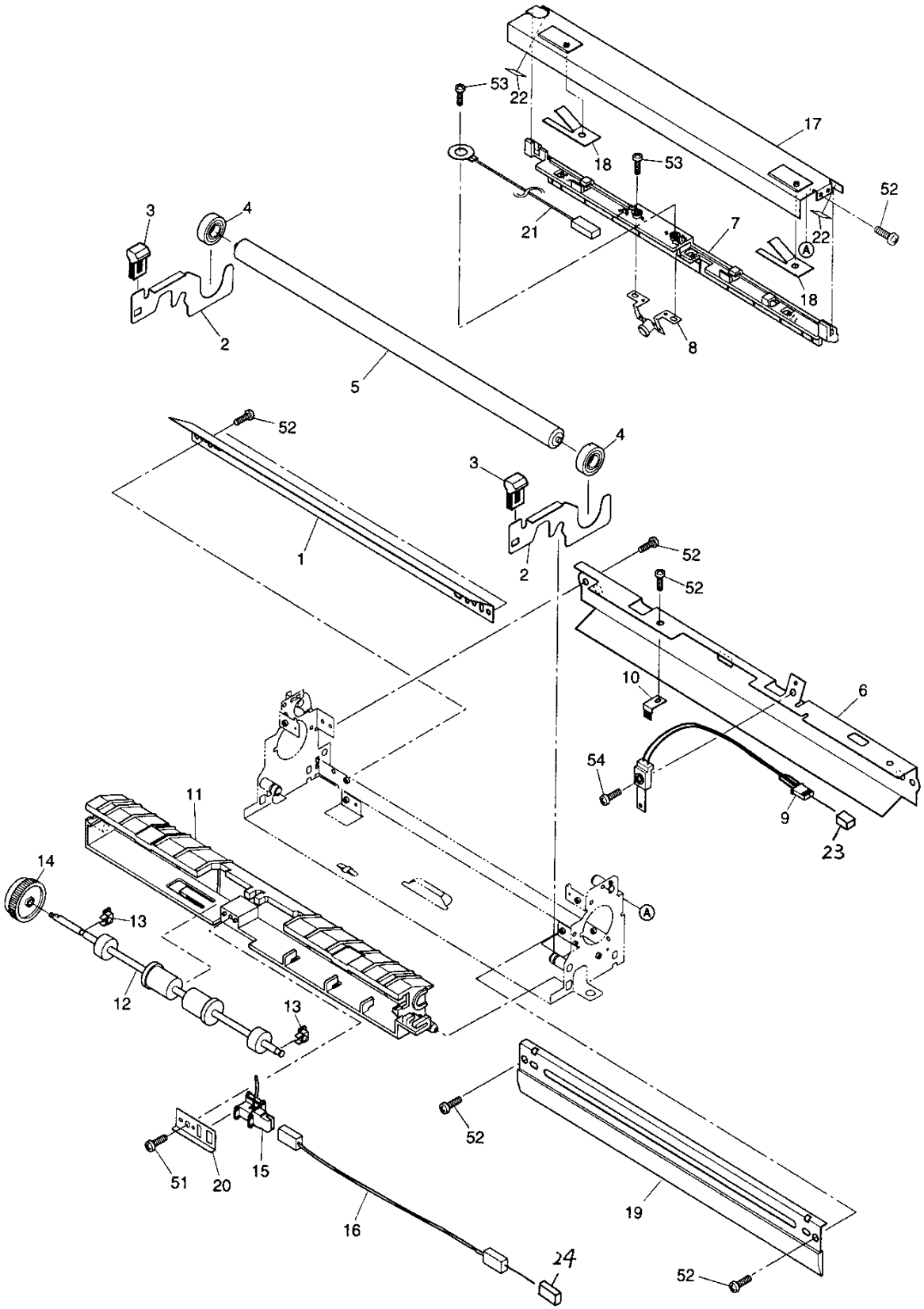
53
22
17
18
53
52
3
4
21
7
22
A
18
2
8
5
52
4
3
1
2
52
52
10
6
54
9
23
11
14
13
12
13
A
52
51
20
15
16
19
24
52

TOSHIBA

ITEM NO.	PARTS NO.	PARTS NAME	Q'TY / PAGE	Q'TY / PACK	SPE PRICE IN NONE	P	I	R	BSI NO.	TO	FROM	SERIAL NO.	REMARKS
1	4402 903260	GUIDE-ENT-FUS	1	1/P									
2	4400 668210	ARM-PRESS-F	2	1/P									
3	4400 668600	CAP-ARM-FUSER	2	5/P									
4	4407 548100	BRG-608ZZ-HR	2	1/P									
5	4409 840810	HR-2510-L	1	1/S									
6	4400 668320	BRKT-HOLD-THMS	1	1/P									
7	4402 903270	K-HLDR-THERM	1	1/P									
8	4400 919520	K-THERMO-176	1	1/C									
9	4400 678880	THMS-HTR-140	1	1/C									
10	4400 536740	BRUSH-FUSER	1	1/C									
11	4400 668510	GUIDE-EXIT-FUS	1	1/PP									
12	4400 668530	ROLLER-EXIT-FUS	1	1/P									
13	4400 668520	BUSH-ROLL-EXIT	2	5/P									
14	4400 668550	GEAR-Z40-E/R	1	1/P									
15	4400 678830	SZ-EX1T-140	1	1/C									
16	4400 678150	WH-EXT-SW-140	1	1/P									
17	4400 668340	COVER-FUSER	1	1/PP									
18	4400 668330	SPL-ROLL-SI	2	1/P									
19	4400 668610	BRADE-HR-F-140	1	1/KP									
20	4400 668710	BRKT-EXIT-SW	1	1/P									
21	4400 677440	WH-HTR-140	1	1/P									
22	4400 668900	MYLAR-COV-FUSER	2	5/P									
23	4843 306487	J-0-175694-4	1	5/P									
24	4843 306486	J-0-175694-3	1	5/P									
51	4842 040846	PTBR30*08MSZN3A	1	50/P									
52	4842 040370	TBID3006MSZN3L	8	50/P									
53	7043 300613	BID30*06MSCR1AI	2	50/P									
54	4842 040694	TZPAN3010MSZN3L	1	50/P									

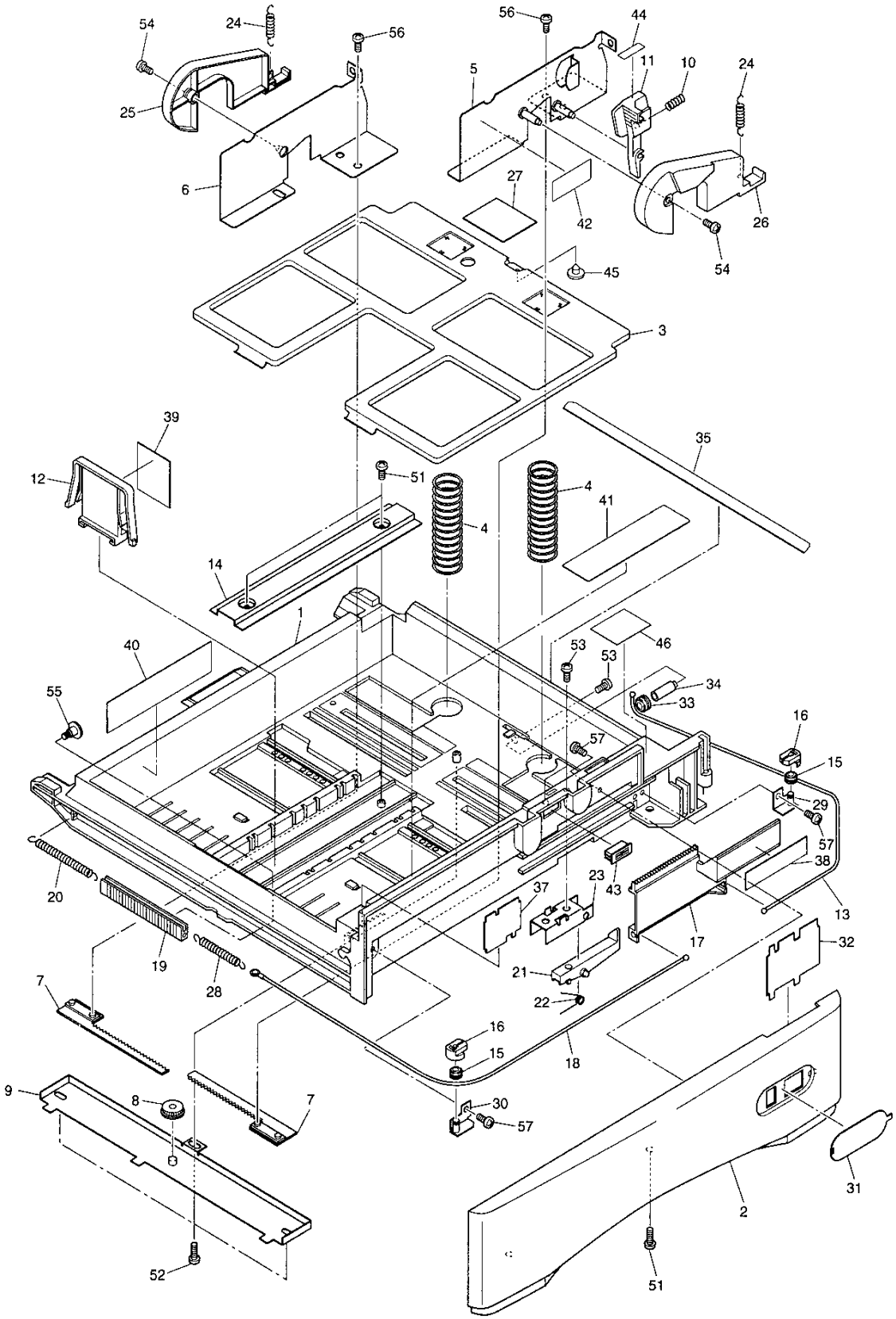
54
24
56
25
6
56
44
5
11
10
24
27
42
26
54
45
3
39
12
51
4
41
35
4
14
1
40
53
53
46
34
33
55
16
57
15
29
57
38
20
37
23
43
13
19
28
17
32
21
7
22
16
15
18
9
8
30
57
7
31
2
52
51

ITEM NO.	PARTS NO.	PARTS NAME	Q'TY / PAGE	Q'TY / PACK	SPE PRICE IN NONE	P	I	R	BSI NO.	TO	FROM	SERIAL NO.	REMARKS
1	4402 903200	CASSETTE-141	1	1/PP									
2	4400 661460	COVER-CST-140	1	1/PP									
3	4400 662600	K-TRAY-140	1	1/PP									
4	4400 670570	SPC310-120-0132	2	5/P									
5	4400 661470	K-WALL-GUIDE-F	1	1/P									
6	4400 661480	K-WALL-GUIDE-R	1	1/P									
7	4400 661550	RACK-ADJ-CST	2	1/P									
8	4407 726480	PINION-18-395	1	1/P									
9	4400 661570	K-COV-BTM-CST	1	1/P									
10	4400 661440	SPC072-080-0270	1	5/P									
11	4400 661560	ARM-ADJUST	1	1/P									
12	4400 661540	GUIDE-PLT-BACK	1	1/P									
13	4400 662200	WIRE-CASET-R	1	1/P									
14	4400 662290	BRKT-GUIDE-BACK	1	1/P									
15	4400 662070	PLY-WIRE-CASET	2	1/P									
16	4400 662060	HOLDER-PLY-WIRE	2	1/P									
17	4400 662180	RACK-CASET	1	1/P									
18	4400 662210	WIRE-CASET-L	1	1/P									
19	4400 662100	RACK-CASET-L	1	1/P									
20	4400 662150	SPE081-055-0575	1	5/P									
21	4400 683110	RCHT-CASSETTE	1	1/P									
22	4400 662170	SPR-RCHT-CST	1	5/P									
23	4400 662030	BRKT-RCHT	1	1/P									
24	4400 670490	SPE057-050-0253	2	5/P									
25	4400 670420	LEVER-TRAY-R	1	1/P									
26	4400 670410	LEVER-TRAY-F	1	1/P									
27	4400 662270	PAD-BRAKE-TRAY	1	1/P						027 1			
27 1	4400 683100	PAD-BRAKE-TRAY	1	1/P		C	E	H	F98B203		027		
28	4400 662280	SPE082-120-0434	1	5/P									
29	4400 662320	K-BKT-WIRE-R	1	1/P									
30	4400 662330	K-BKT-WIRE-L	1	1/P									
31	4400 662010	F-COV-SIZE-CST	1	1/P									
32A	4400 662250	PLATE-SIZE-L	1	1/P									USA SIZE
32B	4400 662230	PLATE-SIZE-A	1	1/P									EUR SIZE
33	4400 662370	PLY-WIRE-TRAY	1	1/P									
34	4400 662380	STUD-PLY-TRAY	1	1/P									
35	4400 670590	MYLAR-CASET	1	1/KP									
37A	4400 662260	PLATE-SIZE-S	1	1/P									USA SIZE
37B	4400 662240	PLATE-SIZE-B	1	1/P									EUR SIZE
38	4400 662760	LBL-EMPTY-140	1	5/P									
39	4400 683080	LBL-LIMIT-140-1	1	5/P									
40	4400 662720	LBL-INST-SIZE	1	1/KP									
41	4400 662780	LBL-INST-CST	1	1/KP									
42B	4400 662790	LBL-DIRECT-P	1	5/P									FOR EUR
43	4402 202680	MG-CATCH-22	1	1/P									
44	4400 662630	LBL-ARROW-ARM	1	5/P									
45	4400 831600	CUSH-GLASS	1	5/P									
46	4400 683090	LBL-LIMIT-140-2	1	5/P									
51	4842 040849	PTBR40*08MSZN3A	5	50/P									
52	4842 040495	PTBR30*06MSZN3A	3	50/P									
53	7043 300813	BID30*08MSCR1A	3	50/P									
54	7640 300551	ZPAN30*05MSZN3A	2	50/P									
55	4400 662390	SCREW-CASET	1	10/P									
56	4842 040148	12ZPAN3008MSZ3A	4	50/P									
57	4842 040846	PTBR30*08MSZN3A	3	50/P									

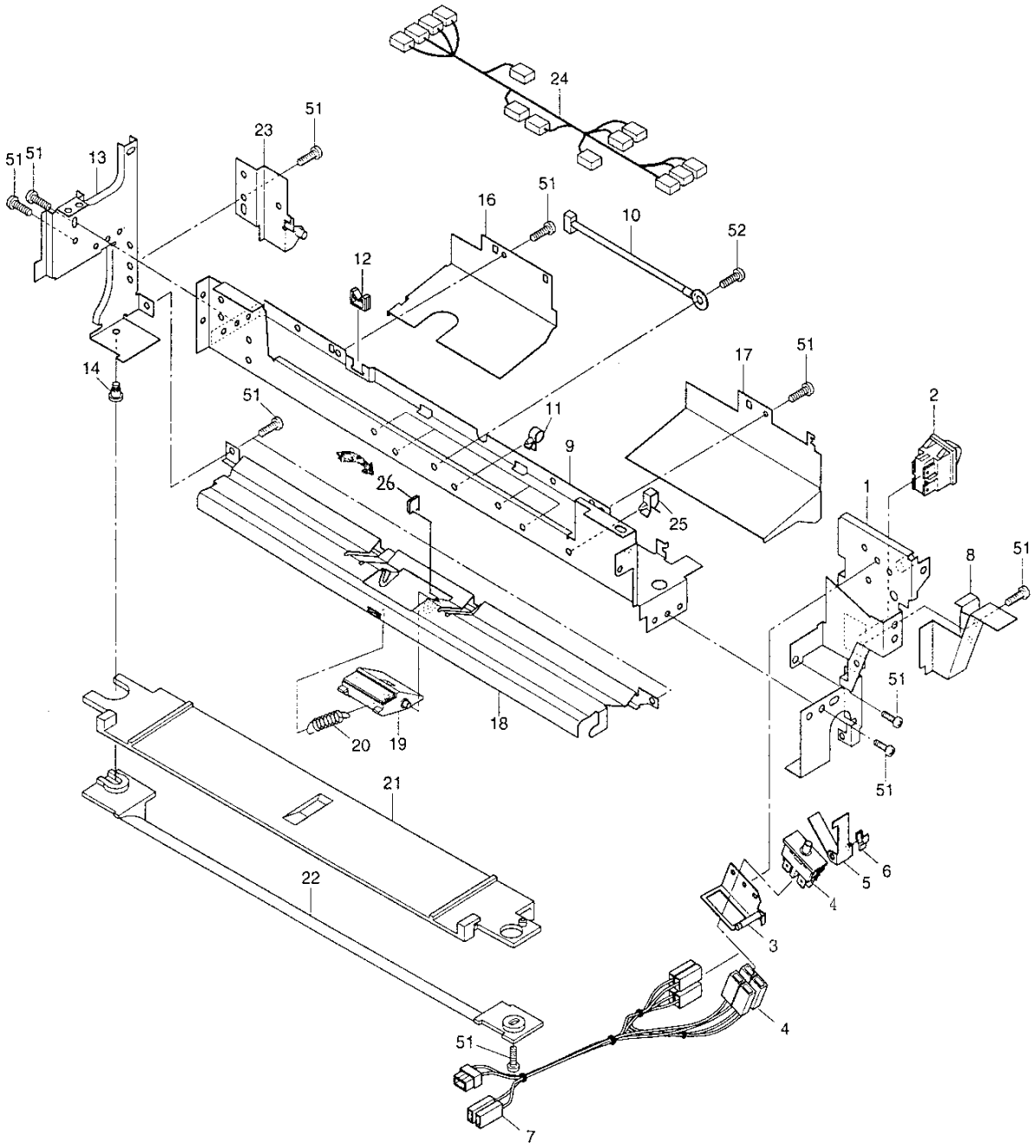
24
51
23
51
51
13
16
51
10
52
12
14
17
51
51
11
2
9
26
25
1
8
51
51
20
19
18
51
21
6
5
22
4
3
4
51
7

TOSHIBA

ITEM NO.	PARTS NO.	PARTS NAME	Q'TY / PAGE	Q'TY / PACK	SPE PRICE IN NONE	P	I	R	BSI NO.	TO	FROM	SERIAL NO.	REMARKS
1	4402 901850	K-FRAME-F	1	N/A***		A	-	J	F97I037				
2	4401 981100	SZ-AJ8R2094ZU01	1	1/D					F97I037				
3	4400 682250	K-BRKT-SW-DOOR	1	1/P					F97I037				
4	4400 678360	SZ-DOOR-140	1	1/D					F97I037				
5	4400 682280	SPL035-S304-SWD	1	1/P					F97I037				
6	4408 354010	STOPPER-REAR	1	1/P					F97I037				
7	4402 907050	WH-AC-MAIN-141	1	1/P					F97I037				
8	4402 901900	COVER-SW	1	1/P					F97I037				
9	4402 901840	STAY-SFB	1	1/P					F97I037				
10	4400 678890	THMS-DRM-140	1	1/P					F97I037				
11	4400 902490	BAND-PS100	5	5/P					F97I037				
12	4843 391367	BD/W-EDS-0607M	1	5/P					F97I037				
13	4402 901880	FRAME-R	1	1/P					F97I037				
14	4402 203820	SCREW-BKT-DEV	1	50/P					F97I037				
16	4402 902200	GUIDE-ENT-SFB-R	1	1/PP					F97I037				
17	4402 902190	GUIDE-ENT-SFB-F	1	1/PP					F97I037				
18	4402 902160	GUIDE-SFB	1	1/PP					F97I037				
19	4401 965130	K-PAD-SPT-BYP	1	1/P					F97I037				
20	4402 902170	SPE057-070-0236	1	5/P					F97I037				
21	4402 901920	GUIDE-U-PFU	1	1/PP					F97I037				
22	4402 901910	GUIDE-U-CST	1	1/PP					F97I037				
23	4402 902240	K-BRKT-TRAY-R	1	1/P					F97I037				
24	4402 907020	K-WH-LGC0PT-141	1	1/P					F97I037				
25	4843 581215	Z-MA-S-5	1	10/P					F97I037				
26	4401 966660	PAD-LEVER-SPT	1	5/P		F	-	J	F98C215				
51	4842 040370	TBID3006MSZN3L	12	50/P					F97I037				
52	4401 791080	SCREW-MR-M3-6	1	50/P					F97I037				

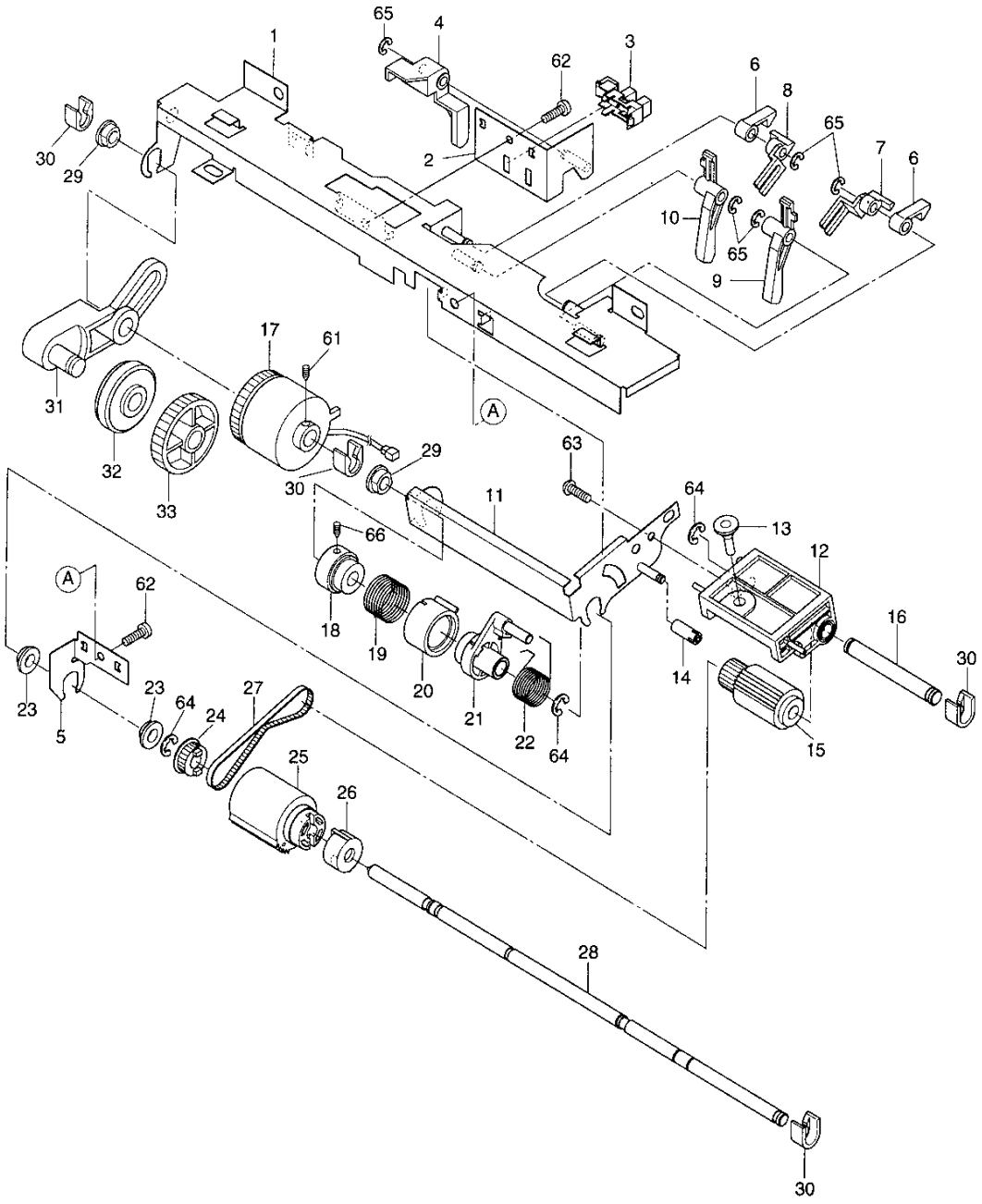
65
4
1
62
3
6
8
65
7
6
30
29
2
10
65
9
17
61
31
32
33
30
29
63
11
64
13
12
66
A
62
18
19
20
21
22
64
16
30
14
15
23
5
23
64
24
27
25
26
28
30

ITEM NO.	PARTS NO.	PARTS NAME	Q'TY / PAGE	Q'TY / PACK	SPE PRICE IN NONE	P	I	R	BSI NO.	TO	FROM	SERIAL NO.	REMARKS
1	4402 902020	K-BKT-SFB-L	1	1/P					F97I037				
2	4401 966580	K-BKT-SZ-ACT	1	1/P					F97I037				
3	4401 983230	SZ-LG248L1	1	1/C					F97I037				
4	4401 965190	ACT-PAPER-SW	1	1/P					F97I037				
5	4401 966570	HLDR-SHAFT-BYP	1	1/P					F97I037				
6	4401 965270	ARM-STOPPER	2	5/P					F97I037				
7	4401 965250	LEVER-STOPPER-F	1	1/P					F97I037				
8	4401 965260	LEVER-STOPPER-R	1	1/P					F97I037				
9	4401 965230	STOPPER-SHEET-F	1	1/P					F97I037				
10	4401 965240	STOPPER-SHEET-R	1	1/P					F97I037				
11	4401 966550	K-BKT-LIFT-PICK	1	1/P					F97I037				
12	4401 965200	HOLDER-PICK/UP	1	1/P					F97I037				
13	4402 242330	SPACER-DF	1	5/P					F97I037				
14	4401 965280	COLLAR-BYPASS	1	5/P					F97I037				
15	4401 966500	K-ROLL-PICK-BYP	1	1/P					F97I037				
16	4401 965380	SHAFT-PICK-BYP	1	1/P					F97I037				
17	4401 969920	ASM-CLT-G28-CW6	1	1/C					F97I037				
18	4401 965300	ARBOR-PICK-UP	1	1/P					F97I037				
19	4401 966620	SPR-0.8-13.82-R	1	5/P					F97I037				
20	4401 965340	SLEEVE-BYPASS	1	1/P					F97I037				
21	4401 965310	LEVER-PICK	1	1/P					F97I037				
22	4401 965350	SPA130-100-R	1	1/P					F97I037				
23	4401 966470	BUSH-6-3.7	2	5/P					F97I037				
24	4401 966400	PLY/T-2GT020-06	1	1/P					F97I037				
25	4402 038460	K-ROLL-FEED-1	1	1/P					F97I037				
26	4402 833110	CLUTCH-6L	1	1/P					F97I037				
27	4401 965220	BLT/T142-2GT2.8	1	1/P					F97I037				
28	4402 902040	SHAFT-SFB	1	1/P					F97I037				
29	4400 802070	BUSH-6L	2	5/P					F97I037				
30	4407 972860	STOP-RING-6-5	4	5/P					F97I037				
31	4402 902050	K-HOLDER-IDLER	1	1/P					F97I037				
32	4402 902080	COLLAR-SFB	1	5/P					F97I037				
33	4402 902090	GEAR-24-1	1	1/P					F97I037				
61	4842 011062	9HSS30-04MSFB	1	50/P					F97I037				
62	4842 040370	TBID3006MSZN3L	4	50/P					F97I037				
63	4842 040846	PTBR30*08MSFB	1	50/P					F97I037				
64	7405 005031	ERR-050SKZN3A	3	50/P					F97I037				
65	7405 003031	ERR-030SKZN3A	5	50/P					F97I037				
66	4842 011083	9HSS40/06MSFB	1	50/P					F97I037				

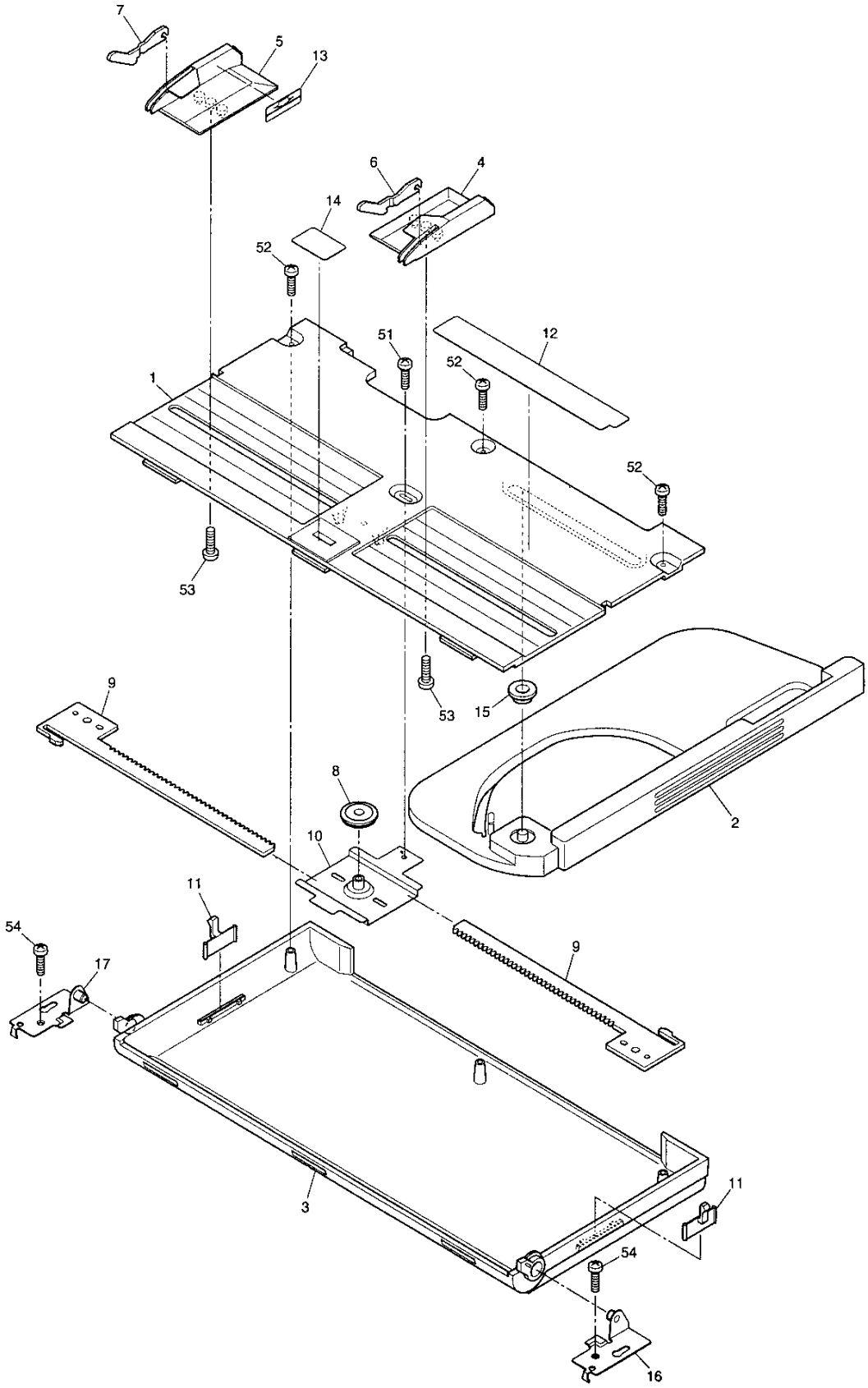

TOSHIBA

ITEM NO.	PARTS NO.	PARTS NAME	Q'TY / PAGE	Q'TY / PACK	SPE PRICE IN NONE	P	I	R	BSI NO.	TO	FROM	SERIAL NO.	REMARKS
1	4402 902350	TRAY-BYPASS-U	1	1/PP					F97I037				
2	4402 902370	TRAY-BYPASS-M	1	1/PP					F97I037				
3	4402 902360	TRAY-BYPASS-L	1	1/PP					F97I037				
4	4402 902380	GUIDE-F-TRAY	1	1/PP					F97I037				
5	4402 902390	GUIDE-R-TRAY	1	1/PP					F97I037				
6	4402 902400	GUIDE-SUB-F-SFB	1	1/P					F97I037				
7	4402 902410	GUIDE-SUB-R-SFB	1	1/PP					F97I037				
8	4407 726480	PINION-18-295	1	1/P					F97I037				
9	4401 966600	RACK-BYPASS	2	1/P					F97I037				
10	4402 902420	K-BRKT-PINION	1	1/P					F97I037				
11	4402 902450	HOOK-TRAY	2	1/P					F97I037				
12	4402 902460	LBL-TRAY-J	1	1/KP					F97I037				
13	4401 966730	LBL-TRAY-SFB	1	5/P					F97I037	013 1			
13 1	4402 902510	LBL-TRAY-SFB-6	1	5/P		E	-	J	F98C215		013		
14	4400 901130	PAD-BRAKE	1	5/P					F97I037				
15	4401 966610	BUSH-IDLER	1	5/P					F97I037				
16	4402 902210	K-BRKT-TRAY-F	1	1/P					F97I037				
17	4402 902240	K-BRKT-TRAY-R	1	1/P					F97I037				
51	7043 300613	BID30*06MSCR1AI	1	50/P					F97I037				
52	4842 041819	TBIDP-30*08-3C	3	50/P					F97I037				
53	4842 040495	PTBR30*06MSZN3A	2	50/P					F97I037				
54	4842 040370	TBID3006MSZN3L	2	50/P					F97I037				

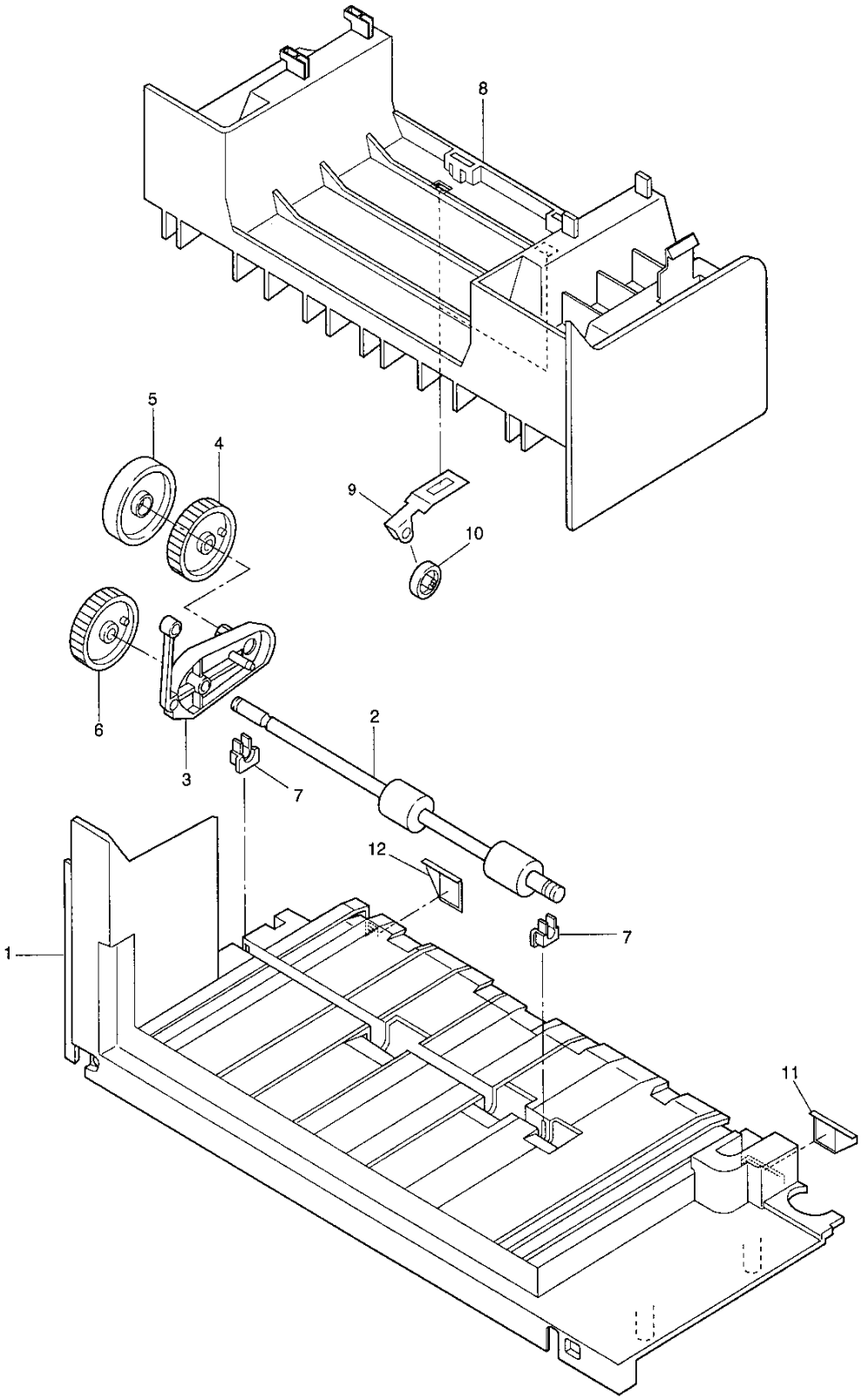
8
5
4
9
10
6
3
2
7
12
7
1
11

ITEM NO.	PARTS NO.	PARTS NAME	Q'TY / PAGE	Q'TY / PACK	SPE PRICE IN NONE	P	I	R	BSI NO.	TO	FROM	SERIAL NO.	REMARKS
1	4400 662830	COVER-SORT-L	1	1/PP									
2	4400 662810	K-ROLL-F-SORT	1	1/KP									
3	4400 662860	ARM-VOINT-SORT	1	1/P									
4	4400 662840	GEAR-Z42-IDLE	1	1/P									
5	4400 662850	CLR-IDLE-SORT	1	1/P									
6	4400 662870	GEAR-Z40-SORT	1	1/P									
7	4400 668520	BUSH-ROLL-EXIT	2	5/P									
8	4400 662920	COVER-SORT-U	1	1/PP									
9	4400 662910	SPL-FEED-SORT-U	2	5/P									
10	4400 832980	IDLE-EXIT-18R	2	5/P									
11	4400 675570	K-PLT-COV-SRT-F	1	1/P									
12	4400 675550	K-PLT-COV-SRT-R	1	1/P									

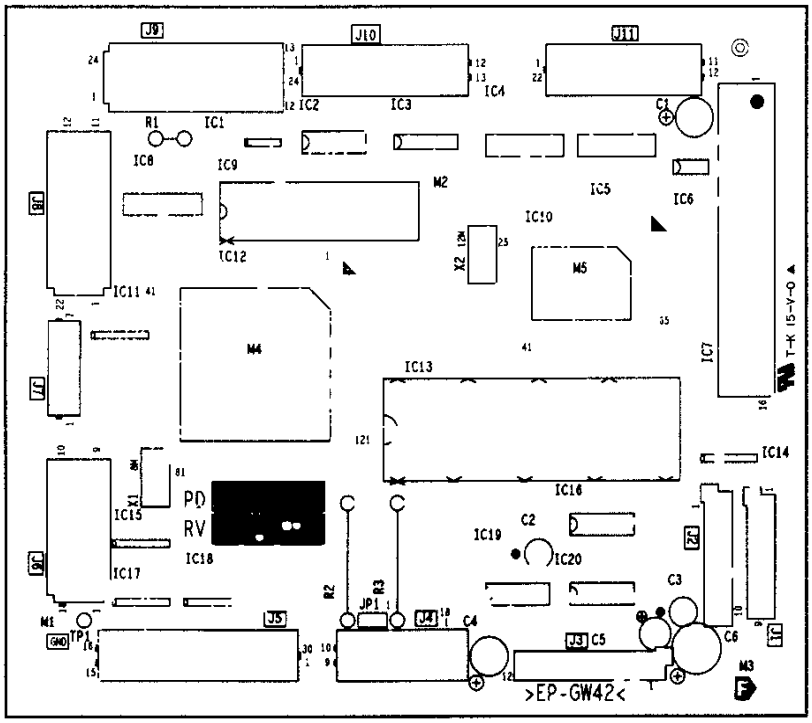
J9
J10
J11
IC1
IC2
IC3
IC4
IC5
IC6
IC7
IC8
IC9
IC10
IC11
IC12
IC13
IC14
IC15
IC16
IC17
IC18
IC19
IC20
M1
M2
M3
M4
M5
M6
M7
M8
PD
RV
>EP-GW42<

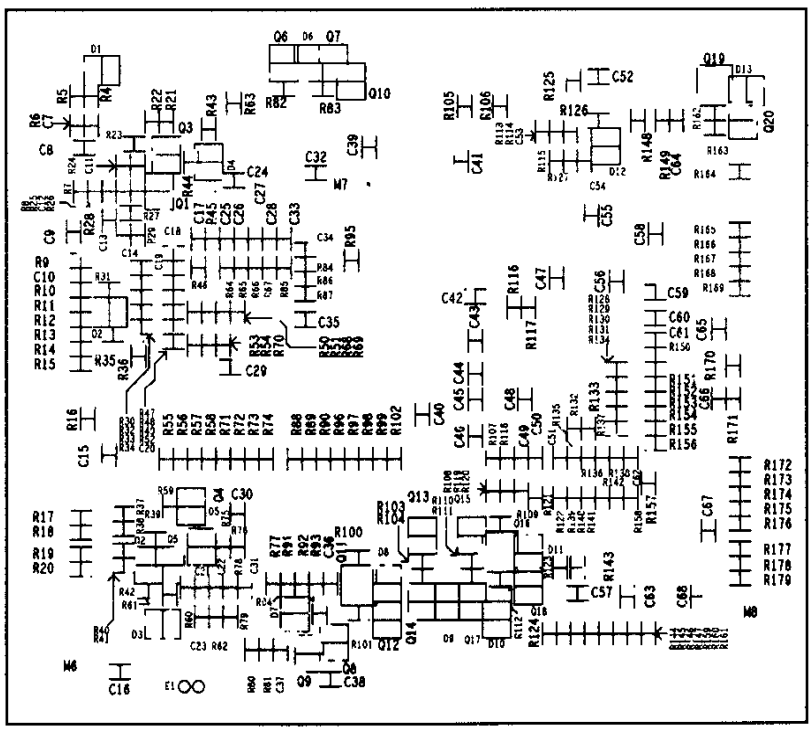

ITEM NO.	PARTS NO.	PARTS NAME	Q'TY / PAGE	Q'TY / PACK	SPE PRICE IN NONE	P	I	R	BSI NO.	TO	FROM	SERIAL NO.	REMARKS
0	4402 906020	PWA-F-LGC-141	1	1/SB					F97I037				
1	4402 906120	PWB-F-LGC-141	1	N/A***					F97I037				
2	4843 321624	SKT-2-382571-3	1	5/S									IC9
3	4843 321565	SKT-CLC10400101	1	5/S									IC13
11	4843 113437	IC-LM358M(EL)	1	5/S									
12	4843 116260	IC-M62353FPT1	1	1/S					F97I037				
13	3040 274647	IC-TD62305F(TP2	1	5/S									
14	3040 274687	IC-TD62308FTP2	1	1/S									
15	3040 274687	IC-TD62308FTP2	1	1/S									
16	3040 349270	IC-TA75393F	1	5/S									
17	4843 113784	IC-STK6712BMK3	1	1/S									
18	3040 274687	IC-TD62308FTP2	1	1/S									
20	3040 522268	IC-TMP96C141AFZ	1	1/S									
21	4843 112762	IC-DM7407M	1	5/S									
22	4843 115525	IC-D65641GD160	1	1/S									
24	4843 112762	IC-DM7407M	1	5/S									
25	4843 112762	IC-DM7407M	1	5/S									
26	4843 113408	IC-MC74HC00F	1	5/S									
27	4843 112762	IC-DM7407M	1	5/S									
28	4843 112762	IC-DM7407M	1	5/S									
29	4843 113612	IC-MC74HC14FL	1	5/S									
30	4843 112458	IC-MC14538BFL	1	5/S									
41	3036 004012	Q-RN1401(TE85R)	1	5/P									
42	3036 546922	Q-2SA1313YTE85R	1	10/P									
43	3036 014012	Q-RN2401(TE85R)	1	5/P									
44	3036 014012	Q-RN2401(TE85R)	1	5/P									
45	3036 004012	Q-RN1401(TE85R)	1	5/P									
46	3036 546922	Q-2SA1313YTE85R	1	10/P									
47	3036 004012	Q-RN1401(TE85R)	1	5/P									
48	3036 014012	Q-RN2401(TE85R)	1	5/P									
49	3036 004012	Q-RN1401(TE85R)	1	5/P									
50	3036 014012	Q-RN2401(TE85R)	1	5/P									
51	3036 341976	Q-2SC2873Y(TE12	1	10/P									
52	3036 014012	Q-RN2401(TE85R)	1	5/P									
53	3036 004012	Q-RN1401(TE85R)	1	5/P									
54	3036 546922	Q-2SA1313YTE85R	1	10/P									
55	3036 004012	Q-RN1401(TE85R)	1	5/P									
56	3036 341976	Q-2SC2873Y(TE12	1	10/P									
57	3036 546922	Q-2SA1313YTE85R	1	10/P									
58	3036 014012	Q-RN2401(TE85R)	1	5/P									
59	3036 341976	Q-2SC2873Y(TE12	1	10/P									
60	3036 014012	Q-RN2401(TE85R)	1	5/P									
61	3036 014012	Q-RN2401(TE85R)	1	5/P					F97I037				
62	3036 014012	Q-RN2401(TE85R)	1	5/P					F97I037				
63	3036 014012	Q-RN2401(TE85R)	1	5/P					F97I037				
64	3036 014012	Q-RN2401(TE85R)	1	5/P					F97I037				
71	3037 150651	D-1SS184(TE85R)	1	5/P									
72	3037 150502	D-1SS181(TE85R)	1	10/P									
73	3037 150651	D-1SS184(TE85R)	1	5/P									
74	3037 238422	D-02CZ5.1Y-85R	1	5/P									
75	3037 151102	D-1SS193(TE85R)	1	5/P									
76	3037 151102	D-1SS193(TE85R)	1	5/P									
77	3037 150502	D-1SS181(TE85R)	1	10/P									
78	3037 151102	D-1SS193(TE85R)	1	5/P									
79	3037 151102	D-1SS193(TE85R)	1	5/P									
80	3037 151102	D-1SS193(TE85R)	1	5/P									
81	3037 151102	D-1SS193(TE85R)	1	5/P									
82	3037 238422	D-02CZ5.1Y-85R	1	5/P									
83	3037 151102	D-1SS193(TE85R)	1	5/P									
84	3037 151102	D-1SS193(TE85R)	1	5/P					F97I037				
85	3037 151102	D-1SS193(TE85R)	1	5/P					F97I037				
91	4843 250419	X-CST8.00MTW	1	5/S									
92	4843 250441	X-CST12.0MTW	1	5/S									
101	4843 406664	CE04W1V220M	1	10/P									
102	4843 410397	CE-04W1C4R7M	1	10/P									
103	4843 410397	CE-04W1C4R7M	1	10/P									
104	4843 406648	CE04W1C470M	1	10/P									
105	4843 406647	CE04W1C220M	1	10/P									
106	4843 406665	CE04W1V470M	1	10/P									
107	4843 410862	CTP-K1F1E104ZT	1	10/P									
108	4843 410862	CTP-K1F1E104ZT	1	10/P									

ITEM NO.	PARTS NO.	PARTS NAME	Q'TY / PAGE	Q'TY / PACK	SPE PRICE IN NONE	P	I	R	BSI NO.	TO	FROM	SERIAL NO.	REMARKS
109	4843 410862	CTP-K1F1E104ZT	1	10/P									
110	4843 410862	CTP-K1F1E104ZT	1	10/P									
111	4843 410862	CTP-K1F1E104ZT	1	10/P									
112	4843 410862	CTP-K1F1E104ZT	1	10/P									
113	4843 410725	CTP-M1B1H222KT	1	10/P									
114	4843 410725	CTP-M1B1H222KT	1	10/P									
115	4843 410862	CTP-K1F1E104ZT	1	10/P									
116	4843 412139	CTP-M1F1H104ZT	1	10/P									
117	4843 410721	CTP-M1B1H102KT	1	10/P									
118	4843 410862	CTP-K1F1E104ZT	1	10/P									
119	4843 410725	CTP-M1B1H222KT	1	10/P									
120	4843 410862	CTP-K1F1E104ZT	1	10/P									
121	4843 410862	CTP-K1F1E104ZT	1	10/P									
122	4843 410725	CTP-M1B1H222KT	1	10/P									
123	4843 410862	CTP-K1F1E104ZT	1	10/P									
124	4843 410862	CTP-K1F1E104ZT	1	10/P									
125	4843 410721	CTP-M1B1H102KT	1	10/P									
126	4843 410721	CTP-M1B1H102KT	1	10/P									
127	4843 410721	CTP-M1B1H102KT	1	10/P									
128	4843 410725	CTP-M1B1H222KT	1	10/P									
129	4843 410862	CTP-K1F1E104ZT	1	10/P									
130	4843 410862	CTP-K1F1E104ZT	1	10/P									
131	4843 410862	CTP-K1F1E104ZT	1	10/P									
132	4843 410862	CTP-K1F1E104ZT	1	10/P									
133	4843 410725	CTP-M1B1H222KT	1	10/P									
134	4843 410862	CTP-K1F1E104ZT	1	10/P									
135	4843 410862	CTP-K1F1E104ZT	1	10/P									
136	4843 410862	CTP-K1F1E104ZT	1	10/P									
137	4843 410721	CTP-M1B1H102KT	1	10/P									
138	4843 410862	CTP-K1F1E104ZT	1	10/P									
139	4843 410862	CTP-K1F1E104ZT	1	10/P									
140	4843 410862	CTP-K1F1E104ZT	1	10/P									
141	4843 410862	CTP-K1F1E104ZT	1	10/P									
142	4843 410862	CTP-K1F1E104ZT	1	10/P									
143	4843 410862	CTP-K1F1E104ZT	1	10/P									
144	4843 410862	CTP-K1F1E104ZT	1	10/P									
145	4843 410862	CTP-K1F1E104ZT	1	10/P									
146	4843 410862	CTP-K1F1E104ZT	1	10/P									
147	4843 410862	CTP-K1F1E104ZT	1	10/P									
148	4843 410862	CTP-K1F1E104ZT	1	10/P									
149	4843 410725	CTP-M1B1H222KT	1	10/P									
150	4843 410862	CTP-K1F1E104ZT	1	10/P									
151	4843 410862	CTP-K1F1E104ZT	1	10/P									
152	4843 410862	CTP-K1F1E104ZT	1	10/P									
153	4843 412139	CTP-M1F1H104ZT	1	10/P									
154	4843 410725	CTP-M1B1H222KT	1	10/P									
155	4843 410862	CTP-K1F1E104ZT	1	10/P									
156	4843 410862	CTP-K1F1E104ZT	1	10/P									
157	4843 410862	CTP-K1F1E104ZT	1	10/P									
158	4843 410862	CTP-K1F1E104ZT	1	10/P									
159	4843 410862	CTP-K1F1E104ZT	1	10/P									
160	4843 410862	CTP-K1F1E104ZT	1	10/P									
161	4843 410862	CTP-K1F1E104ZT	1	10/P									
162	4843 410862	CTP-K1F1E104ZT	1	10/P									
163	4843 410862	CTP-K1F1E104ZT	1	10/P									
164	4843 412139	CTP-M1F1H104ZT	1	10/P									
165	4843 410862	CTP-K1F1E104ZT	1	10/P									
166	4843 410862	CTP-K1F1E104ZT	1	10/P									
167	4843 410862	CTP-K1F1E104ZT	1	10/P									
168	4843 410862	CTP-K1F1E104ZT	1	10/P									
170	4843 410862	CTP-K1F1E104ZT	1	10/P									
181	4843 075357	RZ-RXE017	1	1/P									
182	4843 074594	RS-1/1PL151JF	1	10/P									
183	4843 074589	RS-1/1PL560JF	1	10/P									
184	4843 072175	RTP-2B2A223JDT	1	10/P									
185	4843 072169	RTP-2B2A682JDT	1	10/P									
186	4843 072167	RTP-2B2A472JDT	1	10/P									
187	4843 072171	RTP-2B2A103JDT	1	10/P									
188	4843 072165	RTP-2B2A332JDT	1	10/P									
189	4843 072150	RTP-2B2A181JDT	1	10/P									
190	4843 072164	RTP-2B2A272JDT	1	10/P									

ITEM NO.	PARTS NO.	PARTS NAME	Q'TY / PAGE	Q'TY / PACK	SPE PRICE IN NONE	P	I	R	BSI NO.	TO	FROM	SERIAL NO.	REMARKS
191	4843 072161	RTP-2B2A152JDT	1	10/P									
192	4843 072167	RTP-2B2A472JDT	1	10/P									
193	4843 072167	RTP-2B2A472JDT	1	10/P									
194	4843 072167	RTP-2B2A472JDT	1	10/P									
195	4843 072167	RTP-2B2A472JDT	1	10/P									
196	4843 072167	RTP-2B2A472JDT	1	10/P									
197	4843 072167	RTP-2B2A472JDT	1	10/P									
198	4843 072167	RTP-2B2A472JDT	1	10/P									
199	4843 072167	RTP-2B2A472JDT	1	10/P									
200	4843 072167	RTP-2B2A472JDT	1	10/P									
201	4843 072175	RTP-2B2A223JDT	1	10/P									
202	4843 072167	RTP-2B2A472JDT	1	10/P									
203	4843 072066	RTP-2B2A564JDT	1	10/P									
204	4843 072175	RTP-2B2A223JDT	1	10/P									
205	4843 072159	RTP-2B2A102JDT	1	10/P									
206	4843 072069	RTP-2B2A105JDT	1	10/P									
207	4843 072167	RTP-2B2A472JDT	1	10/P									
208	4843 072166	RTP-2B2A392JDT	1	10/P									
209	4843 072166	RTP-2B2A392JDT	1	10/P									
210	4843 072175	RTP-2B2A223JDT	1	10/P									
211	4843 072167	RTP-2B2A472JDT	1	10/P									
212	4843 072167	RTP-2B2A472JDT	1	10/P									
213	4843 072175	RTP-2B2A223JDT	1	10/P									
214	4843 072167	RTP-2B2A472JDT	1	10/P									
215	4843 072167	RTP-2B2A472JDT	1	10/P									
216	4843 072167	RTP-2B2A472JDT	1	10/P									
217	4843 072167	RTP-2B2A472JDT	1	10/P									
218	4843 072167	RTP-2B2A472JDT	1	10/P									
		1 0 4402906020PWA-F-LGC-141 11/SB							0		0	0	
219	4843 072167	RTP-2B2A472JDT	1	10/P									
220	4843 072167	RTP-2B2A472JDT	1	10/P									
221	4843 072167	RTP-2B2A472JDT	1	10/P									
222	4843 072167	RTP-2B2A472JDT	1	10/P									
223	4843 072175	RTP-2B2A223JDT	1	10/P									
224	4843 072175	RTP-2B2A223JDT	1	10/P									
225	4843 072175	RTP-2B2A223JDT	1	10/P									
226	4843 072175	RTP-2B2A223JDT	1	10/P									
227	4843 072175	RTP-2B2A223JDT	1	10/P									
228	4843 072167	RTP-2B2A472JDT	1	10/P									
229	4843 072159	RTP-2B2A102JDT	1	10/P									
230	4843 072167	RTP-2B2A472JDT	1	10/P									
231	4843 072147	RTP-2B2A101JDT	1	10/P									
232	4843 072167	RTP-2B2A472JDT	1	10/P									
233	4843 072147	RTP-2B2A101JDT	1	10/P									
234	4843 072147	RTP-2B2A101JDT	1	10/P									
235	4843 072167	RTP-2B2A472JDT	1	10/P									
236	4843 072167	RTP-2B2A472JDT	1	10/P									
237	4843 072167	RTP-2B2A472JDT	1	10/P									
238	4843 072167	RTP-2B2A472JDT	1	10/P									
239	4843 072153	RTP-2B2A331JDT	1	10/P									
240	4843 072167	RTP-2B2A472JDT	1	10/P									
241	4843 072159	RTP-2B2A102JDT	1	10/P									
242	4843 072159	RTP-2B2A102JDT	1	10/P									
243	4843 072167	RTP-2B2A472JDT	1	10/P									
244	4843 072175	RTP-2B2A223JDT	1	10/P									
245	4843 072175	RTP-2B2A223JDT	1	10/P									
246	4843 072175	RTP-2B2A223JDT	1	10/P									
247	4843 072167	RTP-2B2A472JDT	1	10/P									
248	4843 072175	RTP-2B2A223JDT	1	10/P									
249	4843 072175	RTP-2B2A223JDT	1	10/P									
250	4843 072175	RTP-2B2A223JDT	1	10/P									
251	4843 072167	RTP-2B2A472JDT	1	10/P									
252	4843 072167	RTP-2B2A472JDT	1	10/P									
253	4843 072167	RTP-2B2A472JDT	1	10/P									
254	4843 072167	RTP-2B2A472JDT	1	10/P									
255	4843 072159	RTP-2B2A102JDT	1	10/P									
256	4843 072167	RTP-2B2A472JDT	1	10/P									
257	4843 072167	RTP-2B2A472JDT	1	10/P									
258	4843 072057	RTP-2B2A104JDT	1	10/P									
259	4843 072068	RTP-2B2A824JDT	1	10/P									
260	4843 072167	RTP-2B2A472JDT	1	10/P									

ITEM NO.	PARTS NO.	PARTS NAME	Q'TY / PAGE	Q'TY / PACK	SPE PRICE IN NONE	P	I	R	BSI NO.	TO	FROM	SERIAL NO.	REMARKS
261	4843 072175	RTP-2B2A223JDT	1	10/P									
262	4843 072167	RTP-2B2A472JDT	1	10/P									
263	4843 072171	RTP-2B2A103JDT	1	10/P									
264	4843 072147	RTP-2B2A101JDT	1	10/P									
265	4843 072167	RTP-2B2A472JDT	1	10/P									
266	4843 072175	RTP-2B2A223JDT	1	10/P									
267	4843 072175	RTP-2B2A223JDT	1	10/P									
268	4843 072167	RTP-2B2A472JDT	1	10/P									
269	4843 072167	RTP-2B2A472JDT	1	10/P									
270	4843 072167	RTP-2B2A472JDT	1	10/P									
271	4843 072162	RTP-2B2A182JDT	1	10/P									
272	4843 072167	RTP-2B2A472JDT	1	10/P									
273	4843 072175	RTP-2B2A223JDT	1	10/P									
274	4843 072167	RTP-2B2A472JDT	1	10/P									
275	4843 072069	RTP-2B2A105JDT	1	10/P									
276	4843 072167	RTP-2B2A472JDT	1	10/P									
277	4843 072167	RTP-2B2A472JDT	1	10/P									
278	4843 072167	RTP-2B2A472JDT	1	10/P									
279	4843 072167	RTP-2B2A472JDT	1	10/P									
280	4843 072159	RTP-2B2A102JDT	1	10/P									
281	4843 072167	RTP-2B2A472JDT	1	10/P									
282	4843 072167	RTP-2B2A472JDT	1	10/P									
283	4843 072171	RTP-2B2A103JDT	1	10/P									
284	4843 072167	RTP-2B2A472JDT	1	10/P									
285	4843 072167	RTP-2B2A472JDT	1	10/P									
286	4843 072167	RTP-2B2A472JDT	1	10/P									
287	4843 072175	RTP-2B2A223JDT	1	10/P									
288	4843 072175	RTP-2B2A223JDT	1	10/P									
289	4843 072159	RTP-2B2A102JDT	1	10/P									
290	4843 072171	RTP-2B2A103JDT	1	10/P									
291	4843 072167	RTP-2B2A472JDT	1	10/P									
292	4843 072167	RTP-2B2A472JDT	1	10/P									
293	4843 072171	RTP-2B2A103JDT	1	10/P									
294	4843 072173	RTP-2B2A153JDT	1	10/P									
295	4843 072171	RTP-2B2A103JDT	1	10/P									
296	4843 072167	RTP-2B2A472JDT	1	10/P									
297	4843 072167	RTP-2B2A472JDT	1	10/P									
298	4843 072175	RTP-2B2A223JDT	1	10/P									
299	4843 072175	RTP-2B2A223JDT	1	10/P									
300	4843 072167	RTP-2B2A472JDT	1	10/P									
301	4843 072175	RTP-2B2A223JDT	1	10/P									
302	4843 072175	RTP-2B2A223JDT	1	10/P									
303	4843 072167	RTP-2B2A472JDT	1	10/P									
304	4843 072167	RTP-2B2A472JDT	1	10/P									
305	4843 072167	RTP-2B2A472JDT	1	10/P									
306	4843 072177	RTP-2B2A333JDT	1	10/P									
307	4843 072175	RTP-2B2A223JDT	1	10/P									
308	4843 072175	RTP-2B2A223JDT	1	10/P									
309	4843 072175	RTP-2B2A223JDT	1	10/P									
310	4843 072175	RTP-2B2A223JDT	1	10/P									
311	4843 072175	RTP-2B2A223JDT	1	10/P									
313	4843 072175	RTP-2B2A223JDT	1	10/P									
314	4843 072175	RTP-2B2A223JDT	1	10/P									
315	4843 072159	RTP-2B2A102JDT	1	10/P									
316	4843 072159	RTP-2B2A102JDT	1	10/P									
317	4843 072159	RTP-2B2A102JDT	1	10/P									
318	4843 072175	RTP-2B2A223JDT	1	10/P									
319	4843 072159	RTP-2B2A102JDT	1	10/P									
320	4843 072159	RTP-2B2A102JDT	1	10/P									
321	4843 072159	RTP-2B2A102JDT	1	10/P									
322	4843 072159	RTP-2B2A102JDT	1	10/P									
323	4843 072167	RTP-2B2A472JDT	1	10/P									
324	4843 072167	RTP-2B2A472JDT	1	10/P									
325	4843 072167	RTP-2B2A472JDT	1	10/P									
326	4843 072167	RTP-2B2A472JDT	1	10/P									
327	4843 072167	RTP-2B2A472JDT	1	10/P									
328	4843 072167	RTP-2B2A472JDT	1	10/P									
329	4843 072167	RTP-2B2A472JDT	1	10/P									
330	4843 072167	RTP-2B2A472JDT	1	10/P									
331	4843 072175	RTP-2B2A223JDT	1	10/P									
332	4843 072175	RTP-2B2A223JDT	1	10/P									

ITEM NO.	PARTS NO.	PARTS NAME	Q'TY / PAGE	Q'TY / PACK	SPE PRICE IN NONE	P	I	R	BSI NO.	TO	FROM	SERIAL NO.	REMARKS
333	4843 072175	RTP-2B2A223JDT	1	10/P									
334	4843 072175	RTP-2B2A223JDT	1	10/P									
335	4843 072175	RTP-2B2A223JDT	1	10/P									
336	4843 072175	RTP-2B2A223JDT	1	10/P									
337	4843 072069	RTP-2B2A105JDT	1	10/P									
338	4843 072175	RTP-2B2A223JDT	1	10/P									
339	4843 072167	RTP-2B2A472JDT	1	10/P									
340	4843 072167	RTP-2B2A472JDT	1	10/P									
341	4843 072167	RTP-2B2A472JDT	1	10/P									
342	4843 072167	RTP-2B2A472JDT	1	10/P									
343	4843 072159	RTP-2B2A102JDT	1	10/P									
344	4843 072167	RTP-2B2A472JDT	1	10/P									
345	4843 072167	RTP-2B2A472JDT	1	10/P									
346	4843 072167	RTP-2B2A472JDT	1	10/P									
347	4843 072167	RTP-2B2A472JDT	1	10/P									
348	4843 072167	RTP-2B2A472JDT	1	10/P									
349	4843 072167	RTP-2B2A472JDT	1	10/P									
350	4843 072167	RTP-2B2A472JDT	1	10/P									
351	4843 072167	RTP-2B2A472JDT	1	10/P									
352	4843 072167	RTP-2B2A472JDT	1	10/P									
353	4843 072167	RTP-2B2A472JDT	1	10/P									
354	4843 072167	RTP-2B2A472JDT	1	10/P									
355	4843 072167	RTP-2B2A472JDT	1	10/P									
356	4843 072167	RTP-2B2A472JDT	1	10/P									
357	4843 072167	RTP-2B2A472JDT	1	10/P									
358	4843 072167	RTP-2B2A472JDT	1	10/P									
359	4843 072167	RTP-2B2A472JDT	1	10/P									
360	4843 072175	RTP-2B2A223JDT	1	10/P					F97I037				
361	4843 072175	RTP-2B2A223JDT	1	10/P					F97I037				
362	4843 072167	RTP-2B2A472JDT	1	10/P					F97I037				
363	4843 072167	RTP-2B2A472JDT	1	10/P					F97I037				
364	4843 072159	RTP-2B2A102JDT	1	10/P					F97I037				
365	4843 072167	RTP-2B2A472JDT	1	10/P					F97I037				
366	4843 072167	RTP-2B2A472JDT	1	10/P					F97I037				
367	4843 072159	RTP-2B2A102JDT	1	10/P					F97I037				
371	4843 307998	J-53324-0910	1	5/P									
372	4843 307999	J-53324-1010	1	5/P									
373	4843 308001	J-53324-1210	1	5/P									
374	4843 307781	J-53313-1815	1	5/P									
375	4843 307787	J-53313-3015	1	5/P									
376	4843 306167	J-1-175132-8	1	5/P									
377	4843 306195	J-0-175487-7	1	5/P									
378	4843 306165	J-2-175132-2	1	5/P									
379	4843 306164	J-2-175132-4	1	5/P									
380	4843 307784	J-53313-2415	1	5/P									
381	4843 307783	J-53313-2215	1	5/P									
382	4843 307996	J-53324-0710	1	5/P					F97I037				
383	4843 307996	J-53324-0710	1	5/P					F97I037				
401	4400 848870	LINE-JUMPER-5	1	10/P									

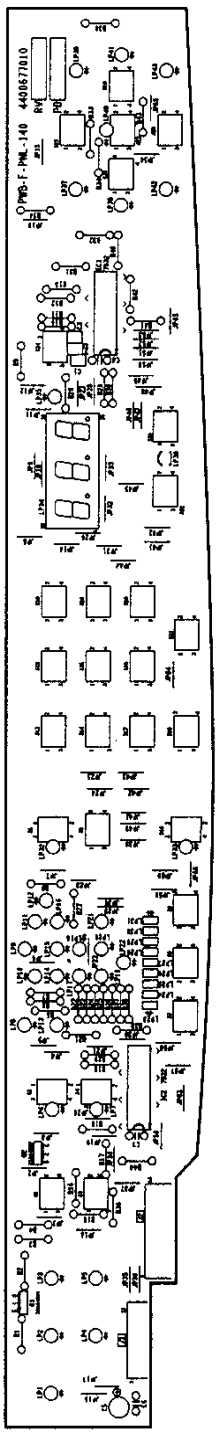

ITEM NO.	PARTS NO.	PARTS NAME	Q'TY / PAGE	Q'TY / PACK	SPE PRICE IN NONE	P	I	R	BSI NO.	TO	FROM	SERIAL NO.	REMARKS
0	4400 677000	PWA-F-PNL-140	1	1/SB									
1	4400 677010	PWB-F-PNL-140	1	N/A***									
2	4400 661310	CASE-LED-EXP	1	1/P									
11	4843 114645	IC-LC7932	1	1/S									
12	4843 114645	IC-LC7932	1	1/S									
21	3036 548970	Q-2SA1428-Y	1	5/P									
22	3036 548970	Q-2SA1428-Y	1	5/P									
31	4843 194633	LED-LTL-16KG	1	10/P									
32	4843 194633	LED-LTL-16KG	1	10/P									
33	4843 194633	LED-LTL-16KG	1	10/P									
34	4843 194633	LED-LTL-16KG	1	10/P									
35	4843 194633	LED-LTL-16KG	1	10/P									
36	4843 194633	LED-LTL-16KG	1	10/P									
37	4843 194633	LED-LTL-16KG	1	10/P									
38	4843 194632	LED-LTL-16KR	1	10/P									
39	4843 194632	LED-LTL-16KR	1	10/P									
40	4843 194634	LED-LTL-16KY	1	10/P									
41	4843 194634	LED-LTL-16KY	1	10/P									
42	4843 194634	LED-LTL-16KY	1	10/P									
43	4843 194632	LED-LTL-16KR	1	10/P									
44	4843 194632	LED-LTL-16KR	1	10/P									
45	4843 194632	LED-LTL-16KR	1	10/P									
46	4843 194632	LED-LTL-16KR	1	10/P									
47	4843 194634	LED-LTL-16KY	1	10/P									
48	4843 194633	LED-LTL-16KG	1	10/P									
49	4843 194634	LED-LTL-16KY	1	10/P									
50	4843 194633	LED-LTL-16KG	1	10/P									
51	4843 194632	LED-LTL-16KR	1	10/P									
52	4843 194633	LED-LTL-16KG	1	10/P									
53	4843 194630	LED-LTL-433G	1	10/P									
54	4843 194630	LED-LTL-433G	1	10/P									
55	4843 194630	LED-LTL-433G	1	10/P									
56	4843 194630	LED-LTL-433G	1	10/P									
57	4843 194630	LED-LTL-433G	1	10/P									
58	4843 194630	LED-LTL-433G	1	10/P									
59	4843 194630	LED-LTL-433G	1	10/P									
60	4843 194630	LED-LTL-433G	1	10/P									
61	4843 194630	LED-LTL-433G	1	10/P									
62	4843 194633	LED-LTL-16KG	1	10/P									
63	4843 194633	LED-LTL-16KG	1	10/P									
64	4843 194594	DSP-LTC-5836G	1	1/S									
65	4843 194633	LED-LTL-16KG	1	10/P									
66	4843 194481	LED-SPR-39MVWF	1	5/P									
67	4843 194633	LED-LTL-16KG	1	10/P									
68	4843 194633	LED-LTL-16KG	1	10/P									
69	4843 194633	LED-LTL-16KG	1	10/P									
70	4843 194633	LED-LTL-16KG	1	10/P									
71	4843 194633	LED-LTL-16KG	1	10/P									
72	4843 194633	LED-LTL-16KG	1	10/P									
73	4843 194633	LED-LTL-16KG	1	10/P									
81	4400 375520	CKM-CC45SL1H330	1	10/P									
82	4400 375520	CKM-CC45SL1H330	1	10/P									
83	4400 375520	CKM-CC45SL1H330	1	10/P									
84	4843 412279	CKM-ECFZ1E104ZF	1	10/P									
85	4843 410373	CE-04C1C330M	1	10/P									
86	4843 412279	CKM-ECFZ1E104ZF	1	10/P									
87	4843 412279	CKM-ECFZ1E104ZF	1	10/P									
101	4843 028567	RD1/4LA150HJ	1	10/P									
102	4843 028595	RD1/4LA2.2KJ	1	10/P									
103	4843 028595	RD1/4LA2.2KJ	1	10/P									
104	4843 028567	RD1/4LA150HJ	1	10/P									
105	4843 028563	RD1/4LA100HJ	1	10/P									
106	4843 028563	RD1/4LA100HJ	1	10/P									
107	4843 028563	RD1/4LA100HJ	1	10/P									
108	4843 028563	RD1/4LA100HJ	1	10/P									
109	4843 028595	RD1/4LA2.2KJ	1	10/P									
110	4843 028563	RD1/4LA100HJ	1	10/P									
111	4843 028563	RD1/4LA100HJ	1	10/P									
112	4843 028563	RD1/4LA100HJ	1	10/P									
113	4843 028563	RD1/4LA100HJ	1	10/P									
114	4843 028579	RD1/4LA470HJ	1	10/P									

ITEM NO.	PARTS NO.	PARTS NAME	Q'TY / PAGE	Q'TY / PACK	SPE PRICE IN NONE	P	I	R	BSI NO.	TO	FROM	SERIAL NO.	REMARKS
115	4843 028595	RD1/4LA2.2KJ	1	10/P									
116	4843 028595	RD1/4LA2.2KJ	1	10/P									
117	4843 028579	RD1/4LA470HJ	1	10/P									
118	4843 028579	RD1/4LA470HJ	1	10/P									
119	4843 028563	RD1/4LA100HJ	1	10/P									
120	4843 028563	RD1/4LA100HJ	1	10/P									
121	4843 028563	RD1/4LA100HJ	1	10/P									
122	4843 028563	RD1/4LA100HJ	1	10/P									
123	4843 028563	RD1/4LA100HJ	1	10/P									
124	4843 028563	RD1/4LA100HJ	1	10/P									
125	4843 028563	RD1/4LA100HJ	1	10/P									
126	4843 028563	RD1/4LA100HJ	1	10/P									
127	4843 028563	RD1/4LA100HJ	1	10/P									
128	4843 028563	RD1/4LA100HJ	1	10/P									
129	4843 028563	RD1/4LA100HJ	1	10/P									
130	4843 028563	RD1/4LA100HJ	1	10/P									
131	4843 028563	RD1/4LA100HJ	1	10/P									
132	4843 028563	RD1/4LA100HJ	1	10/P									
133	4843 028563	RD1/4LA100HJ	1	10/P									
134	4843 028563	RD1/4LA100HJ	1	10/P									
135	4843 028563	RD1/4LA100HJ	1	10/P									
136	4843 028595	RD1/4LA2.2KJ	1	10/P									
137	4843 028563	RD1/4LA100HJ	1	10/P									
138	4843 028563	RD1/4LA100HJ	1	10/P									
139	4843 028563	RD1/4LA100HJ	1	10/P									
140	4843 028563	RD1/4LA100HJ	1	10/P									
141	4843 028563	RD1/4LA100HJ	1	10/P									
142	4843 028563	RD1/4LA100HJ	1	10/P									
143	4843 028563	RD1/4LA100HJ	1	10/P									
144	4843 028579	RD1/4LA470HJ	1	10/P									
161	4843 231490	SP-B3F-1000	1	5/S									
162	4843 231490	SP-B3F-1000	1	5/S									
163	4843 231490	SP-B3F-1000	1	5/S									
164	4843 231490	SP-B3F-1000	1	5/S									
165	4843 231490	SP-B3F-1000	1	5/S									
166	4843 231490	SP-B3F-1000	1	5/S									
167	4843 231490	SP-B3F-1000	1	5/S									
168	4843 231490	SP-B3F-1000	1	5/S									
169	4843 231490	SP-B3F-1000	1	5/S									
170	4843 231490	SP-B3F-1000	1	5/S									
171	4843 231490	SP-B3F-1000	1	5/S									
172	4843 231490	SP-B3F-1000	1	5/S									
173	4843 231490	SP-B3F-1000	1	5/S									
174	4843 231490	SP-B3F-1000	1	5/S									
175	4843 231490	SP-B3F-1000	1	5/S									
176	4843 231490	SP-B3F-1000	1	5/S									
177	4843 231490	SP-B3F-1000	1	5/S									
178	4843 231490	SP-B3F-1000	1	5/S									
179	4843 231490	SP-B3F-1000	1	5/S									
180	4843 231490	SP-B3F-1000	1	5/S									
181	4843 231490	SP-B3F-1000	1	5/S									
182	4843 231490	SP-B3F-1000	1	5/S									
183	4843 231490	SP-B3F-1000	1	5/S									
184	4843 231490	SP-B3F-1000	1	5/S									
185	4843 231490	SP-B3F-1000	1	5/S									
186	4843 231490	SP-B3F-1000	1	5/S									
187	4843 231490	SP-B3F-1000	1	5/S									
188	4843 231490	SP-B3F-1000	1	5/S									
189	4843 231490	SP-B3F-1000	1	5/S									
201	4843 308014	J-53325-1110	1	5/P									
202	4843 308017	J-53325-1410	1	5/P									
211	4407 782660	JUMPER-WIRE-10	66	10/P									

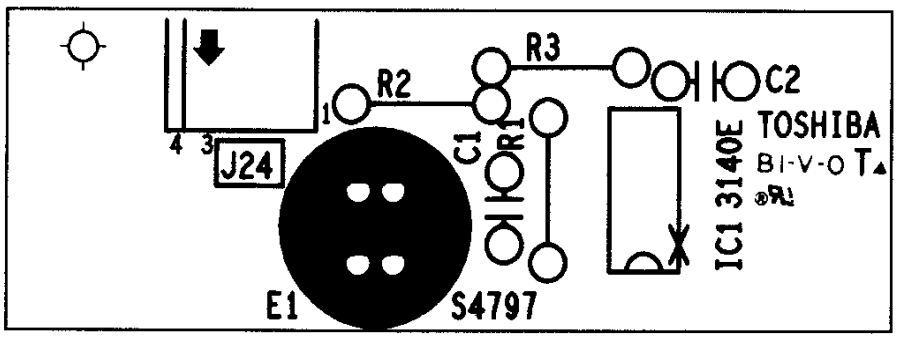
R3
R2
C2
1
4 3
J24
C1
R1
TOSHIBA
IC1 3140E
E1
S4797

ITEM NO.	PARTS NO.	PARTS NAME	Q'TY / PAGE	Q'TY / PACK	SPE PRICE IN NONE	P	I	R	BSI NO.	TO	FROM	SERIAL NO.	REMARKS
0	4400 677240	PWA-F-AES-140	1	1/C									
1	4400 677250	PWB-F-AES-140	1	N/A***									
11	4407 418360	CA3140E	1	5/S									
21	4843 410262	CQ921M1H102K	1	10/P									
22	4407 942000	CZ-308F104Z50	1	10/P									
31	4843 171300	PHD-S4797-01	1	1/C									
41	4843 028657	RD1/4LA820KJ	1	10/P									
42	4843 028629	RD1/4LA056KJ	1	10/P									
43	4843 028611	RD1/4LA010KJ	1	10/P									
54	4843 308007	J-53325-0410	1	5/P									

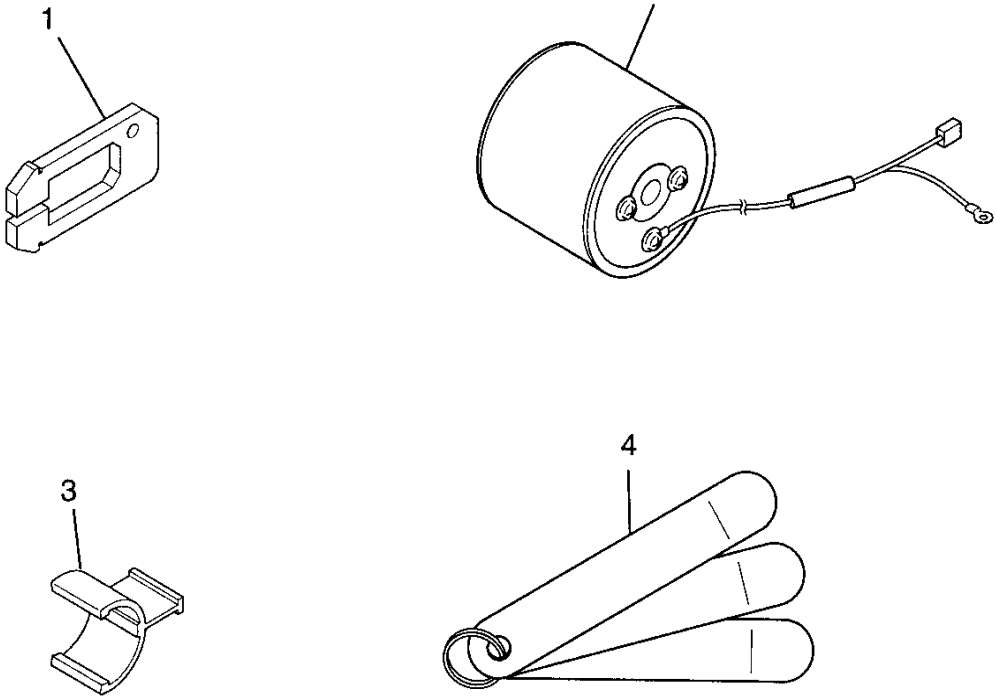
1
2
3
4

ITEM NO.	PARTS NO.	PARTS NAME	Q'TY / PAGE	Q'TY / PACK	SPE PRICE IN NONE	P	I	R	BSI NO.	TO	FROM	SERIAL NO.	REMARKS
1	4400 827800	JIG-D-SW-MD3	1	1/P									
2	4400 675700	ASM-JIG-DRM-140	1	1/C									
3	4400 665570	HOLDER-PLY-SCAN	1	1/P									
4	4402 819200	K-JIG-DC-SL-17	1	1/P									

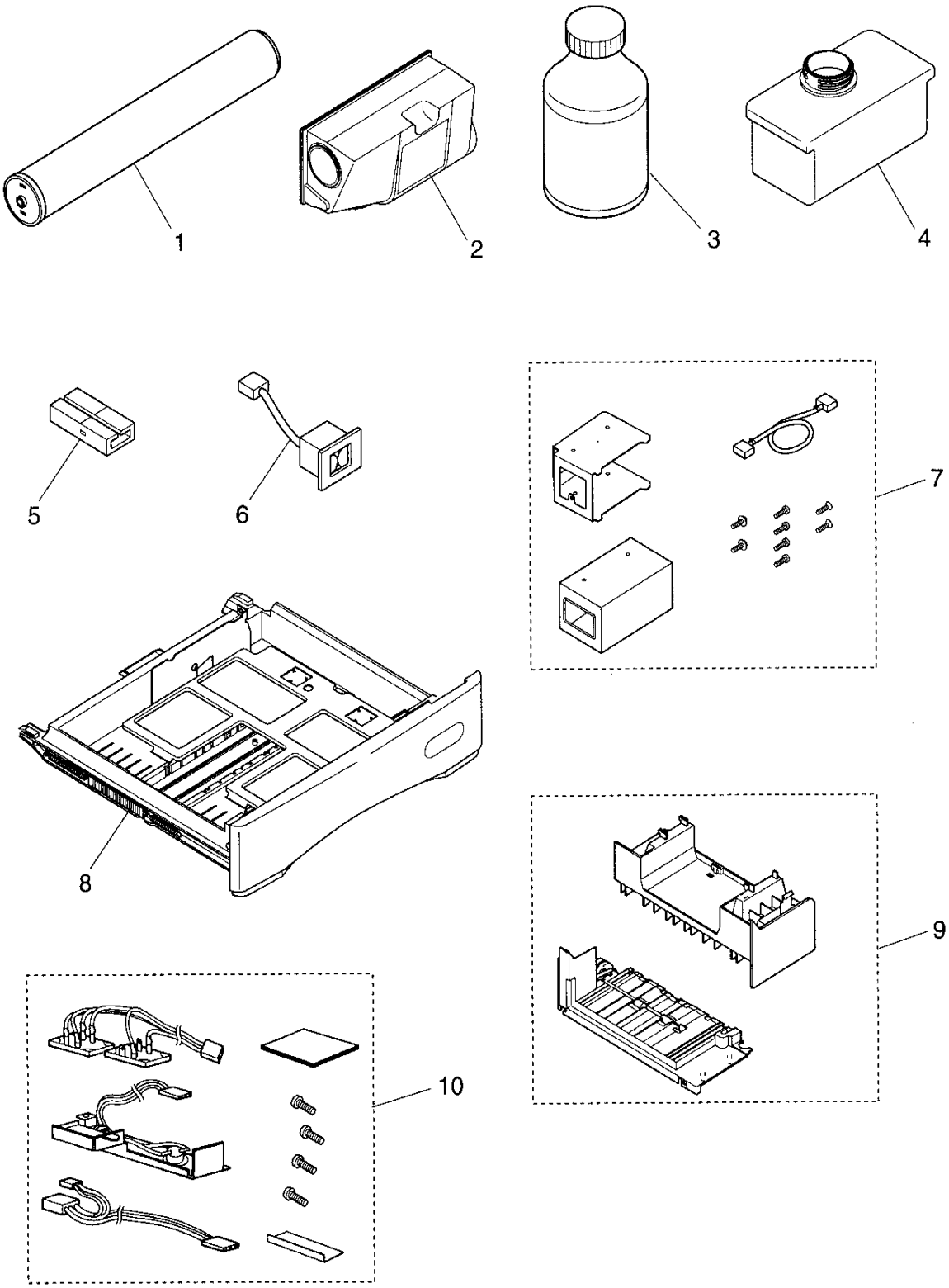

TOSHIBA

ITEM NO.	PARTS NO.	PARTS NAME	Q'TY / PAGE	Q'TY / PACK	SPE PRICE IN NONE	P	I	R	BSI NO.	TO	FROM	SERIAL NO.	REMARKS
1	6608 4854	PS-OD1550	1	SUPPLY									
2A	6608 4852	PS-ZT1550E	1	SUPPLY									EUR
2B	6608 4851	PS-ZT1550	1	SUPPLY									OTHERS
3	6608 4853	PS-ZD1550	1	SUPPLY									
4A	6608 4860	PS-TB1550E	1	SUPPLY									EUR
4B	6608 4859	PS-TB1550	1	SUPPLY									OTHERS
5	6600 2050	MU-8	1	SUPPLY									
6	6600 2051	MU-10	1	SUPPLY									
7	6608 4840	KN-1550K	1	SUPPLY									
8A	6608 4842	KC-1550LF	1	SUPPLY									USA SIZE
8B	6608 4841	KC-1550AF	1	SUPPLY									EUR SIZE
8C	6608 4914	KC-1550AFE	1	SUPPLY									FOR EUR
9	6608 4839	KN-1550S	1	SUPPLY									
10A	6608 4848	MF-1550U	1	SUPPLY									115V
10B	6608 4849	MF-1550E	1	SUPPLY									230V