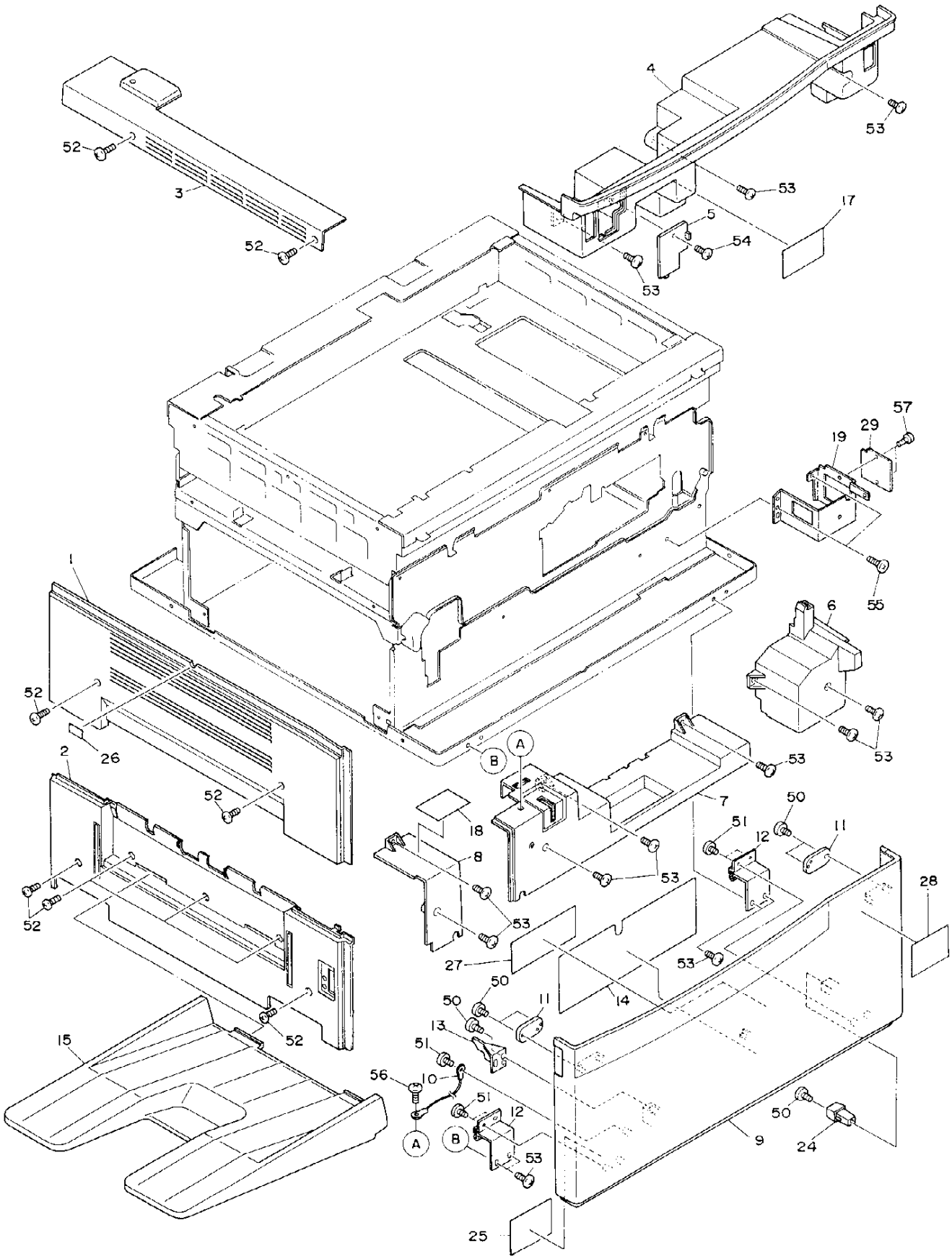
1
2
3
4
5
6
7
8
9
10
11
12
13
14
15
17
18
19
24
25
26
27
28
29
50
51
52
53
54
55
56
57
A
B

ITEM NO.	PARTS NO.	PARTS NAME	Q'TY / PAGE	Q'TY / PACK	SPE PRICE IN NONE	P	I	R	BSI NO.	TO	FROM	SERIAL NO.	REMARKS
1	4400 910790	COV-LEFT-U	1	1/PP						001 1			
1 1	4400 945690	COV-LEFT-U	1	1/PP		C	E	E	F5A381		001		
2	4400 914830	COV-LEFT-L-176	1	1/PP									
3	4400 752090	COV-TOP-LEFT-O	1	1/PP									
4	4400 752050	COV-INNER-U	1	1/PP									
5	4402 803900	LID-COV-INNER-U	1	1/P									
6	4402 803860	COV-CTR	1	1/PP									
7	4400 912060	COV-WH	1	1/PP									
8	4402 803780	COV-INNER-L	1	1/PP									
9A	4400 910660	K-COV-F-U	1	1/PP									ED-2050
9B	4400 930570	K-COV-F-178UE	1	1/PP									ED-1650
10	4402 803510	STOP-F-COV-170	1	1/P									
11	4402 201360	PLATE-MG	2	1/P									
12	4402 803840	HINGE-COV-F	2	1/P									
13	4402 803550	PUSHER-SW-U	1	1/P									
14	4400 723550	LBL-INST-COV-F	1	1/KP									
15	4400 741200	TRAY-101	1	1/PP									
17	4402 800870	LABEL-DRUM-170	1	5/P									
18	4400 831630	LBL-HOT	1	5/P									
19	4402 802560	BKT-KEY-CTR	1	1/P									
24	4402 807610	STOPPER-HANDLE	1	1/P									
25	4402 200680	LBL-MEMORY-A545	1	5/P									
26	4400 750700	LBL-BLIND	1	10/P									
27C	4400 910690	LBL-INST-TNR3-E	1	5/P									EUD
27D	4400 910690	LBL-INST-TNR3-E	1	5/P									GSD
27E	4400 910690	LBL-INST-TNR3-E	1	5/P									FRD
27F	4400 910690	LBL-INST-TNR3-E	1	5/P									SED
27G	4400 910690	LBL-INST-TNR3-E	1	5/P									UKD
28D	4402 031690	LBL-BLUE-ANGEL	1	5/P									GSD
29	4400 912980	PLATE-CTR	1	1/P						029 1			200V SERIES
29 1	4400 912990	PLATE-CTR	1	1/P		C	B	J	F4F178		029		200V SERIES
		REFER TO BSI NO. F4F214											
30C	4400 911080	LBL-INST-TNR	1	1/KP		A	B	J	F4D135				EUD
		CAUTION LABEL FOR THE PIRATED TONER											
30D	4400 911080	LBL-INST-TNR	1	1/KP		A	B	J	F4D135				GSD
		CAUTION LABEL FOR THE PIRATED TONER											
30E	4400 911080	LBL-INST-TNR	1	1/KP		A	B	J	F4D135				FRD
		CAUTION LABEL FOR THE PIRATED TONER											
30F	4400 911080	LBL-INST-TNR	1	1/KP		A	B	J	F4D135				SED
		CAUTION LABEL FOR THE PIRATED TONER											
30G	4400 911080	LBL-INST-TNR	1	1/KP		A	B	J	F4D135				UKD
		CAUTION LABEL FOR THE PIRATED TONER											
50	4842 040846	PTBR30*08MSZN3A	7	50/P									
51	7640 300651	ZPAN30*06MSZN3A	5	50/P									
52	4842 040605	TBID40*10MSCR3C	9	50/P									
53	4842 040700	TZPAN4008MSZN3L	14	50/P									
54	7640 400651	ZPAN40*06MSZN3A	1	50/P									
55	4842 040650	TPAN40*06MSZN3L	2	50/P									
56	7040 400611	PAN40*06MSZN3AI	1	50/P									
57	7040 300611	PAN30*06MSZN3A	2	50/P						057 1			200V SERIES
57 1	4842 040709	TPPAN3006MSZN3A	2	50/P		C	B	J	F4F178		057		200V SERIES
		REFER TO BSI NO. F4F214											

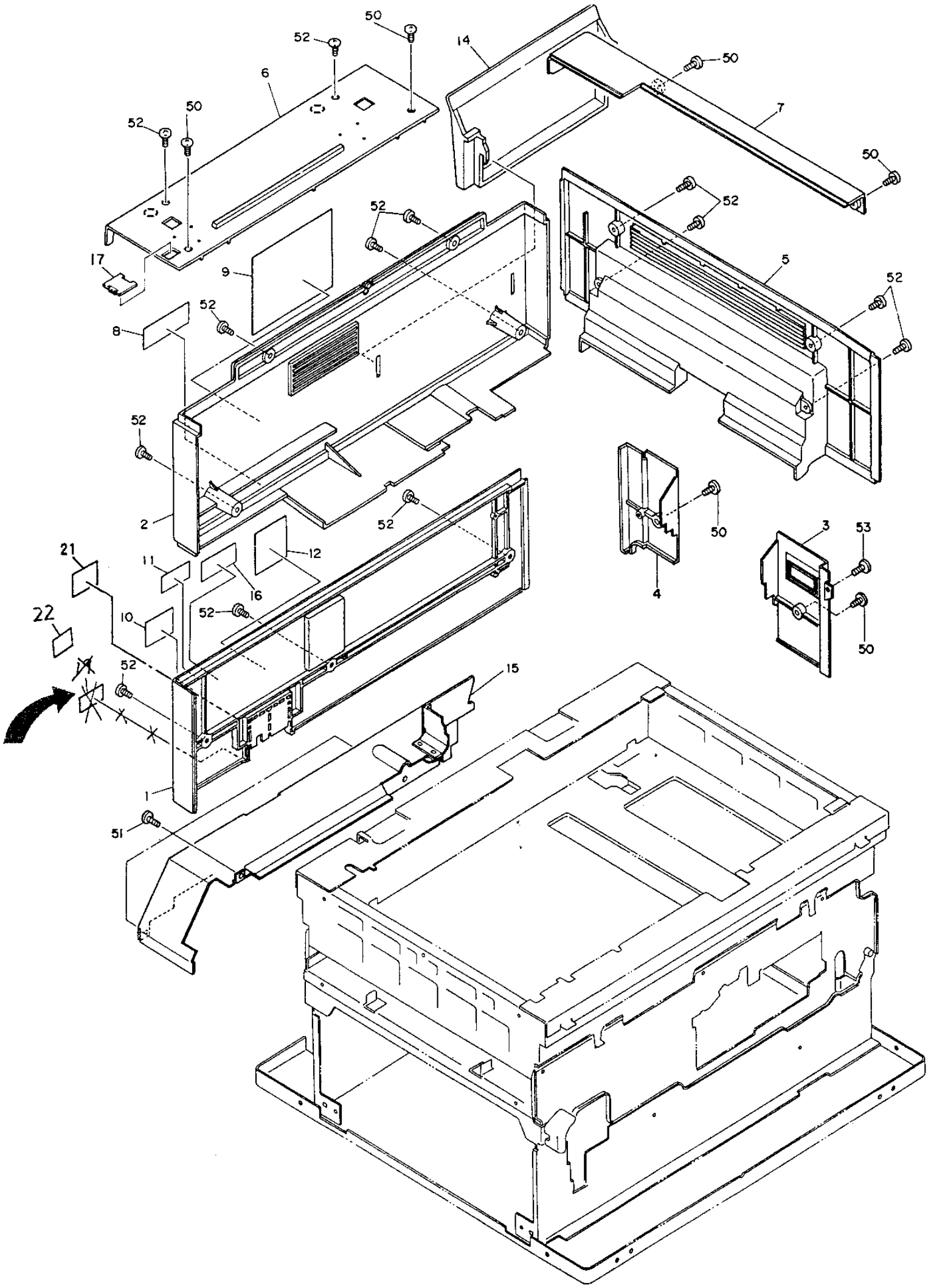
50
52
14
50
6
7
52
50
50
52
52
17
9
5
52
52
8
52
2
52
50
3
53
21
11
12
16
4
22
10
52
50
52
15
1
51

ITEM NO.	PARTS NO.	PARTS NAME	Q'TY / PAGE	Q'TY / PACK	SPE PRICE IN NONE	P	I	R	BSI NO.	TO	FROM	SERIAL NO.	REMARKS
1	4400 914820	COV-REAR-L	1	1/PP									
2	4400 914900	COV-REAR-U	1	1/PP						002 1			
2 1	4400 945680	COV-REAR-U	1	1/PP		C	E	E	F5A381		002	CA5/QA5	
3	4400 914800	COV-RIGHT-L-F	1	1/PP									
4	4400 914810	COVER-RIGHT-L-R	1	1/PP									
5	4402 803990	COV-RIGHT-U	1	1/PP									
6	4400 912920	COV-TOP-REAR	1	1/PP									
7	4402 803360	COV-TOP-RIGHT	1	1/PP									
8A	4400 740530	LABEL-FCC	1	10/P									TAD
9A	4400 361560	STICKER-W-TAIS	1	N/A***									TAD
10D	4407 773470	LABEL-GS	1	5/P									GSD
11F	4407 900890	LBL-NEMKO/SETI	1	5/P									SED
12	4408 543130	LBL-SERVICE-T	1	5/P									
14	4408 541410	BOOK-HOLDER-T	1	1/PP									
15	4400 912150	K-BKT-COV-HANES	1	1/P									
16D	4402 200640	LBL-RECYCLE	1	5/P									GSD
17	4400 912330	COVER-SCREW	1	1/P									
19A	4401 768740	LBL-PATENT	1	5/P		A	B	J	F4F200	019A1		CG4/QG4	TAD
19A1	4401 768740	LBL-PATENT	0	5/P		B	-	J	F97A793		019A		TAD
21B	4400 945700	LABEL-CANADA	1	5/P		A	-	C	F5B397			CA5/QA5	CSD
22G	4402 090460	LABEL-CE	1	5/P		A	-	C	F95H495			CH5/GH5	UKD
50	4842 040635	TBID40*08MSCR3C	7	50/P									
51	4842 040060	TPAN40*08MSZN3L	3	50/P									
52	4842 040605	TBID40*10MSCR3C	13	50/P									
53	7640 400851	ZPAN40*08MSZN3A	1	50/P									

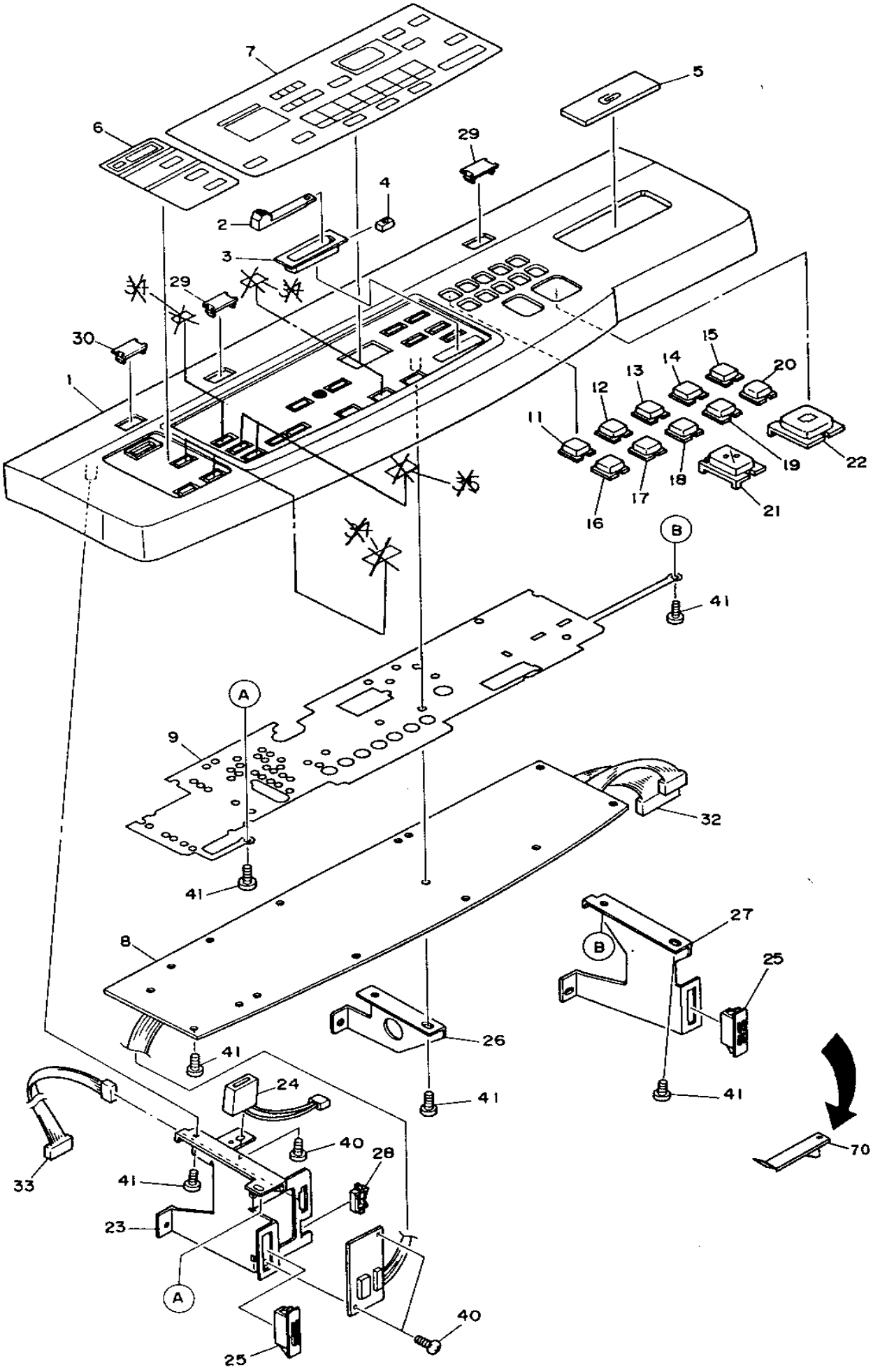
7
6
5
29
4
2
3
29
30
1
15
14
20
13
12
11
19
22
18
17
16
21
B
41
A
9
32
41
8
27
B
25
26
41
41
24
40
28
33
41
23
A
40
25
70

ITEM NO.	PARTS NO.	PARTS NAME	Q'TY / PAGE	Q'TY / PACK	SPE PRICE IN NONE	P	I	R	BSI NO.	TO	FROM	SERIAL NO.	REMARKS
1	4400 910840	COVER-PNL-CONT	1	1/PP									
1C	4400 741400	COVER-PNL-CONT	1	1/PP		E	-	J	F5B395	001C1			EUD
1C1	4402 828300	COVER-PNL-CONT	1	1/PP		C	B	D	F97H968		001C		EUD
1D	4400 741400	COVER-PNL-CONT	1	1/PP		E	-	J	F5B395	001D1			GSD
1D1	4402 828300	COVER-PNL-CONT	1	1/PP		C	B	D	F97H968		001D		GSD
1E	4400 741400	COVER-PNL-CONT	1	1/PP		E	-	J	F5B395	001E1			FRD
1E1	4402 828300	COVER-PNL-CONT	1	1/PP		C	B	D	F97H968		001E		FRD
1F	4400 741400	COVER-PNL-CONT	1	1/PP		E	-	J	F5B395	001F1			SED
1F1	4402 828300	COVER-PNL-CONT	1	1/PP		C	B	D	F97H968		001F		SED
1G	4400 741400	COVER-PNL-CONT	1	1/PP		E	-	J	F5B395	001G1			UKD
1G1	4402 828300	COVER-PNL-CONT	1	1/PP		C	B	D	F97H968		001G		UKD
1Z	4400 910840	COVER-PNL-CONT	1	1/PP		-	-	-	F5B395	001Z1			OTHERS
1Z1	4400 911070	COVER-PNL-CONT	1	1/PP		C	B	D	F96B611		001Z	CC6/QC6	OTHERS
2	4402 803280	SLIDE-PNL-CONT	1	1/P									
3	4402 803850	COVER-SLIDE	1	1/P									
4	4402 803290	CATCH-SLIDE	1	1/P									
5	4402 202200	MG-CLIP	1	1/KP									
6A	4400 910870	OP-SHEET-L-U176	1	1/KP						006A1			USA SIZE
6A1	4400 946210	OP-SHEET-L-U176	1	1/KP		C	E	E	F95G476		006A	CJ5/QJ5	USA SIZE
6B	4400 910880	OP-SHEET-L-E176	1	1/KP						006B1			EUR SIZE
6B1	4400 946220	OP-SHEET-L-E176	1	1/KP		C	E	E	F95G476		006B	CJ5/QJ5	EUR SIZE
6G	4400 910880	OP-SHEET-L-E176	1	1/KP						006G1			UKD
6G1	4400 946220	OP-SHEET-L-E176	1	1/KP		C	E	E	F95G476		006G	CJ5/QJ5	UKD
7A	4400 910750	OP-SHEET-R-U176	1	1/KP						007A1			USA SIZE
7A1	4400 946270	OP-SHEET-R-U176	1	1/KP		C	E	E	F95G476		007A	CJ5/QJ5	USA SIZE
7B	4400 910770	OP-SHEET-R-E176	1	1/KP						007B1			EUR SIZE
7B1	4400 946290	OP-SHEET-R-E176	1	1/KP		C	E	E	F95G476		007B	CJ5/QJ5	EUR SIZE
7C	4400 910760	OP-SHET-R-AU176	1	1/KP						007C1			AUD
7C1	4400 946280	OP-SHET-R-AU176	1	1/KP		C	E	E	F95G476		007C	CJ5/QJ5	AUD
7D	4400 930530	OP-SHEET-R-U178	1	1/KP						007D1			USA ED-1650
7D1	4400 946340	OP-SHEET-R-U178	1	1/KP		C	E	E	F95G476		007D	CJ5/QJ5	USA ED-1650
7E	4400 930550	OP-SHEET-R-E178	1	1/KP						007E1			EUR ED-1650
7E1	4400 946360	OP-SHEET-R-E178	1	1/KP		C	E	E	F95G476		007E	CJ5/QJ5	EUR ED-1650
7F	4400 930540	OP-SHET-R-AU178	1	1/KP						007F1			AUD ED-1650
7F1	4400 946350	OP-SHET-R-AU178	1	1/KP		C	E	E	F95G476		007F	CJ5/QJ5	AUD ED-1650
8	4400 960370	PWA-F-PNL-176UE	1	1/SB									
8C	4400 960080	PWA-F-PNL-101UE	1	1/SB		A	D	J	F5B395				EUD
8D	4400 960080	PWA-F-PNL-101UE	1	1/SB		A	D	J	F5B395				GSD
8E	4400 960080	PWA-F-PNL-101UE	1	1/SB		A	D	J	F5B395				FRD
8F	4400 960080	PWA-F-PNL-101UE	1	1/SB		A	D	J	F5B395				SED
8G	4400 960080	PWA-F-PNL-101UE	1	1/SB		A	D	J	F5B395				UKD
8Z	4400 960370	PWA-F-PNL-176UE	1	1/SB		-	-	-	F5B395				OTHERS
9	4400 912360	MYLAR-SHIELD	1	1/KP									
9C	4400 741430	MYLAR-SHIELD	1	1/KP		A	D	J	F5B395				EUD
9D	4400 741430	MYLAR-SHIELD	1	1/KP		A	D	J	F5B395				GSD
9E	4400 741430	MYLAR-SHIELD	1	1/KP		A	D	J	F5B395				FRD
9F	4400 741430	MYLAR-SHIELD	1	1/KP		A	D	J	F5B395				SED
9G	4400 741430	MYLAR-SHIELD	1	1/KP		A	D	J	F5B395				UKD
9Z	4400 912360	MYLAR-SHIELD	1	1/KP		-	-	-	F5B395				OTHERS
11	4400 912210	KEY-1	1	1/P									
12	4400 912220	KEY-2	1	1/P									
13	4400 912230	KEY-3	1	1/P									
14	4400 912240	KEY-4	1	1/P									
15	4400 912250	KEY-5	1	1/P									
16	4400 912260	KEY-6	1	1/P									
17	4400 912270	KEY-7	1	1/P									
18	4400 912280	KEY-8	1	1/P									
19	4400 912290	KEY-9	1	1/P									
20	4400 912200	KEY-0	1	1/P									
21	4400 912300	KEY-CL	1	1/P									
22	4400 912310	KEY-COPY	1	1/P									
23	4402 803220	BKT-PNL-CONT-L	1	1/P									
24	4400 357700	CTR-E650B-523	1	1/D									
25	4402 202680	MG-CATCH-22	2	1/P									
26	4402 803230	BKT-PNL-CONT-C	1	1/P									
27	4402 803240	BKT-PNL-CONT-R	1	1/P									
28	4843 390942	BD/W-EDS-2	1	10/P									
29	4400 728110	COV-PNL-MG	2	1/P									
30	4400 912330	COVER-SCREW	1	1/P									
32	4402 815500	WH-PNL-170	1	1/P									
33	4400 781710	WH-RST/PNL-170V	1	1/P									

ITEM NO.	PARTS NO.	PARTS NAME	Q'TY / PAGE	Q'TY / PACK	SPE PRICE IN NONE	P	I	R	BSI NO.	TO	FROM	SERIAL NO.	REMARKS
34	4400 912370	MYLAR-KEY-L	4	5/P		F	-	J	F4B100	034 1			
34 1	4400 912370	MYLAR-KEY-L	0	5/P		C	-	E	F95K534		034		
35	4400 912380	MYLAR-KEY-S	2	5/P		F	-	J	F4B100	035 1			
35 1	4400 912380	MYLAR-KEY-S	0	5/P		C	-	E	F95K534		035		
40	7040 300611	PAN30*06MSZN3A	3	50/P									
41	4842 040846	PTBR30*08MSZN3A	22	50/P									
70	4402 825720	BKT-STAY-CONP	1	1/P		A	B	D	F96E688				SERVICE ONLY

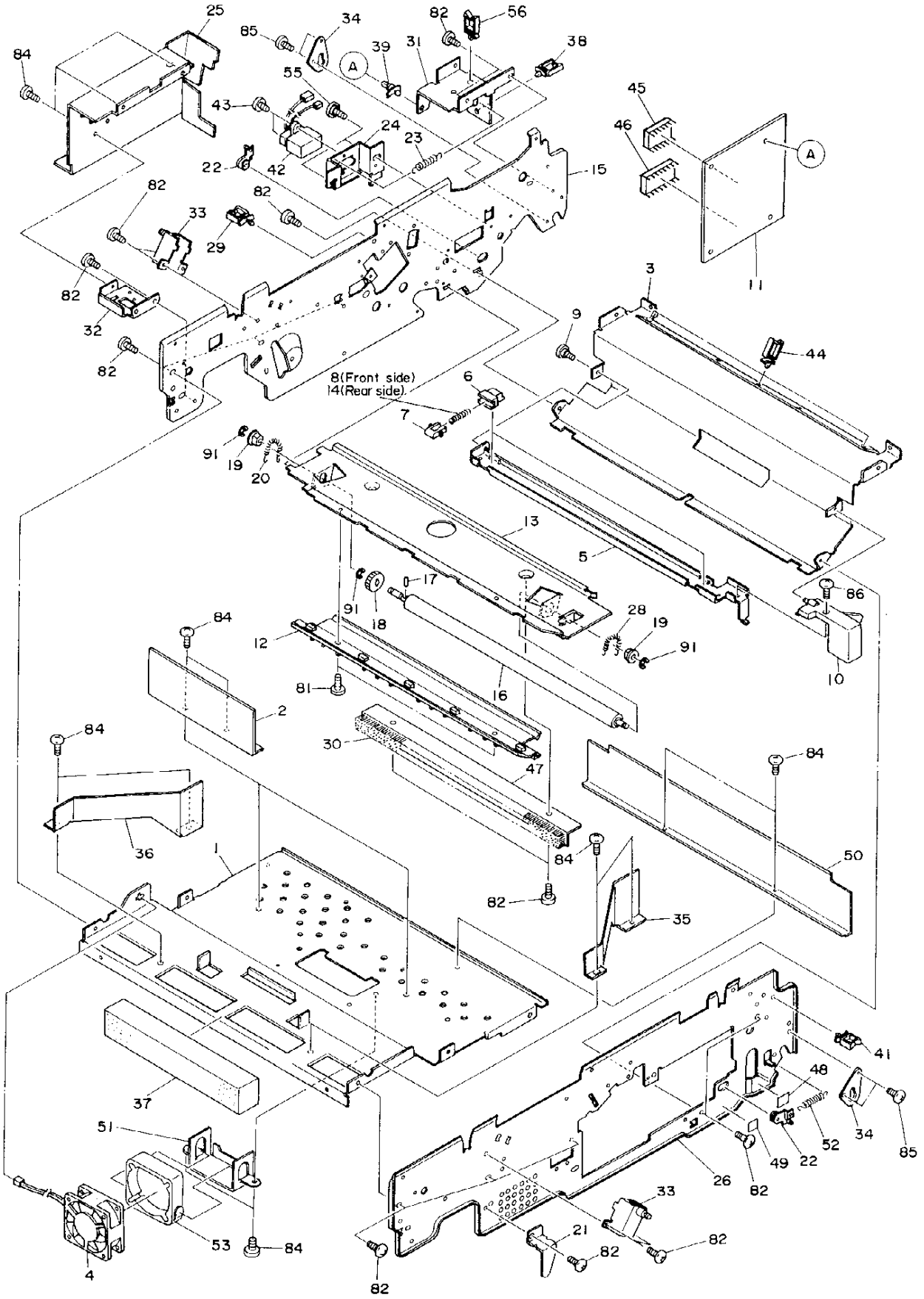
8(Front side)
14(Rear side)

ITEM NO.	PARTS NO.	PARTS NAME	Q'TY / PAGE	Q'TY / PACK	SPE PRICE IN NONE	P	I	R	BSI NO.	TO	FROM	SERIAL NO.	REMARKS
1	4400 911890	STAY-UP-FAN-G	1	N/A***									
2	4402 801680	PLATE-SIDE-FAN	2	1/P									
3	4402 801370	STAY-UPPER	1	N/A***									
4	4400 960820	M/DC-FAN60-176	1	1/C									
5	4402 807120	BKT-PUSH-DEV	1	1/P									
6	4402 203810	HOLDER-PUSHER	2	1/P									
7	4402 203800	PUSHER-DEV	2	1/P									
8	4402 807530	SPRING-SET-DEVF	1	5/P									
9	4400 325930	PIN-BKT-CON-H	1	10/P									
10	4400 912430	K-LEV-SET-DEV	1	1/P									
11	4400 960230	PWA-LGC-176	1	1/SB						011 1			
11 1	4400 960060	PWA-F-LGC-176-4	1	1/SB		C	B	C	F95H495		011	CH5/QH5	
		FOR MACHINES EXCEPT FOR EUROPE, THE INTERCHANGEABILITY IS "E"											
12	4400 724830	GUIDE-ENT-DRM	1	1/P									
13	4402 807070	GUIDE-DEV	1	1/P									
14	4402 807190	SPRING-SET-DEVR	1	5/P									
15	4400 916020	FRAME-REAR-U	1	N/A***									
16	4402 813180	ROLLER-RGT-I-U	1	1/KP									
17	4407 403790	NPIN2-8	1	10/P									
18	4402 813190	GEAR-15-1.0	1	1/P									
19	4407 976990	BUSH-D6-GCB	2	1/P									
20	4407 957140	SPRING-850	1	5/P									
21	4402 801760	PUSHER-SW-DOOR	1	1/P									
22	4402 807000	BUSH-SLIDE-DEV	2	1/P									
23	4402 802440	SPE-060-300	1	5/P									
24	4402 807620	BKT-CON-DEV	1	1/P									
25	4400 911830	BKT-COV-REAR-L	1	1/P									
26	4402 801020	FRAME-FRONT-U	1	N/A***									
28	4407 547370	SPRING-25	1	5/P									
29	4843 390854	CLP/W-LWS-1U	1	5/P									
30	4400 741190	BRUSH-ALN-U-W	1	1/S									
31	4402 802510	BKT-COVER-LGC	1	1/P									
32	4400 754150	BKT-CONECT-200	1	1/P									
33	4402 801400	K-BKT-BALANC-U	2	1/P									
34	4402 812390	BKT-LOCK-FRAME	2	1/P									
35	4402 801350	DUCT-F	1	1/P									
36	4402 801360	DUCT-R	1	1/P									
37	4400 911480	FILTER-U-176	1	1/P									
38	4843 390856	CLP/W-LWS-3U	1	5/P									
39	4843 390868	PWZ-SPLS-3U	1	5/P									
41	4843 390855	CLP/W-LWS-2U	1	5/P									
42	4402 815620	WH-DEV-170	1	1/P									
43	4402 807030	SCREW-SOCKET	2	10/P									
44	4843 390888	CLP/W-WS-2U	3	5/P									
45A	4400 960510	K-SRAM-T176U	1	1/S						045A1			IC23,USA
45A1	4400 960540	K-SRAM-T176U	1	1/S		E	-	J	F4B100	045A2	045A		IC23,USA
45A2	4400 960580	K-SRAM-T176U	1	1/S		C	E	J	F4F208		045A1	CF4	IC23,USA
45B	4400 960520	K-SRAM-T176E	1	1/S						045B1			IC23,EUR
45B1	4400 960550	K-SRAM-T176E	1	1/S		E	-	J	F4B100	045B2	045B		IC23,EUR
45B2	4400 960590	K-SRAM-T176E	1	1/S		C	E	J	F4F208		045B1	CF4	IC23,EUR
46A	4400 960450	PRA-T176M-02	1	1/S						046A1			IC22,ED-2050
46A1	4400 960460	PRA-T176M-03	1	1/S		C	B	B	F4D131	046A2	046A	CC4	IC22,ED-2050
46A2	4400 960480	PRA-T176M-04	1	1/S		C	B	J	F4F208	046A3	046A1	CF4	IC22,ED-2050
46A3	4400 961000	PRA-T176M-05	1	1/S		C	B	D	F4L375		046A2	CK4	IC22,ED-2050
46B	4400 930820	PRA-T178M-02	1	1/S						046B1			IC22,ED-1650
46B1	4400 930830	PRA-T178M-03	1	1/P		C	B	B	F4D131	046B2	046B	QC4	IC22,ED-1650
46B2	4400 930840	PRA-T178M-04	1	1/S		C	B	D	F4L375		046B1	QK4	IC22,ED-1650
47	4402 807510	BKT-BRUSH-ALN	1	1/P									
48	4402 200660	LBL-LOCK-OPEN	1	5/P									
49	4402 200670	LBL-LOCK-CLOSE	1	5/P									
50	4402 801210	DUCT-CLN	1	1/P									
51	4400 741890	BKT-FAN-EXIT	1	1/P									
52	4402 807540	SPE-060-254	1	5/P									
53	4400 741880	DAMPER-FAN-EXIT	1	1/P									
55	4402 203820	SCREW-BKT-DEV	2	50/P									
56	4843 390857	CLP/W-LWS-4U	1	5/P									
81	4842 040690	TZPAN3006MSZN3L	2	50/P									
82	4842 040665	TPAN3006MSZN3L	10	50/P									
84	4842 040060	TPAN40*08MSZN3L	12	50/P									
85	4842 040650	TPAN40*06MSZN3L	4	50/P									
86	4842 040684	TBID3006MSCR3C	1	50/P									

ITEM NO.	PARTS NO.	PARTS NAME	Q'TY / PAGE	Q'TY / PACK	SPE PRICE IN NONE	P	I	R	BSI NO.	TO	FROM	SERIAL NO.	REMARKS
91	7405 005031	ERR050SKZN3A	3	50/P									

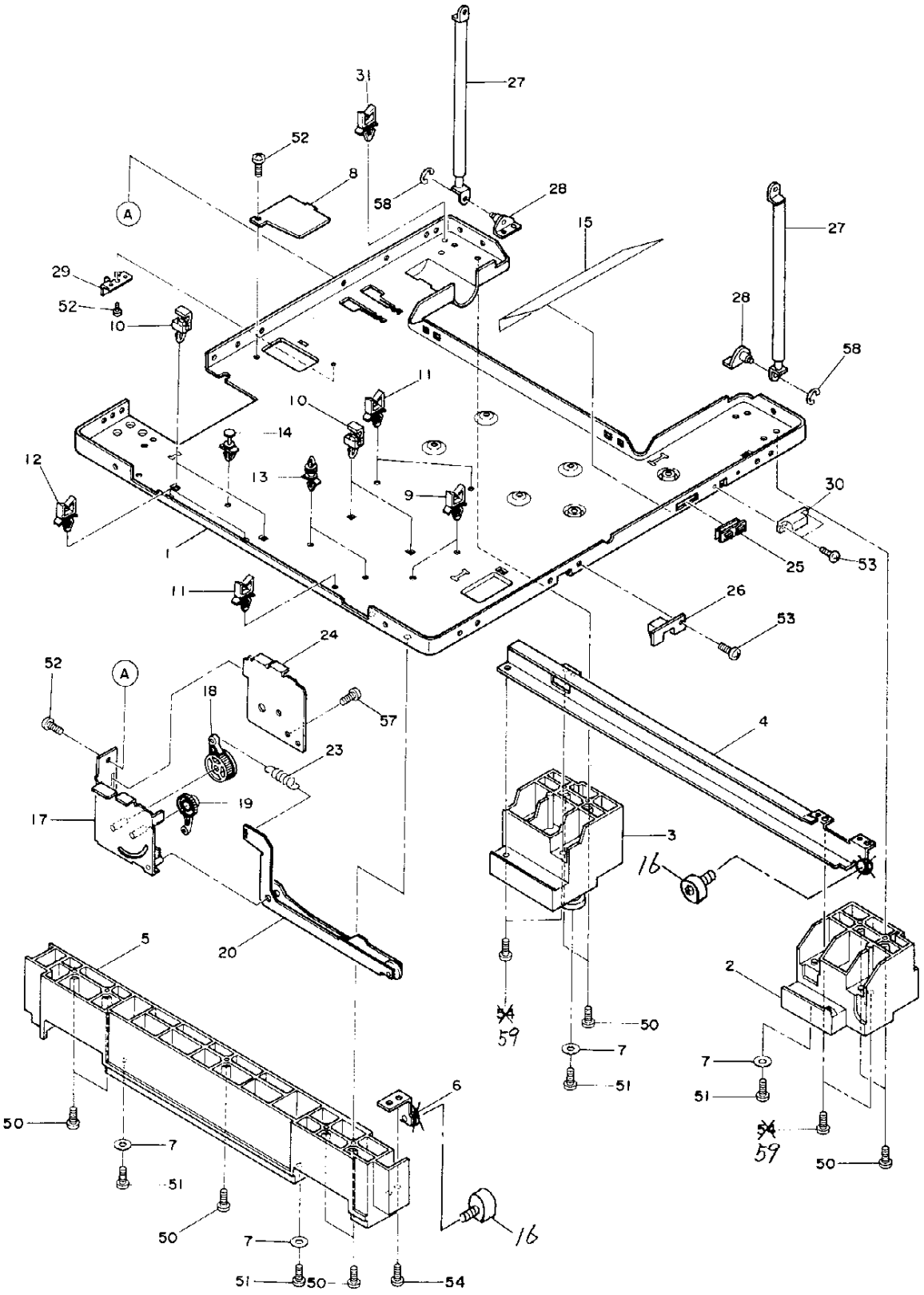
27
31
52
8
58
28
A
15
27
29
52
10
28
58
11
10
14
12
13
9
30
1
25
53
11
26
53
24
52
A
18
57
4
23
19
17
3
16
20
5
2
~~54~~
59
50
7
7
51
51
6
50
7
~~54~~
59
50
51
50
7
16
51
50
54

TOSHIBA

ITEM NO.	PARTS NO.	PARTS NAME	Q'TY / PAGE	Q'TY / PACK	SPE PRICE IN NONE	P	I	R	BSI NO.	TO	FROM	SERIAL NO.	REMARKS
1	4400 916420	FRAME-BASE-176	1	N/A***									
2	4400 911220	GUIDE-CST-R-F	1	1/PP						002 1			
2 1	4400 932540	GUIDE-CST-R-F	1	1/P		C	B	J	F4H263	002 2	002	CJ414416 QJ415109	
2 2	4400 932400	GUIDE-CST-R-F	1	1/P		C	B	J	F4L374		002 1	CK4/QK4	
3	4400 911230	GUIDE-CST-R-R	1	1/PP						003 1			
3 1	4400 932420	GUIDE-CST-R-R	1	1/P		C	B	J	F4L374		003	CK4/QK4	
4	4400 911250	K-BKT-GUIDE-CST	1	1/P						004 1			
4 1	4400 932520	K-BKT-GUIDE-CST	1	1/P		C	B	J	F4H263		004	CJ414416	
												QJ415109	
5	4400 911210	GUIDE-CST-L-176	1	1/PP						005 1			
5 1	4400 932440	GUIDE-CST-L	1	1/P		C	B	J	F4L374		005	CK4/QK4	
6	4400 911280	K-BKT-GUIDE-ROL	1	1/P						006 1			
6 1	4400 932590	BKT-GUIDE-ROL-L	1	1/P		C	B	J	F4H263		006	CJ414416	
												QJ415109	
7	4402 811990	FOOT-8-20	4	1/P									
8	4400 912100	BLIND-DF-TR	1	1/P									
9	4843 390856	CLP/W-LWS-3U	2	5/P									
10	4400 419020	Z/PWB-2196-VO	4	5/P									
11	4843 390855	CLP/W-LWS-2U	3	5/P									
12	4843 390854	CLP/W-LWS-1U	2	5/P									
13	4843 390871	PWZ-SPLS-7U	2	5/P									
14	4843 390860	PWZ-SPS-6U	1	5/P									
15	4400 916440	SEAL-SLIT-COV	1	1/C									
16	4400 932560	ROLL-CST-19S	2	1/P		A	B	J	F4H263			CJ414416 QJ415109	
17	4400 916320	K-FRAME-TRAY-UP	1	1/P									
18	4400 916310	LEVER-GEAR-40	1	1/P									
19	4400 916300	LEVER-GEAR-20	1	1/P									
20	4400 916220	ASM-ARM-TRAY	1	1/P						020 1			
20 1	4400 926320	ASM-ARM-TRY-177	1	1/P		C	E	E	F4F178		020		
23	4400 916360	SPE-TRAY-UP-CA	1	5/P									
24	4400 916350	BKT-FRM-TRY-SUB	1	1/P									
25	4402 202680	MG-CATCH-22	1	1/P									
26	4402 832990	GUIDE-CST-F-PFD	1	1/P									
27	4402 801470	BALANCER-F170	2	1/P									
28	4402 801420	K-BKT-BALANC-L	2	1/P									
29	4400 916590	GUIDE-CST-P	1	1/P									
30	4402 816610	SP-ESE-15404	1	1/C									
31	4843 390856	CLP/W-LWS-3U	1	5/P									
50	4842 040704	TZPAN4012MSZN3L	9	50/P									
51	4842 040867	PTBR40*14MSZN3A	4	50/P									
52	4842 040060	TPAN40*08MSZN3L	3	50/P									
53	4842 040692	TZPAN3008MSZN3L	3	50/P									
54	4842 040702	TZPAN4010MSZN3L	5	50/P						054 1			
54 1	4842 040702	TZPAN4010MSZN3L	1	50/P		E	-	J	F4B100		054		
55	4842 040702	TZPAN4010MSZN3L	1	50/P									
57	4842 040665	TPAN3006MSZN3L	1	50/P									
58	7405 005031	ERR050SKZN3A	2	50/P									
59	4842 040061	TPAN40*10MSZN3L	4	50/P		F	-	J	F4B100				

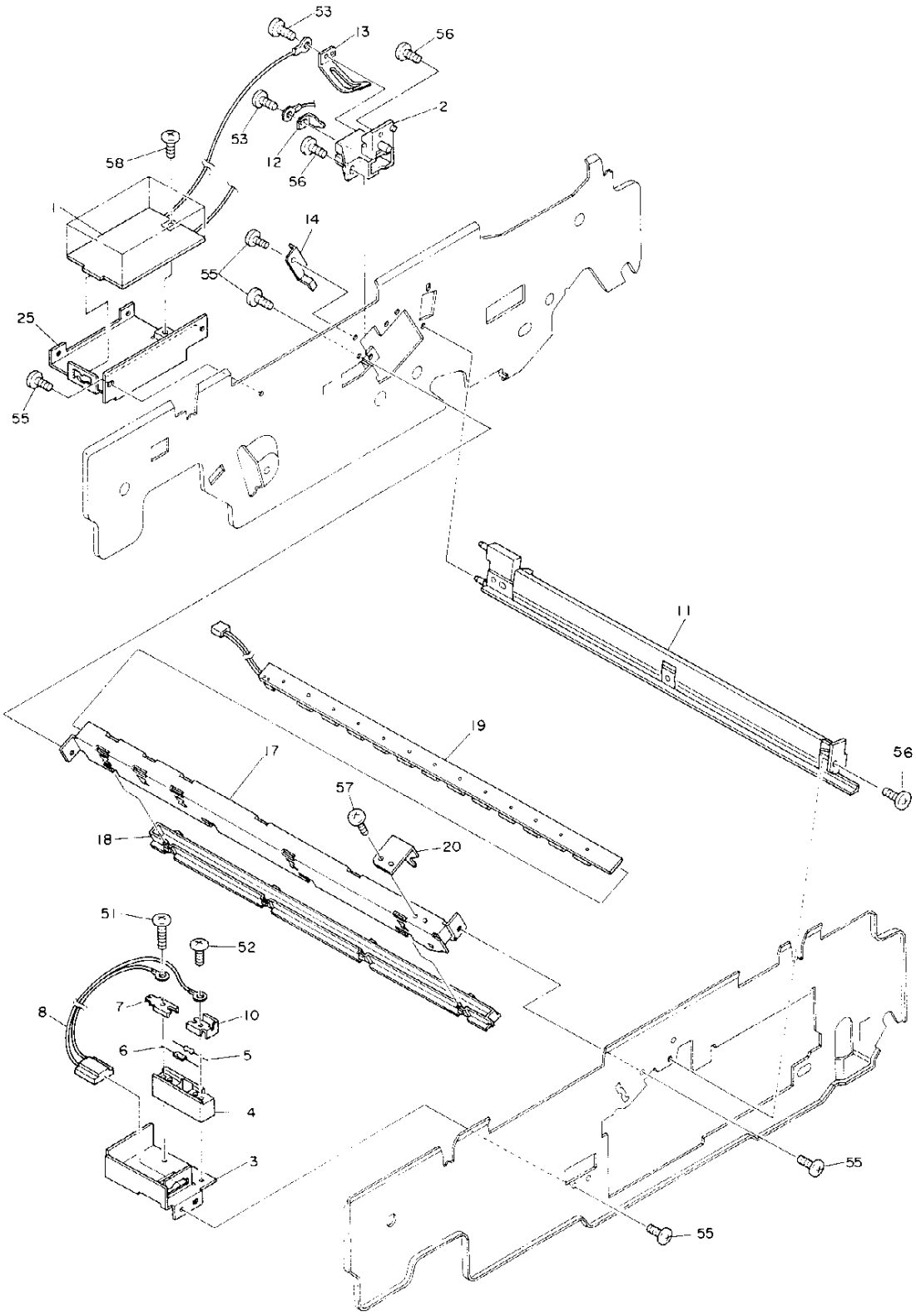
53
13
56
2
58
53
12
56
14
55
25
55
11
19
17
56
57
18
20
51
52
8
7
10
6
5
4
3
55
55

ITEM NO.	PARTS NO.	PARTS NAME	Q'TY / PAGE	Q'TY / PACK	SPE PRICE IN NONE	P	I	R	BSI NO.	TO	FROM	SERIAL NO.	REMARKS
1	4402 816400	PS-HVT-M-170	1	1/C									
2	4402 809110	TERMINAL-HVT-CH	1	1/P									
3	4402 809560	BKT-HLD-RST-CH	1	1/P									
4	4400 857600	K-HLD-RST-CH	1	1/P									
5	4843 018065	RN1/4PR033KF	1	10/P									
6	4843 404212	CM92C1H101KZ	1	10/P						006 1			
6 1	4843 412737	CC-45CH1H101JYS	1	10/P		E	-	J	F4J295		006		
7	4400 857580	BLADE-CH	1	1/P									
8	4400 781700	WH-RST-CH-170V	1	1/P									
10	4402 809570	BLADE-RST-CH	1	1/P									
11	4402 809930	ASM-DCH-170	1	1/C									
12	4402 809120	SPL-HVT-CH	1	5/P									
13	4402 809130	SPL-BIAS-GRID	1	1/P									
14	4402 809530	STOPPER-PWA-ERS	1	1/P									
17	4402 809510	HOLDER-LAMP-ERS	1	1/P									
18	4402 809520	COVER-LAMP-ERS	1	1/P									
19	4400 960100	PWA-F-ERS-176	1	1/C									
20	4402 808590	BKT-CLN-WIRE	1	1/P									
25	4402 802520	BKT-HVT-M	1	1/P									
51	4842 040134	TPAN3020MSZN3A	1	50/P									
52	7040 300611	PAN30*06MSZN3A	1	50/P									
53	4842 040846	PTBR30*08MSZN3A	2	50/P									
54	7640 301251	ZPAN30*12MSZN3A	2	50/P									
55	4842 040060	TPAN40*08MSZN3L	5	50/P									
56	4842 040700	TZPAN4008MSZN3L	3	50/P									
57	4842 040665	TPAN3006MSZN3L	1	50/P									
58	4842 040690	TZPAN3006MSZN3L	1	50/P									

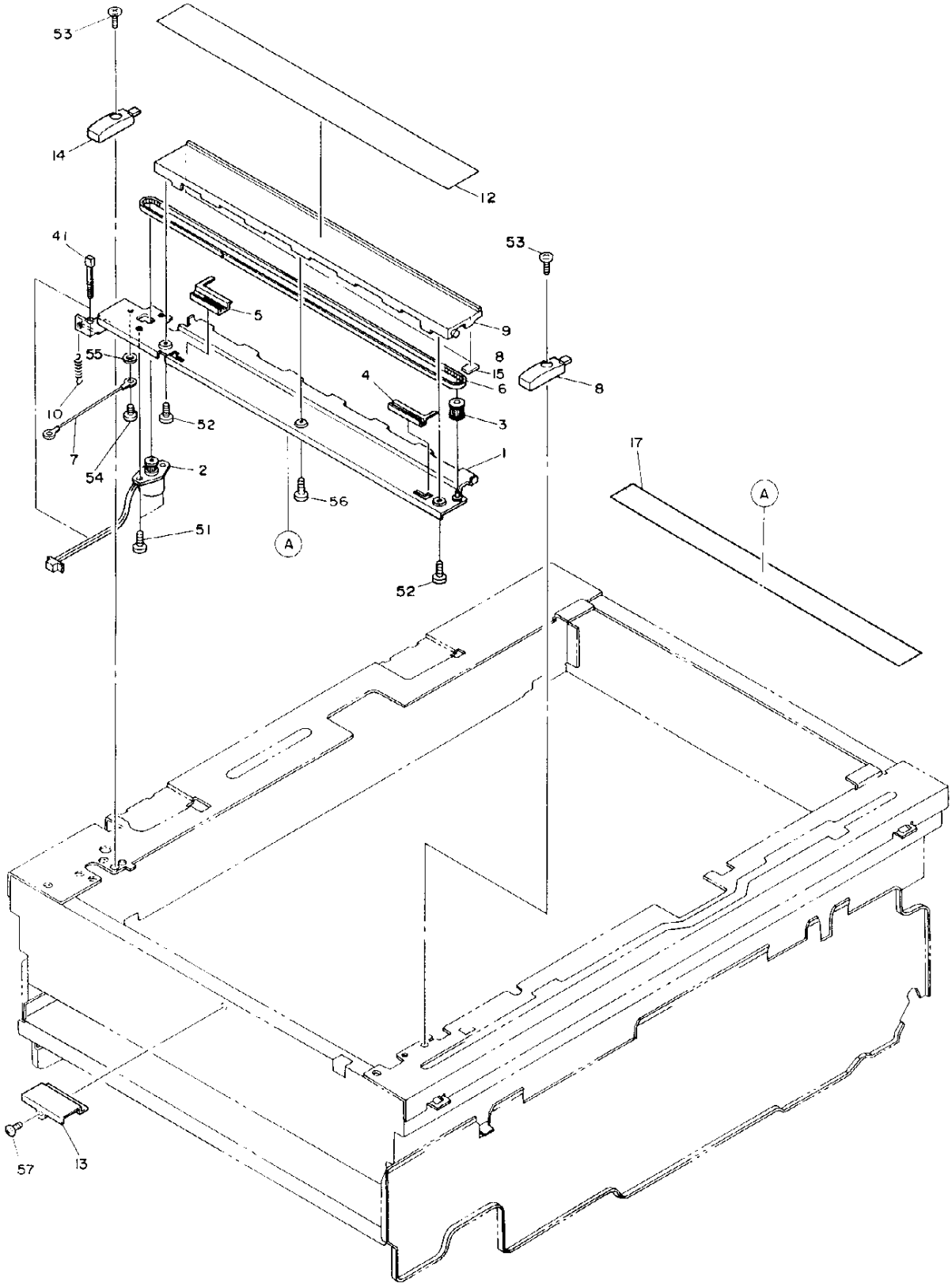
53
14
12
41
53
5
9
8
55
15
6
8
4
10
3
52
7
1
17
54
2
A
56
51
A
52
57
13

ITEM NO.	PARTS NO.	PARTS NAME	Q'TY / PAGE	Q'TY / PACK	SPE PRICE IN NONE	P	I	R	BSI NO.	TO	FROM	SERIAL NO.	REMARKS
1A	4400 770650	K-BASE-INDI	1	1/P									ED-2050
1B	4400 770660	K-BASE-IND-SPOT	1	1/P									ED-1650
2	4400 370350	K-M/P-DCM-527	1	1/C									
3	4407 952410	COLLAR-IND	1	10/P									ED-2050
4	4400 723330	INDICATOR-F	1	1/P									ED-2050
5	4400 723340	INDICATOR-R	1	1/P									ED-2050
6	4407 952380	BELT-HTD348-2M	1	1/P									ED-2050
7	4402 220610	WH-IND-545	1	1/P									ED-2050
8	4400 752430	HINGE-STOPPER-F	1	1/P									
9	4400 770640	STOPPER-ORG	1	1/P									
10	4402 825120	SPE050-050-0184	1	5/P									
12A	4400 925770	LBL-SCALE-UC177	1	1/KP									USA SIZE
12B	4400 925780	LBL-SCALE-ER177	1	1/KP									EUR SIZE
13	4400 723290	BKT-STOP-IND	1	1/P									
14	4400 752440	HINGE-STOPPER-R	1	1/P									
15	4400 854460	SPACER-ORG-79	2	5/P						015 1			ED-1650
15 1	4400 854460	SPACER-ORG-79	0	5/P		E	-	J	F4B100		015		ED-1650
17	4402 825350	TAPE-WHITE-170	1	1/KP									
41	4346 754010	SKB-BAND-1	1	5/P									ED-2050
51	7040 200411	PAN20*04MSZN3AI	2	50/P									ED-2050
52	4842 040495	PTBR30*06MSZN3A	2	50/P									
53	7043 400613	BID40*06MSCR1AI	2	50/P									
54	4842 040650	TPAN40*06MSZN3L	1	50/P									ED-2050
55	7402 004032	0TWAS040SKZN3A	1	50/P						055 1			ED-2050
55 1	7402 004032	0TWAS040SKZN3A	0	50/P		E	-	J	F4B100		055		ED-2050
56	7124 300611	12FLT3006MSZN3A	1	50/P									
57	4842 040060	TPAN40*08MSZN3L	1	50/P									

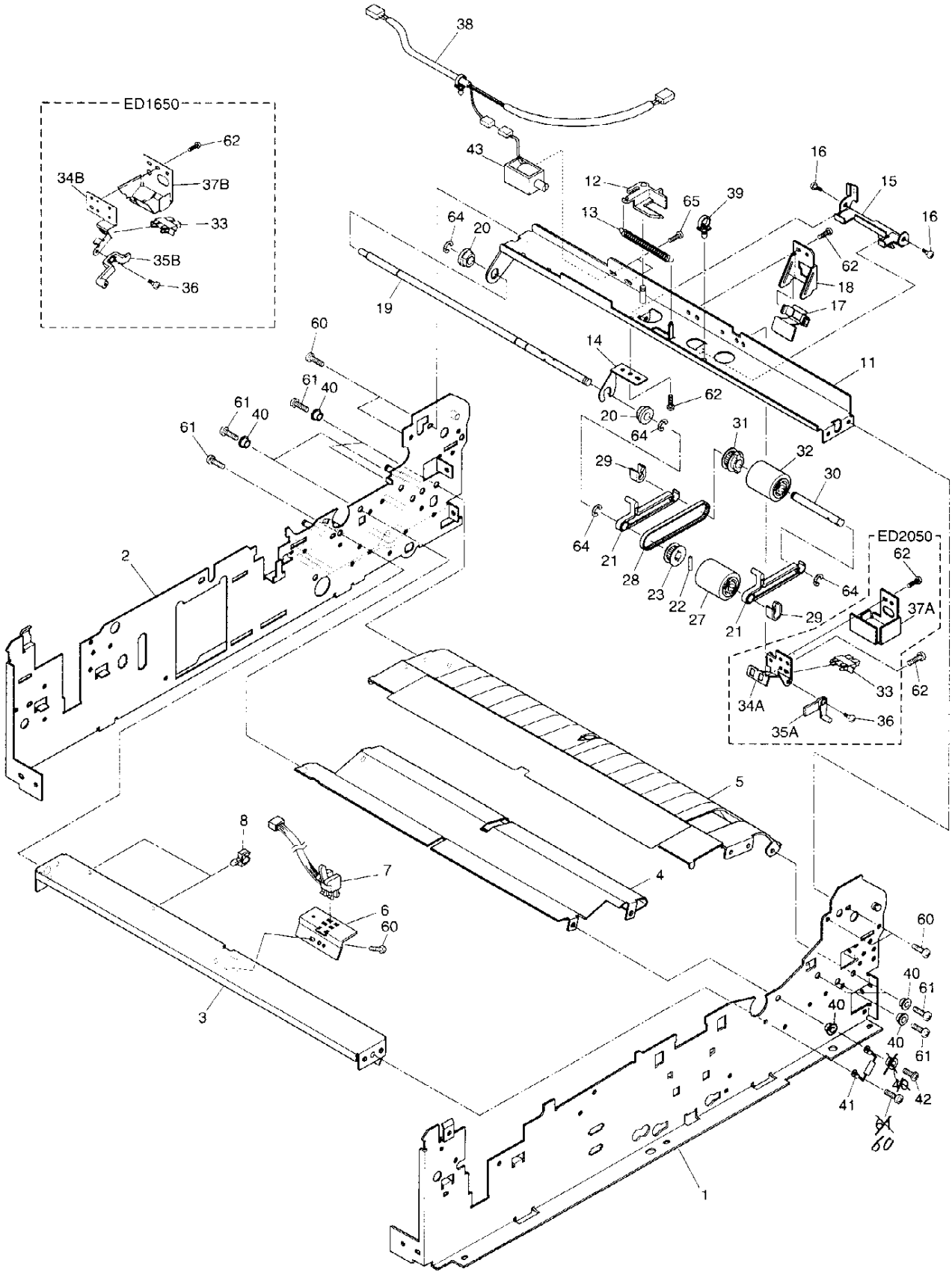
ED1650
62
34B
37B
33
35B
36
38
43
12
65
39
16
15
13
64
20
62
18
19
17
60
14
11
61
40
62
20
64
31
29
32
30
64
21
28
23
22
27
21
29
64
ED2050
62
37A
33
62
34A
36
35A
2
5
8
7
6
60
4
3
60
40
61
40
40
61
40
42
41
60
1

ITEM NO.	PARTS NO.	PARTS NAME	Q'TY / PAGE	Q'TY / PACK	SPE PRICE IN NONE	P	I	R	BSI NO.	TO	FROM	SERIAL NO.	REMARKS
1	4400 917100	K-FRAME-FRONT-L	1	N/A***									
2	4400 916700	K-FRAME-REAR-L	1	N/A***									
3	4400 916530	STAY-RGT-SW	1	1/P									
4	4400 916510	K-GUIDE-PAPER-2	1	1/KP									
5	4400 916570	K-GUIDE-P-1-176	1	1/KP									
6	4402 813620	BKT-RGT-SW	1	1/P									
7	4400 781600	SZ-P-RGT-170V	1	1/C									
8	4843 391176	CLP/W-UAMS05L	2	5/P									
11	4400 756430	K-BKT-BYPASS-U	1	1/P									
12	4400 756410	ACT-BYPASS	1	1/P									ED-2050
13	4400 756490	SPE-SND-BYPASS	1	5/P									ED-2050
14A	4400 756420	BKT-SHAFT-FEED	1	1/P									ED-2050
14B	4400 918320	BKT-SFT-FEED176	1	1/P									ED-1650
15	4400 756460	BKT-BYPASS-U2	1	1/P									ED-2050
16	4400 882280	SCREW-GUIDE-FED	2	10/P									ED-2050
17	4400 756470	STOPPER-PAPER	1	1/P									ED-2050
18	4400 756550	BKT-GUIDE-STOP	1	1/P									ED-2050
19A	4400 918380	SFT-ROL-FEED-U	1	1/P									ED-2050
19B	4400 918280	SFT-ROLL-FD-U76	1	1/P									ED-1650
20	4407 734980	BUSH-6-GCB	2	5/P									
21	4402 813640	ARM-PICK-U-170	2	1/P									ED-2050
22	4407 403790	NPIN2-8	1	10/P									ED-2050
23	4400 884670	PLY-20-ROL	1	1/P									ED-2050
27A	4400 756530	K-ROL-FEED-U-2	1	1/P						027A1			ED-2050
27A1	4401 773050	K-ROL-FED-CW-H	1	1/P		E	-	J	F4B100		027A		ED-2050
27B	4401 773050	K-ROL-FED-CW-H	1	1/P									ED-1650
28	4402 814000	BELT-160-SZ2M	1	1/P									ED-2050
29A	4407 907410	STOP-RING-6	2	5/P									ED-2050
29B	4407 907410	STOP-RING-6	1	5/P									ED-1650
30	4402 813660	SFT-ROL-PICK-U	1	1/P									ED-2050
31	4402 813680	PLY-20	1	1/P									ED-2050
32	4401 773060	K-ROL-P/U-CW-H	1	1/P									ED-2050
33	4402 816780	SZ-GP1A71M1	1	1/C									
34A	4400 756610	BKT-PAPER-SW	1	1/P									ED-2050
34B	4400 918310	BKT-PAPER-SW176	1	1/P									ED-1650
35A	4402 813220	LEV-PAPER-SW	1	1/P									ED-2050
35B	4400 918290	LEV-PAPER-SW176	1	1/P									ED-1650
36	4402 814490	SCREW-BYPASS-Z	1	10/P									
37A	4400 756620	COV-PAPER-SW	1	1/P									ED-2050
37B	4400 918300	COV-PAPER-SW176	1	1/P									ED-1650
38A	4400 744200	WH-M-FED-102	1	1/P									ED-2050
38B	4400 961600	WH-M-FED-176	1	1/P									ED-1650
39	4400 902490	BAND-PS100	1	5/P									
40	4407 980920	BUSH-4-5	8	5/P									
41	4402 816870	K-RESISTOR-170F	1	1/P									
42	4408 300990	SCREW40*10MSCR	1	5/P									
43	4400 744310	SND-FED-170	1	1/D									ED-2050
60	4842 040060	TPAN40*08MSZN3L	6	50/P						060 1			
60 1	4842 040060	TPAN40*08MSZN3L	7	50/P		D	E	E	F4H257		060	CH4/QH4	
61	4842 040061	TPAN40*10MSZN3L	7	50/P						061 1			
61 1	4842 040061	TPAN40*10MSZN3L	6	50/P		D	-	E	F4H257		061	CH4/QH4	
62	4842 040665	TPAN3006MSZN3L	4	50/P									
64	7405 005031	ERR050SKZN3A	4	50/P									
65	7040 300611	PAN30*06MSZN3A	2	50/P									ED-2050

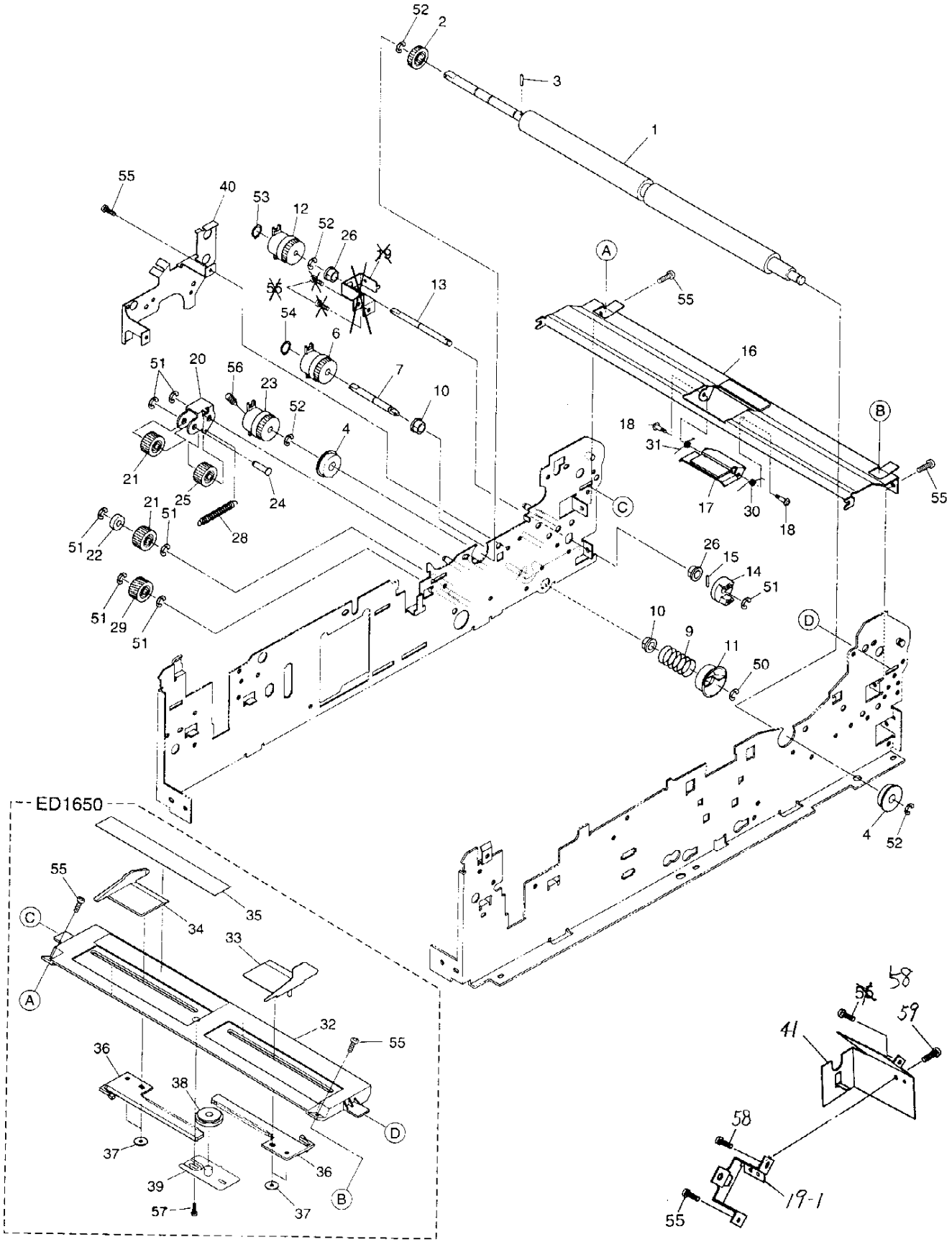
ED1650
A
B
C
D
1
2
3
4
6
7
9
10
11
12
13
14
15
16
17
18
19
20
21
22
23
24
25
26
28
29
30
31
32
33
34
35
36
37
38
39
40
41
50
51
52
53
54
55
56
57
58
59
19-1

TOSHIBA

ITEM NO.	PARTS NO.	PARTS NAME	Q'TY / PAGE	Q'TY / PACK	SPE PRICE IN NONE	P	I	R	BSI NO.	TO	FROM	SERIAL NO.	REMARKS
1	4400 756330	ROLLER-RGT-U	1	1/KP									
2	4402 813120	GEAR-20-1.0	1	1/P									
3	4842 904035	HPIN20/10SUSH7	1	50/P									
4	4400 756300	BUSH-22	2	1/P									
6	4400 917020	ASM-CLUTCH-30-8	1	1/P						006 1			
6 1	4400 917330	ASM-CLUTCH-30-8	1	1/D		C	E	E	F96A589		006		
7	4400 917870	SHAFT-CLT-FEED	1	1/P									
9	4400 917850	SPRING-COUP	1	5/P									
10	4400 802080	BUSH-8	2	5/P									
11	4400 917810	COUPRING-D-SLID	1	5/P									
12	4400 917030	ASM-CLUTCH-30-6	1	1/P						012 1			
12 1	4400 917340	ASM-CLUTCH-30-6	1	1/D		C	E	E	F96A589	012 2	012		
12 2	4400 916680	ASM-CLUTCH-30-6	1	1/D		C	B	D	F97L134		012 1		
13	4400 916910	SHAFT-COUP-FED	1	1/P									
14	4400 917480	COUPLING-FE-ROL	1	5/P						014 1			
14 1	4400 927170	COUPLING-FE-ROL	1	5/P		C	B	E	F4F218		014	CH4/QH4	
15	4842 904020	HPIN20/12SUSH7	1	10/P									
16A	4400 756760	BKT-BYPASS-L	1	1/P									ED-2050
16B	4400 918100	BKT-BYPASS-L176	1	1/P									ED-1650
17	4400 756710	K-PAD-SPT-U	1	1/P									
18	4402 834670	SCREW-SW-M3	2	10/P									
19	4400 917760	BKT-FEED-ROL-2	1	1/P						019 1			
19 1	4400 917290	BKT-FEED-ROL-2	1	1/P		E	-	J	F4B100	019 2	019		
19 2	4400 917130	BKT-FEED-ROL-2	1	1/P		C	B	E	F4F178		019 1	CE4/QE4	
20	4400 917230	ARM-JOINT-FEED	1	1/P						020 1			
20 1	4400 947880	ARM-JOINT-FEED	1	1/P		C	E	E	F4J295		020	CJ414701 QJ415354	
21	4400 916820	GEAR-Z24H	2	1/P									
22	4400 917210	CLR-JOINT-FEED	1	5/P									
23	4402 235600	ASM-CLUTCH-10K	1	1/D									
24	4400 917220	STUD-ARM-JOINT	1	1/P									
25	4400 917240	GEAR-Z24-IDLE	1	1/P									
26	4400 802070	BUSH-6L	2	5/P									
28	4400 917160	SPE-JOINT-FEED	1	5/P						028 1			
28 1	4400 917190	SPE-JOINT-FEED	1	5/P		C	E	E	F4J295		028	CG4/QG4	
29	4400 755300	GEAR-Z24-IDLE	1	1/P									
30	4400 756730	SPRING-SPT-UL	1	5/P									
31	4400 756740	SPRING-SPT-UR	1	5/P									
32	4400 916260	TRAY-M-FEED-176	1	1/P									ED-1650
33	4400 918360	GUIDE-F-176	1	1/P									ED-1650
34	4400 918370	GUIDE-R-176	1	1/P									ED-1650
35A	4400 918160	LBL-TRAY-U-176	1	5/P									ED-1650 USA
35B	4400 918170	LBL-TRAY-E-176	1	5/P									ED-1650 EUR
36	4402 814300	RACK-BYPASS	2	1/P						036 1			ED-1650
36 1	4400 948540	RACK-BYPASS	2	1/P		C	E	J	F95D427		036	QG5	ED-1650
37	4407 408370	PUSH-NUT-3	4	10/P									ED-1650
38	4407 726480	PINION-18-395	1	1/P									ED-1650
39	4400 918260	K-PLT-PINION176	1	1/P									ED-1650
40	4400 917960	BKT-PC-CL	1	1/P									
41	4400 917280	COV-CLUTCH	1	1/P		F	-	J	F4B100	041 1			
41 1	4400 917140	COV-CLUTCH	1	1/P		C	B	E	F4F178		041	CE4/QE4	
50	7405 004031	ERR040SKZN3A	1	50/P									
51	7405 005031	ERR050SKZN3A	12	50/P									
52	7405 007031	ERR070SKZN3A	4	50/P									
53	7403 006039	CRR/S060SKFB	1	50/P									
54	7403 007039	CRR/S070SKFB	1	50/P						054 1			
54 1	7403 008039	CRR/S080SKFB	1	50/P		E	-	J	F4B100		054		
55A	4842 040060	TPAN40*08MSZN3L	6	50/P						055A1			ED-2050
55A1	4842 040060	TPAN40*08MSZN3L	7	50/P		E	-	J	F4B100	055A2	055A		ED-2050
55A2	4842 040060	TPAN40*08MSZN3L	6	50/P		D	-	E	F4D135		055A1		ED-2050
55B	4842 040060	TPAN40*08MSZN3L	8	50/P						055B1			ED-1650
55B1	4842 040060	TPAN40*08MSZN3L	9	50/P		E	-	J	F4B100	055B2	055B		ED-1650
55B2	4842 040060	TPAN40*08MSZN3L	8	50/P		D	-	E	F4D135		055B1		ED-1650
56	4842 011063	9HSS30/05MSFB	1	50/P									
57	4842 040495	PTBR30*06MSZN3A	1	50/P		F	-	J	F4B100				ED-1650
58	4842 040650	TPAN40*06MSZN3L	1	50/P		F	-	J	F4B100	058 1			
58 1	4842 040650	TPAN40*06MSZN3L	2	50/P		D	-	E	F4D135		058		
59	4842 040665	TPAN3006MSZN3L	1	50/P		F	-	J	F4B100				

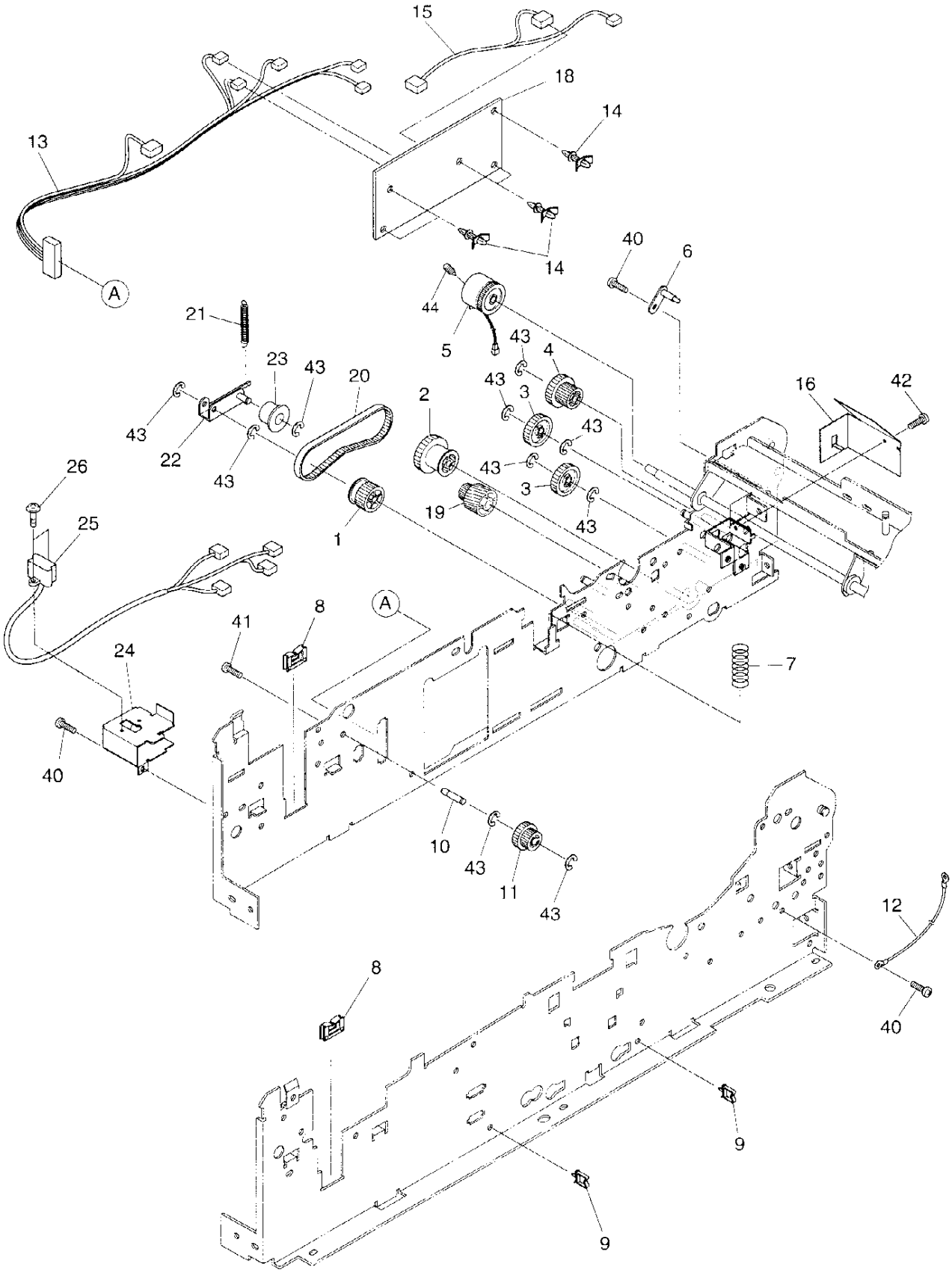
15
18
14
13
14
A
40
6
44
5
21
43
4
23
43
20
43
3
2
16
42
43
22
43
43
26
43
3
19
43
25
1
A
8
41
24
7
40
10
43
11
43
12
8
40
9
9

TOSHIBA

ITEM NO.	PARTS NO.	PARTS NAME	Q'TY / PAGE	Q'TY / PACK	SPE PRICE IN NONE	P	I	R	BSI NO.	TO	FROM	SERIAL NO.	REMARKS
1	4400 916800	PLY-25-G30H	1	1/P									
2	4400 917790	PLY-25-G35	1	1/P									
3	4402 832590	GEAR-29-1.0	2	1/P									
4	4400 917710	GEAR-Z30-Z20	1	1/P									
5	4402 831170	ASM-CLT-10K-30	1	1/C									
6A	4402 817980	K-BKT-TRAY	1	1/P									ED-2050
6B	4400 918060	K-BKT-TRAY-178	1	1/P									ED-1650
7	4402 205790	SPC-CH-TR	1	5/P									
8	4843 391236	BD/W-EDH-18U	2	5/P									
9	4843 390854	CLP/W-LWS-1U	2	5/P									
10	4400 741810	STUD-24-18-BELT	1	1/P									
11	4402 801630	GEAR-24-18-M1	1	1/P									
12	4400 539470	WH-FG-518	1	1/P									
13A	4400 960660	WH-DC-PWR-176JU	1	1/P									TAD
13B	4400 960660	WH-DC-PWR-176JU	1	1/P									CSD
13C	4400 960670	WH-DC-PWR-176E	1	1/P									EUD
13D	4400 960670	WH-DC-PWR-176E	1	1/P									GSD
13E	4400 960670	WH-DC-PWR-176E	1	1/P									FRD
13F	4400 960670	WH-DC-PWR-176E	1	1/P									SED
13G	4400 960670	WH-DC-PWR-176E	1	1/P									UKD
13H	4400 960670	WH-DC-PWR-176E	1	1/P									AUD
13I	4400 960660	WH-DC-PWR-176JU	1	1/P									TWD
13J	4400 960660	WH-DC-PWR-176JU	1	1/P									SAN
13K	4400 960670	WH-DC-PWR-176E	1	1/P									EUN
13L	4400 960670	WH-DC-PWR-176E	1	1/P									AUN
14	4843 381339	Z-PW-LCBS-010N	3	5/P						014 1			
14 1	4843 381339	Z-PW-LCBS-010N	5	5/P		E	-	J	F4B100		014		
15A	4400 960680	WH-FEED-176JU	1	1/P									TAD
15B	4400 960680	WH-FEED-176JU	1	1/P									CSD
15C	4400 960690	WH-FEED-176E	1	1/P									EUD
15D	4400 960690	WH-FEED-176E	1	1/P									GSD
15E	4400 960690	WH-FEED-176E	1	1/P									FRD
15F	4400 960690	WH-FEED-176E	1	1/P									SED
15G	4400 960690	WH-FEED-176E	1	1/P									UKD
15H	4400 960690	WH-FEED-176E	1	1/P									AUD
15I	4400 960680	WH-FEED-176JU	1	1/P									TWD
15J	4400 960680	WH-FEED-176JU	1	1/P									SAN
15K	4400 960690	WH-FEED-176E	1	1/P									EUN
15L	4400 960690	WH-FEED-176E	1	1/P									AUN
16	4400 916770	COV-CLUTCH	1	1/P						016 1			
16 1	4400 916770	COV-CLUTCH	0	1/P		E	-	J	F4B100		016		
18	4400 960030	PWA-F-FED-176	1	1/C									
19	4400 917670	K-GEAR-Z30-Z15	1	1/P									
20	4400 917930	BELT-3M-76-6.5	1	1/P									
21	4400 917180	SPE-RGT-T-419	1	1/P									
22	4400 917070	K-BKT-TENS-176	1	1/P									
23	4400 335180	PULLEY-TENSION	1	1/P									
24G	4400 724850	BKT-CNCT-200-L	1	1/P									UKD
25G	4400 961610	WH-TUV-176L	1	1/P									UKD
26G	4402 807030	SCREW-SOCKET	1	10/P						026G1			UKD
26G1	4402 807030	SCREW-SOCKET	2	10/P		E	-	J	F5B398		026G		UKD
40A	4842 040060	TPAN40*08MSZN3L	3	50/P						040A1			OTHERS
40A1	4842 040060	TPAN40*08MSZN3L	2	50/P		D	-	E	F4D135		040A		OTHERS
40G	4842 040060	TPAN40*08MSZN3L	4	50/P						040G1			UKD
40G1	4842 040060	TPAN40*08MSZN3L	3	50/P		D	-	E	F4D135		040G		UKD
41	4842 040711	TPPAN3008MSZN3A	1	50/P									
42	4842 040665	TPAN3006MSZN3L	1	50/P						042 1			
42 1	4842 040665	TPAN3006MSZN3L	0	50/P		E	-	J	F4B100		042		
43	7405 005031	ERR050SKZN3A	16	50/P									
44	4842 011063	9HSS30/05MSFB	1	50/P									
45	4842 040650	TPAN40*06MSZN3L	1	50/P		A	B	E	F4D135				

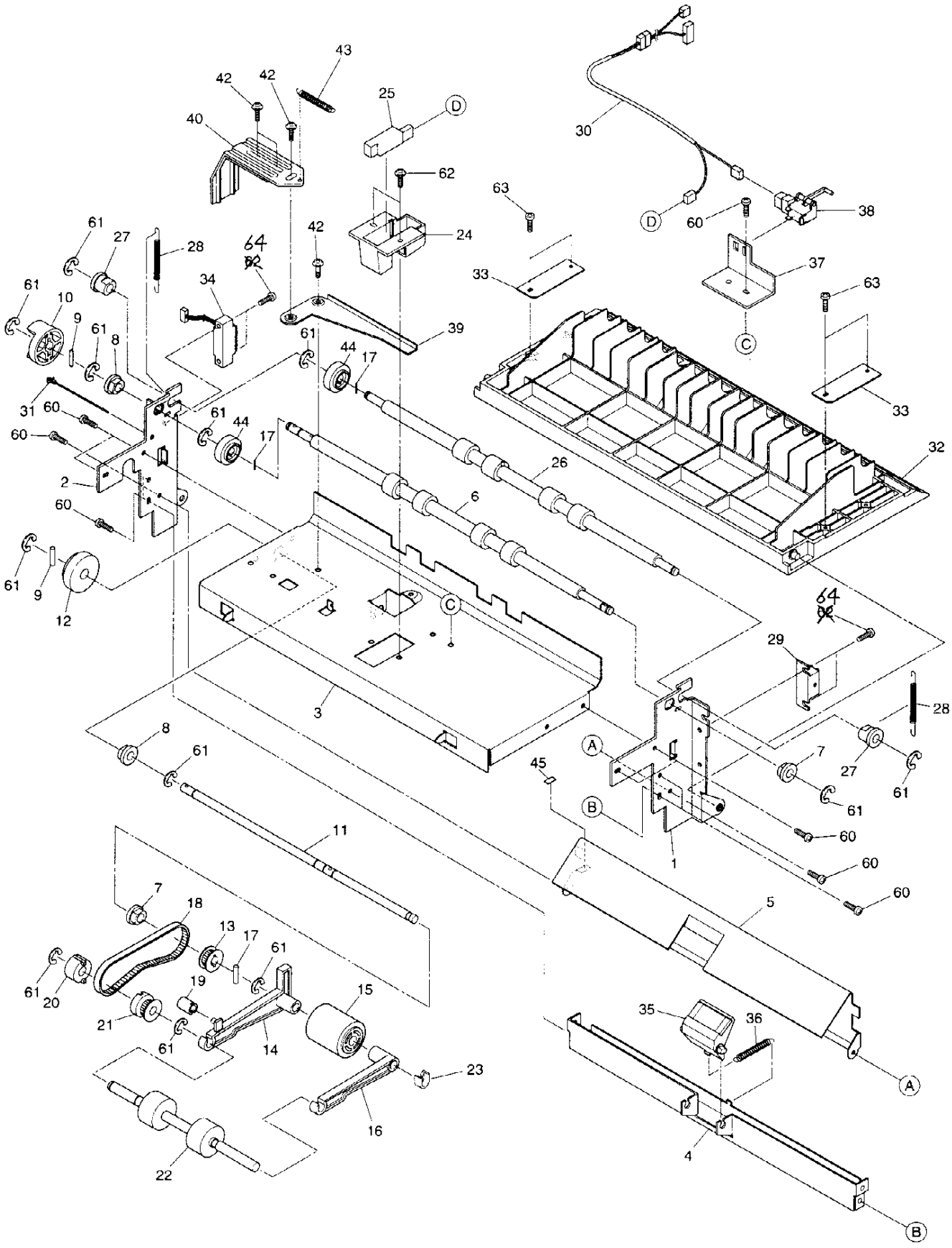
43
42
42
40
25
D
30
62
63
38
D
60
61
27
28
64
~~62~~
42
24
33
37
63
61
10
34
39
9
61
8
61
44
17
C
31
60
61
44
17
33
60
2
26
32
60
6
61
9
12
C
64
~~62~~
29
3
28
8
61
A
7
27
61
45
61
B
11
60
1
60
60
7
18
5
13
17
61
61
20
19
15
21
61
14
35
36
23
A
16
4
22
B

TOSHIBA

ITEM NO.	PARTS NO.	PARTS NAME	Q'TY / PAGE	Q'TY / PACK	SPE PRICE IN NONE	P	I	R	BSI NO.	TO	FROM	SERIAL NO.	REMARKS
1	4400 917590	FRAME-FEED-F-6	1	N/A***									
2	4400 917600	FRAME-FEED-R-6	1	N/A***									
3	4400 917610	BKT-FEED-GU-176	1	1/P									
4	4400 916540	BRKT-PAD-SEP	1	1/P									
5	4400 917570	GUIDE-FEED-176	1	1/P									
6	4400 917560	ROLLER-FEED	1	1/P									
7	4407 734980	BUSH-6-GCB	2	5/P									
8	4400 802070	BUSH-6L	2	5/P									
9	4346 312020	PIN	2	10/P									
10	4400 917480	COUPLING-FE-ROL	1	5/P						010 1			
10 1	4400 927170	COUPLING-FE-ROL	1	5/P		C	B	E	F4F218		010	CH4/QH4	
11	4400 917880	SHAFT-FEED	1	1/P									
12	4400 917820	COUPRING-FEED	1	5/P									
13	4400 884670	PLY-20-ROL	1	1/P									
14	4400 916980	ARM-PICK-R-176	1	1/P									
15	4401 773050	K-ROL-FED-CW-H	1	1/P									
16	4400 916970	ARM-PICK-F-176	1	1/P									
17	4407 403790	NPIN2-8	3	10/P									
18	4407 973140	BELT-HTD-93-2M	1	1/P									
19	4400 916960	PLY-TENS-PICK	1	1/P									
20	4402 833100	CLUTCH-6-R	1	1/D									
21	4402 231780	PLY-20-2M	1	1/P									
22	4400 917630	ROL-PICK-UP	1	1/KP									
23	4407 907410	STOP-RING-6	1	5/P									
24	4400 916950	COV-SW-EMPTY	1	1/P						024 1			
24 1	4400 917010	COV-SW-EMPTY	1	1/P		C	B	E	F95J517		024	CJ5/QJ5	
25	4402 816600	SNSR-PEM-170	1	1/C									
26	4400 917550	ROLLER-FEED-I	1	1/P									
27	4407 976990	BUSH-D6-GCB	2	1/P									
28	4400 885120	SPRING-300	2	5/P									
29	4402 811970	MAG-CATCH-2	1	1/P									
30	4400 960760	WH-CST1-176	1	1/P									
31	4400 902490	BAND-PS100	1	5/P									
32	4400 918000	COV-OPEN-176	1	1/P									
33	4400 917750	PLT-MG	2	1/P									
34	4400 917420	SE-PCSW303B1B	1	1/C									
35	4400 917900	K-PAD-176	1	1/C						035 1			
35 1	4400 927500	K-PAD-HOLDER	1	1/C		C	E	J	F4F218		035		
		COMMUNITY WITH THE OTHER MODELS											
36	4400 917940	SPE-SEP-176-200	1	5/P									
37	4400 916990	BKT-SW	1	1/P									
38	4400 961310	SZ-P-FED-176	1	1/C									
39	4400 917970	LEVER-ARM-1	1	1/P									
40	4400 917980	LEVER-ARM-2	1	1/P									
42	4402 203820	SCREW-BKT-DEV	4	50/P									
43	4400 917990	SPE-LEVER-ARM	1	5/P									
44	4400 823760	GEAR-08-20-LA5	2	1/P									
45	4400 919720	LABEL-9*13-AQUA	1	5/P									
60	4842 040665	TPAN3006MSZN3L	11	50/P									
61	7405 005031	ERR050SKZN3A	13	50/P									
62	4842 040690	TZPAN3006MSZN3L	6	50/P						062 1 064			
62 1	4842 040690	TZPAN3006MSZN3L	2	50/P		D	-	E	F95E435		062	CE5/QE5	
63	4842 040495	PTBR30*06MSZN3A	4	50/P									
64	4842 040692	TZPAN3008MSZN3L	4	50/P		C	E	E	F95E435		062	CE5/QE5	

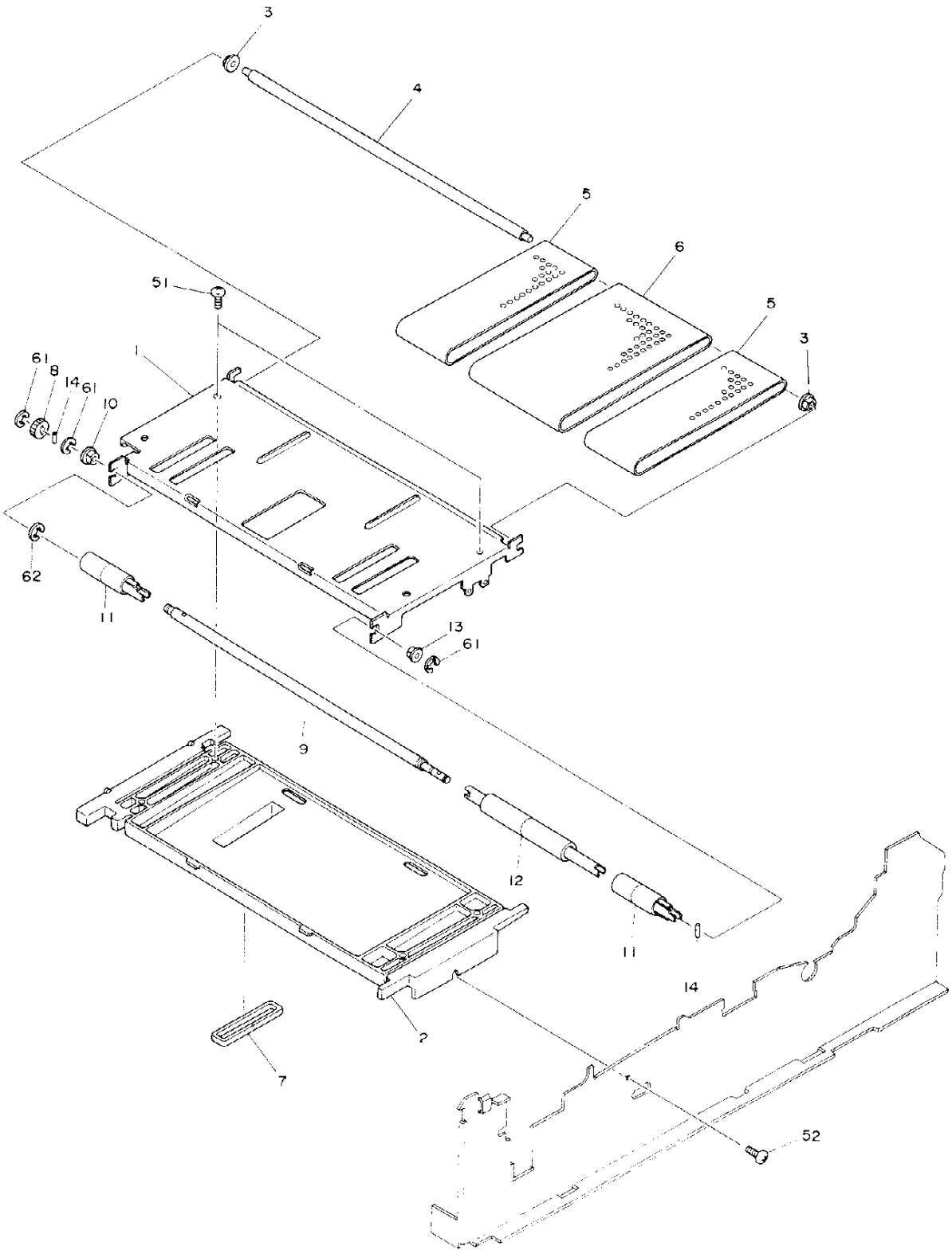

TOSHIBA

ITEM NO.	PARTS NO.	PARTS NAME	Q'TY / PAGE	Q'TY / PACK	SPE PRICE IN NONE	P	I	R	BSI NO.	TO	FROM	SERIAL NO.	REMARKS
1	4402 801840	BKT-BELT-F170	1	1/P						001 1			
1 1	4400 948610	BKT-BELT-F179	1	1/P		C	E	E	F95E435		001	CH5/QH5	
2	4402 801850	DUCT-BELT	1	1/PP									
3	4407 974570	BUSH-6-MU	2	5/P									
4	4402 801580	SHAFT-BELT-I	1	1/P									
5	4402 801530	BELT-TRANSPORT2	2	1/P									
6	4402 801520	BELT-TRANSPORT1	1	1/P									
7	4402 801610	SEAL-DUCT-BELT	1	1/KP									
8	4407 956590	GEAR-10-20-6	1	1/P									
9	4402 801570	SHAFT-BELT	1	1/P									
10	4407 734980	BUSH-6-GCB	1	5/P									
11	4402 801650	ROL-BELT-20-50	2	1/P									
12	4402 801560	ROL-BELT-20-100	1	1/P									
13	4400 802070	BUSH-6L	1	5/P									
14	4346 312020	PIN	2	10/P									
51	4842 040846	PTBR30*08MSZN3A	4	50/P									
52	4842 040700	TZPAN4008MSZN3L	1	50/P									
61	7405 005031	ERR050SKZN3A	3	50/P									
62	7405 007031	ERR070SKZN3A	1	50/P									

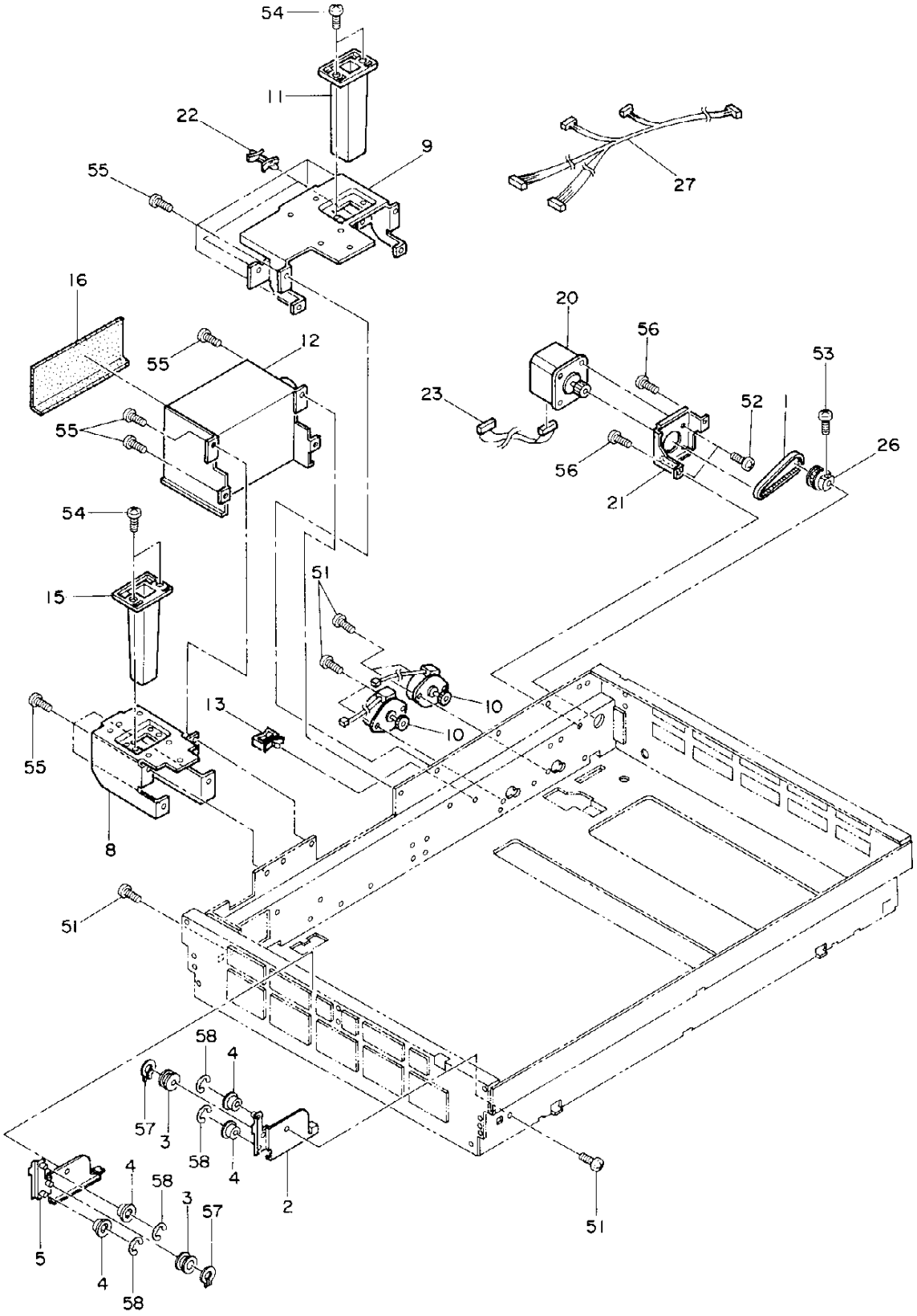
54
11
22
9
55
27
16
20
56
12
55
53
23
52
1
55
26
56
21
54
51
15
10
13
10
55
8
51
58
4
57
3
58
4
4
58
3
57
2
5
4
58
51

ITEM NO.	PARTS NO.	PARTS NAME	Q'TY / PAGE	Q'TY / PACK	SPE PRICE IN NONE	P	I	R	BSI NO.	TO	FROM	SERIAL NO.	REMARKS
1	4400 729290	BELT-2M-60-4-C	1	1/P									
2	4400 922280	K-BKT-PLY-EX-F	1	1/P									
3	4400 922490	K-PULLEY-CRG2	2	1/P									
4	4400 335180	PULLEY-TENSION	4	1/P									
5	4400 922290	K-BKT-PLY-EX-R	1	1/P									
8	4400 770330	BKT-HINGE-PTN-L	1	1/P									
9	4400 770310	BKT-HINGE-PTN-R	1	1/P						009 1			
9 1	4400 946940	BKT-HINGE-PTN-R	1	1/P		C	E	E	F5A381		009	CA5/QA5	
10	4400 781650	K-M/P-L/M-V	2	1/C									
11	4402 217850	GUIDE-HINGE-R	1	1/P									
12A	4402 815970	FAN-DC-OPT-170V	1	1/C									TAD,CSD
12B	4400 741350	FAN-DC-OPT-102	1	1/C									OTHERS
13	4843 390854	CLP/W-LWS-1U	1	5/P									
15	4402 217840	GUIDE-HINGE-L	1	1/P									
16A	4402 805740	FILTER-OPT	1	1/KP									TAD,CSD
16B	4400 471370	FILTER-OPT	1	1/KP						016B1			OTHERS
16B1	4400 741370	FILTER-OPT	1	1/KP		E	-	J	F95E435		016B		OTHERS
20	4400 922010	K-SCAN-MOT-176	1	1/C									
21	4400 922020	BKT-SCN-MOT-176	1	1/P									
22	4843 390871	PWZ-SPLS-7U	2	5/P									
23	4402 815660	WH-SCN-170	1	1/P									
26	4402 804730	PULLEY-31	1	1/P									
27	4402 815600	WH-DC-OPT-170	1	1/P									
51	4842 040665	TPAN3006MSZN3L	4	50/P									
52	7040 300611	PAN30*06MSZN3A	2	50/P									
53	4842 040711	TPPAN3008MSZN3A	1	50/P									
54	4842 040692	TZPAN3008MSZN3L	4	50/P									
55	4842 040060	TPAN40*08MSZN3L	12	50/P									
56	4842 040690	TZPAN3006MSZN3L	2	50/P									
57	7403 006039	CRR/S060SKFB	2	50/P									
58	7405 005031	ERR050SKZN3A	4	50/P									

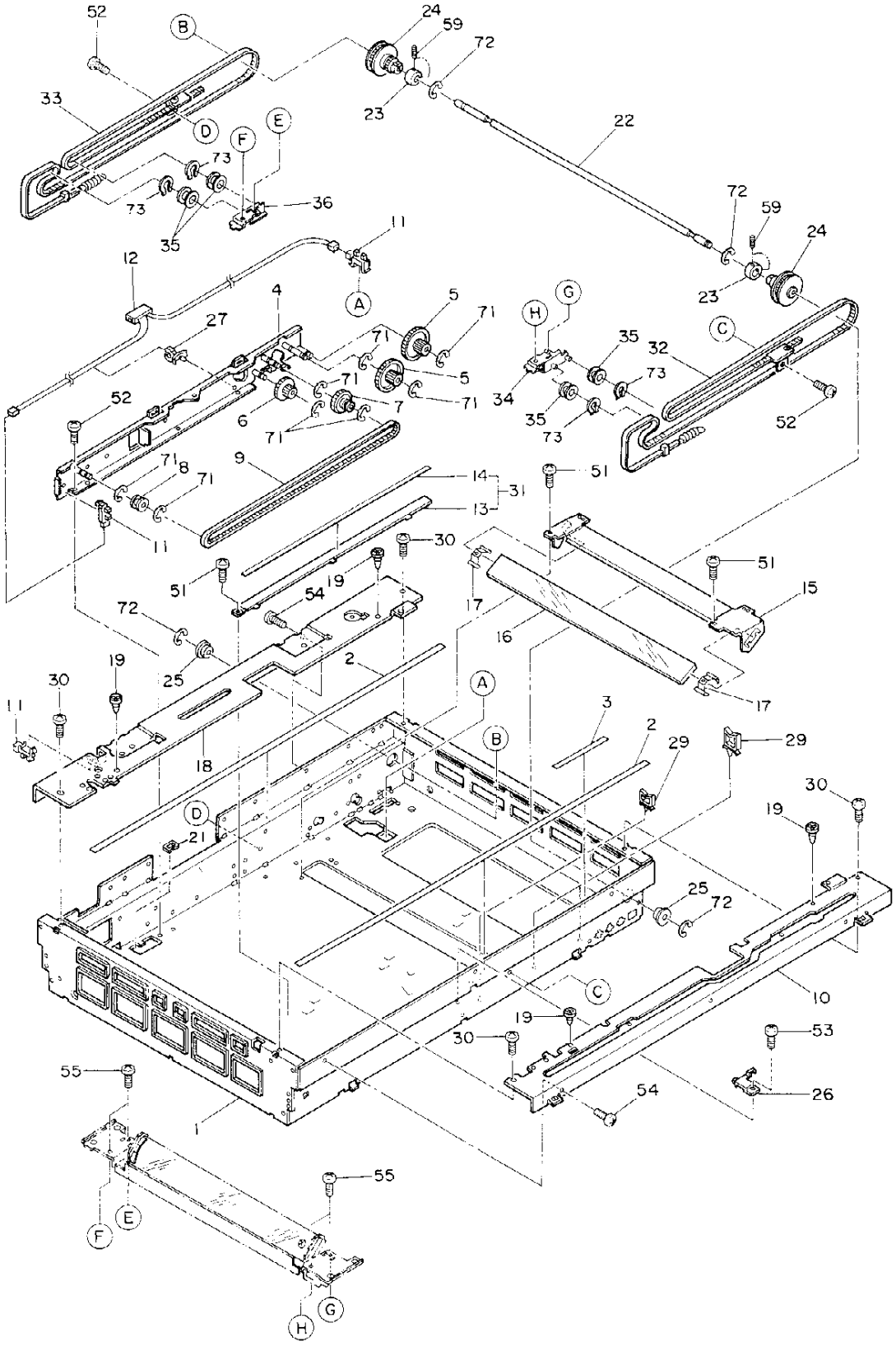
52
B
24
59
72
33
D
E
F
23
22
73
73
36
35
72
59
24
11
12
A
23
4
5
G
H
27
71
71
35
32
C
5
71
71
34
73
52
6
7
35
52
71
73
71
9
14
51
8
71
31
13
11
30
51
19
51
15
54
17
72
16
25
2
19
30
A
17
11
3
2
29
29
18
B
30
D
19
21
25
72
C
10
19
53
30
55
54
26
1
55
E
F
G
H

TOSHIBA

ITEM NO.	PARTS NO.	PARTS NAME	Q'TY / PAGE	Q'TY / PACK	SPE PRICE IN NONE	P	I	R	BSI NO.	TO	FROM	SERIAL NO.	REMARKS
1	4400 921470	K-BASE-OPT	1	N/A***									
2	4402 805550	SHEET-CRG	2	1/KP									
3	4402 804560	SHEET-CRG-MIR	1	1/KP									
4	4400 770480	K-BKT-DRIVE-OPT	1	1/P									
5	4402 804470	GEAR-46-14	2	1/P									
6	4402 804480	GEAR-30-14	1	1/P									
7	4402 804490	PULLEY-16-Z33	1	1/P									
8	4402 217550	PULLEY-16	1	1/P									
9	4402 804550	BELT-2M-330	1	1/P									
10	4400 922080	STAY-GLASS-F	1	N/A***									
11	4402 816780	SZ-GP1A71M1	3	1/C									
12	4402 815610	WH-OPT-SW-170	1	1/P									
13	4400 770930	RAIL-CRG-LENS	1	N/A***									
14	4400 770940	SHEET-CRG-LENS	1	1/KP									
15	4402 805680	BKT-MIRROR-6	1	1/P									
16	4402 804150	MIRROR-6	1	1/C									
17	4402 804340	SPL-MIRROR	2	1/P									
18	4400 922090	STAY-GLASS-R	1	N/A***									
19A	4400 831600	CUSH-GLASS	14	5/P									EUR
19B	4400 831600	CUSH-GLASS	4	5/P									OTHERS
21	4843 391367	BD/W-EDS-0607M	1	5/P									
22	4400 771150	SHAFT-SCAN	1	1/P									
23	4402 804750	FLANGE-PLY-SCAN	2	1/P									
24	4400 771170	PULLEY-25-50	2	1/P									
25	4408 510800	BRG-688ZZNR	2	1/P									
26	4402 805450	CLAMP-CABLE-CRG	1	1/P									
27	4400 902490	BAND-PS100	2	5/P									
29	4843 390855	CLP/W-LWS-2U	3	5/P									
30	4400 841470	SCREW40X08-T	4	50/P									
31	4400 770920	K-RAIL-CRG-LENS	1	1/P									
32	4400 921850	ASM-BELT-CRG-F	1	1/P									
33	4400 921860	ASM-BELT-CRG-R	1	1/P									
34	4400 922200	K-BKT-CRG2-F	1	1/P									
35	4400 922490	K-PULLEY-CRG2	4	1/P									
36	4400 922210	K-BKT-CRG2-R	1	1/P									
51	7040 300611	PAN30*06MSZN3A	5	50/P									
52	4842 040665	TPAN3006MSZN3L	5	50/P									
53	4842 040690	TZPAN3006MSZN3L	1	50/P									
54	4842 040480	THPAN3006MSZN3L	5	50/P									
55	4842 040709	TPPAN3006MSZN3A	4	50/P									
59	4842 011083	9HSS40/06MSFB	4	50/P									
71	7405 005031	ERR050SKZN3A	8	50/P									
72	7405 007031	ERR070SKZN3A	4	50/P									
73	7403 006039	CRR/S060SKFB	4	50/P									

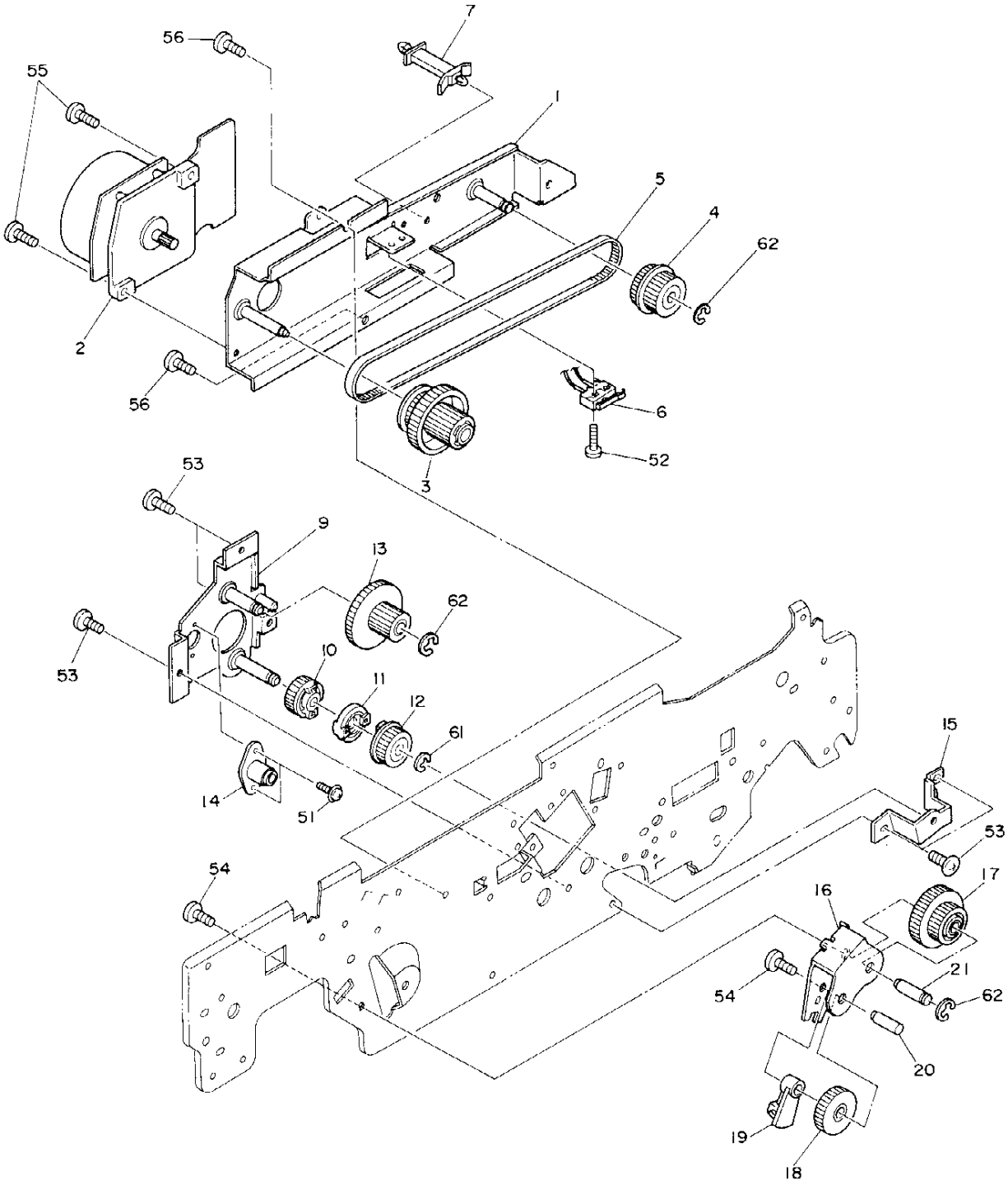
7
56
55
1
5
4
62
2
56
6
52
3
53
9
13
62
53
10
11
12
61
14
51
15
53
54
17
16
21
54
62
20
19
18

ITEM NO.	PARTS NO.	PARTS NAME	Q'TY / PAGE	Q'TY / PACK	SPE PRICE IN NONE	P	I	R	BSI NO.	TO	FROM	SERIAL NO.	REMARKS
1	4400 911810	K-FRAME-DRIVE-M	1	N/A***									
2	4400 960800	M/DC-MAIN-176	1	1/C									
3	4400 911850	K-PLY-30-92H-20	1	1/P									
4	4400 755070	K-PLY-30-30H	1	1/P									
5	4402 802910	BELT-3M-Z169	1	1/P									
6	4400 781770	K-T-FUL-SW-170V	1	1/C									
7	4843 390878	PWZ-SPLS-20U	1	5/P									
9	4400 911910	K-FRAME-DRIVE-S	1	1/P									
10	4400 911980	K-GEAR-Z26H	1	1/P									
11	4402 802950	JOINT-DEV	1	1/P									
12	4402 802980	K-GEAR-Z20H	1	1/P									
13	4400 755270	K-GEAR-20H-50H	1	1/P									
14	4400 755380	BUSH-SHAFT-DRUM	1	1/P									
15	4402 802790	BKT-DRIVE-DEV	1	1/P									
16	4402 802800	ARM-JOINT-FUSER	1	1/P									
17	4402 802540	K-GEAR-36-24	1	1/P									
18	4402 802840	K-GEAR-Z28	1	1/P									
19	4402 802450	BLOCK-DRIVE-HTR	1	1/P									
20	4402 802830	STUD-JOINT-R	1	1/P									
21	4402 802810	STUD-JOINT-L	1	1/P									
51	4842 040690	TZPAN3006MSZN3L	2	50/P									
52	7040 200811	PAN20*08MSZN3AI	1	50/P									
53	4842 040665	TPAN3006MSZN3L	3	50/P									
54	4842 040725	TPPAN4008MSZN3A	2	50/P									
55	4842 040704	TZPAN4012MSZN3L	2	50/P						055 1			
55 1	4842 040706	TZPAN4014MSZN3L	2	50/P		C	E	E	F4J295		055		
56	4842 040650	TPAN40*06MSZN3L	3	50/P									
61	7405 005031	ERR050SKZN3A	2	50/P									
62	7405 007031	ERR070SKZN3A	2	50/P									

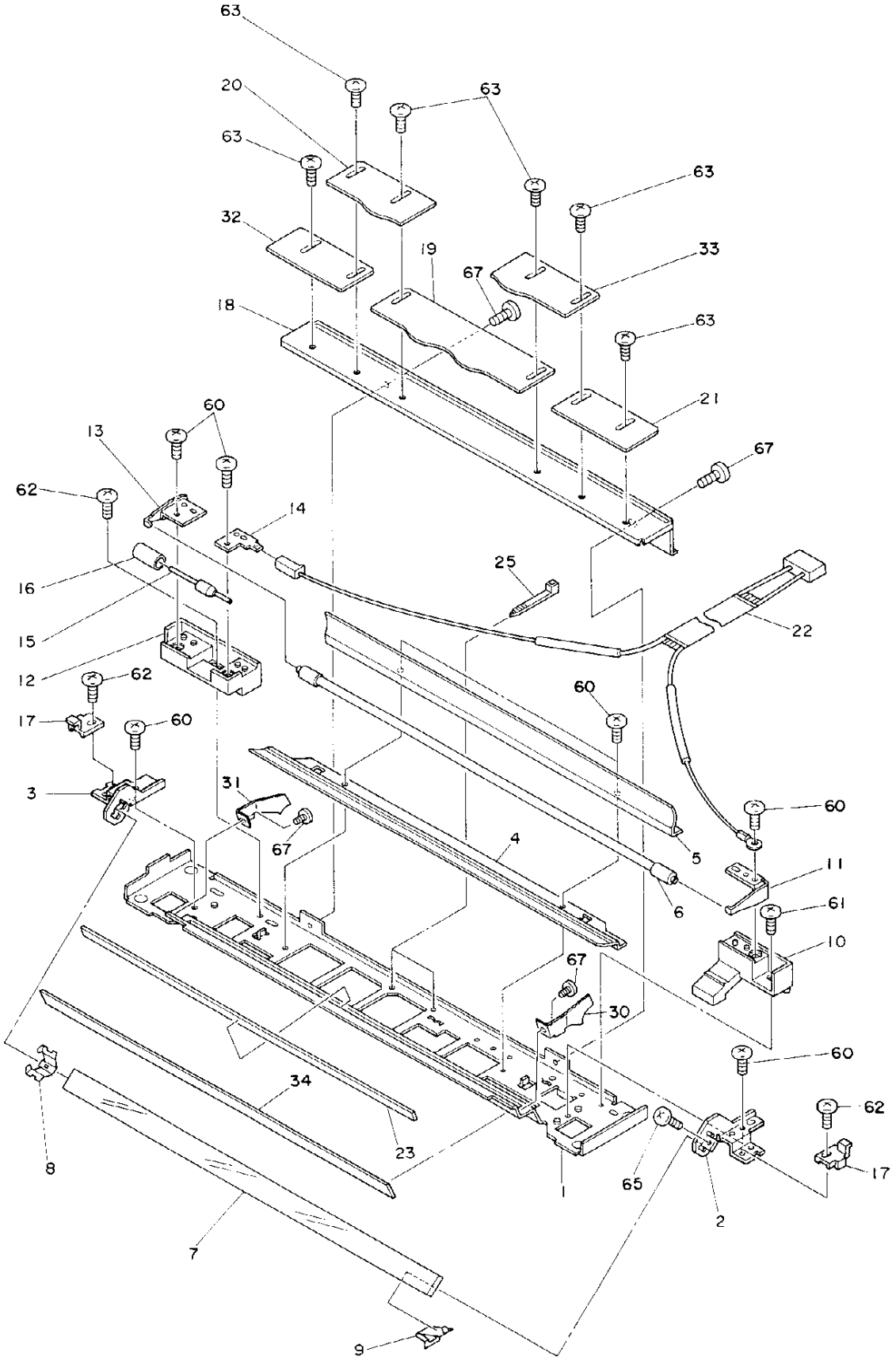
63
20
63
63
63
32
19
33
67
18
63
21
60
13
67
62
14
25
16
22
15
12
62
60
17
60
3
31
60
67
4
5
11
6
61
10
67
30
60
34
62
23
17
8
65
1
2
7
9

ITEM NO.	PARTS NO.	PARTS NAME	Q'TY / PAGE	Q'TY / PACK	SPE PRICE IN NONE	P	I	R	BSI NO.	TO	FROM	SERIAL NO.	REMARKS
1	4400 921660	STAY-CRG1	1	1/P									
2	4402 805610	HOLDER-MRR-1-F	1	1/P									
3	4402 805620	HOLDER-MRR-1-R	1	1/P									
4	4402 216590	REFLECTOR-L	1	1/PP									
5	4402 216580	REFLECTOR-U	1	1/PP									
6A	4400 733240	LP-92-300W-U	1	1/S									TAD
6B	4400 733240	LP-92-300W-U	1	1/S									CSD
6C	4402 816120	LP-184-300W-10A	1	1/S									EUD
6D	4402 816120	LP-184-300W-10A	1	1/S									GSD
6E	4402 816120	LP-184-300W-10A	1	1/S									FRD
6F	4402 816120	LP-184-300W-10A	1	1/S									SED
6G	4402 816120	LP-184-300W-10A	1	1/S									UKD
6H	4402 816120	LP-184-300W-10A	1	1/S									AUD
6I	4400 733240	LP-92-300W-U	1	1/S									TWD
6J	4400 733240	LP-92-300W-U	1	1/S									SAN
6K	4402 816120	LP-184-300W-10A	1	1/S									EUN
6L	4402 816120	LP-184-300W-10A	1	1/S									AUN
7	4402 805600	MIRROR-1	1	1/C									
8	4402 805280	SPRING-M1-R	1	1/P									
9	4402 805270	SPRING-M1-F	1	1/P									
10	4400 922720	HOLDER-BLADE-F	1	1/P									
11	4402 805320	BLADE-LAMP-EXPF	1	1/P									
12	4402 805220	HOLDER-BLADE-R	1	1/P									
13	4402 805370	BLADE-LAMP-EXPR	1	1/P									
14	4402 805380	BLADE-FUSE-EXP	1	1/P									
15	4402 816250	FU-EXPO-91	1	1/P						015 1			
15 1	4402 782540	K-FU/T-091G4	1	1/P		C	E	J	F4E155		015	CF4/QF4	
16	4400 358440	TUBE/I-TFE-523	1	5/P									
17	4402 805330	BLK-BELT	2	1/P									
18	4400 741130	K-COVER-CRG1	1	1/P									
19	4400 741150	PLT-ADJ-EXPO-1	1	1/P									
20	4400 741170	PLT-ADJ-EXPO-3	1	1/P									
21	4400 741160	PLT-ADJ-EXPO-2	1	1/P									
22	4402 815460	WH-EXPO-170	1	1/P									
23	4402 805250	TAPE-REF-SUB	1	1/KP									
25	4346 754010	SKB-BAND-1	2	5/P									
30	4400 726070	REF-SIDE-F	1	1/P									
31	4400 726080	REF-SIDE-R	1	1/P									
32	4400 741220	PLT-ADJ-EXPO-5	1	1/P									
33	4400 741210	PLT-ADJ-EXPO-4	1	1/P									
34	4402 805720	SEAL-CRG1	1	1/KP									
60	7040 300611	PAN30*06MSZN3A	7	50/P									
61	4842 040690	TZPAN3006MSZN3L	1	50/P									
62	4842 040710	TPPAN3006MSZN3L	3	50/P									
63	7040 300417	PAN30*04MSZN3L	6	50/P									
65	7040 300811	PAN30*08MSZN3AI	1	50/P									
67	7040 300411	PAN30*04MSZN3A	4	50/P									

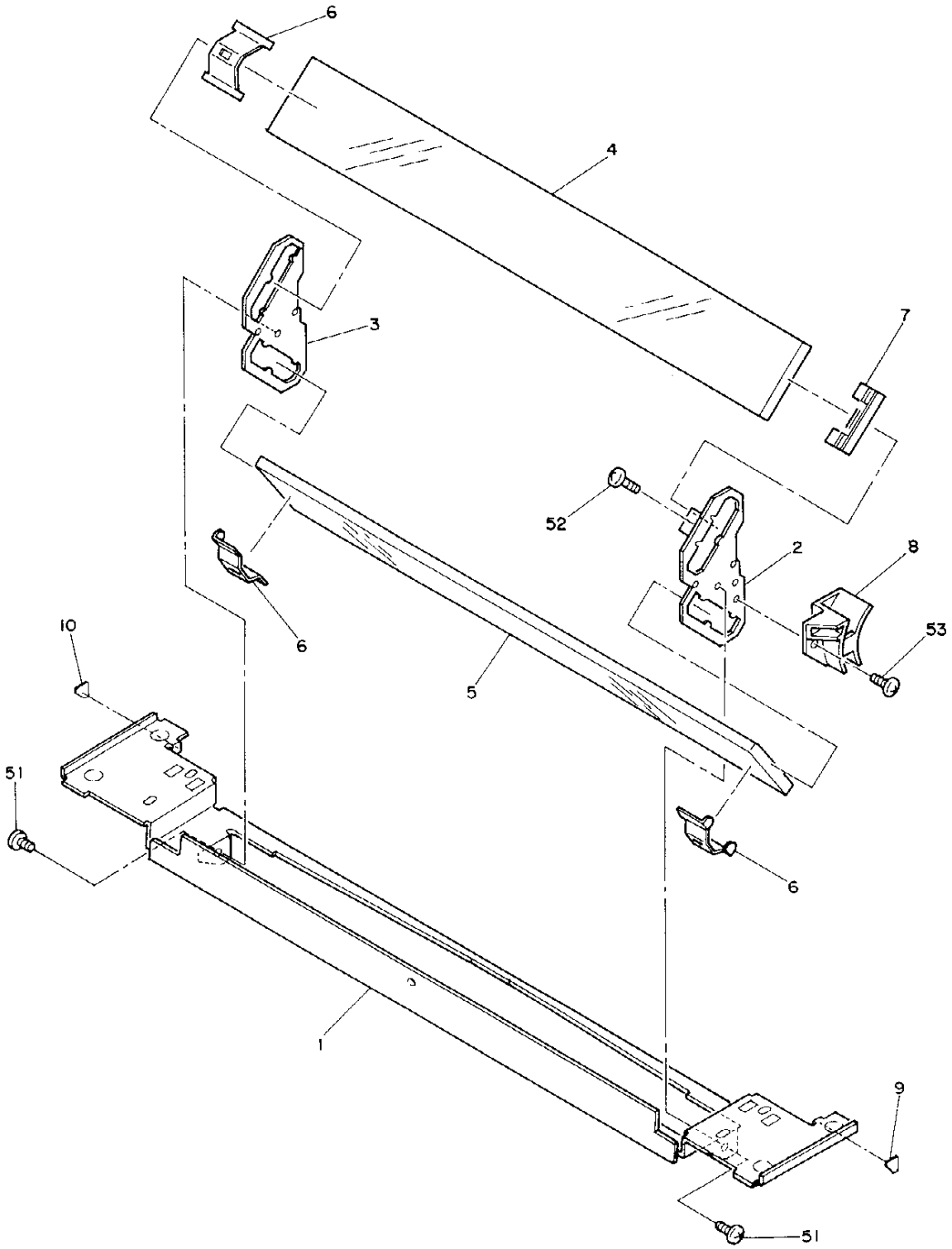
6
4
3
7
52
2
8
53
10
6
5
51
6
1
9
51

ITEM NO.	PARTS NO.	PARTS NAME	Q'TY / PAGE	Q'TY / PACK	SPE PRICE IN NONE	P	I	R	BSI NO.	TO	FROM	SERIAL NO.	REMARKS
1	4400 921330	STAY-CRG2	1	1/P									
2	4402 805020	HLD-MIRROR-C2-F	1	1/P									
3	4402 805030	HLD-MIRROR-C2-R	1	1/P									
4	4402 805040	MIRROR-2	1	1/C									
5	4402 805050	MIRROR-3	1	1/C									
6	4407 960470	SPRING-M4-M5-R	3	1/P									
7	4402 805060	SPRING-M2-F	1	1/P									
8	4400 921380	GUIDE-WH-EXPO	1	1/P						008 1			
8 1	4400 928980	K-GUIDE-WH-EXPO	1	1/P		C	B	D	F4F178	008 2	008	CF4/QF4	
8 2	4400 921390	GUIDE-WH-EXPO	1	1/P		C	E	E	F4J295		008 1		
9	4400 922160	SHEET-CRG2-F	1	5/P									
10	4400 922170	SHEET-CRG2-R	1	5/P									
51	4842 040665	TPAN3006MSZN3L	2	50/P									
52	7040 301211	PAN30*12MSZN3AI	1	50/P									
53	4842 040690	TZPAN3006MSZN3L	1	50/P									

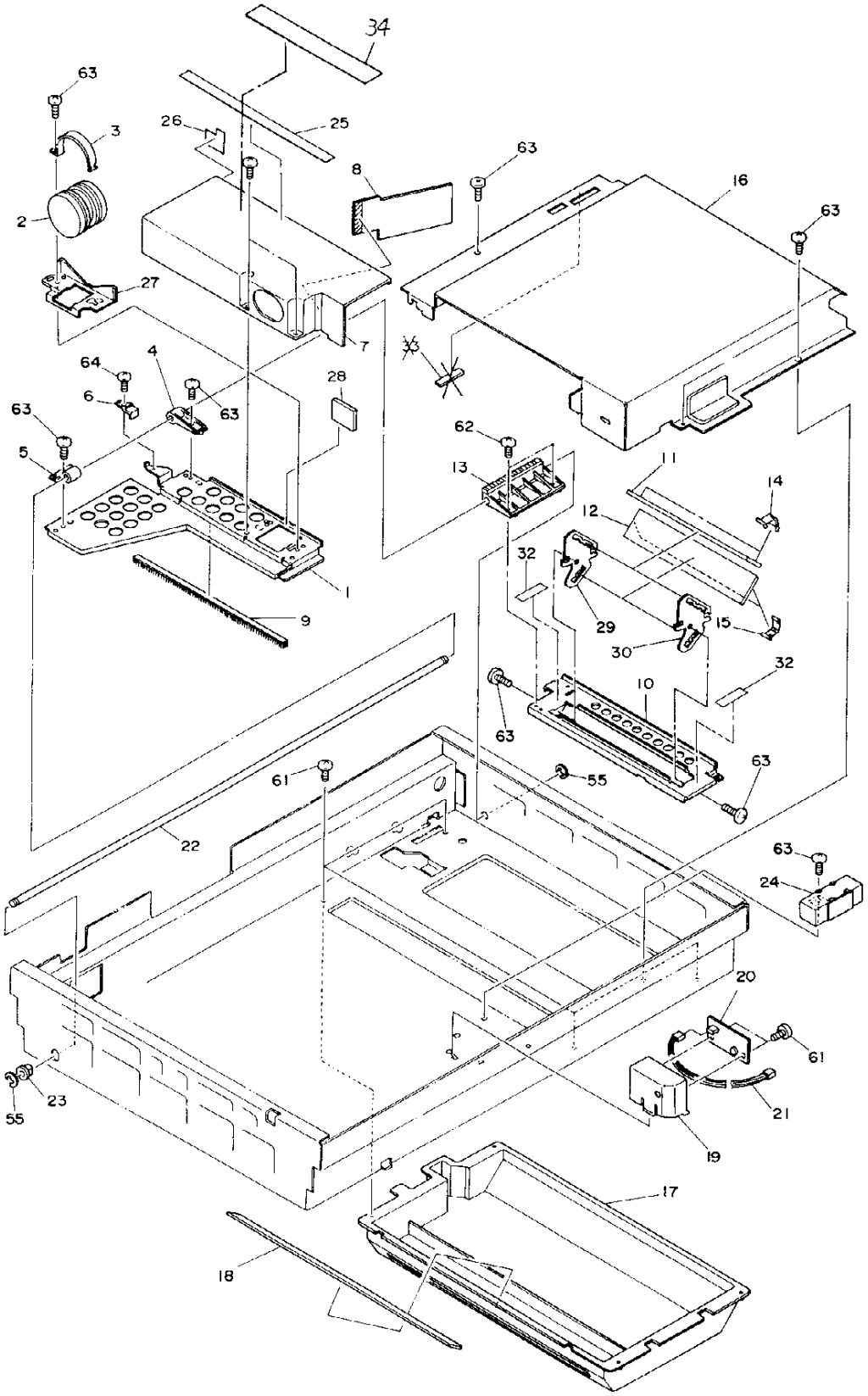
34
63
3
26
25
2
8
63
16
63
27
7
64
4
28
6
63
63
62
5
13
11
14
12
32
29
15
30
32
10
63
63
61
55
22
63
24
20
61
23
55
21
19
17
18

ITEM NO.	PARTS NO.	PARTS NAME	Q'TY / PAGE	Q'TY / PACK	SPE PRICE IN NONE	P	I	R	BSI NO.	TO	FROM	SERIAL NO.	REMARKS
1	4402 804220	BASE-LENS	1	1/P									
2	4402 804240	LENS-185-6.3	1	1/C									
3	4402 804230	BAND-LENS	1	1/P									
4	4402 804250	BUSH-LENS-S	1	1/P									
5	4402 804260	BUSH-LENS-L	1	1/P									
6	4402 804310	BKT-BELT-LENS	1	1/P									
7	4402 804270	COVER-LENS	1	1/P									
8	4402 804570	SEAL-COV-LENS	1	1/KP									
9	4400 726350	BRUSH-BASE-LENS	1	1/S									
10	4400 771350	BASE-MIRROR	1	1/P									
11	4402 804130	MIRROR-4	1	1/C									
12	4402 804140	MIRROR-5	1	1/C									
13	4400 771380	BUSH-MIRROR	1	1/P									
14	4407 960470	SPRING-M4-M5-R	2	1/P									
15	4402 804340	SPL-MIRROR	2	1/P									
16	4400 921490	COVER-OPT-U-176	1	1/P						016 1			
16 1	4400 928550	COVER-OPT-U	1	1/PP		C	E	D	F4G250		016	CI4/QI4	
17	4400 912940	COVER-OPT-L176	1	1/P									
18	4400 770430	GLASS-SLIT	1	1/C									
19	4402 804410	BLK-AES	1	1/P									
20	4402 815110	PWA-F-AES-170	1	1/C									
21	4402 815590	WH-AES-170	1	1/P									
22	4400 741180	SHAFT-L/M	1	1/P									
23	4400 802080	BUSH-8	1	5/P									
24A	4402 816070	ASM-D-HTR-U-115	1	1/D									MF-1710U
24B	4402 816080	ASM-D-HTR-U-220	1	1/D									MF-1710E
24C	4402 816090	ASM-D-HTR-U-240	1	1/D									MF-1710A
24H	4402 816090	ASM-D-HTR-U-240	1	1/D									AUD
25	4400 771120	SEAL-COV-LENS-U	1	1/KP									
26	4402 804370	SEAL-COV-LENS-R	1	5/P									
27	4402 804010	PLATE-LENS	1	1/P									
28	4402 805950	FILTER-BLUE	1	1/C									SERVICE PART
29	4400 771360	BKT-MRR-3-R	1	1/P									
30	4400 771370	BKT-MRR-3-F	1	1/P									
32	4400 771420	MYLAR-CRG-3	2	5/P									
33	4400 729310	SHEET-OPT	1	5/P						033 1			
33 1	4400 729310	SHEET-OPT	0	5/P		B	-	D	F4G239		033	CG4/QG4	
34	4400 928970	SEAL-COV-LENS-B	1	1/KP		C	B	D	F4G239	034 1		CG4/QG4	
34 1	4400 929070	SEAL-COV-LENS-B	1	1/KP		C	B	E	F4J295		034		
55	7405 007031	ERR070SKZN3A	2	50/P									
60	4842 040665	TPAN3006MSZN3L	8	50/P									
61	4842 040495	PTBR30*06MSZN3A	6	50/P									
62	4842 040710	TPPAN3006MSZN3L	3	50/P									
63	4842 040690	TZPAN3006MSZN3L	13	50/P									
64	4842 040709	TPPAN3006MSZN3A	1	50/P									

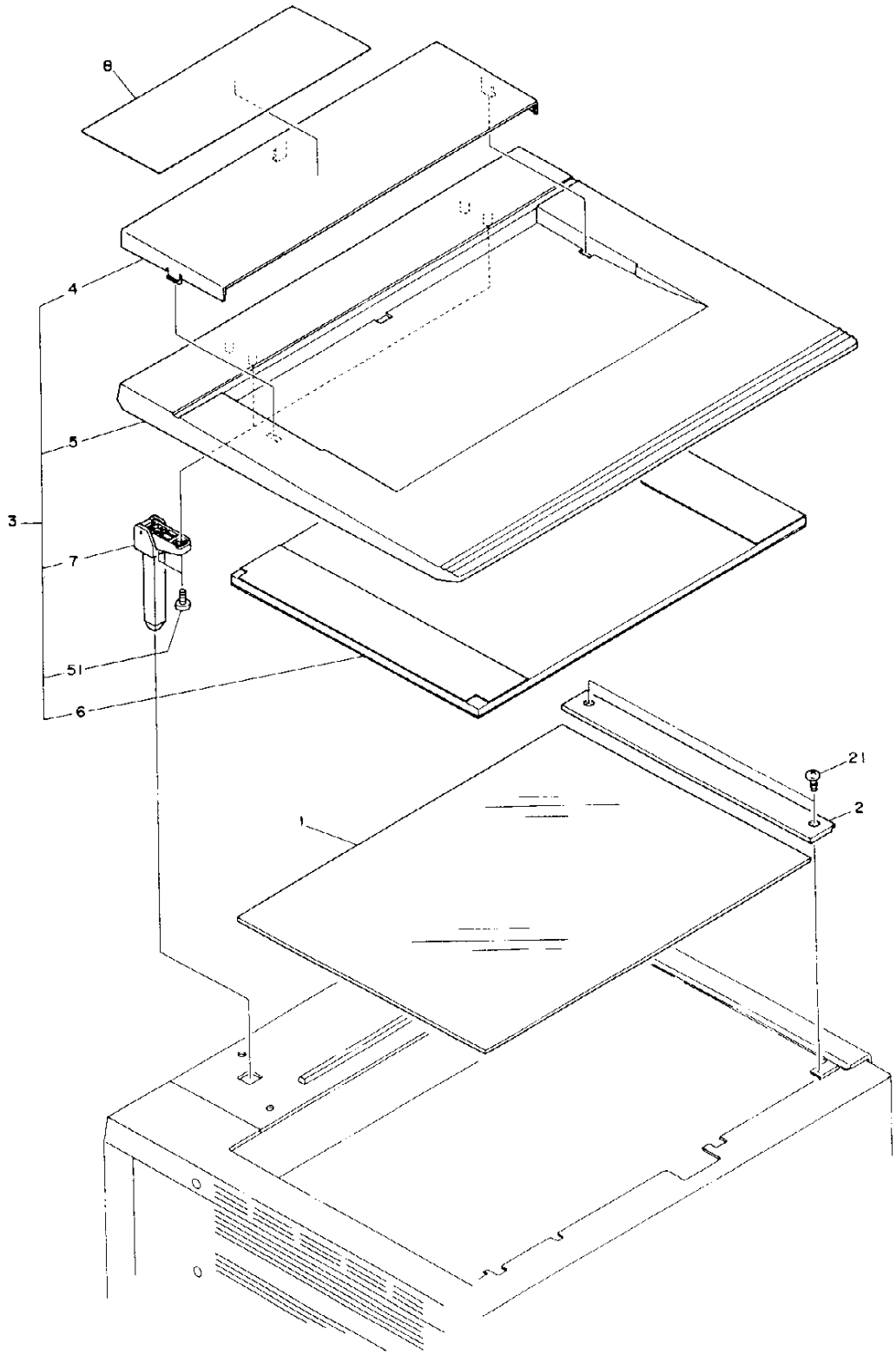
8
4
5
3
7
51
6
21
2
1

ITEM NO.	PARTS NO.	PARTS NAME	Q'TY / PAGE	Q'TY / PACK	SPE PRICE IN NONE	P	I	R	BSI NO.	TO	FROM	SERIAL NO.	REMARKS
1	4407 909190	GLASS-464-348-4	1	1/S									
2	4402 803810	GLASS-FIX	1	1/P									
3A	4402 803880	ASM-PLATEN	1	N/A***									OTHERS
3B	4402 805900	ASM-PLATEN-J/U	1	N/A***									TAD
4	4402 218420	POCKET-PLATEN	1	1/PP									
5	4402 218410	COVER-PLATEN	1	1/PP									
6A	4400 752520	SHEET-PLATEN	1	1/P									OTHERS
6B	4400 752510	SHEET-PLATEN-JU	1	1/P									TAD
7	4402 218440	HINGE-PLATEN	2	1/P									
8A	4400 910970	LBL-INST-2050E	1	1/KP						008A1			ENGLISH
8A1	4400 910970	LBL-INST-2050E	0	1/KP		B	-	J	F95J507		008A	CG5/QG5	ENGLISH
8B	4400 910980	LBL-INST-2050G	1	1/KP						008B1			GERMAN
8B1	4400 910980	LBL-INST-2050G	0	1/KP		B	-	J	F95J507		008B	CG5/QG5	GERMAN
8C	4400 910990	LBL-INST-2050F	1	1/KP									FRENCH
8D	4400 924450	LBL-INST-2050SP	1	1/KP									SPANISH
8E	4400 924460	LBL-INST-2050IT	1	1/KP									ITALIAN
51	4842 040867	PTBR40*14MSZN3A	4	50/P									
52	7043 400613	BID40*06MSCR1AI	2	50/P									

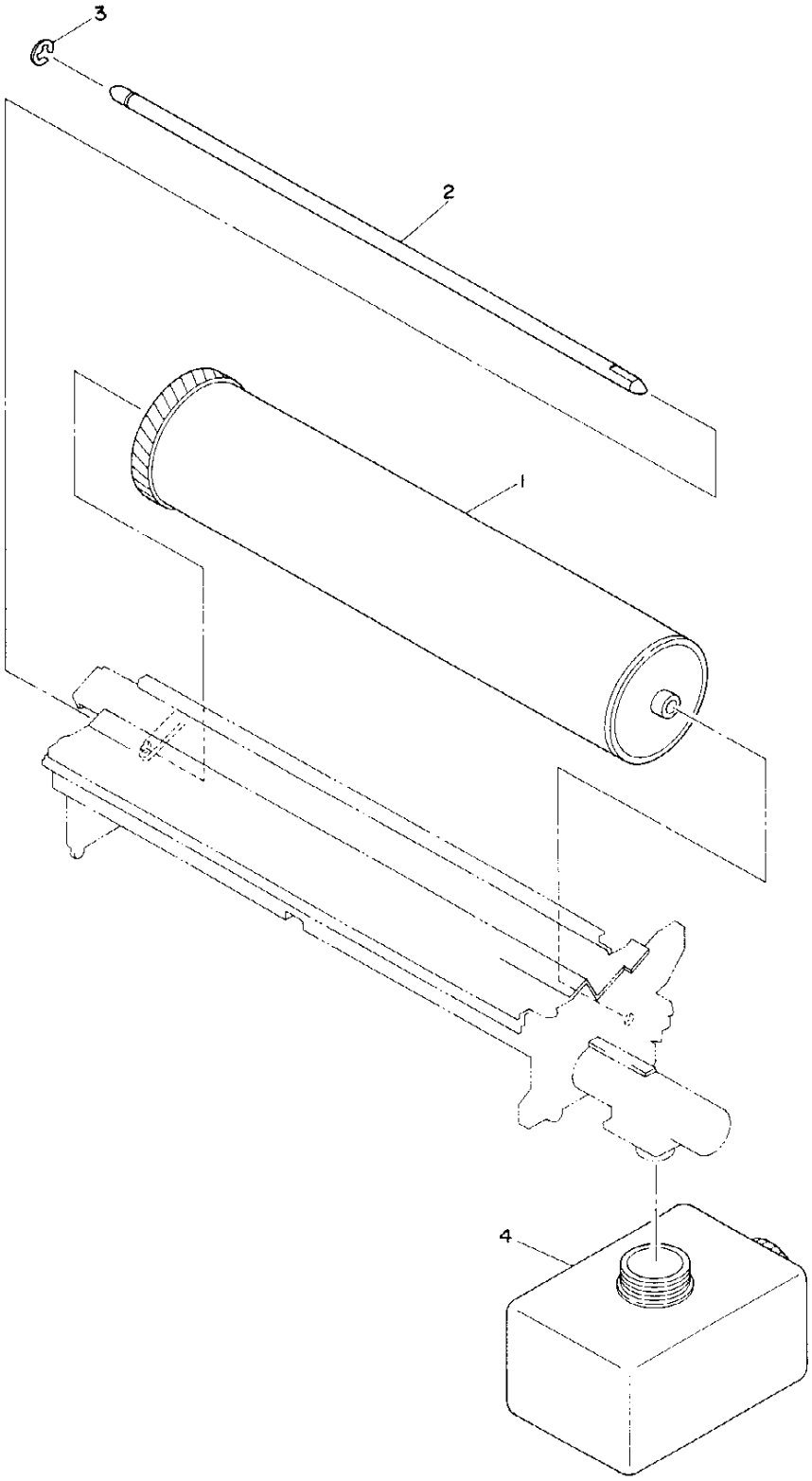
3
2
1
4

ITEM NO.	PARTS NO.	PARTS NAME	Q'TY / PAGE	Q'TY / PACK	SPE PRICE IN NONE	P	I	R	BSI NO.	TO	FROM	SERIAL NO.	REMARKS
1	6608 4225	OD-1710	1	SUPPLY									
2	4402 808610	SHAFT-DRUM	1	1/P									
3	7405 007031	ERR070SKZN3A	1	50/P									
4A	6608 4340	TB-1710BA	1	SUPPLY									EUR
4B	6608 4235	TB-1710	1	SUPPLY									OTHERS

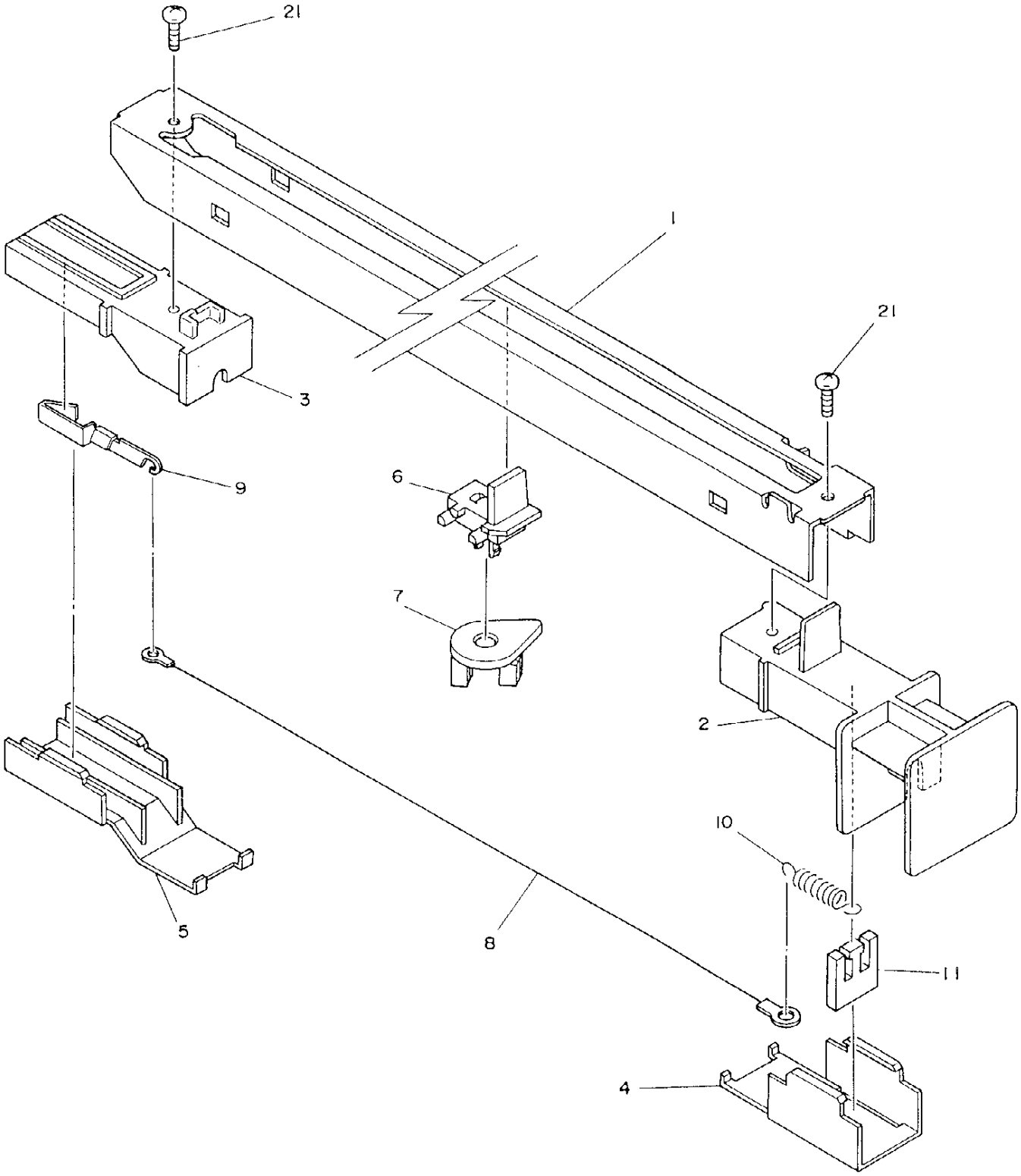
21
1
21
3
9
6
7
2
10
5
8
11
4

ITEM NO.	PARTS NO.	PARTS NAME	Q'TY / PAGE	Q'TY / PACK	SPE PRICE IN NONE	P	I	R	BSI NO.	TO	FROM	SERIAL NO.	REMARKS
0	4400 915370	ASM-CHARGER-M	1	1/C									
1	4402 808550	CASE-CH	1	1/P									
2	4400 915380	TERMINAL-CH-F	1	1/P									
3	4402 809030	TERMINAL-CH-R	1	1/P									
4	4402 808530	LID-CH-F	1	1/P									
5	4402 808540	LID-CH-R	1	1/P									
6	4400 915390	GUIDE-PAD-WIRE	1	1/P									
7	4402 808660	K-PAD-CLN-WIRE	1	1/P									
8	4400 768190	WEX-CH-060*383	1	5/S									
9	4400 537550	SPL-CH-M	1	1/P									
10	4407 402190	SPRING-TENS-CH	1	5/P									
11	4407 682120	HANGER-WIRE	1	1/P									
21	4842 040495	PTBR30*06MSZN3A	2	50/P									

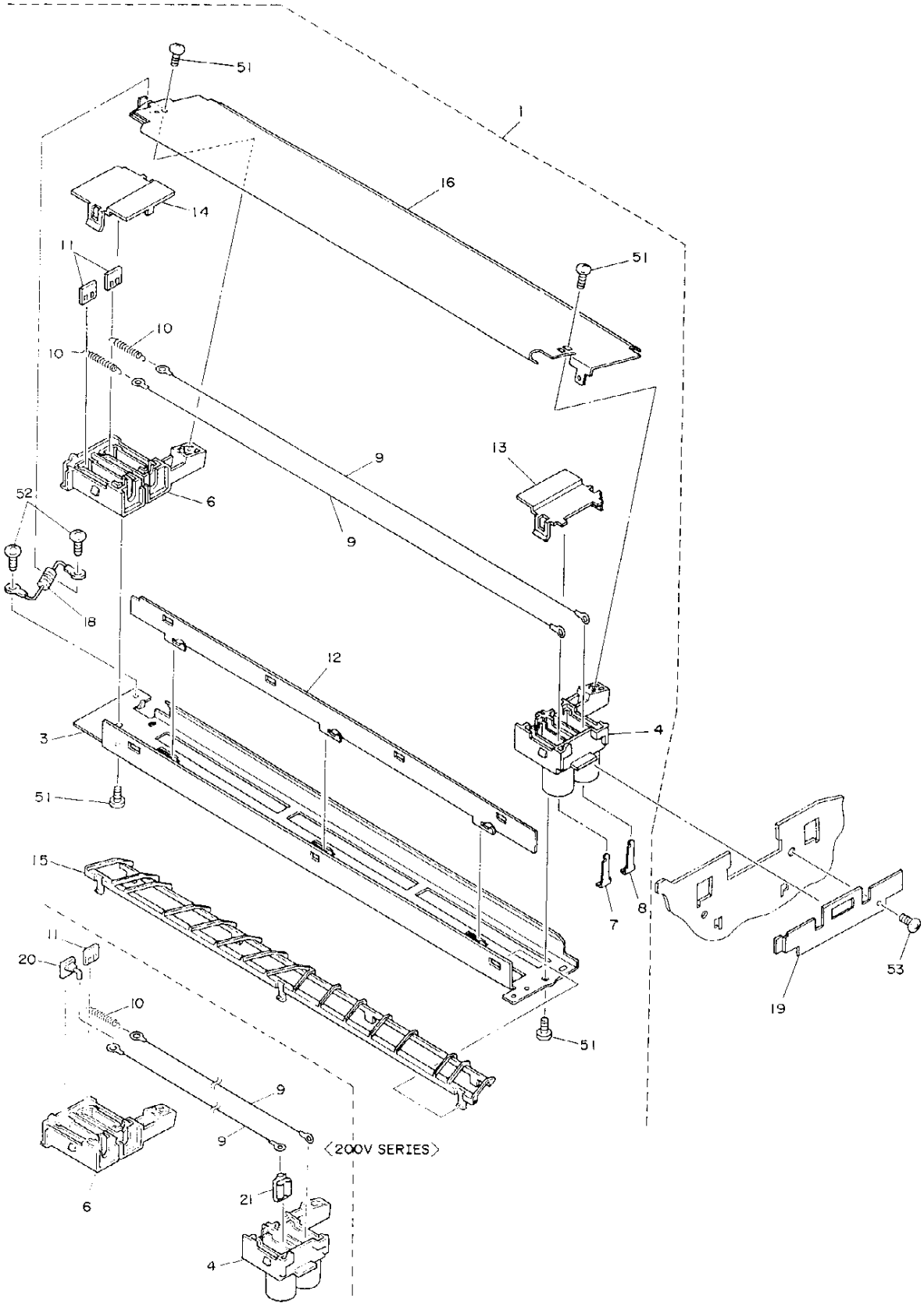
51
1
16
14
11
51
10
10
9
13
52
6
9
18
12
3
4
51
15
7
8
53
19
11
20
10
51
9
9
〈200V SERIES〉
6
21
4

ITEM NO.	PARTS NO.	PARTS NAME	Q'TY / PAGE	Q'TY / PACK	SPE PRICE IN NONE	P	I	R	BSI NO.	TO	FROM	SERIAL NO.	REMARKS
1A	4400 915300	ASM-CHARGER-TRM	1	1/C									TAD.CSD
1B	4400 915310	ASM-CHARGER-TR	1	1/C						001B1			TWD,SAN
1B1	4400 950700	ASM-CHARGER-TR	1	1/C		C	E	J	F5A381		001B		TWD,SAN
		COMMUNITY WITH OTHER MODELS											
1C	4400 915330	ASM-CHARGER-TRF	1	1/C						001C1			OTHERS
1C1	4400 950720	ASM-CHARGER-TRF	1	1/C		C	E	J	F5A381		001C		OTHERS
		COMMUNITY WITH OTHER MODELS											
3	4400 915350	CASE-CH-TR-176	1	1/P									
4	4402 809220	TERMINAL-TR-F	1	1/P									
6	4402 809230	TERMINAL-TR-R	1	1/P									
7	4402 809090	HANGER-WIRE-170	1	1/P									
8	4402 214540	HANGER-WIRE-TR	1	1/P									
9	4402 044230	WEX-CH-060*354	2	5/S									
10A	4407 402190	SPRING-TENS-CH	2	5/P									100V SERIES
10B	4407 402190	SPRING-TENS-CH	1	5/P									200V SERIES
11A	4407 682120	HANGER-WIRE	2	1/P									100V SERIES
11B	4407 682120	HANGER-WIRE	1	1/P									200V SERIES
12	4402 809280	PLT-SEPA-CH-170	1	1/KP									
13	4402 809240	LID-TR-F	1	1/P									
14	4402 809250	LID-TR-R	1	1/P									
15	4400 915340	SUPPORTER-176	1	1/C									
16	4402 809290	GUIDE-CH-ENT	1	1/P						016 1			
16 1	4400 948850	GUIDE-CH-ENT	1	1/P		C	E	J	F5A381		016		
		COMMUNITY WITH OTHER MODELS											
18	4402 816680	K-RESISTOR-170	1	1/D									TAD,CSD
19	4402 809690	STOPPER-CH-TR	1	1/P									
20	4400 768230	HANGER-WIRE-H	1	1/P									200V SERIES
21	4400 768240	SPL-CH-F	1	5/P									200V SERIES
51	4842 040495	PTBR30*06MSZN3A	4	50/P									
52	7040 300611	PAN30*06MSZN3A	2	50/P									TAD,CSD
53	4842 040060	TPAN40*08MSZN3L	1	50/P									

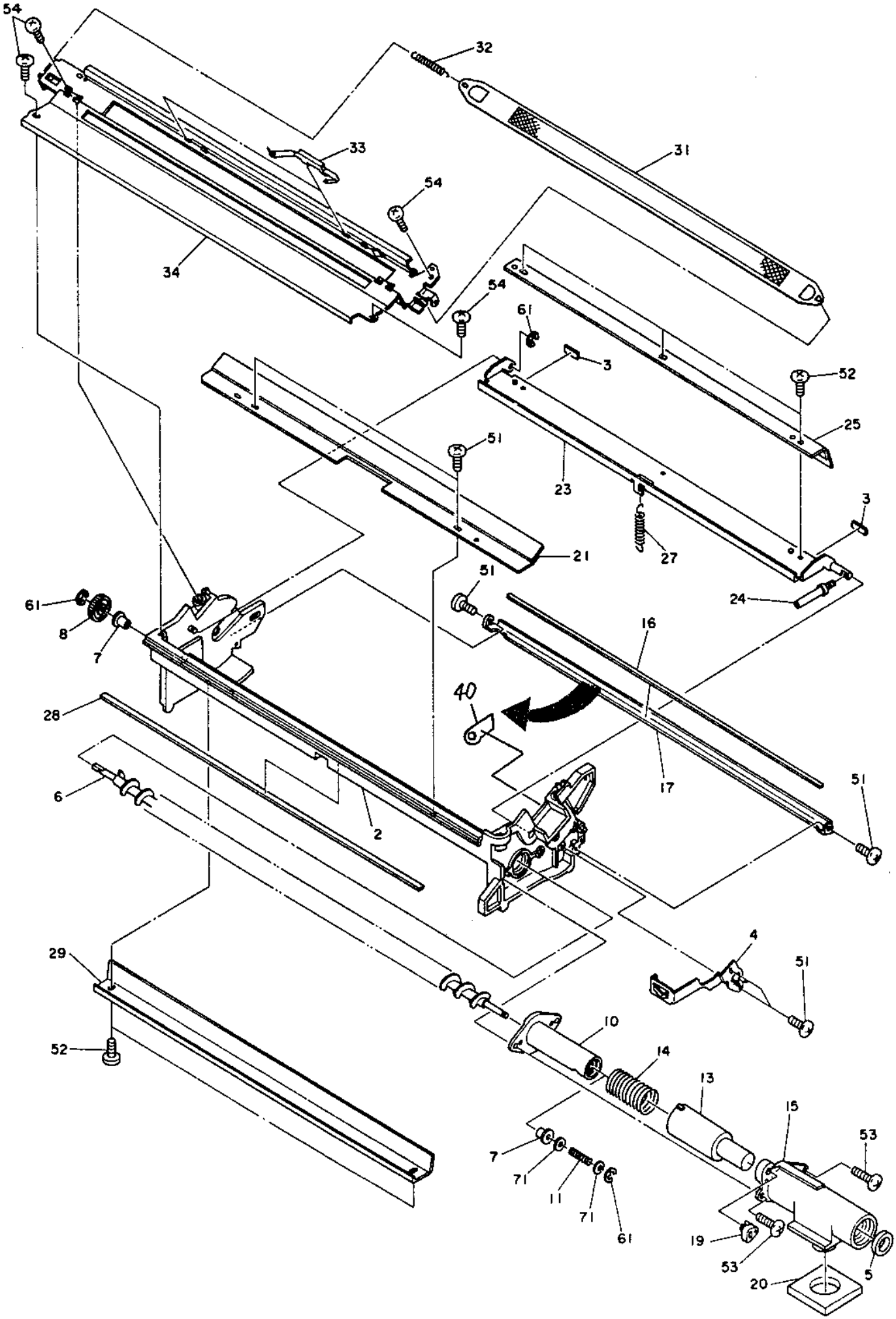
54
32
33
31
54
34
54
61
3
52
25
51
23
3
21
27
51
24
61
8
7
16
40
28
17
6
2
51
4
51
29
10
52
14
13
15
53
7
71
11
71
61
19
53
20
5

ITEM NO.	PARTS NO.	PARTS NAME	Q'TY / PAGE	Q'TY / PACK	SPE PRICE IN NONE	P	I	R	BSI NO.	TO	FROM	SERIAL NO.	REMARKS
0	4402 809180	ASM-CLEANER	1	1/C									
2	4402 809190	K-CASING-CLN	1	1/P									
3	4402 808980	SEAL-CLN-170	2	5/P									
4	4402 808680	EARTH-SFT-DRUM	1	1/C									
5	4402 215400	SEAL-CLN-NOZZLE	1	5/P									
6	4402 808120	K-AUGER-CLN-170	1	1/P									
7	4407 683340	BUSH-4	2	5/P									
8	4402 808290	GAER-0.8-22-16L	1	1/P									
10	4402 215170	NOZZLE-CLN-IN	1	1/P						010 1			
10 1	4402 215480	NOZZLE-CLN-IN	1	1/P		C	B	E	F96D631		010		
11	4407 682390	SPC-AUG	1	5/P									
13	4402 215180	PUSHER-NOZZLE	1	1/P									
14	4402 215200	SPC-1.0*24	1	5/P									
15	4402 808370	NOZZLE-CLN-OUT	1	1/P									
16	4402 808990	SEAL-GUARD-DRUM	1	1/KP									
17	4402 808360	BKT-GUARD-DRUM	1	1/P									
19	4402 808350	CAM-BLADE	1	1/P									
20	4402 215220	SEAL-CL-NOZZLE	1	1/P									
21	4402 808900	K-BKT-MYL-ROOF	1	1/KP									
23	4402 808160	K-BKT-BLADE-CLN	1	1/P									
24	4402 808240	PIN-SHAFT-BLADE	1	5/P									
25	6608 4234	BL-1710D	1	SUPPLY						025 1			
25 1	4409 820340	BL-1710D	1	10/P		C	E	J	F5B401		025		
27	4402 808380	SP-BLADE	1	5/P									
28	4402 808260	SEAL-CLN-REC	1	N/A***									
29	4402 808250	K-BLADE-REC-170	1	1/S									
31	4402 808340	GRID-170	1	1/KP									
32	4400 537630	SPE-GR	1	5/P									
33	4402 808790	SPL-CH-170	2	1/P									
34	4402 808710	ROOF-CLN	1	1/P									
40	4400 950790	MYLAR-DRUM-F	1	1/P		A	B	D	F95L559				
51	4842 040495	PTBR30*06MSZN3A	6	50/P									
52	7640 300651	ZPAN30*06MSZN3A	5	50/P									
53	4842 040847	PTBR30*10MSZN3A	2	50/P									
61	7405 003031	ERR030SKZN3A	3	50/P									
71	7400 104011	1HWAS040MSZN3A	2	50/P									

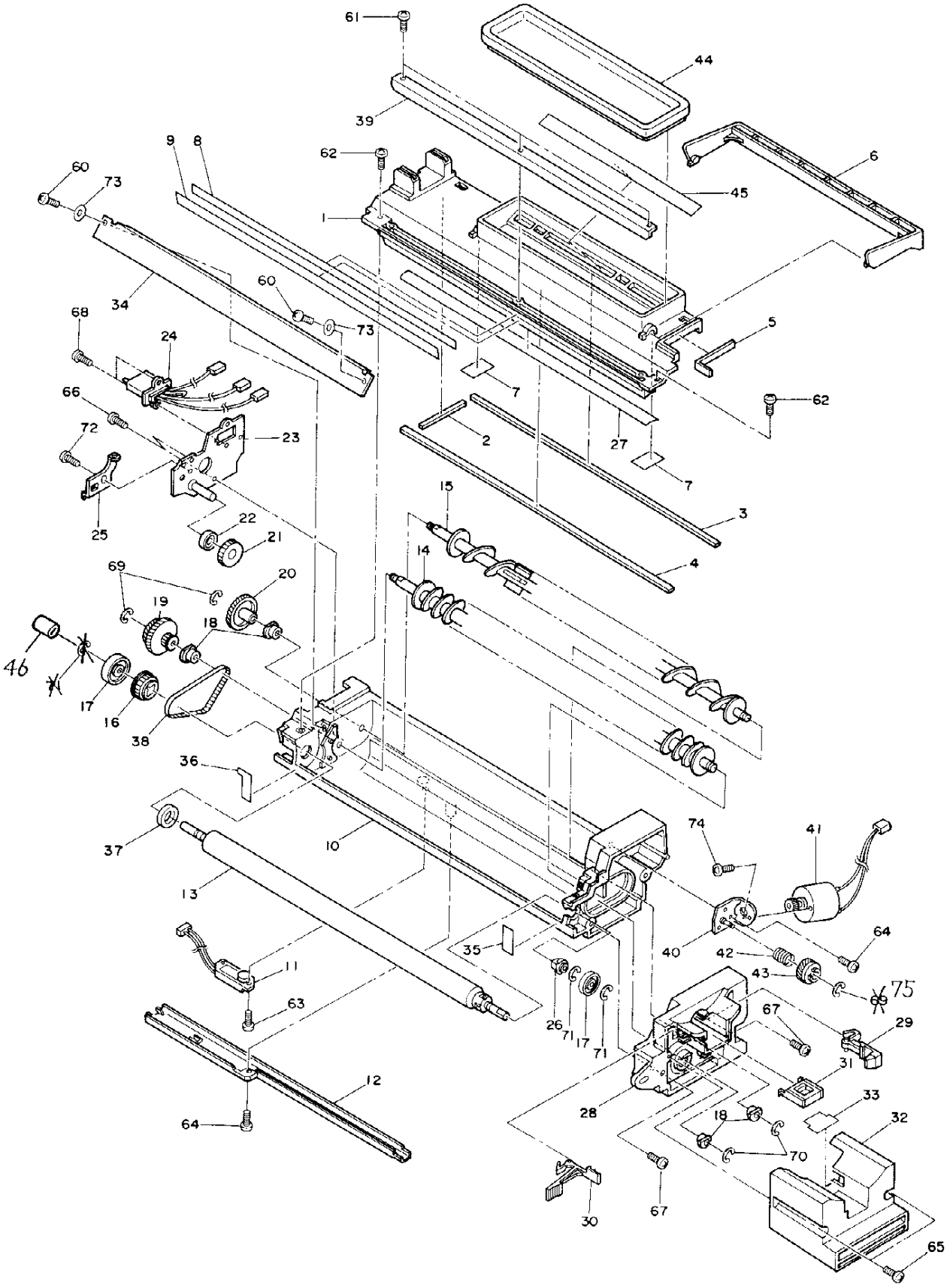
61
44
39
9
8
62
6
60
73
45
1
34
60
73
5
68
24
7
66
62
72
23
2
27
7
15
3
25
22
21
14
4
69
20
19
18
46
17
16
38
36
37
10
74
41
13
35
40
64
42
43
11
75
63
26
71
17
71
67
29
31
12
28
33
18
32
64
70
30
67
65

TOSHIBA

ITEM NO.	PARTS NO.	PARTS NAME	Q'TY / PAGE	Q'TY / PACK	SPE PRICE IN NONE	P	I	R	BSI NO.	TO	FROM	SERIAL NO.	REMARKS
0A	4400 915010	ASM-DEVELOPER-U	1	1/C						000A1			TAD
0A1	4400 929610	ASM-DEVELOPER-U	1	1/C		C	E	J	F4F218		000A		TAD
		COMMUNITY WITH THE OTHER MODELS											
0B	4400 915010	ASM-DEVELOPER-U	1	1/C						000B1			CSD
0B1	4400 929610	ASM-DEVELOPER-U	1	1/C		C	E	J	F4F218		000B		CSD
		COMMUNITY WITH THE OTHER MODELS											
0C	4400 915020	ASM-DEVELOPER-E	1	1/C						000C1			EUD
0C1	4400 929620	ASM-DEVELOPER-E	1	1/C		C	E	J	F4F218		000C		EUD
		COMMUNITY WITH THE OTHER MODELS											
0D	4400 915020	ASM-DEVELOPER-E	1	1/C						000D1			GSD
0D1	4400 929620	ASM-DEVELOPER-E	1	1/C		C	E	J	F4F218		000D		GSD
		COMMUNITY WITH THE OTHER MODELS											
0E	4400 915020	ASM-DEVELOPER-E	1	1/C						000E1			FRD
0E1	4400 929620	ASM-DEVELOPER-E	1	1/C		C	E	J	F4F218		000E		FRD
		COMMUNITY WITH THE OTHER MODELS											
0F	4400 915020	ASM-DEVELOPER-E	1	1/C						000F1			SED
0F1	4400 929620	ASM-DEVELOPER-E	1	1/C		C	E	J	F4F218		000F		SED
		COMMUNITY WITH THE OTHER MODELS											
0G	4400 915020	ASM-DEVELOPER-E	1	1/C						000G1			UKD
0G1	4400 929620	ASM-DEVELOPER-E	1	1/C		C	E	J	F4F218		000G		UKD
		COMMUNITY WITH THE OTHER MODELS											
0H	4400 915010	ASM-DEVELOPER-U	1	1/C						000H1			AUD
0H1	4400 929610	ASM-DEVELOPER-U	1	1/C		C	E	J	F4F218		000H		AUD
		COMMUNITY WITH THE OTHER MODELS											
0I	4400 915010	ASM-DEVELOPER-U	1	1/C						000I1			TWD
0I1	4400 929610	ASM-DEVELOPER-U	1	1/C		C	E	J	F4F218		000I		TWD
		COMMUNITY WITH THE OTHER MODELS											
0J	4400 915010	ASM-DEVELOPER-U	1	1/C						000J1			SAN
0J1	4400 929610	ASM-DEVELOPER-U	1	1/C		C	E	J	F4F218		000J		SAN
		COMMUNITY WITH THE OTHER MODELS											
0K	4400 915010	ASM-DEVELOPER-U	1	1/C						000K1			EUN
0K1	4400 929610	ASM-DEVELOPER-U	1	1/C		C	E	J	F4F218		000K		EUN
		COMMUNITY WITH THE OTHER MODELS											
0L	4400 915010	ASM-DEVELOPER-U	1	1/C						000L1			AUN
0L1	4400 929610	ASM-DEVELOPER-U	1	1/C		C	E	J	F4F218		000L		AUN
		COMMUNITY WITH THE OTHER MODELS											
1	4400 915200	COVER-DEV-176	1	N/A***									
2	4402 806890	SEAL-COVER-DEV4	1	N/A***									
3	4402 806840	SEAL-COVER-DEV1	1	N/A***									
4	4402 806870	SEAL-DOCTOR	1	N/A***									
5	4402 806850	SEAL-COVER-DEV2	1	N/A***									
6	4400 915210	HANDLE-DEV-176	1	1/P									
7	4400 915230	MYLAR-HANDLE	2	5/P									
8	4402 806880	SEAL-DRUM	1	1/KP									
9	4402 806910	SEAL-SLEEVE	1	1/KP									
10	4400 915100	K-CASE-DEV-176	1	N/A***						010 1			
10 1	4400 915100	K-CASE-DEV-176	1	1/P		E	-	J	F95E435		010		
11	4402 859550	SNR-ATC-121	1	1/D									
12	4402 806390	COVER-ATS	1	1/P									
13	4402 806230	MG-ROLL-170-20	1	1/KP						013 1			
13 1	4400 929670	MG-ROLL-177-20N	1	1/KP		C	E	J	F4F218		013		
		COMMUNITY WITH THE OTHER MODELS											
14	4402 806260	MIXER-1-170	1	1/P									
15	4402 806240	K-MIXER-2-170	1	1/P									
16	4400 915120	PULLEY-18-MG-R	1	1/P									
17	4402 806370	ROLL-GUIDE-170E	2	1/P									
18	4407 728150	BUSH-6	4	5/P									
19	4400 915140	GEAR33-Z18-P14	1	1/P									
20	4402 806320	GEAR-33MIX-2	1	1/P									
21	4400 915160	GEAR-Z20-IDLE	1	1/P									
22	4842 110087	BRG-R-1560ZZ	1	1/P									
23	4402 806340	K-PLATE-REAR	1	1/P									
24	4400 960640	WH-DEV-UNIT-176	1	1/P									
25	4402 806400	ADJUSTER-MG	1	1/P									
26	4402 806410	BUSH-MG-ROL-F	1	1/P									
27	4402 806900	SEAL-S1	1	1/KP									
28	4402 806450	K-COV-FROT-DEV	1	1/P									
29	4402 806470	STOPPER-LID	1	1/P									
30	4400 915290	STOPPER-CART	1	1/P									
31	4402 806600	K-LID-NOZZLE	1	1/P									
32	4402 806700	HANDLE-DEV-170	1	1/P									

ITEM NO.	PARTS NO.	PARTS NAME	Q'TY / PAGE	Q'TY / PACK	SPE PRICE IN NONE	P	I	R	BSI NO.	TO	FROM	SERIAL NO.	REMARKS
33	4402 806710	SEAL-SLIT	1	5/P									
34	4402 806680	K-DOCTOR-170	1	1/P									
35	4402 806720	SEAL-F	1	5/P									
36	4402 806730	SEAL-R	1	5/P									
37	4402 806670	SEAL-MG-ROLL	1	5/P									
38	4400 915150	BLT/T-3M-34-4	1	1/P									
39	4402 806920	PLATE-COV-DEV	1	1/P									
40	4402 806750	K-BKT-TMOT	1	1/P									
41	4402 806540	K-M/DC-TNR-170	1	1/C									
42	4400 341490	SPG-045-9	1	5/P									
43A	4402 806770	WHEEL-Z32	1	1/P									TAD
43B	4402 806770	WHEEL-Z32	1	1/P									CSD
43C	4400 915430	WHEEL-Z32-E	1	1/P									EUD
43D	4400 915430	WHEEL-Z32-E	1	1/P									GSD
43E	4400 915430	WHEEL-Z32-E	1	1/P									FRD
43F	4400 915430	WHEEL-Z32-E	1	1/P									SED
43G	4400 915430	WHEEL-Z32-E	1	1/P									UKD
43H	4402 806770	WHEEL-Z32	1	1/P									AUD
43I	4402 806770	WHEEL-Z32	1	1/P									TWD
43J	4402 806770	WHEEL-Z32	1	1/P									SAN
43K	4402 806770	WHEEL-Z32	1	1/P									EUN
43L	4402 806770	WHEEL-Z32	1	1/P									AUN
44	4400 915220	COV-DEV-BTL	1	1/P									
45	4400 915240	MYLAR-NOZZLE	1	5/P									
46	4350 121500	CLR-060*0100FZN	1	10/P		A	B	E	F4J295				
60	4402 806780	ZPAN30*08SSDG	2	50/P									
61	4842 040846	PTBR30*08MSZN3A	3	50/P									
62	7043 300864	BID20*08BSCR3CI	2	50/P									
63	7043 300664	BID30*06BSCR3CI	1	50/P									
64	4842 040495	PTBR30*06MSZN3A	2	50/P									
65	4842 040850	PTBR40*10MSZN3A	2	50/P									
66	7640 300651	ZPAN30*06MSZN3A	2	50/P									
67	7640 300851	ZPAN30*08MSZN3A	2	50/P									
68	4842 040692	TZPAN3008MSZN3L	2	50/P									
69	7405 003031	ERR030SKZN3A	2	50/P									
70	7405 004031	ERR040SKZN3A	2	50/P									
71	7405 005031	ERR050SKZN3A	3	50/P						071 1			
71 1	7405 005031	ERR050SKZN3A	2	50/P		D	-	E	F4J295		071		
72	7040 300611	PAN30*06MSZN3A	1	50/P									
73	7400 103011	1HWAS030MSZN3A	2	50/P									
74	7040 260411	PAN26*04MSZN3AI	1	50/P		F	-	J	F4B100				
75	7405 002031	ERR020SKZN3A	1	50/P		F	-	J	F4B100				
67	7640 300851	ZPAN30*08MSZN3A	2	50/P									

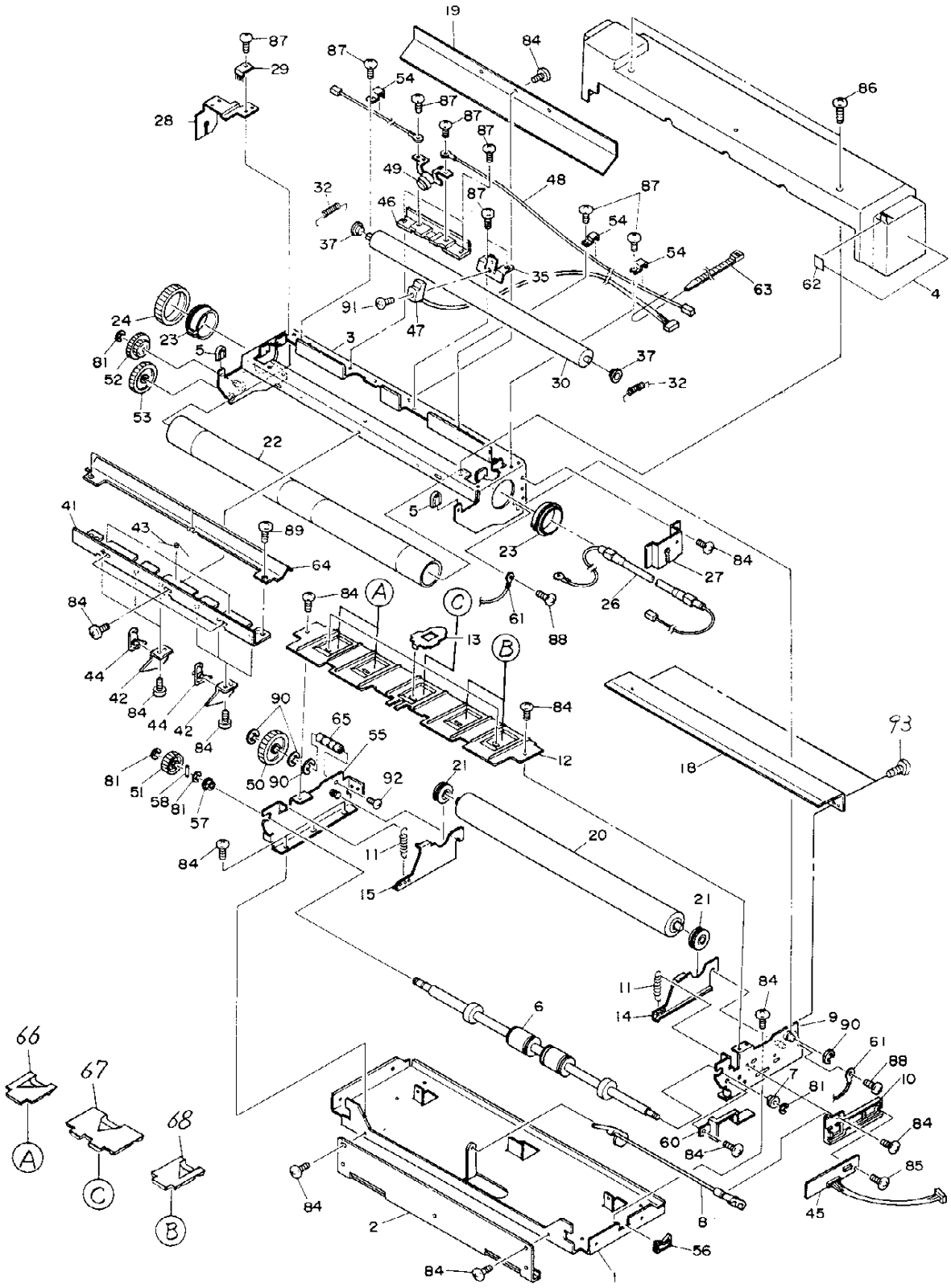
19
87
29
28
87
54
87
87
87
84
86
49
48
87
32
46
87
54
37
54
35
63
62
4
91
47
24
23
3
5
81
52
53
30
37
32
22
41
43
89
64
5
23
84
27
26
84
84
A
C
61
88
13
B
44
42
84
44
42
84
90
65
55
84
12
93
18
81
51
58
81
57
50
90
92
21
20
84
11
15
21
11
14
84
6
9
90
61
88
10
7
81
84
60
84
85
45
84
2
8
56
84
1
66
A
67
C
68
B

TOSHIBA

ITEM NO.	PARTS NO.	PARTS NAME	Q'TY / PAGE	Q'TY / PACK	SPE PRICE IN NONE	P	I	R	BSI NO.	TO	FROM	SERIAL NO.	REMARKS
1	4400 724960	FRAME-FUS-17/23	1	1/P									
2	4400 724070	BKT-EXIT-COV-L	1	1/P									
3	4400 919200	K-FR-FU-UP	1	1/P									
4	4400 919700	K-COVER-FUSER	1	1/PP									
5	4407 958550	CAP-ARM-FUSER	2	1/P									
6	4400 760490	K-ROL-EXIT	1	1/KP									
7	4400 802070	BUSH-6L	1	5/P									
8	4402 810310	ACT-EXIT-SW	1	1/P									
9	4400 760140	K-FRAME-FUSER-F	1	1/P									
10	4402 810320	HLDR-EXIT-SW	1	1/P									
11	4402 210850	SPE-HR	2	5/P									
12	4400 724530	GUIDE-EXIT-LOW	1	1/P						012 1			
12 1	4400 919650	GUIDE-EXIT-L176	1	1/PP		E	-	J	F4B100		012		
13	4400 802280	SCRAPER-HT-L	3	5/P									
14	4400 919260	BKT-ARM-PRESS-F	1	1/P									
15	4400 919270	BKT-ARM-PRESS-R	1	1/P									
18	4400 919340	GUIDE-FU-ENT	1	1/P									
19	4402 210400	GUIDE-FU-ENT-U	1	1/P									
20	6608 4178	HR-2510-L	1	SUPPLY						020 1			
20 1	4409 817900	HR-2510-L	1	1/S		C	E	J	F5B401	020 2	020		
20 2	4409 840810	HR-2510-L	1	1/S		C	E	D	F95D433		020 1	CD5/QD5	
21	4407 548100	BRG-608ZZ-HR	2	1/P									
22	6608 4663	PS-HR2050U	1	SUPPLY						022 1			
22 1	4409 835020	HR-2050-U	1	1/S		C	E	J	F5B401	022 2	022		
22 2	4409 848760	HR-2050-UN	1	1/S		C	B	D	F95K535		022 1	CK5/QK5	
23	4400 919430	BUSH-ROLL-HEAT	2	1/P									
24	4402 810420	GEAR-40-HR-ROL	1	1/P									
26A	4400 733270	HTR-115-900W-U	1	1/S									TAD
26B	4400 733270	HTR-115-900W-U	1	1/S									CSD
26C	4402 816030	HTR-220-1100W11	1	1/S						026C1			EUD
26C1	4402 816040	HTR-240-1100W11	1	1/S		E	-	J	F4B100		026C		EUD
26D	4402 816030	HTR-220-1100W11	1	1/S						026D1			GSD
26D1	4402 816040	HTR-240-1100W11	1	1/S		E	-	J	F4B100		026D		GSD
26E	4402 816030	HTR-220-1100W11	1	1/S						026E1			FRD
26E1	4402 816040	HTR-240-1100W11	1	1/S		E	-	J	F4B100		026E		FRD
26F	4402 816030	HTR-220-1100W11	1	1/S						026F1			SED
26F1	4402 816040	HTR-240-1100W11	1	1/S		E	-	J	F4B100		026F		SED
26G	4402 816040	HTR-240-1100W11	1	1/S									UKD
26H	4402 816040	HTR-240-1100W11	1	1/S									AUD
26I	4400 733270	HTR-115-900W-U	1	1/S									TWD
26J	4402 816020	HTR-127-900W-11	1	1/S									SAN
26K	4402 816030	HTR-220-1100W11	1	1/S						026K1			EUN
26K1	4402 816040	HTR-240-1100W11	1	1/S		E	-	J	F4B100		026K		EUN
26L	4402 816040	HTR-240-1100W11	1	1/S									AUN
27	4400 919410	BKT-HLD-LAMP-F	1	1/P									
28	4402 211410	BKT-HLD-LAMP-R	1	1/P									
29	4400 536740	BRUSH-FUSER	1	1/C									
30	6608 4181	SR-2510H	1	SUPPLY						030 1			
30 1	6608 4321	SR-3210H	1	SUPPLY		E	-	J	F4B100	030 2	030		
30 2	4409 827910	SR-3210H	1	1/S		C	E	J	F5B401		030 1		
32	4400 885130	SPRING-450	2	5/P									
35	4400 919420	HOLDER-THERMI	1	1/P									
37	4407 976990	BUSH-D6-GCB	2	1/P						037 1			
37 1	4408 606520	BUSH-D6-PPS	2	1/P		C	E	D	F4J336		037	CL4/QL4	
41	4402 211190	BKT-SCRAPER-FLT	1	1/P									
42	4402 211430	GUIDE-SCRAPER	6	1/P						042 1			
42 1	4400 919590	GUIDE-SCRAPER2	6	1/P		E	-	J	F4B100		042		
43	4400 852250	WIRE-SCR-070-30	3	5/P									
44	4400 760410	SCRAPER-H/R-174	6	6/P						044 1			
44 1	4400 852220	SCRAPER-H/R-581	6	6/P		C	E	J	F4L377		044	CL4/QL4	
45	4402 815040	PWA-F-HTR-170	1	1/C									
46	4400 919500	HLD-BLADE-THERM	1	1/P									
47	4400 961210	THMS-HTR-176	1	1/C						047 1			
47 1	4400 968820	THMS-HTR-176-N	1	1/C		C	B	D	F95K535		047	CK5/QK5	
48	4402 221630	WH-AC-HTR-545	1	1/P									
49	4400 919520	K-THERMO-176	1	1/C									
50	4402 810280	GEAR-35-IDLE	1	1/P									
51	4407 956590	GEAR-10-20-6	1	1/P									
52	4400 919210	GEAR-24-18-1.0	1	1/P									
53	4402 211220	GEAR-10-30	1	1/P									
54	4400 345540	CLAMP-HARNESS	3	5/P									

ITEM NO.	PARTS NO.	PARTS NAME	Q'TY / PAGE	Q'TY / PACK	SPE PRICE IN NONE	P	I	R	BSI NO.	TO	FROM	SERIAL NO.	REMARKS
55	4400 777500	K-FRAME-FUSER-R	1	1/P									
56	4843 390942	BD-W-EDS-2	1	10/P									
57	4407 734980	BUSH-6-GCB	1	5/P									
58	4346 312020	PIN	1	10/P									
60	4402 810490	COV-PWA-EXIT-SW	1	1/P									
61B	4400 357490	WH-EARTH-523	1	1/P									200V SERIES
62	4400 919720	LABEL-9*13-AQUA	1	5/P									
63	4407 527950	SKB-1M	1	5/P						063 1			
63 1	4346 754010	SKB-BAND-1	1	5/P		E	-	J	F4B100		063		
64	4400 919620	K-BKT-FELT-HR-8	1	1/P									
65	4400 763920	STUD-FUS-LR-170	1	1/P									
66B	4400 919730	SHEET-FUS-R	2	5/P		F	-	J	F4B100				EUR
67B	4400 919680	SHEET-FUS-C	1	5/P		F	-	J	F4B100				EUR
68B	4400 919690	SHEET-FUS-F	2	5/P		F	-	J	F4B100				EUR
81	7405 005031	ERR050SKZN3A	3	50/P									
84	4842 040690	TZPAN3006MSZN3L	17	50/P									
85	4842 040846	PTBR30*08MSZN3A	2	50/P									
86	7040 300811	PAN30*08MSZN3AI	2	50/P									
87	7043 300611	BID30*06MSZN3AI	8	50/P									
88	4842 040118	THPAN4008MSZN3L	2	50/P									200V SERIES
89	7040 300411	PAN30*04MSZN3A	3	50/P									
90	7405 006031	ERR060SKZN3A	4	50/P									
91	4842 040692	TZPAN3008MSZN3L	1	50/P									
92	4842 040725	TPPAN4008MSZN3A	1	50/P									
93	4842 040370	TBID3006MSZN3L	2	50/P		A	E	E	F5A381			CL4/QL4	

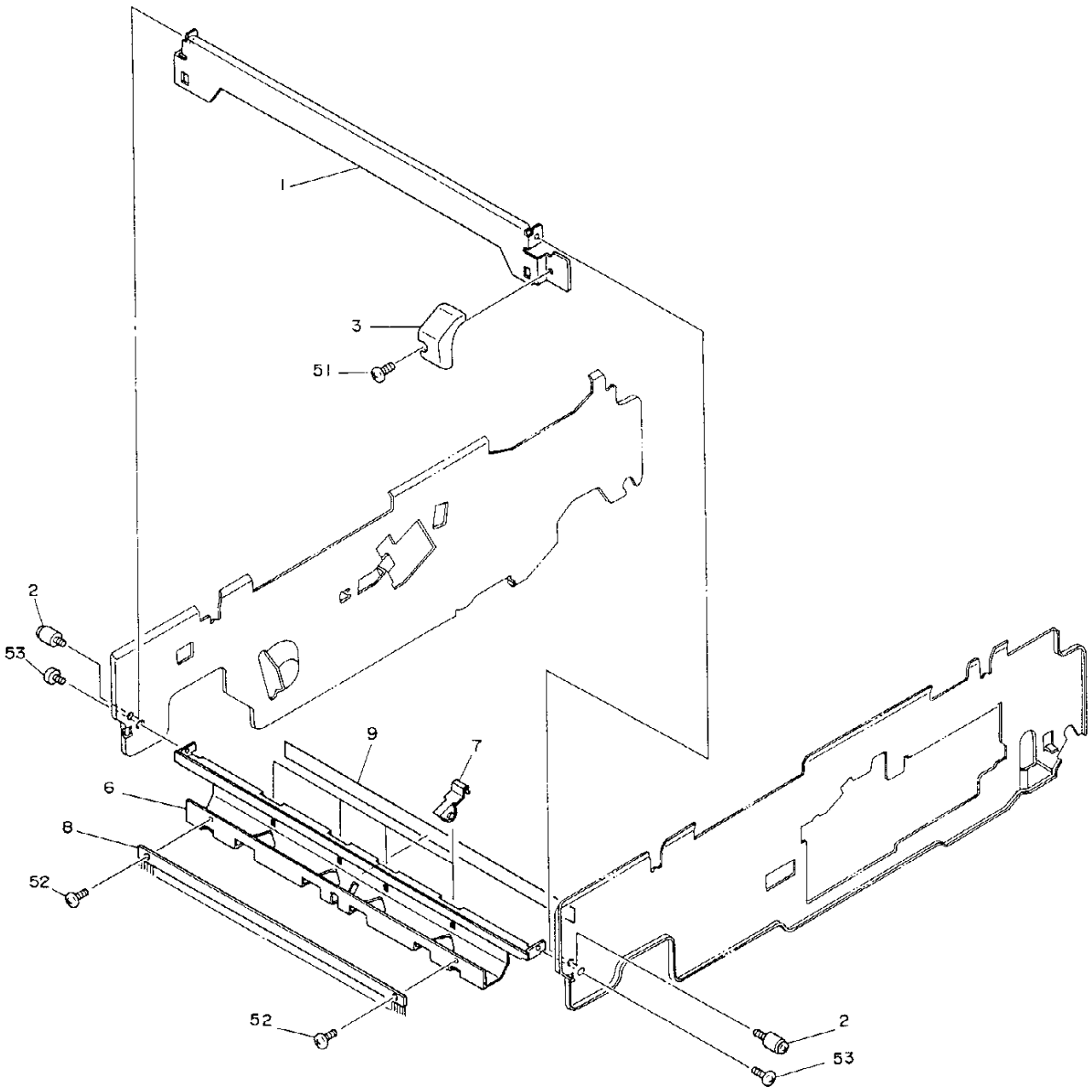
1
3
51
2
53
9
7
6
8
52
52
2
53

ITEM NO.	PARTS NO.	PARTS NAME	Q'TY / PAGE	Q'TY / PACK	SPE PRICE IN NONE	P	I	R	BSI NO.	TO	FROM	SERIAL NO.	REMARKS
1	4402 801700	BKT-LOCK-ARM	1	1/P									
2	4400 805170	SCREW-LOCK-ARM	2	5/P									
3	4402 074510	LEVER-LOCK-ARM	1	1/P									
6	4400 771500	GUIDE-EXIT-ROL	1	1/P									
7	4402 210350	ASM-ROL-EX-UP	4	1/P									
8	4402 801770	BRUSH-EXIT-F170	1	1/KP									
9	4400 911570	SHEET-GUIDE-EXT	1	1/KP									
51	4842 040698	TZPAN4006MSZN3L	1	50/P									
52	4842 040665	TPAN3006MSZN3L	2	50/P									
53	4842 040060	TPAN40*08MSZN3L	2	50/P									
1	4402 801700	BKT-LOCK-ARM	1	1/P									

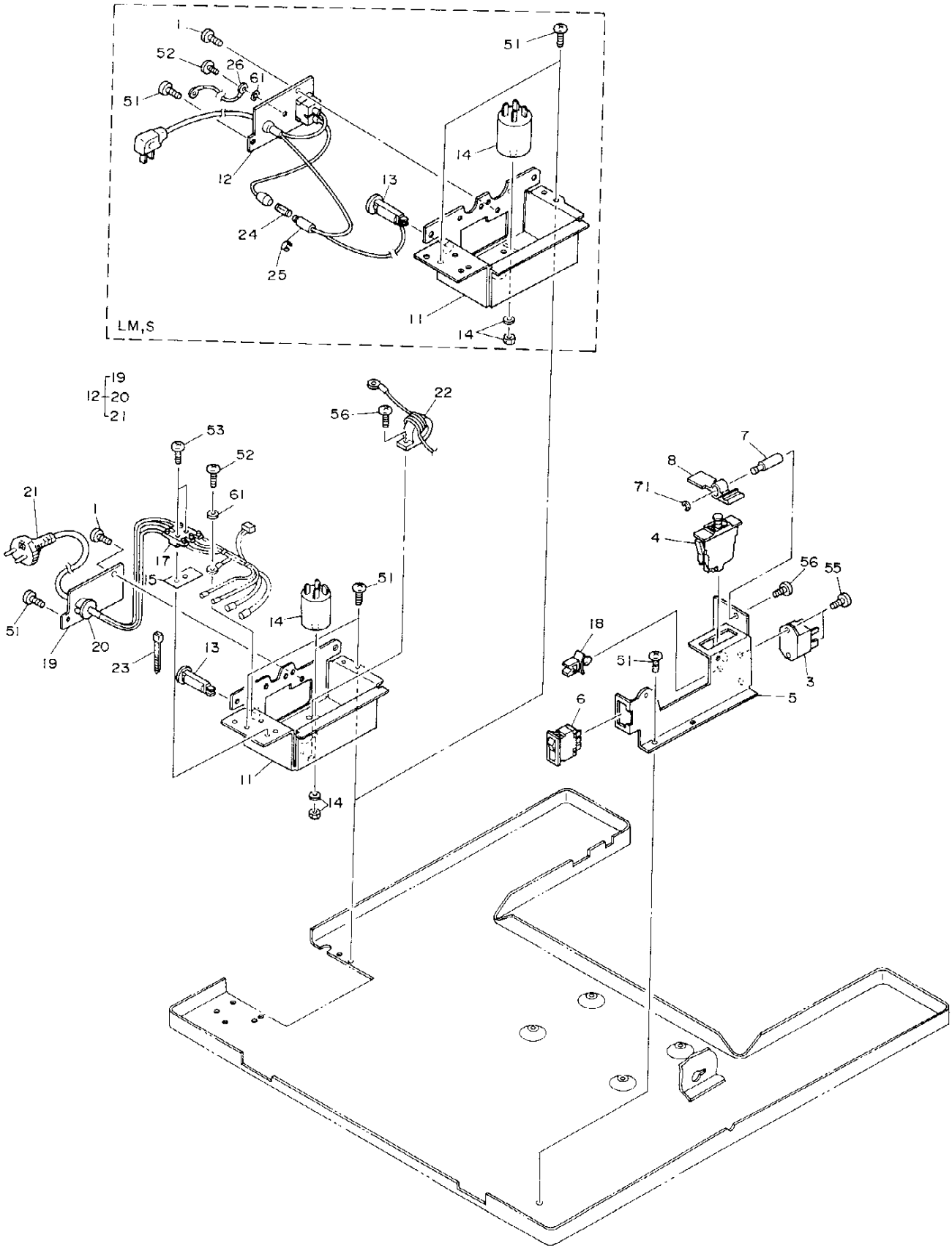
LM,S

ITEM NO.	PARTS NO.	PARTS NAME	Q'TY / PAGE	Q'TY / PACK	SPE PRICE IN NONE	P	I	R	BSI NO.	TO	FROM	SERIAL NO.	REMARKS
1	4400 841470	SCREW40X08-T	1	50/P									
3A	3037 886215	TSS16G48S	1	1/D									100V SERIES
3B	3037 886230	TSS16J48SR	1	1/D									200V SERIES
4	4400 733220	SP-F85B-AJJL	1	1/C									200V SERIES
5	4402 802200	BKT-SW-UNIT	1	1/P									
6	4843 231592	SW-AJ921100Z301	1	1/D									
7	4402 204660	STUD-SW-DOOR	1	1/P									
8	4402 803980	SLIDE-SW-DOOR	1	1/P									
11	4400 915660	BKT-AC-BASE-S	1	1/P									
12A	4402 802160	ASM-PWR-CBL-115	1	1/P									TAD
12B	4402 802160	ASM-PWR-CBL-115	1	1/P									CSD
12C	4400 911770	ASM-PWR-CBL-220	1	1/P									EUD
12D	4400 911770	ASM-PWR-CBL-220	1	1/P									GSD
12E	4400 911770	ASM-PWR-CBL-220	1	1/P									FRD
12F	4400 911770	ASM-PWR-CBL-220	1	1/P									SED
12G	4400 911780	ASM-PWR-CBL-UK	1	1/P									UKD
12H	4400 911790	ASM-PWR-CBL-240	1	1/P									AUD
12I	4400 732570	ASM-PWR-CBL-JPN	1	1/P									TWD
12J	4402 802150	ASM-PWR-CBL-100	1	1/P									SAN
12K	4400 911770	ASM-PWR-CBL-220	1	1/P									EUN
12L	4400 911790	ASM-PWR-CBL-240	1	1/P									AUN
12N	4400 927420	ASM-PWR-CBL-CN	1	1/P		A	-	J	F98B174				CNN
13A	4402 816390	B-NRW10-15A-PY	1	1/D									100V SERIES
13B	4402 816380	B-NRW10-10A-PY	1	1/D									200V SERIES
14A	4400 878600	FILTER-VU-215F3	1	1/D									100V SERIES
14B	4400 961230	FL-ZSLB2210-02	1	1/D									200V SERIES
15B	4407 751090	STICKER-TERM	1	5/P									200V SERIES
17B	4404 432210	TERMINAL-500K13	1	1/P									200V SERIES
18	4843 390856	CLP/W-LWS-3U	1	5/P									
19B	4402 802400	BKT-P-CORD-200	1	1/P									200V SERIES
20B	4407 987410	BUSH-CBL-200	1	5/P									200V SERIES
21C	4407 024130	PW-CABLE-E-287	1	1/P									EUD
21D	4407 024130	PW-CABLE-E-287	1	1/P									GSD
21E	4407 024130	PW-CABLE-E-287	1	1/P									FRD
21F	4407 024130	PW-CABLE-E-287	1	1/P									SED
21G	4402 255840	CBL/P-UK	1	1/P									UKD
21H	4407 322330	POWER-CABLE-AU	1	1/P									AUD
21K	4407 024130	PW-CABLE-E-287	1	1/P									EUN
21L	4407 322330	POWER-CABLE-AU	1	1/P									AUN
21N	4402 874510	CBL/P-CHINA	1	1/P		A	-	J	F98B174				CNN
22C	4407 967090	FLD-ESD-R-25B	1	1/D									EUD
22D	4407 967090	FLD-ESD-R-25B	1	1/D									GSD
22E	4407 967090	FLD-ESD-R-25B	1	1/D									FRD
22F	4407 967090	FLD-ESD-R-25B	1	1/D									SED
22G	4407 967090	FLD-ESD-R-25B	1	1/D									UKD
22K	4407 967090	FLD-ESD-R-25B	1	1/D									EUN
22L	4407 967090	FLD-ESD-R-25B	1	1/D									AUN
23A	4346 754010	SKB-BAND-1	1	5/P									100V SERIES
24J	4346 752050	FUSE-1A	1	5/P									SAN
25I	4407 216780	STICKER-1A	1	5/P									TWD
25J	4407 216780	STICKER-1A	1	5/P									SAN
26I	4403 225510	ASM-EARTH-WIRE	1	1/P									TWD
26J	4403 225510	ASM-EARTH-WIRE	1	1/P									SAN
27D	4400 961360	LBL-PW-CABLE-BA	1	10/P		A	B	C	F4F178			CI4/QI4	GSD
51	4842 040060	TPAN40*08MSZN3L	4	50/P									
52	7040 400660	PAN40*06BSDG	1	50/P									
53	7040 301611	PAN30*16MSZN3AI	2	50/P									
55	4842 040846	PTBR30*08MSZN3A	2	50/P									
56	4842 040700	TZPAN4008MSZN3L	1	50/P									
61	7402 204031	2TWAS040SKZN3A	1	50/P									
71	7405 005031	ERR050SKZN3A	1	50/P									

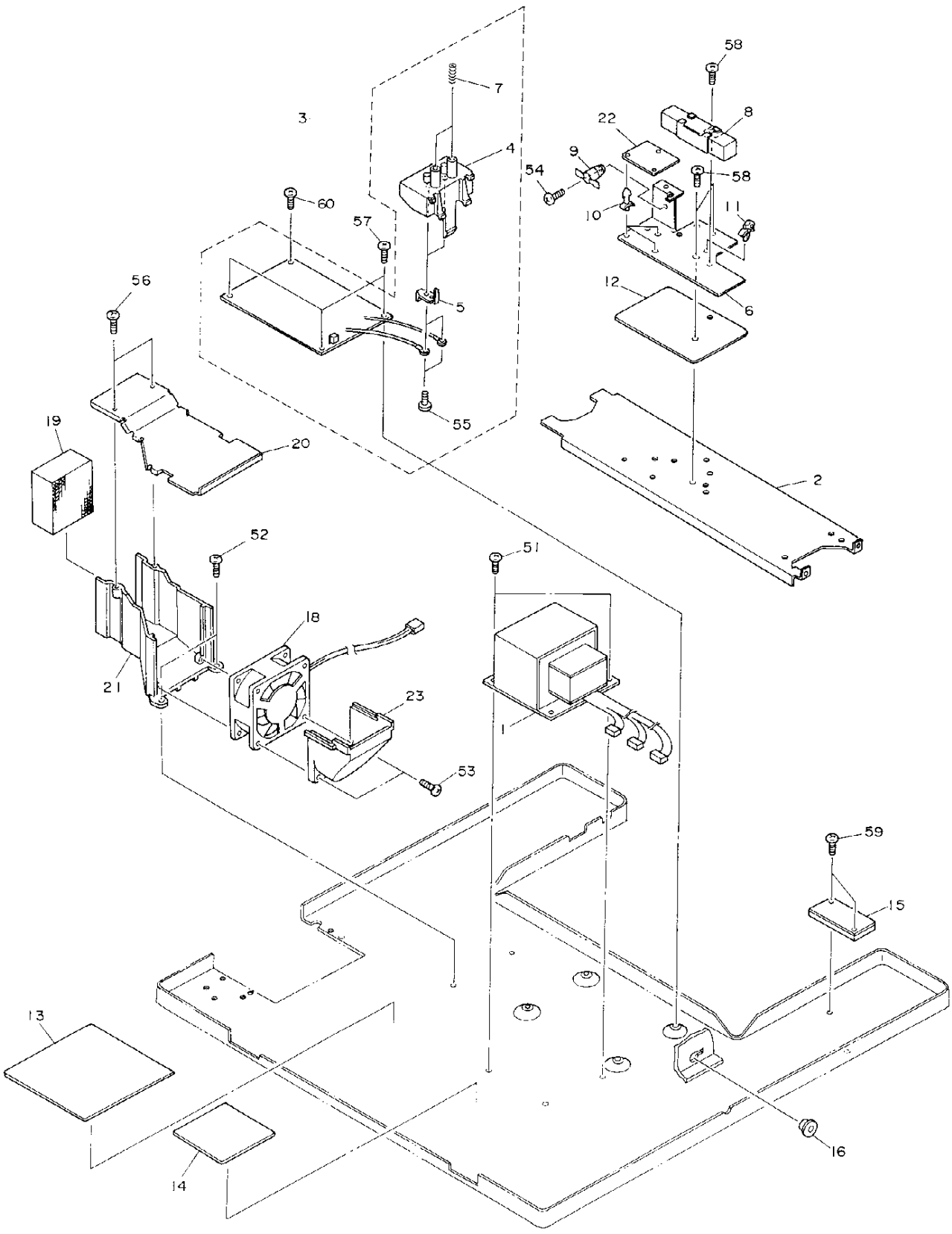
58
7
3
8
22
4
9
54
58
60
10
11
57
56
12
5
6
19
55
20
2
52
51
18
21
23
1
53
59
15
13
16
14

ITEM NO.	PARTS NO.	PARTS NAME	Q'TY / PAGE	Q'TY / PACK	SPE PRICE IN NONE	P	I	R	BSI NO.	TO	FROM	SERIAL NO.	REMARKS
1A	4400 815040	TR-115-306	1	1/C									100V SERIES
1B	4402 816320	TR-200-170	1	1/C									200V SERIES
1J	4400 815500	TR-127-306	1	1/C									SAN
2	4400 912850	BKT-DH-176	1	1/P									
3	4402 809300	ASM-HVT-TR	1	1/C									
4	4402 809310	TERMINAL-HVT-TR	1	1/P									
5	4402 809320	PLT-TERM-HVT-TR	2	1/P									
6	4402 808880	BKT-DH-OPTION	1	1/P									MF-1710
6H	4402 808880	BKT-DH-OPTION	1	1/P									AUD
7	4402 205740	SPC-TERM-HVT-TR	2	1/P									
8A	4402 816170	K-DHT-L-170-115	1	1/D									MF-1710U
8B	4402 816180	K-DHT-L-170-220	1	1/D									MF-1710E
8C	4402 816190	K-DHT-L-170-240	1	1/D									MF-1710A
8H	4402 816190	K-DHT-L-170-240	1	1/D									AUD
9	4400 741340	THEM-CS-7SA	1	1/D									MF-1710
9H	4400 741340	THEM-CS-7SA	1	1/D									AUD
10	4843 390870	PWZ-SPLS-6U	3	5/P									MF-1710
10H	4843 390870	PWZ-SPLS-6U	3	5/P									AUD
11	4407 406860	BAND-PLP1.5I	1	5/P									MF-1710
11H	4407 406860	BAND-PLP1.5I	1	5/P									AUD
12	4402 808870	PLATE-BKT-DH	1	1/P									EXCPT AUD,AU
13	4402 817030	PWA-F-PWR-170	1	1/SB									
14A	4402 816350	PWA-F-LRG-170-U	1	1/SB						014A1			100V SERIES
14A1	4400 964110	PWA-F-LRG-170-U	1	1/SB		C	E	E	F95J516		014A	CI5/QI5	100V SERIES
14B	4402 816360	PWA-F-LRG-170-E	1	1/SB									200V SERIES
15	4402 816420	PS-HVT-GB-170	1	1/C									EXCPT TAD,CS
16	4843 390804	CLP/W-OCB-500	1	5/P									EXCPT TAD,CS
18	4400 960840	FAN-DC-176	1	1/D									
19	4402 801280	FILTER-L-170	1	1/C									
20	4400 757310	BKT-DUCT-FAN-R	1	1/P									
21	4400 757370	DUCT-FAN-REAR	1	1/PP									
22A	4407 965320	PWA-F-FUS-351UC	1	1/C									MF-1710U
22B	4407 965330	PWA-F-FUS-351EU	1	1/C									MF-1710E
22C	4407 965330	PWA-F-FUS-351EU	1	1/C									MF-1710A
22H	4407 965330	PWA-F-FUS-351EU	1	1/C									AUD
23	4402 801260	DUCT-BELT-FAN	1	1/PP									
51	4842 040060	TPAN40*08MSZN3L	2	50/P									
52	4842 040702	TZPAN4010MSZN3L	2	50/P									
53	7120 403511	12PAN4035MSZN3A	2	50/P									
54	4842 040665	TPAN3006MSZN3L	1	50/P									
55	4842 040846	PTBR30*08MSZN3A	2	50/P									
56	4842 040495	PTBR30*06MSZN3A	2	50/P									
57	4842 040700	TZPAN4008MSZN3L	3	50/P									
58	4842 040698	TZPAN4006MSZN3L	3	50/P									
59	4842 040122	THPAN4016MSZN3L	1	50/P						059 1			
59 1	4842 040121	THPAN4014MSZN3L	1	50/P		C	B	E	F4F178		059	CF4/QF4	
60	4842 040407	THPAN4008MSZN3A	1	50/P									

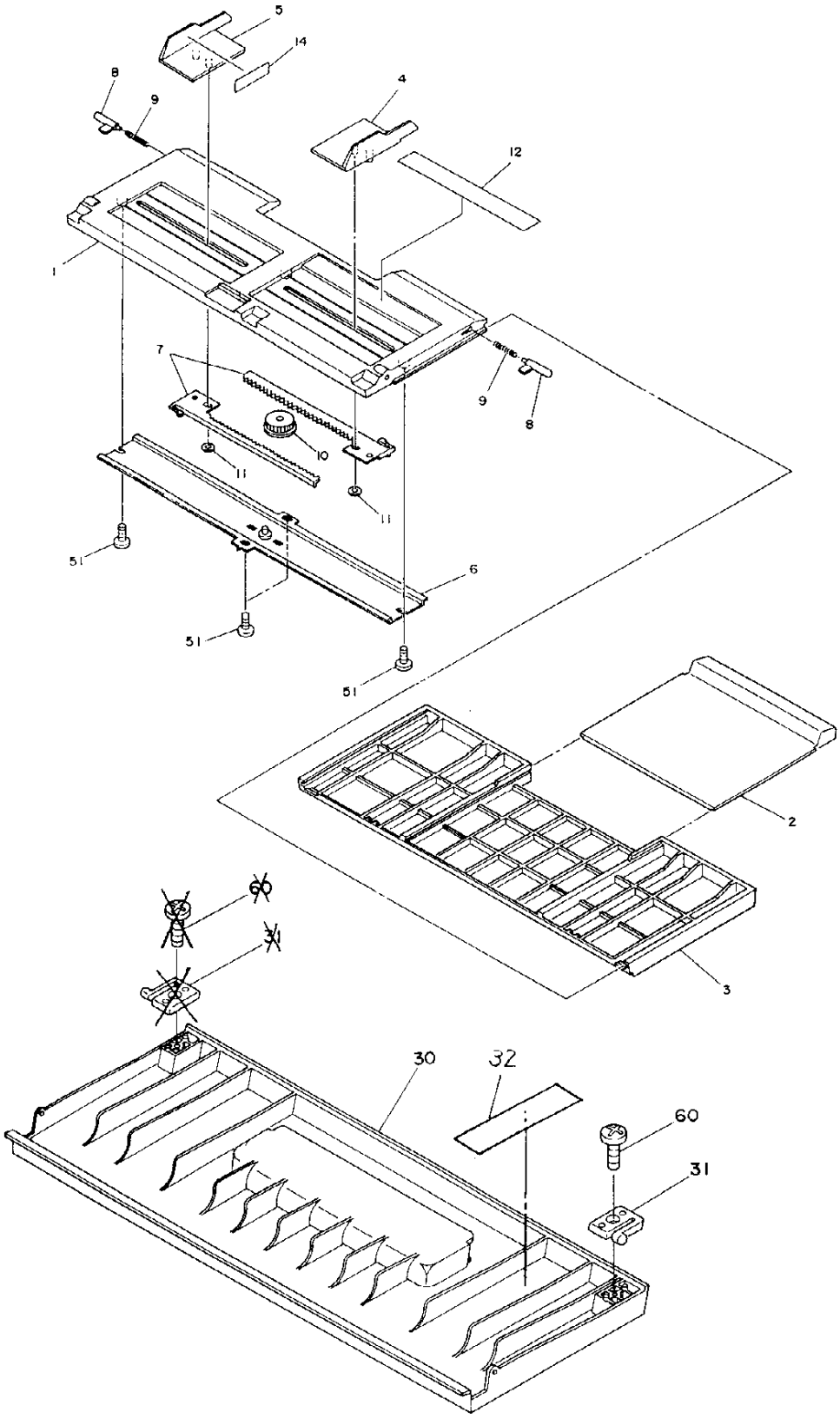
5
14
8
9
4
12
1
7
9
8
10
11
11
51
6
51
51
2
3
60
31
30
32
60
31

ITEM NO.	PARTS NO.	PARTS NAME	Q'TY / PAGE	Q'TY / PACK	SPE PRICE IN NONE	P	I	R	BSI NO.	TO	FROM	SERIAL NO.	REMARKS
1	4400 725010	TRAY-M-FE-U	1	1/PP									ED-2050
2	4400 752720	TRAY-M-FE-M	1	1/PP									ED-2050
3	4400 752730	TRAY-M-FE-L	1	1/PP									ED-2050
4	4402 814250	GUIDE-F	1	1/P									ED-2050
5	4402 814260	GUIDE-R	1	1/P									ED-2050
6	4402 814290	K-PLATE-PINION	1	1/P									ED-2050
7	4402 814300	RACK-BYPASS	2	1/P						007 1			ED-2050
7 1	4400 948540	RACK-BYPASS	2	1/P		C	E	J	F95D427		007	CG5	ED-2050
8	4402 814310	PIN-TRAY-M-FE	2	5/P									ED-2050
9	4402 818340	SPC-PIN-TRAY	2	5/P									ED-2050
10	4407 726480	PINION-18-395	1	1/P									ED-2050
11	4407 408370	PUSH-NUT-3	2	10/P									ED-2050
12A	4402 814340	LBL-TRAY-U	1	1/KP									ED-2050
12B	4402 814350	LBL-TRAY-E	1	1/KP									ED-2050
14	4402 818380	LBL-TRAY-SFB	1	5/P									ED-2050
30	4400 918150	COV-BYPASS-178	1	1/PP						030 1			ED-1650
30 1	4400 914160	COV-BYPASS-178	1	1/PP		E	-	J	F4B100		030		ED-1650
31	4400 918130	CATCH-BYPASS	2	1/P						031 1			ED-1650
31 1	4400 918130	CATCH-BYPASS	1	1/P		E	-	J	F4B100		031		ED-1650
32C	4400 911160	LBL-MANUAL-FEED	1	5/P		A	B	J	F4F178				EUD
32D	4400 911160	LBL-MANUAL-FEED	1	5/P		A	B	J	F4F178				GSD
32E	4400 911160	LBL-MANUAL-FEED	1	5/P		A	B	J	F4F178				FRD
32F	4400 911160	LBL-MANUAL-FEED	1	5/P		A	B	J	F4F178				SED
32G	4400 911160	LBL-MANUAL-FEED	1	5/P		A	B	J	F4F178				UKD
51	4842 040495	PTBR30*06MSZN3A	4	50/P									ED-2050
60	7124 301011	12FLT3010MSZN3A	2	50/P									ED-1650

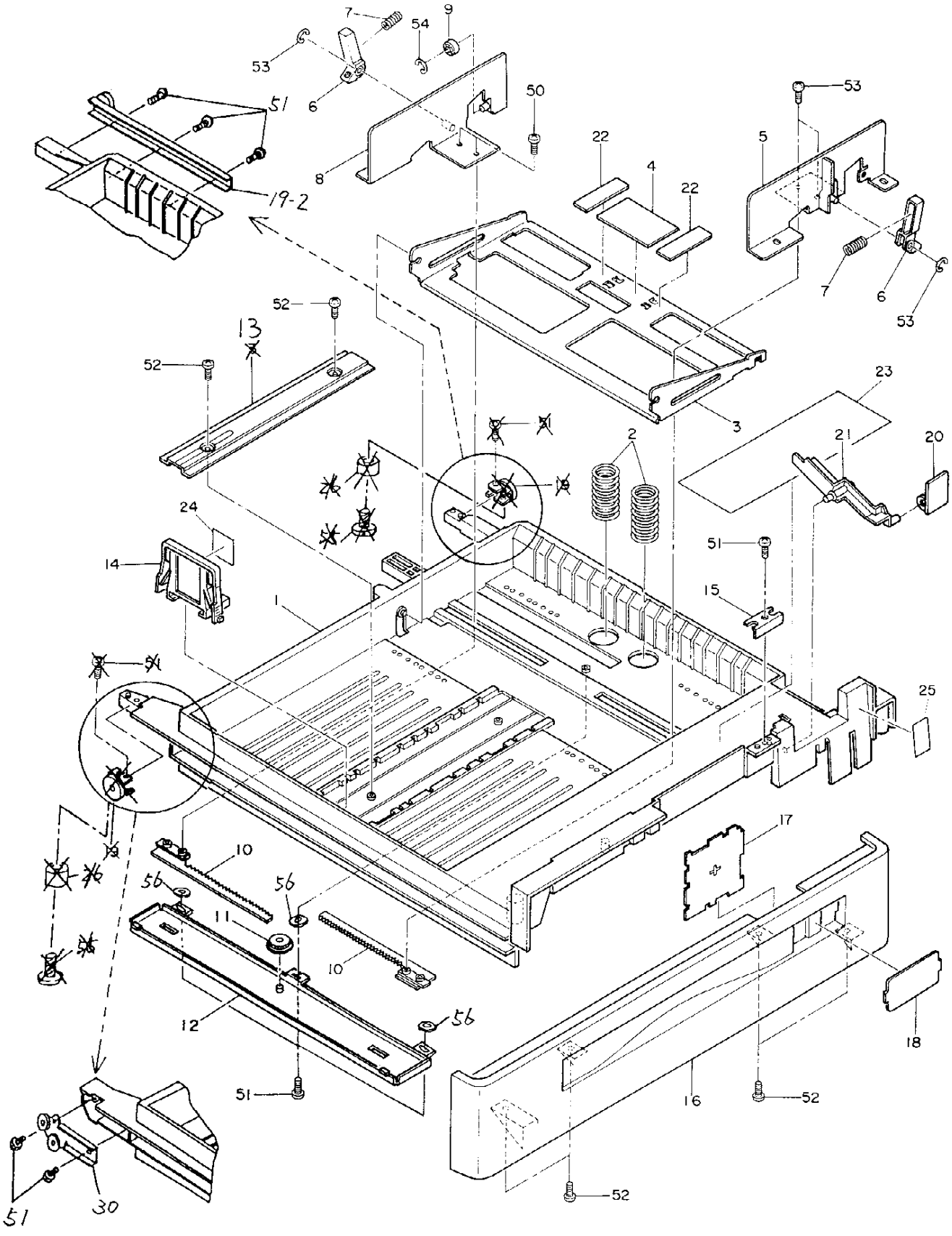
7
9
54
53
6
51
50
8
19-2
22
4
22
5
53
7
6
53
52
13
52
23
3
2
21
20
24
14
51
15
1
25
17
10
56
56
11
10
12
56
18
51
16
52
52
51
30

TOSHIBA

ITEM NO.	PARTS NO.	PARTS NAME	Q'TY / PAGE	Q'TY / PACK	SPE PRICE IN NONE	P	I	R	BSI NO.	TO	FROM	SERIAL NO.	REMARKS
1	4400 918500	CASSETTE-176	1	1/PP						001 1			
1 1	4400 932200	CASSETTE-2540	1	1/PP		C	D	D	F4H262		001	CJ4/QJ4	
2	4400 918510	SPC-TRAY-UP	2	5/P									
3	4400 918720	TRAY-CST	1	1/P									
4	4400 918740	PAD-BRAKE-TRAY	1	1/P						004 1			
4 1	4400 932460	PAD-BRAKE-CST-2	1	1/P		C	E	J	F95D428		004	CB5/QB5	
5	4400 918640	K-WALL-CST-F	1	1/P						005 1			
5 1	4400 929800	K-WALL-CST-F	1	1/P		C	B	D	F4G232	005 2	005	CG4/QG4	
5 2	4400 932220	K-WALL-CST-F	1	1/P		C	B	D	F4H262		005 1	CJ4/QJ4	
6	4400 918850	ARM-ADJUST	2	1/P									
7	4400 918870	SPR-ADJ-ARM	2	5/P						007 1			
7 1	4400 918710	SPE-ADJUST-ARM	2	5/P		E	-	J	F4D135		007		
8	4400 918650	K-WALL-CST-R	1	1/P						008 1			
8 1	4400 929810	K-WALL-CST-R	1	1/P		C	B	D	F4G232	008 2	008	CG4/QG4	
8 2	4400 932230	K-WALL-CST-R	1	1/P		C	B	D	F4H262		008 1	CJ4/QJ4	
9	4400 918880	ROLGUIDE-WALL	1	1/P									
10	4400 918960	RACK-ADJ-CST	2	1/P									
11	4407 726480	PINION-18-395	1	1/P									
12	4400 918560	K-COVER-BTM-CST	1	1/P						012 1			
12 1	4400 932310	K-COVER-BTM-CST	1	1/P		C	B	D	F4H262		012	CJ4/QJ4	
13	4400 918950	BKT-END-GUIDE	1	1/P						013 1			
13 1	4400 919100	BKT-END-GUIDE	1	1/P		C	E	E	F95E435		013	CG5/QG5	
14	4400 918860	GUIDE-SIDE-BACK	1	1/P									
15	4402 814920	PLATE-MG-CST	1	1/P									
16	4400 918900	COV-CST	1	1/P									
17A	4400 918930	PLATE-SIZE-L	1	1/P									USA SIZE
17B	4400 918920	PLATE-SIZE-A	1	1/P									EUR SIZE
18	4400 918970	COVER-SIZE-176	1	1/P									
19	4400 918800	K-CST-ROLL	2	1/P						019 1			
19 1	4400 929350	K-CST-ROLL	2	1/P		C	B	E	F4F218	019 2 030	019	CF4/QF4	
19 2	4400 932270	K-STAY-CST-R	1	1/P		C	D	D	F4H262		019 1	CJ4/QJ4	
20	4400 918530	PLATE-EMPTY	1	1/P									
21	4400 918520	ARM-EMPTY	1	1/P									
22	4400 918980	PAD-BRAKE-CST	2	1/P									
23	4400 918990	LBL-INST-CST	1	1/KP						023 1			
23 1	4400 918550	LBL-INST-CST	1	1/KP		C	B	J	F4D135		023		
		IMPROVEMENT OF THE OPERATION											
24	4400 918590	LBL-LIMIT-176	1	5/P									
25	4400 918540	LBL-EMPTY	1	5/P									
26	4350 120890	CLR-030*0030FZN	2	5/P		A	B	E	F4F218	026 1		CF4/QF4	
26 1	4350 120890	CLR-030*0030FZN	0	5/P		B	-	D	F4H262		026	CJ4/QJ4	
30	4400 932290	K-STAY-CST-L	1	1/P		C	D	D	F4H262		019 1	CJ4/QJ4	
50	4842 040147	12ZPAN3006MSZ3A	4	50/P									
51	4842 040495	PTBR30*06MSZN3A	6	50/P						051 1			
51 1	4842 040495	PTBR30*06MSZN3A	4	50/P		D	-	E	F4F218	051 2	051	CF4/QF4	
51 2	4842 040495	PTBR30*06MSZN3A	9	50/P		D	-	D	F4H262		051 1	CJ4/QJ4	
52	4842 040849	PTBR40*08MSZN3A	6	50/P									
53	7405 005031	ERR050SKZN3A	2	50/P									
54	7405 003031	ERR030SKZN3A	1	50/P									
55	4842 040847	PTBR30*10MSZN3A	2	50/P		A	B	E	F4F218	055 1		CF4/QF4	
55 1	4842 040847	PTBR30*10MSZN3A	0	50/P		B	-	D	F4H262		055	CJ4/QJ4	
56	7402 003032	0TWAS030SKZN3C	3	50/P		A	-	D	F4H262			CJ4/QJ4	

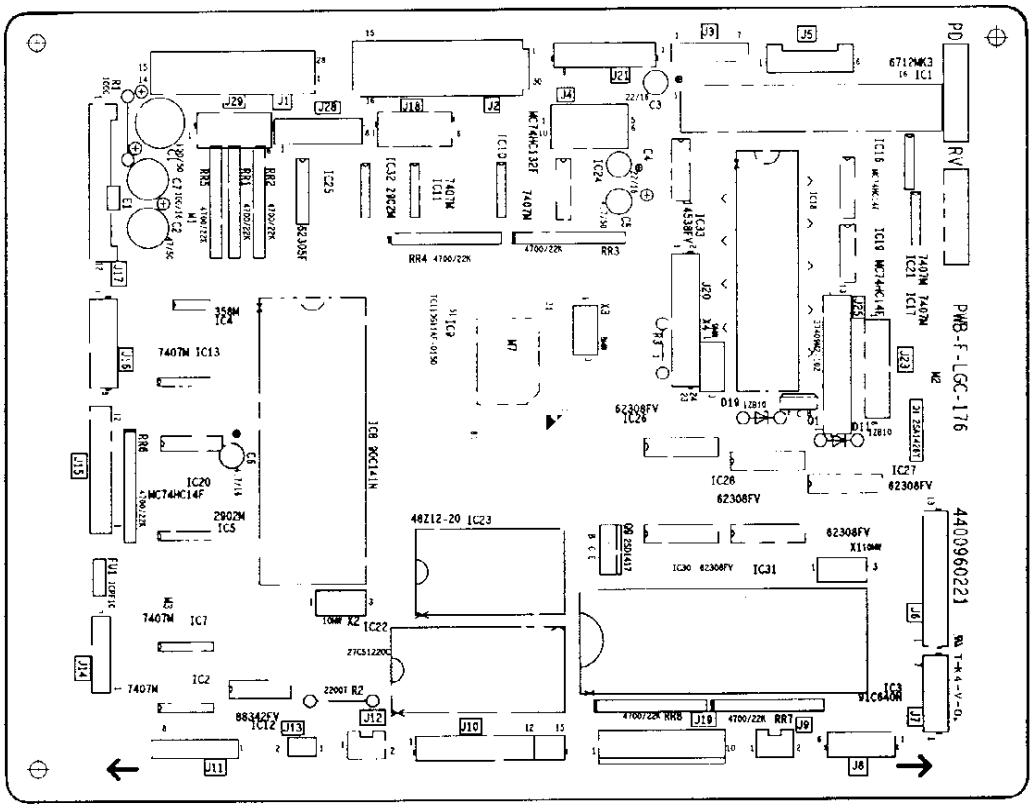
PWB-F-LGC-176
4400960221
PD
RV
IC1
IC2
IC5
IC6
IC7
IC8
IC10
IC11
IC12
IC13
IC20
IC22
IC23
IC26
IC27
IC30
IC31
IC32
IC33
62308FV
7407M
74HC14F
74HC132F
74HC4538F
27C512200
48Z12-20
88342FV
91C640N
J1
J2
J3
J4
J5
J6
J7
J8
J9
J10
J11
J12
J13
J14
J15
J16
J18
J19
J20
J21
J23
J25
J26
J28
J29

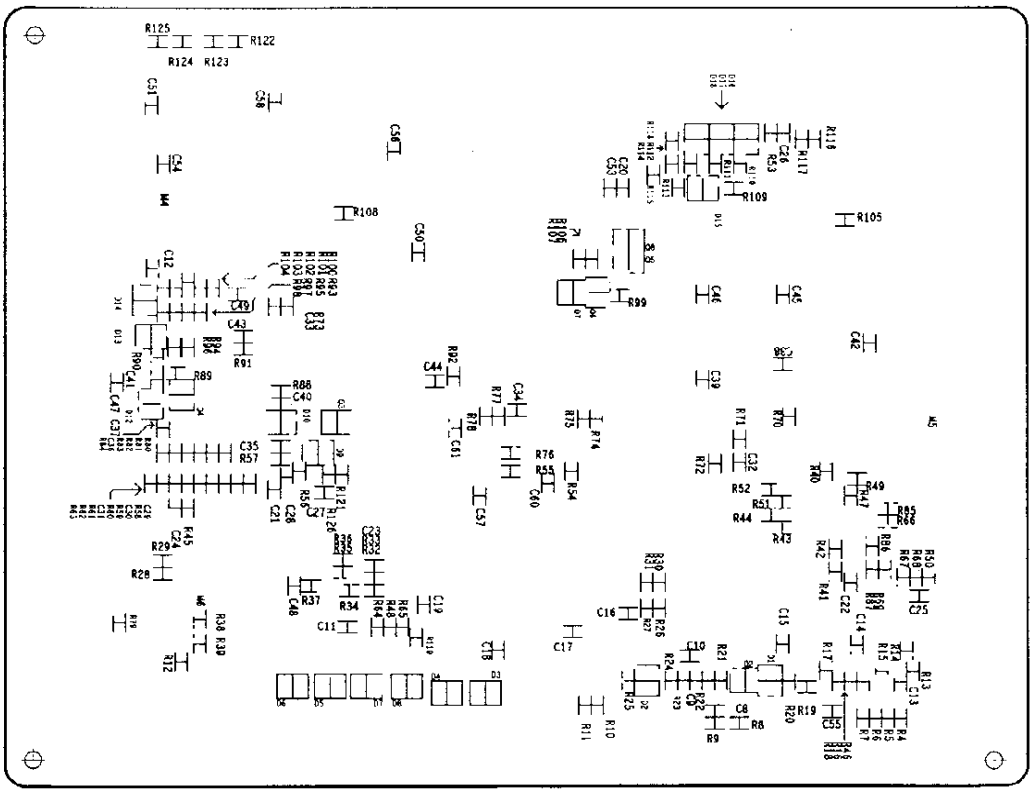

ITEM NO.	PARTS NO.	PARTS NAME	Q'TY / PAGE	Q'TY / PACK	SPE PRICE IN NONE	P	I	R	BSI NO.	TO	FROM	SERIAL NO.	REMARKS
0	4400 960230	PWA-F-LGC-176	1	1/SB						000 1			
0 1	4400 960060	PWA-F-LGC-176-4	1	1/SB		C	B	C	F95H495		000	CH5/QH5	
		FOR MACHINES EXCEPT FOR EUROPE, THE INTERCHANGEABILITY IS "E"											
1	4400 960240	PWB-F-LGC-176	1	N/A***						001 1			
1 1	4400 960260	PWB-F-LGC-176	1	N/A***		C	-	C	F4F178	001 2	001		
1 2	4400 960070	PWB-F-LGC-176-4	1	N/A***		C	B	C	F95H495		001 1	CH5/QH5	
3	4843 321242	SKT-IC87-2806S4	1	5/S						003 1			IC22
3 1	4843 321564	SKT-CLC10280101	1	5/S		E	-	J	F4B100		003		IC22
4	4408 101710	SKT-IC87-2406S4	1	5/S						004 1			IC23
4 1	4843 321563	SKT-CLC10240101	1	5/S		E	-	J	F4B100		004		IC23
5	4843 500641	FU-ICP-F10	1	5/D									
11	4843 113784	IC-STK6712BMK3	1	1/S									
12	4843 112762	IC-DM7407M	1	5/S									
13	3040 566125	TMP91C6402167Z	1	1/S									
14	4843 113437	IC-LM358M(EL)	1	5/S									
15	4843 113438	IC-LM2902M(EL)	1	5/S									
16	4843 112466	IC-MC74HC08FL	1	5/S									
17	4843 112762	IC-DM7407M	1	5/S									
18	3040 522370	IC-TMP90C141N(Z	1	1/S						018 1			
18 1	3040 521840	IC-TMP90C141NZC	1	1/S		C	E	J	F96J777		018		
19	3040 887048	TC110G11AF-1050	1	1/S									
20	4843 112762	IC-DM7407M	1	5/S									
21	4843 112762	IC-DM7407M	1	5/S									
22	4843 112761	IC-MB88342PF	1	5/S									
23	4843 112762	IC-DM7407M	1	5/S									
24	4843 112464	IC-MC74HC04AF	1	5/S									
30	4843 113612	IC-MC74HC14FL	1	5/P									
34	4843 112766	IC-MC74HC132FL	1	5/S									
35	3040 274647	IC-TD62305F(TP2	1	5/S									
36	3040 274862	IC-TD62308AFTP2	1	1/S						036 1			
36 1	3040 274687	IC-TD62308FTP2	1	1/S		E	-	J	F4B100		036		
37	3040 274862	IC-TD62308AFTP2	1	1/S						037 1			
37 1	3040 274687	IC-TD62308FTP2	1	1/S		E	-	J	F4B100		037		
38	3040 274862	IC-TD62308AFTP2	1	1/S						038 1			
38 1	3040 274687	IC-TD62308FTP2	1	1/S		E	-	J	F4B100		038		
40	3040 274862	IC-TD62308AFTP2	1	1/S						040 1			
40 1	3040 274687	IC-TD62308FTP2	1	1/S		E	-	J	F4B100		040		
41	3040 274862	IC-TD62308AFTP2	1	1/S						041 1			
41 1	3040 274687	IC-TD62308FTP2	1	1/S		E	-	J	F4B100		041		
42	4843 113438	IC-LM2902M(EL)	1	5/S									
43	4843 112458	IC-MC14538BFL	1	5/S									
51	3036 548970	Q-2SA1428-Y	1	5/P									
52	3036 004012	Q-RN1401(TE85R)	1	5/P									
53	3036 004012	Q-RN1401(TE85R)	1	5/P									
54	3036 004012	Q-RN1401(TE85R)	1	5/P									
55	3036 014012	Q-RN2401(TE85R)	1	5/P									
56	3036 004012	Q-RN1401(TE85R)	1	5/P									
57	3036 004012	Q-RN1401(TE85R)	1	5/P									
58	3036 014012	Q-RN2401(TE85R)	1	5/P									
59	3036 868550	Q-2SD1417	1	5/S									
71	3037 238212	D-02CZ3.3X-85R	1	5/P									
72	3037 150651	D-1SS184(TE85R)	1	5/P									
73	3037 153602	D-1SS272(TE85R)	1	10/P									
74	3037 153602	D-1SS272(TE85R)	1	10/P									
77	3037 153602	D-1SS272(TE85R)	1	10/P									
78	3037 153602	D-1SS272(TE85R)	1	10/P									
79	3037 150651	D-1SS184(TE85R)	1	5/P									
80	3037 238422	D-02CZ5.1Y-85R	1	5/P									
82	3037 238452	D-02CZ5.6X-85R	1	5/S									
83	3037 150651	D-1SS184(TE85R)	1	5/P									
84	3037 238422	D-02CZ5.1Y-85R	1	5/P									
85	3037 150651	D-1SS184(TE85R)	1	5/P									
88	3037 150651	D-1SS184(TE85R)	1	5/P									
101	4843 250421	X-CST10.0MTW	1	5/S									
102	4843 250421	X-CST10.0MTW	1	5/S									
103	4843 250419	X-CST8.00MTW	1	5/S									
111	4843 406674	CE04W1H101M	1	10/P									
112	4843 411175	CE04W1H470M-F	1	10/P									
113	4843 410402	CE-04W1C220M	1	10/P									
114	4843 410402	CE-04W1C220M	1	10/P									
115	4843 410787	CE-04W1H4R7M	1	5/P									

ITEM NO.	PARTS NO.	PARTS NAME	Q'TY / PAGE	Q'TY / PACK	SPE PRICE IN NONE	P	I	R	BSI NO.	TO	FROM	SERIAL NO.	REMARKS
116	4843 410397	CE-04W1C4R7M	1	10/P									
117	4843 411173	CE04W1C101M-F	1	10/P									
118	4843 410862	CTP-K1F1E104ZT	1	10/P									
119	4843 410862	CTP-K1F1E104ZT	1	10/P									
120	4843 410862	CTP-K1F1E104ZT	1	10/P									
121	4843 412139	CTP-M1F1H104ZT	1	10/P									
122	4843 412139	CTP-M1F1H104ZT	1	10/P									
126	4843 410862	CTP-K1F1E104ZT	1	10/P									
127	4843 410862	CTP-K1F1E104ZT	1	10/P									
128	4843 410862	CTP-K1F1E104ZT	1	10/P									
129	4843 410862	CTP-K1F1E104ZT	1	10/P									
130	4843 410862	CTP-K1F1E104ZT	1	10/P									
131	4843 410862	CTP-K1F1E104ZT	1	10/P									
133	4843 412139	CTP-M1F1H104ZT	1	10/P									
134	4843 410862	CTP-K1F1E104ZT	1	10/P									
136	4843 410725	CTP-M1B1H222KT	1	10/P									
137	4843 410862	CTP-K1F1E104ZT	1	10/P									
138	4843 410862	CTP-K1F1E104ZT	1	10/P									
139	4843 412139	CTP-M1F1H104ZT	1	10/P									
140	4843 410862	CTP-K1F1E104ZT	1	10/P									
141	4843 410862	CTP-K1F1E104ZT	1	10/P									
143	4843 410725	CTP-M1B1H222KT	1	10/P									
144	4843 410862	CTP-K1F1E104ZT	1	10/P									
145	4843 410725	CTP-M1B1H222KT	1	10/P									
146	4843 410862	CTP-K1F1E104ZT	1	10/P									
147	4843 410862	CTP-K1F1E104ZT	1	10/P									
148	4843 412139	CTP-M1F1H104ZT	1	10/P									
149	4843 412139	CTP-M1F1H104ZT	1	10/P									
150	4843 410725	CTP-M1B1H222KT	1	10/P									
151	4843 410862	CTP-K1F1E104ZT	1	10/P									
152	4843 412139	CTP-M1F1H104ZT	1	10/P									
153	4843 410725	CTP-M1B1H222KT	1	10/P									
154	4843 410725	CTP-M1B1H222KT	1	10/P									
155	4843 412139	CTP-M1F1H104ZT	1	10/P									
156	4843 412139	CTP-M1F1H104ZT	1	10/P									
157	4843 412139	CTP-M1F1H104ZT	1	10/P									
158	4843 410862	CTP-K1F1E104ZT	1	10/P									
159	4843 410702	CTP-M1CH1H300KT	1	10/P									
160	4843 410862	CTP-K1F1E104ZT	1	10/P									
161	4843 410862	CTP-K1F1E104ZT	1	10/P									
162	4843 410862	CTP-K1F1E104ZT	1	10/P									
163	4843 410862	CTP-K1F1E104ZT	1	10/P									
164	4843 410862	CTP-K1F1E104ZT	1	10/P									
165	4843 410862	CTP-K1F1E104ZT	1	10/P									
166	4843 410862	CTP-K1F1E104ZT	1	10/P									
167	4843 410862	CTP-K1F1E104ZT	1	10/P									
168	4843 410862	CTP-K1F1E104ZT	1	10/P									
169	4843 410862	CTP-K1F1E104ZT	1	10/P									
170	4843 410862	CTP-K1F1E104ZT	1	10/P									
171	4843 410862	CTP-K1F1E104ZT	1	10/P									
181	4407 634340	RR-S09LM472J223	1	10/P						181 1			
181 1	4843 076427	RR-1/8S08472223	1	10/P		C	E	H	F5A381		181		
182	4407 634340	RR-S09LM472J223	1	10/P						182 1			
182 1	4843 076427	RR-1/8S08472223	1	10/P		C	E	H	F5A381		182		
183	4407 634340	RR-S09LM472J223	1	10/P						183 1			
183 1	4843 076427	RR-1/8S08472223	1	10/P		C	E	H	F5A381		183		
184	4407 634340	RR-S09LM472J223	1	10/P						184 1			
184 1	4843 076427	RR-1/8S08472223	1	10/P		C	E	H	F5A381		184		
185	4407 634340	RR-S09LM472J223	1	10/P						185 1			
185 1	4843 076427	RR-1/8S08472223	1	10/P		C	E	H	F5A381		185		
186	4407 634340	RR-S09LM472J223	1	10/P						186 1			
186 1	4843 076427	RR-1/8S08472223	1	10/P		C	E	H	F5A381		186		
187	4407 634340	RR-S09LM472J223	1	10/P						187 1			
187 1	4843 076427	RR-1/8S08472223	1	10/P		C	E	H	F5A381		187		
188	4407 634340	RR-S09LM472J223	1	10/P						188 1			
188 1	4843 076427	RR-1/8S08472223	1	10/P		C	E	H	F5A381		188		
201	4841 010060	RD1/2P-001KJ	1	10/P									
202	4843 075264	RD-1/2P222JT	1	10/P									
204	4843 072167	RTP-2B2A472JDT	1	10/P									
205	4843 072167	RTP-2B2A472JDT	1	10/P									
206	4843 072167	RTP-2B2A472JDT	1	10/P									

ITEM NO.	PARTS NO.	PARTS NAME	Q'TY / PAGE	Q'TY / PACK	SPE PRICE IN NONE	P	I	R	BSI NO.	TO	FROM	SERIAL NO.	REMARKS
207	4843 072167	RTP-2B2A472JDT	1	10/P									
208	4843 072175	RTP-2B2A223JDT	1	10/P									
209	4843 072167	RTP-2B2A472JDT	1	10/P									
212	4843 072167	RTP-2B2A472JDT	1	10/P									
219	4843 072167	RTP-2B2A472JDT	1	10/P									
220	4843 072145	RTP-2B2A680JDT	1	10/P									
221	4843 072167	RTP-2B2A472JDT	1	10/P									
222	4843 072167	RTP-2B2A472JDT	1	10/P									
223	4843 072159	RTP-2B2A102JDT	1	10/P									
224	4843 072167	RTP-2B2A472JDT	1	10/P									
225	4843 072057	RTP-2B2A104JDT	1	10/P									
226	4843 072159	RTP-2B2A102JDT	1	10/P									
227	4843 072167	RTP-2B2A472JDT	1	10/P									
228	4843 072175	RTP-2B2A223JDT	1	10/P									
229	4843 072167	RTP-2B2A472JDT	1	10/P									
230	4843 072065	RTP-2B2A474JDT	1	10/P									
231	4843 072167	RTP-2B2A472JDT	1	10/P									
232	4843 072170	RTP-2B2A822JDT	1	10/P									
233	4843 072165	RTP-2B2A332JDT	1	10/P									
234	4843 072171	RTP-2B2A103JDT	1	10/P									
235	4843 072171	RTP-2B2A103JDT	1	10/P									
236	4843 072173	RTP-2B2A153JDT	1	10/P									
237	4843 072173	RTP-2B2A153JDT	1	10/P									
238	4843 072175	RTP-2B2A223JDT	1	10/P									
239	4843 072179	RTP-2B2A473JDT	1	10/P									
245	4843 072144	RTP-2B2A171JDT	1	10/P									
248	4843 072160	RTP-2B2A122JDT	1	10/P									
253	4843 072167	RTP-2B2A472JDT	1	10/P									
254	4843 072069	RTP-2B2A105JDT	1	10/P									
255	4843 072167	RTP-2B2A472JDT	1	10/P									
256	4843 072175	RTP-2B2A223JDT	1	10/P									
257	4843 072175	RTP-2B2A223JDT	1	10/P									
258	4843 072165	RTP-2B2A332JDT	1	10/P									
259	4843 072162	RTP-2B2A182JDT	1	10/P									
260	4843 072169	RTP-2B2A682JDT	1	10/P									
261	4843 072168	RTP-2B2A562JDT	1	10/P									
262	4843 072065	RTP-2B2A474JDT	1	10/P									
263	4843 072169	RTP-2B2A682JDT	1	10/P									
264	4843 072159	RTP-2B2A102JDT	1	10/P									
265	4843 072161	RTP-2B2A152JDT	1	10/P									
270	4843 072159	RTP-2B2A102JDT	1	10/P									
273	4843 072167	RTP-2B2A472JDT	1	10/P									
274	4843 072175	RTP-2B2A223JDT	1	10/P									
275	4843 072167	RTP-2B2A472JDT	1	10/P									
276	4843 072167	RTP-2B2A472JDT	1	10/P									
277	4843 072167	RTP-2B2A472JDT	1	10/P									
278	4843 072167	RTP-2B2A472JDT	1	10/P									
279	4843 072171	RTP-2B2A103JDT	1	10/P									
280	4843 072158	RTP-2B2A821JDT	1	10/P									
281	4843 072054	RTP-2B2A563JDT	1	10/P									
282	4843 072159	RTP-2B2A102JDT	1	10/P									
283	4843 072175	RTP-2B2A223JDT	1	10/P									
284	4843 072176	RTP-2B2A273JDT	1	10/P									
288	4843 072175	RTP-2B2A223JDT	1	10/P									
289	4843 072167	RTP-2B2A472JDT	1	10/P									
290	4843 072167	RTP-2B2A472JDT	1	10/P									
291	4843 072167	RTP-2B2A472JDT	1	10/P									
292	4843 072167	RTP-2B2A472JDT	1	10/P									
293	4843 072171	RTP-2B2A103JDT	1	10/P									
294	4843 072175	RTP-2B2A223JDT	1	10/P									
295	4843 072171	RTP-2B2A103JDT	1	10/P									
296	4843 072148	RTP-2B2A121JDT	1	10/P									
297	4843 072171	RTP-2B2A103JDT	1	10/P									
298	4843 072177	RTP-2B2A333JDT	1	10/P									
299	4843 072167	RTP-2B2A472JDT	1	10/P									
300	4843 072175	RTP-2B2A223JDT	1	10/P									
301	4843 072173	RTP-2B2A153JDT	1	10/P									
302	4843 072175	RTP-2B2A223JDT	1	10/P									
303	4843 072173	RTP-2B2A153JDT	1	10/P									
304	4843 072175	RTP-2B2A223JDT	1	10/P									
305	4843 072069	RTP-2B2A105JDT	1	10/P									

ITEM NO.	PARTS NO.	PARTS NAME	Q'TY / PAGE	Q'TY / PACK	SPE PRICE IN NONE	P	I	R	BSI NO.	TO	FROM	SERIAL NO.	REMARKS
306	4843 072160	RTP-2B2A122JDT	1	10/P									
307	4843 072169	RTP-2B2A682JDT	1	10/P									
308	4843 072069	RTP-2B2A105JDT	1	10/P									
310	4843 072166	RTP-2B2A392JDT	1	10/P									
312	4843 072153	RTP-2B2A331JDT	1	10/P									
313	4843 072167	RTP-2B2A472JDT	1	10/P									
314	4843 072164	RTP-2B2A272JDT	1	10/P									
315	4843 072155	RTP-2B2A471JDT	1	10/P									
316	4843 072175	RTP-2B2A223JDT	1	10/P									
317	4843 072167	RTP-2B2A472JDT	1	10/P									
318	4843 072150	RTP-2B2A181JDT	1	10/P									
319	4843 072164	RTP-2B2A272JDT	1	10/P									
320	4843 072175	RTP-2B2A223JDT	1	10/P									
321	4843 072175	RTP-2B2A223JDT	1	10/P									
322	4843 072175	RTP-2B2A223JDT	1	10/P									
323	4843 072167	RTP-2B2A472JDT	1	10/P									
324	4843 072167	RTP-2B2A472JDT	1	10/P									
325	4843 072175	RTP-2B2A223JDT	1	10/P									
326	4843 072167	RTP-2B2A472JDT	1	10/P									
327	4843 072057	RTP-2B2A104JDT	1	10/P									
341	4843 307786	J-53313-2815	1	5/P									
342	4843 306161	J-3-175132-0	1	5/P									
343	4843 306501	J-53253-0710	1	5/P									
345	4843 304942	J-53052-0610	1	5/P									
346	4843 302629	J-DF3A-13P-2DSA	1	5/P									
347	4843 302623	J-DF3A-7P-2DSA	1	5/P									
348	4843 304840	J-53014-0610	1	5/P									
349	4843 304946	J-53052-0210	1	5/P									
350	4843 302628	J-DF3A-12P-2DSA	1	5/P									
351	4843 306502	J-53253-0810	1	5/P									
352	4843 304946	J-53052-0210	1	5/P									
353	4843 306496	J-53253-0210	1	5/P									
354	4843 306501	J-53253-0710	1	5/P									
355	4843 306506	J-53253-1210	1	5/P									
357	4843 304936	J-53052-1210	1	5/P									
358	4843 306194	J-0-175487-6	1	5/P									
360	4843 306566	J-DF11-24DS2DSA	1	5/P									
368	4843 304842	J-53014-0810	1	5/P									
350	4843 302628	J-DF3A-12P-2DSA	1	5/P									

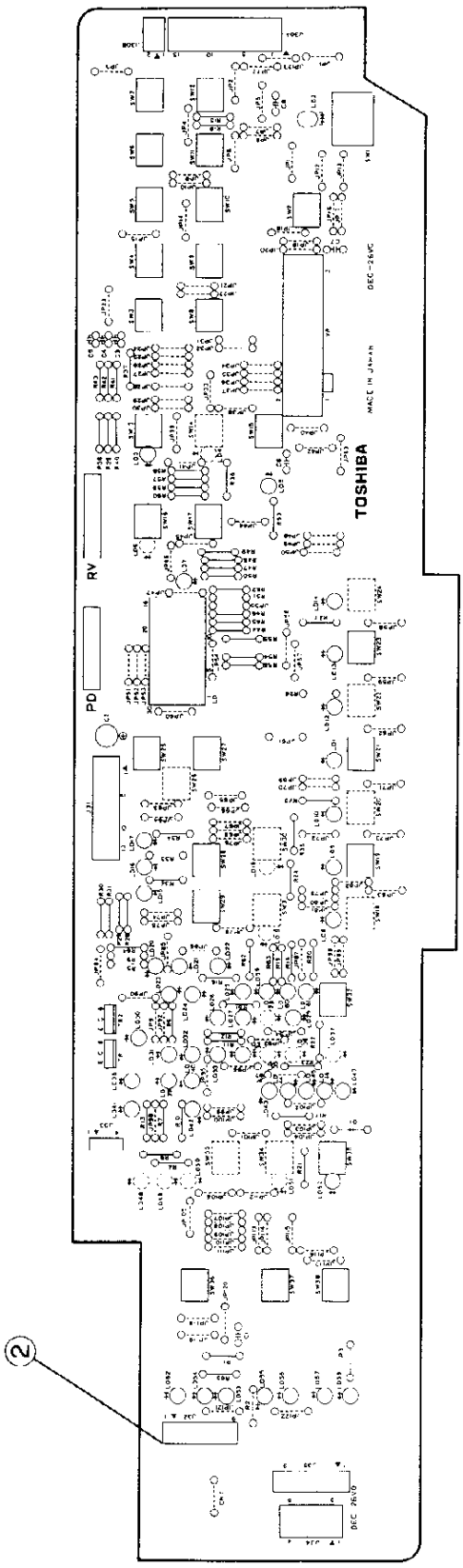
TOSHIBA
RV
PD
2

ITEM NO.	PARTS NO.	PARTS NAME	Q'TY / PAGE	Q'TY / PACK	SPE PRICE IN NONE	P	I	R	BSI NO.	TO	FROM	SERIAL NO.	REMARKS
0	4400 960370	PWA-F-PNL-176UE	1	1/SB									
0C	4400 960080	PWA-F-PNL-101UE	1	1/SB		A	D	J	F5B395				EUD
0D	4400 960080	PWA-F-PNL-101UE	1	1/SB		A	D	J	F5B395				GSD
0E	4400 960080	PWA-F-PNL-101UE	1	1/SB		A	D	J	F5B395				FRD
0F	4400 960080	PWA-F-PNL-101UE	1	1/SB		A	D	J	F5B395				SED
0G	4400 960080	PWA-F-PNL-101UE	1	1/SB		A	D	J	F5B395				UKD
0Z	4400 960370	PWA-F-PNL-176UE	1	1/SB		-	-	-	F5B395				OTHERS
1	4400 960380	PWB-F-PNL-176	1	N/A***									
1C	4400 744100	PWB-F-PNL-101	1	N/A***		A	-	J	F5B395				EUD
1D	4400 744100	PWB-F-PNL-101	1	N/A***		A	-	J	F5B395				GSD
1E	4400 744100	PWB-F-PNL-101	1	N/A***		A	-	J	F5B395				FRD
1F	4400 744100	PWB-F-PNL-101	1	N/A***		A	-	J	F5B395				SED
1G	4400 744100	PWB-F-PNL-101	1	N/A***		A	-	J	F5B395				UKD
1Z	4400 960380	PWB-F-PNL-176	1	N/A***		-	-	-	F5B395				OTHERS
2	4402 815700	WH-PWA-CHK-170	1	1/P									
11	4843 114181	IC-LC7932M	1	1/S									
12	4843 114181	IC-LC7932M	1	1/S									
13	4843 114181	IC-LC7932M	1	1/S									
21	3036 548970	Q-2SA1428-Y	1	5/P									
22	3036 548970	Q-2SA1428-Y	1	5/P									
31	3037 249660	1S1588(TP3)	1	5/P									
41	4400 375500	LED-LB-403MD2	1	1/S									
42	4843 194481	LED-SPR-39MVWF	1	5/P									
43	4843 194479	LED-SLR-34MG3F	1	5/P									
44	4843 194479	LED-SLR-34MG3F	1	5/P									
45	4843 194479	LED-SLR-34MG3F	1	5/P									
46	4843 194479	LED-SLR-34MG3F	1	5/P									
47	4843 194479	LED-SLR-34MG3F	1	5/P									
48	4843 194479	LED-SLR-34MG3F	1	5/P									
49	4843 194479	LED-SLR-34MG3F	1	5/P									
50	4843 194479	LED-SLR-34MG3F	1	5/P									
51	4843 194479	LED-SLR-34MG3F	1	5/P									
52	4843 194479	LED-SLR-34MG3F	1	5/P									
53	4843 194479	LED-SLR-34MG3F	1	5/P									
54	4843 194479	LED-SLR-34MG3F	1	5/P									
55	4843 194479	LED-SLR-34MG3F	1	5/P									
56	4843 194479	LED-SLR-34MG3F	1	5/P									
57	4843 194479	LED-SLR-34MG3F	1	5/P									
60	4843 194480	LED-SLR-34YY3F	1	5/P									
61	4843 194479	LED-SLR-34MG3F	1	5/P									
62	4843 194480	LED-SLR-34YY3F	1	5/P									
63	4843 194480	LED-SLR-34YY3F	1	5/P									
64	4843 194478	LED-SLR-34VR3F	1	5/P									
66	4843 194479	LED-SLR-34MG3F	1	5/P									
67C	4843 194479	LED-SLR-34MG3F	1	5/P		A	-	J	F5B395				EUD
67D	4843 194479	LED-SLR-34MG3F	1	5/P		A	-	J	F5B395				GSD
67E	4843 194479	LED-SLR-34MG3F	1	5/P		A	-	J	F5B395				FRD
67F	4843 194479	LED-SLR-34MG3F	1	5/P		A	-	J	F5B395				SED
67G	4843 194479	LED-SLR-34MG3F	1	5/P		A	-	J	F5B395				UKD
68C	4843 194479	LED-SLR-34MG3F	1	5/P		A	-	J	F5B395				EUD
68D	4843 194479	LED-SLR-34MG3F	1	5/P		A	-	J	F5B395				GSD
68E	4843 194479	LED-SLR-34MG3F	1	5/P		A	-	J	F5B395				FRD
68F	4843 194479	LED-SLR-34MG3F	1	5/P		A	-	J	F5B395				SED
68G	4843 194479	LED-SLR-34MG3F	1	5/P		A	-	J	F5B395				UKD
69	4843 194480	LED-SLR-34YY3F	1	5/P									
70	4843 194478	LED-SLR-34VR3F	1	5/P									
71	4843 194480	LED-SLR-34YY3F	1	5/P									
72	4843 194478	LED-SLR-34VR3F	1	5/P									
73	4843 194480	LED-SLR-34YY3F	1	5/P									
74C	4843 194480	LED-SLR-34YY3F	1	5/P		A	-	J	F5B395				EUD
74D	4843 194480	LED-SLR-34YY3F	1	5/P		A	-	J	F5B395				GSD
74E	4843 194480	LED-SLR-34YY3F	1	5/P		A	-	J	F5B395				FRD
74F	4843 194480	LED-SLR-34YY3F	1	5/P		A	-	J	F5B395				SED
74G	4843 194480	LED-SLR-34YY3F	1	5/P		A	-	J	F5B395				UKD
75C	4843 194480	LED-SLR-34YY3F	1	5/P		A	-	J	F5B395				EUD
75D	4843 194480	LED-SLR-34YY3F	1	5/P		A	-	J	F5B395				GSD
75E	4843 194480	LED-SLR-34YY3F	1	5/P		A	-	J	F5B395				FRD
75F	4843 194480	LED-SLR-34YY3F	1	5/P		A	-	J	F5B395				SED
75G	4843 194480	LED-SLR-34YY3F	1	5/P		A	-	J	F5B395				UKD
78	4843 194479	LED-SLR-34MG3F	1	5/P									
79	4843 194478	LED-SLR-34VR3F	1	5/P									

ITEM NO.	PARTS NO.	PARTS NAME	Q'TY / PAGE	Q'TY / PACK	SPE PRICE IN NONE	P	I	R	BSI NO.	TO	FROM	SERIAL NO.	REMARKS
80	4843 194478	LED-SLR-34VR3F	1	5/P									
81	4843 194479	LED-SLR-34MG3F	1	5/P									
82	4843 194478	LED-SLR-34VR3F	1	5/P									
83	4843 194479	LED-SLR-34MG3F	1	5/P									
84	4843 194479	LED-SLR-34MG3F	1	5/P									
85	4843 194479	LED-SLR-34MG3F	1	5/P									
86	4843 194479	LED-SLR-34MG3F	1	5/P									
87	4843 194479	LED-SLR-34MG3F	1	5/P									
88	4843 194479	LED-SLR-34MG3F	1	5/P									
89	4843 194479	LED-SLR-34MG3F	1	5/P									
90	4843 194479	LED-SLR-34MG3F	1	5/P									
91	4843 194479	LED-SLR-34MG3F	1	5/P									
92	4843 194479	LED-SLR-34MG3F	1	5/P									
93	4843 194479	LED-SLR-34MG3F	1	5/P									
94	4843 194479	LED-SLR-34MG3F	1	5/P									
95	4843 194479	LED-SLR-34MG3F	1	5/P									
96	4843 194479	LED-SLR-34MG3F	1	5/P									
97	4843 194479	LED-SLR-34MG3F	1	5/P									
98	4843 194479	LED-SLR-34MG3F	1	5/P									
99C	4843 194478	LED-SLR-34VR3F	1	5/P		A	-	J	F5B395				EUD
99D	4843 194478	LED-SLR-34VR3F	1	5/P		A	-	J	F5B395				GSD
99E	4843 194478	LED-SLR-34VR3F	1	5/P		A	-	J	F5B395				FRD
99F	4843 194478	LED-SLR-34VR3F	1	5/P		A	-	J	F5B395				SED
99G	4843 194478	LED-SLR-34VR3F	1	5/P		A	-	J	F5B395				UKD
102	4843 194479	LED-SLR-34MG3F	1	5/P									
121	4843 028557	RD1/4LA056HJ	1	10/P									
122	4843 028557	RD1/4LA056HJ	1	10/P									
123	4843 028557	RD1/4LA056HJ	1	10/P									
124	4843 028557	RD1/4LA056HJ	1	10/P									
125	4843 028559	RD1/4LA068HJ	1	10/P									
126	4843 028555	RD1/4LA047HJ	1	10/P									
127	4843 028559	RD1/4LA068HJ	1	10/P									
128	4843 028557	RD1/4LA056HJ	1	10/P									
129	4843 028557	RD1/4LA056HJ	1	10/P									
130	4843 028559	RD1/4LA068HJ	1	10/P									
131	4843 028555	RD1/4LA047HJ	1	10/P									
132	4843 028557	RD1/4LA056HJ	1	10/P									
133	4843 028557	RD1/4LA056HJ	1	10/P									
134	4843 028557	RD1/4LA056HJ	1	10/P									
135	4843 028555	RD1/4LA047HJ	1	10/P									
137	4843 028555	RD1/4LA047HJ	1	10/P									
138	4843 028557	RD1/4LA056HJ	1	10/P									
139	4843 028555	RD1/4LA047HJ	1	10/P									
141	4843 028557	RD1/4LA056HJ	1	10/P									
142	4843 028557	RD1/4LA056HJ	1	10/P									
143	4843 028557	RD1/4LA056HJ	1	10/P									
144	4843 028557	RD1/4LA056HJ	1	10/P									
145	4843 028557	RD1/4LA056HJ	1	10/P									
146	4843 028557	RD1/4LA056HJ	1	10/P									
147	4843 028557	RD1/4LA056HJ	1	10/P									
148	4843 028595	RD1/4LA2.2KJ	1	10/P									
149	4843 028570	RD1/4LA200HJ	1	10/P									
150	4843 028595	RD1/4LA2.2KJ	1	10/P									
151	4843 028570	RD1/4LA200HJ	1	10/P									
152	4843 028557	RD1/4LA056HJ	1	10/P									
153	4843 028557	RD1/4LA056HJ	1	10/P									
154	4843 028557	RD1/4LA056HJ	1	10/P									
156	4843 028557	RD1/4LA056HJ	1	10/P									
157	4843 028595	RD1/4LA2.2KJ	1	10/P									
158	4843 028579	RD1/4LA470HJ	1	10/P									
159	4843 028595	RD1/4LA2.2KJ	1	10/P									
160	4843 028595	RD1/4LA2.2KJ	1	10/P									
161	4843 028579	RD1/4LA470HJ	1	10/P									
162	4843 028579	RD1/4LA470HJ	1	10/P									
163	4843 028579	RD1/4LA470HJ	1	10/P									
164	4843 028557	RD1/4LA056HJ	1	10/P									
165	4843 028557	RD1/4LA056HJ	1	10/P									
166	4843 028557	RD1/4LA056HJ	1	10/P									
167	4843 028557	RD1/4LA056HJ	1	10/P									
168	4843 028557	RD1/4LA056HJ	1	10/P									
169	4843 028557	RD1/4LA056HJ	1	10/P									

ITEM NO.	PARTS NO.	PARTS NAME	Q'TY / PAGE	Q'TY / PACK	SPE PRICE IN NONE	P	I	R	BSI NO.	TO	FROM	SERIAL NO.	REMARKS
170	4843 028557	RD1/4LA056HJ	1	10/P									
171	4843 028557	RD1/4LA056HJ	1	10/P									
172	4843 028557	RD1/4LA056HJ	1	10/P									
173	4843 028557	RD1/4LA056HJ	1	10/P									
174	4843 028557	RD1/4LA056HJ	1	10/P									
175	4843 028557	RD1/4LA056HJ	1	10/P									
176	4843 028557	RD1/4LA056HJ	1	10/P									
177	4843 028557	RD1/4LA056HJ	1	10/P									
178	4843 028557	RD1/4LA056HJ	1	10/P									
179	4843 028557	RD1/4LA056HJ	1	10/P									
180	4843 028557	RD1/4LA056HJ	1	10/P									
181	4843 028559	RD1/4LA068HJ	1	10/P									
182C	4843 028557	RD1/4LA056HJ	1	10/P		A	-	J	F5B395				EUD
182D	4843 028557	RD1/4LA056HJ	1	10/P		A	-	J	F5B395				GSD
182E	4843 028557	RD1/4LA056HJ	1	10/P		A	-	J	F5B395				FRD
182F	4843 028557	RD1/4LA056HJ	1	10/P		A	-	J	F5B395				SED
182G	4843 028557	RD1/4LA056HJ	1	10/P		A	-	J	F5B395				UKD
183C	4843 028555	RD1/4LA047HJ	1	10/P		A	-	J	F5B395				EUD
183D	4843 028555	RD1/4LA047HJ	1	10/P		A	-	J	F5B395				GSD
183E	4843 028555	RD1/4LA047HJ	1	10/P		A	-	J	F5B395				FRD
183F	4843 028555	RD1/4LA047HJ	1	10/P		A	-	J	F5B395				SED
183G	4843 028555	RD1/4LA047HJ	1	10/P		A	-	J	F5B395				UKD
185	4843 028557	RD1/4LA056HJ	1	10/P									
201	4843 412279	CKM-ECFZ104ZF	1	10/P									
202	4843 412281	CE-04C1C100M	1	10/P									
203	4843 412280	CKM-ECCZ1H330JG	1	10/P									
204	4843 412280	CKM-ECCZ1H330JG	1	10/P									
205	4843 412280	CKM-ECCZ1H330JG	1	10/P									
206	4843 412279	CKM-ECFZ1E104ZF	1	10/P									
207	4843 412279	CKM-ECFZ1E104ZF	1	10/P									
208	4843 412279	CKM-ECFZ1E104ZF	1	10/P									
221	4843 073037	RV-SS302N00A10K	1	1/D									
231	4843 231491	SP-B3F-4000	1	5/S									
232	4843 231490	SP-B3F-1000	1	5/S									
233	4843 231490	SP-B3F-1000	1	5/S									
234	4843 231490	SP-B3F-1000	1	5/S									
235	4843 231490	SP-B3F-1000	1	5/S									
236	4843 231490	SP-B3F-1000	1	5/S									
237	4843 231490	SP-B3F-1000	1	5/S									
238	4843 231490	SP-B3F-1000	1	5/S									
239	4843 231490	SP-B3F-1000	1	5/S									
240	4843 231490	SP-B3F-1000	1	5/S									
241	4843 231490	SP-B3F-1000	1	5/S									
242	4843 231490	SP-B3F-1000	1	5/S									
243	4843 231490	SP-B3F-1000	1	5/S									
244	4843 231490	SP-B3F-1000	1	5/S									
245	4843 231490	SP-B3F-1000	1	5/S									
246	4843 231490	SP-B3F-1000	1	5/S									
247	4843 231490	SP-B3F-1000	1	5/S									
249	4843 231490	SP-B3F-1000	1	5/S									
251	4843 231490	SP-B3F-1000	1	5/S									
253	4843 231490	SP-B3F-1000	1	5/S									
255	4843 231490	SP-B3F-1000	1	5/S									
256	4843 231490	SP-B3F-1000	1	5/S									
257	4843 231490	SP-B3F-1000	1	5/S									
258	4843 231490	SP-B3F-1000	1	5/S									
259	4843 231490	SP-B3F-1000	1	5/S									
262	4843 231490	SP-B3F-1000	1	5/S									
263	4843 231490	SP-B3F-1000	1	5/S									
264	4843 231490	SP-B3F-1000	1	5/S									
265	4843 231490	SP-B3F-1000	1	5/S									
266	4843 231490	SP-B3F-1000	1	5/S									
267	4843 231490	SP-B3F-1000	1	5/S									
268	4843 231490	SP-B3F-1000	1	5/S									
281	4843 307363	J-173979-13	1	5/P									
283	4843 304962	J-53025-0410	1	5/P									
284	4843 302979	J-5566-NA-8	1	5/P									
285	4843 304378	J-173979-15	1	5/P									
286	4843 304367	J-173979-02	1	5/P									
300	4400 732600	JUMPER-WIRE-170	1	10/P									
312	4407 782660	JUMPER-WIRE-10	76	10/P									

ITEM NO.	PARTS NO.	PARTS NAME	Q'TY / PAGE	Q'TY / PACK	SPE PRICE IN NONE	P	I	R	BSI NO.	TO	FROM	SERIAL NO.	REMARKS
313	4407 782660	JUMPER-WIRE-10	50	10/P									
314	4407 782660	JUMPER-WIRE-10	1	10/P									
315	4407 782660	JUMPER-WIRE-10	2	10/P									
316	4407 782660	JUMPER-WIRE-10	1	10/P									
317	4407 782660	JUMPER-WIRE-10	1	10/P									
318	4407 782660	JUMPER-WIRE-10	2	10/P									
319	4407 782660	JUMPER-WIRE-10	4	10/P									
320	4407 782660	JUMPER-WIRE-10	3	10/P									

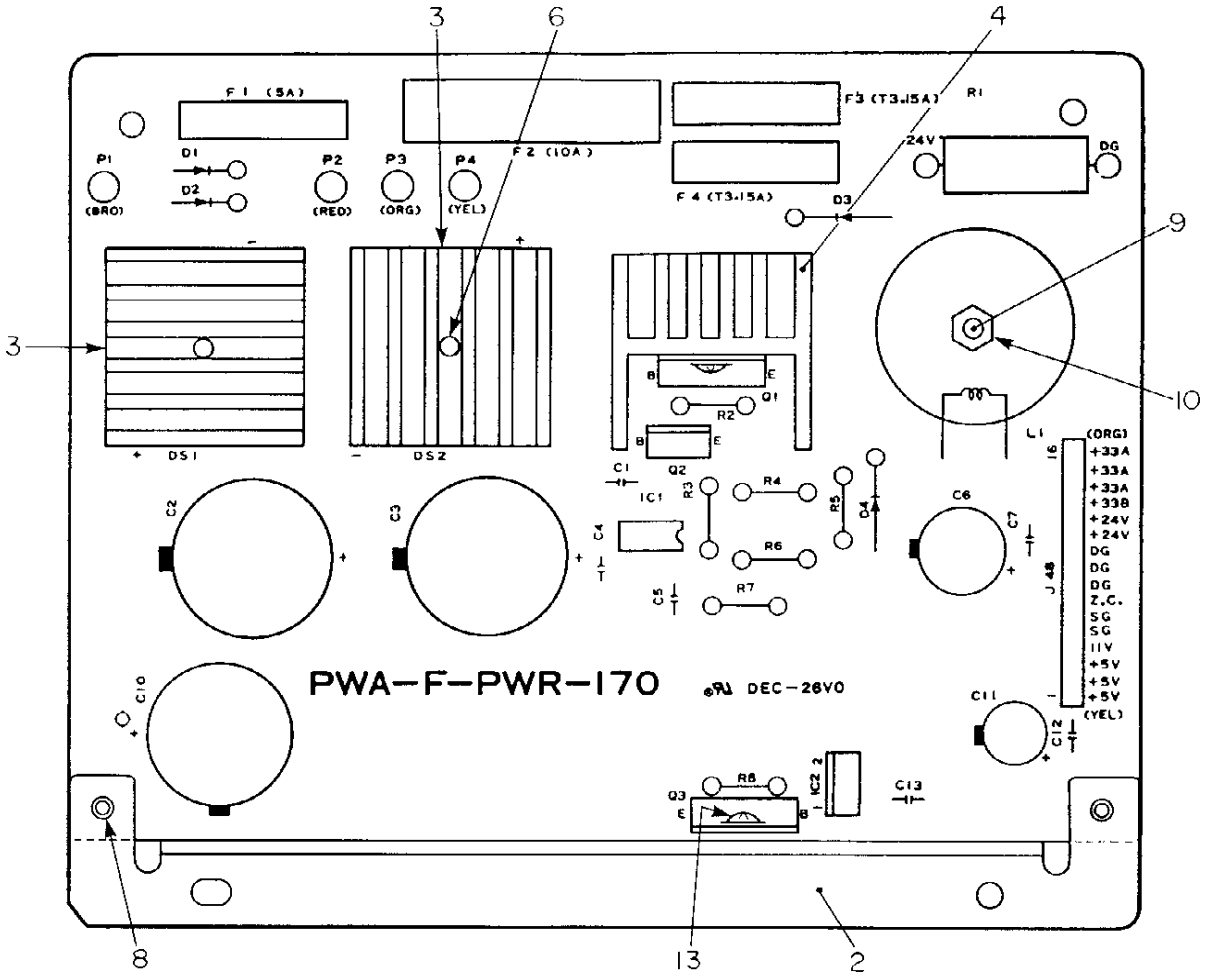
PWA-F-PWR-170
DEC-26V0
F1 (5A)
F2 (10A)
F3 (T3.15A)
F4 (T3.15A)
P1
P2
P3
P4
D1
D2
D3
R1
24V
DG
DS1
DS2
Q1
Q2
IC1
R2
R3
R4
R5
R6
R7
R8
C1
C2
C3
C4
C5
C6
C7
C10
C11
C12
C13
L1
(ORG)
+33A
+33A
+33A
+33B
+24V
+24V
DG
DG
DG
Z.C.
SG
SG
11V
+5V
+5V
+5V
(YEL)
3
6
4
9
10
8
13
2

ITEM NO.	PARTS NO.	PARTS NAME	Q'TY / PAGE	Q'TY / PACK	SPE PRICE IN NONE	P	I	R	BSI NO.	TO	FROM	SERIAL NO.	REMARKS
0	4402 817030	PWA-F-PWR-170	1	1/SB									
1	4402 817040	PWB-F-PWR-170	1	N/A***						001 1			
1 1	4400 962350	PWB-F-PWR-170	1	N/A***		C	-	E	F4J295		001		
2	4402 816580	HS-PWR-170	1	1/P									
3	4407 768700	HT-SINK-3030ST	2	1/P									
4	4407 966750	HT-SINK-3030-SP	1	1/P									
5	7640 301051	ZPAN30*10MSZN3A	1	50/P									
6	7040 301811	PAN30*18MSZN3AI	2	50/P									
7	7640 301251	ZPAN30*12MSZN3A	1	50/P									
8	7640 300851	ZPAN30*08MSZN3A	2	50/P									
9	7640 302851	ZPAN30*28MSZN3A	1	50/P									
10	7360 300011	6/0NUT30MSZN3A	1	50/P									
11	4407 305760	IC-SN72305AP	1	5/S									
12	3040 376602	IC-TA78DL05AP	1	5/S									
13	7640 301051	ZPAN30*10MSZN3A	1	50/P									
31	3036 331905	Q-2SC2555,BS	1	5/S									
32	4402 817060	Q-2SB1186A	1	5/S									
33	3036 625159	Q-2SB686-O(BS)	1	5/S									
51	3037 249601	D-1S1588	1	5/P									
52	3037 249601	D-1S1588	1	5/P									
53	4843 101133	D-1SR35-100A	1	10/P									
54	3037 580600	D-3BH61	1	5/P						054 1			
54 1	3037 580604	D-3BH61(Z)	1	5/P		C	E	H	F5A381		054		
71	3037 671045	D-6B4B41	1	1/P									
72	3037 671124	D-15B4B41	1	1/P									
91	4407 942000	CZ-308F104Z50	1	10/P									
92	4843 411031	CE-04C1H682M5	1	1/D									
93	4843 411031	CE-04C1H682M5	1	1/D									
94	4843 407334	CM9210H101KZ	1	10/P									
95	4407 942000	CZ-308F104Z50	1	10/P									
96	4400 815840	CE-ECRHT1V331M	1	5/D									
97	4407 942000	CZ-308F104Z50	1	10/P									
100	4843 411721	CE-04C1E682M	1	5/P									
101	4400 815830	CE-ECRHT1C331M	1	5/D									
102	4407 942000	CZ-308F104Z50	1	10/P									
103	4843 410842	CKM-92E1E105ZY	1	10/P									
121	4407 305770	RESISTER-330H-5	1	10/P									
122	4843 028557	RD1/4LA056HJ	1	10/P									
123	4407 965980	RS1/2LT022HJ	1	10/P									
124	4843 028659	RD1/4LA001MJ	1	10/P									
125	4843 028595	RD1/4LA2.2KJ	1	10/P									
126	4843 028613	RD1/4LA012KJ	1	10/P									
127	4843 028589	RD1/4LA1.2KJ	1	10/P									
128	4843 028561	RD1/4LA082HJ	1	10/P									
151	4407 305840	COIL-800MH	1	1/D									
161	4402 815760	WH-PWA-TR-170	1	1/P									
171	4402 817160	FUSE-5A	1	5/P									
172	4402 817190	FUSE-10A	1	5/P						172 1			
172 1	4402 817090	FUSE-10A	1	5/P		E	-	J	F95K530		172		
173	4402 817180	FUSE-3.15A	1	5/P									
174	4402 817180	FUSE-3.15A	1	5/P									
181	4402 815720	WH-PWA-PWR-170	1	1/P									
191	4407 966760	FUSE/CLIP-MINI	6	5/P									F1,3,4
192	4843 510601	FH-SN-5051	2	1/P									F2

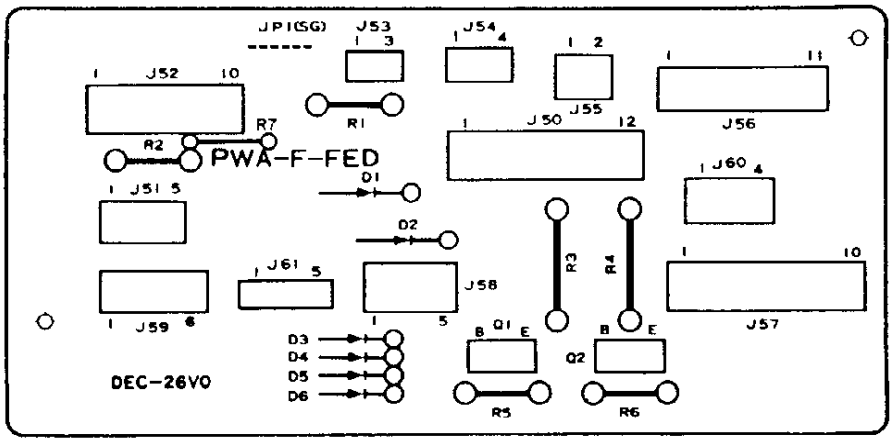
JP1(SG)
J53
J54
J52
J55
J56
R1
R7
R2
PWA-F-FED
J50
J60
D1
J51
D2
R3
R4
J61
J58
J57
J59
D3
D4
D5
D6
Q1
Q2
R5
R6
DEC-26V0

ITEM NO.	PARTS NO.	PARTS NAME	Q'TY / PAGE	Q'TY / PACK	SPE PRICE IN NONE	P	I	R	BSI NO.	TO	FROM	SERIAL NO.	REMARKS
0	4400 960030	PWA-F-FED-176	1	1/C									
1	4400 960040	PWB-F-FED-176	1	N/A***									
11	3036 548970	Q-2SA1428-Y	1	5/P									
21	3037 568250	D-1S1834	1	5/P									
31	4843 028579	RD1/4LA470HJ	1	10/P									
32	4843 028579	RD1/4LA470HJ	1	10/P									
33	4843 070443	RS1/1PT001KJ	1	10/P									
34	4843 028579	RD1/4LA470HJ	1	10/P									
50	4843 308050	J-53401-1410	1	5/P									
51	4843 302621	J-DF3A-5P-2DSA	1	5/P									
52	4843 302624	J-DF3A-8P-2DSA	1	5/P									
53	4843 306497	J-53253-0310	1	5/P									
54	4400 960620	WH-RGT1-176	1	1/P									
55	4400 960610	WH-RGT0-176	1	1/P									
56	4843 302627	J-DF3A-11P-2DSA	1	5/P									
57	4843 304937	J-53052-1110	1	5/P									
58	4843 304944	J-53052-0410	1	5/P									
60	4843 304861	J-5483-05AX	1	5/P									
62	4843 306191	J-0-175487-3	1	5/P									

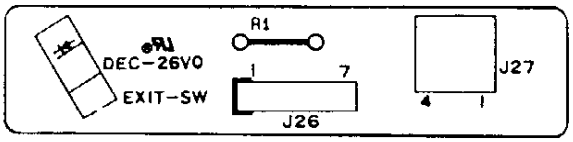
A1
DEC-26V0
EXIT-SW
1
7
J26
J27
4
1

ITEM NO.	PARTS NO.	PARTS NAME	Q'TY / PAGE	Q'TY / PACK	SPE PRICE IN NONE	P	I	R	BSI NO.	TO	FROM	SERIAL NO.	REMARKS
0	4402 815040	PWA-F-HTR-170	1	1/C									
1	4402 815240	PWB-F-HTR-170	1	N/A***									
11	4843 171249	SCO-GP1S58	1	1/S									
21	4843 028579	RD1/4LA470HJ	1	10/P									
36	4402 815710	WH-PWA-HTR-170	1	1/P									
37	4843 301281	J-5046-04A	1	5/P									

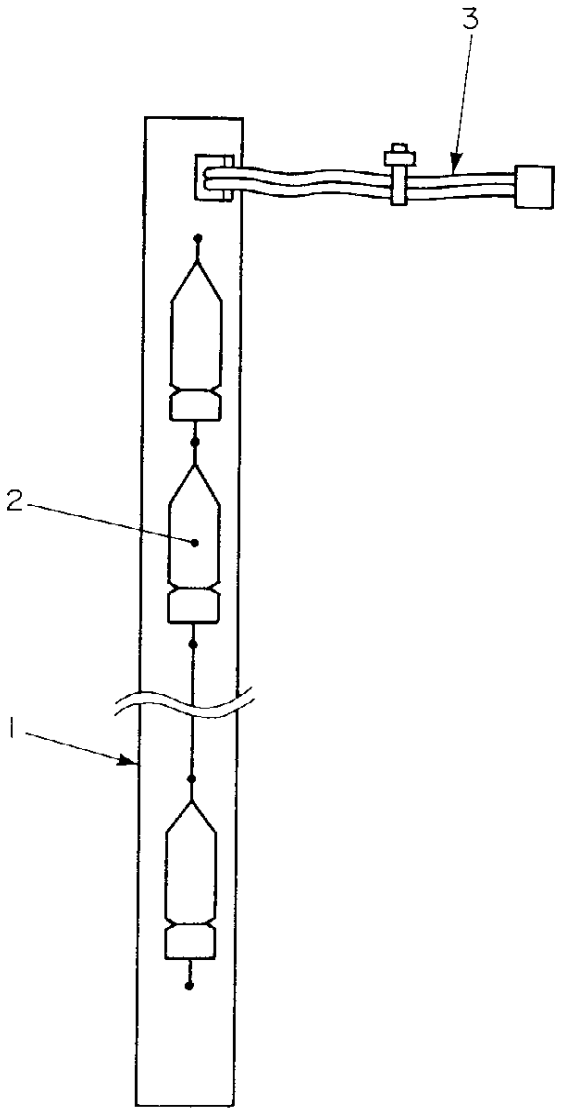
3
2
1

ITEM NO.	PARTS NO.	PARTS NAME	Q'TY / PAGE	Q'TY / PACK	SPE PRICE IN NONE	P	I	R	BSI NO.	TO	FROM	SERIAL NO.	REMARKS
0	4400 960100	PWA-F-ERS-176	1	1/C									
1	4400 960110	PWB-F-ERS-176	1	N/A***									
2	4407 406520	LAMP-12V-150MA	9	5/C									
3	4402 815750	WH-PWA-ERS-170	1	1/P									

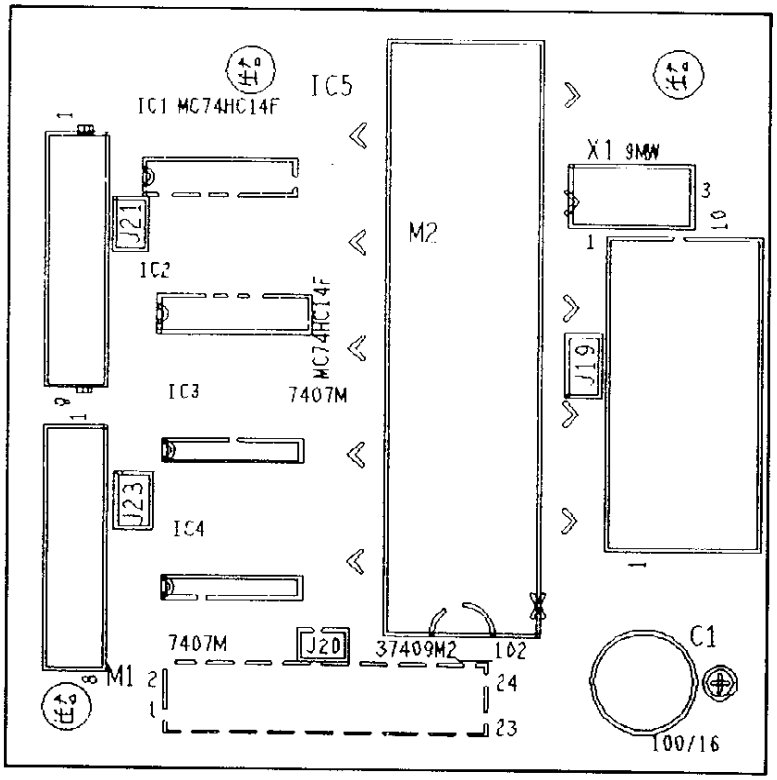
IC1 MC74HC14F
IC5
X1 9MHz
M2
J21
IC2
MC74HC14F
IC3
7407M
J19
J23
IC4
7407M
J20
37409M2
102
C1
100/16
M1
24
23

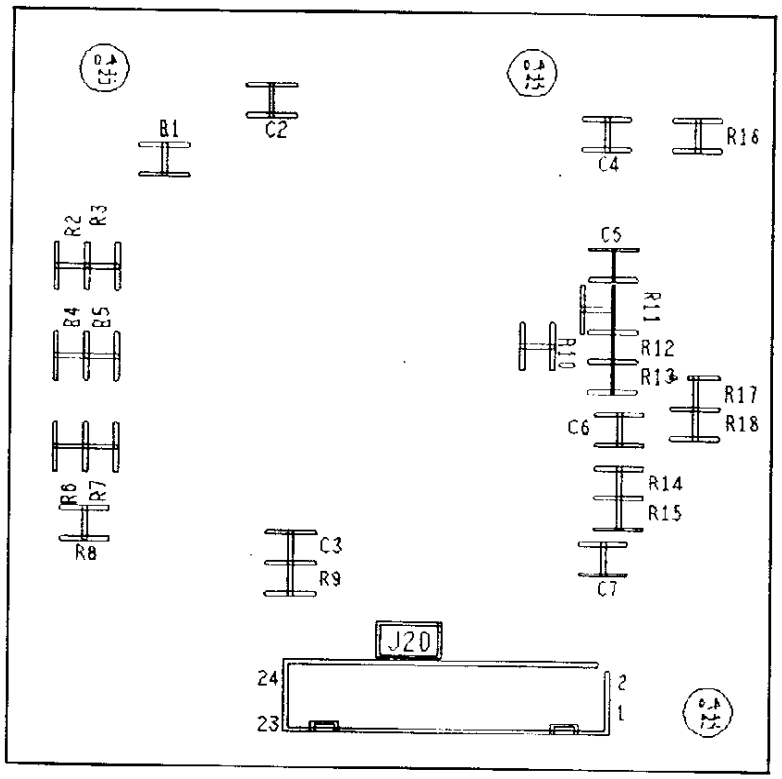
B1
C2
C4
R16
R2
R3
B4
B5
C5
R11
R10
R12
R13
R17
R18
C6
R14
R15
R6
R7
R8
C3
R9
C7
J20
24
23

ITEM NO.	PARTS NO.	PARTS NAME	Q'TY / PAGE	Q'TY / PACK	SPE PRICE IN NONE	P	I	R	BSI NO.	TO	FROM	SERIAL NO.	REMARKS
0	4400 960300	PWA-F-IPC-176	1	1/SB									
1	4400 960310	PWB-F-IPC-176	1	N/A***									
2	4843 113612	IC-MC74HC14FL	1	5/P									
3	4843 113612	IC-MC74HC14FL	1	5/P									
4	4843 112762	IC-DM7407M	1	5/S									
5	4843 112762	IC-DM7407M	1	5/S									
6	4402 221500	IC-M37409M2-102	1	1/S									
11	4843 411173	CE04W1C101M-F	1	10/P									
12	4843 410862	CTP-K1F1E104ZT	1	10/P									
13	4843 410725	CTP-M1B1H222KT	1	10/P									
14	4843 410862	CTP-K1F1E104ZT	1	10/P									
15	4843 410862	CTP-K1F1E104ZT	1	10/P									
16	4843 410862	CTP-K1F1E104ZT	1	10/P									
17	4843 410862	CTP-K1F1E104ZT	1	10/P									
31	4843 072069	RTP-2B2A105JDT	1	10/P									
32	4843 072167	RTP-2B2A472JDT	1	10/P									
33	4843 072175	RTP-2B2A223JDT	1	10/P									
34	4843 072167	RTP-2B2A472JDT	1	10/P									
35	4843 072175	RTP-2B2A223JDT	1	10/P									
36	4843 072167	RTP-2B2A472JDT	1	10/P									
37	4843 072175	RTP-2B2A223JDT	1	10/P									
38	4843 072167	RTP-2B2A472JDT	1	10/P									
39	4843 072167	RTP-2B2A472JDT	1	10/P									
40	4843 072175	RTP-2B2A223JDT	1	10/P									
41	4843 072175	RTP-2B2A223JDT	1	10/P									
42	4843 072167	RTP-2B2A472JDT	1	10/P									
43	4843 072167	RTP-2B2A472JDT	1	10/P									
44	4843 072167	RTP-2B2A472JDT	1	10/P									
45	4843 072167	RTP-2B2A472JDT	1	10/P									
46	4843 072167	RTP-2B2A472JDT	1	10/P									
47	4843 072175	RTP-2B2A223JDT	1	10/P									
48	4843 072167	RTP-2B2A472JDT	1	10/P									
61	4843 250420	X-CST9.00MTW	1	5/P									
79	4843 301016	J-5046-10A	1	5/P									
80	4843 305513	J-DF11-24DP2DSA	1	5/P									
81	4402 815780	WH-PWA-IPC-170U	1	1/P									
83	4843 308044	J-53401-0810	1	5/P									

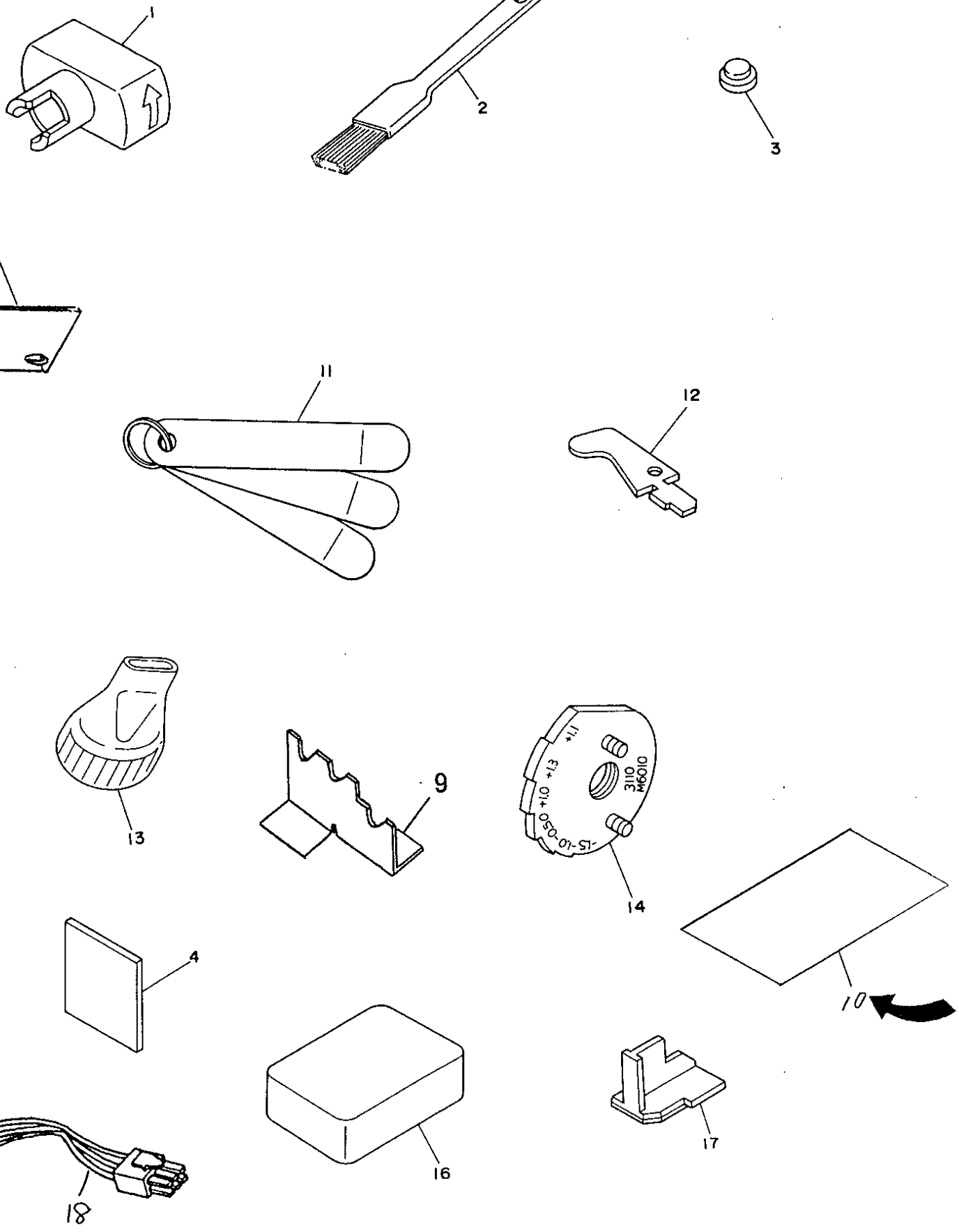
1
2
3
19
11
12
13
9
+1.1
+1.3
+1.0
3110
M6010
14
10
4
16
17
18

ITEM NO.	PARTS NO.	PARTS NAME	Q'TY / PAGE	Q'TY / PACK	SPE PRICE IN NONE	P	I	R	BSI NO.	TO	FROM	SERIAL NO.	REMARKS
1	4402 807600	DEV-INSET-170	1	1/P									
2	4400 545330	BRUSH-518	1	1/P									
3	4407 904280	SPACER-FOOT	2	1/P									
4	4402 800810	SPACER-RUBBER	4	1/P									EU,GS,F,UK
9	4402 069310	JIG-D/S-GAP	1	1/C		A	-	D	F5A391				
10Z	4400 922820	SHEET-INST-SB	1	1/KP		A	-	J	F95J507			CG5/QG5	MJD
11	4402 819200	K-JIG-DC-SL-17	1	1/P									
12	4407 915730	JIG-SW-F-COV	1	1/P									
13	4407 914000	NOZZLE-BOTTLE	1	1/P									
14	4407 673540	ASM-GAP-GIG-60	1	1/P									
15L	4402 819110	SV-1710-SEC-V	1	1/D						015L1			
15L1	4402 819110	SV-1710-SEC-V	0	1/D		E	-	J	F4D135		015L		
16	4408 062070	CLEANER-TPH-B	1	1/P									
17	4402 819300	JIG-DEV-LID-170	1	1/P									
18	4400 961690	WH-AC240	1	1/P		A	B	J	F4D132				SERVICE PART
19	4400 915690	PLATE-BLIND	1	1/P		A	B	J	F4D130				SERVICE PART

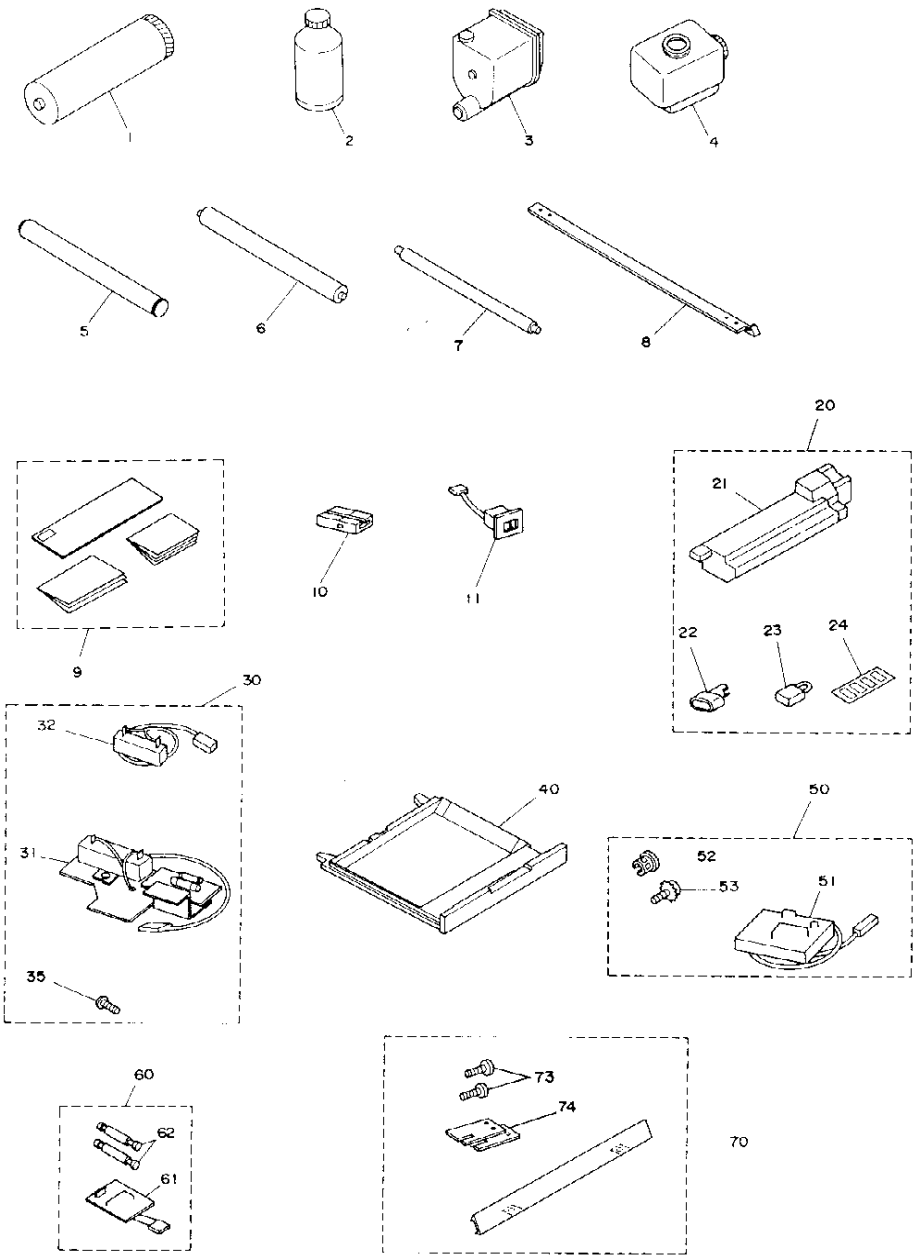
1
2
3
4
5
6
7
8
9
10
11
20
21
22
23
24
30
31
32
35
40
50
51
52
53
60
61
62
70
73
74

TOSHIBA

ITEM NO.	PARTS NO.	PARTS NAME	Q'TY / PAGE	Q'TY / PACK	SPE PRICE IN NONE	P	I	R	BSI NO.	TO	FROM	SERIAL NO.	REMARKS
1	6608 4225	OD-1710	1	SUPPLY									
2	6608 4474	D-1710	1	SUPPLY									10 QTY/SET
2A	6608 4230	D-1710-R	1	SUPPLY									4 QTY/SET
2B	6608 4231	D-1710-BL	1	SUPPLY									4 QTY/SET
3A	6608 4472	T-1710	1	SUPPLY									MADE IN JPN
3B	6608 4476	T-1710	1	SUPPLY									MADE IN USA
3C	6606 2005	PS-ZT2050E	1	SUPPLY									MADE IN FR.
3D	6608 4227	T-1710-R	1	SUPPLY									
3E	6608 4228	T-1710-BL	1	SUPPLY									
4A	6608 4340	TB-1710BA	1	SUPPLY									EUR
4B	6608 4235	TB-1710BA	1	SUPPLY									OTHERS
5	6608 4663	PS-HR2050U	1	SUPPLY						005 1			
5 1	4409 835020	HR-2050-U	1	1/S		C	E	J	F5B401	005 2	005		
5 2	4409 848760	HR-2050-UN	1	1/S		C	B	D	F95K535		005 1	CK5/QK5	
6	6608 4178	HR-2510-L	1	SUPPLY						006 1			
6 1	4409 817900	HR-2510-L	1	1/S		C	E	J	F5B401	006 2	006		
6 2	4409 840810	HR-2510-L	1	1/S		C	E	D	F95D433		006 1	CD5/QD5	
7	6608 4181	SR-2510H	1	SUPPLY						007 1			
7 1	6608 4321	SR-3210H	1	SUPPLY		E	-	J	F4B100	007 2	007		
7 2	4409 827910	SR-3210H	1	1/S		C	E	J	F5B401		007 1		
8	6608 4234	BL-1710D	1	SUPPLY						008 1			
8 1	4409 820340	BL-1710D	1	10/P		C	E	J	F5B401		008		
9A	6608 4632	KM-2050-EN	1	SUPPLY									ENGLISH
9B	6608 4633	KM-2050-GE	1	SUPPLY									GERMAN
9C	6608 4634	KM-2050-FR	1	SUPPLY									FRENCH
9D	6608 4635	KM-2050-SP	1	SUPPLY									SPANISH
9E	6608 4636	KM-2050-IT	1	SUPPLY									ITALIAN
10	6600 2050	MU-8	1	SUPPLY									
11	6600 2051	MU-10	1	SUPPLY									
20	6608 4219	MK-1710	1	SUPPLY									
21	4402 806040	ASM-DEVELOPER-P	1	N/A***									
22	4402 807600	DEV-INSET-170	1	1/P									
23	4400 357380	CONECT-BLUE	1	1/P									
24	4400 876230	LBL-COLOR-3	1	1/KP									
30A	6608 4237	MF-1710U	1	SUPPLY									115V
30B	6608 4238	MF-1710E	1	SUPPLY									220V
30C	6608 4239	MF-1710A	1	SUPPLY									240V
31A	4402 809370	ASM-DHT-L-170UC	1	N/A***									115V
31B	4402 809380	ASM-DHT-L-170EU	1	N/A***									220V
31C	4402 809390	ASM-DHT-L-170AU	1	N/A***									240V
32A	4402 816070	ASM-D-HTR-U-115	1	1/D									115V
32B	4402 816080	ASM-D-HTR-U-220	1	1/D									220V
32C	4402 816090	ASM-D-HTR-U-240	1	1/D									240V
35	4842 040690	TZPAN3006MSZN3L	1	50/P									
40A	6608 4630	KC-2050L-F	1	SUPPLY									USA SIZE
40B	6608 4631	KC-2050A-F	1	SUPPLY									EUR SIZE
50	6608 4262	MV-1710	1	SUPPLY									
51	4402 816420	PS-HVT-GB-170	1	1/C									
52	4843 390804	CLP/W-OCB-500	1	5/P									
53	4842 040122	THPAN4016MSZN3L	1	50/P									
60A	6608 4664	KL-2050U	1	SUPPLY									100V SERIES
60B	6608 4665	KL-2050E	1	SUPPLY									200V SERIES
61	4400 960300	PWA-F-IPC-176	1	1/SB									
62	4843 391274	PWZ-MPS-5	2	5/P									
70	6608 4265	KN-1710S	1	SUPPLY									
73	7040 400811	PAN40*08MSZN3AI	2	50/P									
74	4402 817130	STOPPER-SORTER	2	SUPPLY									