TOSHIBA

SERVICE HANDBOOK 2060/2860/70

PLAIN PAPER COPIER

AUTOMATIC DUPLEXING UNIT MD-5002

Click the Page Only button to close the overview area of the window.

Click the Bookmarks and Page button to open the Contents and display bookmarks created for the document. Click a bookmark's name to go to the Page marked by that bookmark.

Click the Thumbnails and Page button to open the overview area and display thumbnail images of each document page. Click a thumbnail to go to the page marked by that thumbnail.

Copyright TOSHIBA CORPORATION 1995
ALL RIGHTS RESERVED

GENERAL PRECAUTIONS REGARDING THE INSTALLATION AND SERVICE FOR THE COPIER 2060, 2860/70 AND THE AUTOMATIC DUPLEXING UNIT MD-5002

1. Transportation/Installation

- When transporting/installing the copier, use two persons and be sure to use the positions as indicated below.

  The copier is fairly heavy and weighs approximately 73 kg (161 lb), therefore pay full attention when handling it. (2870: 84 kg)

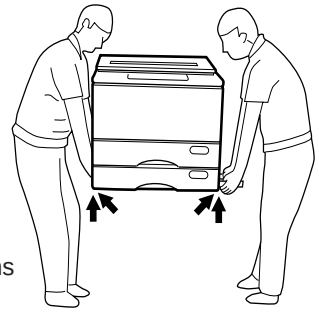

4 portions

2. Installation

- Be sure to use a dedicated outlet with AC 115V/15A (220V, 240V/10A) or more for its power source.
- The copier must be grounded for safety.

  Never ground it to a gas pipe or a water pipe.
- Select a suitable place for installation.

  Avoid excessive heat, high humidity, dust, vibration and direct sunlight.
- Also provide proper ventilation as the copier emits a slight amount of ozone.
- To insure adequate working space for the copying operation, keep a minimum clearance of 80 cm (32”) on the left, 80 cm (32”) on the right and 10 cm (4”) in the rear.

3. Service of Machines

- Basically, be sure to turn the main switch off and unplug the power cord during service.
- Be sure not to touch high-temperature sections such as the exposure lamp, the fuser unit, the damp heater and their periphery.
- Be sure not to touch high-voltage sections such as the chargers and the high-voltage transformer.
- Be sure not to touch rotating/operating sections such as gears, belts, pulleys, etc.
- When servicing the machines with the main switch turned on, be sure not to touch live sections such as the lamp terminal, etc.
- Use suitable measuring instruments and tools.

4. **Main Service Parts for Safety**
   - The breaker, door switch, fuse, thermostat, thermofuse, thermistor, etc. are particularly important for safety. Be sure to handle/install them properly.

5. **Notice Labels**
   - Be sure to check the rating plate and the cautionary labels such as “Unplug the power cord during service”, “Hot area” etc. to see if there is any dirt on their surface or if they are properly stuck to the copier during servicing.

6. **Disposition of Consumable Parts/Packing Materials**
   - Regarding the recovery and disposal of the copier, supplies, consumable parts and packing materials, it is recommended to follow the relevant local regulations or rules.

7. **When parts are disassembled, reassembly is basically the reverse of disassembly unless otherwise noted in this manual or other related documents. Be careful not to reassemble small parts such as screws, washers, pins, E-rings, toothed washers in the wrong places.**

8. **Basically, the machine should not be operated with any parts removed or disassembled.**

9. **Precautions Against Static Electricity**
   - The PC board must be stored in an anti-electrostatic bag and handled carefully using a wristband, because the ICs on it may become damaged due to static electricity.

1. ADJUSTMENT ITEMS

1.1 Error Codes

When either the CLEAR PAPER ( ) or CALL SERVICE ( ) symbol appears, press the CLEAR/STOP and "8" keys simultaneously and the corresponding error code will be displayed. To clear the error code, turn off the machine.

Group	Error code	Machine status
Transporting jam at the copier	E01	Paper jam inside the copier
	E02	Paper jam near the fuser unit
	E03	Paper remaining inside the machine when power on
	E04	The front cover is opened during copying
	E05	Paper jam near the aligning roller
	E08	Paper jam at the stacking area inside the ADU
Paper feeding jam	E11	Paper feeding jam at the ADU
	E12	Manual feeding jam
	E13	Cassette feeding or transporting jam (1st cassette)
	E14	Cassette feeding or transporting jam (2nd cassette)
	E15	Cassette feeding or transporting jam (3rd cassette)
	E16	Cassette feeding or transporting jam (4th cassette)
	E17	Cassette feeding or transporting jam (5th cassette)
	E19	Paper feeding or transporting jam at the LCF
Paper transporting jam at the feeding units	E21	Paper jam at the transport route 1 (LCF)
	E22	Paper jam at the transport route 2 (Copier)
	E23	Paper jam at the transport route 3 (Aligning)
	E25	Paper jam at the transport route 4 (PFP)
Original transporting jam at the ADF	E71	Original feeding jam
	E72	Original transporting jam
	E73	Original exiting jam
	E75	2nd original feeding jam (2 in 1)
Paper transporting jam at the sorter	E81	Copy paper arrival time is over
	E82	Copy paper staying time is over
	E83	Sorter early arrival jam
	E84	Paper remaining inside the sorter when power on
	E85	Joint open jam while copying
	E88	Staple jam
Service call by the drive system	C01	Abnormal operation of the copier main motor
	C04	Abnormal operation of the PFP main motor
	C05	Abnormal operation of the ADU main motor

Group	Error code	Machine status
Service call by the paper feeding system	C11	Abnormal operation of the ADU side motor
	C12	Abnormal operation of the ADU end motor
	C13	Abnormal operation of the upper cassette tray
	C14	Abnormal operation of the lower cassette tray
	C15	Abnormal operation of the PFP upper cassette tray
	C16	Abnormal operation of the PFP middle cassette tray
	C17	Abnormal operation of the PFP lower cassette tray
	C18	Abnormal operation of the LCF tray
Service call by the optical system	C21	Carriage initialize error
	C22	Lens initialize error
	C23	Mirror initialize error
	C26	Exposure lamp burn out detected
Service call by the process system	C33	Easy set-up is failed
	C35	Developer material exist at the transfer/separation adjustment
Fuser unit area	C41	Abnormal thermistor or heater disconnection when power is on
	C43	Warming up mode after disconnection judgement, or abnormal thermistor after ready
	C44	Warming up mode after disconnection judgement, or heater disconnection after ready
	C45	Sub thermistor is open-circuited
Service call by communication	C54	Sorter — Main CPU communication error
	C55	ADF — Main CPU communication error
	C56	PFC — Main CPU communication error
Service call by ADF	C72	Poor adjustment by the aligning sensor detected
	C73	EEROM poor initialized
	C74	Poor adjustment by the exit/reserve sensor detected
Service call by sorter	C81	Paper transport motor abnormal
	C82	Bin shifting motor abnormal
	C83	Upper limit error
	C84	Lower limit error
	C85	Home sensor error
	C86	Staple guide bar drive motor abnormal
	C87	Staple drive motor abnormal
	C88	Copy removal sensor error
Service call by the other	C93	ADF original stop signal not received

Note: If there is a possibility of the heater malfunctioning as a consequence of the short-circuiting of the triac, the microcomputer will check for abnormal temperature and send out error code “C44” and turn off the main switch of the copier.

1.2 Self-Diagnosis Modes

Mode	Input code	Definition	Cleaning method	Display after selection
All-LEDs-lit	"01"	All LEDs on the control panel are lit.	C/S	——
Aging mode	"02"	Aging (RADF does not operate)	"09"	AGING 100%
Test mode	"03"	Motor test and input/output check	"09"	TEST MODE 100%
Test mode	"04"	Motor test and input/output check	"09"	TEST MODE 100%
Adjustment mode	"05"	Adjustment of items	"09"	TEST MODE 100%
Forced ready mode	"06"	Forced entry of ready mode	–	——
Aging mode	"07"	Aging (includes RADF)	"09"	AGING 100%
Setting mode	"08"	System switch over and setting of each priority mode, PM counter, etc.	"09"	TEST MODE 100%

Note: To access the desired diagnostic mode, turn on the power switch while pressing the appropriate keys.

<Procedure>

• All-LEDs-lit mode (01):



• Aging mode (02 or 07):

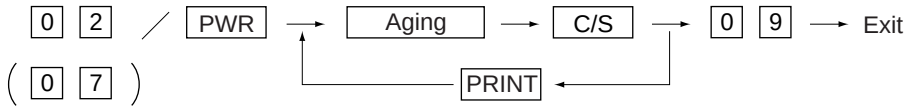

• Test mode (03 or 04):

For these test modes, refer to 1.2.1 and 1.2.2.

• Adjustment mode (05):

For this mode, refer to "1.2.3 Adjustment mode".

• Forced ready mode (06):

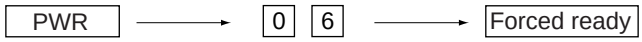

Note: This mode is for checking the paper feeding operation only.

• Setting mode (08):

For this mode, refer to "1.2.4 Setting mode".

Notes: C/S: Press the CLEAR/STOP key
PWR: Turn on the power switch
INT: Press the INTERRUPT key
E/S: Press the ENERGY SAVER key

Quick reference chart for self-diagnostic mode

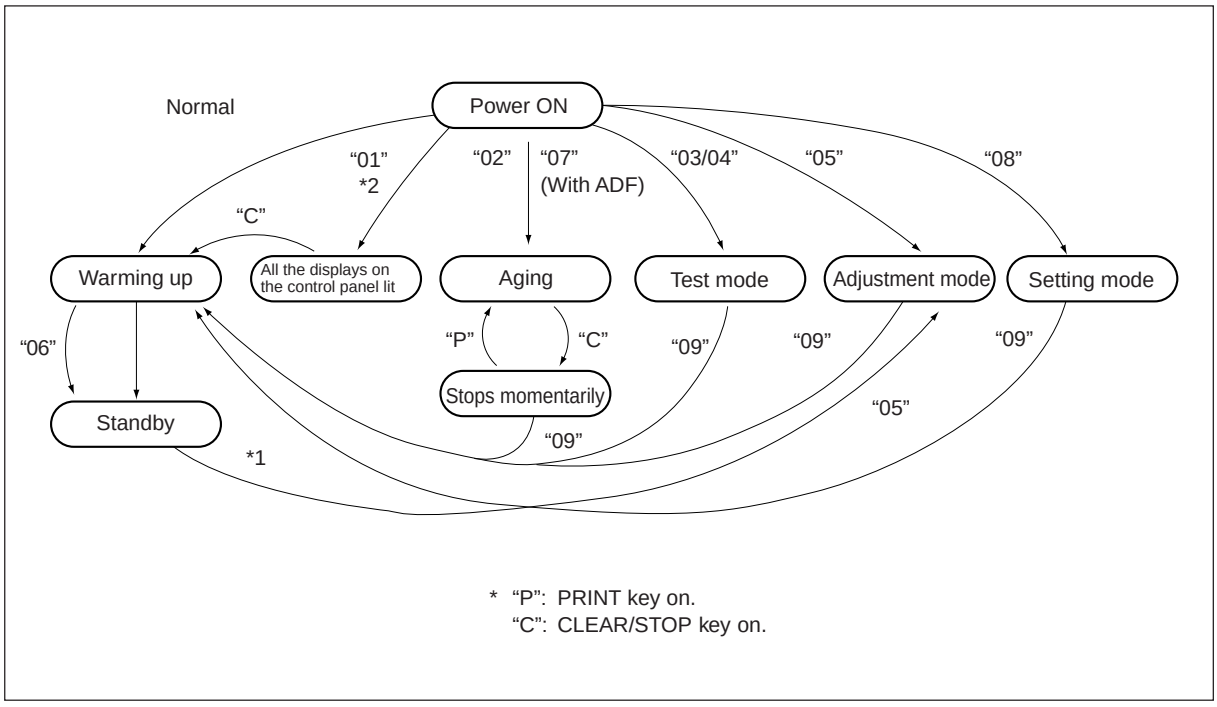

*1 When the copier is in the adjustment mode which you entered by turning on the power switch while pressing keys "0" and "5" simultaneously, pressing keys "0" and "9" simultaneously will make the copier exit into the stand-by mode. In this stand-by mode only, you can access the adjustment mode repeatedly by simply entering "0" and "5".

*2 While all the displays on the control panel are lit ("01" mode), copying is disenabled.
When the copier enters the standby status by pressing the CLEAR/STOP key, copying is enabled.

1.2.1 Input signal check (Test mode 03/04)

In the “03” or “04” test mode, the following input signal conditions can be checked by pressing the appropriate keys.

[A] When automatic exposure is selected

Indicator LED / Key operation	Original size LED				Copy size LED				Unit
	A4/LD	A3/LG	B4/LT	A5/ST	A4/LD	A3/LG	B4/LT	A5/ST	
[1] Key	PLTNSW Closed	PLL-OK Main motor rotation NG	MRRSW Mirror home position	LNZSW Lens home position	PSTPSW Paper found	–	–	–	Copier
[2] Key	–	–	–	EXITSW Paper found	PCCNT	APSR Rear sensor not found original	APSC Center sensor not found original	APSF Front sensor not found original	
[3] Key	–	–	–	DFCNT DF not loaded	SCNT Sorter not loaded	DEVSW Dev unit not loaded	TFULSW Not toner full	–	
[4] Key	HOMESW Carriage home position	–	HTRDY Heater ON	–	–	APS2 Original not found	APS1 Original not found	APS0 Original not found	
[5] Key	–	–	Size width sensor 2 ON	Size width sensor 1 ON	Empty sensor ON	Open sensor ON	Exit sensor ON	Aligning sensor ON	ADF
[6] Key	–	–	Copy removal sensor ON	Limit sensor ON	Bin home sensor ON	One rotation detect sensor ON	Tray paper detect sensor ON	Entrance sensor ON	Sorter

LED lit in above condition (Signal level : H)

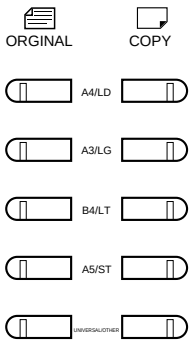

[B] When manual exposure is selected

Indicator LED / Key operation	Original size LED				Copy size LED				Unit
	A4/LD	A3/LG	B4/LT	A5/ST	A4/LD	A3/LG	B4/LT	A5/ST	
[1] Key	–	TUPCL Copier upper cassette tray top position	PEMPCL Copier upper cassette paper empty	PSTPCL Copier upper cassette PSTP-SW ON	UCVDOR U-turn cover opened	TUPCU Copier lower cassette tray top position	PEMPCU Copier lower cassette paper empty	PSTPCU Copier lower cassette PSTP-SW ON	Copier
[2] Key	SBFSW Manual feed paper empty	–	LC-KEY LCF tray down key OFF	LC-CNT LCF not installed	LCDOR LCF door opened	TDWNLC LCF tray bottom SW ON	TUPLC LCF tray top SW ON	PEMPLC LCF paper empty	Copier LCF
[3] Key	–	TUPPF2 Pedestal middle cassette tray top position	PEMPPF2 Pedestal middle cassette paper empty	PSTPPF2 Pedestal middle cassette PSTP-SW ON	–	TUPPF1 Pedestal upper cassette tray top position	PEMPPF1 Pedestal upper cassette paper empty	PSTPPF1 Pedestal upper cassette PSTP-SW ON	PFP
[4] Key	–	PPLL-OK Pedestal motor rotating NG	PF-CNT Pedestal not installed	PFDOR PFP side door opened	–	TUPPF3 Pedestal lower cassette tray top position	PEMPPF3 Pedestal lower cassette paper empty	PSTPPF3 Pedestal lower cassette PSTP-SW ON	
[5] Key	–	AD-CNT ADU not installed	APLL-OK ADU motor rotating NG	SIDSW ADU side guide home SW ON	ENDSW ADU end guide home SW ON	PJAM1AD ADU JAM SW Paper present	–	PEMPAD ADU inside Paper present	ADU
[6] Key	SIZCU3 Copier upper cassette SIZE SW OFF	SIZCU2 Copier upper cassette SIZE SW OFF	SIZCU1 Copier upper cassette SIZE SW OFF	SIZCU0 Copier upper cassette SIZE SW OFF	SIZCL3 Copier lower cassette SIZE SW OFF	SIZCL2 Copier lower cassette SIZE SW OFF	SIZCL1 Copier lower cassette SIZE SW OFF	SIZCL0 Copier lower cassette SIZE SW OFF	Copier
[7] Key	SIZPF33 Pedestal upper cassette SIZE SW OFF	SIZPF32 Pedestal upper cassette SIZE SW OFF	SIZPF31 Pedestal upper cassette SIZE SW OFF	SIZPF30 Pedestal upper cassette SIZE SW OFF	SIZPF23 Pedestal middle cassette SIZE SW OFF	SIZPF22 Pedestal middle cassette SIZE SW OFF	SIZPF21 Pedestal middle cassette SIZE SW OFF	SIZPF20 Pedestal middle cassette SIZE SW OFF	PFP
[8] Key	SIZPF13 Pedestal lower cassette SIZE SW OFF	SIZPF12 Pedestal lower cassette SIZE SW OFF	SIZPF11 Pedestal lower cassette SIZE SW OFF	SIZPF10 Pedestal lower cassette SIZE SW OFF	–	–	–	–	

LED lit in above condition (Signal level : H)

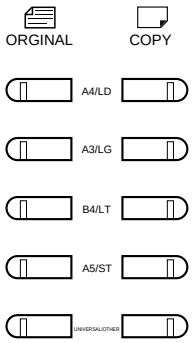

<Procedure>

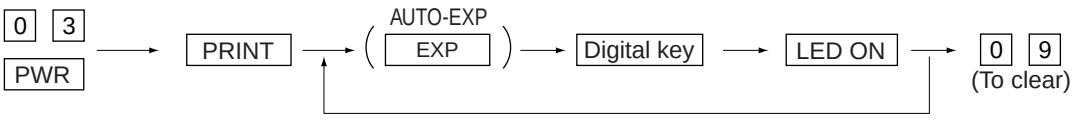

Note: 03 → With initialization before test mode is entered
04 → Without initialization

1.2.2 Output signal check (03/04)

In the “03” or “04” test mode, the following output signal conditions can be checked by entering appropriate codes.

Code	Function		Code	Function	Group
1	Main motor	ON	11	OFF	1
2	Feed roller clutch	ON	12	OFF	1
3	Aligning roller clutch	ON	13	OFF	1
6	Toner motor	ON	16	OFF	1
7	Optical fan	ON	17	OFF	1
8	Exit fan/Bottom fan	ON	18	OFF	1
10	Total counter	Increases at each “P” key press.			2
20	Scanning motor	At 1st “P” key press, scans forward and backward at 2nd press.			2
21	Lens motor	At 1st “P” key press, moves to 50% position and to 200% position at 2nd press.			2
22	Mirror motor	At 1st “P” key press, moves to 50% position and to 200% position at 2nd press.			2
24	Document motor	At 1st “P” key press, moves to 50% position and to 200% position at 2nd press.			2
30	Charge output	At 1st “P” key press, comes on and goes off at 2nd press.			3
31	Transfer output	At 1st “P” key press, comes on and goes off at 2nd press.			3
32	Separation output	At 1st “P” key press, comes on and goes off at 2nd press.			3
*1 33	Exposure lamp	At 1st “P” key press, comes on and goes off at 2nd press.			3
34	Pre-transfer bias	At 1st “P” key press, comes on and goes off at 2nd press.			3
40	Copier upper cassette tray motor	Tray only rises.			3
41	Copier upper cassette feed roller clutch	At 1st “P” key press, comes on and goes off at 2nd press.			3
42	Copier transport clutch	At 1st “P” key press, comes on and goes off at 2nd press.			3
43	Copier lower cassette tray motor	Tray only rises.			3
44	Copier lower cassette feed roller clutch	At 1st “P” key press, comes on and goes off at 2nd press.			3
45	ADU stopper end motor	Reciprocates at each “P” key press.			3
46	ADU side end motor	Reciprocates at each “P” key press.			2
47	ADU feed roller clutch	At 1st “P” key press, comes on and goes off at 2nd press.			2
48	ADU stack clutch	At 1st “P” key press, comes on and goes off at 2nd press.			3
49	PFP upper cassette tray motor	Tray only rises.			3
50	PFP upper cassette feed roller clutch	At 1st “P” key press, comes on and goes off at 2nd press.			3
51	PFP transport clutch	At 1st “P” key press, comes on and goes off at 2nd press.			3
52	PFP middle cassette tray motor	Tray only rises.			3
53	PFP middle cassette feed roller clutch	At 1st “P” key press, comes on and goes off at 2nd press.			3

*1 The exposure lamp stays on for 5 sec., then goes off automatically.

Code	Function		Code	Function	Group
54	PFP lower cassette tray motor	Tray only rises.			3
55	PFP lower cassette feed roller clutch	At 1st “P” key press, comes on and goes off at 2nd press.			3
56	Manual feed roller clutch	At 1st “P” key press, comes on and goes off at 2nd press.			3
57	LCF tray motor	At 1st “P” key press, rises to the limit and goes down at 2nd press.			2
58	LCF feed motor	At 1st “P” key press, comes on and stops at 2nd press.			3
60	ADU motor	ON	70	OFF	1
61	PFP main motor	ON	71	OFF	1
80	DF independent aging (single side operation)	At 1st “P” key press, comes on and stops at 2nd press.			3
81	DF independent aging (double side operation)	At 1st “P” key press, comes on and stops at 2nd press.			3
82	DF pick-up roller rotation	At 1st “P” key press, comes on and stops at 2nd press.			3
83	DF aligning roller rotation	At 1st “P” key press, comes on and stops at 2nd press.			3
84	DF transport belt rotation (CW)	At 1st “P” key press, comes on and stops at 2nd press.			3
85	DF transport belt rotation (CCW)	At 1st “P” key press, comes on and stops at 2nd press.			3
90	Sorter transport motor ON (403 mm/sec)	At 1st “P” key press, comes on and stops at 2nd press.			3
91	Sorter bin motor ON (bins move up and down after initialization.)	At 1st “P” key press, comes on and stops at 2nd press.			3
92	Sorter aging without paper	At 1st “P” key press, starts and goes off at 2nd press.			3

<Procedure>

Group (1)

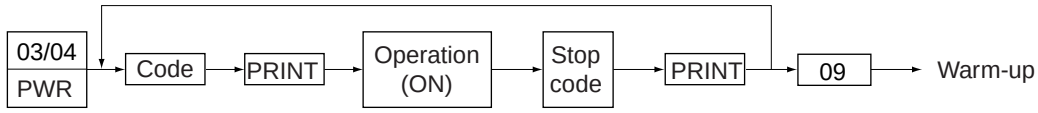

Group (2)

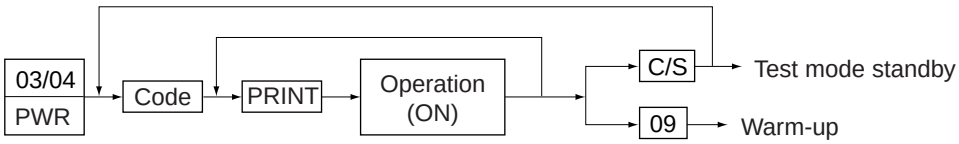

Group (3)

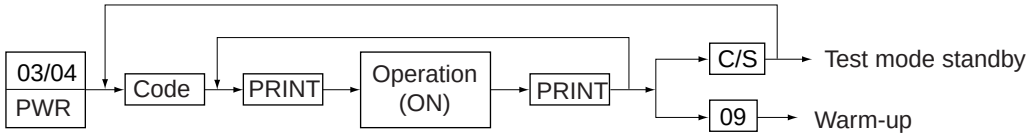

1.2.3 Adjustment mode (05)

In this mode, the following adjustment items can be corrected or changed (see the Adjustment Code List for “05” Mode). To access this code, turn on the power while pressing the “0” and “5” keys.

	Adjustment item	Code	Key to adjust with	Key to store with	Remarks
*2	Auto-toner sensor	0	Zoom keys	INTERRUPT	See 1.3 for details.
	Exposure	1–17	Zoom keys	INTERRUPT	See 1.4 for details.
*3	Automatic adjustment for exposure	49	Not needed	Not needed	
	HVT output	38–40	Zoom keys	INTERRUPT	See 1.6 for details.
	Registration	53–59	Digital keys	INTERRUPT	See 1.5 for details.
*4	ADF EEPROM initialization and automatic adjustment for ADF sensor	97	Not needed	Not needed	
	Other adjustment	Except for above codes	Digital keys	INTERRUPT	Refer to Adjustment code list.

<Procedure>

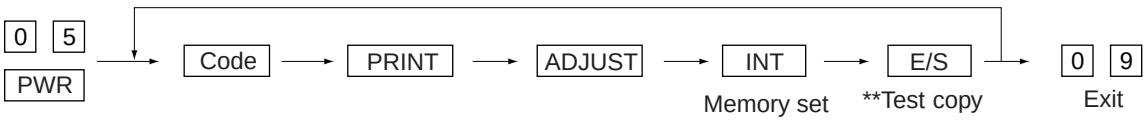



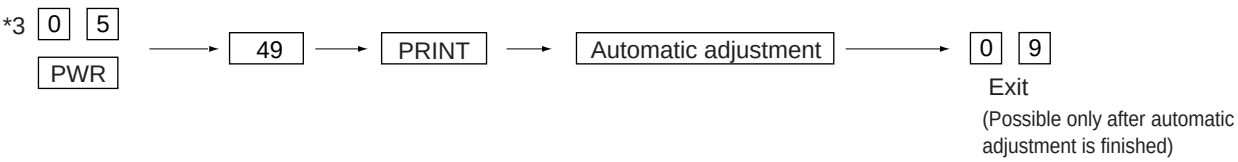



** Duplex copying is not available using E/S key in the adjustment mode.

Adjustment code list (“05”)

	Code No.	Name	Allowable input value	Initial value*	Remarks
*2	0	Auto-toner sensor	–	–	About 3 minutes later this value changes automatically
	1	Manual exposure (100%)	0–255	128	The larger the value, the lighter the image. The adjustment sequence must be 1 → 2 → 3 → 4 → 5 → 6 → 7 → 8 → 9 → 10
	2	Manual exposure (154%)	0–255	128	
	3	Manual exposure (50%)	0–255	128	
	4	Manual exposure (200%)	0–255	128	
	5	Automatic exposure (100%)	0–255	128	
	6	Automatic exposure (154%)	0–255	128	
	7	Automatic exposure (50%)	0–255	128	
	8	Automatic exposure (200%)	0–255	128	
	9	Allowable exposure step range (light)	0–255	50	The larger the value, the lighter the light range.
	10	Allowable exposure step range (dark)	0–255	210	The larger the value, the darker the dark range.
	14	Photo exposure (100%)	0–255	157	The larger the value, the lighter the image. The adjustment sequence must be 14 → 15 → 16 → 17
	15	Photo exposure (154%)	0–255	128	
	16	Photo exposure (50%)	0–255	128	
	17	Photo exposure (200%)	0–255	128	
	21	Lengthwise reproduction ratio adjustment (Scan motor speed adjustment)	0–15	8	Each increase by “1” causes the lengthwise reproduction ratio to increase by 0.1%
	25	LED eraser array timing adjustment (100%)	0–15	8	Each increase by “1” causes the erased position by LED to shift approx. 0.5 mm toward the trail edge of the paper. The adjustment sequence must be 25 → 26 → 27
	26	LED eraser array timing adjustment (200%)	0–15	8	
	27	LED eraser array timing adjustment (50%)	0–15	8	
	30	LED eraser array timing adjustment (leading edge)	0–15	8	Each increase by “1” causes the erased position by LED to shift approx. 0.5 mm toward the trail edge.
	31	LED eraser array timing adjustment (trailing edge)	0–15	8	
	35	Leading-edge void adjustment	0–15	3	0: No void 1-15: Void present (approx. 0.5 mm/step)
	36	Trailing-edge void adjustment	0–15	0	
	38	Grid bias output	0–255	128	The larger the value, the higher the output.
*5	39	Transfer transformer output	0–255	128	The larger the value, the higher the output.
*5	40	Separation transformer output	0–255	128	The larger the value, the higher the output.
	42	Grid bias output (photo mode)	0–255	138	The larger the value, the higher the output.
	43	Developer bias adjustment	0-255	100	Use code 38 in order to check output.
*3	49	Automatic adjustment for automatic exposure	–	–	Automatically adjusts the automatic exposure based on the manual exposure. (AJ 5,6,7,8) The adjustment sequence must be 1 → 2 → 3 → 4 → 49
	53	Registration (100%, lower feeder)	0–40	20	Each increase by “1” causes the image to shift 0.8 mm toward the paper lead edge. The adjustment sequence must be 53 → 54 → 55 → 56 → 58
	54	Registration (200%, lower feeder)	0–15	8	
	55	Registration (50%, lower feeder)	0–15	8	
	56	Registration (100%, SFB)	0–15	8	
	58	Registration (100%, ADU feed)	0–15	8	

	Code No.	Name	Allowable input value	Initial value*	Remarks
	60	Lens position adjustment (100%)	0–40	20	Each increase by “1” moves the lens toward enlargement. The adjustment sequence must be 61 ⇔ 60 → 63 ⇔ 62 → 65 ⇔ 64
	61	Mirror position adjustment (100%)	0–40	20	
	62	Lens position adjustment (200%)	0–40	20	
	63	Mirror position adjustment (200%)	0–40	20	
	64	Lens position adjustment (50%)	0–40	20	
	65	Mirror position adjustment (50%)	0–40	20	
	80	Aligning value (lower feeder long)	0–31	20	Each increase by “1” causes the paper to bend more.
	81	Aligning value (manual)	0–31	24	
	82	Aligning value (upper feeder long)	0–31	20	
	83	Aligning value (ADU feed long)	0–31	20	
	84	ADF aligning value (1st page)	0–15	8	Each increase by “1” the original moves toward the exit side of DF.
	85	ADF aligning value (2nd page)	0–15	8	Each increase by “1” the original moves toward the exit side of DF.
	87	ADF aligning value (2 in 1 original gap)	0–15	8	Each increase by “1” the gap between originals increases.
	90	Auto-toner sensor adjustment value	0–255	128	The auto-toner adjustment value is indicated.
	92	Aligning value (PFP)	0–31	20	Each increase by “1” causes the paper to bend more.
	93	Aligning value (LCF)	0–31	20	
	94	Aligning value (lower feeder short)	0–31	16	
	95	Aligning value (upper feeder short)	0–31	16	
	96	Aligning value (ADU feed short)	0–31	16	
*4	97	ADF EEPROM Initialize and automatic adjustment for ADF sensor	–	–	

* Initial value means memory initialization value.

*5 Remove developer for adjustment.

1.2.4 Setting mode (08)

In this mode, the various special modes listed in the Setting Code List can be set or changed.

<Procedure>

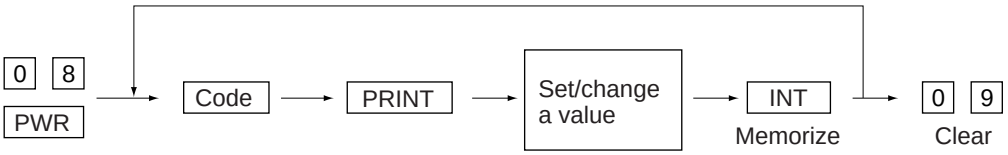

Code No.	Name	Allowable input value	Initial Value*	Remarks
3	Message language	0–2	0	
4	Automatic sort mode	0–3	0	The sort mode is selected automatically when the original is placed on the ADF. 0 : deactivated, 1: staple, 2 : sort, 3 : group
5	Automatic duplex mode	0–3	EUR, OTHER = 0 UC = 1	The duplex mode is selected automatically when the original is placed on the ADF. 0 : deactivated, 1 : single-sided to dual-sided, 2 : dual-sided to dual-sided, 3 : dual-sided to single-sided or single-sided to dual-sided (according to the message)
7	Access control mode	0–1	0	0 : deactivated, 1 : activated
8	Version	0–3	0–3	0 : EUR, 1 : UC, 2 : JPN, 3 : OTHER
9	Actual-size reproduction ratio (the direction of copy movement)	0–1	0–1	0 : 100% (EUR, OTHER), 1 : 101% (UC)
10	Timer mode	0–10	3	Resetting operation start time is: 0 : deactivated, 1 : 15 sec, 2 : 30 sec, 3 : 45 sec, 4 : 60 sec, N : nx 15 sec
11	Auto power saving	0–15	EUR, OTHER = 0 UC = 1	Auto power saving operation start time is: 0 = deactivated, 1 = 30 sec, 2 = 60 sec, 3 = 90 sec, 4 = 120 sec, 5 = 150 sec, 6 = 3 min., 7 = 4 min., 8 = 5 min., 9 = 7 min., 10 = 10 min., 11 = 15 min., 12 = 20 min., 13 = 30 min., 14 = 45 min., 15 = 60 min.
12	MAX. 9	0–3	0	0 : max. 999, 1 : max. 99, 2 : max. 9, 3 : max. 600
13	Paper-feed retrial	0–1	0	0 : feed-retrial mode, 1 : no-feed-retrial mode
14	Cassette priority selection	0–6	0	0 : A4/LT, 1 : LCF, 2 : upper feeder, 3 : lower feeder, 4 : PFP-U, 5 : PFP-M, 6 : PFP-L
15	Default exposure	0–2	0	0 : auto, 1 : manual, 2 : photo
16	A3/LD double count	0–1	0	0 : single count, 1 : double count
17	Manual-feed auto-start	0–1	0	0 : PRINT key starting, 1 : auto-start

Code No.	Name	Allowable input value	Initial Value*	Remarks
18	Default ADF mode	0–1	0	0 : ADF mode, 1 : SDF mode
19	Default Sorter mode	0–3	0	0 : non sort, 1 : staple, 2 : sort, 3 : group
20	Default edge erasing mode	0–2	2	0 : non edge erasing, 1 : Edge erasing, 2 : Auto edge erasing
21	Auto cassette change	0–1	1	0 : deactivated, 1 : activated
22	Default APS mode	0–2	0	0 : manual, 1 : APS, 2 : AMS
23	Detection of manually placed original	0–1	0	0 : activated, 1 : deactivated
25	Guide Bias control selection	0–1	0	0 : activate Guide Bias control, 1 : deactivate Guide Bias (always off)
27	ADF's APS mode	0–2	0	0 : detects every original, 1 : detects only the first original, 2 : prevents copying blank originals
28	Pressing PRINT-KEY after suspension of APS/AMS	0–2	0	0 : accept (copy start), 1 : refuse 1st pressing (accept 2nd pressing), 2 : copy disable
31	Paper size (LCF)	0–14	3, 4	3 : LT (UC), 4 : A4 (EUR, OTHER)
35	Cassette/ADU connect	0–3	0	0 : Auto-detection, 1 : cassette, 2 : ADU, 3 : No connection
36	PFP connect	0–4	0	0 : Auto-detection, 1 : 1-cassette, 2 : 2-cassettes, 3 : 3-cassettes, 4 : No connection
37	Order of sorter key selection	0–1	0	0 : sort → staple → group → non sort, 1 : staple → sort → group → non sort
38	Heat-roller temperature setting value (energy saving)	0–11	5	0 : off, 1 : 110 °C, 2 : 120 °C, 3 : 130 °C, 4 : 140 °C, 5 : 150 °C, 6 : 160 °C, 7 : 170 °C, 8 : 180 °C, 9 : 190 °C, 10 : 200 °C, 11 : 210 °C
43	Resettable counter display/ Original counter display	0–3	0	0 : deactivated, 1 : resettable counter display, 2 : original counter display, 3 : both
44	All clear after copy	0–1	0	0 : deactivated, 1 : activated
47	Pre-run time setting value	0–18	3	0 : off, 1 : 5 sec., 2 : 10 sec., 3 : 15 sec., 4 : 20 sec., 5 : 25 sec., 6 : 30 sec., 7 : 40 sec., 8 : 50 sec., 9 :60 sec., 10 : 70 sec., 11 : 80 sec., 12: 90 sec., 13 : 100 sec., 14 : 110 sec., 15 : 120 sec., 16 : 130 sec., 17 : 140 sec., 18 : 150 sec.
48	Width of erased area by LED eraser array (51, 54, 58%)	0–1	0	0 : Wide, 1 : Narrow
51	UA mode selection	0–1	0	0 : deactivated, 1 : activated
52	Quick copy mode	0–1	0–1	0 : deactivated (EUR, OTHER), 1 : activated (UC)
53	Exposure burnout detection	0–2	0	0 : activated at all times, 1 : activated only at automatic exposure, 2 : deactivated
54	Coin controller mode	0–2	0	0 : deactivated, 1 : activated (when ENABLE signal = Low, large size copy is prohibited), 2 : activated (when ENABLE signal = Low, large size copy or non 100% copy is prohibited)

	Code No.	Name	Allowable input value	Initial Value*	Remarks
	56	Auto shut-off	0–20	20	Auto shut-off to force when it was left for a following control time (min.) 0 = 3, 1 = 5, 2 = 10, 3 = 15, 4 = 20, 5 = 25, 6 = 30, 7 = 40, 8 = 50, 9 = 60, 10 = 70, 11 = 80, 12 = 90, 13 = 100, 14 = 110, 15 = 120, 16 = 150, 17 = 180, 18 = 210, 19 = 240, 20 : deactivated
	62	AMS copy stop switching	0–1	1	0 : Non stop, 1 : Temporary stop
	68	Copylyzer	0–1	0	0 : deactivate, 1 : activate (only for Japan)
	69	PM counter setting value	0–999, 999	000000	0 : PM counter deactivated, Not 0 : PM call when set value ≦ code “79”
*1	76	Running timer (drum)	0–277 Hour	0	Hours, minutes, seconds indication
*1	77	Running timer (developer)	0–277 Hour	0	Hours, minutes, seconds indication
	79	Current PM counter value	0–999, 999	000000	Current copy quantity
	80	Telephone number	14 digits	0	Telephone number of up to 14 digits can be entered. Use the HELP key to enter hyphens.
	81	Front cover open counter	0–999, 999	000000	
	89	Heater abnormal counter	0–9	0	0–1 : copy enable, 2 or more : copy disable
*2	99	Error history	–	–	Display last 8 Error codes
*1	101	Power on time counter	0–99999 Hour	0	Hours, minutes, seconds indication
*1	102	Copying time counter	0–99999 Hour	0	Hours, minutes, seconds indication
	104	Pre-run time setting value (Thick paper mode)	0–6	2	0 = 3 sec., 1 = 5 sec., 2 = 10 sec., 3 = 15 sec., 4 = 20 sec., 5 = 25 sec., 6 = 30 sec.
	105	APS sensor position	1, 2	2	1 : LT series (UC), 2 : A series (EUR, OTHER)
	106	Original setting method (ADF)	0–1	0	0 : Direct stop, 1 : switch back
	108	Width of erased area by LED eraser array (for edge erase)	0–1	0	0 : Narrow, 1 : Wide
	109	Universal paper	0–14	FOLIO, COMP	FOLIO ; EUR, OTHER COMP : UC
	110	Paper size (0 : non standard size)	140–297/210–432	297/420 279/432	Width/Length 297/420 : EUR, OTHER, 279/432 : UC
	111	Paper size (1 : A5–R)	140–297/210–432	148/210	Width/Length
	112	Paper size (2 : B5)	140–297/210–432	257/182	Width/Length
	113	Paper size (3 : B5–R)	140–297/210–432	182/257	Width/Length
	114	Paper size (4 : A4)	140–297/210–432	297/210	Width/Length
	115	Paper size (5 : A4–R)	140–297/210–432	210/297	Width/Length
	116	Paper size (6 : FOLIO)	140–297/210–432	210/330	Width/Length
	117	Paper size (7 : B4)	140–297/210–432	257/364	Width/Length
	118	Paper size (8 : A3)	140–297/210–432	297/420	Width/Length
	119	Paper size (9 : ST–R)	140–297/210–432	140/216	Width/Length
	120	Paper size (10 : LT)	140–297/210–432	280/216	Width/Length
	121	Paper size (11 : LT–R)	140–297/210–432	216/280	Width/Length
	122	Paper size (12 : LG)	140–297/210–432	216/356	Width/Length
	123	Paper size (13 : COMP)	140-297/210-432	258/356	Width/Length
	124	Paper size (14 : LD)	140–297/210–432	280/432	Width/Length

<table>
<tr><th>Code No.</th><th>Name</th><th>Allowable input value</th><th>Initial Value*</th><th>Remarks</th></tr>
<tr><td>125</td><td>INFO/HELP-key name (in LCD message)</td><td>0–6</td><td>0, 1, 6</td><td>< > : Bit
<0> : 0 = PHOTO, UNIVERSAL
1 = IMAGE, OTHER
<1> : 0 = HELP, 1 = INFO
<2> : 0 = JOB MEMORY, 1 = MODE MEMORY
<table>
<tr><th></th><th colspan="3">Bit</th><th></th></tr>
<tr><th></th><th>2</th><th>1</th><th>0</th><th></th></tr>
<tr><td>EUR</td><td>MODE 1</td><td>INFO 1</td><td>UNIV. 0</td><td>6</td></tr>
<tr><td>UC</td><td>JOB 0</td><td>HELP 0</td><td>OTHER 1</td><td>1</td></tr>
<tr><td>OTHER</td><td>JOB 0</td><td>HELP 0</td><td>UNIV. 0</td><td>0</td></tr>
</table></td></tr>
<tr><td>129</td><td>USER SET operation</td><td>0–2</td><td>0</td><td>0 : default
1 : can not multiplex “USER SET”
2 : Language selection only</td></tr>
<tr><td>133</td><td>Mode clear function when disconnecting key counter</td><td>0–1</td><td>0</td><td>0 : ON
1 : OFF</td></tr>
</table>

*1 • Time display counter clearing procedure (AD Code Nos. 76, 77, 101 and 102).

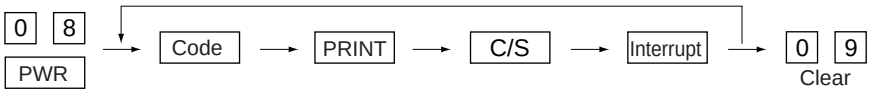

• Time display counter value changing procedure (AD Code Nos. 76, 77, 101 and 102).

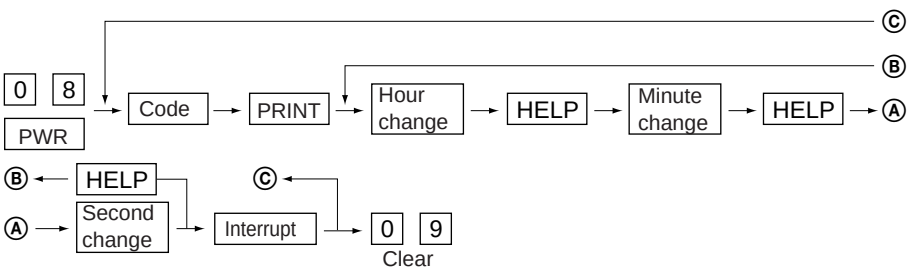

*2 • Error history checking procedure (AD Code No.99).

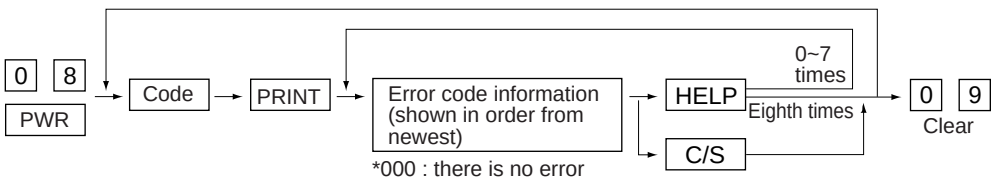

• Error memory

Dislay format E01 64 ABCDEFGHIJ

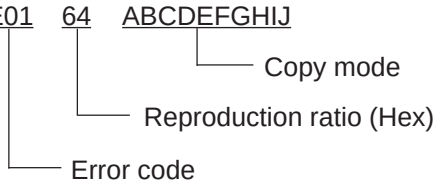

Meaning of the display (copy mode)

A··· Paper feed cassette

0 : Non-select, 1 : SBF, 2 : LCC, 3 : upper cassette (PFP)

4 : middle cassette (PFP), 5 : lower cassette (PFP), 6 : ADU

7 : upper cassette (Main unit), 8 : lower cassette (Main unit)

B··· Paper size code

C··· Sort copying mode

0 : Non-select, 1 : Group, 2 : Sort, 6 : Staple

D··· DF mode

0 : Non-connect, 1 : SDF, 2 : ADF, 6 : 2 in 1

E··· APS/AMS mode

0 : Non-select, 1 : APS, 2 : AMS

F··· Duplex copying mode

0 : Non-select, 1 : book→both sides copy,

2 : both sides→one side copy, 4 : both sides→both sides copy,

8 : one side→both sides copy

G··· Not used

H··· Image shift

0 : Non-select, 1 : book, 2 : left, 3 : right

I··· Not used

J··· Edge erasing and dual page copying

0 : Non-select, 1 : Edge erase, 2 : Dual page,

3 : Edge erase and dual page

1.2.5 How to register/change ID codes (Access control mode)

When ID codes are registered, copies made will be classified according to each ID code. The copier will not start unless one of the ID codes registered is keyed in.

<Preparation to enter the access control mode>

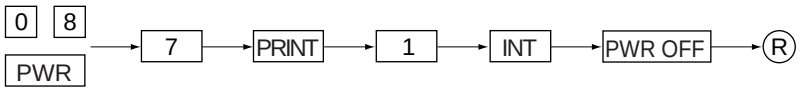

Procedure to register ID codes:

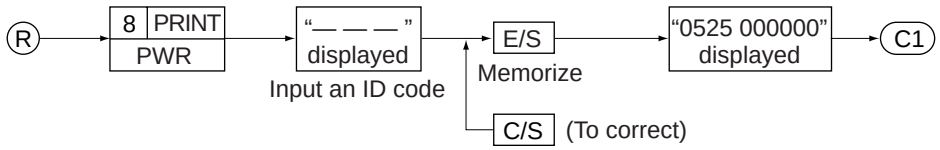

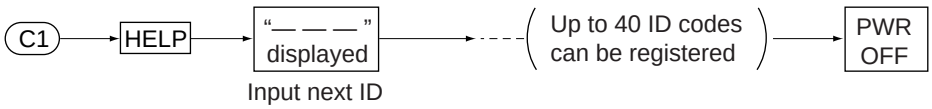

Procedure to change ID codes:

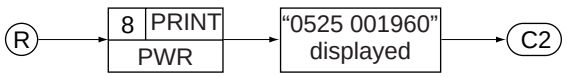

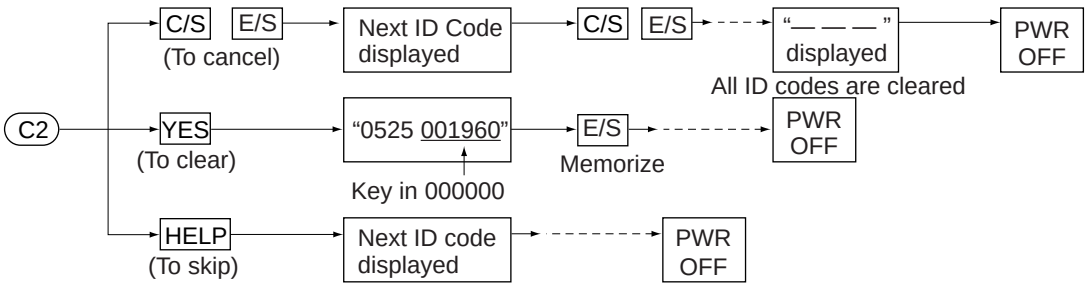

1.3 Auto-Toner Sensor Adjustment

When the developer material is replaced, the auto-toner sensor needs to be adjusted.

Notes: 1. If the high voltage (main/transfer/separation charger) output adjustment is combined, high voltage adjustment should be performed first before the developer material is loaded into the developer unit.

2. Make sure that the drum blade is pressed to the drum before the auto-toner adjustment.

<Procedure> (Use code "0" in the "05" mode.)

(1) Install the process unit to the copier (main blade contacts with drum).

(2) Press the keys "0" and "5" at the same time and turn on the power switch.
The following display appears indicating that the adjustment mode has been entered.

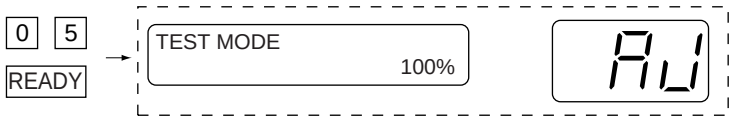

(3) Enter "0" using the digital keys and press the PRINT key.
The following display will appear.

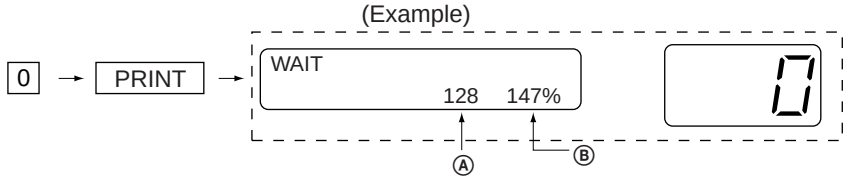

Note: Ⓑ: Indicates the output voltage of the auto-toner sensor. (The above example is only a typical value.) The above display indicates an output voltage of 1.47V.
The drum, developer unit, etc., are operating at this time.

(4) After approximately two minutes, the Ⓐ and Ⓑ displays on the message display will automatically begin to change.

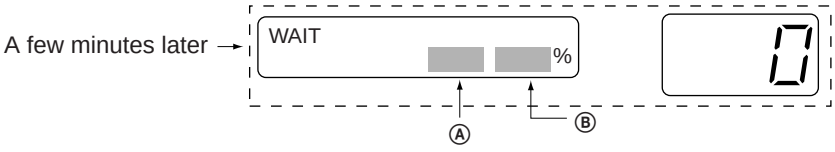

(5) After a short time, the Ⓐ and Ⓑ displays on the message display will automatically stop changing and, at the same time, the message will also change as shown below.

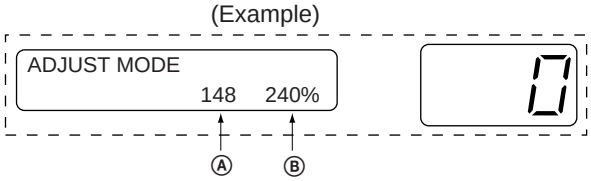

(The numerical values shown above for Ⓐ and Ⓑ are only typical values.)

Note: The numerical value displayed in Ⓑ may vary in the range of ±4 or less.

(6) In this status, check if the numerical value in Ⓑ is within the range of 235 ~ 245 (auto-toner sensor output range of 2.35 V ~ 2.45 V).

(7) If the numerical value in Ⓑ is not within the range of 235 ~ 245, use the ZOOM keys to adjust the numerical values manually to within the range of 235 ~ 245.

Note: The relationship between the ZOOM keys and the numerical values in Ⓐ and Ⓑ is as shown below.

PRINT Key used	Ⓐ value	Ⓑ value
[↑] ZOOM up key	Increase	Increase
[↓] ZOOM down key	Decrease	Decrease

(8) Press the INTERRUPT key.
The drum, developer unit, etc., will stop operating and the following display will appear.

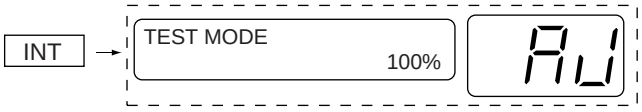

(9) Turn off the power switch.
Install the toner cartridge.

1.4 Exposure Adjustment

At the initial machine setup or when the light distribution is adjusted, the exposure needs to be adjusted. Adjustment must be also performed in accordance with any special request of the user.

1.4.1 Adjustment order

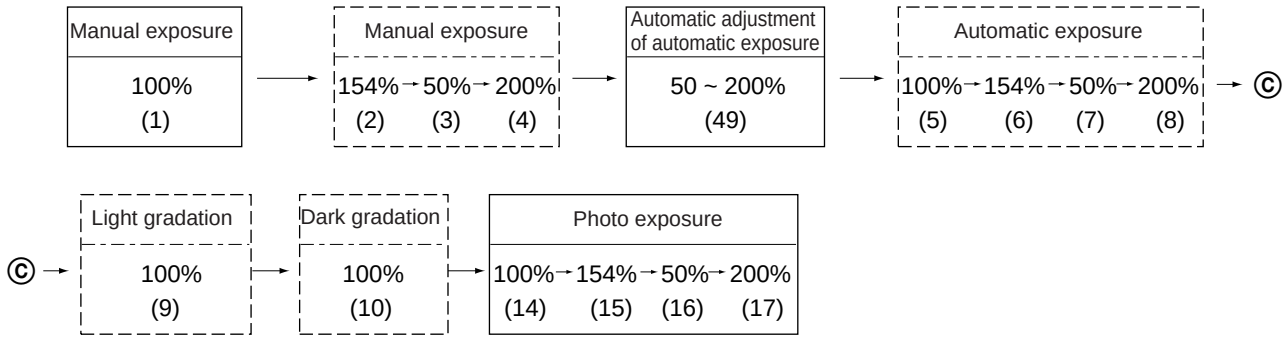

Notes: 1. In dotted-line squares are the adjustments to be performed according to any special request of the user.
2. In ( ) numbers show adjustment code.

1.4.2 Adjustment procedure (Use the appropriate code in the “05” mode.)

Example: Adjustment for 100% manual exposure

(1) While pressing the keys “0” and “5” at the same time, turn on the power switch. The “TEST MODE 100% AJ” appears indicating that the adjustment mode has been entered.

(2)

① Input the code “1” using the digital keys and press the PRINT key.

② [When the density is high]
Input a larger numerical value using the ZOOM UP or digital keys.
[When the density is low]
Input a smaller numerical value using the ZOOM DOWN or digital keys.

③ Press the INTERRUPT key to store the numerical value.

④ Press the ENERGY SAVER key to make a test copy.

⑤ If the image density of the test copy is not satisfactory, repeat the operations ① through ④.

Notes: 1. The numerical value in Ⓐ has a one-to-one correspondence to the angle set for the conventional internal VR. Pressing the ZOOM keys causes the value to increase or decrease in increments of one.

2. As adjustment of 154%, 50% and 200% manual exposure has already been performed, readjustment is not required. However, if individual adjustment of manual or automatic exposure is requested by the user, conduct the relevant adjustment.

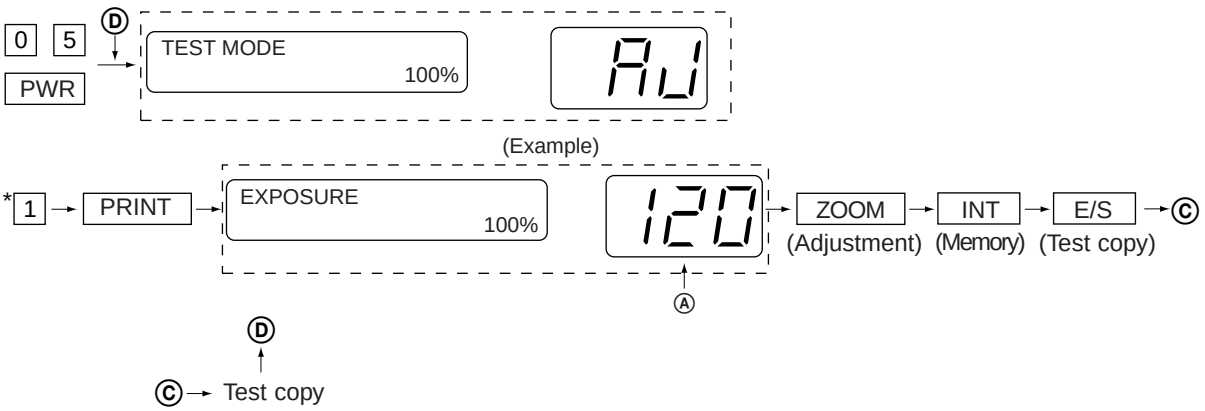

Note: The * mark shows the values changed in accordance with the exposure status and reproduction ratio.

1.4.3 Automatic adjustment of automatic exposure

Note: Before proceeding to the following automatic adjustment, be sure to finish the adjustment of the manual exposure.

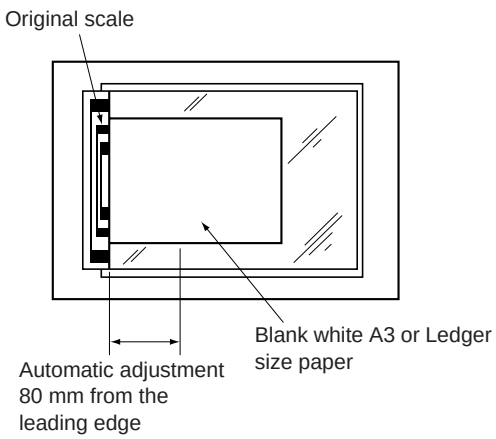

(1) Place a blank sheet of Ledger or A3 paper on the glass. Align the sheet with the original scale and close the original cover.

(2) While pressing the keys “0” and “5” at the same, turn on the power switch. The following display appears indicating that the adjustment mode has been entered.

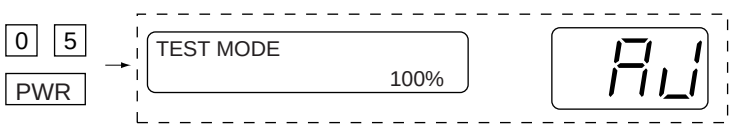

(3) Enter the code “49” using the digital keys, then press the PRINT key.

* During automatic adjustment, the carriage will shift, and the lens and mirror will move in accordance with the reproduction ratio.
* The exposure lamp will flash 4 times.
* The end of automatic adjustment is indicated by return of the display to TEST MODE.

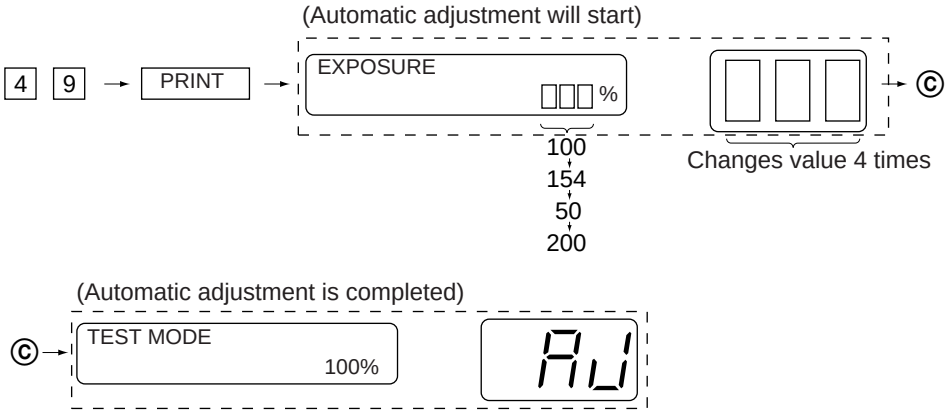

Notes: 1. As automatic adjustment of automatic exposure is performed on the basis of manual exposure, be sure to conduct manual exposure adjustment beforehand.
2. When adjustment is performed in accordance with the user’s request, perform it.
3. Be sure to avoid opening the ADF unit, changing the manual exposure LED position, pressing the keys on the control panel, or turning the power off during automatic adjustment.

1.4.4 Changing the amount of variation in light/dark image density

Adjustment is performed in accordance with the user’s request.

(1) LIGHT-side image density

① Input adjustment code “9”.
② Use the ZOOM or digital keys to decrease the value to darken the maximum light image and vice versa.
③ Press the INTERRUPT key to store the value.
④ Press the ENERGY SAVER key to make a test copy.
⑤ If the image density of the test copy is not satisfactory, repeat the operations ① through ④.

(2) DARK-side image density

① Input adjustment code “10”.
② Use the ZOOM or digital keys to increase the value to lighten the maximum dark image and vice versa.
③ Press the INTERRUPT key to store the value.
④ Press the ENERGY SAVER key to make a test copy.
⑤ If the image density of the test copy is not satisfactory, repeat the operations ① through ④.

1.5 Adjustment of Reproduction Ratio in the Direction of Paper Movement, Paper Aligning Value and Registration

<Adjustment order>

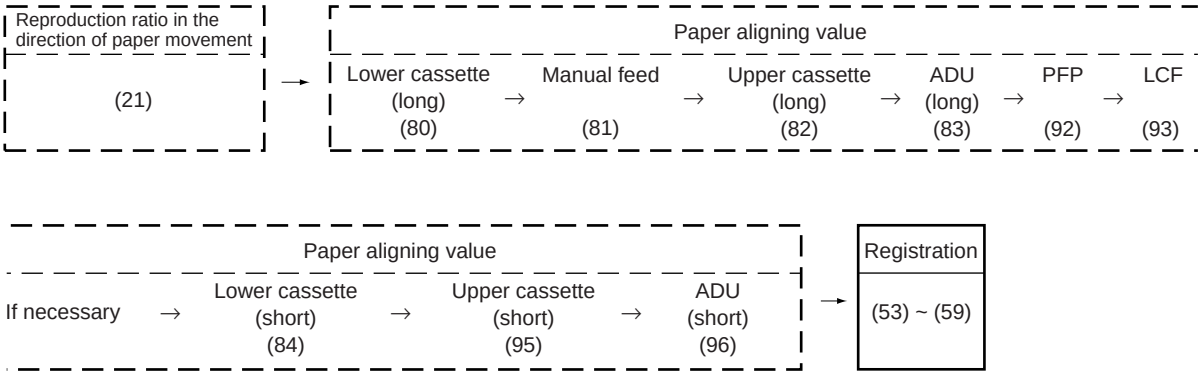

Note: The adjustment of these items in the dotted-line square is usually not necessary.

1.5.1 Reproduction ratio in the direction of paper movement

To check/adjust the reproduction ratio in the direction of paper movement:

(1) Make an A4 (or Letter) copy of a rule placed on the glass.

(2) Wait a few minutes and compare the actual rule to the copied one.

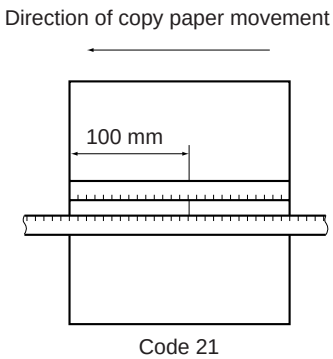

Code 21

(3) If adjustment is needed, select 100% and A4 (or Letter) and follow this procedure:

0 5 PWR → 2 1 → PRINT → Adjust with digital keys* → INT → E/S

* To increase the reproduction ratio, use a larger value and vice versa.

1.5.2 Adjustment of paper aligning value

If necessary, you can extend the feed roller life slightly by increasing the paper aligning value.

<Procedure> (Use code 80~83 or 92~96 in the “05” mode.)

(1) [0] [5] → [8] [0] → [PRINT] → [08] [1] [5] → [INT] → [Cassette] → Ⓒ
[PWR] (Cassette) (Current value) (New value)

Ⓒ → [E/S] → [0] [9]
(To copy)

(2) Check the copy for image void and if there is any, reduce the new value to 14, 13, … until no void occurs. Check for paper misfeeding. When the aligning value is increased, noise caused by the paper scraping against the mylar may possibly be increased.

(3) For the LCF, ADU and pedestal, the same procedure can be used.

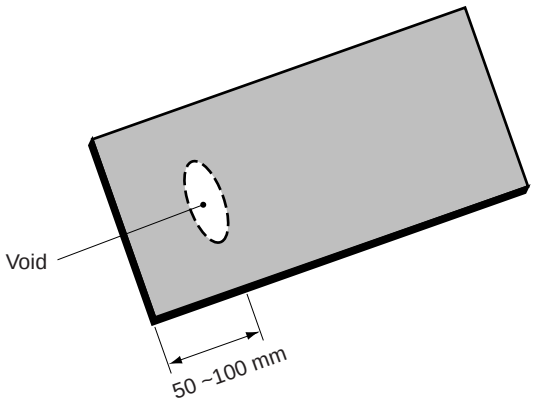

Notes: 1. When frequent paper jams occur near the aligning roller by using special thin paper other than specified, the aligning value can be changed (reduced) as a measure. However, when the aligning value is reduced excessively, this may possibly cause the registration to be shifted. Therefore, make sure that no registration shifting occurs while adjusting the value.

2. Long size adjustment is used as the base when there are both long and short adjustments.

1.5.3 Registration adjustment

Incorrect registration (or top margin) may occur due to paper quality, feed roller surface condition, etc. besides, misadjustment. Check these items before starting adjustment.

Note: When the adjustment value of the cassette is changed, the registrations by all the other feedings will be shifted correspondingly. Therefore, be sure to check all other registrations after the cassette adjustment. However, each adjustment other than the cassette can be performed individually.

Cassette (lower)	Manual feed	ADU
100% (53) → 200% (54) → 50% (55)	100% (56)	100% (59)

<Procedure> (Use the appropriate code in the “05” mode.)

Example: Adjustment for lower cassette at 100%

(1) [0] [5] [PWR] → TEST MODE 100% → A1 → [Cassette selection] → Ⓒ

Ⓒ → [E/S]* → Test copy to check for misregistration

(2) [5] [3] → [PRINT] → ADJUST MODE 100% → 11 (Example)

* When checking the registration for the ADU, press the [0] and [9] keys to exit from the test mode, then check it by making a duplex copy. After that, press the [0] and [5] keys to return to the test mode.

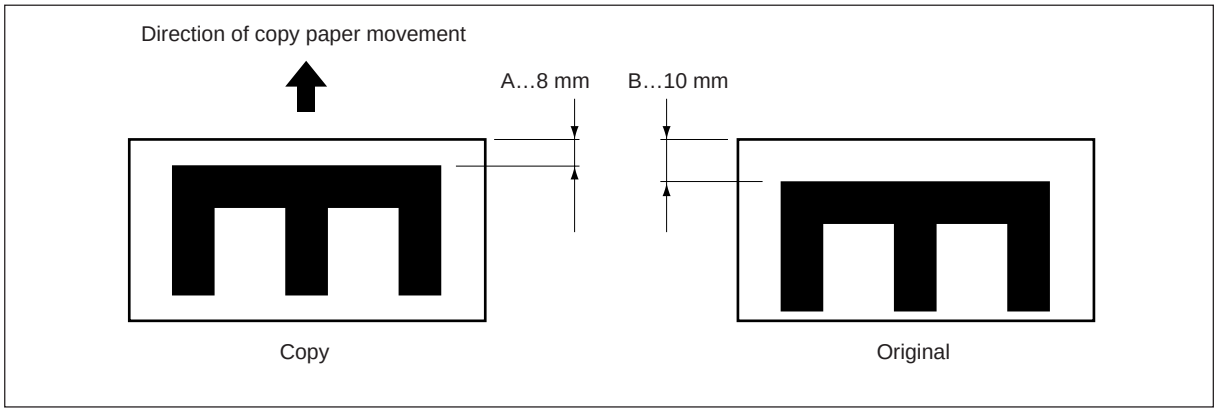

(3) Calculate the new value:

$$\text{New value} = \text{Current value} + \frac{A - B}{0.5} = 11 + \frac{8 - 10}{0.5} = 11 - 4 = 7$$

(4) [7] → ADJUST MODE 100% → 7

(5) [INT] → TEST MODE 100% → A1

(6) To adjust for manual feeding and the ADU, follow steps (1) ~ (5).

(7) Finally, press the [0] and [9] keys to exit from the test mode.

1.6 Check/Adjustment of High-Voltage Transformer

1.6.1 Check/adjustment of main, transfer, separation charger and developer bias outputs

When the high-voltage transformer is replaced, etc., the checking/adjusting of the main, transfer and separation charger and developer bias outputs is necessary. These outputs can be checked/adjusted in the same way.

Code to be used in the test mode “05”:

“38”: Main charger

“39”: Transfer charger

“40”: Separation charger

“43”: Developer bias (The output check uses code “38”)

Notes: 1. Clear the drum counter (mode “08”, code “76”) to “0” when the drum is replaced with a new one.

2. When carrying out adjustments of the main, transfer and separation charger output, refer to the points below.
   - Adjustment codes “39” and “40” are not used if developer material is inside (Error code “C35”).
   - Adjustment codes “39” and “40” are used to perform detection of the remaining developer material for 15 sec. (adjustment is impossible during this period).
   - The input value can be adjusted after the remaining developer detection is finished.
   - If detection has already been performed once, detection of the remaining developer material cannot be performed unless disconnection and connection of the developer unit connector are done.
3. Use a digital tester with an input impedance of 10MΩ or over.

<Procedure>

(1) Preparation of the process unit

[A] For the main/transfer/separation charger output

- Pull out the process unit consisting of the developer and cleaner units.
  Disconnect the developer and cleaner units.
- Remove the upper cover (2 screws) of the developer unit.
  Discharge the developer material from the developer unit.
- Connect the cleaner unit with a drum and developer unit. Install the process unit into the copier.
  Connect the connector securely to the developer unit.

[B] For the developer bias output

- Set the process unit to the copier.
- Remove the toner cartridge.

(2) Connect a digital tester to the copier as shown:

- (–) COM terminal of the tester to pin “1” (leftmost terminal) of the measuring terminal.
- For the main charger: (+) terminal to the grid voltage measuring hole.
- For the transfer/separation charger: (+) terminal to pin “3” (rightmost terminal) of the measuring terminal.
- For the developer bias: (+) terminal to the hole of the plate in front of the developer unit.

(3) Function and range switches of the digital tester as follows:

- For the main charger: DC 1000V full scale
- For the transfer charger: DC 20V full scale
- For the separation charger: AC 20V full scale
- For the developer bias: DC 200V full scale

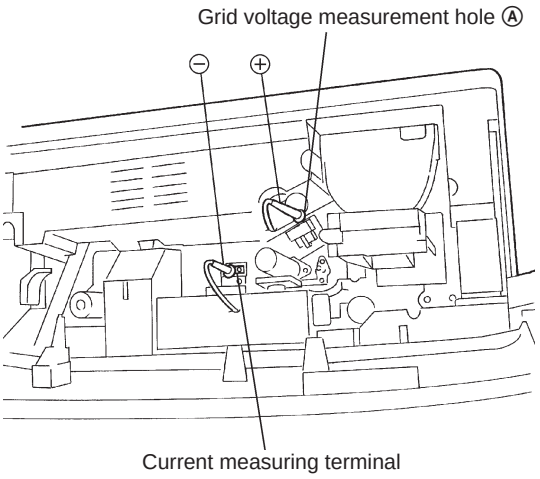

(Main charger output) Grid voltage measurement

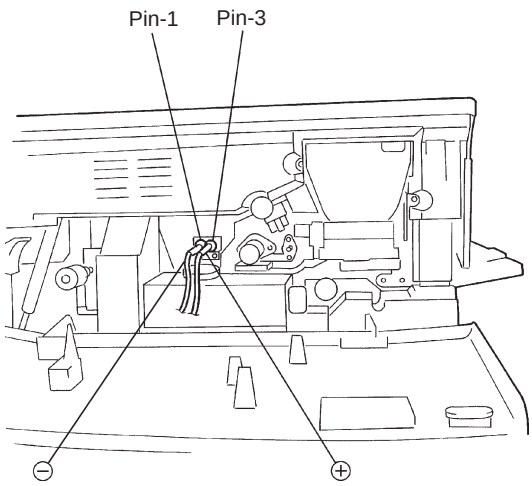

Transfer/separation charger output measurement

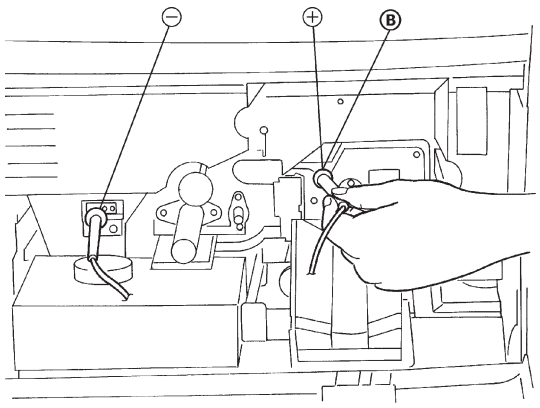

Developer bias output measurement

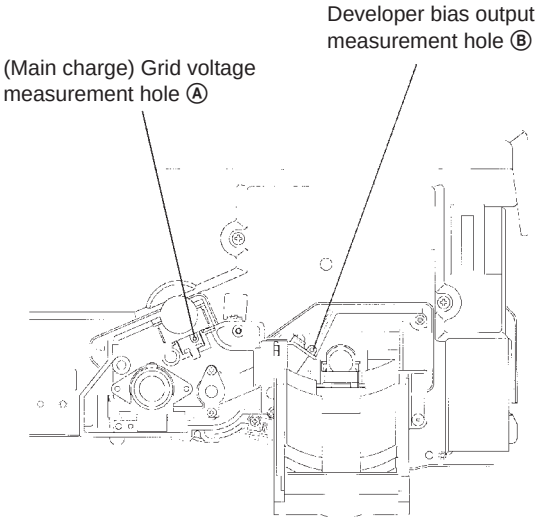

(4) Turn on the door switch using the door switch jig.

(5) Turn on the main switch while pressing the “0” and “5” keys at the same time. The following display appears indicating that the adjustment mode has been entered.

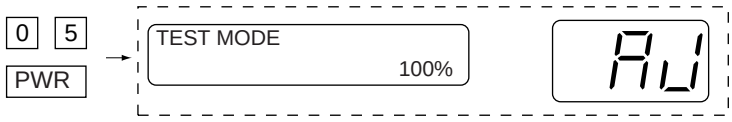

(6) Use the digital keys to input the adjustment code (38, 39, 40 or 43) and then press the PRINT key. The following display will appear and the drum will rotate, and the charging transformer will be turned on with the discharge lamp on. However the adjustment code 43 is only the input of adjustment value Ⓐ.

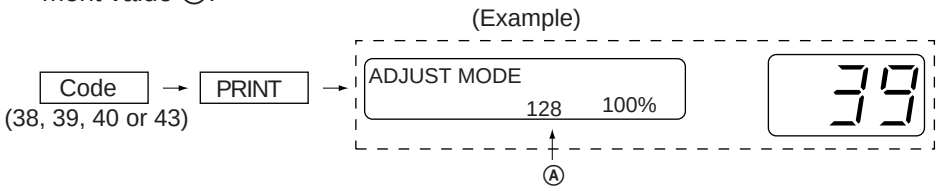

(7) Check the reading of the digital tester:

- –635V ±5V for the main charger
- –2.10V ±0.2V for the transfer charger
- AC 2.80V ±0.3V (true RMS) or AC 2.52V ±0.3V (average voltage) for the separation charger
- DC –100V ±5V for the developer bias. (Use the code 38 for the output check, and the code 43 for the input of the adjustment value Ⓐ.

(8) If adjustment is necessary, change the value Ⓐ using the ZOOM keys.

When the measurements are completed, press the INTERRUPT key to stop the drum rotation, extinguish the discharge lamp and turn off the charger transformer. Also the value in Ⓐ is stored in the BC-RAM. The following display will appear:

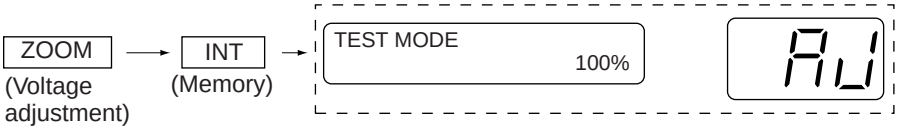

[Note: When separation output is adjusted]

If pockmarks occur on halftone copies, reduce the separation output. If poor separation of paper from the drum occurs or when the user normally uses thin paper, increase the separation output. But be careful not to increase or decrease the separation output excessively.

[A] Adjustment and detection of separation output of high-voltage transformer

Pockmarks and defective paper separation may be caused by various other reasons as well as poor adjustment of the separation output. So, make the following checks before starting to adjust the separation output.

[B] Items to check before adjustment

(1) Charger wires
(2) Developer unit
(3) Toner density in the developer unit
(4) Copy paper and paper feeding
(5) Aligning roller rotation
(6) Main charger output
(7) Transfer charger output
(8) Developer bias output

[C] Output adjustment procedure

Caution:

- When pockmarks occur:
  When pockmarks (irregularities) are generated on the halftone areas, reduce the output in accord ance with the adjustment procedure described on the next page.
  Note: Do not reduce the output excessively. Otherwise, the separation ability will decrease.
- Defective separation:
  When defective paper separation occurs despite the charger wires being clean, or when the user is likely to use a large quantity of thin paper, raise the output in accordance with the adjustment procedure described on the next page.
  Note: Do not increase the output excessively, otherwise pockmarks will be generated and the separation ability will decrease.
- When developer bias output is adjusted:
  If backgrounding occurs over the entire copy with no under-exposure conditions, increase the bias output. However, increasing it excessively would result in poor image contrast, bias leakage or adherence of carrier powder to the drum surface.

1.7 Installation of Carriage Drive Wire

When the carriage drive wire is replaced, attach the new wire as shown:

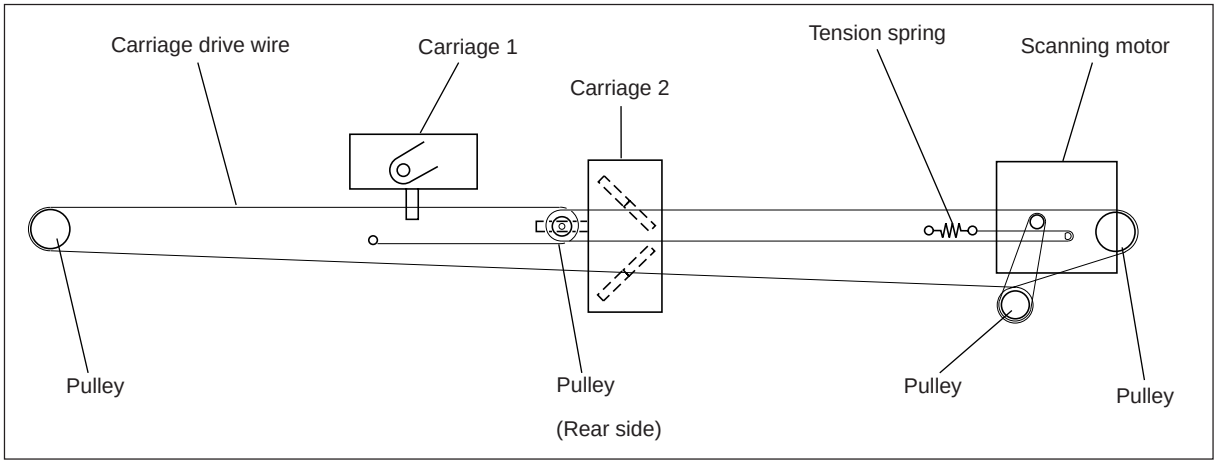

1.7.1 Belt tension adjustment

(1) For this model, it is unnecessary to adjust the carriage drive wire tension.

1.7.2 Adjustment of carriage 1 and carriage 2

(1) Loosen the 3 screws fixing carriage-1 (2 screws) and -2 (1 screw in front) to the wire.

(2) While pressing carriage-2 against the exit side frame (A & B), tighten the carriage-2 fixing screws.

(3) Also while pressing carriages 1 and 2 against the exit side frame (C & D), tighten the carriage-1 fixing screws.

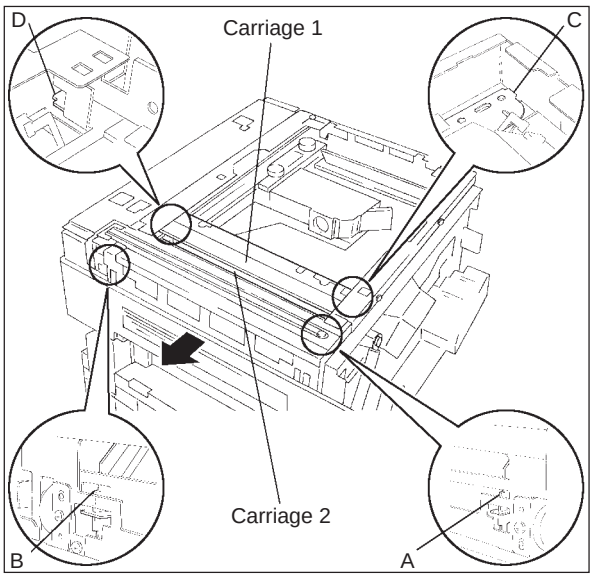

1.8 Adjustment of Mirrors and Lens

Checking and adjustment regarding the mirrors and the lens should be made by using the following procedure:

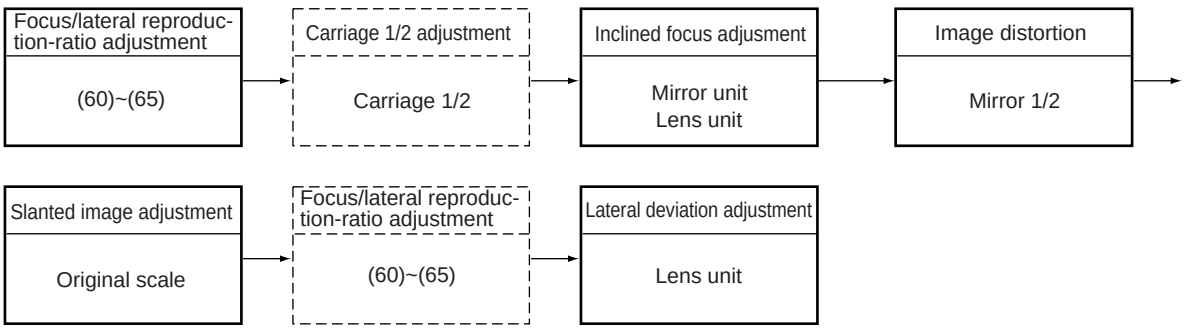

Note: In the dotted-line boxes are the items which normally do not require adjustment.

1.8.1 Adjustment of focus and horizontal reproduction ratio

If the lens has been replaced or the adjustment of focus and horizontal reproduction ratio is necessary, the following adjustment data must be entered.

			Allowable input value	Center value
Lens position data	(100%)	(Adjustment mode, code 60)	0 to 40	20
Mirror position data	(100%)	(Adjustment mode, code 61)	0 to 40	20
Lens position data	(200%)	(Adjustment mode, code 62)	0 to 40	20
Mirror position data	(200%)	(Adjustment mode, code 63)	0 to 40	20
Lens position data	(50%)	(Adjustment mode, code 64)	0 to 40	20
Mirror position data	(50%)	(Adjustment mode, code 65)	0 to 40	20

The adjustment should be performed in the following order.

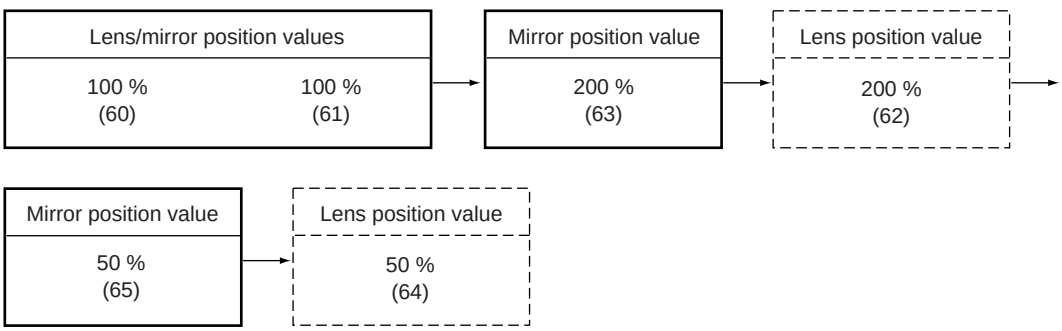

Note: In the dotted-line boxes are the items which normally do not require adjustment.

[A] Focus and horizontal reproduction ratio adjustment for 100%

(1) Make an actual size-copy and check the focus and horizontal reproduction ratio. If adjustment is necessary, the adjustment data must be re-entered as follows.

- Poor focus and reduced horizontal reproduction ratio: reduce the mirror position data (code 61).
- Poor focus and enlarged horizonal reproduction ratio: increase the mirror position data (code 61).
- Good focus, but reduced horizontal reproduction ratio: increase the lens position data (code 60).
- Good focus, but enlarged horizontal reproduction ratio: decrease the lens position data (code 60).

Notes:

1. The focus and horizontal reproduction ratio change when the lens or the mirror is moved. But the lens position data mainly change the horizontal reproduction ratio and the mirror position data mainly change the focus.
2. The horizontal reproduction ratio should be adjusted after adjusting the focus, then check the focus again.
3. If the horizontal reproduction ratio is incorrect (within ±0.5%), it will not be possible to achieve good focusing.
4. Because of the lens characteristics, there is a greater margin for focusing at the center of the image than at the corners.
5. For 200% and 50%, the horizontal reproduction ratio (lens position) will automatically assume the optimum condition when the focus (mirror position) is adjusted. So the horizontal reproduction ratio adjustment is not normally necessary.

[B] Focus and horizontal reproduction ratio adjustment for 200%

(1) Make a 200% copy and check the focus and horizontal reproduction ratio.

(2) If the focus and horizontal reproduction ratio are poor, re-enter the data of code 63 to adjust them. Adjustment of the code 62 is usually unnecessary.

[C] Focus and horizontal reproduction ratio adjustment for 50%

(1) Make a 50% copy and check the focus and horizontal reproduction ratio.

(2) If the focus and horizontal reproduction are poor, re-enter the data of code 65 to adjust them. Adjustment of the code 64 is usually unnecessary.

1.8.2 Optical axis adjustment

When the focus is incorrect at the front or rear side, adjust the focus by moving the mirror unit as follows:

<Procedure> (Use the code “61” in the test mode “05”)

(1) Turn on the power while pressing the “0” and “5” keys simultaneously. The display “TEST MODE 100% AJ” will come on.

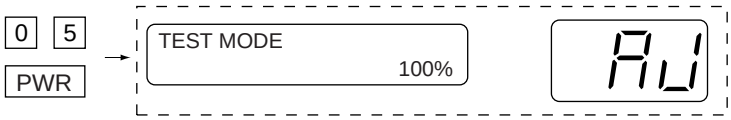

(2) Input “61”, press the PRINT key, and the current mirror setting position will be displayed (“09” for example). Write this number down.

(3) Input another value (between 0 to 40) and press the INTERRUPT key to establish setting, then press the ENERGY SAVER key and make a copy to check the focus.

(4) Repeat steps (2) and (3) until the front side focus has been corrected. Write down the value when it is focused.

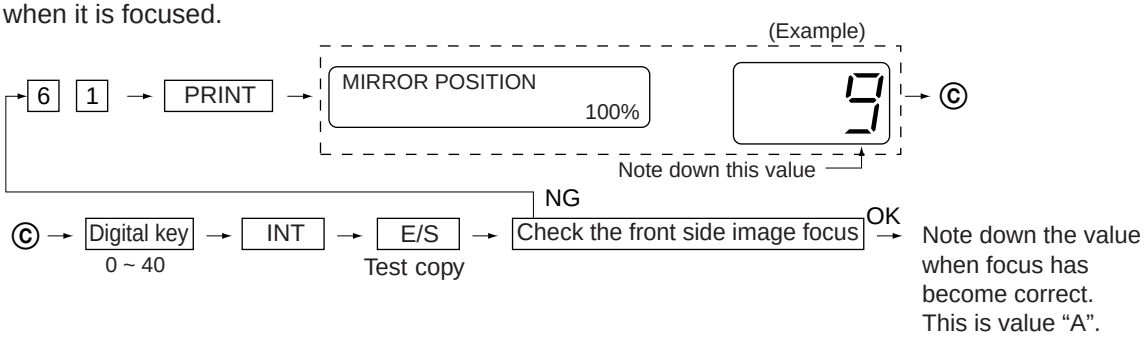

(5) Next, repeat steps (2) and (3) until the rear side focus has been corrected. Write this number down.

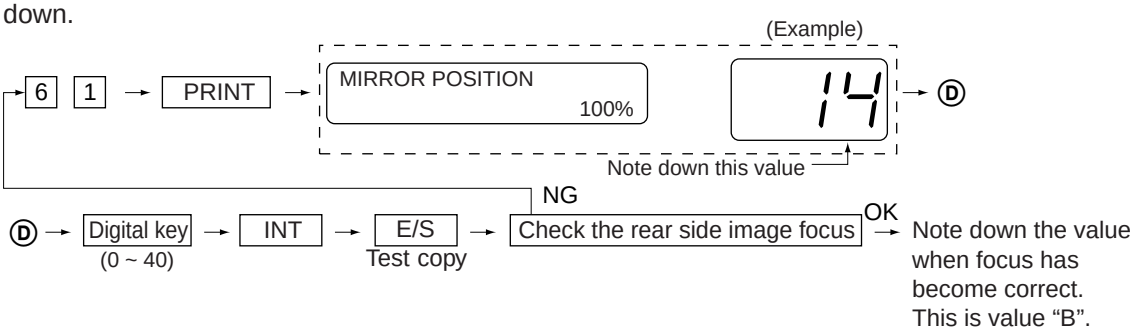

(6) Set the setting to the value established in step (5) and turn off the main switch.

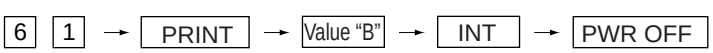

(7) Remove the feed cover.

(8) Slant the mirror unit by turning the adjustment screw for the mirror unit. Compare values established in steps (4) (front side) and (5) (rear side).
In case of value “A” > value “B”: rotate the screw in direction of the arrow A.
In case of value “A” < value “B”: rotate the screw in direction of the arrow B.

(9) Reinstall the feed cover.

(10) Make a copy to check the focus. If necessary, repeat 1 to 8.

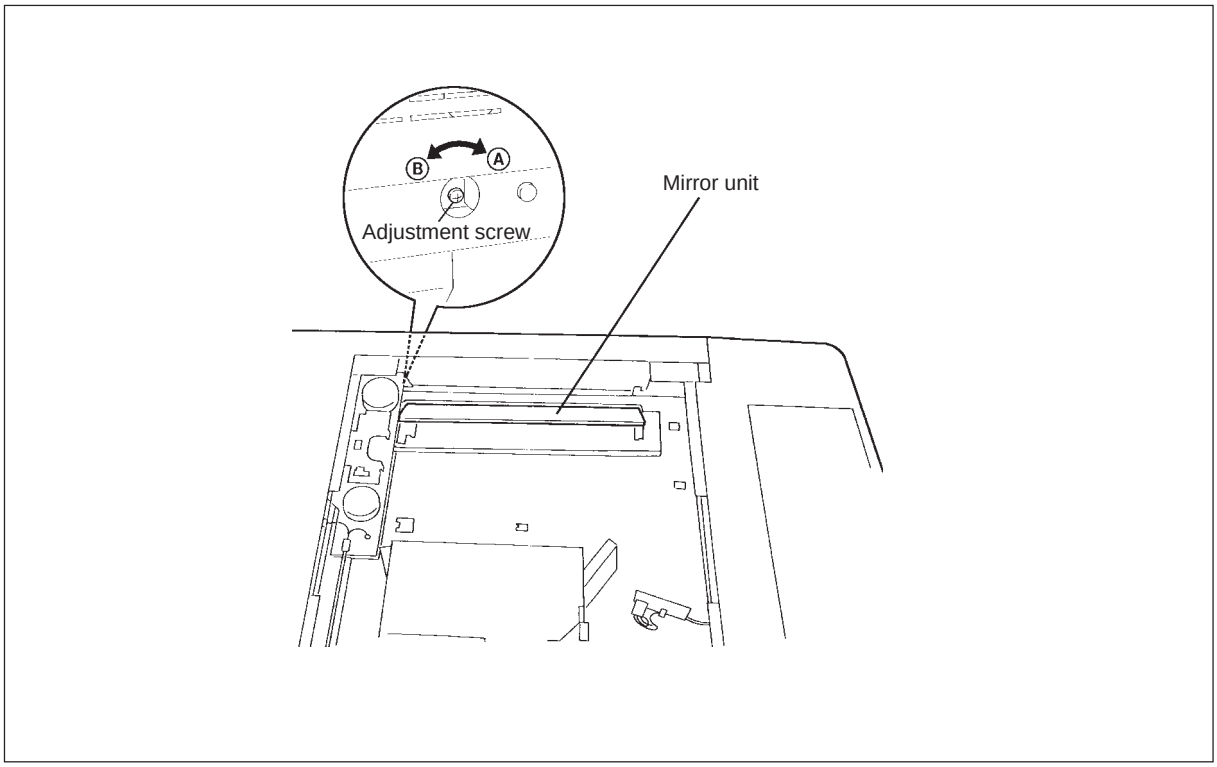

1.8.3 Image distortion

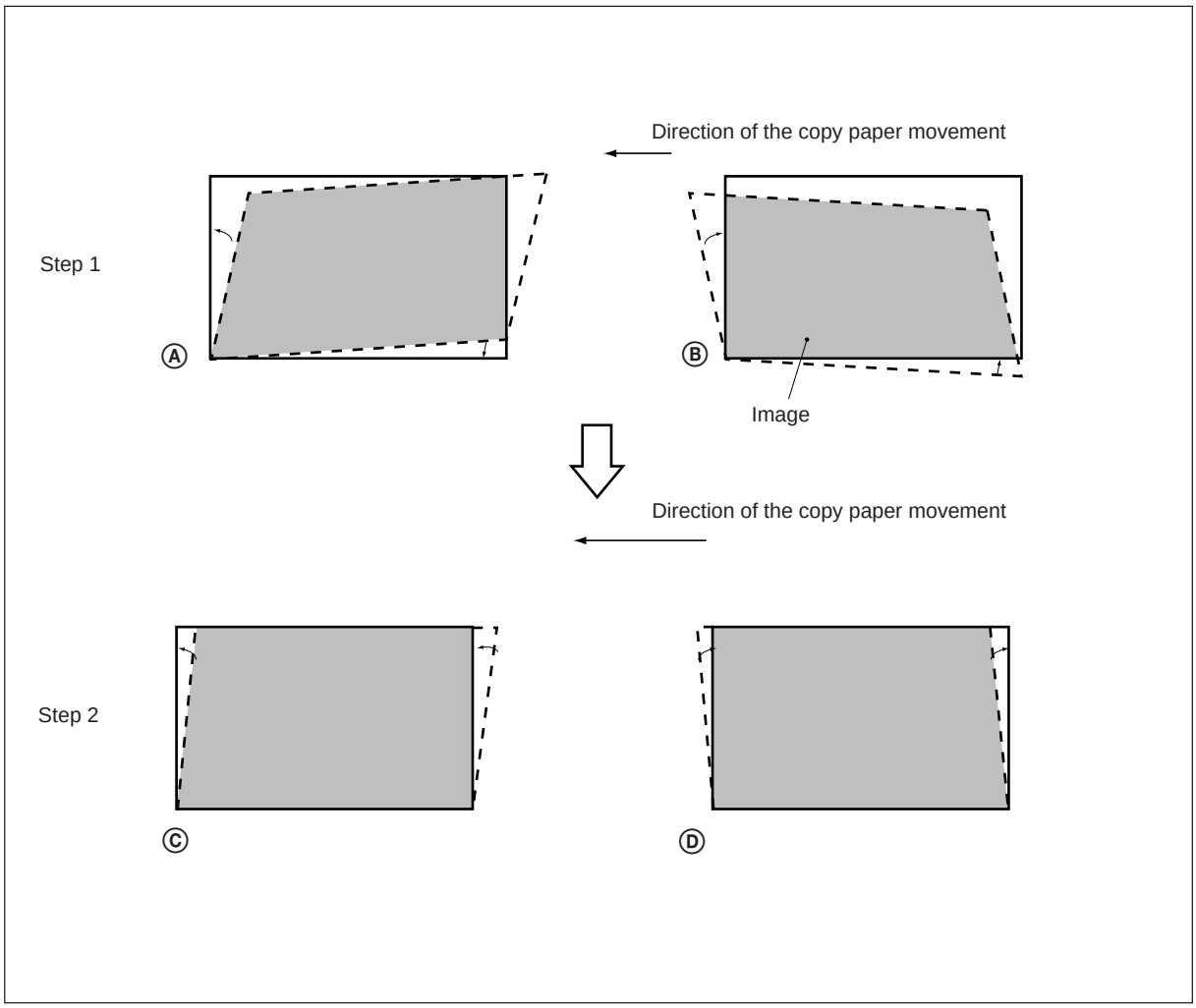

<Procedure>

Removing the original glass. (Adjustment order: step 1 → step 2)

Step 1

In case of Ⓐ:

Loosen the screw (CCW).

In case of Ⓑ:

Tighten the mirror 2 adjustment screw (CW).

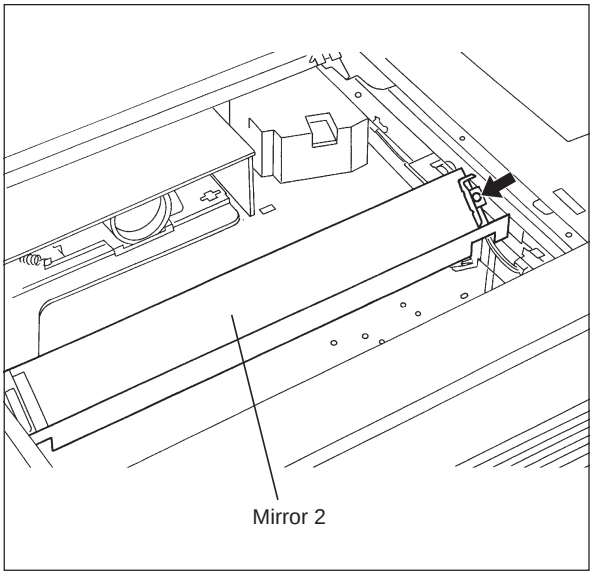

Step 2

In case of Ⓒ:

Tighten the mirror 1 adjustment screw (CW).

→ Normal image

In case of Ⓓ:

Loosen the screw (CCW).

→ Normal image

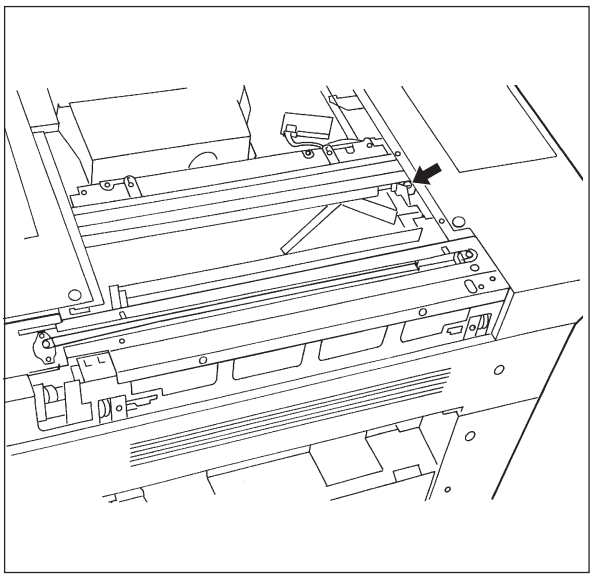

1.8.4 Image inclination

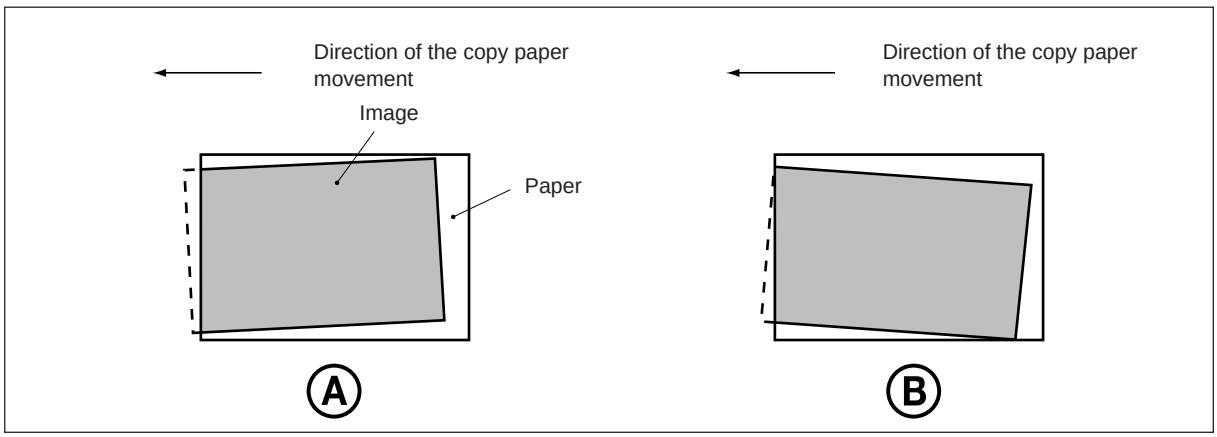

If inclination of the image occurs even though the edge of the original is properly aligned with the scale, adjust by moving the original scale.

In case of Ⓐ

- Move the original scale in the direction indicated by ➡

In case of Ⓑ

- Move the original scale in the direction indicated by ➡

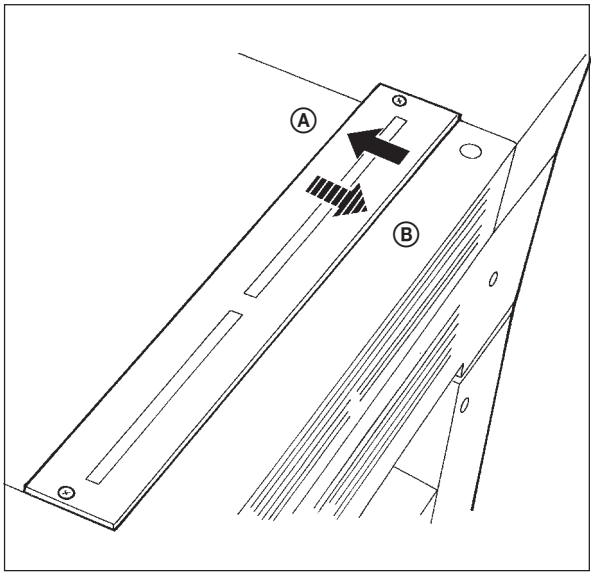

1.8.5 Side deviation of lens unit

(1) Remove the optical cover and the lens cover.

(2) Loosen the lens unit fixing 2 screws.

(3) The lens unit position can be adjusted from the front to the rear or the rear to the front.

- If the center of image deviates toward the rear, adjust the lens unit toward the front (Ⓑ) by turning the adjustment screw clockwise.
- If the center of image deviates toward the front, adjust the lens unit toward the rear (Ⓐ) by turning the adjustment screw counterclockwise.

Note: The adjustment should be made making use of the 1 mm spaced marks impressed on the frame.

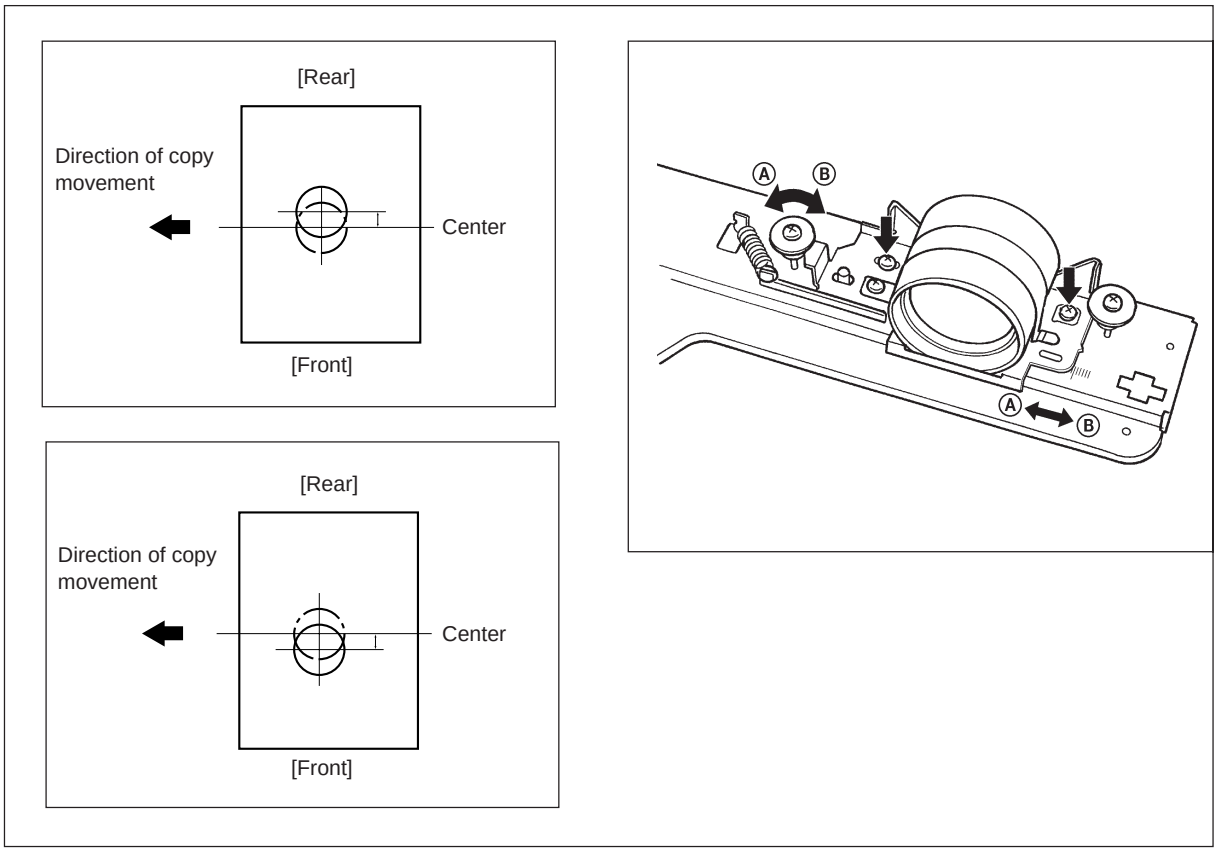

1.9 Light Distribution

When the exposure is different at the front and rear sides, adjust the light distribution by moving the distribution plate as follows:

Note: When this adjustment is performed, the overall exposure may change. So be sure to check or adjust the exposure.

<Procedure>

(1) Make a copy with slightly dark manual exposure.

(2) To adjust the light distribution:
- Place the paper on the manual feed tray to move the carriage-1 toward the paper feed side.
- Turn off the power.
- Remove the glass fix (2 screws).
- Reposition the adjustment plate by loosening the appropriate screws to change the light distribution in the area relating to the given plate.
- Loosen the screws and move the adjustment plates ① – ⑤ in the direction of the arrow (⟵) according to the uneven light distribution.

Notes: 1. The rear adjustment plates control the light distribution of the front side of the copy.
2. Adjustment plate → Left: Image → Dark
Adjustment plate → Right: Image → Light

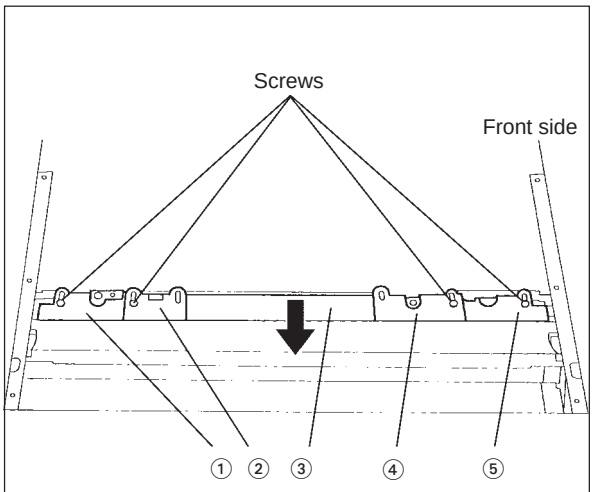

Light distribution adjustment plates

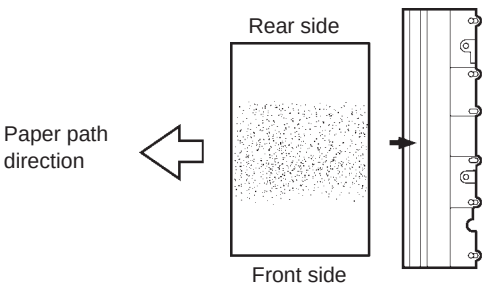

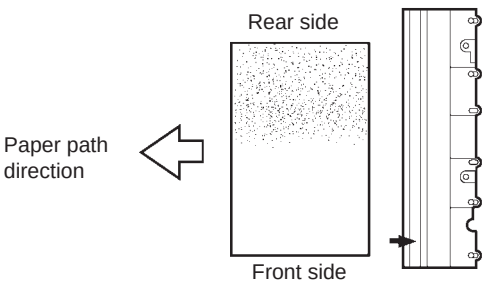

Example 1: When the front side is too light

• Move the adjustment plates ① – ③ in the direction of the arrow (⟵).

Example 2: When the rear side is too light

• Move the adjustment plates ③ – ⑤ in the direction of the arrow (⟵).

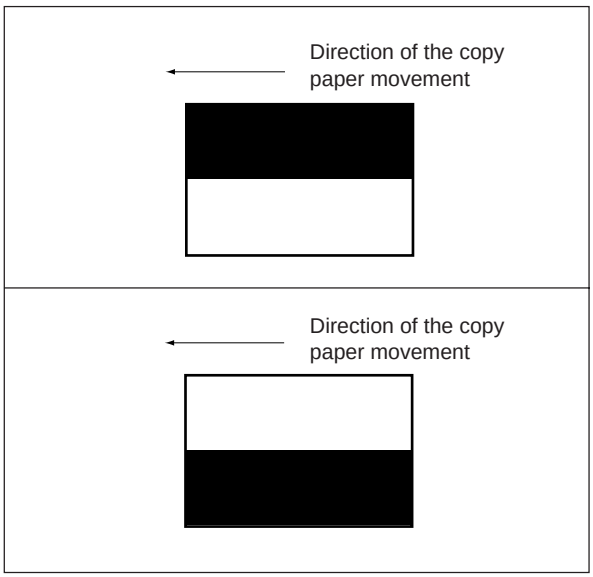

When this adjustment is performed, the overall exposure may change. So, be sure to make a copy to check. If necessary, make exposure adjustment referring to “1.4 Exposure Adjustment”

1.10 Adjustment of Gap between Drum and Sleeve

This model uses a hit-drum method using the guide roller, and no adjustment is necessary.

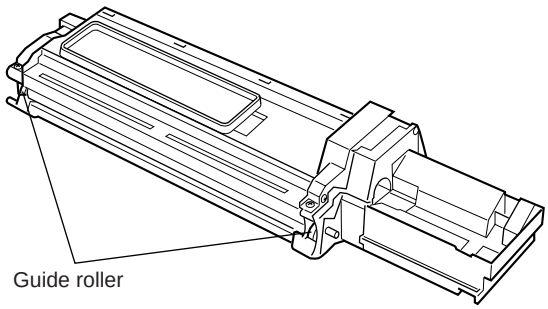

1.11 Adjustment of Developer Polarity Position

(1) Remove the developer unit from the machine.

(2) Adjust at rear adjustment plate. Loosen the fixing screw of the adjustment plate and move the plate according to the stamped mark on the plate as a guide line to make adjustment. As this is already adjusted with a special jig at the time of shipping from the factory, do not loosen the screw unnecessarily.

When loosening the screw for disassembly, etc., remember the position of the adjustment plate and reinstall it where it was.

(During the replacement of the magnetic roller, adjust the developer the developer polarity position.)

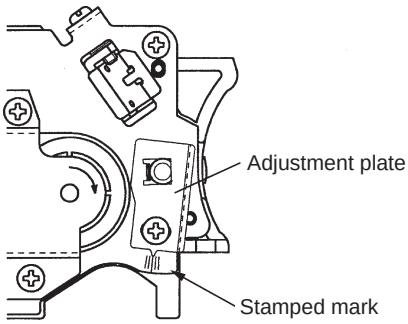

Height of developer polarity position: H=34.7 mm

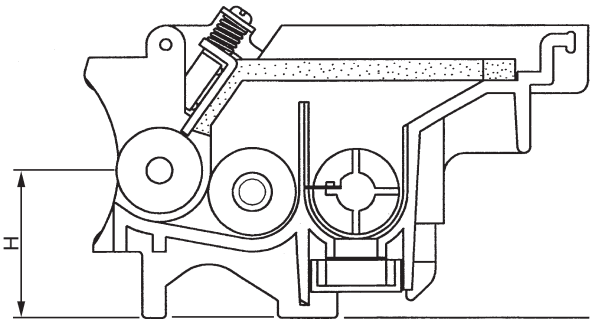

1.12 Doctor Sleeve Gap Adjustment

Tools required: Doctor sleeve jig

Method

(1) Remove the developer unit from machine, take out the upper cover (2 screws), and discharge the developer material.

(2) Place the developer unit on a flat surface.

(3) Turn the leveler adjustment screws and adjust it using the step “0.45” into the gap between the sleeve and leveler.

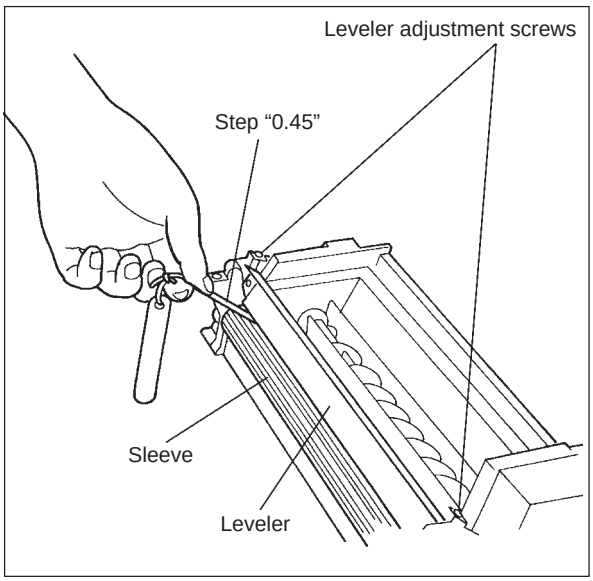

(4) Check that step “0.40” can move smoothly in the front and rear direction in the gap between the sleeve and leveler, while step “0.50” cannot be inserted.

(5) Reassemble the upper cover of developer unit.

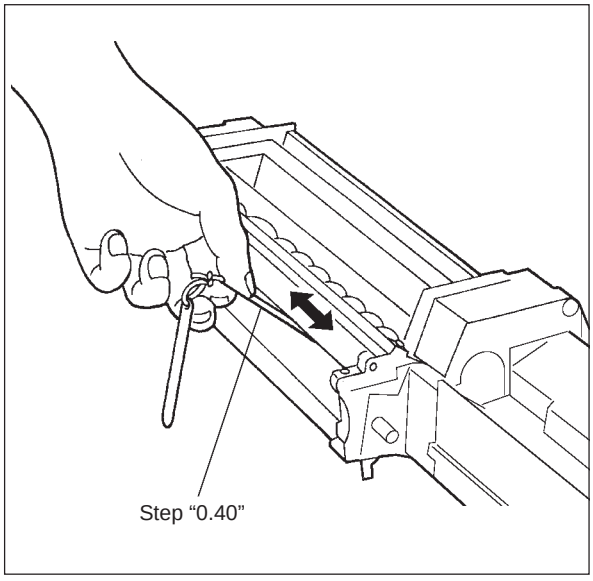

Notes:
1. Align the position of sleeve marking with that of the leveler, when checking or adjusting the gap between the sleeve and the leveler.
2. When assembling the upper cover, fasten the hooks with a screw after fully inserting them.
3. After reassembling the upper cover, pay attention to avoid overlapping of the side seal (front and rear) and the rubber seal.

1.13 ADU Adjustment

1.13.1 Adjusting the stack guide unit in position

In duplex copying using the ADU, the difference in side deviation on both sides of the copy should be within ±3 mm. If not, make adjustment as follows:

After stacking sheets of paper on the stack guide, check that the gap between the side stopper and the edge of the sheet is 1.5 ± 1 mm. To adjust the gap, loosen the side switch bracket fixing screw. Move the bracket according to the scale. After moving the bracket, initialize the ADU. Check the gap between the side guide and the paper.

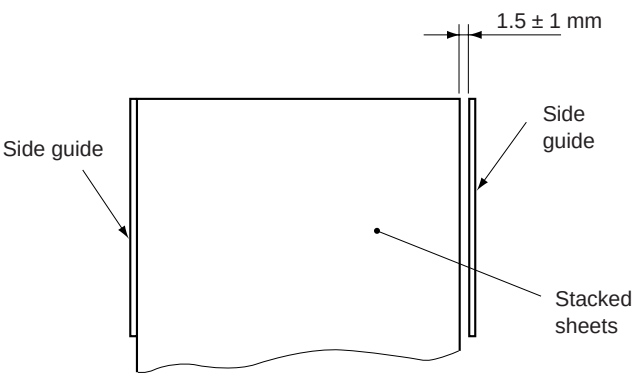

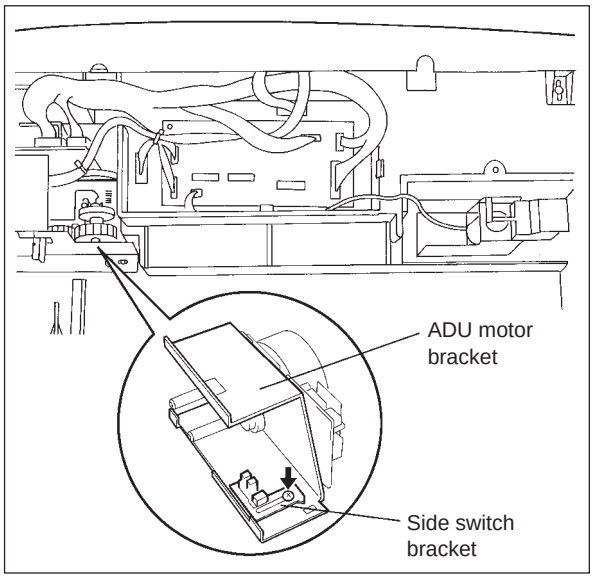

1.13.2 Adjusting ADU side deviation

To adjust the side deviation of the image of duplexed copies (i.e. image on the second side):

(1) When the 5 fixing screws at the front cover of the ADU are loosened, the ADU can be adjusted in the front/rear direction by a maximum of 3 mm.

(2) If the center of the image is shifted toward the rear side, move the ADU front cover to the rear side the same distance (as the image is shifted) and tighten the screw.

(3) If the center of the image is shifted toward the front side, move the ADU front cover to the front side the same distance (as the image is shifted) and tighten the screw.

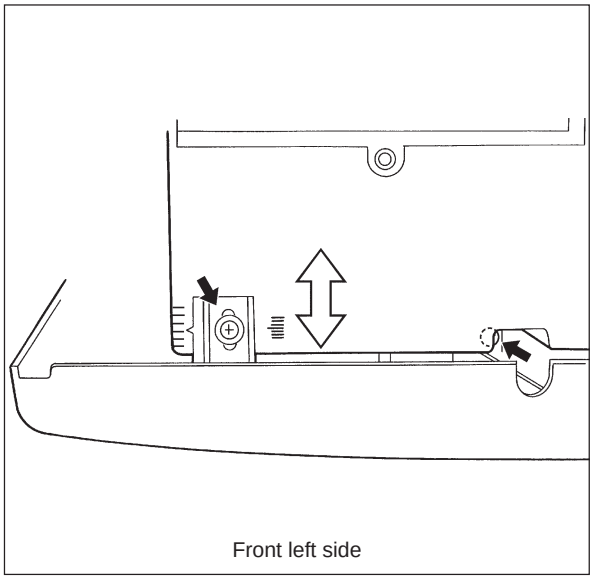

Front left side

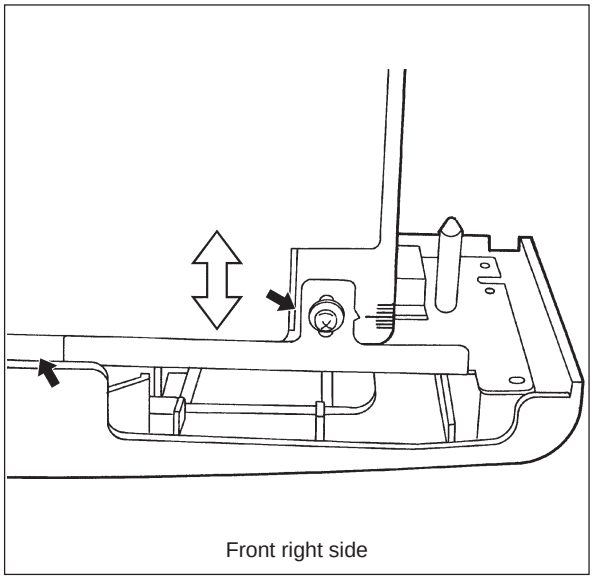

Front right side

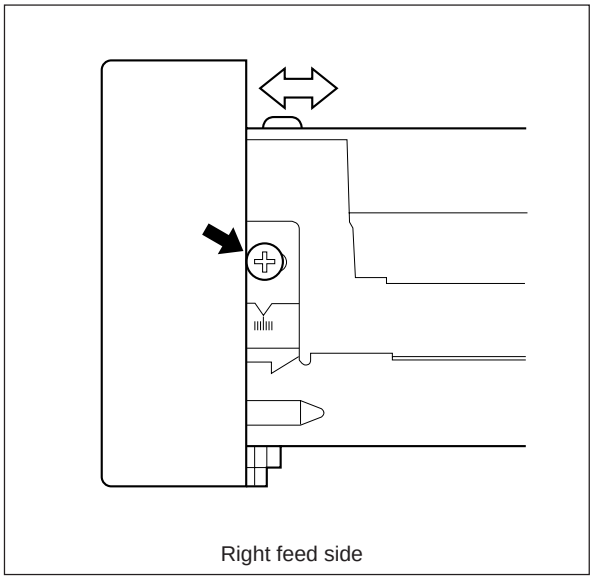

Right feed side

1.14 Adjusting Cassette Side Deviation

The procedure for adjusting cassette side deviation for the copier and the PFP is the same as in 1.13.2.

2. PERIODICAL MAINTENANCE

2.1 Inspection every 80,000 Copies

(1) Preparation

① Ask the key operator about the present machine conditions and note them down.

② Before starting the maintenance work, make and retain a few sample copies for later comparison.

③ Turn off the power switch and disconnect the power cord plug.

(2) The periodic inspection should be conducted in accordance with the Periodic Inspection Check List shown below. Perform the inspection by referring to the figures, as well as to the explanations in the Service Manual when necessary.

(3) After the inspection has been completed, plug in the machine and turn the power switch on, and confirm the general operation of the machine by making a few copies and comparing them to those made previously.

2.2 Inspection and Overhaul every 240,000 Copies

(1) Replace all the consumables.

(2) Check to see if there is any damage to the parts of driving section (gear, pulley, timing belt, etc.). Replace parts on principle if damaged.

(3) Check to see if there is any damage or peeling of adhered parts (tape, Mylar sheet, etc.). Replace any affected parts.

(4) Check to see if all the switches and sensors operate properly. Replace them if they are not operating properly.

(5) Clean the inside of the machine thoroughly.

2.3 Periodic Inspection Check List

Symbols used in the Periodic Inspection Check List

<table>
<tr><th>Cleaning</th><th>Lubrication</th><th>Replacement</th><th>Date</th><th></th></tr>
<tr><td rowspan="4">A: Cleaning with alcohol
P: Cleaning with heat roller cleaner (RC60)
◯: Cleaning with soft pad, cloth, or cleaner (vacuum cleaner)</td><td>L: Launa 40</td><td rowspan="4">80: Every 80,000 copies
160: Every 160,000 copies
Same thereafter
△: Replace in event of deformation or other damage</td><td>Customer's name</td><td></td></tr>
<tr><td>Application</td><td></td><td></td></tr>
<tr><td rowspan="2">S: Silicone Oil
W: White grease (Molycoat)</td><td>Machine No.</td><td></td></tr>
<tr><td>Inspector</td><td></td></tr>
<tr><td></td><td>Remarks</td><td></td></tr>
</table>

PERIODIC INSPECTION CHECK LIST

Area	Item to check	Clean at 80,000 copies	Lubricate at 80,000 copies	Replace x 1,000	Check while on	Remarks
Cleaner	1. Overall unit	◯				
	2. Main blade	◯		80		*1
	3. Toner bag			20		Conducted by key operator
	4. Recovery blade	◯		△		*2
	5. Drum bushing	◯				
	6. Separation claw	◯		80 △	◯	*3
Drum	7. Drum shaft	◯ or (A)				
	8. Drum			80 or more		*4
	9. Ozone filter	◯		80		
Original holder	10. Glass	◯				
	11. Original cover	◯ or (A)				
Optical system	12. Mirror 1	◯				
	13. Mirror 2	◯				
	14. Mirror 3	◯				
	15. Mirror 4	◯				
	16. Mirror 5	◯				
	17. Mirror 6	◯				
	18. Slit glass	◯				Both sides
	19. Reflector	◯				
	20. Lens	◯				
	21. Exposure lamp			△	◯	
	22. Copy area indicator				◯	
	23. AES	◯			◯	
	24. APS	◯			◯	
	25. Reproduction mechanism (mirror)				◯	
	26. Reproduction mechanism (lens)				◯	
	27. Slider sheet (front, rear)	◯ or A		△		
	28. Air filter	◯		△		*5
Charger	29. Case	◯				*6
	30. LED eraser array	◯				
	31. Charger wire	◯		80 △	◯	*6
	32. Terminal contact	◯				
	33. Grid	◯		80		*7

Area	Item to check	Clean at 80,000 copies	Lubricate at 80,000 copies	Replace X 1,000	Check while on	Remarks
Develop-er unit	34. Overall unit	◯				
	35. Developer material			80		*8
	36. Front shield	◯		△		*9
	37. Guide roller	◯ or (A)		△		
Paper feed system	38. Pick-up roller	A		80 △		
	39. Feed roller	A		80 △		
	40. Separation roller	A		80 △		
	41. Paper feed system drive gears (tooth faces)		W			
	42. Aligning roller	A		△		
	43. Paper guide	◯				
	44. Brush	◯		△		
	45. Transport belt	◯		△		
	46. Separation pad	A		80△		
Fuser unit	47. Heat roller (H/R)	◯ or P		160		*10
	48. Fuser entrance guide	◯ or P				
	49. Pressure roller (P/R)	◯ or P		160		*11
	50. Cleaning felt roller			80		*12
	51. Thermistor	◯ or P		△		
	52. Scraper (for H/R)	◯ or P		80		*13
	53. Fuser exit guide	◯ or P				
	54. Exit roller	A				
	55. Scraper (for P/R)	◯ or P		△		
	56. Heat roller cleaning blade	A		△		*14
Drive system	57. H/R drive gear (tooth faces and idler shafts)		S			
	58. GCB bushing (including main motor section, paper feed section and fuser unit)		L			
	60. Main motor drive unit gears		W			*16
	61. Toner cartridge drive gear shaft		W			
Others	62. Clamshell lock section		W			*18

ADU

		ADU counter				
Area	Item to check	Clean at 80,000 copies	Lubricate None	Replace x 1,000	Check while on	Remarks
ADU	71. Pick-up roller			80		
	72. Feed roller (main)			80		
	73. Feed roller (sub)	A				
	74. Separation roller			80		
	75. Transport roller	A				
	76. Empty sensor	◯				
	77. Jam sensor	◯				
	78. Side guide sensor	◯				
	79. End sensor	◯				

Lubrication point: None

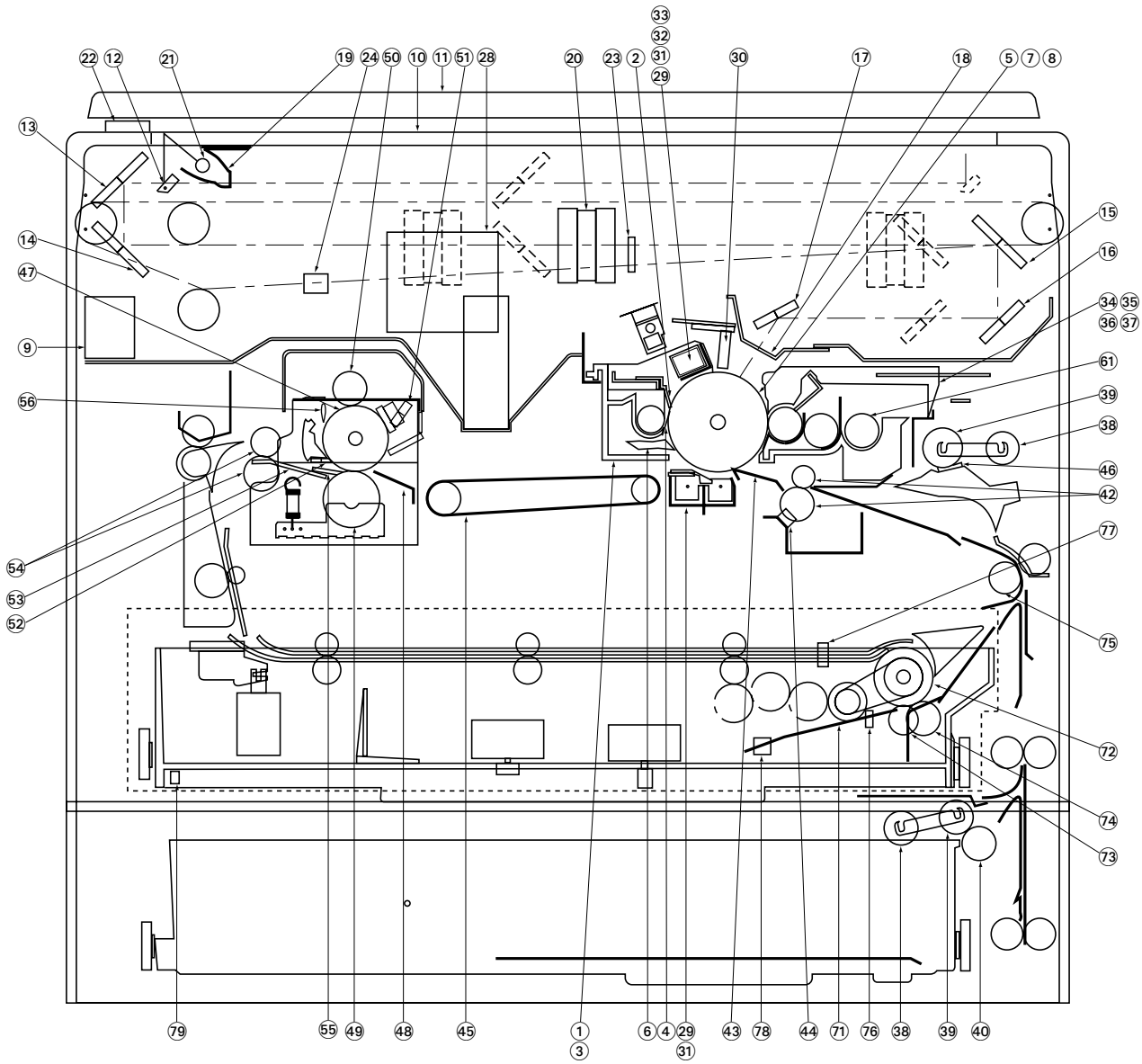

Front sectional view

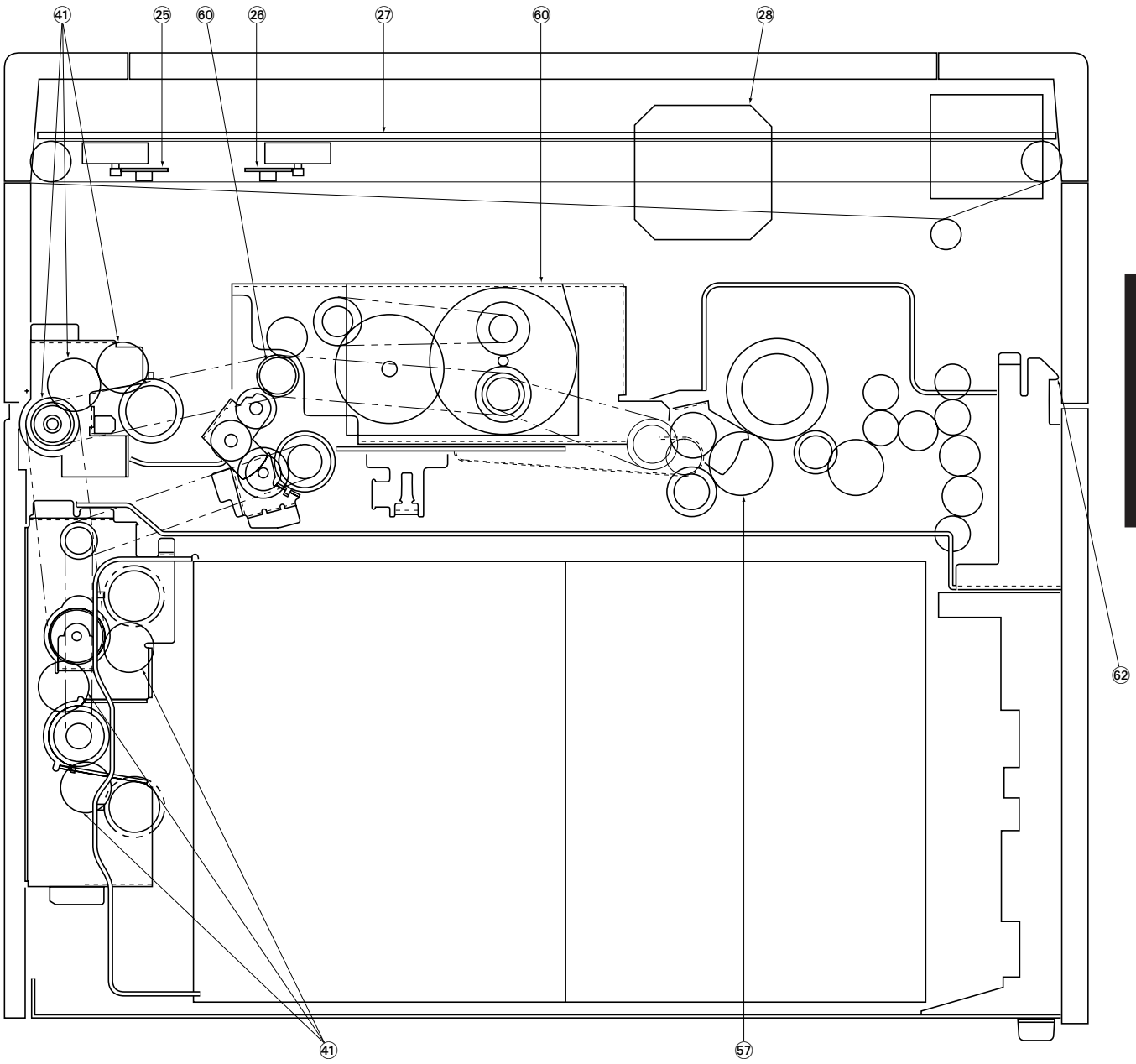

Rear side view

Explanation of items in the “REMARKS” column of the Periodic Inspection Check List

*1 Main blade

Clean the main blade with a cloth which should be soaked in water and then squeezed tightly. If poor cleaning occurs due to the adhesion of paper dust, etc., the edge of the blade has been damaged.

Replace the blade regardless of the number of copies made so far.

*2 Recovery blade

If the edge of the blade is damaged, replace the blade regardless of the number of copies made so far.

*3 Separation claw

If the tip of the separation claw has been damaged, replace the claw regardless of the number of copies made so far.

Clean the tip of the claw by lightly wiping with a dry cloth. After cleaning, make sure to remove bits of lint from the claw. In addition, be sure to apply patting powder (lubricant) to the separation claw after cleaning the claw and when replacing the claw or drum.

*4 Drum

Refer to section “3.2 Inspection and Cleaning OPC Drum”.

*5 Air filter

If the air filter is dirty, replace it.

*6 Charger wire and case

Clean the inner surface of the charger case and the charger wire with a cloth which should be soaked in water and then squeezed tightly.

*7 Grid

Remove the grid from the main charger. Clean the grid with a pad (service part) moistened with water.

*8 Developer material

After replacing the developer material, be sure to adjust the corresponding auto-toner sensor.

*9 Front shield

Clean it with a cloth which should be soaked in water and then squeezed tightly.

*10 Heat roller
*11 Pressure roller
*12 Cleaning felt roller

Refer to section “3.5 Checking and Cleaning Upper and Lower Heater Roller”.

Refer to section “3.4 Checking and Replacing Cleaning Felt Roller” of this Service Handbook.

*13 Scraper

If the tip of any of the scraper claws is chipped, replace it regardless of the number of copies made so far. If toner adhering to the scraper claw is forcibly scraped off, it may be damaged.

Therefore, if the tip of the claw is heavily coated with toner, replace the claw.

*14 Heat roller cleaning blade

Refer to section “3.6 Checking and Cleaning Heat Roller Cleaning Blade” of this Service Handbook.

*16 Apply white grease to the main motor drive unit gears (shown arrow).

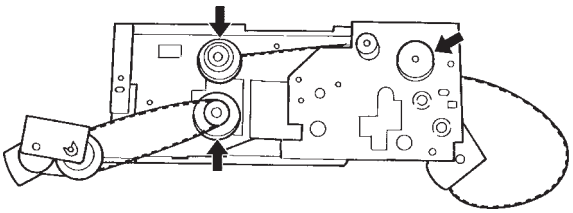

*18 Clamshell lock section

Apply white grease to the clamshell lock section.

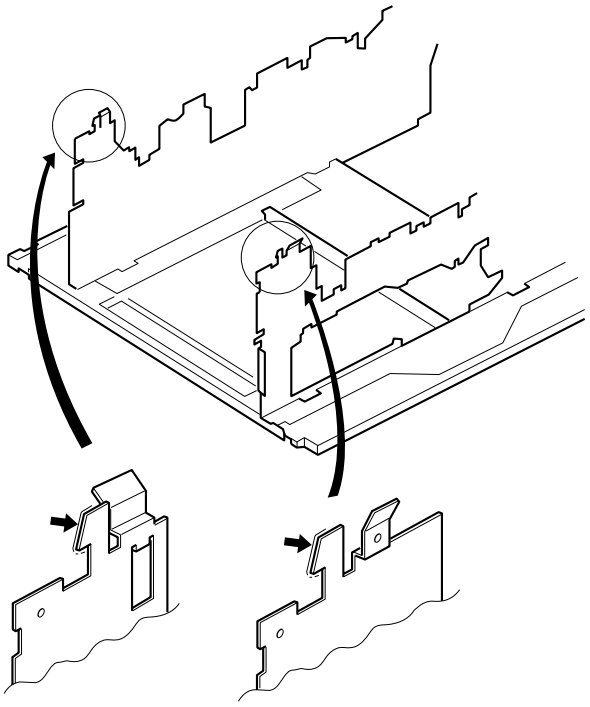

2.4 Oiling Cycle Table

*Number	Item to Lubricate	Type of Oil	Oiling Cycle Number of copies x 1000
46	Paper-feed system drive gears (tooth faces)	White grease	80
57	Heat roller drive gears (tooth faces and idler shafts)	Silicone oil	80
58	GCB bushings (including paper feed section and fuser unit)	Launa 40	80
59	Cleaner drive gear	White grease	80
60	Timing pulley shafts	White grease	80
61	Toner cartridge drive gear shaft	White grease	80
62	Clamshell lock section	White grease	80

* The number is the same as that in the Periodic Inspection Check List.

Note: Do not apply oil to the rollers, belt and belt pulley.

2.5 Replacement Schedule of Disposable Parts and Supplies

*Number	Part Name	Code	Replacement Cycle	Parts List	
			(Number of copies x 1000)	Page	Item
2	Main (cleaning) blade	BL-2060D	80	22	4
3	Toner bag	TB-2060	20	24	3
6	Drum separation claw	–	80	22	14
8	Drum	OD-2060	80	24	1
31	Charger wire	–	80	20 21	6 9
33	Grid	–	80	20	9
35	Developer material	ZD-2060	80	101	3
47	Teflon roller (upper heat roller)	HR-2060-U	160	25	2
49	Rubber roller (lower heat roller)	HR-2060-L	160	26	4
50	Cleaning felt roller	SR-2060-L	80	25	12
52	Scraper (for heat roller)	–	80	25	16

* The number is the same as that in the Periodic Inspection Check List.

2.6 Jig List

Name	Parts List	
	Page	Item
Door switch jig	100	1
Developer nozzle jig	100	2
Grid cleaning pad	100	6
Wire holder jig	100	3
Doctor sleeve jig	100	4
Recovery blade jig	100	5
Developer unit cap jig	100	7
Test developer unit	100	8

3. PRECAUTIONS FOR STORING AND HANDLING SUPPLIES

3.1 Precautions for Storing TOSHIBA Supplies

A. Toner and Developer

Toner and developer should be stored in a place where the ambient temperature is below 35˚C (95˚F) and should also be protected against direct sunlight during transportation.

B. OPC Drum

Similarly to the toner and developer, selenium drums should be stored in a dark place where the ambient temperature is below 35˚C. Be sure to avoid those places where drums may be subjected to high humidity, chemicals and/or their fumes.

C. Cleaning Blade and Heat-Roller Blade

These items should be stored in a flat place where the ambient temperature is below 35˚C and should also be protected against high humidity, chemicals and/or their fumes.

D. Heat Roller and Pressure Roller

Avoid those places where heat rollers may be subjected to high humidity, chemicals and/or their fumes.

E. Copy Paper

Avoid storing copy paper in a place where the humidity is high.

After a package is opened, be sure to place and store it in a storage bag. During wet or winter seasons where the temperature varies much from high to low due to room heating, etc. or where the humidity is high, pull out the cassette from the machine, and put it together with the paper inside in a storage bag upon the completion of copying for the day. Also instruct the users to do the same.

3.2 Inspection and Cleaning OPC Drum

A. Precautions for Handling

(1) Use of gloves

If fingerprints or oils adhere to the drum surface, characteristics of the photoconductor may degrade, affecting the quality of the copy image; therefore, do not touch the drum surface with your bare hands.

(2) Removing and reinstalling drums

Since the OPC drum surface is very sensitive, be sure to handle the drum carefully when installing and removing it so as not damage its surface.

Be sure to apply “patting powder” (lubricant) to the entire surface of the drum and separation claw before installing the drum into the machine.

Notes: 1. Application of the patting powder is to reduce the friction between the drum, cleaning blade, and separation claw. If the application of patting powder is neglected, the drum and cleaning blade may be damaged.

2. When paper fibers adhere to the cleaning blade edge, they may reduce the cleaning efficiency and, in addition, may damage the blade and the drum. So, if any fibers are found adhering to the blade, be sure to remove them carefully using a soft pad.

(3) Installation of Machine and Storage of Drum

Avoid installing the machine in such places where it may be subjected to high temperature, high humidity, chemicals and their fumes.

Do not leave drums in a bright place for a long time, otherwise the drum will fatigue and will not produce sufficient image density immediately after being installed in the machine.

However, this effect may decrease as time elapses.

(4) Cleaning the Drum

At periodic maintenance calls, wipe clean the entire surface of the drum using the designated cleaning cotton. Use a sufficient thickness of cleaning cotton so as not to scratch the drum surface inadvertently with your fingertips or nails. Also, remove your ring and wristwatch before starting cleaning work to prevent accidental damage to the drum.

Be sure not to use alcohol, selenium refresher and other organic solvents or silicone oil as they will have an undesirable effect on the drum.

(5) Repairing Scratches on OPC Drum Surface

If a scratch exists on the surface through which the aluminum substrate can be seen, no copy image will be produced on this area and, in addition, the cleaning blade will be damaged so replacement with a new drum will be necessary.

(6) Collecting Used OPC Drums

Regarding the recovery and diposal of the used OPC drums, it is recommended to follow the relevent local regulations or rules.

3.3 Checking Drum Cleaning Blade

(1) Precautions for Handling

Pay attention to the following points as the cleaning blade life is determined by its edge condition:

① Do not allow a hard object to hit on or rub against the blade edge. Do not rub the edge with a cloth.

② Do not leave oil (or fingerprints, etc.) on the edge.

③ Do not put solvents such as thinner, etc. on the edge.

④ Do not deposit dirt such as paper fibers, etc, on the blade.

⑤ Do not place the blade near a heat source.

3.4 Checking and Replacing Cleaning Felt Roller

(1) Precautions for Handling

Never allow solvents such as thinner, etc, to adhere to the cleaning felt roller.

(2) Poor Heat-Roller Cleaning and Countermeasures

Poor heat-roller cleaning should be judged by the deposited toner on the roller. When the felt roller has heavy toner deposits, the heat-roller surface may be stained with toner. If this happens, replace the cleaning felt roller.

The cleaning felt roller will be gradually degraded due to subjection to the heat from the heat roller over a long period of time; therefore, replace it preferably after about 80,000 copies have been made.

3.5 Checking and Cleaning Upper and Lower Heat Rollers

(1) Precautions for Handling

A Upper Heat Roller

① Do not leave oil (fingerprints, etc.) on the heat roller.

② Be extremely careful not to allow a hard object to hit on or rub against the roller because the thin Teflon layer coated on the aluminum substrate is easily damaged and, if damaged, will result in poor drum cleaning.

B Lower Pressure Roller

① Do not leave oil (fingerprints, etc.) on the roller surface.

(2) Checking

① Check for staining and damage to the heat roller and clean or replace if necessary.

② Clean the separation claws and check for chipped claws.

③ Check for cleaning condition of cleaning felt roller.

④ Check the thermistor for proper contact with the heat roller.

⑤ Check the fused condition of the toner image.

⑥ Check the heat rollers for proper rotation.

(3) Cleaning Procedure for Heat Rollers

When the heat roller becomes dirty, it will cause paper jamming. In that case, wipe the roller surface clean with cotton soaked in alcohol or heat-roller cleaner “RC60” which contains silicone oil. For a better cleaning effect, clean the roller while it is still warm.

Note: Be careful not to rub against the Teflon-coated surface with fingernails or hard objects because it is easily damaged. Do not use silicone oil on the upper heat roller.

3.6 Checking and Cleaning Heat Roller Cleaning Blade

(1) Precautions for Handling

Do not allow a hard object to hit on or rub against the blade edge.

(2) Checking

When the blade edge becomes dirty, clean it with a cloth soaked in alcohol.

If the cleaning blade is damaged, replace it.