TOSHIBA

SERVICE MANUAL
PLAIN PAPER COPIER
2060/2860/70
AUTOMATIC DUPLEXING UNIT MD-5002



Click the Page Only button to close the overview area of the window.

Click the Bookmarks and Page button to open the Contents and display bookmarks created for the document. Click a bookmark's name to go to the Page marked by that bookmark.

Click the Thumbnails and Page button to open the overview area and display thumbnail images of each document page. Click a thumbnail to go to the page marked by that thumbnail.

Copyright TOSHIBA CORPORATION 1995
ALL RIGHTS RESERVED

GENERAL PRECAUTIONS REGARDING THE INSTALLATION AND SERVICE FOR THE COPIER 2060, 2860/70 AND THE AUTOMATIC DUPLEXING UNIT MD-5002

1. Transportation/Installation

- When transporting/installing the copier, use two persons and be sure to use the positions as indicated below.

  The copier is fairly heavy and weighs approximately 73 kg (161 lb), therefore pay full attention when handling it. (2870: 84 kg)

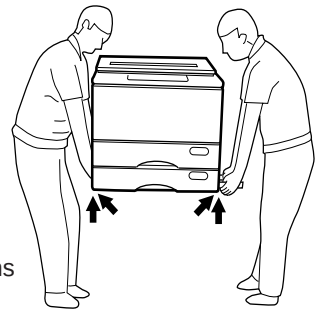

4 portions

2. Installation

- Be sure to use a dedicated outlet with AC 115V/15A (220V, 240V/10A) or more for its power source.
- The copier must be grounded for safety.

  Never ground it to a gas pipe or a water pipe.
- Select a suitable place for installation.

  Avoid excessive heat, high humidity, dust, vibration and direct sunlight.
- Also provide proper ventilation as the copier emits a slight amount of ozone.
- To insure adequate working space for the copying operation, keep a minimum clearance of 80 cm (32”) on the left, 80 cm (32”) on the right and 10 cm (4”) in the rear.

3. Service of Machines

- Basically, be sure to turn the main switch off and unplug the power cord during service.
- Be sure not to touch high-temperature sections such as the exposure lamp, the fuser unit, the damp heater and their periphery.
- Be sure not to touch high-voltage sections such as the chargers and the high-voltage transformer.
- Be sure not to touch rotating/operating sections such as gears, belts, pulleys, etc.
- When servicing the machines with the main switch turned on, be sure not to touch live sections such as the lamp terminal, etc.
- Use suitable measuring instruments and tools.

4. **Main Service Parts for Safety**
   - The breaker, door switch, fuse, thermostat, thermofuse, thermistor, etc. are particularly important for safety. Be sure to handle/install them properly.

5. **Notice Labels**
   - Be sure to check the rating plate and the cautionary labels such as “Unplug the power cord during service”, “Hot area” etc. to see if there is any dirt on their surface or if they are properly stuck to the copier during servicing.

6. **Disposition of Consumable Parts/Packing Materials**
   - Regarding the recovery and disposal of the copier, supplies, consumable parts and packing materials, it is recommended to follow the relevant local regulations or rules.

7. **When parts are disassembled, reassembly is basically the reverse of disassembly unless otherwise noted in this manual or other related documents. Be careful not to reassemble small parts such as screws, washers, pins, E-rings, toothed washers in the wrong places.**

8. **Basically, the machine should not be operated with any parts removed or disassembled.**

9. **Precautions Against Static Electricity**
   - The PC board must be stored in an anti-electrostatic bag and handled carefully using a wristband, because the ICs on it may become damaged due to static electricity.

1. SPECIFICATIONS • ACCESSORIES • OPTIONS • SUPPLIES

1.1 Specifications

Copy process		Indirect electrophotographic process (dry)
Type		Desk top (console when the pedestal is used)
Exposure Type		Slit exposure with fixed table
Acceptable originals	Kind	Sheets, books, and 3-dimensional objects. When the document feeder is used: Sheet originals only (60 g/m^2~90 g/m^2) (16 lb.~24 lb.)
	Maximum size	A3 (Ledger)

Copy paper				
	Cassette	Duplexing	Manual	Note
Size	A3~A5-R		A3~A6-R	Adjustable to
	(Ledger~Statement-R)			Unfixed, Arbitary sizes
Thickness	64~80		64~130	Unit: g/m^2
(Weight)	(17~22)		(17~34)	(Unit: lb.)
Special paper	–	–	OHP film etc.	

Copy speed

	Cassette/manual		LCF		
Paper size	2060	2860	2060	2860	
A4, B5, A5-R LT, ST-R	20	28	20	28	CPM
A4-R, B5-R LT-R	20	26	—	—	
B4, FOLIO LG, Computer	20	22	—	—	
A3 LD	19	19	—	—	
Reduction/ Enlargement	15	15	15	15	

Manual feeding represents the value when the size is set.

System copy speed (BLI format)

Mode		CPM	
Original→Copy	Number of copies	2060	2860
1 → 1	1 set	19	24
	3 set	20	27
	5 set	20	28
1 → 2	1 set	10	10
	3 set	15	18
	5 set	17	21
2 → 2	1 set	8	8
	3 set	14	16
	5 set	16	19
2 → 1	1 set	16	16
	3 set	19	23
	5 set	19	25

*Ten originals (A4) are set in the ADF. This includes the first copy time.

First copy	Approx. 4.0 sec. (Actual-size A4 or Letter from upper cassette)
Warm-up time	Approx. 80 sec.
Multiple copying	1~999, keyboard entry
Reproduction ratio	
Actual ratio	100% or 101% (Setting mode)
Zoom ratios	50~200% (Multiple reduction and enlargement in 1% steps)

Paper supply	Cassette or sheet-bypass feeding Cassette: 600 sheets Sheet-bypass feeding: 50 sheets
Toner supply	Automatic density detection and replenishment Toner cartridge replacement
Exposure	Automatic control and manually selectable (9 steps)
Weight	Copier: 73 kg (with 2 cassettes and the platen cover), ADU: 10 kg
Power source	115 V ~ 60 Hz, 12A For the U.S.A. and Canada 220 V ~ 50/60 Hz, 8A } For Europe 240 V ~ 50 Hz, 8A }
Power consumption	1.5 kW (115 V), 1.7 kW (220 V/240 V)
Counter	6-digit total counter

Machine size

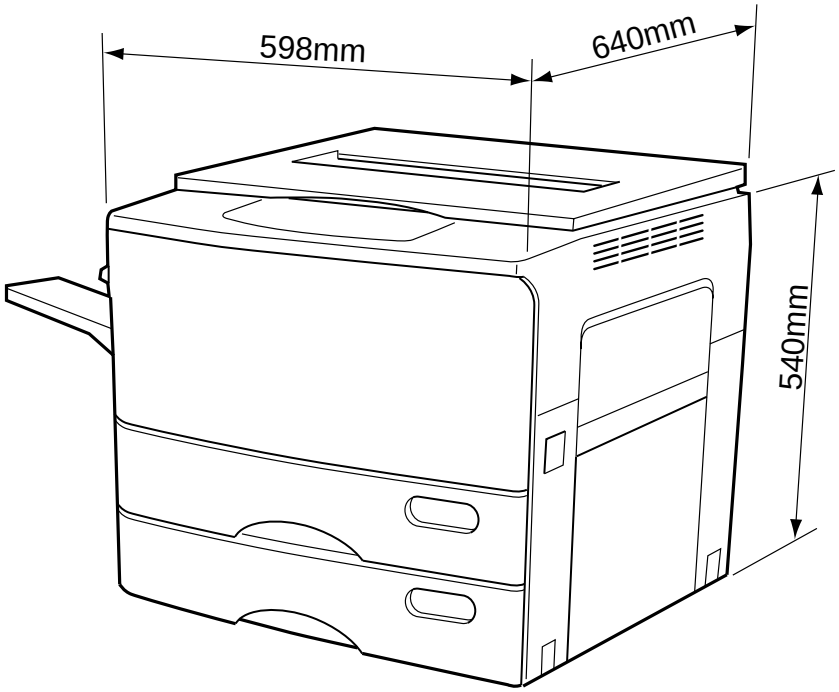

1.2 Accessories

Copy receiving tray	:	1 pc.
Operator's manual	:	1 pc.
Set-up report	:	1 pc.
Drum	:	1 pc.
Developer	:	1 bottle
Toner	:	1 pc.

*Accessories vary according to the destination.

1.3 Options

Automatic duplexing unit: ADU	MD-5002
Automatic document feeder: ADF	MR-3006 (RADF), MR-2008 (ADF)
Paper feed pedestal: PFP	KD-1003 (1 cassette), KD-2009 (2 cassettes)
Paper feed unit	MY-1006
Large capacity feeder: LCF	MP-1501
Sorter	MG-1003A (10 bins) MG-1004 (10 bins staple) MG-2009 (20 bins) MG-2010 (20 bins staple)
Key copy counter	MU-8/MU-10 (6 digit)

*Options vary according to the destination.

1.4 Supplies

Drum	OD-2060
Developer	ZD-2060
Toner	ZT-2060

2. OUTLINE OF THE MACHINE

2.1 Sectional Views and Electrical Parts Location Diagram

2.1.1 Sectional view

[A] Front view

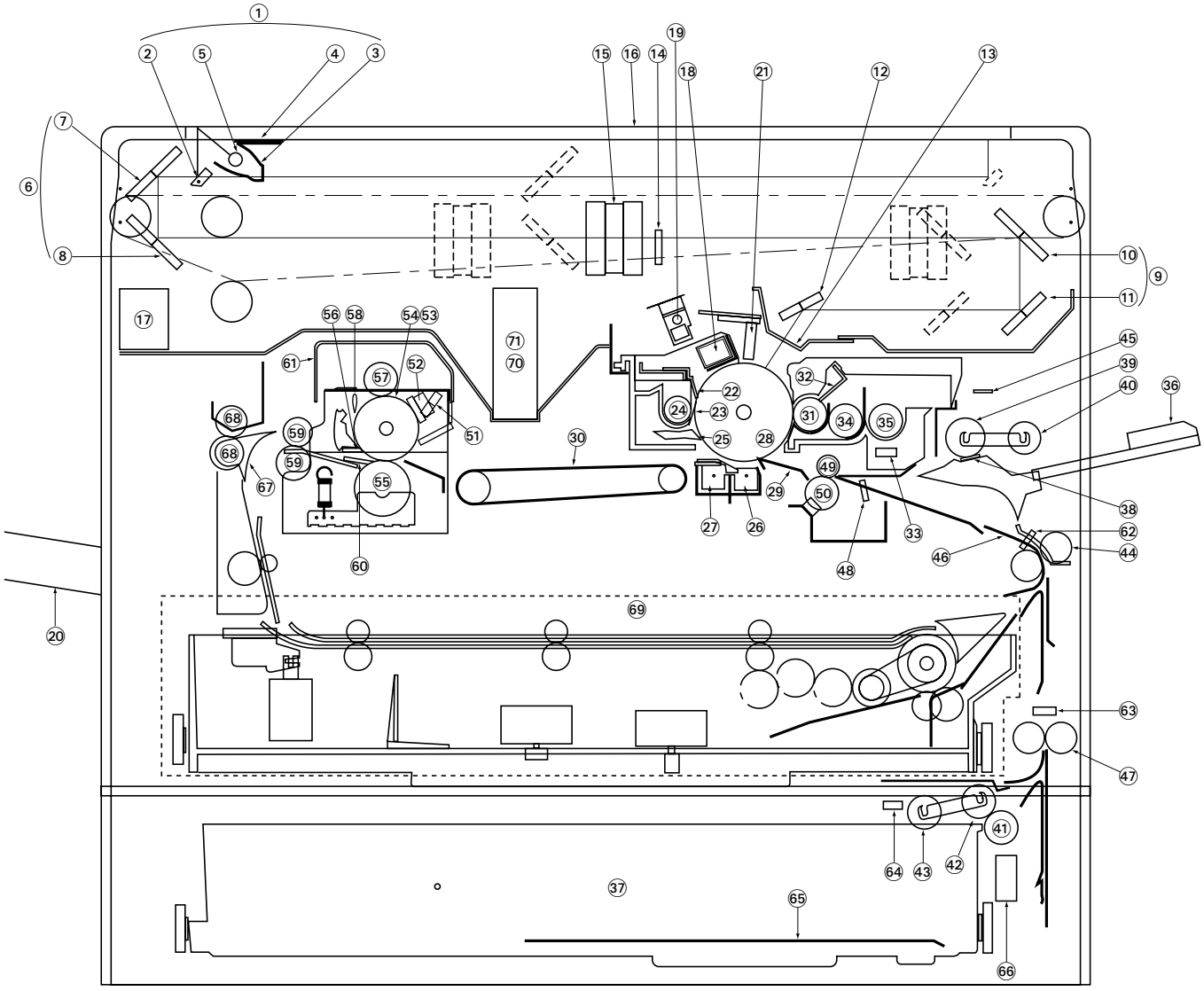

(This diagram includes an installed ADU. Refer to Chapter 13 concerning the ADU.)

No.	Name	No.	Name
①	Carriage 1	㊲	Cassette
②	Mirror 1	㊳	Manual feed separation pad
③	Reflector	㊴	Manual feed roller
④	Light distribution adjustment plates	㊵	Manual pickup roller
⑤	Exposure lamp	㊶	Cassette separation roller
⑥	Carriage 2	㊷	Cassette feed roller
⑦	Mirror 2	㊸	Cassette pickup roller
⑧	Mirror 3	㊹	Upper transport roller
⑨	Mirror unit	㊺	Manual feed switch (S6)
⑩	Mirror 4	㊻	Paper guide
⑪	Mirror 5	㊼	Lower transport roller
⑫	Mirror 6	㊽	Aligning switch (S8)
⑬	Slit glass	㊾	Aligning roller (U)
⑭	Auto exposure sensor	㊿	Aligning roller (L)
⑮	Lens	(51)	Thermistor-1 (THMS1)
⑯	Original glass	(52)	Thermostat (THERMO)
⑰	Ozone filter	(53)	Heater lamp
⑱	Main charger	(54)	Heat roller (upper side)
⑲	Discharge lamp	(55)	Pressure roller (lower side)
⑳	Receiving tray	(56)	Separation claw (for heat roller)
㉑	LED eraser array	(57)	Felt roller
㉒	Main blade	(58)	Heat roller cleaning blade
㉓	Recovery blade	(59)	Fuser exit roller
㉔	Toner recovery auger	(60)	Scraper
㉕	Separation claw (for drum)	(61)	Fuser cover
㉖	Transfer charger	(62)	Paper stop switch-1 (S7)
㉗	Separation charger	(63)	Paper stop switch-2 (S16)
㉘	Drum	(64)	Paper-empty switch-2 (S14)
㉙	Bias guide	(65)	Cassette tray
㉚	Transport belt	(66)	Cassette size switch-2 (S15)
㉛	Magnetic roller	(67)	Exit/ADU selection gate
㉜	Leveller (doctor)	(68)	Exit roller
㉝	Auto-toner sensor	(69)	ADU
㉞	Mixer 1	(70)	Exit fan (M7)
㉟	Mixer 2	(71)	Bottom fan (M8)
㊱	Sheet bypass guide		

[B] Rear side view

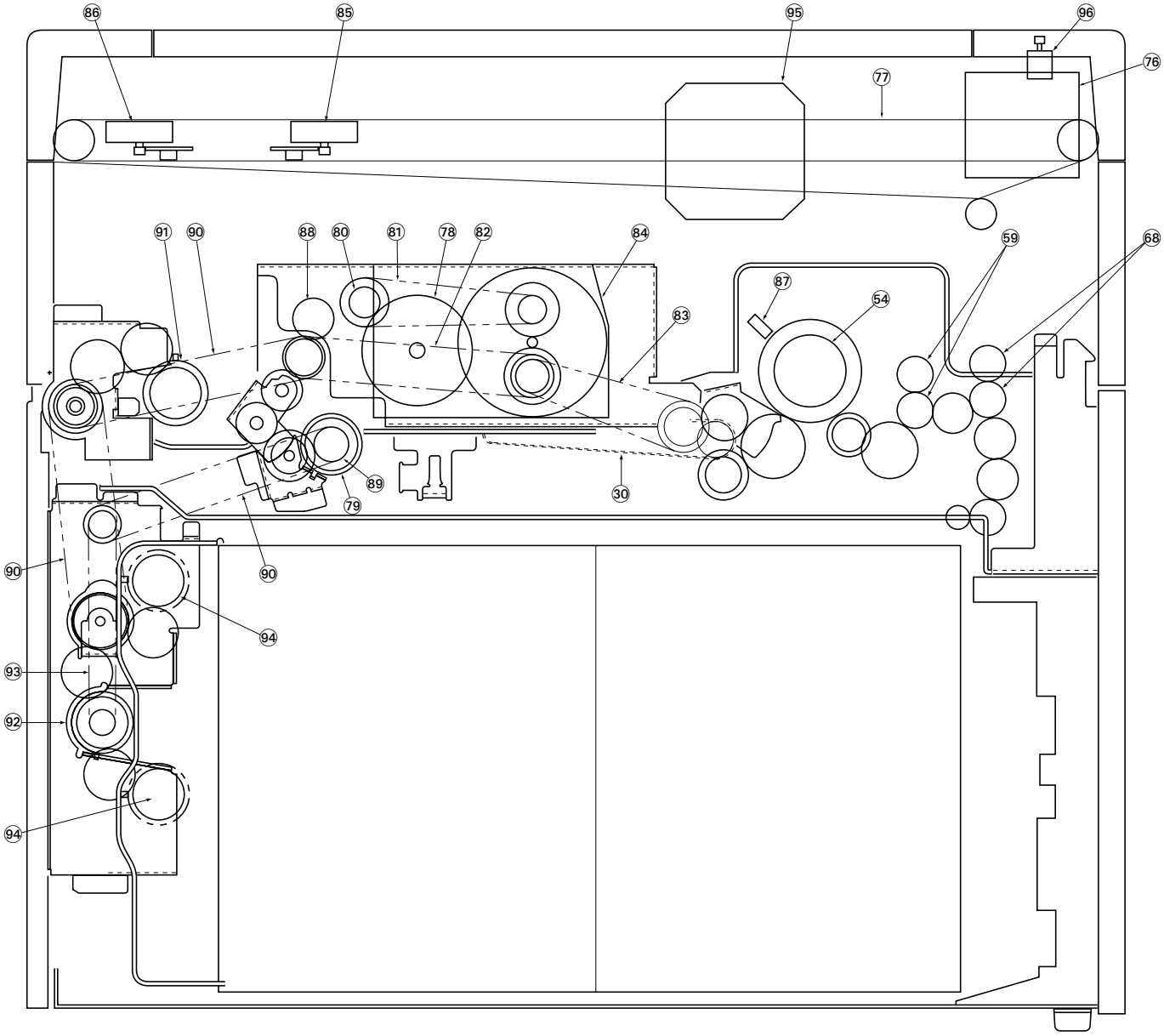

No.	Name
㊻	Scanning motor (M2)
㊼	Carriage drive wire
㊽	Drum gear
㊾	Aligning clutch (CLT2)
㊿	Drum driving gear
(81)	Drum belt
(82)	Belt for dev-unit, ALGN-roller & paper feeding drive
(83)	Belt for fuser drive
(84)	Main motor (M1)
(85)	Lens motor (M3)
(86)	Mirror motor (M4)
(87)	Thermistor-2 (THMS2)
(88)	Dev-unit drive gear
(89)	Aligning roller
(90)	Paper feed belt
(91)	Manual feed clutch (CLT4)
(92)	Transport roller clutch (CLT1)
(93)	Transport roller drive belt
(94)	Cassette feed clutch (CLT3, 5)
(95)	Optical fan (M6,12)
(96)	Document motor (M11)

2.1.2 Electrical parts layout

[A] DC electrical parts (except motors)

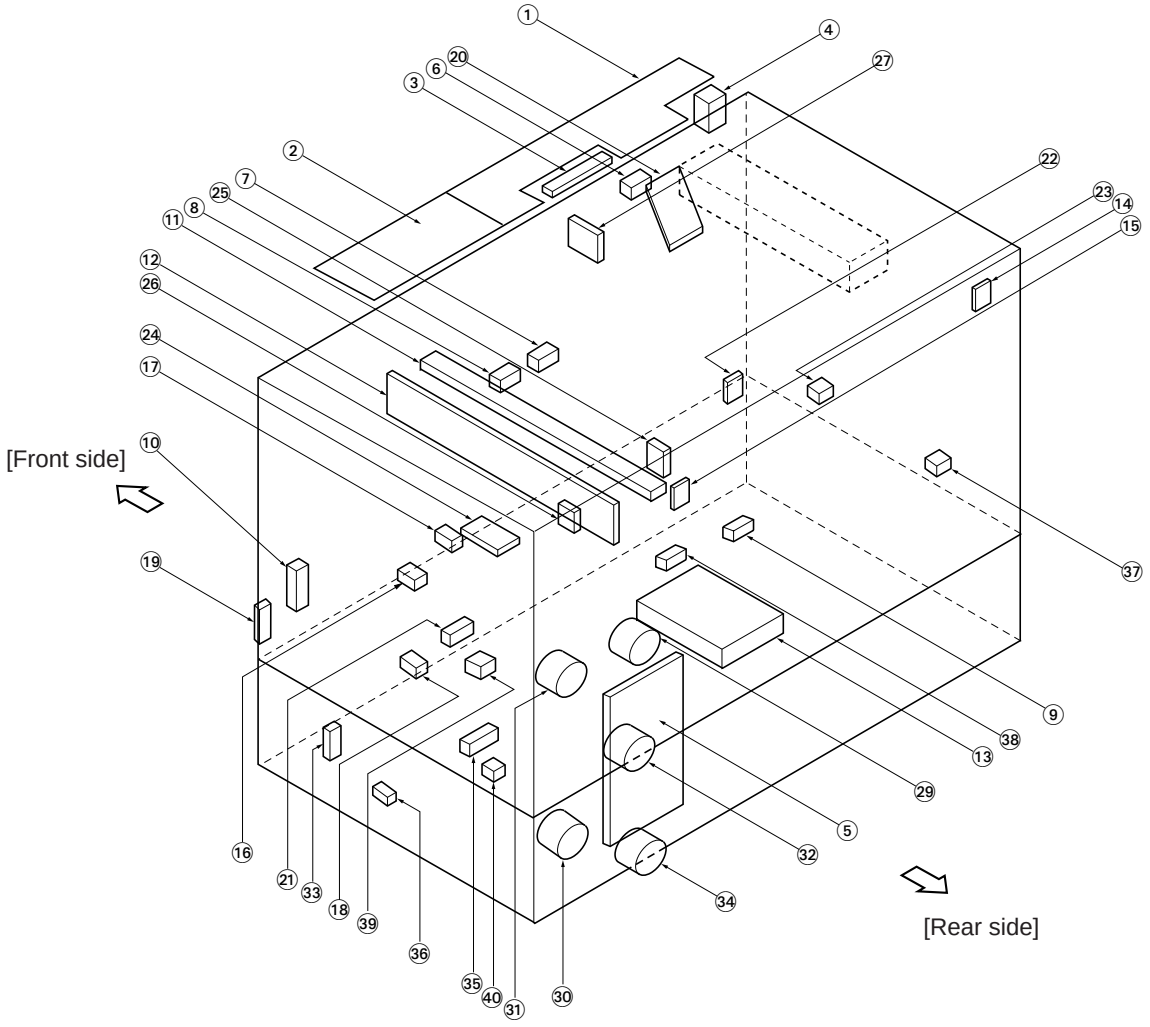

No.	Name	No.	Name
①	Control panel key PC board (PWA-KEY)	*㉑	Paper-empty switch-1 (EMP1-SW) (S3)
②	Display PC board (PWA-DSP)	㉒	Exit switch (EXIT-SW) (S9)
③	Liquid crystal module (LCD)	㉓	Heat-roller thermistor 1 (THMS1-HTR)
④	Total counter (T-CTR)	㉔	Toner sensor (TNR-ATC)
⑤	Logic PC board (PWA-LGC)	㉕	Lens switch (LNS-SW) (S11)
⑥	Auto paper sensor-2 (APS-R)	㉖	Mirror switch (MRR-SW) (S12)
⑦	Auto paper sensor-3 (APS-C)	㉗	Automatic exposure PC board (PWA-AES)
⑧	Auto paper sensor-4 (APS-F)	㉙	Aligning-roller clutch (RGT0-CLT) (CLT2)
⑨	Toner-full switch (T-FUL-SW) (S13)	㉚	Transport-roller clutch (RGT1-CLT) (CLT1)
*⑩	Size switch 1 (SIZE1-SW) (S5)	㉛	Manual-feed roller clutch (MFED-CLT) (CLT4)
⑪	Discharge lamp PC board (PWA-ERS)	*㉜	Feed-roller clutch 1 (FED1-CLT) (CLT3)
⑫	LED eraser array PC board (K-DCH)	㉝	Size switch 2 (SIZE2-SW) (S15)
⑬	High-voltage power supply (PS-HVT)	㉞	Feed-roller clutch 2 (FED2-CLT) (CLT5)
⑭	Home switch (HOME-SW) (S10)	㉟	Paper-empty switch 2 (EMP2-SW) (S14)
⑮	Platen switch (PTN-SW) (S27)	㊱	Paper stop switch 2 (PSTP2-SW) (S16)
⑯	Manual feed switch (M-FED-SW) (S6)	㊲	Heat-roller thermistor-2 (THMS2-HTR)
⑰	Aligning switch (PSTPO-SW) (S8)	㊳	Drum thermistor (DRM-THMS)
⑱	Paper stop switch 1 (PSTP1-SW) (S7)	*㊴	Tray-up switch (T-UP1-SW) (S28)
⑲	Side door switch (U-COV-SW) (S4)	㊵	Tray-up switch (T-UP2-SW) (S29)
⑳	Auto paper sensor-1 (APS-3B)		

*: Option

[B] DC electrical parts (motors)

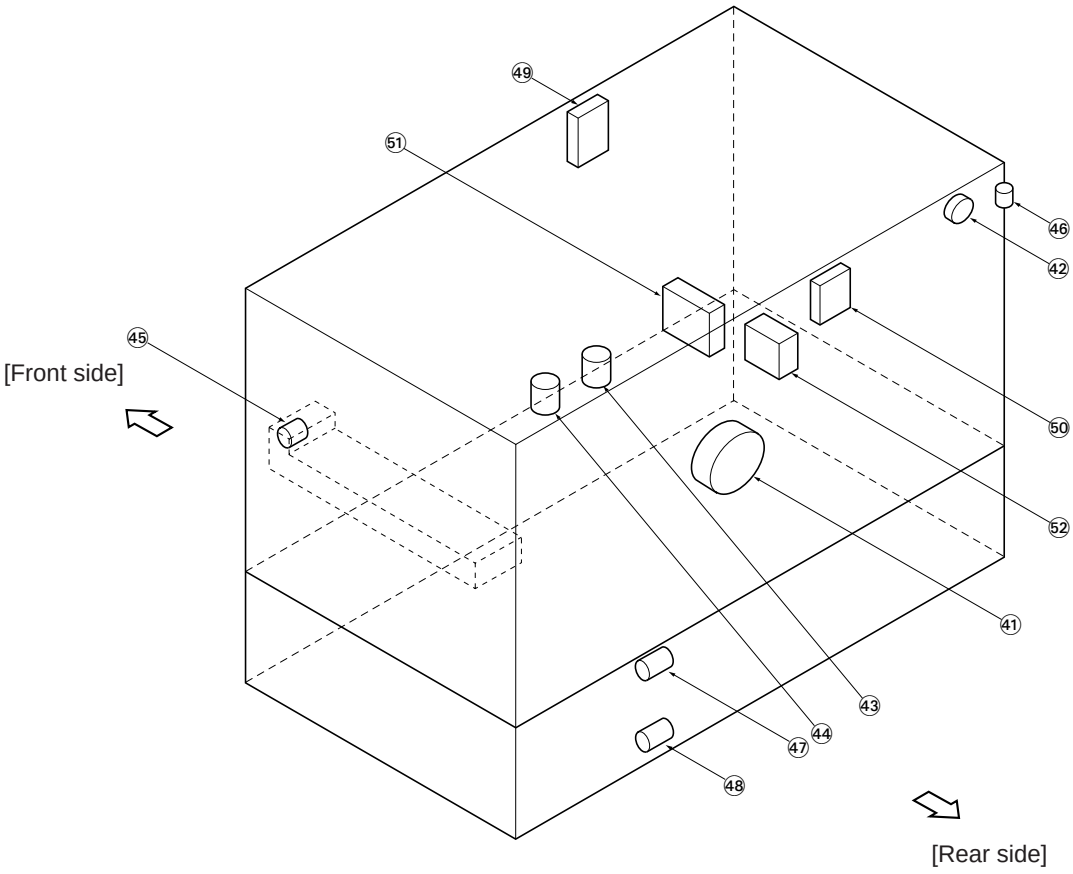

No.	Name	No.	Name
㊶	Main motor (MAIN-MOT) (M1)	*㊼	Tray-up motor-1 (T-UP1-MOT) (M13)
㊷	Scanning motor (SCN-MOT) (M2)	㊽	Tray-up motor-2 (T-UP2-MOT) (M14)
㊸	Lens motor (LNS-MOT) (M3)	㊾	Optical fan-F (OPT-FAN-F) (M12)
㊹	Mirror motor (MRR-MOT) (M4)	㊿	Optical fan-R (OPT-FAN-R) (M6)
㊺	Toner motor (TNR-MOT) (M9)	(51)	Exit fan (EXIT-FAN) (M7)
㊻	Document motor (DCM-MOT) (M11)	(52)	Bottom fan (BTM-FAN) (M8)

*: Option

[C] AC electrical parts

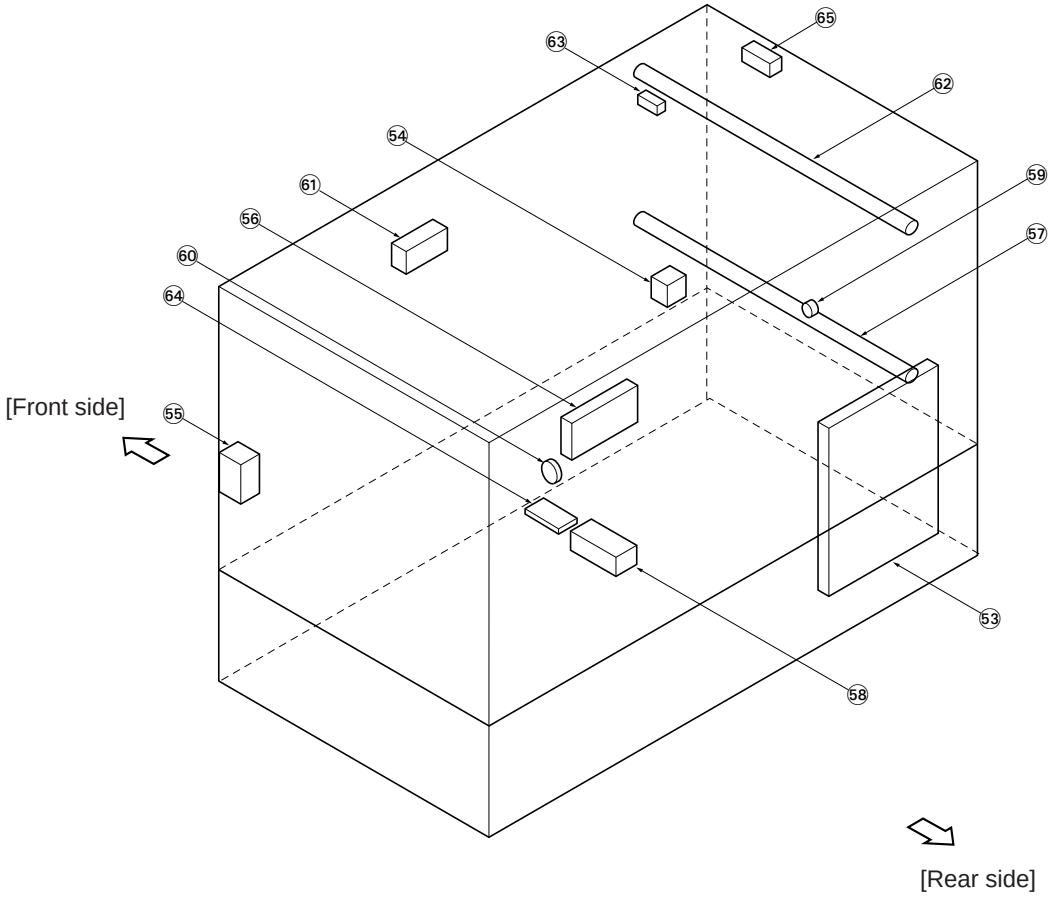

No.	Name	No.	Name
㊸	SW power supply (PS-ACC)	㊵	Thermostat (Option)
㊹	Door switch (DOOR-SW) (S2)	㊶	Damp heater U1 (D-HTR-U1) (Option)
㊺	Main switch (MAIN-SW) (S1)	㊷	Exposure lamp (EXPO-LAMP)
㊻	Lamp regulator PC board (PWA-LRG)	㊸	Thermofuse (FU-EXPO)
㊼	Heater lamp (HTR-LAMP)	㊹	Fuse PC board (PWA-FUS) (Option)
㊽	Damp heater L (D-HTR-L) (Option)	㊺	Damp heater U2 (D-HTR-U2) (Option)
㊾	Thermostat (K-THERMO)		

2.2 Symbol and Function of Electrical Parts

(1) Motors

Symbol	Code name	Function	Remarks	Parts list	
				Page	Item
M1	MAIN-MOT (Main motor)	Drives the drum, developer, heat roller and transport belt	IC motor	10	31
M2	SCN-MOT (Scanning motor)	Scans the optical system	Pulse motor	5	23
M3	LNS-MOT (Lens motor)	Drives the lens unit	Pulse motor	11	23
M4	MRR-MOT (Mirror motor)	Drives the mirror unit	Pulse motor	11	23
M6	OPT-FAN-R (Optics fan-R)	Cools the optical system	IC motor: □80	5	8
M7	EXIT-FAN (Exit-fan)	Cools the drum and cleaner	IC motor: □80	4	14
M8	BTM-FAN (Bottom fan)	Prevents the paper from floating up through suction	IC motor: □80	4	14
M9	TNR-MOT (Toner motor)	Replenishes the toner	Brush motor	23	30
M11	DCM-MOT (Document motor)	Drives copy-area indicators	Pulse motor	9	2
M12	OPT-FAN-F (Optical fan-F)	Cools the optical system	IC motor: □80	4	14
M13	T-UP1-MOT (Tray-up motor-1)	Drives the upper cassette tray to lift up/down	Brush motor	12	36
M14	T-UP2-MOT (Tray-up motor-2)	Drives the lower cassette tray to lift up/down	Brush motor	12	36

(2) Electromagnetic spring clutches

Symbol	Code name	Function	Remarks	Parts list	
				Page	Item
CLT1	RGT1-CLT (Transport-roller clutch)	Transmits transport-roller drive.		13	40
CLT2	RGT0-CLT (Aligning-roller clutch)	Transmits aligning-roller drive.		15	16
CLT3	FED1-CLT (Feed-roller clutch-1)	Transmits feed-roller clutch drive. (Upper cassette)		12	24
CLT4	MFED-CLT (Manual-feed roller clutch)	Transmits manual-feed roller clutch drive.		14	17
CLT5	FED2-CLT (Feed-roller clutch-2)	Transmits feed-roller clutch drive. (Lower cassette)		12	24

(3) Counters

Symbol	Code name	Function	Remarks	Parts list	
				Page	Item
T	T-CTR (Total counter)	Total counter	6-digit	3	23
K	K-CTR (Key-copy counter)	Individual counter	6-digit (option)	101	5

(4) Switches

Symbol	Code name	Function	Remarks	Parts list	
				Page	Item
S1	MAIN-SW (Main switch)	Power supply	Tumbler type	6	3
S2	DOOR-SW (Door switch)	For safety, cancels abnormal condition	Push switch	6	4
S3	EMP1-SW (Paper-empty switch-1)	Detects lack of paper in the upper cassette	Photointerruptor	12	32
S4	U-COV-SW (Side door switch)	For safety, detects open/closed condition of paper jam release cover	Push switch	2	27
S5	SIZE1-SW (Size switch-1)	Detects upper cassette size	Push switch	13	50
S6	M-FED-SW (Manual-feed switch)	Detects manual feeding	Photointerruptor	14	3
S7	PSTP1-SW (Paper stop switch-1)	Detects paper in front of the upper transport roller	Photointerruptor	13	8
S8	PSTP0-SW (Aligning switch)	Detects paper in front of the aligning roller	Photointerruptor	15	20
S9	EXIT-SW (Exit switch)	Detects exiting paper	Photointerruptor	28	8
S10	HOME-SW (Home switch)	Detects home position of the optical system	Photointerruptor	11	8
S11	LNS-SW (Lens switch)	Detects home position of the lens unit	Photointerruptor	11	8
S12	MRR-SW (Mirror switch)	Detects home position of the mirror unit	Photointerruptor	11	8
S13	T-FUL-SW (Toner-full switch)	Detects when the used toner bag is full	Push switch	10	25
S14	EMP2-SW (Paper-empty switch-2)	Detects lack of paper in the lower cassette	Photointerruptor	12	32
S15	SIZE2-SW (Size switch-2)	Detects lower cassette size	Push switch	13	50
S16	PSTP2-SW (Paper stop switch-2)	Detects paper in front of the lower transport roller	Photointerruptor	2	26
S27	PTN-SW (Platen switch)	Detects open/closed condition of the platen cover	Photointerruptor	5	38
S28	T-UP1-SW (Tray-up-1 switch)	Detects the position of the upper cassette tray	Photointerruptor	12	32
S29	T-UP2-SW (Tray-up-2 switch)	Detects the position of the lower cassette tray	Photointerruptor	12	32

(5) Heaters and lamps

Symbol	Code name	Function	Remarks	Parts list	
				Page	Item
EXP	EXPO-LAMP (Exposure lamp)	Exposes the original	Halogen lamp 300W	18	13
HTR	HTR-LAMP (Heater lamp)	Fixing	Halogen lamp 900W (100V series) 1100W (200V series)	25	6
ERS	ERS-LAMP (Discharge lamp)	Discharges the drum	Fuse type	4	12
DCH	DCH-LED (LED eraser array)	To interrupt the charge	LED	4	10
DHU1	D-HTR-U1 (Damp heater U1)	Keeps optical system warm (option)	Cement resistor	102	4
DHU2	D-HTR-U2 (Damp heater U2)	Keeps optical system warm (option)	Cement resistor	102	4
DHL	D-HTR-L (Damp heater L)	Keeps the drum and transfer/separation charger case warm (option)	Cement resistor	7	30

(6) PC boards

Symbol	Code name	Function	Remarks	Parts list	
				Page	Item
LGC	PWA-LGC (Logic PC board)	Controls the entire copier		8	15
DSP	PWA-DSP (Display PC board)	Controls condition displays		3	20
KEY	PWA-KEY (Key PC board)	Controls operation keys		3	21
LRG	PWA-LRG (Lamp regulator PC board)	Controls exposure lamp		5	20
DCH	K-DCH (LED eraser array PC board)	Turns on and drives LED during reduction		4	10
ERS	PWA-ERS (Discharge lamp PC board)	Discharge lamp		4	12
AES	PWA-AES (Automatic exposure PC board)	Reads dark/light of the original		17	37
FUS	PWA-FUS (Fuse PC board)	Fuse for the damp heater circuit		7	31

(7) Transformers

Symbol	Code name	Function	Remarks	Parts list	
				Page	Item
HVT	PS-HVT (Charging transformer)	Generates high voltage electricity for charging (negative voltage)	Mono unit type	7	27
	(Transfer/separation transformer)	Generates high voltage electricity for transfer/separation and developing bias voltage			
	(Transfer bias transformer)	Generates bias voltage to raise transfer efficiency			
ACC	PS-ACC (Power supply for all)	Power supply for whole copier power		8	7

(8) Others

Symbol	Code name	Function	Remarks	Parts list	
				Page	Item
ATS	SNR-ATC (Auto-toner sensor)	Reads toner density with a magnetic sensor		23	33
THMS1	THMS1-HTR (Heat-roller thermistor-1)	Detects temperature of the heat roller		26	19
THMS2	THMS2-HTR (Heat-roller thermistor-2)	Detects the temperature of the heat roller end		26	27
THERMO	K-THERMO (Thermostat)	Prevents abnormal heating of heat roller		26	8
FU	FU-EXPO (Thermofuse) exposure lamp	Prevents abnormal heating of the		18	12

2.3 Wire Harness Location Diagram

[A] Location diagram for upper unit

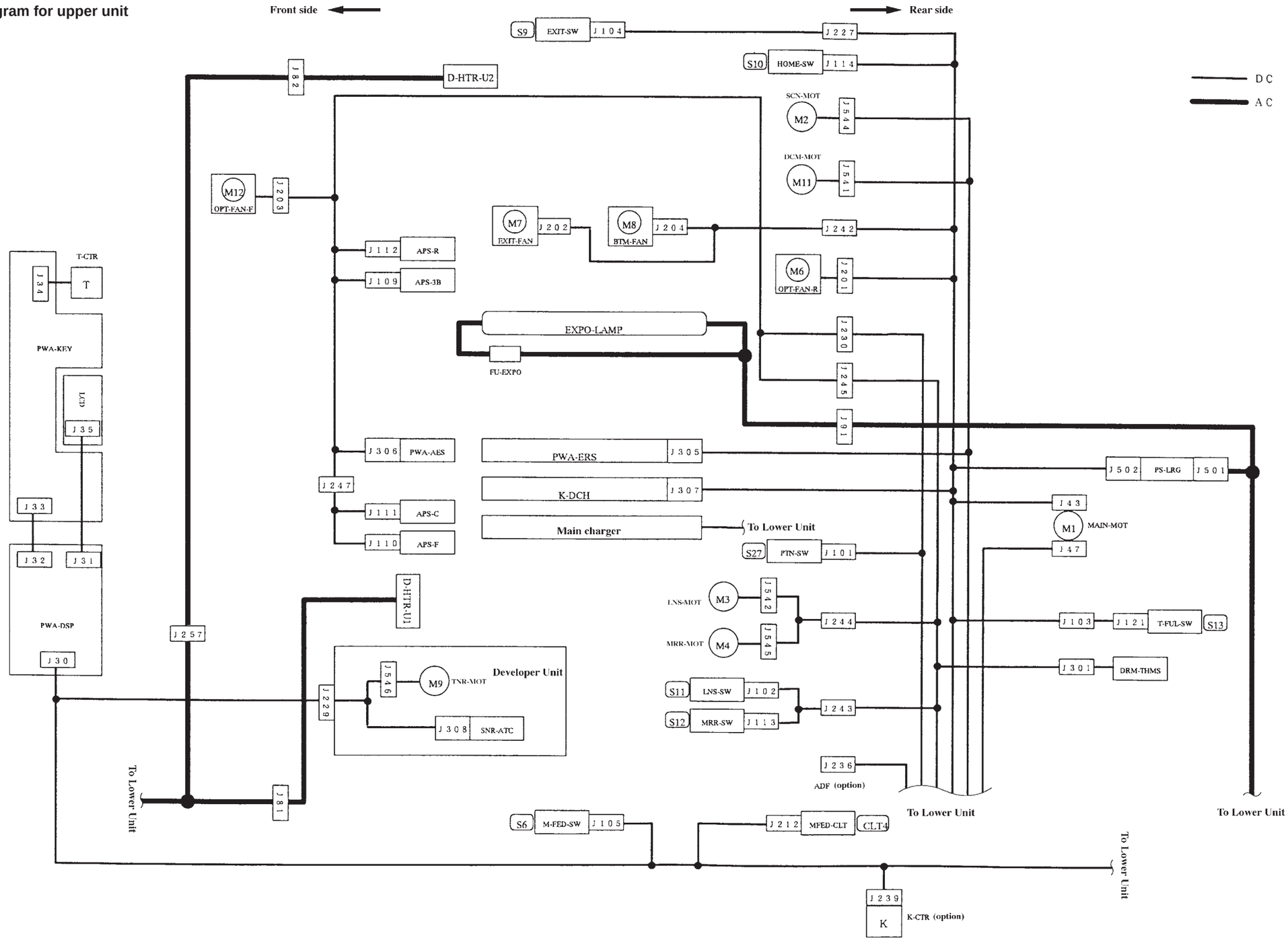

[B] Location diagram for lower unit

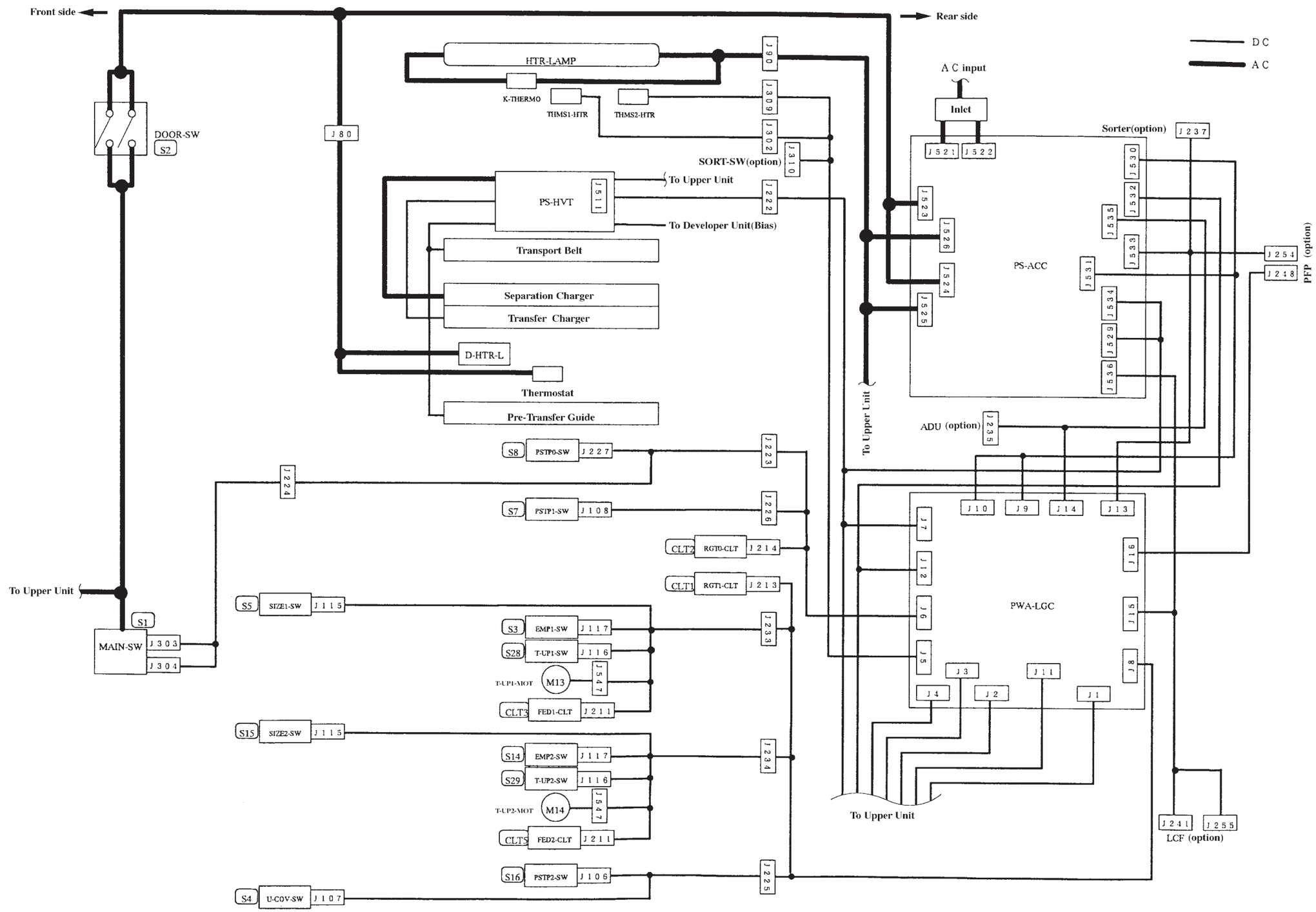

2.4 Removal of Covers and PC Boards

2.4.1 Removal of covers

[A] Front cover

(1) Open the front cover.

(2) Remove the pins on the hinges at both ends (1 each).

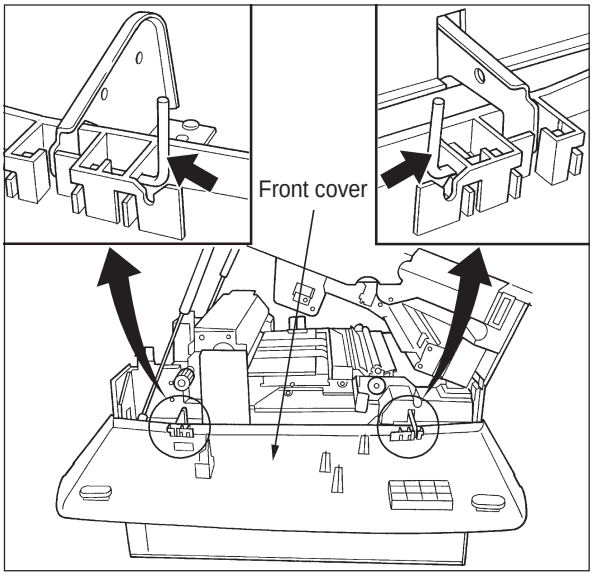

[B] Upper rear cover

(1) Remove the 4 screws.

[C] Lower rear cover

(1) Remove the upper 3 screws.

(2) Loosen the lower 2 screws.

[D] Upper feed cover

(1) Open the front cover and the bypass tray and then remove the 2 screws.

[E] Feed cover (left and right)

(1) Remove the paper feed cover.

(2) When removing the left feed cover, open the front cover.

(3) Remove the screws (2 on each side).

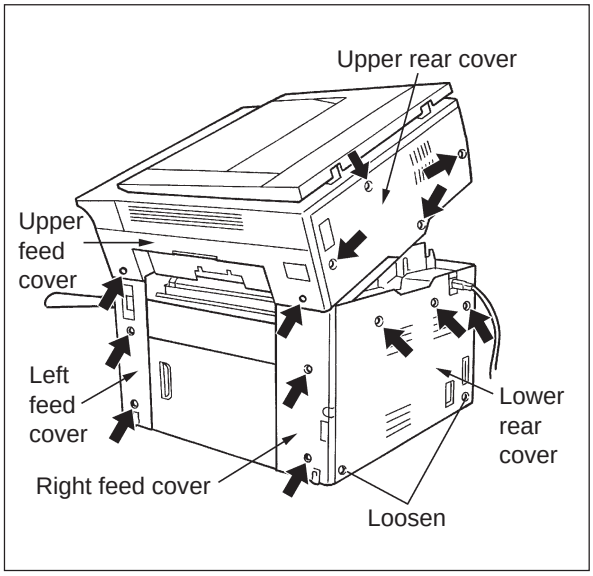

[F] Upper exit cover

(1) Remove the 2 screws.

(2) Open the front cover and remove the screw.

[G] Lower exit cover

(1) Lift the upper unit.

(2) Remove the 5 screws.

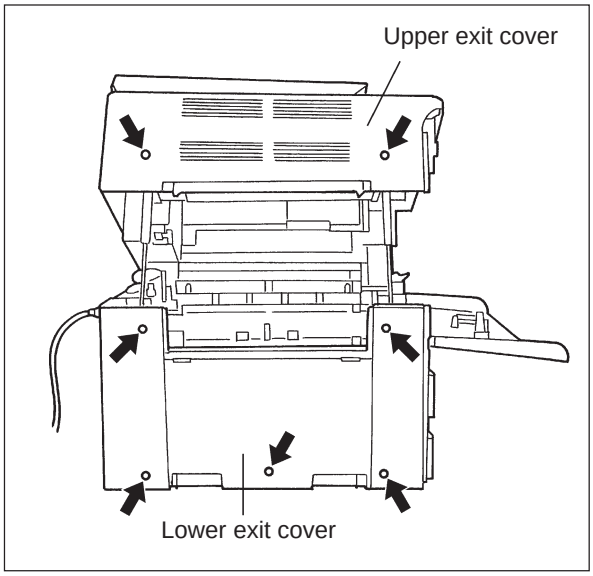

[H] Rear top cover

(1) Remove the original cover.

(2) Remove the 4 screws.

[I] Right top cover (feed side)

(1) Remove the 2 screws.

[J] Left top cover (exit side)

(1) Remove the 2 screws.

[K] Glass fix

(1) Remove the 2 screws.

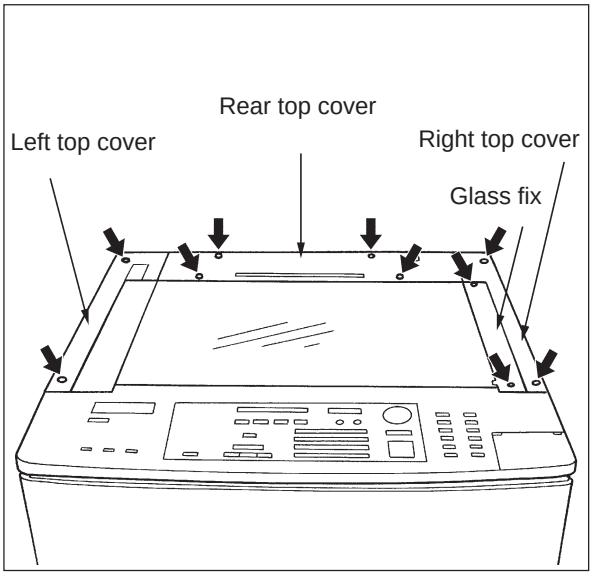

[L] Upper inner cover

(1) Remove the process unit.

(2) Remove the 3 screws.

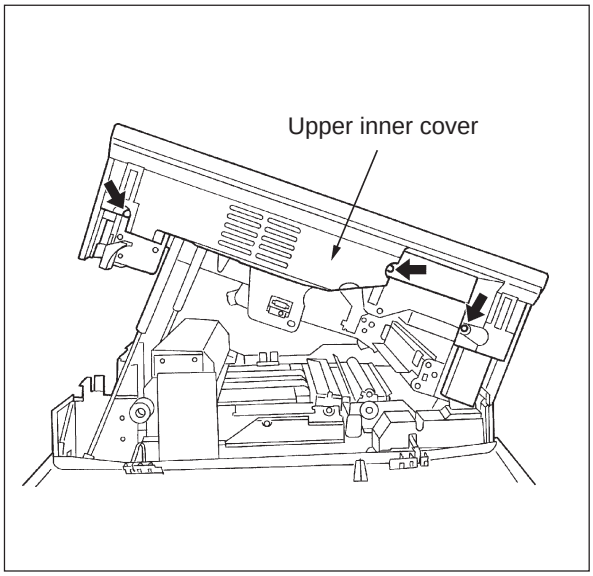

[M] Middle inner cover

(1) Remove the screw.

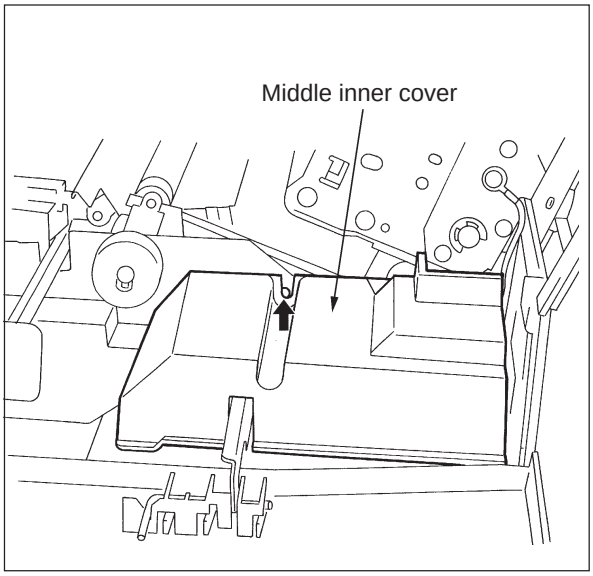

[N] Door switch cover

(1) Remove the 2 screws.

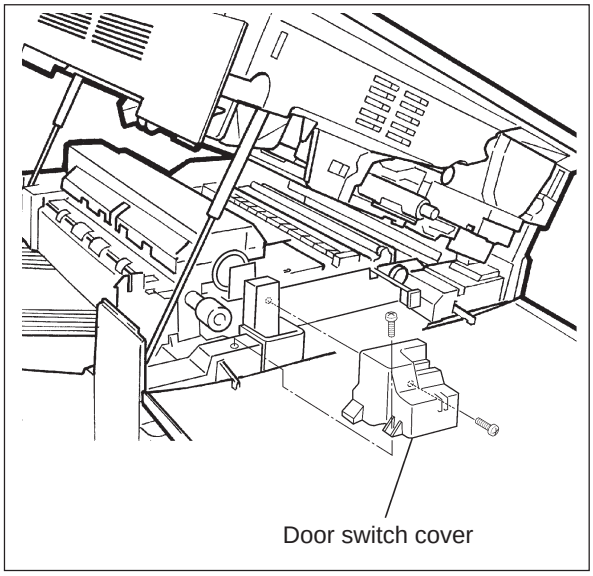

[O] Lower inner cover

(1) Remove the toner box.

(2) Remove the middle inner cover.

(3) Remove the 1 screw.

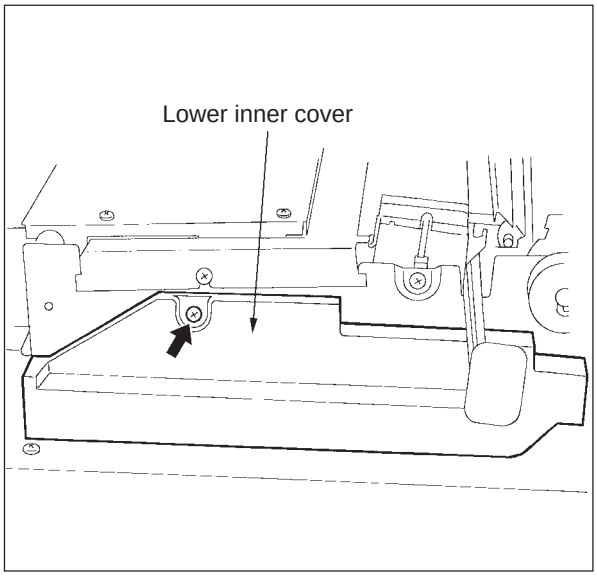

2.4.2 Removal of main PC boards

[A] Logic PC board (PWA-LGC)

(1) Remove the lower rear cover.
(2) Remove the 16 connectors (2860).
(15 connectors for 2060).
(3) Remove the lock supports (4 pcs.)
(4) Remove the logic PC board.

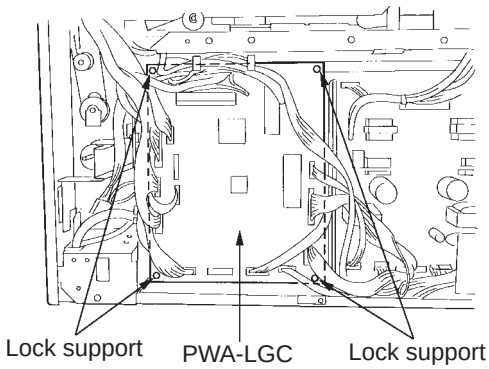

[B] Power supply PC board (PS-ACC)

(1) Remove the connector bracket (2 screws).
(2) Remove the 14 connectors.
(3) Remove the 4 screws.
(4) Remove the power supply PC board.

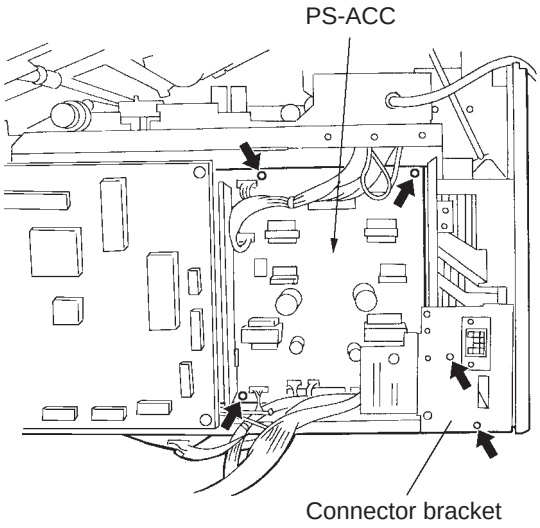

[C] Lamp regulator PC board (PWA-LRG)

(1) Remove the upper rear cover.
(2) Remove the 2 connectors.
(3) Remove the lamp regulator PC board (4 lock supports).

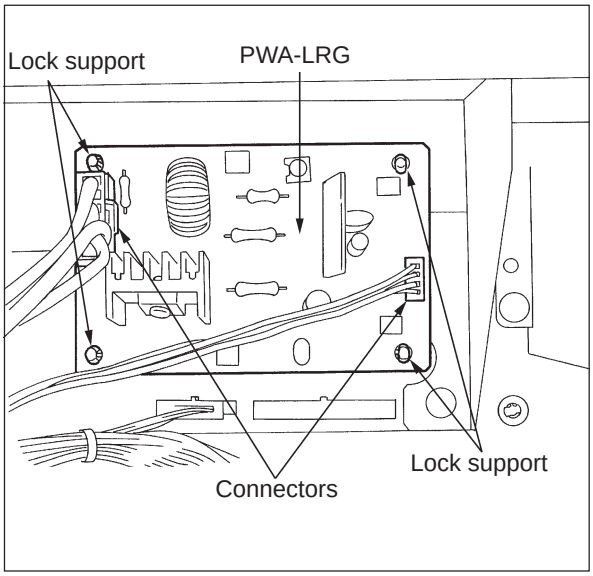

[D] ADU drawer connector

(1) Remove the logic PC board.

(2) Remove the bracket for the logic PC board (3 screws).
Remove the connector J535 on the PS-ACC.

(3) Remove the bracket for the ADU drawer connector (2 screws).

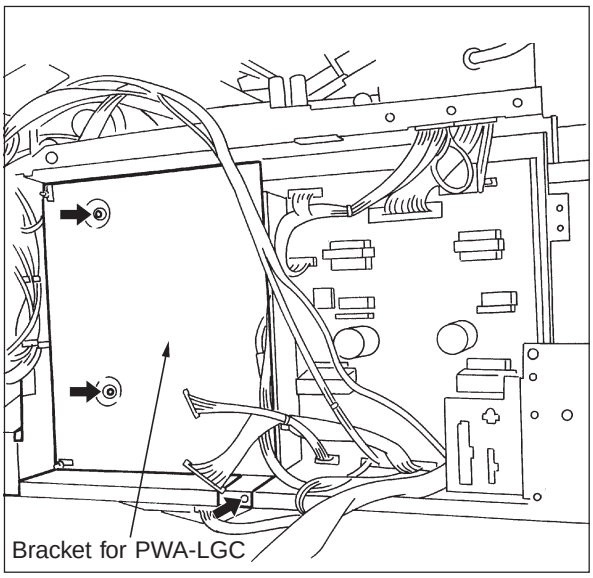

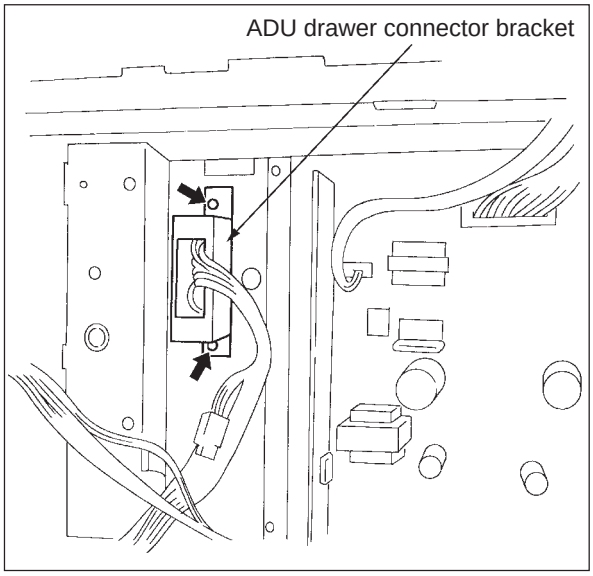

3. COPYING PROCESS

3.1 Copying Process

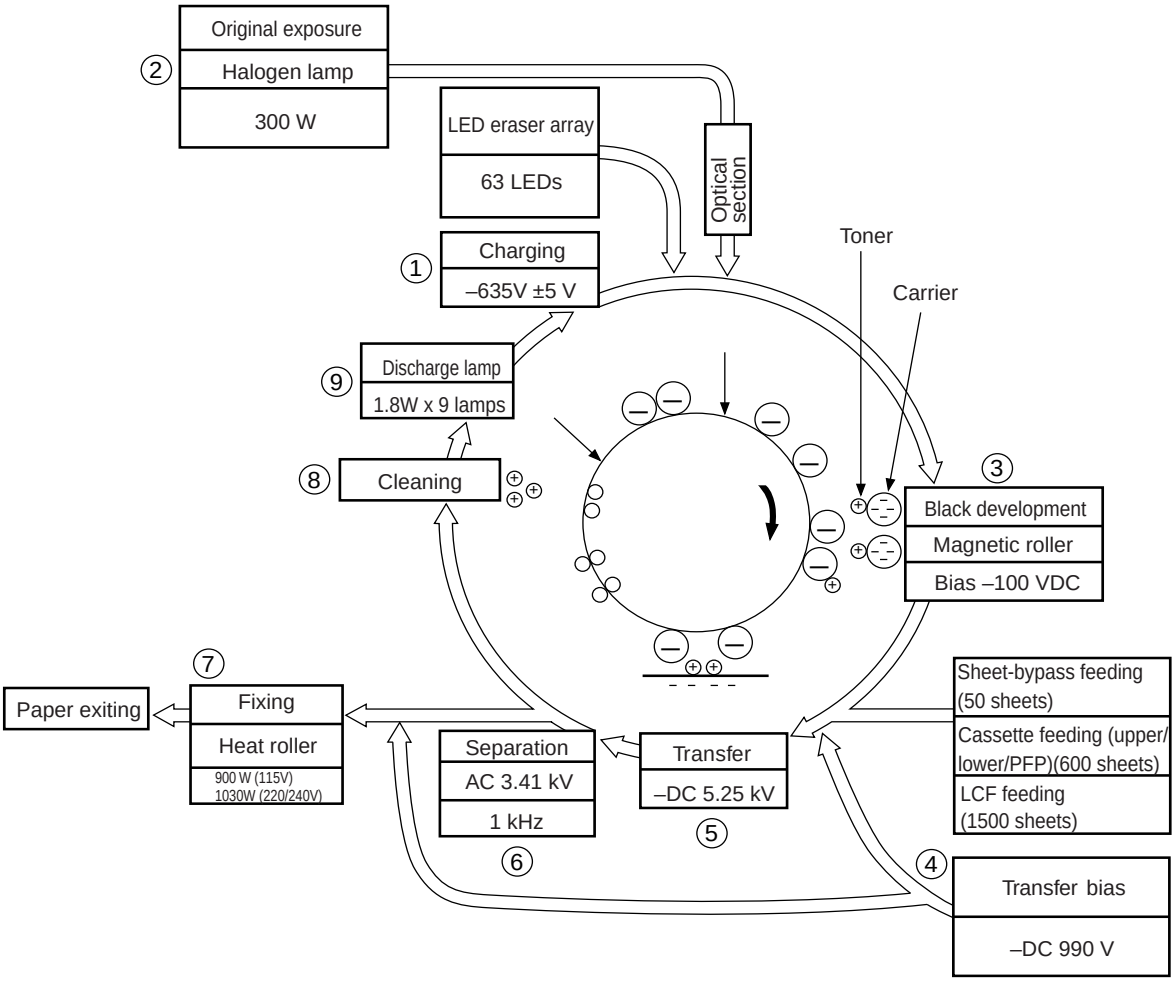

① Charging : Negatively charges surface of the photosensitive drum.
⇩
② Exposure : Forms an electrical image on the drum.
⇩
③ Development : ⊕ toner adheres to surface of photosensitive drum and forms a visible image.
⇩
④ Transfer bias : Increases transfer efficiency.
⇩
⑤ Transfer : Transfers the visible image from the drum onto the transfer (copy) sheet.

⑥ Separation : Separates the transfer sheet, along with the toner, from the drum.
⇩
⑦ Fixing : Fixes the toner on the transfer sheet by applying heat and pressure.
⇩
⑧ Cleaning : Mechanically removes any remaining toner on the drum.
⇩
⑨ Discharge lamp : Discharges any remaining charge from the drum.

3.2 Comparison with the 2050 of Copying Process Conditions

Process	2050	2060/2860
1. Drum	OD-1710 (OPC ø60)	OD-2060 (OPC ø60)
(1) Sensitivity	Highly sensitized drum	(1) ←
(2) Charger grid voltage	DC –800V Scolotron system	(2)–635 V DC Scolotron system Output adjustable by using the ten keys
2. Main charger	Variable output (fixed current) using the digital keys	←
3. Exposure (1) Light control	Automatic exposure/manual slide volume setting	(1)Automatic exposure and manual 9-step setting
(2) Light source	300W halogen lamp stabilized with regulator (light intensity remains constant even when voltage varies)	(2) ←
4. Development (1) Magnetic roller	One magnetic roller (with two shaft mixers)	(1) ←
(2) Auto-toner	Magnetic bridge-circuit system	(2) ←
(3) Toner replenishment	Toner cartridge system	(3) ←
(4) Toner-empty detection	Intensity sensing system	(4) ←
(5) Toner	T-1710 (Black) T-1710-R (Red) T-1710-BL (Blue)	(5)T-2060 (Black)
(6) Developing material	D-1710 (Black) D-1710-R (Red) D-1710-BL (Blue)	(6)D-2060 (Black)
(7) Developer bias	–194V DC, volume adjustable	(7)–100 V DC, adjustable using the digital keys
5. Transfer bias	–1.4KV DC	–990 V DC
6. Transfer	Adjustable output (fixed current) using the digital keys	←
7. Separation	Adjustable output (independently adjustable using the digital keys)	←

Process	2050	2060/2860
8. Discharge		
(1) Discharging position	Discharge by exposure after cleaning	(1) ←
(2) Discharge lamp	Discharge by tungsten lamp	(2) ←
9. Cleaning		
(1) System	Blade system	(1) ←
(2) Recovered toner	Non-reusable	(2) ←
10. Fixing		
(1) System	Long-life heat roller system	(1) ←
• Fixing	• Fixing roller: Teflon coated roller	• Fixing roller: Aluminum roller coated with Teflon (ø40)
• Pressure	• Pressure roller: PFA tube silicon roller (ø28)	• Pressure roller: Silicon rubber roller with PFA tube. (ø35)
• Lamp rating	Infrared heat • 900W (100V series) • 1100W (200V series)	Infrared heat • 900W (115V) • 1030W (220/240V)
(2) Cleaning	Cleaning with silicon impregnated roller	(2) ←
(3) Heater-temperature control	ON/OFF control by thermistor	(3) ←
11. Control	Microcomputer	←

4. COPIER OPERATION

4.1 Operation Outline

Copier operation
- Operation during warm up and standby
- Copying operation
  - Automatic-feed copying using PRINT key
  - Bypass-feed copying
  - Interrupt copying

4.2 Description of Operation

4.2.1 Operation up to standby state after power on

(1) Initial operation

- The main switch is turned ON.
- Copy quantity indicator “0” and “WAIT WARMING UP” are displayed.
- Initialization of the optical system
  - ~ Carriages move to their home position and then stop.
  - ~ Lens and mirror units move to their home position and then stop.
  - ~ Indicators perform the initial operation and move to a position indicating the copy area.
- Initialization of the paper feed section
  - ~ Each slot’s cassette trays move upward. If they were raised already, they are not moved.

(2) Pre-running

65 sec. have elapsed since the power was turned ON ~

Main motor rotates ~ Fuser unit drive section rotates: Pre-running

||

Pressure roller is warmed

After pre-running for 15 sec., the main motor stops

~ Fuser unit drive section stops

(3) When the heat roller temperature is sufficient for fixing, the heater lamp is turned off, and the copier enters the standby mode.

4.2.2 Standby (ready)

- Bottom fan motor (M8) and exit fan motor (M7) are running at low speed.
- All keys on the control panel are operable.

  When there is no key input for a set amount of time, the copy quantity “1” will be shown, the reproduction ratio will indicate “actual size”, and the exposure will be set at automatic.

4.2.3 Automatic feed copying using the PRINT key

(1) PRINT key is pressed

- Main, transfer, and separation chargers, transfer bias, discharge lamp and LED eraser array are turned on.
- Optical fan motor (M6, M12), bottom fan motor (M8) and exit fan motor (M7) are running at high speed.
- Main motor is turned on
  - ~ Drum, developer unit, transport belt, heat roller, and exit roller are running.

(2) Cassette feeding

- Feed clutch (CLT3 or 5) is turned on
  - ~ Pick-up roller, paper feed roller, and separation roller are running.

– Transport roller rotating

- Paper reaches the transport roller
  - ~ Paper stop switch-2 (S14) is turned on. After a set amount of time, the feed clutch (CLT3 or 5) is turned off.

* Paper reaches the aligning roller. Paper stop switch-1 (S7) is turned on.

~ Aligning operation

After a set amount of time, the feed roller stops rotating (CLT1).

(3) Carriage operation

- Exposure lamp is turned on.

Carriages -1 and -2 scan in a forward direction

~ Scanning motor (M15) is turned on. At this time, if the toner density of the developer material is lower than the set value, the copier enters the toner supply operation.

~ Toner motor (M9) is turned ON.

(4) A set time lag after the carriage operation;

aligning clutch (CLT2) is turned on:

~ paper is sent to the transfer unit.

The counter is increased by 1.

(5) Termination of carriage scanning.

- Scanning motor (M2) is turned off.
- Main charger and exposure lamp are turned off.
- Aligning clutch (CLT2) is turned off. (Timing of shutting off depends on paper size.)

(6) Exit operation

- Exit switch (S9) detects the passing of the paper trailing edge.
- Main motor (M1), transfer and separation chargers, transfer bias, discharge lamp, and LED eraser array are turned off.
- Optical fan motor (M6, M12) stop, and bottom fan motor (M8) and exit fan motor (M7) are running at low speed.
- Carriages and indicators move to the position indicating copy area.
- The copier enters the standby mode.

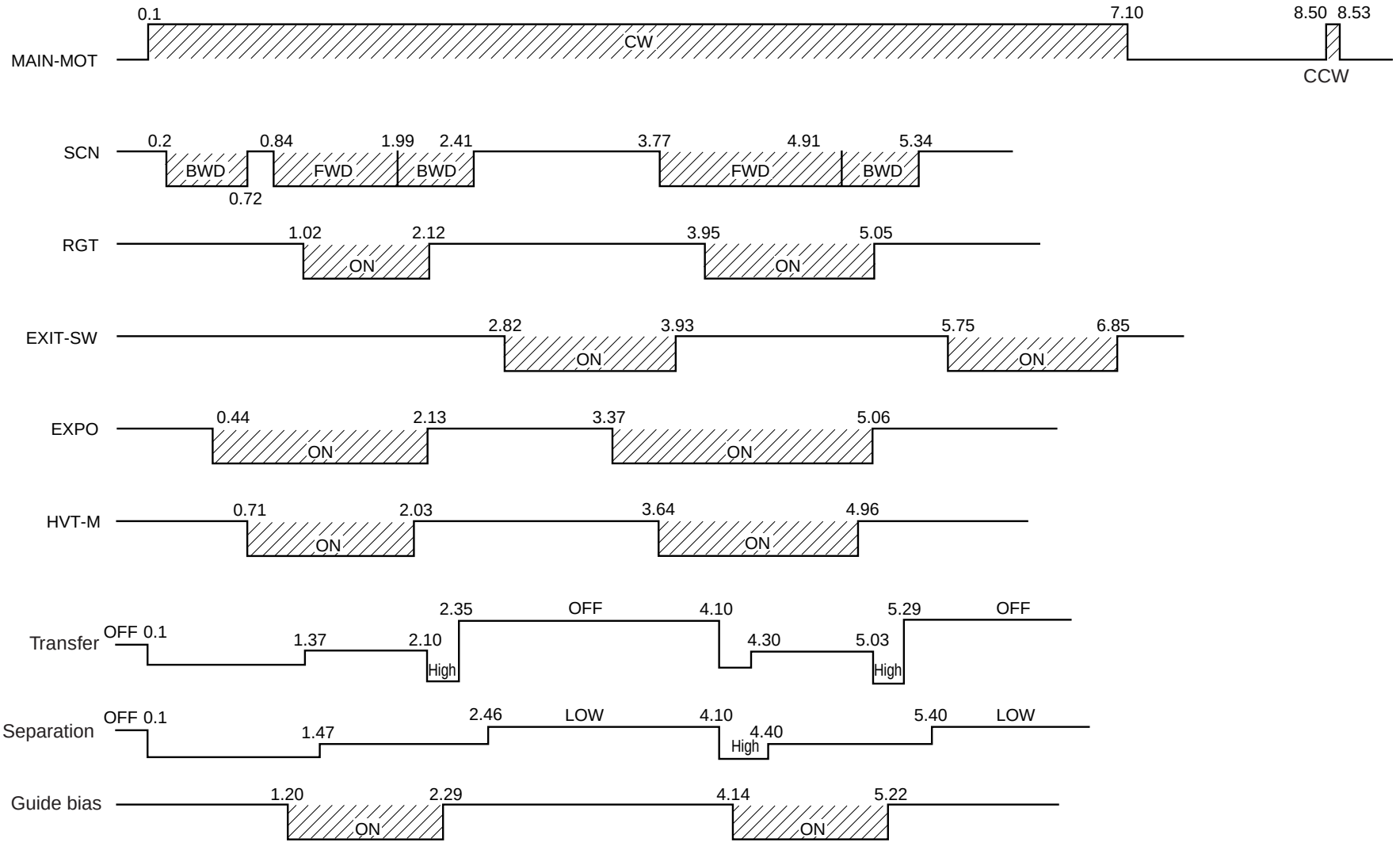

Timing chart for two A4 actual-size cassette feeding

4.2.4 Bypass-feed copying

(1) A sheet of paper is inserted through the bypass guide
- Manual feed switch (S6) is turned on.

(2) PRINT key is pressed
- The main transfer and separation chargers, transfer bias, discharge lamp, and LED eraser array are turned on.
- Optical fan motor (M6, M12), bottom fan motor (M8) and exit fan motor (M7) are running at high speed.
- Main motor (M1) is turned on

  ~ Drum, developer unit, transport belt, heat roller, and exit roller are running.

(3) Sheet-bypass feeding
- Manual feed clutch (CLT4) is turned on

  ~ Manual feed roller is lowered.

  ~ Manual feed roller, paper feed roller, and separation roller are running.

– Aligning operation –
- Paper reaches aligning roller

  ~ Paper stop switch1 (S7) is turned on.

  After a set time lag, the manual feed clutch (CLT4) is turned off and paper feeding is terminated.

(4) Same as operation (3) through (6) of “4.2.3 Automatic Feed Copying Using the PRINT key”.

4.2.5 Interrupt copying

(1) The INTERRUPT key is pressed.
- Interruption LED is turned on.

  The copying operation is temporarily halted and carriages-1 and -2 return to their home position. The copying mode is set to automatic exposure and 1-to-1 reproduction ratio. Register remains unchanged.

(2) The preferred copying modes are specified.

(3) After interrupt copying is terminated when the INTERRUPT key is pressed again, the interrupt LED goes off and the copier returns to the conditions before the interruption.

(4) PRINT key is pressed

The copying operation before the interruption is resumed.

4.3 Fault Detection

If a fault occurs in the copier, a symbol corresponding to the type of fault will be displayed in order to draw the attention of the operator.

- Classification of faults
  - A) Faults which can be cleared without turning off the door switch (yellow flashing display on the display panel).
    - (1) ADD PAPER
    - (2) BYPASS MISFEED
    - (3) INSERT KEY COPY COUNTER
    - (4) CASSETTE MISFEED
  - B) Faults which cannot be cleared without turning off the door switch (red flashing display on the display panel).
    - (1) CLEAR PAPER
    - (2) ADD TONER (yellow flashing display)
    - (3) REPLACE TONER BAG
  - C) Faults which cannot be cleared unless the main switch (S1) is turned off.
    - (1) SERVICE CALL

A-1) ADD PAPER ( )

[In the case of the copier and PFP cassettes]

- When the cassette is not installed, the size switch (S5 or S15) detects the absence of the cassette.

⇩

When the cassette is not installed.
When the cassette is installed but there is no paper in the cassette.

~Size switches are all switched off.

Paper empty status.

↓

Signal sent to control circuit.

↓

The ADD PAPER display will flash.

* The PRINT key will not function.

[In the case of the LCF and the pedestal]

By combining the operation of the tray motor and the condition of the tray-up switch and the empty switch, the CPU detects whether or not there is paper.

- When the power is turned on or when the LCF door is opened/closed (for the pedestal: when the power is turned on or when the cassette is removed) ~
  The PFC (Paper Feed Controller) causes the LCF to initialize.

  ↓

  Detects whether or not there is paper

  ↓

- Tray motor comes on ~ The tray rises.

  ↓ At this time, both tray-up and LCF empty switches are off.

- A fixed time later, if the tray-up switch is not turned on:

  ||

  The tray is not normal → The "ADD PAPER" is displayed regardless of paper being present or not.

  ↕

  Removing/reinstalling the LCF or turning off/on clears this condition. (For the pedestal, turn off/on the power.)

  ↓

- Within a fixed time, the tray-up switch turns on:
  ~ The tray motor stops.
  At this time, if the empty switch is on ~ It is determined there is paper.
  At this time, if the empty switch is off ~ It is determined there is no paper.

  ↓

  The "ADD PAPER" is displayed.

- During copying, sheets of paper are fed and when the paper supply becomes low →
  The tray-up switch goes off → The PFC turns on the tray motor ~ The tray moves up.
  The tray-up switch come on → The tray motor stops.
- During copying, when the empty switch goes off despite the tray-up switch being on

  ↓

  It is determined there is no paper.

  ↓

  "ADD PAPER" is displayed.

  ↓

  Copying stops.

A-2) BYPASS MISFEED ( )

- During sheet bypass copying

The manual feed clutch (CLT4) has been turned on

↓

The paper-stop switch-1 (S7) comes on

* If the paper-stop switch-1 (S7) does not come on within the specified time:

↓

BYPASS MISFEED

↓

The BYPASS MISFEED symbol is displayed

↓

Copying cannot be started

↓

Clearing method: Remove the paper from the sheet-bypass guide. The manual-feed switch (S6) goes off.

A-3) INSERT KEY COPY COUNTER ( )

- If the copy counter (optional) is installed in the copier and is then withdrawn:

The INSERT KEY COPY COUNTER display appears ←

↓

Copying is not possible

- If the counter is withdrawn during copying, the machine will stop after the paper being copied has exited.

B-1) CLEAR PAPER ( )

- Leading-edge jam detection by the exit switch (S9): (E01)

The aligning clutch (CLT2) is turned on

↓ 1.875 sec.*

The exit switch (S9) comes on

* When the exit switch (S9) has not come on after 1.875 seconds have elapsed.

↓

The CLEAR PAPER symbol (E01) appears and copying will stop.

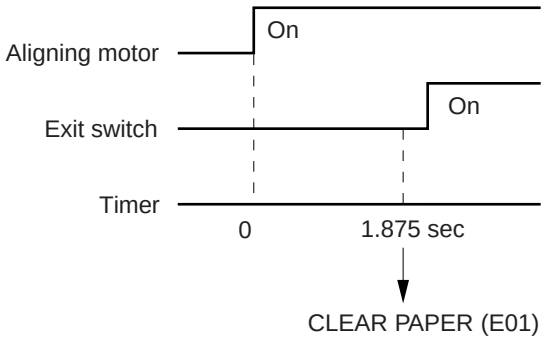

- Trailing-edge detection by exit switch (S9): (E02)
  Aligning clutch (CLT2) goes off.
  ↓ 1.92 sec*
  The exit switch (S9) goes off (detects paper exit)
  * When the exit switch (S9) does not go off even after 1.92 seconds:
  ↓
  The CLEAR PAPER symbol appears (E02), and copying stops.

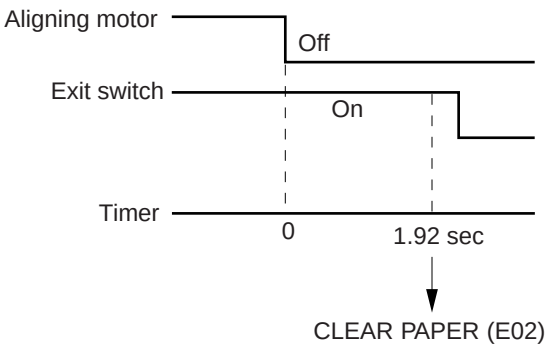

- Immediately after power on
  ↓
  Exit switch (S9) is detecting paper (on)
  ↓
  CLEAR PAPER (E03)

- If the front cover is opened during copying
  ↓
  CLEAR PAPER (E04)

- Leading edge jam detection by the paper stop switch in front of the aligning roller:
  After the leading edge of the paper passes the transport rollers, if the paper stop switch-1 (S7) is not turned on within a fixed time
  ↓
  Paper misfeeding (E05)

- During paper feeding from the ADU:
  After the feed clutch is turned on, if the paper stop switch (S16) does not come on within a fixed time.
  ↓
  Paper misfeeding (E11)

- During paper stacking in the ADU:
  If the ADU jam switch (SA4) does not detect any paper at the fixed timing
  ↓
  Paper misfeeding (E08)

- During paper feeding from the copier and the pedestal:
  After the feed clutch is turned on, if paper stop switches (S7/S16) do not come on within a fixed time
  ↓
  Paper misfeeding (E13 – E19)
  E13 – E19: The error code is different according to the cassette used.

B-2) ADD TONER ( )

Toner density has become low
↓
Toner empty detection: Auto-toner sensor
↓
Control circuit: → the ADD TONER symbol appears: copying is not possible
Clearing method: Replace the toner cartridge and close the front cover.
Toner supply operation: copying is possible

B-3) REPLACE TONER BAG ( )

The toner bag becomes full of toner
↓
The toner-recovery auger moves towards the rear of the copier: toner-full switch (S13) will be turned on.
↓
REPLACE TONER BAG display

- When the toner-full switch (S13) comes on during copying
  ↓
  Copying will stop after the last sheet has exited during copying
  Clearing method: Replace with a new toner bag.

C-1) Service call

If the CLEAR/STOP key and the “8” key are pressed simultaneously when the SERVICE CALL symbol symbol is flashing, one of the error codes will appear on the message display.
For the contents of the error codes, refer to the “SERVICE HANDBOOK”.

4.4 Flow Charts

4.4.1 Power on to ready

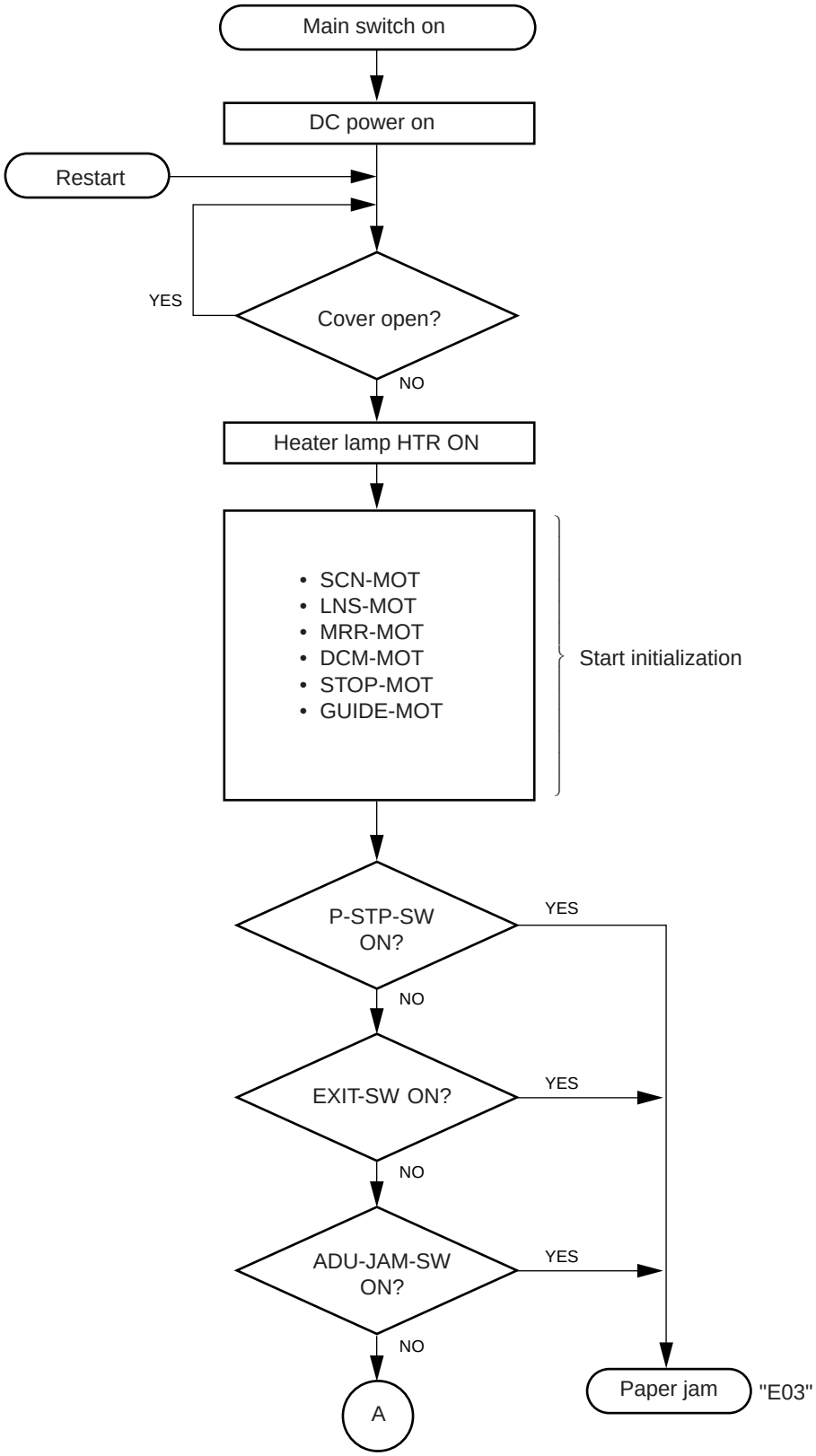

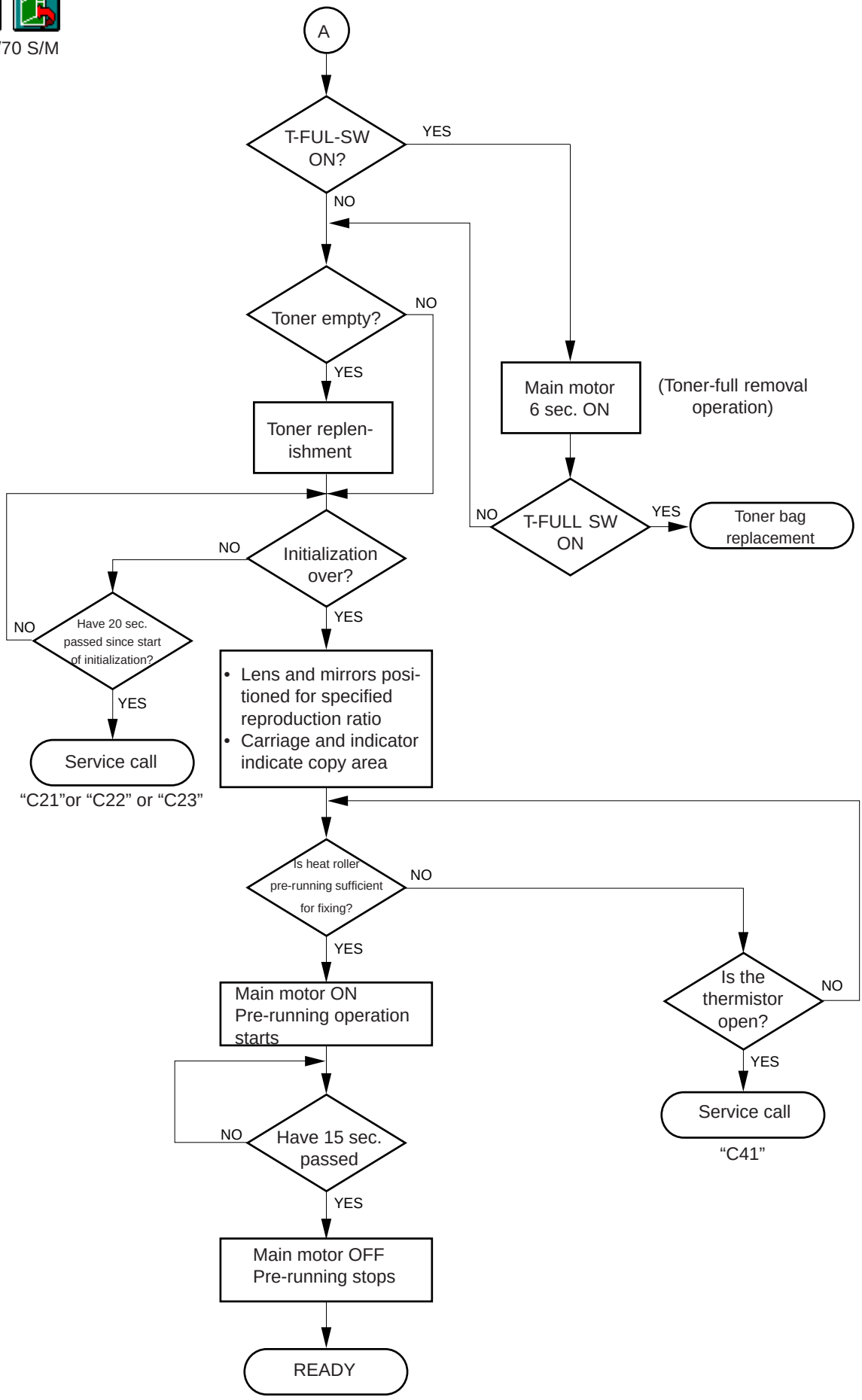
A
T-FUL-SW ON?
YES
NO
Toner empty?
NO
YES
Toner replen-ishment
Main motor 6 sec. ON
(Toner-full removal operation)
T-FULL SW ON
NO
YES
Toner bag replacement
Initialization over?
NO
YES
Have 20 sec. passed since start of initialization?
NO
YES
Service call
"C21"or "C22" or "C23"
• Lens and mirrors posi-tioned for specified reproduction ratio
• Carriage and indicator indicate copy area
Is heat roller pre-running sufficient for fixing?
NO
YES
Main motor ON
Pre-running operation starts
Is the thermistor open?
NO
YES
Service call
"C41"
Have 15 sec. passed
NO
YES
Main motor OFF
Pre-running stops
READY

4.4.2 Automatic feed copying

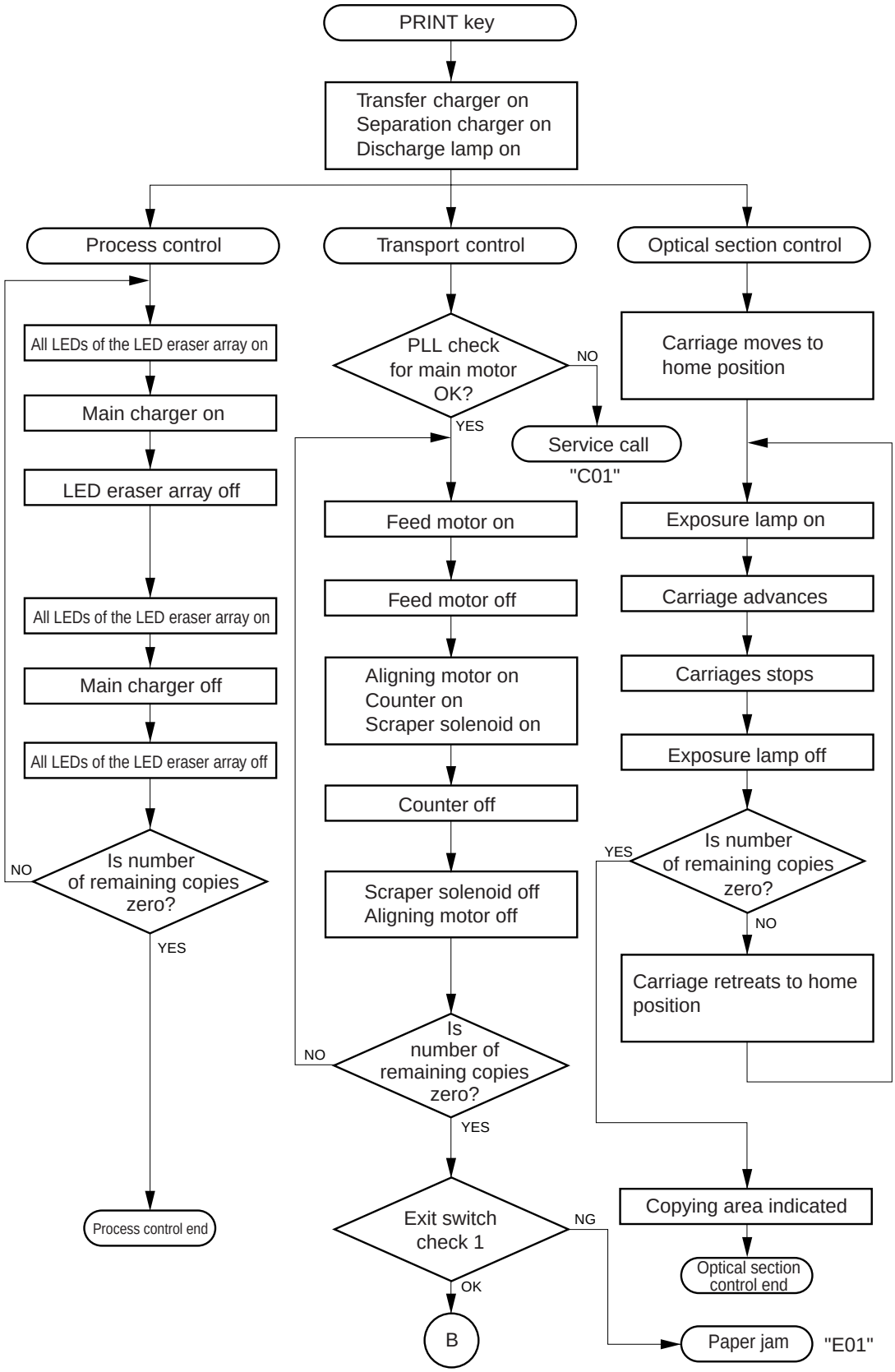

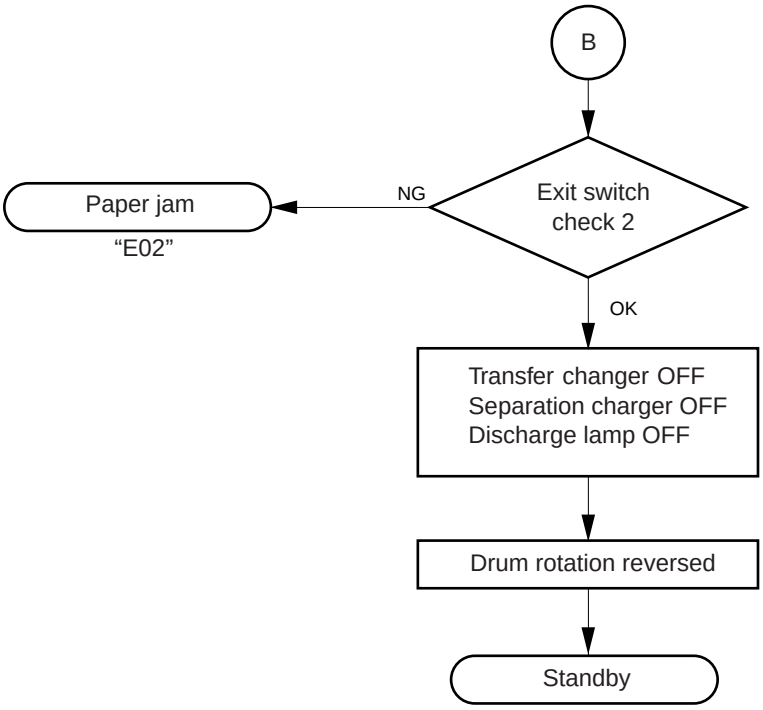
B
Exit switch check 2
NG
Paper jam
“E02”
OK
Transfer changer OFF
Separation charger OFF
Discharge lamp OFF
Drum rotation reversed
Standby

5. DISPLAY UNIT

The display unit consists of key switches for copier operation/selection of each mode, LEDs and an LCD displaying the copier state or messages.
Particularly, when the operator's attention is recommended, a graphic symbol lights or flashes and the message indicating that condition is displayed.

5.1 Detailed Drawing of the Control Panel and the Display Panel

For the U.S.A. and Canada

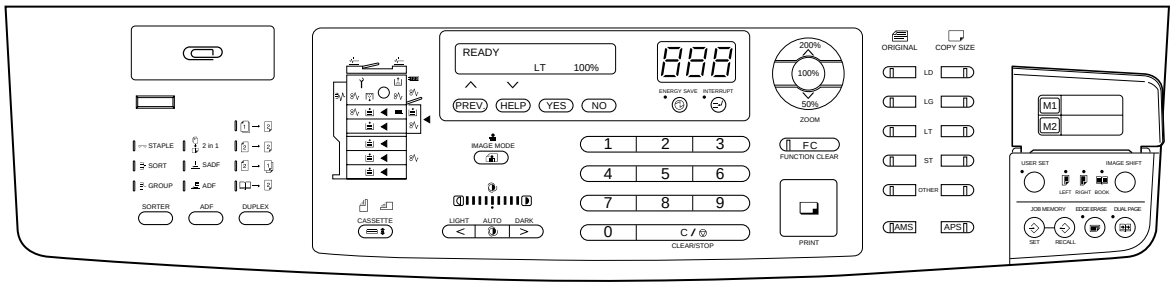

For Europe

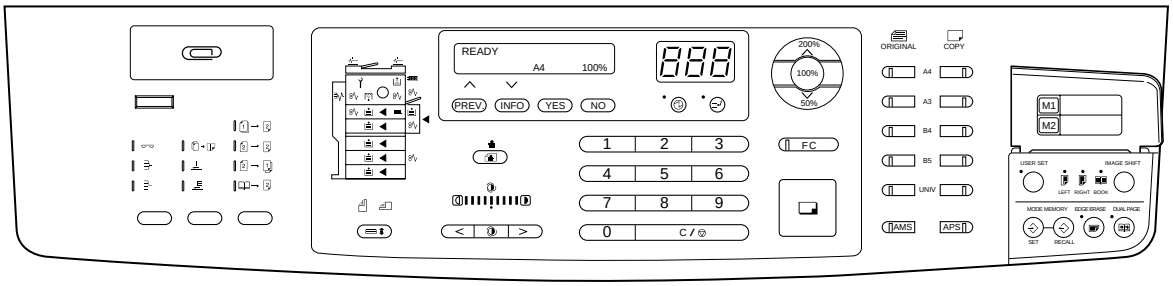

Arrangement of the control panel

For the U.S.A. and Canada

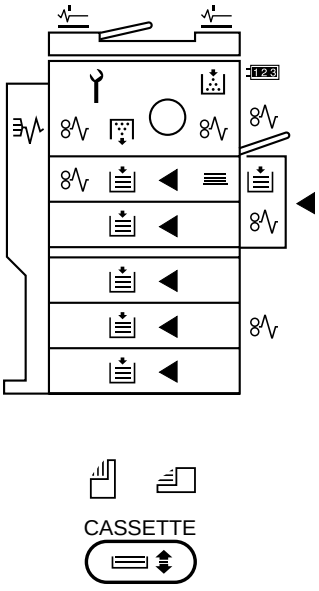

For Europe

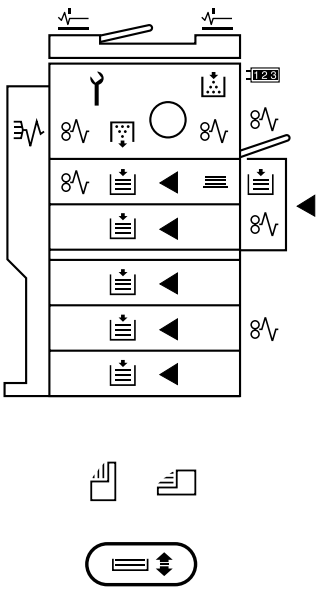

Details of the display panel

5.2 Items Shown on the Display Panel

5.2.1 Display during normal copying

No.	Message	Conditions of machine	Notes
1	WAIT WARMING UP	Being warmed up • Indicated after the main switch is switched on up until the machine becomes capable of copying.	• The number and reproduction ratio of the copies are indicated, for example, as “0”, “100%” when the main switch comes on.
2	READY	Capable of copying. • Indicated when the machine is capable of copying and the operator’s instructions for copying conditions are awaited. • Returns to the initial condition if no key input is given for 45 seconds.	• Copy quantity indicator indicates as “1”. When a digital key is pressed, the set number is indicated. • The set number is cleared to “1” by pressing the CLEAR/STOP key. • Manual copying is possible.
3	COPYING	Now copying. • Indicated by pressing the PRINT key. • Copy quantity indicator becomes “1” and copying is completed.	• After completion of copying, the copy quantity indicator returns to the initially set number.
4	SAVING ENERGY PRESS PRINT	Energy saving conditions.	• Released by pressing the ENERGY SAVER key or the PRINT key.
5	PLACE NEXT ORIGINAL	ADU 1-sided copying standby state. Ⓒ below.	• When using ADU 1-sided, and when not using ADF.

In case of lateral paper feeding, the symbol Ⓐ lights up and for longitudinal feeding, the symbol Ⓑ lights up on the display panel.

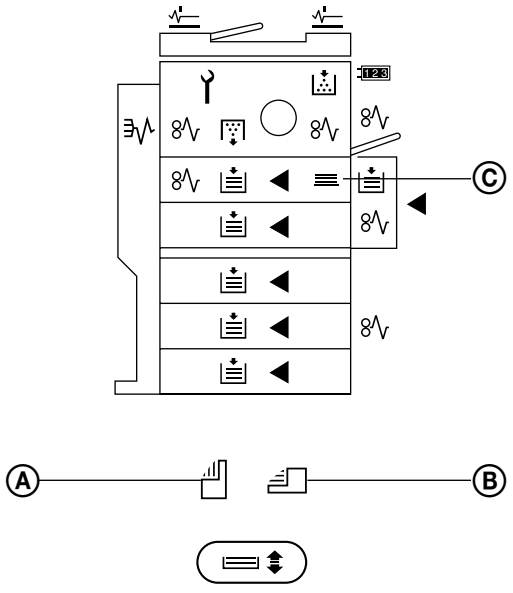

5.2.2 Display in the event of faulty conditions

No.	Message	Abnormal state & indication	Solution
6	ADD PAPER	Indication of lack of paper. • Indicates when there is no paper in the cassette. (Ⓐ below.) • Indicates which cassette has no paper. (Ⓔ below.) • Manual copying is possible.	• Supply paper to the selected cassette. • Select another cassette.
7	ADD TONER: PRESS INFO	Indication of lack of toner. • Ⓑ below is indicated when the toner in the toner cartridge runs out. • When this message is displayed, it is not possible to copy.	• Released after the toner is supplied and the front cover is closed.
8	INSERT KEY COPY COUNTER	Key copy counter withdrawn. • Indicated when the key copy counter is withdrawn when the machine is READY or during copying. Ⓒ below. • When it is removed after pressing the PRINT key, the machine stops after that copy is completed, but the counter counts it.	• Released and returned to normal conditions by inserting the key copy counter.
9	DISPOSE OF USED TONER	Indication of need to replace the toner bag. • Indicated when the toner bag is full. Ⓓ below. The copier stops.	Open the front cover and replace the toner bag.

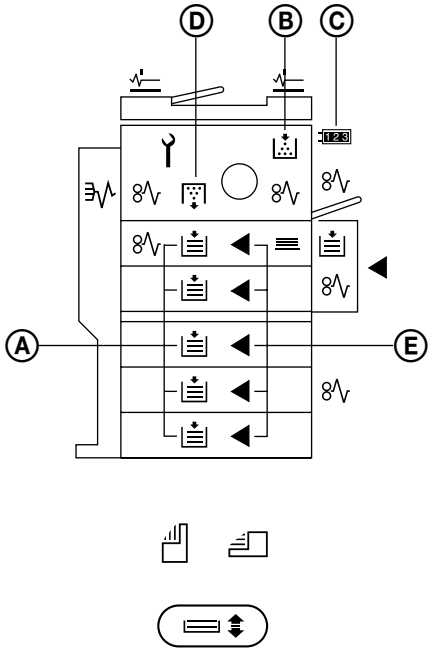

No.	Message	Abnormal state & indication	Solution
10	PAPER MISFEED IN BYPASS	Bypass paper jamming • Indicates when paper jams at the bypass guide. Ⓐ below.	The machine is returned to normal conditions automatically by pulling the paper out from the bypass guide.
11	MISFEED IN COPIER PRESS INFO	Paper jammed in the machine. • Indicated when paper jams in the machine. Ⓑ, Ⓒ, Ⓓ and Ⓗ below.	• Press the HELP (INFO) key and remove the paper jammed in the copier following the message.
12	MISFEED IN DOC. FEEDER	Original jammed • Indicated when an original is jammed in the optional document feeder. Ⓔ and Ⓕ below.	Open the ADF feed cover and remove the jammed original.
13	MISFEED IN SORTER: PRESS INFO	Paper jammed in the sorter. • Indicates when paper is jammed in the sorter. Ⓖ below.	Remove the paper jammed in the sorter and open and close the front cover once.
14	MISFEED IN ADU: PRESS INFO	Indicates when paper is jammed in the ADU section. Ⓘ below.	Press the HELP (INFO) key and remove the paper jammed in the copier following the message.

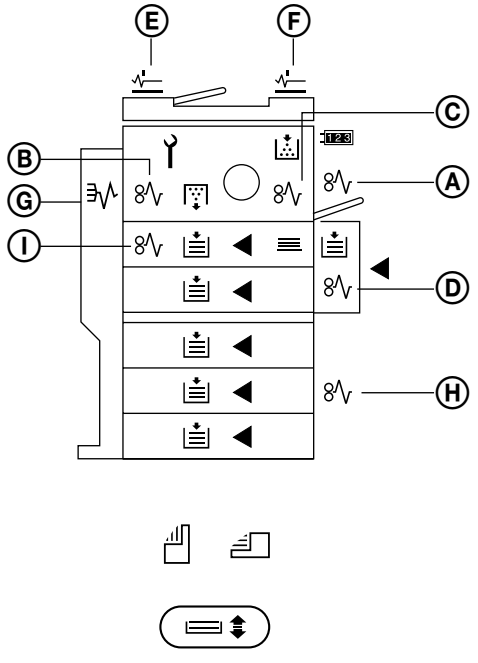

No.	Message	Abnormal state & indication	Solution
15	CALL FOR SERVICE: PRESS INFO	Some or one of the mechanism, motors, switches or sensors are abnormal. Ⓐ below.	Turn off the machine, remove the cause of the fault and turn the machine back on.
16	TIME FOR PERIODIC MAINTENANCE	Indication of PM cycle. • Indicated when it is time for periodic maintenance and inspection. • Capable of copying.	Maintenance and inspection by a qualified service technician.

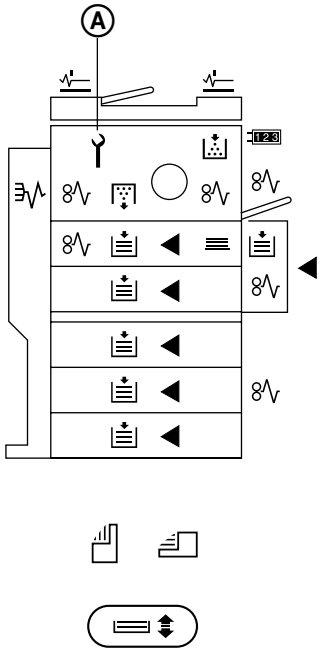

5.3 Relationship between Copier Conditions and Operator's Actions

Operation / Condition	PRINT key	CLEAR/ STOP key	Digital keys	REPRO-DUCTION RATIO selection key	EXPOSURE key	ORIGINAL SIZE key	COPY SIZE key	CASSETTE SELECTION key	INTER-RUPT key	ENERGY SAVER key	EDGE ERASE key	DUAL-PAGE COPY key	IMAGE SHIFT key	Sheet bypass
Warming up	–	○	○	○	○	○	○	○	○	○	○	○	○	○
Ready	○	○	○	○	○	○	○	○	○	○	○	○	○	○
Reproduction-ratio changing	–	○	○	○	○	○	○	○	○	○	○	○	○	○
Copying	–	○	–	–	○	–	–	○	○	–	–	–	–	○
Add paper	–	○	○	○	○	○	○	○	○	○	○	○	○	○
Add toner	–	○	○	○	○	○	○	○	○	○	○	○	○	○
Key copy counter not inserted (optional)	–	○	○	○	○	○	○	○	○	○	○	○	○	○
Bypass misfeed	–	–	–	–	–	–	–	–	–	–	–	–	–	–
Replace toner bag	–	–	○	○	○	○	○	○	○	○	○	○	○	○
Clear paper	–	–	–	–	–	–	–	–	–	–	–	–	–	–
Service call	–	–	–	–	–	–	–	–	–	–	–	–	–	–
Interrupt mode	○	–	–	○	○	○	○	○	○	–	○	–	○	○
Energy-saving mode	○	–	–	–	–	–	–	–	–	○	–	–	–	–

○: Machine operates or indicates in accordance with the operator's action. – : Operation is ignored.

(1) By pressing the ENERGY SAVER key or the PRINT key, the energy-saving mode will be cancelled.

(2) During copying, avoid changing exposure as far as possible.

(3) The function of the CLEAR/STOP key changes in the following manner according to the machine status.

During copying ..... Interruption of the copying (Stop function ..... The copy quantity indicator will not change.)

When not copying .... When pressed once, the copy quantity indicator returns to "1".

(4) During copying, avoid sheet bypass feeding because of possible paper jamming.

Note: The interrupt mode will be automatically cancelled when the machine is not used for 45 seconds.

Dec. 1996 © TOSHIBA

5.4 Description of Operation

5.4.1 Dot matrix LCD display circuit

(1) Structure

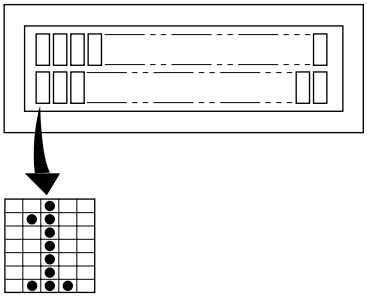

- Dot matrix LCD display circuit has a display capacity of 40 characters (20 characters x 2 lines).
- 1 character is a unit consisting of ON/OFF lights made of 35-element (5 x 7) dots.

(2) Drive Operation

- LED control: The LCD's internal control driver drives.
- What character is displayed in what position: IC19 (main CPU), IC9 (HC244), IC37 (7407), and IC18 (gate array) of the logic circuit control.
- Message data and executable programs are stored in the main PROM.
- The character codes are stored in the PROM on the LCD.

The main CPU divides the display block into 4 blocks. The main CPU outputs the RAM address data for the starting position at which each block is displayed and then outputs display data for the number of characters (10 characters) to be displayed to the LCD. When the message is changed, the main CPU outputs the display data for the blocks 1~4.

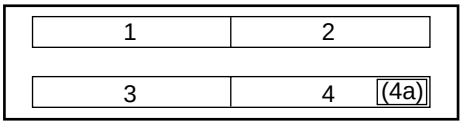

Display blocks

When changing the display data only for the reproduction ratio, the leading RAM address data in the display position of the reproduction-ratio block (4a) are first output and then the display data for the number of reproduction-ratio characters (4 characters) are output to the LCD.

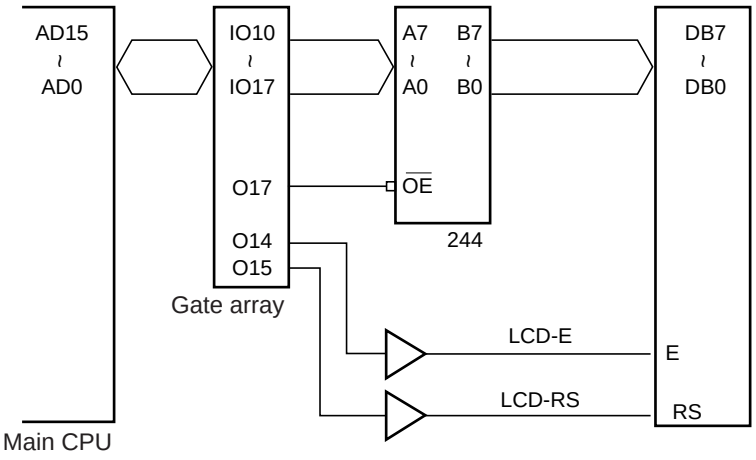

5.4.2 LED display circuit

(1) LED display method

For example, the following shows how the LED LP12 (APS) lights up for displaying “automatic paper sensing”.

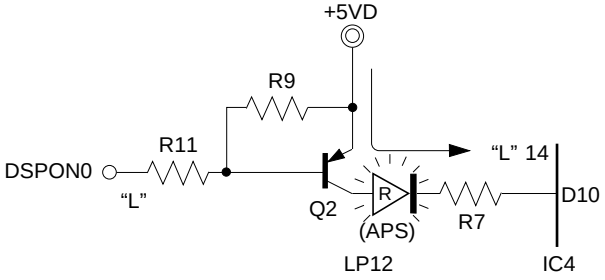

When DSPON0 signal becomes “L” level, transistor Q2 is turned ON. Further, when IC4 pin14 (D10) becomes “L” level, current flows from +5VD to LP12 (APS) through the transistor. In this way LP12 (APS) lights up.

(2) The actual circuit is controlled as follows.

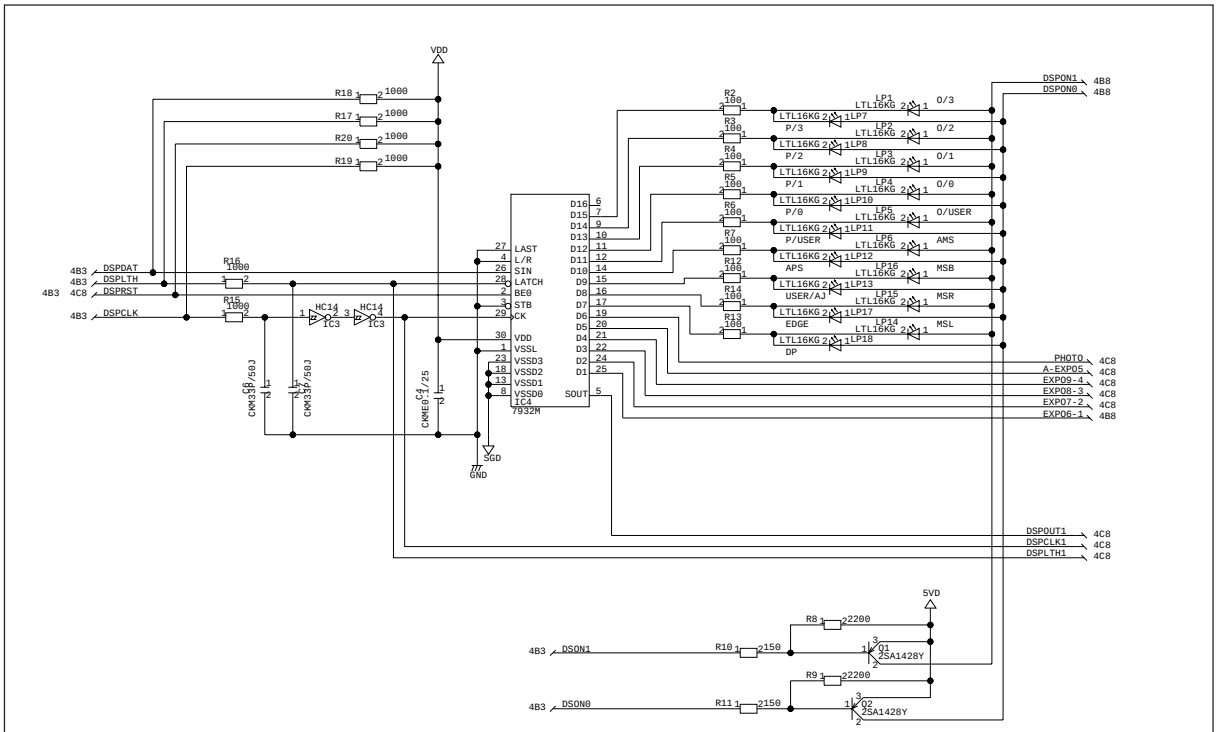

(14.2.1 Display Circuit (PWA-DSP) 1/4)

- The signals of DSPON0 and DSPON1 become “L” level by one turn every 8 msec.
- Q1 (or Q2) is turned ON when DSPON0 (or DSPON1) is “L” level.
- LED ON/OFF signal from LGC is inputted to the SIN (pin 26) terminal of IC4 through DSPDAT signal line. (Serial data)
- The LED ON/OFF signal is inputted to IC2 in serial is outputted to output terminals of D1 – D16 in parallel.

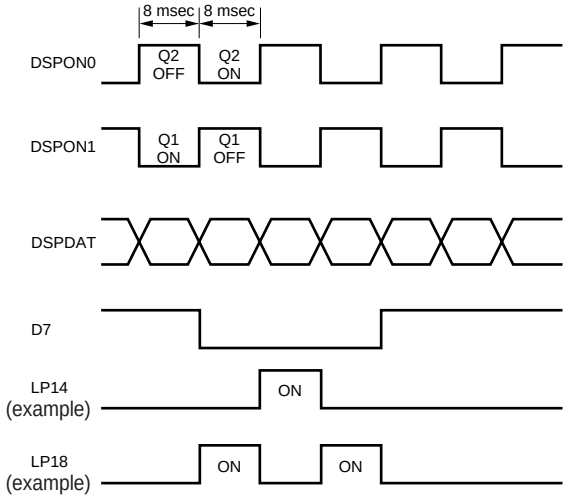

Condition of LED lighting

① The transistor (Q1 or Q2) connected on the anode side of the LED is ON status.

② Output connected on the cathode side of the LED is “L” level.

When the above conditions ① and ② are fulfilled, the LED lights.

Refer to the following names of the LED which are ON/OFF controlled by DSPON0/DSPON1 signals.

Transmission order	LP	SIGNAL	DSP-ON-0	LP	SIGNAL	DSP-ON-1	LC7932
1	5	DF/SINGL	ADF single feeding	6	DF/MULT1	ADF multiple feeding	IC1-6
2	38	CST1	Cassette selection (LCF)	35	PEMP1	Paper empty (LCF)	IC1-7
3	22	CST2	Cassette selection (Copier-U)	17	PEMP2	Paper empty (Copier-U)	IC1-9
4	23	CST3	Cassette selection (Copier-L)	18	PEMP3	Paper empty (Copier-L)	IC1-10
5	24	CST4	Cassette selection (PFP-U)	19	PEMP4	Paper empty (PFP-U)	IC1-11
6	25	CST5	Cassette selection (PFP-M)	20	PEMP5	Paper empty (PFP-M)	IC1-12
7	26	CST6	Cassette selection (PFP-L)	21	PEMP6	Paper empty (PFP-L)	IC1-14
8	27	O/YOKO	Horizontal original	28	O/TATE	Vertical original	IC1-15
9	12	DFJ	ADFJAM (Feeding)	29	DEJ	ADFJAM (Exiting)	IC1-16
10	15	SRVC	Call service	11	SJ	Sorter JAM	IC1-17
11	30	TEMP	Toner empty	13	EJ	Paper existing JAM	IC1-19
12	16	TFULL	Toner full	31	RJ	Paper feeding JAM (Before aligning)	IC1-20
13	33	KCTR	Key copy counter withdrawn	36	TJ	Paper feeding JAM (After aligning)	IC1-21
14	32	ADUSTUCK	ADU stacking	14	ADUJ	ADUJAM	IC1-22
15				37	PJ	PFPJAM	IC1-24
16				34	MJ	Bypass JAM	IC1-25
17	53	MAG2/G	Copy quantity display (tens)	53	MAG1/G	Copy quantity display (hundreds)	IC2-6
18	53	MAG2/B	Copy quantity display (tens)	53	MAG1/B	Copy quantity display (hundreds)	IC2-7
19	53	MAG2/A	Copy quantity display (tens)	53	MAG1/A	Copy quantity display (hundreds)	IC2-9
20	53	MAG2/F	Copy quantity display (tens)	53	MAG1/F	Copy quantity display (hundreds)	IC2-10
21	53	MAG2/E	Copy quantity display (tens)	53	MAG1/E	Copy quantity display (hundreds)	IC2-11
22	53	MAG2/D	Copy quantity display (tens)	53	MAG1/D	Copy quantity display (hundreds)	IC2-12
23	53	MAG2/C	Copy quantity display (tens)	53	MAG1/C	Copy quantity display (hundreds)	IC2-14
24	53	MAG3/G	Copy quantity display (units)	52	AC	All clear	IC2-15
25	53	MAG3/B	Copy quantity display (units)	50	PS	Energy saving	IC2-16
26	53	MAG3/A	Copy quantity display (units)	51	INT	Interruption	IC2-17
27	53	MAG3/F	Copy quantity display (units)	4	2IN1	2IN1	IC2-19
28	53	MAG3/E	Copy quantity display (units)	1	STAPLE	Staple mode	IC2-20
29	53	MAG3/D	Copy quantity display (units)	2	SORT	Sort mode	IC2-21
30	53	MAG3/C	Copy quantity display (units)	3	GROUP	Group mode	IC2-22
31	7	ADU1	Duplexing (1 → 2)	8	ADU2	Duplexing (2 → 2)	IC2-24
32	9	ADU3	Duplexing (2 → 1)	10	ADU4	Duplexing (Book → 2)	IC2-25
33							IC4-6
34	*7	P/3	Paper size	*1	O/3	Original size	IC4-7
35	*8	P/2	Paper size	*2	O/2	Original size	IC4-9
36	*9	P/1	Paper size	*3	O/1	Original size	IC4-10
37	*10	P/0	Paper size	*4	O/0	Original size	IC4-11
38	*11	P/USER	Paper size (User adjustment)	*5	O/USER	Original size (User adjustment)	IC4-12
39	*12	APS	APS	*6	AMS	AMS	IC4-14
40	*13	USER/AJ	User adjustment	*16	MSB	Margin shift (Book)	IC4-15
41	*17	EDGE	Edge erasing	*15	MSR	Right margin shift	IC4-16
42	*18	DP	Dual-page copying	*14	MSL	Left margin shift	IC4-17
43	39	PHOTO	Photo mode				IC4-19
44	40	AUTO	Automatic exposure	45	EXPO5	Exposure display 5	IC4-20
45	49	EXPO9	Exposure display 9 (D MAX.)	44	EXPO4	Exposure display 4	IC4-21
46	48	EXPO8	Exposure display 8	43	EXPO3	Exposure display 3	IC4-22
47	47	EXPO7	Exposure display 7	42	EXPO2	Exposure display 2	IC4-24
48	46	EXPO6	Exposure display 6	41	EXPO1	Exposure display 1 (L MAX.)	IC4-25

Mark *: LEDs on PWA-DSP
No mark: LEDs on PWA-KEY

6. DRIVE SYSTEM

6.1 Construction of Drive System

The drive system consists of a drum (cleaner unit), developer unit, transport belt, heat roller, exit roller, transport roller, cassette feed roller and aligning roller.
The drive system is driven by the main motor.

6.2 Description of Operations

- Drum drive (Cleaner unit) ..... Main motor rotation is transmitted to the drum drive pulley via the timing belt, and drives the drum gear.
- Developer unit drive ..... Main motor rotation is transmitted to the developer unit drive gear via the timing belt and the gear.
- Heat roller drive ..... Main motor rotation is transmitted to the heat roller gear via timing belt and gears, and drives the heat roller.
- Transport belt ..... Transport belt gear is driven by the heat roller gear via the idle gear.
- Exit roller ..... Exit roller gear is driven by the heat roller gear via the idle gear.
- Aligning roller ..... Main motor rotation is transmitted to the aligning roller clutch via the timing belt and gears.
- Transport roller ..... Main motor rotation is transmitted to the transport roller clutch via timing belts and gears.
- Cassette feed roller ..... Main motor rotation is transmitted to the cassette feed roller via timing belts and gears.

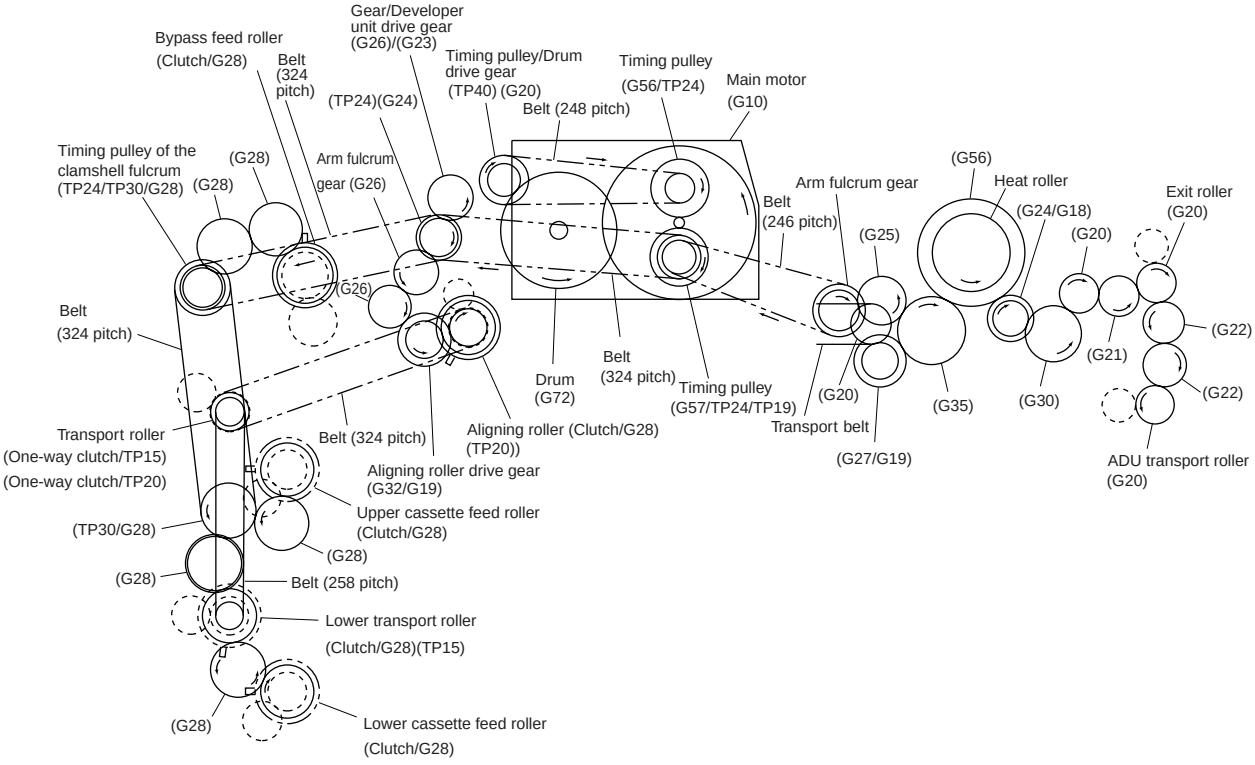

Drive system (Rear side view)

6.3 Disassembly and Replacement

[A] Clamshell fulcrum bracket and pulley

(1) Remove the upper rear cover and the upper feed cover.
(2) Remove the clamshell fulcrum bracket (3 screws).
(3) Remove the 2 belts from the pulley.
(4) Remove the clamshell fulcrum pulley.

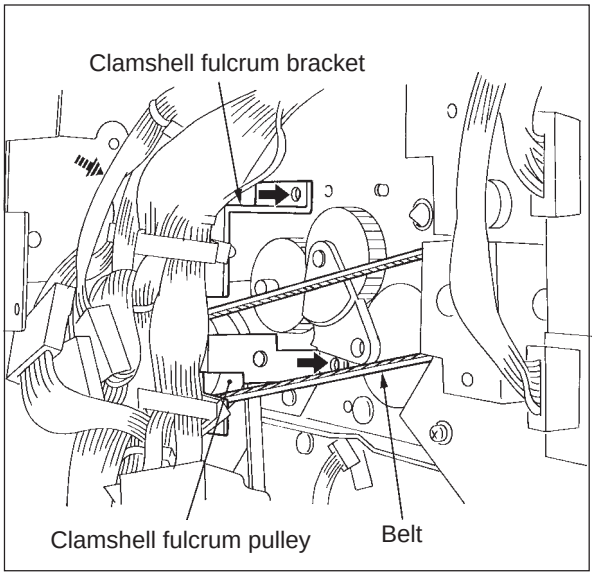

[B] Main motor

(1) Remove the main motor (2 connectors and 2 screws).

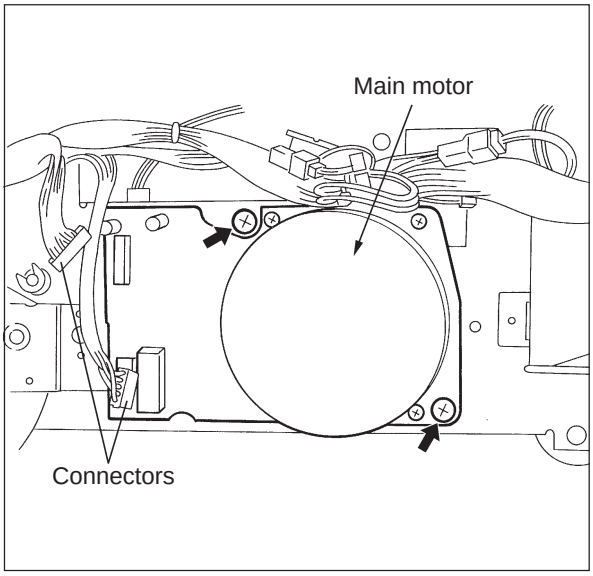

[C] Main drive unit

(1) Remove the drum tension bracket (1 screw).
(2) Remove the shaft bracket (1 screw).
(3) Remove the main drive unit (connector and 5 screws).

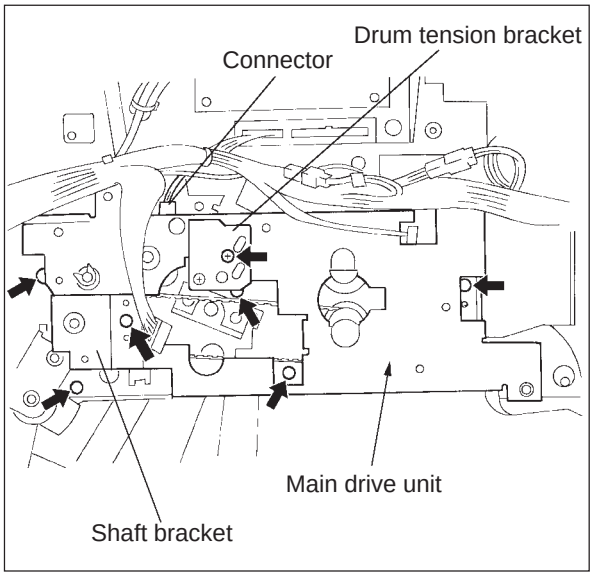

[D] Main drive unit gears

(1) The developer-unit drive gear and the drum drive gear are press-fitted to their shafts.

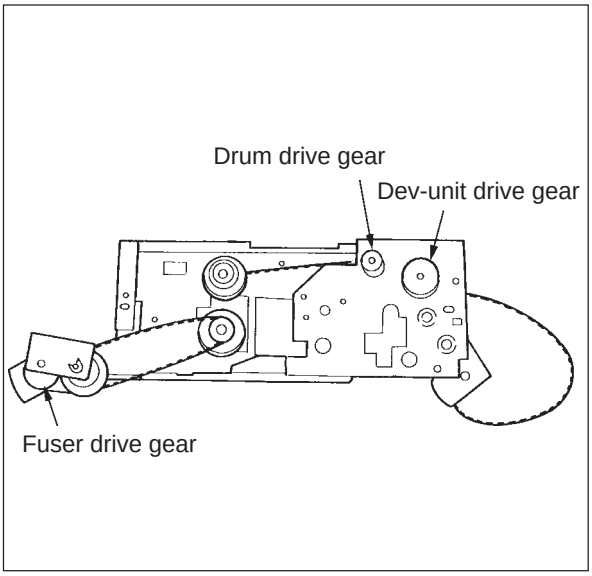

[E] Feed drive unit

(1) Remove the LCF connector bracket (2 screws).

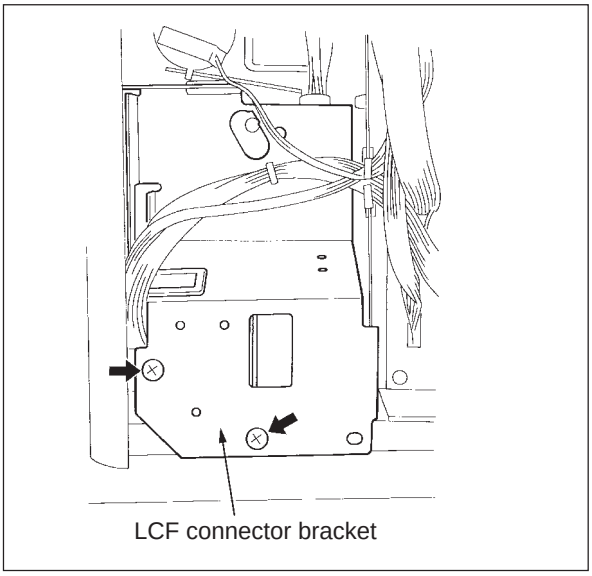

(2) Remove the clamshell fulcrum bracket and the feed roller bracket (3 screws) and then remove the pulley and belt.

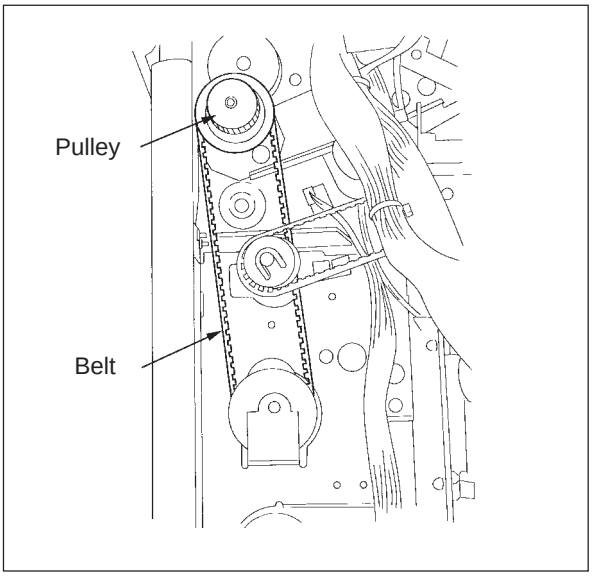

(3) Remove the lower feed roller clutch (1 set-screw).

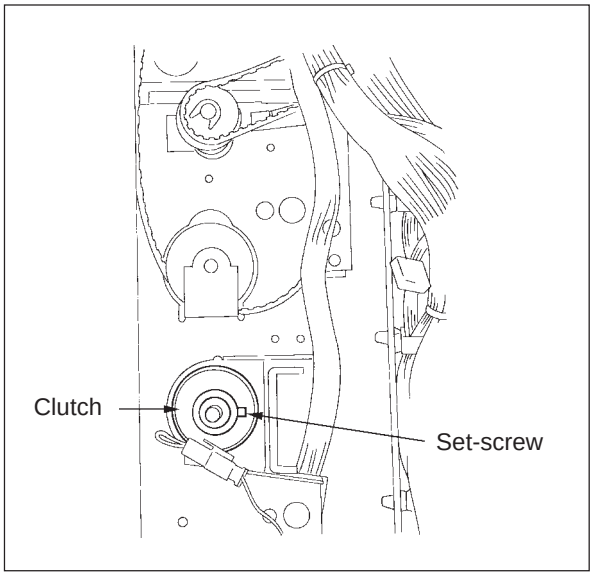

(4) Remove the pulley and belt for the upper feed roller (1 stop-ring).

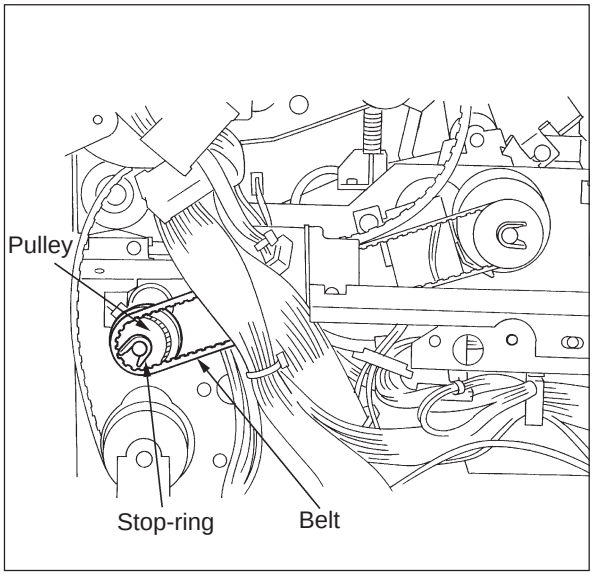

(5) Remove the feed drive unit (3 screws).
- This is easy to remove if the feed drive unit is slanted.

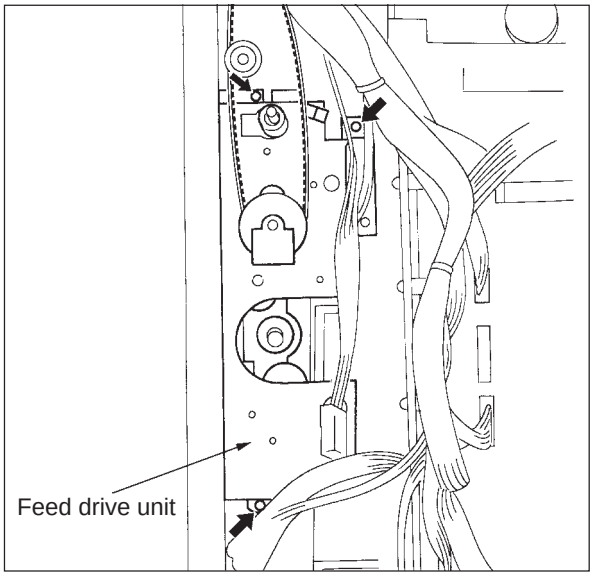

6.4 Main Motor

6.4.1 Main motor drive

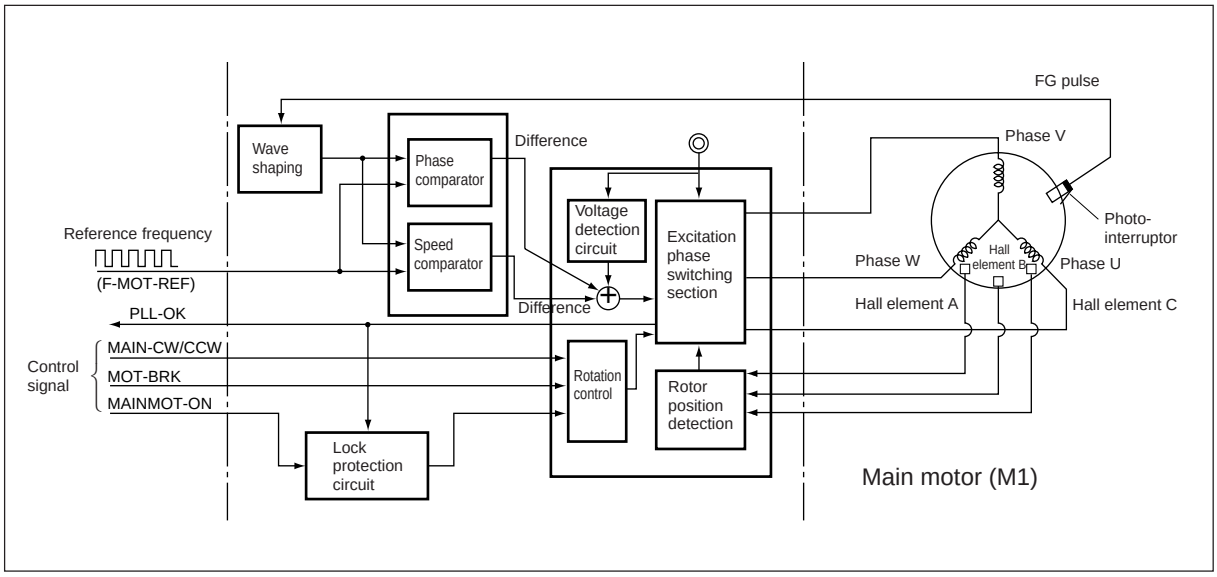

(1) The LGC transmits control signals for main motor rotation. (MAIN-CW/CCW: Direction of rotation, MAINMOT-ON: Motor rotation command)

(2) The excited phase switching unit excites each phase on the main motor → Main motor runs.

(3) Hall elements A to C are used to detect the rotation position of the motor (or rotor).

(4) The excited phase switching unit switches the excitation for each phase.
(By repeating (2) through (4) above, the motor keeps running.)

(5) The FG pulse is generated by the FG pulse pattern and N/S magnets of rotor installed on the main motor.

(6) The phases and velocities of the FG pulse and the reference frequency from the LGC are compared, and the differences are added. Further to this are added the fluctuations in the supply voltage. (Signal generation)

(7) Changes the switching timing for the excited phase switching unit to match the signal amount obtained in step (6).
i.e. control is done to equalize the FG pulse and reference frequency. → The main motor runs at a constant speed. (Locked range state.)

(8) When the main motor enters the locked range state, the excited phase switching unit transmits the PLL-OK signal to the LGC. (“L” level).

(9) When the MOT-BRK from LGC enters “L” level, the main motor rotation is braked, and when the MAINMOT-ON signal enters “H” level, the main motor stops.

6.4.2 Control signals

(1) MAIN-CW/CCW signal (LGC → MOT: Input)

Switches the rotation direction of the main motor. When this signal becomes “L” level, the main motor rotates counterclockwise as viewed from the rear side, and drives the developer unit, drum, heat roller, etc.

(2) PLL-OK signal (MOT → LGC: Output)

When the cycle of FG pulse deviation from the reference frequency is within fixed range, this state is specified as lock range (normal rotation), and this PLL-OK signal becomes “L” level. Also, at this time, the LED “LP1” light comes on.

(3) F-MOT-REF signal (LGC → MOT: Input)

This signal is a reference clock signal for the main motor to rotate at a fixed speed.

(4) MOT-BRK signal (LGC → MOT: Input)

When it becomes “L” level, the main motor rotation is broken down.

(5) MAINMOT-ON signal (LGC → MOT: Input)

This signal is main motor ON/OFF control signal, when it becomes “L” level, the motor rotates.

Signal level of motor circuit.

Signal	“H” level	“L” level
MAIN-CW/CCW	CW	CCW direction
PLL-OK	Speed is out of the locked range.	Locked range state.
F-MOT-REF	Reference clock	
MOT-BRK	Brake OFF	Brake ON
MAINMOT-ON	Motor OFF	Motor ON

* The signal names indicate a level in the connector J543, respectively.

7. OPTICAL SYSTEM

7.1 Functions

In this copier, the surface of the original is directly exposed to light, and the reflected light is conducted to the surface of the drum via the mirror, lens, and slit.

The whole original image is reflected on the drum surface through the light source being scanned from the leading edge to the trailing edge.

This area where functions as above are performed is called the optical section, located at the upper side of the copier.

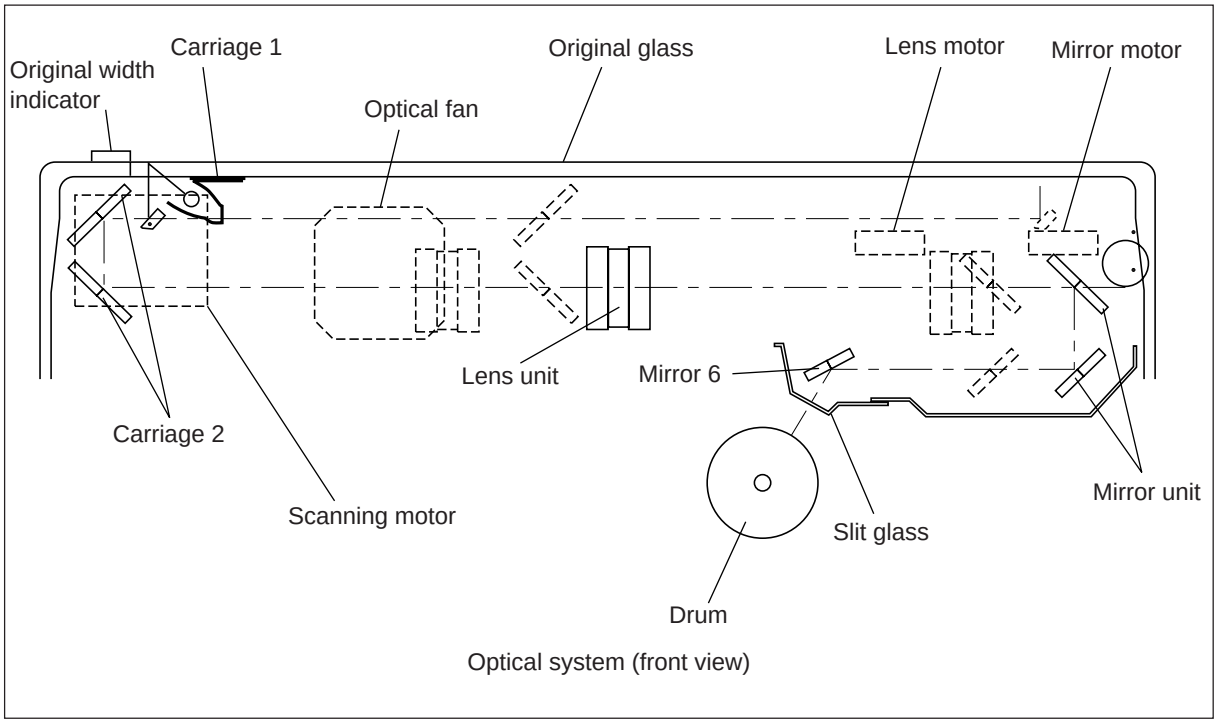

Optical system (front view)

7.2 Construction

The construction and purpose of the optical section are the followings:

(1) Original glass

The original is placed on this glass. Light from the exposure lamp exposes the surface of the original through this original glass.

(2) Carriage 1

Carriage 1 consists of the exposure lamp, reflector, mirror 1, thermofuse, and light distribution adjustment plates, etc. Carriage 1 is scanned by the scanning motor. The relation between the scanning speed and the drum rotation speed is specified as follows. In actual-size copying, both speeds are the same. The reproduction ratio of the direction of paper transport (lengthwise reproduction ratio) is specified by this scanning speed being changed. In enlargement copying, the scanning speed is slower than the drum rotation speed, and in reduction copying it is faster.

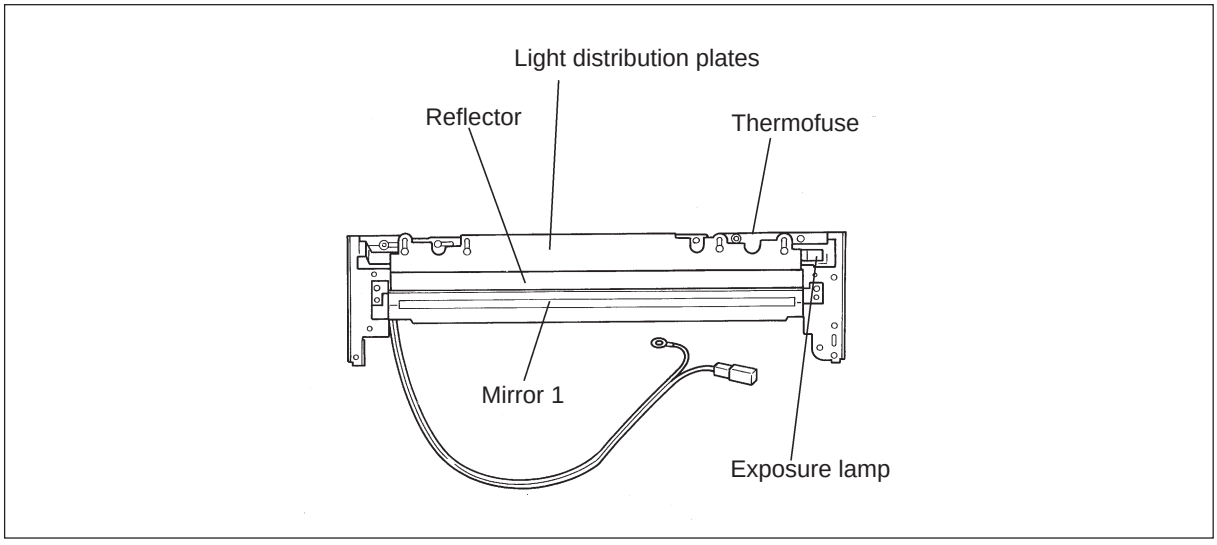

a. Exposure lamp

The light source for exposing the original to light.

b. Reflector

The reflection plate for using the exposure lamp effectively.

The sub-reflector is slit for optical path width cutting.

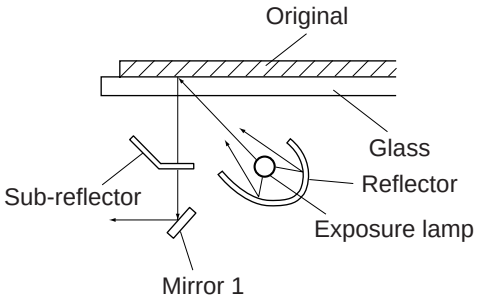

c. Mirror 1

The mirror for conducting the reflected light from the original to mirror 2 (mentioned later).

d. Thermofuse

Prevents the exposure lamp from an increase in temperature due to excessive lighting.

e. Light distribution adjustment plates

It is positioned to shield the light irradiated from the reflector on the surface of original, and adjusts the light intensity.

If the positions for the installation of this adjustment plate at the front or rear side are shifted, and the light intensity is different at both sides, this may cause uneven light distribution.

(3) Carriage 2

Consists of mirror 2 and 3, conducts the reflected light from mirror 1 to the lens via mirror 2 and 3. This is also scanned by the scanning motor in the same way as carriage 1.

The scanning speed is half that of carriage 1.

(The scanning distance is also half.)

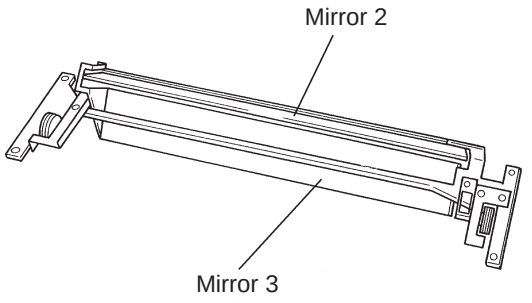

Carriage 2

(4) Lens unit

It is driving by the lens motor. The reflected light from mirror 3 is reversed at the lens focus, and conducted to mirror 4 (mentioned later).

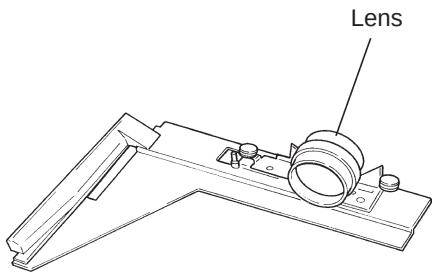

Lens unit

(5) Mirror unit

The mirror unit consists of mirror 4 and 5, and conducts the reflected light passing the lens to mirror 6 via mirror 4 and 5. This is driven by the mirror motor. Changing of positions of the lens unit and mirror unit alters the reproduction ratio of the vertical direction of paper transport (lateral reproduction ratio).

When the distance of the light path is equal between the original surface and the lens focus and the lens focus and the drum surface, actual-size copying is obtained.

When the former is longer, reproduction copying is performed, and when shorter, enlargement copying.

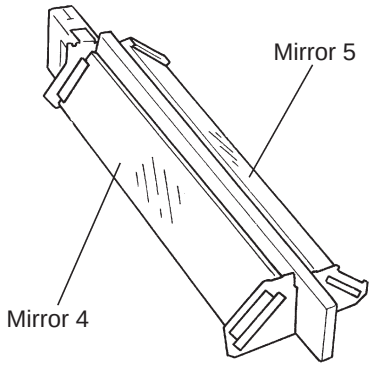

Mirror unit

(6) Mirror 6

Conducts the reflected light from mirror 5 to the slit.

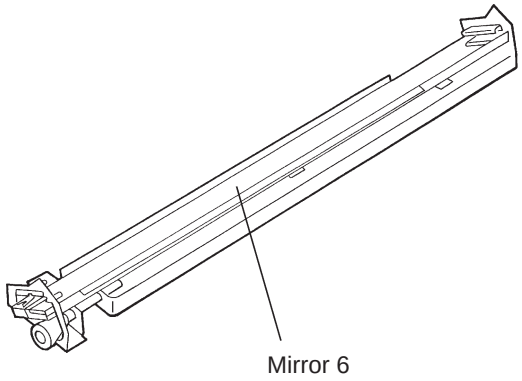

(7) Slit (glass)

The sub-reflector performs slit functions therefore the slit glass only protects the optical section from toner dust, etc.

(8) Copy-area indicator unit

This is located inside the original scale. This is for indication of the maximum area in which the copy can be made at that time.

The indicator is driven by the document motor. The original range is indicated with the copy-area indicator and orange line on carriage 1.

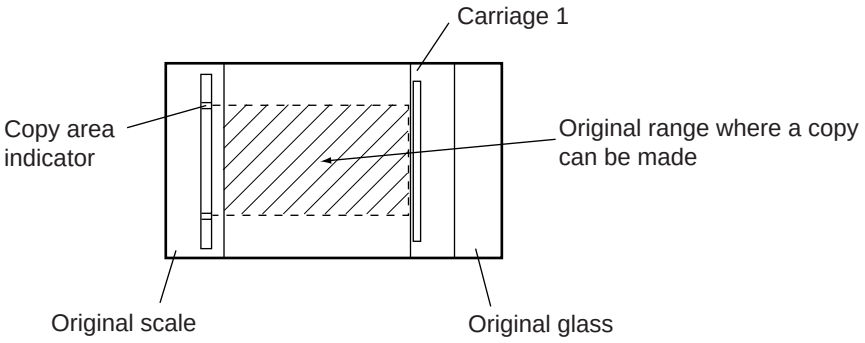

7.3 Description of Operation

7.3.1 Scanning motor

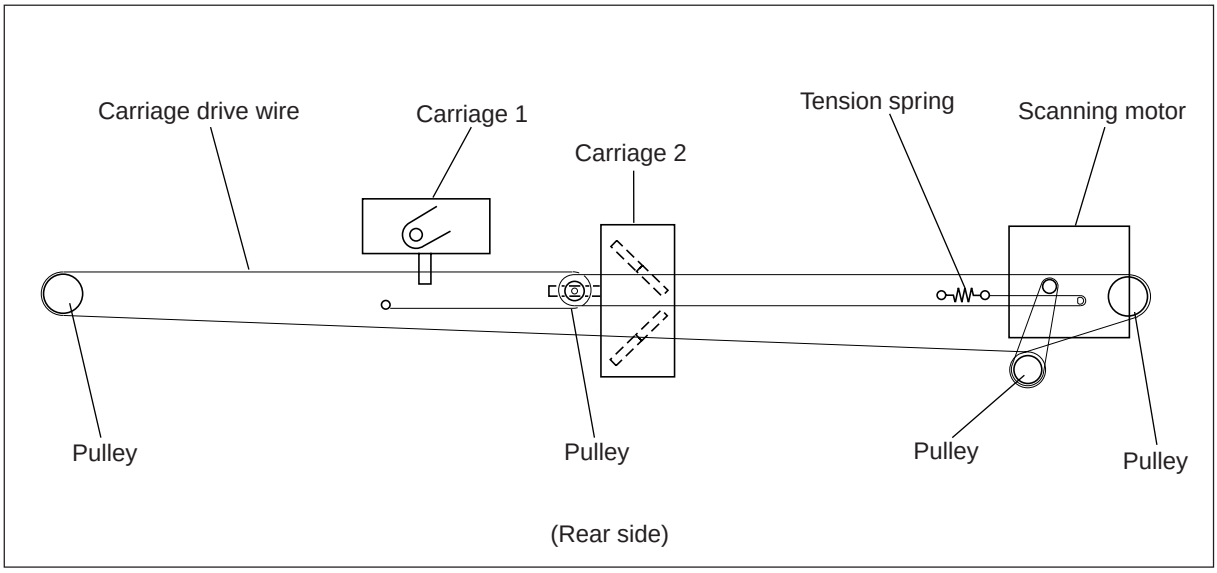

The scanning motor rotation is transmitted to carriages 1 and 2 via the timing belt and the carriage drive wire. Carriage 1 and 2 are first moved to home position. The home position is detected when carriage 1 passes the home switch. When the PRINT key is pressed, carriages 1 and 2 scan the original.

7.3.2 Mirror motor/lens motor

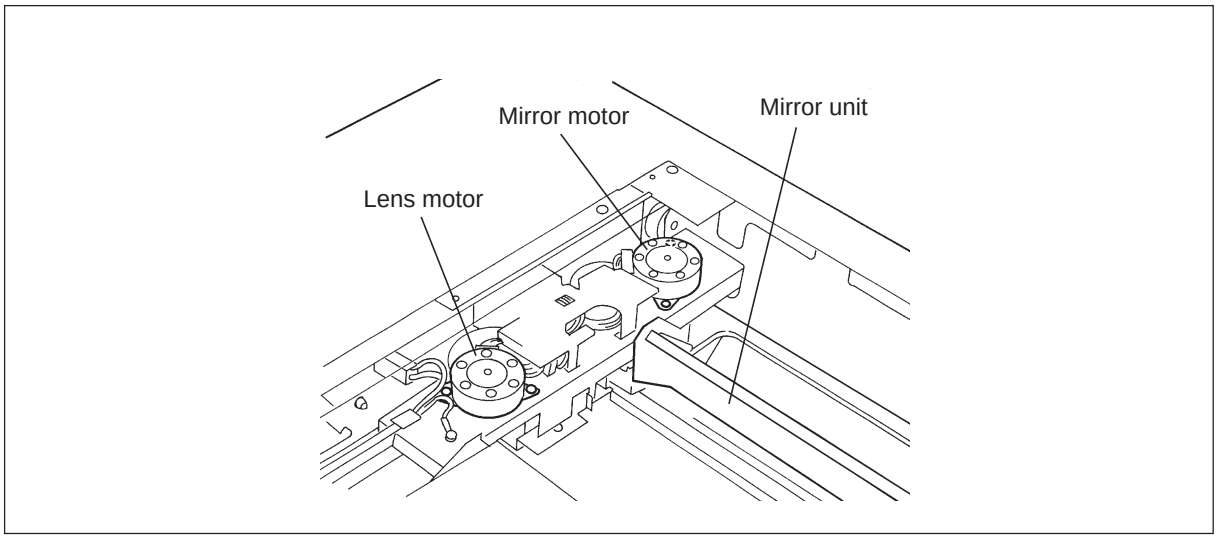

Lens motor

Gear (G18)…motor axis
↓
Gear/pulley (G88/TP16)
↓
Timing belt (pitch length: 810)
↓
Lens unit

Mirror motor

Gear (G18)…motor axis
↓
Gear (G88/G10)
↓
Rack gear (G22)
↓
Mirror unit

Immediately after the power is switched on:

- If the lens/mirror switch is on, the lens unit is transported to the exit side. Then the mirror unit is transported to the feed side, and it is positioned for actual size copying.
- If the lens/mirror switch is off, the switches are turned on by the lens unit, then the mirror unit in that order and both units are positioned for actual-size copying.

When the reproduction ratio is selected, the lens unit and the mirror unit are positioned accordingly using the actual-size position as the starting (standard) position.

7.3.3 Document motor

The front and rear copy area indicators are set at home position, that is, for maximum width, via the timing belt. When the paper size or reproduction ratio is changed, the indicators are positioned for the specified size and the original setting position is indicated on the glass.

7.3.4 Optical fan motor

Stops during standby and rotates during copying, and cools the optical section.

7.4 Pulse Motor Drive

7.4.1 Pulse motor drive circuit (constant current type)

The scanning motor (M2) is driven by hybrid IC STK6713BMK4 of the unipolar constant current chopper drive. The driving circuits of A and $\overline{A}$ phases are shown below. Since B and $\overline{B}$ phases are exactly the same, they are omitted here.

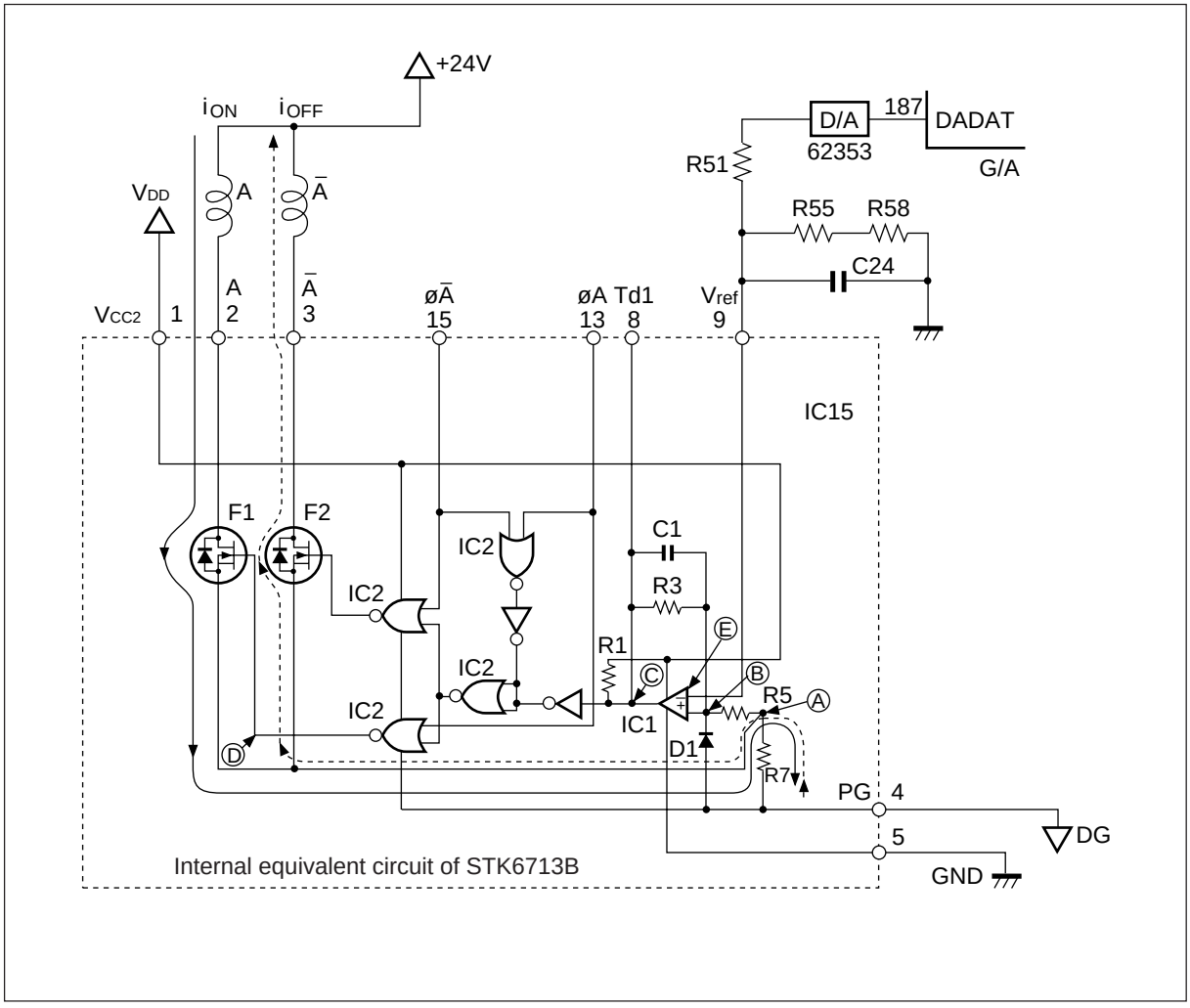

The circuit configuration on the inside of the IC is composed of each phase excitation switching section (IC2), driver (F1, F2), comparator (IC1), and current detection resistor (R7).

The following explains the circuit operation when the A phase is excited.

– Process when the A phase is excited –

① øA phase becomes “L” level (ø$\overline{A}$ is “H” level).

② Reverse input Ⓔ of the comparator (IC1) is applied the reference voltage which depends on the resistance divided voltage of the R51, R55, and the R58.
Non-reverse input Ⓑ is “L” level. Therefore, the output Ⓒ of IC1 becomes “L” level.

③ According to step ① and ②, Ⓓ of IC2 becomes “H” level, and F1 is turned ON. (conductive condition).

④ Current flows into the coil A from the power supply of +24V, and it gradually increases.

⑤ The terminal voltage of the current detection resistor R11 increases, and Ⓒ becomes “H” level and F1 goes OFF from the moment when voltage Ⓑ becomes higher than voltage Ⓔ.

⑥ Because the winding method of coil A and $\overline{A}$ is bipolar winding, the energy stored in coil A is induced in coil $\overline{A}$, and is discharged using the coil $\overline{A}$.
That is, A current flows in direction of DG (Drive Ground), R7, F2 diode and coil A.

⑦ When the voltage stored in the condenser C1 lowers, and becomes lower than voltage Ⓔ , Ⓒ becomes “L” level and F1 comes ON again, and winding current of A phase increases.

⑧ In this manner, the ON/OFF operation of the motor current (constant current chopping operation) is repeated.

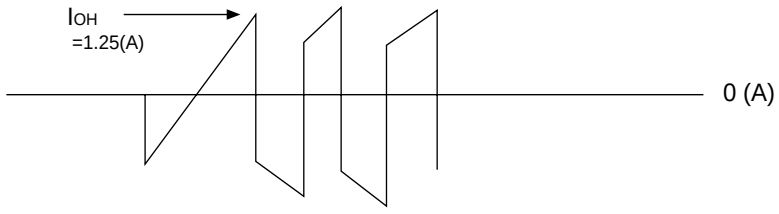

Motor input current waveform

In the case of the excitation of $\overline{A}$ phase, ø$\overline{A}$ becomes “L” level and F2 comes ON, the same operation is performed.

The limit of winding value is changed in high torque and low torque by the D/A output. In low torque the current is lower, in high torque the current is higher.

Low torque : I_{OH} = 1.0 – 1.15 (A)
High torque: I_{OH} = 1.25 (A)

Waveform time chart of each section

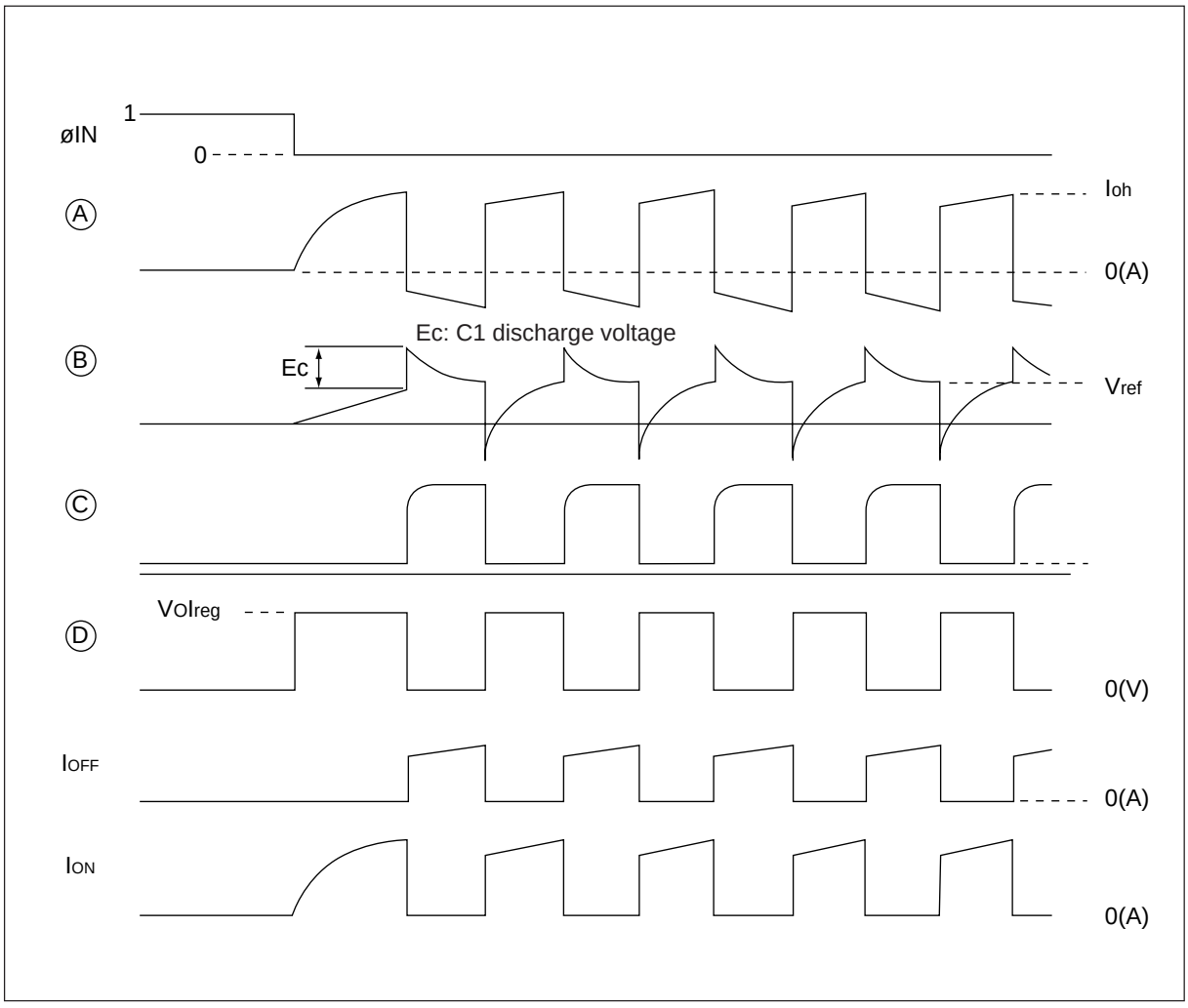

Equivalent circuit

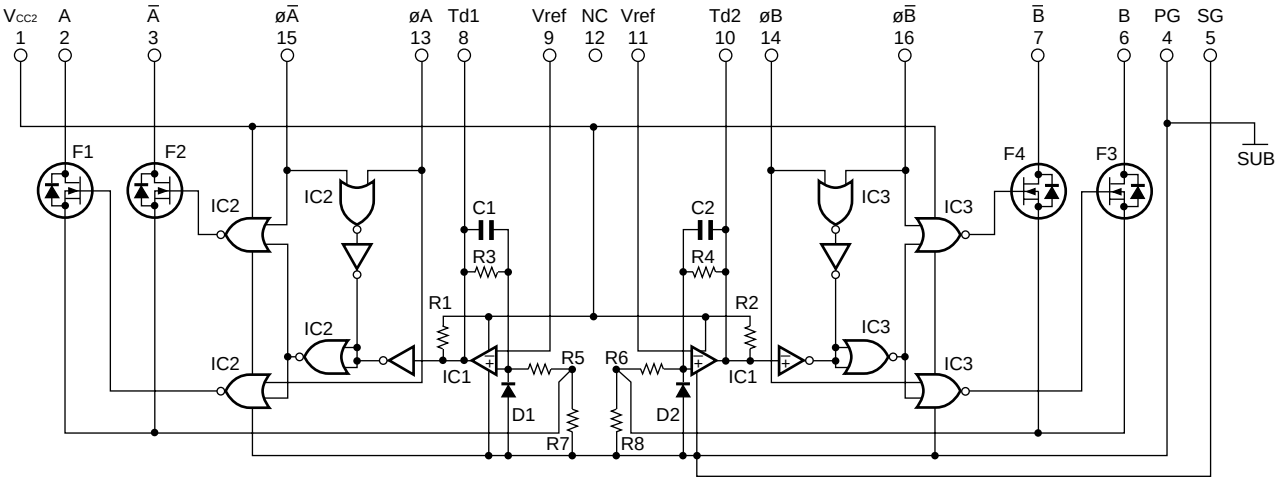

7.4.2 Pulse motor drive circuit (constant voltage type)

- Lens motor (M3) (LNS-MOT) ~Driven by IC3 (Logic PC board: TD62308F)
- Mirror motor (M4) (MRR-MOT) ~Driven by IC4 (Logic PC board: TD62308F)
- Document motor (M11) (DCM-MOT) ~Driven by IC2 (Logic PC board: TD62308F)

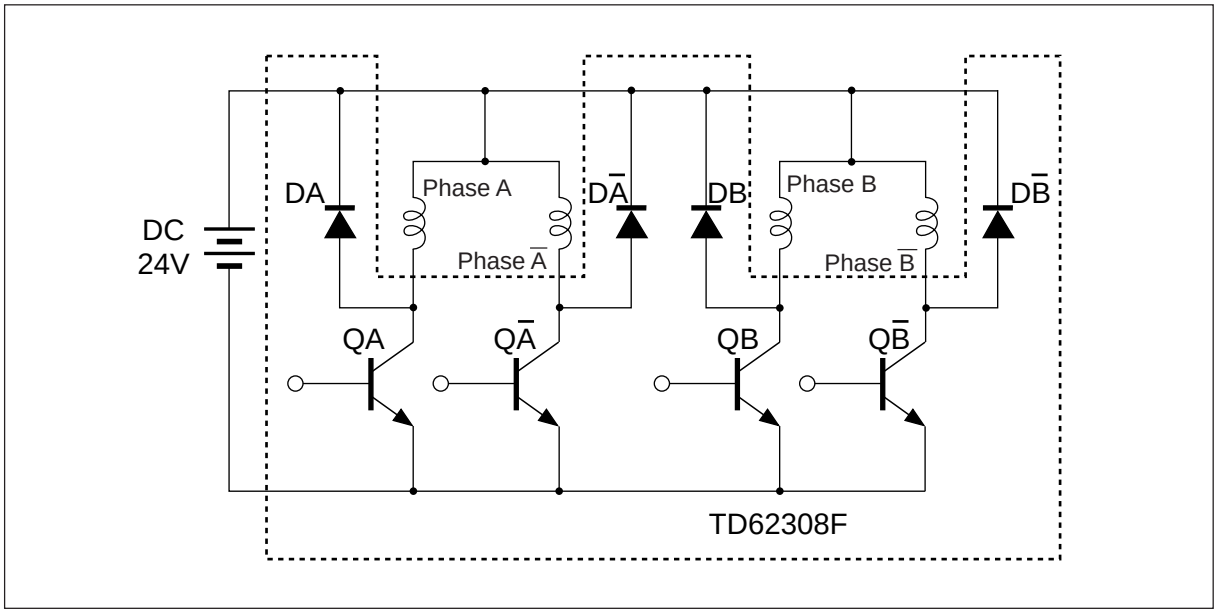

In the case of 2-phase excitation, the figure on the right shows the signals applied to the base of transistors QA, QB, $\overline{QA}$, and $\overline{QB}$.

An ON/OFF combination of the transistor is switched.

↓

The combination of the current flowing phases is switched.

↓

The motor rotates.

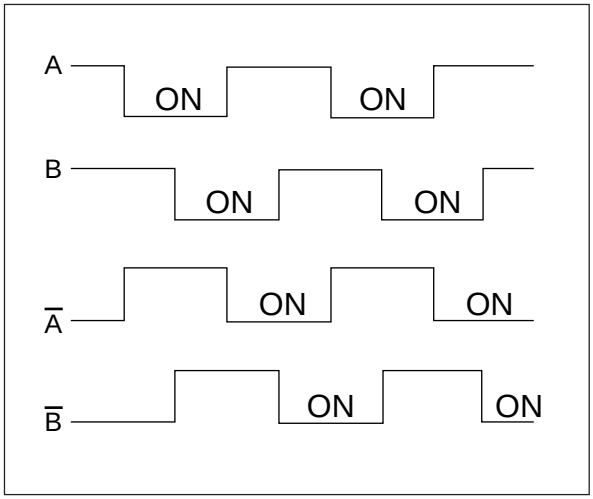

7.5 Exposure Control Circuit

7.5.1 Introduction

The exposure control circuit is composed of four blocks as follows.

① Lamp regulator — Applies a pulse duty ratio corresponding to PWM signal to the exposure lamp.

② Automatic exposure sensor circuit — Generates an AES signal indicating the density of the original by sensing the light reflected by the surface of the original.

③ Exposure step — Detects the exposure position set by the operator's key input

④ Arithmetic and control unit — Determines the lamp voltage by computation on the basis of AES and exposure step, and outputs the PWM signal to the lamp regulator.

Note: The ON/OFF state of the exposure lamp is controlled by a special signal (EXPON; J2-A18), distinct from the PWM signal.

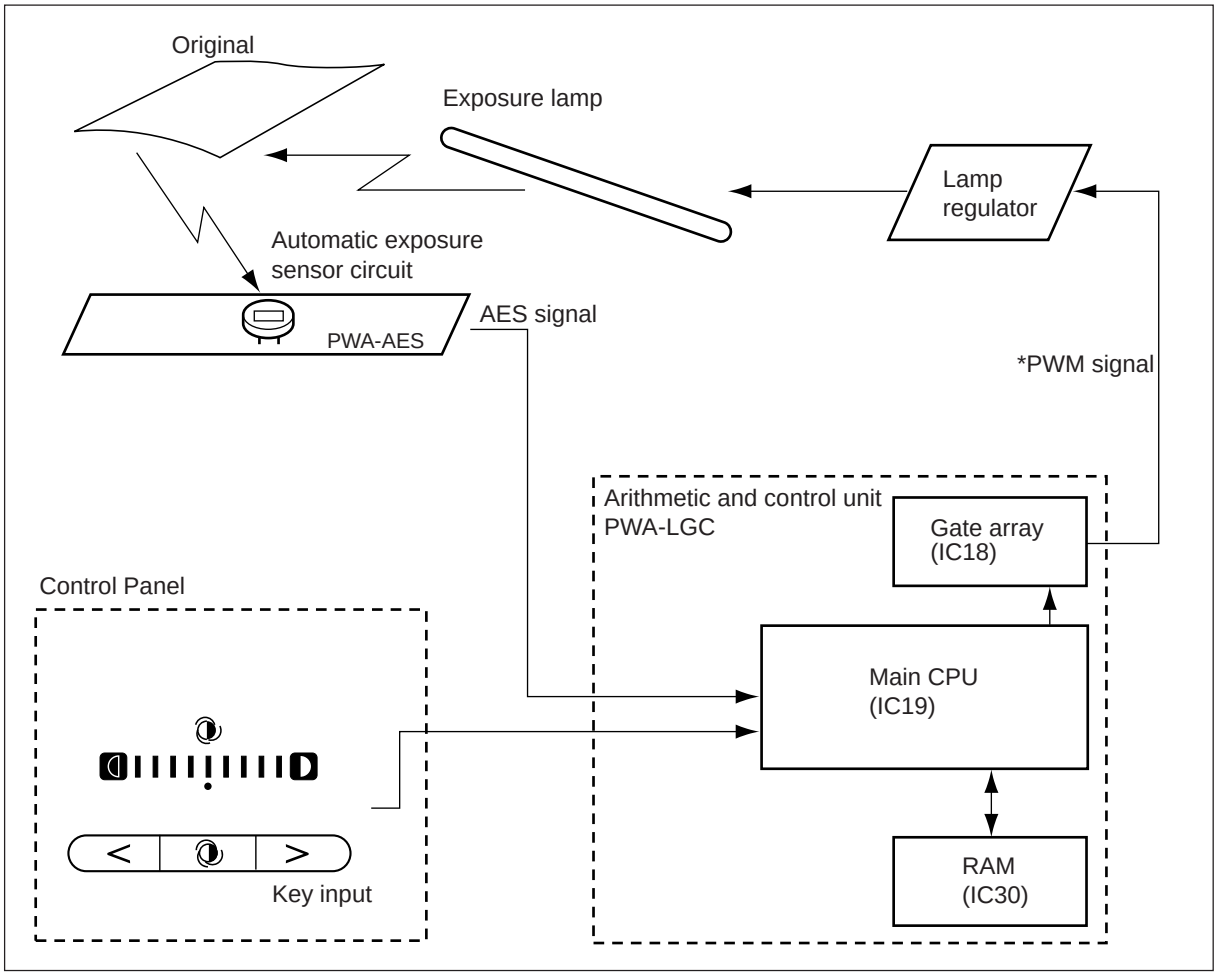

The exposure control circuit has the following two functions:

Ⓐ Manual exposure mode ..... A constant lamp voltage corresponding to the set exposure step on the exposure lamp is applied.

Ⓑ Automatic exposure mode ..... The quantity of light reflected by the surface of the original, which varies infinitely with the lightness and darkness of the surface of the original, is detected by the automatic exposure sensor circuit, and the voltage applied to the exposure lamp is continually varied accordingly; a high lamp voltage being impressed for dark originals and a low lamp voltage for light originals.

7.5.2 Operation of lamp regulator

A typical characteristic curve is shown in the following diagram.

By means of a phase-angle control system, a lamp voltage corresponding to the PWM pulse duty ratio input is generated even if some fluctuation occurs in the AC input voltage.

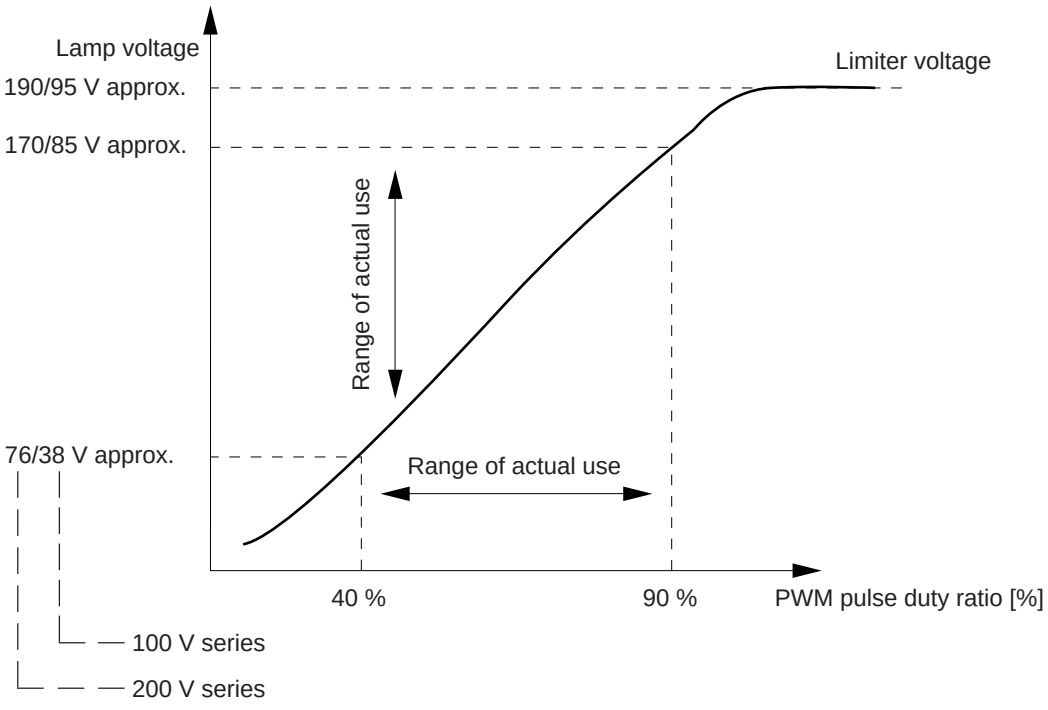

[Characteristic curve of the lamp regulator]

7.5.3 Automatic exposure sensor circuit

By the action of IC1, the incidence of light upon photocell PD1 is generated as an AES signal on J1-B13 (PWA-LGC).

Dim reflected light→ Small AES output

Intense reflected light→ Large AES output

7.5.4 Arithmetic and control unit

The arithmetic and control unit is composed of the following four blocks.

① AD converter

The AES signal is input into the analog input terminals of the CPU (IC19) and converted to digital.

② SRAM with built-in battery (BC-RAM)

Consists of IC30, which stores exposure adjustment data to ensure that optimum exposure is performed for each reproduction ratio and for automatic exposure.

③ Main CPU (IC19)

Incorporates software which computes the voltage to be applied to the lamp in accordance with the copying mode, such as enlargement/reduction, automatic exposure, and manual exposure, and the adjustment data in BC-RAM.

④ PWM timer circuit

Consists of the circuit shown in figure below.

The data resulting from the computation performed by the CPU described in item ③ above, are converted to PWM signals by the gate array, and output to J2-A17 via IC10 from the PWM output terminal of the gate array.

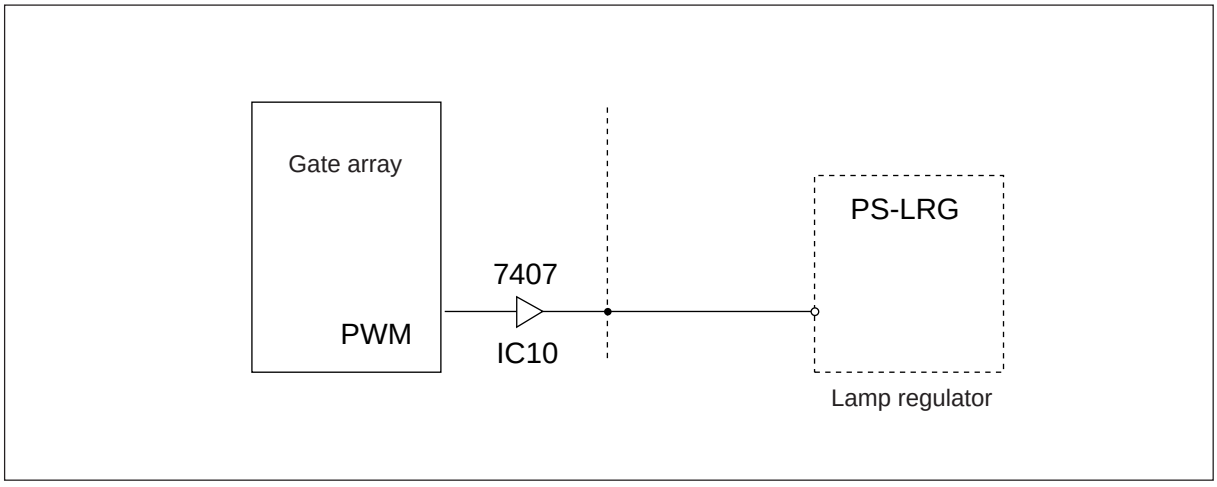

7.5.5 Lamp regulator circuit

The lamp regulator monitors the AC input voltage to control the exposure lamp to a fixed intensity.

(Method)

- The AC input voltage is detected.

↓

- The waveform rectifying circuit rectifies the AC input voltage to a DC voltage approximated to the effective value of the input voltage.

↓

- This DC voltage and pulse signal are rectified, and compared with the reference voltage and amplified.

↓

- According to the output, the trigger pulse generation circuit generates a trigger pulse synchronous with the power source frequency.

↓

- The energization angle of the triac is controlled.

II

Makes the voltage at both ends of the lamp constant.

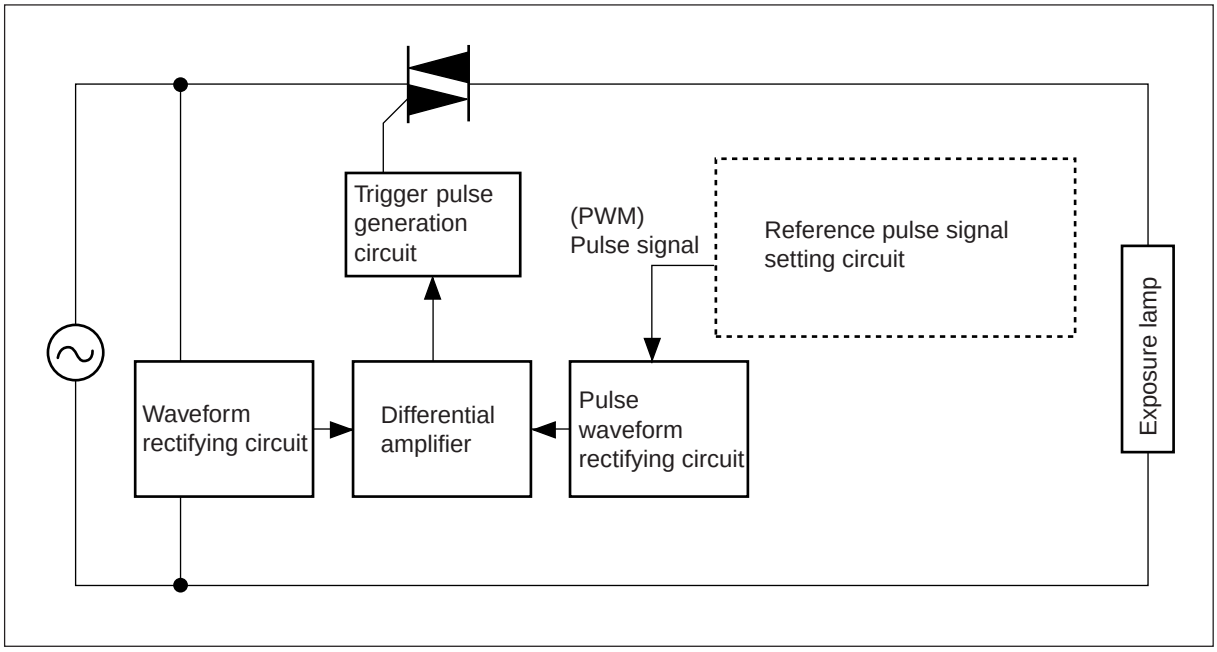

7.6 Automatic Original-Size Detection Circuit

This circuit detects the original size (standard sizes only) using the 3-beam type reflecting photosensor and 2 – 3 reflecting photosensors (3 for A4 series, 2 for LT series) on the base frame of the optical unit.

7.6.1 Principle of original-size detection

On the base frame of the optical unit, the reflecting photosensor (3-beam type) and 2 – 3 reflecting photosensors (3 for A4 series, 2 for LT series). Each photosensor consists of an infrared light emitting diode (light-emitting side LED) and a phototransistor (light-receiving side). When an original is placed on the original glass, the light emitted by the LEDs is reflected by the original and led to the phototransistor. In this way, the presence or absence of an original is detected by whether reflected light exists or not.

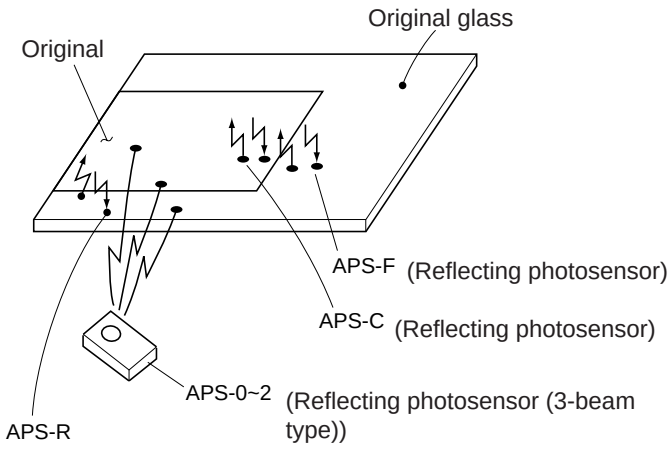

7.6.2 Original size detection

(1) If the copier is set in the original size detection mode, the carriage is set at its home position.

(2) Detection is performed in an instant when the original cover is opened, each sensor receive the reflecting light and the condition of a matrix shown in (4) are satisfied.

(3) Original size detection is performed when the output signals from each sensor are input to the gate array (IC18) and the main CPU (IC19). IC18 and IC19 are on the logic PC board.

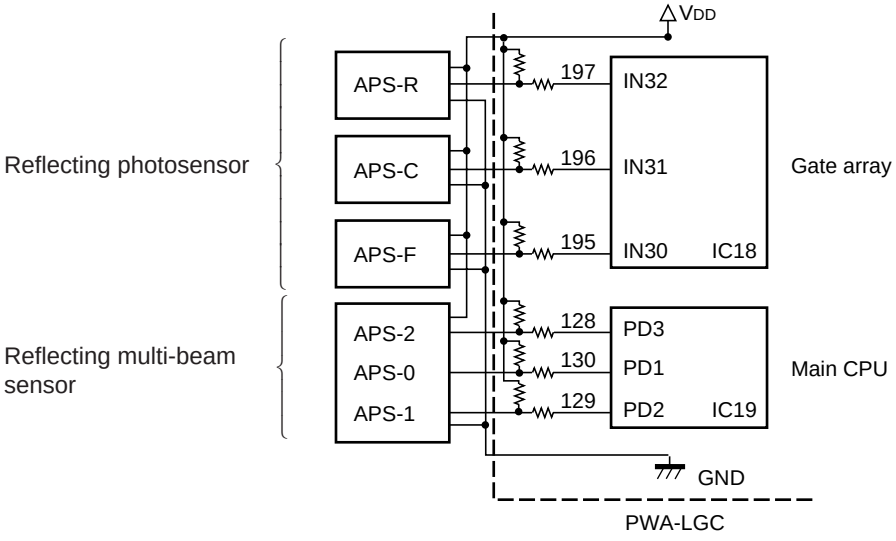

Original size detection circuit

Return Skip

3560/70 S/M

A4 series

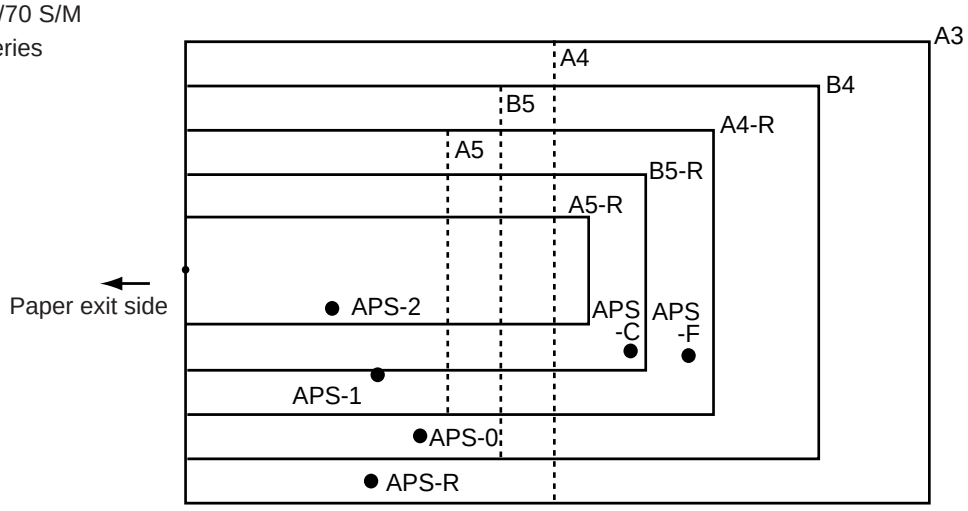

"•" are detection points for each sensor

Sensor detection points

LT series

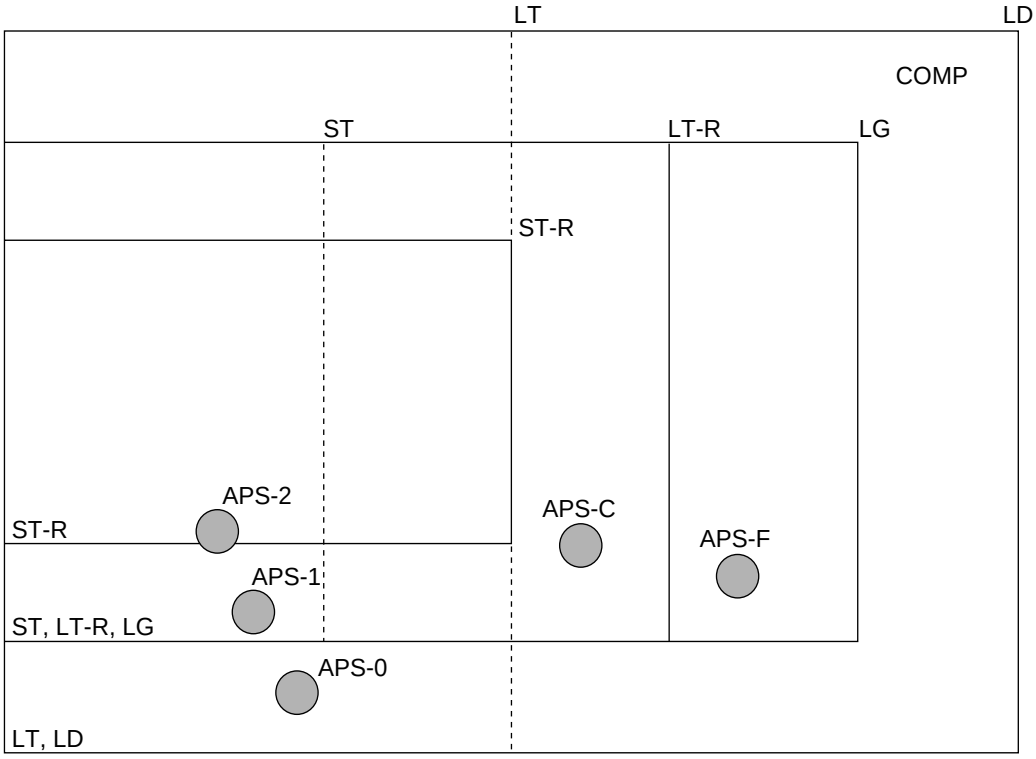

(4) Original size is determined by a combination of the presence/absence of the original. Combination charts for size determination of A4 series and LT series are shown below in input level at ports PD1 ~ PD3 (Main CPU: IC19) and ports IN30 ~ IN32 (Gate array: IC18).

* LT series does not use IN32.



A4 series

Main CPU (IC19) Port Input Level			Gate array (IC18)			
(APS-2) PD3	(APS-1) PD2	(APS-0) PD1	(APS-F) IN30	(APS-C) IN31	(APS-R) IN32	Original size
H	H	H	H	H	H	Original not exist
L	L	H	H	H	H	A5
L	L	L	H	H	H	B5
L	H	H	H	H	H	A5-R
L	L	L	H	H	L	A4
L	*	H	H	L	H	B5-R
L	L	H	L	L	H	A4-R
L	L	L	L	L	H	B4
L	L	L	L	L	L	A3

LT series

Main CPU (IC19) Port Input Level			Gate array (IC18)		
(APS-2) PD3	(APS-1) PD2	(APS-0) PD1	(APS-F) IN30	(APS-C) IN31	Original size
H	H	H	H	H	Original not exist
L	L	H	H	H	ST
L	H	H	H	H	ST-R
L	L	L	H	H	LT
L	L	H	H	L	LT-R
L	L	H	L	L	LG
L	L	L	L	L	LD

Note:

H: Original detected

L: Original not detected

*: H and L whichever is sufficient

Port input level (Main CPU: IC19, Gate array: IC18)

= Output level of each sensor

7.7 Disassembly and Replacement

7.7.1 Original glass

(1) Remove the glass fix (2 screws).

(2) Remove the original glass in the direction of the arrow.

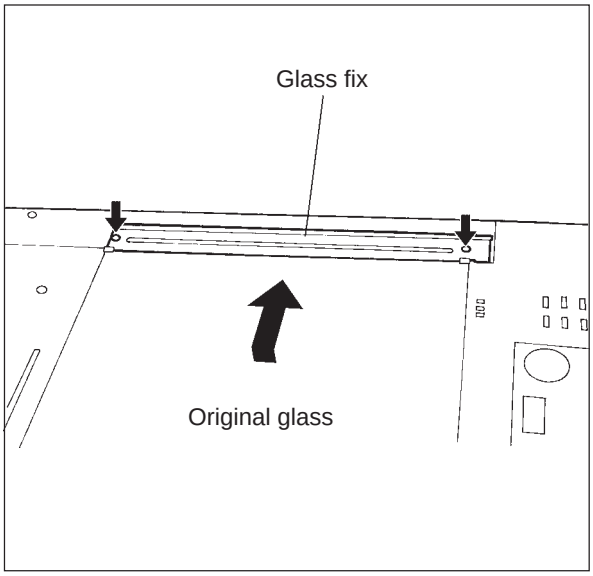

7.7.2 Automatic exposure sensor PC board (PWA-AES)

(1) Remove the original glass and move carriages 1 and 2 to the exit side.

(2) Remove the optical cover (2 screws).

Note: Be careful not to deform the black sheets of either side of the lens unit when moving the lens unit with its optical cover removed. Move the lens unit toward the paper feed side to protect the black sheet when installing the optical cover.

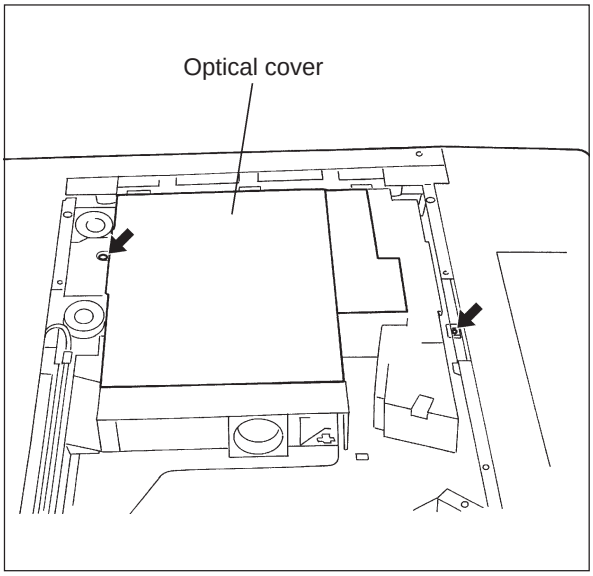

(3) Remove the automatic exposure sensor unit (1 screw).

(4) Remove the connector (1) and the screws (2) and take off the PC board.

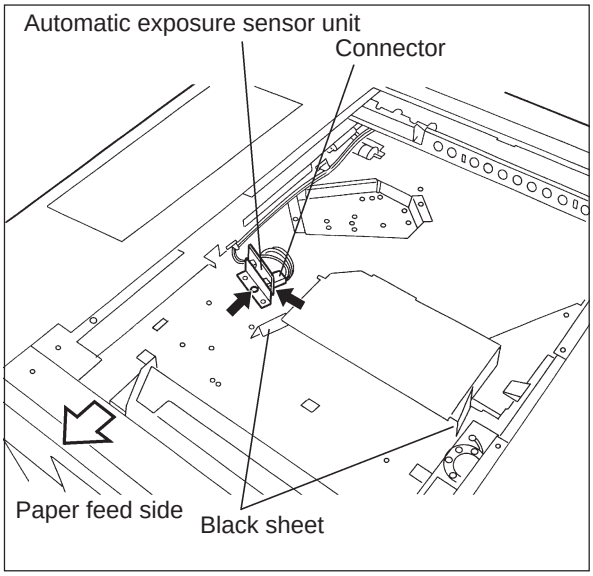

7.7.3 Optical fan (front)

(1) Open the front cover.

(2) Remove the inner cover (3 screws).

(3) Disconnect a connector and remove 2 screws.

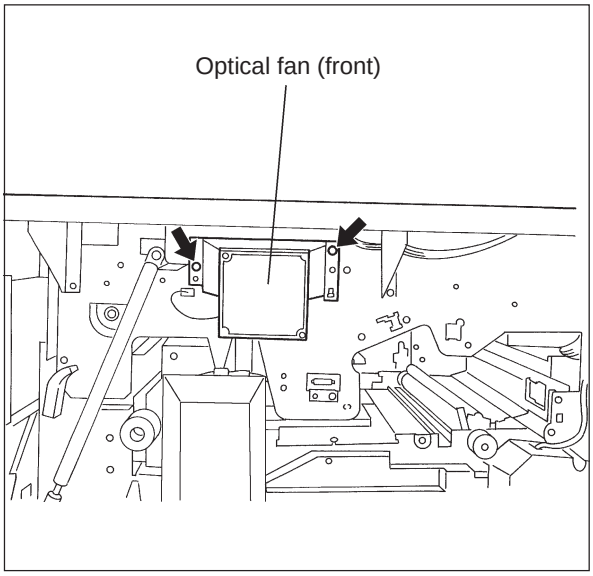

7.7.4 Optical fan (rear)

(1) Remove the upper rear cover.

(2) Remove the connector (1) and the screws (2).

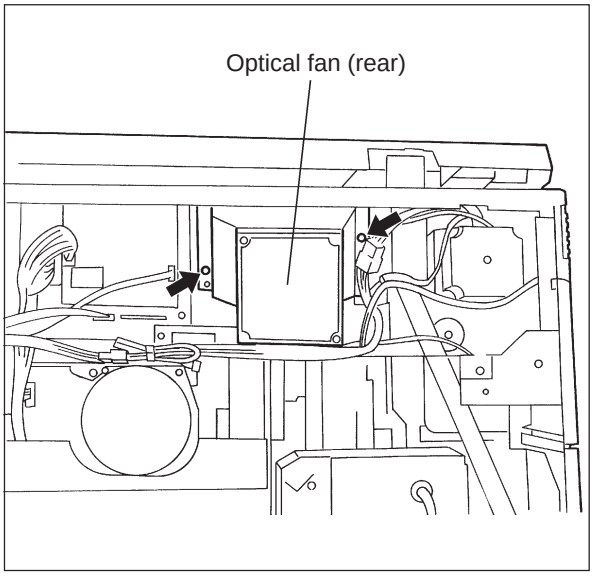

7.7.5 Lens motor/mirror motor

(1) Remove the optical cover.

(2) Remove each motor (2 screws each).

(3) Remove the each connector.

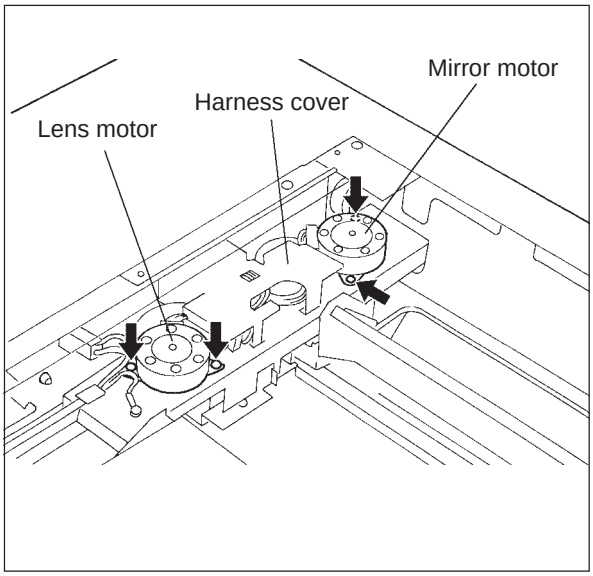

7.7.6 Automatic paper-size detector

(1) Remove the original glass.

(2) Remove the 3 beams sensor. (2 screws, 1 connector).

(3) Remove the reflecting photosensors (1 screw, 1 connector).

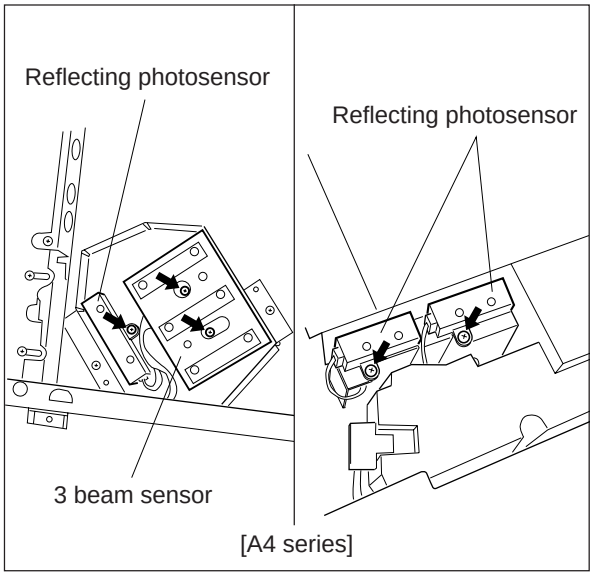

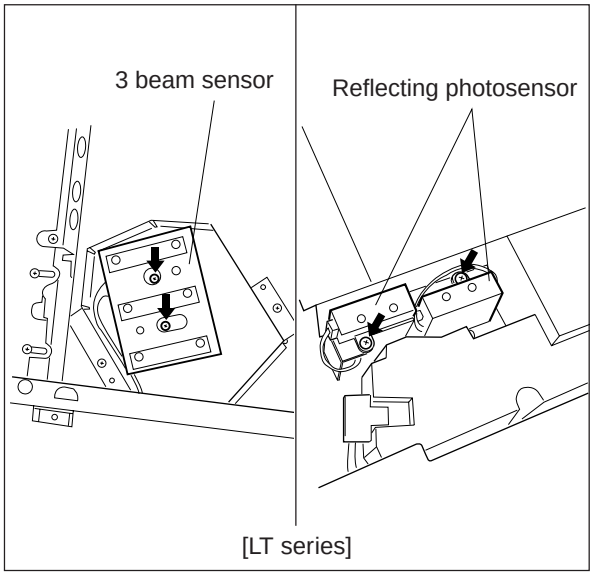

7.7.7 Exposure lamp and thermal fuse

(1) Remove the original glass and the rear top cover.

(2) Move the carriage 1 to the position that the lamp terminal is visible.

(3) Remove the exposure lamp while bending the power supply blade. Attention should be paid not to touch lamp surface. (It may lead to uneven exposure.)

Note: When installing, position the lamp so that the TOSHIBA mark faces to the front. Moreover, the projection on the exposure lamp should face to the exit side.

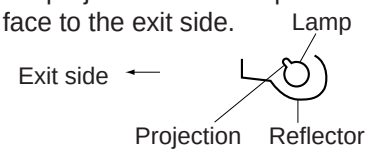

(4) To replace the thermofuse, remove the 2 screws.

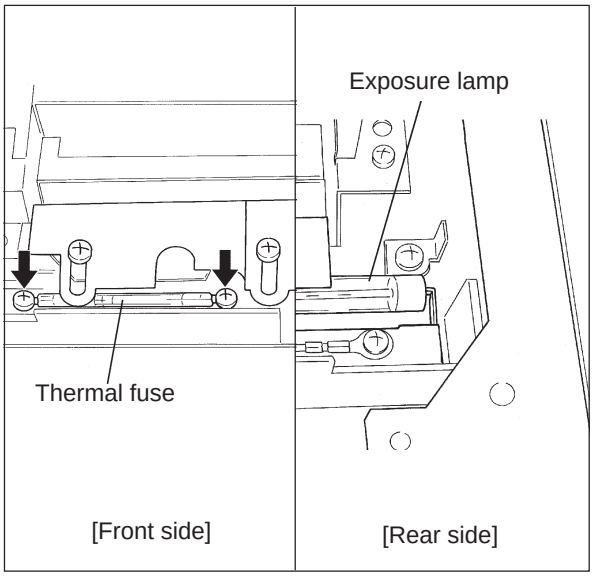

7.7.8 Copy area indicator unit

(1) Remove the left top cover, the upper rear cover and the control panel.

(2) Remove the transparent indicator cover (2 screws).

(3) Disconnect the document motor connector.

(4) To take out the document motor, disconnect a connector and remove the 2 screws.
Remove the belt.

Note: To install the belt, place both indicators against the bracket projection and set the belt in the groove on the indicator.

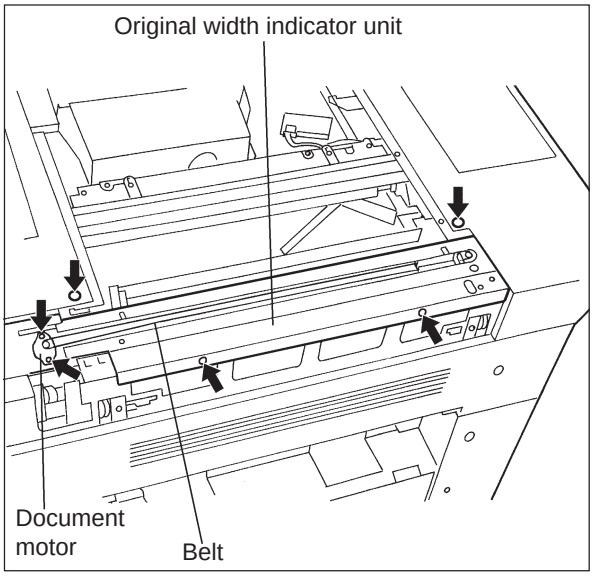

7.7.9 Scanning motor

(1) Remove the upper rear cover.

(2) Disconnect the connector. Remove 2 screws, the tension spring, the wire drive belt, and the scanning motor bracket.

Note: When installing;

1. Hang the tension spring on to the copier's frame.
2. Hang the wire drive belt on the scanning motor pulley and then the belt drive pulley. Attach the screws A and B temporarily.
3. Hang the tension spring on to the scanning motor bracket.
4. Tighten the screws A and then B after a proper tension is applied by the spring while screws A and B are loosened.

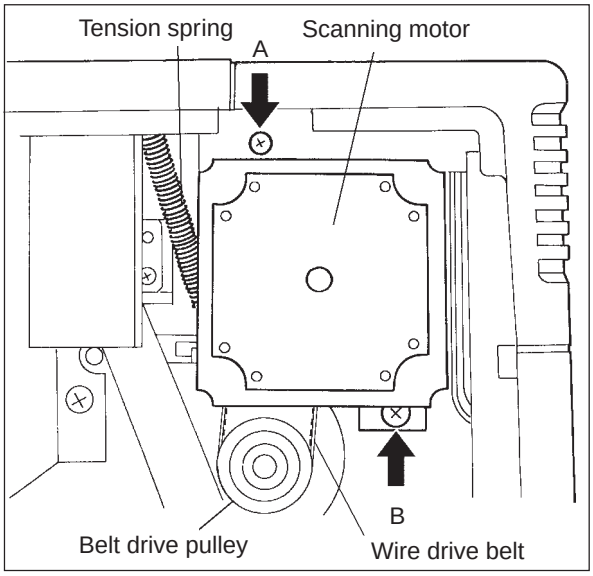

(3) Remove the 3 screws and take out the scanning motor.

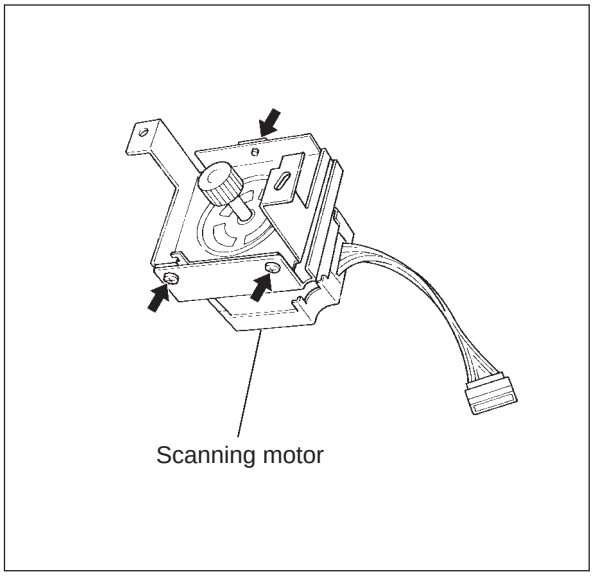

7.7.10 Home switch

(1) Remove the top left cover.

(2) Remove the connector and the 2 claws on the bracket, then take out the home switch.

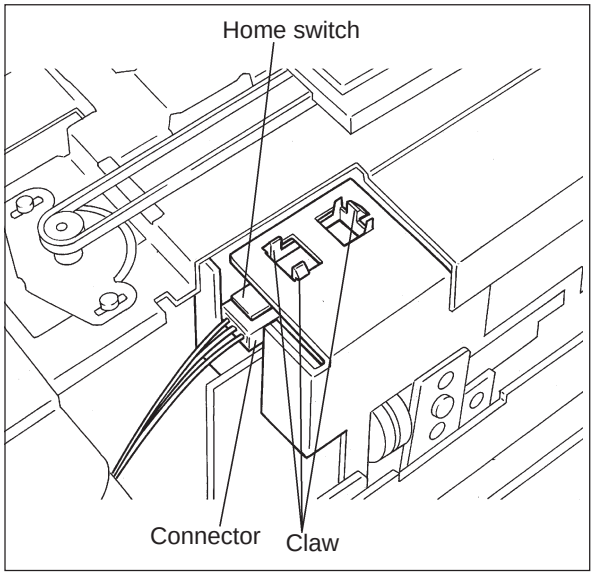

7.7.11 Platen switch

(1) Remove the upper rear cover and the rear top cover.

(2) Remove the platen switch unit (2 screws).

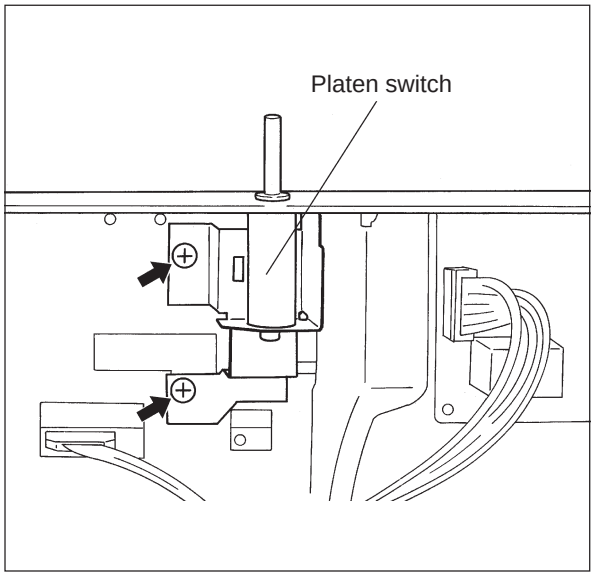

(3) Remove the platen switch actuator by pressing and turning it in the direction of the arrow (arrows ① to ③). Then remove the connector and 2 claws.

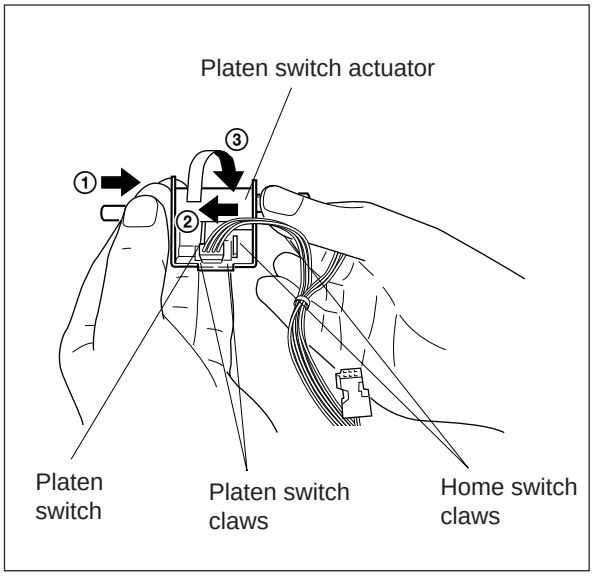

7.7.12 Carriage 1

(1) Remove the original glass, the left top cover, the transparent indicator cover and the upper rear cover.

(2) Remove the 2 brackets which attach carriage 1 to the wire (1 screw each).

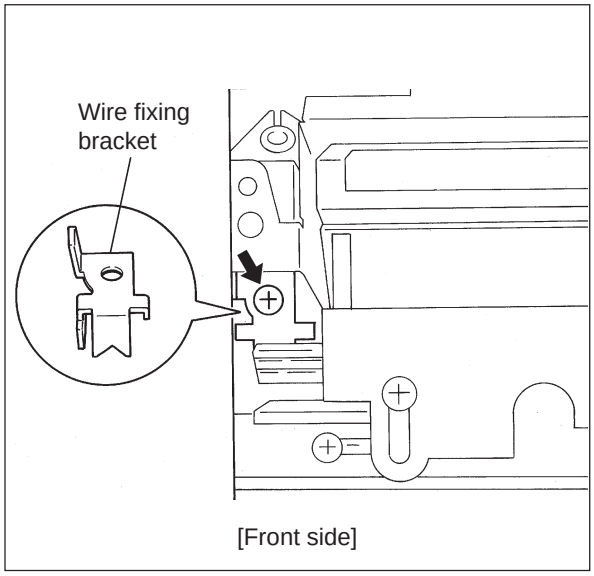

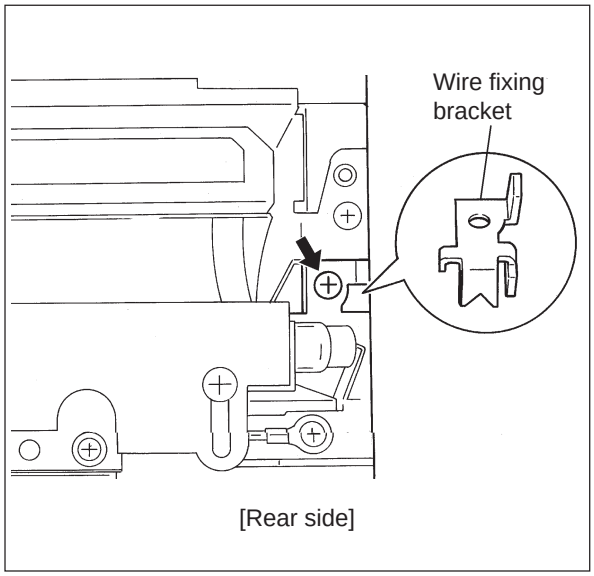

(3) Remove the cable for carriage 1 from the cable holder of carriage 2.

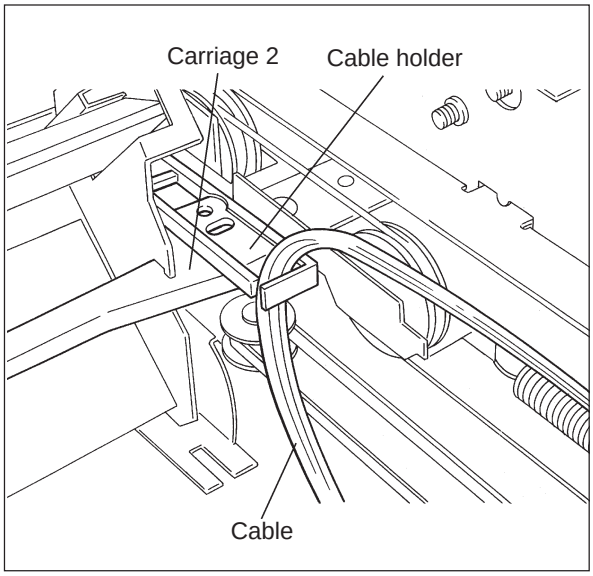

(4) Remove the cable holder.
Disconnect the connector.
Remove the earth wire (1 screw).

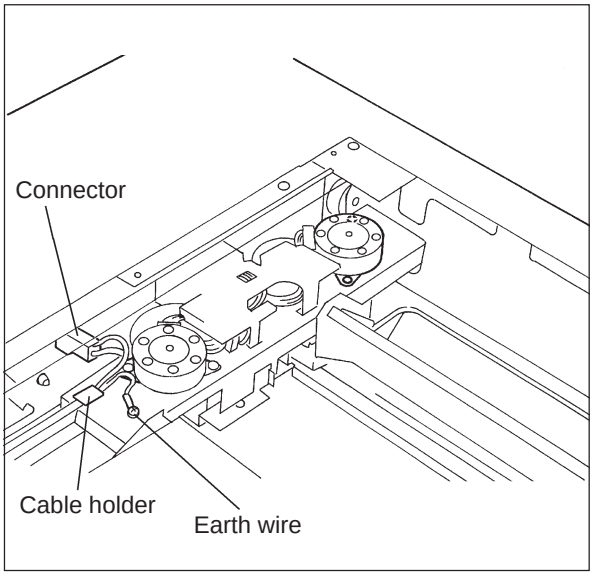

(5) Tilt entire the unit of carriage 1 and pull it out upwards.

Note: Adjustments are necessary when installing carriage 1.

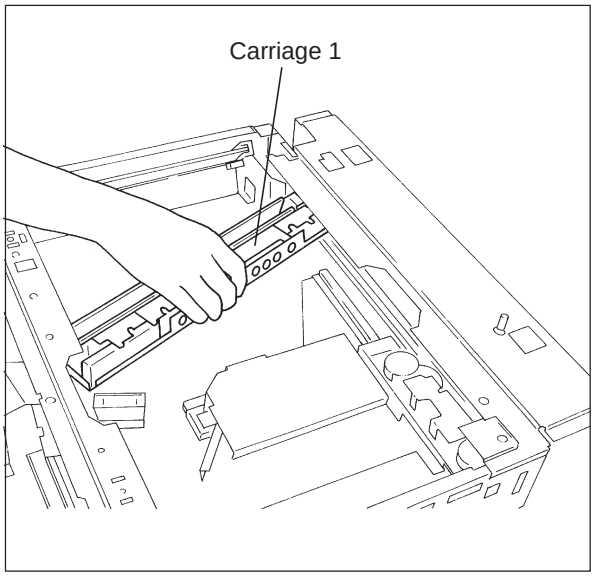

7.7.13 Mirror 1

(1) Remove the carriage 1.
(2) Remove the plate springs (2) which fix mirror 1.
(3) Remove the mirror 1.

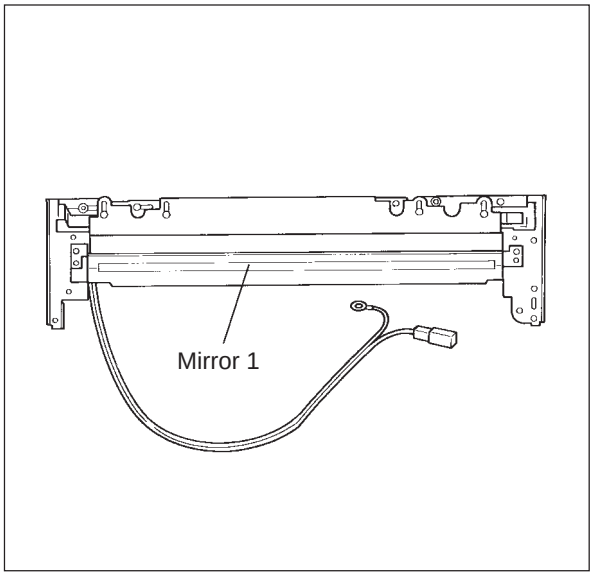

7.7.14 Lens unit

(1) Remove the lens cover.
(2) Remove the upper exit cover and the left top cover.
(3) Remove the cable guide (1 screw).
(4) Remove the lens/mirror drive unit.
(5) Remove the indicator unit.

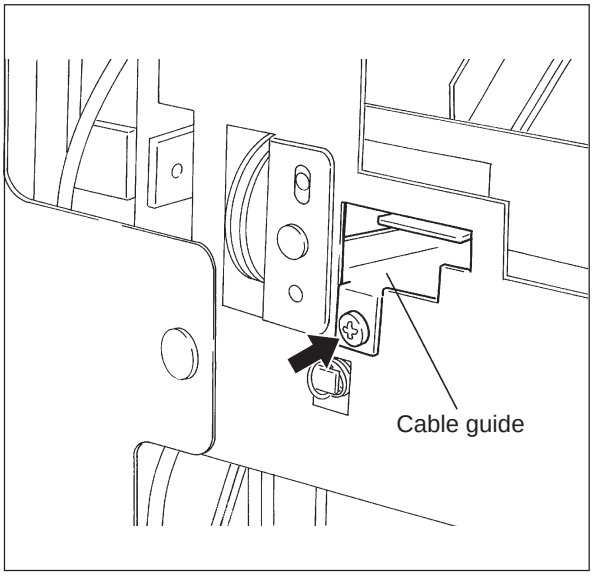

(6) Remove the tension bracket (1 screw).

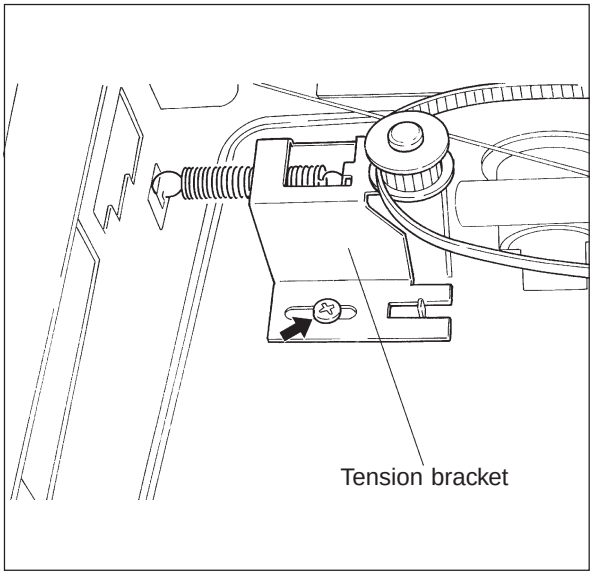

(7) Remove the lens/mirror shaft bracket (1 screw).

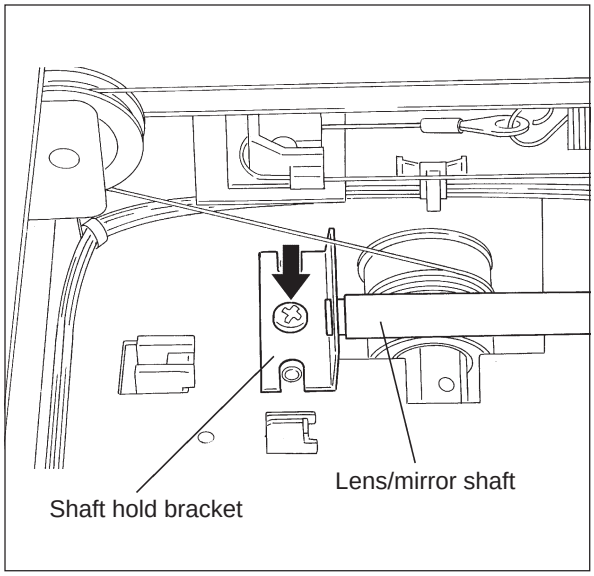

(8) Remove the lens unit from the lens/mirror shaft.

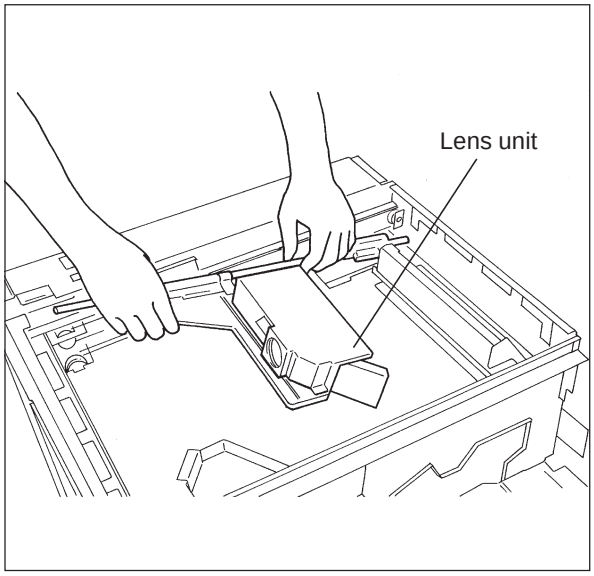

7.7.15 Mirror unit and mirrors 4 and 5

(1) Remove the lens unit.
(2) Remove the mirror unit from the lens/mirror shaft.
(3) Remove the plate springs (2 each) to take out the mirrors.

Note: Adjustments are necessary when installing the mirror unit.

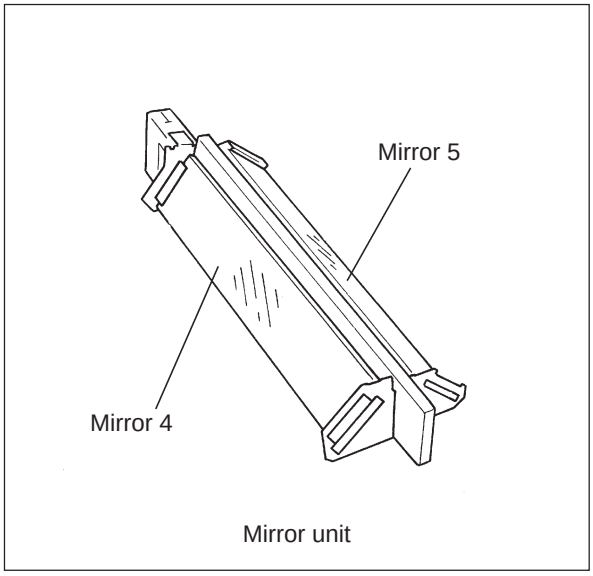

Mirror unit

7.7.16 Lens/mirror drive unit

(1) Remove the right top cover, rear top cover, optical cover and upper rear cover.

(2) Remove the glass stay in front and rear (4 screws).

(3) Remove the cable holder and the earth wire (1 screw).

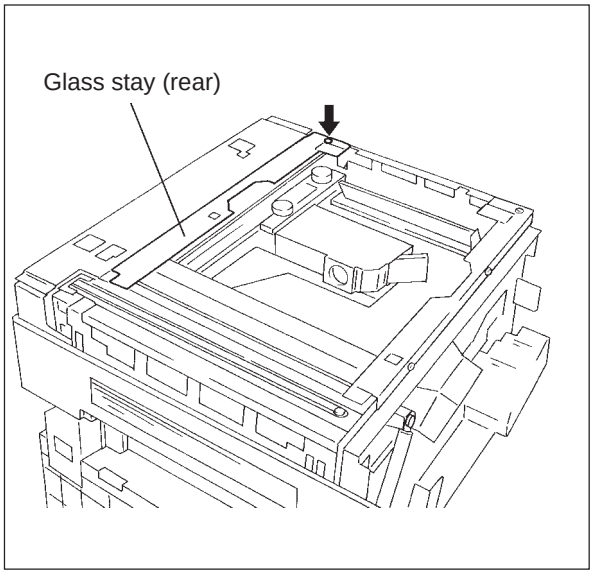

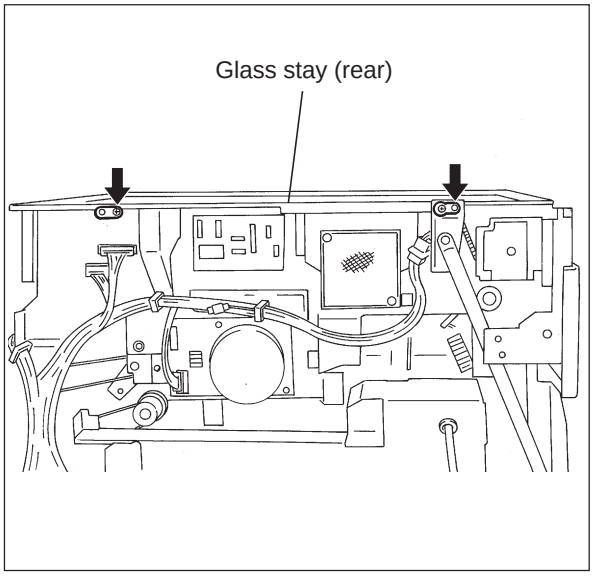

(4) Disconnect the connector from rear side, and remove the 2 screws.

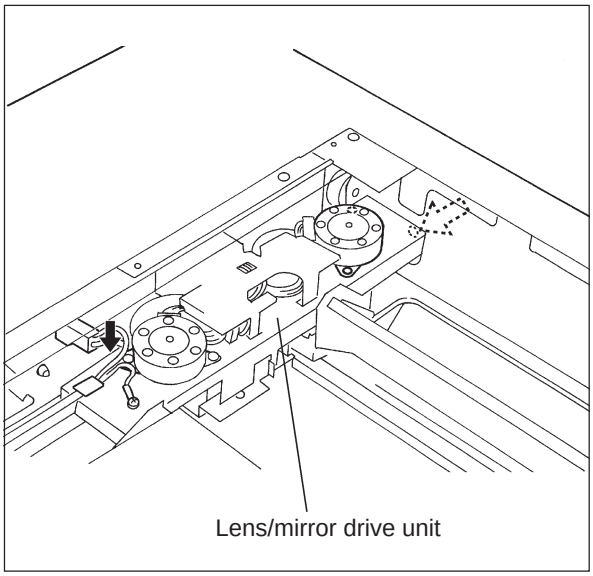

7.7.17 Lens/mirror switch

(1) Disconnect the connector. Remove the lens/mirror drive unit (2 screws).
(2) Disconnect the connector. Remove the lens/mirror switch with its bracket (2 screws).
(3) Remove the hook. Disconnect the 2 connectors. Remove the lens/mirror switch.

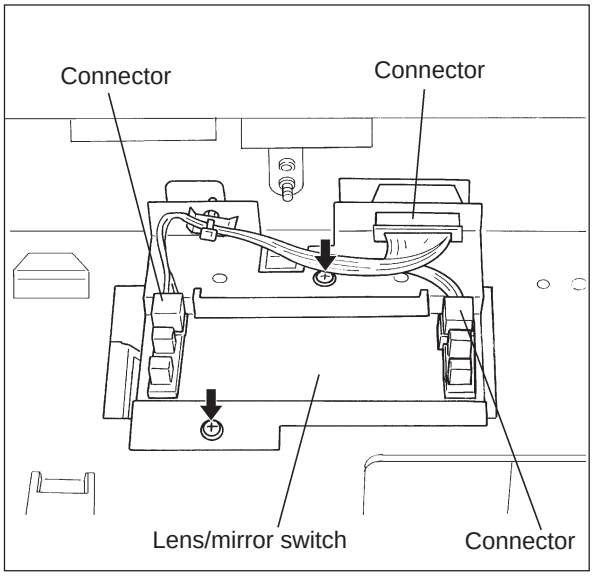

7.7.18 Carriage 2

(1) Remove the carriage 1.
(2) Remove the lens/mirror drive unit.
(3) Set the wire holder jig to the wire drive pulley on the front and rear side.

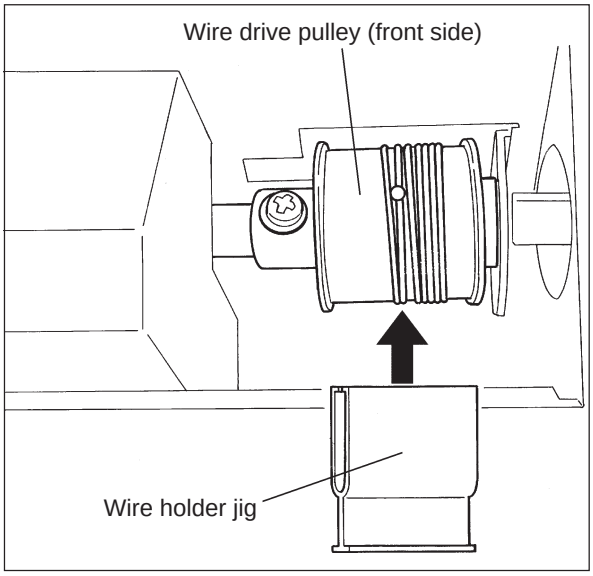

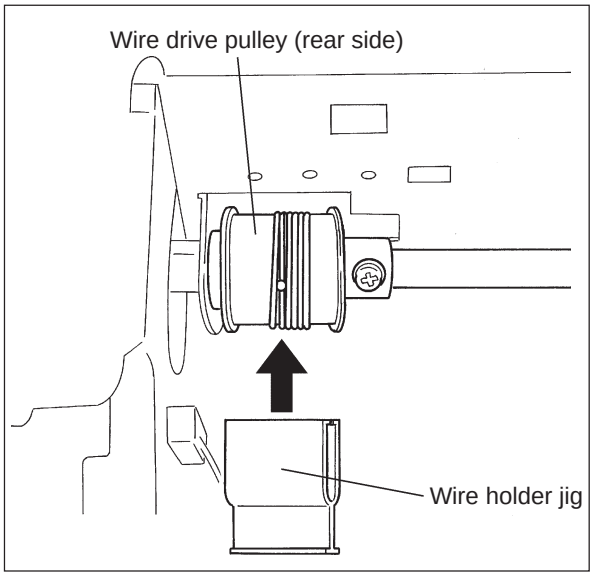

(4) Remove the tension spring on the front and rear side.

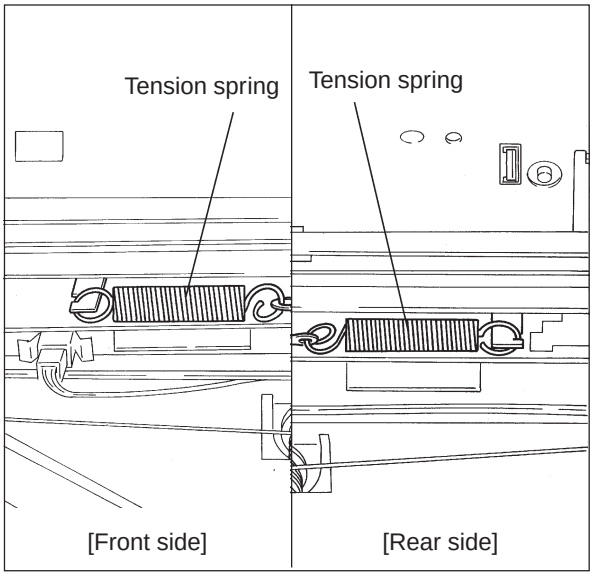

(5) Remove carriage 2.

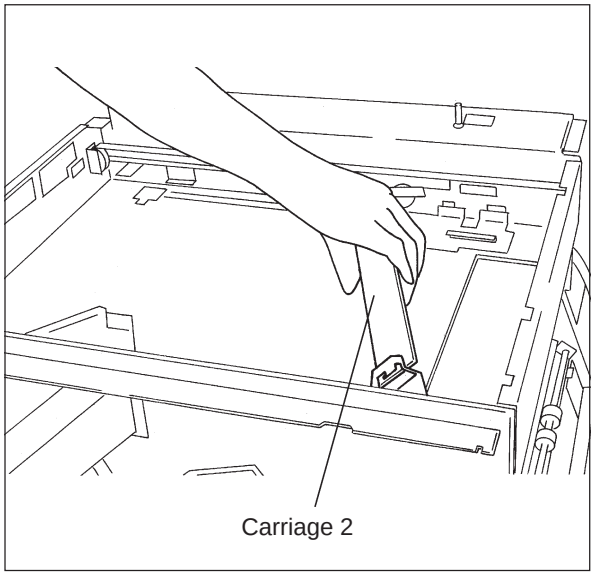

7.7.19 Mirror 2 and Mirror 3

(1) Remove carriage 2.

(2) Remove the plate springs (2 each).

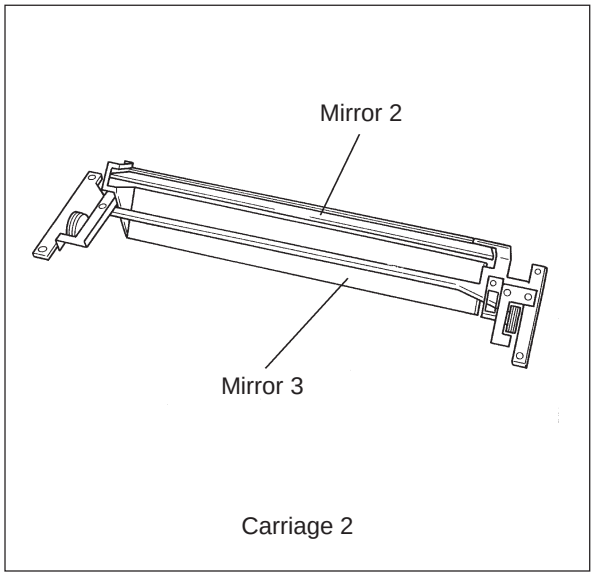

7.7.20 Upper exit roller

(1) Remove the upper exit cover and rear cover.
(2) Remove the upper exit roller unit (2 screws).
(3) Remove the upper exit roller from its fitting in the bracket.

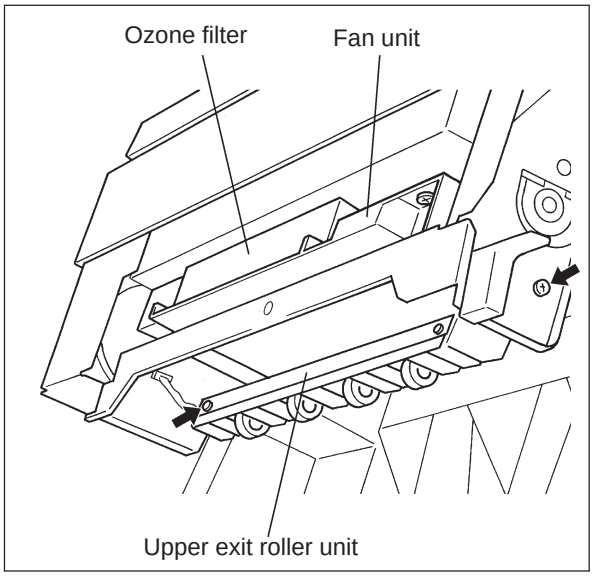

7.7.21 Exit side ozone filter

(1) Remove the upper exit cover.
(2) Pull the ozone filter out.

Note: When replacing it with a new filter, be careful not to crush or otherwise damage it with your fingers.

7.7.22 Exit fan motor

(1) Remove the upper exit cover and rear cover.
(2) Remove the 2 screws each which secure the clamshell release lever and the upper exit roller unit.

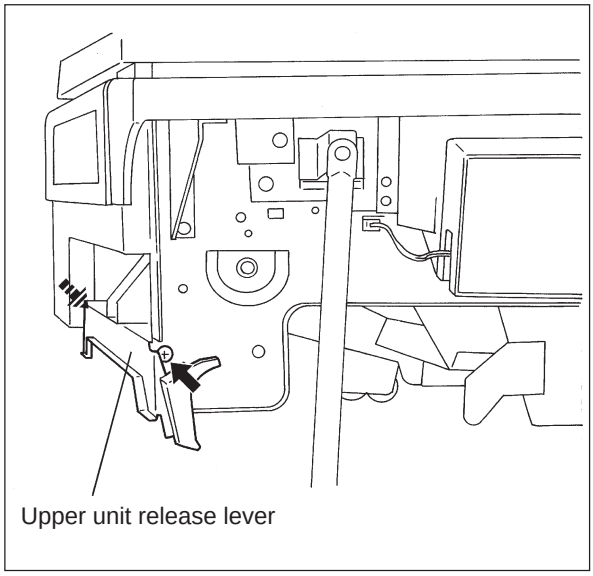

(3) Take out the 1 screw securing the fan unit.
(4) Remove the connector.
(5) Remove the exit fan motor.

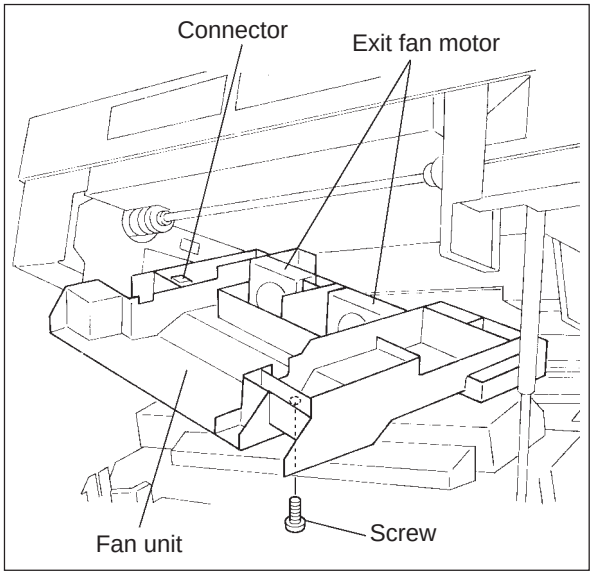

7.7.23 Carriage drive wire

(1) Remove the carriages 1 and 2.
(2) Remove the scanning motor and the belt.
(3) Remove the belt drive pulley (1 screw).
(4) Remove the fan unit.

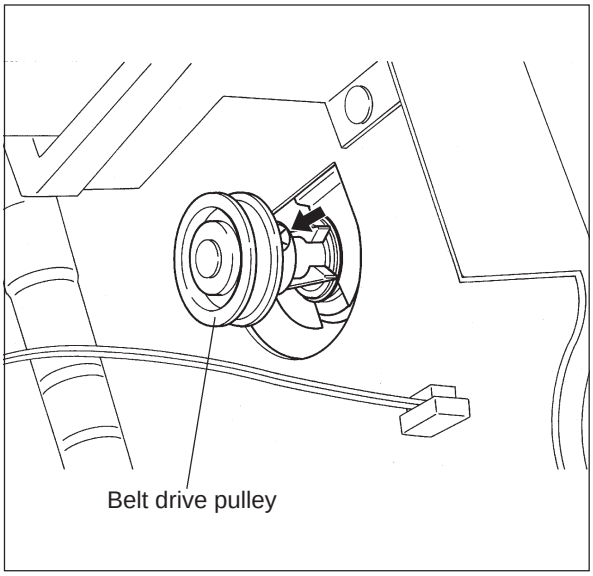

(5) Remove the one screw on the rear side wire drive pulley.
(6) Remove the stopper ring and bearing in front and rear side.
(7) Remove the whole wire drive shaft.
(8) Remove the rear side wire drive pulley from the shaft. Remove the front side wire drive pulley (1 screw).

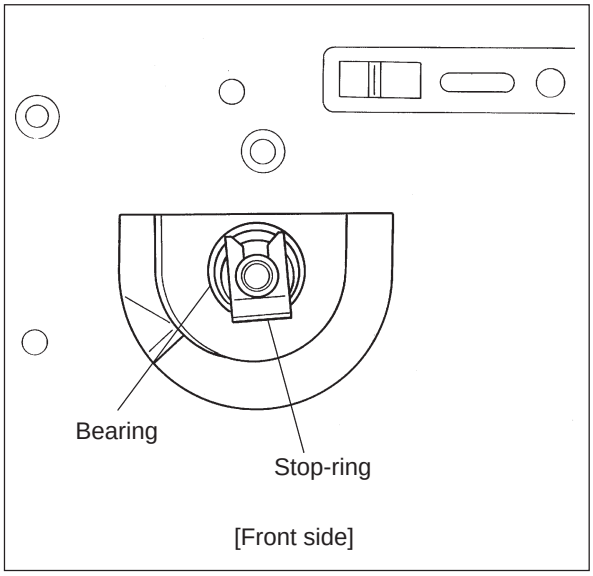

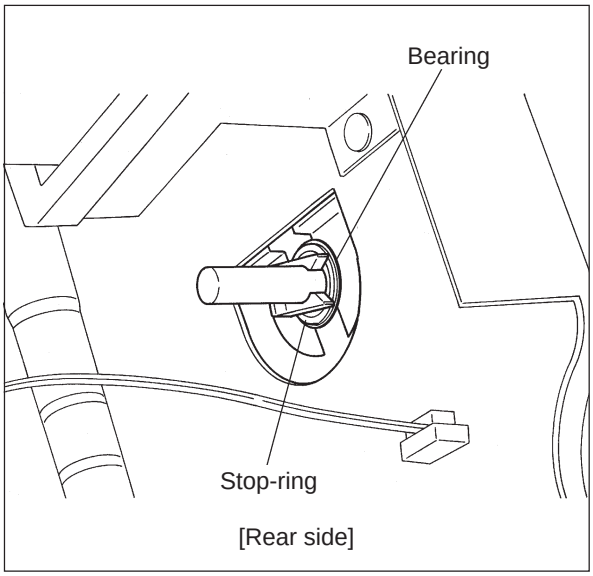

Note: How to wind the carriage drive wires

1. Fit the end “D” of the carriage drive wire in the groove of the wire drive pulley and wind the carriage drive wire in the direction and the number of turns shown in the figure on the right. (Do not allow the wire to twist while winding it.)
2. Install the wire holding jig from the side indicated with an arrow.

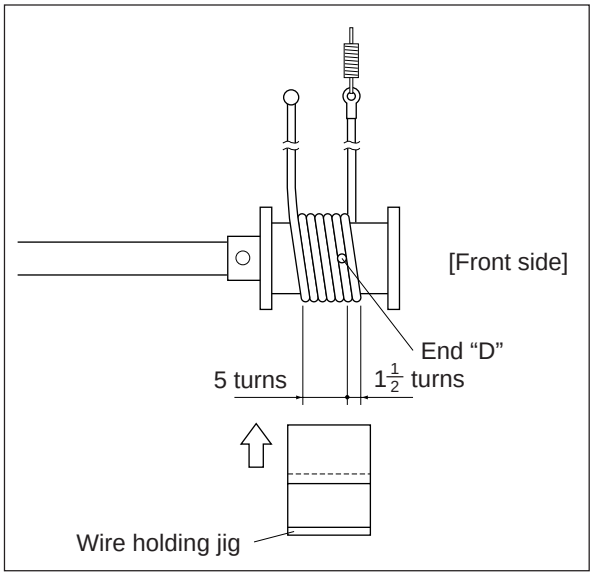

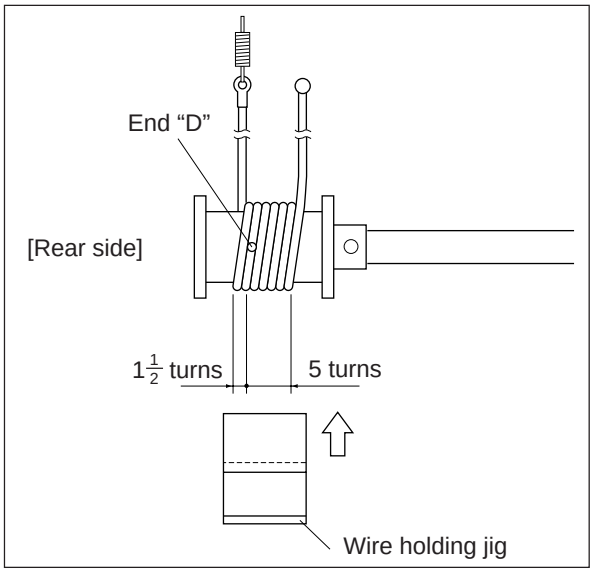

7.7.24 Slit glass, mirror 6 cover

(1) Remove the process unit.

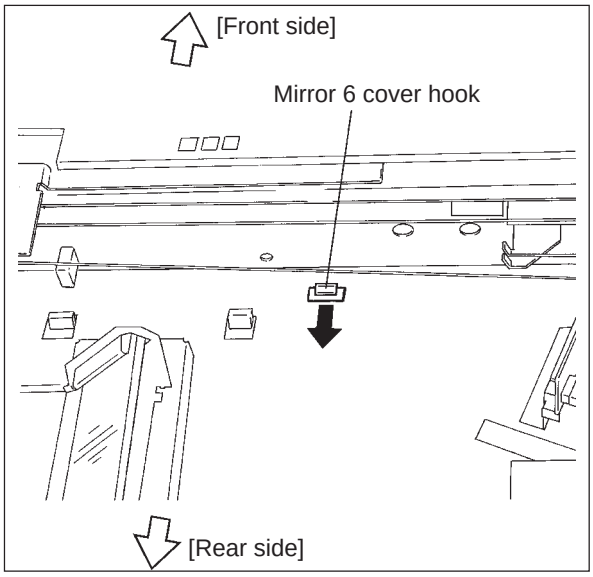

(3) Remove the mirror 6 cover (1 hook).

(4) Remove the slit glass from the mirror 6 cover releasing the claw.

Note: Be sure not to let the slit glass fall during installation or removal.

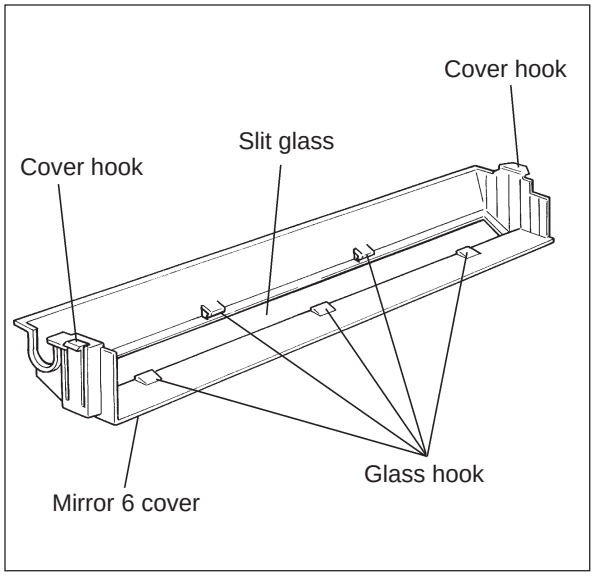

7.7.25 Mirror 6

(1) Remove the optical cover and the mirror 6 cover.

(2) Remove the mirror 6 bracket (3 screws, 2 hooks).

(3) Take out the mirror 6 bracket in the direction of the arrow.

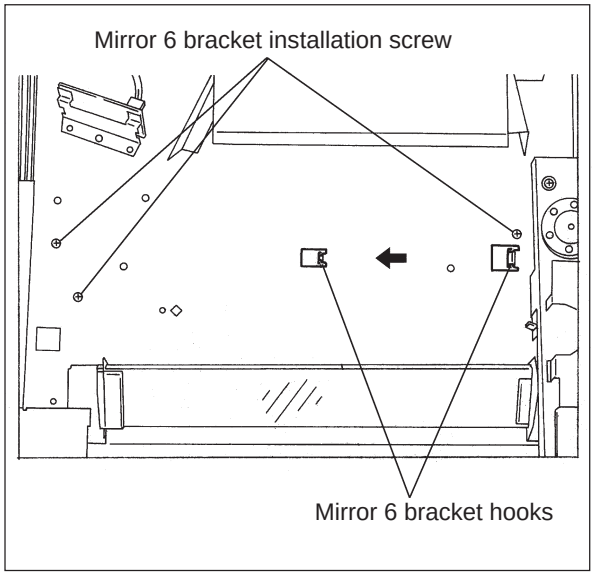

(4) Remove the 2 plate springs and take out mirror 6.

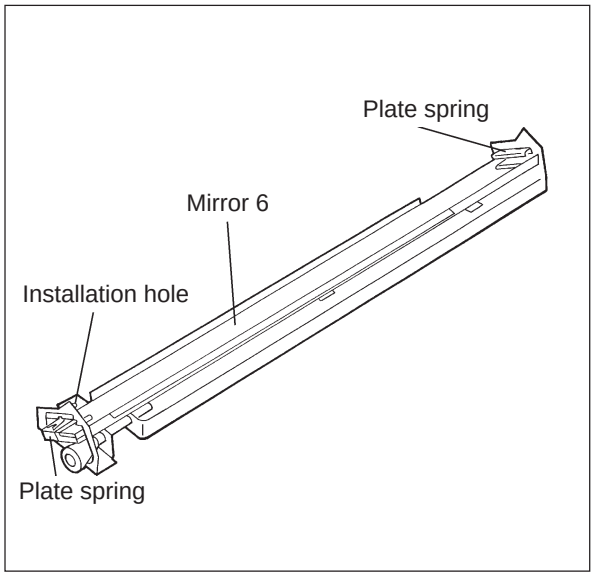

7.7.26 Upper damp heater-1

(1) Remove the optical cover and the inner cover.
(2) Remove the connector.
(3) Remove the screw and take out the upper damp heater-1.

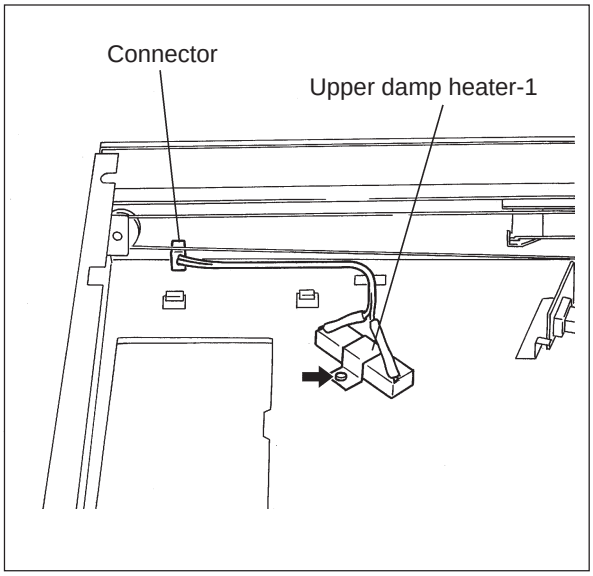

7.7.27 Upper damp heater-2

(1) Remove the original glass.
(2) Remove the upper exit cover.
(3) Remove the connector.
(4) Remove the screw and take out the upper damp heater-2

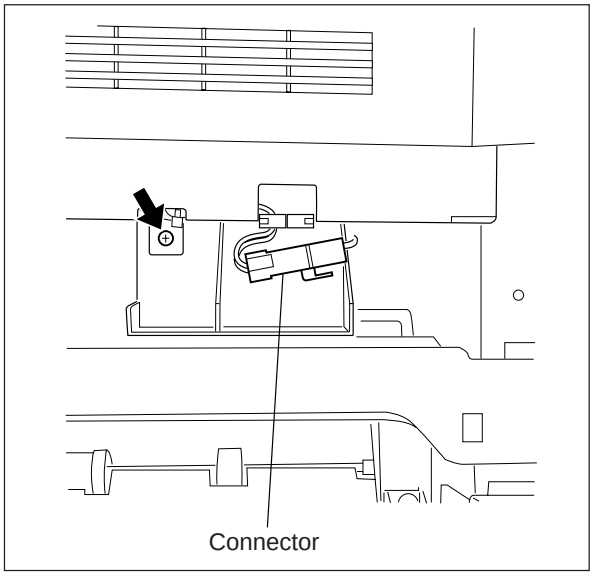

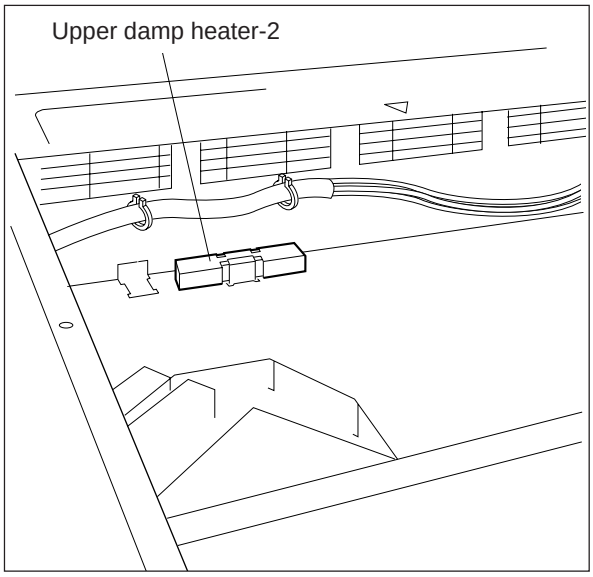

8 PAPER FEEDING SECTION

8.1 Functions

This unit sends paper which is set in the paper cassette or the bypass tray to the transfer position.

The paper feeding section is mainly comprised of manual feed roller, pick-up rollers, paper feed rollers, separation rollers, transport rollers, aligning roller, manual feed switch, paper empty switch, paper size switch, paper feed switch, paper stop switch and also their drive mechanism.

The following explains each part function.

(1) Pick-up roller/manual feed roller

Sends paper in the bypass tray or the paper cassette to the paper feed roller and the roller moves up and down on each occasion of paper feeding.

(2) Paper feed roller

This is the opposite of the separation roller, sending paper fed from the pick-up roller to the transport roller.

(3) Separation roller

This is the opposite of the paper feed roller. When two sheets or more are fed from the pick-up roller, the load of the torque limiter of the separation roller is greater than the friction power between the sheets of paper, the separation roller stops, causing the lower sheet also to stop and not be fed at that moment. But in the case of single sheet feeding, it rotates at the same timing as the paper feed roller so that it has the rotation force of that roller.

(4) Transport roller

Transport the paper from the feed roller to the aligning roller.

(5) Aligning roller

Paper fed from the paper feed roller is stuck against the aligning roller which is at rest, and leading edge alignment is performed.

Then the aligning roller rotates to feed paper to the developing position.

Further, the aligning roller is contacted with the brush to prevent paper dust from adhering to the aligning roller due to paper alignment. The following explains about switches which detect paper size, paper presence and paper feeding position for ON/OFF control of each roller.

(6) Manual feed switch

Detects if paper is set in the bypass tray. If this is the case, manual paper feeding has priority over cassette paper feeding.

(7) Paper-empty switch

This sensor detects paper in the paper cassette by the use of the actuator. When there is no paper in the cassette, the actuator intercepts the transmitted light in the sensor, causing a paper-empty situation to be detected.

(8) Paper size switch

Consists of four push-type switches.

In the paper cassette, tabs are installed so that any of these switches (1 to 4) is pressed when a paper cassette is installed in the copier.

Corresponding to which switch is being pressed, paper size detection is performed.

(9) Paper stop switch

Detects the leading/trailing edge of paper passing through the paper transport roller.

Jam detection such as for paper misfeeding, etc. is also used.

(10) Paper aligning switch

Detects that the leading edge of the paper has arrived at the aligning roller.

Also detects that the trailing edge of the paper has passed through the aligning roller.

If the former is detected, it reads that the aligning roller has completed paper alignment.

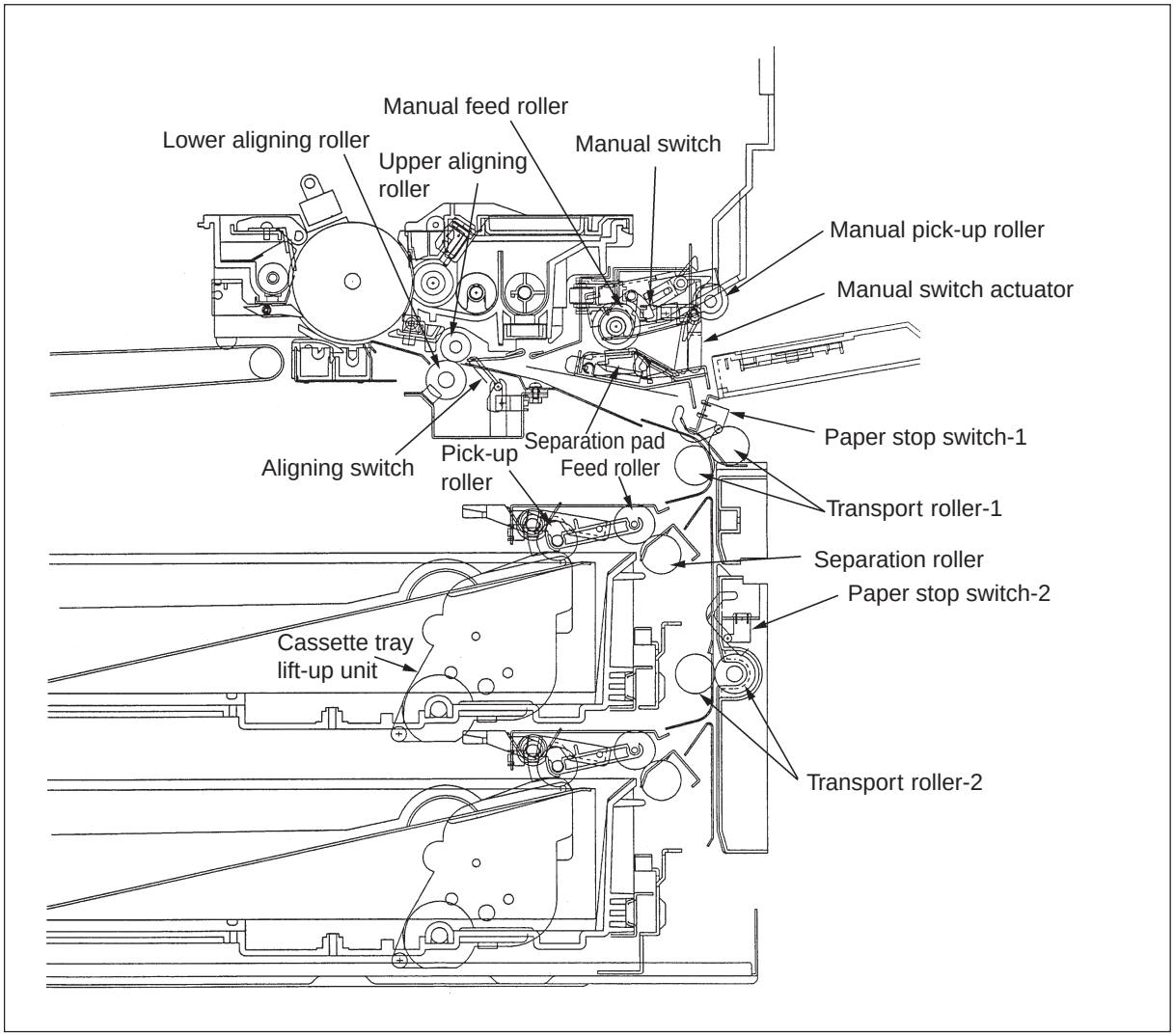

Paper feeding section sectional view (Front side)

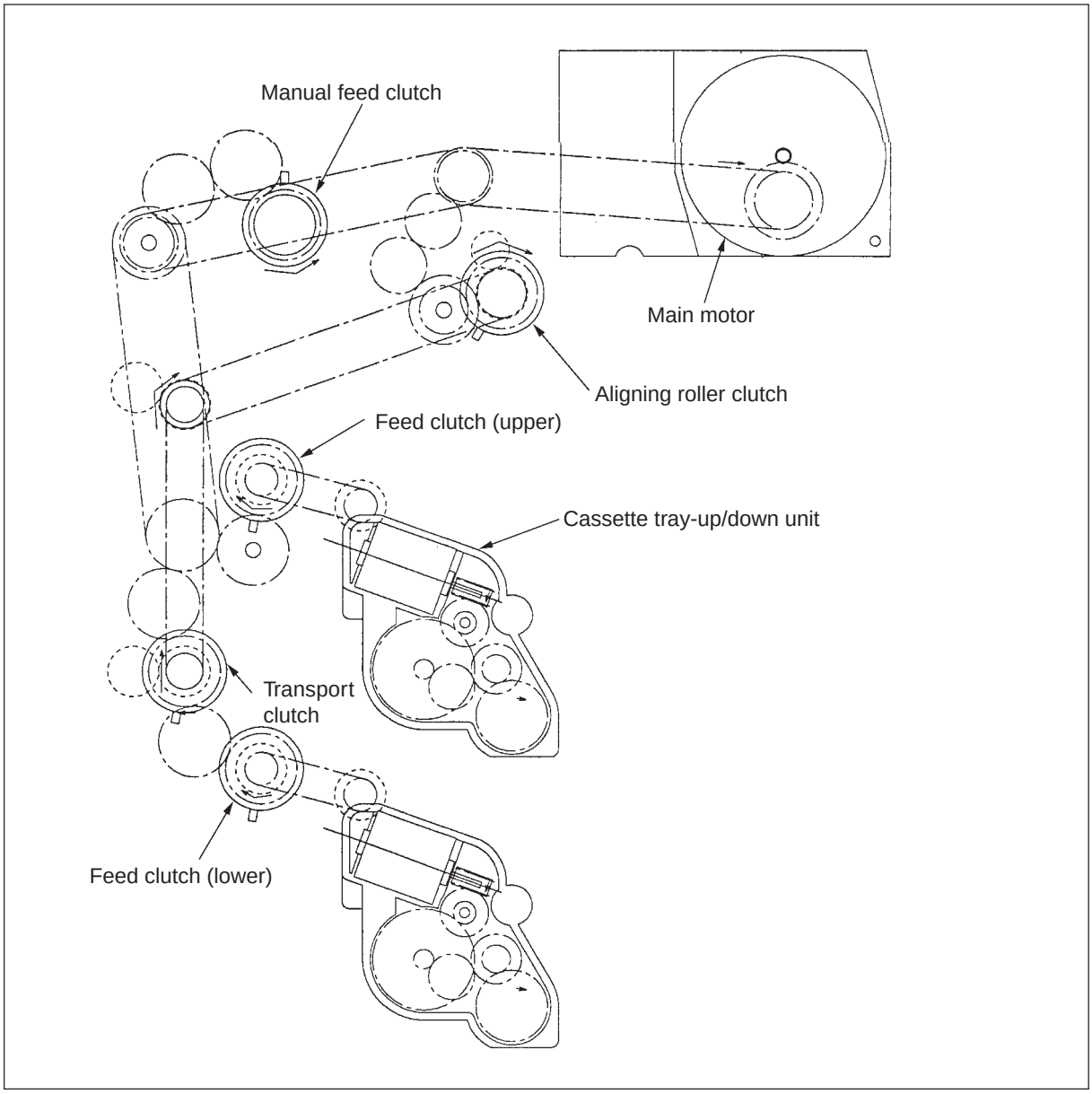

Paper feeding section drive system (Rear side)

8.1.1 Manual pick-up roller vertical movement

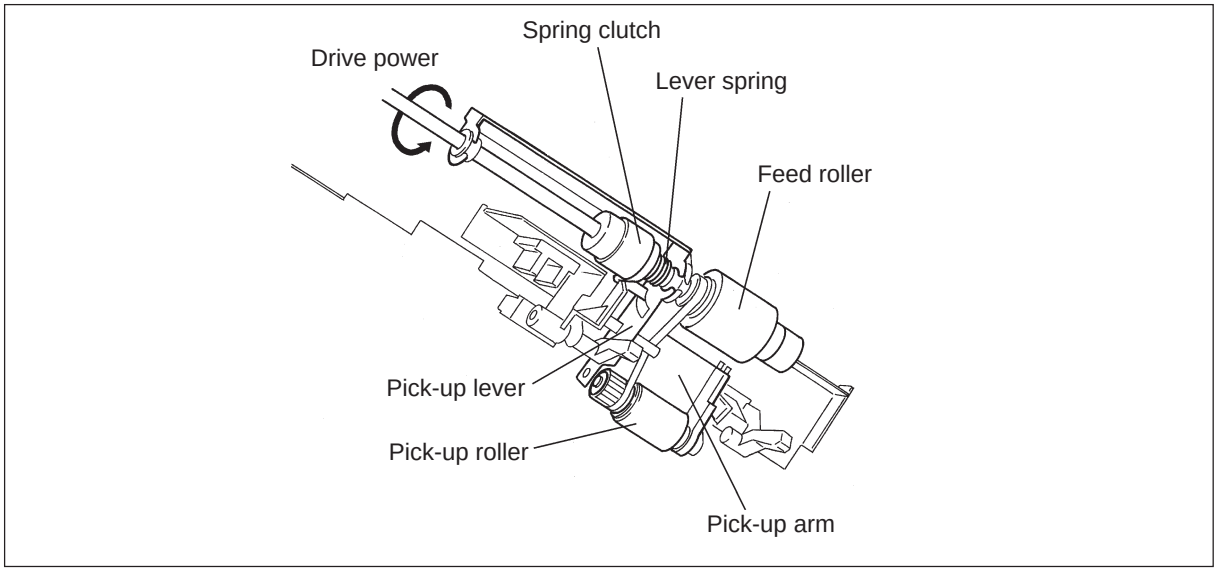

When drive power is transmitted to the feed roller, rotation power is sent to the pick-up lever via the spring clutch. Then the pick-up arm falls by its own weight and the spring clutch stops in the position in which it has bumped into the stopper.
When the drive power of the feed roller is lost, the pick-up lever is lifted up by the force of the lever spring after which the pick-up arm is also raised.

8.1.2 Cassette pick-up roller vertical movement

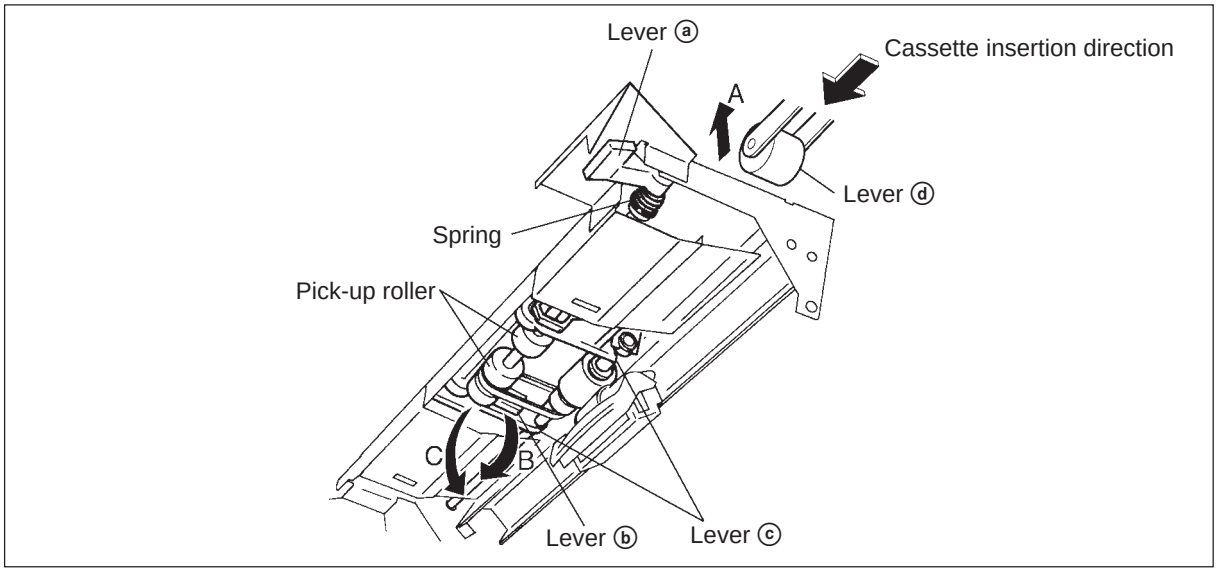

When the cassette is inserted, the cassette lever ⓓ pushes up the lever ⓐ in the direction A. Then the pick-up roller is caused to fall by its own weight due to the link mechanism of the levers ⓑ and ⓒ.

8.1.3 Paper separation operation

Since no paper separation claws are used in the cassette, a paper separation roller is installed inside the machine. The separation roller section consists of a paper feed roller, separation roller, spring joint, etc., as shown.

The feed roller is rotated by the feed clutch in the direction of the arrow ( ) at the same timing as the pick-up roller.

As shown in the lower right figure, two sheets feeding are occured, since the friction between the sheets is smaller, the lower sheet is stopped being fed any further while the upper sheet is forced to be transported by the feed roller in the direction of the arrow ( ).

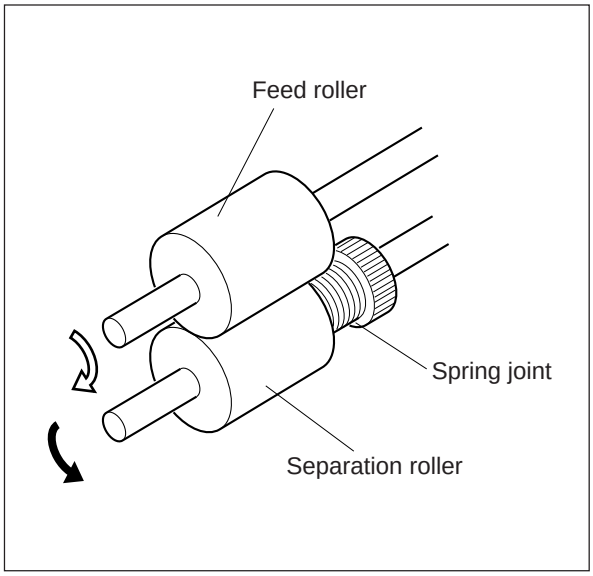

[Example]

When only one sheet of paper ① has entered into the separation roller section, since the feed roller's transporting force is stronger than the separation roller's braking force, the separation roller is forced to rotate causing the sheet to be sent toward the aligning roller ( ).

When, two sheets (① and ②) have entered into the separation roller section at the same time, since the powers of the feed roller's transporting and separation roller's braking are greater than the friction power of the paper, the paper ① is transported toward in the direction of the arrow ( ) and the paper ② is not transported any further by the separation roller.

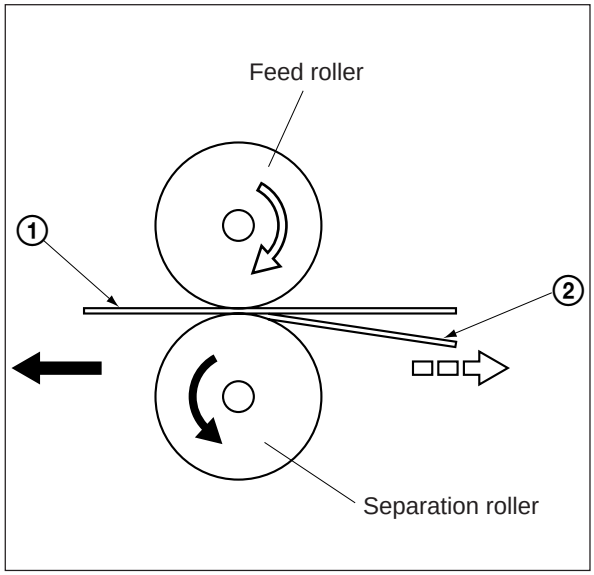

8.2 Cassette Feeding Operations

8.2.1 Operation explanation

[A] From power-on until standby status

(1) When the power is turned on for the copier, the tray motors (M13/14) are set to ON and the trays at each level start to rise. When the trays are raised, the tray-up switches (S28/29) are turned on (L → H), and the tray motors (M13/14) are turned off, which stops the upward motion of the trays. At this point, if the empty switches (S3/14) are off (L), it is determined that paper is not present. If the empty switches are on (H), it is determined that paper is present. The trays stop in their raised position regardless of whether there is paper or not.

(2) If the power is turned on when the cassette has been removed, the tray motor for that level does not come on. When the cassette is inserted in the slot, the tray is raised and the presence or absence of paper is determined.

(3) If either of the paper stop switches (S7/16) or the aligning switch (S8) is ON (because there is paper in the paper path) when the power is turned on, it is determined that a paper jam has occurred and operation is not possible until the paper is removed.

[B] Standby mode

(1) After the paper supply is checked by the raising of the trays as described above, the standby mode is obtained. In the standby mode, the trays remain in their raised position.

(2) When the cassette is inserted or removed in the standby mode, the tray is raised again to check the paper supply.

[C] Manual feeding

- The manual feed switch detects the presence of manual feeding paper.
- The manual solenoid is turned on, and the pick-up roller and the manual feed roller are rotated.
- The pick-up roller is lowered, and paper feeding is started.
- The leading edge of the paper turns on the paper aligning switch and is aligned at the aligning roller.
- The manual feed clutch is turned off, and the pick-up roller and manual feed roller stopped rotating, and then the pick-up roller is raised.
- The aligning clutch is turned on, and the paper is transported to the transfer process.

[D] Cassette feeding (upper or lower)

- The feed clutch and the transport clutch are turned on, and the feed roller and the transport roller are rotated, and then paper feeding is started.
- The leading edge of the paper turns on the paper stop switch, then the feed clutch is turned off.
- The leading edge of the paper turns on the aligning switch, and is aligned at the aligning roller.
- The transport clutch is turned off, and the transport roller is stopped.
- The aligning clutch is turned on, and the paper is transported to the transfer process.

8.3 Motor Drive Circuit

8.3.1 Brush motor drive circuit

Tray-up motor (T-UP-MOT) : Driven by IC13 (upper cassette)/IC12 (lower cassette) (PWA-LGC: TA8428)

The block diagram of TA8428 is shown below.

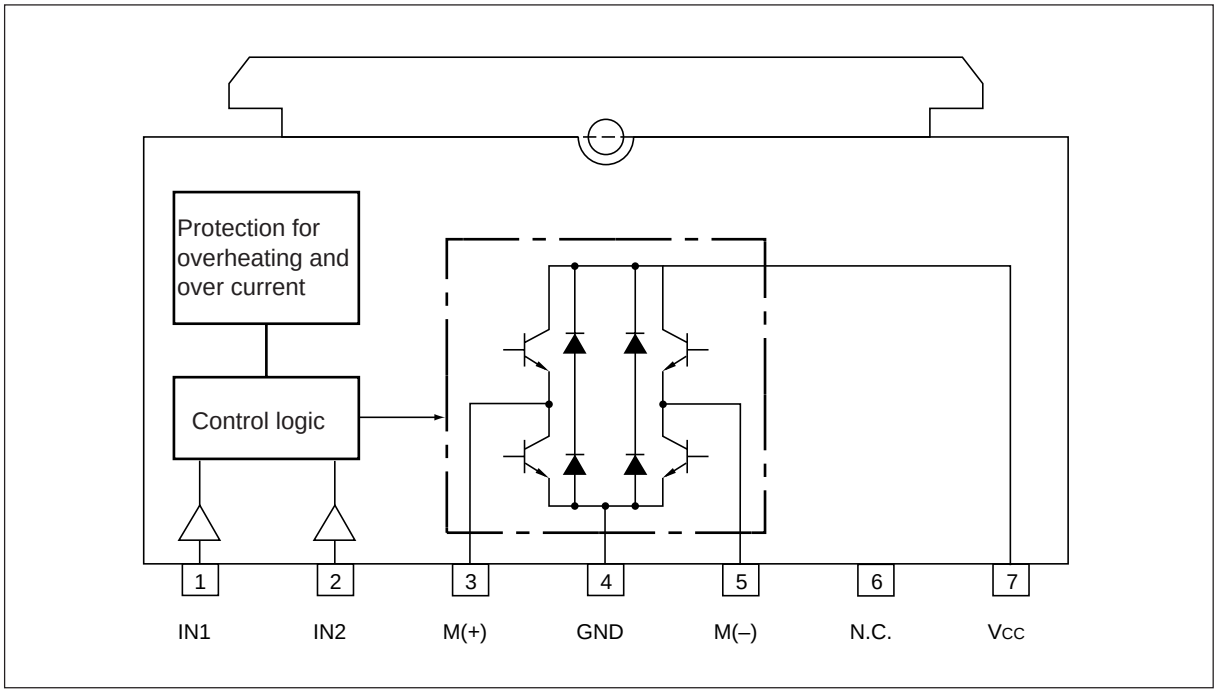

IN1 and IN2 are input terminals for the signals from the microcomputer. In the control section, the motor is controlled on and off based on the signals from the microcomputer. For the control, refer to the table below.

Input		Output		Description
IN1	IN2	M (+)	M (–)	
H	H	L	L	BRAKE
L	H	L	H	CCW (upward)
H	L	H	L	CW (downward)
L	L	OFF (high impedance)		STOP

8.4 Disassembly and Replacement

8.4.1 Manual feed unit (roller)

(1) Remove the upper feed cover and left feed cover.

(2) Remove the screw and bracket in the front side, and then take out the manual feed tray unit.

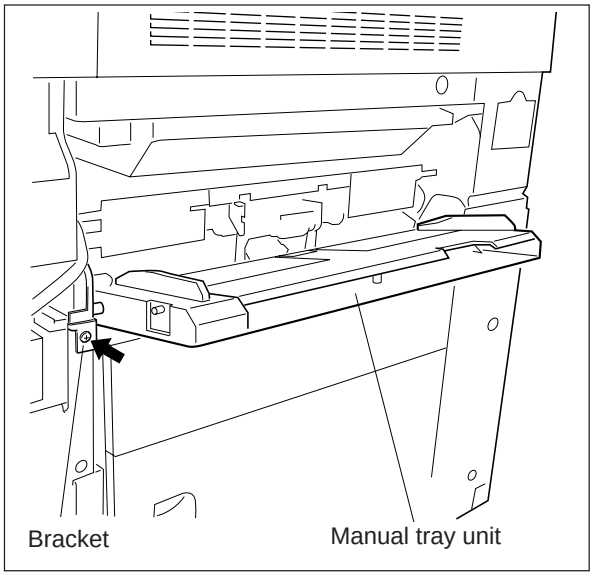

(3) Remove screw a, and then b and c.

(4) Disconnect the connector of the electromagnetic clutch.

(5) Remove the manual feed unit (screw d) while pressing the separation pad.

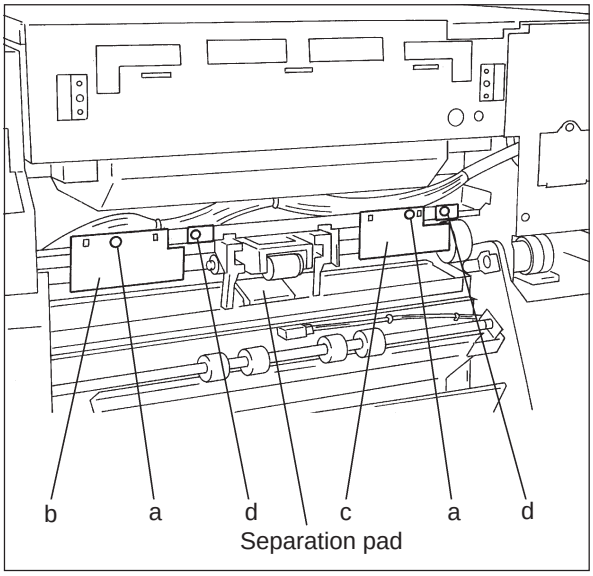

[A] Manual feed roller

(1) Remove the stop ring.

(2) Pull out the feed roller in the direction of the arrow A.

[B] Pick-up roller

(1) Remove the stop-ring.

(2) Pull out the ø6 shaft in the direction of the arrow B.

Notes: Pay attention to the following points when reassembling the manual, pick-up, feed and separation rollers.

1. Set the timing belt securely on the pulley.
2. Be careful not to mistake the setting position of the timing belt (manual feed roller).
3. Put the clip properly into the slot of the shaft.
4. Check that oil etc. has not adhered to the surface of the timing belts, pulleys and rollers.
5. Make sure of the roller orientation.

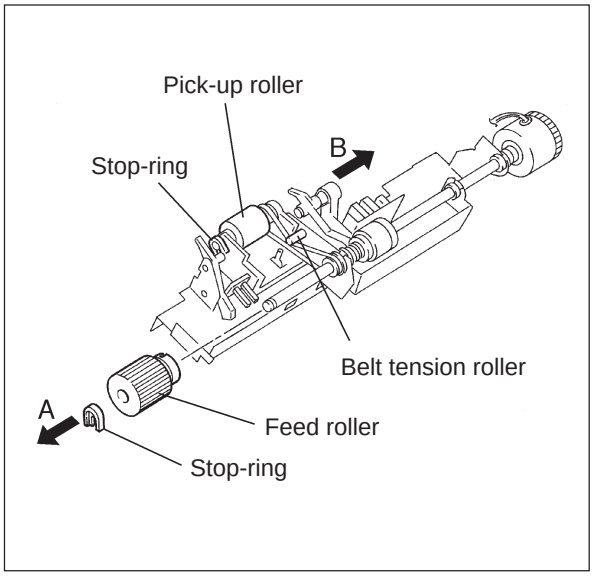

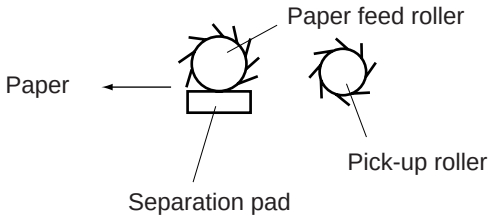

8.4.2 Separation pad

(1) Remove the manual feed unit (roller).

(2) Remove the separation pad bracket (2 screws) and then take the bracket out toward the front.

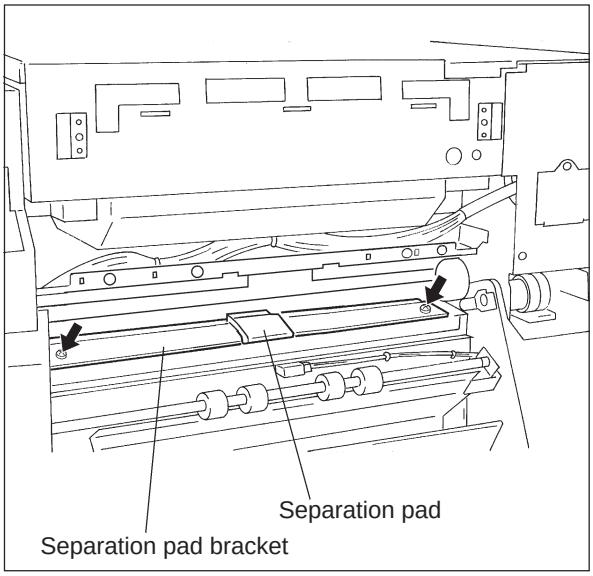

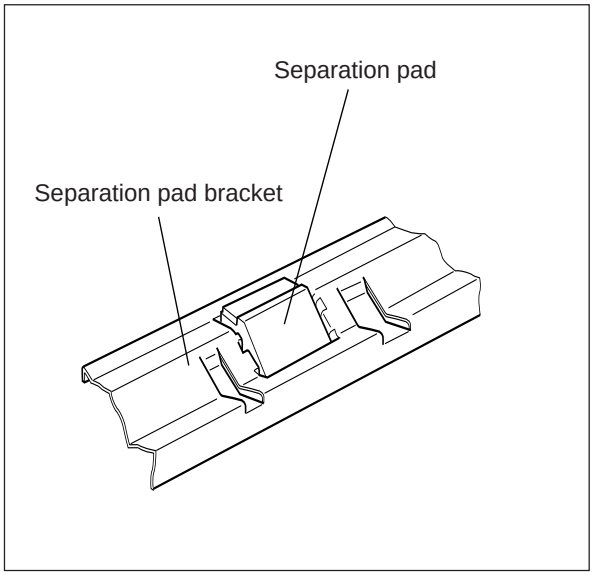

(3) Remove the spring and then the separation pad.

Note: Be careful not to damage the manual feed switch at the time of installation.

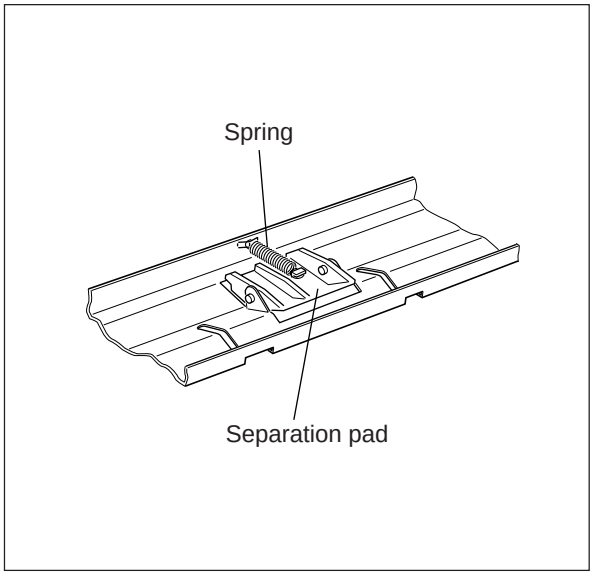

8.4.3 Aligning unit

(1) Remove the front inner cover, the lower inner cover and the transfer/separation charger unit.
(2) Disconnect the connector of the developer bias harness from the HVT transformer. Remove the pulley and belt in the rear side of the aligning roller.
(3) Remove the aligning unit fixing screws. (front: 2 pcs., rear: 1pc.)
(4) Disconnect the connectors of the clutch in the rear side and the aligning switch.
(5) Slide the aligning unit to the rear side and lift up the unit to remove it.

Note: When installing the aligning unit, insert the rotation stopper of the electromagnetic clutch properly into the rear side bracket and securely hook the belt to the pulley.

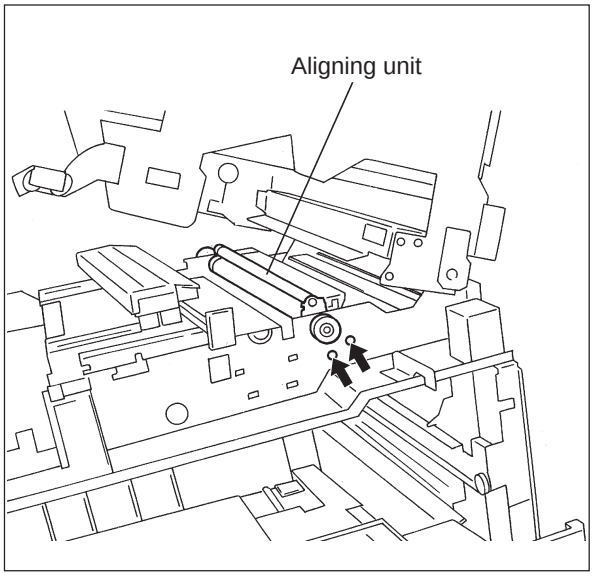

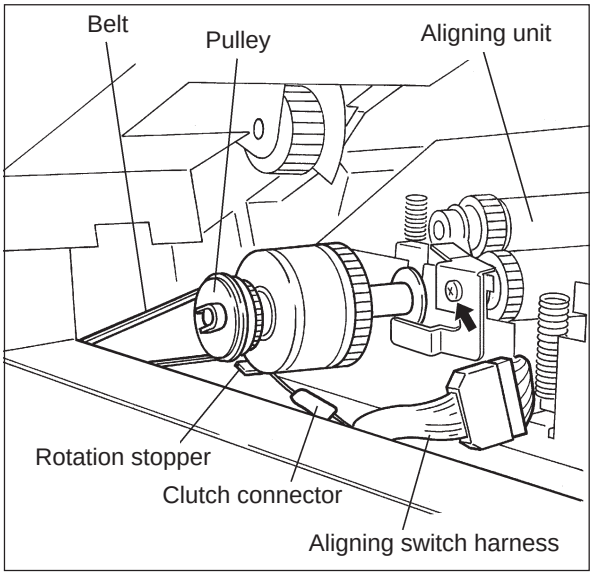

[A] Aligning roller (upper, lower)

(1) Remove the aligning guide (2 screws).

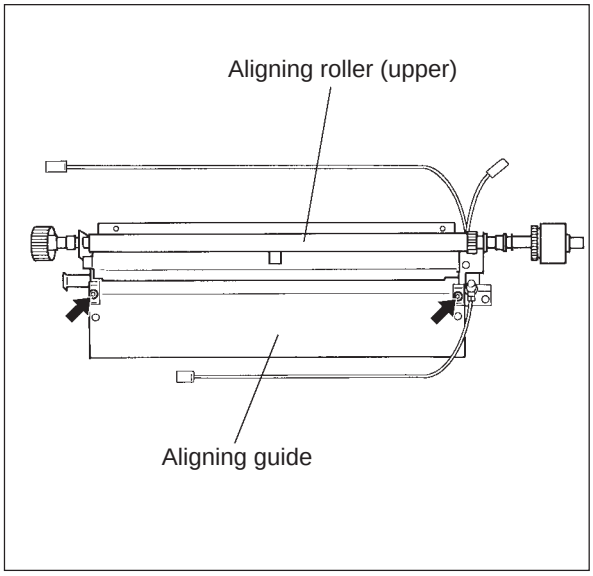

(2) Remove the aligning pressure spring.

(3) Remove the bushes (upper, lower, 2 each).

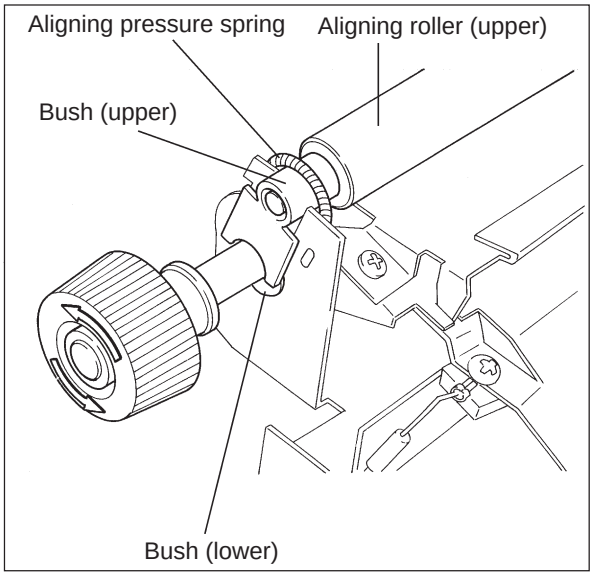

(4) Lift up the aligning rollers (upper and lower) in the direction of the arrow D to remove them.

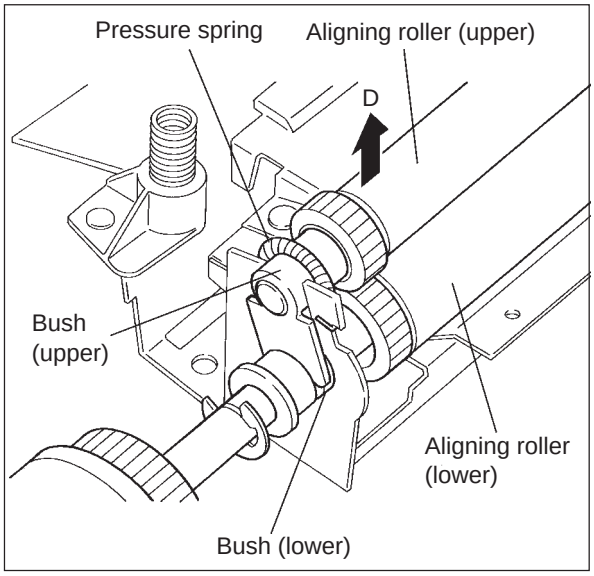

[B] Paper dust cleaning brush

(1) Remove the brush (2 screws).
(When the unit is installed in the machine, the brush can be removed/installed if the transfer/ separation charger has been taken out).

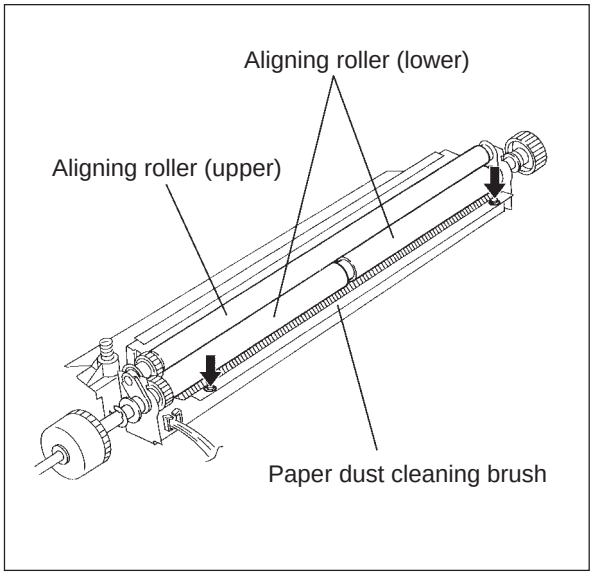

8.4.4 Cassette feed section

(1) Remove the right feed cover.
(2) Open the jam release cover.
(3) Remove the hinge (2 screws).
(4) Remove the harness cover.
(5) Remove the jam release cover.
(6) Disconnect the connector from the feed unit.

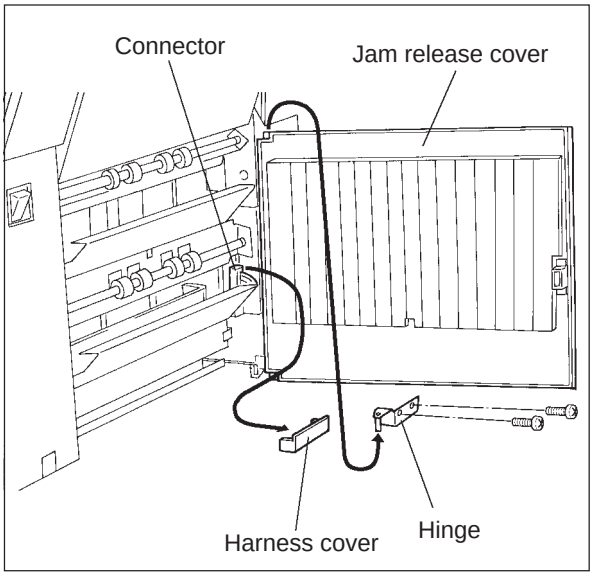

(7) Pull out the cassette.
(8) Disconnect the paper size detection switch harness from the switch.
(9) Remove the two paper feed unit fixing screws, and pull out the unit toward the front side.

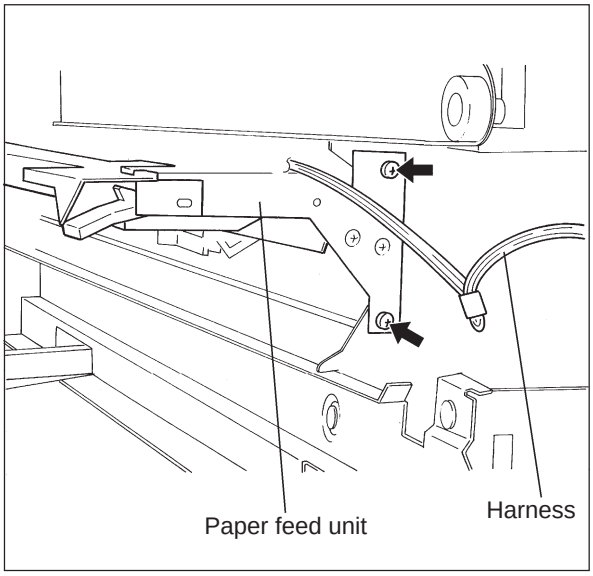

Note: If the LCF has been installed on the copier, use the following procedure to remove the harness cover and the connector.

1. Remove the right feed cover.
2. Remove the hinge stopper for the LCF in order to open it fully.
3. Open the LCF fully.
4. Remove the harness cover.
5. Disconnect the connector from the feed unit.

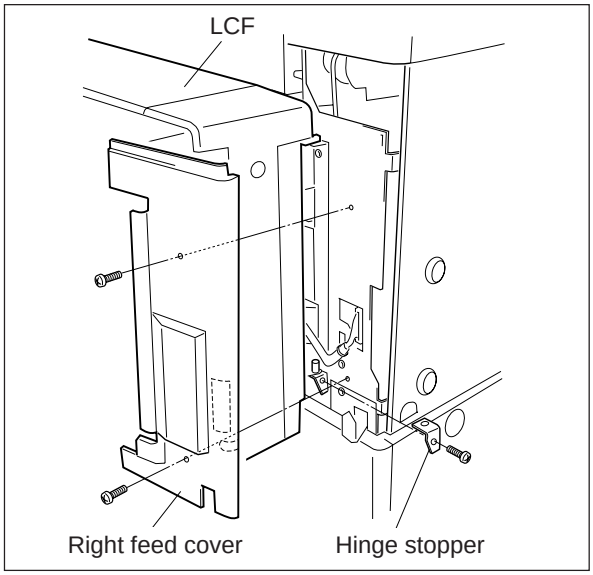

[A] Cassette feed unit (rollers)

(1) Remove the clutch bracket.

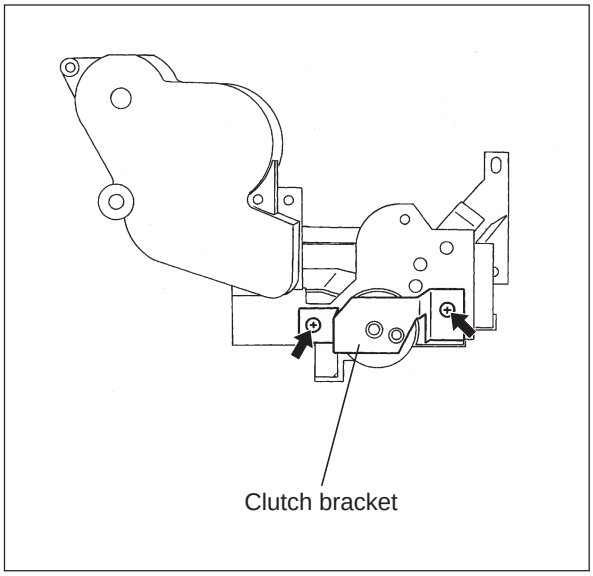

(2) Remove the separation roller holder (2 screws).
(3) Remove the pick-up roller from the arm.
(4) Slide the feed roller in the direction of the arrow A and pull out the bush from the shaft.
(5) Remove the stop-ring and pick-up arm from the shaft and pull out the feed roller.

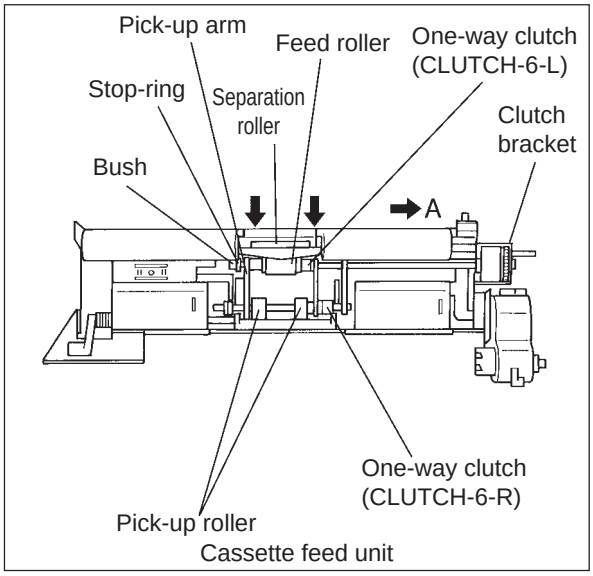

(6) Remove the lever and separation roller with shaft from the holder.
(7) Remove the cover, arbor and clutch spring, and then separation roller from the shaft.

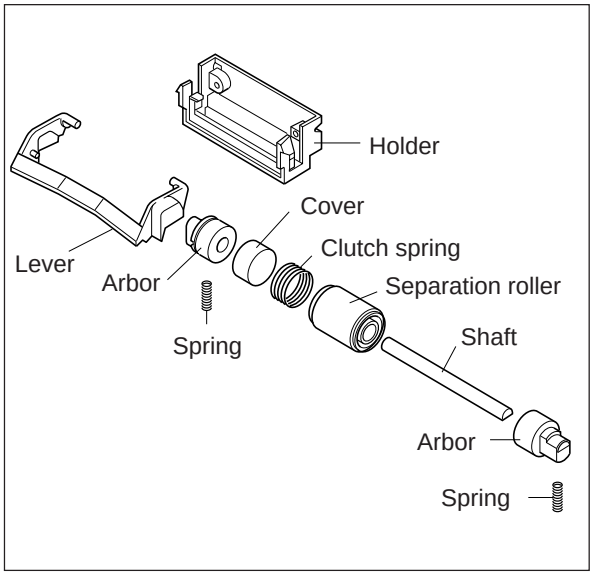

Note: When installing the manual feed, pick-up, paper feed and separation rollers, pay attention to the following items.

1. Insert a pin in the pulley.
2. Make sure the timing belt is correctly looped on the pulley.
3. Make sure the lock direction of the one-way clutch is correct.

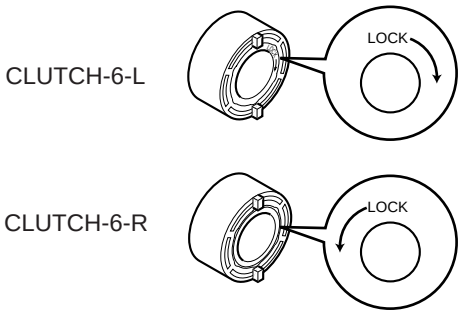

4. Make sure the clip is set in the shaft groove.
5. Make sure no oil gets on the surface of the timing belt, pulley and roller.
6. Make sure of the roller orientation.

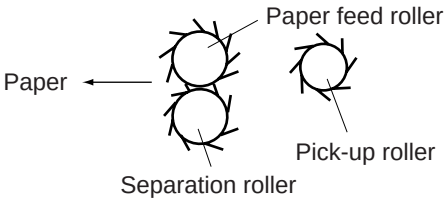

9. DRUM-RELATED SECTION

9.1 Construction

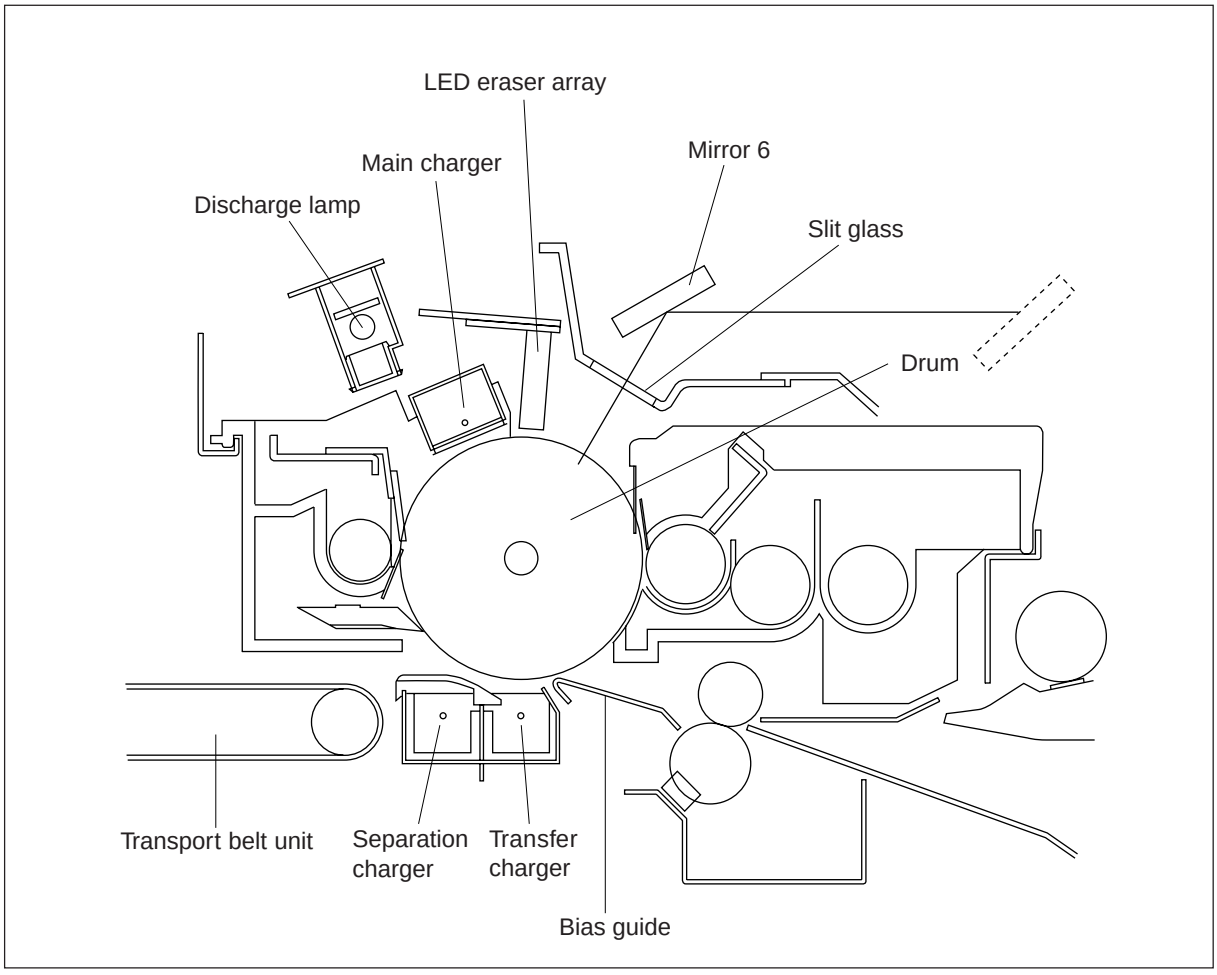

In this section, the drum-related parts including the drum are described. (The cleaner unit is excepted.) Construction of the parts is as follows.

- Upper unit
  - Drum
  - Main charger – – – – – – – – – – High-voltage transformer unit
  - LED eraser array, discharge lamp

- Lower unit
  - Transfer/separation charger – High-voltage transformer unit
  - Transfer guide bias – – – – –
  - Transport-belt unit – – – – –

9.2 Drive Mechanism

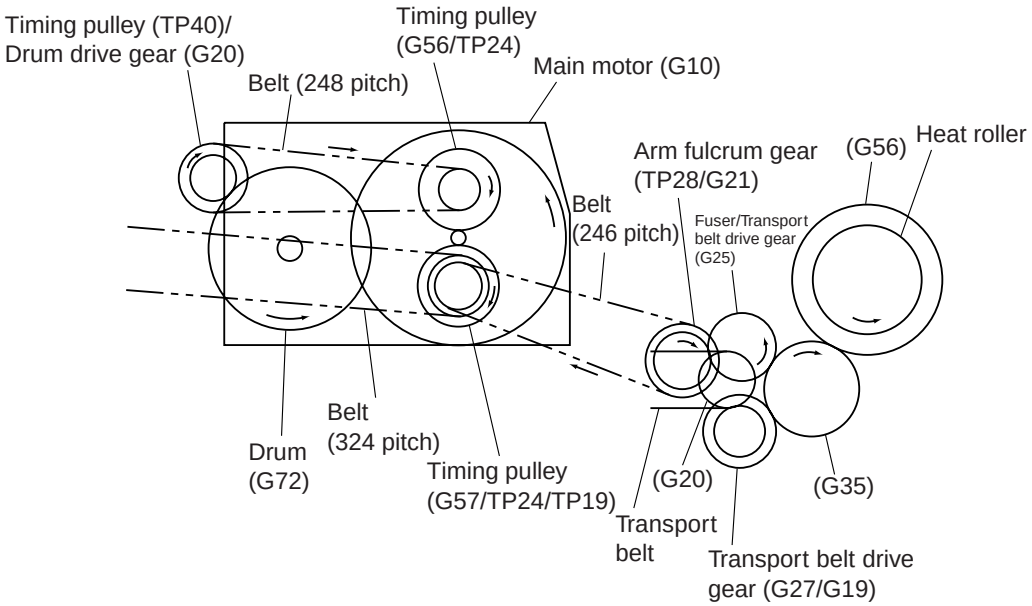

Rear side sectional view

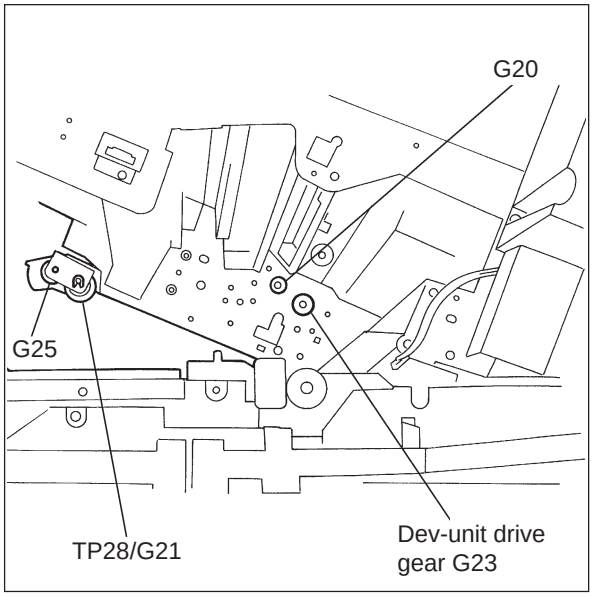

Front side view

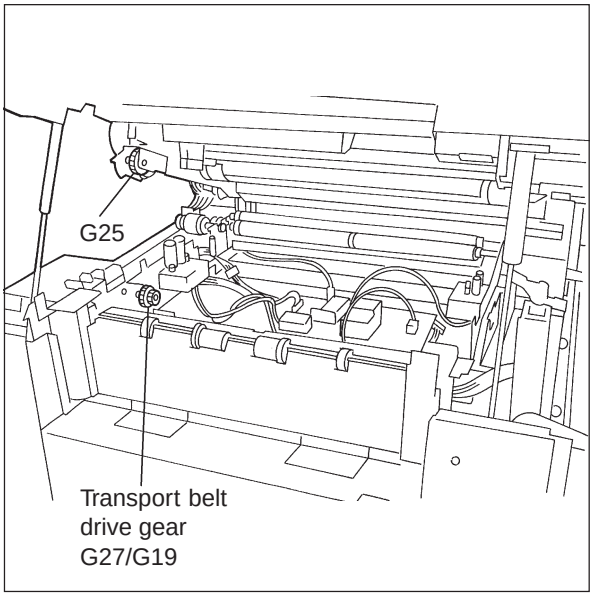

Removing fuser unit and transport belt unit

• Drum drive

Gear (teeth: 20)……Copier rear side (inside of rear frame)

└→ Drum gear (teeth: 72) → Drum (inside of cleaner unit)

• Transport belt drive

Gear (teeth: 19)……Copier rear side (inside of rear frame)

└→ Transport belt gear (teeth: 20) → Transport belt

9.3 Functions

9.3.1 Main charger, discharge lamp, and LED eraser array

[A] Main charger

(1) Applies a negative electrical charge to the drum (through a high-voltage transformer).

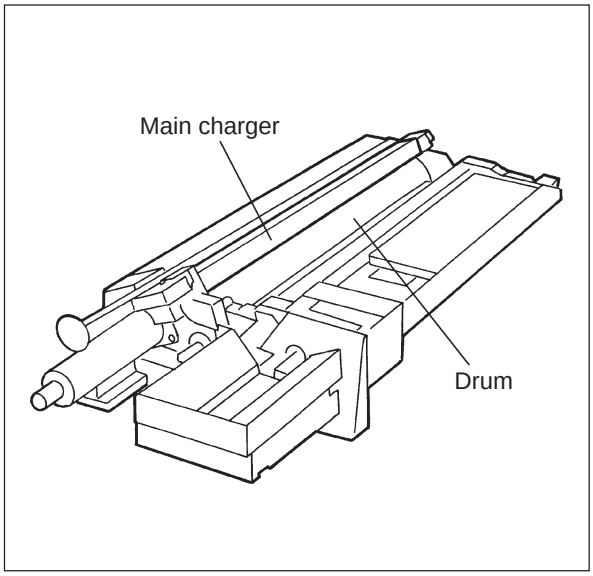

[B] Discharge lamp

(1) Remove any electrical charge remaining on the drum after cleaning.

[C] LED eraser array

(1) Remove any unrequired portion of latent image formed on the drum.

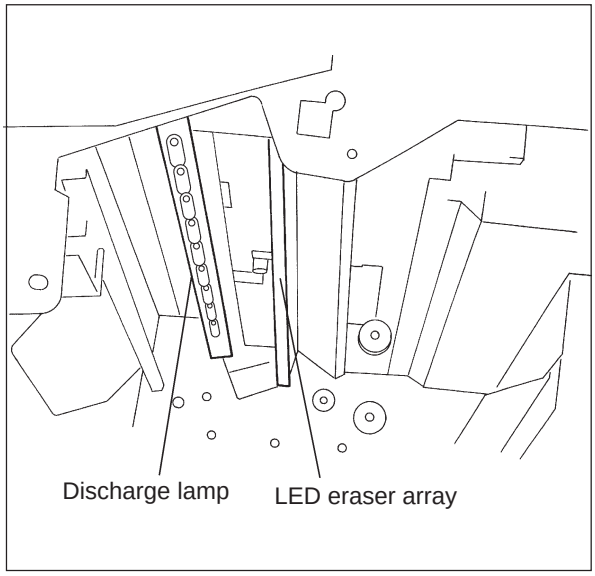

9.3.2 Transfer/separation charger, transport belt

[A] Transfer charger

(1) Transfers the toner on the drum to the copy paper (high-voltage transformer: DC).

[B] Separation charger

(1) Separates the copy paper with toner from the drum (high-voltage transformer: AC).

[C] Transport belt

(1) Transports the paper, which has been transferred and separated from the drum, to the fuser unit.

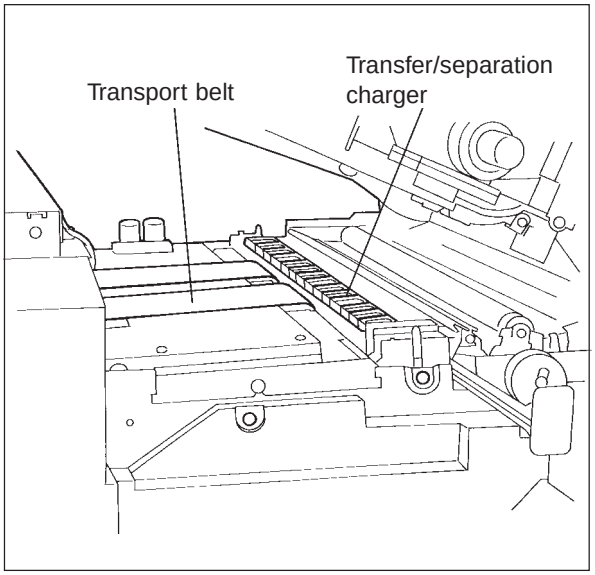

9.4 Disassembly/Replacement

Remove the switch cover and the process unit as required to create easy-to-service conditions.

9.4.1 Discharge lamp

(1) Remove the rear cover (U).

(2) Disconnect the connector J12.

(3) Hold the leading edge of the PC board and pull it to the rear.

Note: When reassembling, insert the PC board firmly until it touches the bracket.

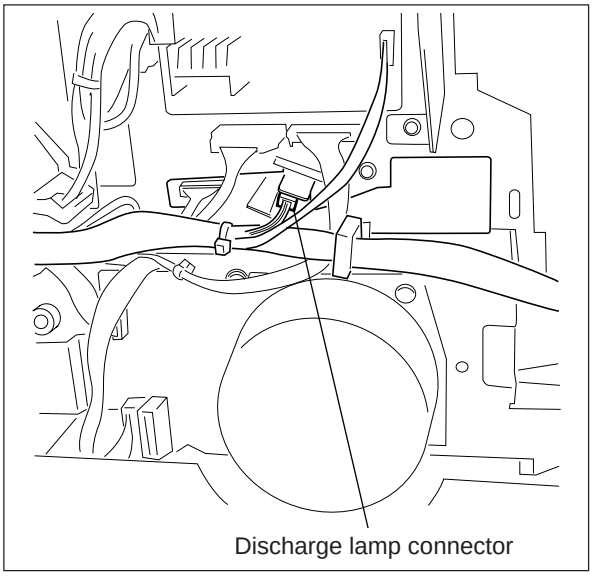

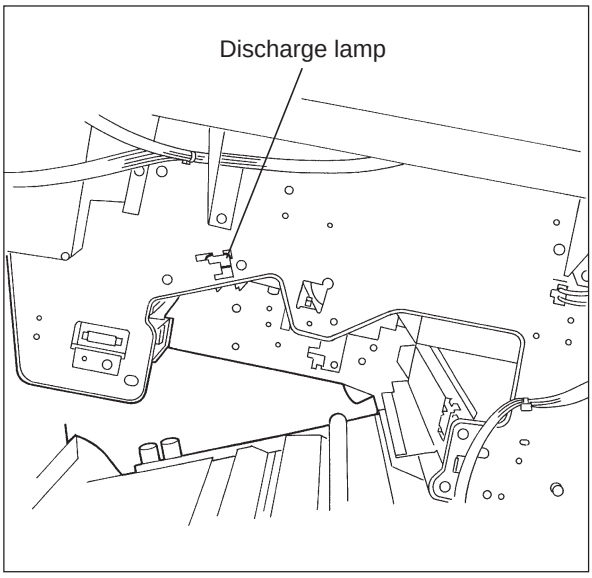

9.4.2 LED eraser array

(1) Remove the process unit and the rear cover (U).

(2) Disconnect the connector.

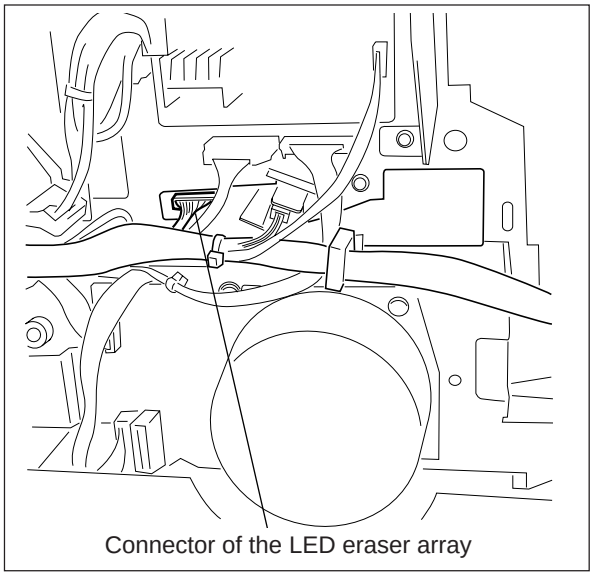

(3) Remove one screw and pull it to the front.

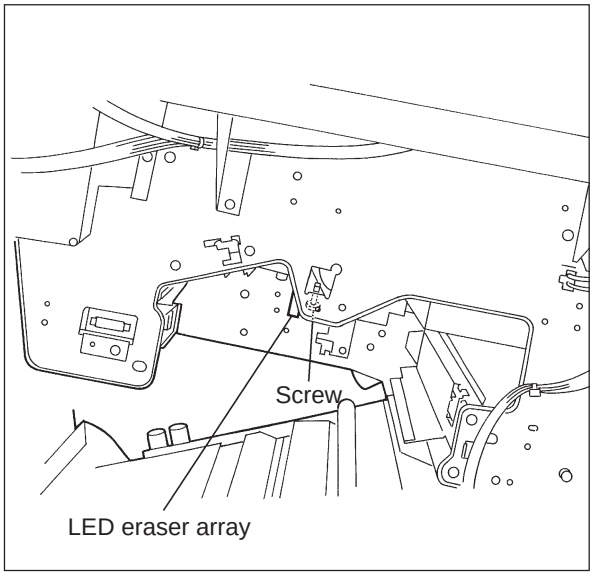

9.4.3 Main charger

(1) Remove the toner cartridge.

(2) Lift up the upper unit.

(3) Remove the connector cover (1 screw) (for European machines).

(4) Remove the one screw shown by the arrow. Pull out the unit to the front side.

Notes: 1. Be careful not to damage the drum.

2. Check that the drum shaft is in the cleaner unit.

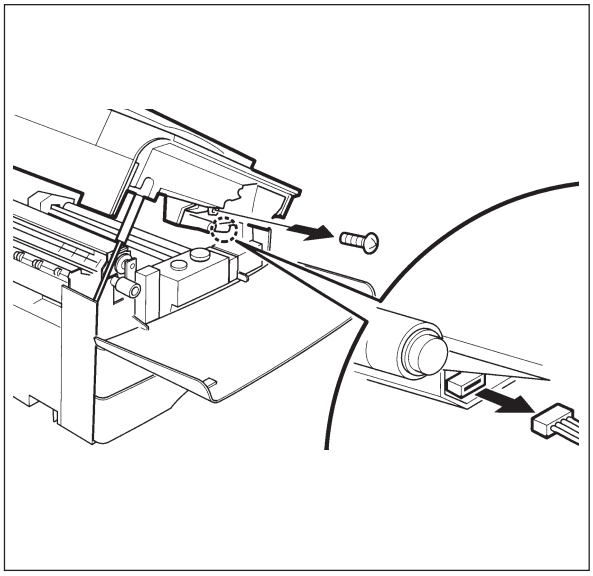

(5) Remove the holder charger.

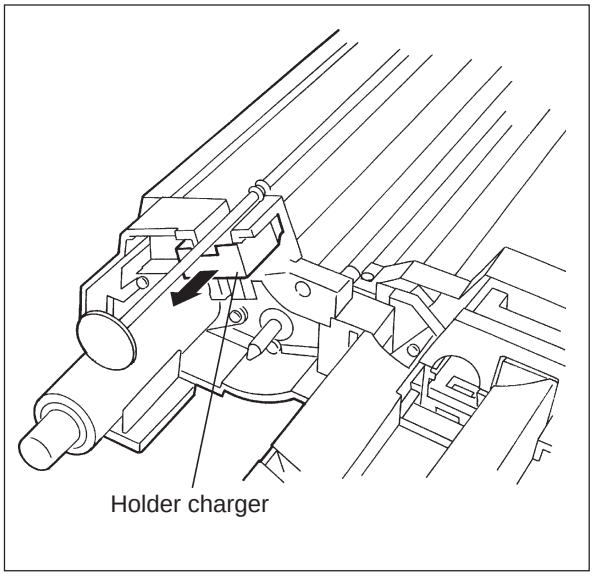

(6) Remove the main charger in the order of ① – ②.

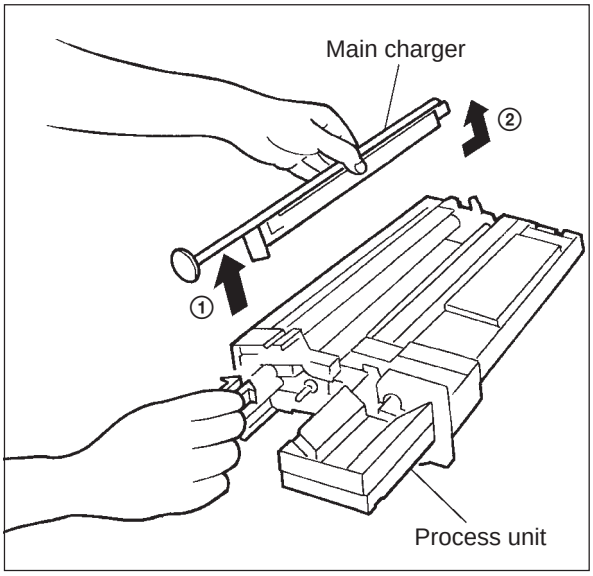

[A] Grid

(1) Pull the grid in the direction of the arrow and unhook it.

Note: During replacement, do not touch the mesh section of the grid with your bare hands.

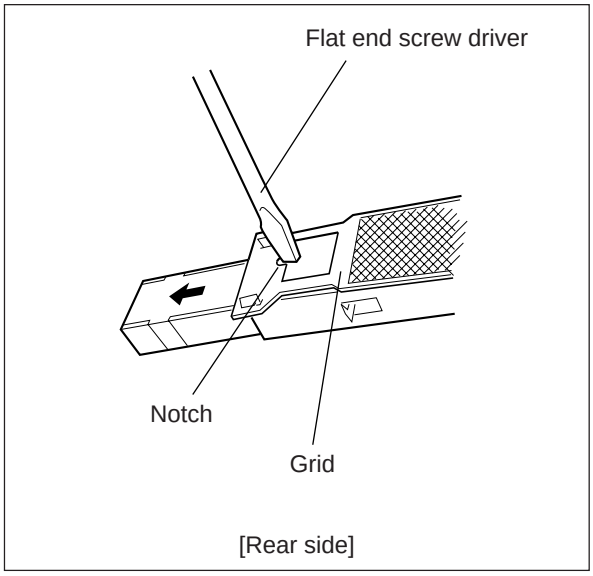

[B] Replacement of charger wire

(Total length: 353 mm
Tungsten wire: ø0.06 mm

(1) Remove the terminal cover at the front and rear.

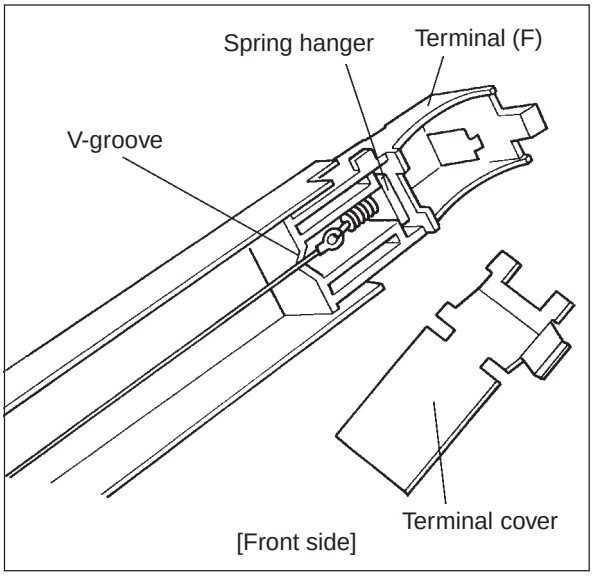

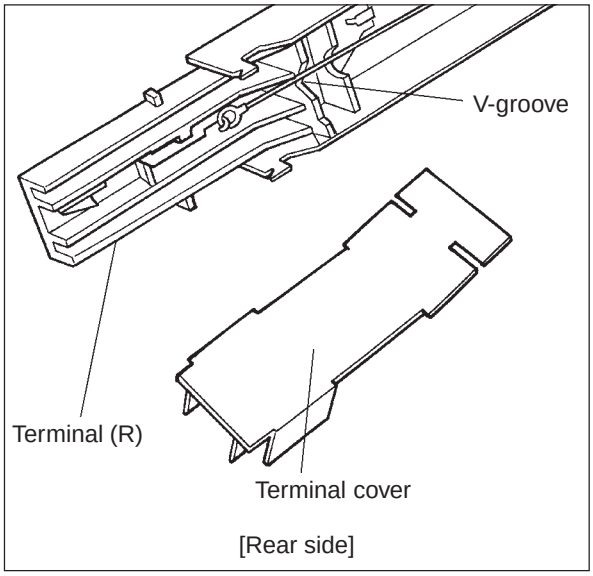

Notes: 1. Pay attention to direction of the spring hanger on the front.
2. Insert fully in the V-groove on the front and rear.
3. The wire must not be kinked.
4. Do not touch the wire directly with your hands.
5. It is easy to replace the charger wire when the rear side terminal is put on the holder charger.

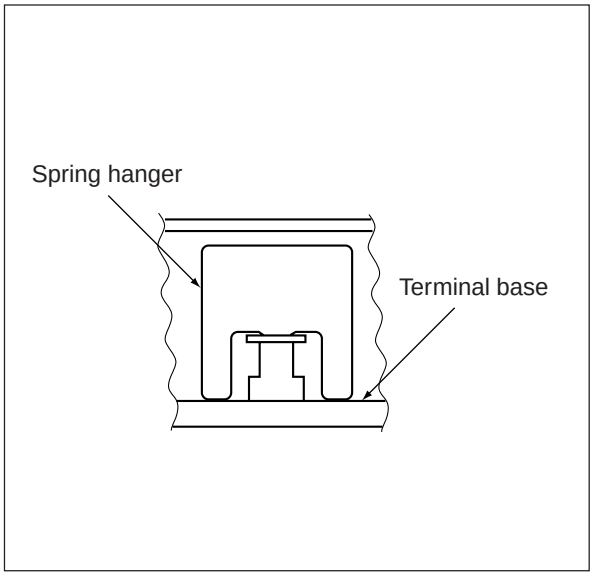

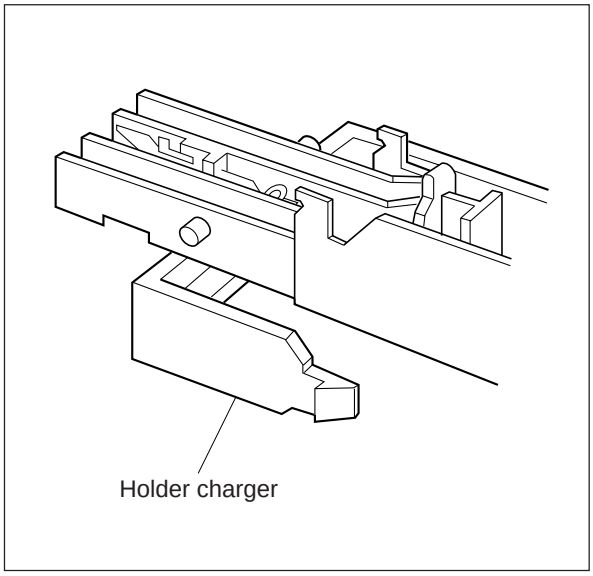

[C] Replacing the cleaning pad:

(1) Remove the charge wire.
(2) Remove the rear terminal.
(3) Move the cleaning pad to the rear side.
(4) Remove the pad holder snap from the shaft.

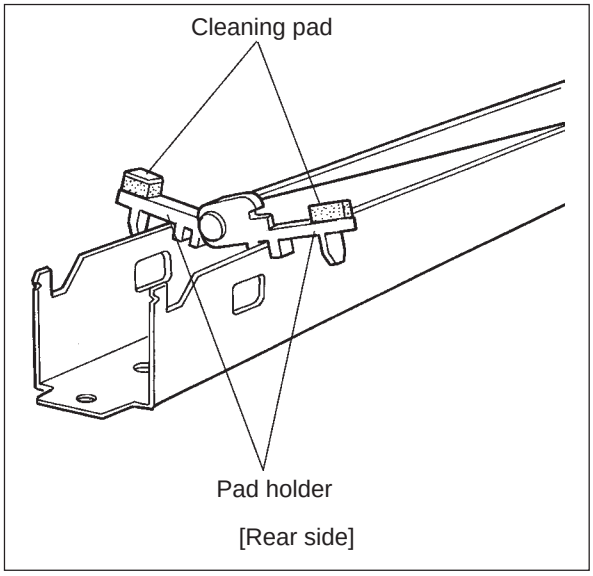

Notes: 1. When reassembling, pay attention to the direction in which the pad holder faces.
2. When moved to the rear, the pads (2 pcs.) should be clearly away from the wires.

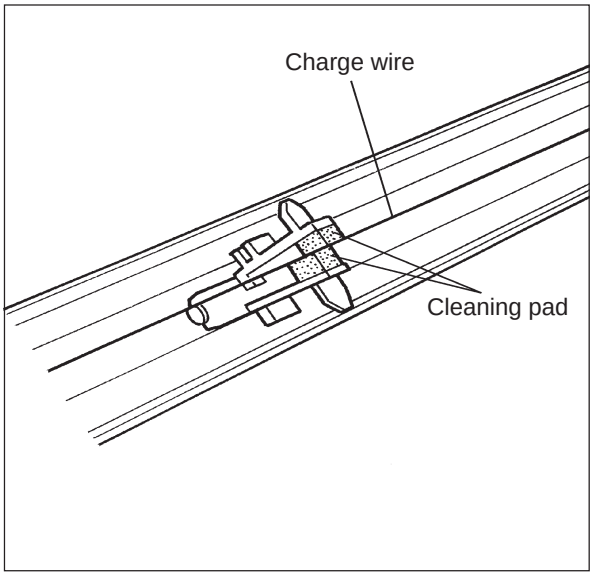

9.4.4 Transfer/separation charger

(1) Remove 1 screw.

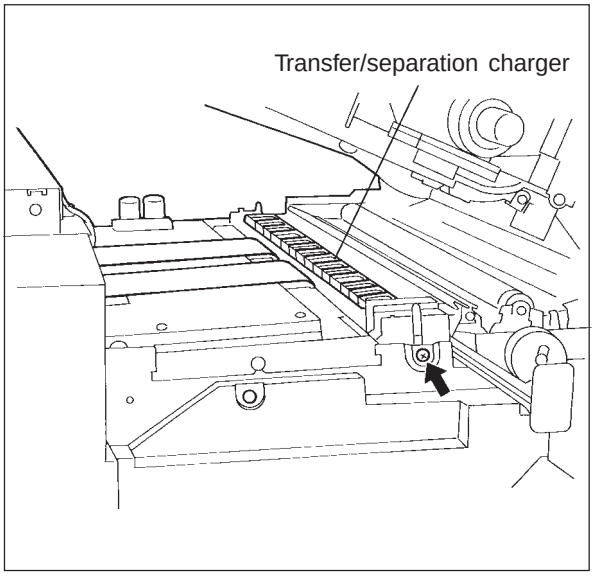

(2) Remove 1 connector.

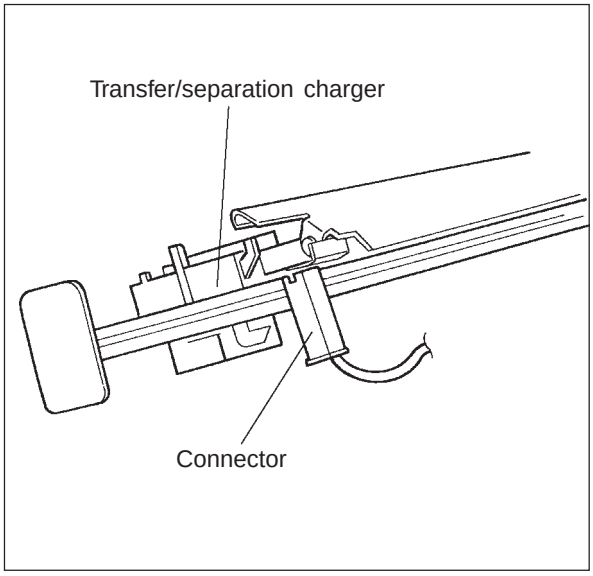

Notes: 1. When fitting the transfer/separation charger, insert it in the placement groove on the rear frame. Also check that it can be pushed up by the spring and moves up and down.

2. Do not forget to insert the connector.

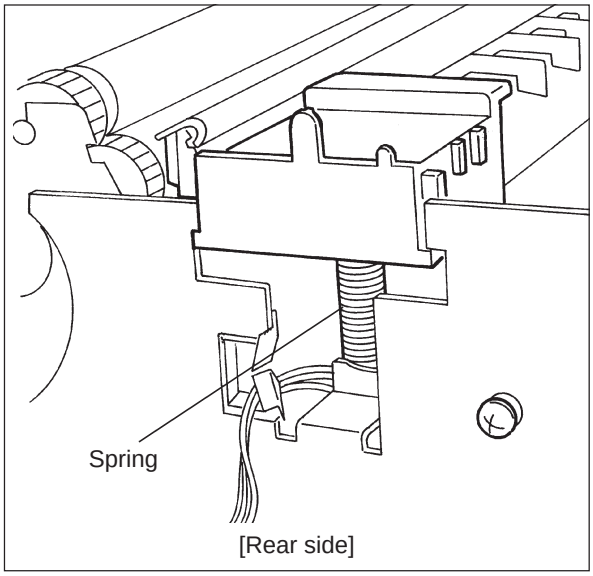

[A] Replacement of chager wire

Total length: 353 mm
Gold plated tungsten wire: ø0.06 mm

(1) Remove the terminal cover on the front and rear. In the case of the separation charger,…remove the supporter.

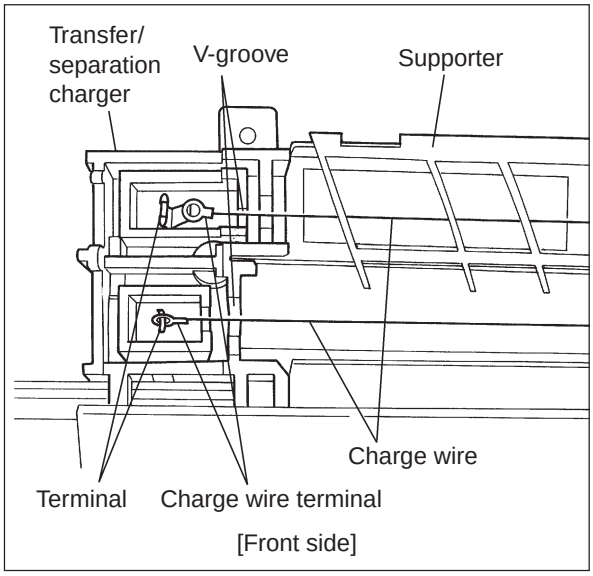

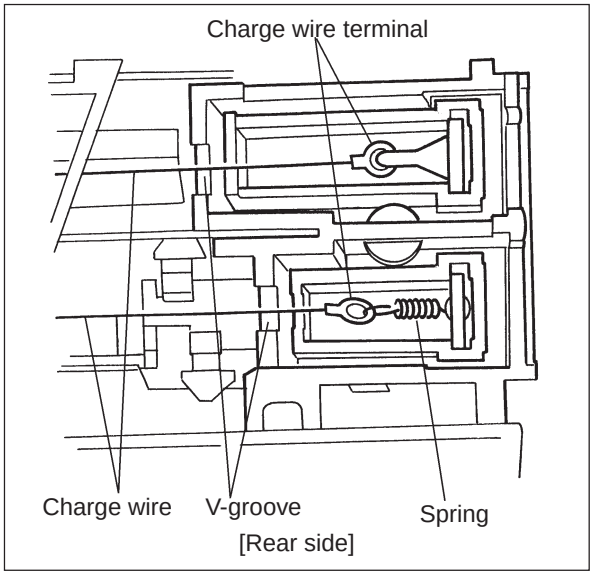

Notes: 1. Pay attention to the direction of the spring hanger on rear.
2. Ensure that the charge wires are firmly inserted in V-slots at the front and rear.
3. The wire must not be kinked.
4. Do not touch the wire directly with your hand.
5. Insert the supporter securely into the hook or slot.

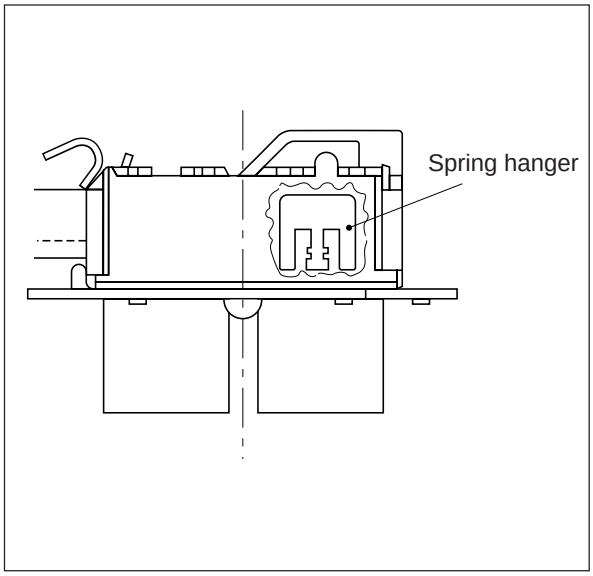

[B] Replacing the cleaning pad:

(1) Remove the charge wire.
(2) Remove the rear terminal.
(3) Move the cleaning pad to the rear side.
(4) Remove the pad holder snap from the shaft.

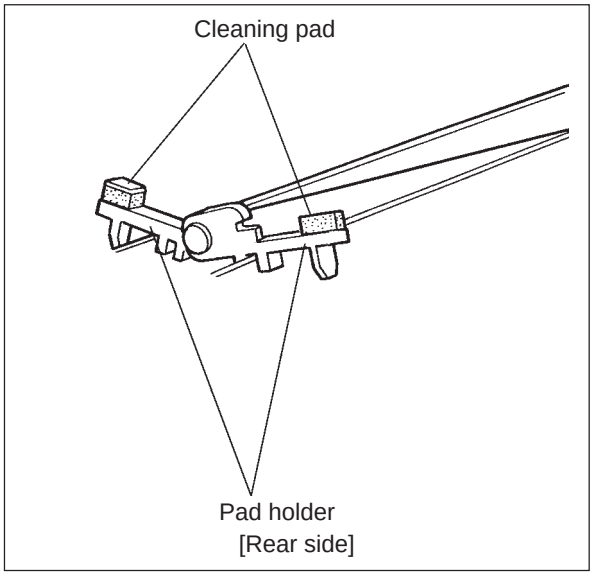

Notes: 1. When reassembling, pay attention to the direction in which the pad holder faces.
2. When moved to the rear, the pads (2 pcs.) should be clearly away from the wires.

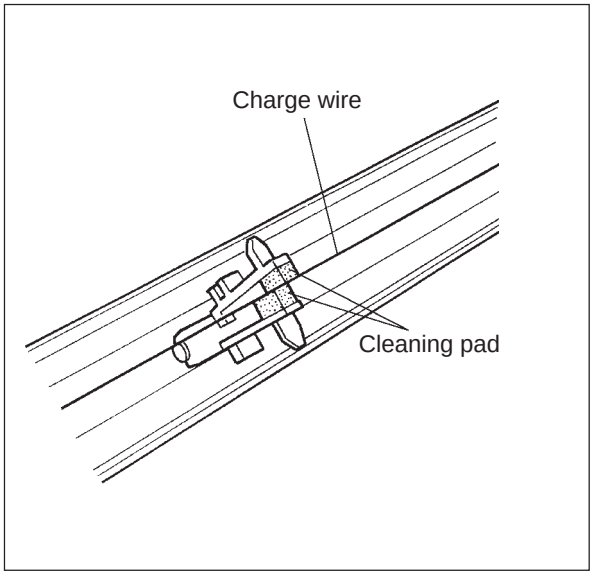

9.4.5 Transport belt unit

(1) Remove the toner box.

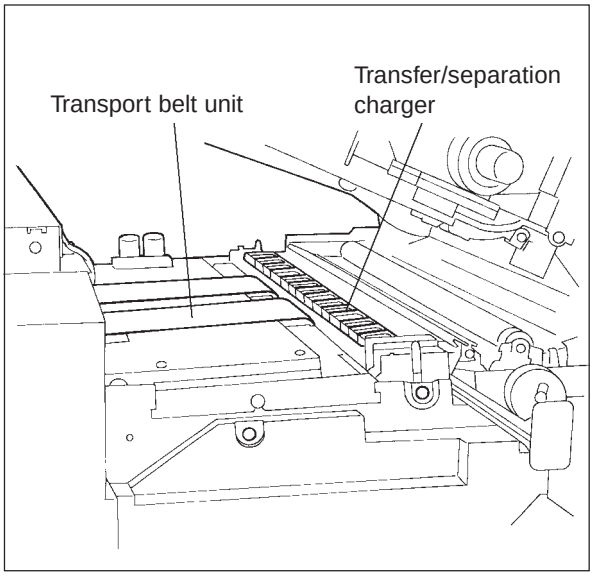

(2) Remove the screw, disconnect the 2 connectors on the front side, and take out the transport belt unit.

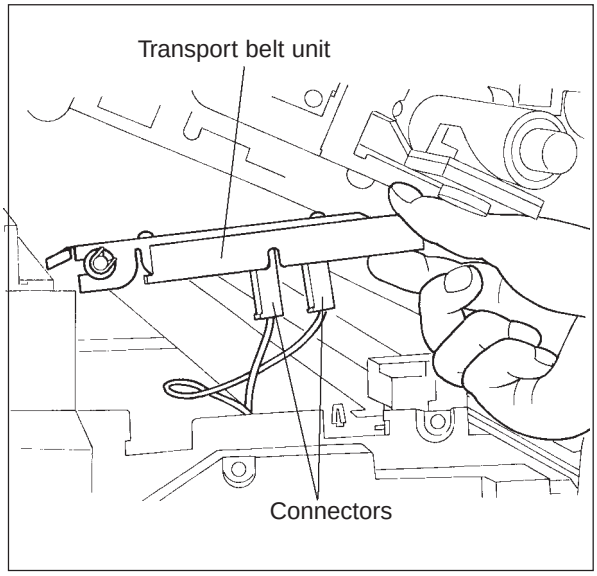

[A] To place the belt:

(1) Remove the idle roller on the drum side.
(2) Remove the stop-ring and shaft.
(3) Remove the belt case (4 screws).
(4) Remove the belt.

Note: The belt position for installation is shown in the figure below.

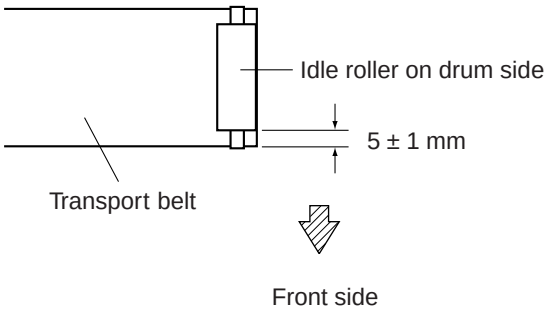

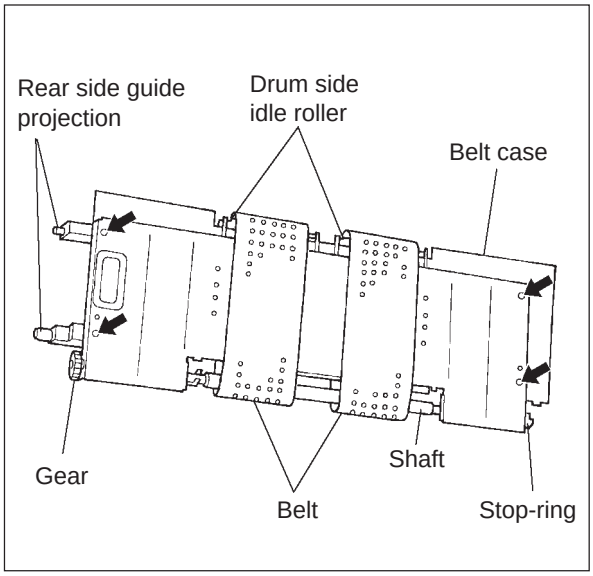

Notes: 1. To reinstall the transport-belt unit in the copier, fit its rear guide projection (2) in the hole in the rear copier frame and the front guide projection in the cut-out portion of the front copier frame.
2. Check that the gears on the front and rear are properly engaged.

9.4.6 High-voltage transformer for main charger, transfer/separation and transfer bias

(1) Remove the transfer/separation charger and transport belt unit.
(2) Remove the screw and take out the protective bracket.

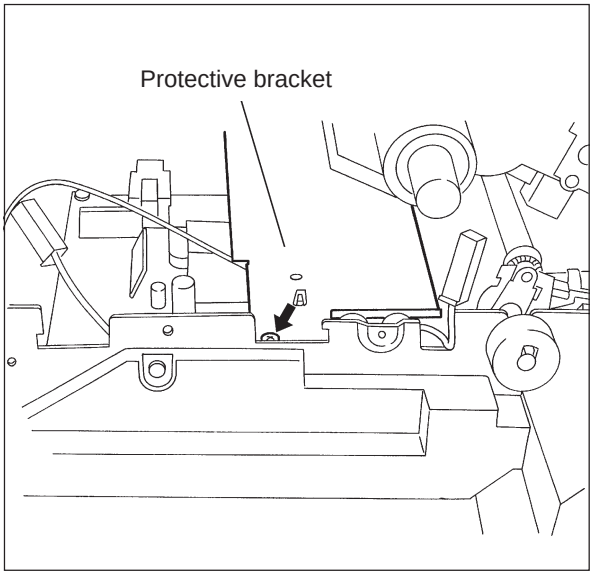

(3) Remove the connectors for the transfer/separation charger (front side) and the main charger (rear side).

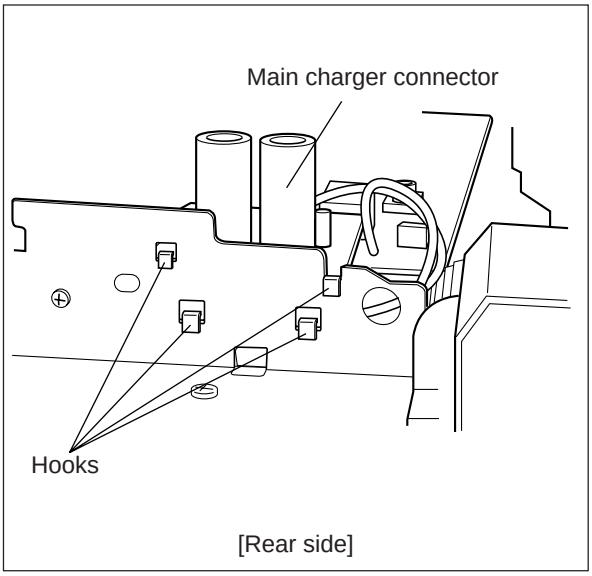

(4) Remove the 2 connectors and 3 screws, and take out the high-voltage transformer.

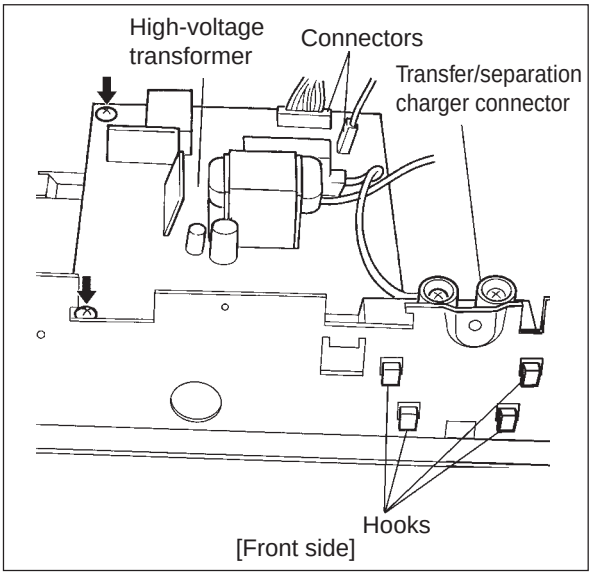

9.4.7 Lower damp heater, fuse PC board, and thermostat

(1) Remove the protection bracket.
(2) Remove the screw, pull out the connector, and take out the entire bracket.
(3) Pull out the connector on the fuse PC board and the 2 Faston terminals for the thermostat. Remove the screw and the washer. Take out the lower damp heater.
(4) Remove the connector and take off the fuse PC board from the lock support.
(5) Pull out the 2 Faston terminals, remove the screw and take off the thermostat.

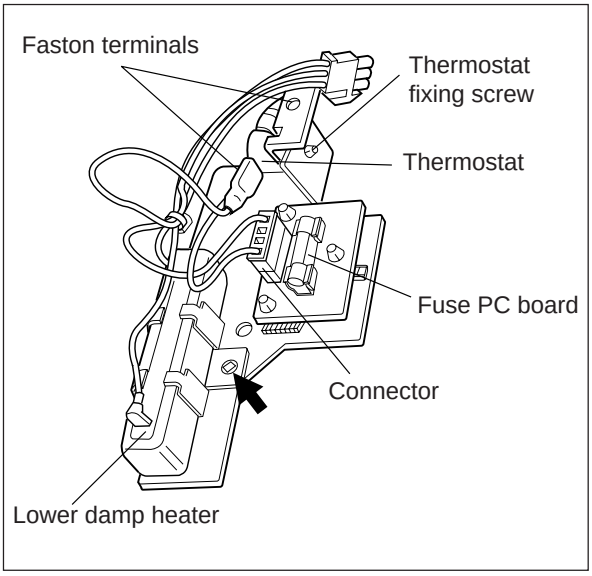

9.5 Charging, Transfer, Separation, Developer-bias Control Circuit

9.5.1 Outline

- Circuit to create the output control voltage Vc of the charging/transfer/separation/developer-bias.
- Vc is varied → output current or voltage varies linearly.

9.5.2 Operation explanation

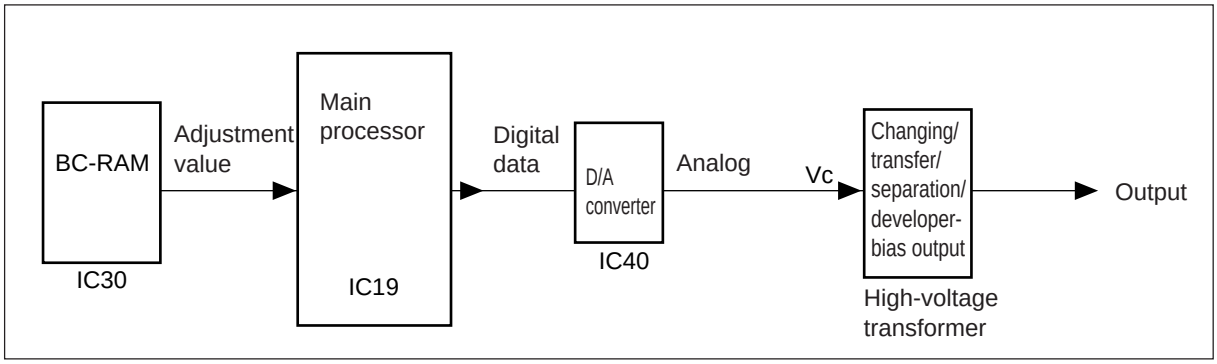

- Charging/transfer/separation/developer-bias output adjustment value inside BC-RAM is output to the main processor.

↓

- Outputs control voltage data from the main processor to the D/A converter.

↓

- Analog conversion by the D/A converter.

↓

- Outputs control voltage Vc to the charging/transfer/separation/developer-bias transformer.

↓

- Charging/transfer/separation/developer-bias transformer generates an output current or voltage proportional to control the voltage Vc.

  * Adjustment of control voltage Vc (adjustment data change) is performed in the AJ mode.

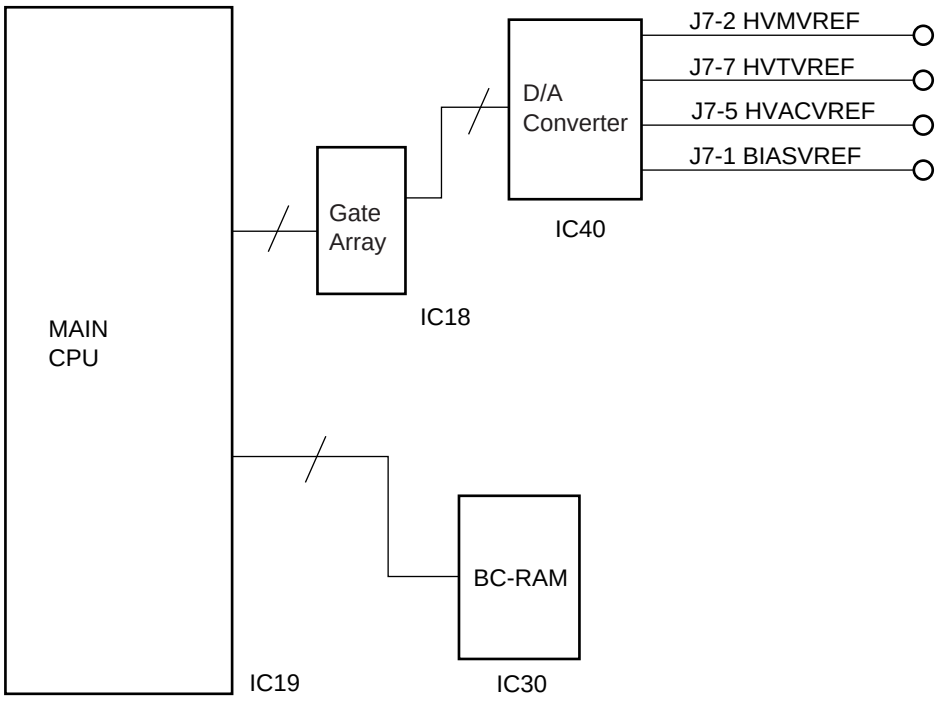
MAIN
CPU
IC19
Gate
Array
IC18
D/A
Converter
IC40
J7-2 HVMVREF
J7-7 HVTVREF
J7-5 HVACVREF
J7-1 BIASVREF
BC-RAM
IC30

10. DEVELOPER UNIT

10.1 Construction

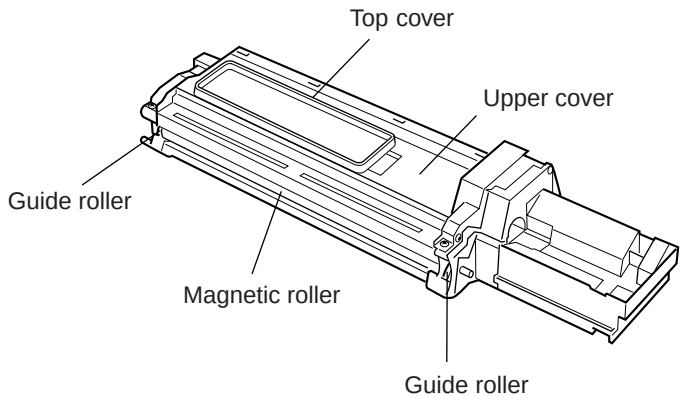

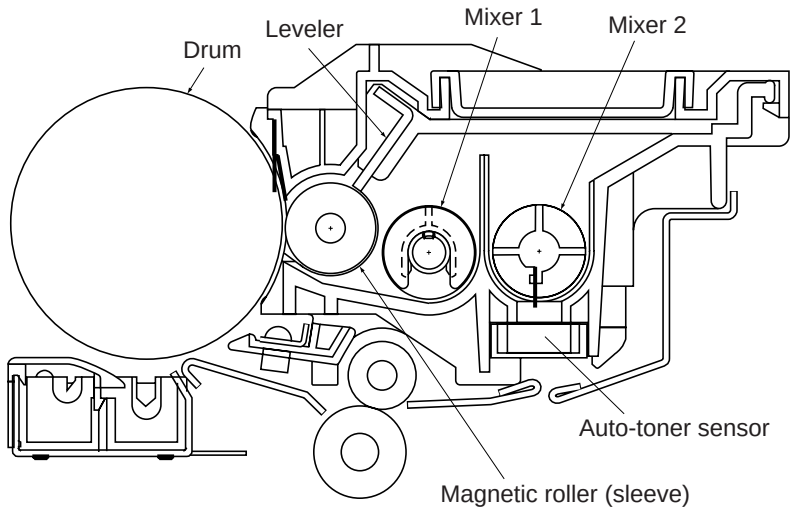

Front side sectional view

10.2 Developer drive

10.2.1 Magnetic roller, mixer 1 and mixer 2

[Rear of copier] Gear (teeth: 23)

↓

Developer drive gear (teeth: 24) → Mixer-1

Rear of developer

→ Gear (teeth: 24) → Mixer 2

→ Pulley (teeth: 24) Timing belt (2M96)

→ Sleeve drive pulley → Magnetic roller
(teeth: 27)

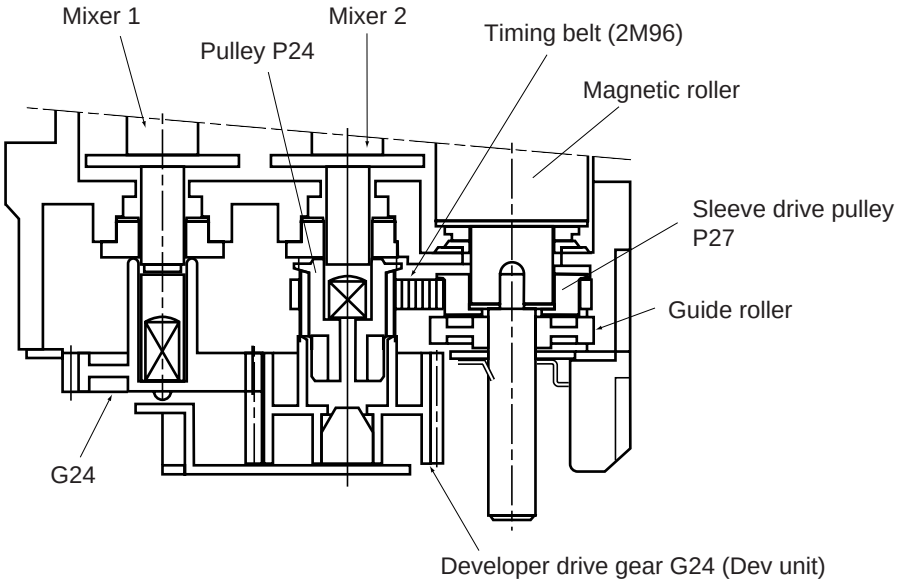

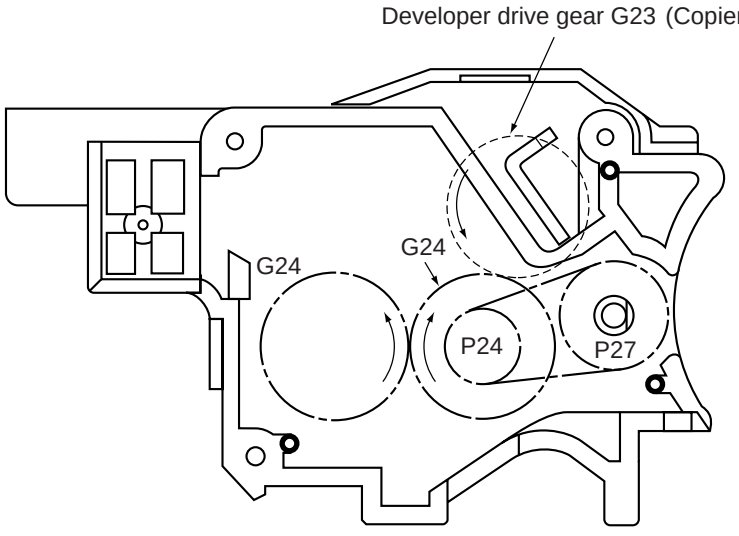

[Rear side]

10.2.2 Toner cartridge

[Developer front]

Toner cartridge drive motor
↓
Drive gear (teeth: 32)
↓
Toner cartridge (toner replenishment)
↑
Mix toner with mixer 1 and 2.

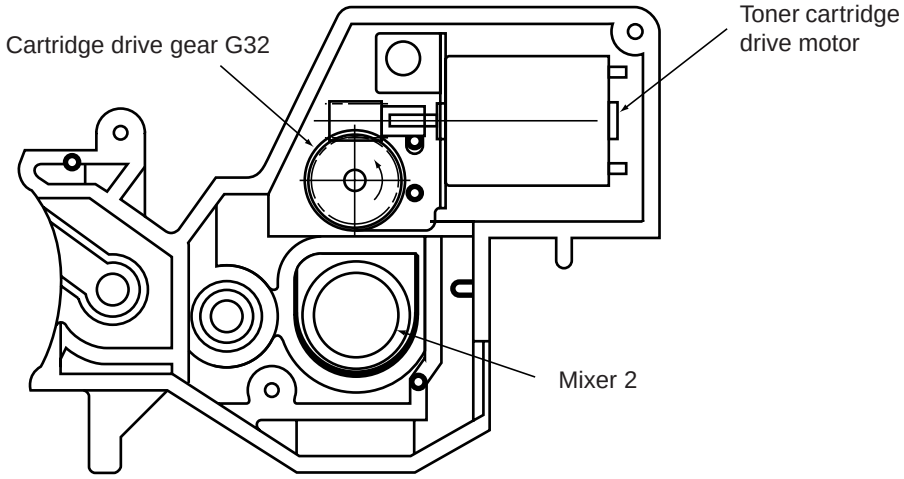

[Front side]

10.3 Disassembly/Replacement

10.3.1 Disassembly and reassembly of developer unit

(1) Remove the toner cartridge.

(2) Lift up the upper unit.

(3) Pull out the process unit.

(4) Place the process unit on the flat space. Pull up the front lever and push down the rear lever in the cleaner section. Disconnect the developer unit from the cleaner section.

Notes: 1. Be careful not to damage the drum.

2. Check that the drum shaft is in the cleaner unit.

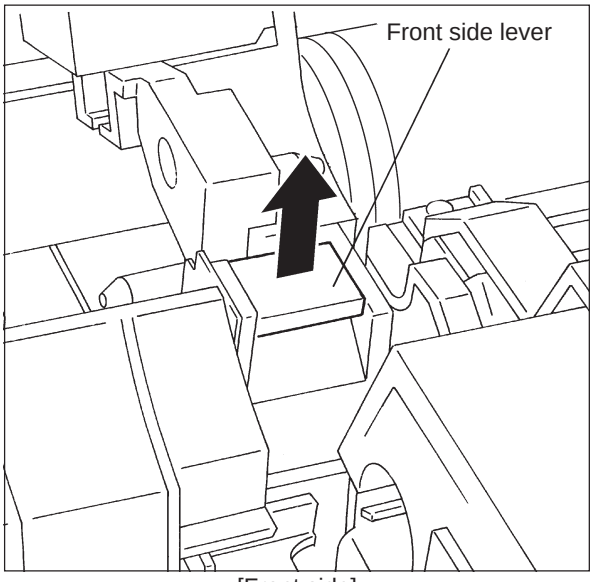

[Front side]

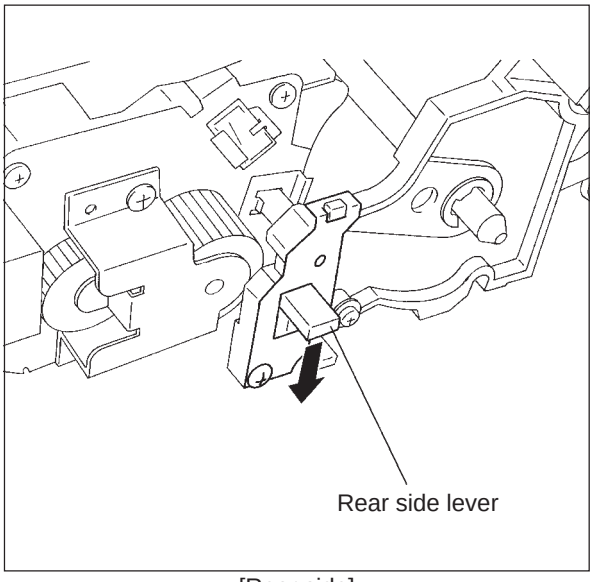

[Rear side]

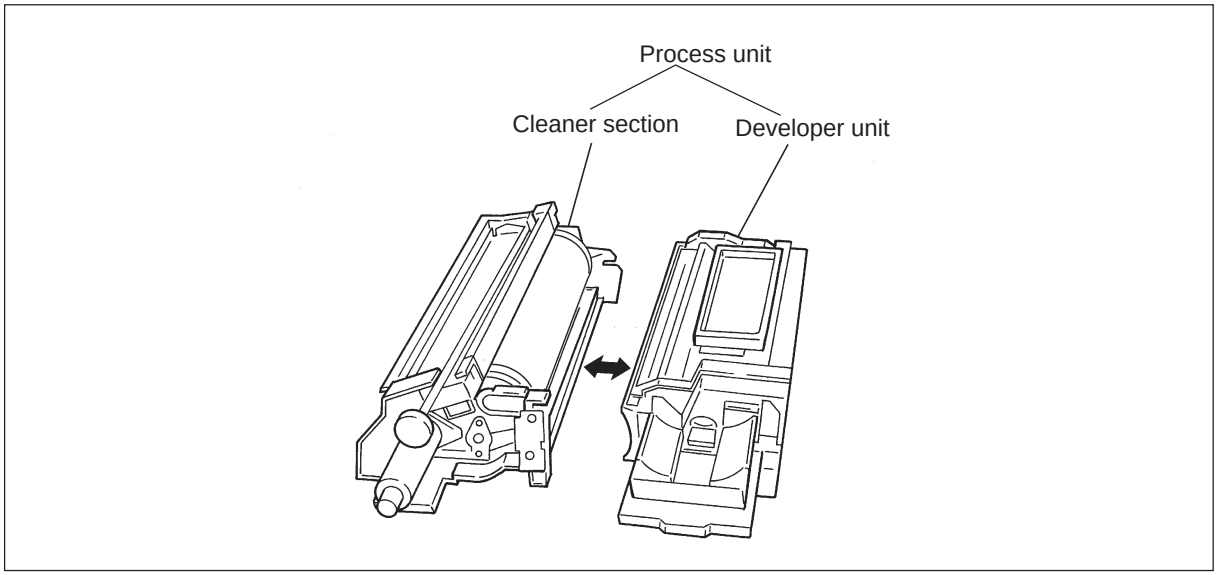

(5) When installing the process unit into the copier, align the 2 guides.
Finally, insert the positioning pin into the upper frame hole pushing the portion indicating the arrow.

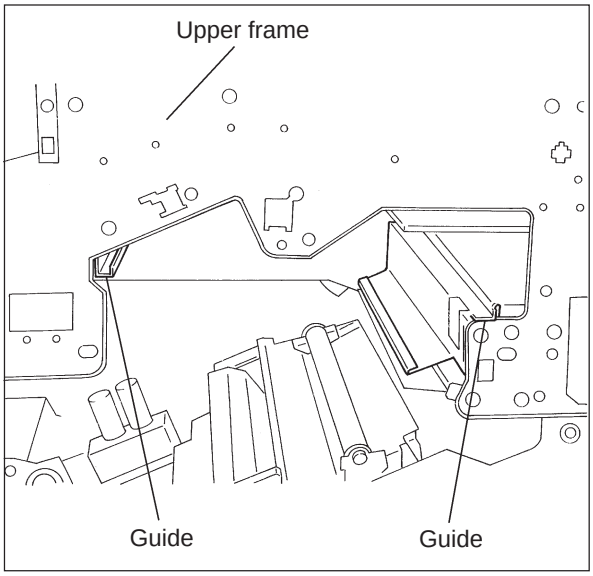

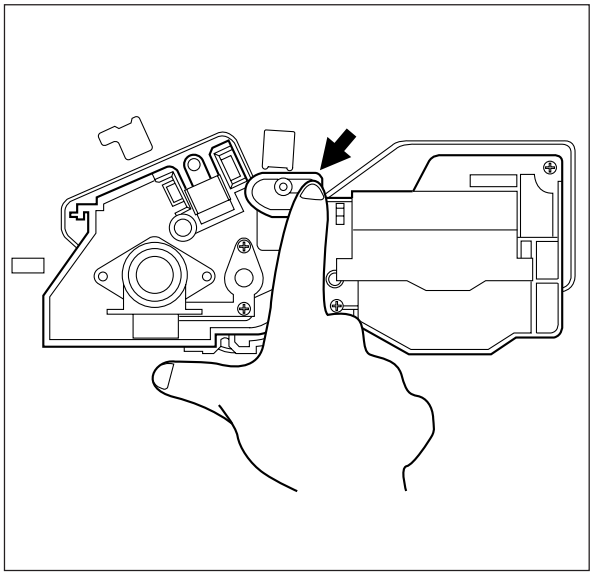

10.3.2 Pouring in developer material

(1) Remove the upper cover (2 screws).

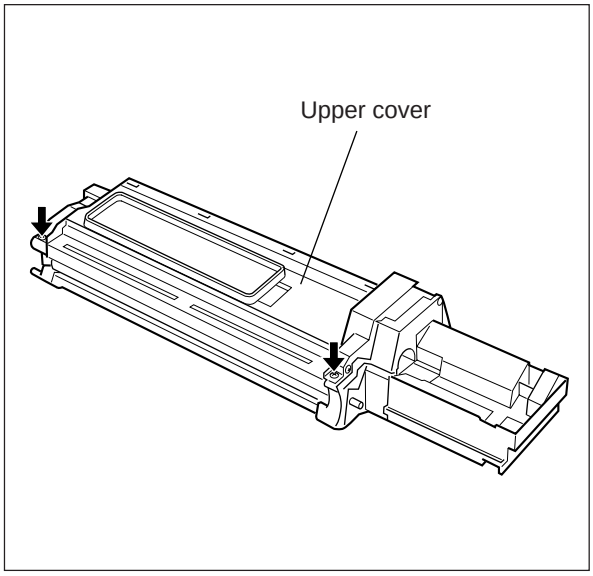

(2) Remove the cap of the developer material bottle. Pour the developer material into the developer unit.

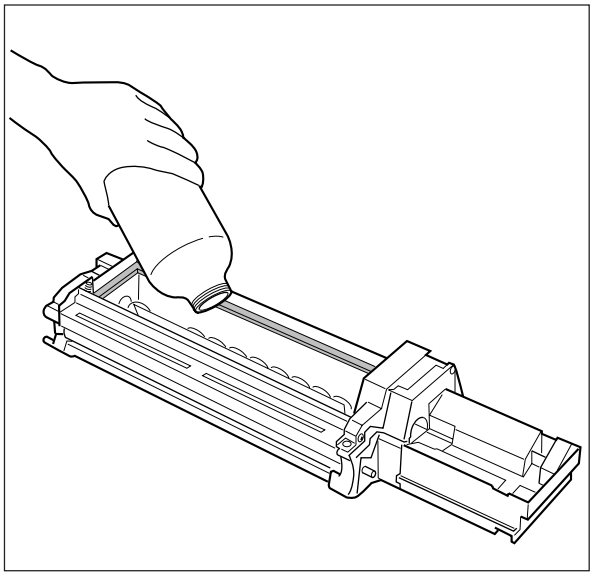

(3) After the pouring in has been completed, turn the gear in the direction of the arrow, and cause the developer material to be transported onto the magnetic roller.

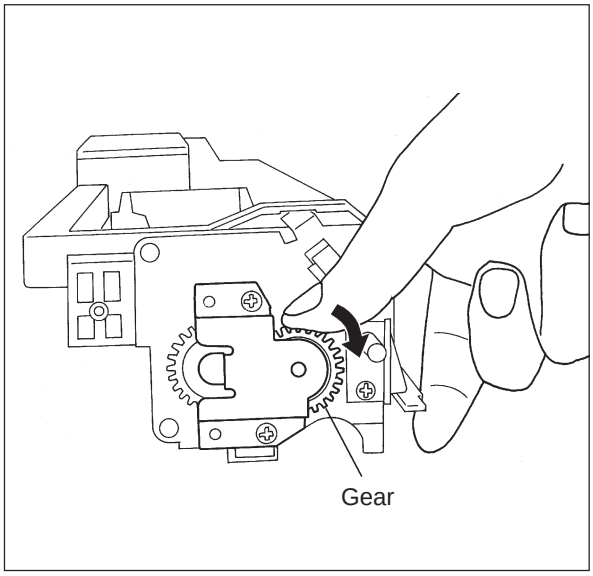

(4) Install the upper cover. After fully inserting the hooks (four places), fasten with screws.

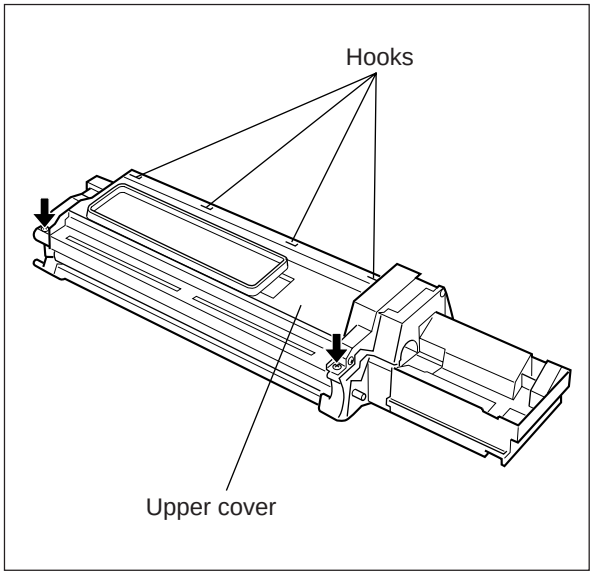

(5) Pay attention to the overlapping between the side seal (front, rear) and the rubber seal. (Be careful when reassembling the upper cover.) The side seal must come between the outer rubber seal and inner one.

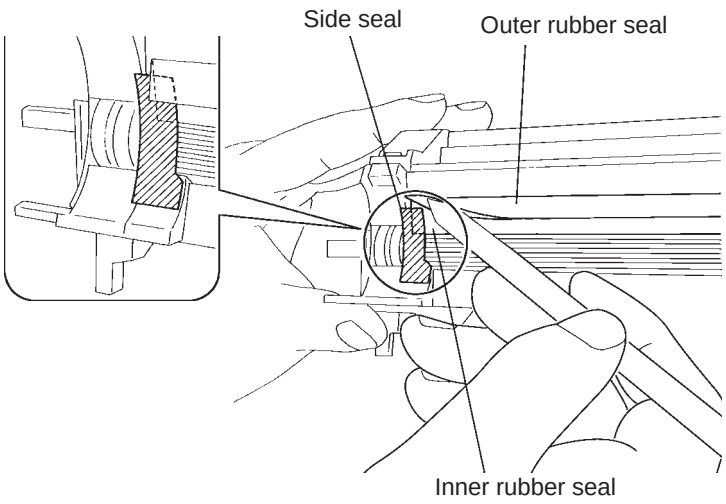

10.3.3 Discharging developer material

(1) Set the cap jig on the toner replenishment orifice on the developer unit as shown in the figure. (This is done to prevent the developing material around the toner replenishment orifice from splattering into the toner cartridge drive unit when the developer unit is turned upside down.)

(2) Remove the upper cover (2 screws).

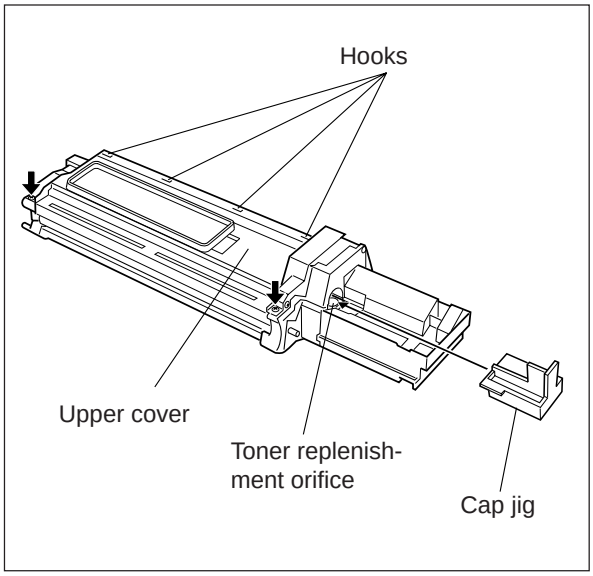

(3) Incline the developer unit and discharge developer material from the position indicated by the arrow.

Notes: 1. Do not discharge developer material from the toner replenishment orifice, as the developer will adhere to the gear of the toner cartridge drive motor, causing the motor to seize.

2. Take care to avoid the connector becoming smeared with developer material when discharging is performed.

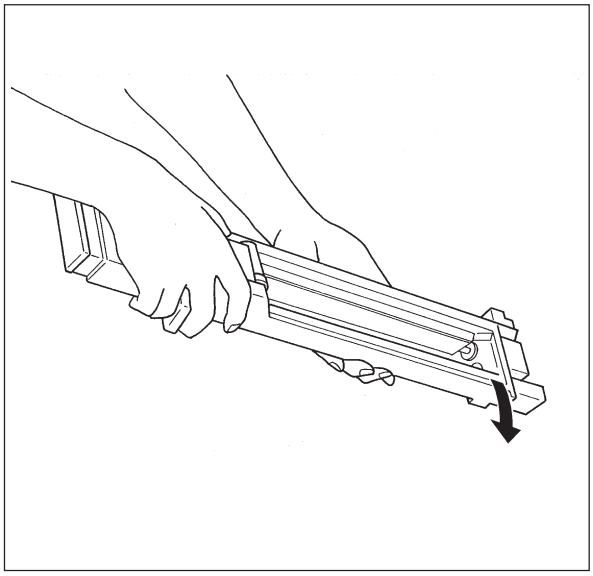

10.3.4 Guide roller

[A] Front side

(1) Discharge the developer material.

(2) Remove the toner holder bracket (2 screws).

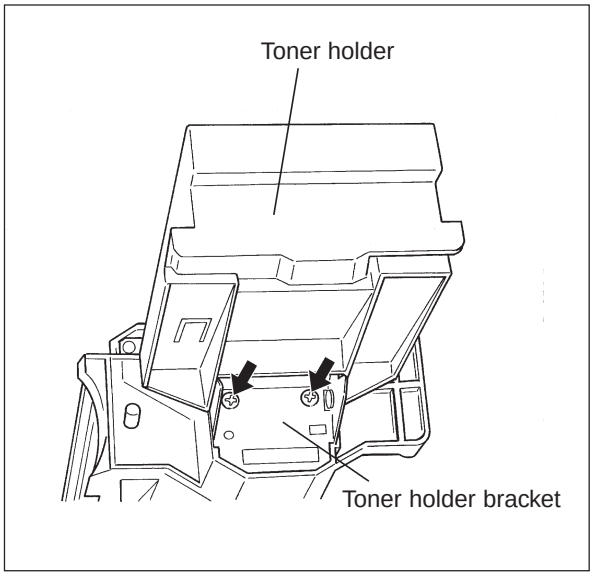

(3) Remove the connector.

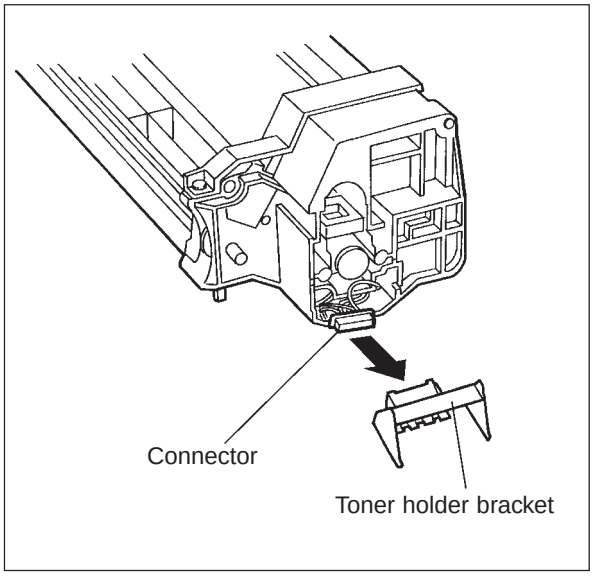

(4) Remove the nozzle (3 screws).

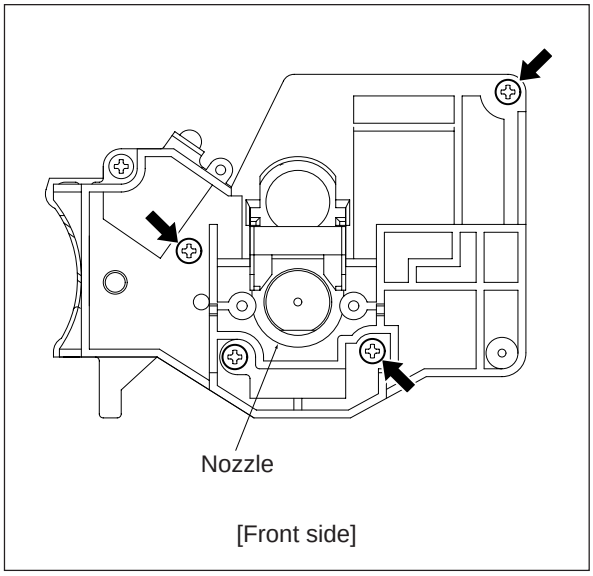

(5) Remove the plate
(3 screws, coil spring).

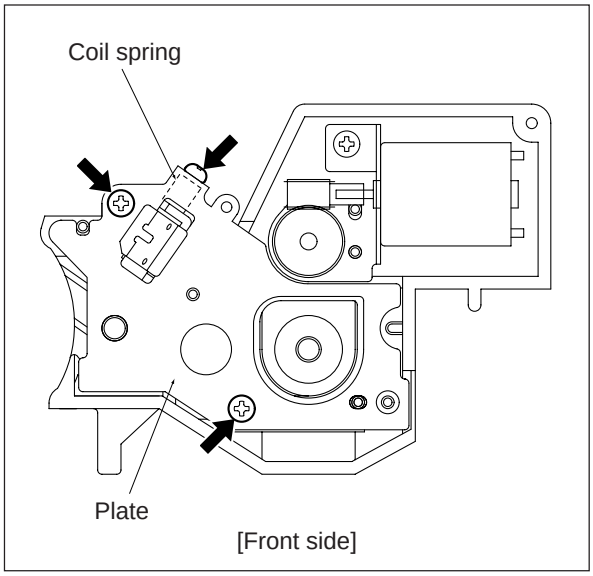

(6) Remove the E-ring.
Replace guide roller.

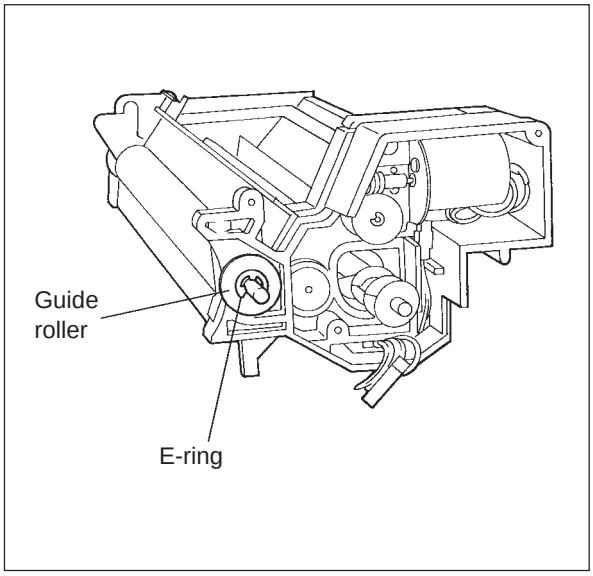

[B] Rear side

(1) Remove adjustment plate (1 screw).
(2) Remove plate (4 screws and 1 coil spring).

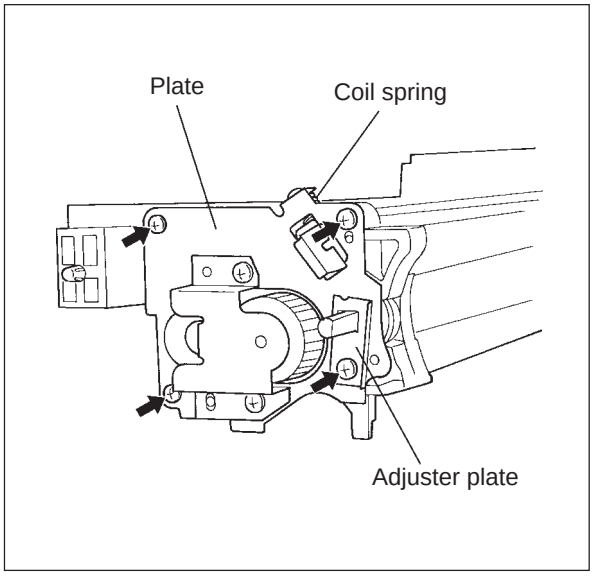

(3) Replace the guide roller.

Notes: 1. The guide roller is common to the front and rear.

2. After reassembly, adjust the polarity position and the doctor sleeve gap according to the method given in the Service Handbook.

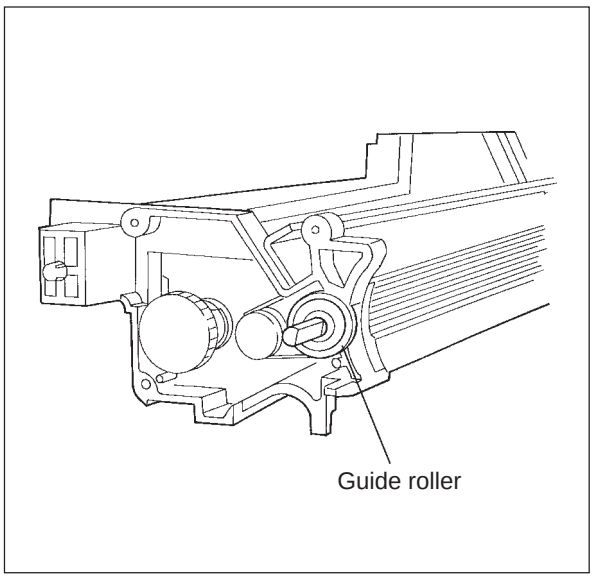

10.3.5 Toner cartridge drive

(1) Discharge the developer material.

(2) Remove the toner holder bracket, nozzle and side plate.

(3) Pull out the harness and disconnect the connector. Remove the motor unit (1 screw).

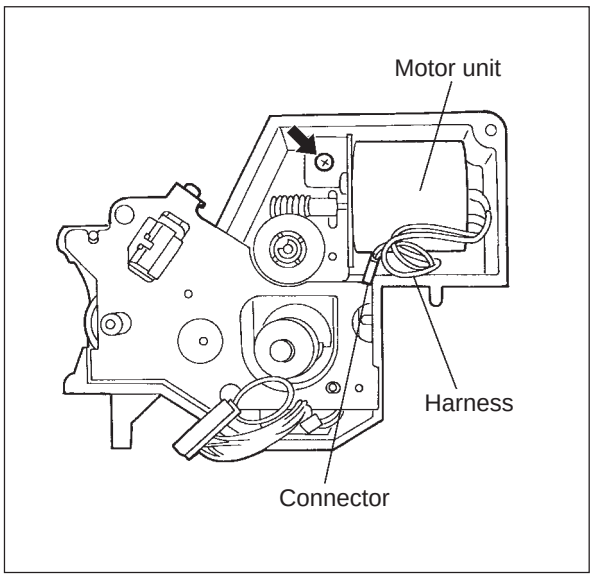

(4) Remove the motor (2 screws).
Replace the motor.
When the gear is defective, replace the entire unit.

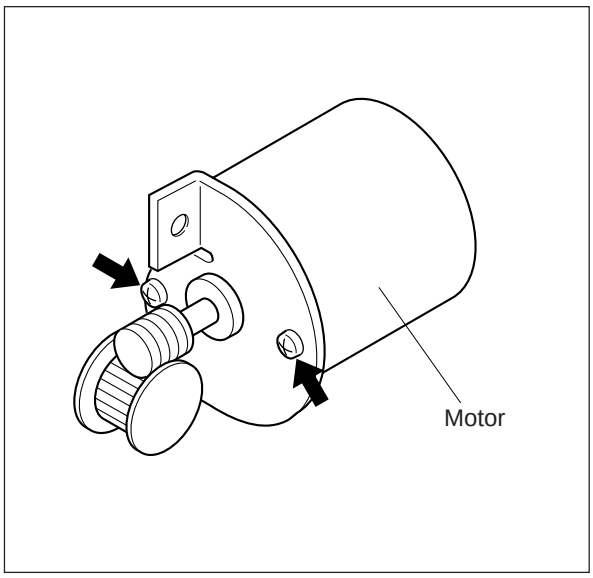

10.3.6 Toner sensor

(1) Discharge the developer material.

(2) Reverse the developer unit and remove the harness cover (1 screw).

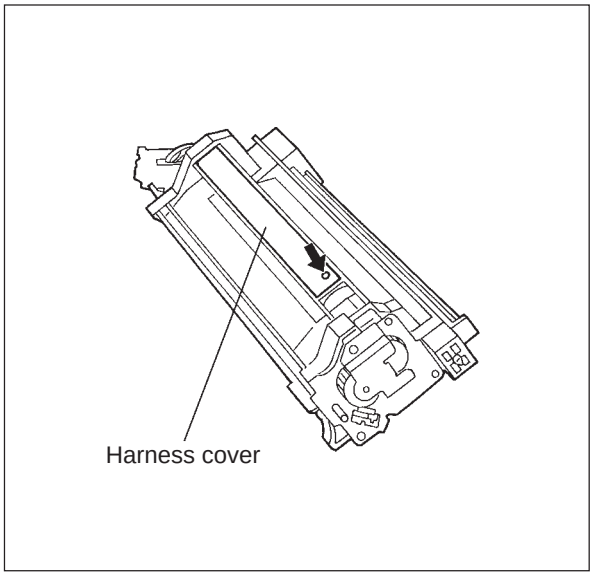

(3) Remove the toner sensor (1 connecor). Replace the sensor.

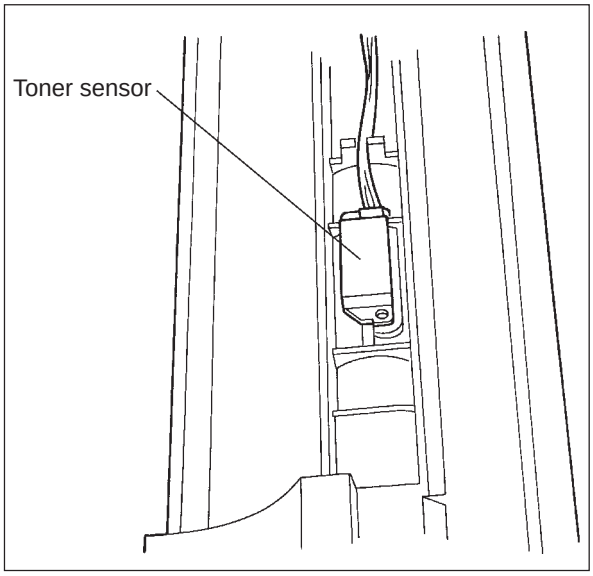

10.3.7 Magnetic roller

(1) Discharge the developer material.

(2) Remove the toner holder, nozzle, plate and guide roller.

(3) Remove the leveler (2 screws).

(4) Remove the sleeve drive pulley.

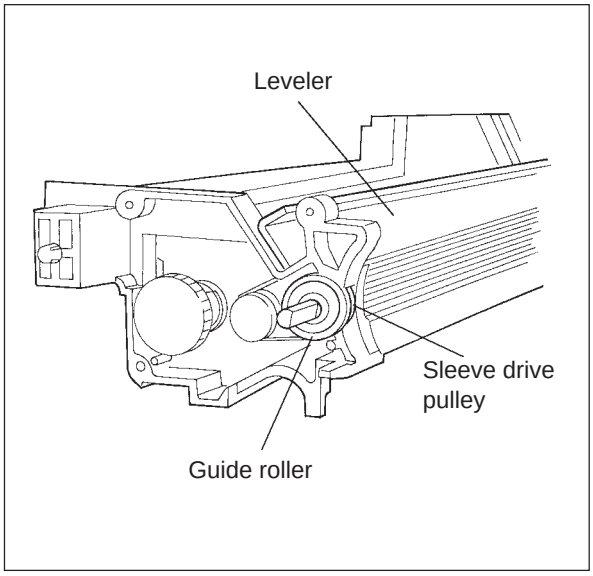

(5) Peel off the seal after removing the front E-ring, and then remove the magnetic roller bearing. Shift the magnetic roller in the direction of the arrow, remove it from the slit in the frame and pull it out towards the front.

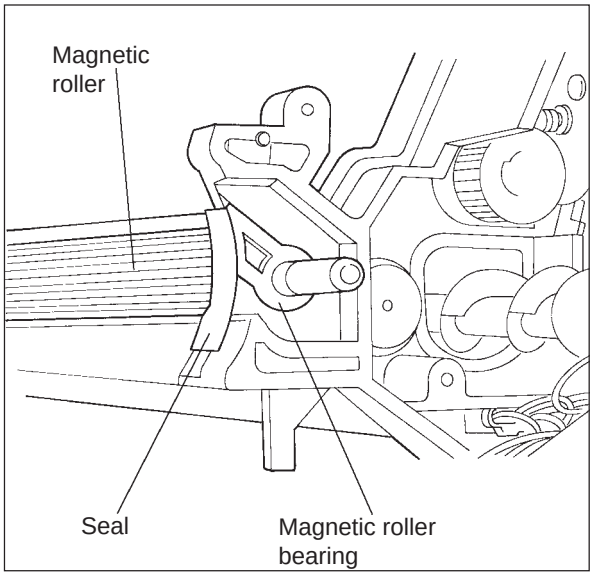

(6) Remove the V-ring.

Notes: 1. Pay attention to the direction (obverse/reverse) of the V-ring when reassembly.

2. After reassembly, adjust the polarity position and the doctor sleeve gap according to the method given in the Service Handbook.

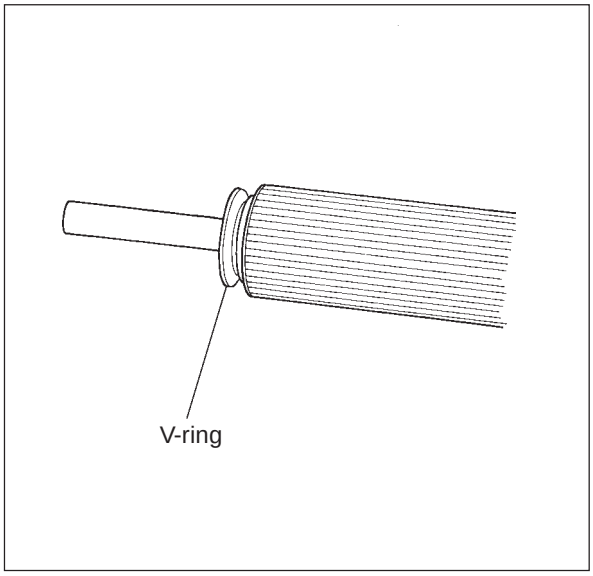

10.4 Brush Motor (Toner Motor (M15)) Drive Circuit

The toner motor is provided to supply toner for the developer unit.

The toner motor is driven by transistor 2SD1417 (Q3 on the logic PC board), and its circuit is structured as follows.

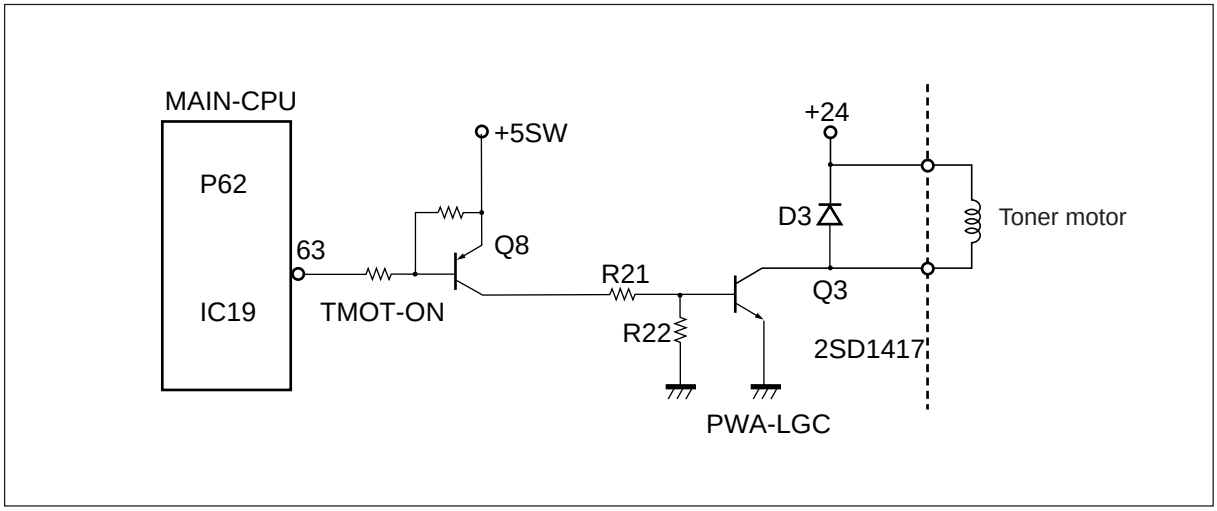

The motor winding is connected to the +24V at its (+) side and to the collector of Q3 at its (–) side.

– When P62 (TMOT-ON signal) of the main-CPU becomes “L” level –

- Q8 is turned on → Q3 is turned on
- The +24V power supply supplies current in Q3 via the motor winding → the motor rotates

– When TMOT-ON signal becomes “H” level –

- Q8 is turned off → Q3 is turned off
- The current which was flowing in the motor winding flows via the route of diode D3.
  - ~ It decreases at the rate of the time constant determined by the inductance and resistance of the winding.

10.5 Auto-Toner Sensor Circuit

10.5.1 Brief description

- Functions of auto-toner circuit.
  - Detects the density of the toner in the developer material.
    ~ Density drops → toner supply.
  - Detects that the toner in the toner cartridge has been used up (toner empty).
- Configuration of auto-toner circuit.
  - Auto-toner sensor: Detects toner density.
  - Control section: Control to maintain the toner in the developer material at a constant specific density.
  - Toner motor: Replenishes the toner in the developer material.
  - Display unit: Displays the toner-empty status.

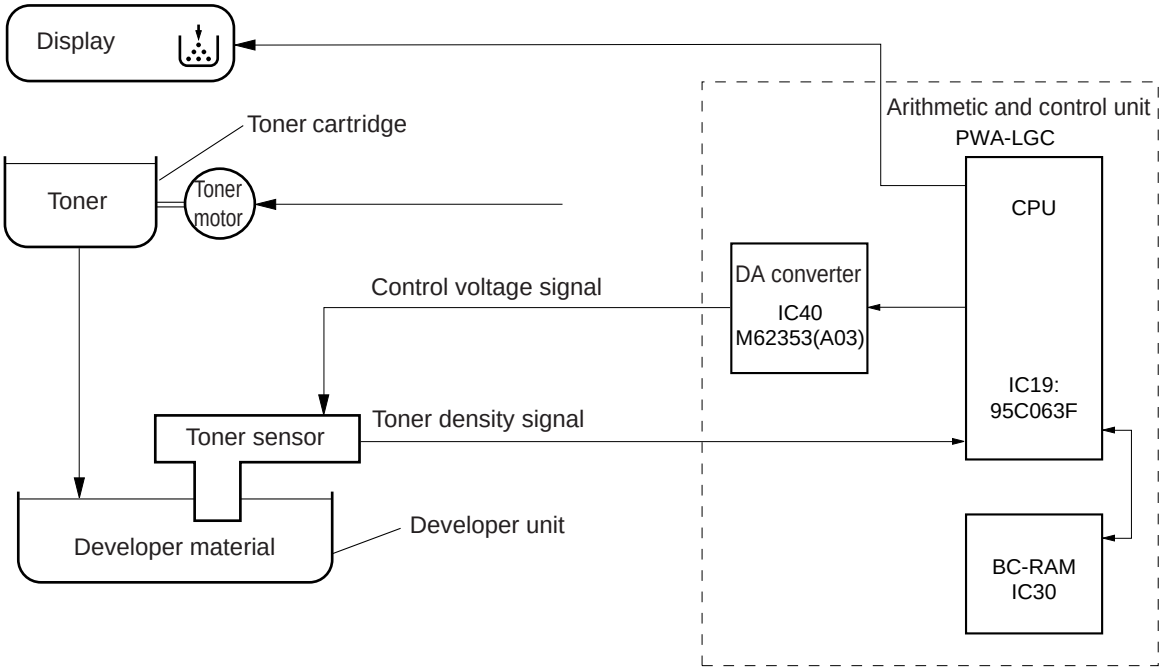

11. CLEANER UNIT

11.1 Construction

The cleaner unit consists of a drive section, main blade, recovery blade, toner-recovery auger, and toner bag (see Chapter 9 for main charger).

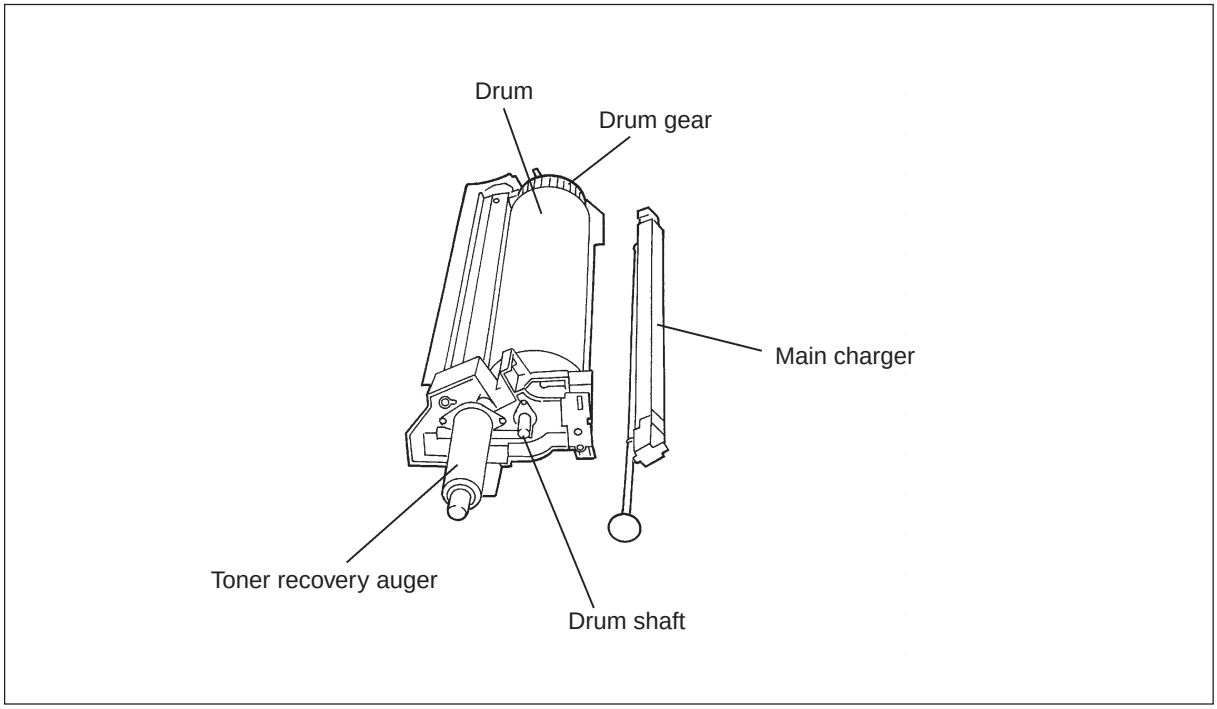

When the main charger has been removed

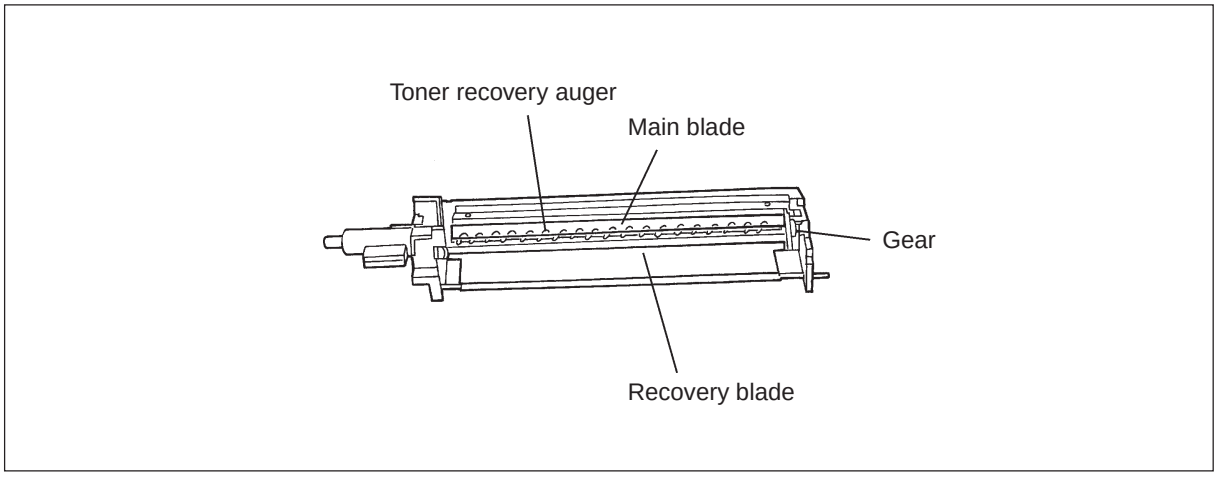

When the drum has been removed

11.2 Drive system

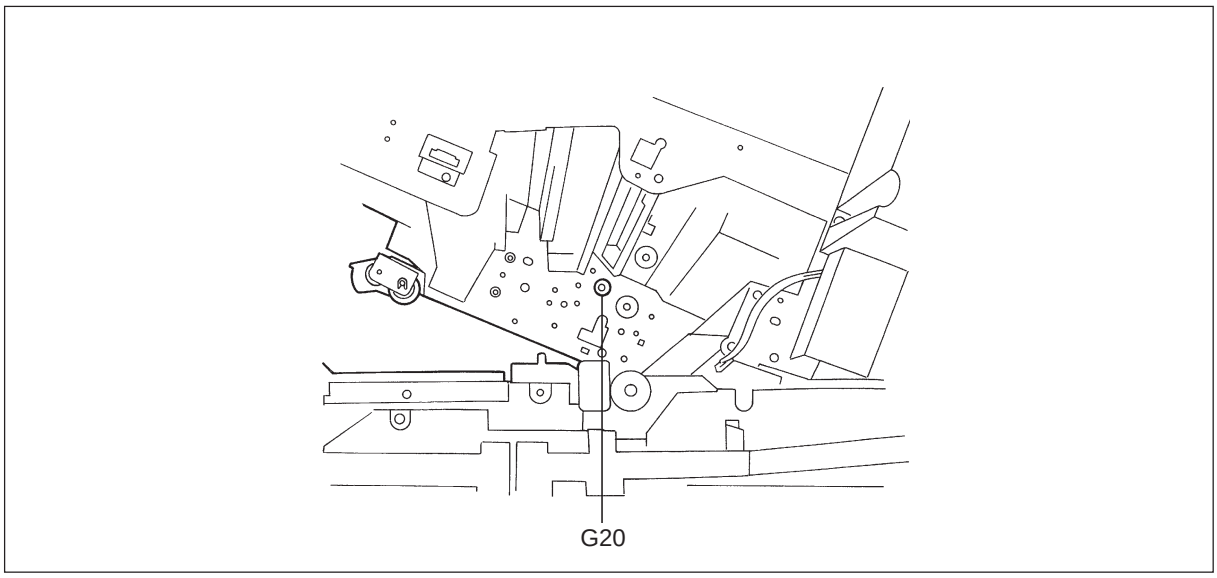

Front view

- Drum/toner recovery auger drive

Gear (teeth: 20)-----Rear of machine (inside frame)
→ Drum gear (teeth: 72) → Drum
→ Gear (teeth: 23) → Toner recovery auger
↓
Toner-full switch

11.3 Description of Functions

[A] Main blade

Scrapes off residual toner on the drum surface. The blade is pushed against the drum at a constant pressure by the pressure spring.

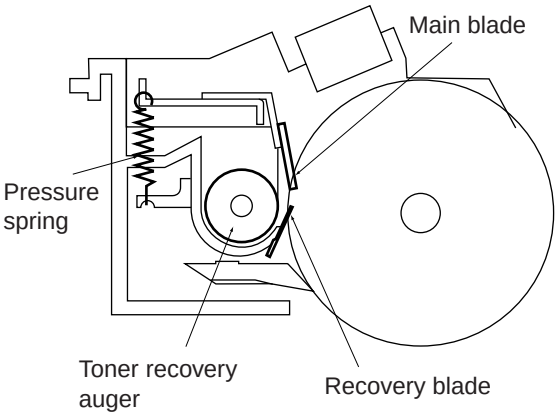

Front cross-section view

Note: When the blade is released from the drum such as for adjustment of the high- voltage transformer, rotate the blade pressure release cam in the direction of the arrow.

[B] Recovery blade

Catches the toner scraped off by the main blade.

[C] Toner recovery auger

Transports scraped off residual toner into the toner bag.

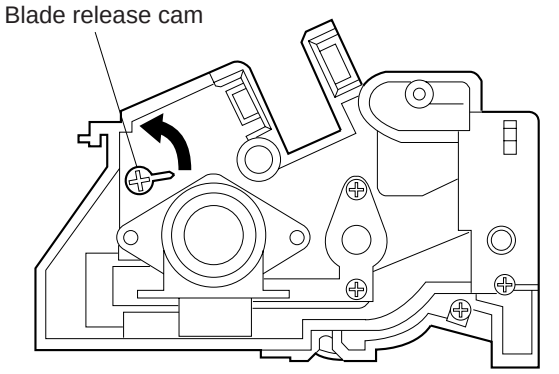

[D] Toner bag

The toner scraped off by the cleaner blade is carried by the recovery auger into the toner bag.

[E] Toner-full switch

When the toner bag becomes full of recovered toner, the recovery auger is pushed back towards the rear, causing the toner-full switch S13 to come on.

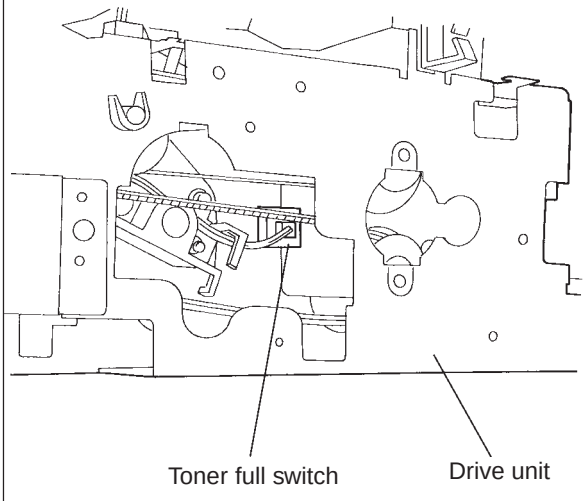

When rear cover (U) has been removed

11.4 Disassembly/Replacement

11.4.1 Cleaner unit

(1) Remove the toner cartridge.
(2) Lift up upper unit.
(3) Pull out the process unit.
(4) Disconnect the cleaner unit from the developer unit.

Notes: 1. Be careful not to damage the drum.
2. Check that the drum shaft is in the cleaner unit.
3. In this copier's cleaner unit, the main blade is in constant contact with the drum. Consequently, when fitting a new drum to the cleaner unit, release the main blade pressure by turning the blade pressure release cam.
4. After applying powder to the entire drum, turn the cam and bring the main blade in contact with the drum.
5. When rotating the cam, use a screw-driver to perform certain operations.

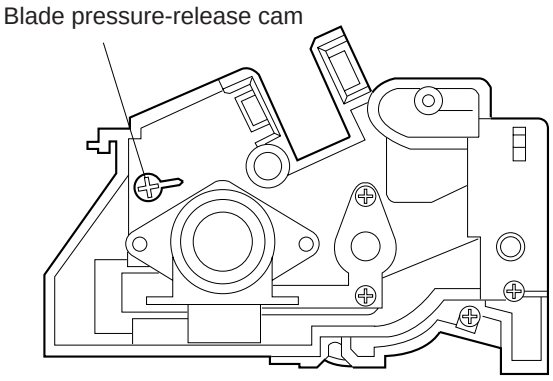

Blade pressure applied cam position

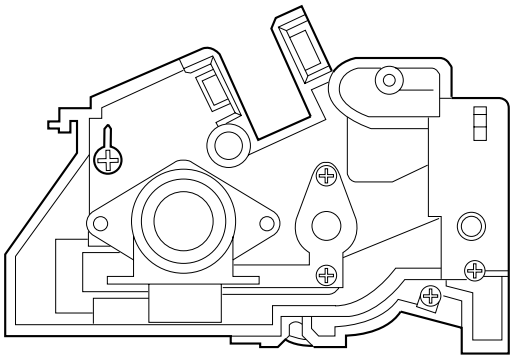

Blade pressure released cam position

(5) Pull out the drum shaft from the rear after lift up the drum shaft stopper lever.

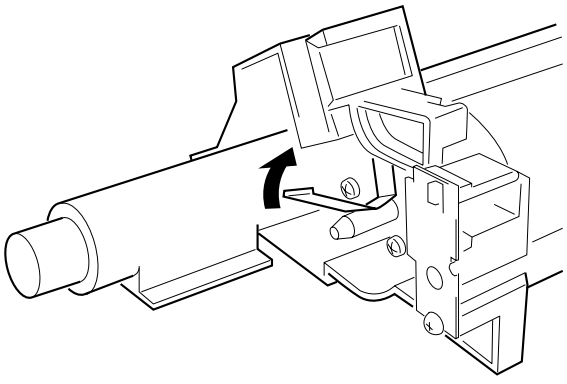

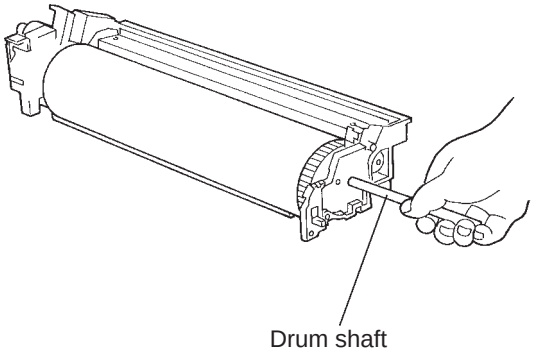

(6) When removing the drum from the cleaner unit, hold the side of the drum as shown (in diagram), and slowly take it out.

Note: When reinstalling the drum in the cleaner unit, the drive gear should be installed to the rear.

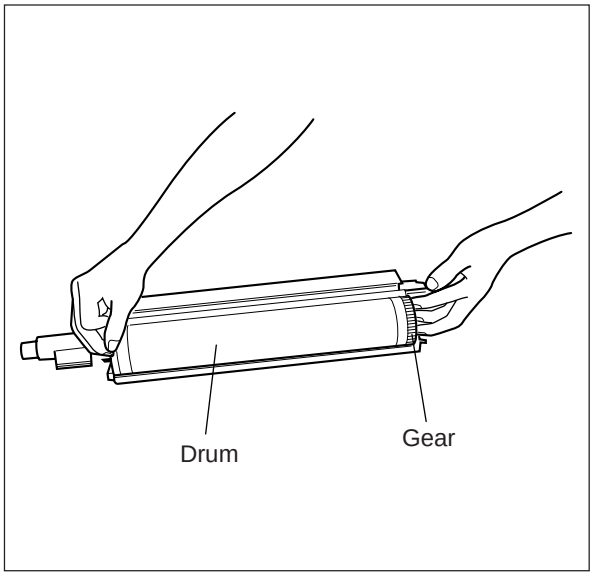

11.4.2 Main blade

(1) Remove the main charger.
(2) Remove the spring.
(3) Remove the 2 screws.
When reassembling, secure with the screws in the following order:
① → ②

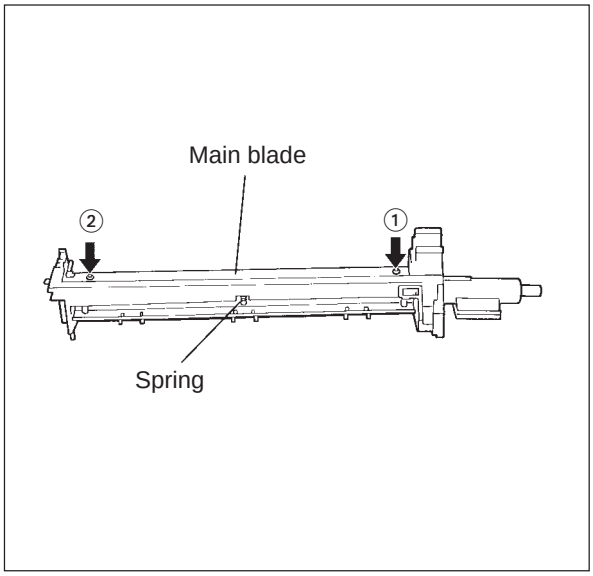

11.4.3 Recovery blade

(1) Turn the cleaner unit upside down.
(2) Remove the separation claw holder (4 screws).
(3) Remove the recovery blade (2 screws).

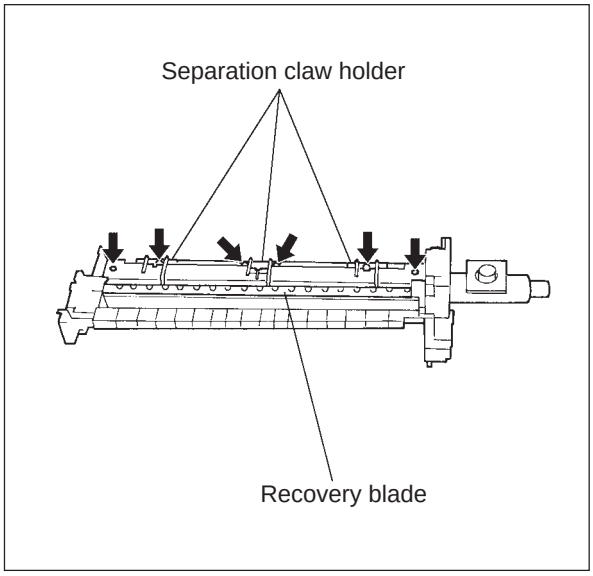

11.4.4 Separation claw

(1) Turn the cleaner unit upside down.
(2) Remove the 2 screws and take out the separation claw with the holder.
(3) Remove the separation claw from its fitting.

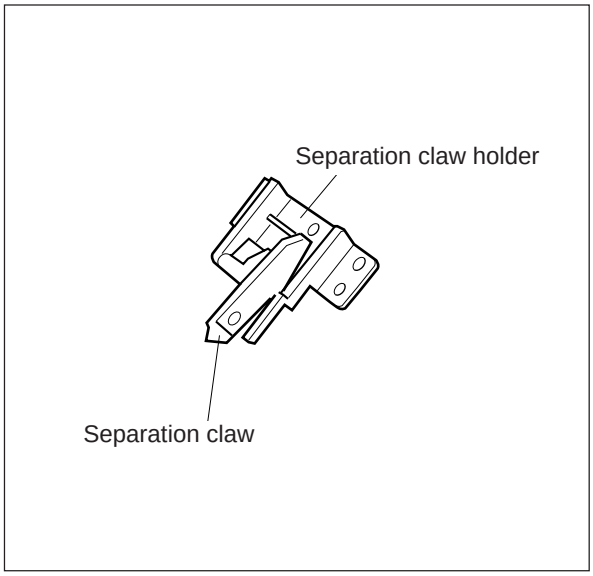

11.4.5 Block for charger output adjustment

(1) Remove cleaner unit.
(2) Remove inner cover (upper).
(3) Remove a screw.

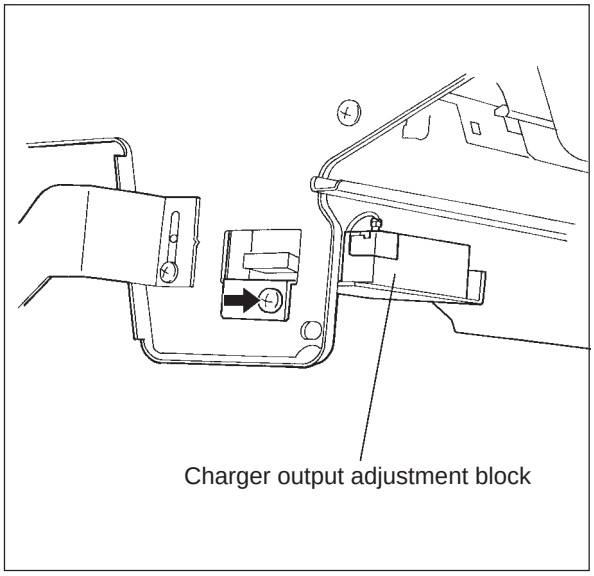

11.4.6 Toner-full switch

(1) Remove the main motor (2 screws).
(2) Remove the drive unit (5 screws).
(3) Remove the toner-full switch.

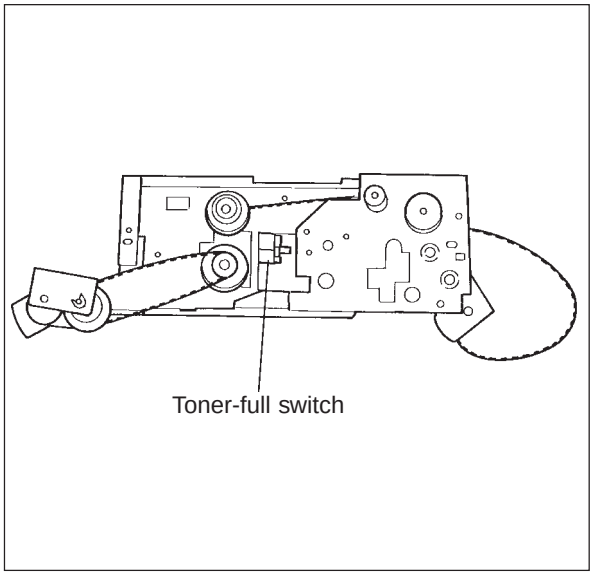

12 FUSER UNIT/PAPER-EXIT UNIT

12.1 General Description

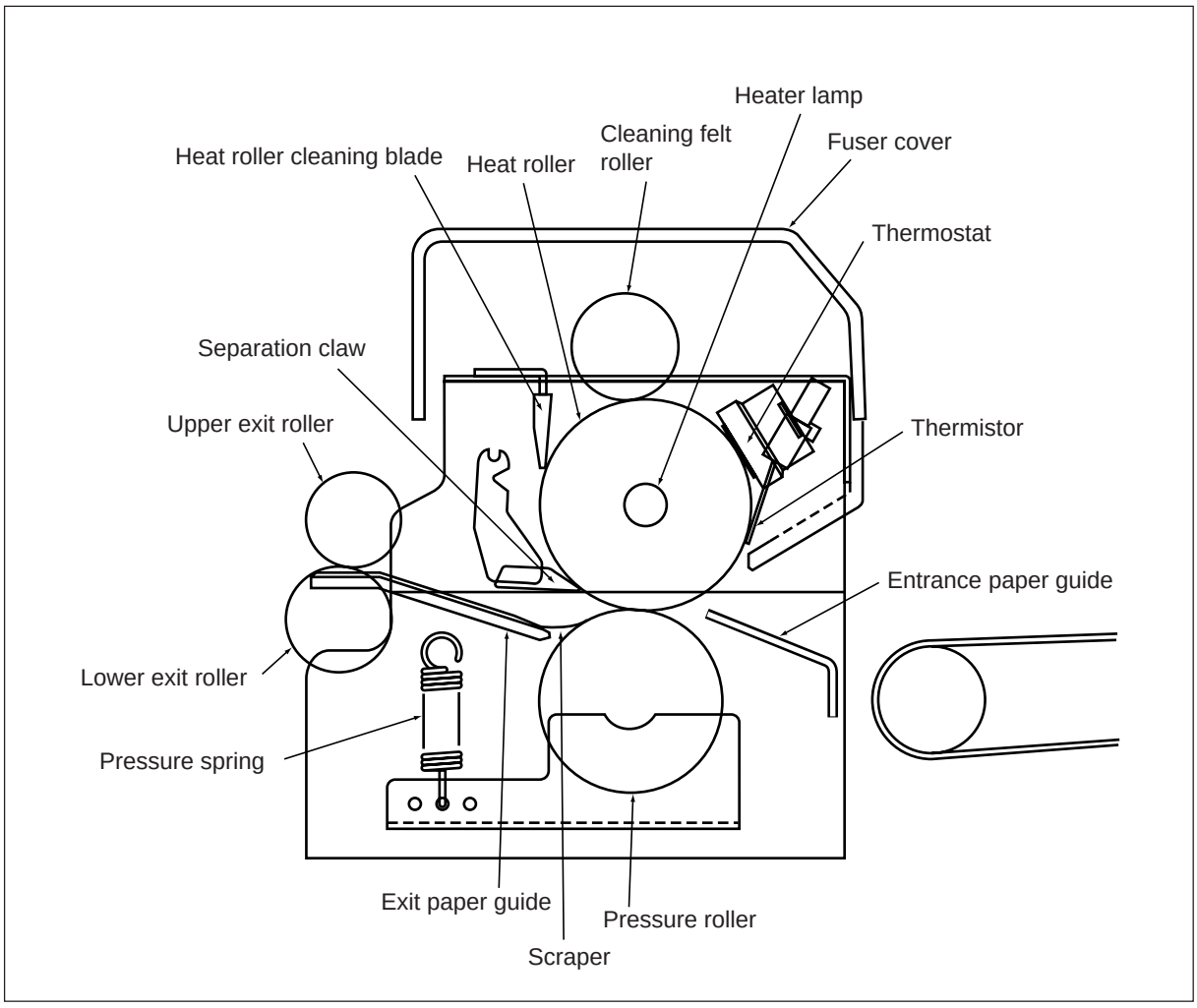

Heat and pressure are applied to the transfer paper which has been separated from the drum, and the toner image is fixed there. The transfer paper which has completed the fixing process exits onto the receiving tray through the paper exit unit.

The fuser unit comprises the heater lamp, heat roller, pressure roller, separation claws, scraper, cleaning felt roller, thermistor, thermostat, etc. The paper exit unit consists of exit rollers, discharge brush, etc..

12.2 Description of Operations

(1) Fuser unit

Heat and pressure are applied to the paper which has been separated from the drum and transported into the fuser unit and the toner image is fixed there. Steady pressure is applied always to the upper and lower rollers by springs and they are rotated by the main motor. (The upper roller (heat roller) has a heater lamp, but it does not rotate.)

The paper which has been fixed is smoothly removed from the heat roller by the use of the separation claws.

The detection unit monitors the heat roller temperature using a thermistor, and when the temperature becomes abnormally high, the power supply to the heater lamp is stopped by a thermostat.

(2) Paper-exit unit

The upper and lower exit rollers rotate using the gear drive from the fuser unit.

The paper which has completed the fixing process exits smoothly onto the receiving tray through the upper and lower exit rollers.

12.3 Functions of Each Part

(1) Heater lamp

This halogen lamp is located inside the heat roller, applying heat to the heat roller. The heater lamp is secured as it is while the heat roller rotates.

(2) Heat roller

This roller is made of aluminum whose heat conductivity is relatively good, and has heat applied by the heater lamp. Steady pressure is applied to both the heat and pressure rollers (mentioned later). Fixing is performed by the transfer paper to be passed through between the two rollers as above so that the toner image faces the heat roller. The toner is fused by the heat roller, the heat conductivity rate is increased by the pressure roller, causing the toner to permeate the paper fiber. However, during this process, a problem may occur. That is, because the toner is fixed by contacting with the heat roller, the toner may adhere to the roller (called “offset phenomenon”). Therefore, for easier removal of the toner from the heat roller, a Teflon coating has been applied on the surface of the heat roller.

(3) Pressure roller

This is made of rubber for smooth application of pressure to the heat roller. The pressure roller has pressure applied always by springs.

(4) Separation claws/Scraper

By the use of the separation claws/scraper, the paper which has been fixed to the both heat and pressure rollers is smoothly removed.

(5) Cleaning felt roller

This cleans the toner remaining on the drum at fixing process. The cleaning felt roller is located so that it can come in contact with the heat roller. The silicon oil soaked in the pressure roller is evaporated by the heat roller, causing it to adhere to the surface of the heat roller. As a result, the cleaning of the toner on the heat roller can be smoothly performed.

(6) Thermistor-1

Surface temperature of the heat roller should be maintained within a fixed range, (actually, around 200 °C), i.e. higher than the minimum temperature at which improper fixing may occur, lower than the maximum temperature at which “baking” may occur. The thermistor detects the surface temperature of the heat roller. If the temperature is lower than the standard temperature, it turns on the heater lamp, if higher to turns it off.

(7) Thermistor-2

Temperature distribution in axis of the heat roller may differ greatly on its center and ends by conditions. The thermistor-2 detects temperature of the heat roller end.

When either thermistor-1 or -2 detects the temperature over the specifieds, heater lamp is turned off by their thermal controls.

(8) Thermostat

When the surface temperature of the heat roller becomes excessively high due to thermistor failure, etc., the thermostat stops the power supply to the heater lamp.

As the thermostat used in this copier is a type which protects against abnormal operation, when it detects an abnormal operation, it is set to stay OFF. Therefore, during repair, this should be replaced together with other damaged parts in the fuser unit.

(9) Exit rollers

Through the exit rollers, the paper removed by the separation claws or scraper exits smoothly onto the receiving tray via the ADU exit roller.

12.4 Heater Control Circuit

12.4.1 Temperature detection unit

To maintain the heat roller temperature, this unit detects the heat-roller temperature by thermistor-1, and then performs heater lamp ON/OFF control.

The thermistor is an electrical element whose resistance decreases as its detected temperature increases. If the thermistor is open-circuited, the control circuit erroneously determines that the fuser temperature is extremely low and continues to energize the heater lamp. As a result, the fuser temperature rises abnormally high, possibly activating the thermostat provided for safety purposes. The CPU works to detect the breakage of the thermistor and prevents the condition mentioned above.

The following abnormalities are detected:

(1) Abnormal detection during warming up

Maximum 25 sec. after the power has been turned on, if the thermistor-1 output voltage does not exceed 0.078 V, CALL SERVICE (C41) is displayed.

(2) Abnormal detection during stand-by/copying (Thermistor-1)

If the thermistor-1 output voltage decreases to and remains at 0.078 V or lower for 260 msec. or more, CALL SERVICE (C43) is displayed.

(3) Abnormal detection during stand-by/copying (Thermistor-2)

If the thermistor-2 output voltage decreases to and remains at 0.192 V or lower for 260 msec. or more, CALL SERVICE (C45) is displayed.

(4) C40 error counter control

- For improved fuser-unit safety, the CPU works as follows: After the C41 error occurs two times in succession, even when the power is turned on, the heater will not come on and the C41 error will be immediately displayed.
- However, with “1” or less stored in the C40 counter, if the copier becomes ready correctly, the C40 counter clears to “0”.
- After CALL SERVICE (C41 – C45) has occurred and the thermistor, heater lamp, etc. have been repaired (or replaced), if turning on the power switch does not cause the heater to energize resulting in a C40 error, check the C40 counter (08-code 89) and reset it to “0”.

Surface temperature of heat roller: 200°C (Thermistor resistance value: about 3.2 kΩ)

Reference

1. A value other than 0, 1, 2, 3, 4, 5, 6, 7, 8 or 9 is never written in the C40 counter.
   - At the power on, if the heater does not turn on and the copier goes into the C40 CALL SERVICE, check the C40 counter if it is 2 or more. If it is 2 or more, be sure to check the thermistor and heater lamp, and after repair, reset the C40 counter (08-code 89) to 0 and then turn on the power switch.
   - If the value of the C40 counter is more than 10 (11, for example), it may be possible that BC-RAM or the data in it have been destroyed by charger leaking, etc. In this case, check the guide bias, high-voltage transformers, charger wires, etc. for any defects. Also, all the data inside BC-RAM need to be rechecked.
2. Relationship between the output voltage and the fusing temperature.
   - 200°C corresponds to approx. 2.5V and 0.078 V corresponds to approx. 40°C.
3. Relationship between heat roller surface temperature and thermistor-1 resistance.

Temperature	Thermistor resistance	Heater lamp state
Less than 200°C	More than 3.2 KΩ	ON
200°C	3.2KΩ	Maintains previous status
More than 200°C	Less than 3.2 KΩ	OFF

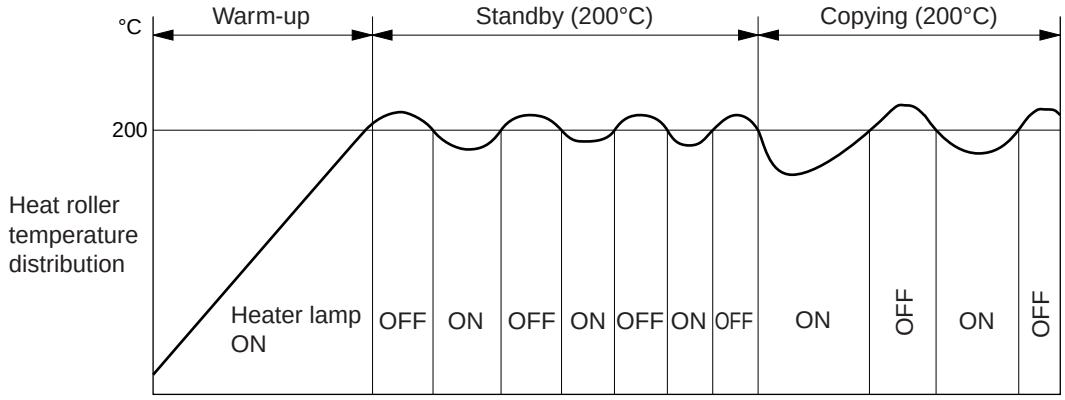

4. Temperature control at heat roller ends
   During multicopying, the temperature at each end (no paper-contact area) of the heat roller normally tends to rise higher that the controlled temperature of the paper-contact area. Therefore, the circuit is so devised that if the temperature in the no paper-contact area rises to 245°C, the second thermistor detects this, causing the heater to be turned off immediately regardless of the temperature in the paper-contact area.

12.4.2 Detection of thermistor burnout

* Since thermistor burnout detection circuits of the thermistor-1 and -2 are common, it is explained with the thermistor-1.

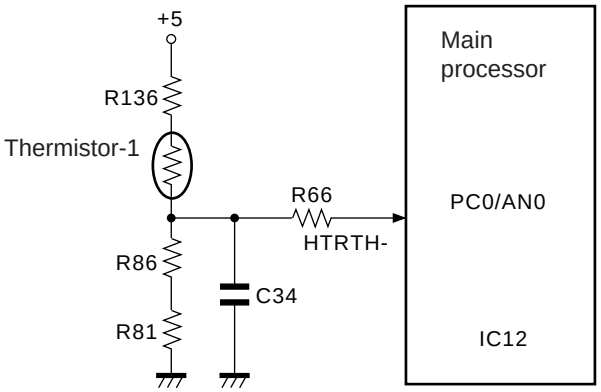

- The input voltage is obtained by voltage dividing R136, thermistor, R86 and R81.
- The surface temperature of the heat roller changes.
  → The thermistor resistance value changes
  → The input voltage also changes
- The main processor detects an abnormality
  ⩾ thermistor broken

12.4.3 Control for abnormal heater condition

When something abnormal occurs in the heater turn-on circuit, such as a shorted triac, it may become incapable of ON/OFF control. In this case, the microcomputer detects abnormal temperatures through the first and second thermistors, determines the corresponding error codes and counter values, and causes the main power to switch off to protect the fuser unit.

(1) Temperature detection

The following abnormal temperatures are detected by the respective thermistors:

First thermistor: 230°C

Second thermistor: 270°C

(2) Error codes

"C44": Displayed when keys C/S + 8 are pressed simultaneously at the time of Call Service.

Counter value "9": Displayed when you input "89" in the AD (0 + 8) mode.

(3) Machine condition

After deenergizing all outputs (heater lamp, exposure lamp, control-panel displays, motors, etc.), the microcomputer causes the main power to switch off.

(4) Corrective action

After the error code and counter value in (2) have been determined, abnormal temperature detection in (1) continues. So, if the main switch is turned on immediately, it will be turned off again as long as the temperature on the heater surface remains above the abnormal detection temperatures of thermistors. Thereafter, this will be repeated. So, after waiting for the heater surface temperature to drop, turn on the main switch and you can check the counter value before the main switch is turned off again. After confirming that an abnormal heater condition has occurred, repair the problem and then clear code 89 of the AD (0 + 8) mode with "0". After that, you can bring the copier into its normal operating condition.

12.5 Disassembly and Replacement

12.5.1 Fuser unit

(1) Remove the used toner box, door switch cover and the fuser cover (2 screws each).

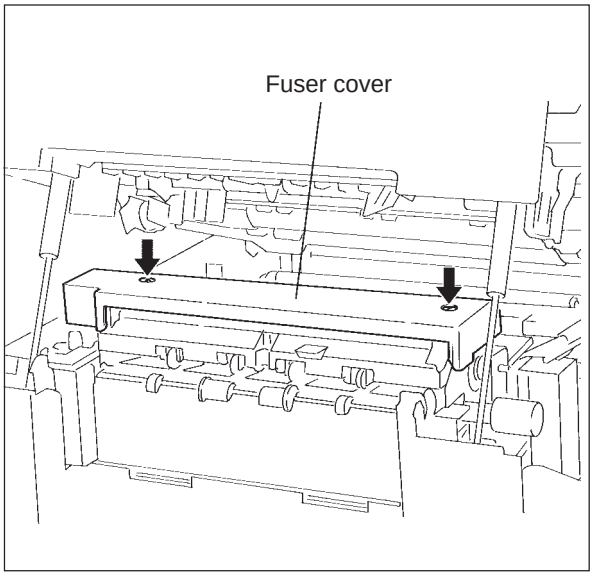

(2) Remove the 3 connectors on the rear side.

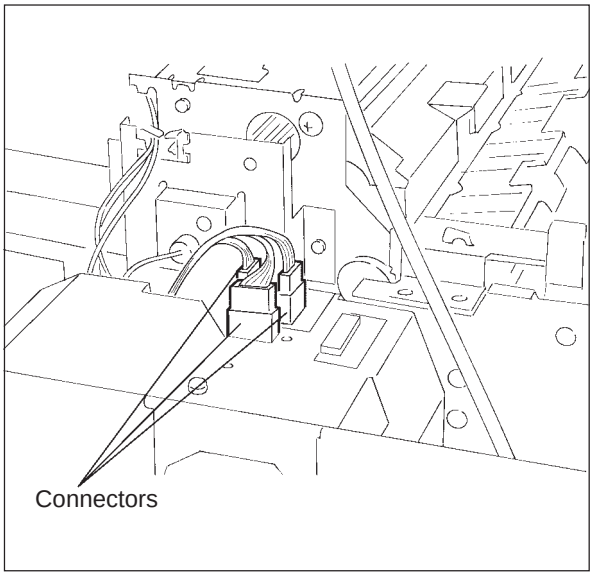

(3) Remove the 1 screw which secures the fuser unit.

Note: Use the original hole (round) when securing it again.

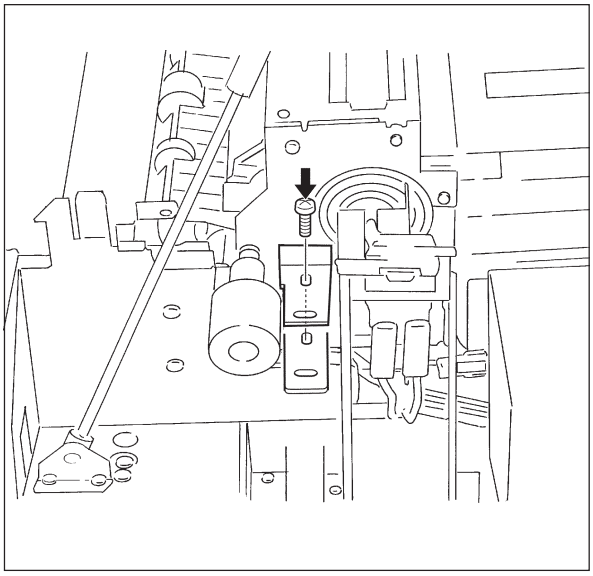

(4) Slide the entire unit to the front side, unhook the stud from the copier frame, and remove it while lifting it up.

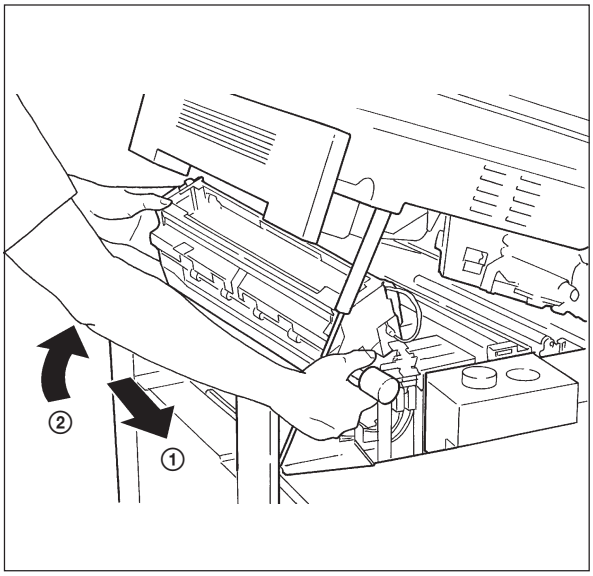

12.5.2 Heater lamp

(1) Remove the fuser unit.

(2) Remove the lamp terminal fixing screws (2 screws).

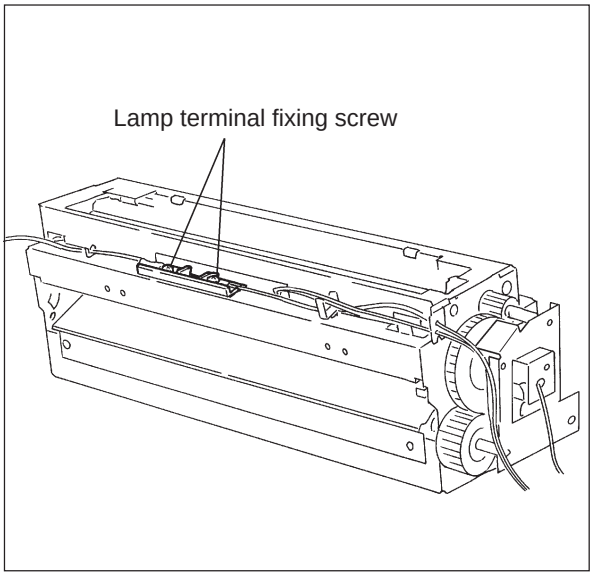

(3) Remove the lamp holder bracket at the front side (1 screw).

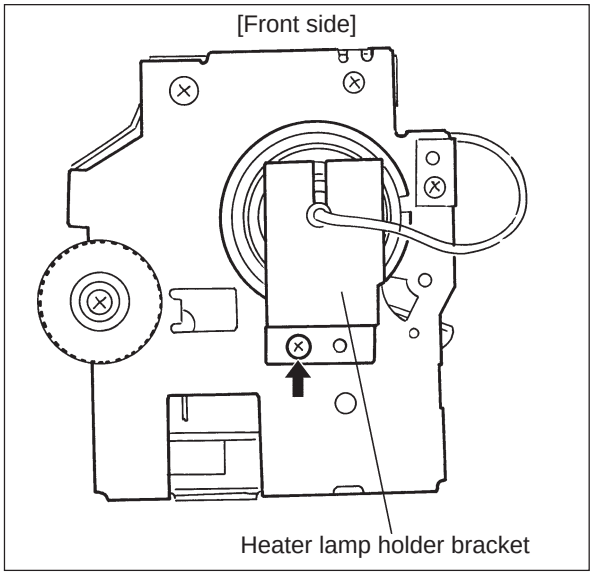

(4) Remove the lamp holder bracket on the rear side (2 screws).

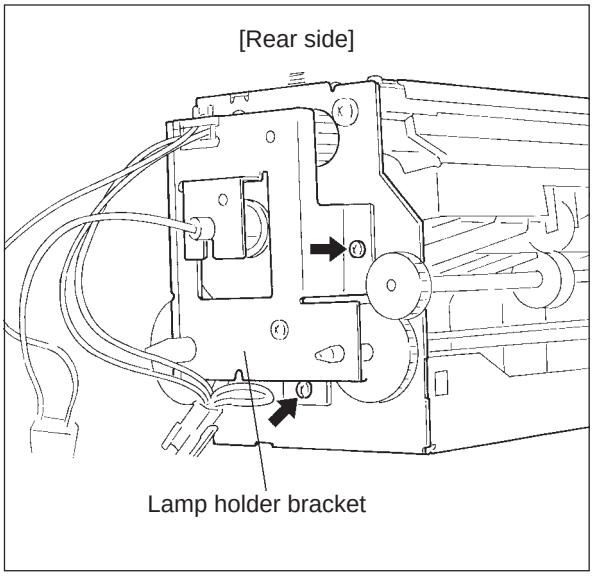

(5) Pull the heater lamp out towards the rear side.

Notes: 1. Do not touch the heater lamp surface directly with your hands.
2. Set the TOSHIBA mark facing the front side.

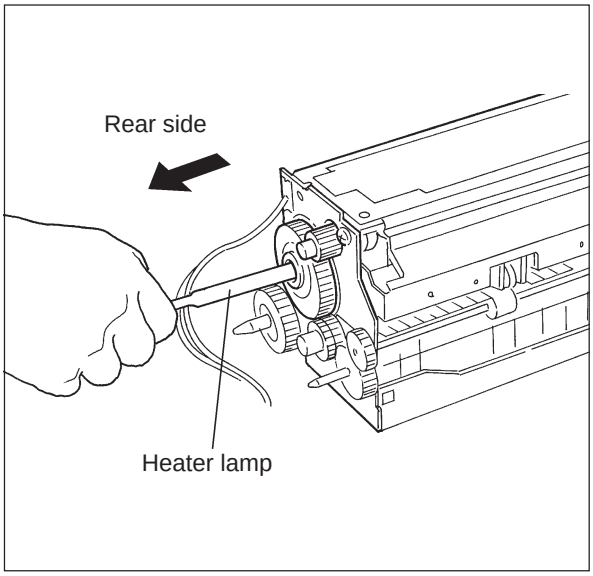

12.5.3 Heat roller

(1) Remove the heater lamp.

(2) Remove the separation claw unit (2 screws).

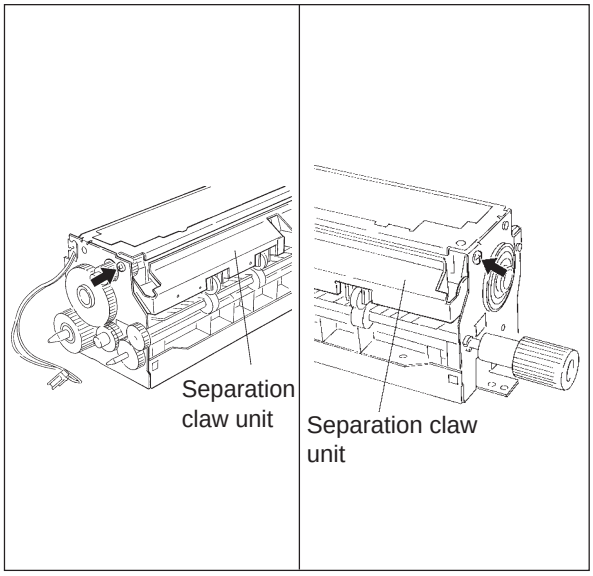

(3) Remove the upper stay of the fuser unit (2 screws).
(4) Remove the cleaning felt roller lifting up.
(5) Remove the upper frame (4 screws).
(6) Remove the bracket fixing the thermistor and thermostat (1 screw).

Note: Be careful not to deform the root of the thermistor harness when removing the bracket.

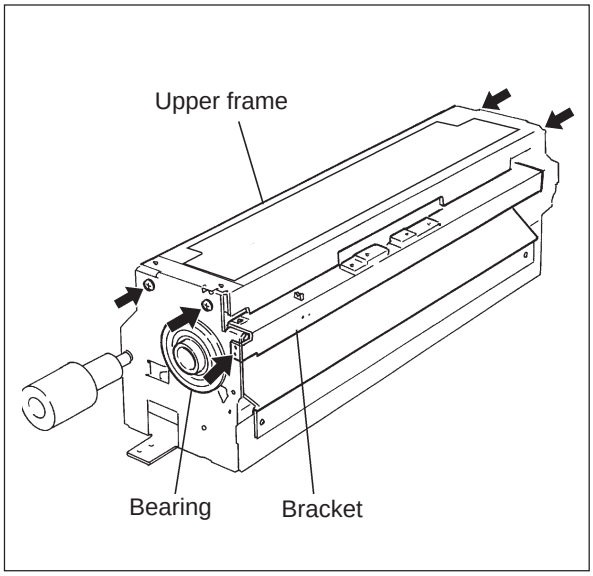

(7) Remove the C-ring at the front and rear side, and the gear at the rear side.

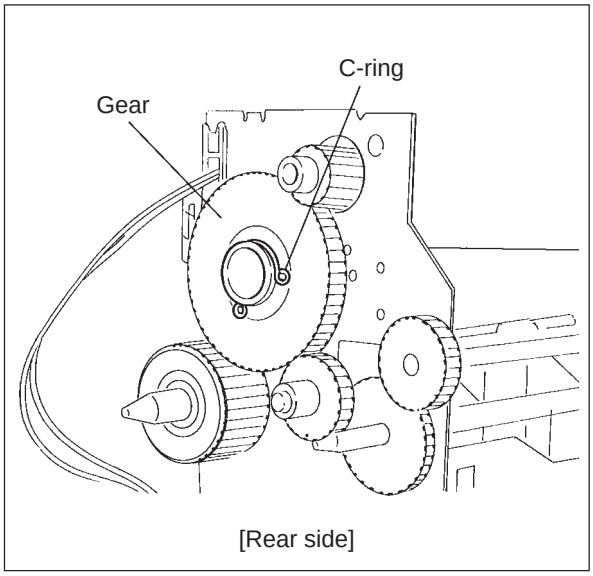

(8) Remove the ball bearing from the frame.

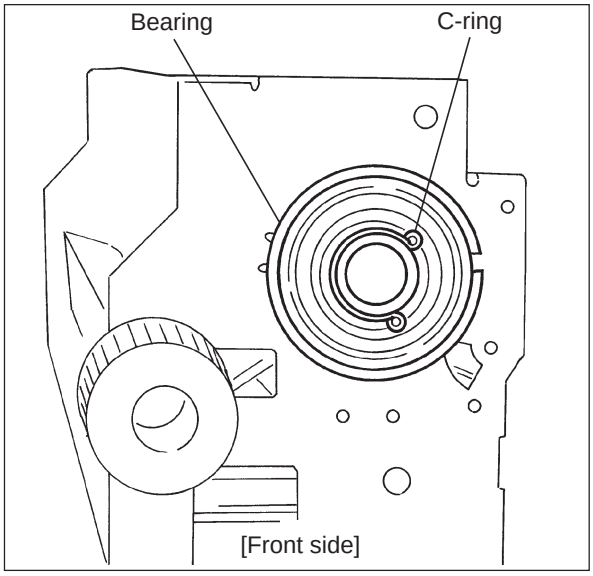

(9) Slide the heat roller to the front side and pull it off from the rear side frame, then take out the heat roller toward the exit side.

Note: Be careful not to damage the heat roller surface by knocking it against the bracket, etc.

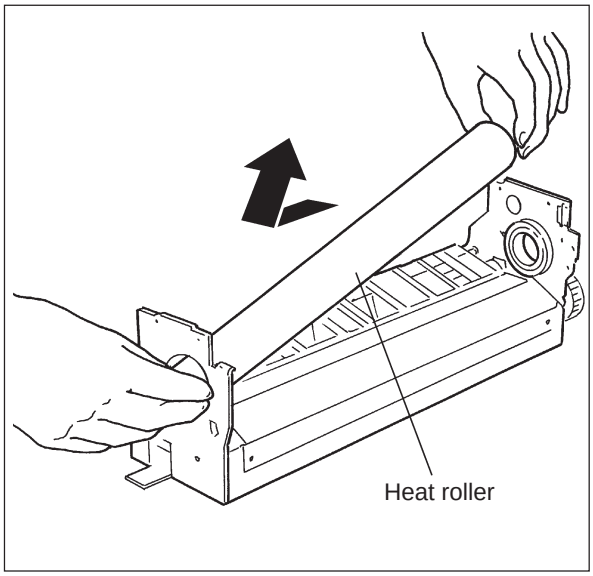

12.5.4 Pressure roller

(1) Remove the fuser unit.
(2) Remove the heat roller.
(3) Remove the exit roller (stop-ring).

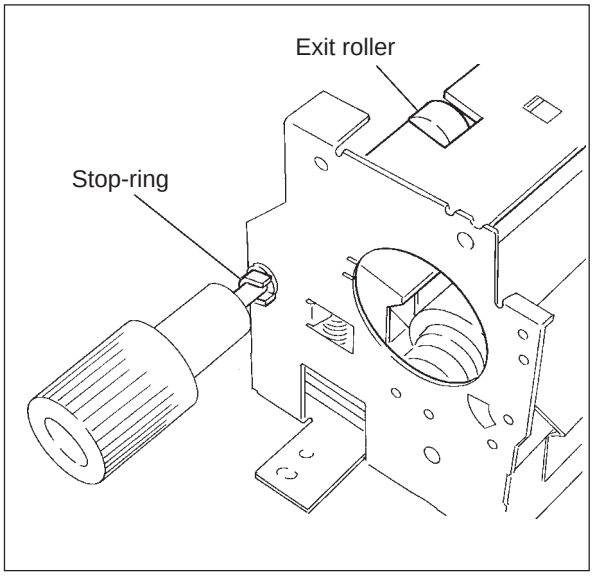

(4) Take off the entrance paper guide by unscrewing the two screws.
(5) Remove the exit paper guide hook.

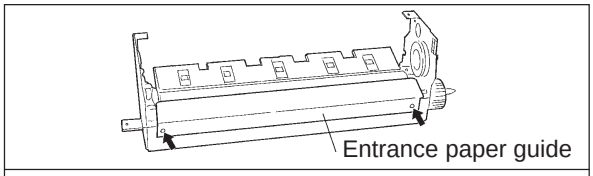

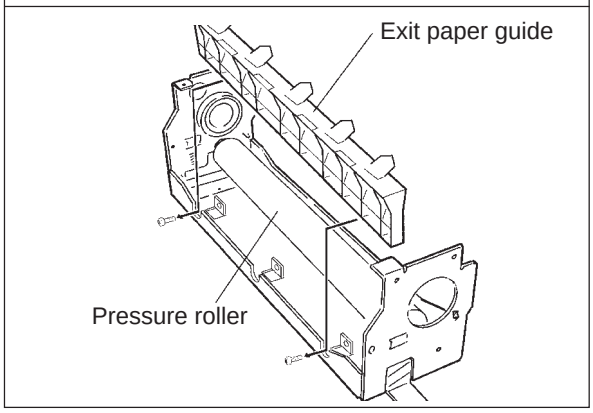

(6) Lift up the pressure roller holding both ends, and take the pressure roller out with its bearings.

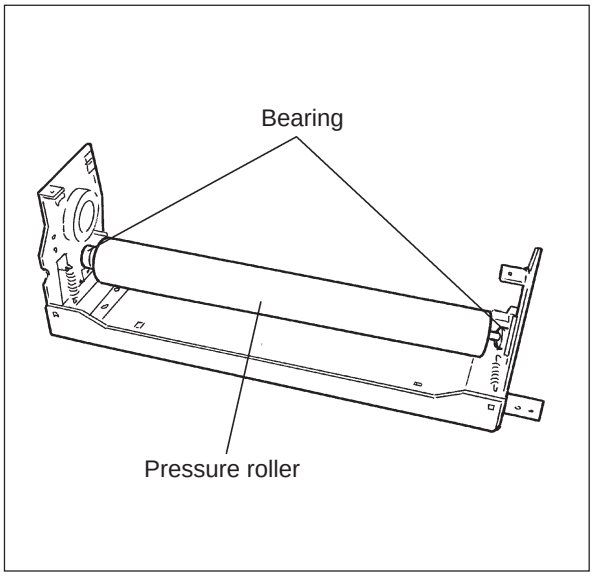

Note: When installing the pressure roller, make sure the bearing grooves on both front and rear are set in the pressure levers.

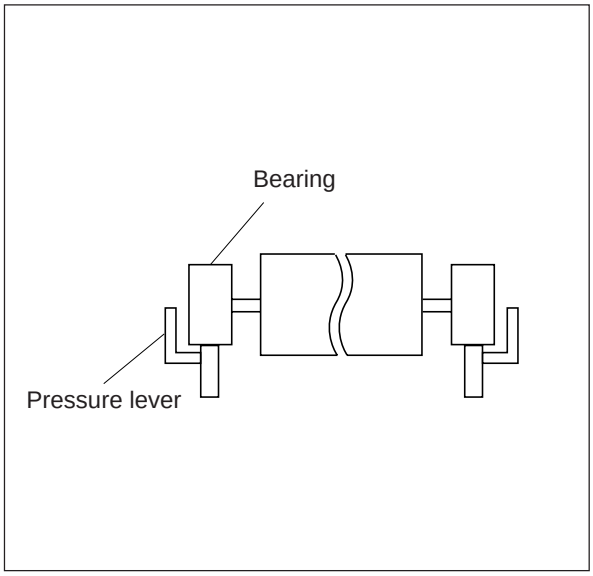

12.5.5 Cleaning felt roller

(1) Remove the upper stay (2 screws).

(2) Remove the cleaning felt roller by lifting the roller.

Note: When installing the cleaning felt roller, make sure the color of pressure springs (front side: golden, rear: silver).

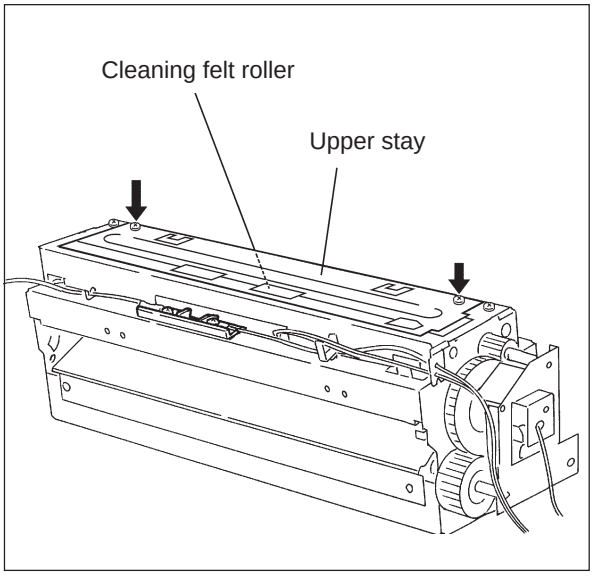

12.5.6 Heat roller cleaning blade

(1) Remove the bracket (upper plate).

(2) Remove the heat roller cleaning blade by taking out the two screws.

Note: When installing the heat roller cleaning blade, use the original hole (round) of the blade.

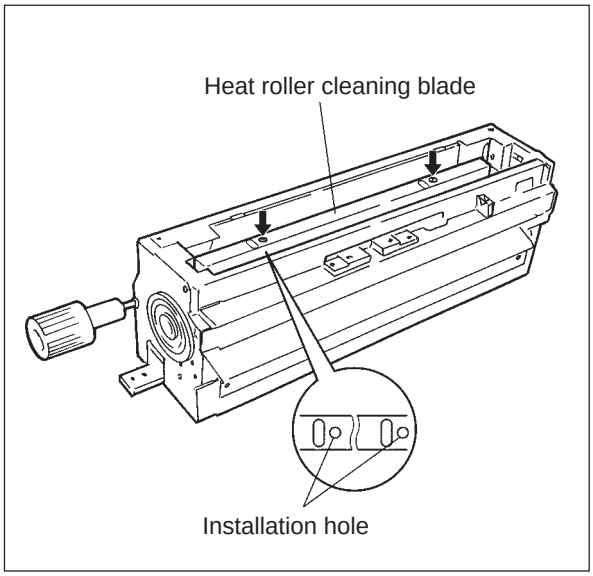

12.5.7 Separation claw units

(1) Remove the separation claw cover (3 screws).

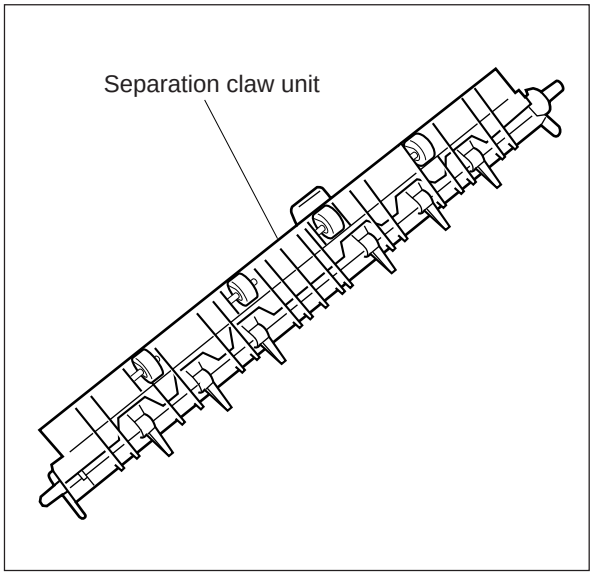

(2) There are 6 separation claws in all. For each claw, remove the spring, then remove the claw.

Note: Check that the edges (tips) of the claws are not chipped.

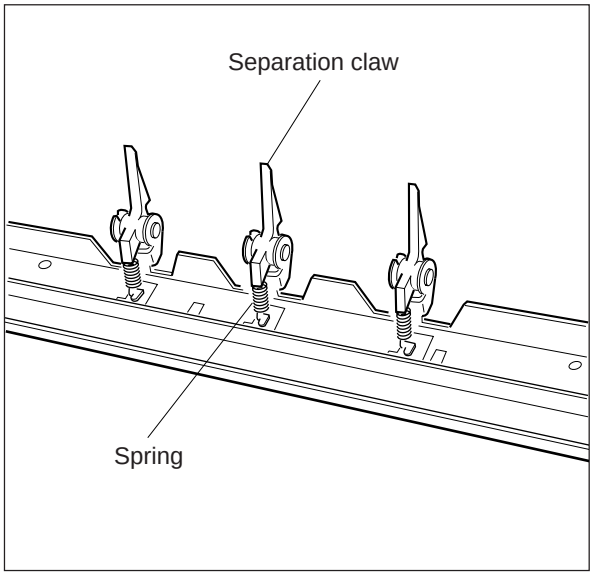

12.5.8 Thermistor and thermostat

(1) Remove the cleaning roller bracket.

(2) Remove the 2 thermistors (1 screw each).

- Be careful not to deform the root of the thermistor harness.

(3) Unscrew 2 screws and take off the thermostat from the holder.

Note: When installing, make sure the thermistor and thermostat both contact the heat roller surface evenly.

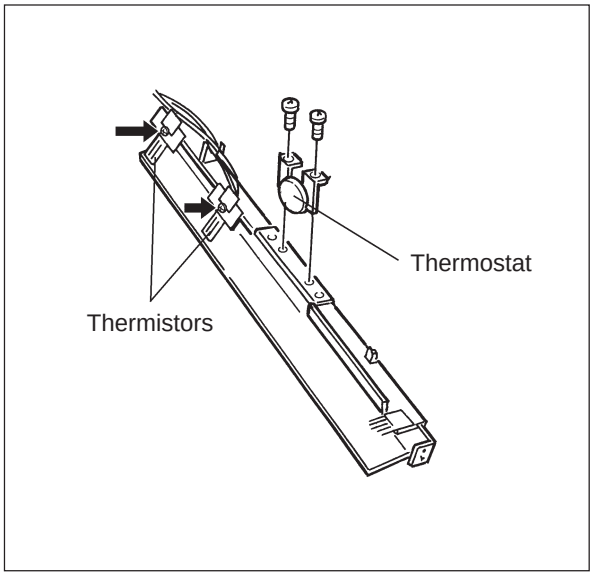

12.5.9 Lower exit roller

(1) Remove the fuser unit.

(2) Remove the stop-ring.

Note: Attach the stop-ring as shown in the figure below.

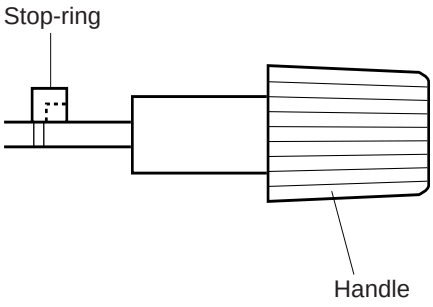

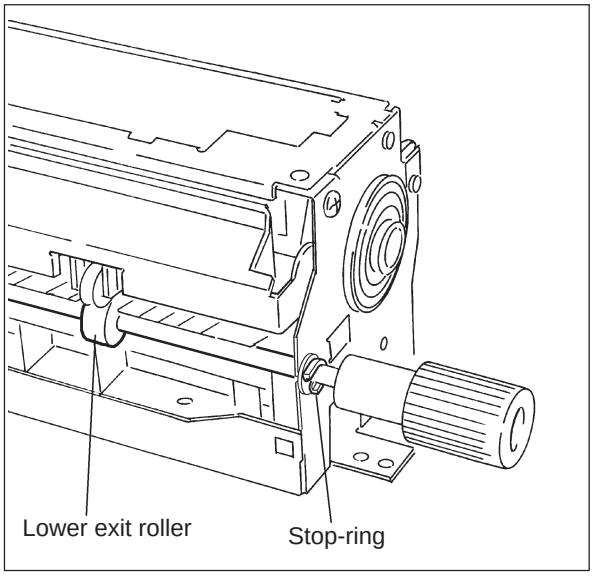

13. Automatic Duplexing Unit (ADU) MD-5002

13.1 Specifications

Type:	Unit type
Function:	Feeding for duplex copying
Paper sizes:	50 sheets stackable: A3, B4, A4, B5, A5, Folio (for Europe) Ledger, Legal, Letter, Computer, Statement (for U.S.A. and Canada)
Type of paper:	Toshiba-recommended paper 64~80 g/m^2 (17~22 lb) (sheets of paper)
Max. number of copies in multicopying:	1~50 sheets
Dimensions:	W598 x D620 x H110 mm
Weight:	Approx. 10 kg
Power Source:	Supplied from the copier

Note: Specifications are subject to change without notice.

13.2 Names of Various Components

13.2.1 Front-side view

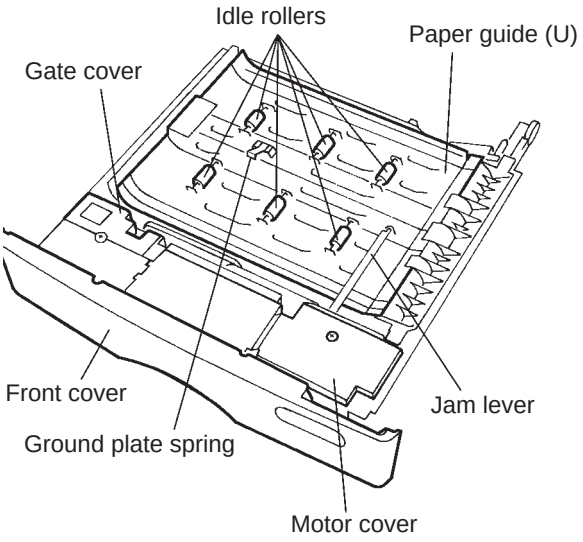

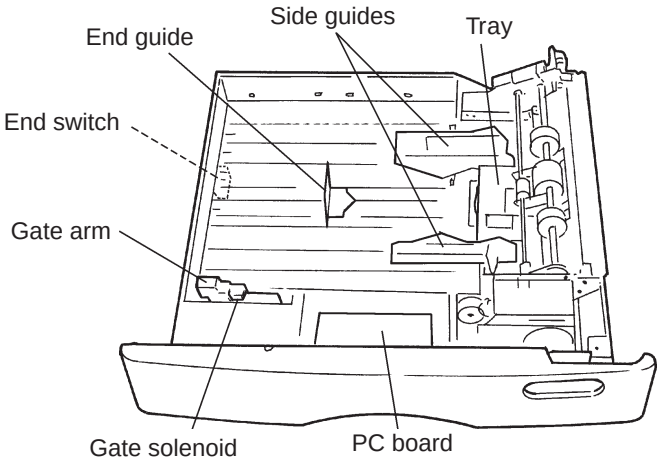

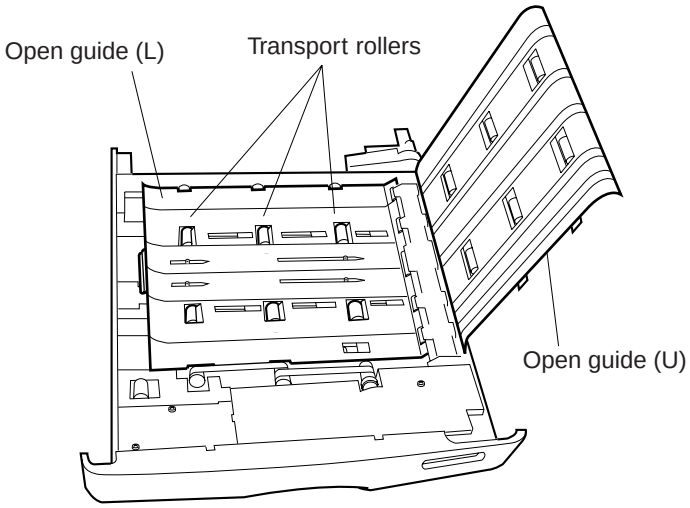

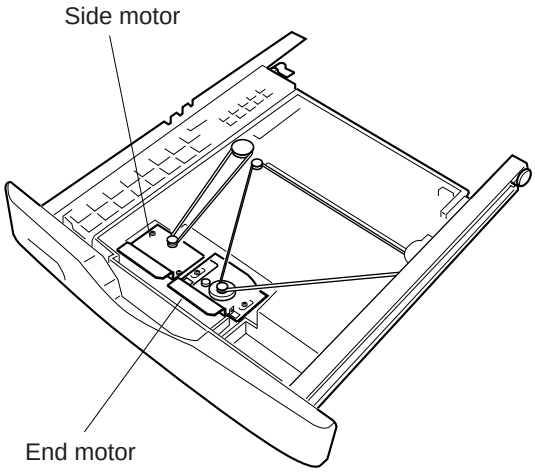

13.2.2 Rear-side view

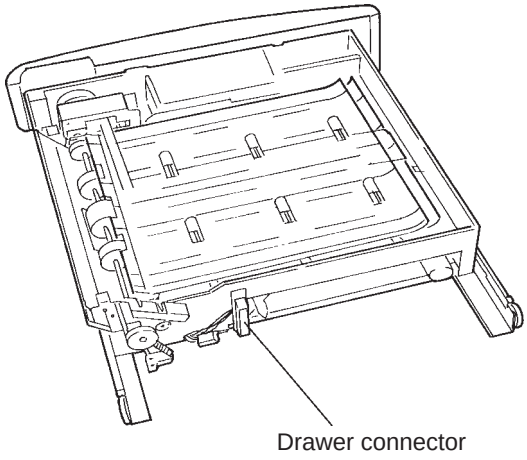

13.2.3 Feed-side section

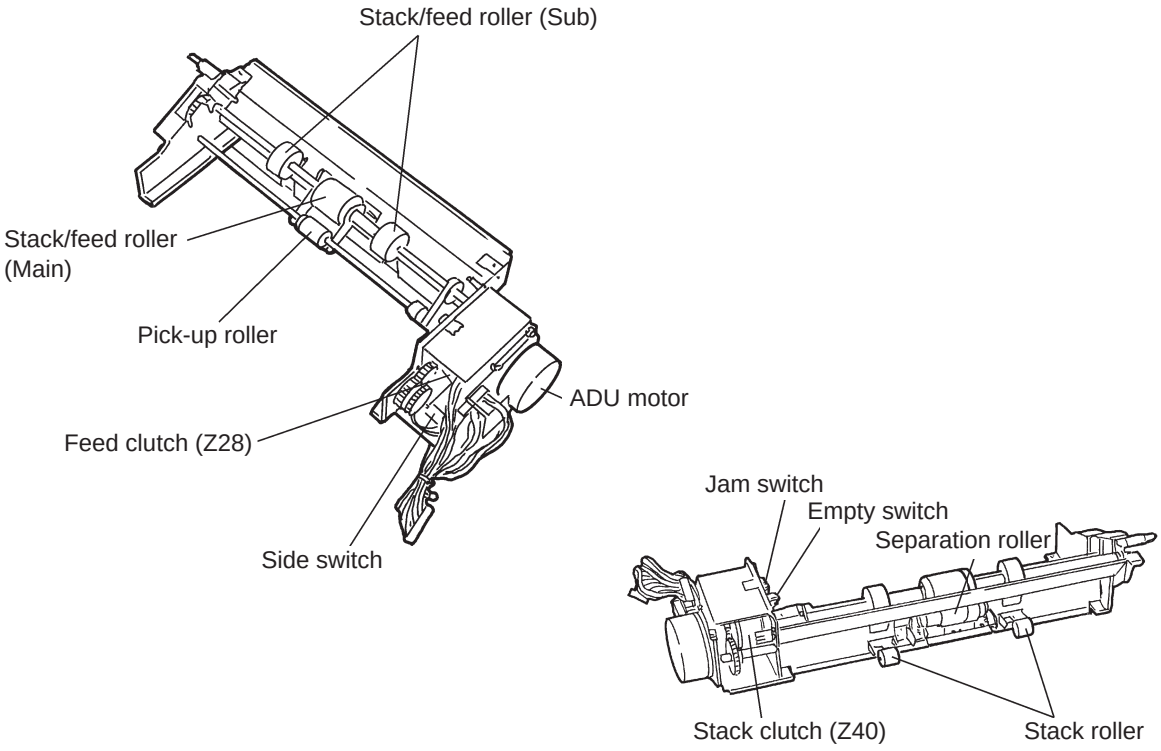

13.2.4 Copier's exit-side section

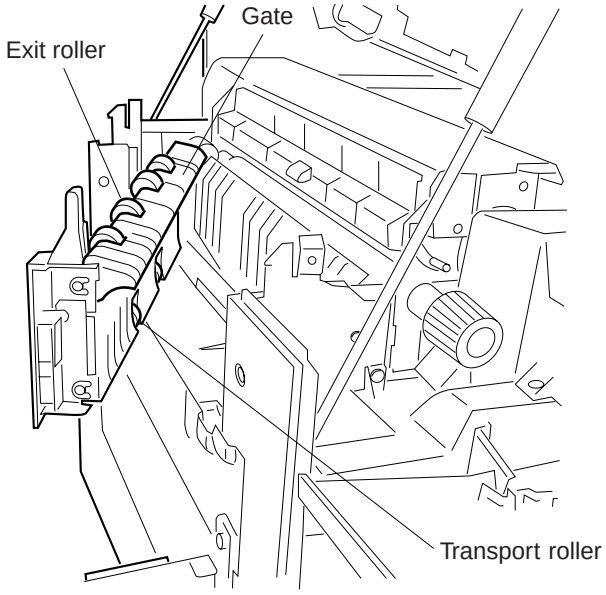

13.2.5 Sectional view

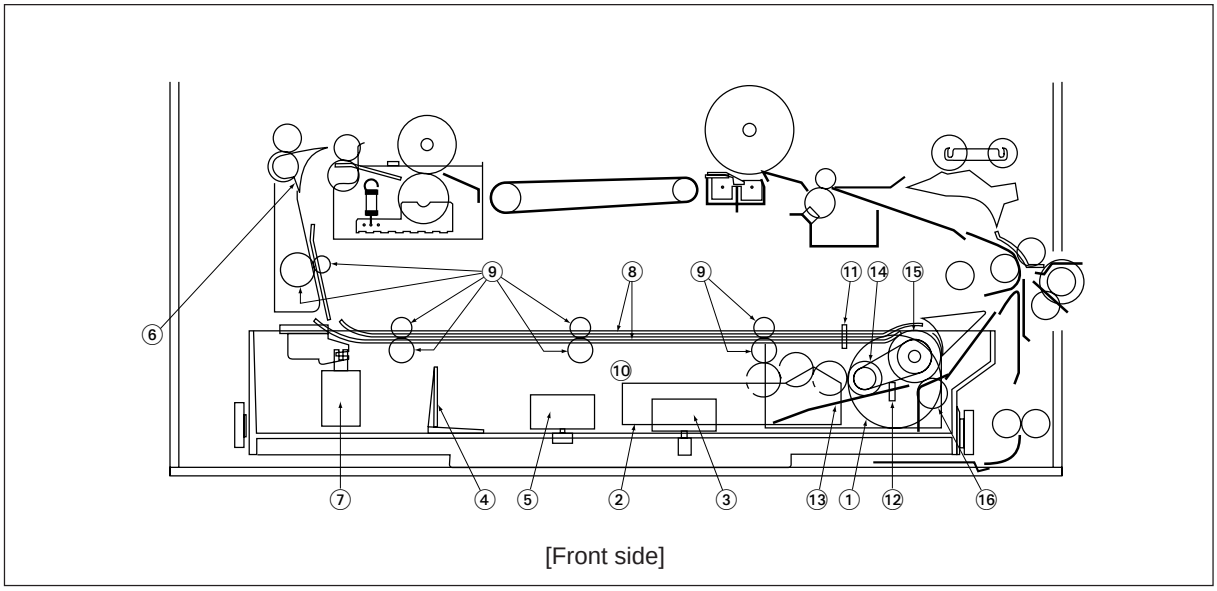

[Front side]

①	ADU motor	⑨	Transport roller
②	Side guide	⑩	Stacking section
③	Side motor	⑪	Jam switch
④	End guide	⑫	Empty switch
⑤	End motor	⑬	Tray
⑥	EXIT/ADU selection gate	⑭	Pickup roller
⑦	Gate solenoid	⑮	Stack/feed roller
⑧	Open guide	⑯	Separation roller

13.3 Description of ADU Operation

13.3.1 Paper stacking operation

When the ADU (duplex copying) mode is selected and the PRINT key is pressed on the copier's control panel, the ADU motor starts rotating, and the side guides and the end guide in the stacking section are moved to the positions corresponding to the selected size of paper by their respective motors. Then, the stack clutch comes on, the transport roller rotates and the EXIT/ADU selection gate is switched in the direction of the stacking section by the gate solenoid.

The copy paper which has exited from the copier is sent into the ADU's open guide by the EXIT/ADU selection gate. This paper is further carried by transport rollers into the stacking section, where the paper is stacked face up. This operation is repeated until the specified number of sheets are stacked.

At the start of the stacking operation, the side guides are set with a 5 mm gap relative to each side of the paper, and each time 5 sheets are stacked consecutively during stacking, the side guides perform a paper aligning operation.

A jam switch is provided to have paper jams in the open guide detected. The empty switch is to detect whether or not paper is present in the stacking section.

13.3.2 Duplex copying

After the paper stacking operation, when a second original is set and the PRINT key is pressed, the ADU motor starts rotating, causing the elevator arm to rotate. This will cause the tray positioned under the stacked sheets of paper to rise, making the sheets come into contact with the rotating pick-up roller and sending the topmost sheet out. The separation roller rotates with the feed roller. At this time, if two or more sheets are sent out, the separation roller stops rotating, causing the lower sheet(s) to stop its movement.

The sheet of paper thus sent out is carried by the copier's upper transport roller to the copier's aligning roller and aligned. The sheet is then copied on the side not copied previously. The sheet copied on both its sides passes through the copier's exit roller and over the EXIT/ADU selection gate which is already positioned in the direction of existing, further passing through the exit roller to exit finally into the receiving tray.

13.4 Drive System

13.4.1 Driving of the EXIT/ADU gate

When the gate solenoid is turned on, the arm rotates and pushes up the lever, causing the gate to open. The copied sheet is then transported to the ADU's stacking section. When the gate solenoid is turned off, the arm is pulled back to its original position by a spring, causing the gate to close, and the copied sheet will exit.

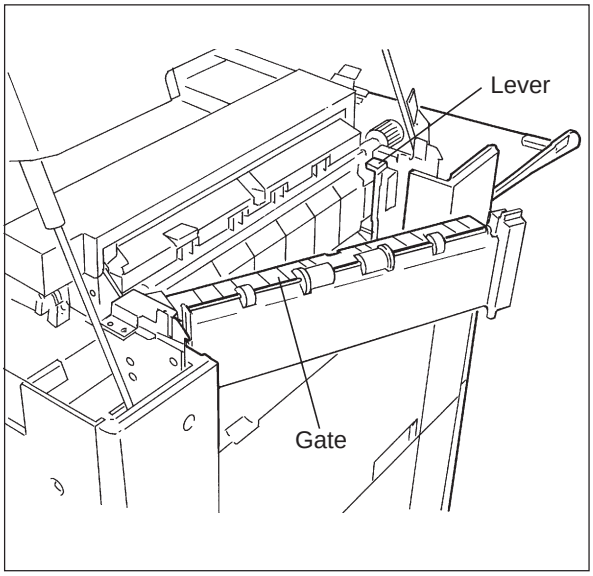

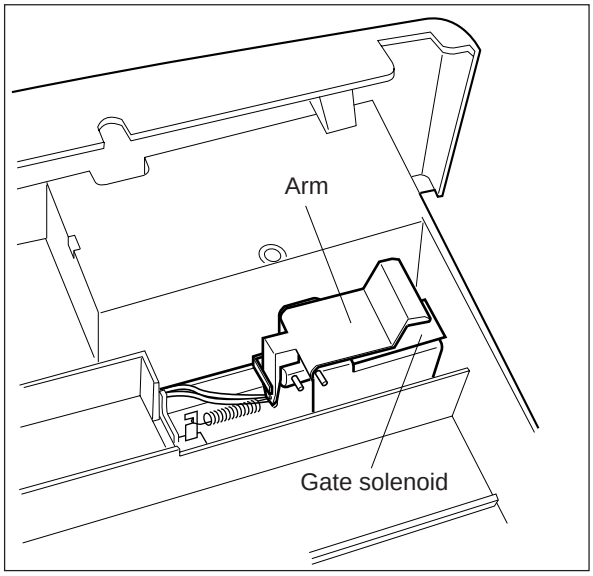

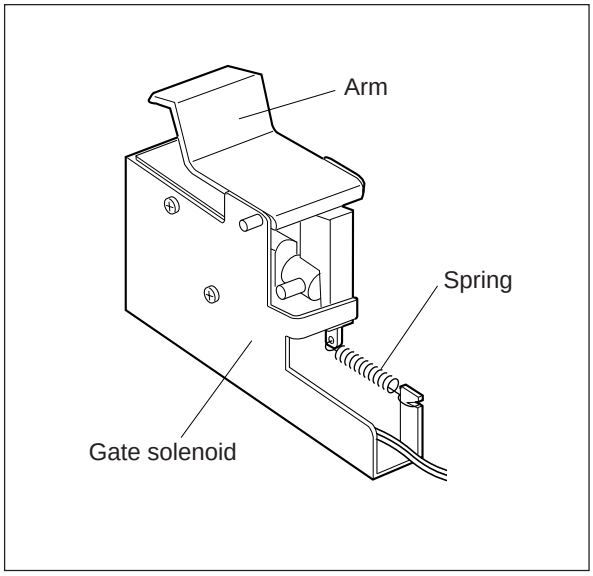

13.4.2 Driving of the stack guides

(1) Side guides

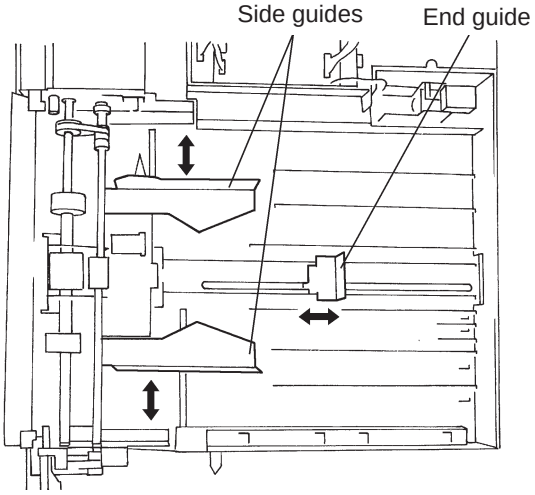

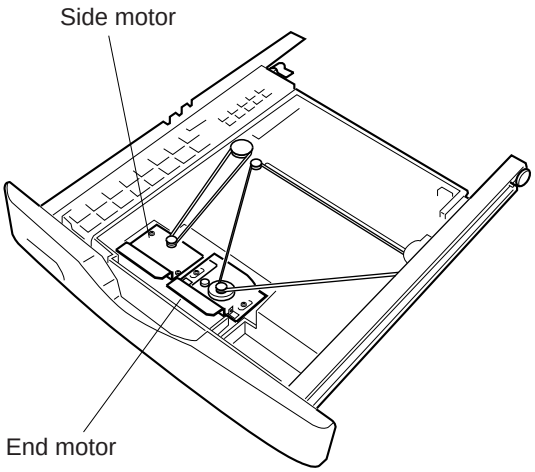

The side motor rotates corresponding to the size of paper selected, causing the side guides to move to the positions specified. In addition, each time five sheets are stacked, the side motor performs paper aligning by moving the side guides to the right and left.

(2) End guide

The end motor rotates corresponding to the size of paper selected, causing the end guide to move to the position specified.

13.4.3 Driving of the ADU pick-up roller, ADU feed roller and ADU transport rollers

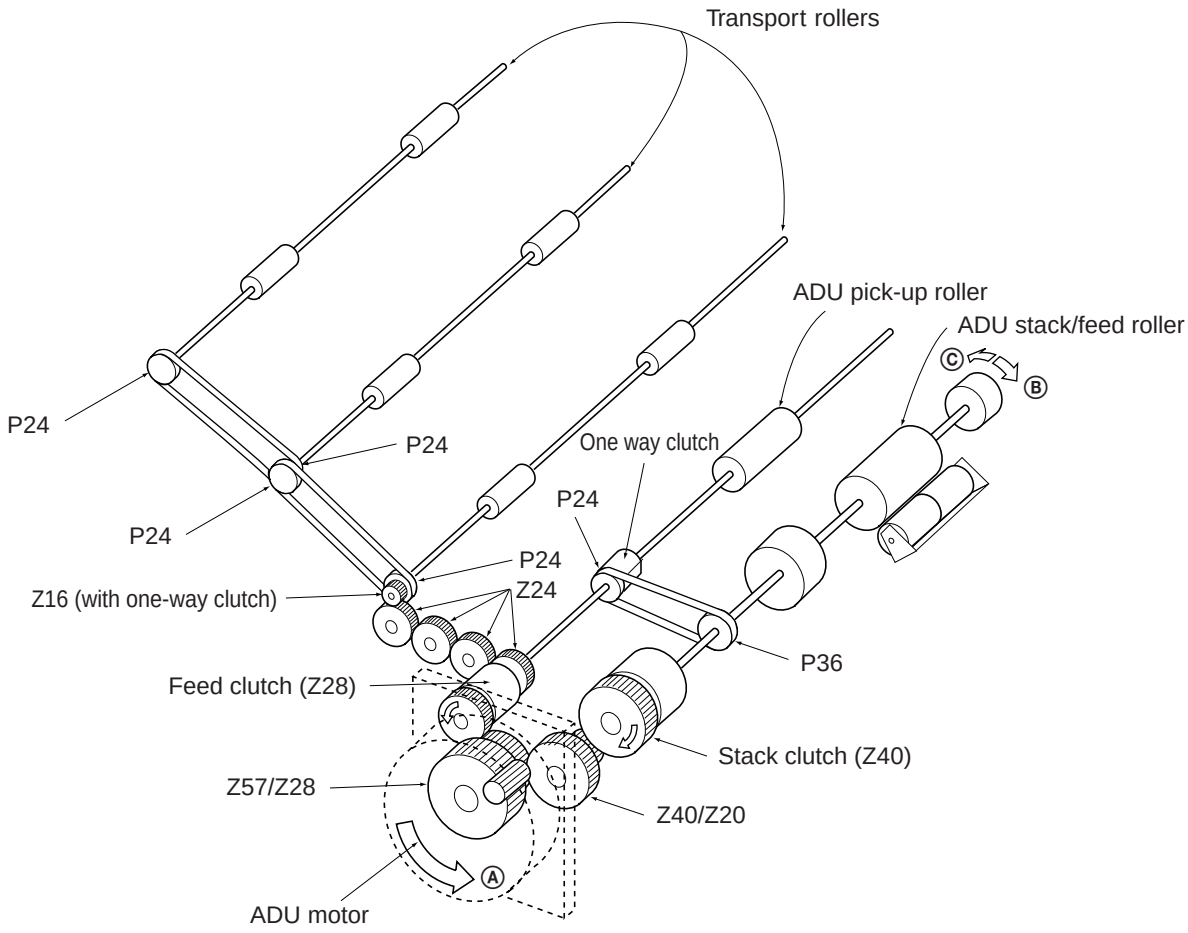

- When the ADU motor rotates in the direction of the arrow Ⓐ and stack clutch (Z40) energizes, the transport rollers are rotated and the ADU stack/feed roller is rotated in the direction of the arrow Ⓑ (in the stacking direction).
- When the ADU motor rotates (arrow Ⓐ) and the feed clutch (Z28) energizes, the pick-up roller and the ADU stack/feed roller are rotated in the feeding direction (arrow Ⓒ).
  At this time, the transport rollers do not rotate since a one-way clutch is contained inside of the gear (Z16) on the transport roller shaft.

13.5 Disassembling and Reassembling Various Parts

13.5.1 Removing the ADU covers

[A] Motor cover and gate cover

(1) Remove one screw fastening each cover.

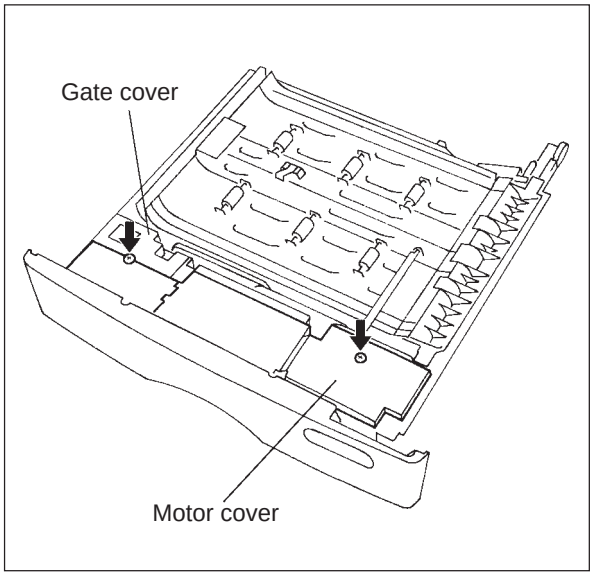

[B] Lower cover

(1) Place the ADU upside down.

(2) Remove the 7 screws fastening the cover.

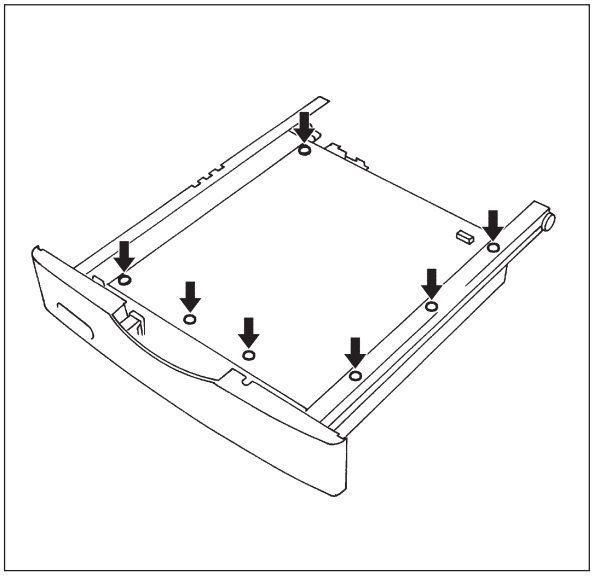

13.5.2 Transport system

[A] ADU vertical transport roller, exit roller and EXIT/ADU selection gate

(1) Open the front cover and clamshell. To remove the ADU exit unit, open the unit and remove the screw of the unit's pivot bracket located at the rear. Remove the bracket.

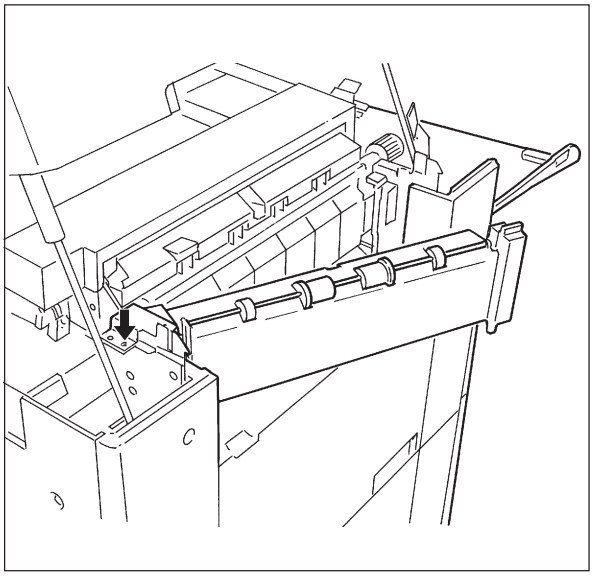

(2) Lift the rear side of the unit and pull out the pivot.

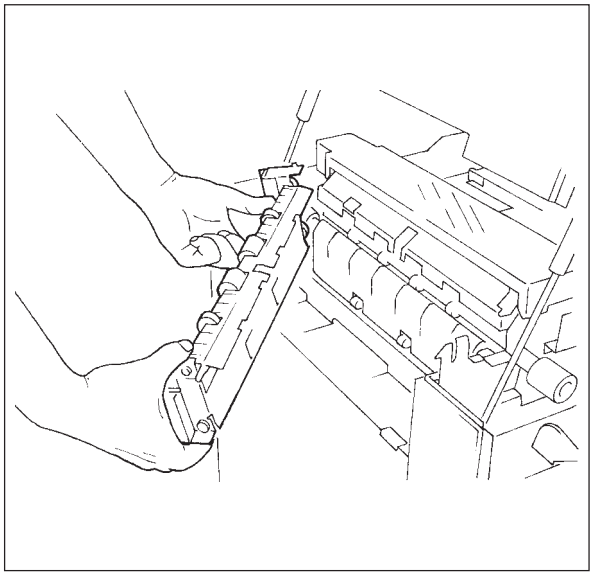

(3) Take out two screws from the ADU exit unit and remove the vertical transport guide unit.

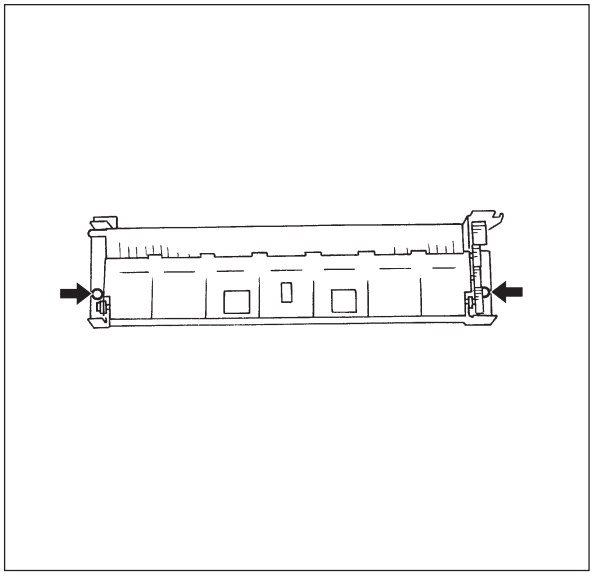

(4) To take out the vertical transport roller, remove the stop-ring and bushing at the front, and the gear and bushing at the rear.

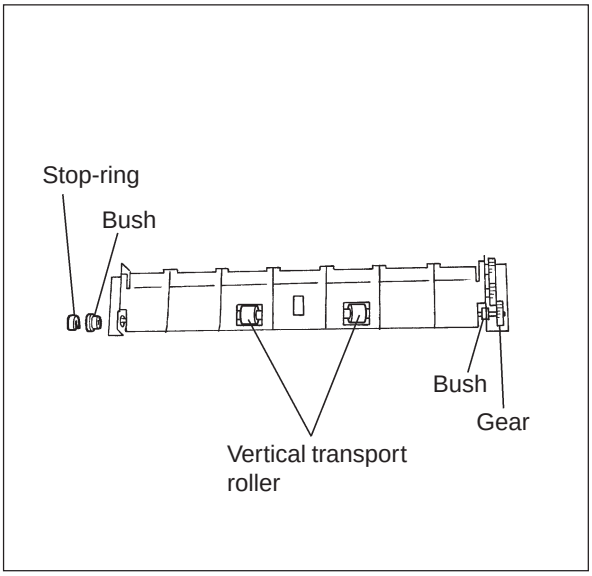

(5) To take out the EXIT/ADU selection gate and exit roller, remove the stop-ring and bushing at the front, and the gear and bushing at the rear, from the exit roller of ADU exit unit whose vertical transport guide unit has already been extracted.

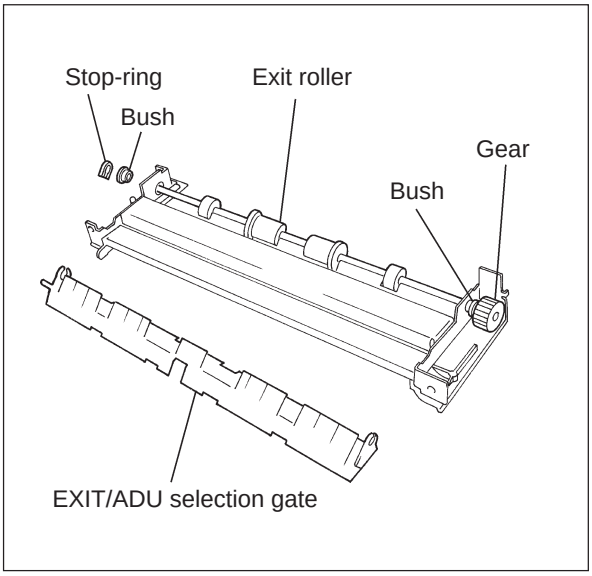

[B] Transport rollers 1, 2 and 3

(1) Take out the upper paper guide by removing its two screws.

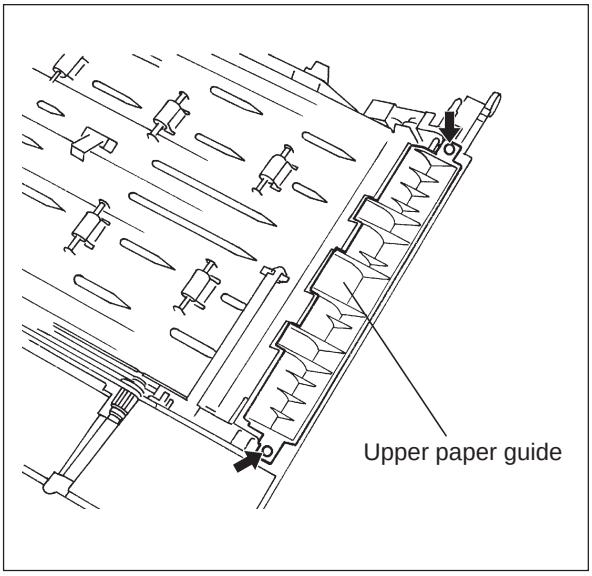

(2) Remove the stop-ring securing the open guide stopper.
Take out the open guide stopper from the open guide (lower) while pushing it toward the rear.

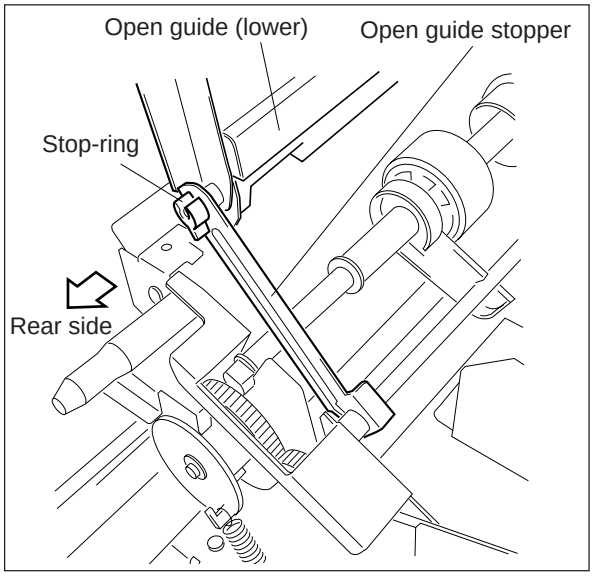

(3) To remove the open guide units (upper and lower), remove the stop-ring (front and rear, 1 each) and the snap pin (rear), push the units toward the rear to have the front stud disengaged, and then take out the units toward the front.

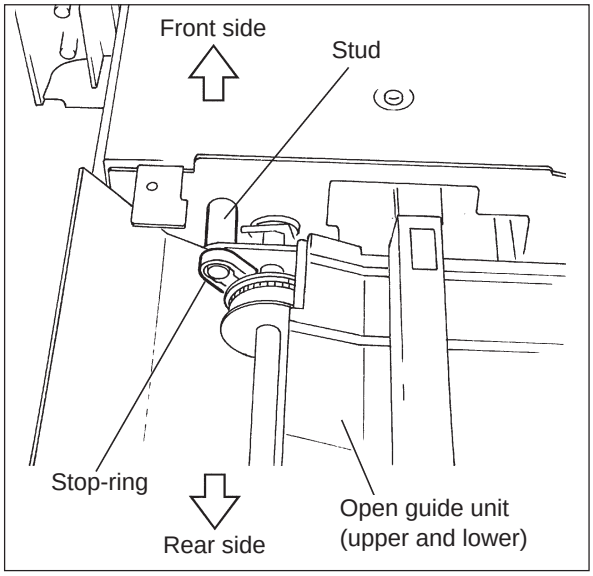

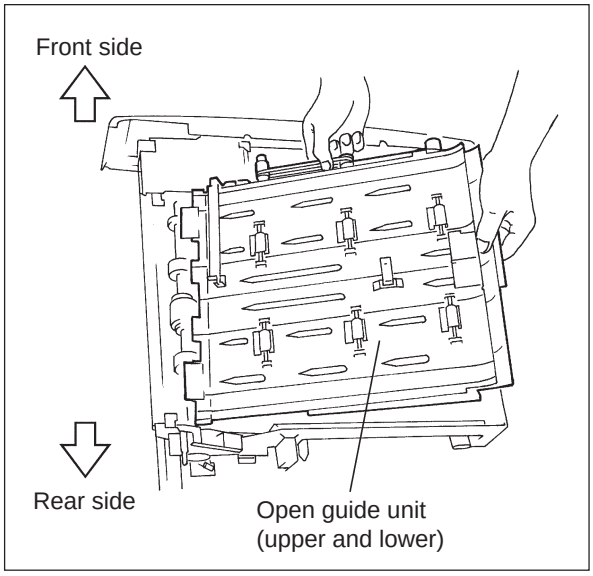

[B-1] Removing the transport roller 1

(1) Remove the open guide unit (lower), and two stop-rings, guide roller, gear, pulley, pin and bushing at the front.
(2) Remove the stop-ring and bushing at the rear.
(3) Remove the timing belt, bring the transport roller 1 near to the front and then take it out toward the rear.

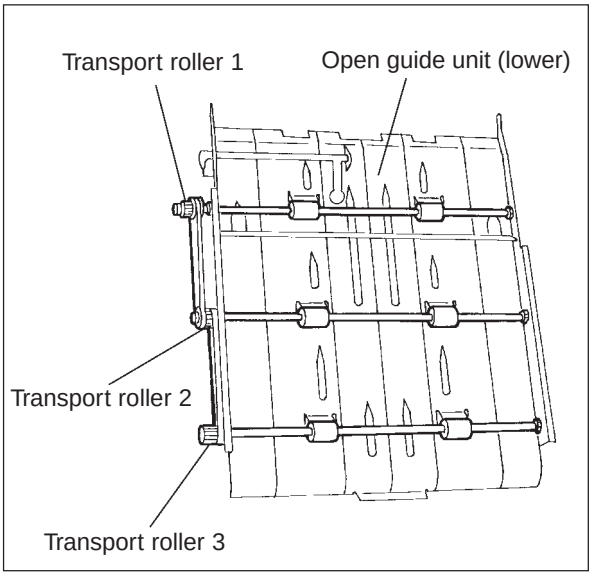

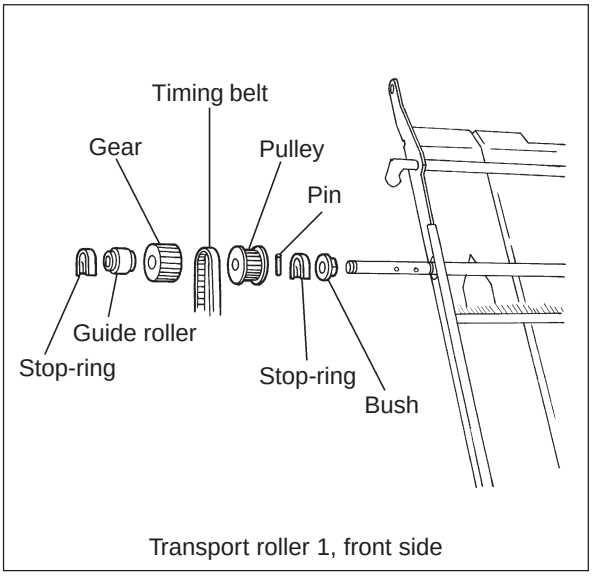

Transport roller 1, front side

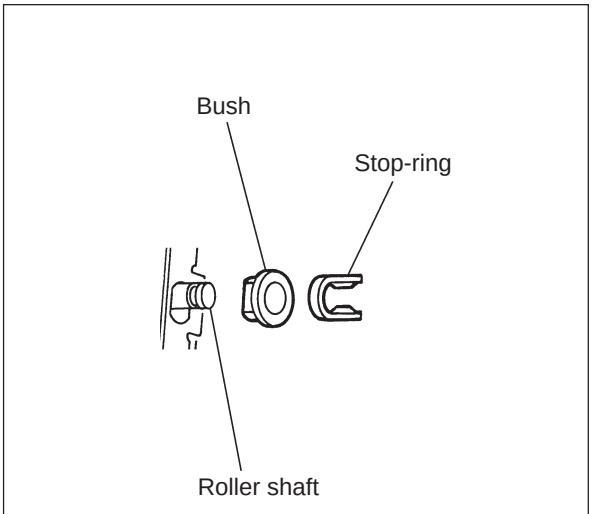

Transport roller 1, 2, 3, rear side

[B-2] Removing the transport roller 2

(1) Remove the open guide unit (lower), and the stop-ring, two pulleys, two pins and bushing at the front.
(2) Remove the stop-ring and bushing at the rear.
(3) Remove the timing belt, bring the transport roller 2 near to the front and then take it out toward the rear.

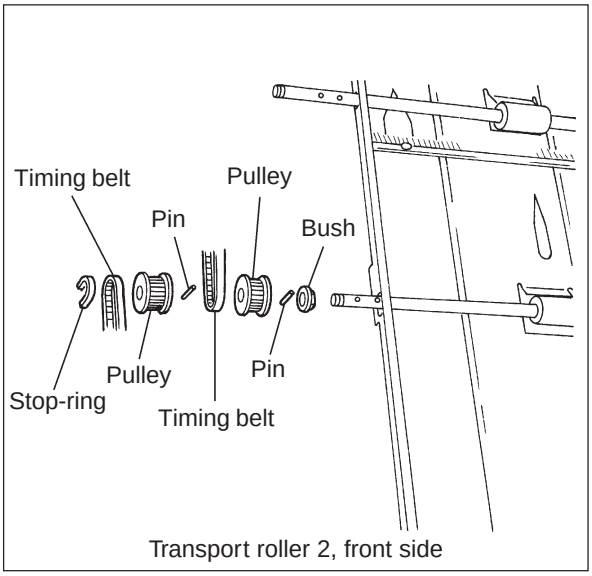

Transport roller 2, front side

[B-3] Removing the transport roller 3

(1) Remove the open guide unit (lower), and the stop-ring, pulley, pin and bushing at the front.
(2) Remove the stop-ring and bushing at the rear.
(3) Remove the timing belt, bring the transport roller 3 near to the front and then take it out toward the rear.

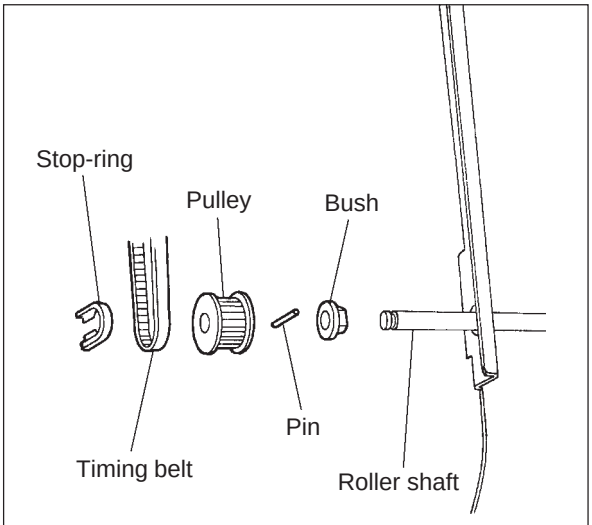

Transport roller 3, front side

[C] ADU pick-up roller

(1) Take out the upper paper guide by removing two screws.
Take out the open guide stopper from the open guide after removing one stop-ring.
(2) Take out the open guide unit (upper and lower) by removing two stop-rings and one snap pin.
(3) Remove the stacker from the pick-up roller shaft.
(4) Remove the stop-ring on each end of the ADU pick-up roller shaft and the gear at the front, and push the bushing to the inside.
(5) Remove the four pick-up roller guides from the pick-up roller shaft by pushing them downward, and lift the rear end of the shaft.

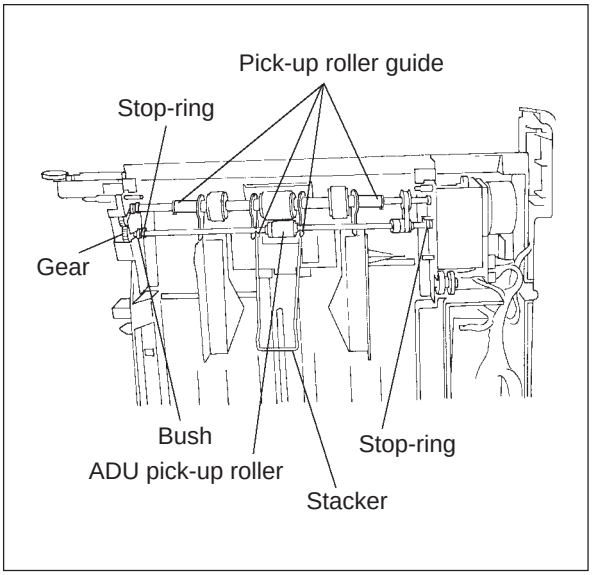

(6) Remove the bushing from the rear end of the pick-up roller shaft and the stop-ring at the rear of the pick-up roller. Then, take the pick-up roller out toward the rear.

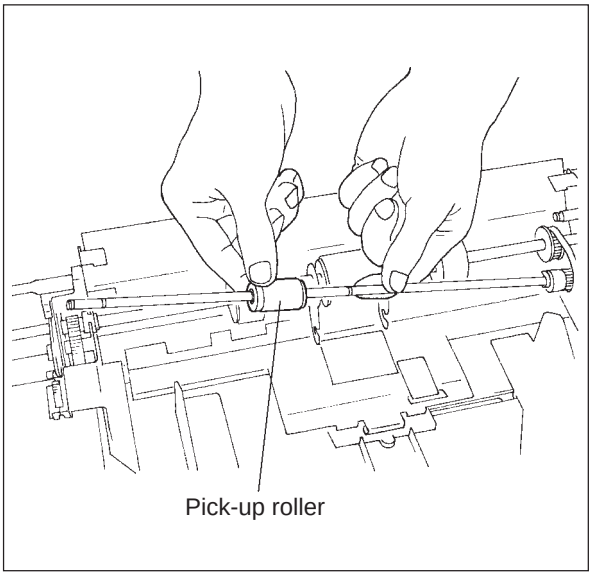

[D] ADU stack/feed rollers (Main and sub)

(1) Take out the upper paper guide by removing two screws.
Take out the open guide stopper from the open guide (lower) after removing one stop-ring.

(2) Remove the open guide units (upper and lower) by removing two stop-rings and one snap-ring.

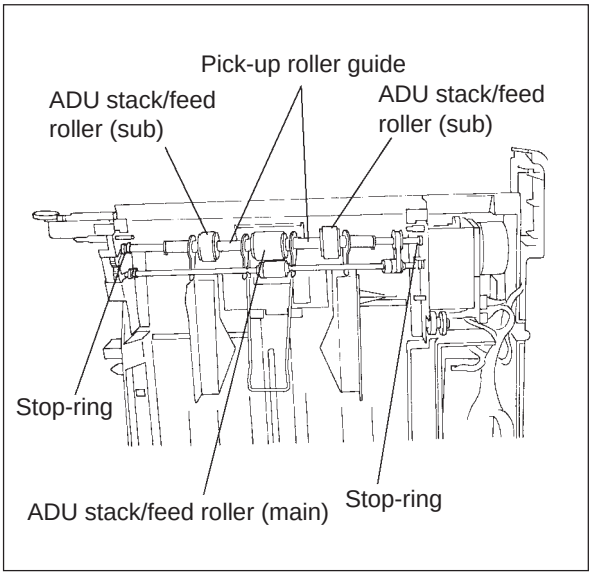

(3) Remove the stop-ring on each end of the ADU stack/feed roller shaft, and push the bushing toward the inside.

(4) Remove the four pick-up roller guides from the pick-up roller shaft by pushing them downward. Then, lift the rear end of the shaft.

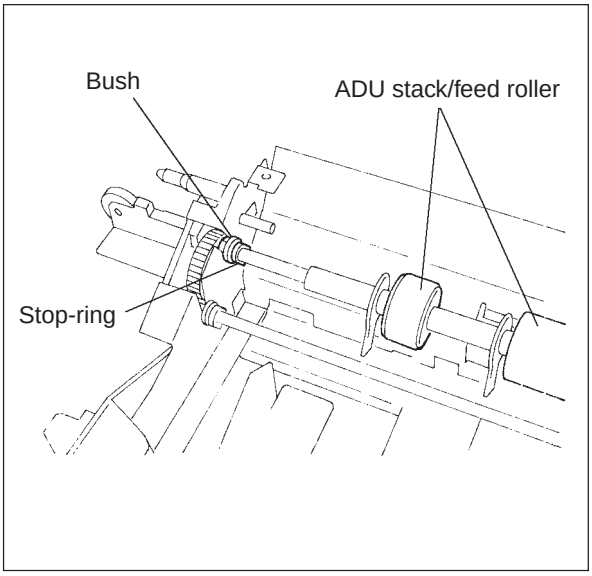

(5) Remove the bushing from the rear end of the stack/feed roller shaft, and the stop-ring and pick-up roller guide at the rear.

(6) After removing the front stop-ring, move the roller and the entire guide toward the front and remove the pin.

(7) From the rear, take out the sub-stack/feed roller, pick-up roller guide, pin and main stack/feed roller, pick-up roller guide, pin and sub-stack/feed roller in this order.

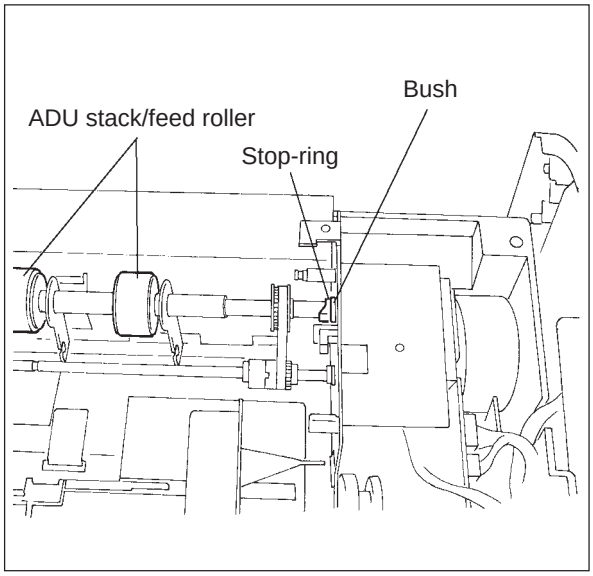

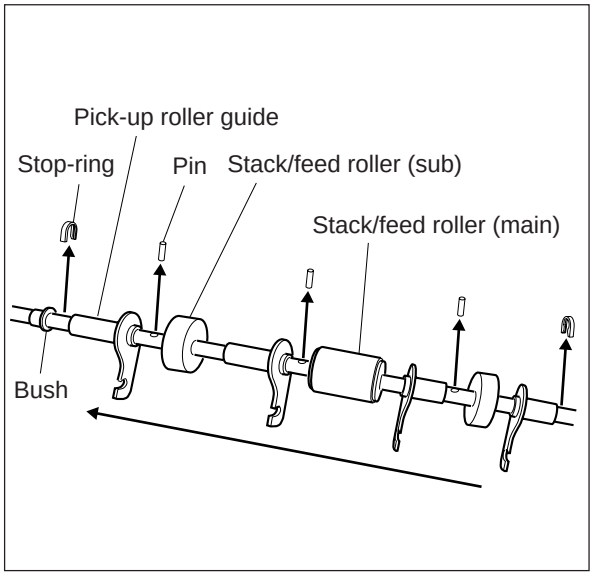

[E] ADU separation roller

(1) Remove the two screws of the ADU separation roller.

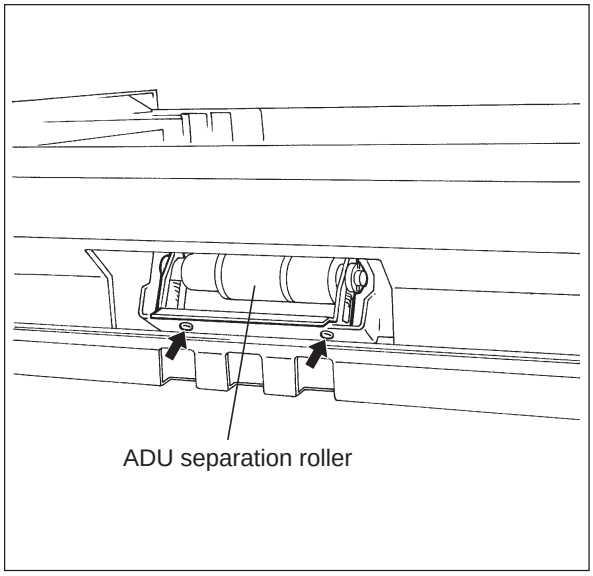

(2) Take out the unit toward the feed side.

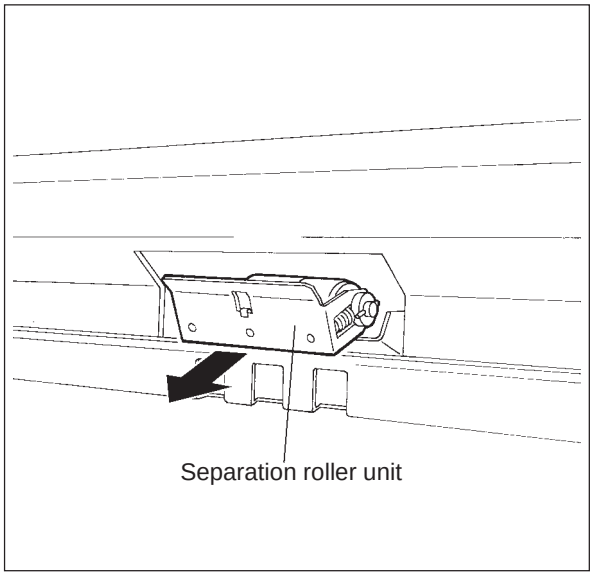

(3) Remove the stop-ring, pull out the shaft, and take out the separation roller.

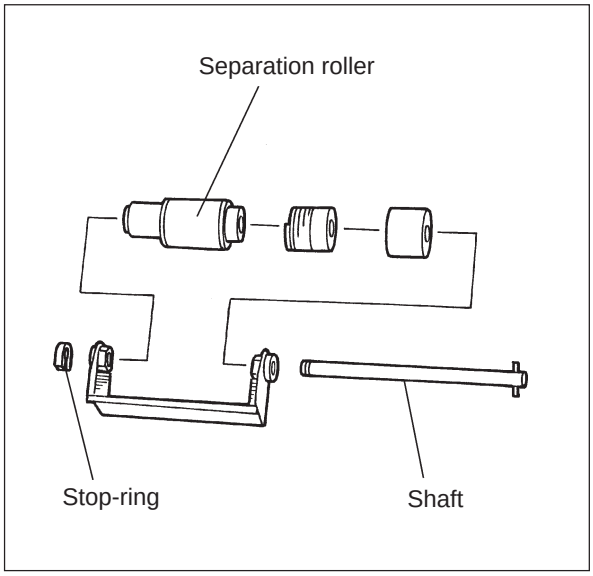

13.5.3 Drive system

[A] ADU motor

(1) Remove the upper paper guide by unscrewing two screws.
Take out the open guide stopper from the open guide (lower) after removing one stop-ring.

(2) Take out the open guide unit (upper and lower) by removing two stop-rings and one snap pin.

(3) Remove the motor cover by unscrewing a screw.

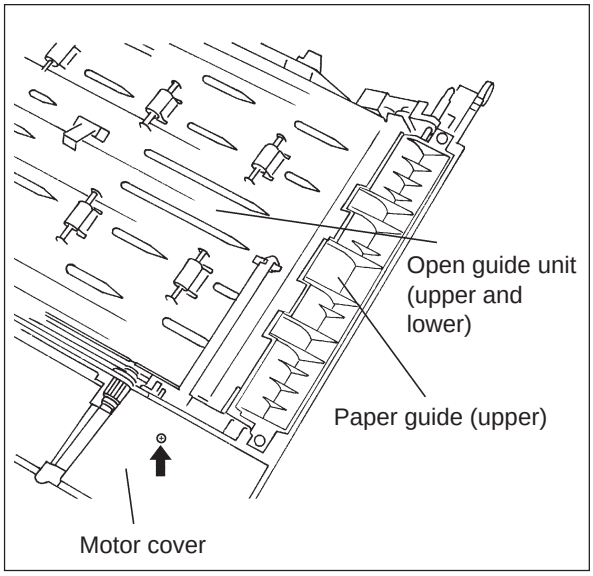

(4) Remove the spring on the rear.

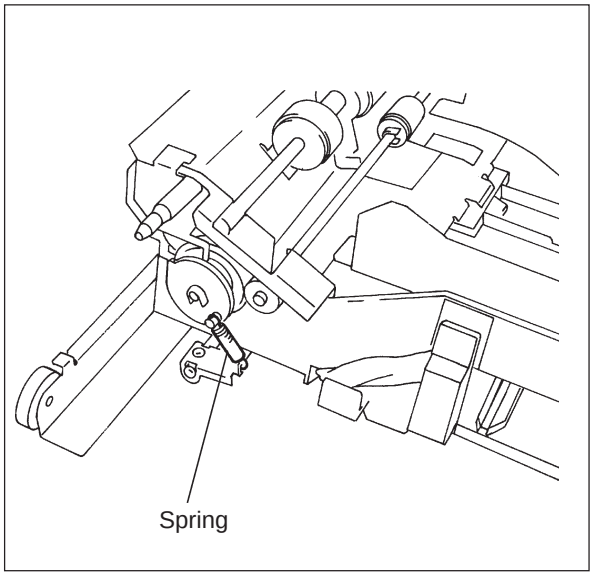

(5) Move the side guides toward the center. Take out the ADU feed unit by unscrewing four screws.

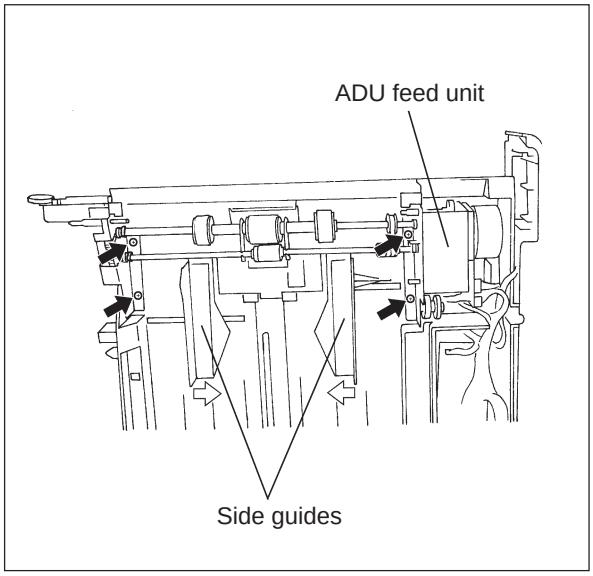

(6) Remove two screws and take out the ADU motor.

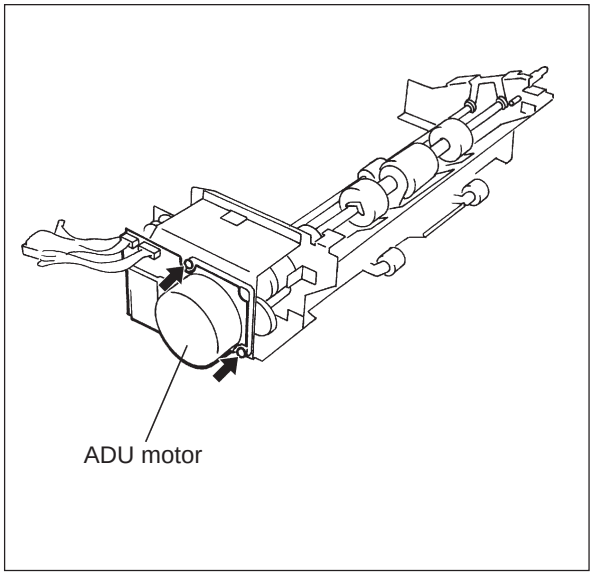

[B] Feed clutch and stack clutch

(1) Remove the ADU motor bracket from the ADU feed unit by unscrewing four screws.

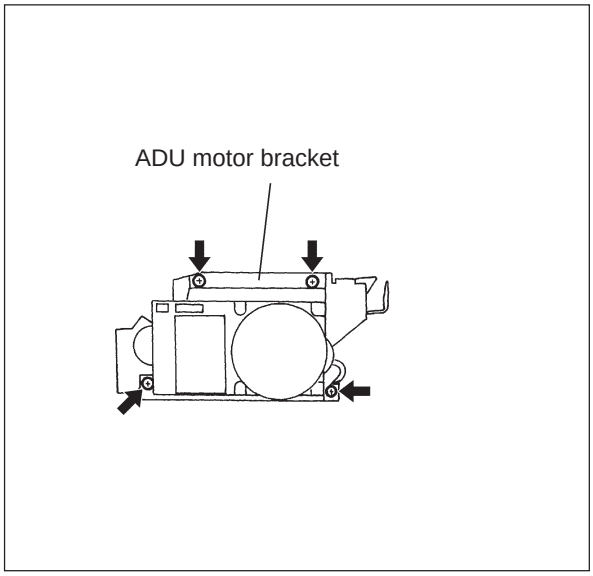

(2) Remove the switch bracket by unscrewing a screw.

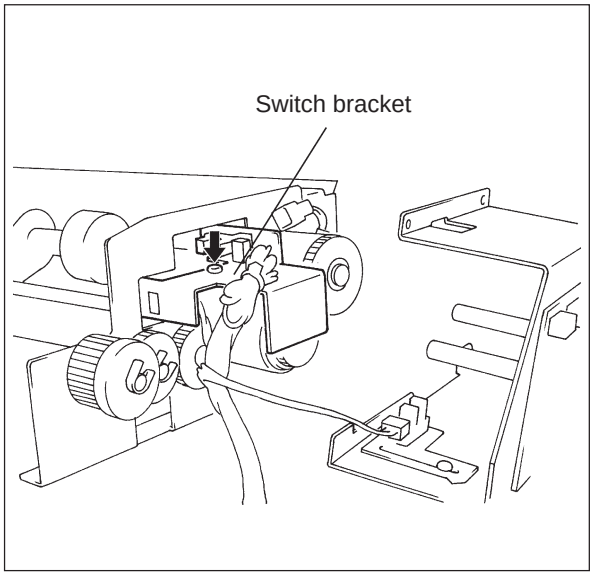

(3) Disconnect the connectors of the feed clutch and stack clutch. Loosening two setscrews of each of the feed and stack clutches, take them out from their shafts.

(4) Align the end surface of the shaft and clutch, then securely tighten the two setscrews at this position when reassembling the feed and stack clutches.

* Make a gap of approx. 0.5 mm between the feed clutch and the gear, and also between the stack clutch and the bush.

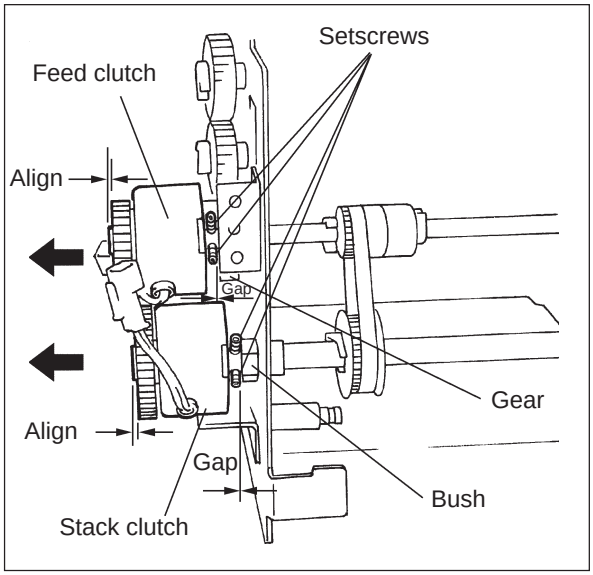

[C] Gate solenoid

(1) Remove the gate cover and motor cover by unscrewing each screw.

(2) Disconnect the gate solenoid connector and take out the gate unit by removing two screws.

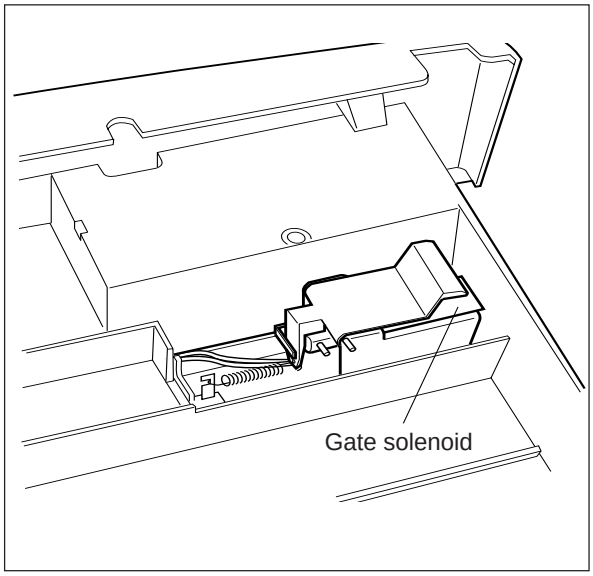

(3) Remove the gate solenoid by unscrewing two screws.

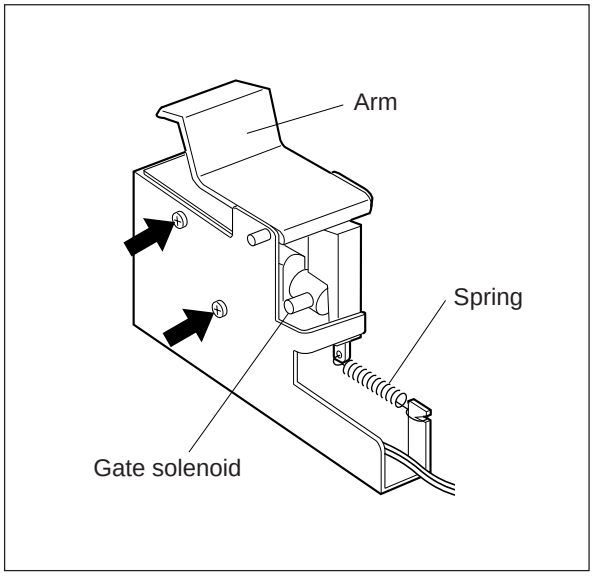

[D] Side motor and end motor

(1) Place the ADU upside down.

(2) Remove the lower cover by unscrewing 7 screws.

(3) Unscrew two screws, take out the timing belt, and remove the side motor bracket.

(4) The end motor can be removed by the same procedure.

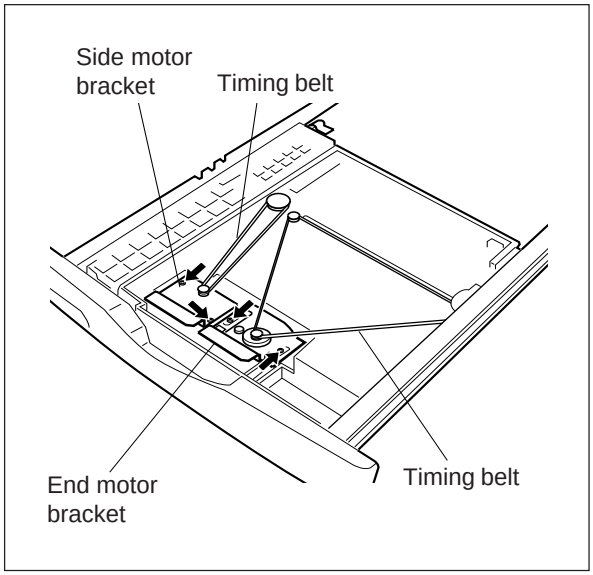

(5) Remove the side motor and the end motor from their brackets by unscrewing two screws for each.

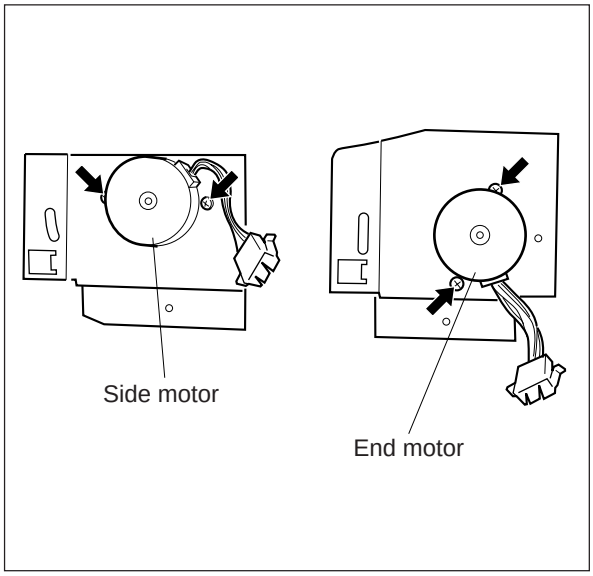

(6) Fix the side motor bracket at the position of 21 ± 0.5 mm from the case when reassembling.

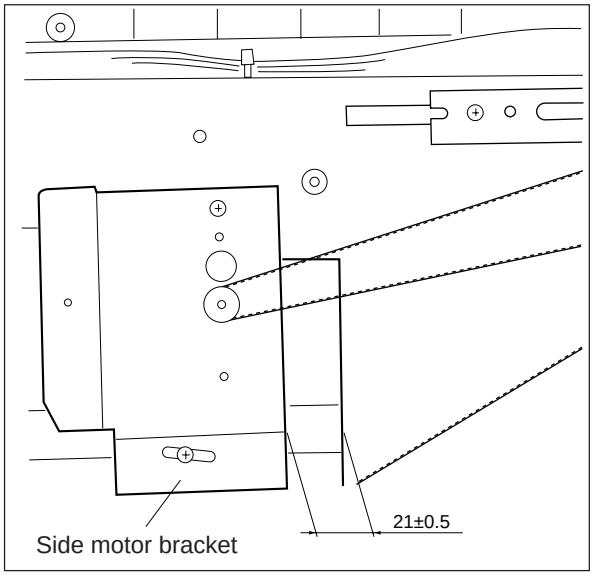

13.5.4 Various switches

[A] Jam switch and empty switch

(1) Remove the ADU feed unit.
(2) Remove the switch bracket.
(3) Unlatch the claws of the switches.
(4) Disconnect the connector.

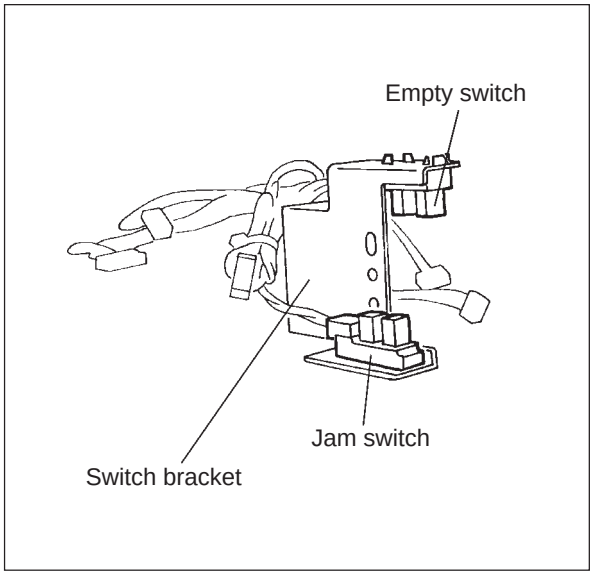

[B] Side switch

(1) Remove the ADU feed unit.
(2) Remove the ADU motor bracket.
(3) Disconnect the connector.
(4) Remove the guide switch bracket from the ADU motor bracket by unscrewing a screw.

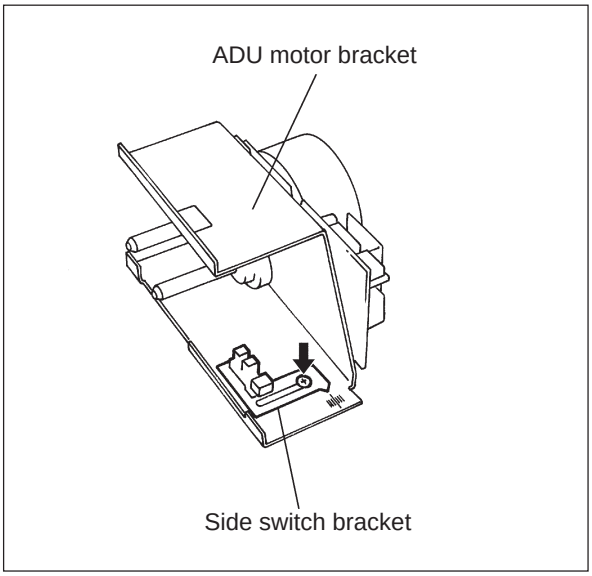

(5) Unlatch the claws of the switch.

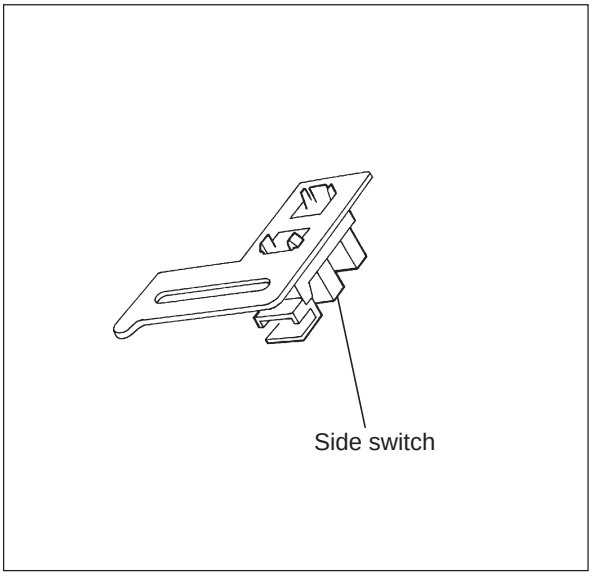

[C] End switch

(1) Remove the upper paper guide and the open guide units (upper and lower).
(2) Place the ADU upside down and remove the lower cover.
(3) Remove the rail guide.

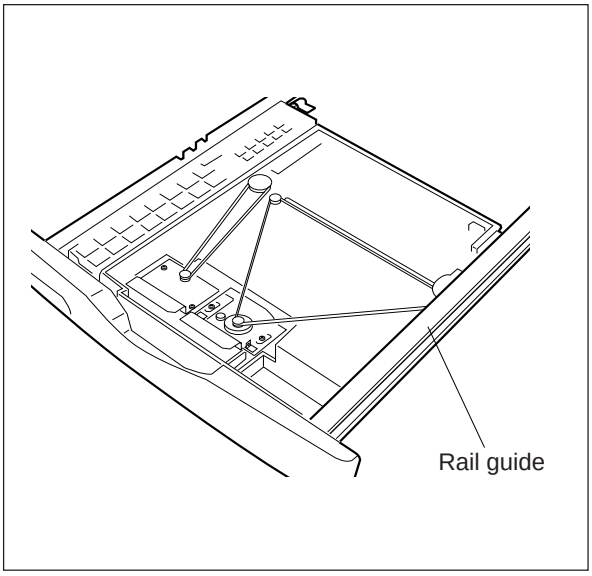

(4) Disconnect the switch connector and unlatch the claws of the switch.

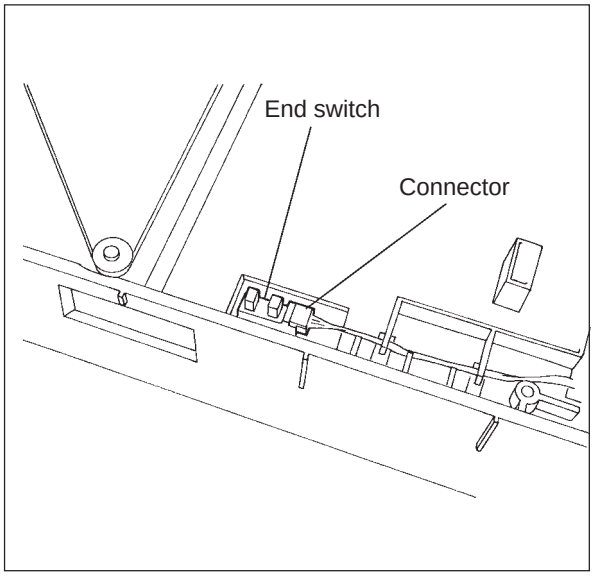

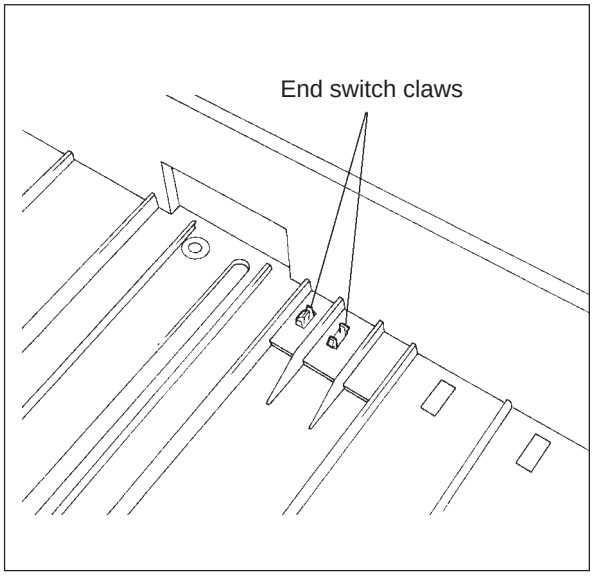

13.6 Symbols and Functions of Electrical Parts

13.6.1 Motors (M)

Symbol	Abbreviation	Function	Remarks
DM1	ADU-MOT (ADU motor)	Drives paper transport rollers.	Blushless motor
DM2	END-MOT (End motor)	Drives the end guide in the stack section.	Pulse motor
DM3	SID-MOT (Side motor)	Drives the side guides in the stack section.	Pulse motor

13.6.2 Solenoids

Symbol	Abbreviation	Function	Remarks
SOL1	STSOL (Gate solenoid)	Used to open and close the gate.	

13.6.3 Clutches

Symbol	Abbreviation	Function	Remarks
CLT1	FEDCLT (Feed clutch)	Used for paper re-feeding.	
CLT2	STCLT (Stack clutch)	Used for stacking operation.	

13.6.4 Switches and sensors

Symbol	Abbreviation	Function	Remarks
SA1	END-SW (End switch)	Detects the end guide position in the stack section.	Semiconductor sensor
SA2	SID-SW (Side switch)	Detects the side guide position in the stack section.	Semiconductor sensor
SA3	EMP-SW (Empty switch)	Detects when the ADU cassette runs out of paper.	Semiconductor sensor
SA4	JAM-SW (Jam switch)	Detects the passage of paper through the guide up to the stack section.	Semiconductor sensor

13.7 Layout for Electrical Parts

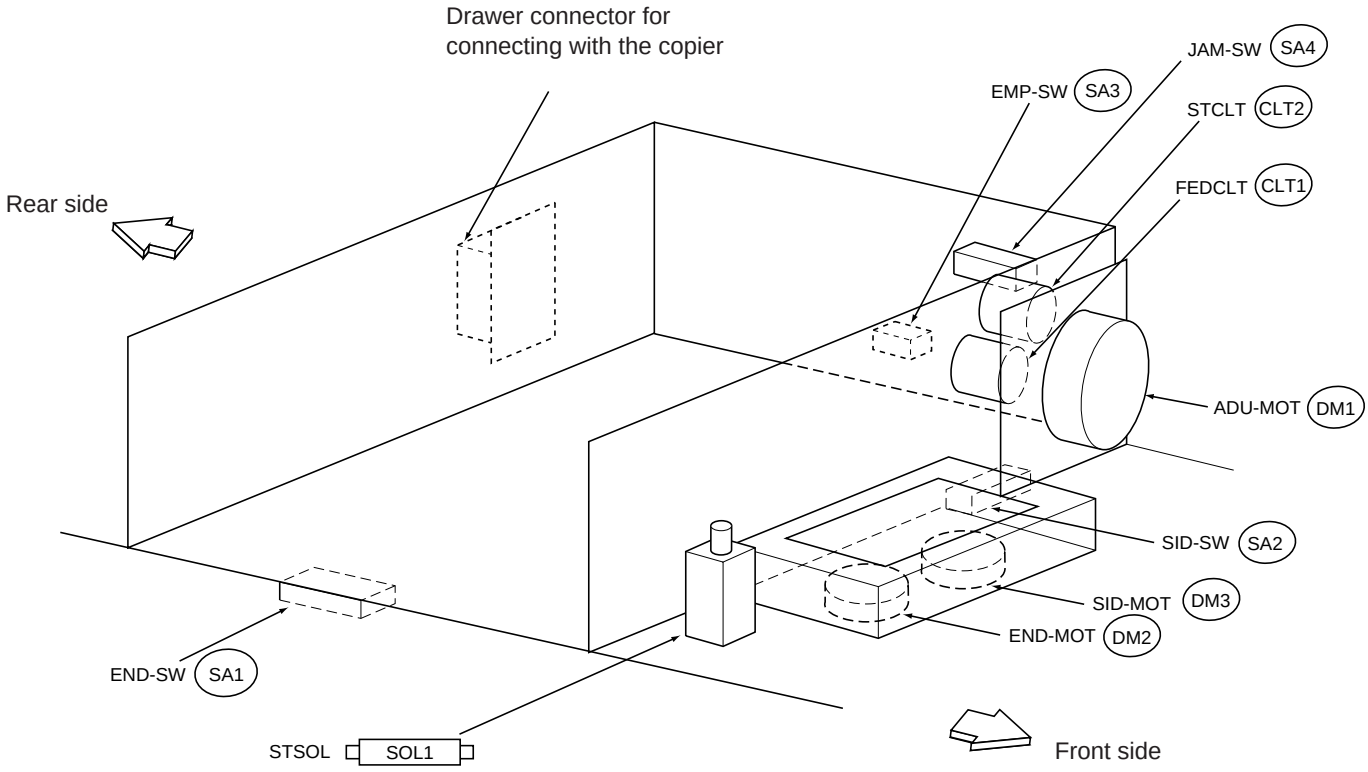

13.8 Description of Operation

13.8.1 General operation

(1) Initializing

When the power switch is turned on or when the front cover is opened/closed or when the ADU is pulled out/pushed in, this operation is performed.

(2) Stacking operation

This is an operation in which sheets of paper fed from the cassette and copied on their surface (first side) are sent into the ADU stack section and stacked there.

(3) Duplex copying

Sheets of paper which have been copied on their first sides are automatically sent into the copier and copied on their reverse surface (second side).

(4) ADU paper feeding

This operation causes sheets of paper to be fed from the ADU into the copier.

13.8.2 Description of each operation

[A] Initializing

[A-1] Initializing when the power switch is turned on

(1) When the power switch is turned on, the end motor (END-MOT) (DM2) rotates to move the end guide in the stack section to its home position.

(2) The side motor (SID-MOT) (DM3) rotates to move the side guides to their home position.

[A-2] Initializing when the copier's front cover is opened/closed

(1) The operation in step (1) above is performed.

[A-3] Initializing when the ADU is pulled out/pushed in

(1) The end motor (END-MOT) (DM2) rotates to move the end guide to its home position once, then moves it to the position corresponding to the selected size of paper.

(2) The side motor (SID-MOT) (DM3) rotates to move the side guides to their home position once, then moves them to the position corresponding to the selected size of paper.

[B] Stacking operation

(1) When the [PRINT] key is pressed, the SID-MOT (DM3) and END-MOT (DM2) are rotated to move the side and end guides to the position corresponding to the specified size of paper, and the ADU-MOT (DM1) is rotated clockwise to transport the paper. STSOL (□ SOL 1 □) is energized to position the EXIT/ADU selection gate in the direction of stacking, and STCLT (CLT2) is energized to rotate the ADU transport rollers in the direction of stacking.

(2) Jam detection inside the ADU is performed as follows:
JAM-SW (SA4) is checked if it is turned on within a specified period of time after the copied paper turned on the copier's exit switch. The switch is also checked if it is turned off within a specified period of time after the exit switch was turned off by the paper.

(3) Each time five sheets of paper are stacked in the ADU, the side motor (SID-MOT) (DM3) is rotated to move the side guides so that the sheets stacked are aligned, then the side guides are returned to their previous position.

(4) The above procedure (2)~(3) is repeated until the specified number of copies are made.

(5) After the final sheet is stacked in the ADU stack section, STSOL (SOL 1), STCLT (CLT2) and ADU-MOT (DM1) are turned off.

[C] Feeding from ADU

(1) When the PRINT key is pressed, the SID-MOT (DM3) is rotated to move the side guides to the specified size of paper and ADU-MOT (DM1) is rotated clockwise and FEDCLT (CLT1) is turned on, causing the ADU feed roller and pick-up roller to rotate.

(2) Due to the operation in (1), the ADU tray is raised, causing the copy paper to come into contact with the pick-up roller for paper feeding.

(3) A sheet of paper is fed out of the ADU and transported toward the copier's aligning roller.

(4) When the sheet pushes the copier's paper transport switch on, FEDCLT (CLT1) is turned off, causing the pick-up roller and feed roller to stop rotating.

(5) Then, the copier's aligning roller starts rotating, and the copying process commences.

(6) The above procedure (2)~(5) is repeated until the specified number of copies are made. When copies are finished, ADU-MOT (DM1) is stopped rotation.

[D] Duplex copying

(1) When the first-side copying operation is started, ADU-MOT (DM1) is rotated, and the side and end guides are moved to the position of specified paper size by the SID-MOT (DM3) and END-MOT (DM2).

Additionally, the STSOL (SOL 1) and the STCLT (CLT2) are turned on in the same way as the [B] Stacking operation.

(2) The first-side copied sheet is transported into the ADU from the copier exit switch and gate sections, and then stacked through the JAM-SW (SA4).

The ADU inside jam symbol comes on when the JAM-SW (SA4) is not turned on within a specified time after the copier exit switch is turned on, or the JAM-SW is not turned off within a specified time after the copier exit switch is turned off.

(3) Each time five sheets of paper are stacked, the stacked sheets are aligned by the side motor SID-MOT (DM3) moving the side guides.

(4) The above procedure (2)~(3) is repeated until the specified number of sheets are stacked.

(5) The final sheet is stacked in the ADU, and then STSOL (SOL 1) and STCLT (CLT2) are turned off.

(6) When the RADF is not used, ADU-MOT (DM1) is stopped once to turn over the original. After turning over the original, ADU-MOT (DM1) is rotated again to make a copy of the next original in step 7 or later.

When the RADF is used, ADU-MOT (DM1) is not stopped since the original is turned over continuously.

(7) When the second-side copying is started, the side guides are moved by the SID-MOT (DM3) to the specified size position.

(8) When the FEDCLT (CLT1) is turned on, the ADU paper feed tray is lifted up, and also the pickup and feed rollers are driven, then one sheet of paper is separated and fed.
When the sheet reaches the copier's transport switch, the FEDCLT (CLT1) is turned off.
The ADU feed jam symbol comes on when the copier's transport switch is not turned on within a specified time after the FEDCLT (CLT1) is turned on.

(9) The above step (8) is repeated until the specified number of copies are made. After copying has been finished, ADU-MOT (DM1) is stopped.

13.8.3 Meaning of signals

Signal name	Meaning of signals		Remarks
	"L" LOW level	"H"HIGH level	
FEDCLT	Paper feeding from ADU	–	
STCLT	Paper stacking in ADU	–	
STSOL (Gate solenoid)	ADU stacking Send paper into ADU	Normal paper existing	
JAM-SW (Jam switch)	No paper on ADU stack path	Paper on ADU stack path	
EMP-SW (Empty switch)	No paper in ADU stack section	Paper in ADU stack section	
SID-SW (Side switch)	–	Side guide home position (Photosensor shielded)	L: Off H:On
END-SW (End switch)	–	End guide home position (Photosensor shielded)	L: Off H: On

13.8.4 Detection of abnormal status

When an abnormal condition is detected inside the ADU, a symbol corresponding to the condition is shown on the copier's control panel. The following kinds of abnormal status may be encountered:

(1) Abnormal statuses which can be cleared without pulling out/pushing in the ADU:
- Paper misfeeding which occurs while paper is being fed from the stack section.

(2) Abnormal statuses which can be cleared by pulling out/pushing in the ADU:
- Paper misfeeding in the paper stack section.

(3) Abnormal statuses which can be cleared only by turning off/on the copier's power switch:
- When the side guides or end guide cannot be initialized to their correct positions.

[A] Paper misfeeding

(1)Paper misfeeding during duplex copying:

While paper is fed from the ADU, if the copier's P-STP-SW is not turned on within about 1 sec. after FEDCLT (CLT1) was energized, it is judged that paper misfeeding has occurred during ADU paper feeding, and a paper misfeed symbol is displayed. This condition can be cleared by opening/closing the copier's side cover.

(2)Paper misfeeding during paper stacking:

During paper stacking, if the ADU's JAM-SW (SA4) is not turned on within about 3 sec. after the copier's EXIT-SW was turned on/off, it is judged that paper misfeeding has occurred inside the ADU. To clear this condition, pull out the ADU, remove the misfed sheet, then push in the ADU. (If necessary, open/close the copier's front cover.)

[B] Abnormal statuses at power on

(1)Paper remaining in the stack section at power on:

If a sheet of paper is left in the stack section when the power is turned on, a symbol indicating that paper is still there is displayed on the copier's control panel when the duplexing mode is selected. This mode cannot be started until the paper is removed.

(2)Misfed paper remaining inside the ADU when the power is turned on:

If a misfed sheet of paper remains on the ADU's paper path when the power is turned on, the ADU misfeed symbol is shown. To clear this condition, pull out the ADU, remove the misfed sheet and then push in the ADU. (If necessary, open/close the copier's front cover.)

[C] "Serviceman Call" errors

(1)The paper side guides and end guide cannot be initialized :

During the initialization of the SID-MOT (DM3) and END-MOT (DM2) , if the respective home switch positions are not detected, a message will be displayed indicating that the ADU cannot function.

13.8.5 Flow charts

[A] General flow charts

(1) Duplex copying from single-sided originals

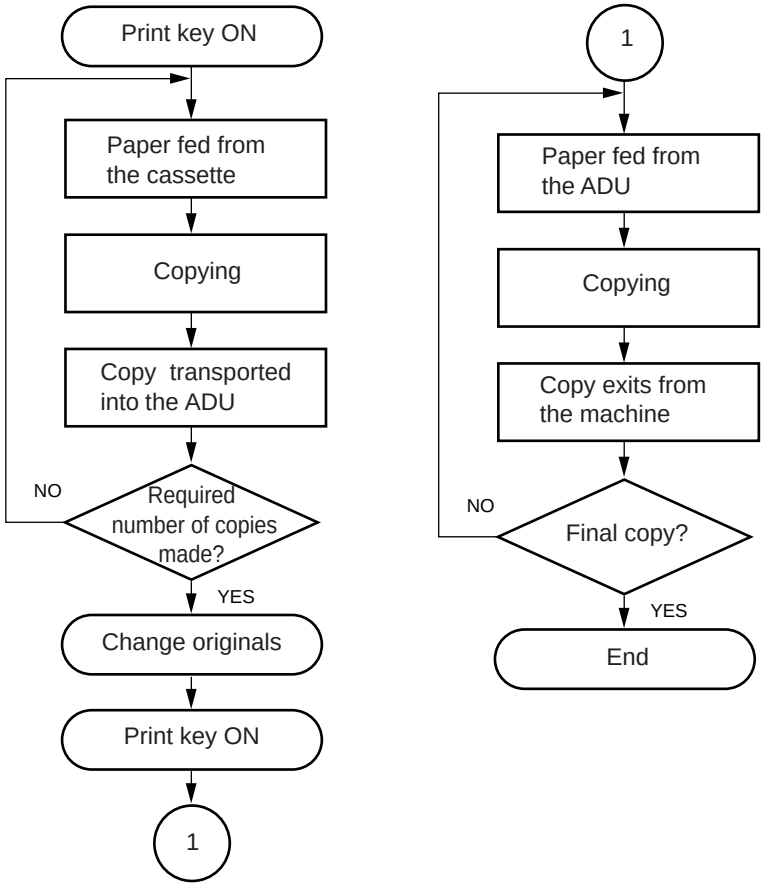

(2) Duplex copying from single-sided originals through ADF

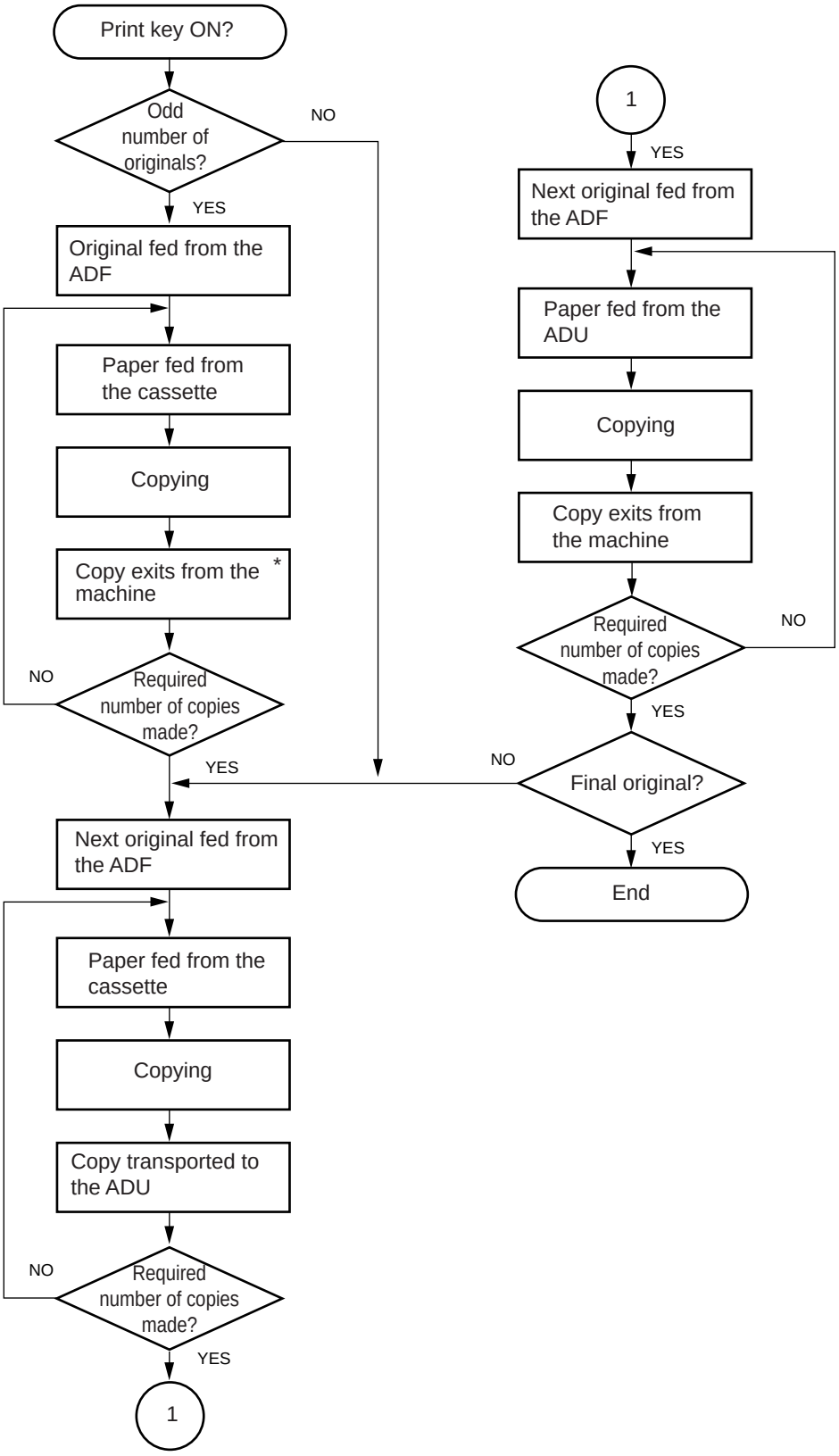

(3) Duplex copying from two-sided originals

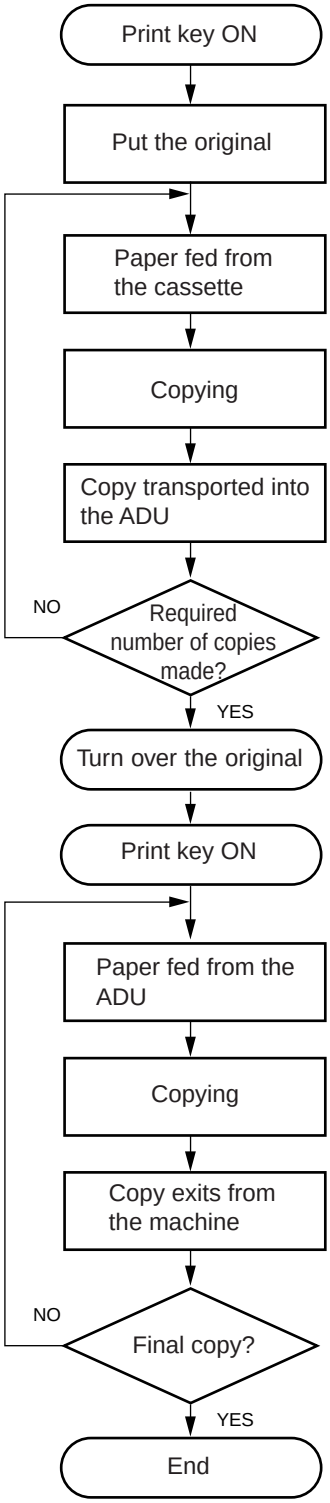

(4) Duplex copying from two-sided originals through RADF

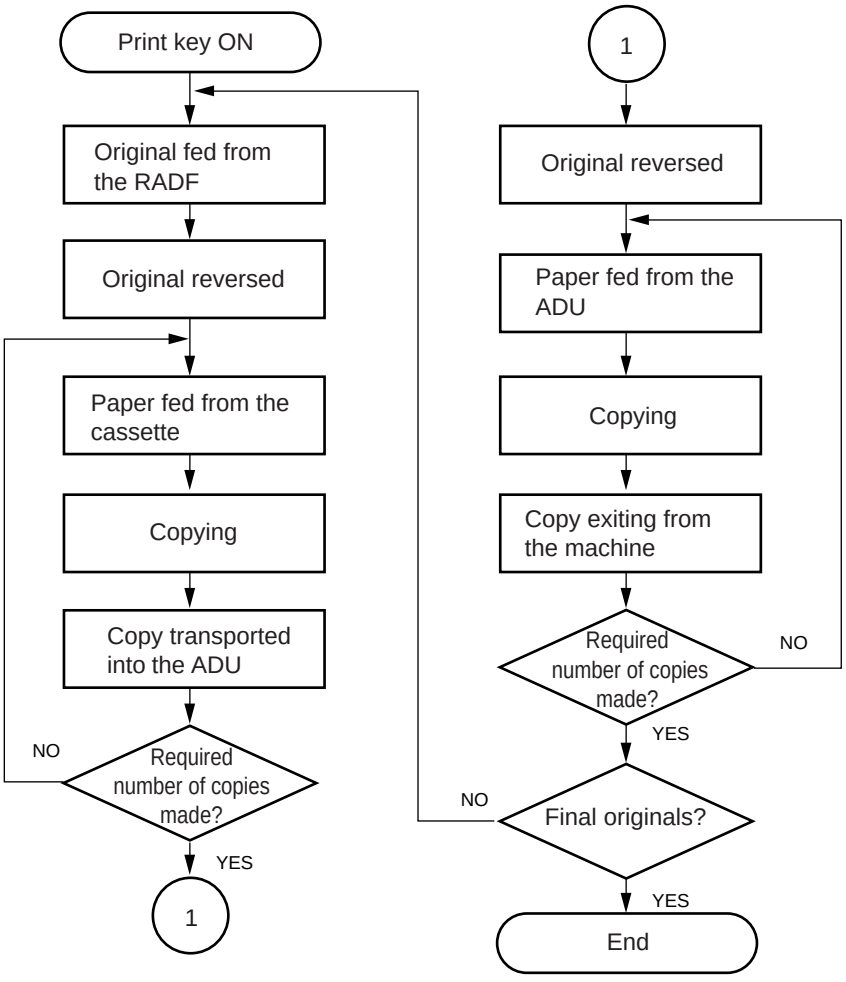

(5) Duplex copying from two-page originals

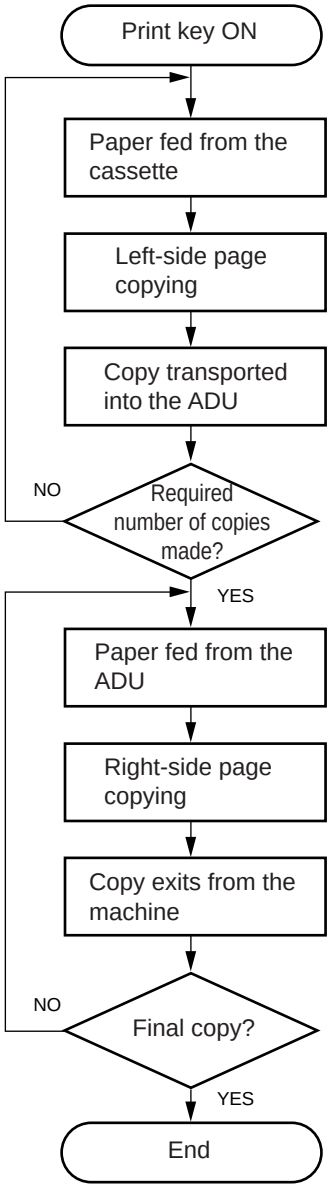

(6) Duplex copying from book originals

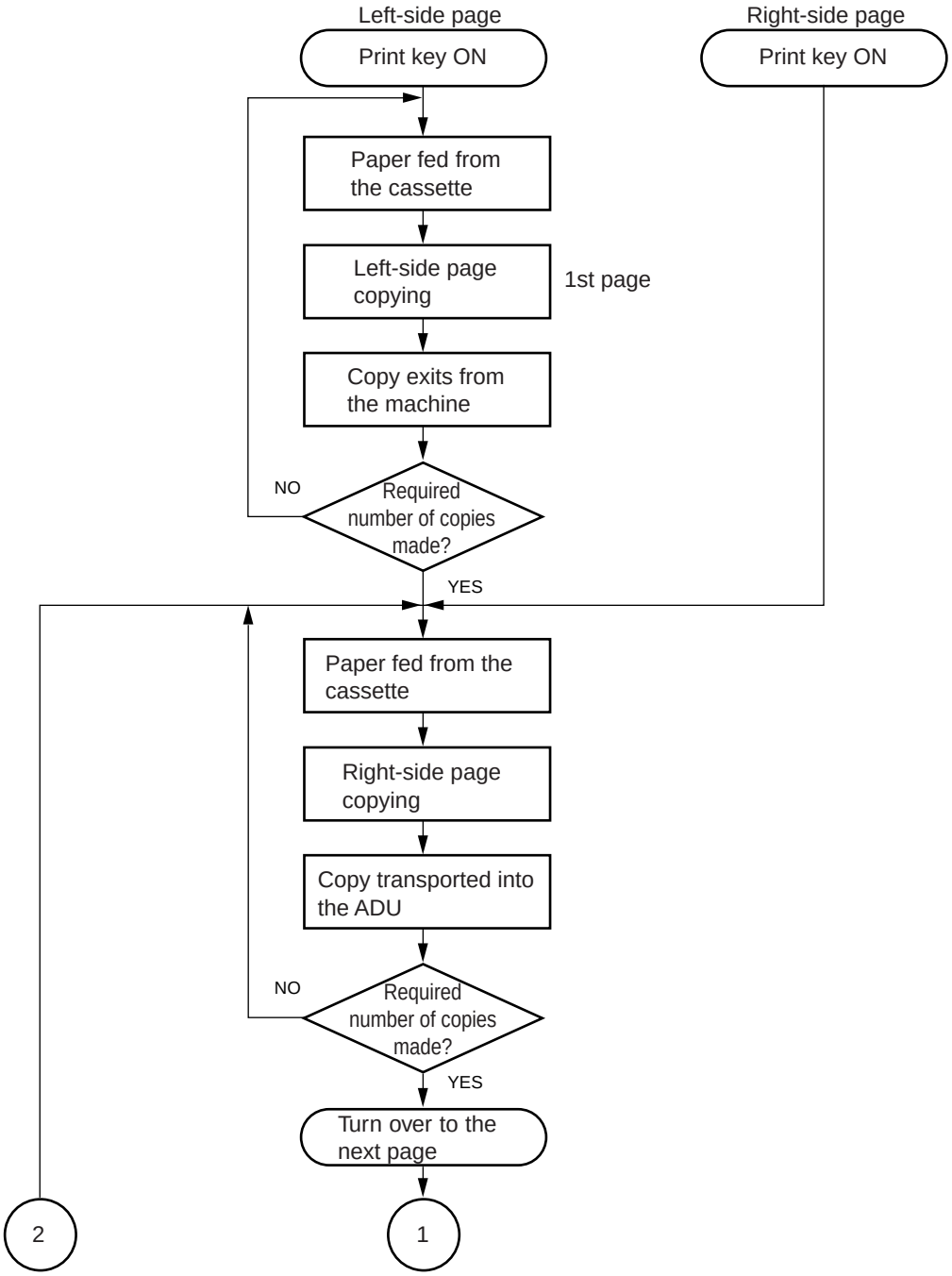

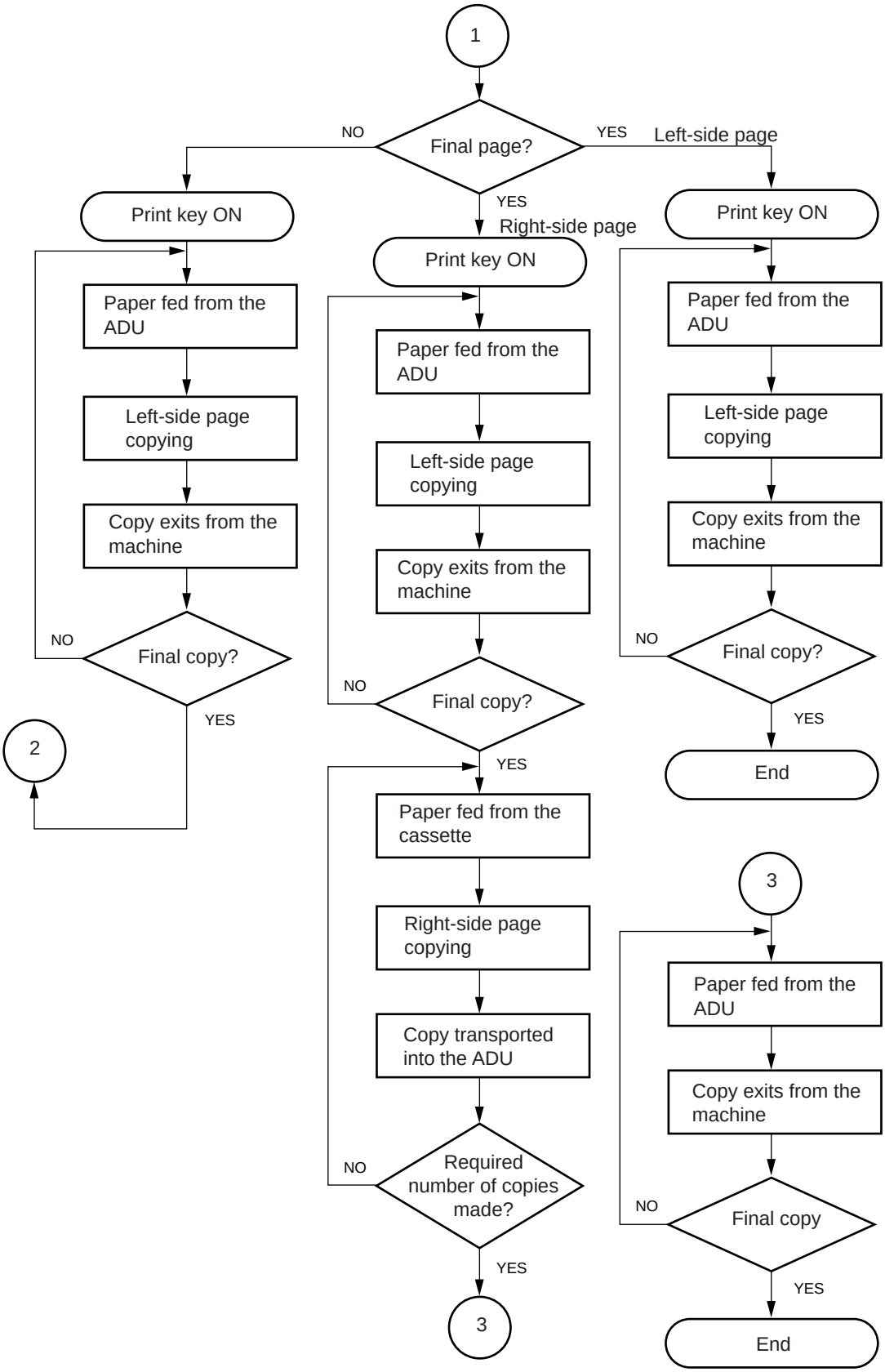
1
Final page?
NO
YES
Left-side page
YES
Right-side page
Print key ON
Paper fed from the ADU
Left-side page copying
Copy exits from the machine
Final copy?
NO
YES
2
Print key ON
Paper fed from the ADU
Left-side page copying
Copy exits from the machine
Final copy?
NO
YES
End
Print key ON
Paper fed from the ADU
Left-side page copying
Copy exits from the machine
Final copy?
NO
YES
Paper fed from the cassette
Right-side page copying
Copy transported into the ADU
Required number of copies made?
NO
YES
3
3
Paper fed from the ADU
Copy exits from the machine
Final copy
NO
YES
End

[B] Control flow charts

(1) Stacking operation

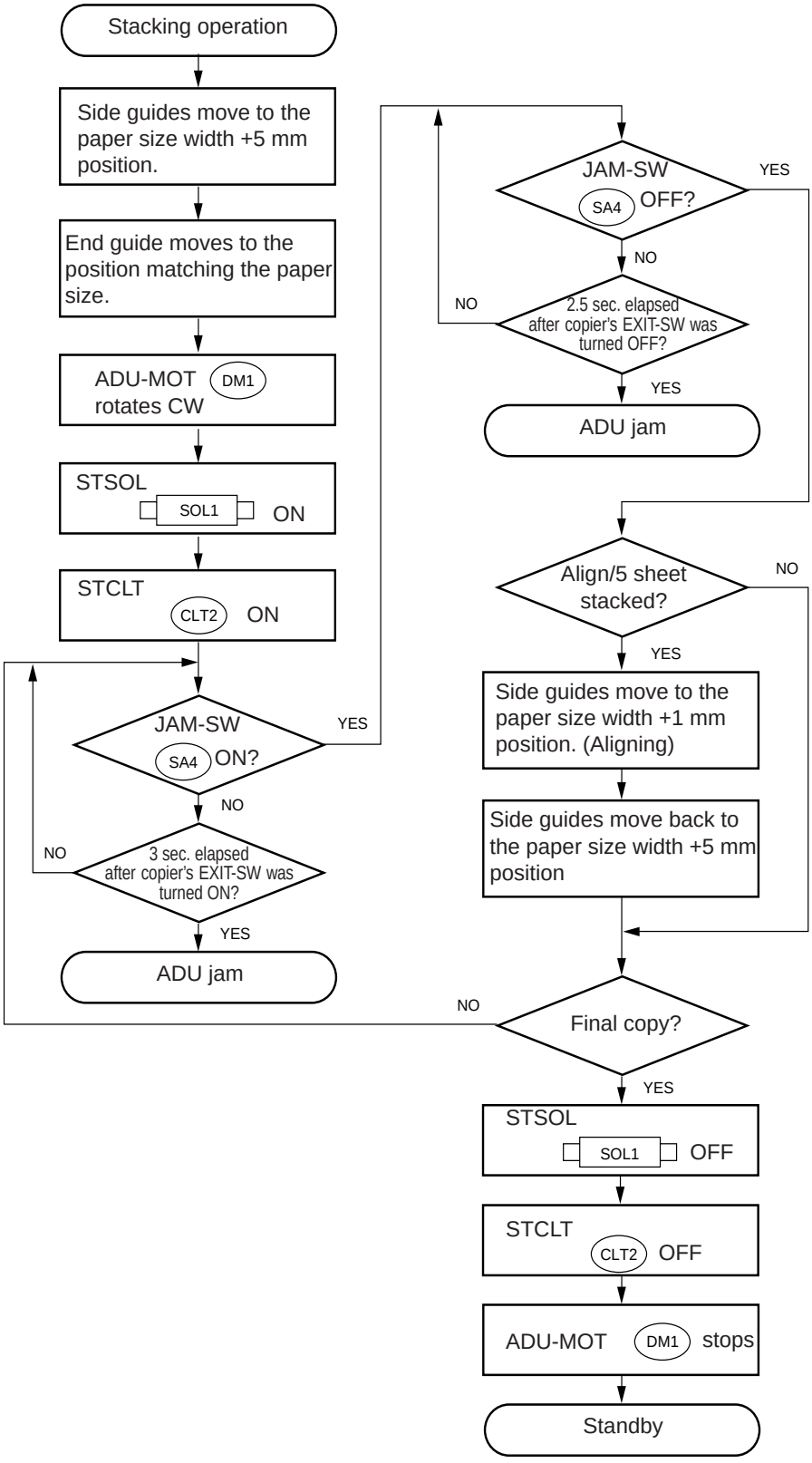

(2) Duplex copying operation

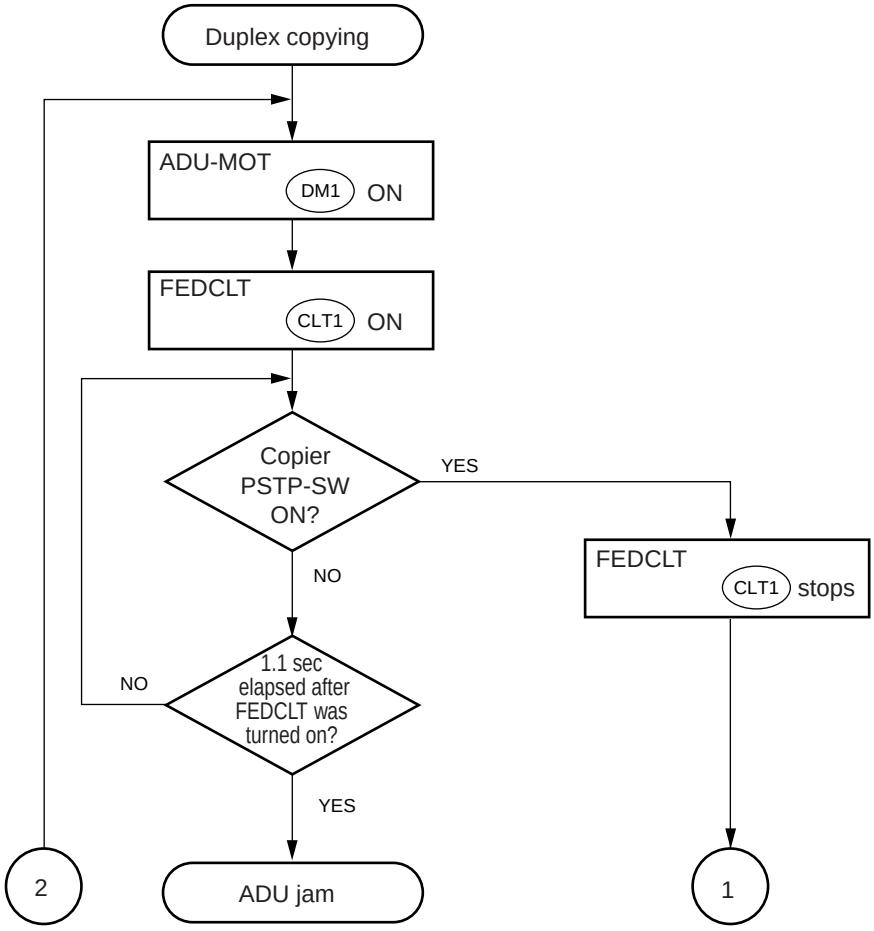

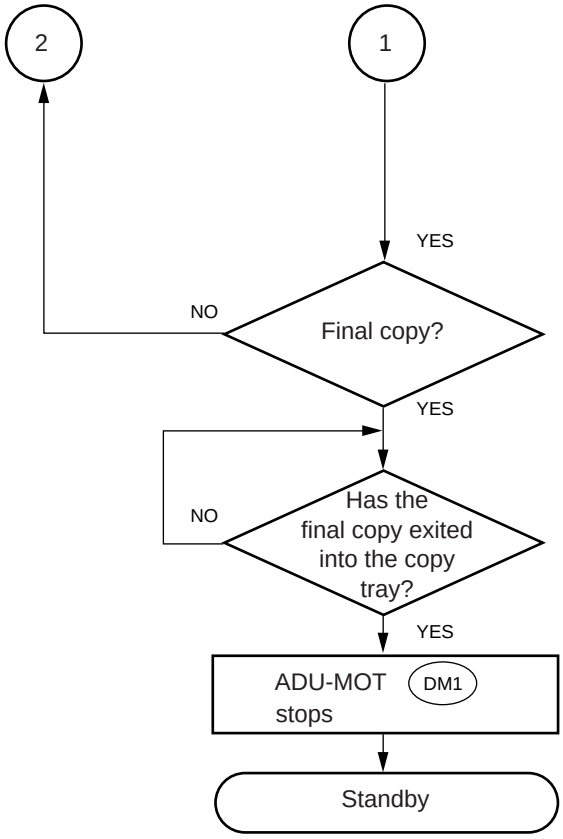
2
1
YES
NO
Final copy?
YES
NO
Has the final copy exited into the copy tray?
YES
ADU-MOT stops
DM1
Standby

13.8.6 Timing charts

(A) Timing for ADU stacking (A4 size, feeding from copier's two cassettes)

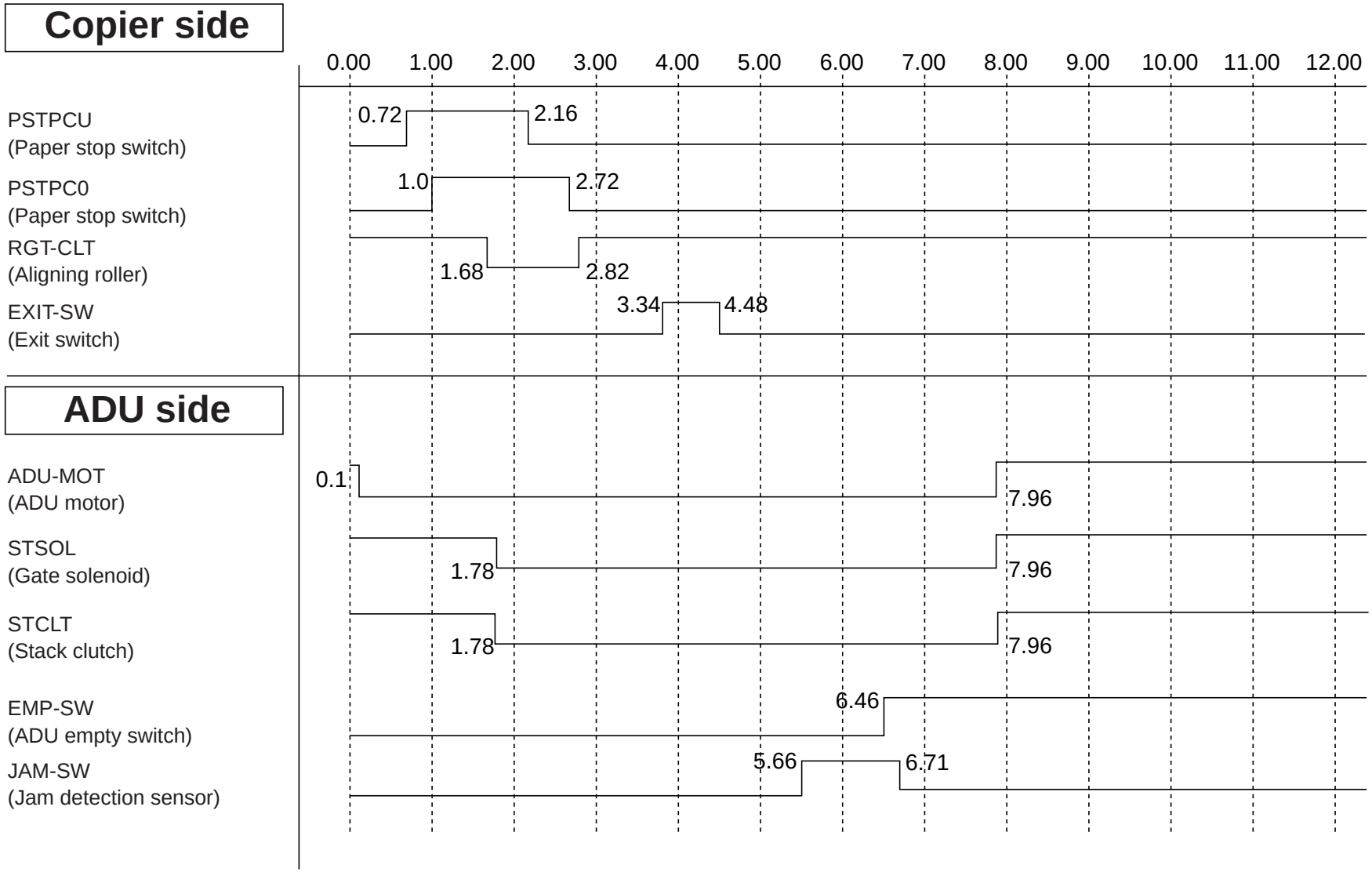

(B) Timing for ADU re-feeding (A4 size, single-sheet stacking)

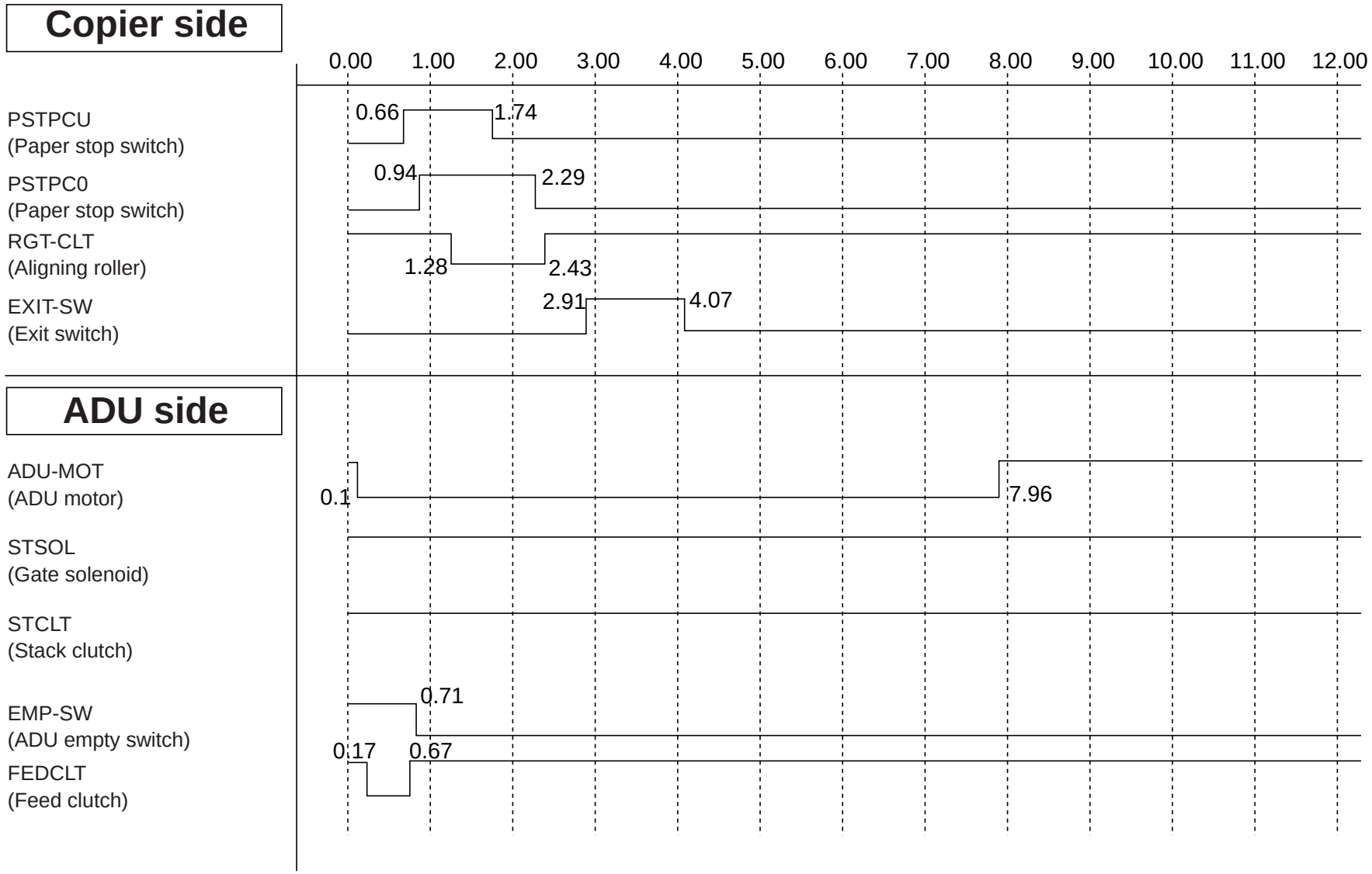

Dec. 1996 © TOSHIBA

13.8.7 Harness connection diagram

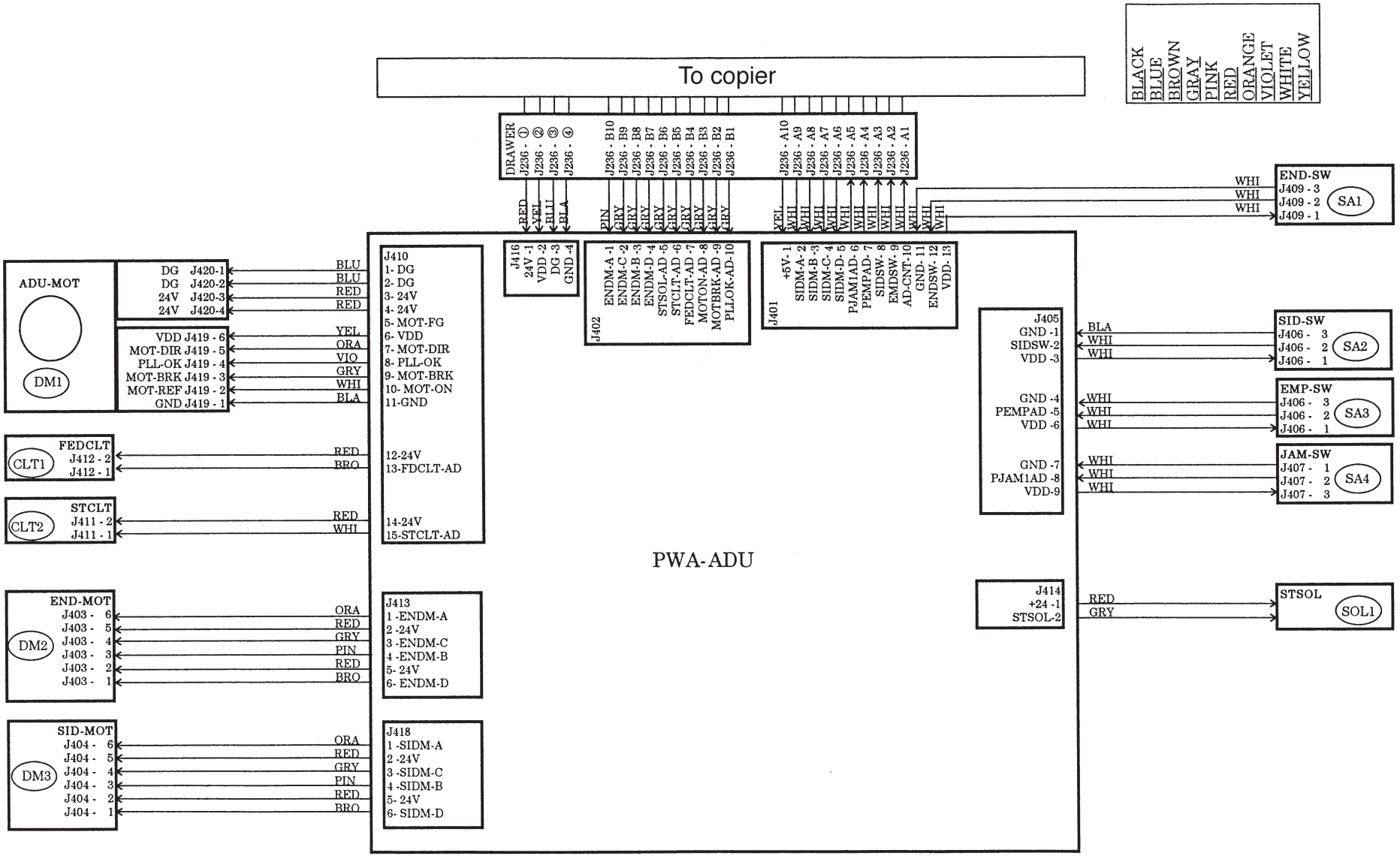

13.8.8 Circuit diagrams (1/2)

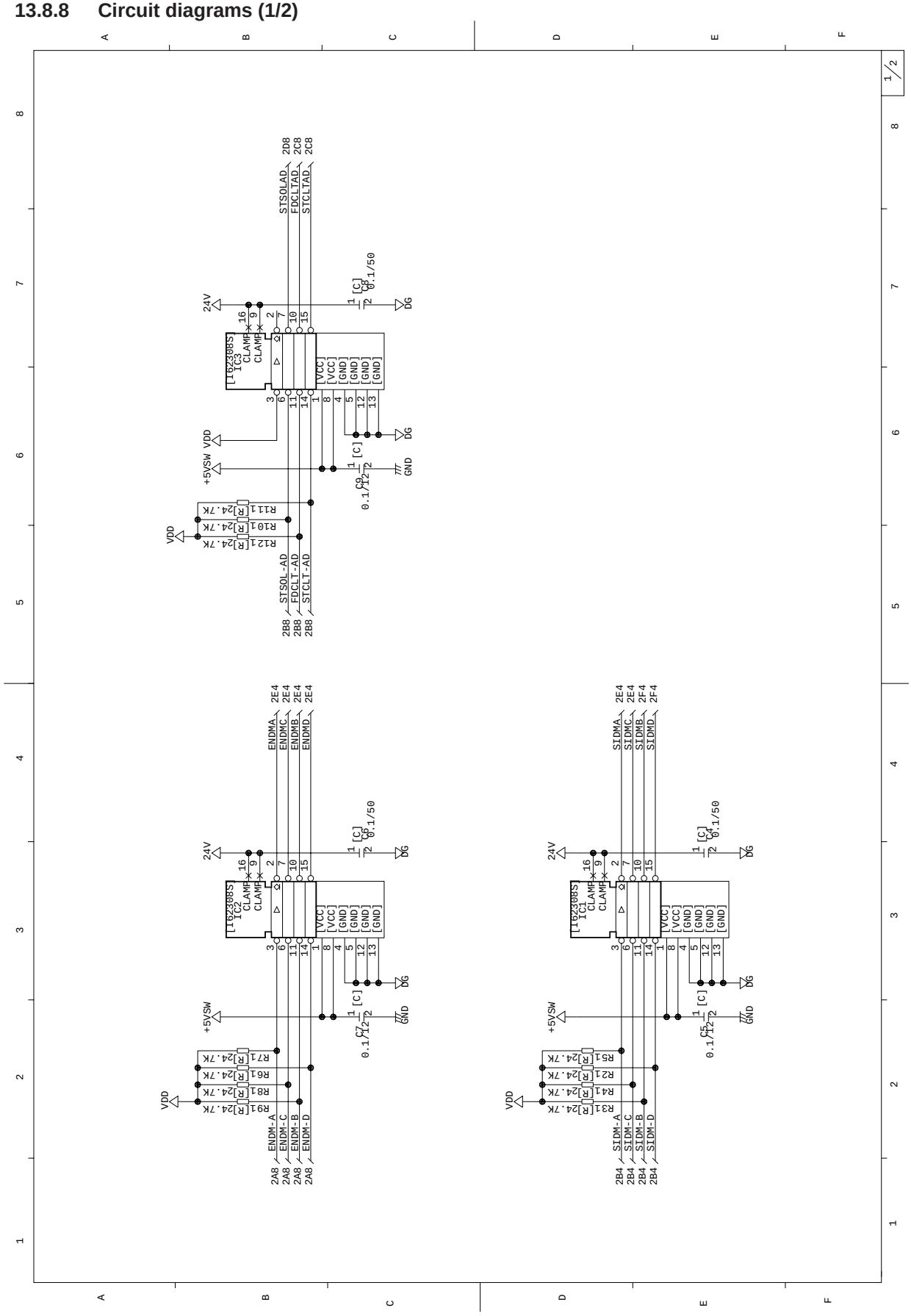

Circuit diagrams (2/2)

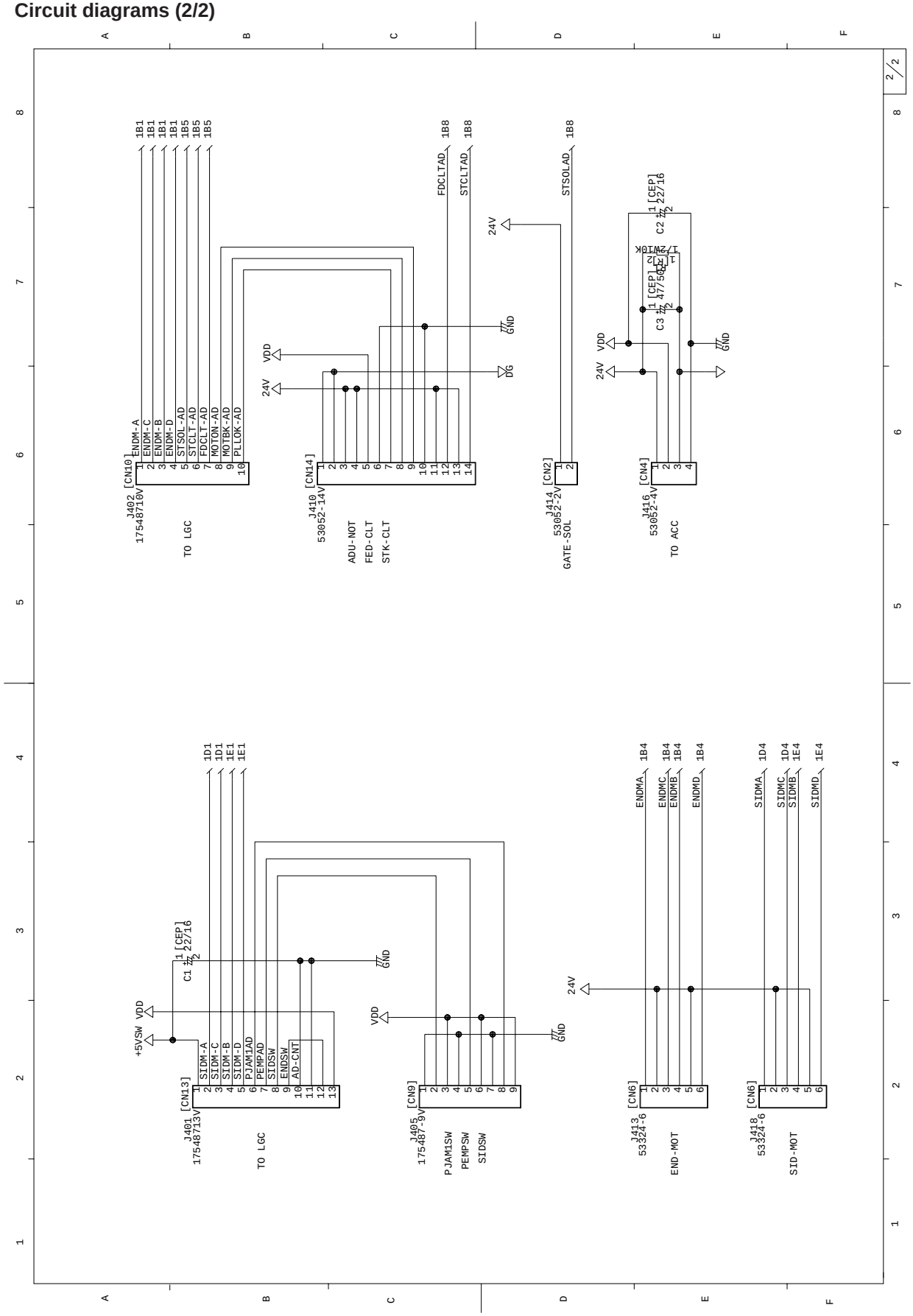

13.8.9 PC board assembly

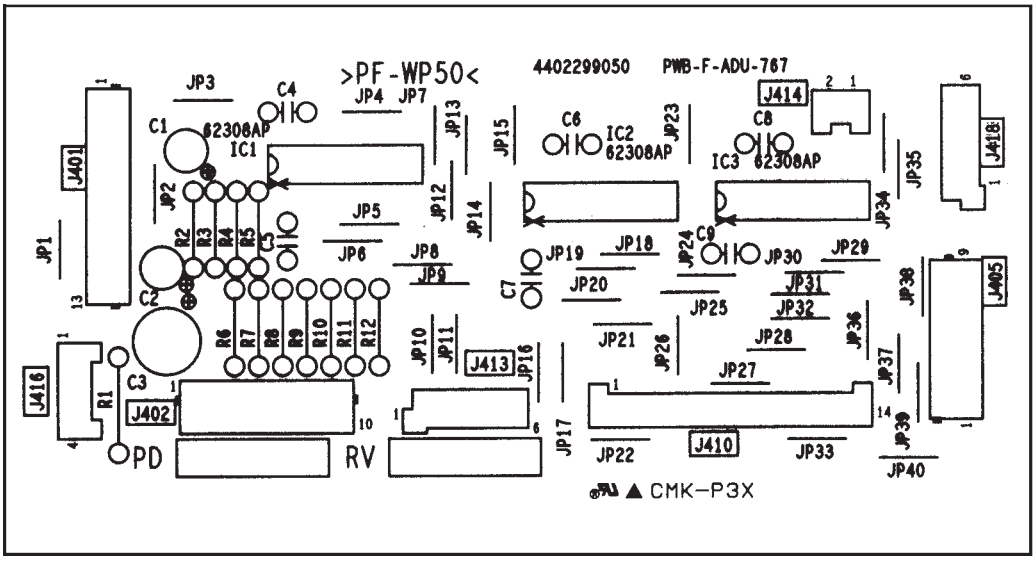

HINT
How to search for where a signal in a circuit diagram has jumped to.

14. ELECTRIC CIRCUIT DIAGRAM

14.1 Logic Circuit (PWA-LGC) 1/13

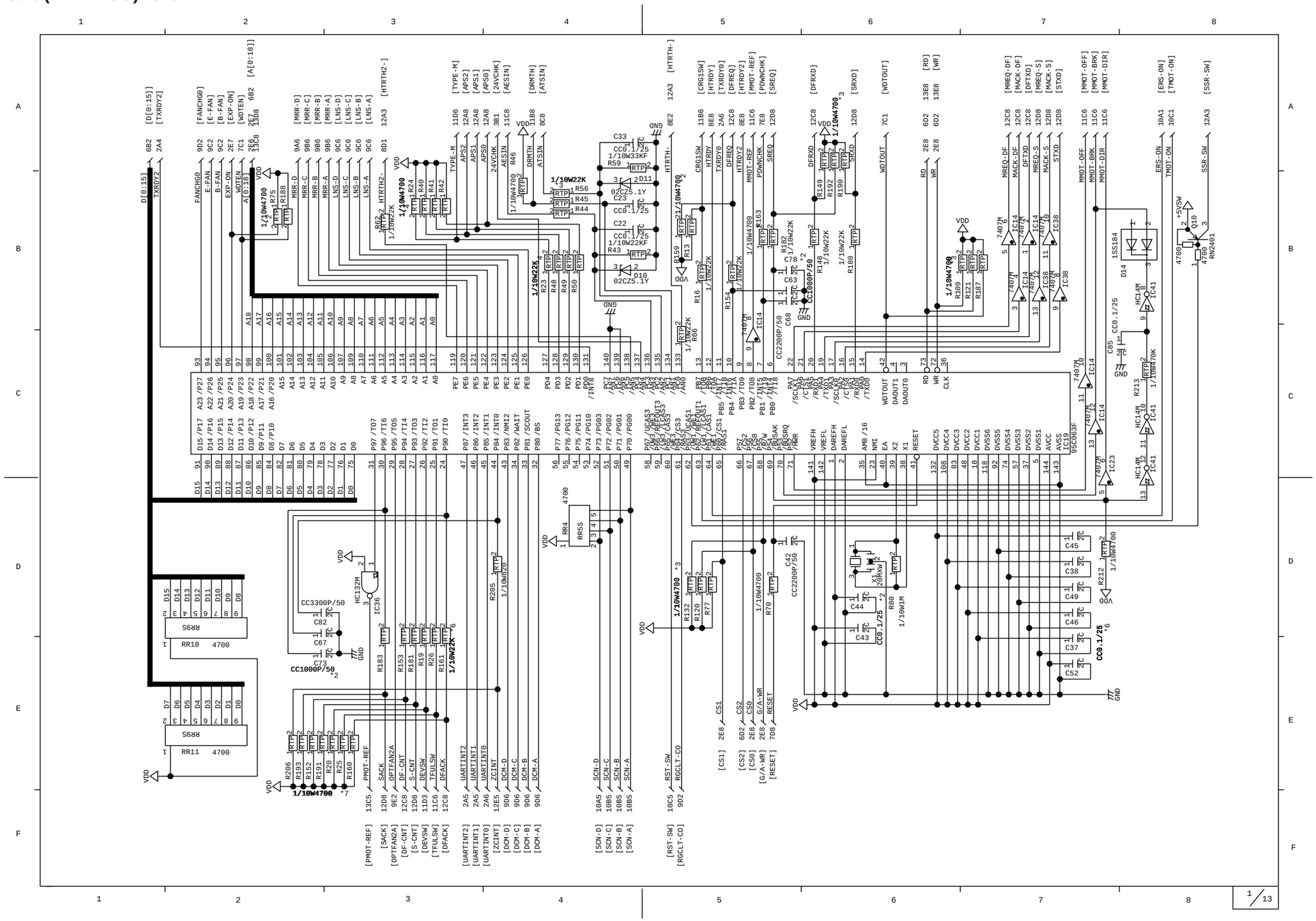

HINT

How to search for where a signal in a circuit diagram has jumped to.

Logic Circuit (PWA-LGC) 2/13

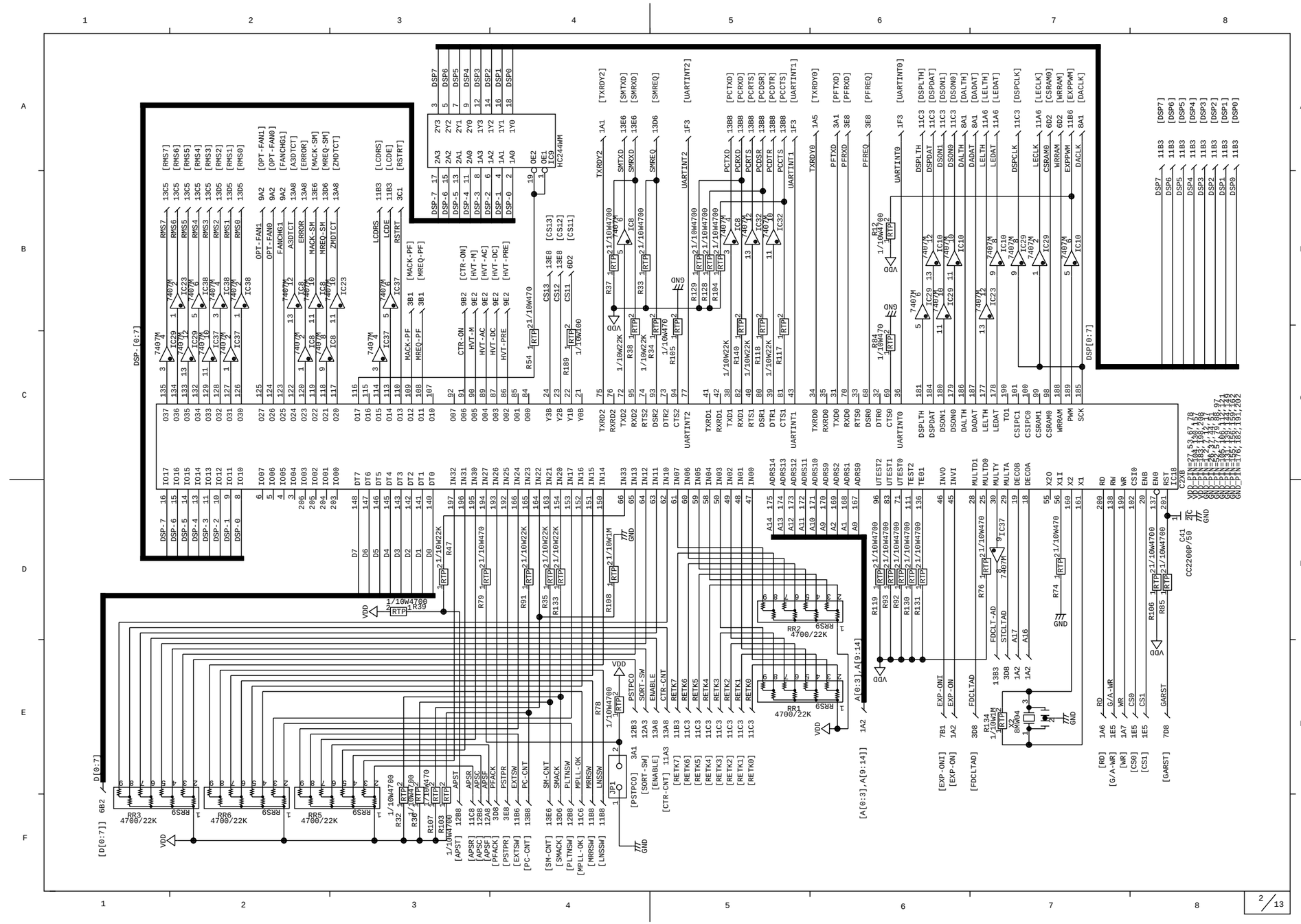

HINT
How to search for where a signal in a circuit diagram has jumped to.

Logic Circuit (PWA-LGC) 3/13

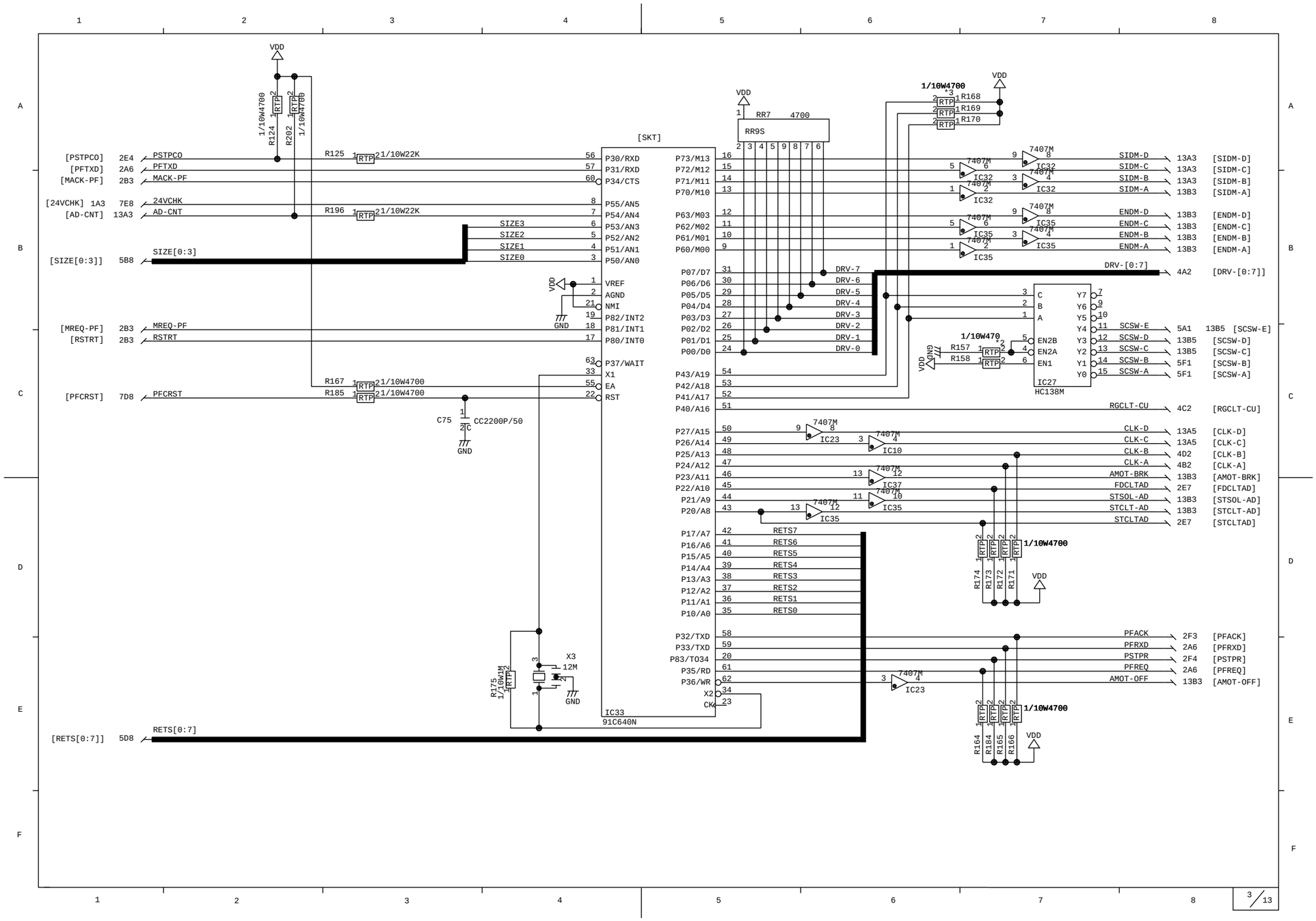

HINT

How to search for where a signal in a circuit diagram has jumped to.

Logic Circuit (PWA-LGC) 4/13

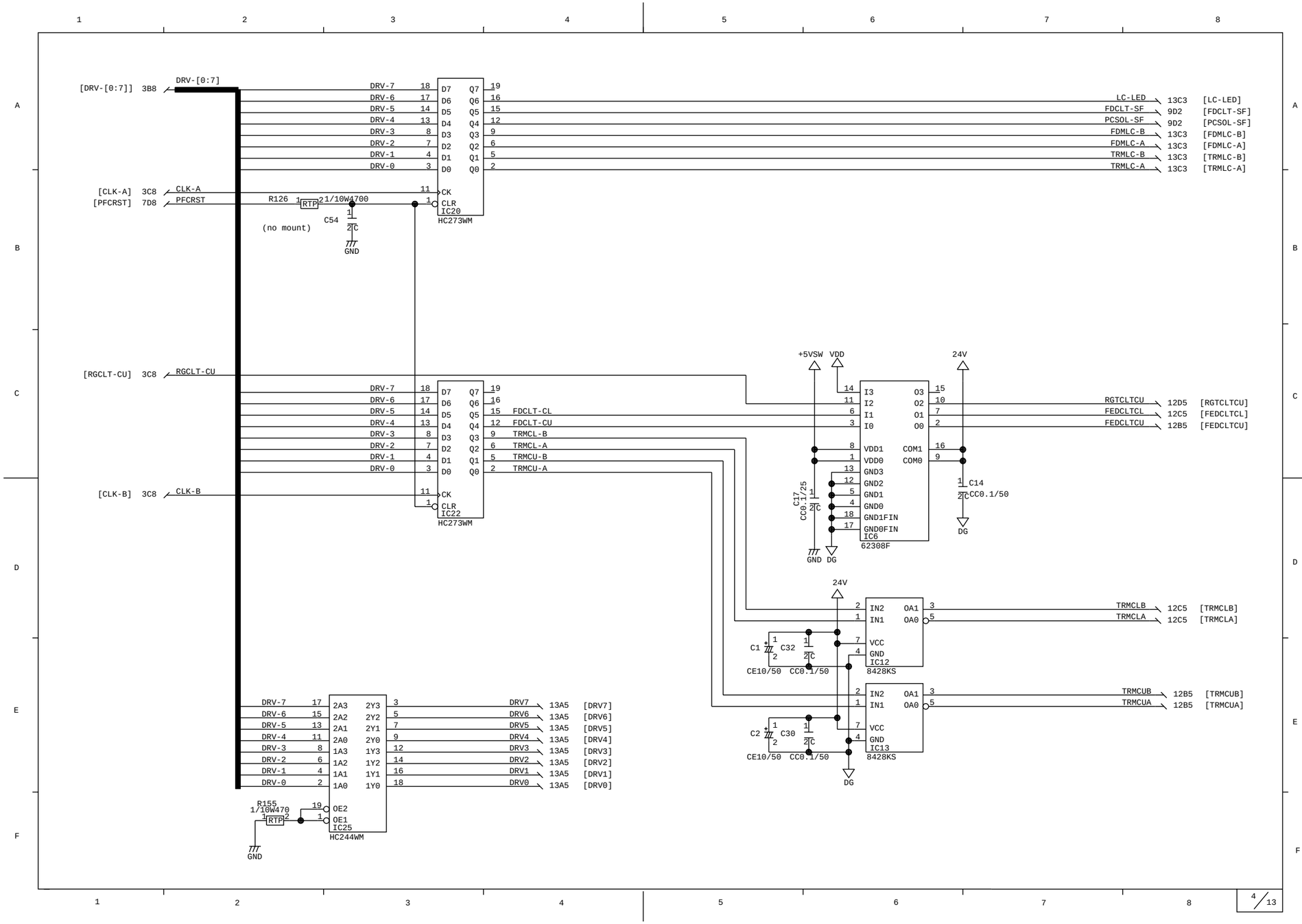

HINT

How to search for where a signal in a circuit diagram has jumped to.

Logic Circuit (PWA-LGC) 5/13

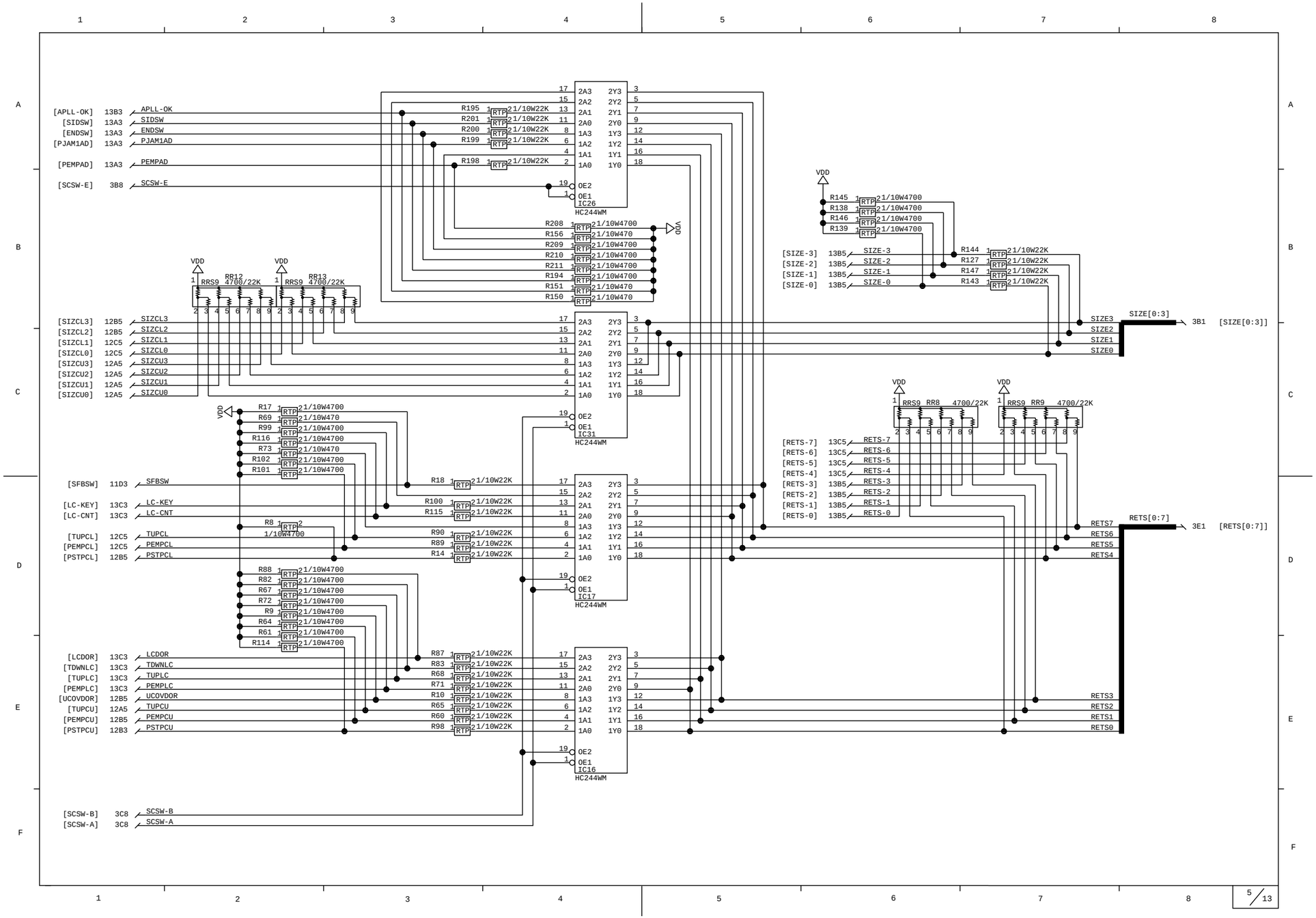

HINT
How to search for where a signal in a circuit diagram has jumped to.

Logic Circuit (PWA-LGC) 6/13

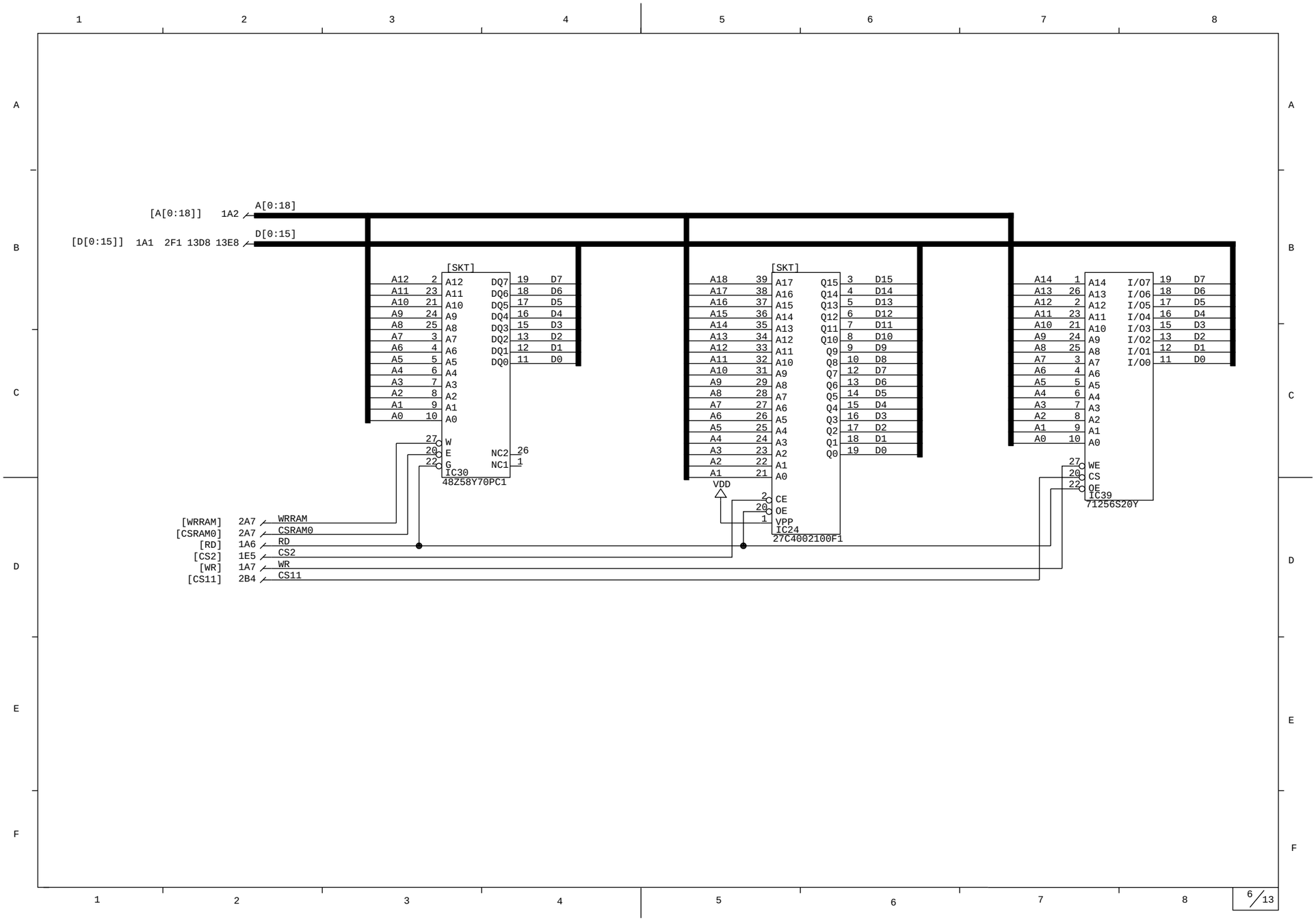

 Dec. 1996 © TOSHIBA

Logic Circuit (PWA-LGC) 7/13

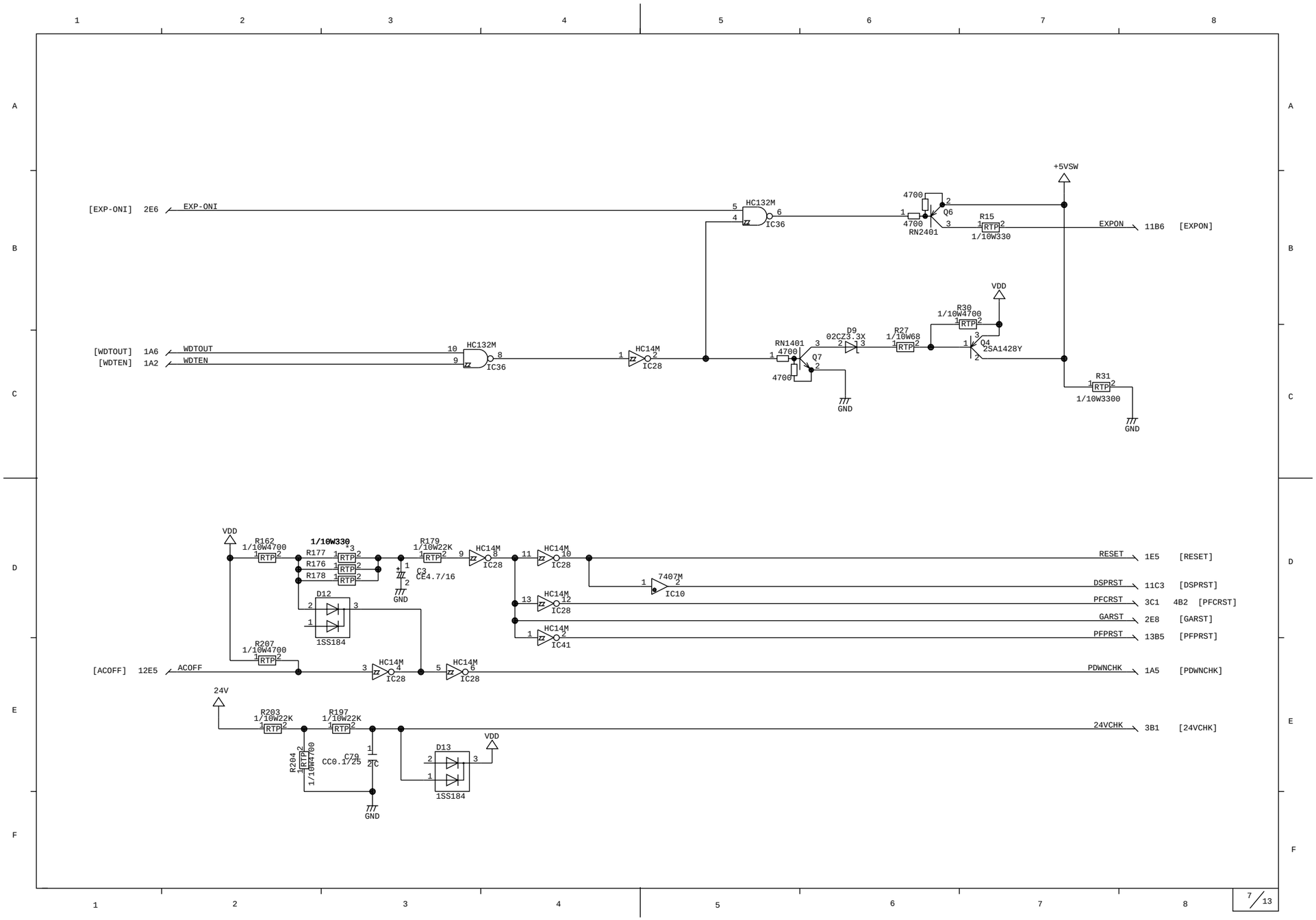

HINT

How to search for where a signal in a circuit diagram has jumped to.

Logic Circuit (PWA-LGC) 8/13

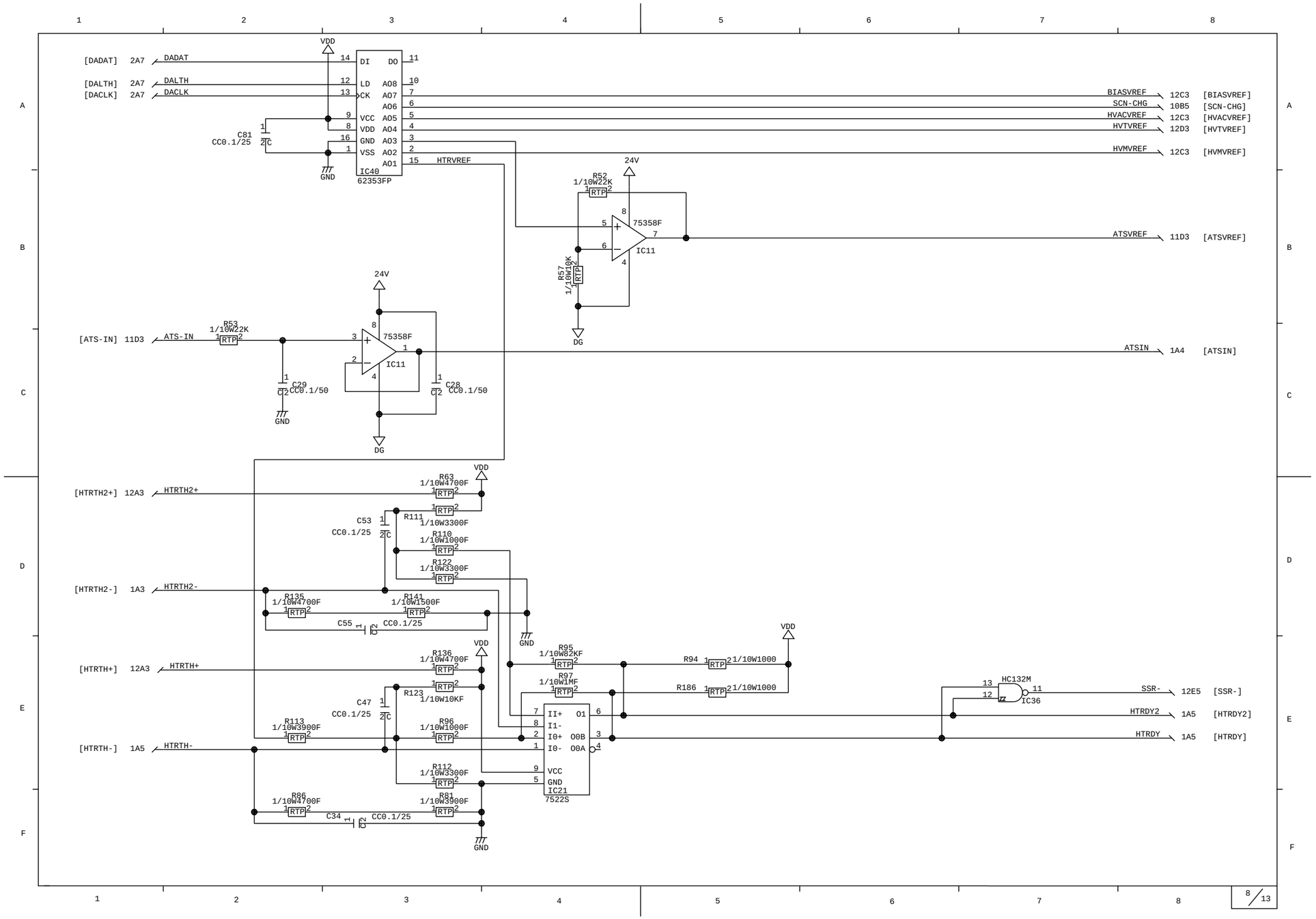

HINT

How to search for where a signal in a circuit diagram has jumped to.

Logic Circuit (PWA-LGC) 9/13

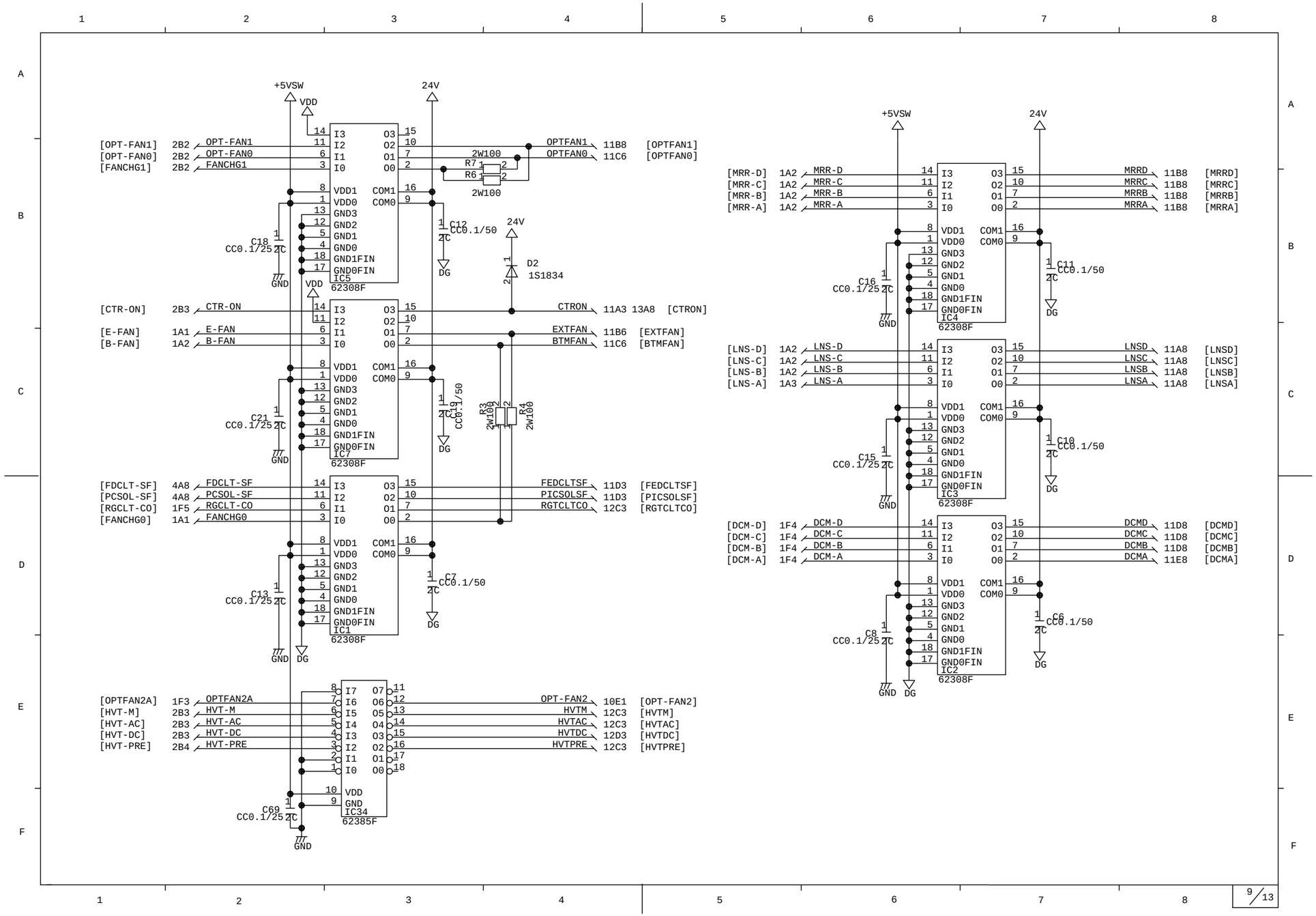

HINT
How to search for where a signal in a circuit diagram has jumped to.

Logic Circuit (PWA-LGC) 10/13

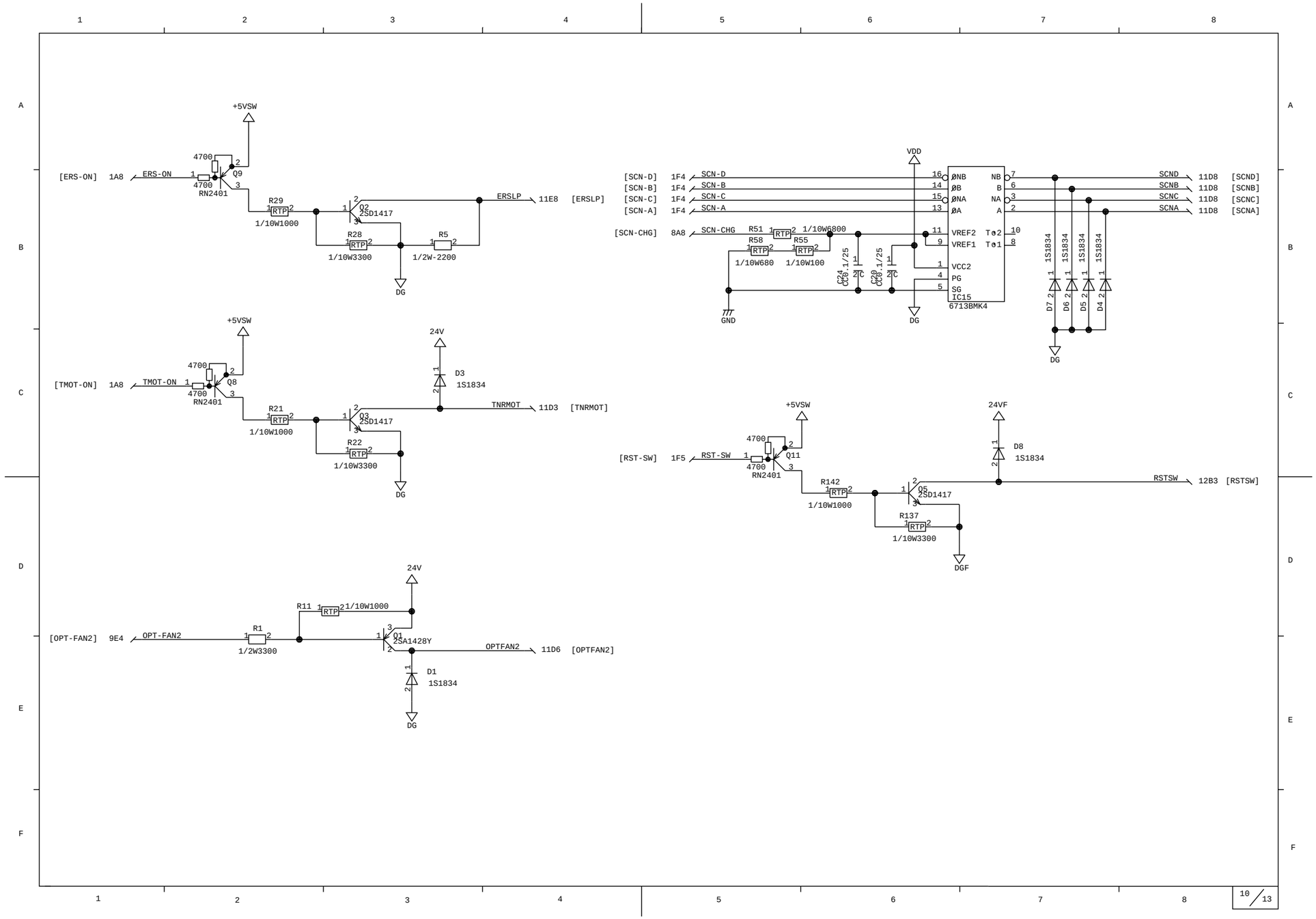

HINT

How to search for where a signal in a circuit diagram has jumped to.

Logic Circuit (PWA-LGC) 11/13

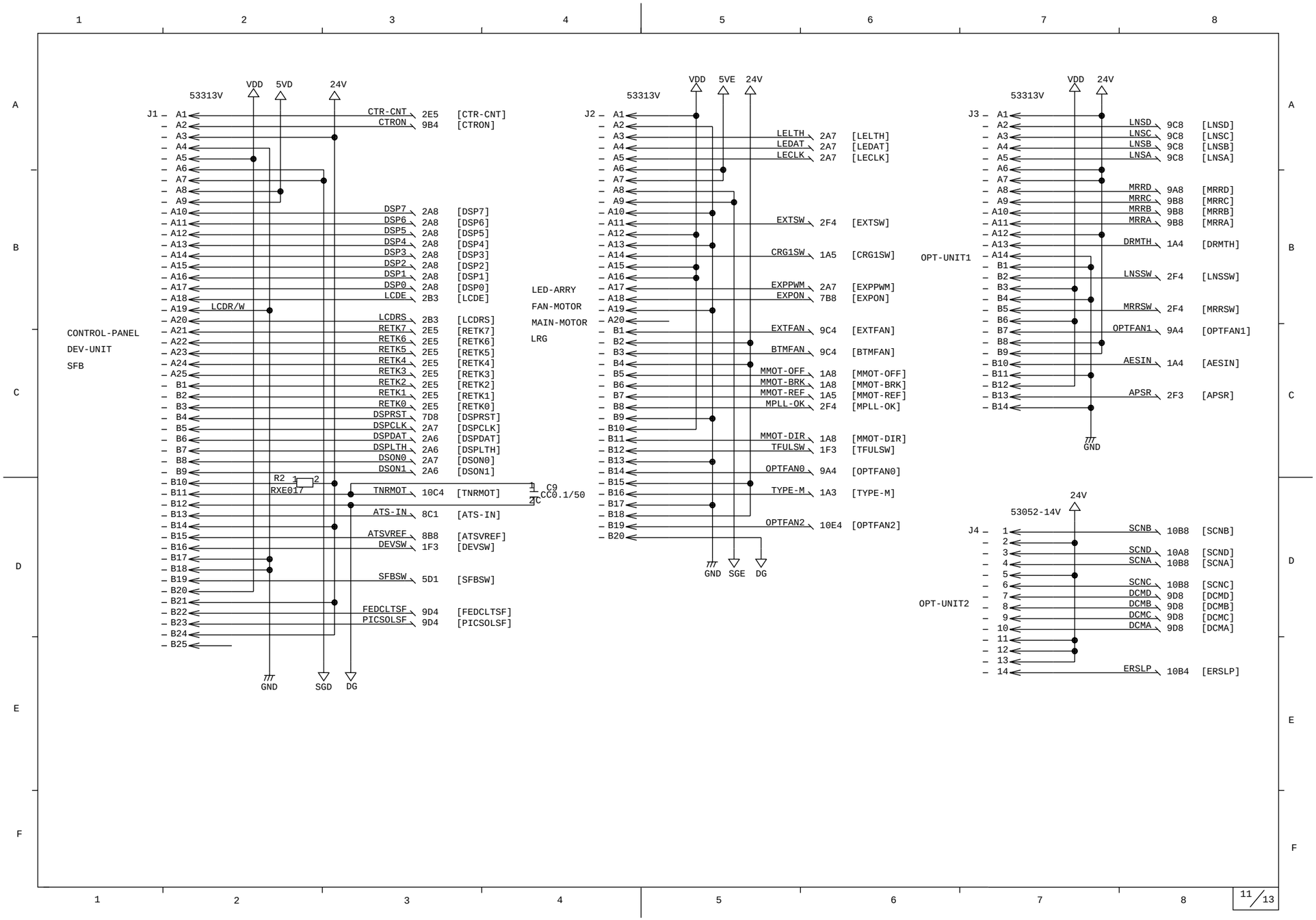

HINT
How to search for where a signal in a circuit diagram has jumped to.

Logic Circuit (PWA-LGC) 12/13

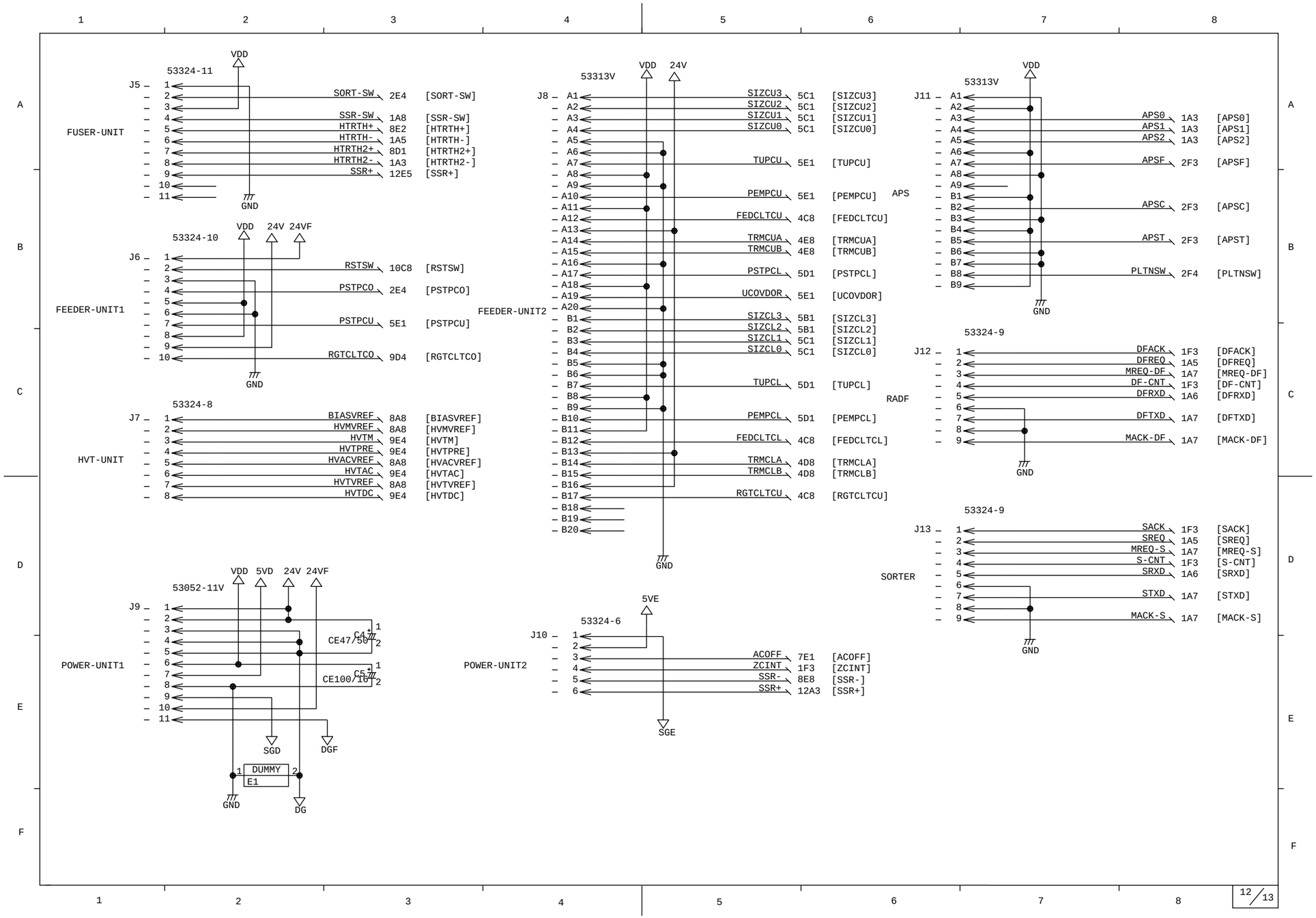

 Dec. 1996 © TOSHIBA

HINT
How to search for where a signal in a circuit diagram has jumped to.

Logic Circuit (PWA-LGC) 13/13

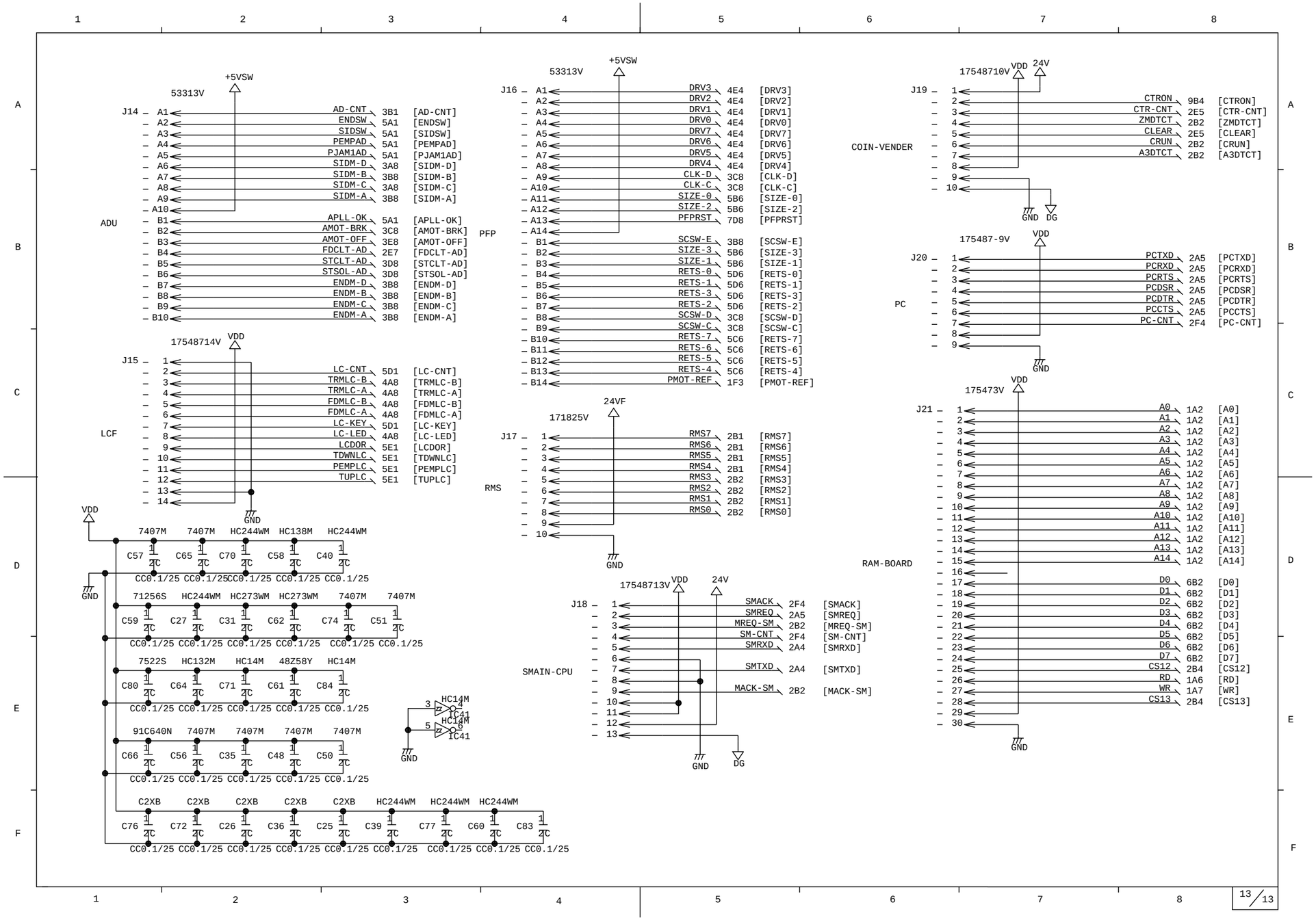

HINT
How to search for where a signal in a circuit diagram has jumped to.

14.2 Control Panel Circuit

14.2.1 Display circuit (PWA-DSP) 1/4

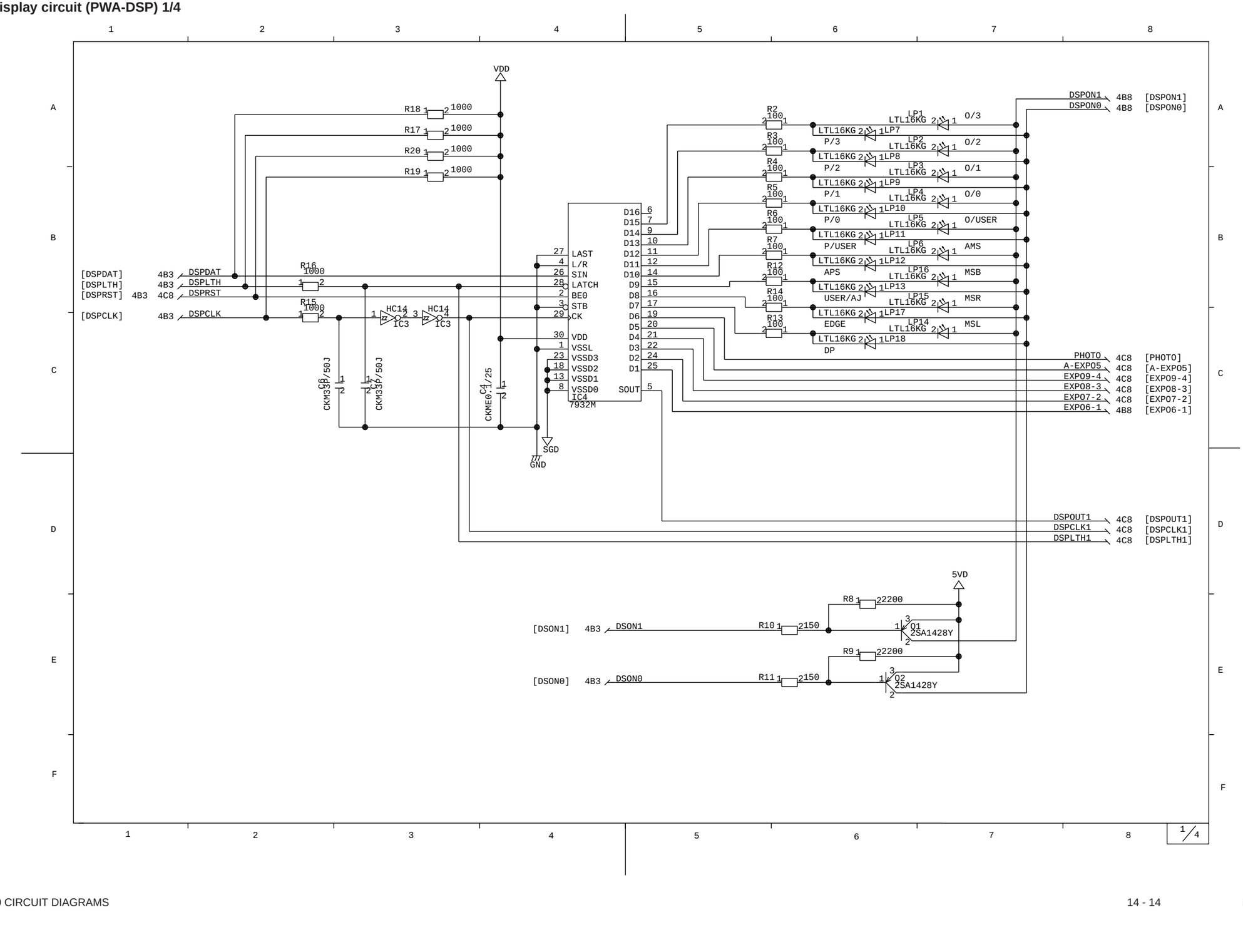

 Dec. 1996 © TOSHIBA

HINT
How to search for where a signal in a circuit diagram has jumped to.

Display circuit (PWA-DSP) 2/4

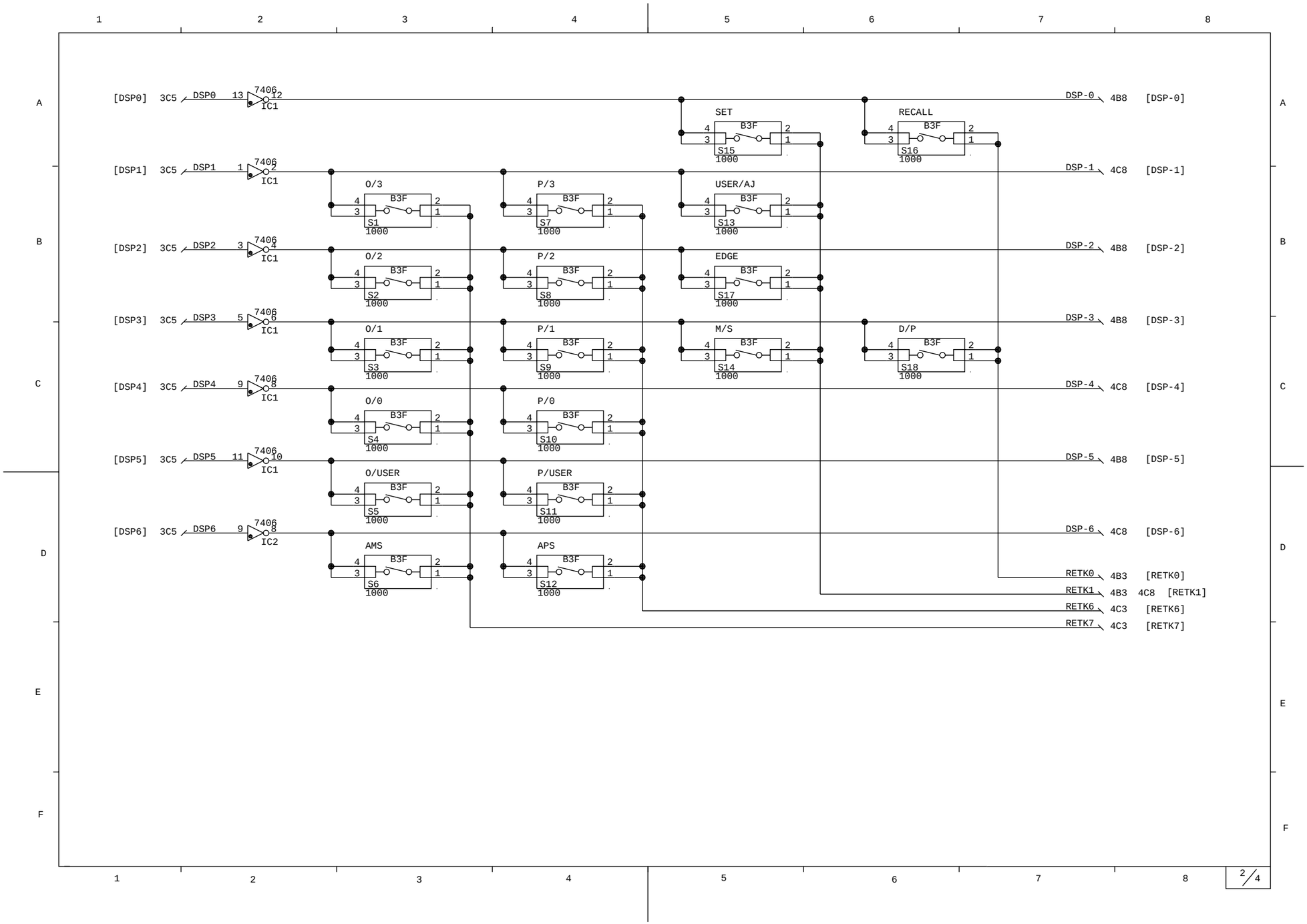

HINT

How to search for where a signal in a circuit diagram has jumped to.

Display circuit (PWA-DSP) 3/4

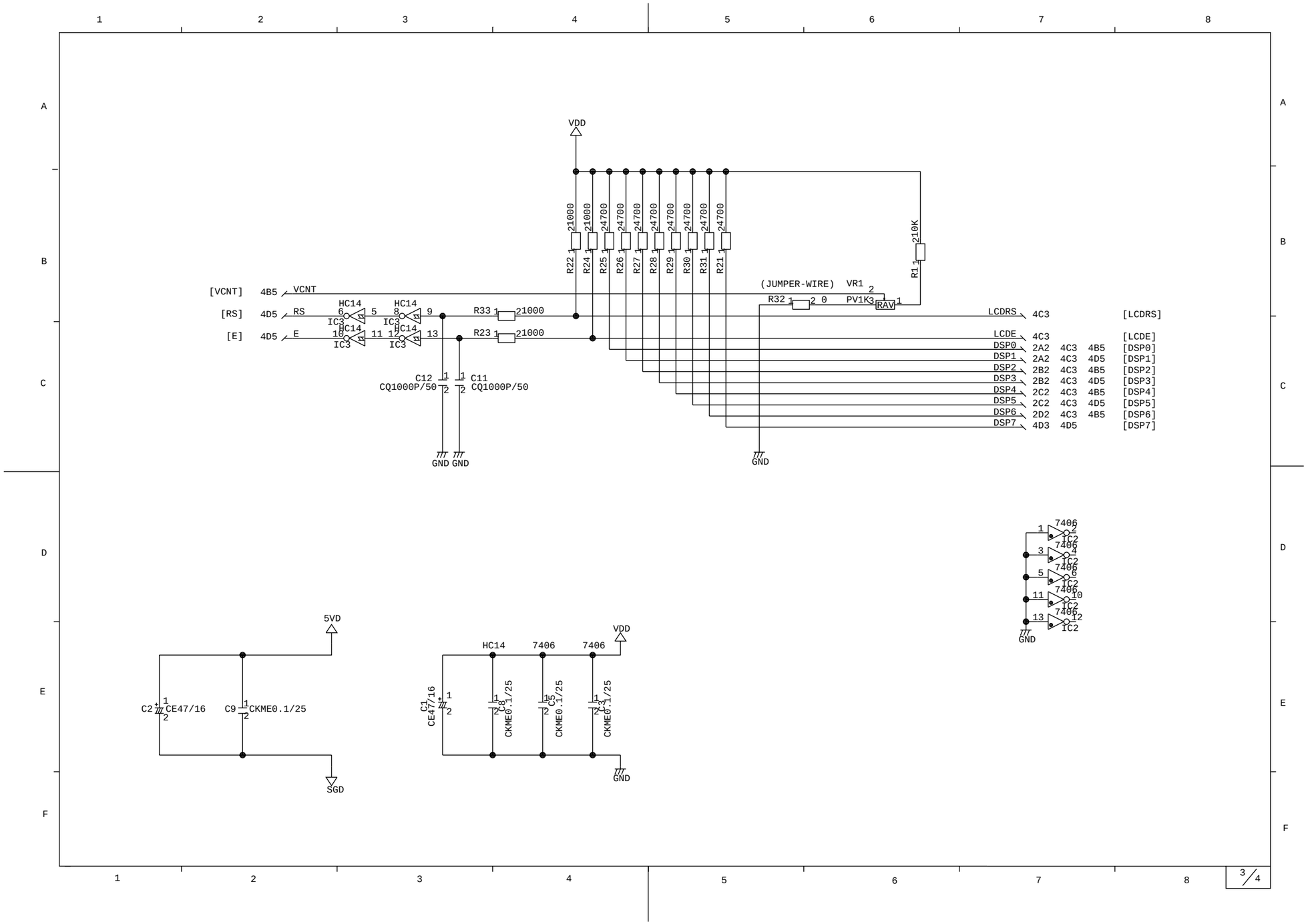

 Dec. 1996 © TOSHIBA

HINT
How to search for where a signal in a circuit diagram has jumped to.

Display circuit (PWA-DSP) 4/4

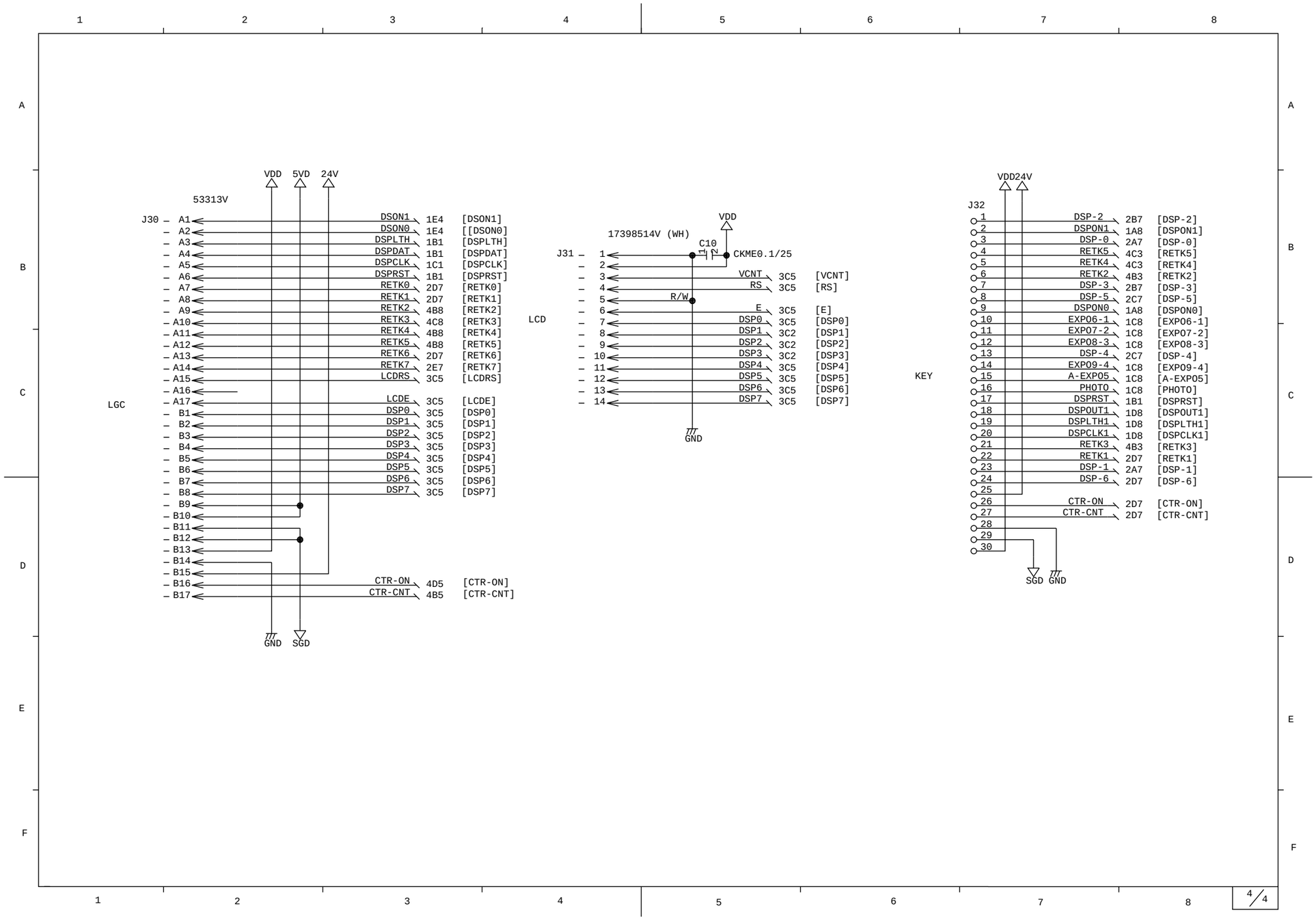

HINT

How to search for where a signal in a circuit diagram has jumped to.

14.2.2 Control key circuit (PWA-KEY) 1/5

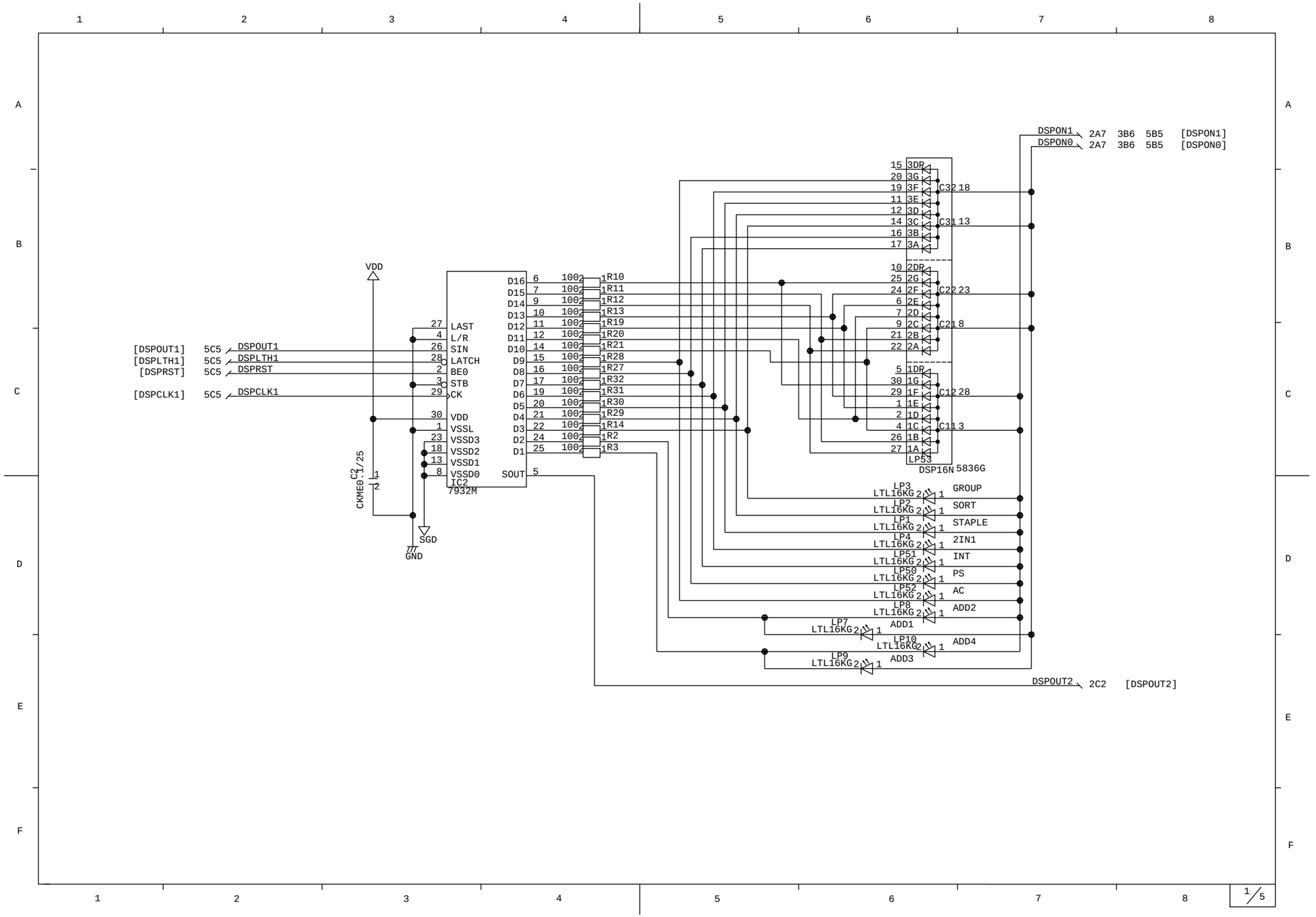

 Dec. 1996 © TOSHIBA

HINT

How to search for where a signal in a circuit diagram has jumped to.

Control key circuit (PWA-KEY) 2/5

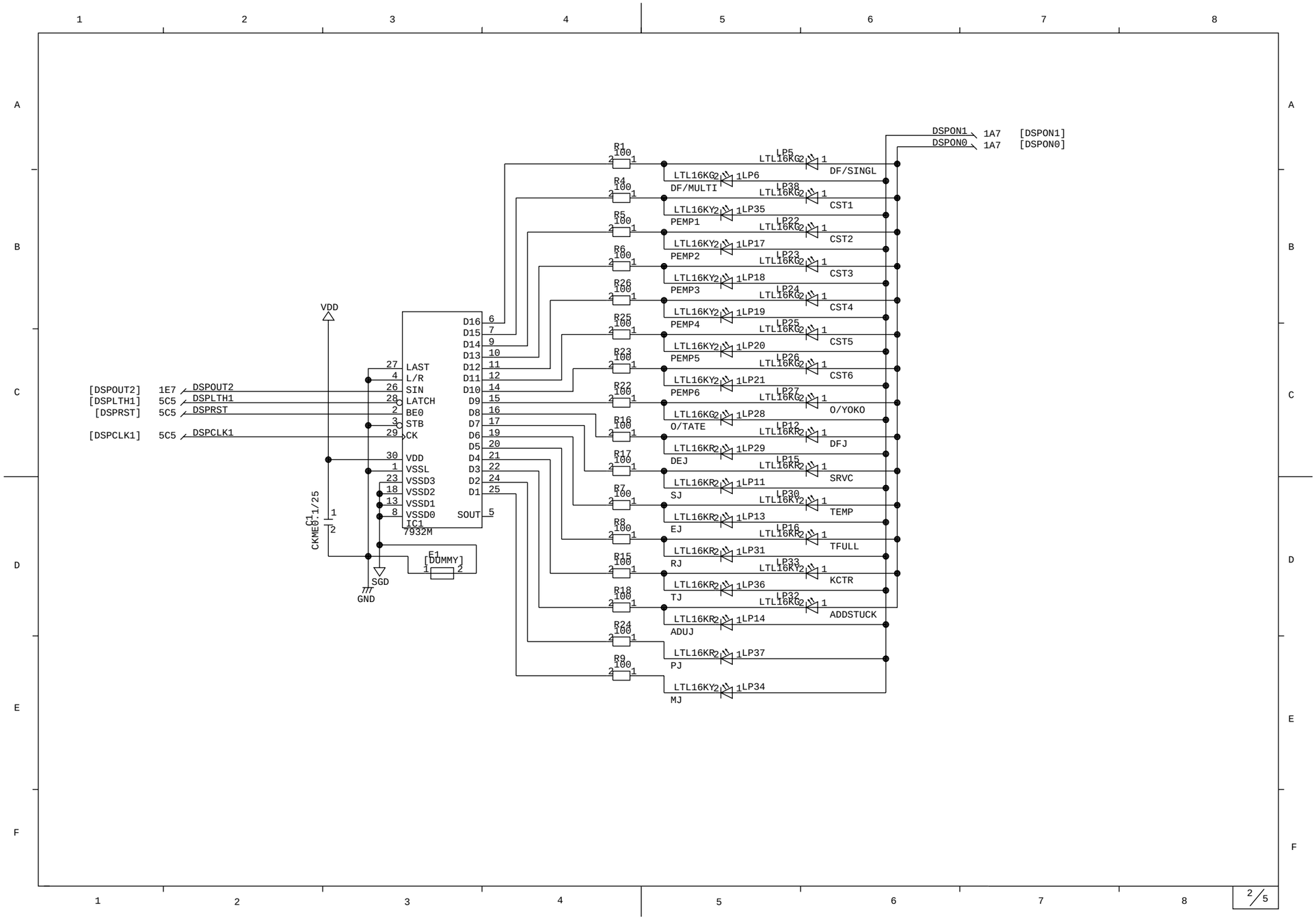

HINT

How to search for where a signal in a circuit diagram has jumped to.

Control key circuit (PWA-KEY) 3/5

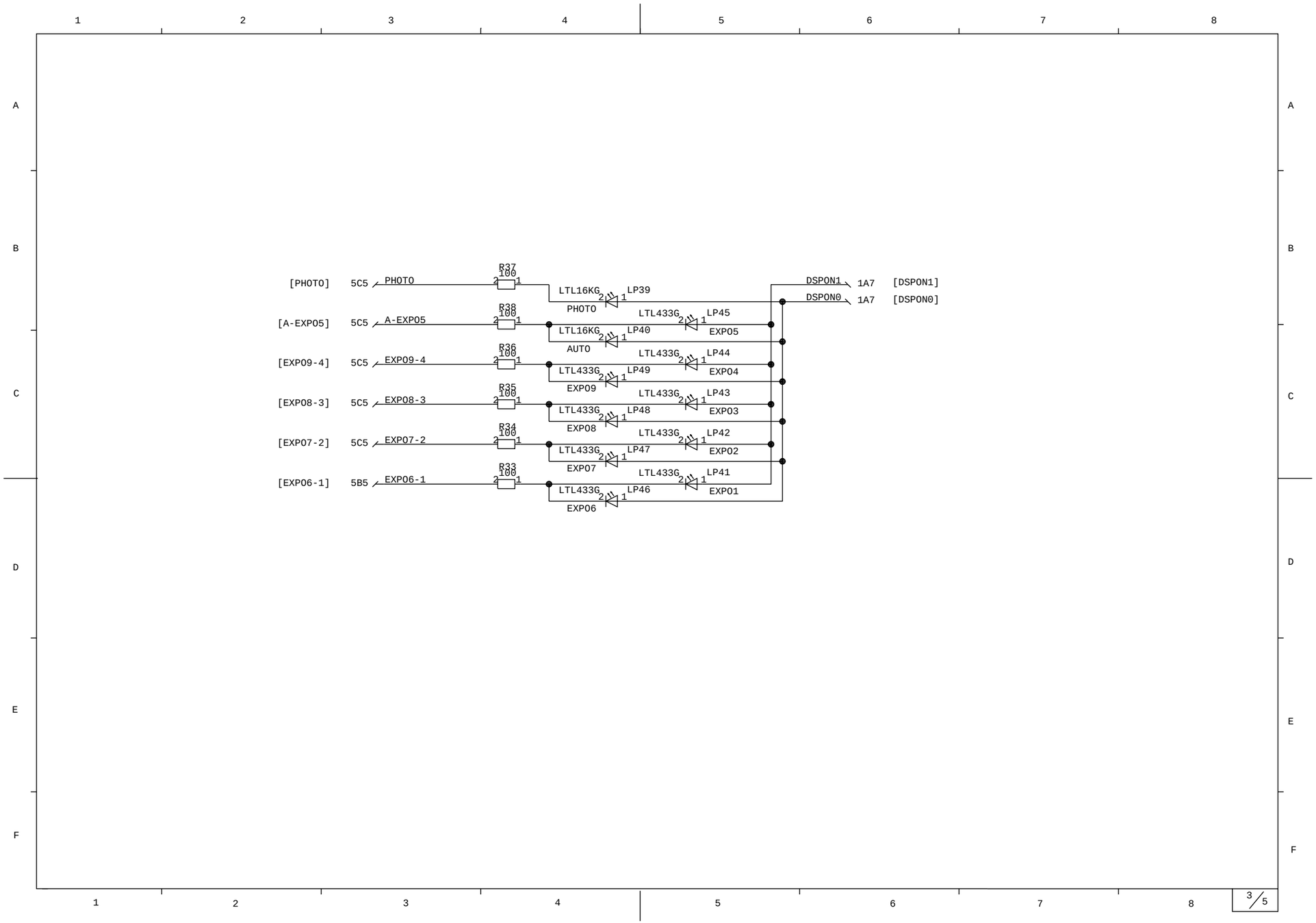

 Dec. 1996 © TOSHIBA

HINT
How to search for where a signal in a circuit diagram has jumped to.

Control key circuit (PWA-KEY) 4/5

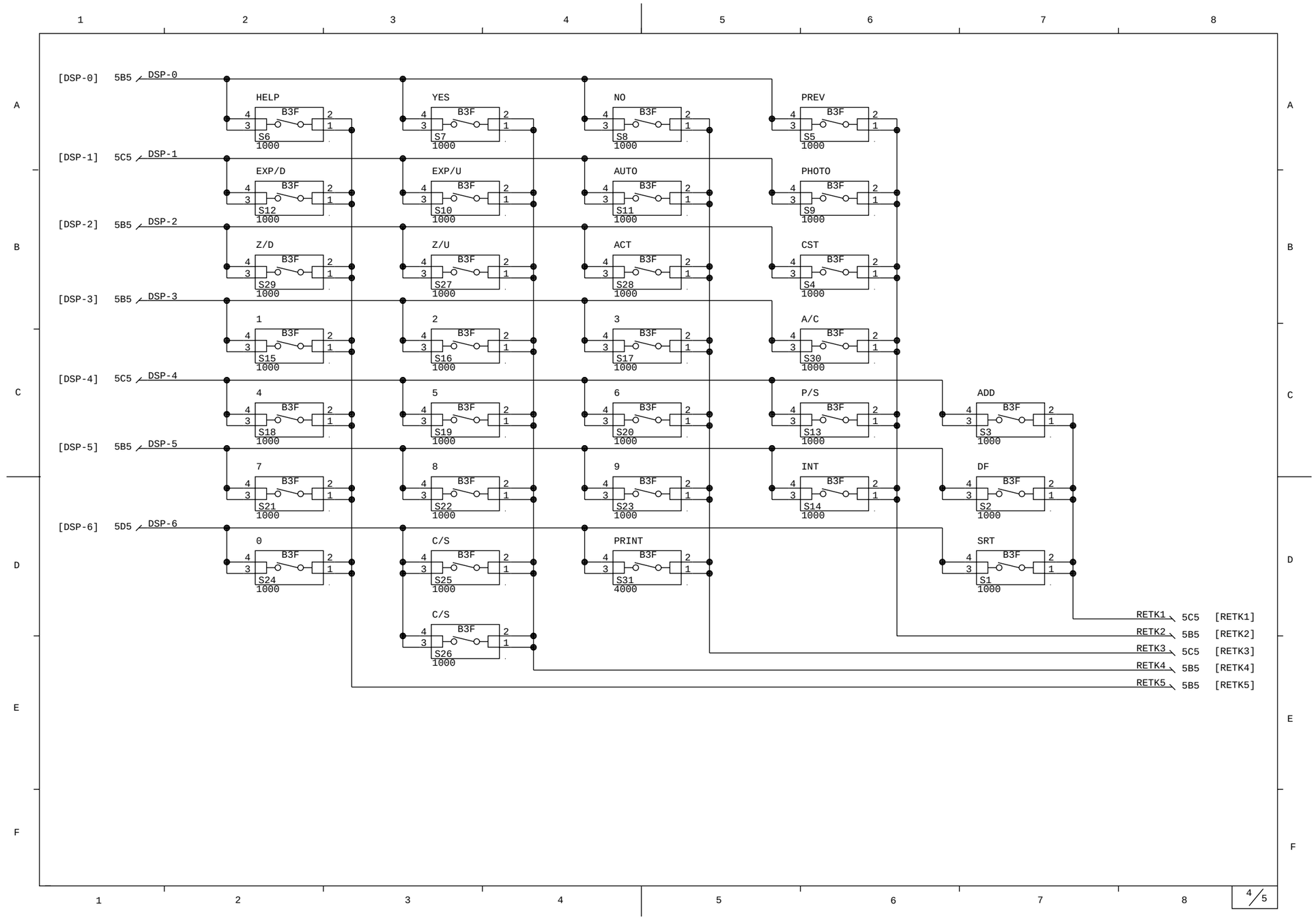

HINT

How to search for where a signal in a circuit diagram has jumped to.

Control key circuit (PWA-KEY) 5/5

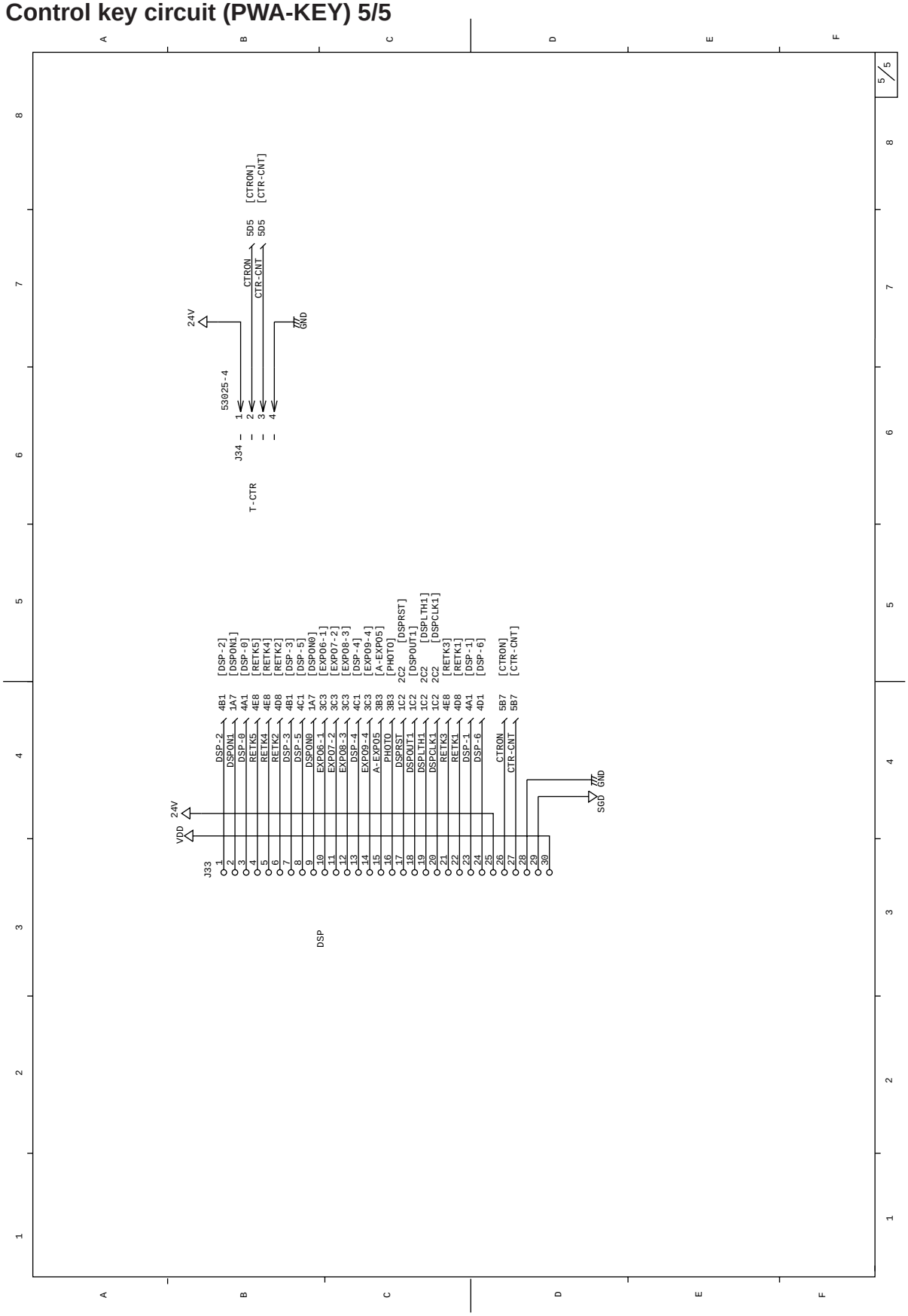

HINT
How to search for where a signal in a circuit diagram has jumped to.

14.3 Power Supply Circuit (PS-ACC)

[A] 115 V

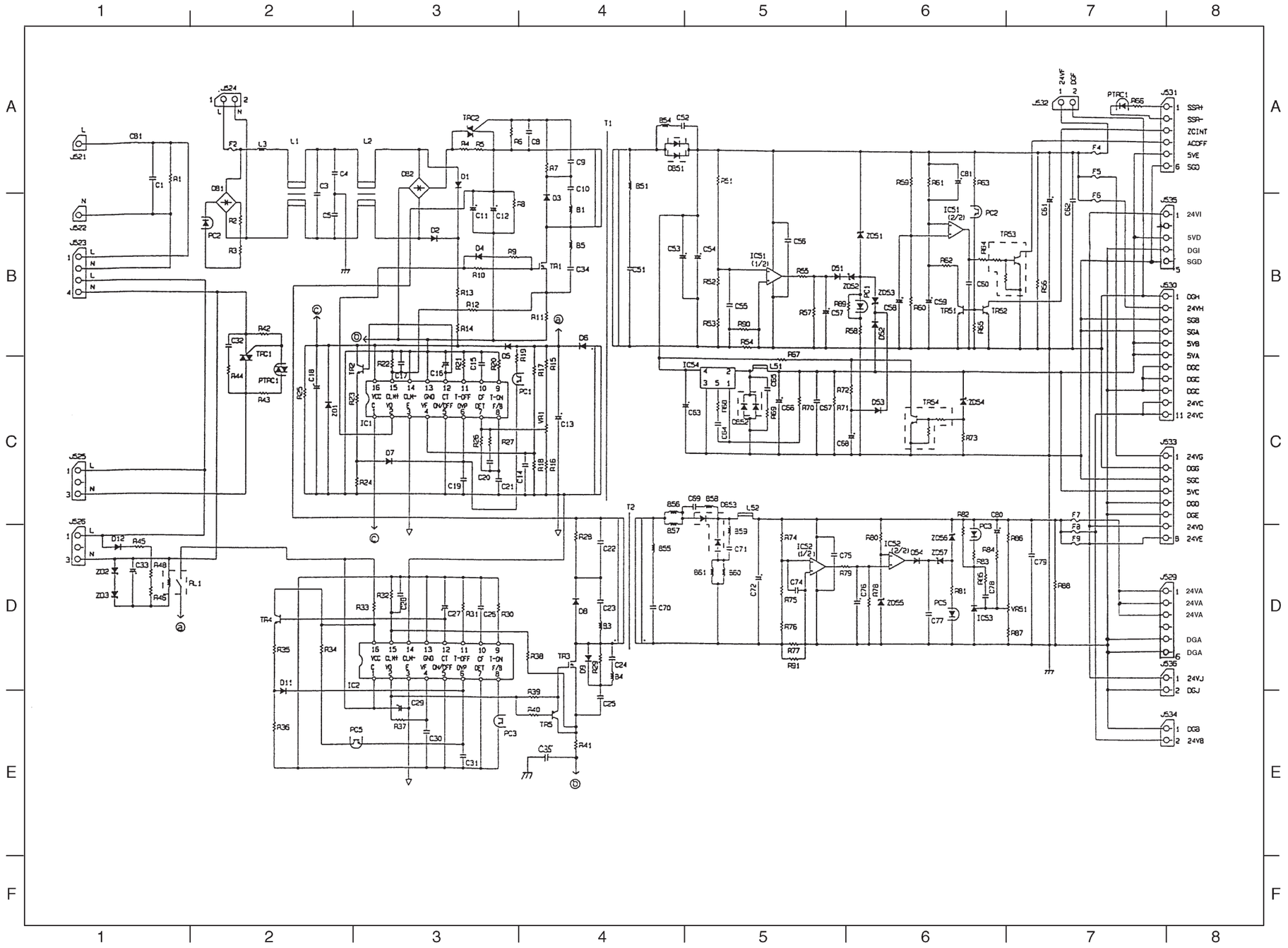

HINT

How to search for where a signal in a circuit diagram has jumped to.

[B] 200 V

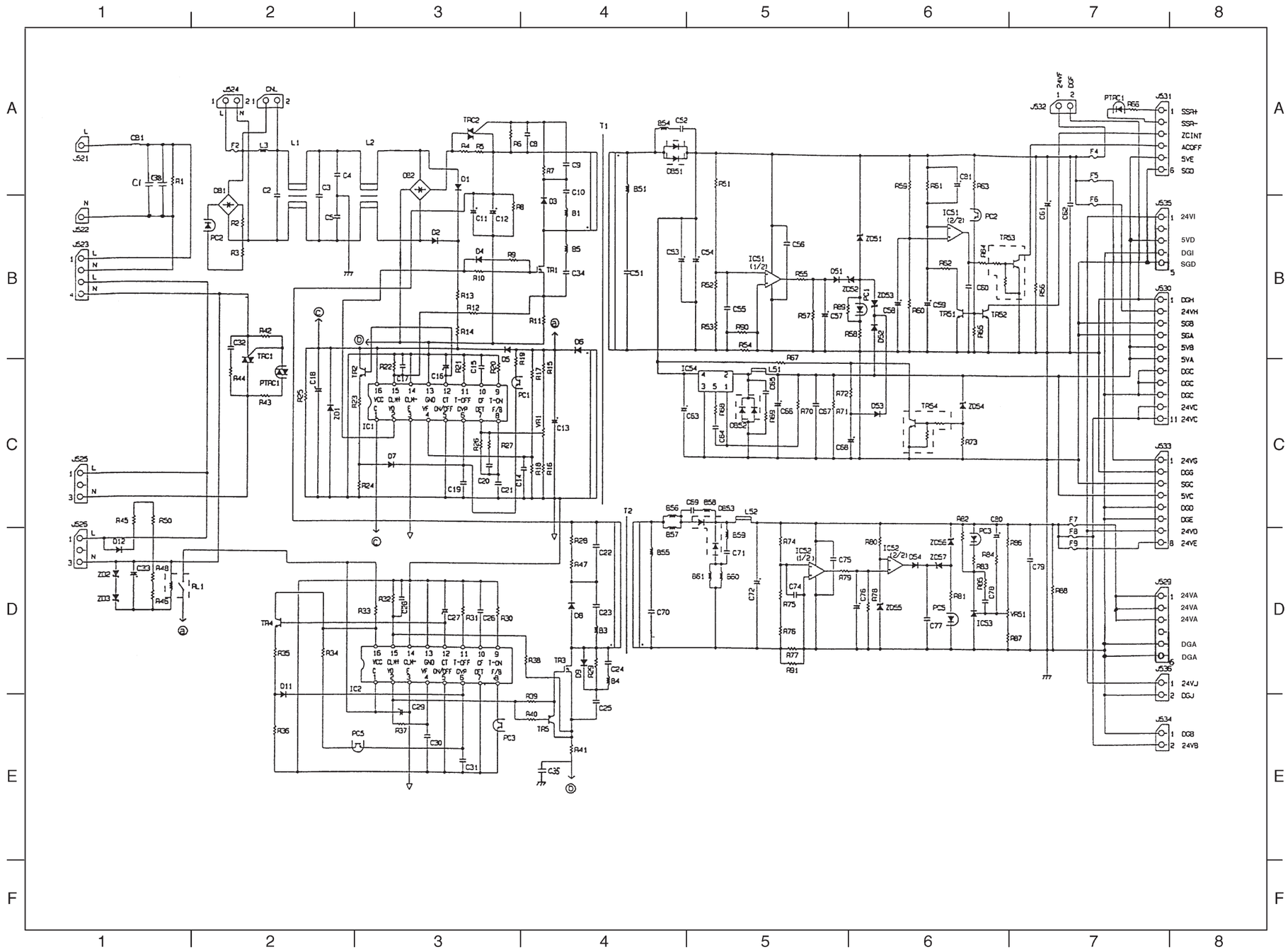

 Dec. 1996 © TOSHIBA

[C] 200 V (French production)

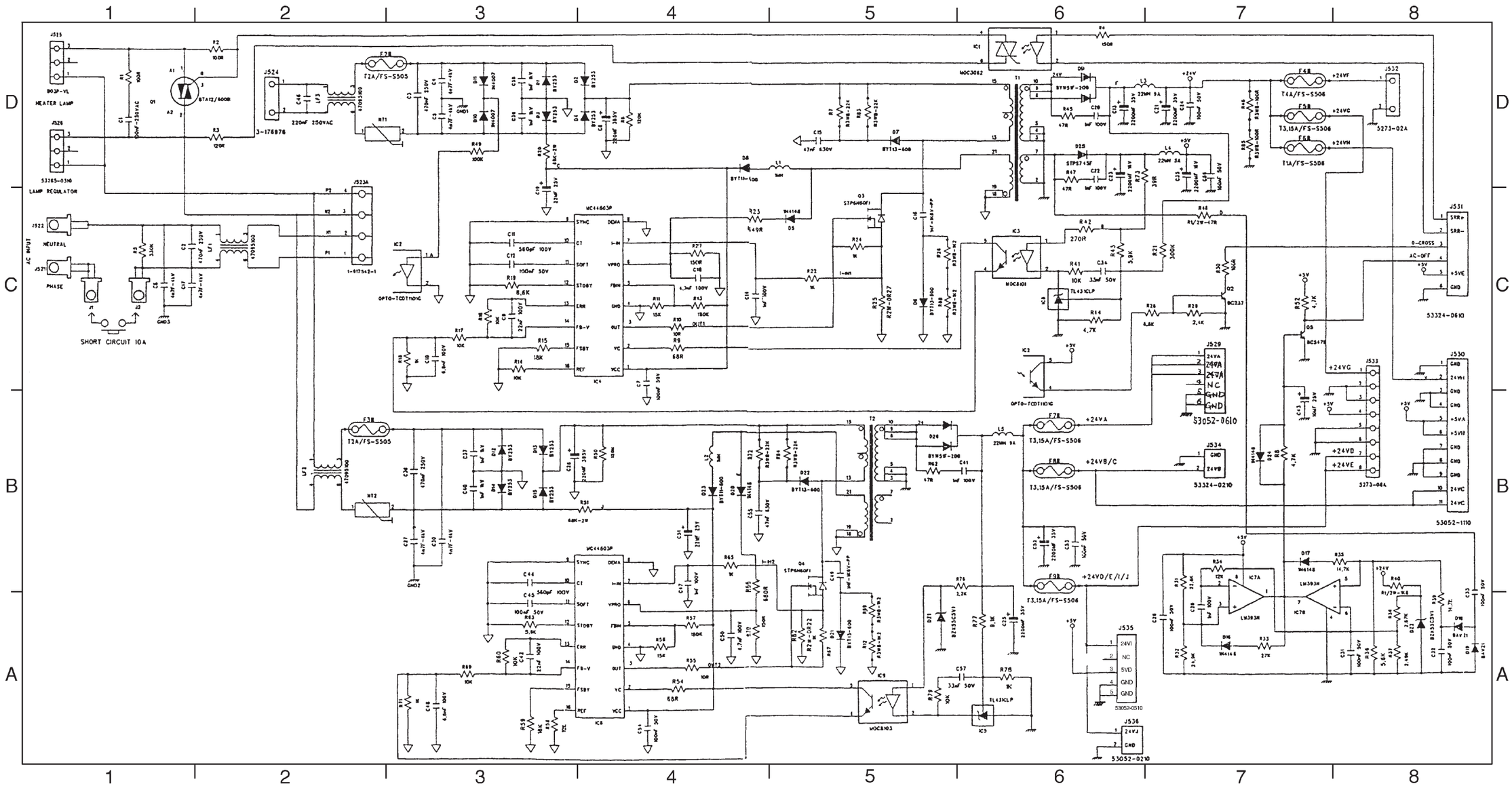

15. POWER STABILIZING CIRCUIT

15.1 Power Circuit

This power circuit has the following 3 DC outputs.

DC output	Rating	Main load
5V	5.1V±5%	LED eraser array, LCD, LED, logic IC power supplies
24VA – E, I, J	24V±10%	Motors, clutches, high-voltage transformer, scanning motor
24VF – H	24V±10%	RADF, optional sorter, main switch

15.2 Description of Operation

When the main switch on the copier is turned ON, AC power is supplied to the switching power supply, and then the 5V power supply for the logic ICs, and the 24VF – H DC power supply for the RADF and sorter are turned ON. At this time, if the door switch is ON (closed), the 24VA – E, I, J DC voltages are turned ON.

Each of these power circuit is provided with overcurrent protection fuses (excluding 5V) and an overcurrent protection unit is provided in the circuit to protect the copier's power circuit in case of an overload or a power output short.

When these functions are in operation, remove the cause of the overload or short. When a fuse has blown, replace the fuse. Or, when overcurrent protection in the circuit is in operation, turn the main switch OFF then ON again to enable circuit operation.

The power circuit is also provided with an overvoltage protection function. This function prevents the power supply from turning ON to protect electrical components if two different voltages short. If this happens, remove the cause of the short, and turn the main switch OFF then ON again to enable circuit operation.

15.3 DC Voltage Applications and Related Fuse Numbers

Voltage	Load	Fuse Numbers
+5.1V	For LSIs, logic ICs, LED eraser array, LCD, and display LEDs.	—
ACOFF ZCINT	For detection of abnormalities in the power supply, and exposure lamp control.	—
+24VA	Main motor (M1)	F7
+24VB +24VC	Scanning motor (M2), lens motor (M3), mirror motor (M4), tray-up motor (M13), exit fan (M7), OPT fan (M6, 12), Bottom fan (M8), toner motor (M9), document motor (M11), aligning clutch (CLT2), transport clutch (CLT1), feed clutch (CLT3 – 5), total counter	F8
+24VD, E	PFP (pedestal)	F9
+24VI	ADU	
+24VJ	LCF	
+24VF	RADF	F4
+24VG	Sorter	F5
+24VH	Reset switch (main switch) drive, remote monitoring	F6

[A] DC voltage check

DC output voltages can be checked on following connector pin.

Voltage	Connector	Pin
24VA	J529	1
24VB	J534	2
24VC	J530	11
24VD	J533	7
24VE	J533	8
24VI	J535	1
24VJ	J536	1
24VF	J532	1
24VG	J533	1
24VH	J530	2
5V	J531	5

15.4 AC Voltage

① Heater lamp voltage

② Lamp regulator voltage

③ Damp heater voltage

15.5 Output Sequence

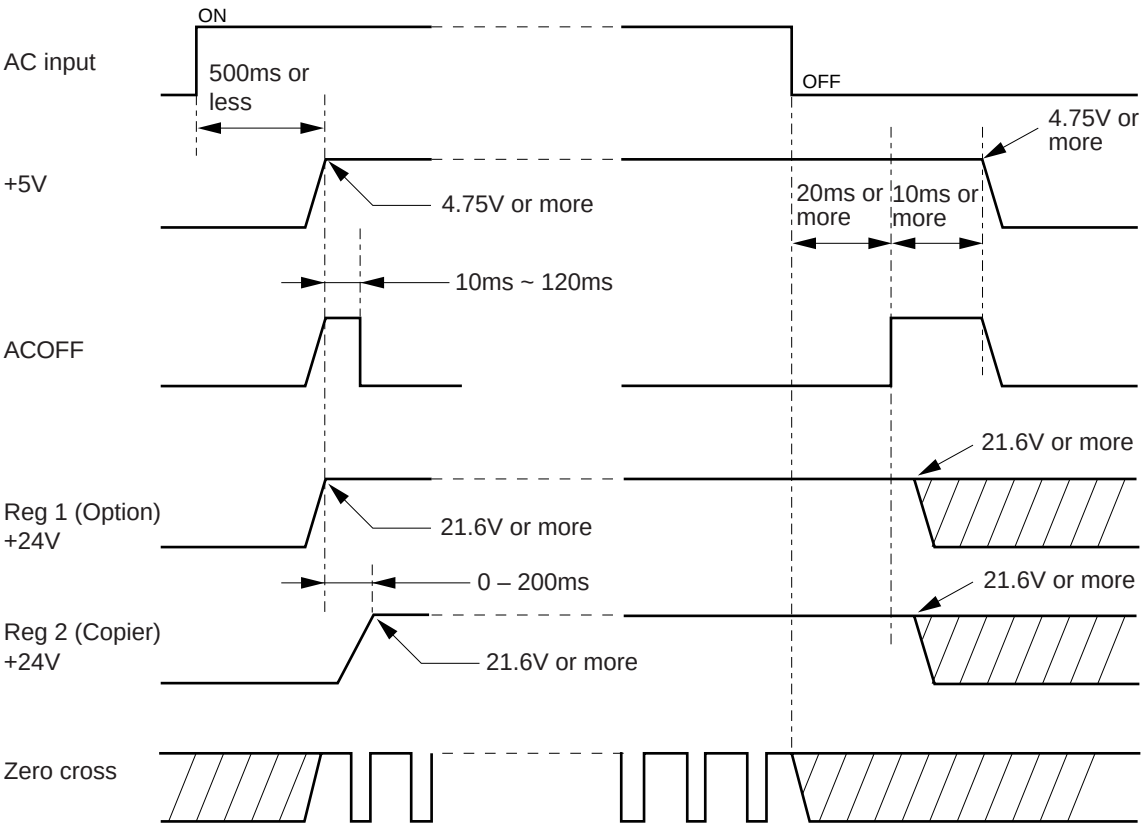

16. PC BOARD ASSEMBLY

16.1 PWA-LGC

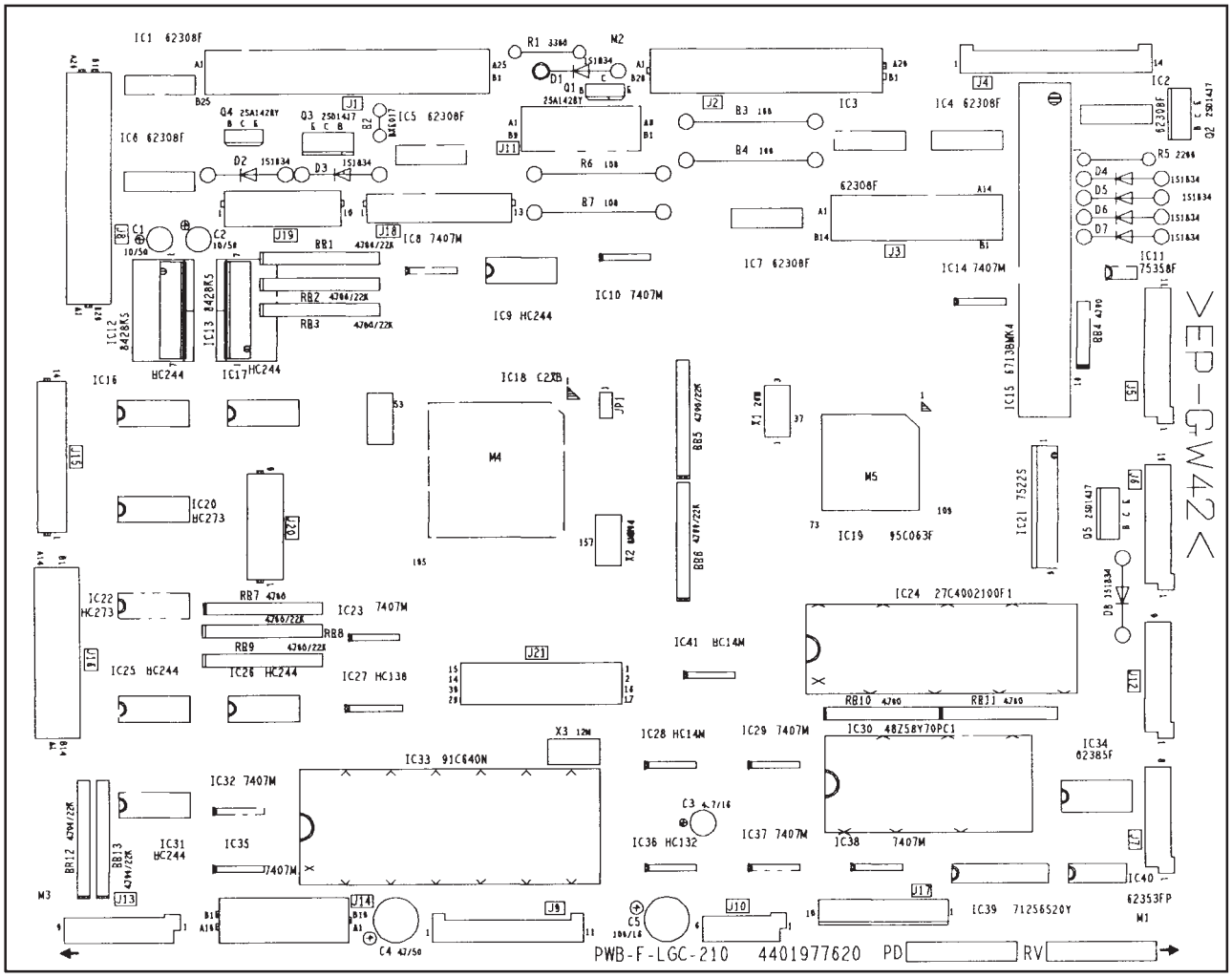

16.2 PWA-DSP

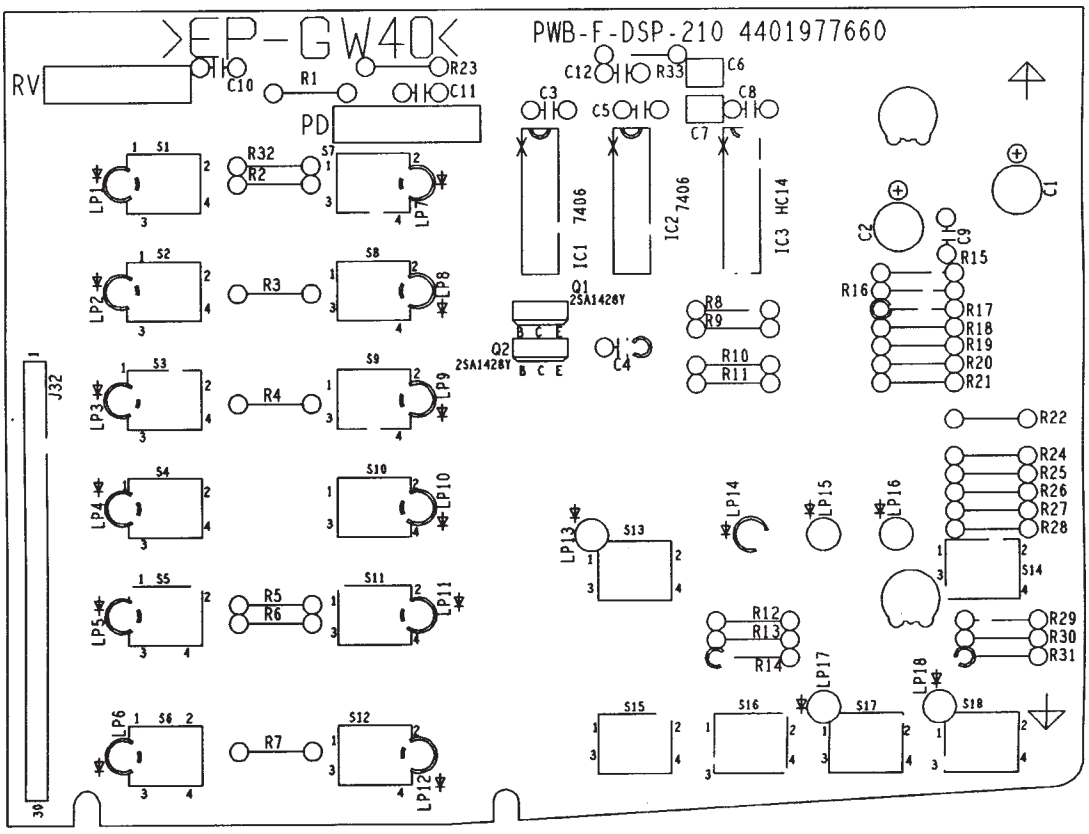

>EP-GW40<
PWB-F-DSP-210 4401977660
RV
PD
C10
R1
R23
C11
C12
R33
C6
C3
C5
C8
C7
IC1 7406
IC2 7406
IC3 HC14
Q1 2SA1428Y
Q2 2SA1428Y
C4
C1
C2
C9
R15
R16
R17
R18
R19
R20
R21
R22
R24
R25
R26
R27
R28
R29
R30
R31
R8
R9
R10
R11
R12
R13
R14
R32
R2
R3
R4
R5
R6
R7
S1
S2
S3
S4
S5
S6
S7
S8
S9
S10
S11
S12
S13
S14
S15
S16
S17
S18
LP1
LP2
LP3
LP4
LP5
LP6
LP7
LP8
LP9
LP10
LP11
LP12
LP13
LP14
LP15
LP16
LP17
LP18
J32

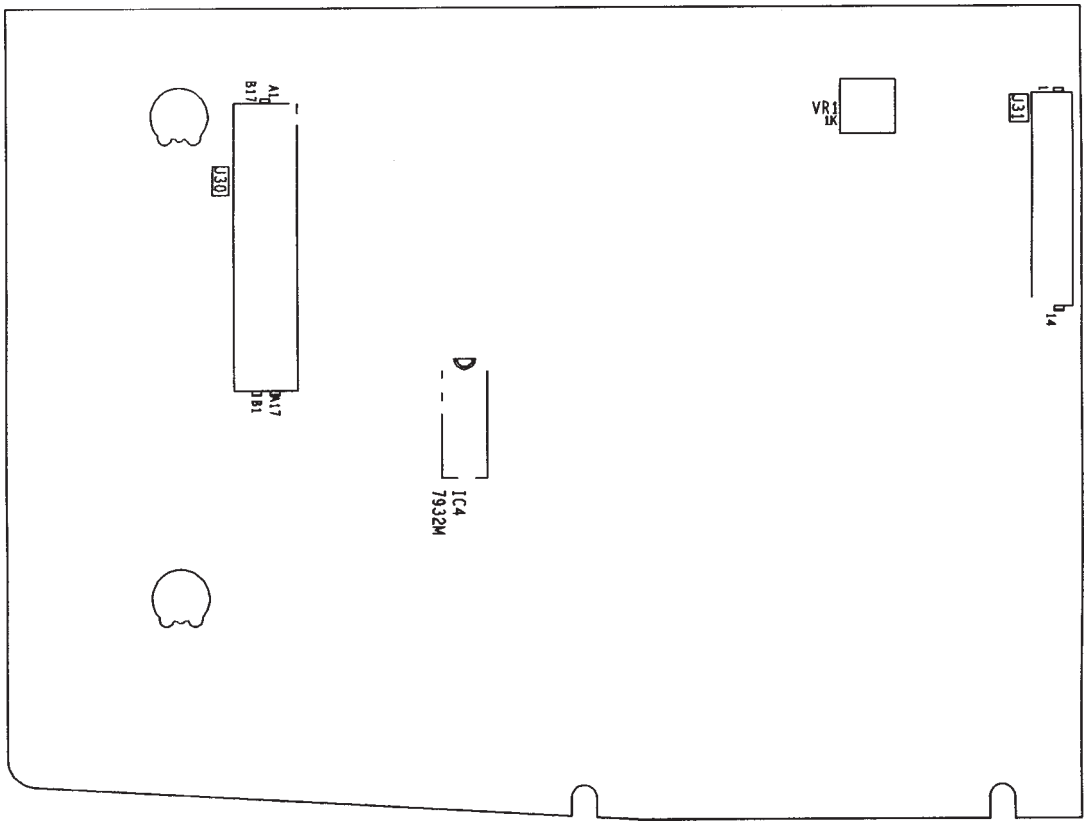

VR1 1K
J30
J31
IC4 7932M

16.3 PWA-KEY

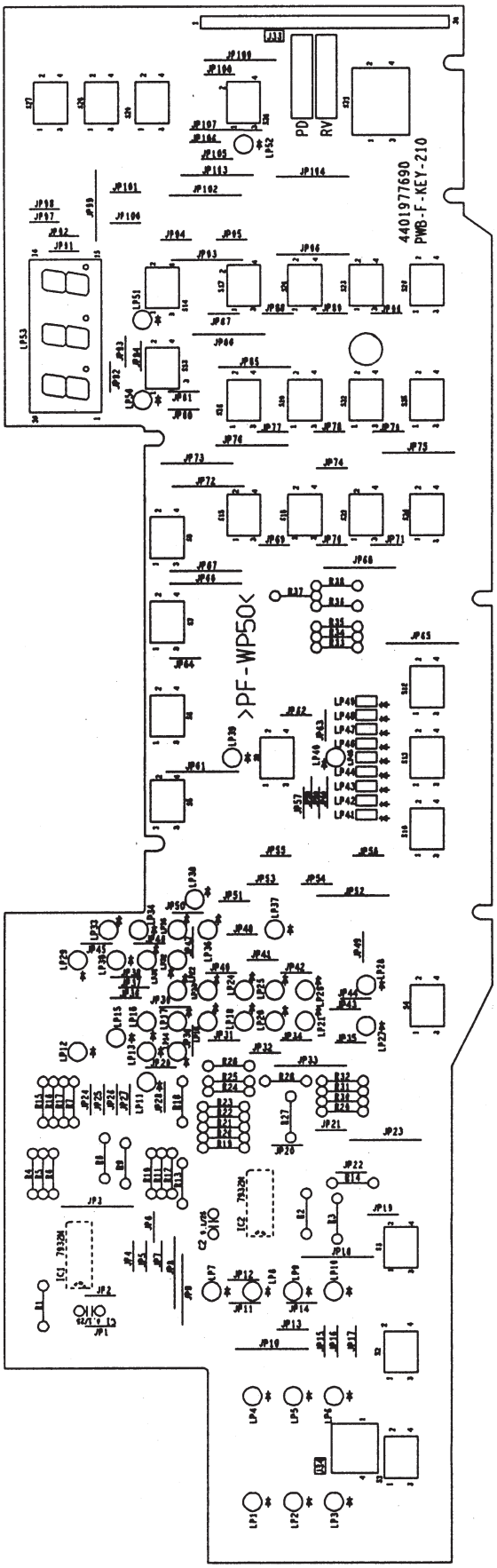

16.4 LCD

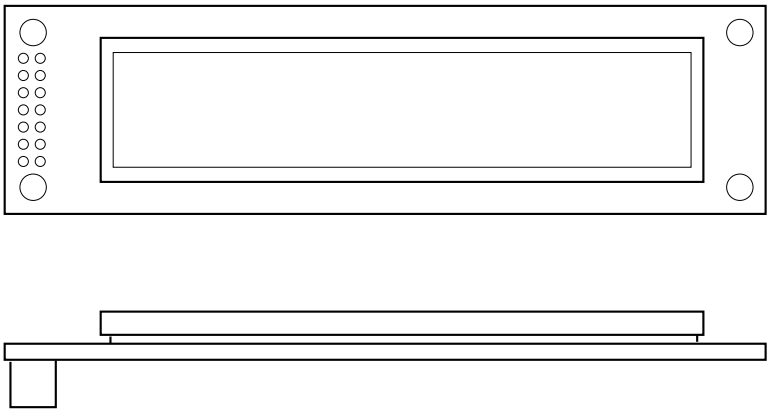

16.5 PWA-ERS

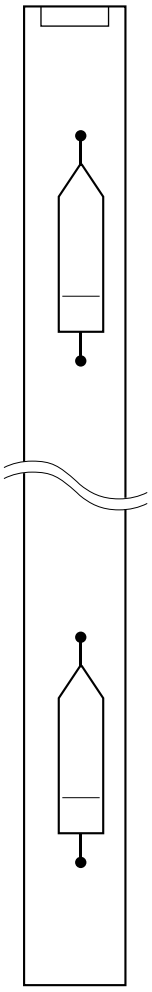

16.6 PS-ACC

[A-1] Japanese/chinese production (115V)

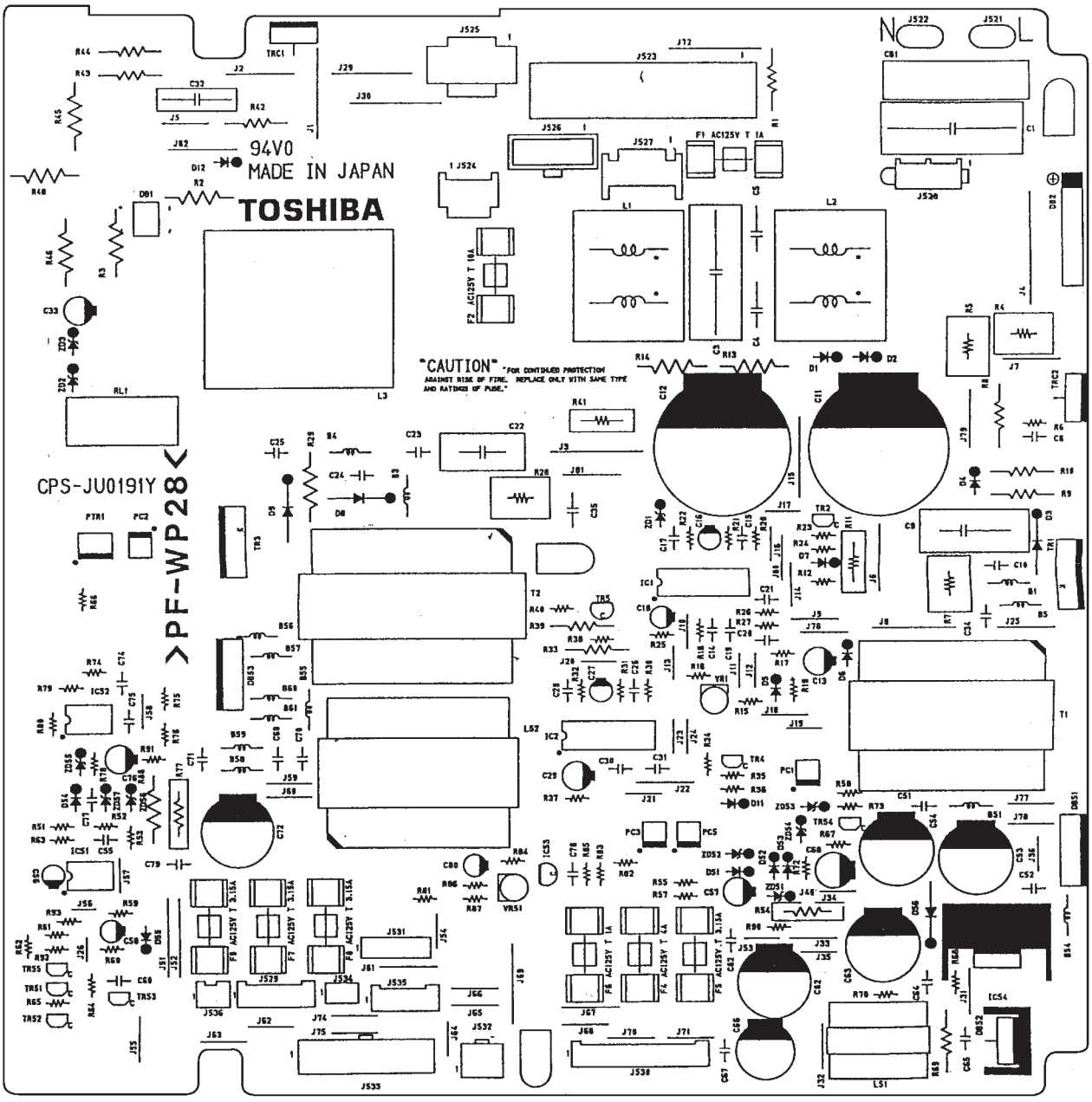

[A-2] Japanese/chinese production (230V)

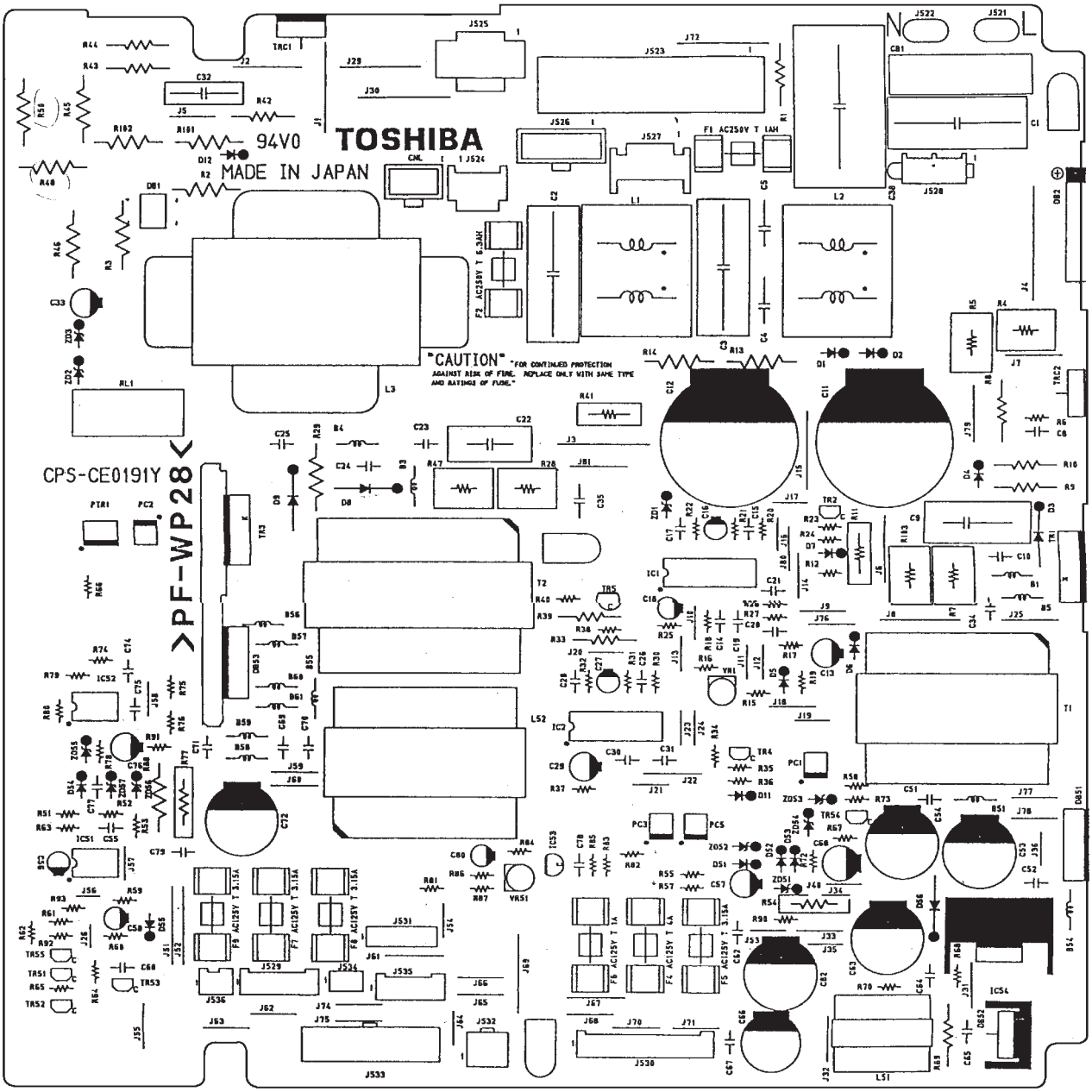

[B] French production

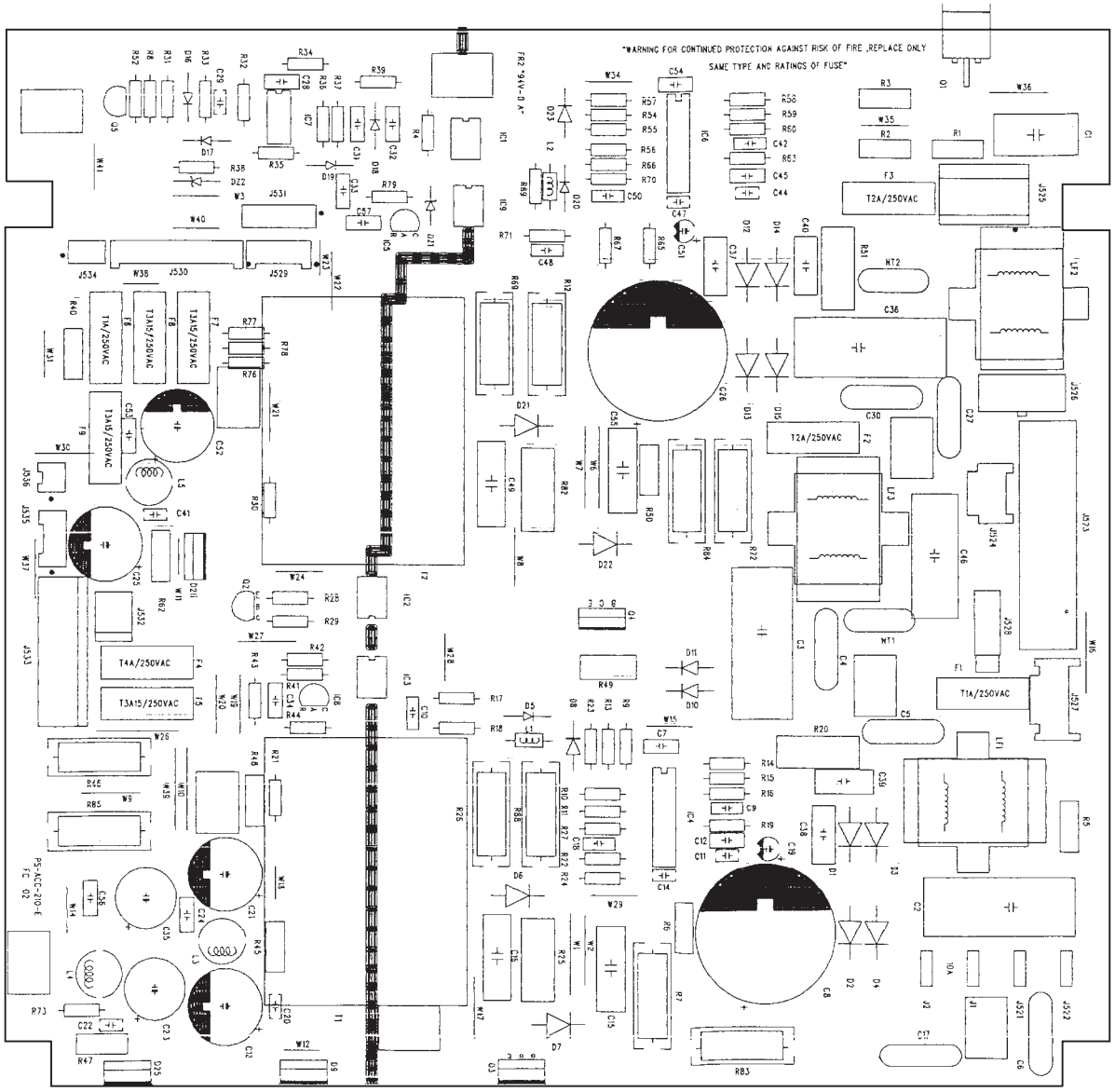

16.7 PS-HVT

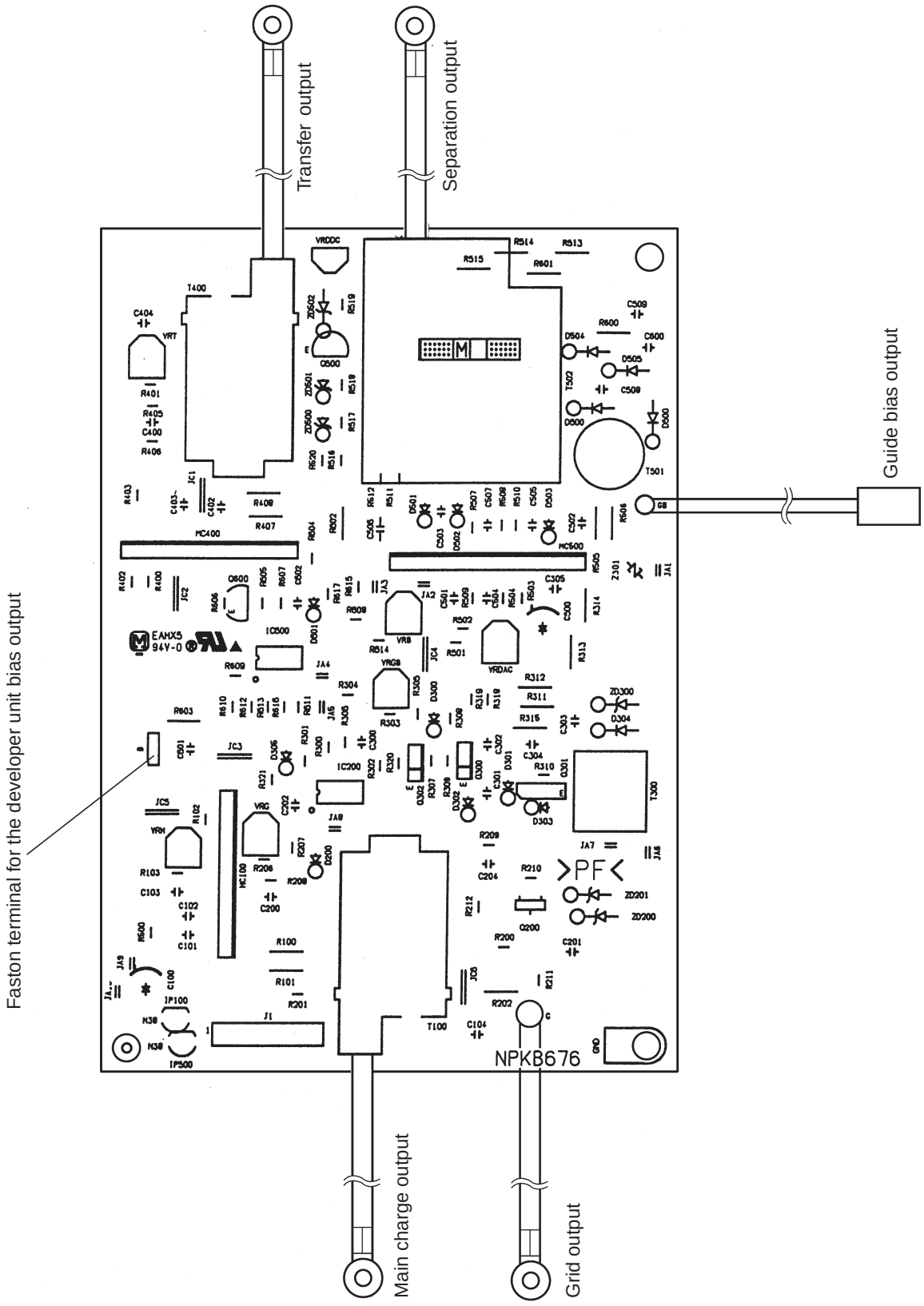
Transfer output
Separation output
Guide bias output
Faston terminal for the developer unit bias output
Main charge output
Grid output
NPKB676

17. WIRE HARNESS CONNECTION DIAGRAM

17.1 AC Wire Harness

[A] Japanese/chinese production

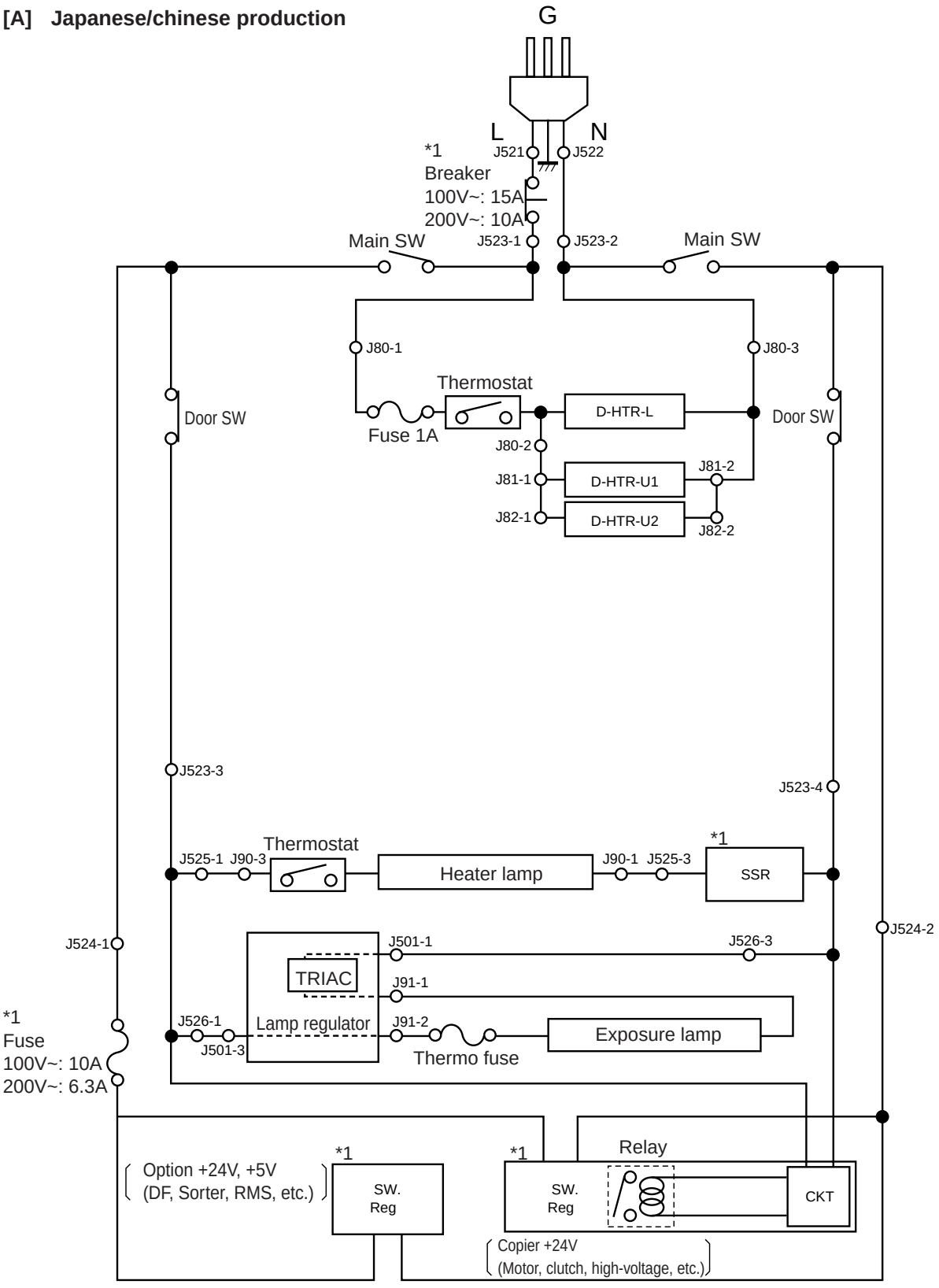

*1: Parts inside the switching power supply

[B] French production

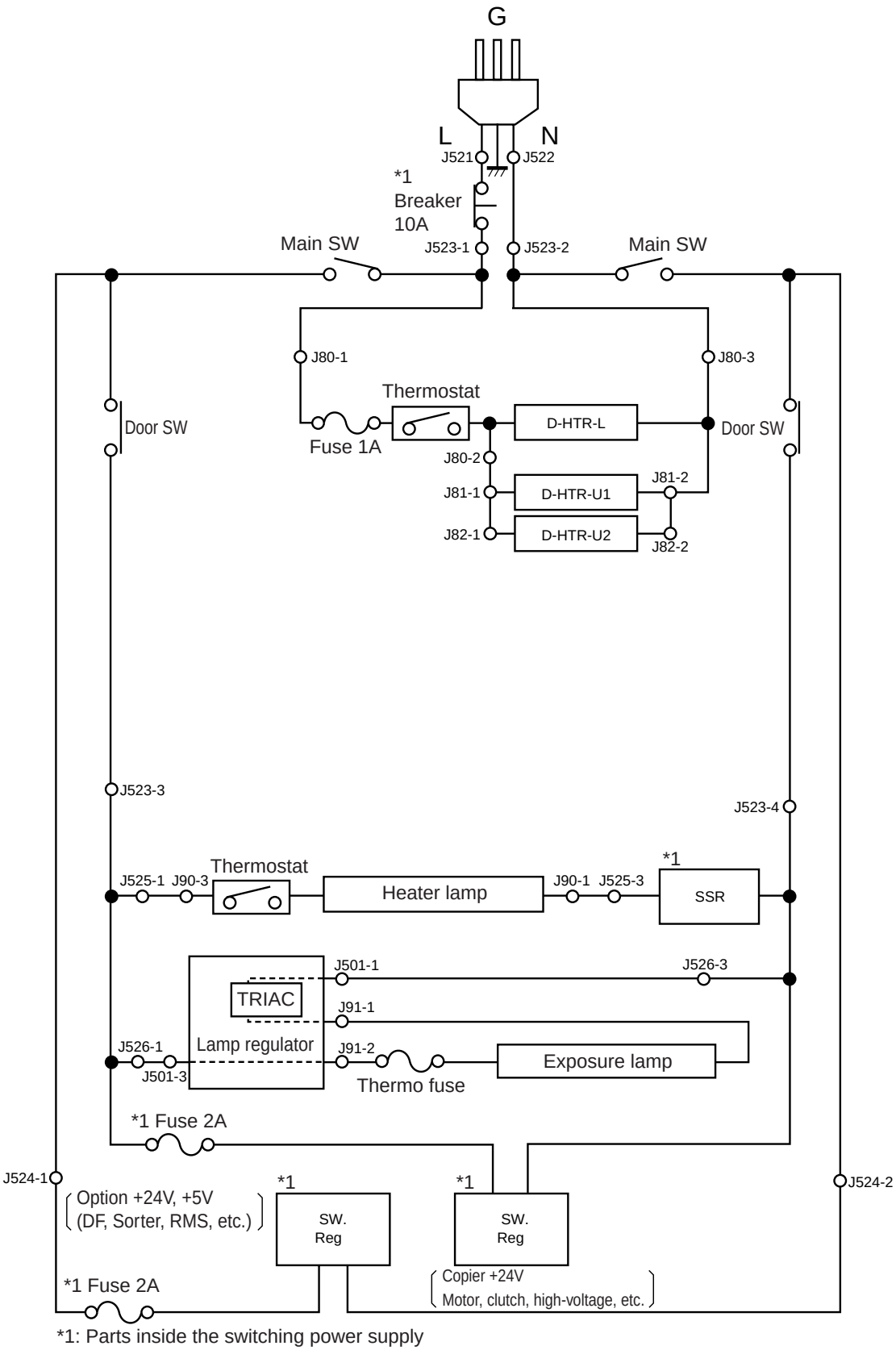

*1: Parts inside the switching power supply

17.2 DC Wire Harness Connection Diagram

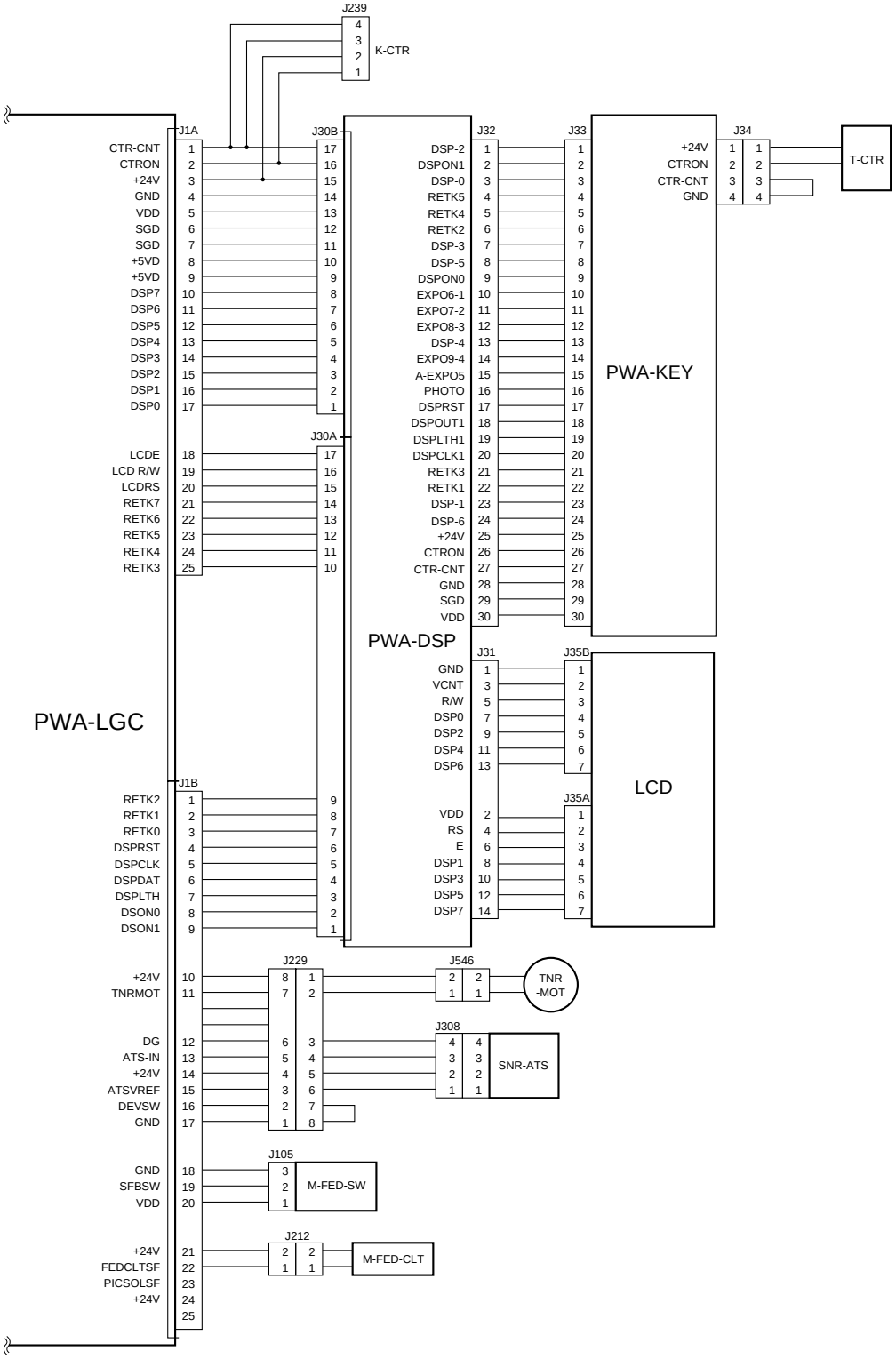

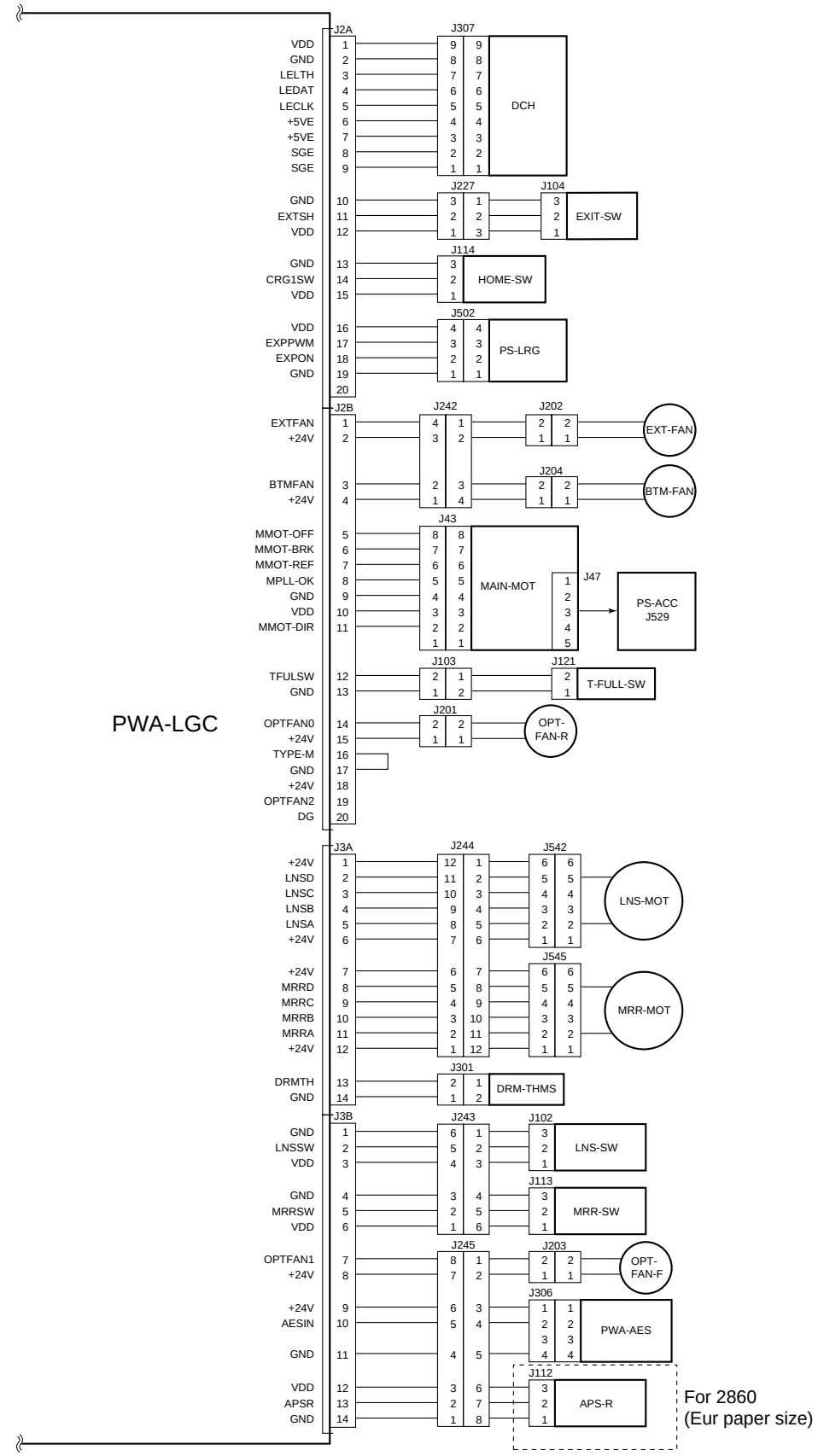
PWA-LGC
J2A
VDD 1
GND 2
LELTH 3
LEDAT 4
LECLK 5
+5VE 6
+5VE 7
SGE 8
SGE 9
GND 10
EXTSH 11
VDD 12
GND 13
CRG1SW 14
VDD 15
VDD 16
EXPPWM 17
EXPON 18
GND 19
20
J307
DCH
J227
J104
EXIT-SW
J114
HOME-SW
J502
PS-LRG
J2B
EXTFAN 1
+24V 2
BTMFAN 3
+24V 4
MMOT-OFF 5
MMOT-BRK 6
MMOT-REF 7
MPLL-OK 8
GND 9
VDD 10
MMOT-DIR 11
TFULSW 12
GND 13
OPTFAN0 14
+24V 15
TYPE-M 16
GND 17
+24V 18
OPTFAN2 19
DG 20
J242
J202
EXT-FAN
J204
BTM-FAN
J43
MAIN-MOT
J47
PS-ACC
J529
J103
J121
T-FULL-SW
J201
OPT-
FAN-R
J3A
+24V 1
LNSD 2
LNSC 3
LNSB 4
LNSA 5
+24V 6
+24V 7
MRRD 8
MRRC 9
MRRB 10
MRRA 11
+24V 12
DRMTH 13
GND 14
J244
J542
LNS-MOT
J545
MRR-MOT
J301
DRM-THMS
J3B
GND 1
LNSSW 2
VDD 3
GND 4
MRRSW 5
VDD 6
OPTFAN1 7
+24V 8
+24V 9
AESIN 10
GND 11
VDD 12
APSR 13
GND 14
J243
J102
LNS-SW
J113
MRR-SW
J245
J203
OPT-
FAN-F
J306
PWA-AES
J112
APS-R
For 2860
(Eur paper size)

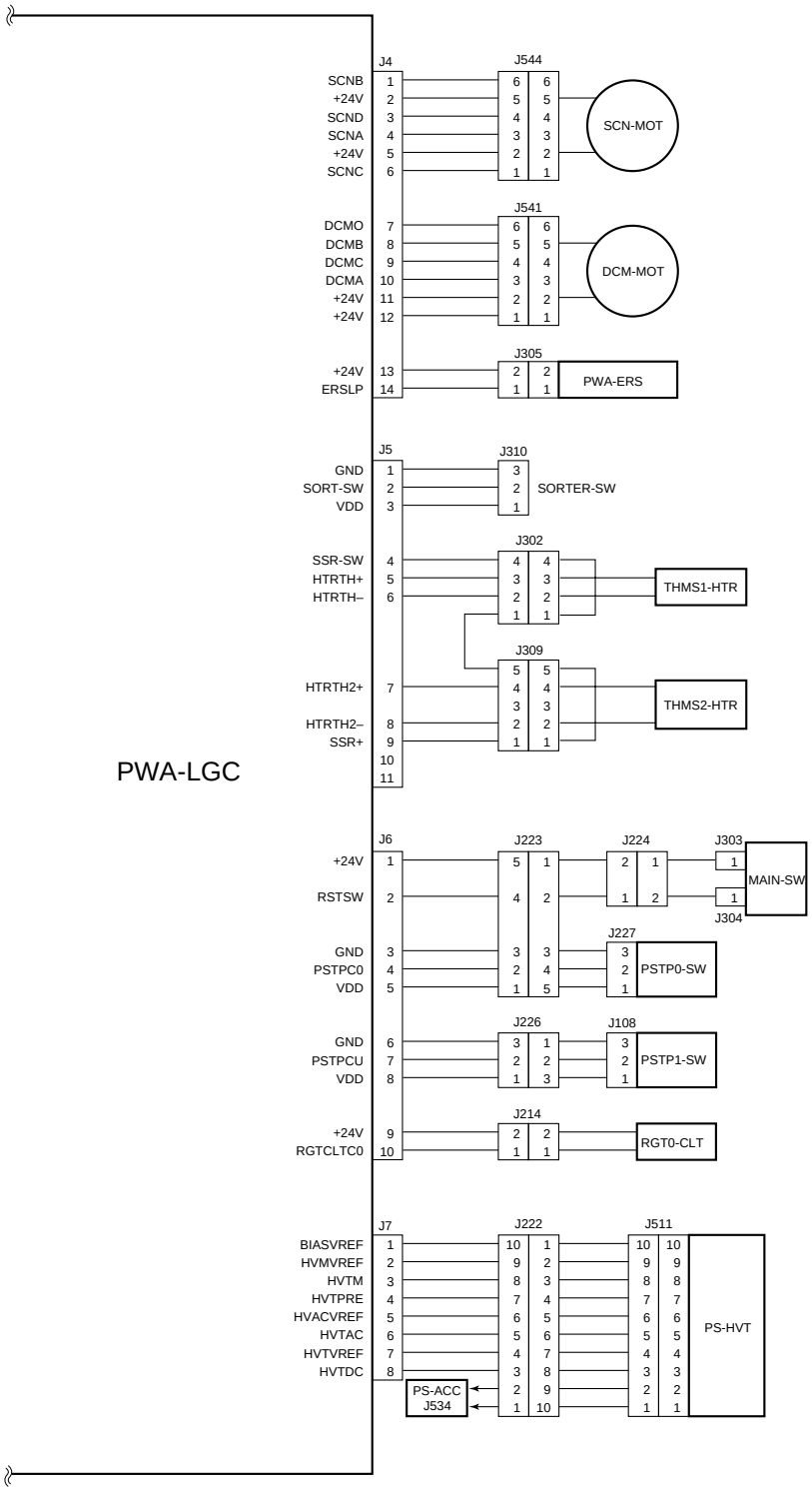
PWA-LGC
J4
SCNB 1
+24V 2
SCND 3
SCNA 4
+24V 5
SCNC 6
J544
SCN-MOT
DCMO 7
DCMB 8
DCMC 9
DCMA 10
+24V 11
+24V 12
J541
DCM-MOT
+24V 13
ERSLP 14
J305
PWA-ERS
J5
GND 1
SORT-SW 2
VDD 3
J310
SORTER-SW
SSR-SW 4
HTRTH+ 5
HTRTH– 6
J302
THMS1-HTR
J309
HTRTH2+ 7
HTRTH2– 8
SSR+ 9
10
11
THMS2-HTR
J6
+24V 1
RSTSW 2
GND 3
PSTPC0 4
VDD 5
GND 6
PSTPCU 7
VDD 8
+24V 9
RGTCLTC0 10
J223
J224
J303
MAIN-SW
J304
J227
PSTP0-SW
J226
J108
PSTP1-SW
J214
RGT0-CLT
J7
BIASVREF 1
HVMVREF 2
HVTM 3
HVTPRE 4
HVACVREF 5
HVTAC 6
HVTVREF 7
HVTDC 8
J222
J511
PS-HVT
PS-ACC
J534

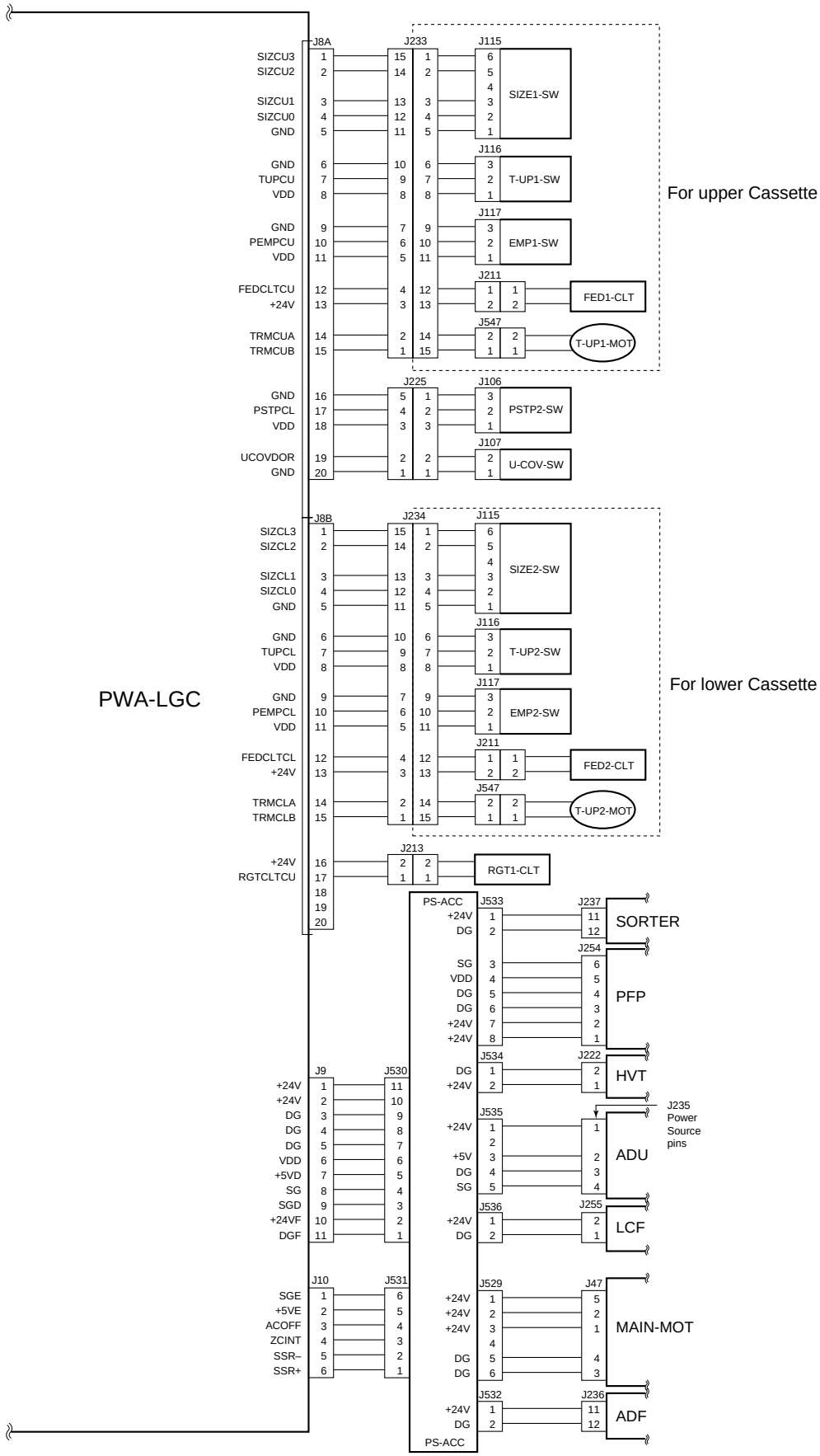
PWA-LGC
J8A
SIZCU3
SIZCU2
SIZCU1
SIZCU0
GND
GND
TUPCU
VDD
GND
PEMPCU
VDD
FEDCLTCU
+24V
TRMCUA
TRMCUB
GND
PSTPCL
VDD
UCOVDOR
GND
J233
J115
SIZE1-SW
J116
T-UP1-SW
J117
EMP1-SW
J211
FED1-CLT
J547
T-UP1-MOT
J225
J106
PSTP2-SW
J107
U-COV-SW
For upper Cassette
J8B
SIZCL3
SIZCL2
SIZCL1
SIZCL0
GND
GND
TUPCL
VDD
GND
PEMPCL
VDD
FEDCLTCL
+24V
TRMCLA
TRMCLB
+24V
RGTCLTCU
J234
J115
SIZE2-SW
J116
T-UP2-SW
J117
EMP2-SW
J211
FED2-CLT
J547
T-UP2-MOT
J213
RGT1-CLT
For lower Cassette
J9
+24V
+24V
DG
DG
DG
VDD
+5VD
SG
SGD
+24VF
DGF
J530
J10
SGE
+5VE
ACOFF
ZCINT
SSR–
SSR+
J531
PS-ACC
J533
+24V
DG
J237
SORTER
J254
SG
VDD
DG
DG
+24V
+24V
PFP
J534
DG
+24V
J222
HVT
J535
+24V
+5V
DG
SG
J235
Power
Source
pins
ADU
J536
+24V
DG
J255
LCF
J529
+24V
+24V
+24V
DG
DG
J47
MAIN-MOT
J532
+24V
DG
J236
ADF
PS-ACC

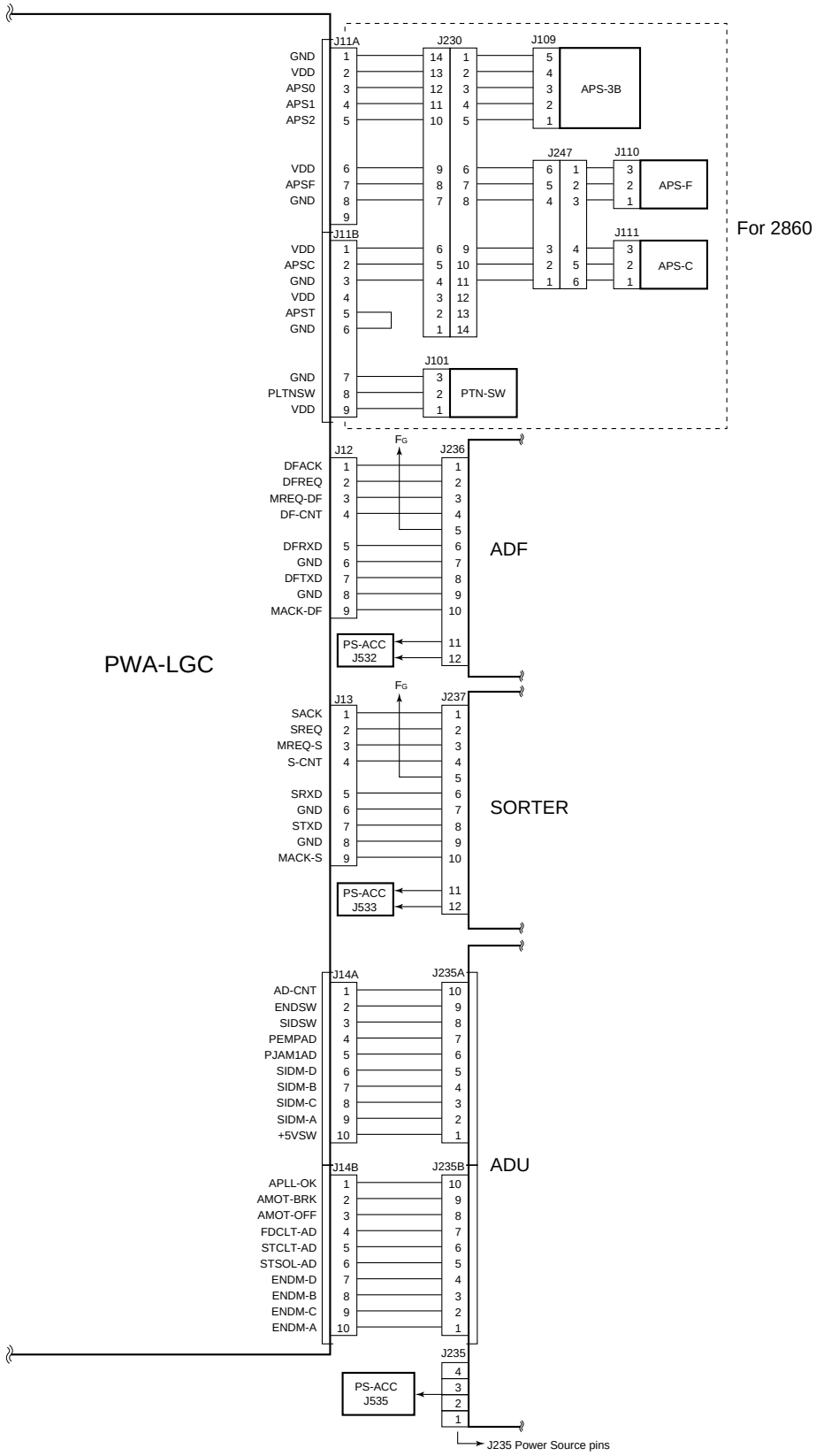
PWA-LGC
For 2860
J11A
GND 1
VDD 2
APS0 3
APS1 4
APS2 5
VDD 6
APSF 7
GND 8
9
J11B
VDD 1
APSC 2
GND 3
VDD 4
APST 5
GND 6
GND 7
PLTNSW 8
VDD 9
J230
14 1
13 2
12 3
11 4
10 5
9 6
8 7
7 8
6 5 10
5 4 11
4 3 12
3 2 13
2 1 14
J109
5
4
3
2
1
APS-3B
J247
6 1
5 2
4 3
3 4
2 5
1 6
J110
3
2
1
APS-F
J111
3
2
1
APS-C
J101
3
2
1
PTN-SW
J12
DFACK 1
DFREQ 2
MREQ-DF 3
DF-CNT 4
DFRXD 5
GND 6
DFTXD 7
GND 8
MACK-DF 9
FG
J236
1
2
3
4
5
6
7
8
9
10
11
12
ADF
PS-ACC
J532
J13
SACK 1
SREQ 2
MREQ-S 3
S-CNT 4
SRXD 5
GND 6
STXD 7
GND 8
MACK-S 9
FG
J237
1
2
3
4
5
6
7
8
9
10
11
12
SORTER
PS-ACC
J533
J14A
AD-CNT 1
ENDSW 2
SIDSW 3
PEMPAD 4
PJAM1AD 5
SIDM-D 6
SIDM-B 7
SIDM-C 8
SIDM-A 9
+5VSW 10
J235A
10
9
8
7
6
5
4
3
2
1
J14B
APLL-OK 1
AMOT-BRK 2
AMOT-OFF 3
FDCLT-AD 4
STCLT-AD 5
STSOL-AD 6
ENDM-D 7
ENDM-B 8
ENDM-C 9
ENDM-A 10
J235B
10
9
8
7
6
5
4
3
2
1
ADU
J235
4
3
2
1
PS-ACC
J535
J235 Power Source pins

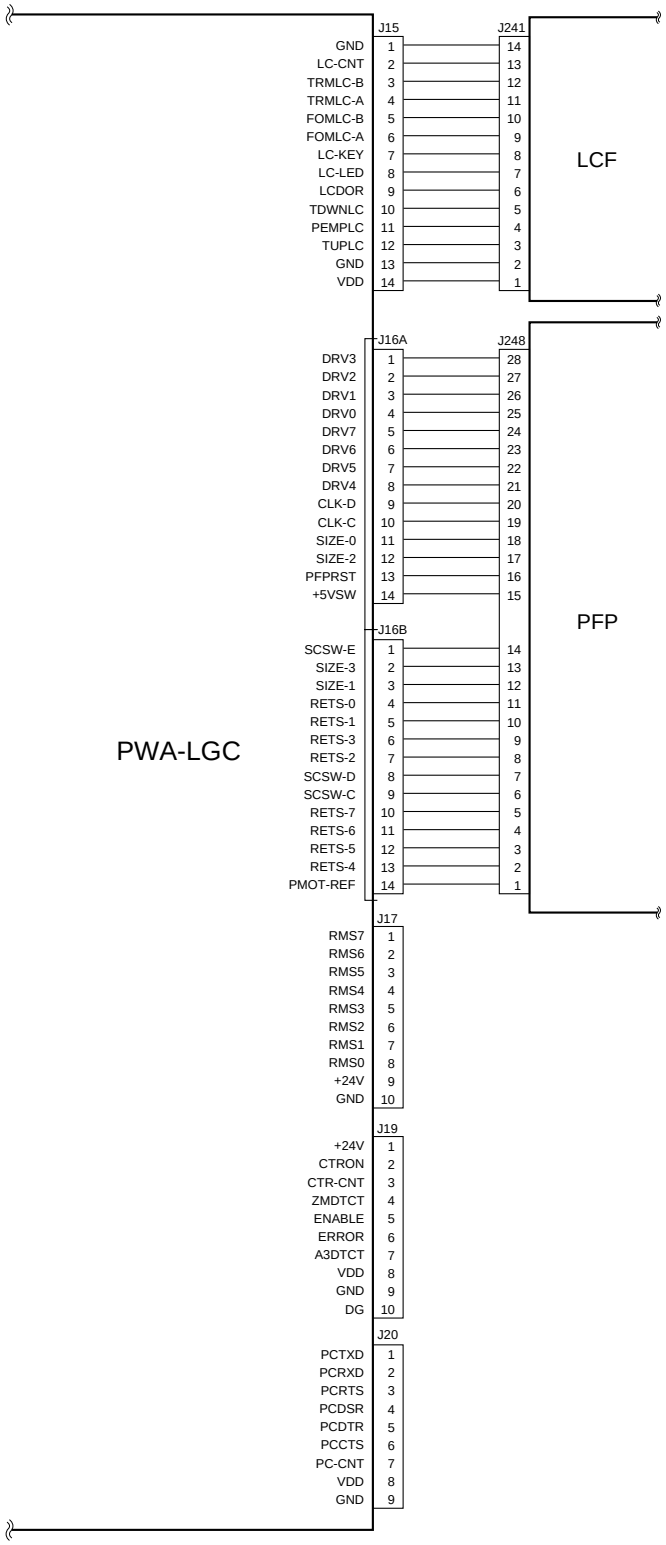
PWA-LGC
J15
GND 1
LC-CNT 2
TRMLC-B 3
TRMLC-A 4
FOMLC-B 5
FOMLC-A 6
LC-KEY 7
LC-LED 8
LCDOR 9
TDWNLC 10
PEMPLC 11
TUPLC 12
GND 13
VDD 14
J241
14 13 12 11 10 9 8 7 6 5 4 3 2 1
LCF
J16A
DRV3 1
DRV2 2
DRV1 3
DRV0 4
DRV7 5
DRV6 6
DRV5 7
DRV4 8
CLK-D 9
CLK-C 10
SIZE-0 11
SIZE-2 12
PFPRST 13
+5VSW 14
J248
28 27 26 25 24 23 22 21 20 19 18 17 16 15
J16B
SCSW-E 1
SIZE-3 2
SIZE-1 3
RETS-0 4
RETS-1 5
RETS-3 6
RETS-2 7
SCSW-D 8
SCSW-C 9
RETS-7 10
RETS-6 11
RETS-5 12
RETS-4 13
PMOT-REF 14
14 13 12 11 10 9 8 7 6 5 4 3 2 1
PFP
J17
RMS7 1
RMS6 2
RMS5 3
RMS4 4
RMS3 5
RMS2 6
RMS1 7
RMS0 8
+24V 9
GND 10
J19
+24V 1
CTRON 2
CTR-CNT 3
ZMDTCT 4
ENABLE 5
ERROR 6
A3DTCT 7
VDD 8
GND 9
DG 10
J20
PCTXD 1
PCRXD 2
PCRTS 3
PCDSR 4
PCDTR 5
PCCTS 6
PC-CNT 7
VDD 8
GND 9

18. INSTALLATION INSTRUCTION

18.1 2060, 2860/70

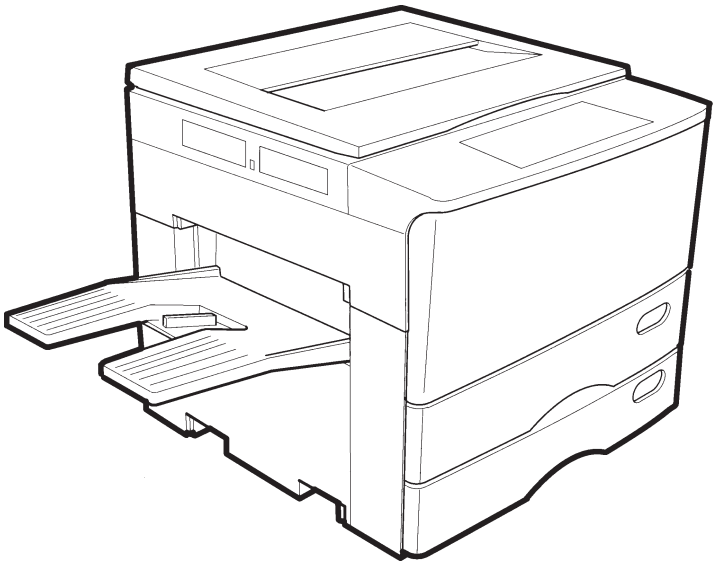

WARNING 警告 ATTENTION WARNUNG 警告

●The unpacking and set-up procedure shall be done by a qualified service technician.

●開梱および設置は資格をもったサービス技術者が行わなければなりません。

●La procédure de déballage et de mise en route doit étre exécutée par un technicien d'entretien qualifié.

●Auspacken und Einrichten muß von einem qualifizierten Service-Techniker durchgeführt werden.

●机器的开箱及安装必须由专业人员负责。

⚠WARNING

- The unpacking and set-up procedure should be done by a qualified person.

●According to the application PPC models, there is possibility of changing these figures.

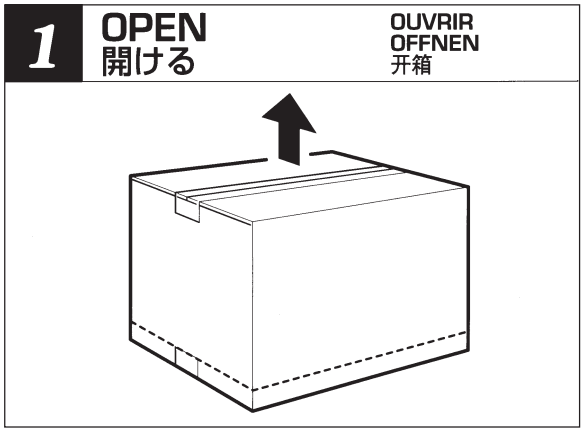

<Unpacking procedure>

Unpacking the copier carton box.

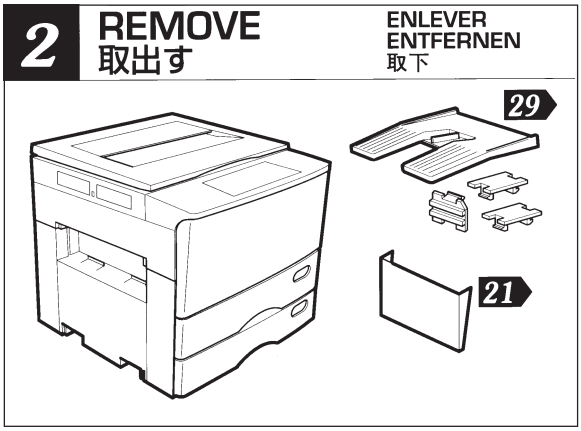

<Unpacking the accessory package>

Remove the accessory package and other packing material.

Accessories vary according to the destination.

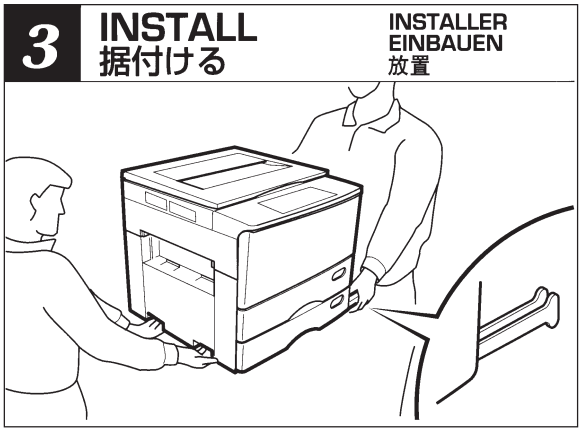

- The machine must be lifted with a person on its right and left side and the handles grasped firmly.
- Keep the machine horizontal when transporting it.
- Set the machine on the appropriate stand.

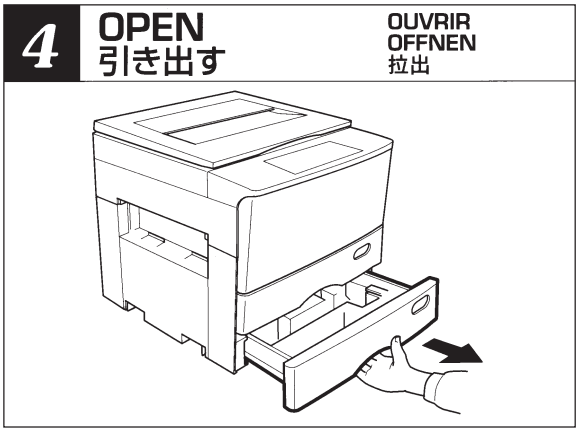

Pull out the cassette.

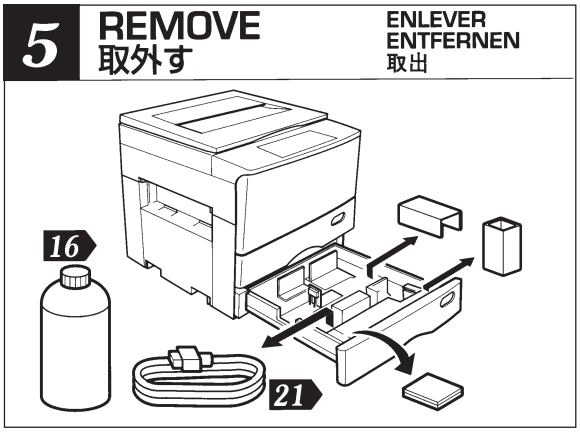

- Remove the packing materials from inside of the cassette.
- Remove the power cord and the developer bottle.

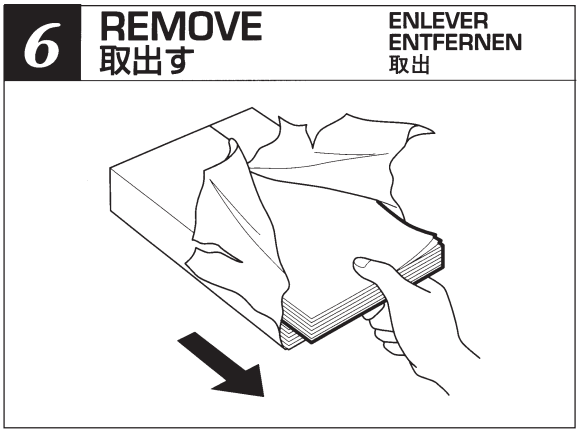

Remove the paper from the paper package.

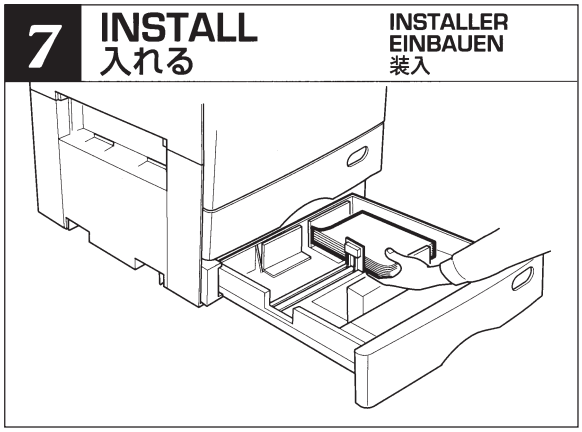

Set the paper for each cassette.

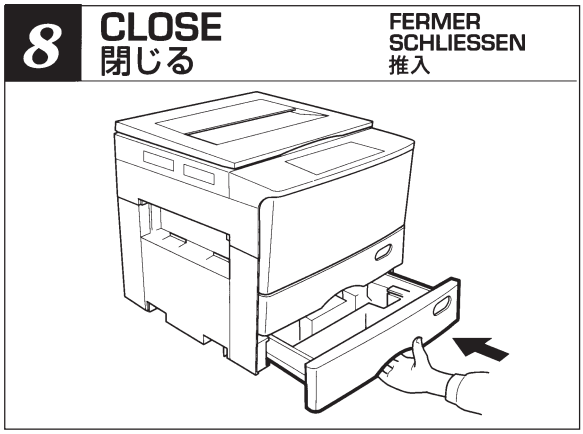

Insert the cassette gently.

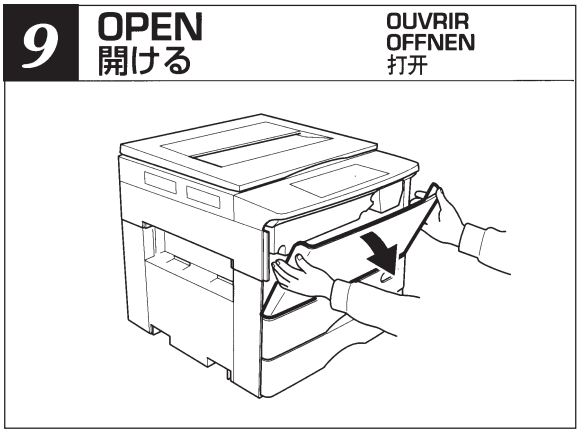

Open the front cover.

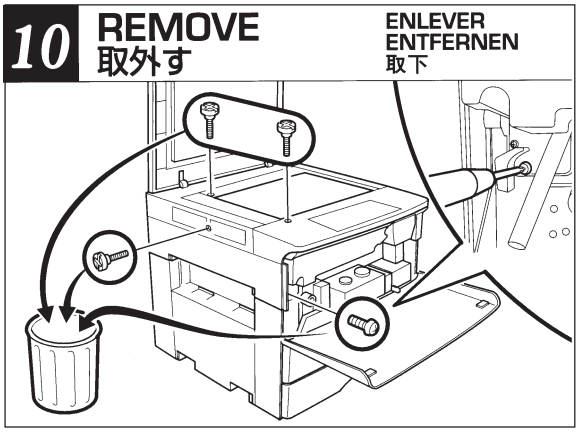

Remove the packing screws.

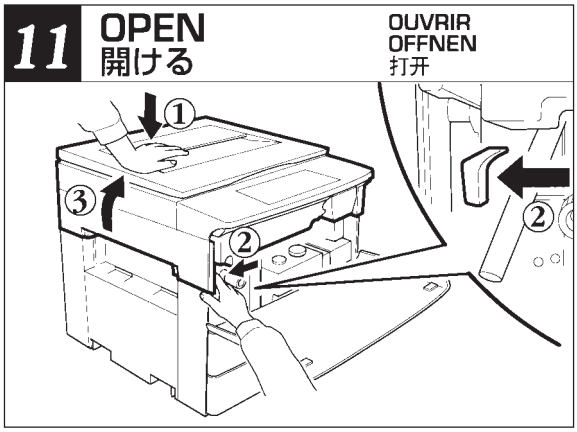

Open the upper unit.

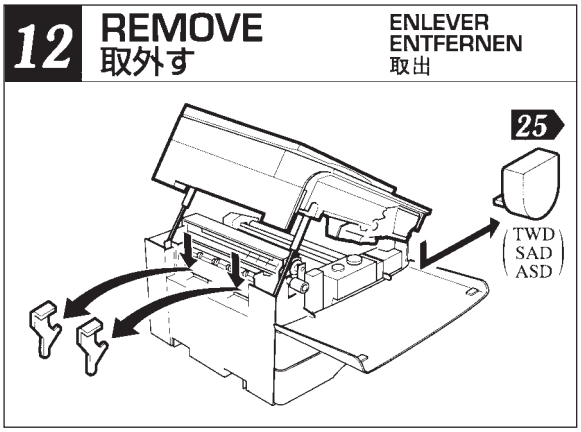

- Remove the pressure release bracket (2 pcs.) from the fuser unit.
- Remove the toner cartridge (only for AUD, TWD, SAD, ASD).

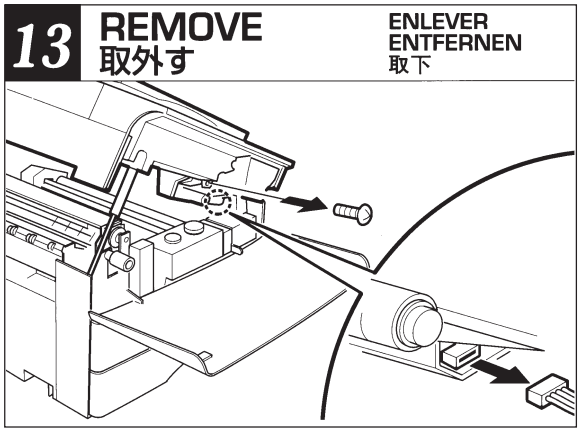

Remove the process unit.

- Remove the screw and connector, then the process unit.

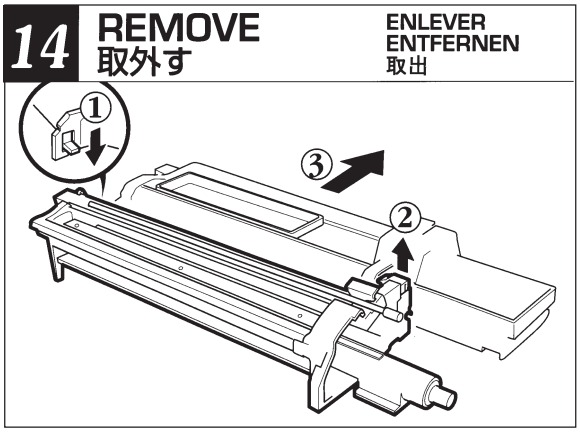

- Place the process unit on a flat surface. Raise the lever located on each side of the process unit in the direction of the arrow.
- Remove the developer unit from the process unit.

Note: If the photoconductor is exposed to fluorescent light or external light for long time, it may suffer from light-caused fatigue. So, be sure to cover the process unit with, for example, a suitable cloth.

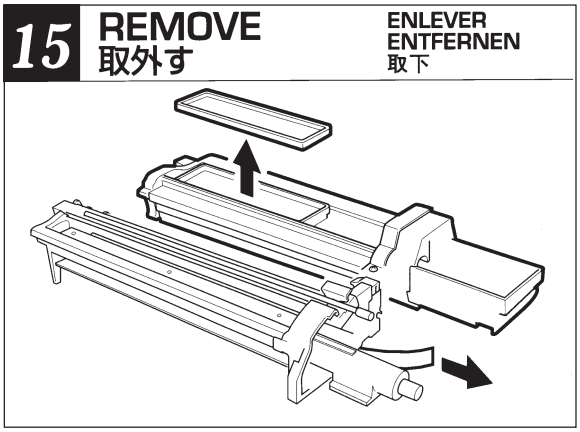

- Remove the top cover of the developer unit.
- Remove the protection mylar sheet for the separation claw from the cleaner unit.

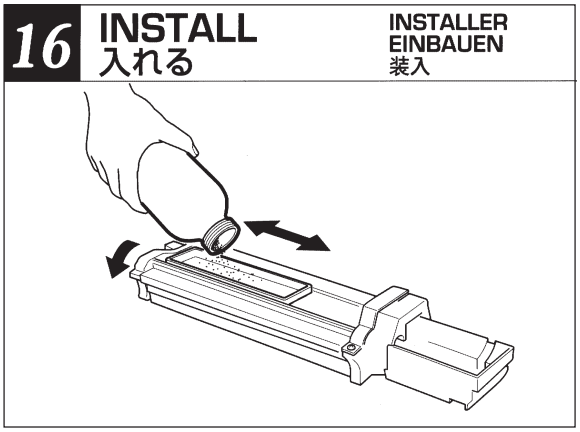

Pour in the developer material.

Note: Before pouring in the developer material, be sure to shake the developer bottle fully.

By rotating the magnetic roller, check to make sure that the developer material is transported properly.

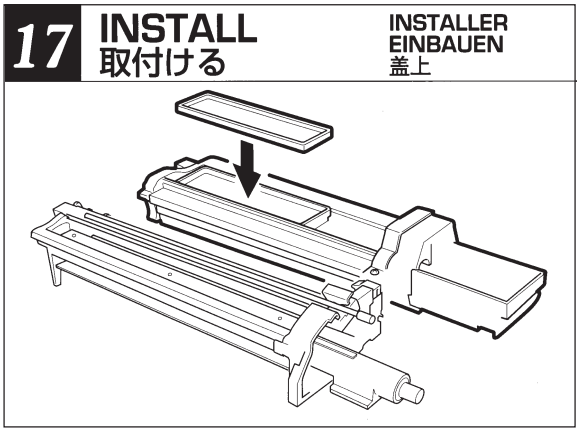

Reinstall the top cover.
Be sure to install the top cover firmly.

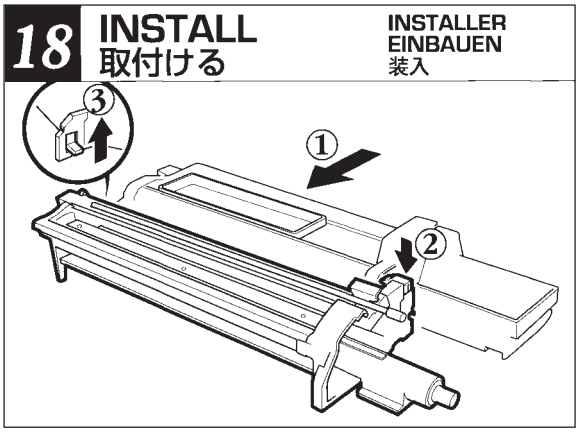

After placing the developer unit in the process unit, move down the lever on each side to fix the developer unit.

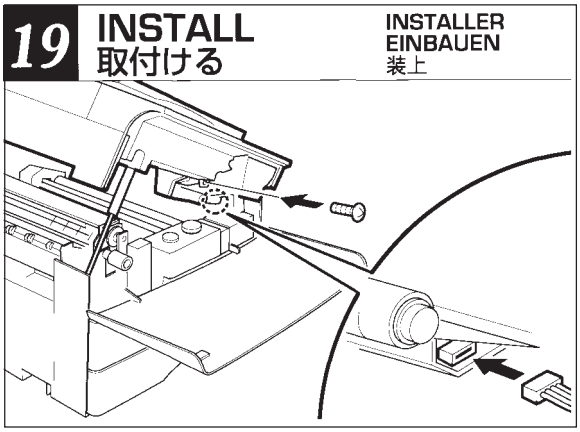

Reinstall the process unit into the machine.

Reinstall the screw and connector.

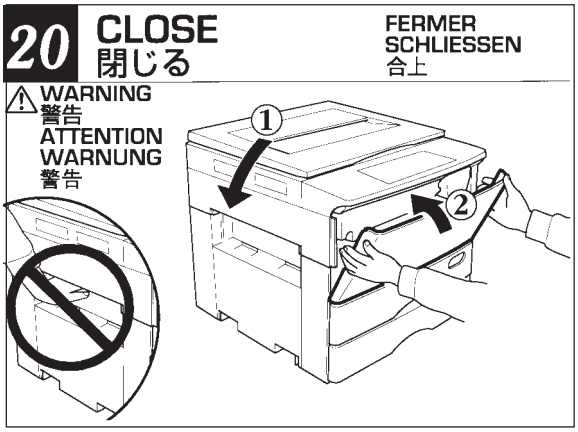

⚠WARNING

- Be careful not to catch your fingers between the two units when the upper unit is pressed down.

Close the upper unit and the front cover.

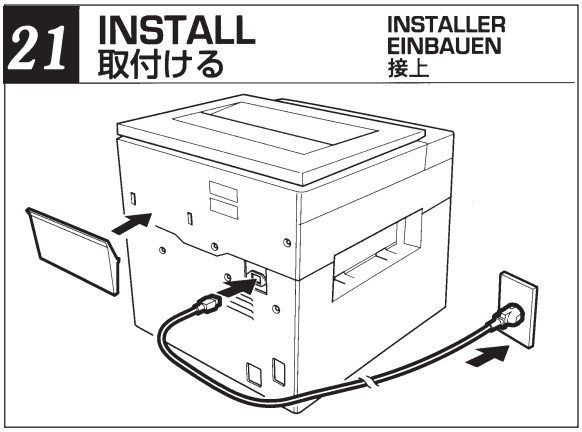

- Connect the power cable to the outlet.
- Install the operator's manual pocket.

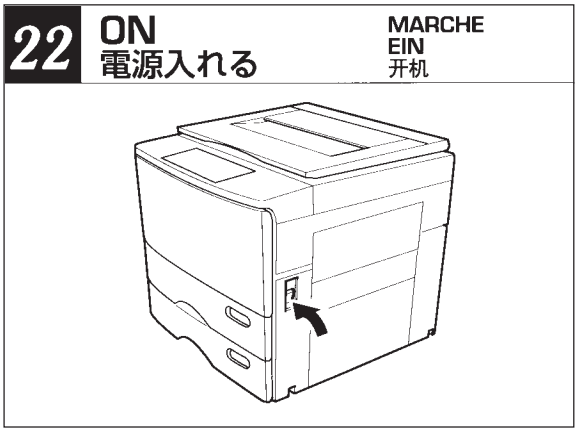

Turn on the copier main switch.

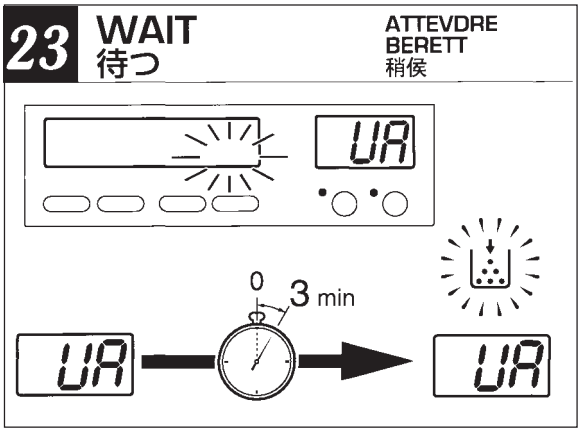

<Adjustment procedure>

Automatic adjustment of the auto-toner sensor

(1) When the power switch is turned on, the auto-toner sensor is automatically adjusted by the following procedure.

(2) "UA" is shown on the copy quantity display. The automatic adjustment of the auto-toner sensor starts.

(3) The machine starts its operation. The output value of the toner sensor is shown on the display and changes quickly.

(4) About 2 minutes and 30 seconds later, the value on the display stabilizes at 230~250.

(5) About 30 seconds later, the automatic adjustment of the auto-toner sensor is complete and "UA" is shown on the copy quantity display. Also, the ADD TONER symbol is displayed.

- If the adjustment has finished abnormally, the machine stops its operation and displays the CALL SERVICE symbol. Then, for the subsequent adjustment of the auto-toner sensor, follow the procedure described in the Service Manual.

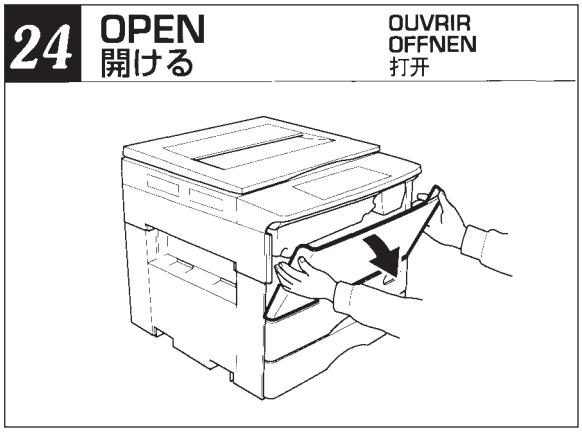

<Procedure for installing the toner cartridge>

Open the front cover.

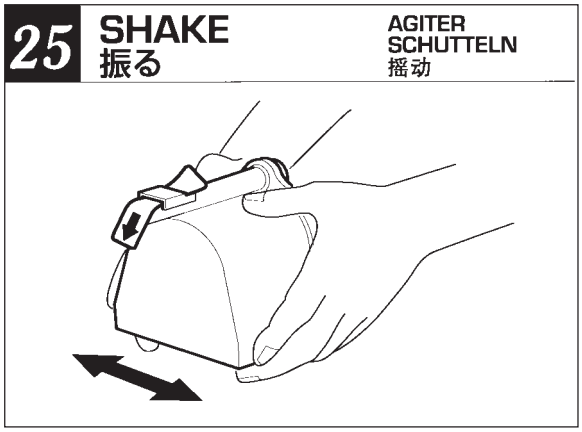

Shake the new toner cartridge to the right and to the left 5 or 6 times to loosen the toner inside.

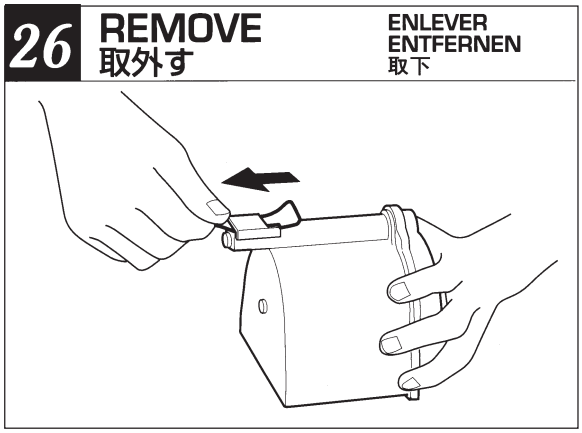

Pull to remove the seal from the new toner cartridge.

- Do not shake the toner cartridge after removing the seal (the toner may spill).

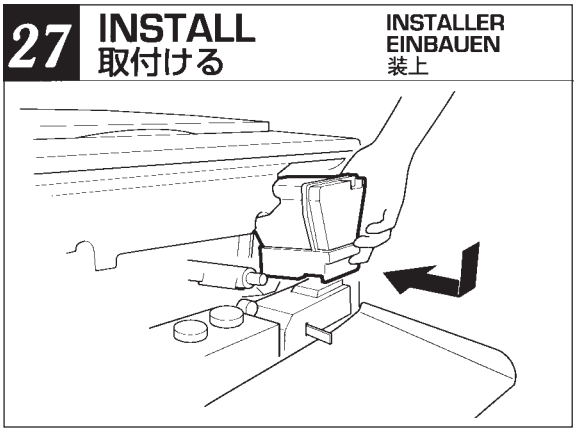

Install the new toner cartridge in the machine.

- Push the toner cartridge fully in until it is locked securely.

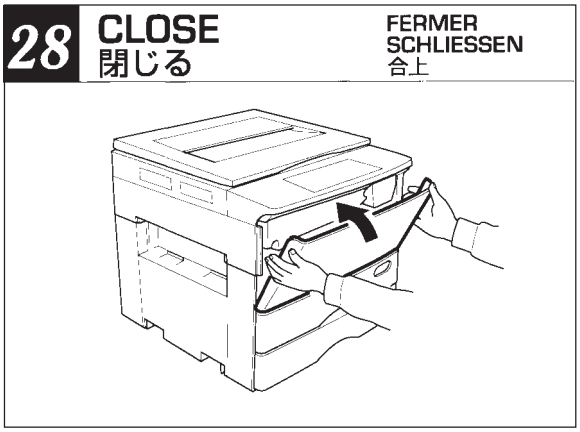

Close the front cover.

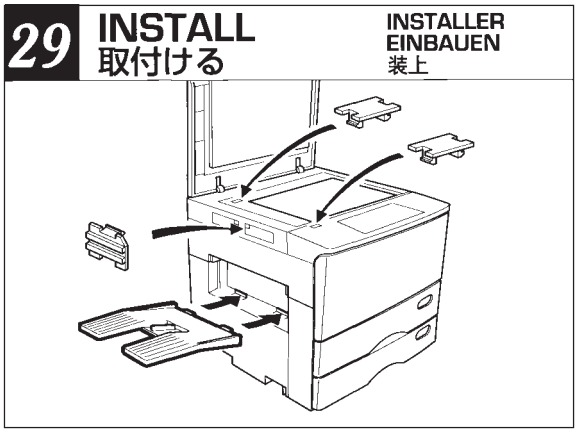

- Install the 3 plastic covers to the outer covers.
- The copy receiving tray should be installed in the slots in the exit cover.

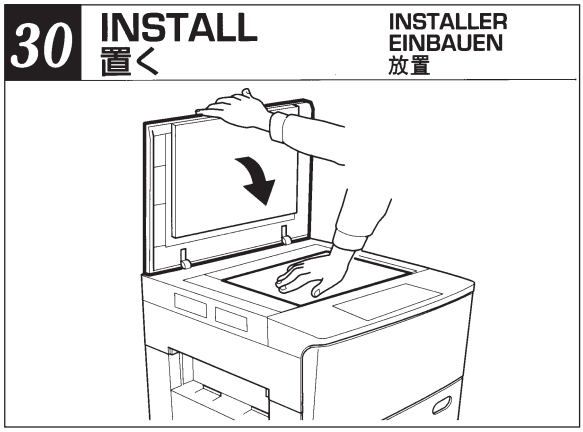

Put the original on the glass.

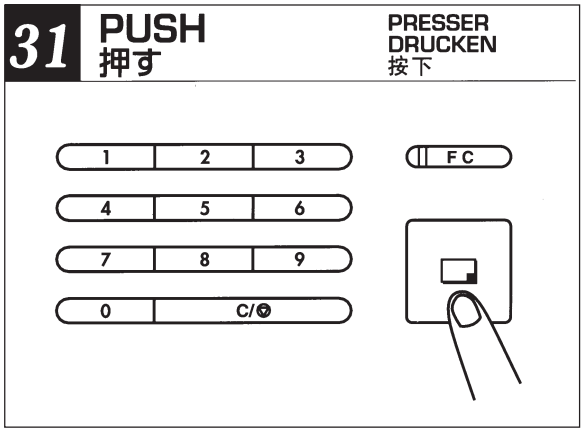

<Final Check>

Making copies from the cassette and the bypass, check the following.

- Paper feeding from the cassette is correct.
- Paper feeding from the bypass feed guide is correct.
- Automatic duplexer operation is correct (if ADU is installed).
- Light distribution is correct.
- Fixing and cleaning are correct.
- Exposure level is correct.
- Control panel displays and key operation are correct.
  - * Basic operations
  - * Special features
  - – Automatic paper selection (APS), Automatic magnification selection (AMS)
  - – Duplex mode (if ADU is installed)
  - – Enlarging and reducing modes
  - – Interrupting mode
  - – Dual-page copying
  - – Edge erase copying
  - – User set
  - – Image shifting
  - – Copy-mode memory

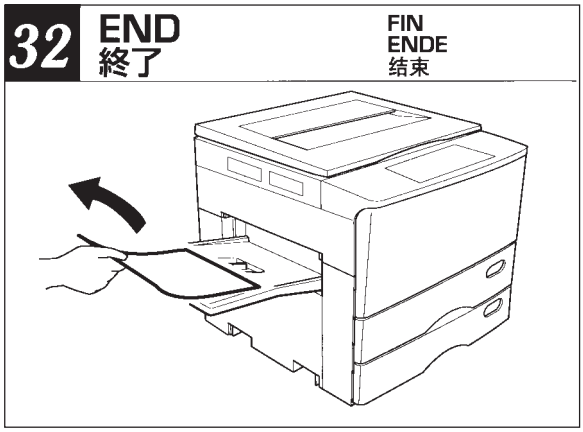

Note: The packing material should be disposed of properly.

18.2 Automatic Duplexing Unit (ADU) MD-5002

MD-5002

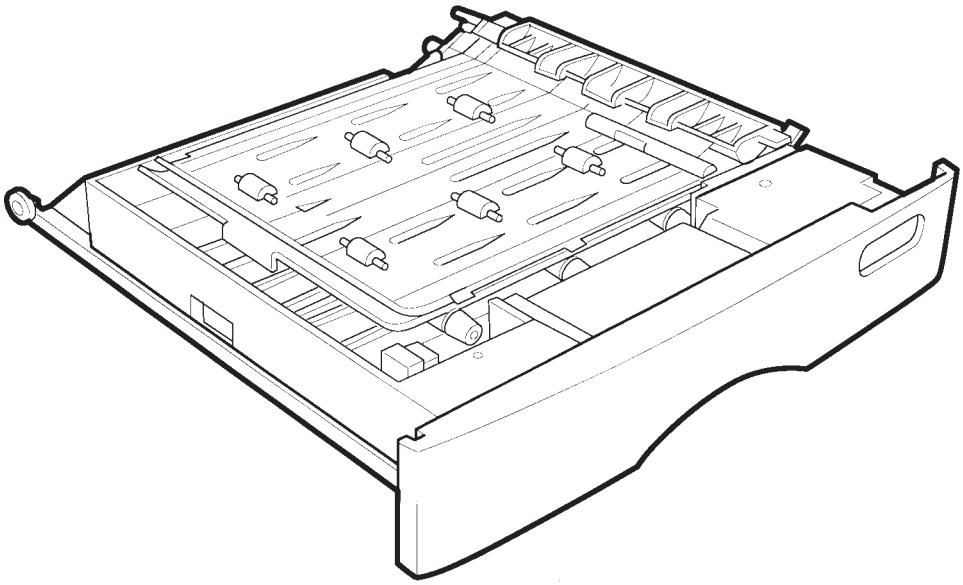

WARNING 警告 ATTENTION WARNUNG 警告

- The unpacking and set-up procedure shall be done by a qualified service technician.
- 開梱および設置は資格をもったサービス技術者が行わなければなりません。
- La procédure de déballage et de mise en route doit étre exécutée par un technicien d'entretien qualifié.
- Auspacken und Einrichten muß von einem qualifizierten Service-Techniker durchgeführt werden.
- 机器的开箱及安装必须由专业人员负责。

⚠WARNING

- The unpacking and setup procedure should be done by a qualified person.

●According to the application PPC models, there is possibility of changing these figures.

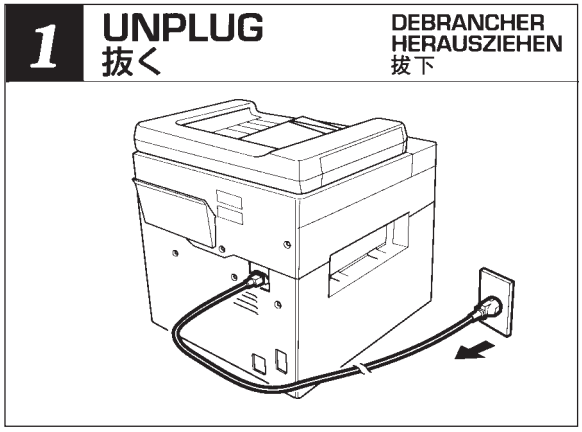

When performing the installation, turn off the main switch of the copier and unplug the power cable from the outlet.

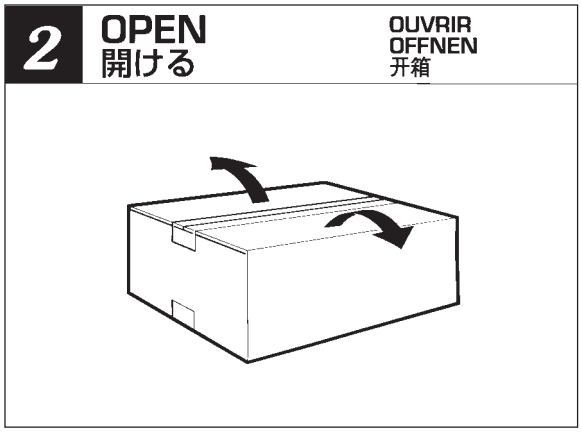

<Unpacking procedure>
Open the carton box.

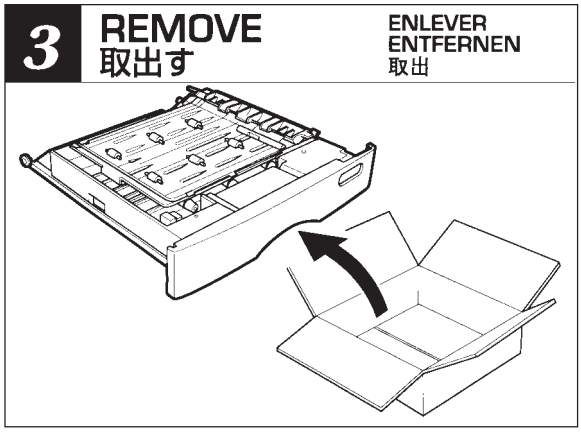

Take out the ADU.

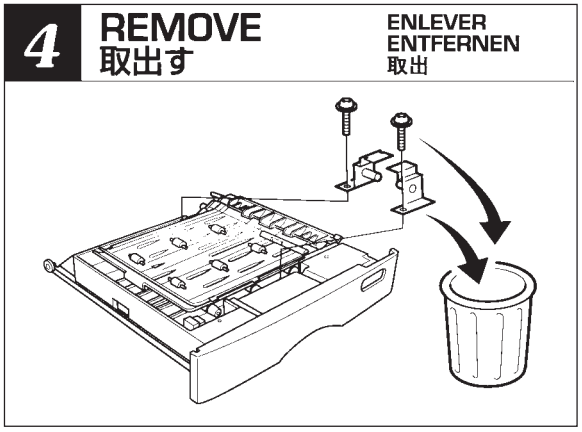

Remove the 2 brackets (1 screw each) which fix the open guide.

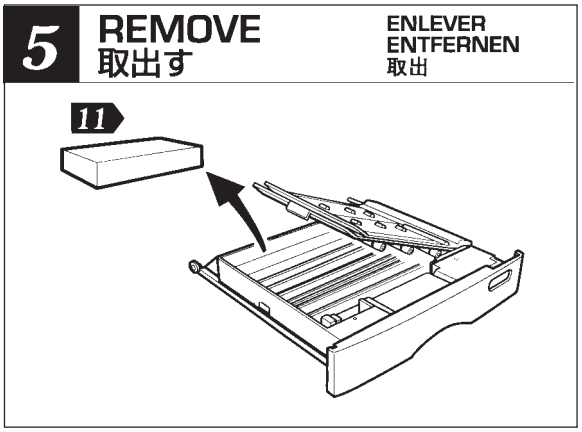

Remove the accessory packages and other packing materials. The accessory packages contain the following parts.

① Automatic Duplexing Unit (ADU).. 1 pc. 17
② Vertical transport guide..... 1 pc. 14
③ PAN screw..... 2 pcs. 14
④ Drawer stopper..... 1 pc. 18
⑤ TBID screw..... 1 pc. 18
⑥ Exit unit handle..... 1 pc. 13
⑦ TBID screw..... 1 pc. 13
⑧ ADU indicating seal (only for JAPAN)..... 1pc. 22

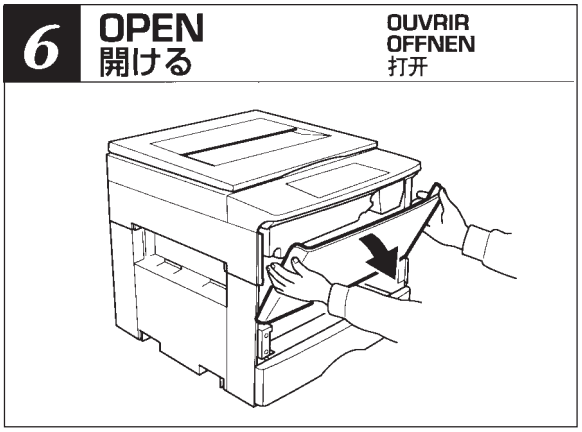

<Installation procedure>
Open the copier front cover.

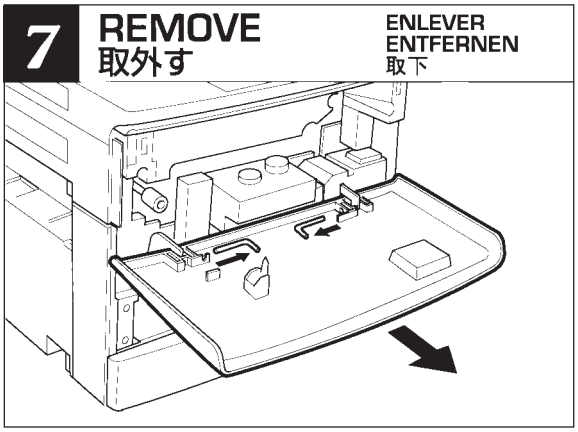

Remove the front cover.

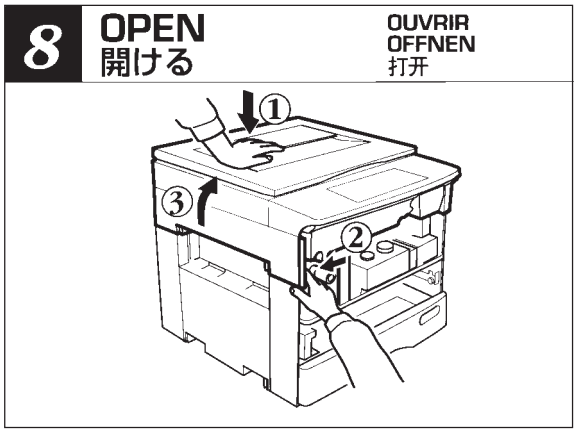

Lift up the copier upper unit to open it.

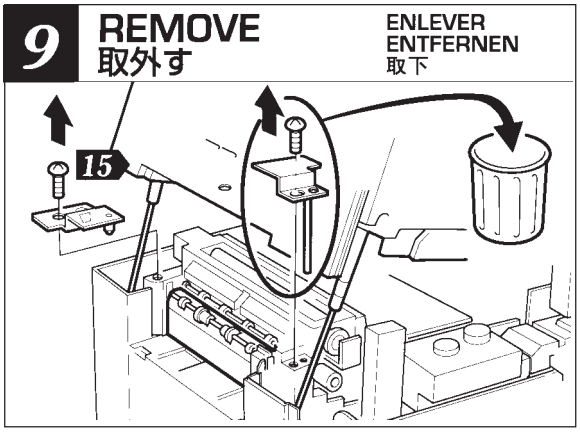

Remove the 2 brackets (1 screw each) fixing the exit unit.

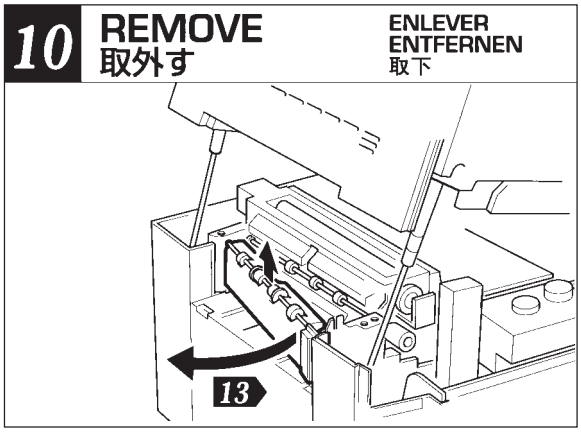

Remove the exit unit.

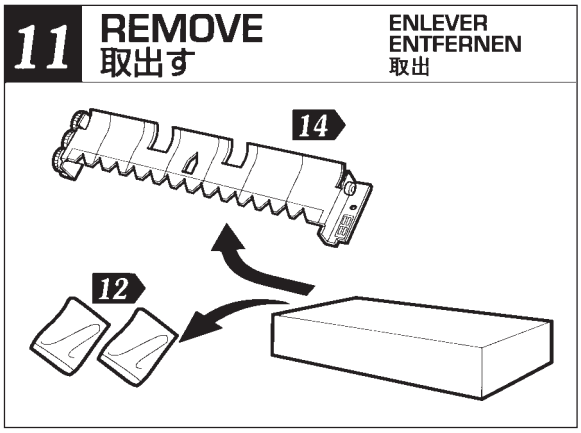

Remove the vertical transport guide and accessory parts from the accessory package.

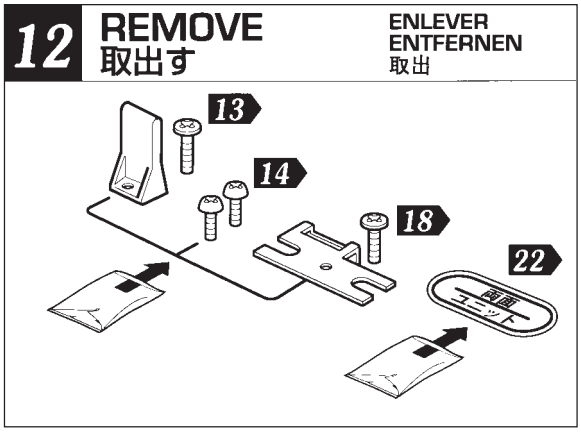

Remove the following parts from the accessory package.

PAN screw	2 pcs.	14
Drawer stopper	1 pc.	18
TBID screw	1 pc.	18
EXIT unit handle	1 pc.	13
TBID screw	1 pc.	13
ADU indicating seal (only for Japan)	1 pc.	22

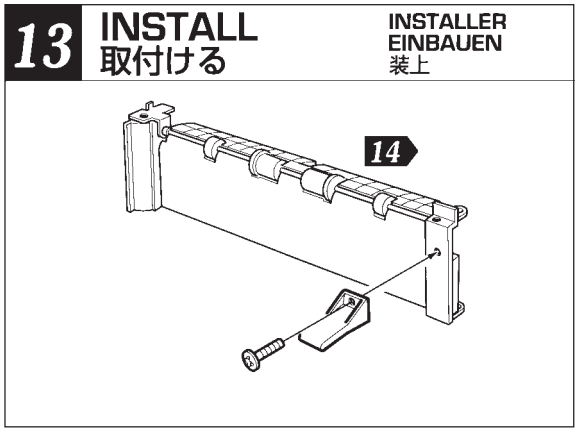

Install the exit unit opening/closing handle **13** and the vertical transport guide **14** to the exit unit using the accessory screws (TBID M4X14 1pc., PAN M3X6 2pcs.).

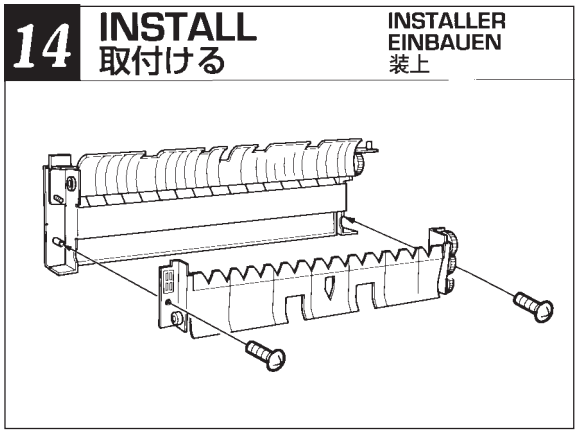

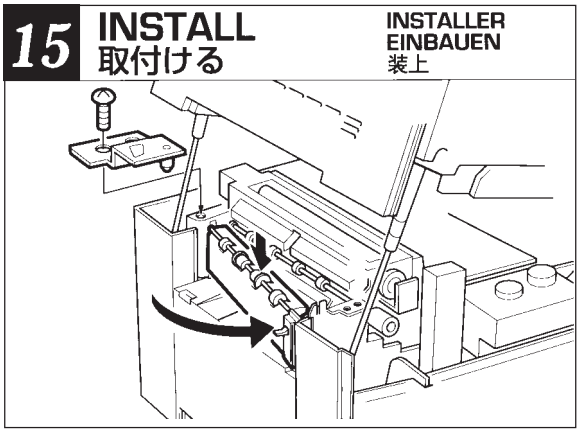

Install the exit unit as follows.

- Put the projection part under the rear exit unit side into the original hole.
- Fix the rear unit side only with the fixing bracket.
- Close the exit unit pushing the opening/closing handle. (Check that the magnetic catch sticks.)

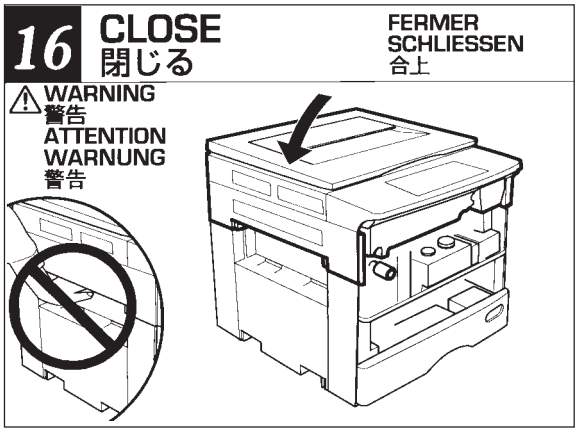

Close the copier upper unit.

⚠WARNING

- Be careful not to catch your fingers between the two units when the upper unit is pressed down.

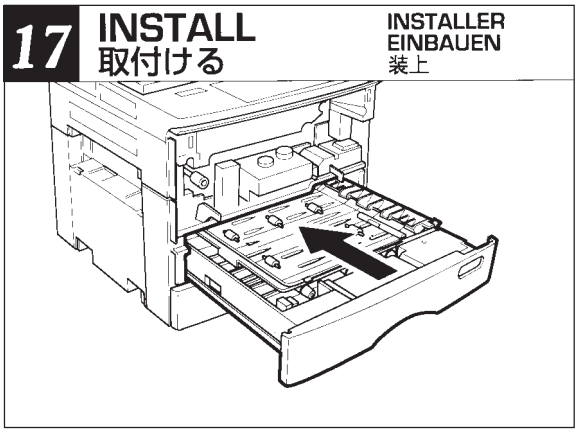

Install the ADU to the copier upper feeding slot.

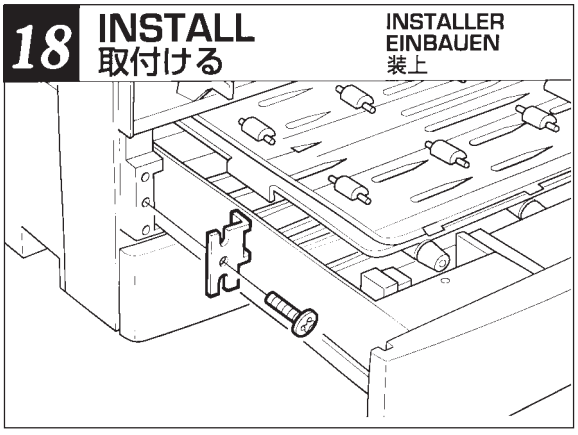

Install the drawer stopper as follows.

- Stop the ADU when it is half put in place.
- Install the drawer stopper (1 screw, TBID M4X10) to the exit side bracket of the copier.

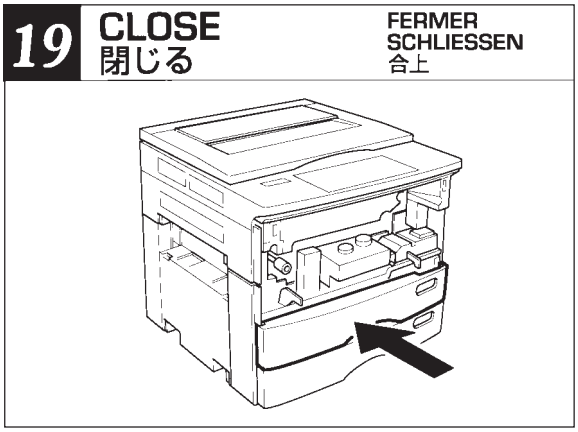

Push in the ADU until it stops after the stopper has been installed.

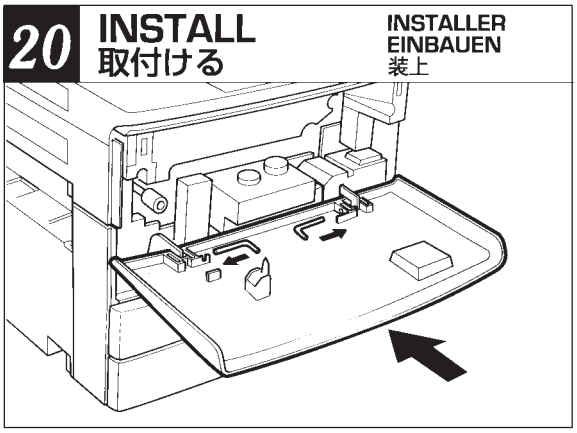

Install the front cover.

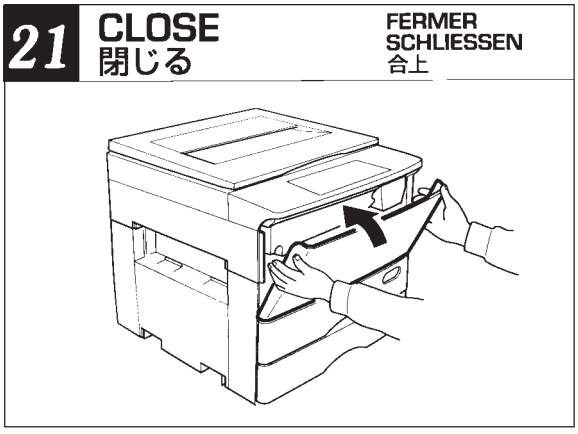

Close the front cover.

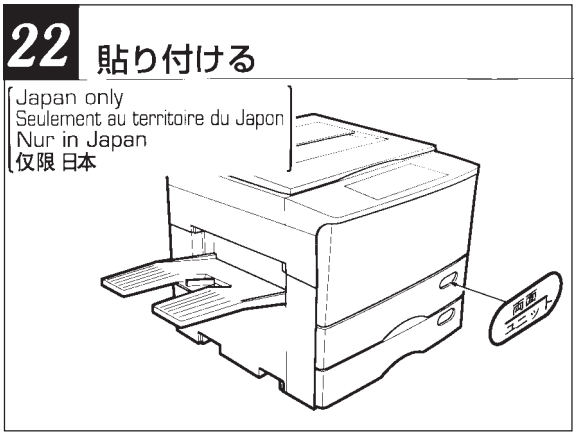

Stick the ADU indication seal (only for Japan).

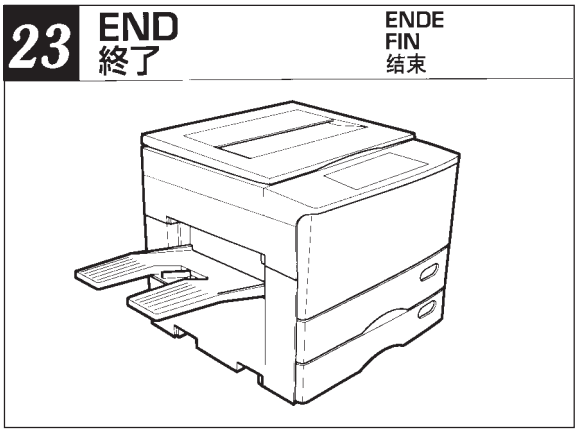

18.3 Paper Feed Unit MY-1006

MY-1006

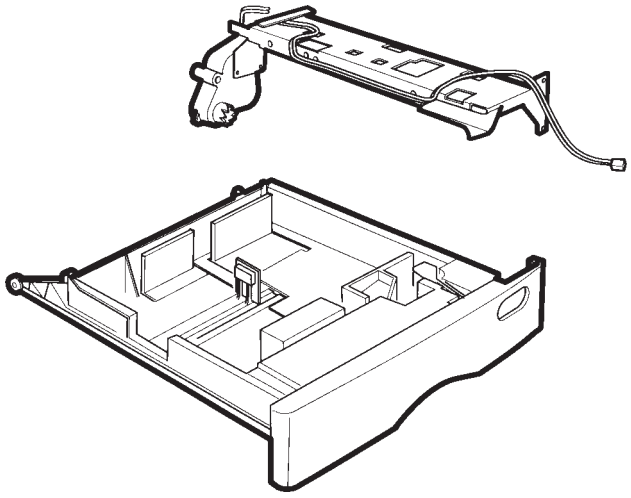

⚠ WARNING 警告 **ATTENTION WARNUNG 警告**

- The unpacking and set-up procedure shall be done by a qualified service technician.
- 開梱および設置は資格をもったサービス技術者が行わなければなりません。
- La procédure de déballage et de mise en route doit étre exécutée par un technicien d'entretien qualifié.
- Auspacken und Einrichten muß von einem qualifizierten Service-Techniker durchgeführt werden.
- 机器的开箱及安装必须由专业人员负责。

⚠WARNING

- The unpacking and set-up procedure should be done by a qualified person.

●According to the application PPC models, there is possibility of changing these figures.

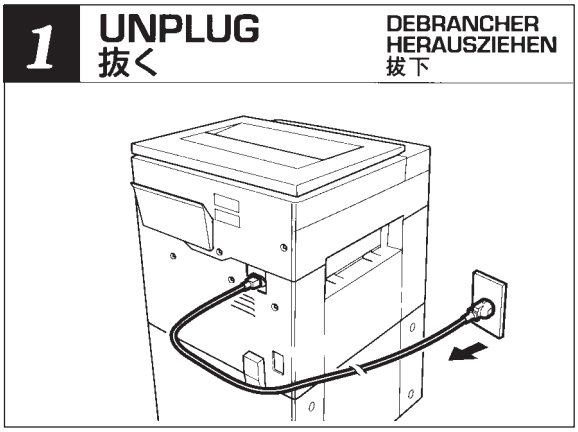

Unplug the power cable from the outlet.

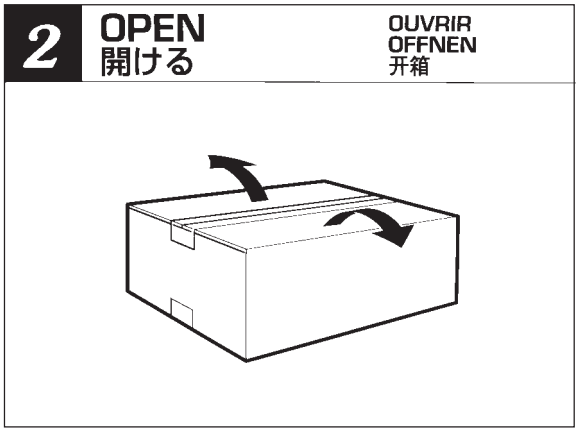

Open the carton box.

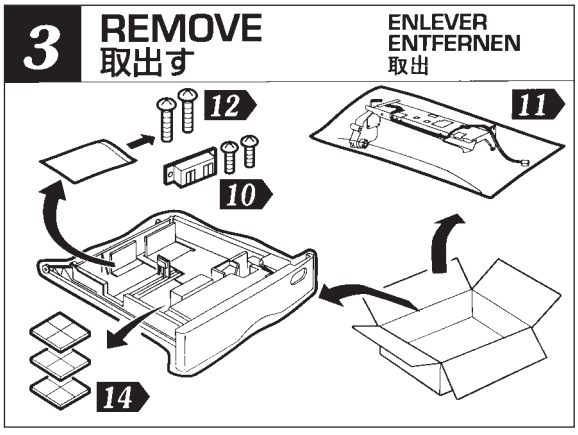

Remove the contents from the box.

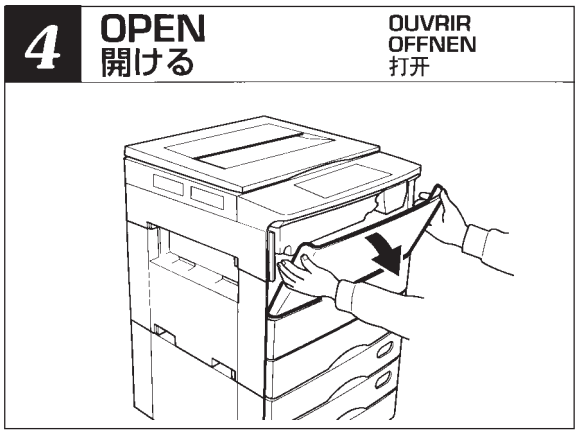

- Open the front cover.
- Lift up the upper unit.

(If the MY-1006 is installed to the copier.)

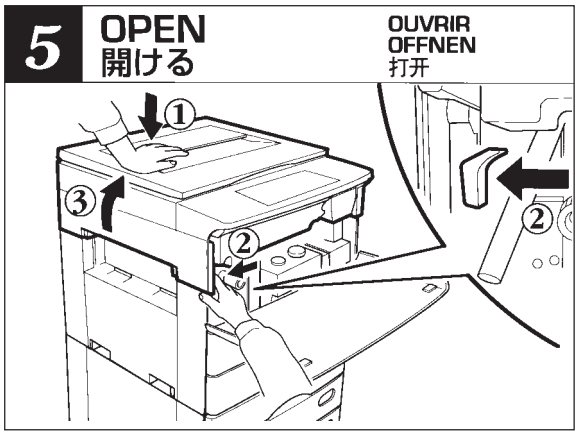

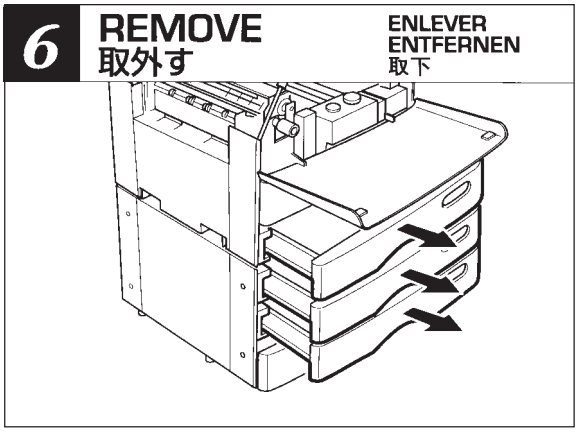

Remove all the cassettes.

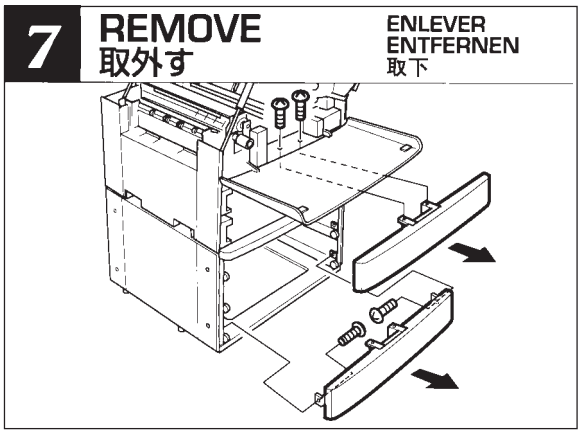

Remove the slot cover (2 screws) from the corresponding slot.

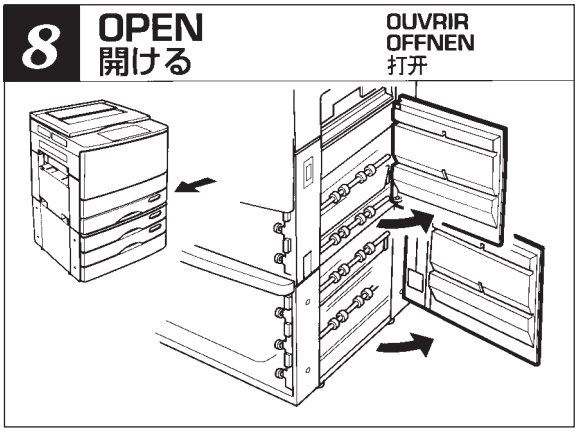

Open the right side cover.

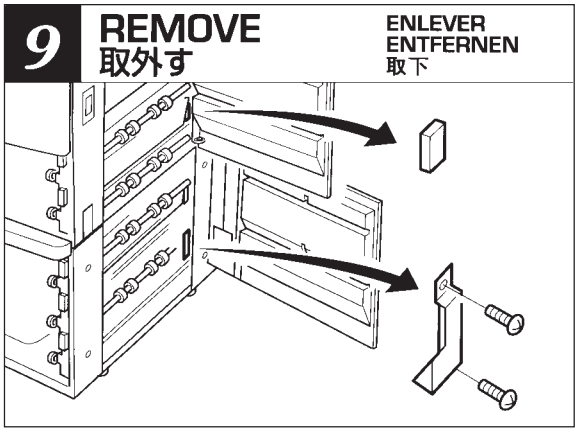

Remove the connector cover for the corresponding slot.

Remove the 2 screws for the lower slot of the PFP.

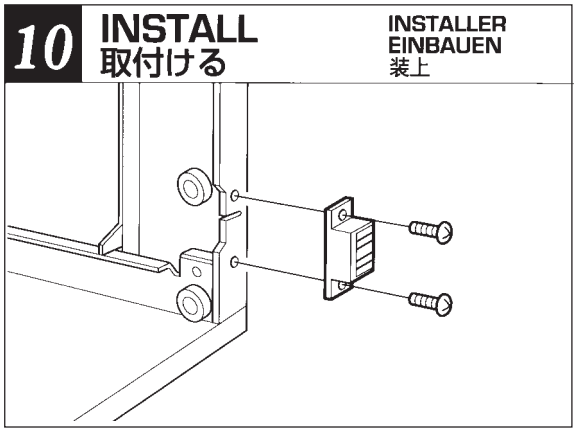

Install the switch for the corresponding slot (2 screws).

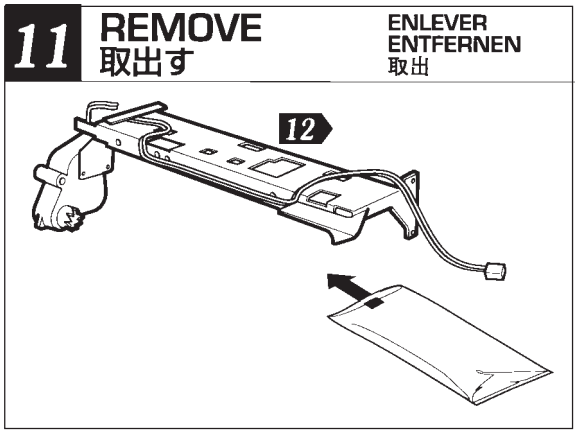

Remove the paper feed unit from the package.

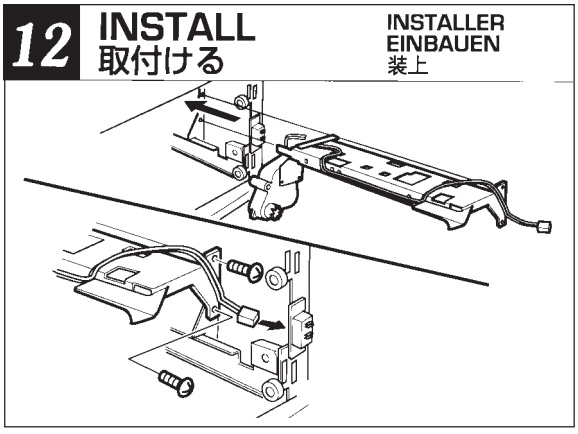

Install the paper feed unit (2 screws).

Connect the connector.

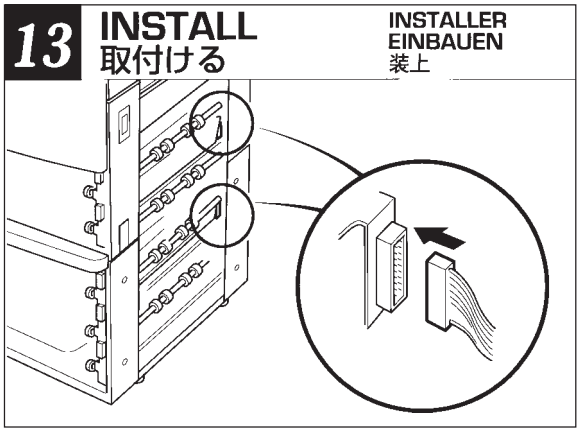

Install the connector of the paper feed side.

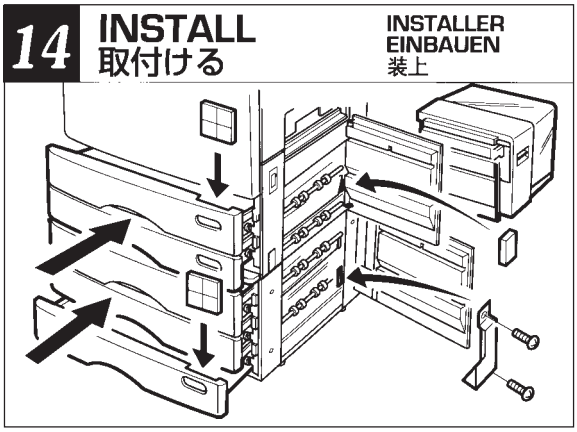

Install the connector cover to the original position.

Install the size plate to the cassette.

Install the cassette.

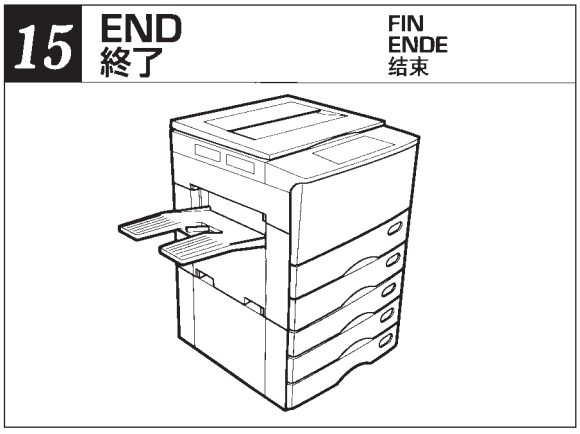

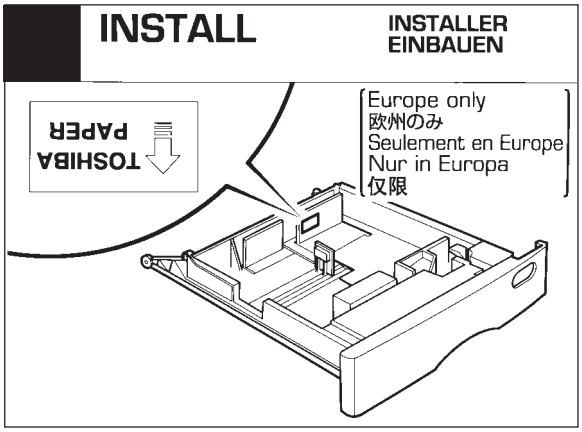
INSTALL
INSTALLER
EINBAUEN
Europe only
欧州のみ
Seulement en Europe
Nur in Europa
仅限
TOSHIBA
PAPER

18.4 Installation of Red Filter (Service Part)
(This filter improves the reproduction of red originals.)

<Procedure>

(1) Remove the original glass, optical cover and lens cover.

(2) Set the red filter on the lens unit bracket at the feed side.

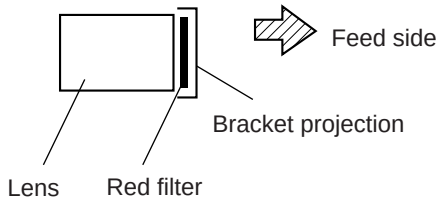

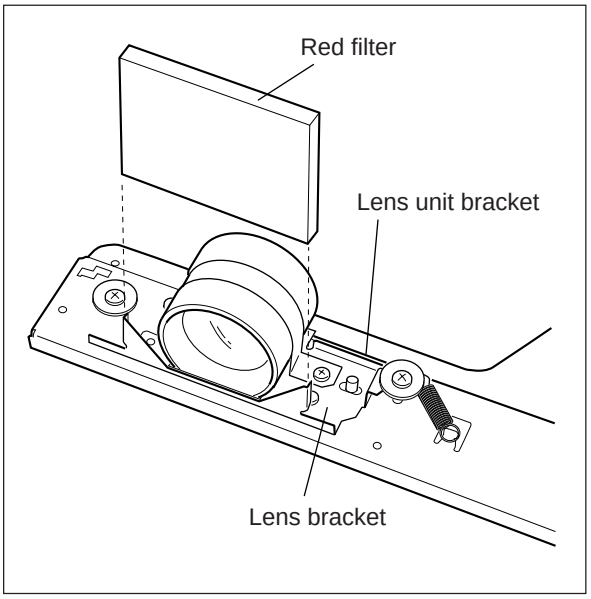

18.5 Key Copy Counter MU-8/MU-10

To install the key copy counter, the following parts are required:

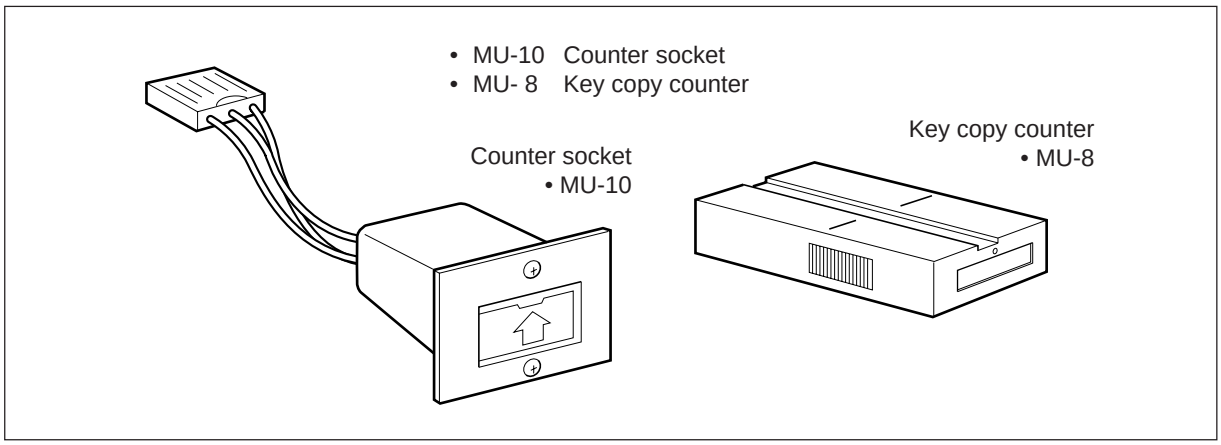

(1) Remove the upper feed cover.
Cut the window for the counter.

(2) Remove the blind plate (1 screw) for the 200V machine.

(3) Pull out the harness connector from the opening in the machine frame.
Disconnect the short connector from the harness.

Note: Remove the rear cover if the harness connector is in the back etc.

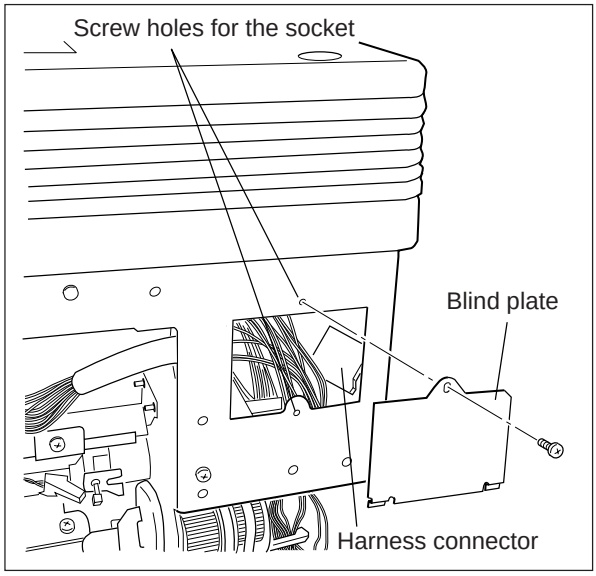

(4) Insert the socket connector into the harness connector.

(5) Install the counter socket to the frame (2 M3 screws).

(6) Reinstall the upper feed cover.

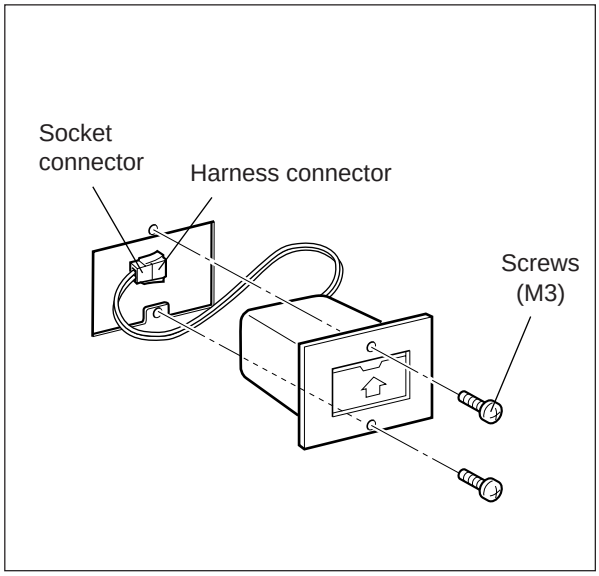

(7) Insert the key copy counter with its arrow mark facing up as shown.

