TOSHIBA

SERVICE MANUAL 3560/70

PLAIN PAPER COPIER



Click the Page Only button to close the overview area of the window.

Click the Bookmarks and Page button to open the Contents and display bookmarks created for the document. Click a bookmark's name to go to the Page marked by that bookmark.

Click the Thumbnails and Page button to open the overview area and display thumbnail images of each document page. Click a thumbnail to go to the page marked by that thumbnail.

Copyright TOSHIBA CORPORATION 1995
ALL RIGHTS RESERVED

GENERAL PRECAUTIONS REGARDING THE INSTALLATION AND SERVICE FOR THE COPIER 3560/70

The installation and service should be done by a qualified service technician.

1. Transportation/Installation

- When transporting/installing the copier, use two persons and be sure to use the positions as indicated below.
  The copier is fairly heavy and weighs approximately A kg (B lb), therefore pay full attention when handling it.

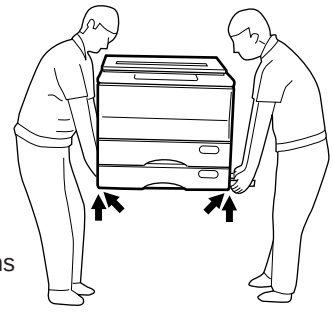

4 portions

	3560	3570
A	73	92
B	161	203

2. Installation

- Be sure to use a dedicated outlet with AC 115V/15A (220V, 230V, 240V/10A) or more for its power source.
- The copier must be grounded for safety.
  Never ground it to a gas pipe or a water pipe.
- Select a suitable place for installation.
  Avoid excessive heat, high humidity, dust, vibration and direct sunlight.
- Also provide proper ventilation as the copier emits a slight amount of ozone.
- To insure adequate working space for the copying operation, keep a minimum clearance of 80 cm (32”) on the left, 80 cm (32”) on the right and 10 cm (4”) in the rear.
- After having installed the copier, be sure to push the carrying handles into the copier and fasten them with screws.

3. Service of Machines

- Basically, be sure to turn the main switch off and unplug the power cord during service.
- Be sure not to touch high-temperature sections such as the exposure lamp, the fuser unit, the damp heater and their periphery.
- Be sure not to touch high-voltage sections such as the chargers and the high-voltage transformer.
- Be sure not to touch rotating/operating sections such as gears, belts, pulleys, etc.
- When servicing the machines with the main switch turned on, be sure not to touch live sections such as the lamp terminal, etc. and rotating/operating sections.
- Use suitable measuring instruments and tools.

4. **Main Service Parts for Safety**
   - The breaker, door switch, fuse, thermostat, thermofuse, thermistor, etc. are particularly important for safety. Be sure to handle/install them properly.

5. **Cautionary Labels**
   - During service be sure to check the rating plate and the cautionary labels such as “Unplug the power cord during service”, “Hot area” etc. to see if there is any dirt on their surface or whether they are properly stuck to the copier.

6. **Disposition of Consumable Parts/Packing Materials**
   - Regarding the recovery and disposal of the copier, supplies, consumable parts and packing materials, it is recommended to follow the relevant local regulations or rules.

7. **When parts are disassembled, reassembly is basically the reverse of disassembly unless otherwise noted in this manual or other related documents. Be careful not to reassemble small parts such as screws, washers, pins, E-rings, toothed washers in the wrong places.**

8. **Basically, the machine should not be operated with any parts removed or disassembled.**

9. **Precautions Against Static Electricity**
   - The PC board must be stored in an anti-electrostatic bag and handled carefully using a wristband, because the ICs on it may become damaged due to static electricity.

     Caution: Before using the wrist band, pull out the power cord plug of the copier and make sure that there is no uninsulated charged objects in the vicinity.

1. SPECIFICATIONS • ACCESSORIES • OPTIONS • SUPPLIES

1.1 Specifications

Copy process		Indirect electrophotographic process (dry)
Type		Desk top (console when the pedestal is used)
Exposure Type		Slit exposure with fixed table
Acceptable originals	Kind	Sheets, books, and 3-dimensional objects. When the document feeder is used: Sheet originals only (60 g/m^2~90 g/m^2) (16 lb.~24 lb.)
	Maximum size	A3 (Ledger)

Copy paper				
	Cassette	Duplexing	Manual	Note
Size	A3~A5-R		A3~A6-R	Adjustable to
	(Ledger~Statement-R)			Unfixed, Arbitary sizes
Thickness	64~80		64~130	Unit: g/m^2
(Weight)	(17~22)		(17~34)	(Unit: lb.)
Special paper	–	–	OHP film etc.	

Copy speed

	Cassette/manual		LCF		
Paper size	3560	3570	3560	3570	
A4, B5, A5-R LT, ST-R	35	35	35	35	CPM
A4-R, B5-R LT-R	26	26	—	—	
B4, FOLIO LG, Computer	22	22	—	—	
A3 LD	19	19	—	—	
Reduction/ Enlargement	15	15	15	15	

Manual feeding represents the value when the size is set.

System copy speed (BLI format)

Mode		CPM
Original→Copy	Number of copies	3560/70
1 → 1	1 set	30
	3 set	33
	5 set	34
1 → 2	1 set	10
	3 set	19
	5 set	24
2 → 2	1 set	8
	3 set	17
	5 set	21
2 → 1	1 set	16
	3 set	25
	5 set	29

* Ten originals (A4) are set in the RADF. This includes the first copy time.

First copy	Approx. 4.0 sec. (Actual-size A4 or Letter from large capacity feeder)
Warm-up time	Approx. 80 sec.
Multiple copying	1~999, keyboard entry
Reproduction ratio	
Actual ratio	100% or 101% (Setting mode)
Zoom ratios	50~200% (Multiple reduction and enlargement in 1% steps)

Paper supply	Cassette or sheet-bypass feeding Cassette: 600 sheets Sheet-bypass feeding: 50 sheets
Toner supply	Automatic density detection and replenishment Toner cartridge replacement
Exposure	Automatic control and manually selectable (9 steps)
Weight *1: 3560, *2: 3570	Copier: *1 73 or *2 92 kg (with 2 cassettes and the platen cover), ADU: 10 kg
Power source	115 V ~ 60 Hz, 12A For the U.S.A. and Canada 220–240 V ~ 50/60 Hz, 8A For Europe
Power consumption	1.5 kW (115 V), 1.7 kW (220 V/240 V)
Counter	7-digit total counter

Machine size

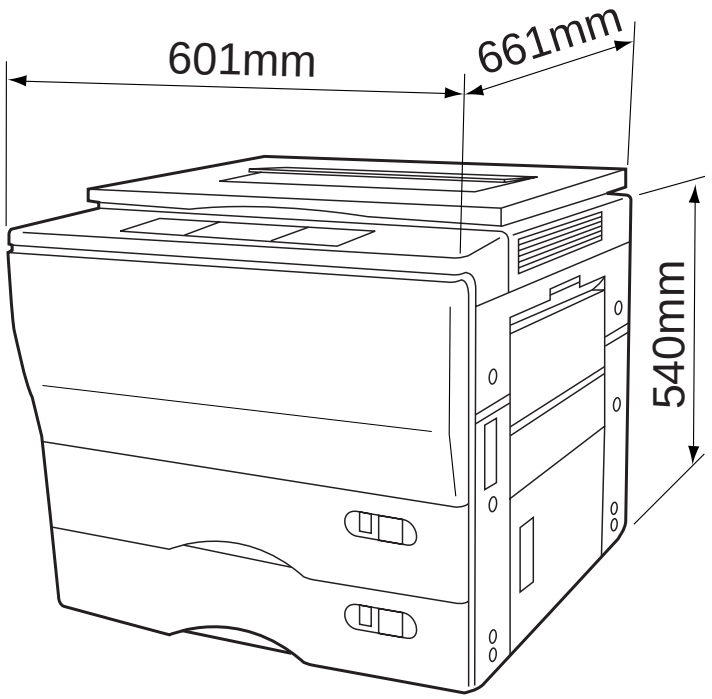

1.2 Accessories

Copy receiving tray	:	1 pc.
Operator's manual	:	1 pc.
Set-up report	:	1 pc.
Drum	:	1 pc.
Developer	:	1 bottle
Toner	:	1 pc.

*Accessories vary according to the destination.

1.3 Options

Automatic duplexing unit: ADU	MD-5002A
Automatic document feeder: ADF	MR-3006A (RADF), MR-2008 (ADF)
Paper feed pedestal: PFP	KD-1003 (1 cassette), KD-2009 (2 cassettes)
Paper feed unit	MY-1006
Large capacity feeder: LCF	MP-1501LT, MP-1501A4, MP-4001LT, MP-4001A4
Sorter	MG-1003B (10 bins), MG-2012 (20 bins) MG-1004A (10 bins staple) MG-2009A (20 bins) MG-2010 (20 bins staple)
Key copy counter	MU-8/MU-10 (6 digit)

*Options vary according to the destination.

1.4 Supplies

Drum	OD-3560
Developer	ZD-3560
Toner	ZT-3560, 3560E

2. OUTLINE OF THE MACHINE

2.1 Sectional Views and Electrical Parts Location Diagram

2.1.1 Sectional view

[A] Front view

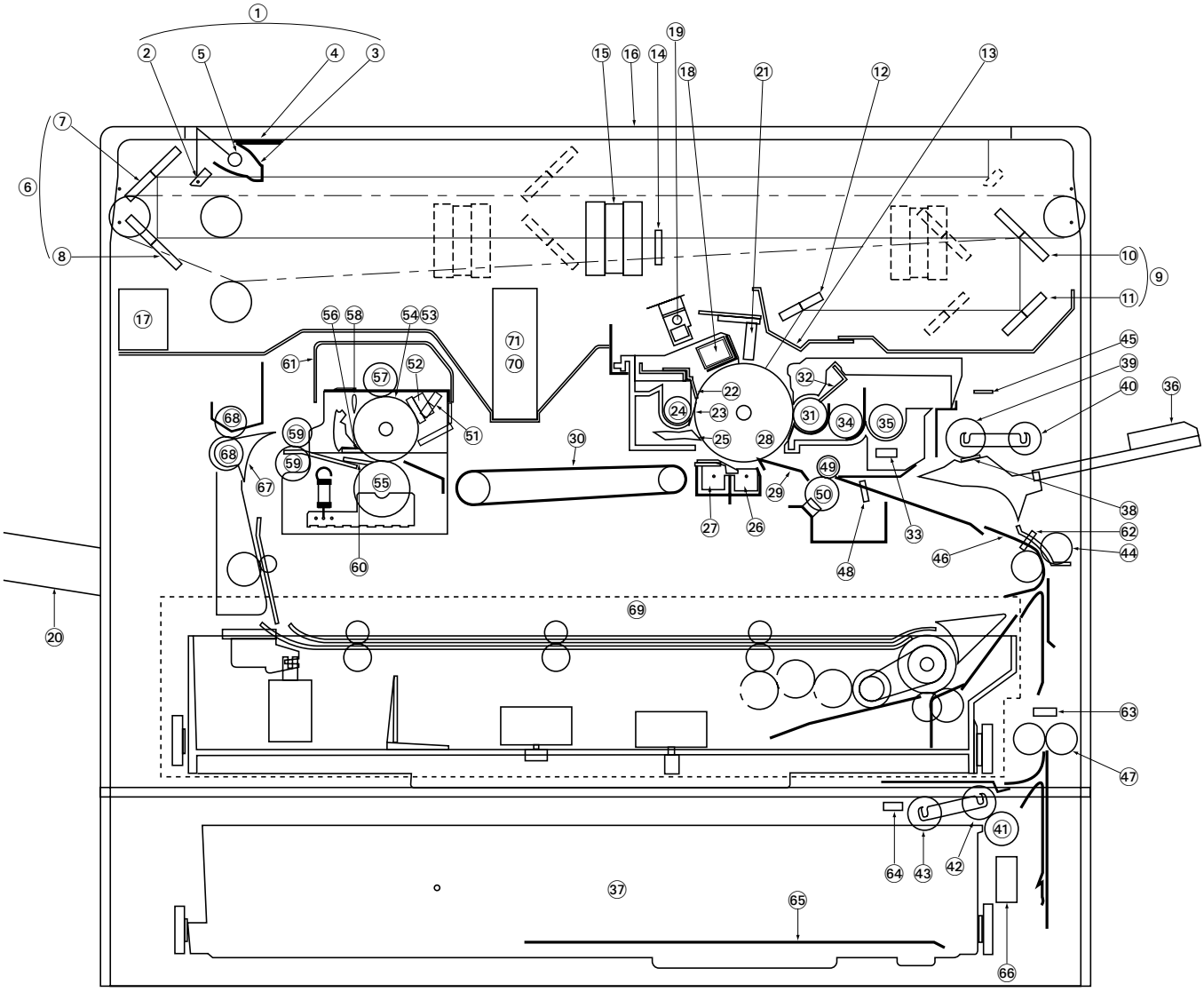

(This diagram includes an installed ADU.)

No.	Name	No.	Name
①	Carriage 1	㊲	Cassette
②	Mirror 1	㊳	Manual feed separation pad
③	Reflector	㊴	Manual feed roller
④	Light distribution adjustment plates	㊵	Manual pickup roller
⑤	Exposure lamp	㊶	Cassette separation roller
⑥	Carriage 2	㊷	Cassette feed roller
⑦	Mirror 2	㊸	Cassette pickup roller
⑧	Mirror 3	㊹	Upper transport roller
⑨	Mirror unit	㊺	Manual feed switch (S6)
⑩	Mirror 4	㊻	Paper guide
⑪	Mirror 5	㊼	Lower transport roller
⑫	Mirror 6	㊽	Aligning switch (S8)
⑬	Slit glass	㊾	Aligning roller (U)
⑭	Auto exposure sensor	㊿	Aligning roller (L)
⑮	Lens	(51)	Thermistor-1 (THMS1)
⑯	Original glass	(52)	Thermostat (THERMO)
⑰	Ozone filter	(53)	Heater lamp
⑱	Main charger	(54)	Heat roller (upper side)
⑲	Discharge lamp	(55)	Pressure roller (lower side)
⑳	Receiving tray	(56)	Separation claw (for heat roller)
㉑	LED eraser array	(57)	Felt roller
㉒	Main blade	(58)	Heat roller cleaning blade
㉓	Recovery blade	(59)	Fuser exit roller
㉔	Toner recovery auger	(60)	Scraper
㉕	Separation claw (for drum)	(61)	Fuser cover
㉖	Transfer charger	(62)	Paper stop switch-1 (S7)
㉗	Separation charger	(63)	Paper stop switch-2 (S16)
㉘	Drum	(64)	Paper-empty switch-2 (S14)
㉙	Bias guide	(65)	Cassette tray
㉚	Transport belt	(66)	Cassette size switch-2 (S15)
㉛	Magnetic roller	(67)	Exit/ADU selection gate
㉜	Leveller (doctor)	(68)	Exit roller
㉝	Auto-toner sensor	(69)	ADU (option)
㉞	Mixer 1	(70)	Exit fan (M7)
㉟	Mixer 2	(71)	Bottom fan (M8)
㊱	Sheet bypass guide		

[B] Rear side view

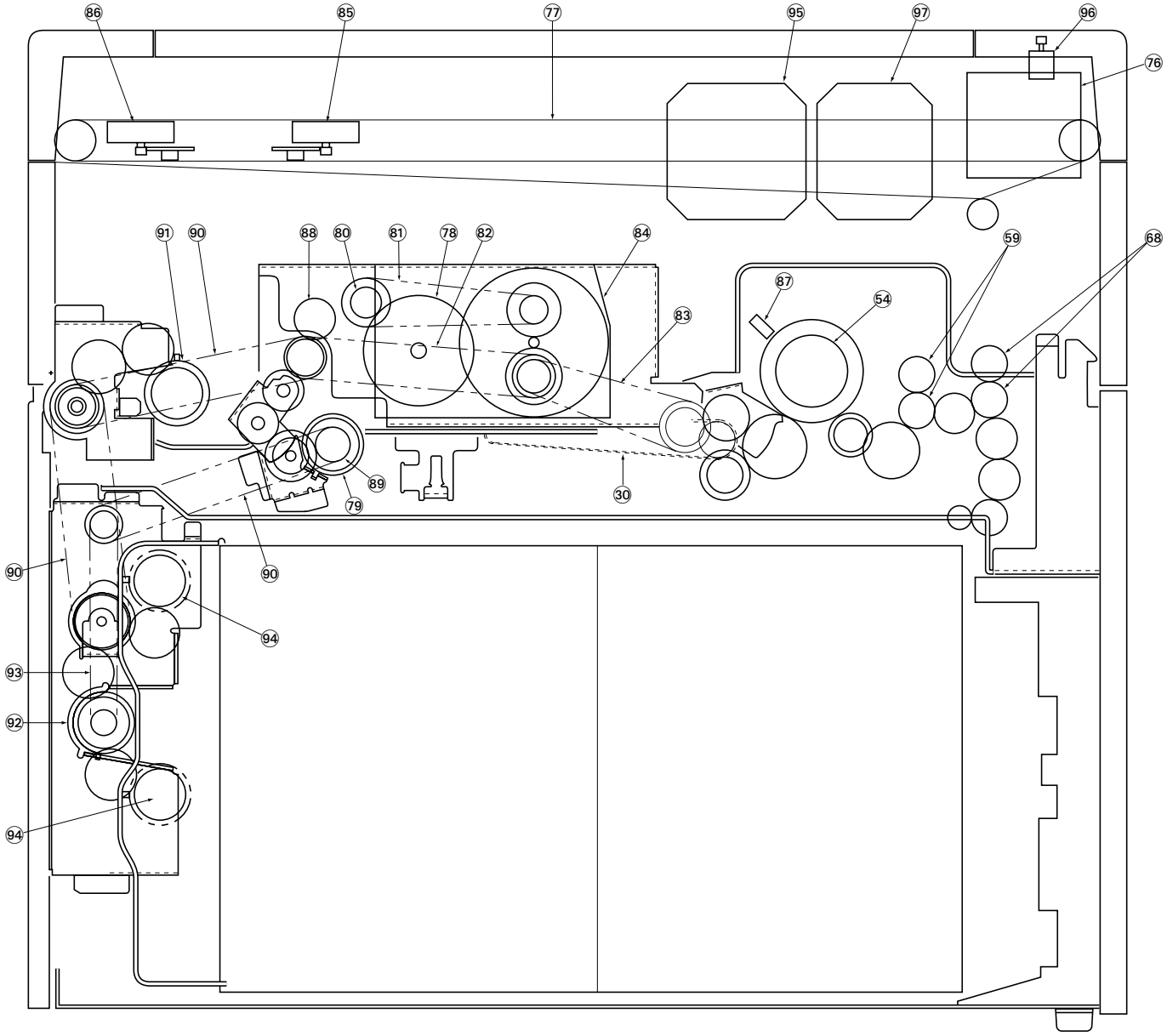

No.	Name
⑯	Scanning motor (M2)
⑰	Carriage drive wire
⑱	Drum gear
⑲	Aligning clutch (CLT2)
⑳	Drum driving gear
㉑	Drum belt
㉒	Belt for dev-unit, ALGN-roller & paper feeding drive
㉓	Belt for fuser drive
㉔	Main motor (M1)
㉕	Lens motor (M3)
㉖	Mirror motor (M4)
㉗	Thermistor-2 (THMS2)
㉘	Dev-unit drive gear
㉙	Aligning roller
㉚	Paper feed belt
㉛	Manual feed clutch (CLT4)
㉜	Transport roller clutch (CLT1)
㉝	Transport roller drive belt
㉞	Cassette feed clutch (CLT3, 5)
㉟	Optical fan (M6,12)
㊱	Document motor (M11)
㊲	Optical fan (M15)

2.1.2 Electrical parts layout

[A] DC electrical parts (except motors)

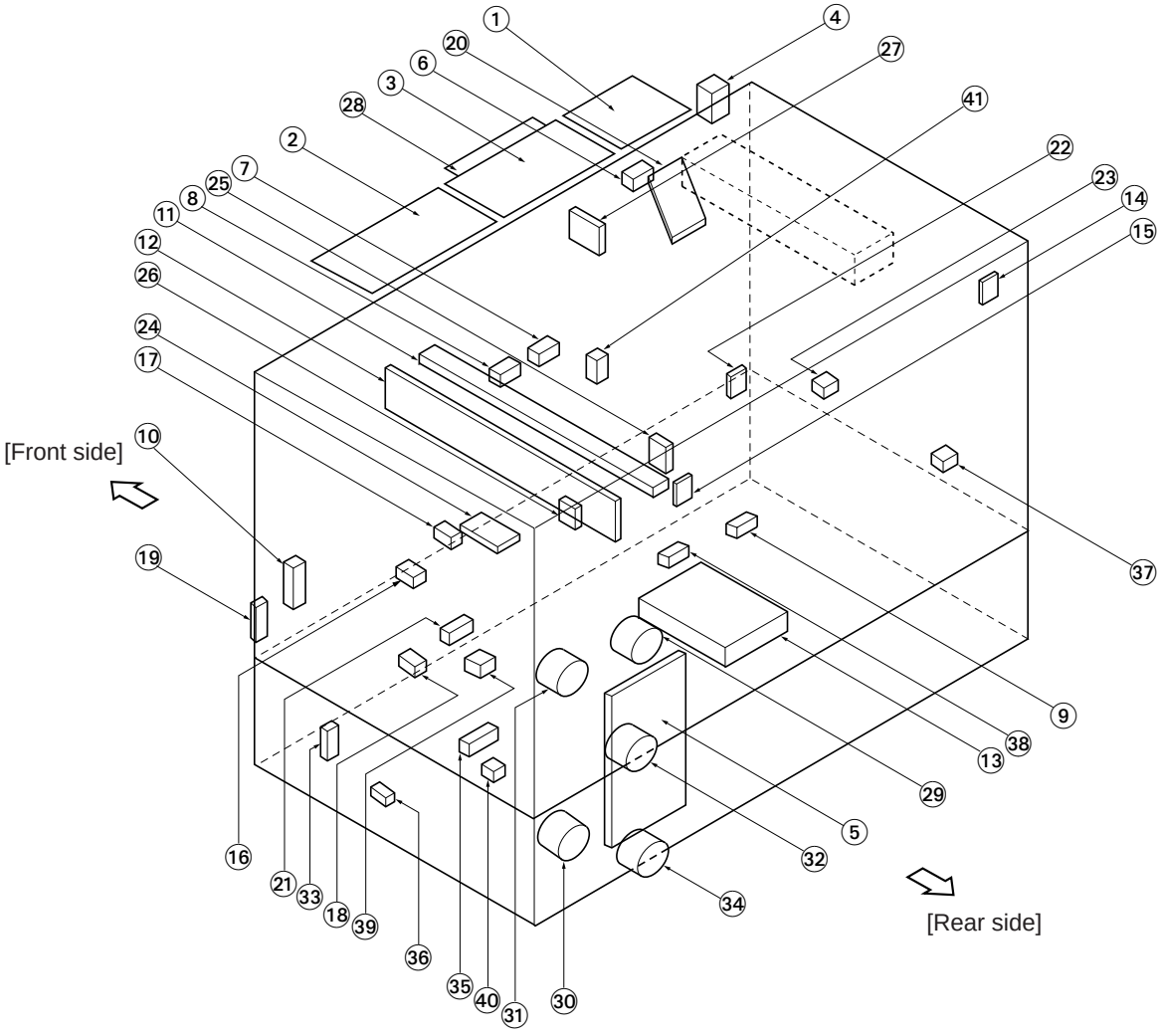

No.	Name
①	Control panel key PC board (PWA-KEY2)
②	Control panel key PC board (PWA-KEY1)
③	Liquid crystal module (LCD)
④	Total counter (T-CTR)
⑤	Logic PC board (PWA-LGC)
⑥	Auto paper sensor-2 (APS-R)
⑦	Auto paper sensor-3 (APS-C)
⑧	Auto paper sensor-4 (APS-F)
⑨	Toner-full switch (T-FUL-SW) (S13)
*⑩	Size switch 1 (SIZE1-SW) (S5)
⑪	Discharge lamp PC board (PWA-ERS)
⑫	LED eraser array PC board (K-DCH)
⑬	High-voltage power supply (PS-HVT)
⑭	Home switch (HOME-SW) (S10)
⑮	Platen switch (PTN-SW) (S27)
⑯	Manual feed switch (M-FED-SW) (S6)
⑰	Aligning switch (PSTPO-SW) (S8)
⑱	Paper stop switch 1 (PSTP1-SW) (S7)
⑲	Side door switch (U-COV-SW) (S4)
⑳	Auto paper sensor-1 (APS-3B)

No.	Name
*㉑	Paper-empty switch-1 (EMP1-SW) (S3)
㉒	Exit switch (EXIT-SW) (S9)
㉓	Heat-roller thermistor 1 (THMS1-HTR)
㉔	Toner sensor (SNR-ATC)
㉕	Lens switch (LNS-SW) (S11)
㉖	Mirror switch (MRR-SW) (S12)
㉗	Automatic exposure PC board (PWA-AES)
㉘	Control panel PC board (PWA-PNL)
㉙	Aligning-roller clutch (RGT0-CLT) (CLT2)
㉚	Transport-roller clutch (RGT1-CLT) (CLT1)
㉛	Manual-feed roller clutch (MFED-CLT) (CLT4)
*㉜	Feed-roller clutch 1 (FED1-CLT) (CLT3)
㉝	Size switch 2 (SIZE2-SW) (S15)
㉞	Feed-roller clutch 2 (FED2-CLT) (CLT5)
㉟	Paper-empty switch 2 (EMP2-SW) (S14)
㊱	Paper stop switch 2 (PSTP2-SW) (S16)
㊲	Heat-roller thermistor-2 (THMS2-HTR)
㊳	Drum thermistor (DRM-THMS)
*㊴	Tray-up switch (T-UP1-SW) (S28)
㊵	Tray-up switch (T-UP2-SW) (S29)
㊶	Separation claw solenoid (SCRP-SOL) (SOL1)

*: Option

[B] DC electrical parts (motors)

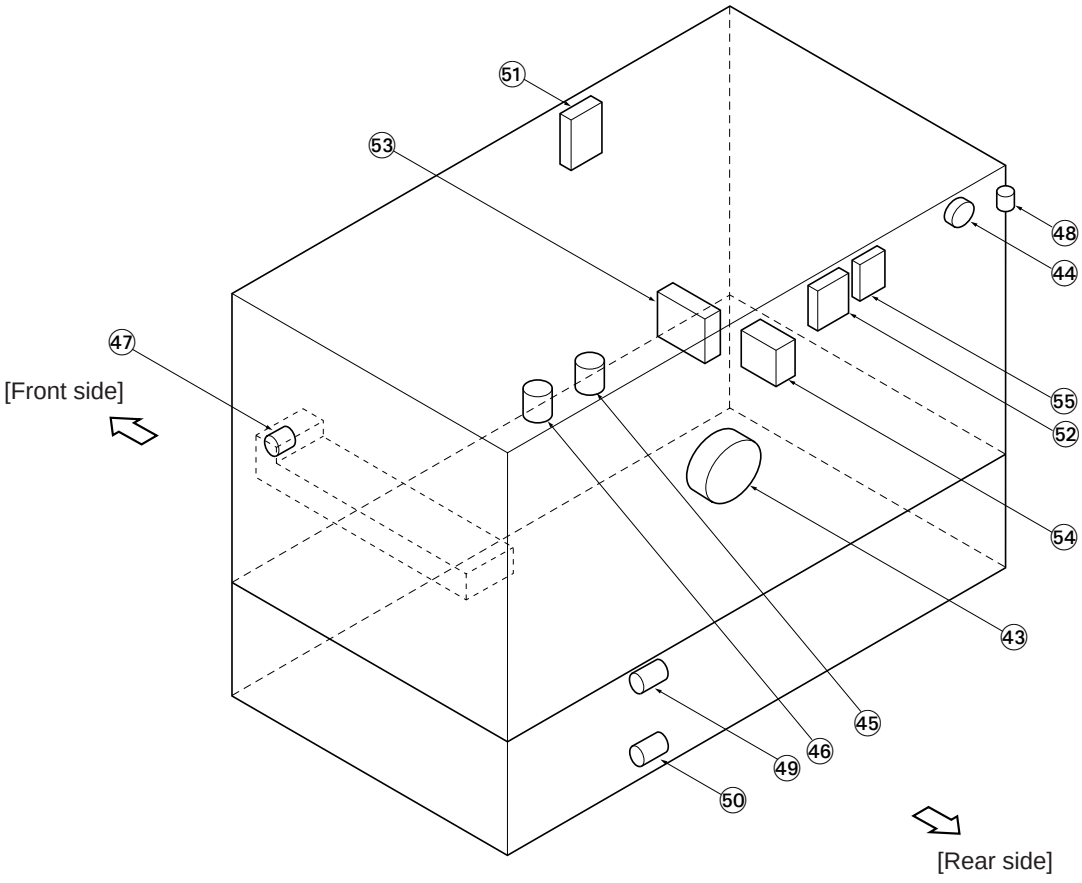

No.	Name	No.	Name
㊸	Main motor (MAIN-MOT) (M1)	㊿	Tray-up motor-2 (T-UP2-MOT) (M14)
㊹	Scanning motor (SCN-MOT) (M2)	(51)	Optical fan-F (OPT-FAN-F) (M12)
㊺	Lens motor (LNS-MOT) (M3)	(52)	Optical fan-R (OPT1-FAN-R) (M6)
㊻	Mirror motor (MRR-MOT) (M4)	(53)	Exit fan (EXIT-FAN) (M7)
㊼	Toner motor (TNR-MOT) (M9)	(54)	Bottom fan (BTM-FAN) (M8)
㊽	Document motor (DCM-MOT) (M11)	(55)	Optical fan-R (OPT2-FAN-R) (M15)
*㊾	Tray-up motor-1 (T-UP1-MOT) (M13)		

*: Option

[C] AC electrical parts

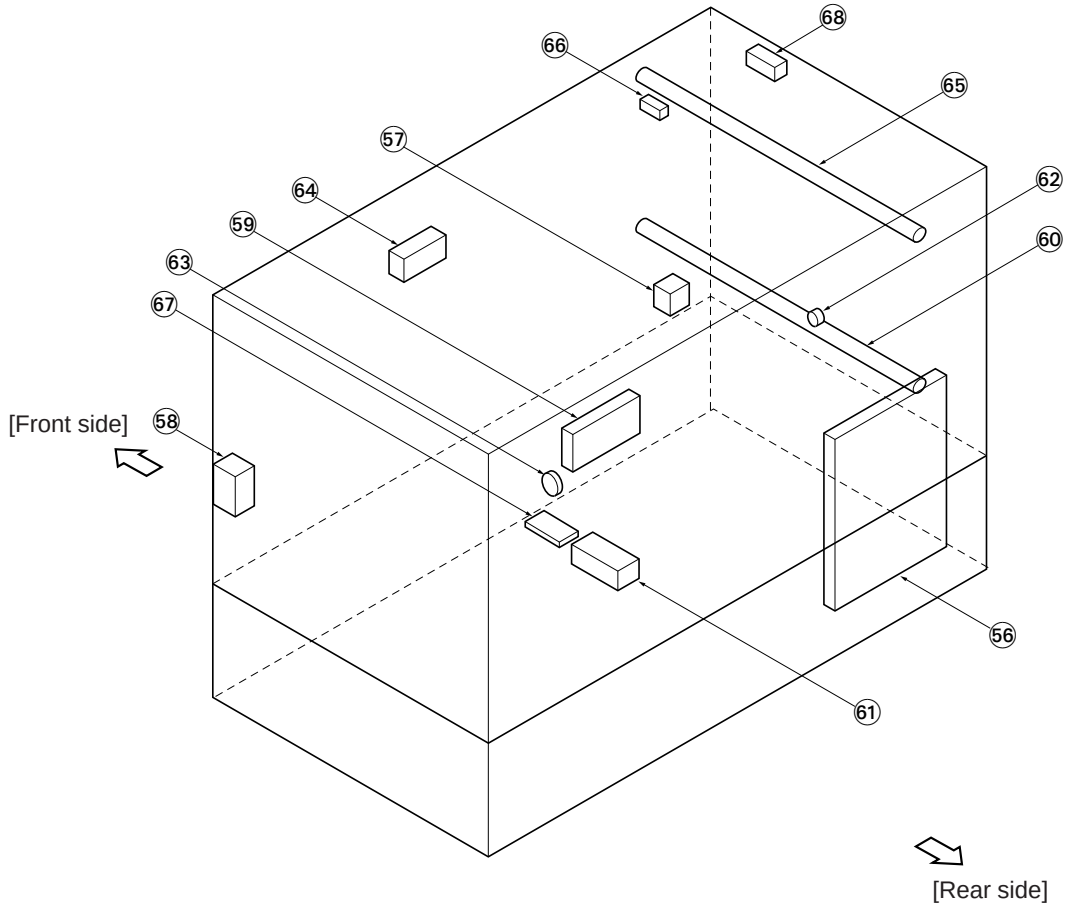

No.	Name	No.	Name
⑯	SW power supply (PS-ACC)	⑬	Thermostat (Option)
⑰	Door switch (DOOR-SW) (S2)	⑭	Damp heater U1 (D-HTR-U1) (Option)
⑱	Main switch (MAIN-SW) (S1)	⑮	Exposure lamp (EXPO-LAMP)
⑲	Lamp regulator PC board (PWA-LRG)	⑯	Thermofuse (FU-EXPO)
⑳	Heater lamp (HTR-LAMP)	⑰	Fuse PC board (PWA-FUS) (Option)
⑪	Damp heater L (D-HTR-L) (Option)	⑱	Damp heater U2 (D-HTR-U2) (Option)
⑫	Thermostat (K-THERMO)		

2.2 Symbol and Function of Electrical Parts

(1) Motors

Symbol	Code name	Function	Remarks	Parts list	
				Page	Item
M1	MAIN-MOT (Main motor)	Drives the drum, developer, heat roller and transport belt	IC motor	10	31
M2	SCN-MOT (Scanning motor)	Scans the optical system	Pulse motor	5	23
M3	LNS-MOT (Lens motor)	Drives the lens unit	Pulse motor	11	23
M4	MRR-MOT (Mirror motor)	Drives the mirror unit	Pulse motor	11	23
M6	OPT1-FAN-R (Optics fan-R)	Cools the optical system	IC motor: □80	5	8
M7	EXIT-FAN (Exit-fan)	Cools the drum and cleaner	IC motor: □80	4	14
M8	BTM-FAN (Bottom fan)	Prevents the paper from floating up through suction	IC motor: □80	4	14
M9	TNR-MOT (Toner motor)	Replenishes the toner	Brush motor	24	30
M11	DCM-MOT (Document motor)	Drives copy-area indicators	Pulse motor	9	2
M12	OPT-FAN-F (Optical fan-F)	Cools the optical system	IC motor: □60	4	39
M13	T-UP1-MOT (Tray-up motor-1)	Drives the upper cassette tray to lift up/down	Brush motor	12	36
M14	T-UP2-MOT (Tray-up motor-2)	Drives the lower cassette tray to lift up/down	Brush motor	12	36
M15	OPT2-FAN-R (Optics fan-R)	Cools the optical system	IC motor: □80	5	8

(2) Electromagnetic spring clutches

Symbol	Code name	Function	Remarks	Parts list	
				Page	Item
CLT1	RGT1-CLT (Transport-roller clutch)	Transmits transport-roller drive.		13	17
CLT2	RGT0-CLT (Aligning-roller clutch)	Transmits aligning-roller drive.		16	16
CLT3	FED1-CLT (Feed-roller clutch-1)	Transmits feed-roller clutch drive. (Upper cassette)		12	24
CLT4	MFED-CLT (Manual-feed roller clutch)	Transmits manual-feed roller clutch drive.		15	17
CLT5	FED2-CLT (Feed-roller clutch-2)	Transmits feed-roller clutch drive. (Lower cassette)		12	24

(3) Counters

Symbol	Code name	Function	Remarks	Parts list	
				Page	Item
T	T-CTR (Total counter)	Total counter	7-digit	3	32
K	K-CTR (Key-copy counter)	Individual counter	6-digit (option)	101	5

(4) Switches

Symbol	Code name	Function	Remarks	Parts list	
				Page	Item
S1	MAIN-SW (Main switch)	Power supply	Tumbler type	6	3
S2	DOOR-SW (Door switch)	For safety, cancels abnormal condition	Push switch	6	4
S3	EMP1-SW (Paper-empty switch-1)	Detects lack of paper in the upper cassette	Photointerruptor	12	32
S4	U-COV-SW (Side door switch)	For safety, detects open/closed condition of paper jam release cover	Push switch	2	27
S5	SIZE1-SW (Size switch-1)	Detects upper cassette size	Push switch	14	31
S6	M-FED-SW (Manual-feed switch)	Detects manual feeding	Photointerruptor	15	3
S7	PSTP1-SW (Paper stop switch-1)	Detects paper in front of the upper transport roller	Photointerruptor	14	15
S8	PSTP0-SW (Aligning switch)	Detects paper in front of the aligning roller	Photointerruptor	16	20
S9	EXIT-SW (Exit switch)	Detects exiting paper	Photointerruptor	29	8
S10	HOME-SW (Home switch)	Detects home position of the optical system	Photointerruptor	11	8
S11	LNS-SW (Lens switch)	Detects home position of the lens unit	Photointerruptor	11	8
S12	MRR-SW (Mirror switch)	Detects home position of the mirror unit	Photointerruptor	11	8
S13	T-FUL-SW (Toner-full switch)	Detects when the used toner bag is full	Push switch	10	25
S14	EMP2-SW (Paper-empty switch-2)	Detects lack of paper in the lower cassette	Photointerruptor	12	32
S15	SIZE2-SW (Size switch-2)	Detects lower cassette size	Push switch	14	31
S16	PSTP2-SW (Paper stop switch-2)	Detects paper in front of the lower transport roller	Photointerruptor	2	26
S27	PTN-SW (Platen switch)	Detects open/closed condition of the platen cover	Photointerruptor	5	38
S28	T-UP1-SW (Tray-up-1 switch)	Detects the position of the upper cassette tray	Photointerruptor	12	32
S29	T-UP2-SW (Tray-up-2 switch)	Detects the position of the lower cassette tray	Photointerruptor	12	32

(5) Heaters and lamps

Symbol	Code name	Function	Remarks	Parts list	
				Page	Item
EXP	EXPO-LAMP (Exposure lamp)	Exposes the original	Halogen lamp 300W	19	13
HTR	HTR-LAMP (Heater lamp)	Fixing	Halogen lamp 900W (100V series) 1030W (200V series)	26	6
ERS	ERS-LAMP (Discharge lamp)	Discharges the drum	Fuse type	4	12
DCH	DCH-LED (LED eraser array)	To interrupt the charge	LED	4	10
DHU1	D-HTR-U1 (Damp heater U1)	Keeps optical system warm (option)	Cement resistor	102	4
DHU2	D-HTR-U2 (Damp heater U2)	Keeps optical system warm (option)	Cement resistor	102	4
DHL	D-HTR-L (Damp heater L)	Keeps the drum and transfer/separation charger case warm (option)	Cement resistor	7	30

(6) PC boards

Symbol	Code name	Function	Remarks	Parts list	
				Page	Item
LGC	PWA-LGC (Logic PC board)	Controls the entire copier		8	15
PNL	PWA-PNL (Control panel PC board)	Controls control panel		3	33
KEY1	PWA-KEY1 (Key PC board)	Controls operation keys		3	11
KEY2	PWA-KEY2 (Key PC board)	Controls operation keys		3	14
LRG	PWA-LRG (Lamp regulator PC board)	Controls exposure lamp		5	20
DCH	K-DCH (LED eraser array PC board)	Turns on and drives LED during reduction		4	10
ERS	PWA-ERS (Discharge lamp PC board)	Discharge lamp		4	12
AES	PWA-AES (Automatic exposure PC board)	Reads dark/light of the original		18	37
FUS	PWA-FUS (Fuse PC board)	Fuse for the damp heater circuit		7	31

(7) Transformers

Symbol	Code name	Function	Remarks	Parts list	
				Page	Item
HVT	PS-HVT (Charging transformer)	Generates high voltage electricity for charging (negative voltage)	Mono unit type	7	27
	(Transfer/separation transformer)	Generates high voltage electricity for transfer/separation and developing bias voltage			
	(Transfer bias transformer)	Generates bias voltage to raise transfer efficiency			
ACC	PS-ACC (Power supply for all)	Power supply for whole copier power		8	7

(8) Solenoid

Symbol	Code name	Function	Remarks	Parts list	
				Page	Item
SOL1	SCRP-SOL (Separation claw solenoid)	Drives the separation claws for the drum		4	42

(9) Others

Symbol	Code name	Function	Remarks	Parts list	
				Page	Item
ATS	SNR-ATC (Auto-toner sensor)	Reads toner density with a magnetic sensor		24	33
THMS1	THMS1-HTR (Heat-roller thermistor-1)	Detects temperature of the heat roller		27	19
THMS2	THMS2-HTR (Heat-roller thermistor-2)	Detects the temperature of the heat roller end		27	27
THERMO	K-THERMO (Thermostat)	Prevents abnormal heating of heat roller		27	8
FU	FU-EXPO (Thermofuse) exposure lamp	Prevents abnormal heating of the		19	12

2.3 Wire Harness Location Diagram

[A] Location diagram for upper unit

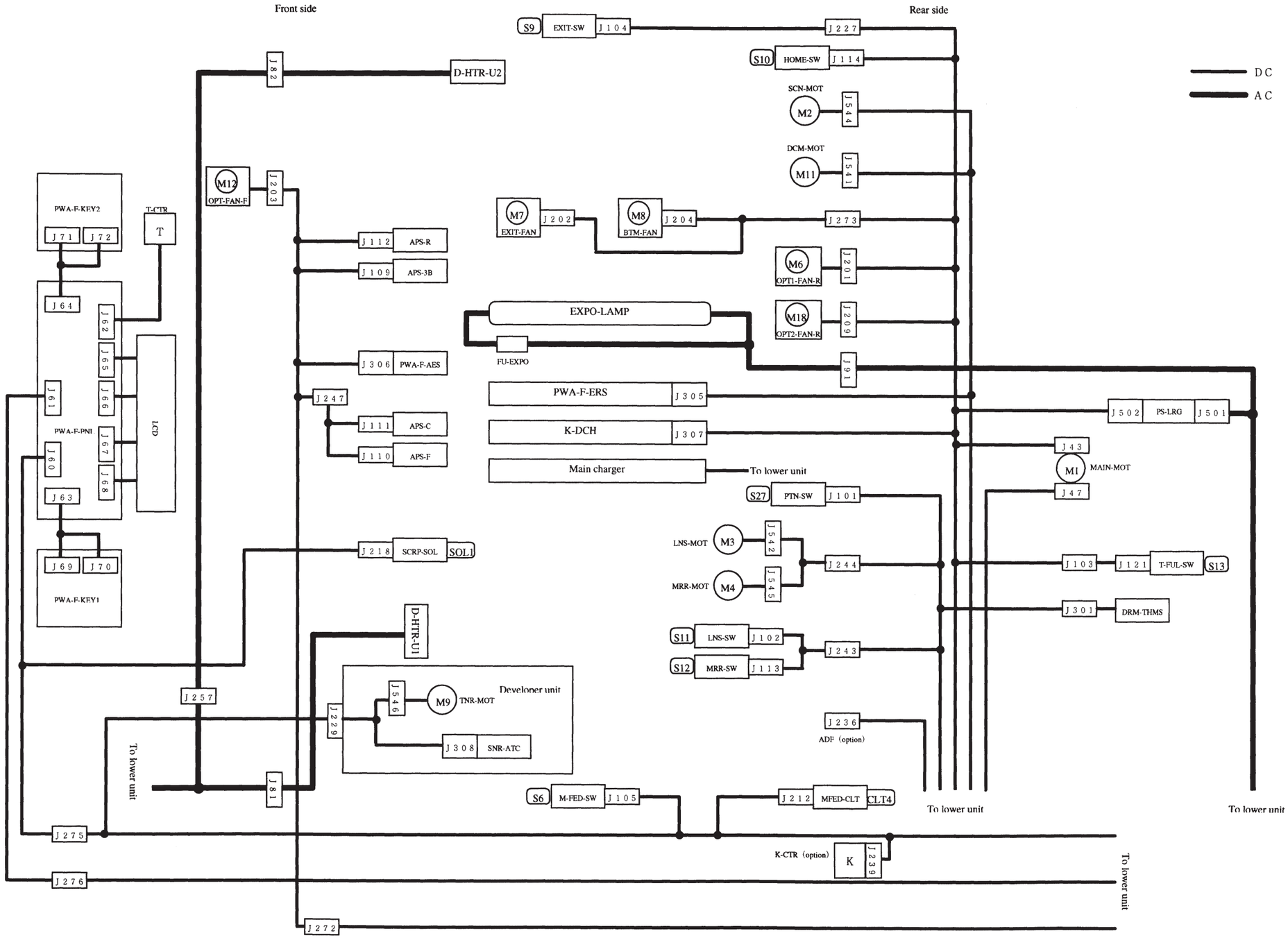

[B] Location diagram for lower unit

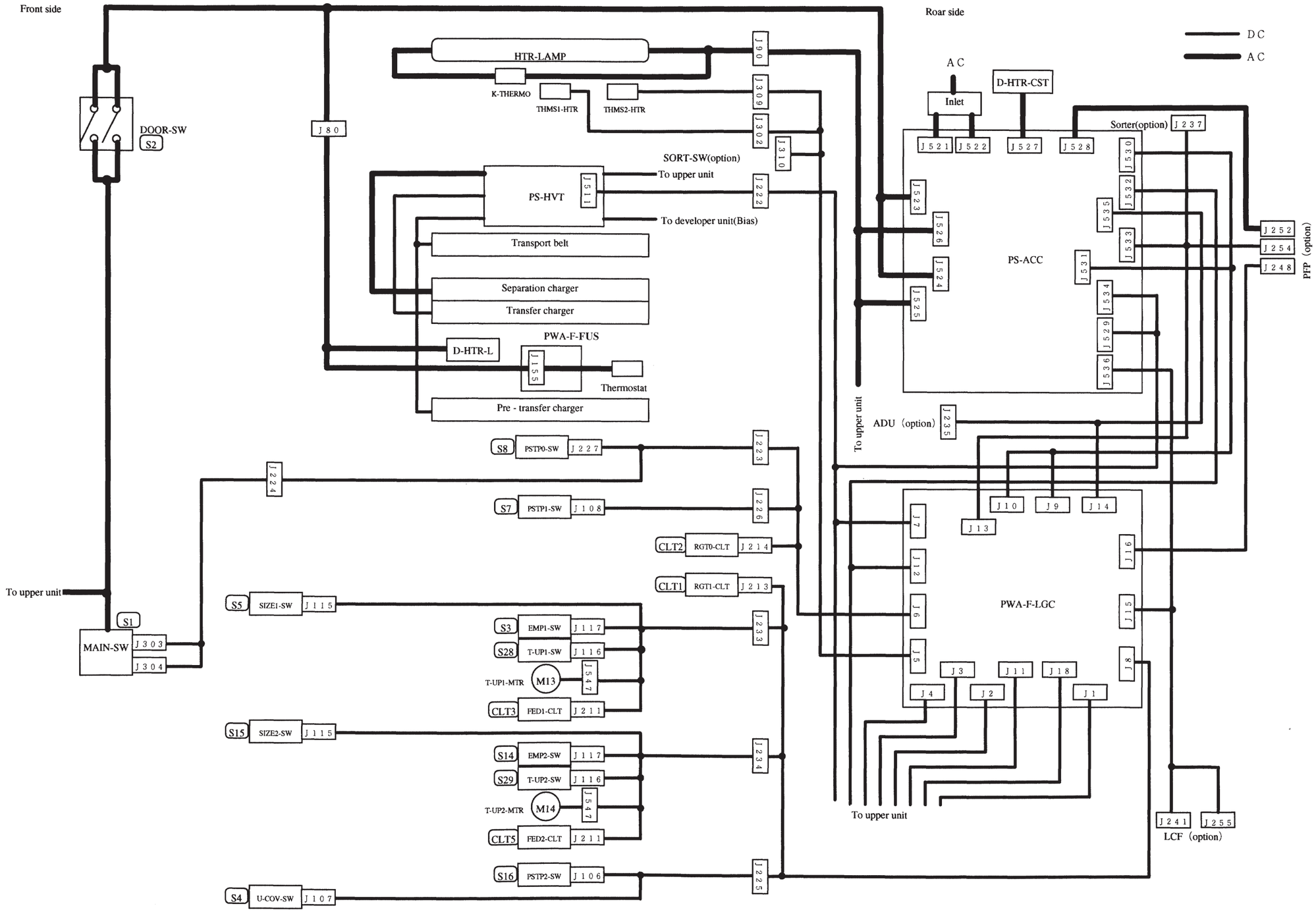

 Nov. 1997 © TOSHIBA

2.4 Removal of Covers and PC Boards

The above item 2.4 is the same one as for 2060/2860.

Changes for the 3560/70

1. The front cover, the inner cover, the upper exit cover and the left top cover have slightly been changed.
2. The control panel has slightly been changed to accommodate a graphic touch panel.

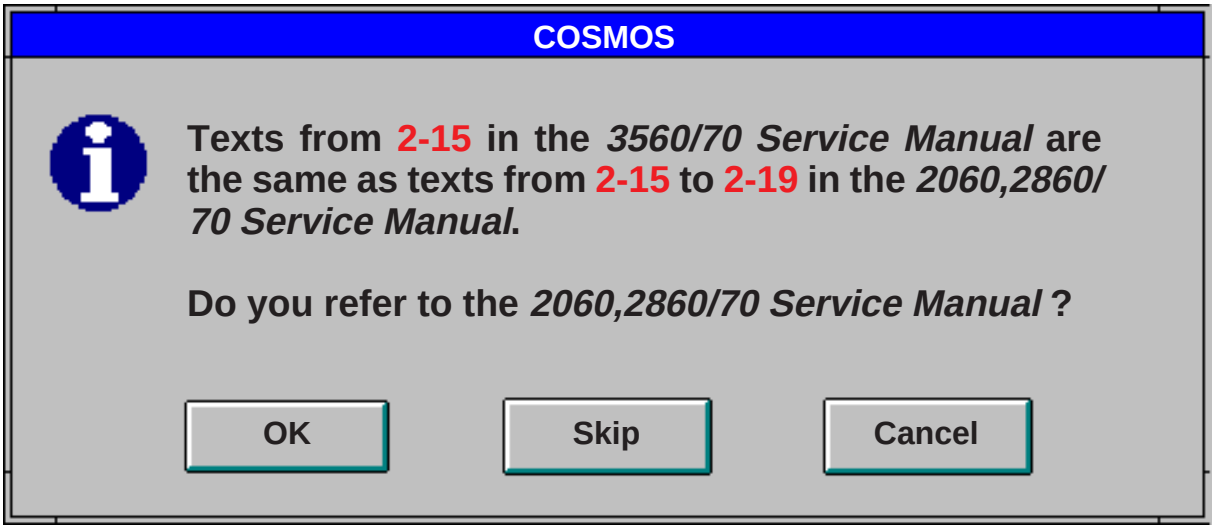

3. COPYING PROCESS

The above item 3 is the same one as for the 2060/2860 except for the transfer value.

Transfer value

2060/2860	3560/70
–DC 5.25KV	–DC 5.10KV

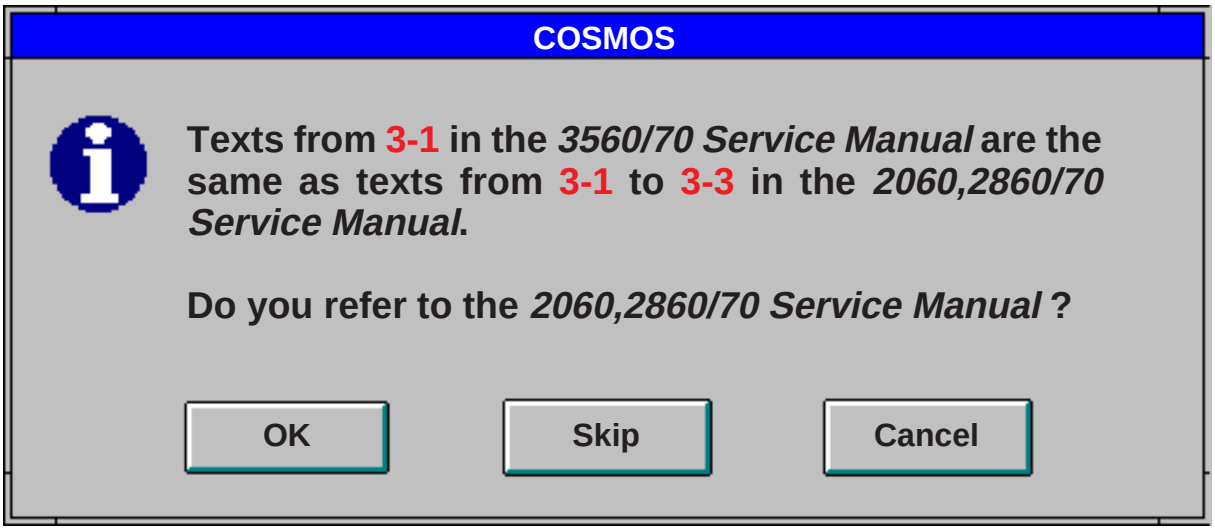

4. COPIER OPERATION

The above item 4 is the same one as for the 2060/2860 except for page 4-3.

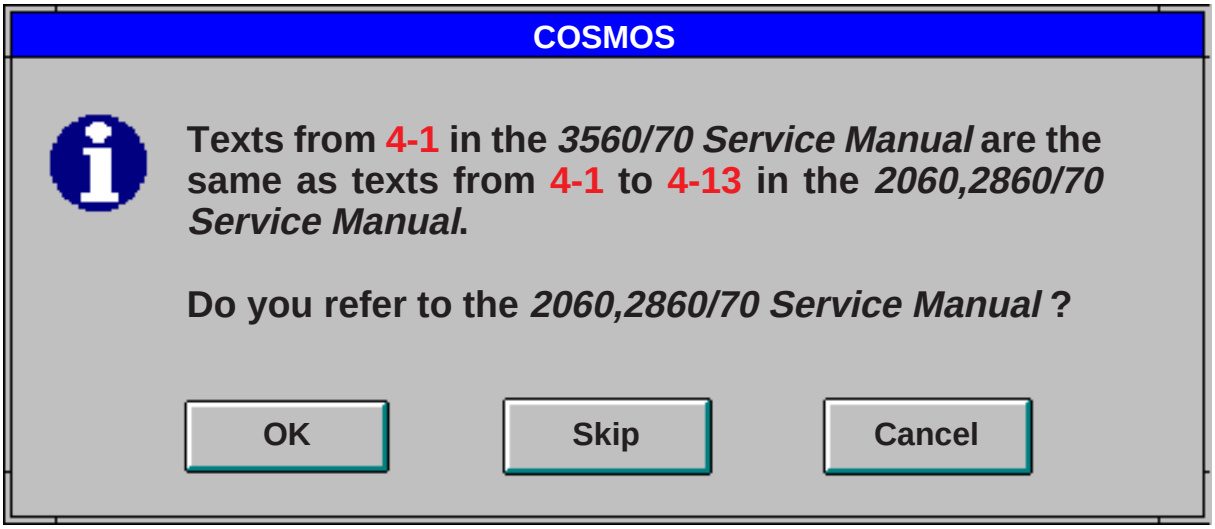

3560/70 change item

1. The optical fan became 3 pieces (M6, M12, **M15**) from 2 pieces.
2. The timing chart has been changed.

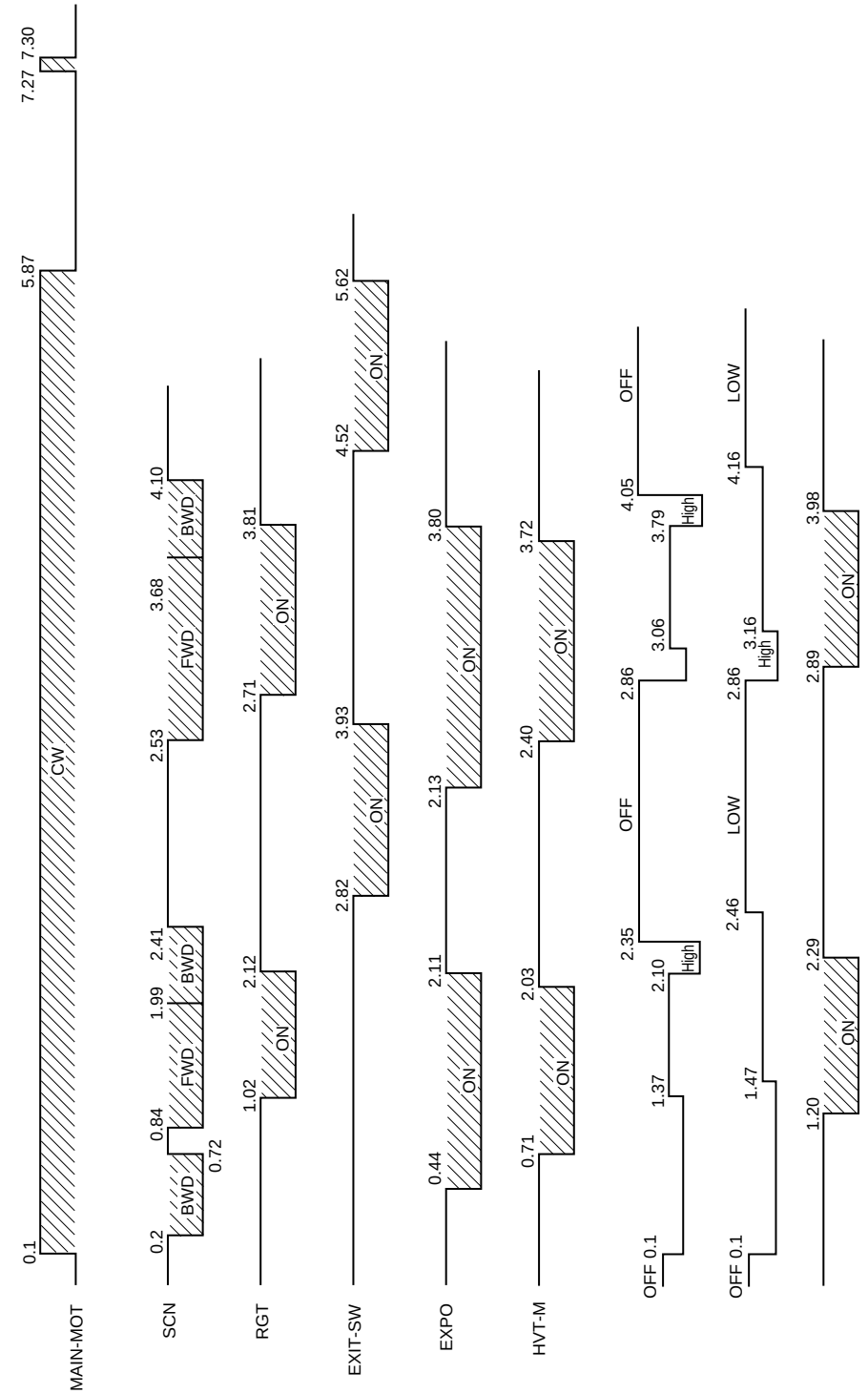

5. DISPLAY UNIT

The display unit consists of key switches for copier operation/selection of each mode, LEDs and an LCD displaying the copier state or messages.
Particularly, when the operator's attention is recommended, a graphic symbol lights or flashes and the message indicating that condition is displayed.

5.1 Detailed Drawing of the Control Panel and the Display Panel

For the U.S.A. and Canada

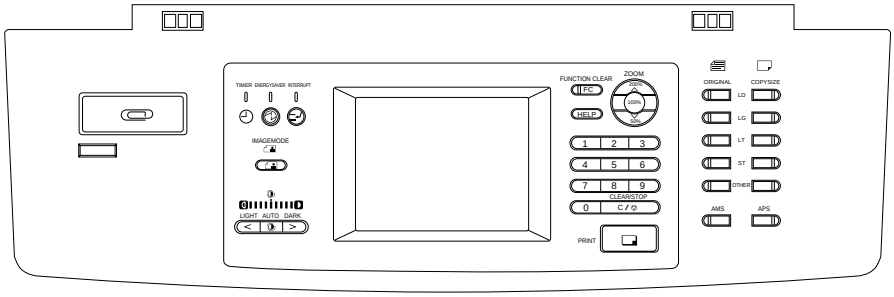

For Europe

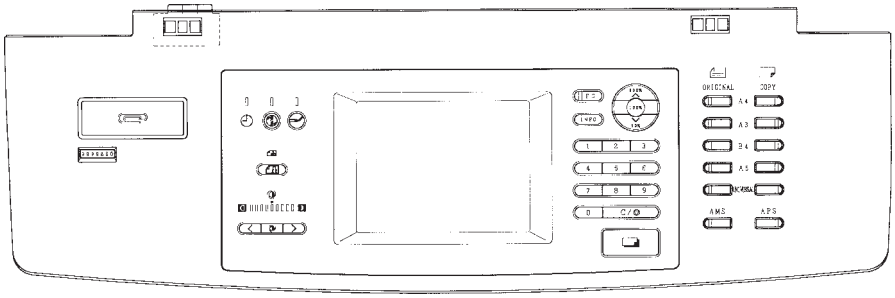

Arrangement of the control panel

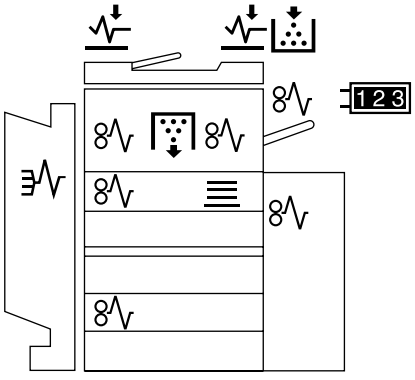

Details of the display panel

5.2 Items Shown on the Display Panel

5.2.1 Display during normal copying

No.	Message	Conditions of machine	Notes
1	WAIT WARMING UP	Being warmed up • Indicated after the main switch is switched on up until the machine becomes capable of copying.	• The number and reproduction ratio of the copies are indicated, for example, as “0”, “100%” when the main switch comes on.
2	READY	Capable of copying. • Indicated when the machine is capable of copying and the operator’s instructions for copying conditions are awaited. • Returns to the initial condition if no key input is given for 45 seconds.	• Copy quantity indicator indicates as “1”. When a digital key is pressed, the set number is indicated. • The set number is cleared to “1” by pressing the CLEAR/STOP key. • Manual copying is possible.
3	COPYING	Now copying. • Indicated by pressing the PRINT key. • Copy quantity indicator becomes “1” and copying is completed.	• After completion of copying, the copy quantity indicator returns to the initially set number.
4	SAVING ENERGY PRESS PRINT	Energy saving conditions.	• Released by pressing the ENERGY SAVER key or the PRINT key.
5	PLACE NEXT ORIGINAL	ADU 1-sided copying standby state. Ⓐ below.	• When using ADU 1-sided, and when not using ADF.
6	—	Timer off • No message is displayed in the panel except for timer LED.	• Released by pressing the PRINT key.

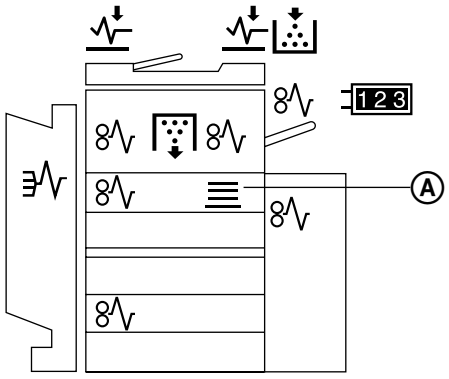

5.2.2 Display in the event of faulty conditions

No.	Message	Abnormal state & indication	Solution
7	ADD PAPER	Indication of lack of paper. • Flashes when there is no paper in the cassette. • Indicates which cassette has no paper. (Ⓐ below.) • Manual copying is possible.	• Supply paper to the selected cassette.
8	ADD TONER: PRESS INFO	Indication of lack of toner. • Ⓑ below is indicated when the toner in the toner cartridge runs out. • When this message is displayed, it is not possible to copy.	• Released after the cartridge is replaced and the front cover is closed.
9	INSERT KEY COPY COUNTER	Key copy counter withdrawn. • Indicated when the key copy counter is withdrawn when the machine is READY or during copying. Ⓒ below. • When it is removed after pressing the PRINT key, the machine stops after that copy is completed, but the counter counts it.	• Released and returned to normal conditions by inserting the key copy counter.
10	DISPOSE OF USED TONER	Indication of need to replace the toner bag. • Indicated when the toner bag is full. Ⓓ below. The copier stops.	Open the front cover and replace the toner bag.

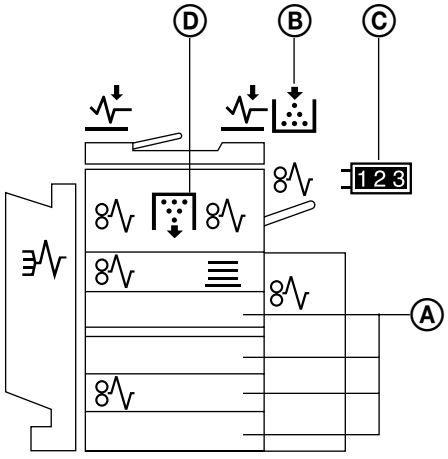

No.	Message	Abnormal state & indication	Solution
11	PAPER MISFEED IN BYPASS	Bypass paper jamming • Indicates when paper jams at the bypass guide. Ⓐ below.	The machine is returned to normal conditions automatically by pulling the paper out from the bypass guide.
12	MISFEED IN COPIER PRESS INFO	Paper jammed in the machine. • Indicated when paper jams in the machine. Ⓑ below. Misfeed from LCF, PFP • Indicated when paper fed from a cassette does not arrive at the paper-stop switch within a set time. Ⓒ and Ⓕ below.	• Press the HELP (INFO) key and remove the paper jammed in the copier following the message.
13	MISFEED IN DOC. FEEDER	Original jammed • Indicated when an original is jammed in the optional document feeder. Ⓓ below	Open the ADF feed cover and remove the jammed original.
14	MISFEED IN SORTER: PRESS INFO	Paper jammed in the sorter. • Indicates when paper is jammed in the sorter. Ⓔ below.	Remove the paper jammed in the sorter and open and close the front cover once.
15	MISFEED IN ADU: PRESS INFO	Indicates when paper is jammed in the ADU section. Ⓖ below.	Press the HELP (INFO) key and remove the paper jammed in the copier following the message.

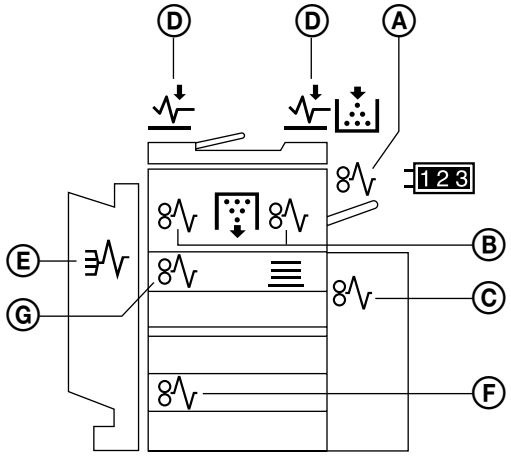

No.	Message	Abnormal state & indication	Solution
16	CALL FOR SERVICE: CALL	Some or one of the mechanism, motors, switches or sensors are abnormal.	Turn off the machine, remove the cause of the fault and turn the machine back on.
17	TIME FOR PERIODIC MAINTENANCE	Indication of PM cycle. • Indicated when it is time for periodic maintenance and inspection. • Capable of copying.	Maintenance and inspection by a qualified service technician.

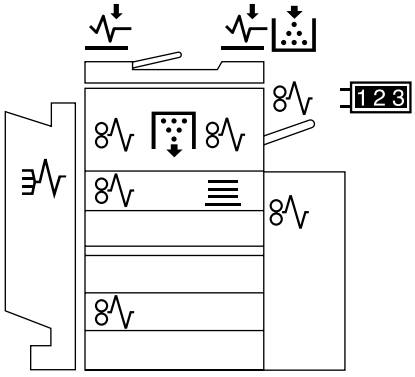

5.3 Relationship between Copier Conditions and Operator's Actions

Operation / Condition	PRINT key	CLEAR/ STOP key	Digital keys	REPRO-DUCTION RATIO selection key	EXPOSURE key	ORIGINAL SIZE key	COPY SIZE key	INTER-RUPT key	ENERGY SAVER key	Sheet bypass
Warming up	–	○	○	○	○	○	○	○	○	○
Ready	○	○	○	○	○	○	○	○	○	○
Reproduction-ratio changing	–	○	○	○	○	○	○	○	○	○
Copying	–	○	–	–	○	–	–	○	–	○
Add paper	–	○	○	○	○	○	○	○	○	○
Add toner	–	○	○	○	○	○	○	○	○	○
Key copy counter not inserted (optional)	–	○	○	○	○	○	○	○	○	○
Bypass misfeed	–	–	–	–	–	–	–	–	–	–
Replace toner bag	–	–	○	○	○	○	○	○	○	○
Clear paper	–	–	–	–	–	–	–	–	–	–
Service call	–	–	–	–	–	–	–	–	–	–
Interrupt mode	○	–	–	○	○	○	○	○	–	○
Energy-saving mode	○	–	–	–	–	–	–	–	○	–

○: Machine operates or indicates in accordance with the operator's action. –: Operation is ignored.

(1) By pressing the ENERGY SAVER key or the PRINT key, the energy-saving mode will be cancelled.

(2) During copying, avoid changing exposure as far as possible.

(3) The function of the CLEAR/STOP key changes in the following manner according to the machine status.

During copying ..... Interruption of the copying (Stop function .....The copy quantity indicator will not change.)

When not copying .... When pressed once, the copy quantity indicator returns to "1".

(4) During copying, avoid sheet bypass feeding because of possible paper jamming.

Note: The interrupt mode will be automatically cancelled when the machine is not used for 45 seconds.

5.4 Description of Operation

5.4.1 Dot matrix LCD display circuit

(1) Structure

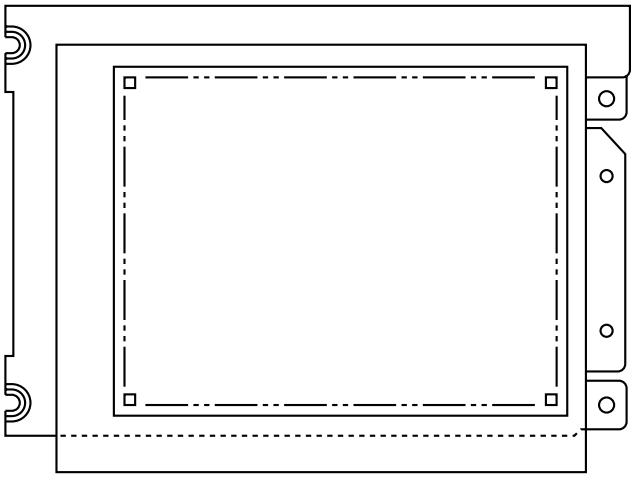

LCD module is an STN black and white mode transmissive type LCD with a 320 × 240-dot display capacity. It includes a driver LSI, frame print board, and lateral CFL backlighting.

*STN: Super Twisted Nematic

(2) Block diagram

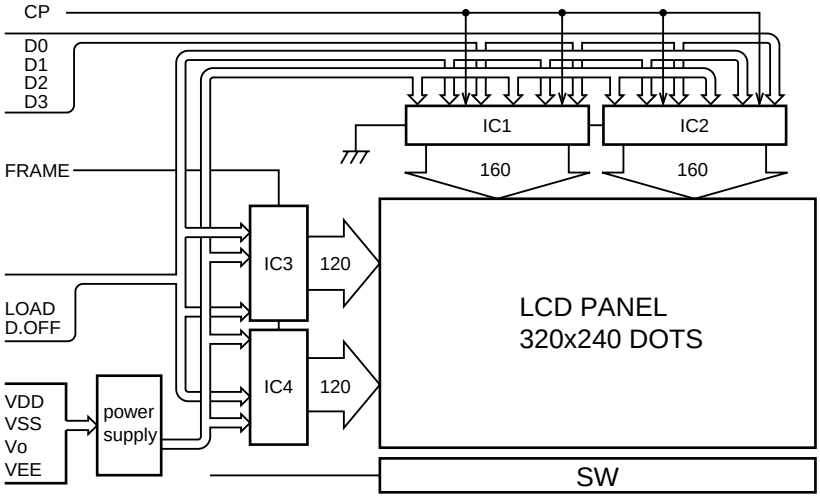

(3) Drive

- LCD control: Drive is effected by the LCD controller on the PNL board.
- What character is displayed in what position: IC7 (main CPU) and IC4 (LCD controller) of the panel circuit control.
- Message data, executable programs, and character codes: Stored in the PROM on the PNL board.
- Each character on the liquid crystal is made up of 16 × 16 dots or 16 × 8 dots. The whole panel consists of 320 × 240 dots.

  Graphic data is written by the main CPU to the liquid crystal controller at the RAM address corresponding to the position at which it is to be displayed. The LCD controller then sends the data to the LCD.

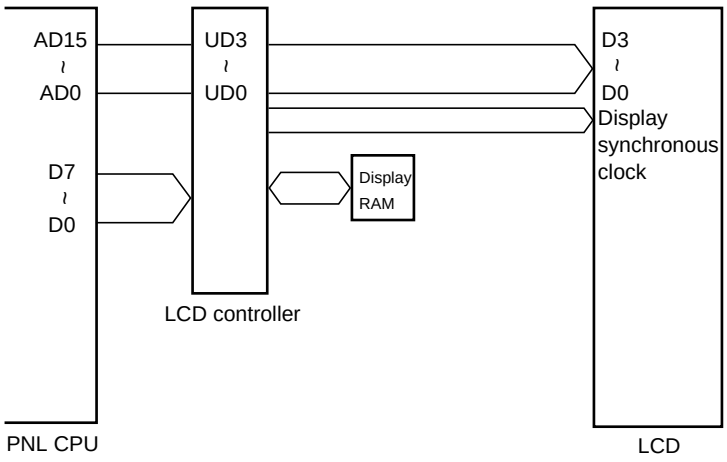

Data Transmission Method.

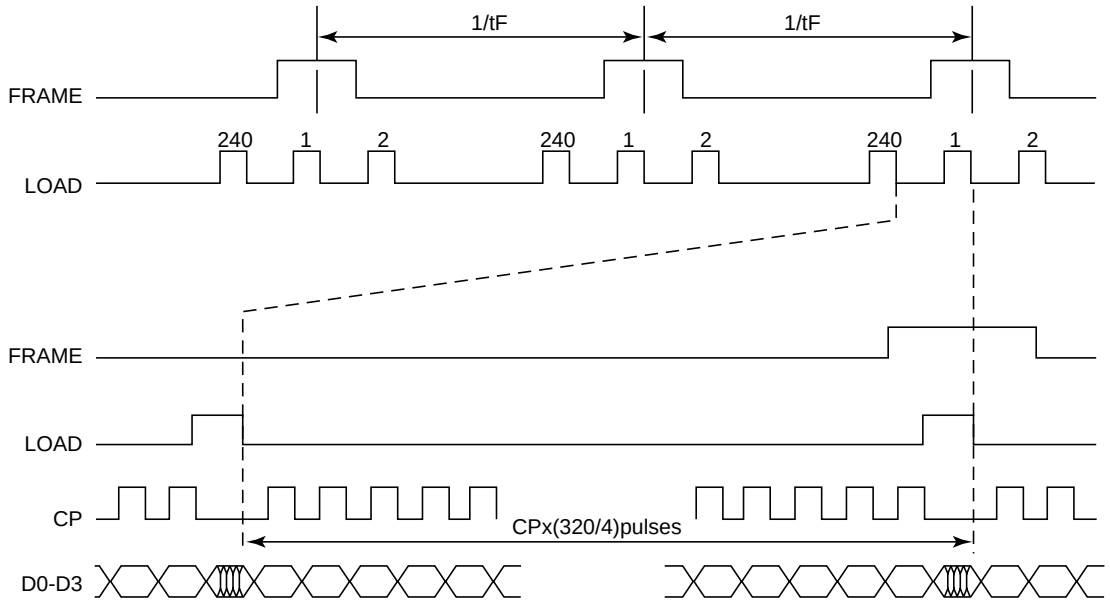

5.4.2 LED display circuit

(1) LED display method

For example, the following shows how the LED LP6 (APS) lights up for displaying “automatic paper sensing”.

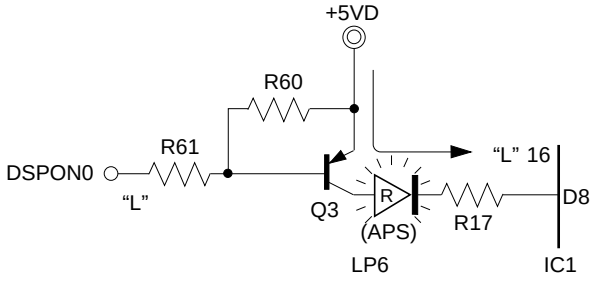

When DSPON0 signal becomes “L” level, transistor Q3 is turned ON. Further, when IC1 pin16 (D8) becomes “L” level, current flows from +5VD to LP6 (APS) through the transistor. In this way LP6 (APS) lights up.

(2) The actual circuit is controlled as follows.

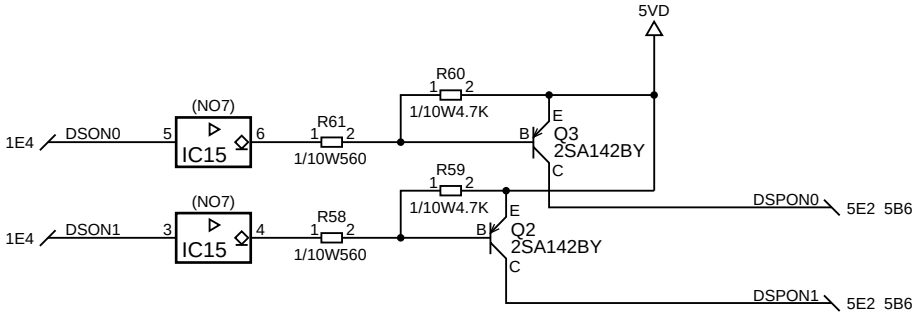

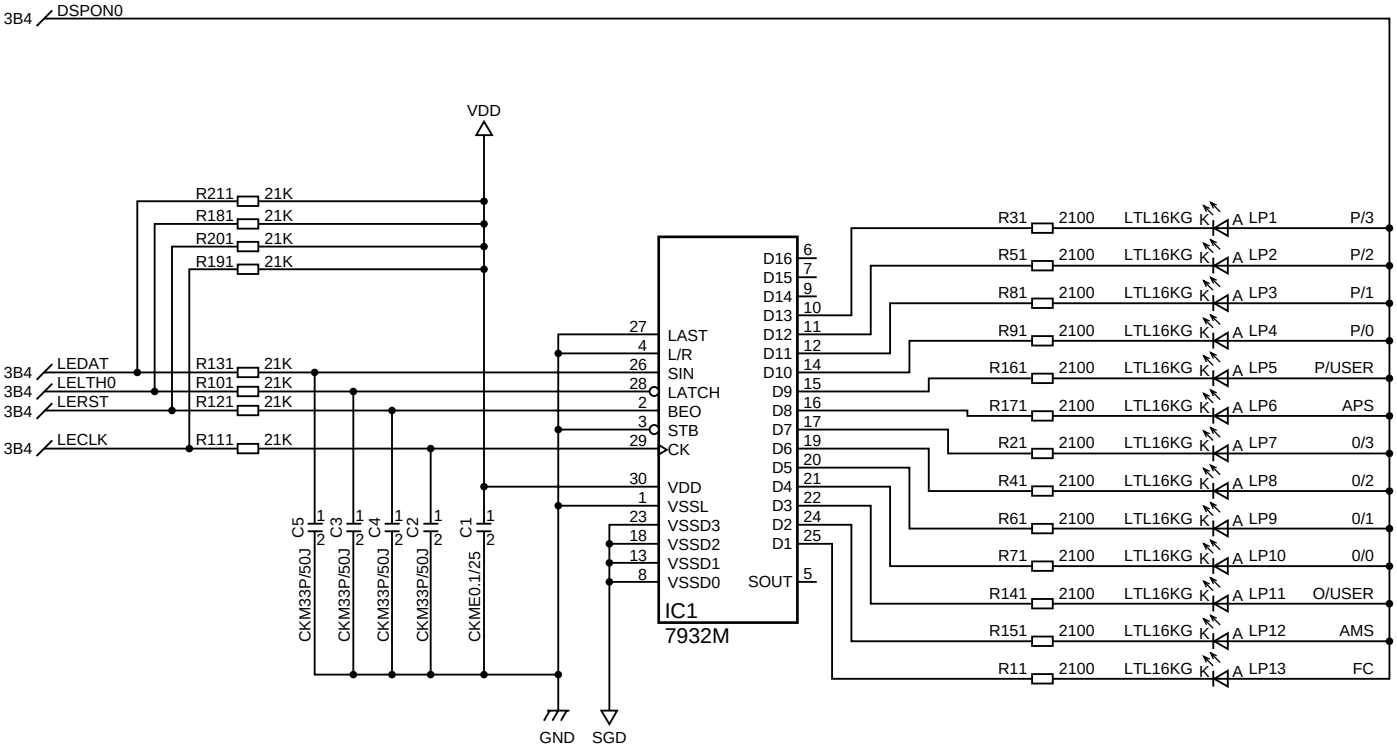

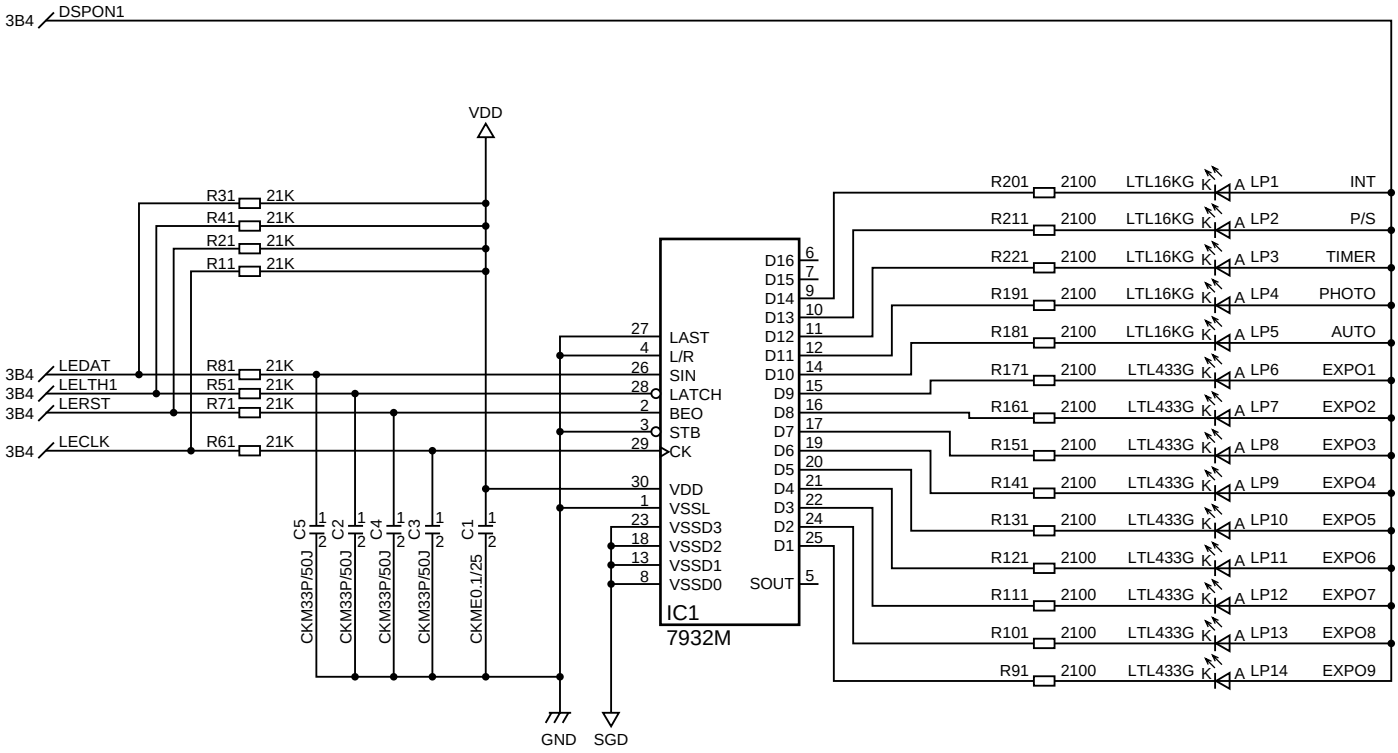

- The signals of DSPON0 and DSPON1 become “H” level by one turn every 6 msec.
- Q2 (or Q3) is turned ON when DSPON0 (or DSPON1) is “L” level.
- LED ON/OFF signal from PNL is inputted to the SIN (pin 26) terminal of IC1 through LEDAT signal line. (Serial data)
- The LED ON/OFF signal is inputted to IC1 in serial is outputted to output terminals of D1 – D16 in parallel.

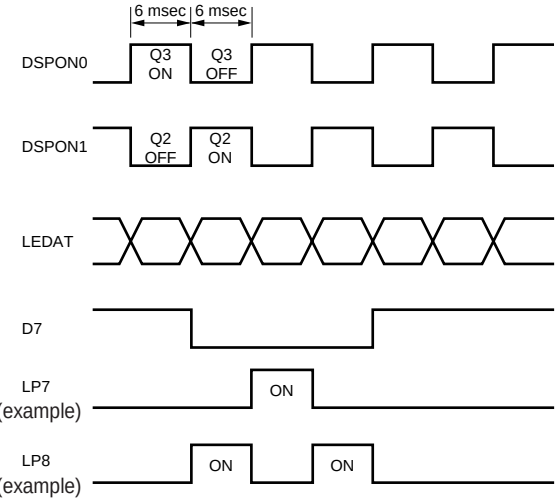

Condition of LED lighting

① The transistor (Q2 or Q3) connected on the anode side of the LED is ON status.

② Output connected on the cathode side of the LED is “L” level.

When the above conditions ① and ② are fulfilled, the LED lights.

Refer to the following names of the LED which are ON/OFF controlled by DSPON0/DSPON1 signals.

Transmission order	LP	SIGNAL	DSP-ON-0	IC7932	LP	SIGNAL	DSP-ON-1	IC7932
1				IC1-6				IC1-6
2				IC1-7				IC1-7
3				IC1-9	1	INT	Interrupt	IC1-9
4	1	P/3	Paper size	IC1-10	2	P/S	Energy saver	IC1-10
5	2	P/2	Paper size	IC1-11	3	TIMER	Timer	IC1-11
6	3	P/1	Paper size	IC1-12	4	PHOTO	Photo mode	IC1-12
7	4	P/0	Paper size	IC1-14	5	AUTO	Auto exposure	IC1-14
8	5	P/USER	Paper size (User adjustment)	IC1-15	6	EXPO1	Exposure display1 (L MAX)	IC1-15
9	6	APS	Automatic paper selection	IC1-16	7	EXPO2	Exposure display2	IC1-16
10	7	0/3	Original size	IC1-17	8	EXPO3	Exposure display3	IC1-17
11	8	0/2	Original size	IC1-19	9	EXPO4	Exposure display4	IC1-19
12	9	0/1	Original size	IC1-20	10	EXPO5	Exposure display5	IC1-20
13	10	0/0	Original size	IC1-21	11	EXPO6	Exposure display6	IC1-21
14	11	0/USER	Original size (User adjustment)	IC1-22	12	EXPO7	Exposure display7	IC1-22
15	12	AMS	Automatic magnification selection	IC1-24	13	EXPO8	Exposure display8	IC1-24
16	13	FC	All clear	IC1-25	14	EXPO9	Exposure display9 (D MAX)	IC1-25

DSP-ON-0 signal is LED and IC on PWA-KEY1.
DSP-ON-1 signal is LED and IC on PWA-KEY2.

6. DRIVE SYSTEM

The above item 6 is the same one as for the 2060/2860.

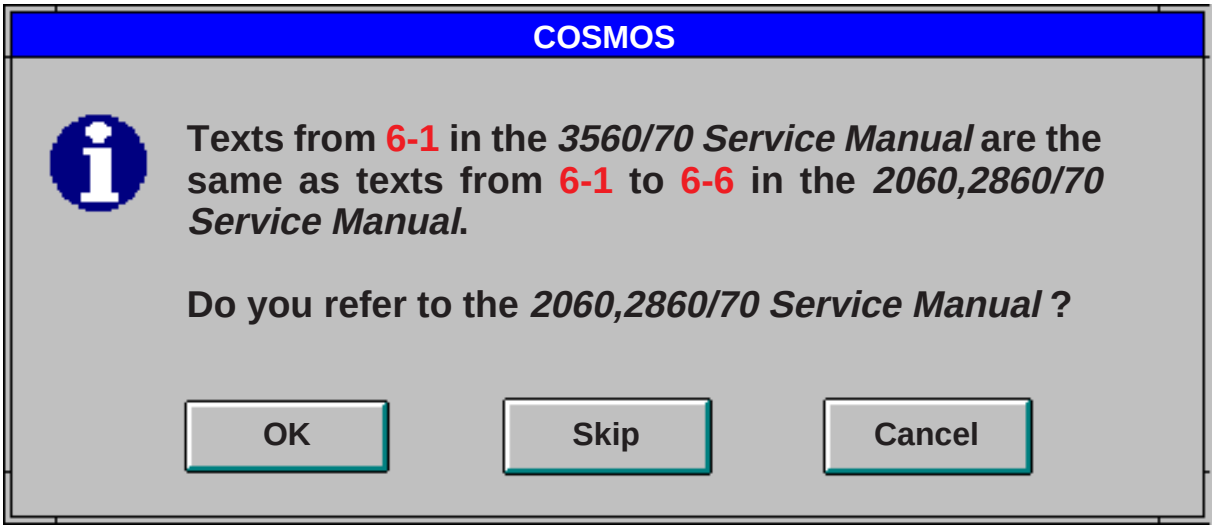

7. OPTICAL SYSTEM

The above item 7 is all the same as for the 2060/2860 except for 7.7.4 (because there were two rear fans).

However, numbers of R, C, IC, etc. are changed (refer to the circuit diagram).

Example

2060/2860	3560/70
R51 (P7-8, 9)	R12
R55 (P7-8, 9)	R14
R58 (P7-8, 9)	R18
C24 (P7-8)	C10
IC15 (P7-8)	IC41
IC18 (P7-12)	IC21
IC19 (P7-12)	IC35
IC30 (P7-12)	IC37
J1-B13 (P7-14)	J1-B4
IC19 (P7-14)	IC35
IC30 (P7-14)	IC37
IC10 (P7-14)	IC18
IC19 (P7-16, 17)	IC35
IC18 (P7-16, 17)	IC21

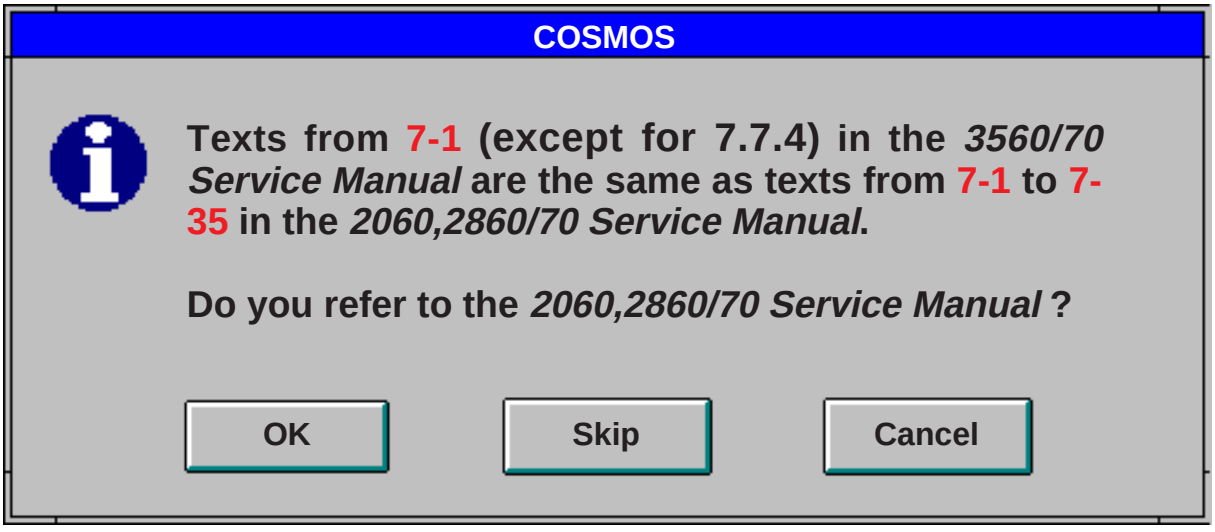

7.7.4 Optical fan (rear)

(1) Remove the upper rear cover.
(2) Remove the connectors (2) and the screws (4).
Two optical fans can be removed together with the COV-FAN-R.

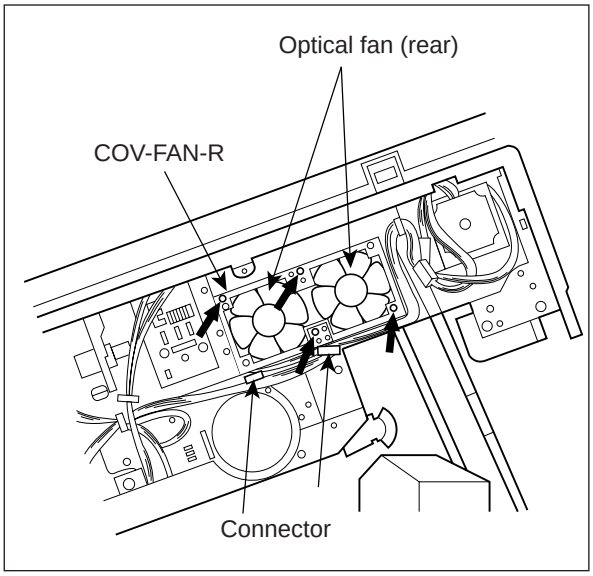

8 PAPER FEEDING SECTION

The above item 8 is the same one as for the 2060/2860.

However, number of IC is changed (refer to the circuit diagram).

Example

2060/2860	3560/70
IC13 (P8-7)	IC9
IC12 (P8-7)	IC3

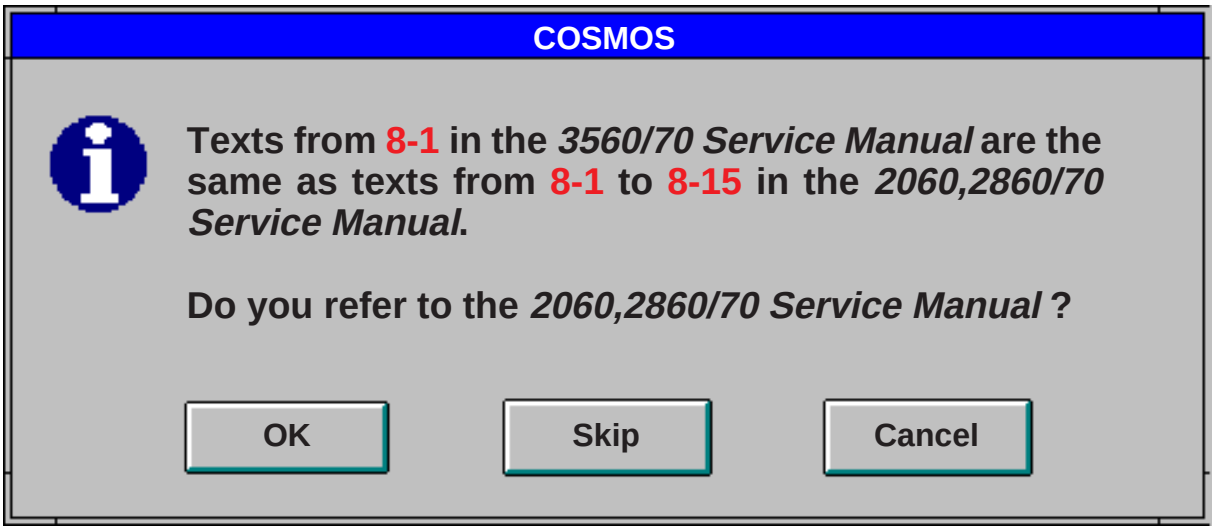

9. DRUM-RELATED SECTION

The above item 9 is the same one as for the 2060/2860.

However, number of IC is changed (refer to the circuit diagram).

Example

2060/2860	3560/70
IC30 (P9-15, 16)	IC37
IC19 (P9-15, 16)	IC35
IC40 (P9-15, 16)	IC46
IC18 (P9-16)	IC21

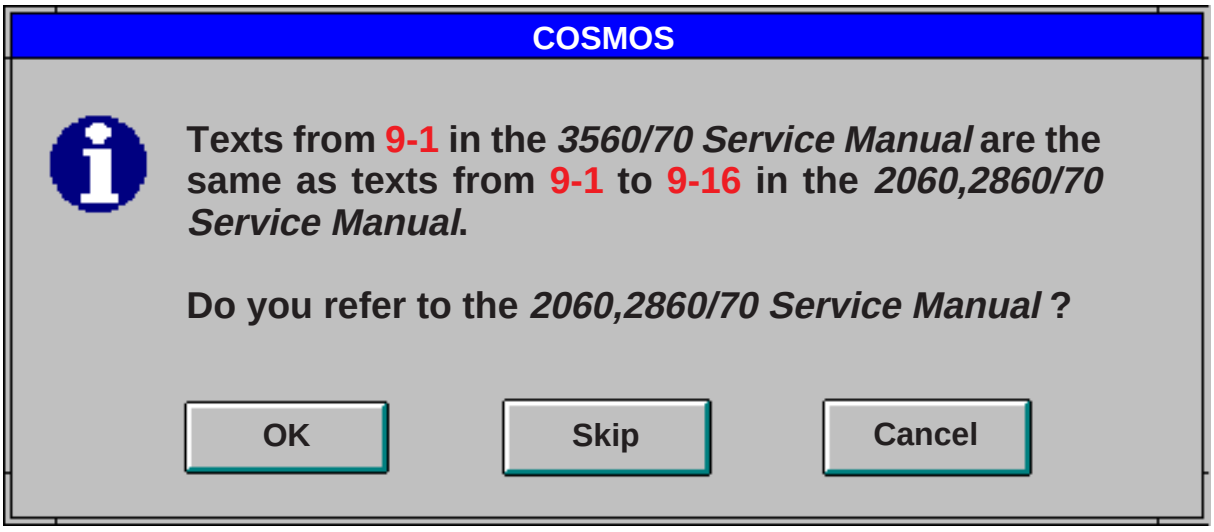

10. DEVELOPER UNIT

The above item 10 is all the same as for 2060/2860 except for the shape of the cartridge holder.

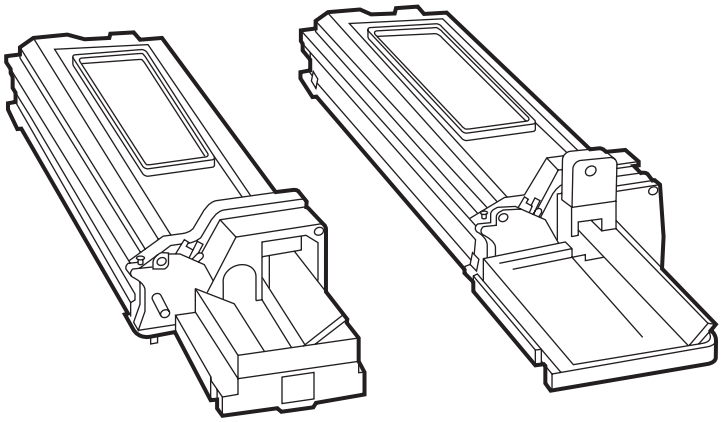

2060/2860 3560/3570

However, numbers of IC, R, Q, D, etc. are changed (refer to the circuit diagram).

Example

2060/2860	3560/70
Q3 (P10-14)	Q2
IC19 (P10-14)	IC35
Q8 (P10-14)	Q10
R21 (P10-14)	R157
R22 (P10-14)	R156
D3 (P10-14)	D2
IC40 (P10-15)	IC46
IC19 (P10-15)	IC35
IC30 (P10-15)	IC37

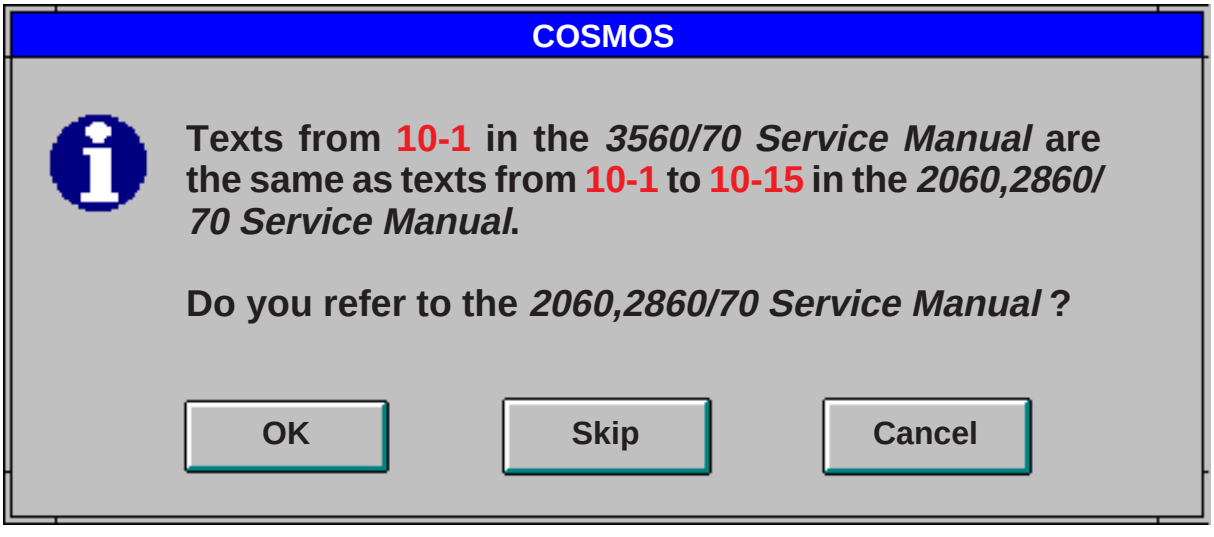

11. CLEANER UNIT

The above item 11 is all the same as for the 2060/2860 except that 11.4.3, 11.4.4 and 11.4.5 have been changed due to the addition of separation claws and a separation claw solenoid.

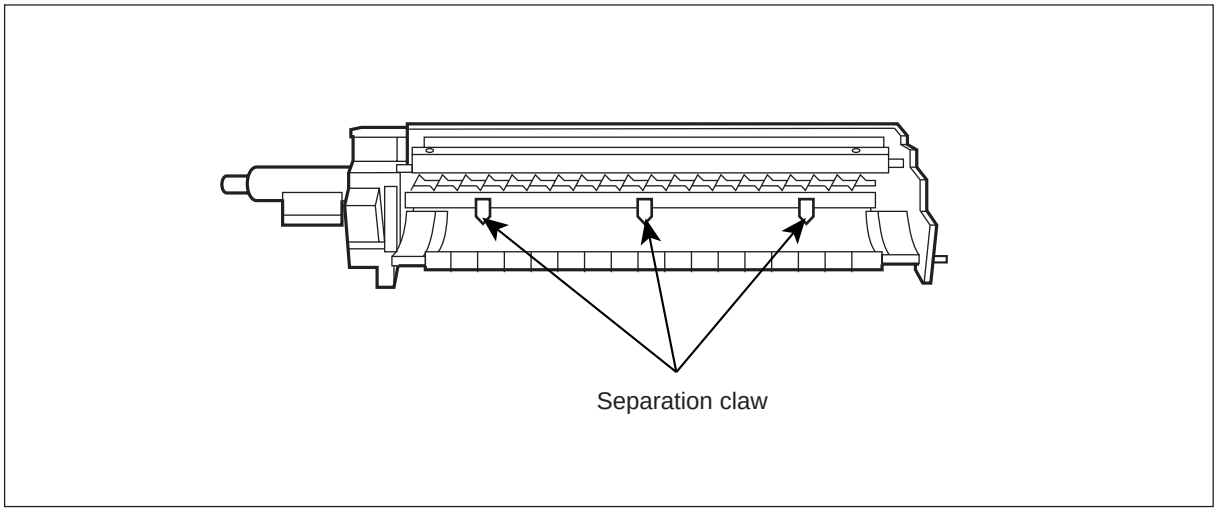

When the drum has been removed

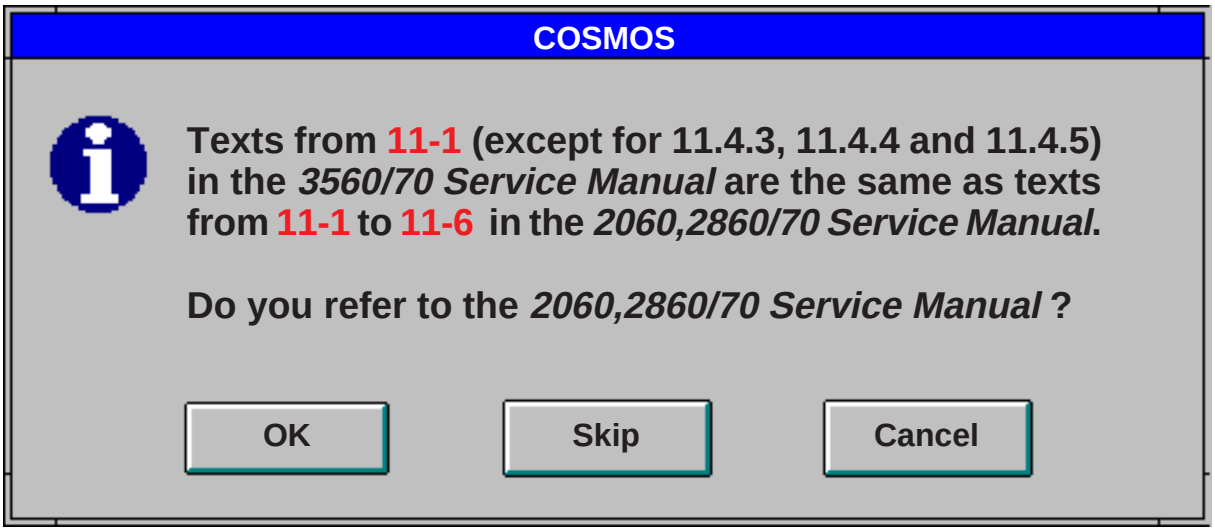

11.4.3 Recovery blade

(1) Turn the cleaner unit upside down.
(2) Remove the three separation claws (4 screws). Refer to 11.4.4.
(3) Remove the recovery blade (2 screws).

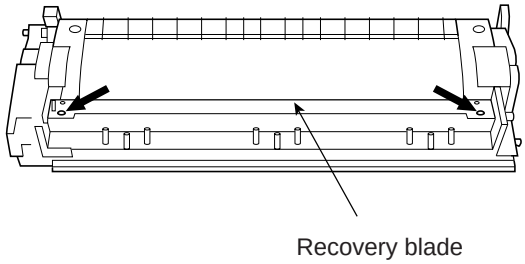

11.4.4 Separation claw

(1) Turn the cleaner unit upside down.
(2) Remove the spring.
(3) Remove the lever from the fitting sections of the separation claw holders.

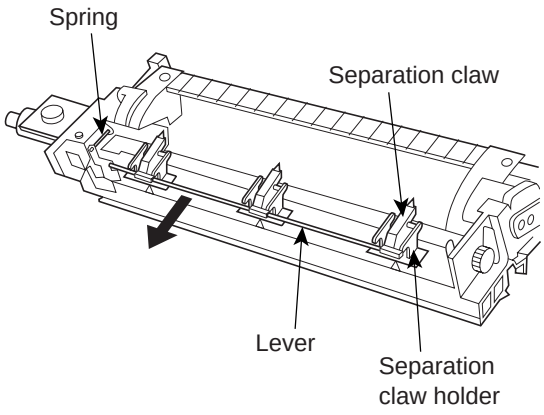

(4) Remove the 4 screws and take out the separation claw with the holder.

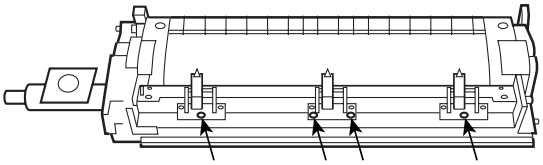

(5) Remove the separation claw from its fitting.

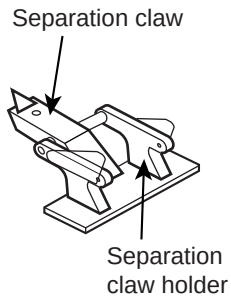

11.4.5 Block for charger output adjustment, separation claw solenoid

(1) Remove cleaner unit.

(2) Remove inner cover (upper).

(3) Remove a screw and a connector.

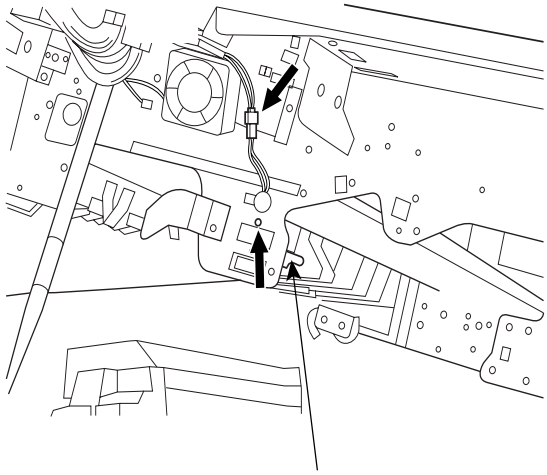

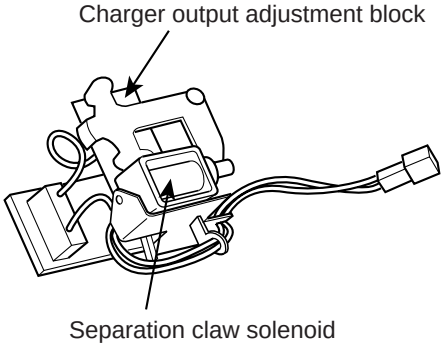

12 FUSER UNIT/PAPER-EXIT UNIT

The above item 12 is the same one as for the 2060/2860.

However, numbers of R, IC, C, etc. are changed (refer to the circuit diagram).

Example

2060/2860	3560/70
R136 (P12-6)	R34
R86 (P12-6)	R24
R81 (P12-6)	R23
R66 (P12-6)	R22
C34 (P12-6)	C14
IC12 (P12-6)	IC35

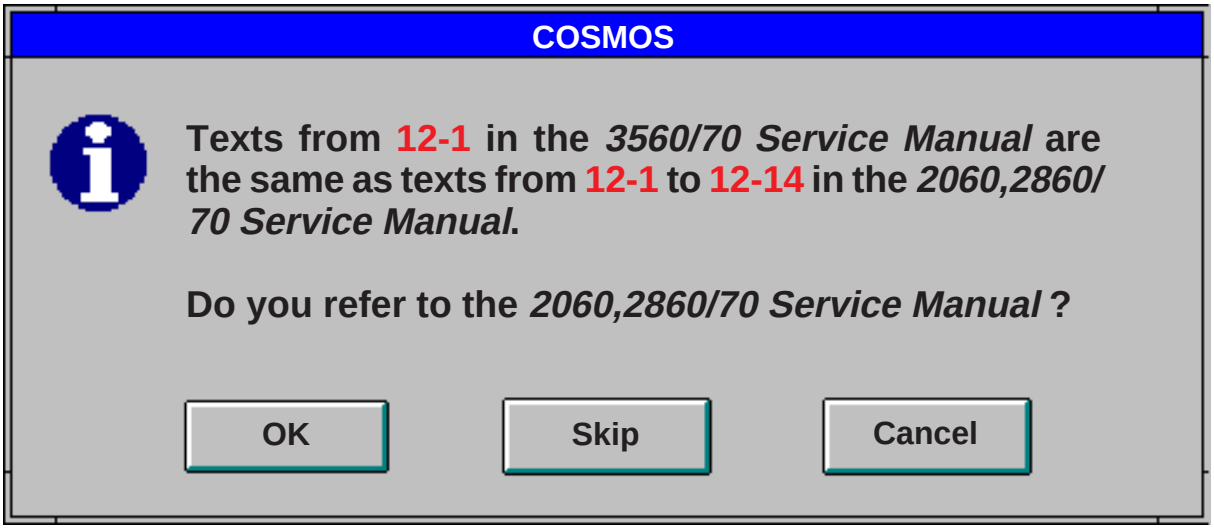

HINT

How to search for where a signal in a circuit diagram has jumped to.

13. ELECTRIC CIRCUIT DIAGRAM

13.1 Logic Circuit (PWA-LGC) 1/13

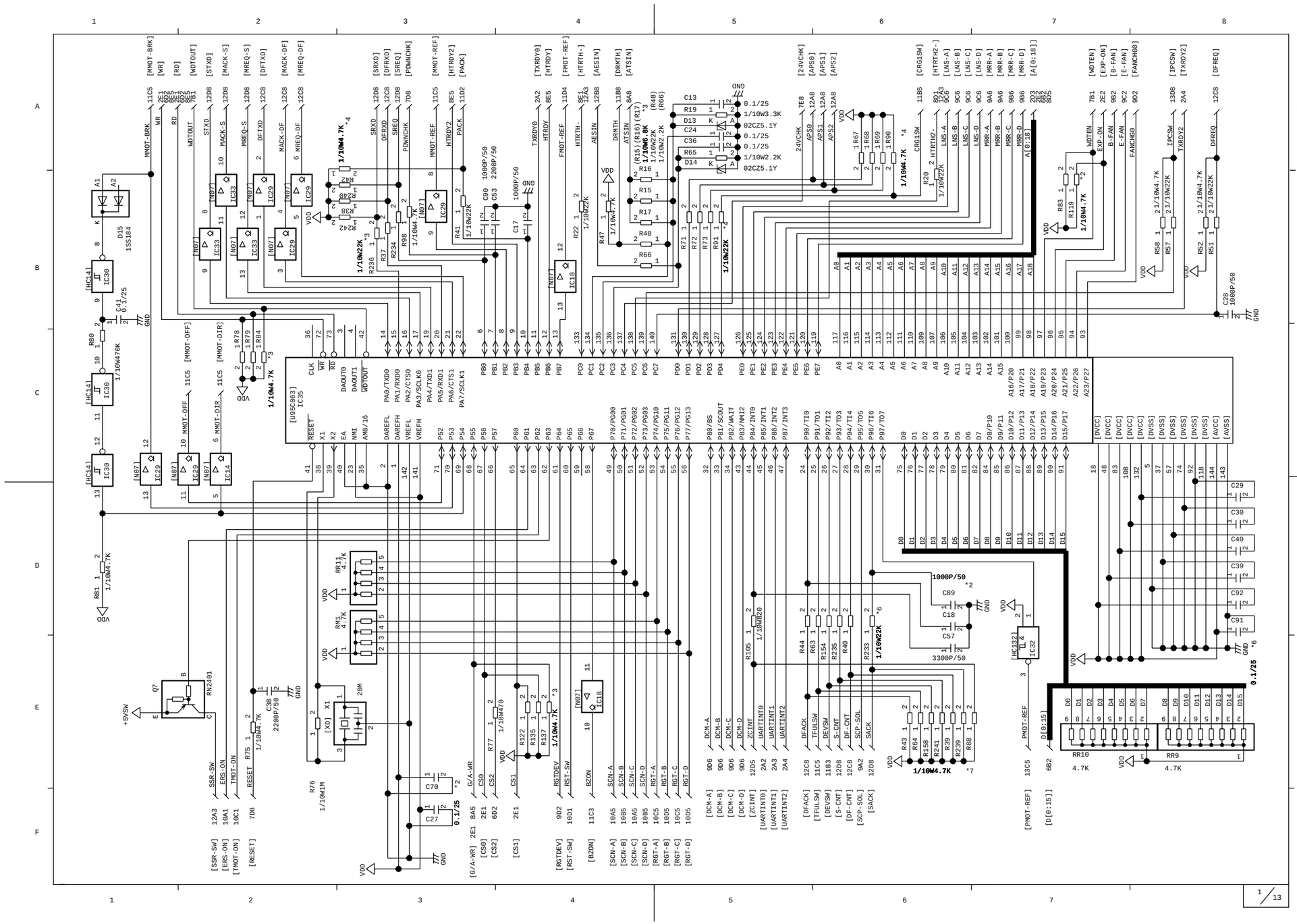

HINT
How to search for where a signal in a circuit diagram has jumped to.

Logic Circuit (PWA-LGC) 2/13

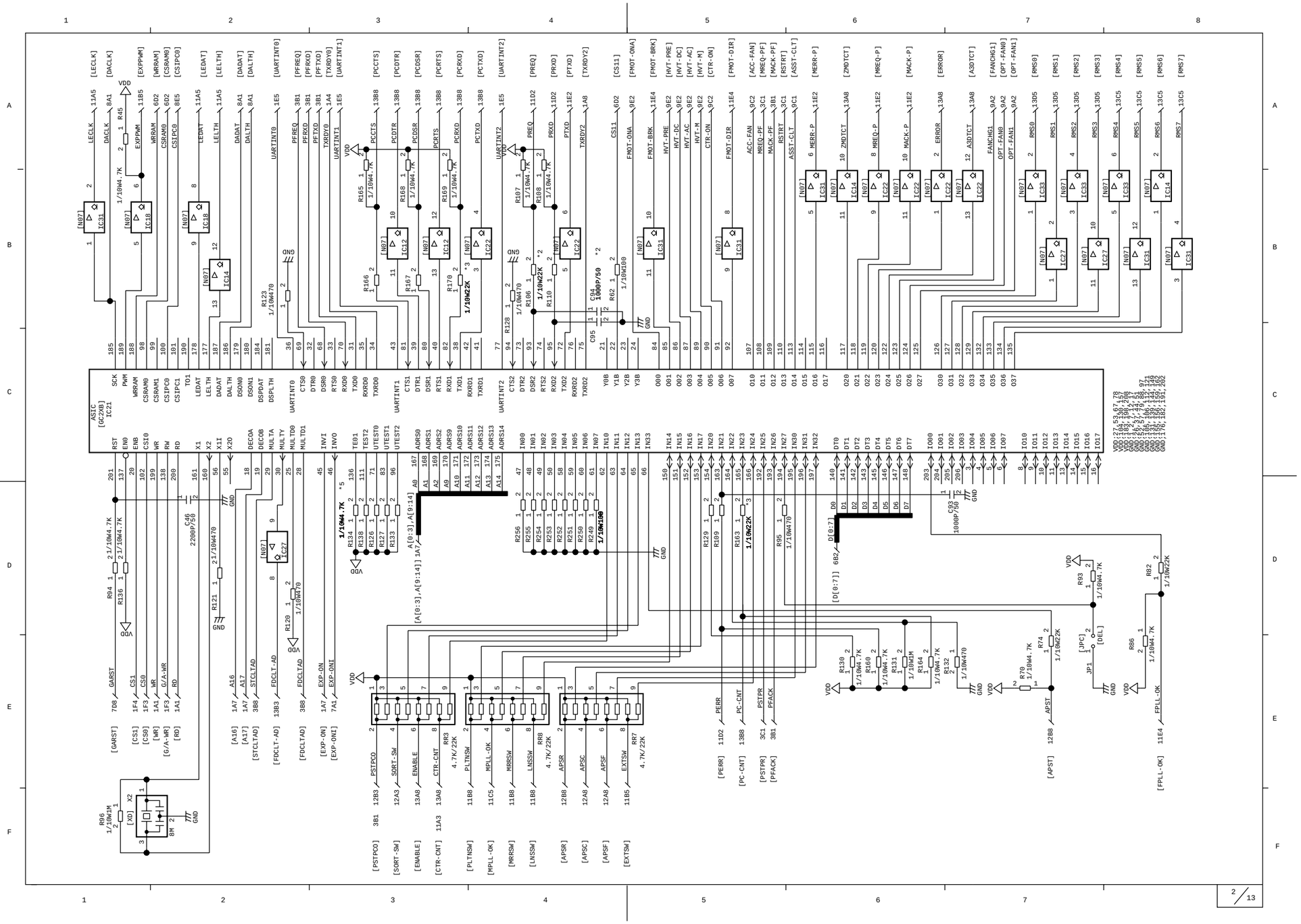

HINT

How to search for where a signal in a circuit diagram has jumped to.

Logic Circuit (PWA-LGC) 3/13

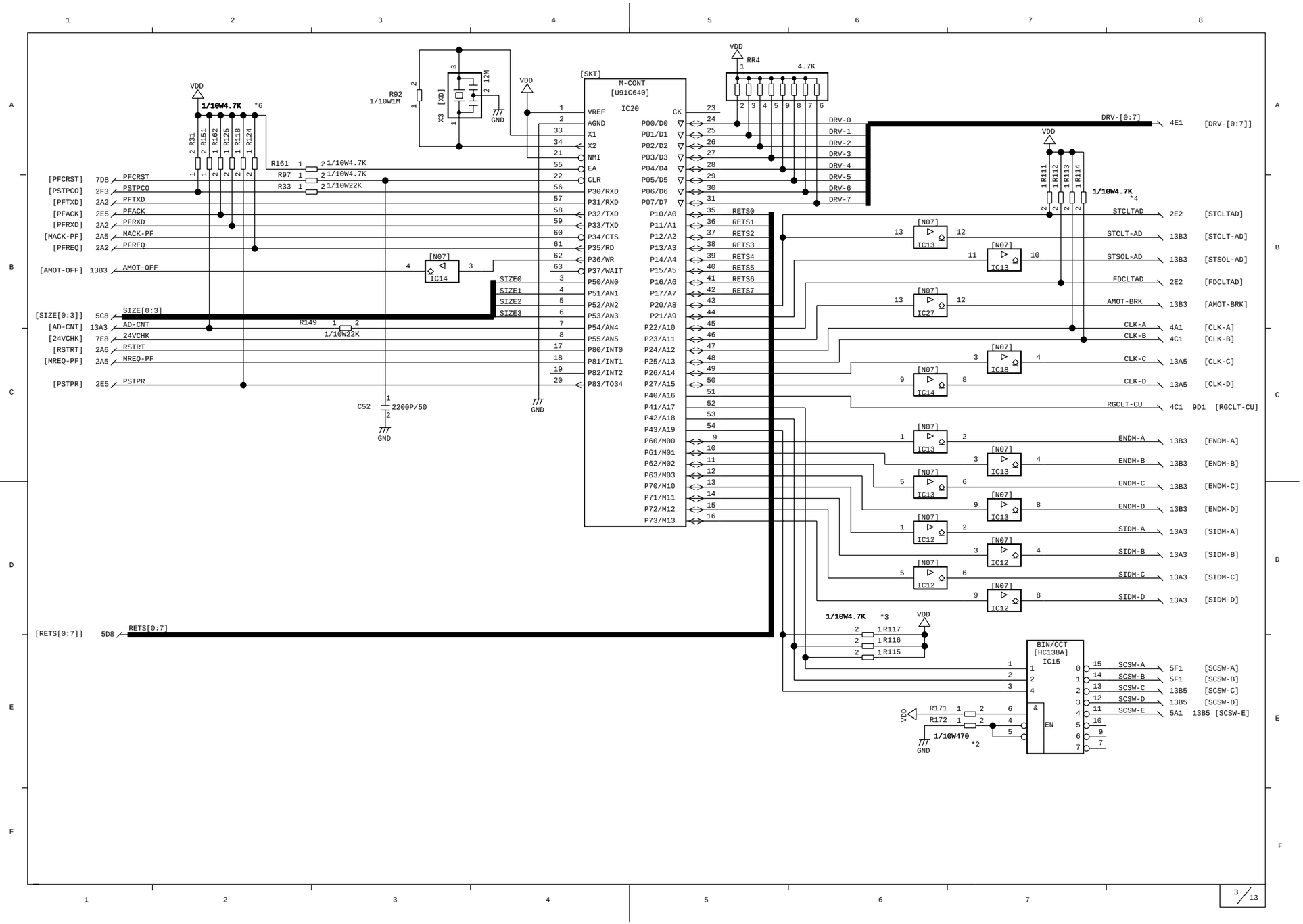

HINT

How to search for where a signal in a circuit diagram has jumped to.

Logic Circuit (PWA-LGC) 4/13

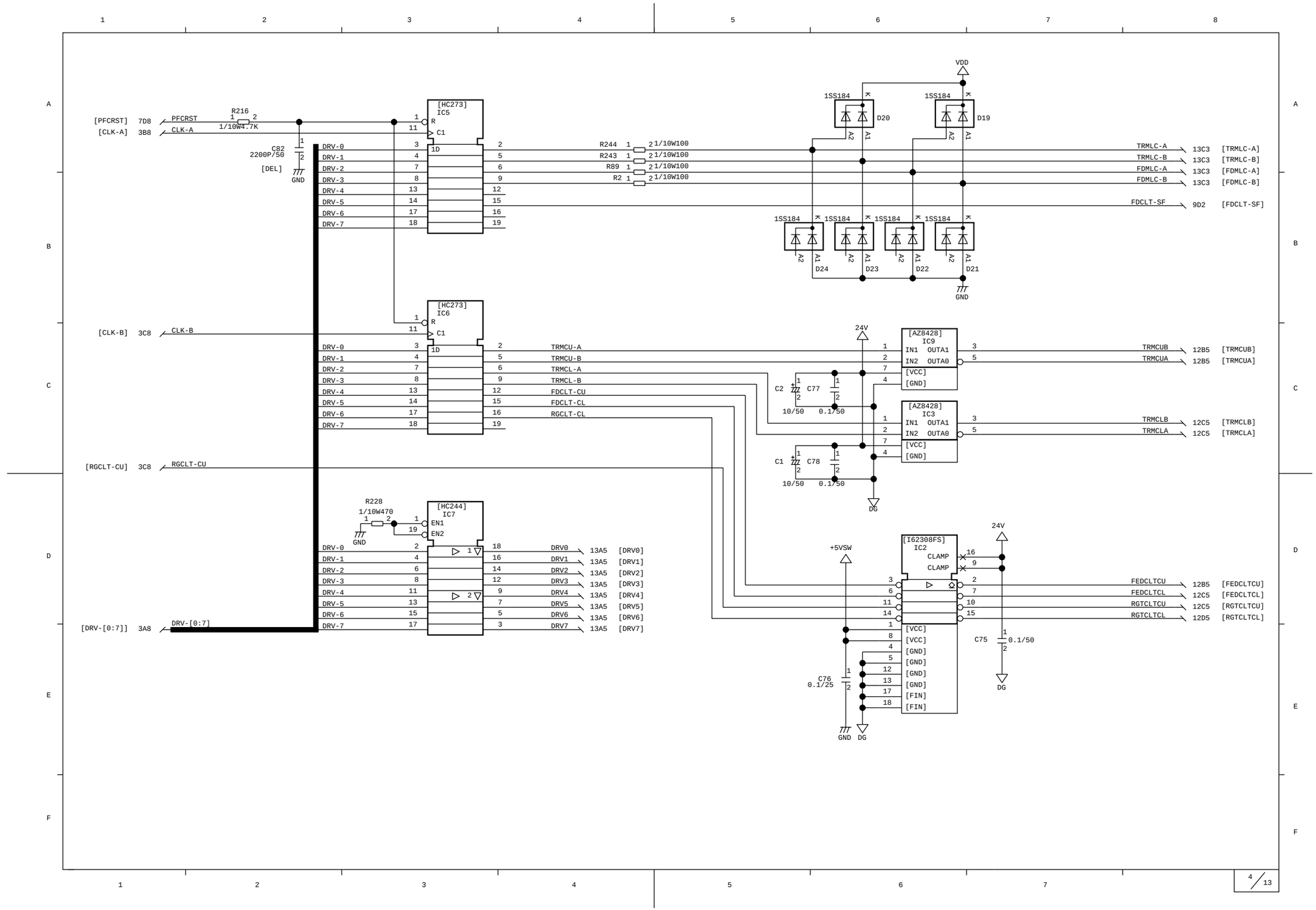

HINT

How to search for where a signal in a circuit diagram has jumped to.

Logic Circuit (PWA-LGC) 5/13

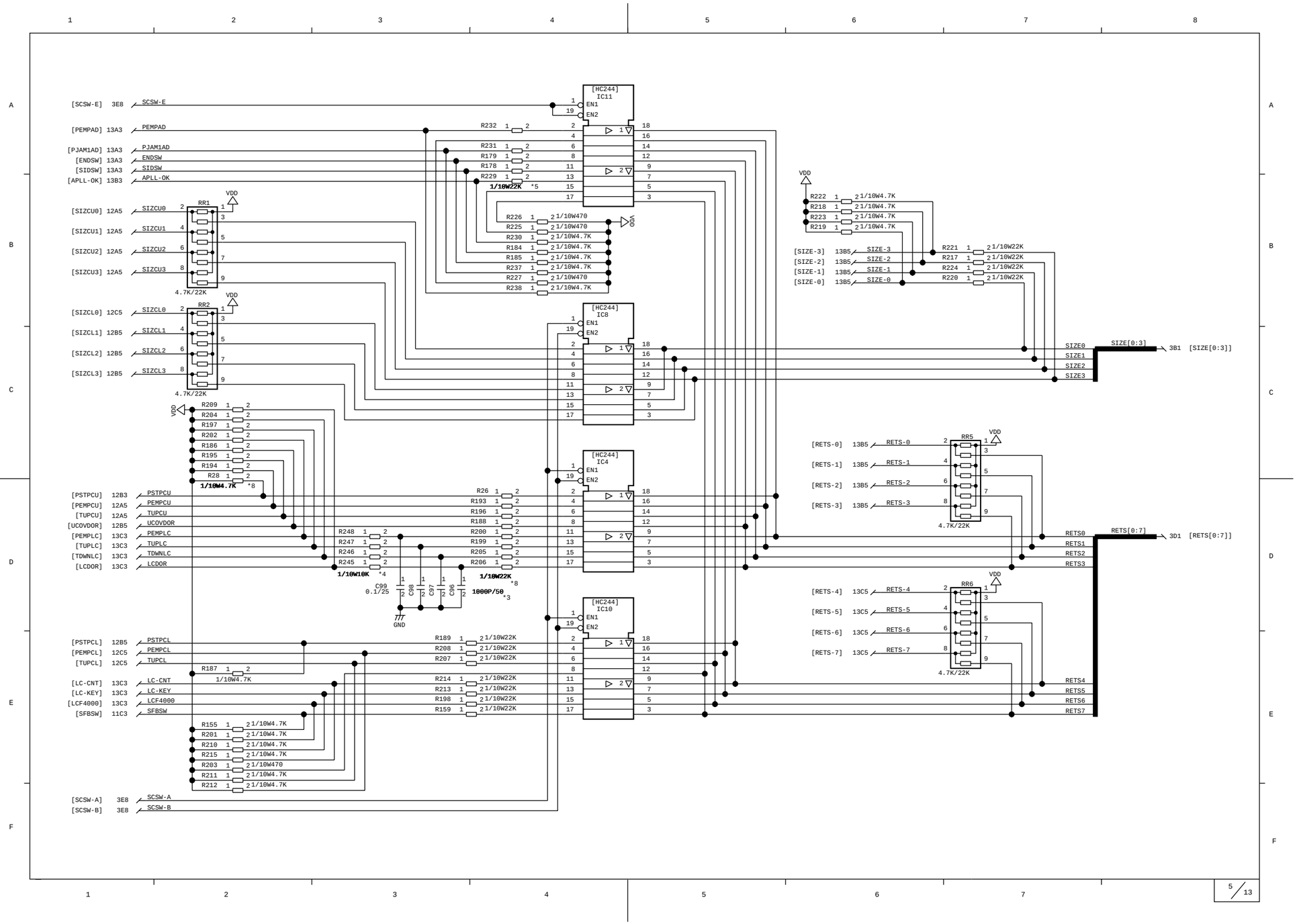

HINT
How to search for where a signal in a circuit diagram has jumped to.

Logic Circuit (PWA-LGC) 6/13

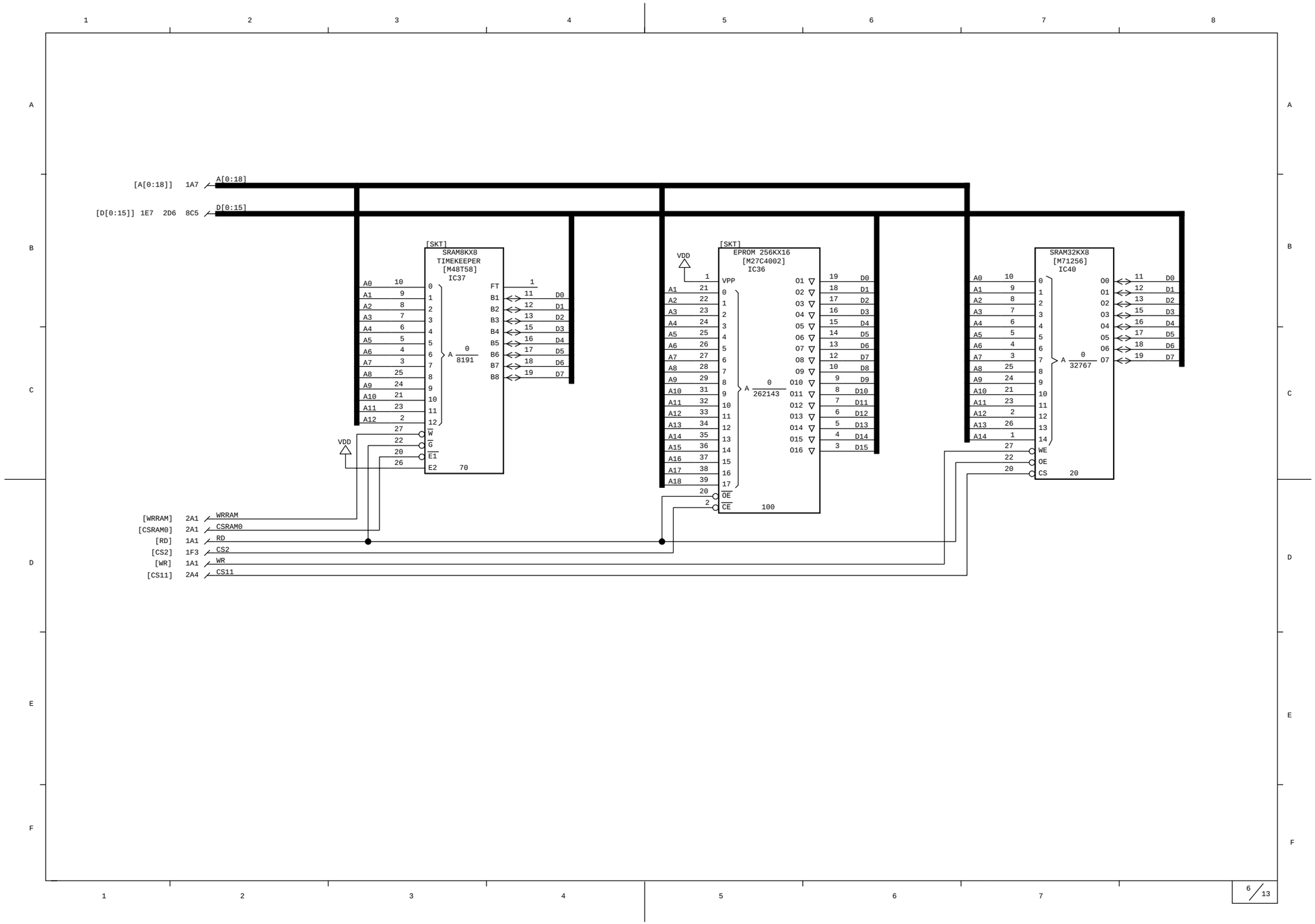

 Nov. 1997 © TOSHIBA

HINT

How to search for where a signal in a circuit diagram has jumped to.

Logic Circuit (PWA-LGC) 7/13

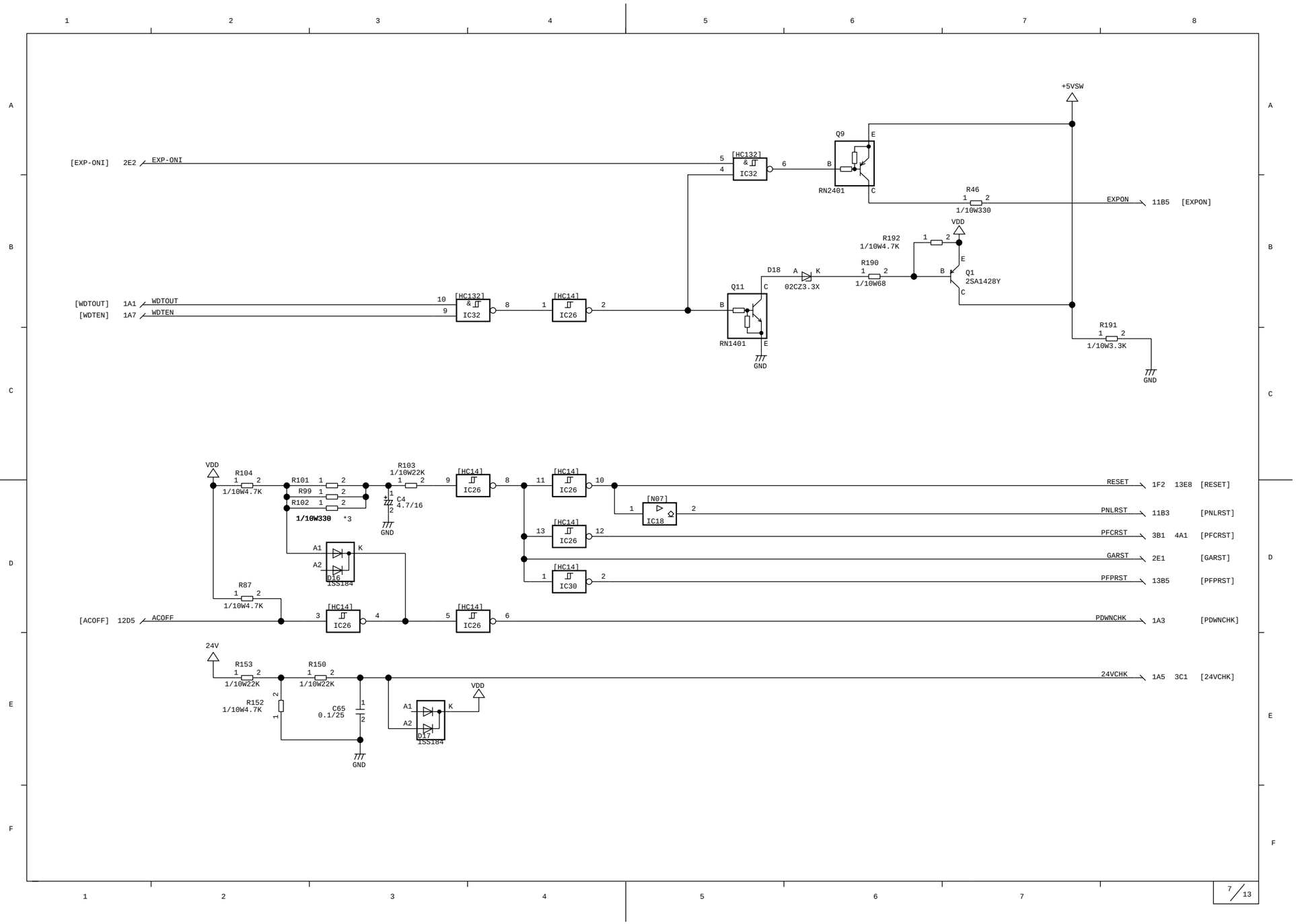

HINT

How to search for where a signal in a circuit diagram has jumped to.

Logic Circuit (PWA-LGC) 8/13

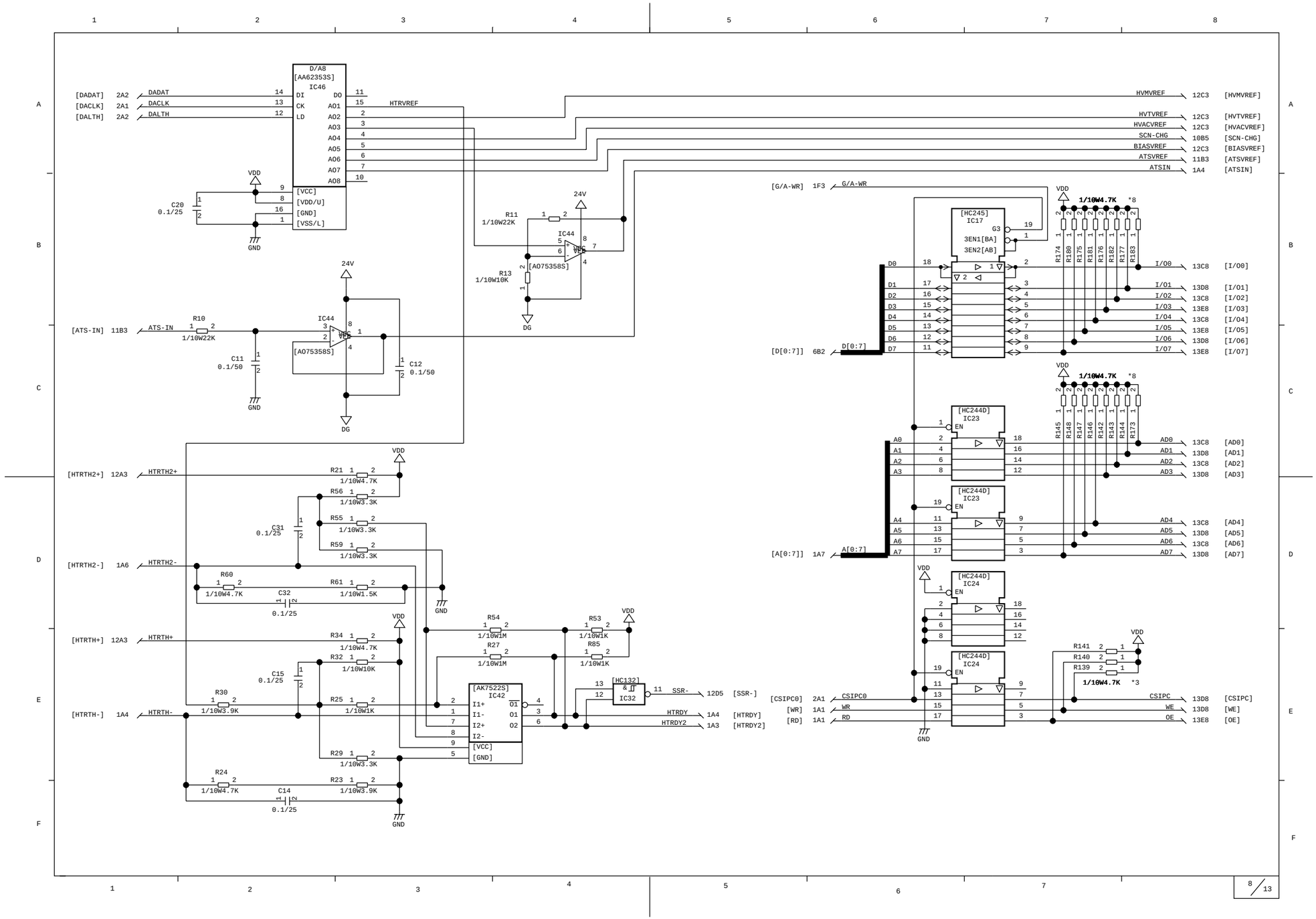

HINT

How to search for where a signal in a circuit diagram has jumped to.

Logic Circuit (PWA-LGC) 9/13

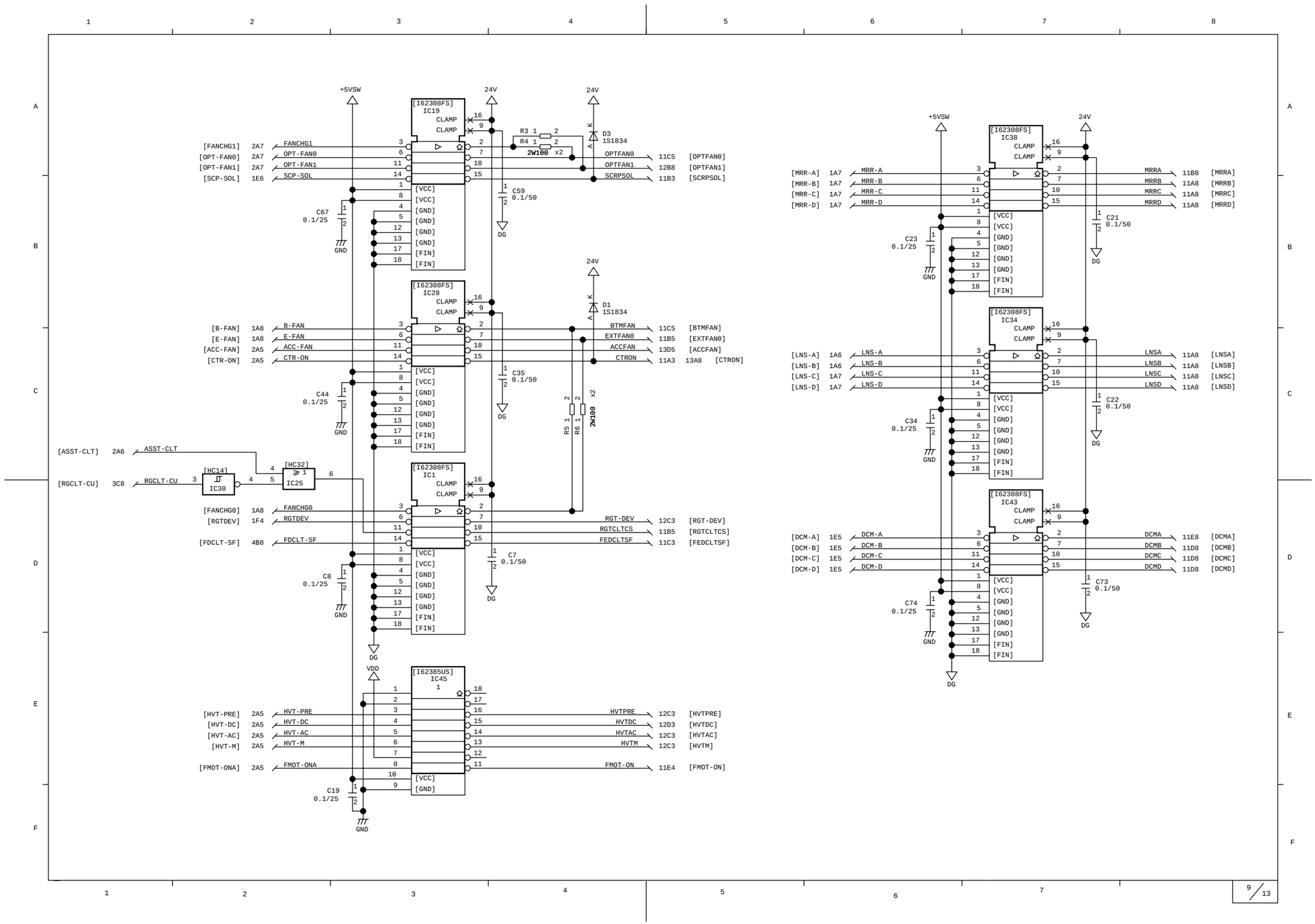

HINT

How to search for where a signal in a circuit diagram has jumped to.

Logic Circuit (PWA-LGC) 10/13

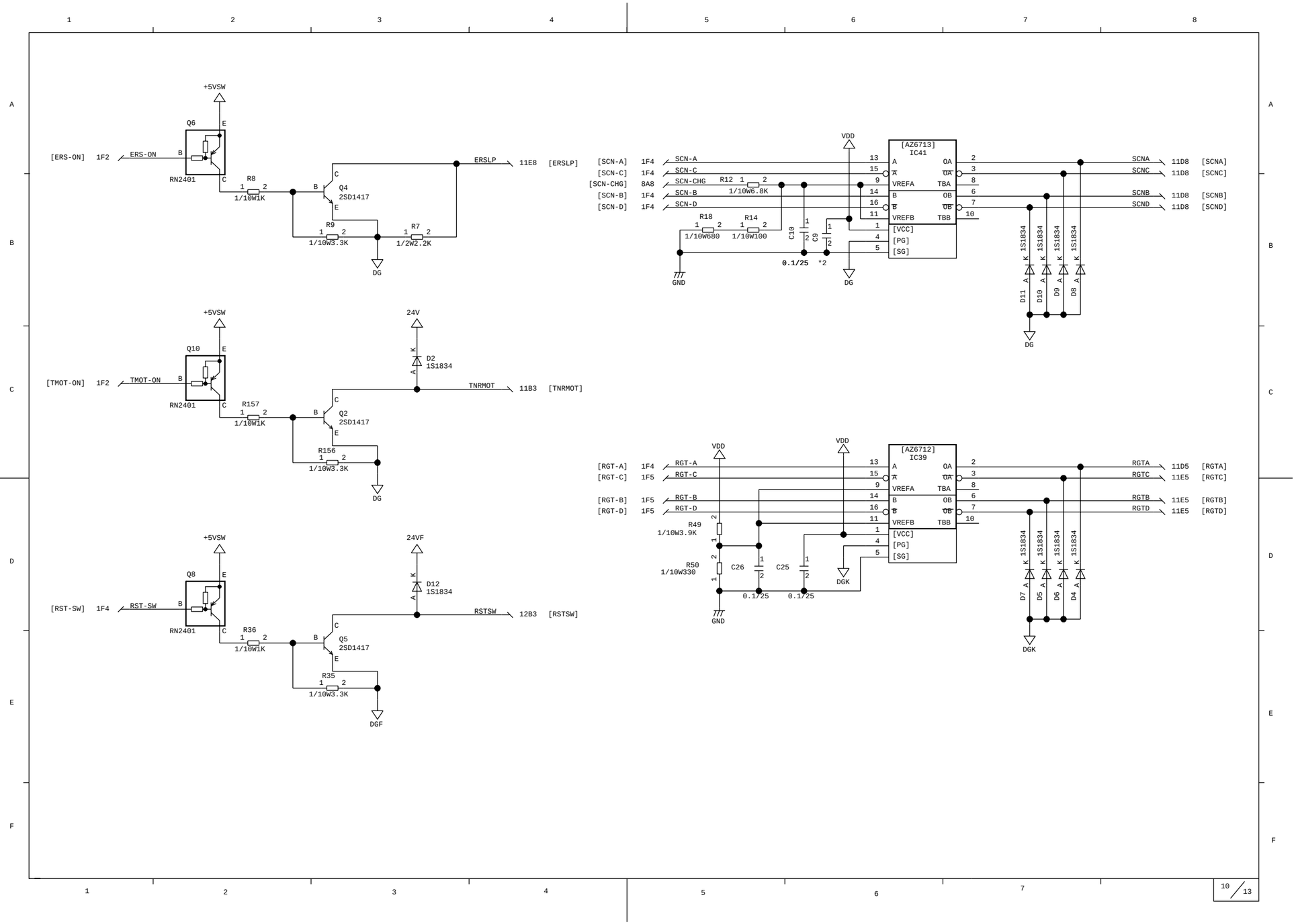

HINT
How to search for where a signal in a circuit diagram has jumped to.

Logic Circuit (PWA-LGC) 11/13

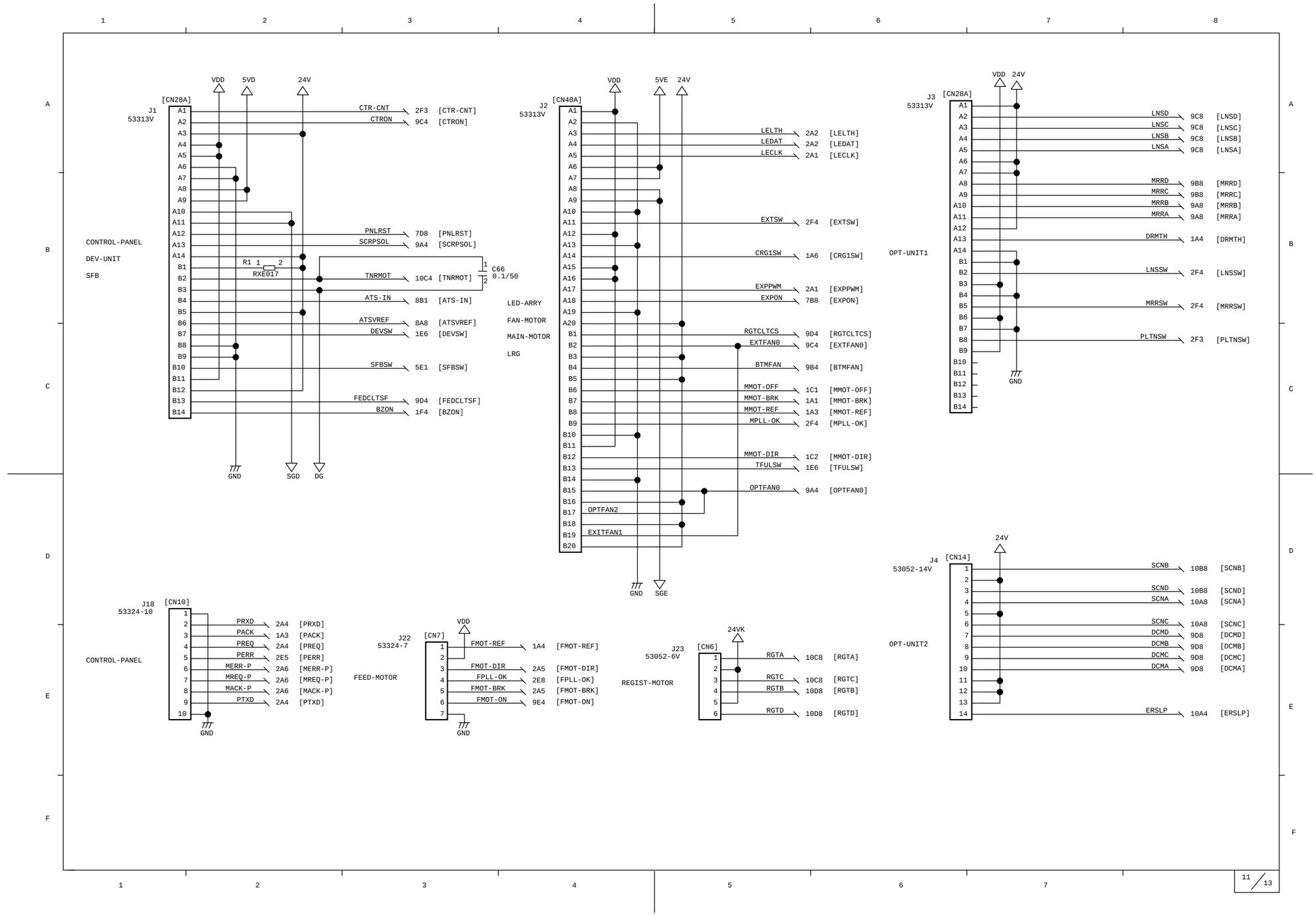

HINT

How to search for where a signal in a circuit diagram has jumped to.

Logic Circuit (PWA-LGC) 12/13

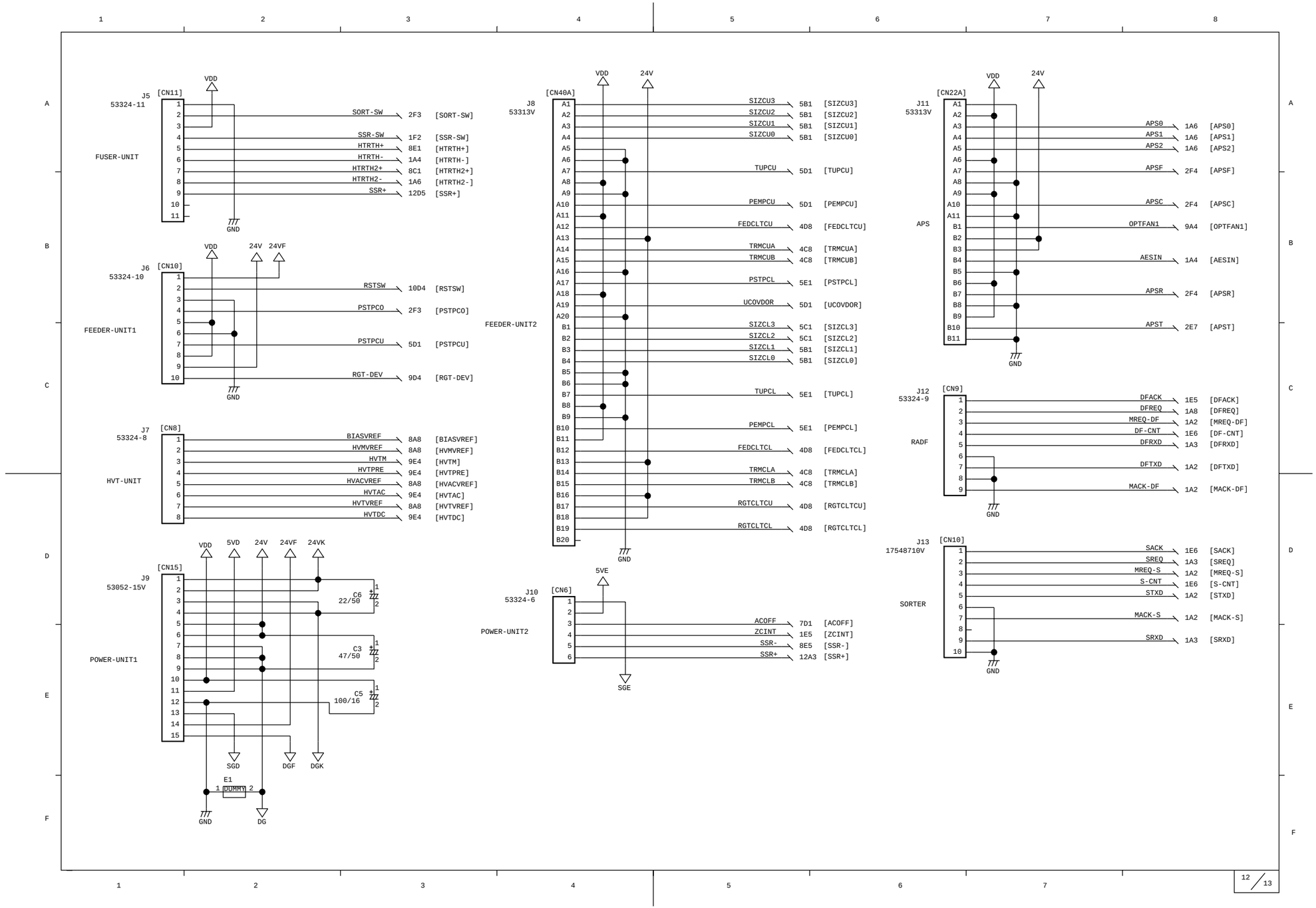

HINT

How to search for where a signal in a circuit diagram has jumped to.

Logic Circuit (PWA-LGC) 13/13

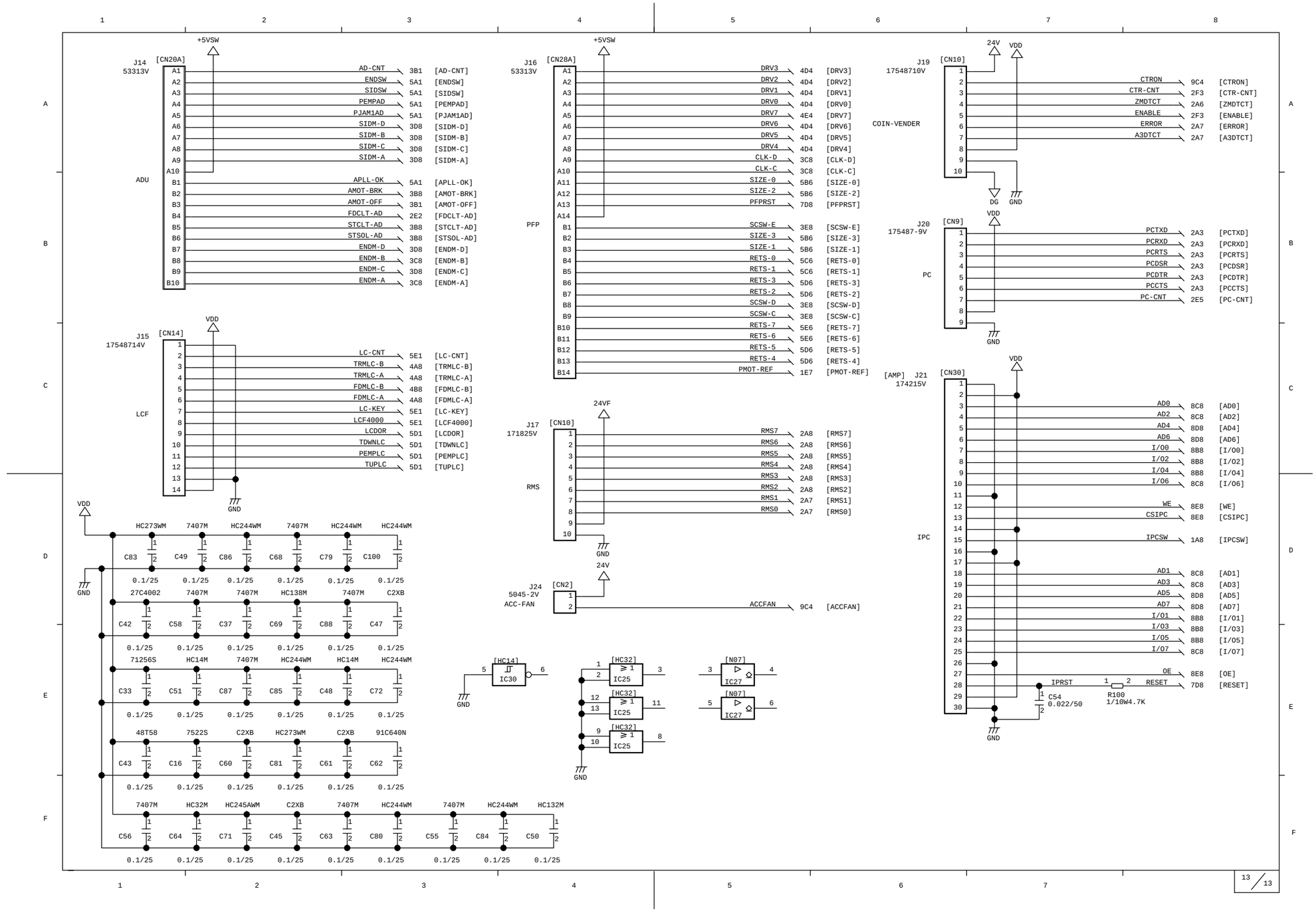

HINT

How to search for where a signal in a circuit diagram has jumped to.

13.2 Control Panel Circuit

13.2.1 Control panel circuit (PWA-PNL) 1/5

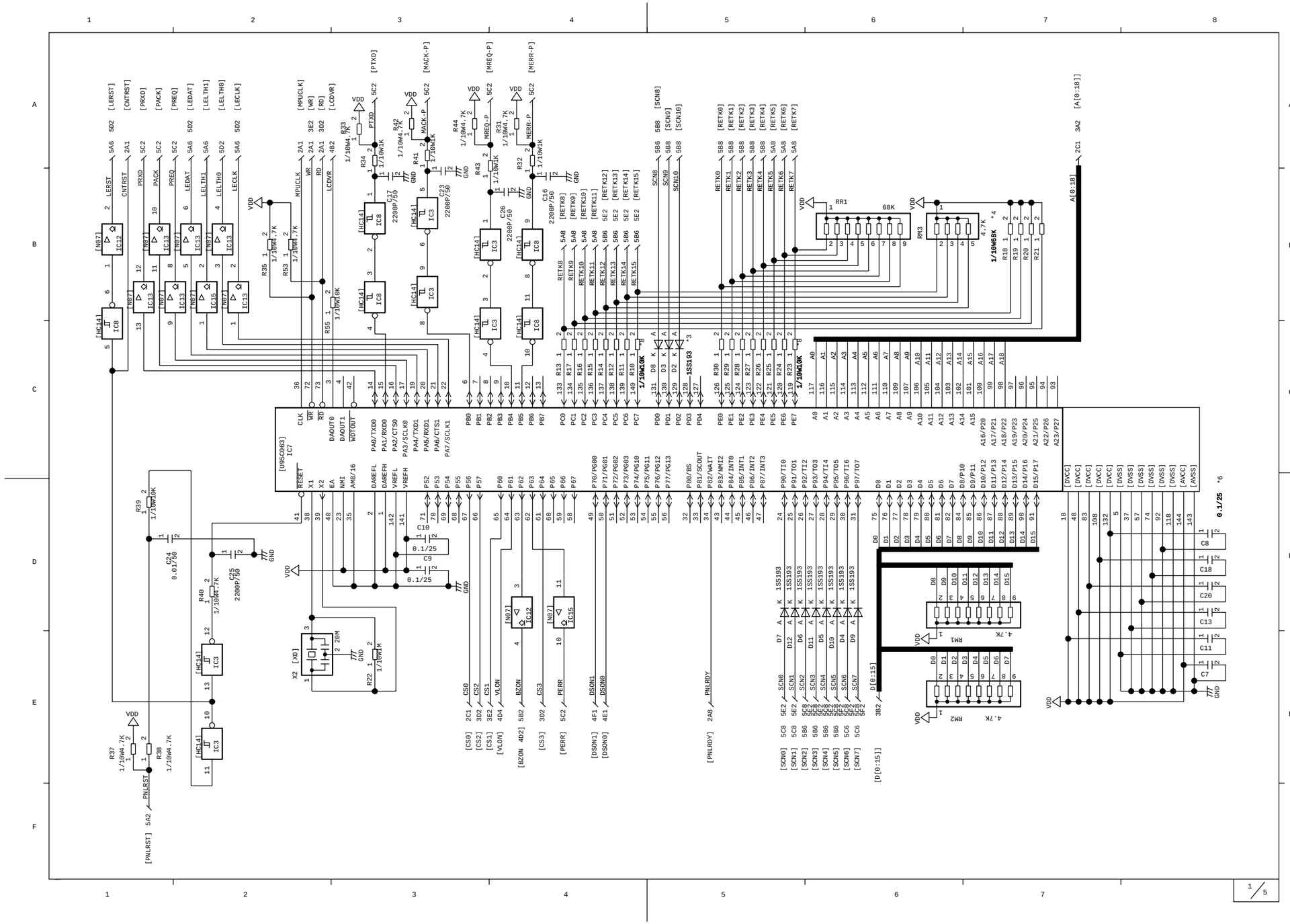

HINT

How to search for where a signal in a circuit diagram has jumped to.

Control panel circuit (PWA-PNL) 2/5

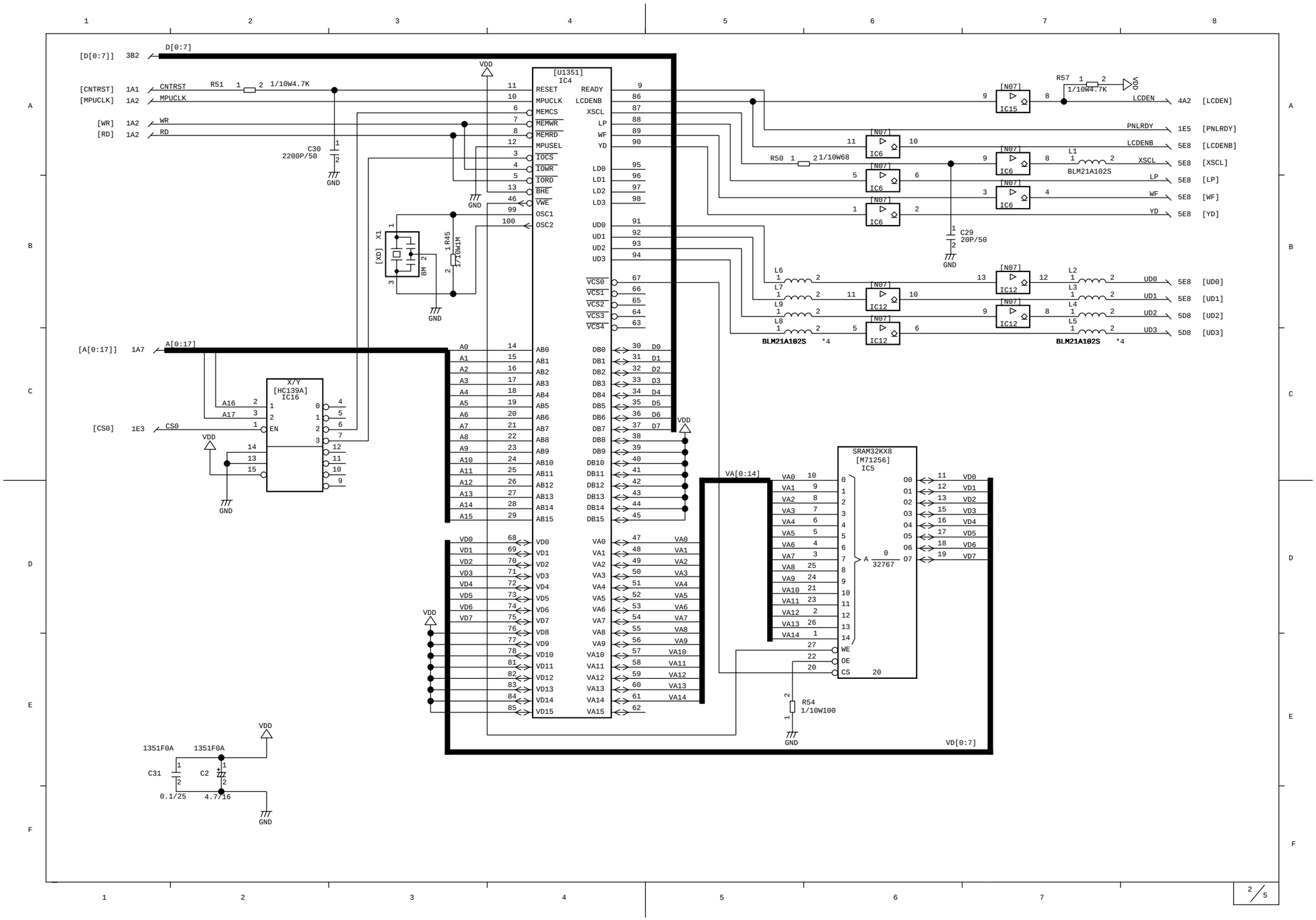

HINT

How to search for where a signal in a circuit diagram has jumped to.

Control panel circuit (PWA-PNL) 3/5

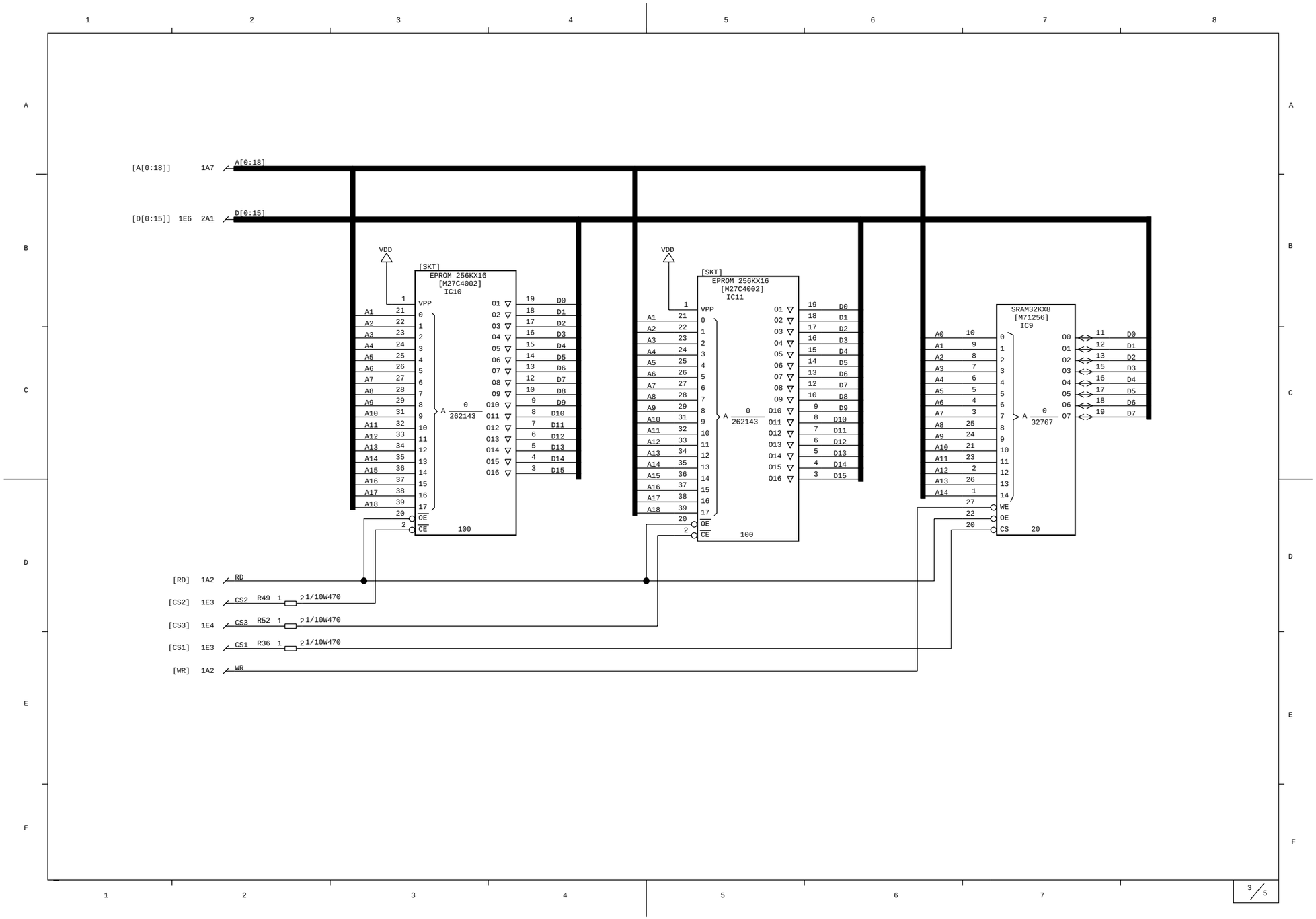

 Nov. 1997 © TOSHIBA

HINT

How to search for where a signal in a circuit diagram has jumped to.

Control panel circuit (PWA-PNL) 4/5

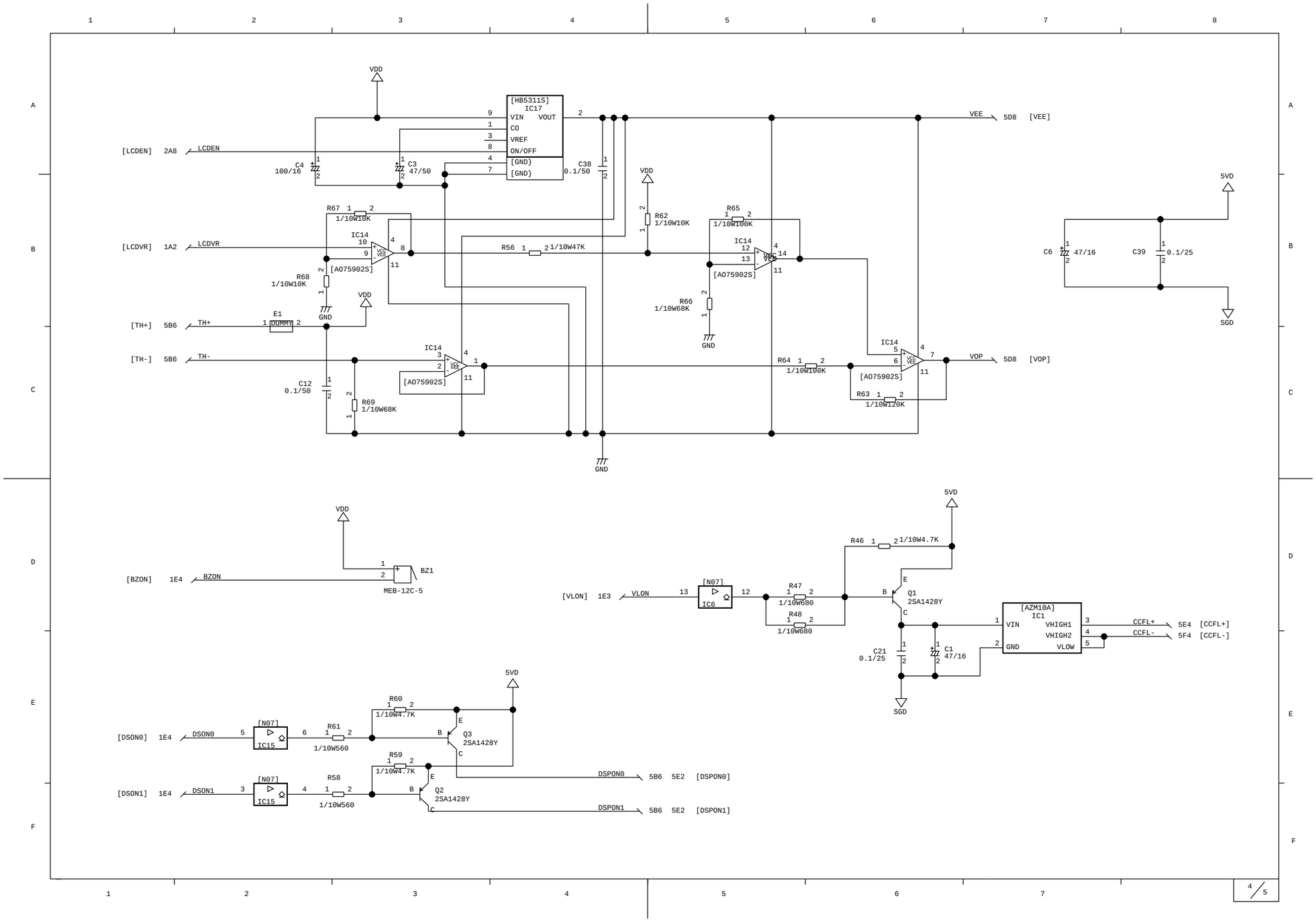

HINT

How to search for where a signal in a circuit diagram has jumped to.

Control panel circuit (PWA-PNL) 5/5

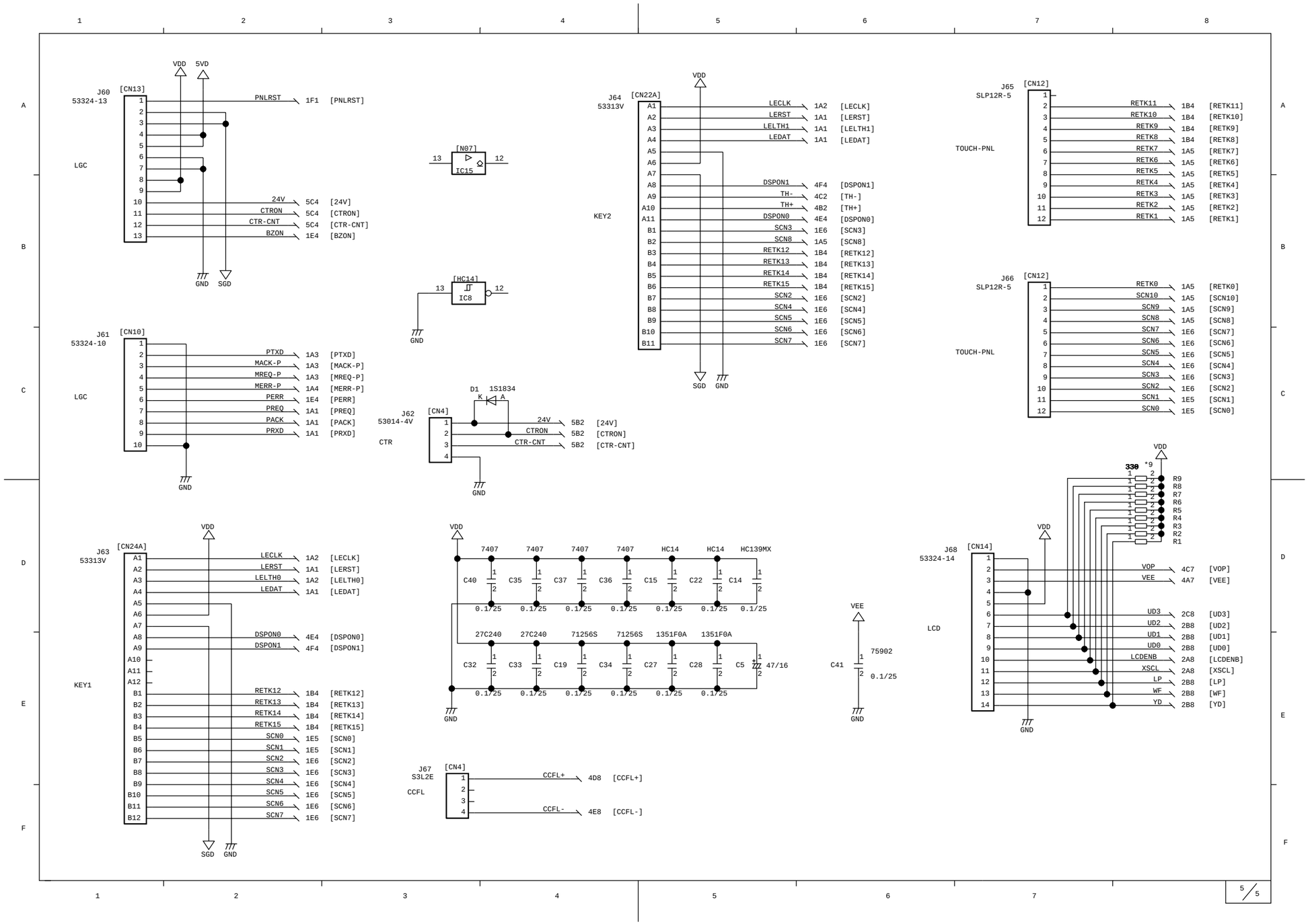

13.2.2 Control key circuit (PWA-KEY1) 1/3

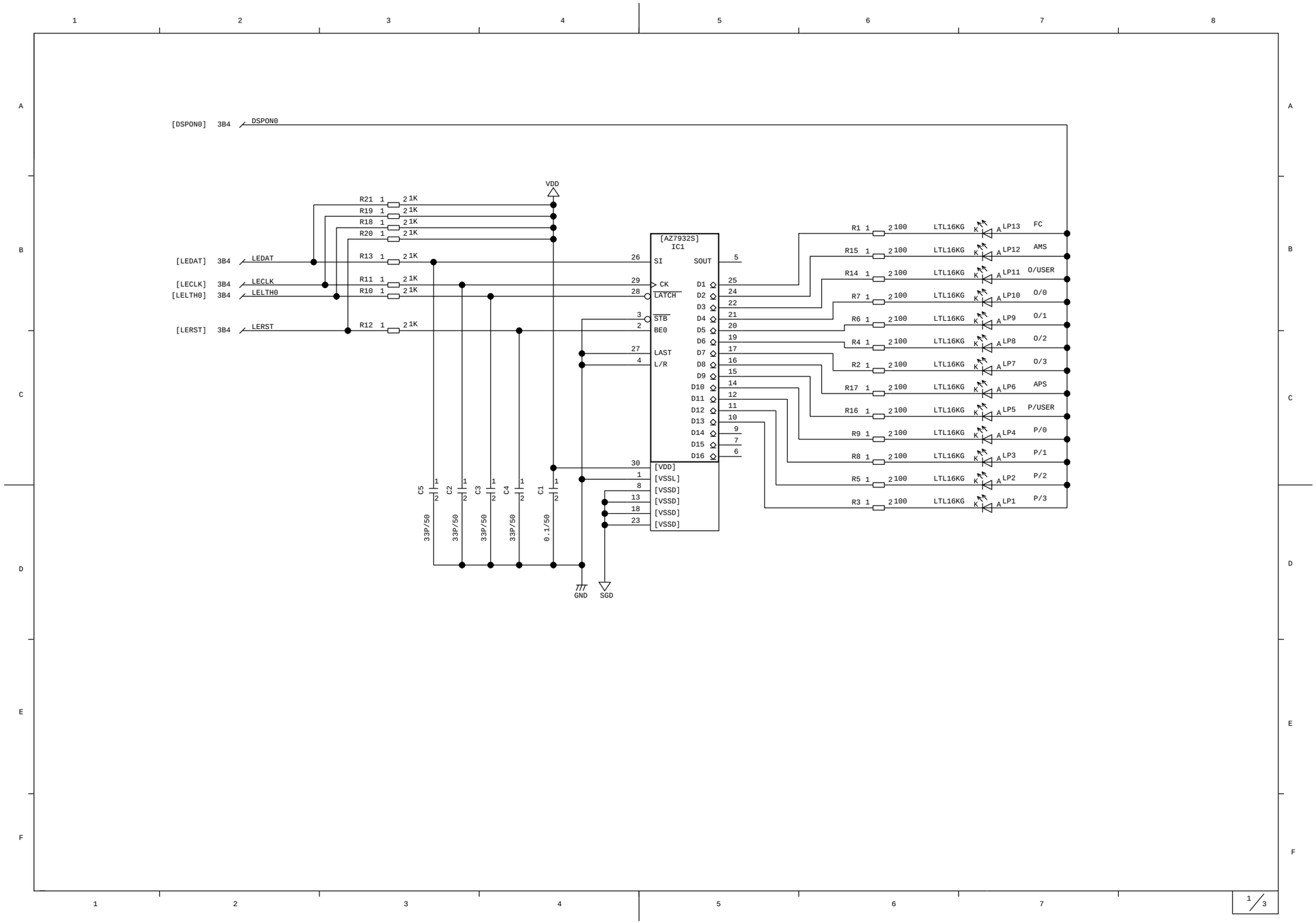

HINT

How to search for where a signal in a circuit diagram has jumped to.

Control key circuit (PWA-KEY1) 2/3

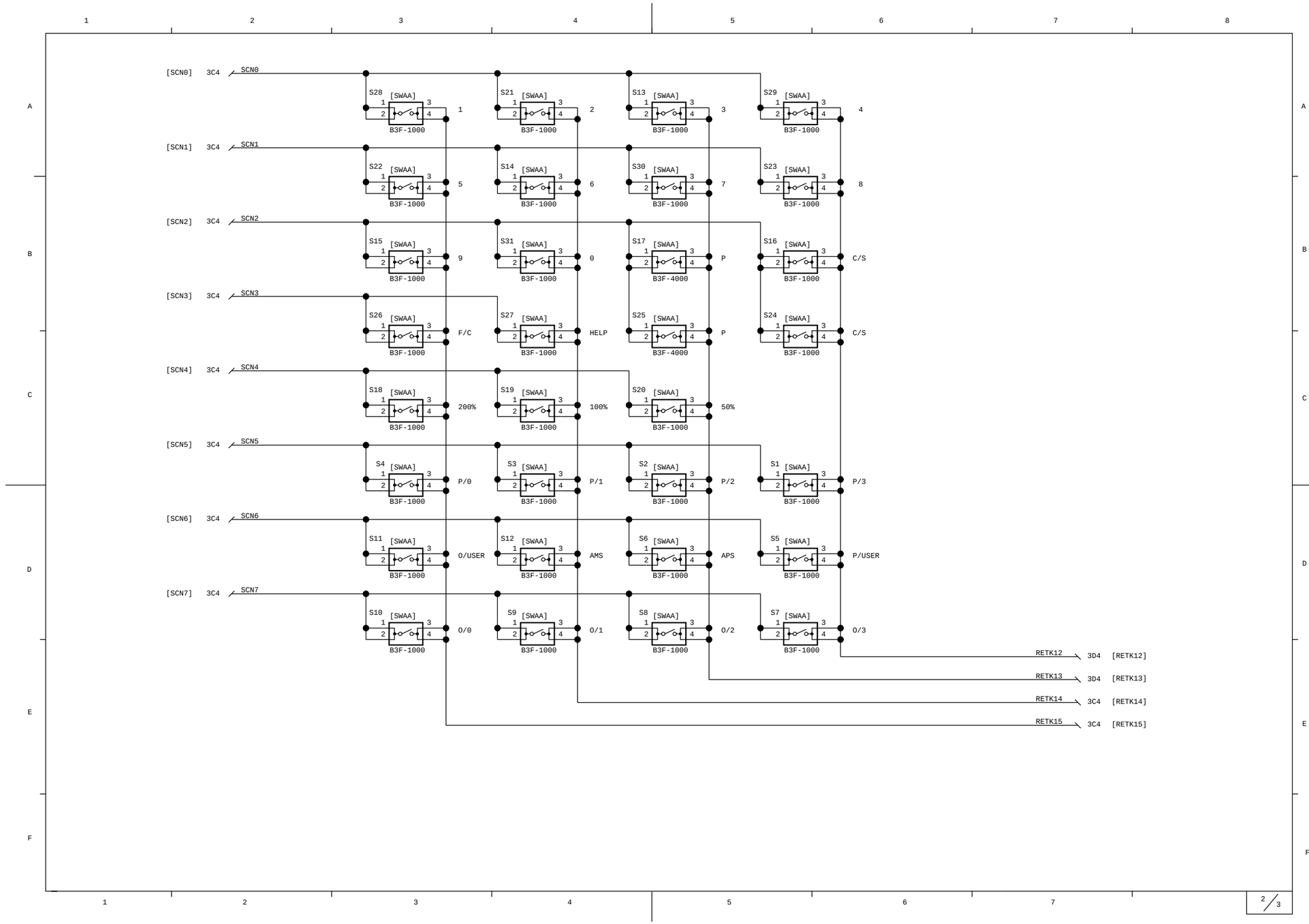

 Nov. 1997 © TOSHIBA

HINT

How to search for where a signal in a circuit diagram has jumped to.

Control key circuit (PWA-KEY1) 3/3

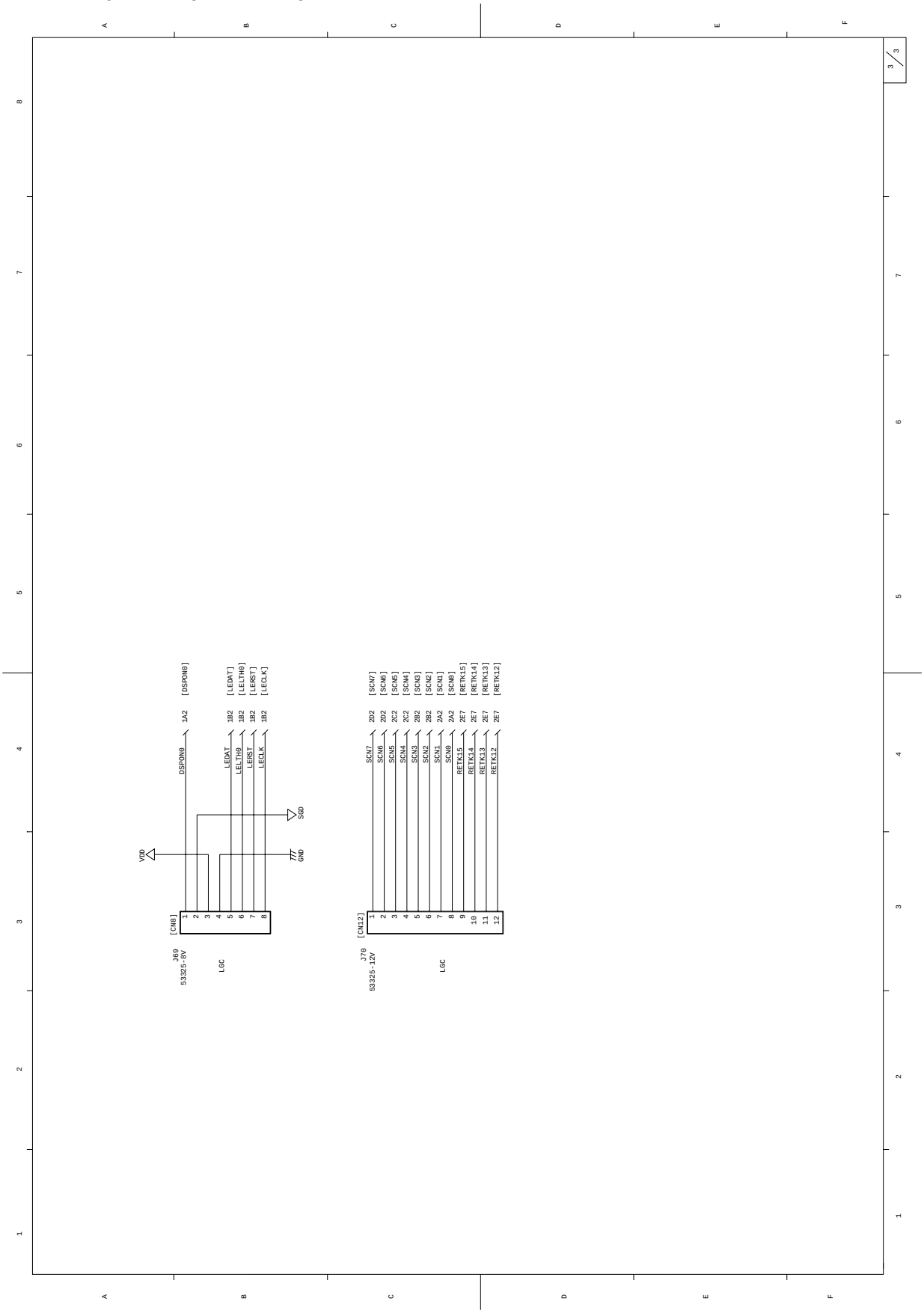

HINT

How to search for where a signal in a circuit diagram has jumped to.

13.2.3 Control key circuit (PWA-KEY2) 1/3

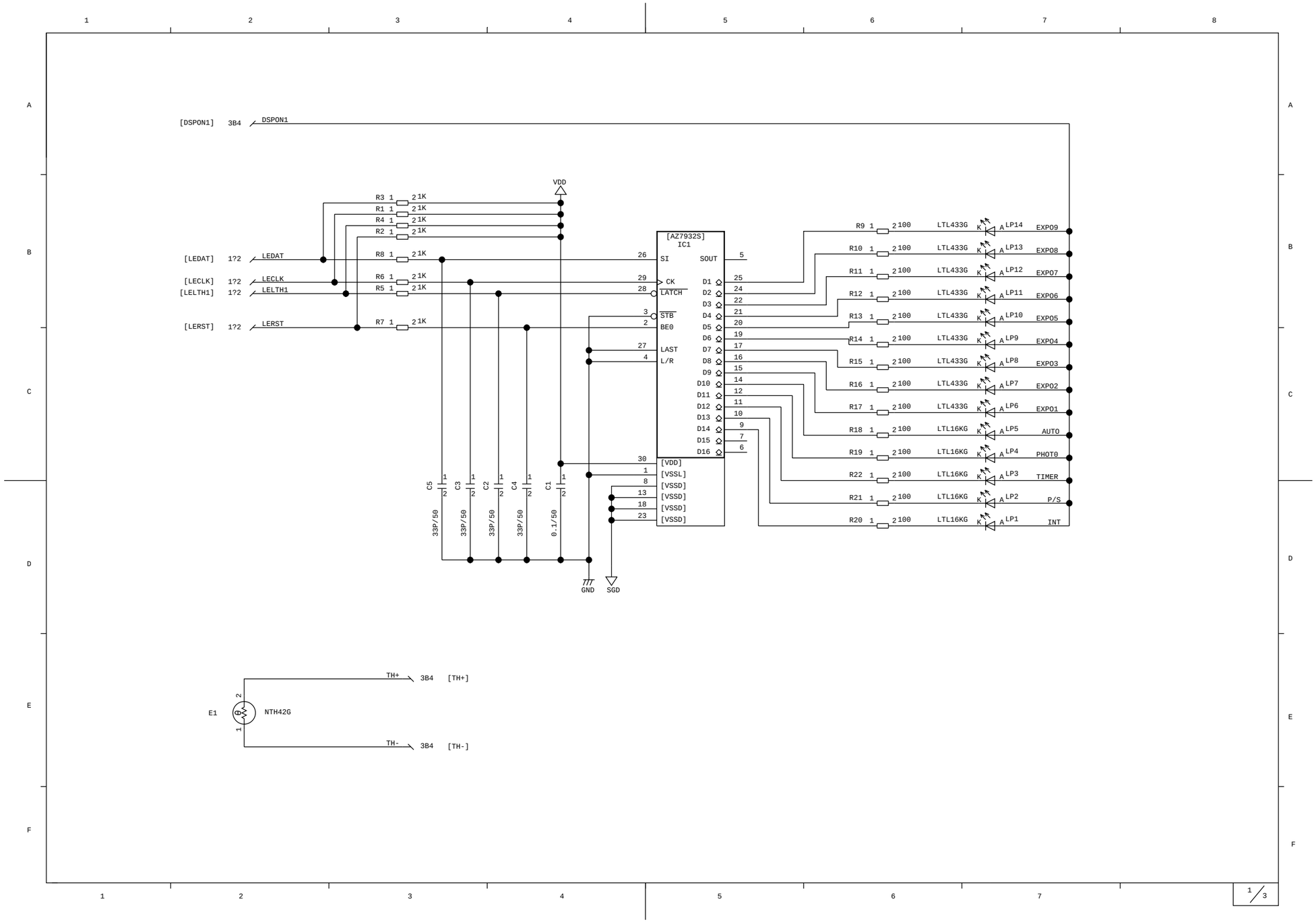

HINT
How to search for where a signal in a circuit diagram has jumped to.

Control key circuit (PWA-KEY2) 2/3

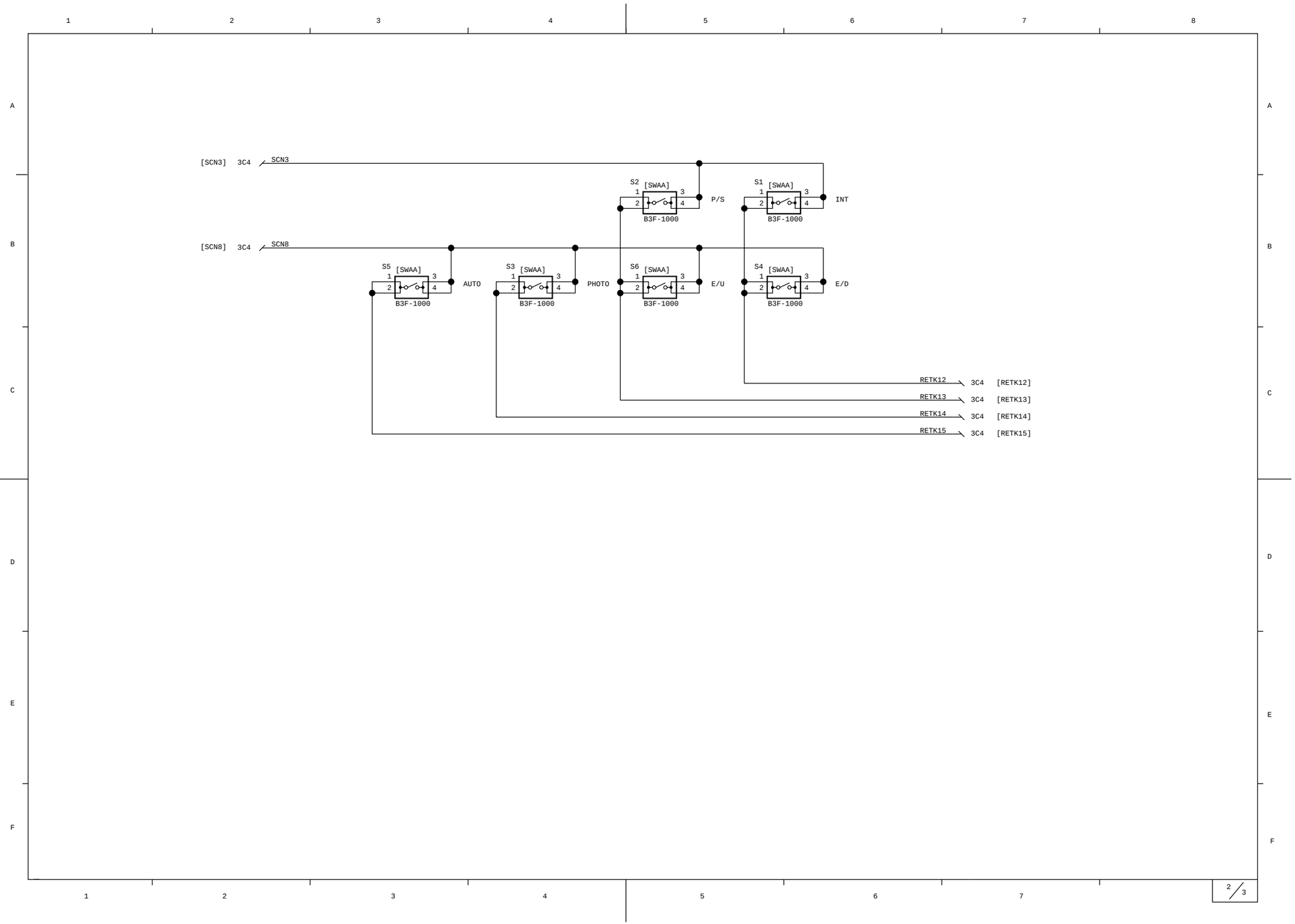

HINT

How to search for where a signal in a circuit diagram has jumped to.

Control key circuit (PWA-KEY2) 3/3

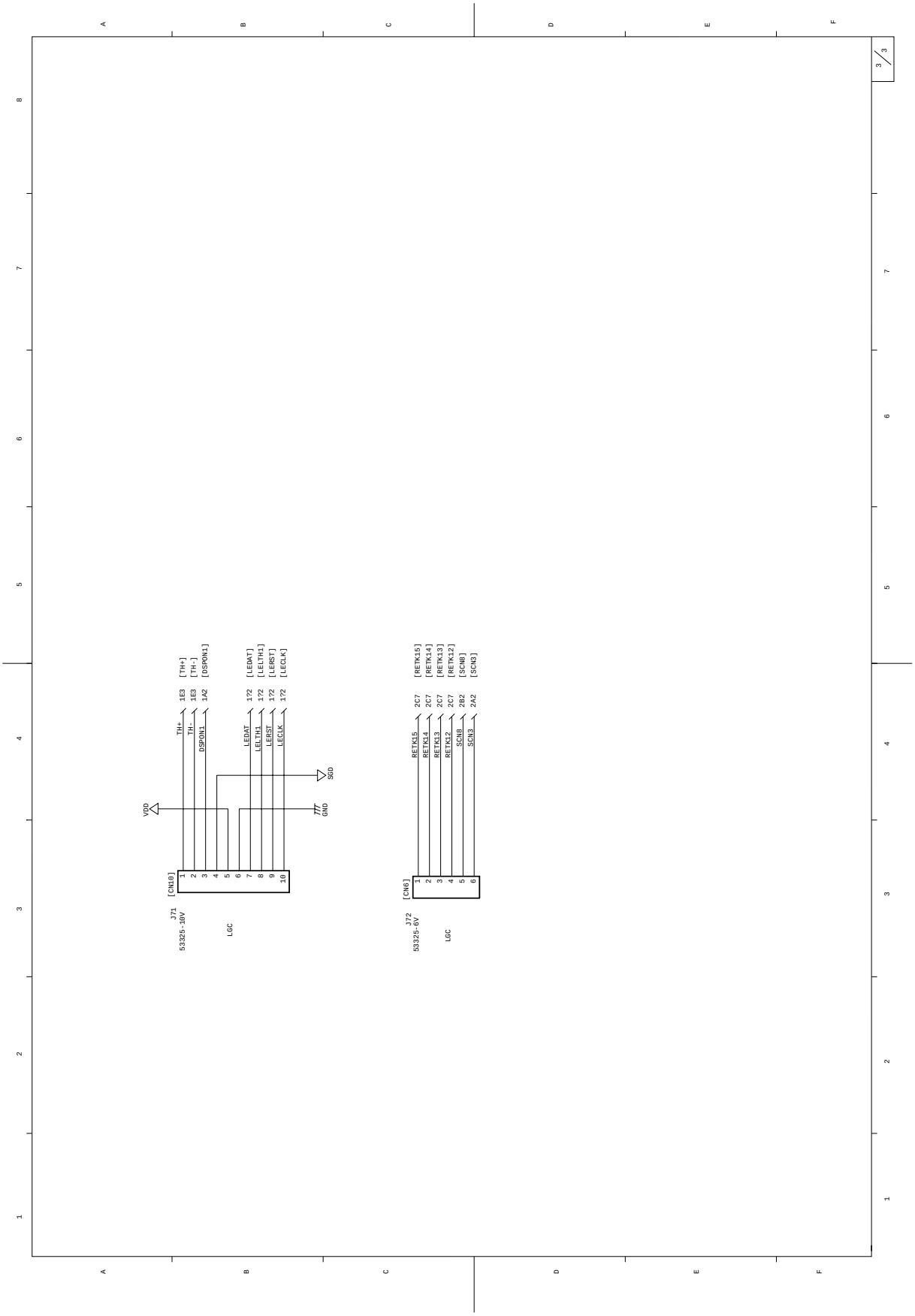

13.3 Power Supply Circuit (PS-ACC)

[A] 115 V

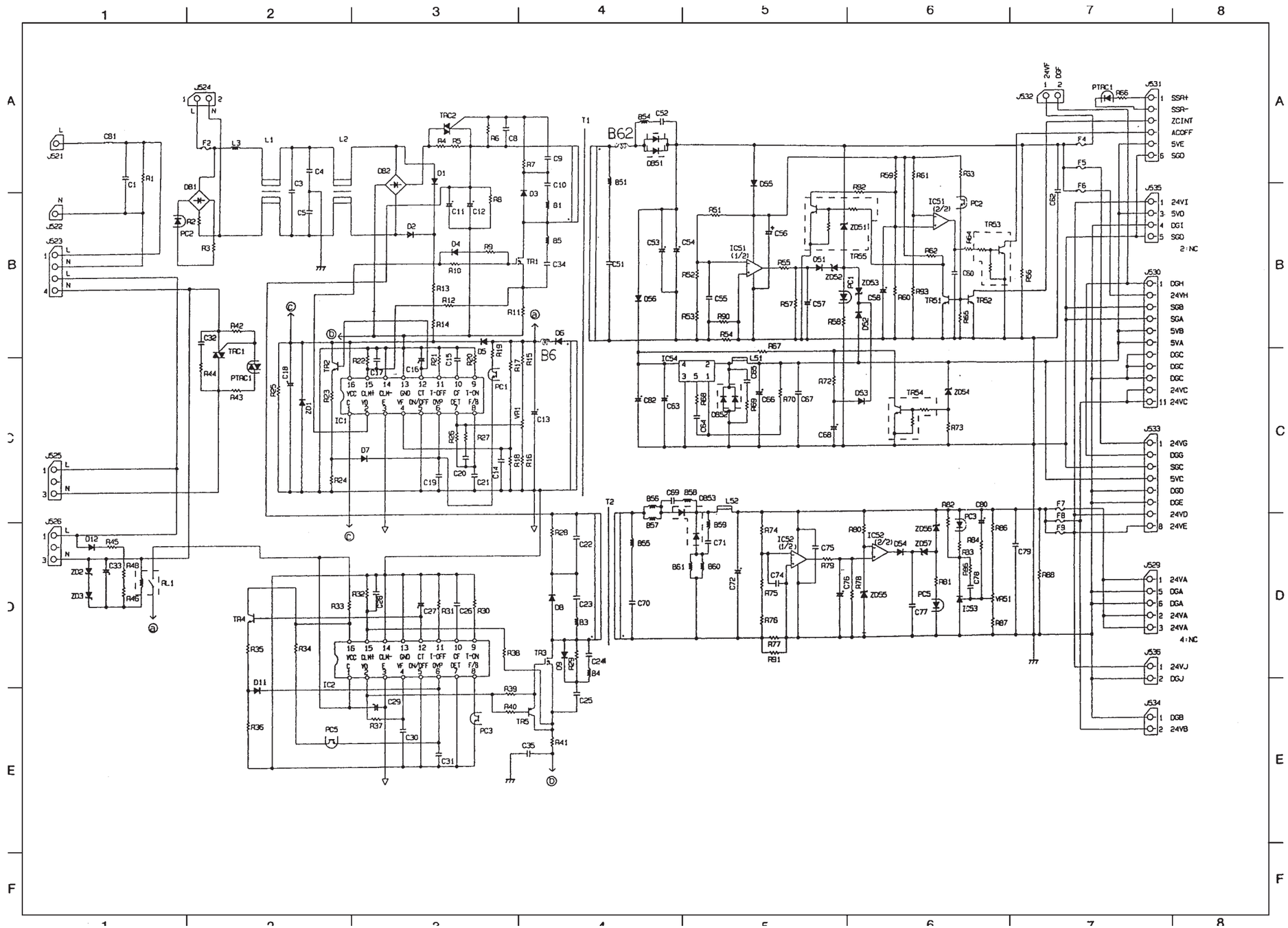

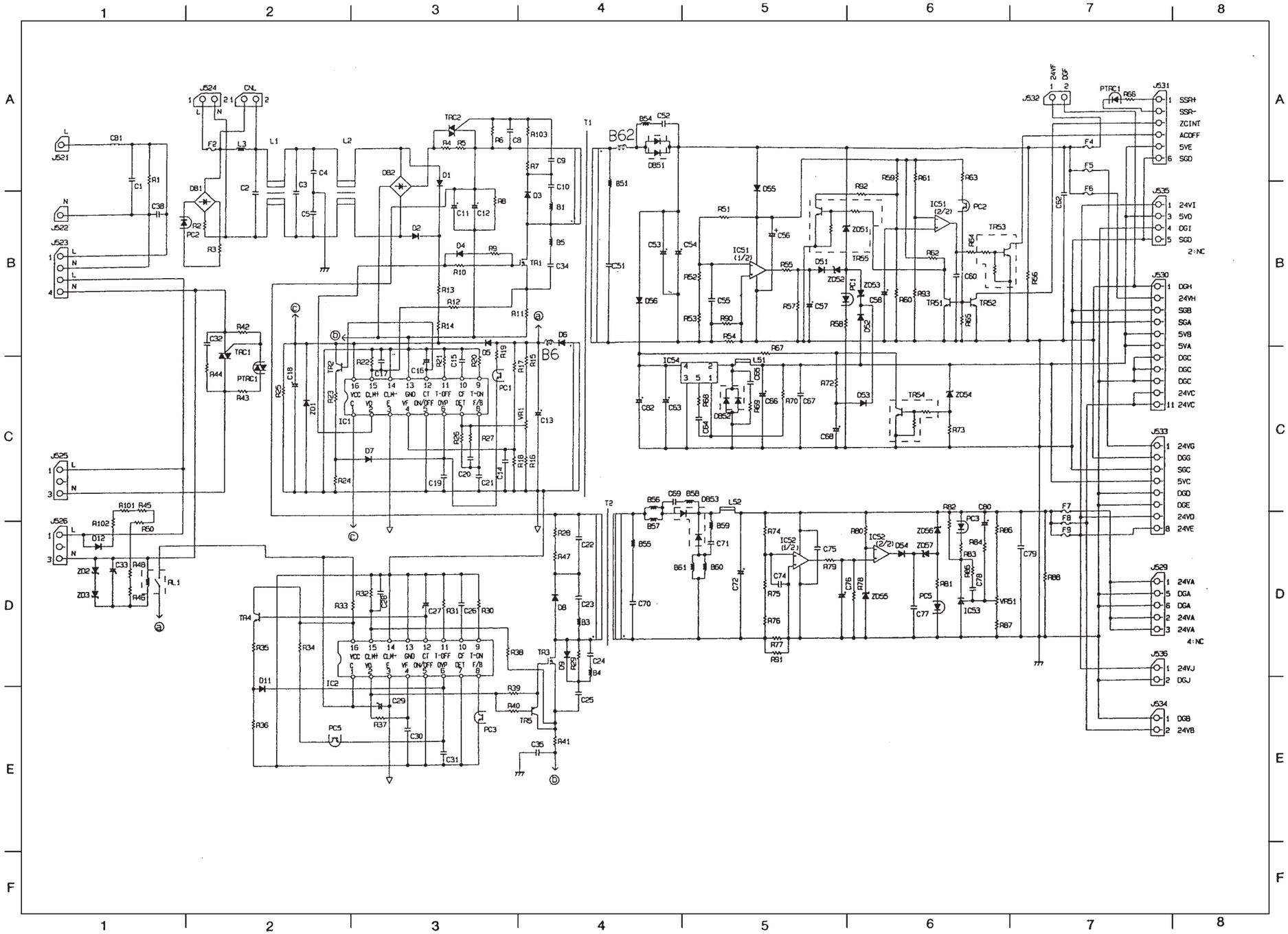
J521
J522
J523
J524
J525
J526
CNL
CB1
F2
L1
L2
L3
C1
C2
C3
C4
C5
C38
R1
R2
R3
PC2
DB1
DB2
D1
D2
D3
D4
TRC2
TR1
R4
R5
R6
R7
R8
R9
R10
R11
R12
R13
R14
R103
C8
C9
C10
C11
C12
C34
B1
B5
T1
B62
B54
C52
DB51
B51
C51
D55
R51
R52
R53
R54
R55
R56
R57
R58
R59
R60
R61
R62
R63
R64
R65
R66
R92
R93
C53
C54
C55
C56
C57
C58
C60
IC51 (1/2)
IC51 (2/2)
PC1
PC2
TR51
TR52
TR53
TR55
ZD51
ZD52
D51
D52
D56
R42
C32
TRC1
PTRC1
R44
R43
B6
TR2
IC1
C13
C14
C15
C16
C17
C18
C19
C20
C21
R15
R16
R17
R18
R19
R20
R21
R22
R23
R24
R25
R26
R27
VR1
D5
D6
D7
D8
D9
D11
D12
ZD1
ZD2
ZD3
R101
R102
R45
R50
R46
R48
C33
RL1
IC54
L51
C65
C66
C67
C68
C69
C70
C72
C82
R67
R68
R69
R70
R72
R73
D53
D54
TR54
ZD54
B52
B53
B55
B56
B57
B58
B59
B60
B61
C71
D853
L52
T2
IC52 (1/2)
IC52 (2/2)
C74
C75
C76
C77
C78
C79
C80
R74
R75
R76
R77
R78
R79
R80
R81
R82
R83
R84
R86
R87
R88
R91
ZD55
ZD56
ZD57
D54
PC3
PC5
IC53
VR51
F4
F5
F6
F7
F8
F9
J531
J532
J535
J530
J533
J529
J536
J534
SSRH
SSR-
ZCINT
ACOFF
5VE
SGD
24VI
5VD
DGI
SGD
2:NC
DGH
24VH
SGB
SGA
5VB
5VA
DGC
DGC
DGC
24VC
24VC
24VG
DGG
SGC
5VC
DGD
DGE
24VD
24VE
24VA
DGA
DGA
24VA
24VA
4:NC
24VJ
DGJ
DGB
24VB
IC1
IC2
TR3
TR4
TR5
C22
C23
C24
C25
C26
C27
C28
C29
C30
C31
C35
C36
R28
R30
R31
R32
R33
R34
R35
R36
R37
R38
R39
R40
R41
R47
B3
B4
TR1
TR2
TR3
TR4
TR5
VR1
IC1
IC2
16 VCC C
15 CLHH VO
14 CLH- E
13 GND VF
12 CT T-OFF ON/OFF
11 OVP
10 DET
9 T-ON F/B
1
2
3
4
5
6
7
8

14. POWER STABILIZING CIRCUIT

14.1 Power Circuit

This power circuit has the following 3 DC outputs.

DC output	Rating	Main load
5V	5.1V±5%	LED eraser array, LCD, LED, logic IC power supplies
24VA – E, I, J	24V±10%	Motors, clutches, high-voltage transformer, scanning motor
24VF – H	24V±10%	RADF, optional sorter, main switch

14.2 Description of Operation

When the main switch on the copier is turned ON, AC power is supplied to the switching power supply, and then the 5V power supply for the logic ICs, and the 24VF – H DC power supply for the RADF and sorter are turned ON. At this time, if the door switch is ON (closed), the 24VA – E, I, J DC voltages are turned ON.

Each of these power circuit is provided with overcurrent protection fuses (excluding 5V) and an overcurrent protection unit is provided in the circuit to protect the copier's power circuit in case of an overload or a power output short.

When these functions are in operation, remove the cause of the overload or short. When a fuse has blown, replace the fuse. Or, when overcurrent protection in the circuit is in operation, turn the main switch OFF then ON again to enable circuit operation.

The power circuit is also provided with an overvoltage protection function. This function prevents the power supply from turning ON to protect electrical components if two different voltages short. If this happens, remove the cause of the short, and turn the main switch OFF then ON again to enable circuit operation.

14.3 DC Voltage Applications and Related Fuse Numbers

Voltage	Load	Fuse Numbers
+5.1V	For LSIs, logic ICs, LED eraser array, LCD, and display LEDs.	—
ACOFF ZCINT	For detection of abnormalities in the power supply, and exposure lamp control.	—
+24VA	Main motor (M1)	F7
+24VB +24VC	Scanning motor (M2), lens motor (M3), mirror motor (M4), tray-up motor (M13), exit fan (M7), OPT fan (M6, 12, 15), Bottom fan (M8), toner motor (M9), document motor (M11), aligning clutch (CLT2), transport clutch (CLT1), feed clutch (CLT3 – 5), total counter	F8
+24VD, E	PFP (pedestal)	F9
+24VI	ADU	
+24VJ	LCF	
+24VF	RADF	F4
+24VG	Sorter	F5
+24VH	Reset switch (main switch) drive, remote monitoring	F6

[A] DC voltage check

DC output voltages can be checked on following connector pin.

Voltage	Connector	Pin
24VA	J529	1
24VB	J534	2
24VC	J530	11
24VD	J533	7
24VE	J533	8
24VI	J535	1
24VJ	J536	1
24VF	J532	1
24VG	J533	1
24VH	J530	2
5V	J531	5

14.4 AC Voltage

① Heater lamp voltage

② Lamp regulator voltage

③ Damp heater voltage

14.5 Output Sequence

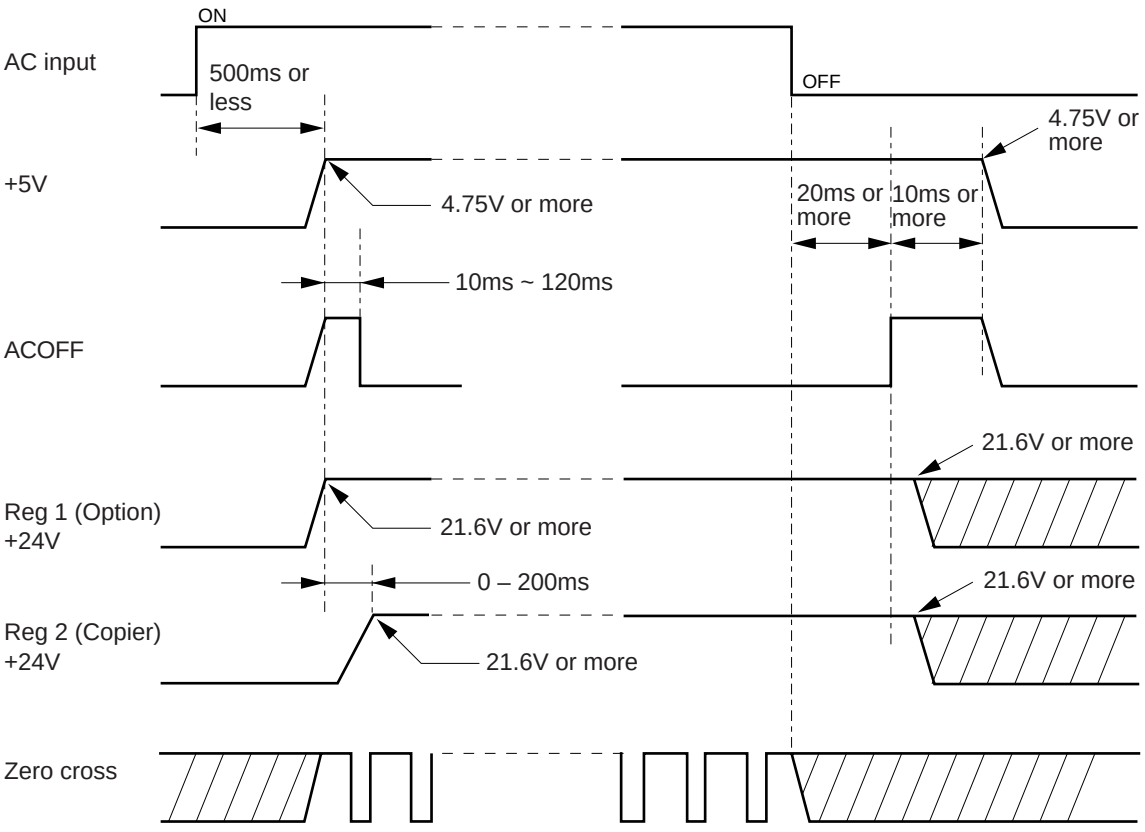

15. PC BOARD ASSEMBLY

15.1 PWA-LGC

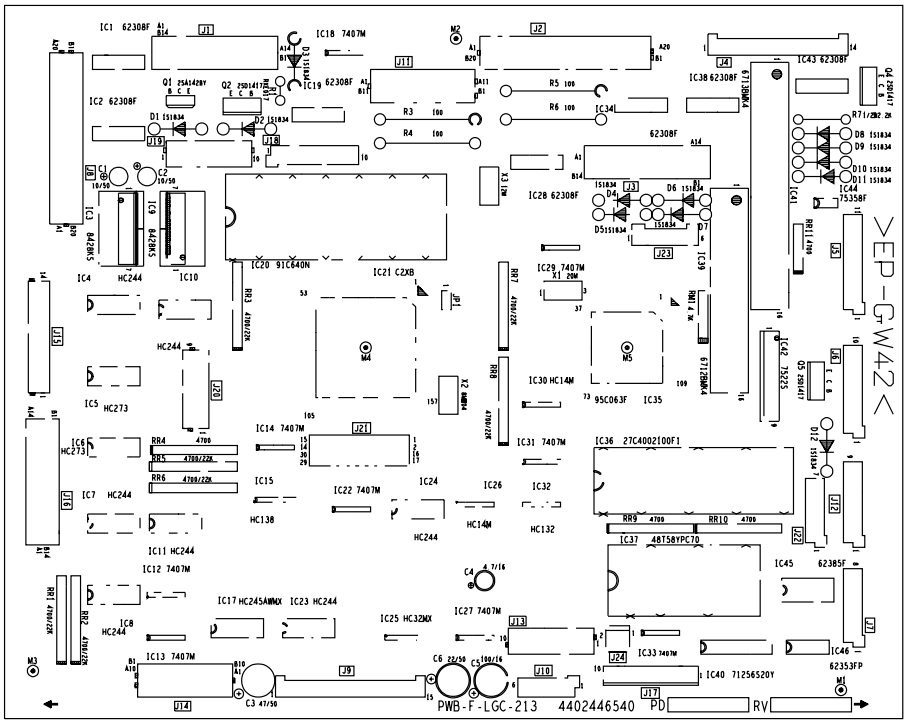

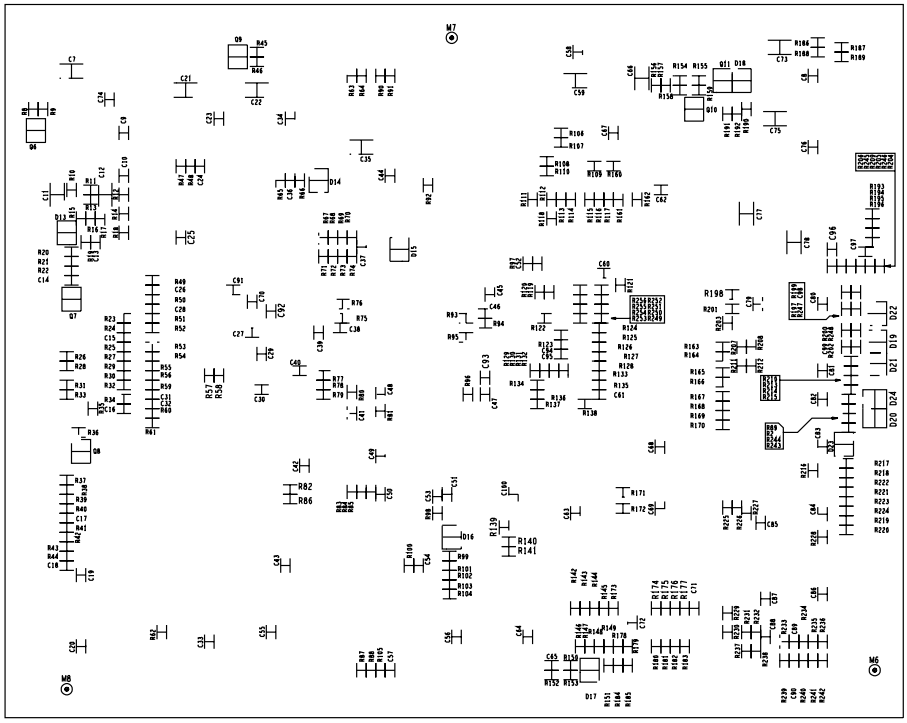

15.2 PWA-PNL

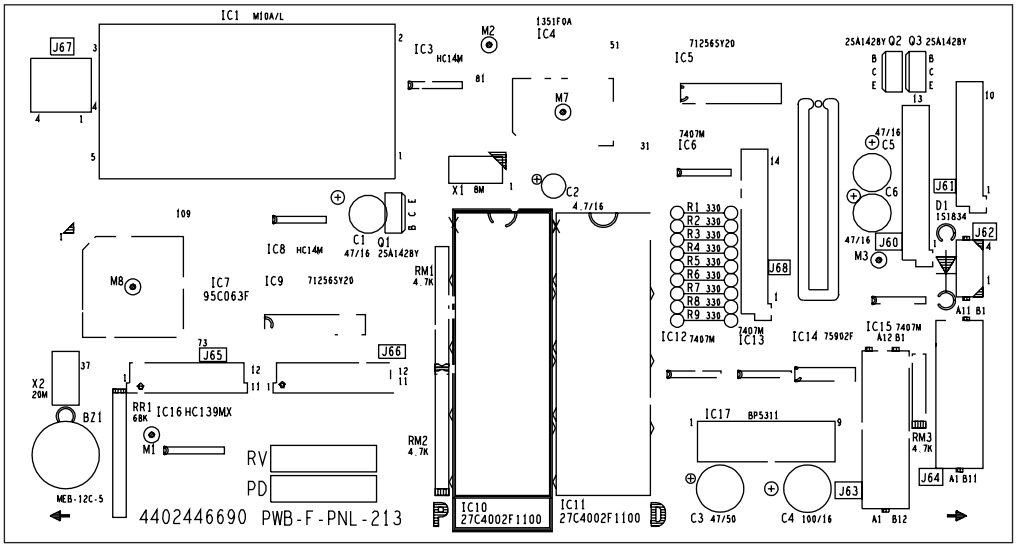
IC1 M10A/L
J67
IC3 HC14M
M2
1351F0A
IC4
IC5 712565Y20
25A1428Y Q2 Q3 25A1428Y
M7
7407M
IC6
C5
C6
J61
D1
1S1834
J62
J60
M3
X1 8M
C2
4.7/16
R1 330
R2 330
R3 330
R4 330
R5 330
R6 330
R7 330
R8 330
R9 330
J68
IC12 7407M
7407M
IC13
IC14 75902F
IC15 7407M
A12 B1
A11 B1
IC8 HC14M
C1
47/16
Q1
25A1428Y
RM1
4.7K
M8
IC7
95C063F
IC9 712565Y20
J65
J66
X2
20M
BZ1
RR1
68K
IC16 HC139MX
M1
RV
PD
MEB-12C-5
RM2
4.7K
IC17 BP5311
RM3
4.7K
J64
A1 B11
J63
C3 47/50
C4 100/16
A1 B12
4402446690 PWB-F-PNL-213
IC10
27C4002F1100
IC11
27C4002F1100

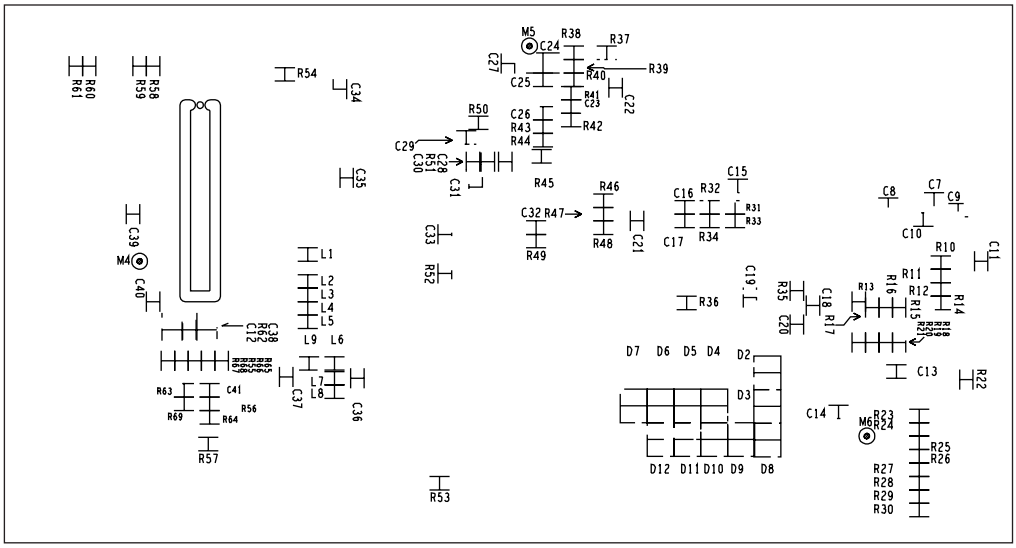
M5
C24
R38
R37
R39
C27
C25
R40
R41
C23
C22
R42
R50
C26
R43
R44
C29
C28
R51
C30
C31
R45
R46
C32
R47
R48
C21
R49
C15
C16
R32
R31
R33
C17
R34
C8
C7
C9
C10
R10
C11
R11
R12
R13
R14
R15
R16
R17
R18
R19
R20
R21
R22
C19
R35
C18
R36
C20
C13
D7 D6 D5 D4
D2
D3
C14
M6
R23
R24
R25
R26
R27
R28
R29
R30
D12 D11 D10 D9 D8
R53
R54
C34
C35
C33
R52
R60
R61
R58
R59
C39
M4
C40
L1
L2
L3
L4
L5
L9 L6
C38
R62
C12
R65
R66
R67
R63
C41
R56
R69
R64
R57
C37
L7
L8
C36

15.3 PWA-KEY

KEY1

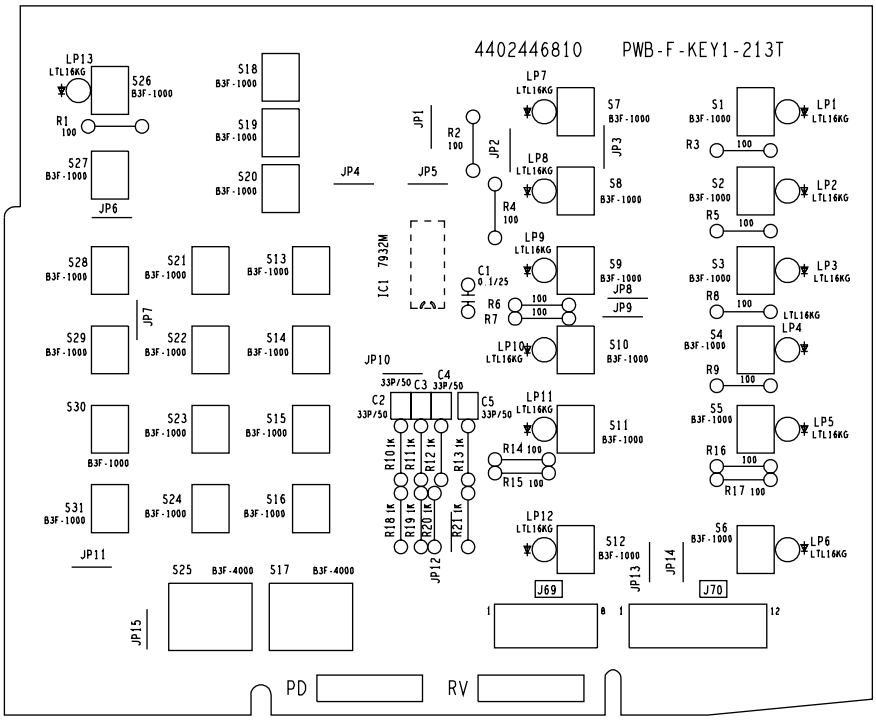

KEY2

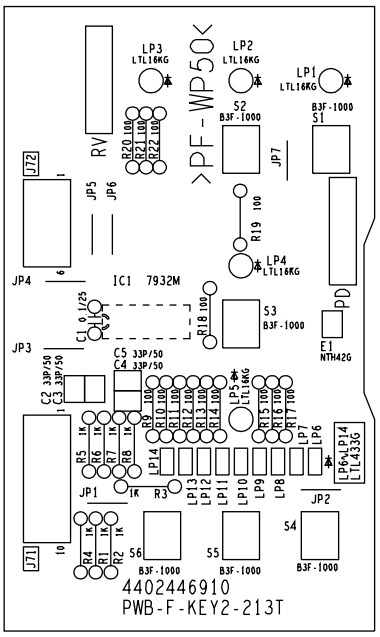

15.4 PWA-ERS

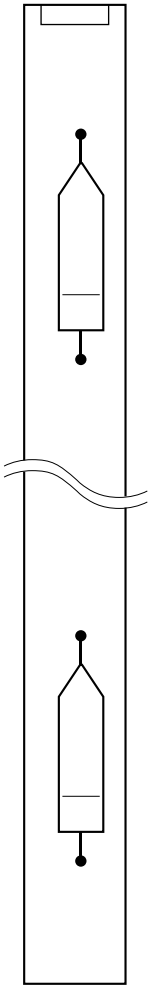

15.5 PS-ACC

[A-1] 115V

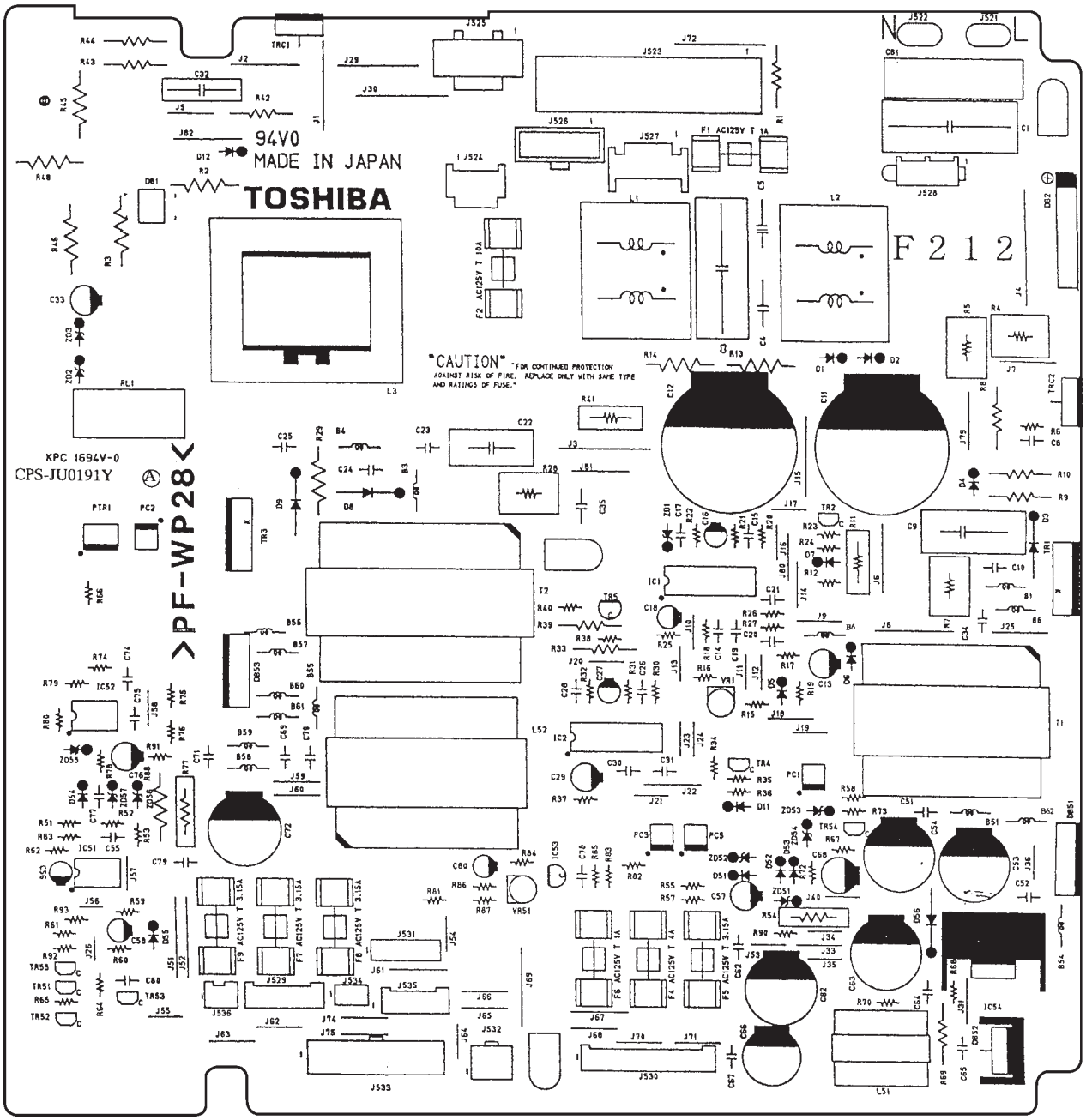

[A-2] 230V

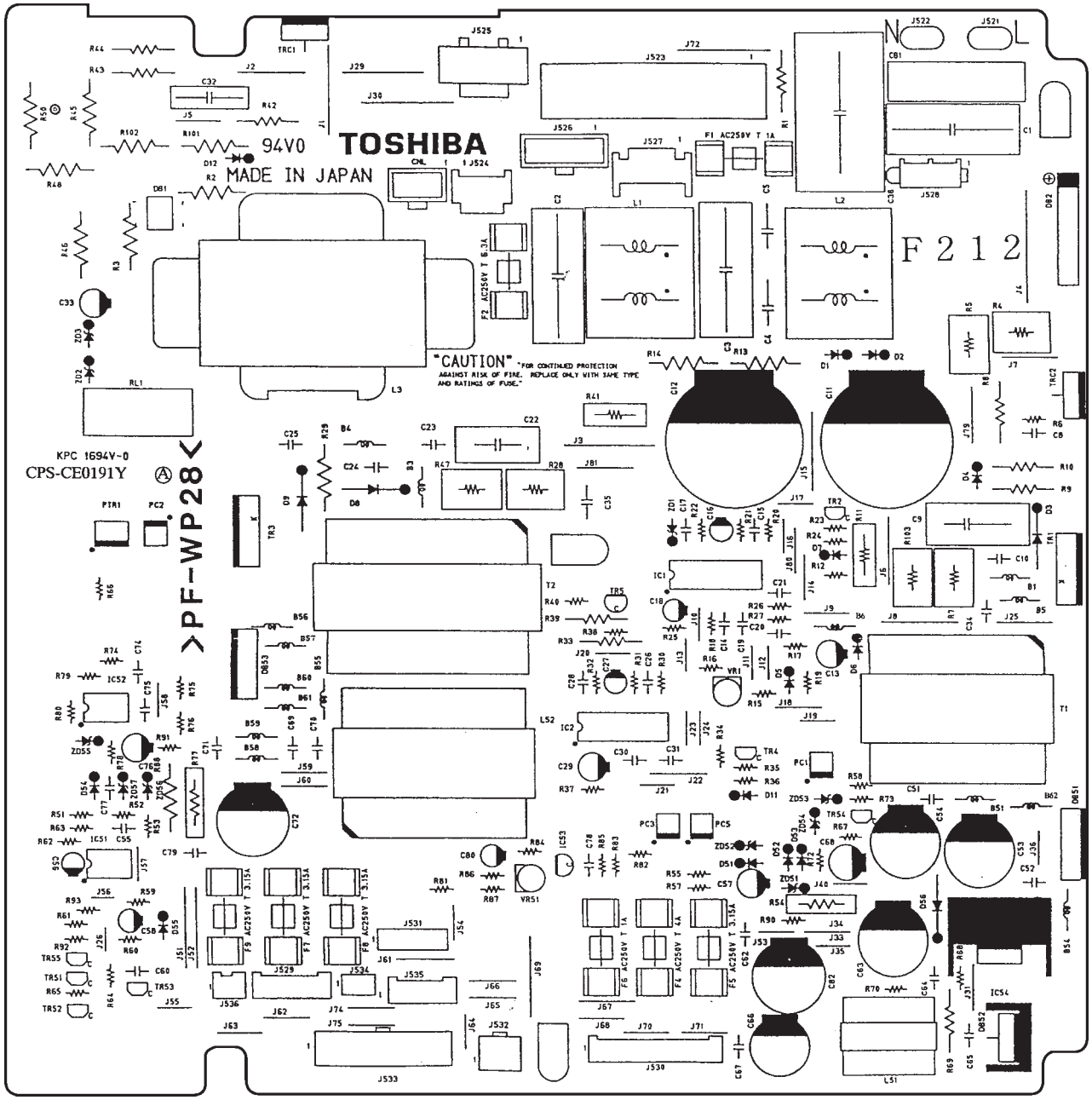
TOSHIBA
94V0
MADE IN JAPAN
F 2 1 2
"CAUTION"
KPC 1694V-0
CPS-CE0191Y
PF-WP28

15.6 PS-HVT

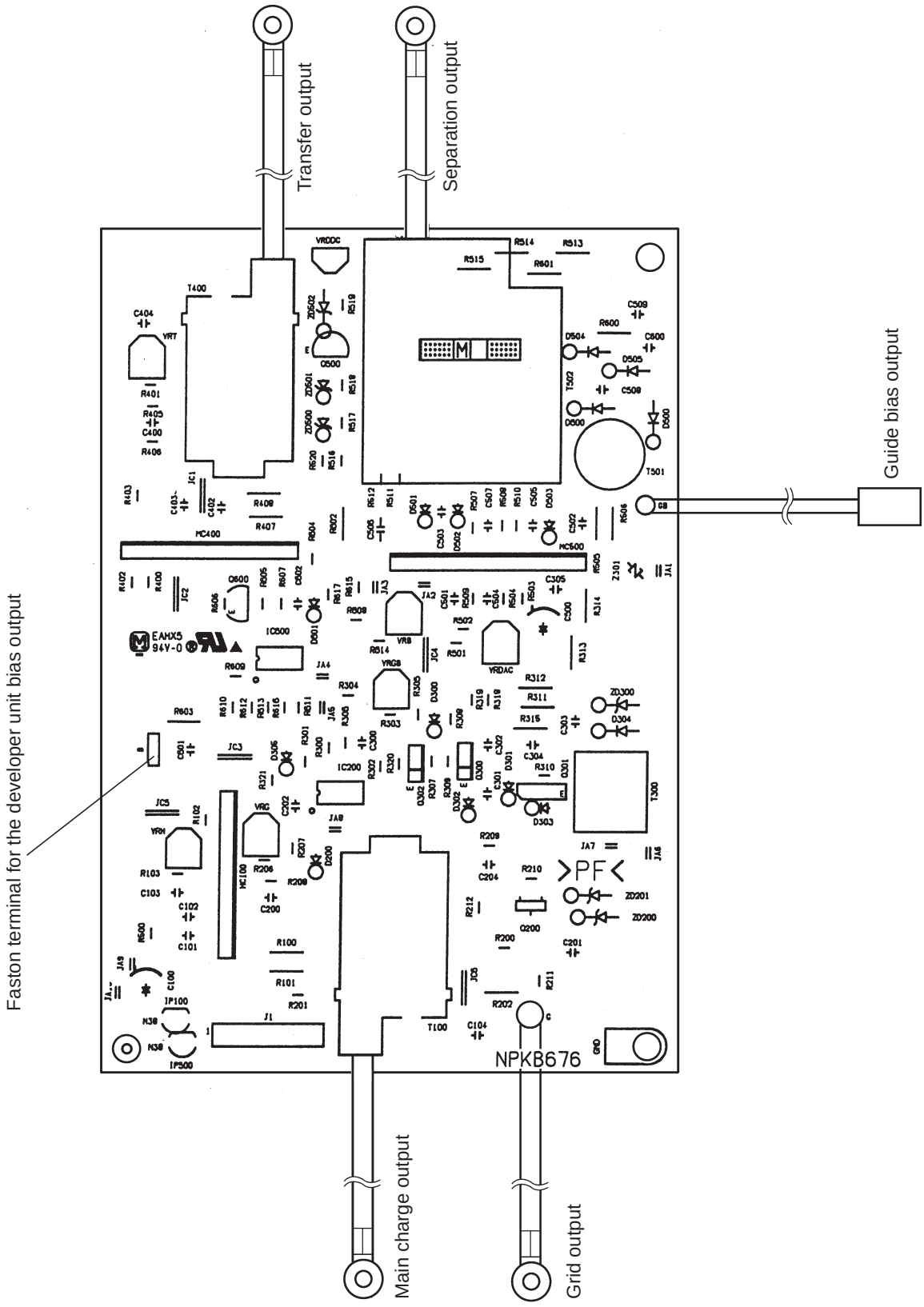
Transfer output
Separation output
Guide bias output
Faston terminal for the developer unit bias output
Main charge output
Grid output
NPKB676

16. WIRE HARNESS CONNECTION DIAGRAM

16.1 AC Wire Harness

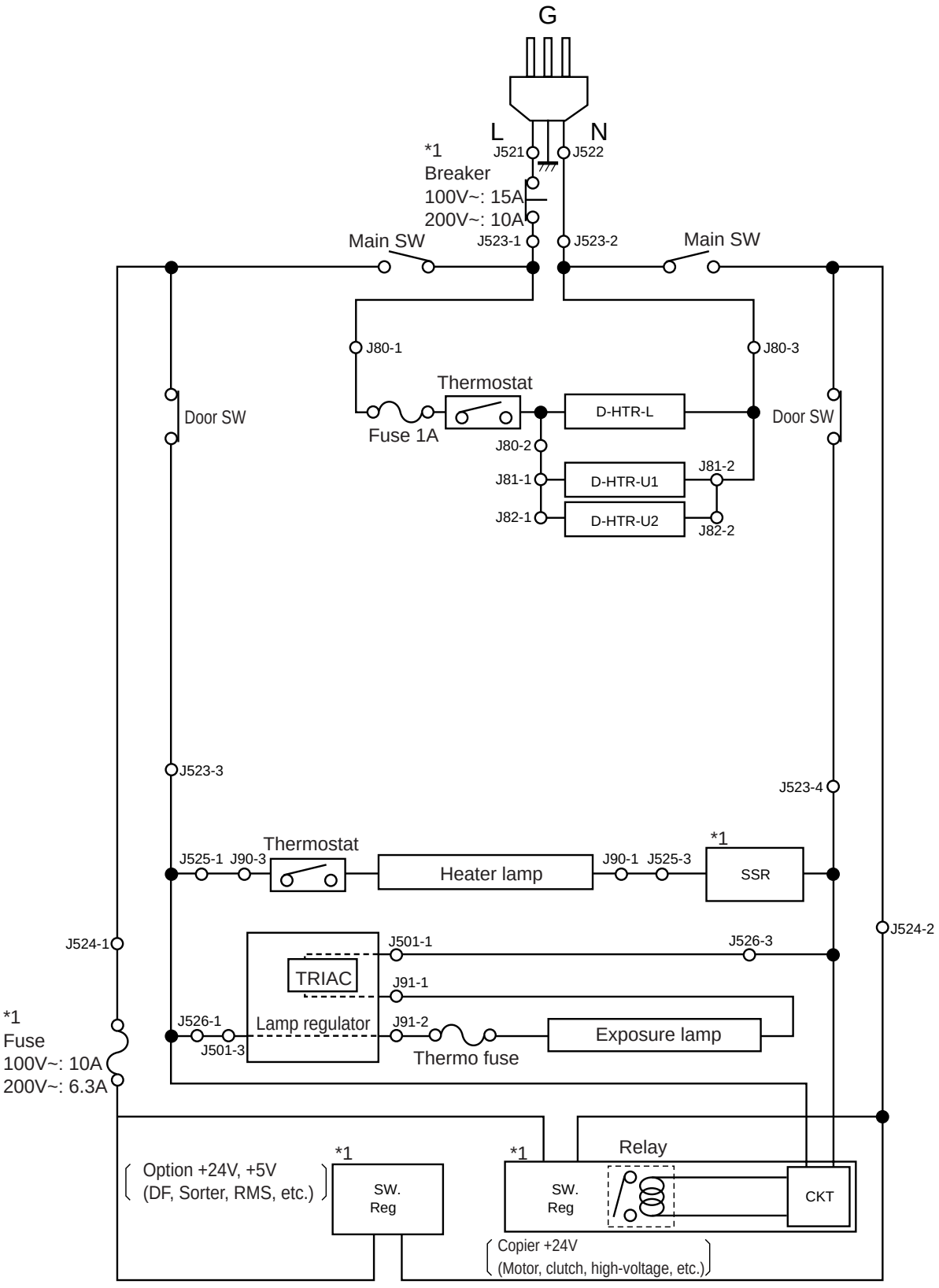

*1: Parts inside the switching power supply

16.2 DC Wire Harness Connection Diagram

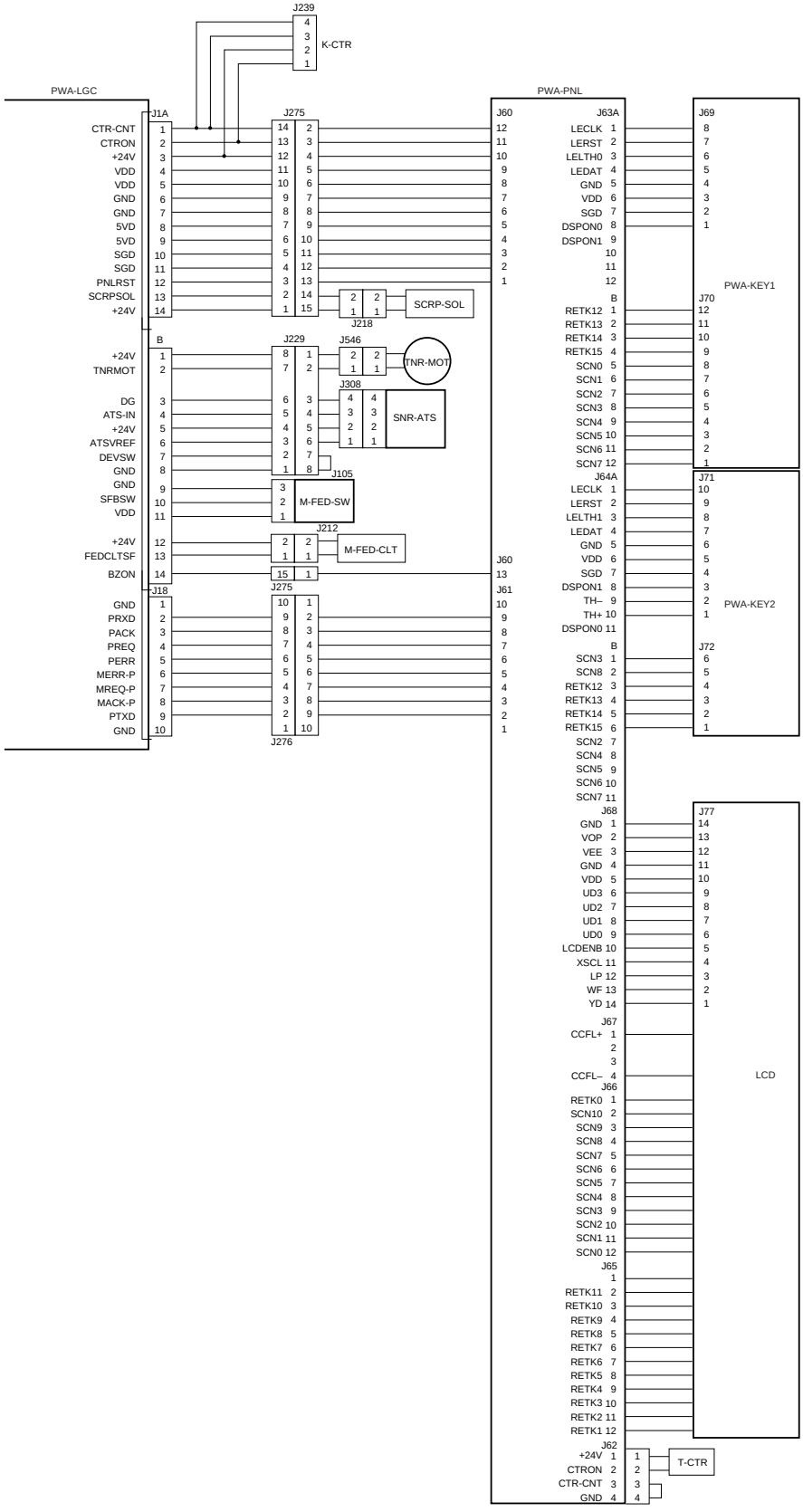

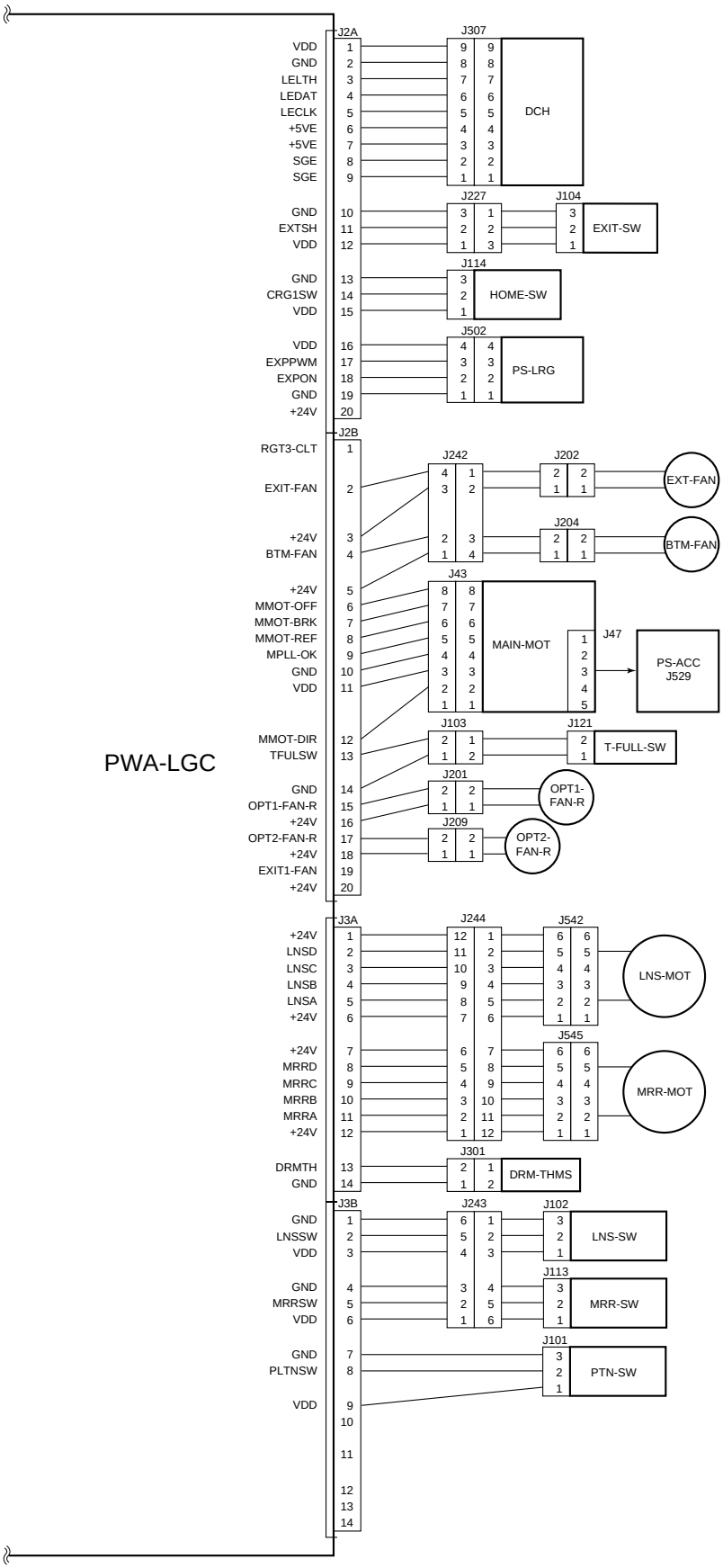
PWA-LGC
J2A
VDD 1
GND 2
LELTH 3
LEDAT 4
LECLK 5
+5VE 6
+5VE 7
SGE 8
SGE 9
GND 10
EXTSH 11
VDD 12
GND 13
CRG1SW 14
VDD 15
VDD 16
EXPPWM 17
EXPON 18
GND 19
+24V 20
J307
DCH
J227
J104
EXIT-SW
J114
HOME-SW
J502
PS-LRG
J2B
RGT3-CLT 1
EXIT-FAN 2
+24V 3
BTM-FAN 4
+24V 5
MMOT-OFF 6
MMOT-BRK 7
MMOT-REF 8
MPLL-OK 9
GND 10
VDD 11
MMOT-DIR 12
TFULSW 13
GND 14
OPT1-FAN-R 15
+24V 16
OPT2-FAN-R 17
+24V 18
EXIT1-FAN 19
+24V 20
J242
J202
EXT-FAN
J204
BTM-FAN
J43
MAIN-MOT
J47
PS-ACC
J529
J103
J121
T-FULL-SW
J201
OPT1-
FAN-R
J209
OPT2-
FAN-R
J3A
+24V 1
LNSD 2
LNSC 3
LNSB 4
LNSA 5
+24V 6
+24V 7
MRRD 8
MRRC 9
MRRB 10
MRRA 11
+24V 12
DRMTH 13
GND 14
J244
J542
LNS-MOT
J545
MRR-MOT
J301
DRM-THMS
J3B
GND 1
LNSSW 2
VDD 3
GND 4
MRRSW 5
VDD 6
GND 7
PLTNSW 8
VDD 9
10
11
12
13
14
J243
J102
LNS-SW
J113
MRR-SW
J101
PTN-SW

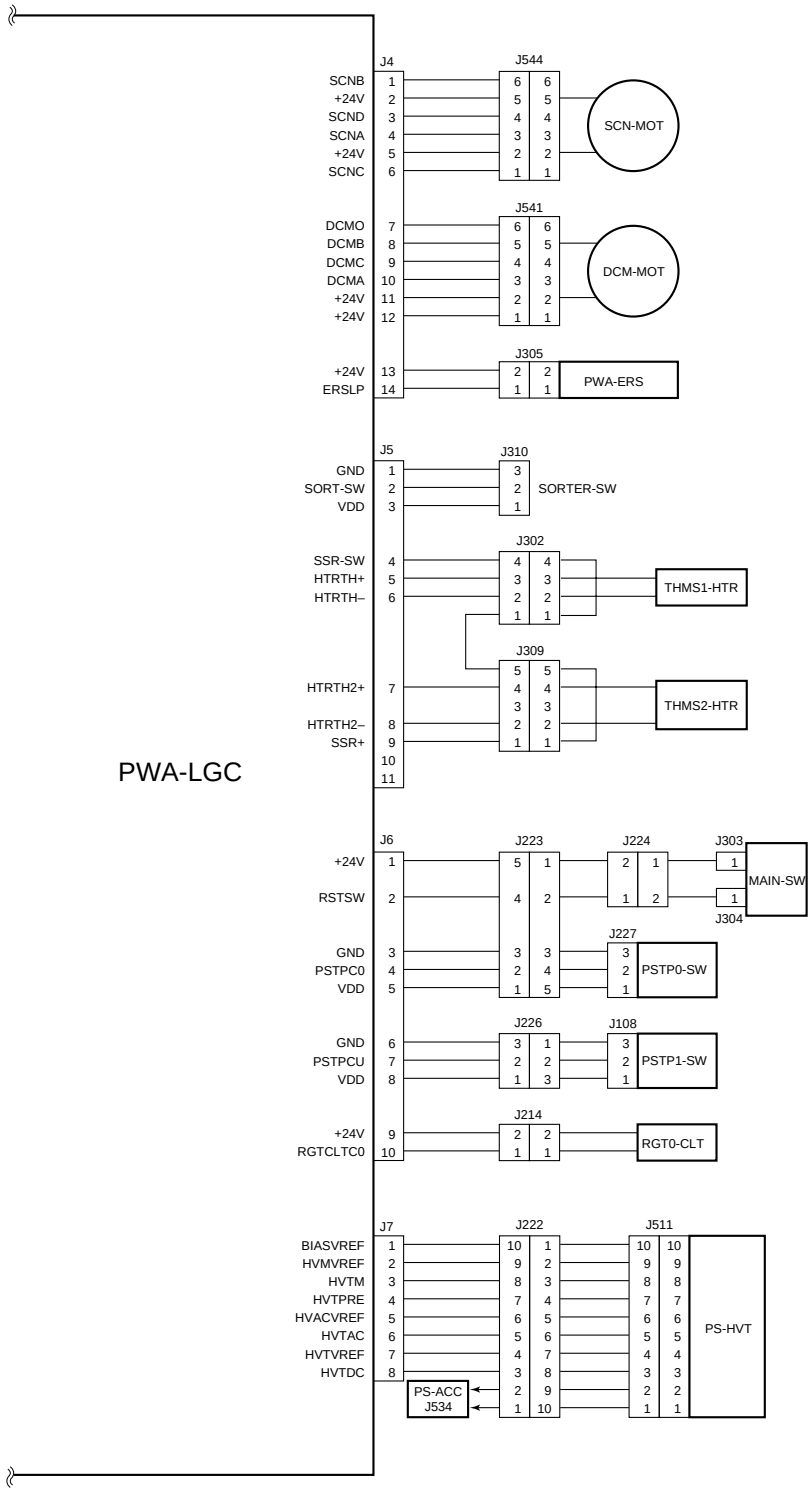
PWA-LGC
J4
SCNB 1
+24V 2
SCND 3
SCNA 4
+24V 5
SCNC 6
J544
SCN-MOT
DCMO 7
DCMB 8
DCMC 9
DCMA 10
+24V 11
+24V 12
J541
DCM-MOT
+24V 13
ERSLP 14
J305
PWA-ERS
J5
GND 1
SORT-SW 2
VDD 3
J310
SORTER-SW
SSR-SW 4
HTRTH+ 5
HTRTH– 6
J302
THMS1-HTR
J309
HTRTH2+ 7
HTRTH2– 8
SSR+ 9
10
11
THMS2-HTR
J6
+24V 1
RSTSW 2
J223
J224
J303
J304
MAIN-SW
GND 3
PSTPC0 4
VDD 5
J227
PSTP0-SW
GND 6
PSTPCU 7
VDD 8
J226
J108
PSTP1-SW
+24V 9
RGTCLTC0 10
J214
RGT0-CLT
J7
BIASVREF 1
HVMVREF 2
HVTM 3
HVTPRE 4
HVACVREF 5
HVTAC 6
HVTVREF 7
HVTDC 8
J222
J511
PS-HVT
PS-ACC
J534

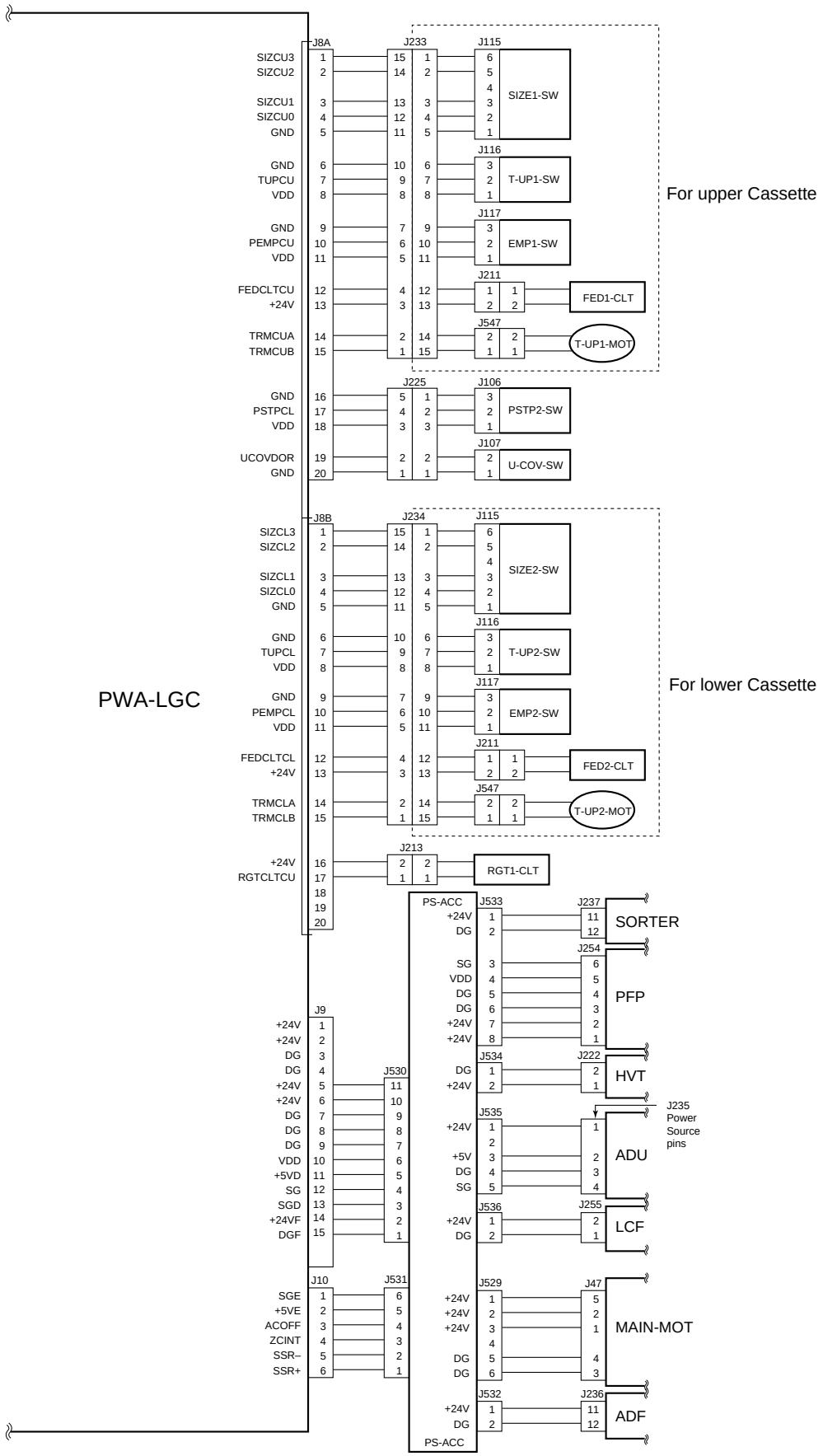
PWA-LGC
J8A
J233
J115
SIZCU3
SIZCU2
SIZCU1
SIZCU0
GND
SIZE1-SW
J116
GND
TUPCU
VDD
T-UP1-SW
J117
GND
PEMPCU
VDD
EMP1-SW
J211
FEDCLTCU
+24V
FED1-CLT
J547
TRMCUA
TRMCUB
T-UP1-MOT
For upper Cassette
J225
J106
GND
PSTPCL
VDD
PSTP2-SW
J107
UCOVDOR
GND
U-COV-SW
J8B
J234
J115
SIZCL3
SIZCL2
SIZCL1
SIZCL0
GND
SIZE2-SW
J116
GND
TUPCL
VDD
T-UP2-SW
J117
GND
PEMPCL
VDD
EMP2-SW
J211
FEDCLTCL
+24V
FED2-CLT
J547
TRMCLA
TRMCLB
T-UP2-MOT
For lower Cassette
J213
+24V
RGTCLTCU
RGT1-CLT
PS-ACC
J533
+24V
DG
SORTER
J237
J254
SG
VDD
DG
DG
+24V
+24V
PFP
J534
DG
+24V
HVT
J222
J535
+24V
+5V
DG
SG
ADU
J235
Power
Source
pins
J536
+24V
DG
LCF
J255
J9
J530
J10
J531
SGE
+5VE
ACOFF
ZCINT
SSR–
SSR+
J529
J47
MAIN-MOT
J532
J236
ADF
PS-ACC

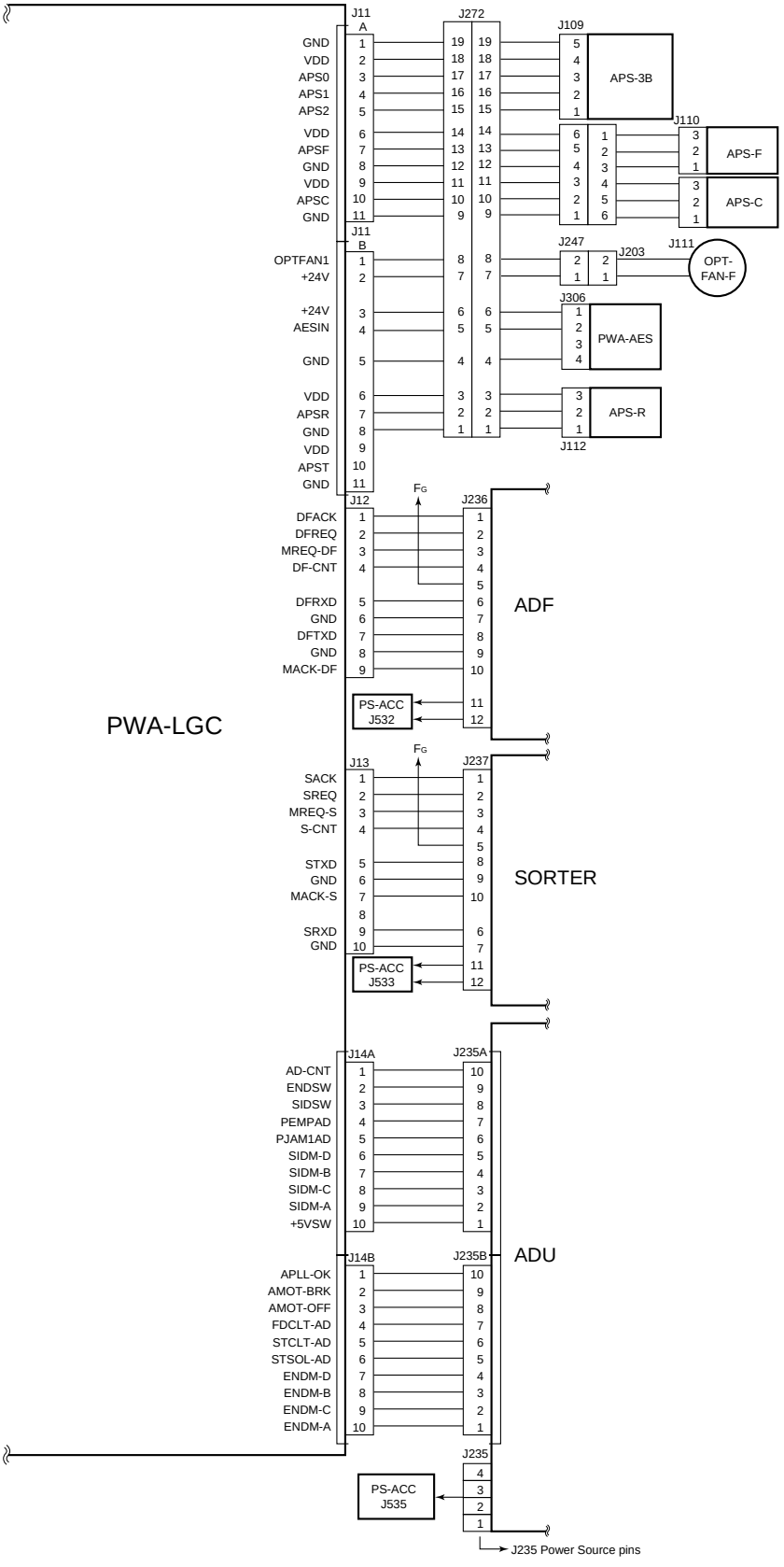
PWA-LGC
J11 A
GND 1
VDD 2
APS0 3
APS1 4
APS2 5
VDD 6
APSF 7
GND 8
VDD 9
APSC 10
GND 11
J11 B
OPTFAN1 1
+24V 2
+24V 3
AESIN 4
GND 5
VDD 6
APSR 7
GND 8
VDD 9
APST 10
GND 11
J272
J109
APS-3B
J110
APS-F
APS-C
J247
J203
J111
OPT-FAN-F
J306
PWA-AES
APS-R
J112
J12
DFACK 1
DFREQ 2
MREQ-DF 3
DF-CNT 4
DFRXD 5
GND 6
DFTXD 7
GND 8
MACK-DF 9
FG
J236
ADF
PS-ACC J532
J13
SACK 1
SREQ 2
MREQ-S 3
S-CNT 4
STXD 5
GND 6
MACK-S 7
SRXD 9
GND 10
J237
SORTER
PS-ACC J533
J14A
AD-CNT 1
ENDSW 2
SIDSW 3
PEMPAD 4
PJAM1AD 5
SIDM-D 6
SIDM-B 7
SIDM-C 8
SIDM-A 9
+5VSW 10
J235A
J14B
APLL-OK 1
AMOT-BRK 2
AMOT-OFF 3
FDCLT-AD 4
STCLT-AD 5
STSOL-AD 6
ENDM-D 7
ENDM-B 8
ENDM-C 9
ENDM-A 10
J235B
ADU
J235
PS-ACC J535
J235 Power Source pins

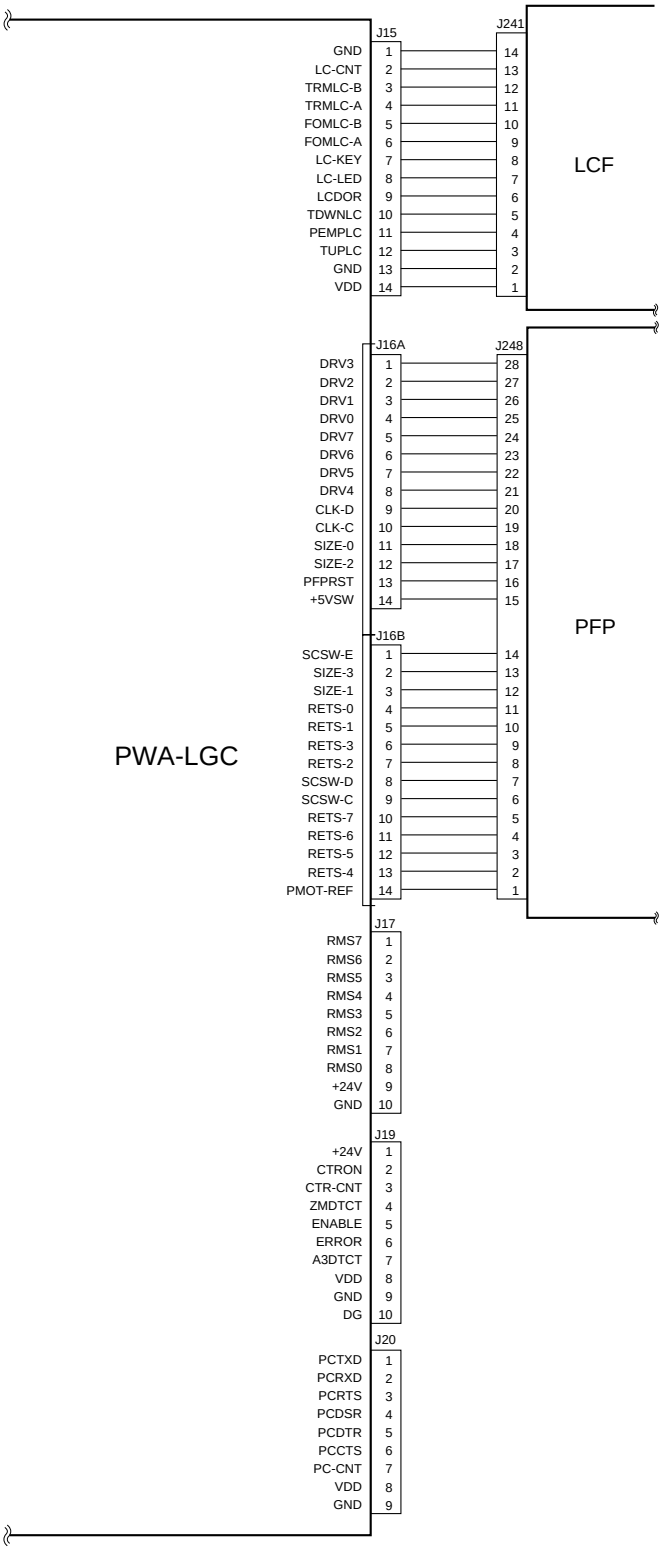
PWA-LGC
J15
GND 1
LC-CNT 2
TRMLC-B 3
TRMLC-A 4
FOMLC-B 5
FOMLC-A 6
LC-KEY 7
LC-LED 8
LCDOR 9
TDWNLC 10
PEMPLC 11
TUPLC 12
GND 13
VDD 14
J241
14 13 12 11 10 9 8 7 6 5 4 3 2 1
LCF
J16A
DRV3 1
DRV2 2
DRV1 3
DRV0 4
DRV7 5
DRV6 6
DRV5 7
DRV4 8
CLK-D 9
CLK-C 10
SIZE-0 11
SIZE-2 12
PFPRST 13
+5VSW 14
J248
28 27 26 25 24 23 22 21 20 19 18 17 16 15
J16B
SCSW-E 1
SIZE-3 2
SIZE-1 3
RETS-0 4
RETS-1 5
RETS-3 6
RETS-2 7
SCSW-D 8
SCSW-C 9
RETS-7 10
RETS-6 11
RETS-5 12
RETS-4 13
PMOT-REF 14
14 13 12 11 10 9 8 7 6 5 4 3 2 1
PFP
J17
RMS7 1
RMS6 2
RMS5 3
RMS4 4
RMS3 5
RMS2 6
RMS1 7
RMS0 8
+24V 9
GND 10
J19
+24V 1
CTRON 2
CTR-CNT 3
ZMDTCT 4
ENABLE 5
ERROR 6
A3DTCT 7
VDD 8
GND 9
DG 10
J20
PCTXD 1
PCRXD 2
PCRTS 3
PCDSR 4
PCDTR 5
PCCTS 6
PC-CNT 7
VDD 8
GND 9

17. UNPACKING PROCEDURE

17.1 Unpacking and Set-up Procedure for the 3560

(1) Unpacking the copier carton box.

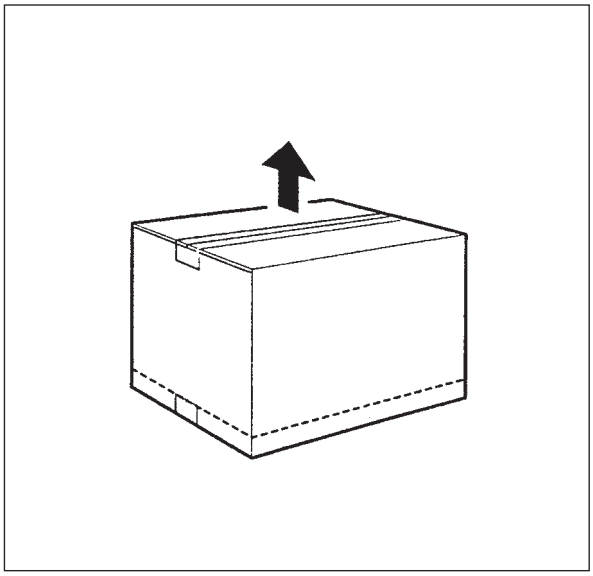

(2) Unpack the accessory package. Remove the accessory package and other packing material. Below are accessories (accessories vary according to the destination):

- Bracket for fixing handle 2 (4)
  Screw (M3 × 6) (black) 2
- Operator's manual pocket 1 (22)
- Copy receiving tray 1 (30)
  Plastic cover 4
- Easy set-up instruction 1
- Operator's manual 1
- Others (vary according to the destination)

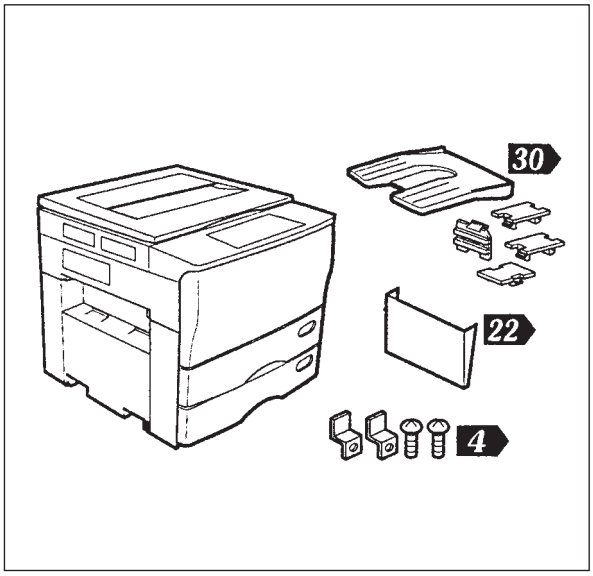

(3) Pulling out the handles located on both sides of the body.
Keep the machine horizontal and the handles firmly grasped when transporting.

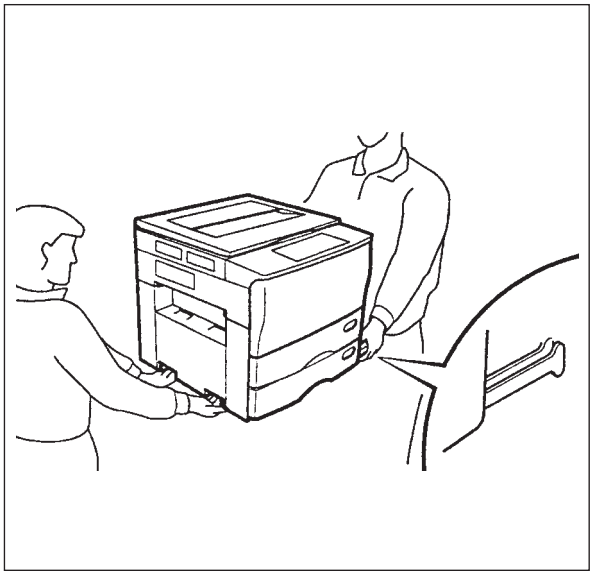

(4) After setting the machine on the appropriate stand, pushing the handles into the body. Fix the handles by using the screws and the brackets included in the package.

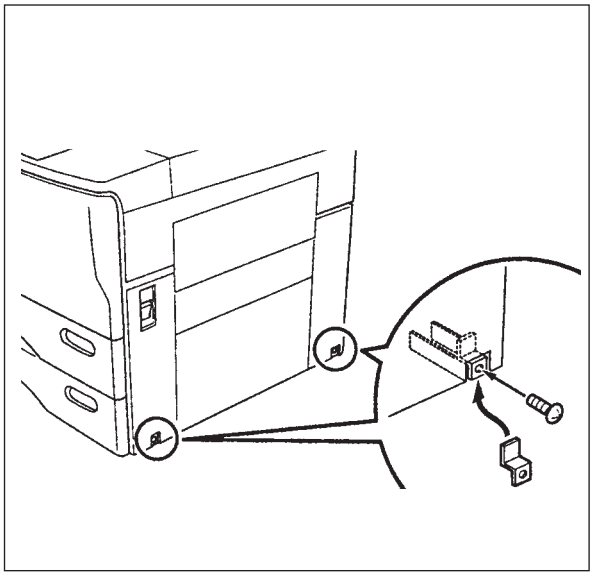

(5) Pull out the cassette.

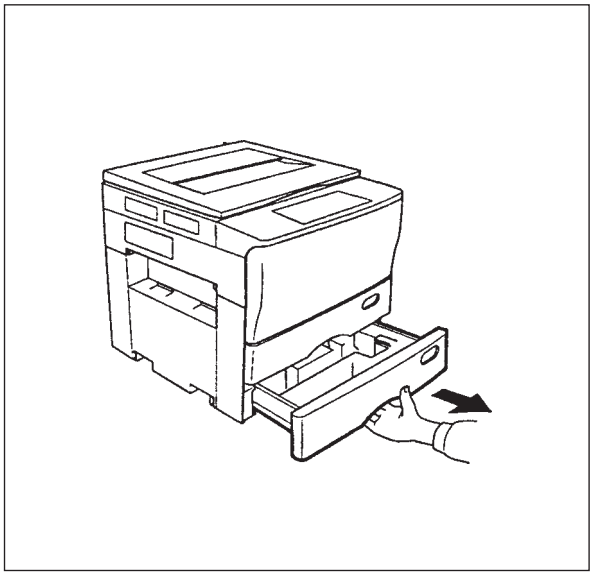

(6) Remove the packing materials and parts from inside of the cassette.

- Developer bottle 1 (17)
  Accessories vary according to the destination.
- Power cord 1 (22)

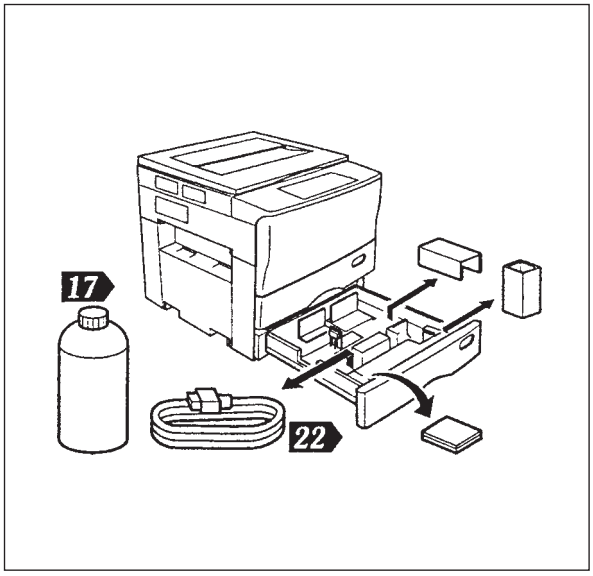

(7) Remove the paper from the package.

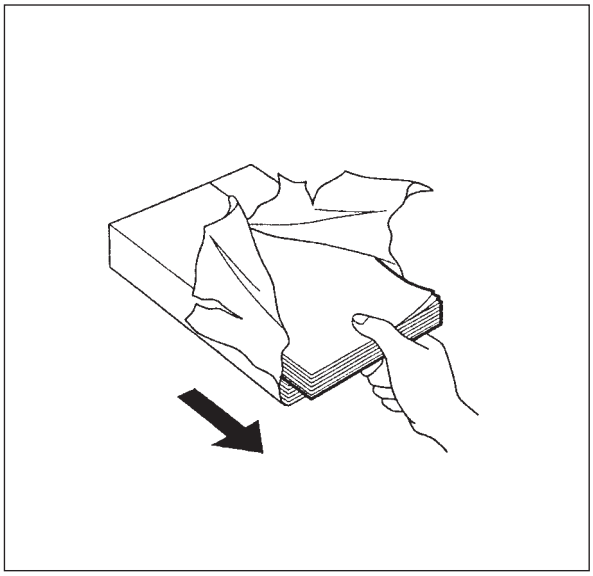

(8) Set the paper for each cassette.

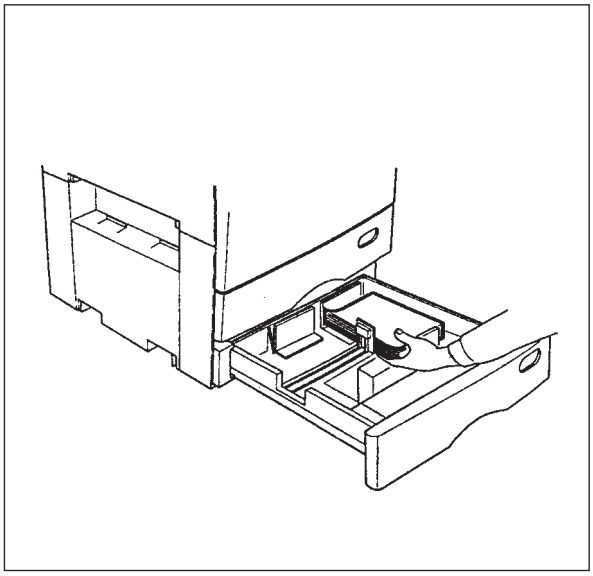

(9) Insert the cassette gently.

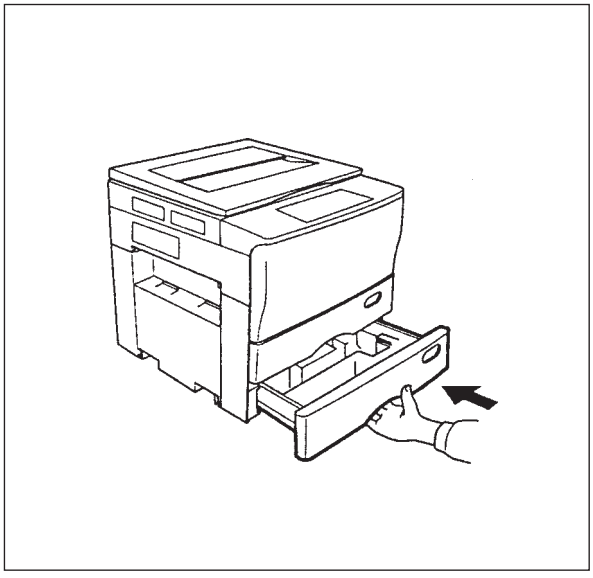

(10) Open the front cover.

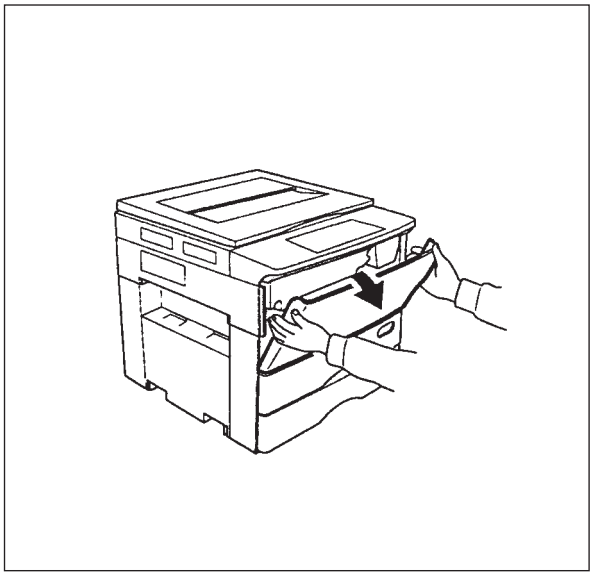

(11) Remove the packing screws (four).

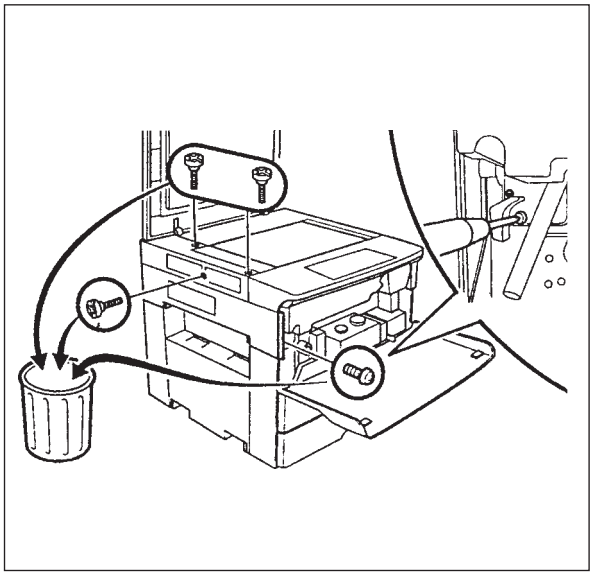

(12) Open the upper unit.

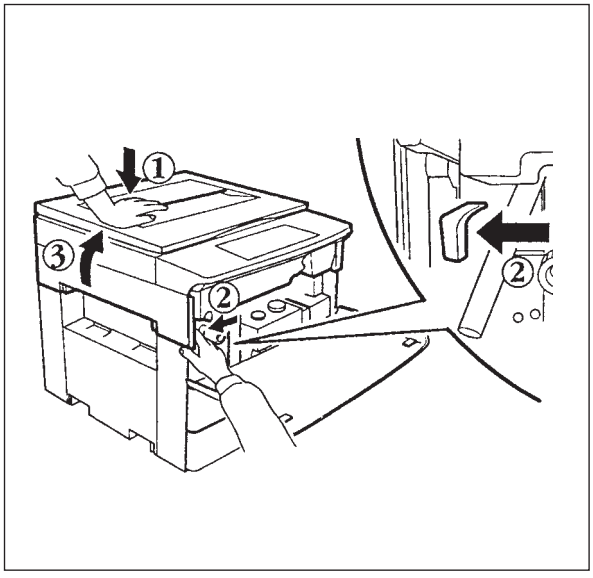

(13) Remove the pressure release bracket (2 pcs.) from the fuser unit.

- Remove the toner cartridge (only for AUD, TWD, SAD, ASD).

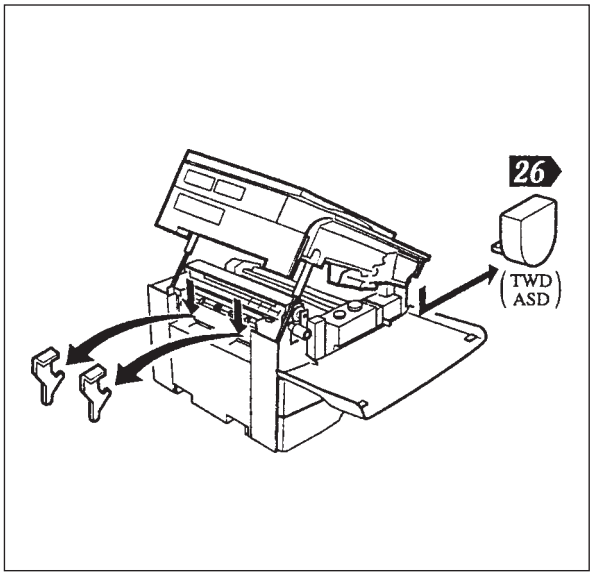

(14) Remove the screw (1) and connector (1), then the process unit.

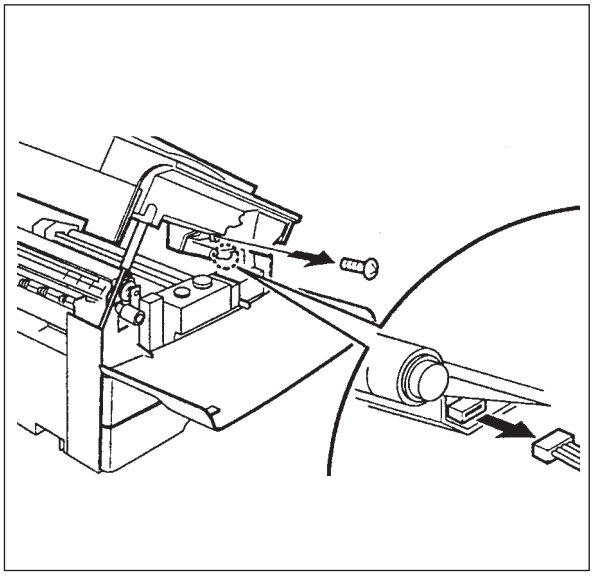

(15) Place the process unit on a flat surface. Raise the lever located on each side of the process unit in the direction of the arrow.

- Remove the developer unit from the process unit.

Note: If the photoconductor is exposed to fluorescent light or external light for long time, it may suffer from light-caused fatigue. So, be sure to cover the process unit with, for example, a suitable cloth.

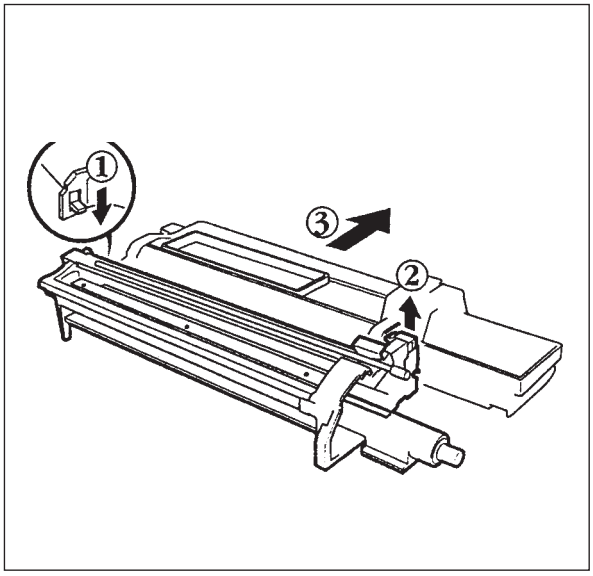

(16) Remove the top cover of the developer unit.

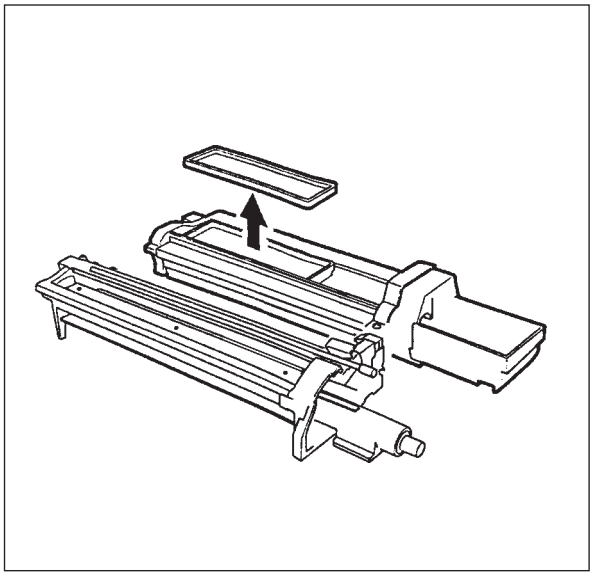

(17) Pour in the developer material.

Note: Before pouring in the developer material, be sure to shake the developer bottle fully.

By rotating the magnetic roller, check to make sure that the developer material is transported properly.

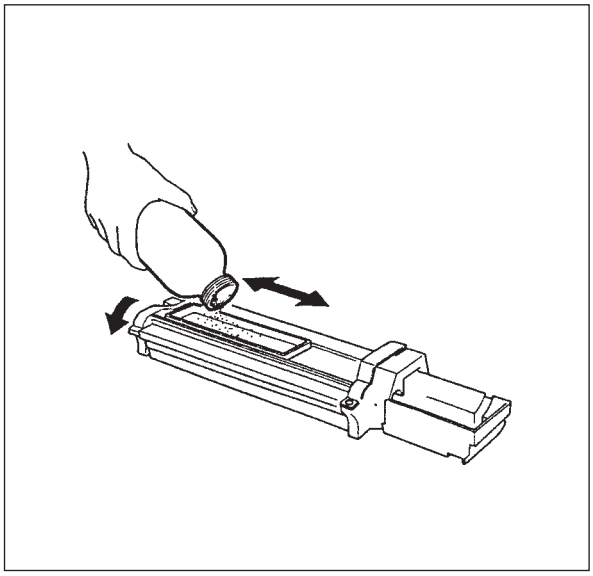

(18) Reinstall the top cover.

Be sure to install the top cover firmly.

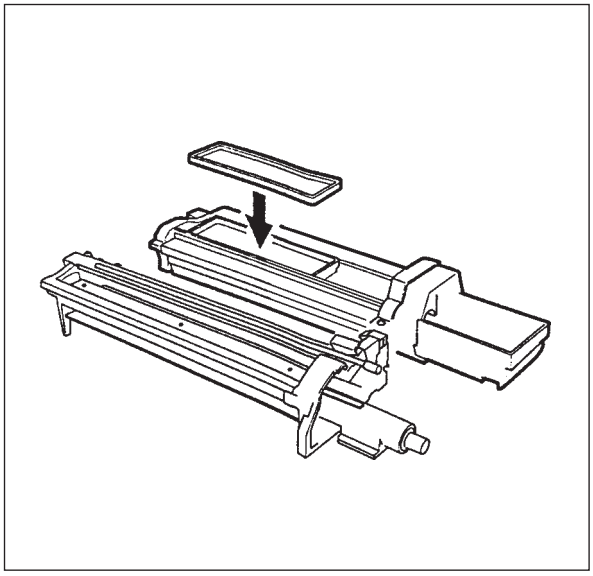

(19) After placing the developer unit in the process unit, move down the lever on each side to fix the developer unit.

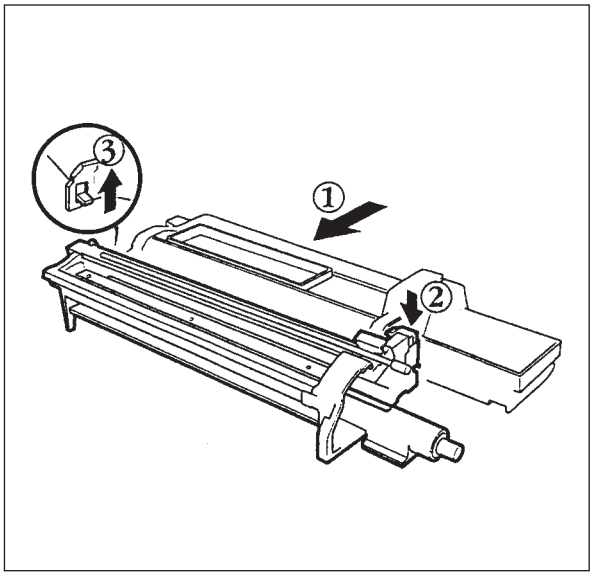

(20) Reinstall the process unit into the machine. Reinstall the screw and connector.

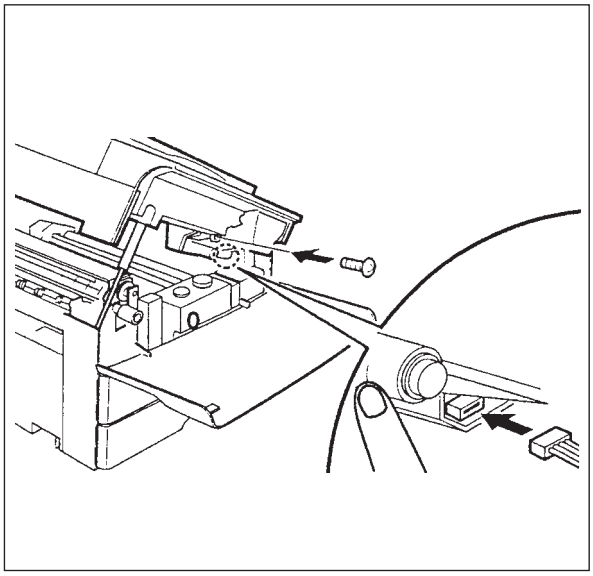

⚠WARNING

- Be careful not to catch your fingers between the two units when the upper unit is pressed down.

(21) Close the upper unit and the front cover.

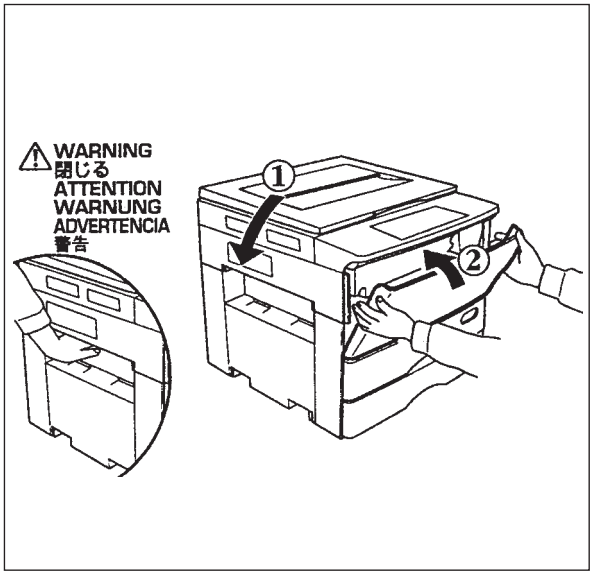

(22) Connect the power cable to the outlet.

- Install the operator's manual pocket.

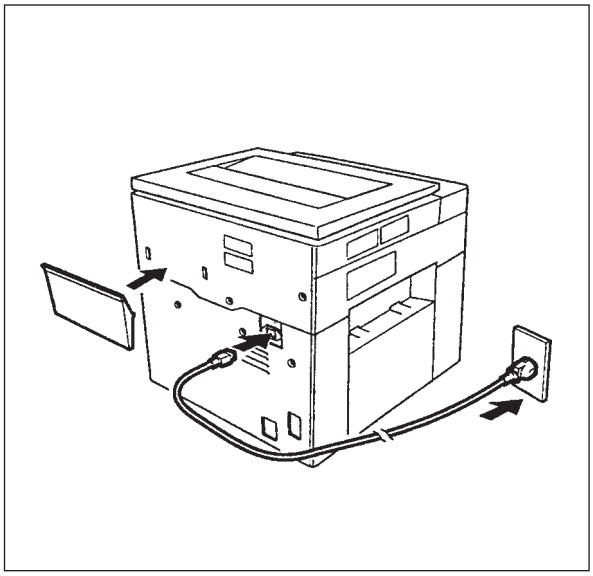

(23) Turn on the copier main switch.

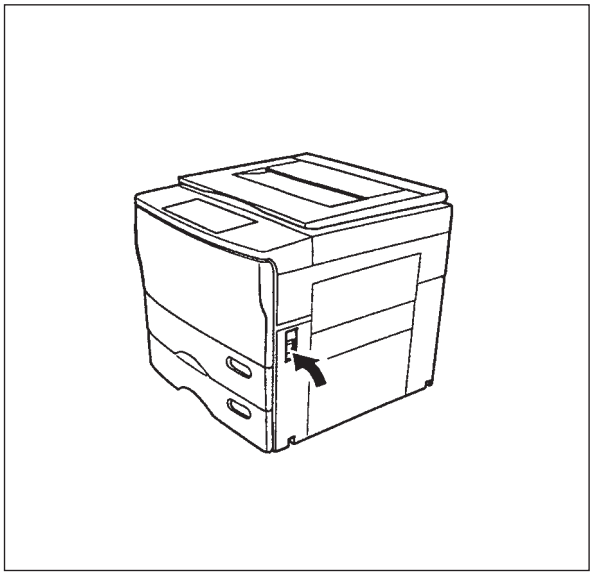

(24) Automatic adjustment of the auto-toner sensor

1. When the power switch is turned on, the auto-toner sensor is automatically adjusted by the following procedure.
2. "UA" is shown on the message display. The automatic adjustment of the auto-toner sensor starts.
3. The machine starts its operation. The value on the message display changes.
4. About 2 to 3 minutes later, the value on the message display stabilizes at 235~245.

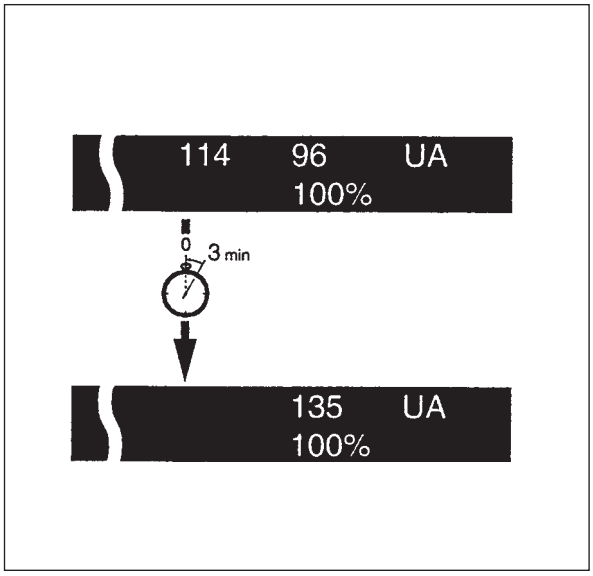

5. The automatic adjustment of the auto-toner sensor is complete and “Install new cartridge” is shown on the message display.
   - If the adjustment has finished abnormally, the machine stops its operation and displays the CALL SERVICE. Then, for the subsequent adjustment of the auto-toner sensor, follow the procedure described in the Service Manual.

(25) **<Procedure for installing the toner cartridge>**
Open the front cover.

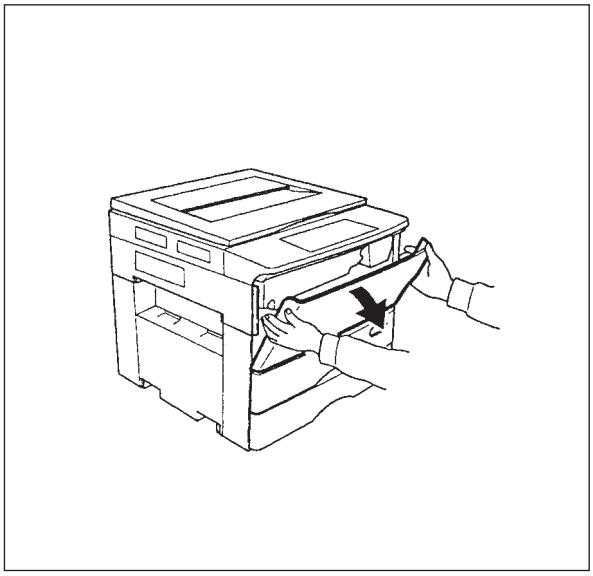

(26) Shake the new toner cartridge to the right and to the left 5 or 6 times to loosen the toner inside.

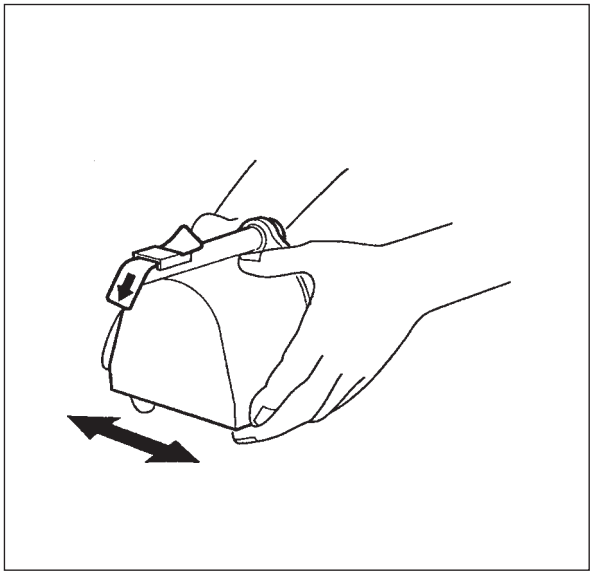

(27) Pull to remove the seal from the new toner cartridge.
- Do not shake the toner cartridge after removing the seal (the toner may spill).

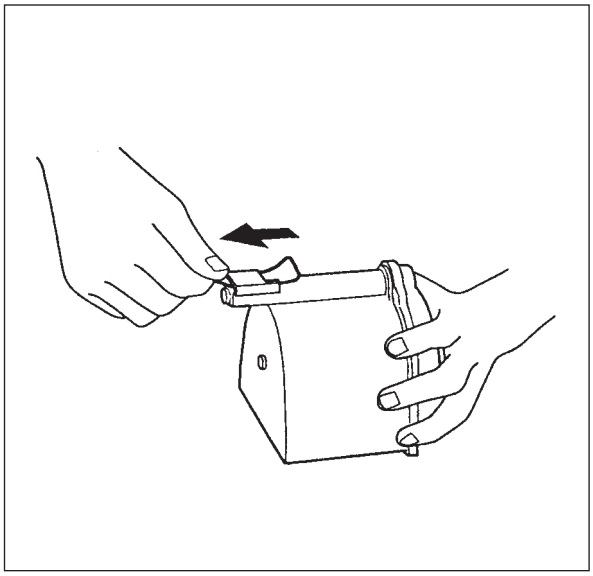

(28) Install the new toner cartridge in the machine.
- Push the toner cartridge fully in until it is locked securely.

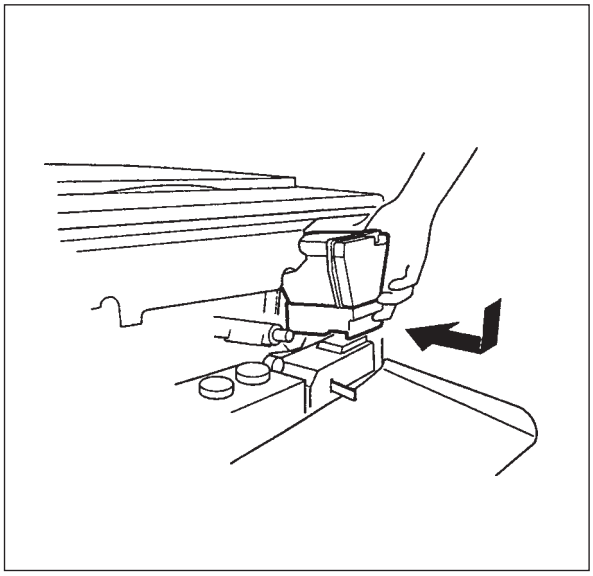

(29) Close the front cover.

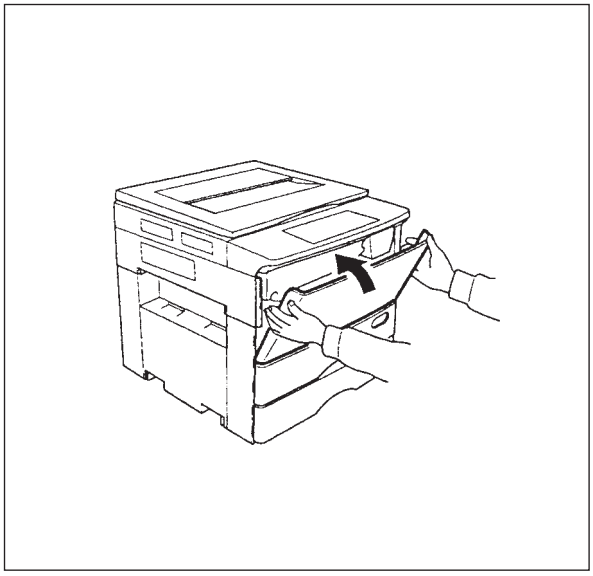

(30) Install the 4 plastic covers to the outer covers.
- The copy receiving tray should be installed in the slots in the exit cover.

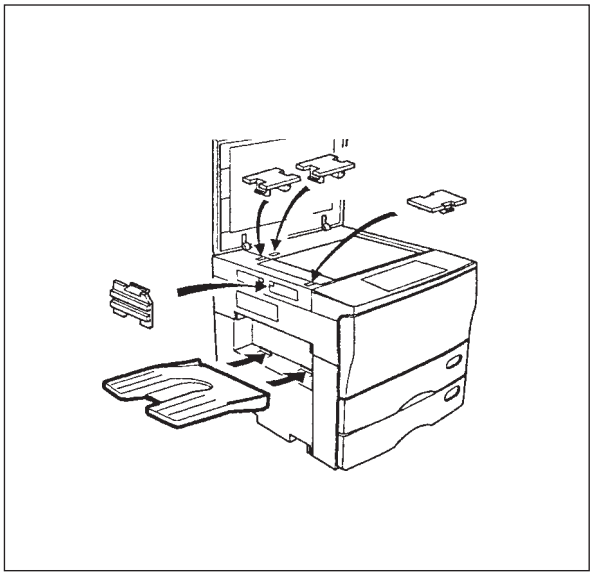

(31) Put the original on the glass.

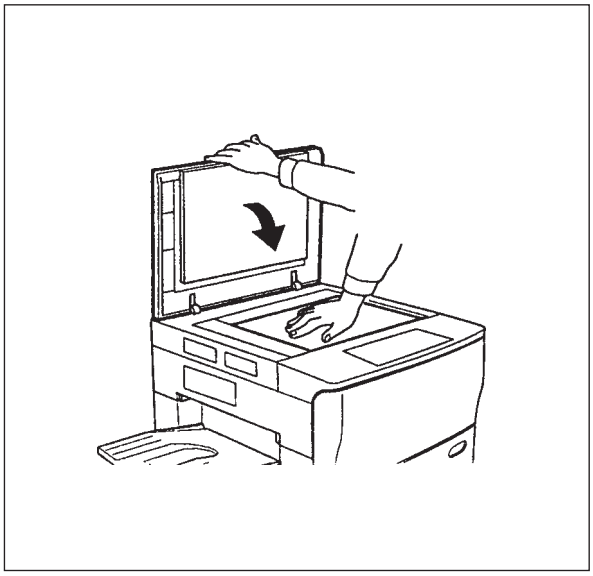

<Final Check>

(32) Making copies from the cassette and the bypass, check the following.
- Paper feeding from the cassette is correct.
- Paper feeding from the bypass feed guide is correct.
- Automatic duplexer operation is correct (if ADU is installed).
- Light distribution is correct.
- Fixing and cleaning are correct.
- Exposure level is correct.
- Control panel displays and key operation are correct.

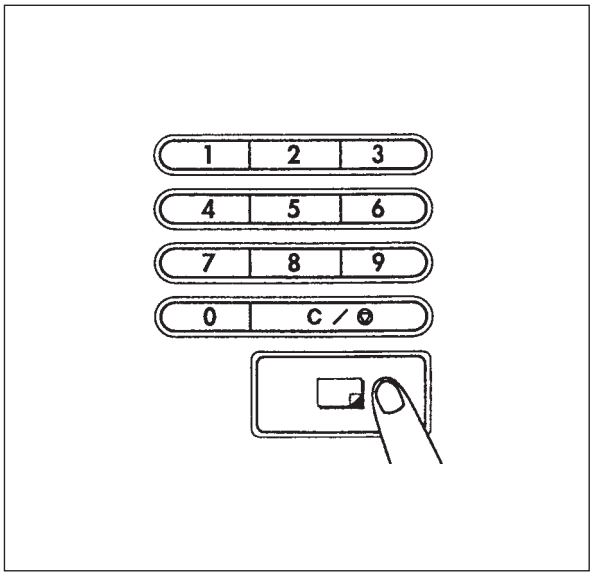

* Basic operations
* Special features

– Automatic paper selection (APS), Automatic magnification selection (AMS)
– Duplex mode (if ADU is installed)
– Enlarging and reducing modes
– Interrupting mode
– Dual-page copying
– Edge erase copying
– User set
– Image shifting
– Copy-mode memory

Note: The packing material should be disposed of properly.

17.2 Unpacking and Set-up Procedure for the 3570

(1) Unpacking the copier carton box.

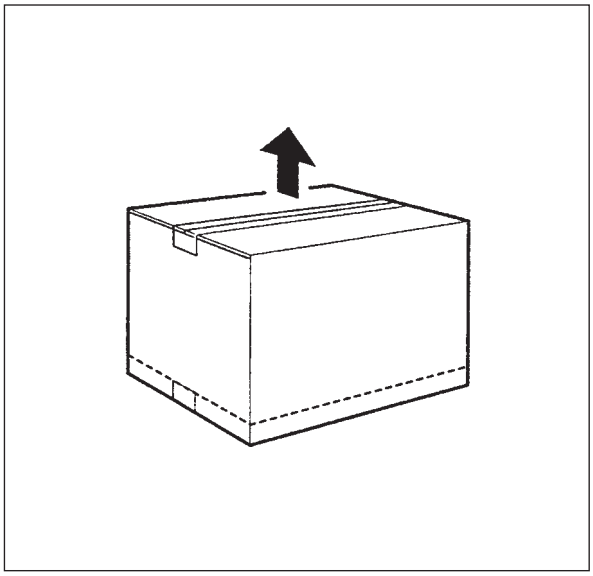

(2) Unpack the accessory package. Remove the accessory package and other packing material. Below are accessories (accessories vary according to the destination):

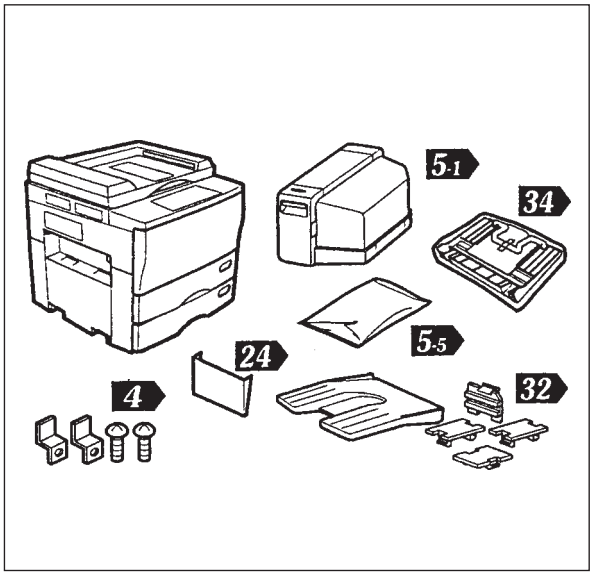

- Bracket for fixing handle 2 (4)
  Screw (M3 × 6) (black) 2
- Large-capacity feeder 1 (5-1)
- Fixing parts for the large-capacity feeder 1 (5-5)
- Operator's manual pocket 1 (24)
- Copy receiving tray 1 (32)
  Plastic cover 4
- Original feed tray 1 (34)
- Easy set-up instruction 1
- Operator's manual 1
- Others (vary according to the destination)

(3) Pulling out the handles located on both sides of the body.
Keep the machine horizontal and the handles firmly grasped when transporting.

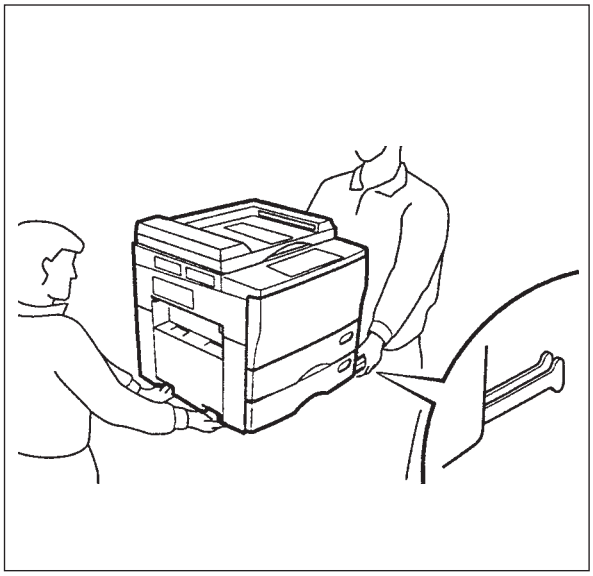

(4) After setting the machine on the appropriate stand, pushing the handles into the body. Fix the handles by using the screws and the brackets included in the package.

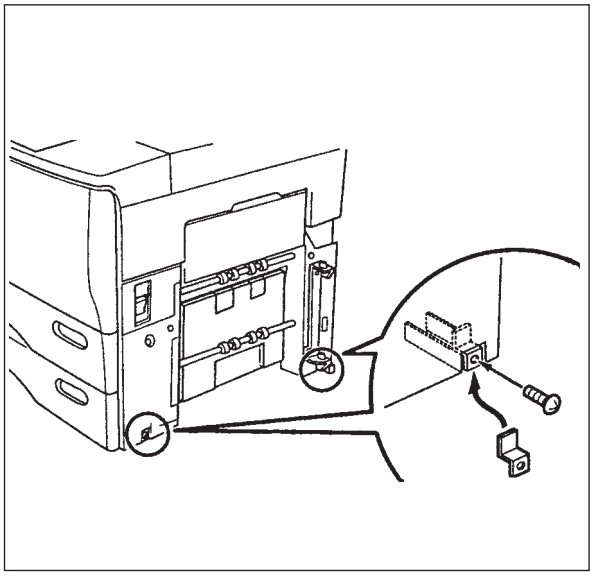

(5-1) Remove the packing material inside of the large-capacity feeder.

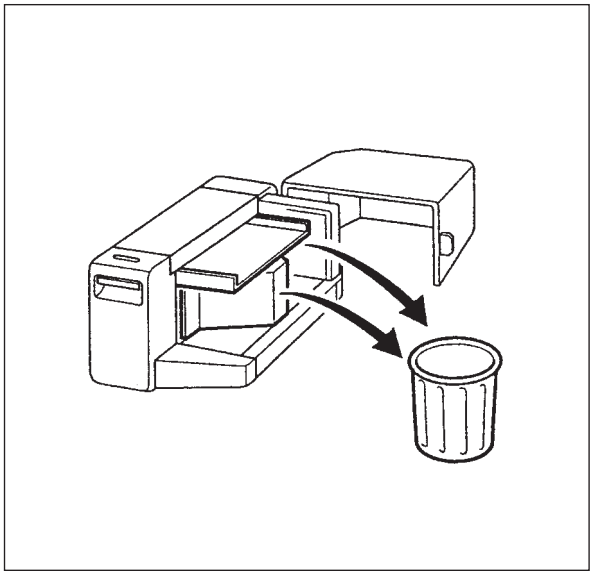

(5-2) Remove the packing material from the paper feeding side of the copy machine.

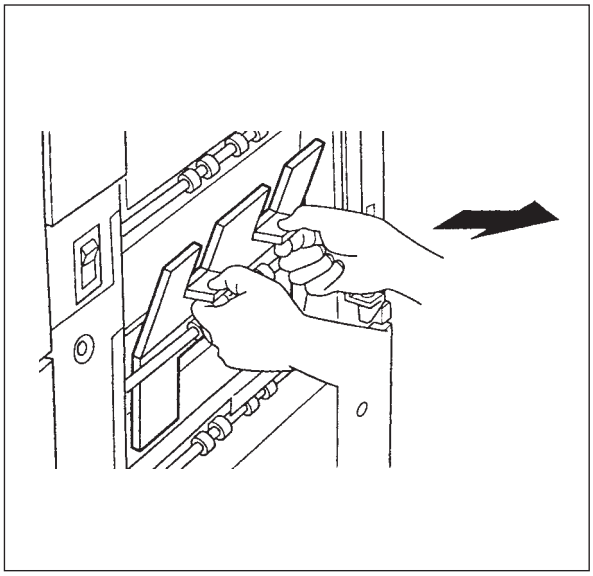

(5-3) Insert the pins of the copy machine into the hinge of the large-capacity feeder.

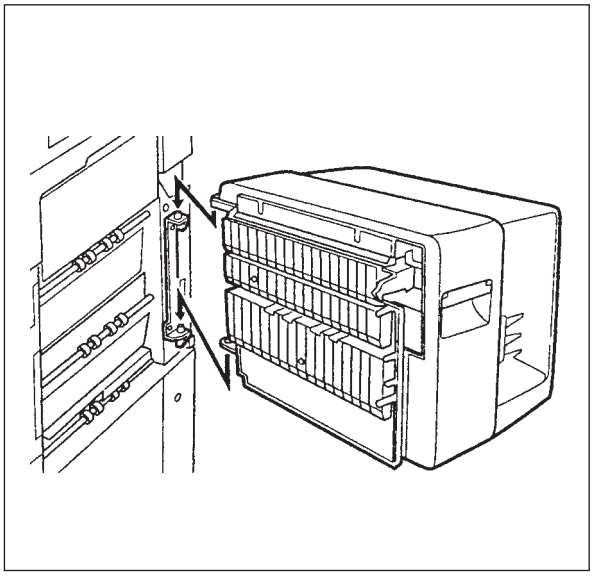

(5-4) Install the connector.

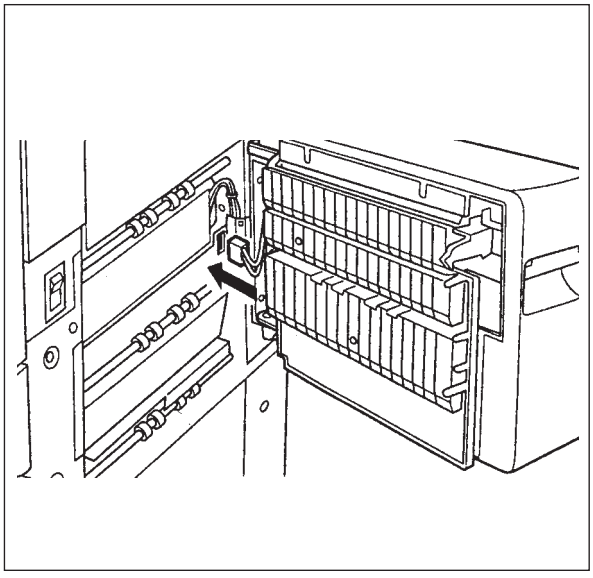

(5-5) Unpacking the accessory package.

- Harness cover A 1 (5-6)
- Harness cover B 1 (5-7)
- Clamp 1 (5-8)
  Screw (M4 × 8) (black) 1
- Hinge fixing bracket 1 (5-9)
  Screw (M4 × 8) (silver) 1
- Connector cover 1 (5-11)
  Screw (M4 × 8) (silver) 2

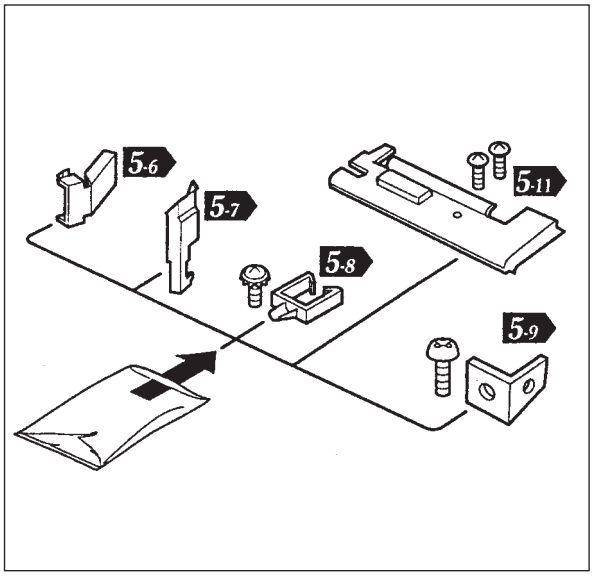

(5-6) Install the harness cover A.

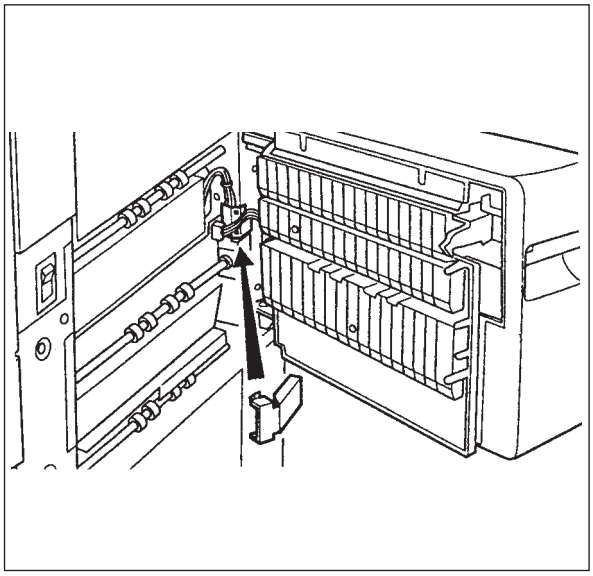

(5-7) Install the harness cover B.

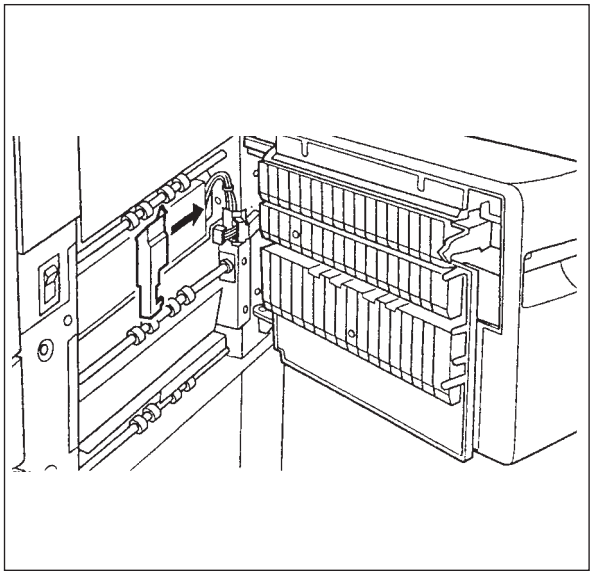

(5-8) Attach the FG harness of the copy machine to the large-capacity feeder by screw (M4 × 8, black, 1).

- Attach the clamp to the large-capacity feeder.

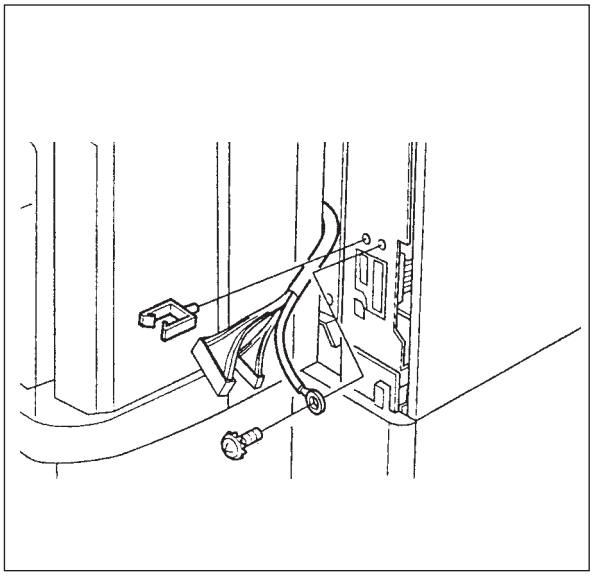

(5-9) Fix the hinge fixing bracket by screw (M4 × 8, silver, 1)

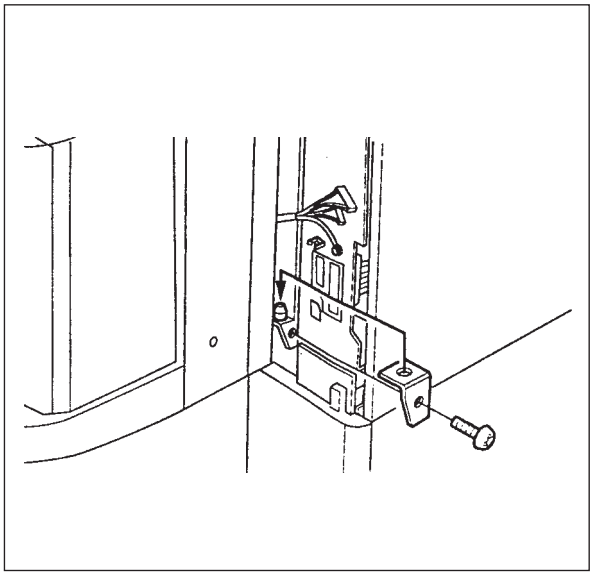

(5-10) Attaching 2 connectors.

After attaching them, fix the harness by clamp.

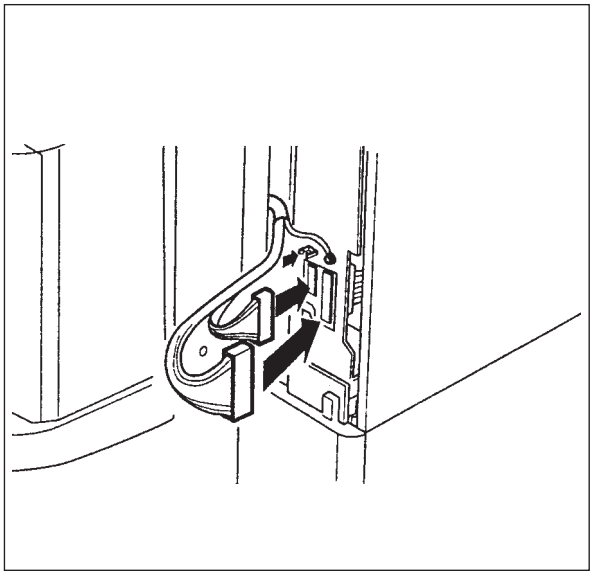

(5-11) Fix the connector cover by screw (M4 × 8, silver, 2).

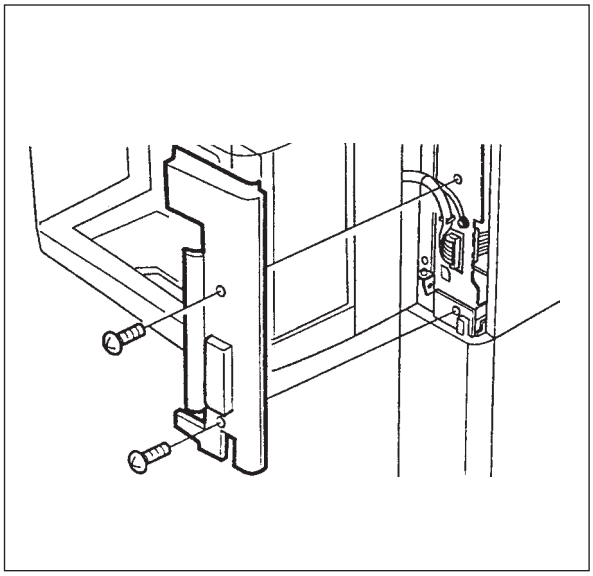

(6-1) Pull out the automatic duplexing unit.

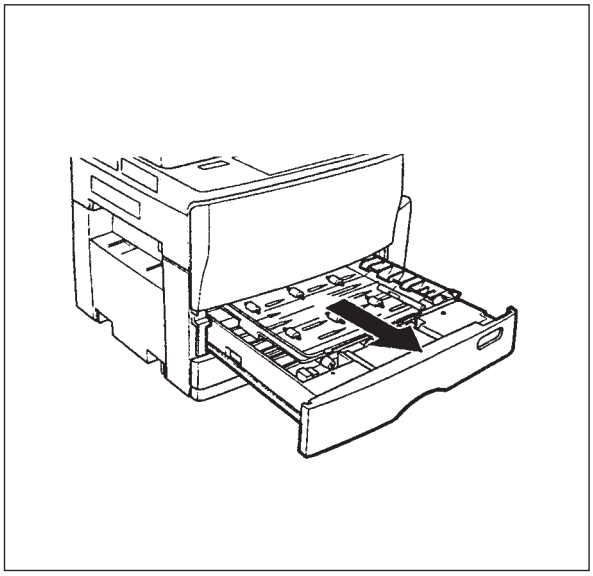

(6-2) Remove the packing parts.

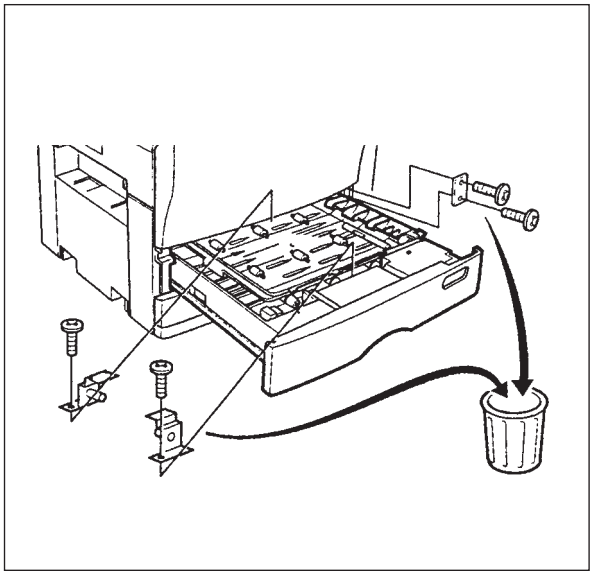

(6-3) Remove the packing material.

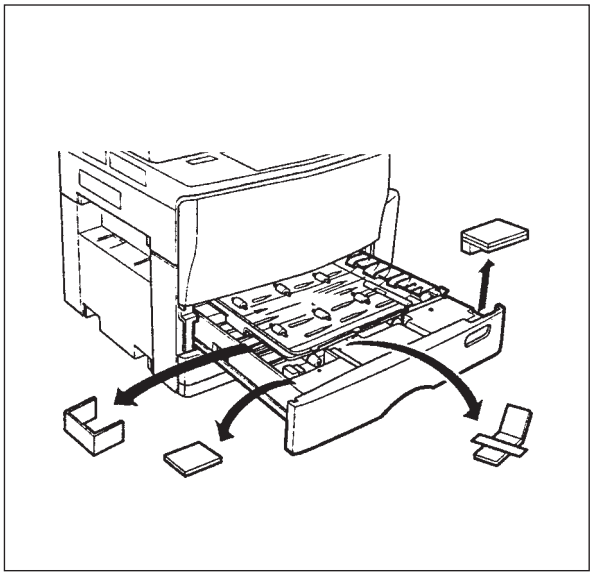

(6-4) Push the automatic duplexing unit into the body carefully.

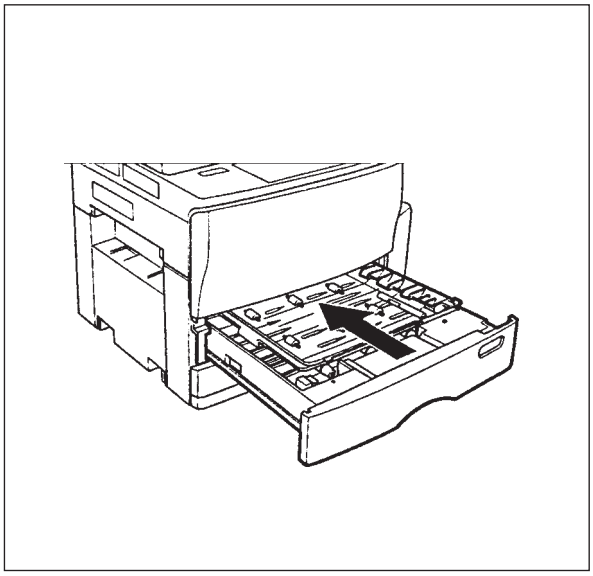

(7) Pull out the cassette.

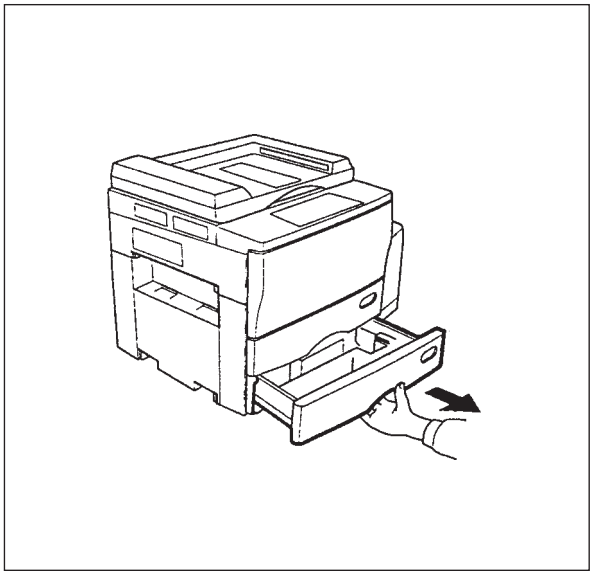

(8) Remove the packing materials and parts from inside of the cassette.

- Developer bottle 1 (19)
  Accessories vary according to the destination.
- Power cord 1 (24)

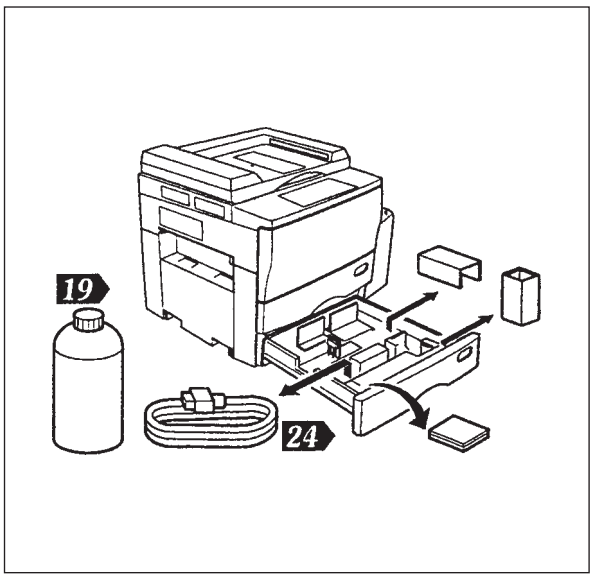

(9) Remove the paper from the package.

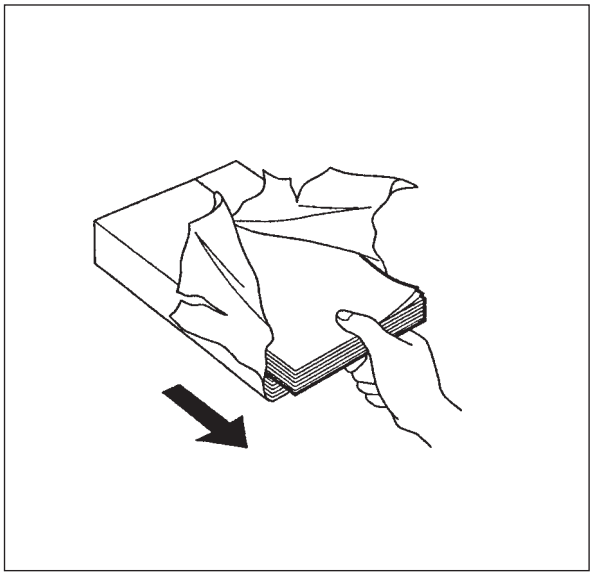

(10) Set the paper for each cassette.

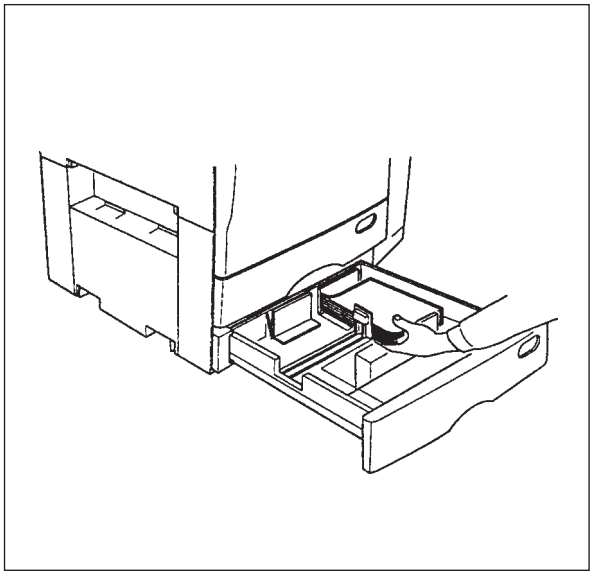

(11) Insert the cassette gently.

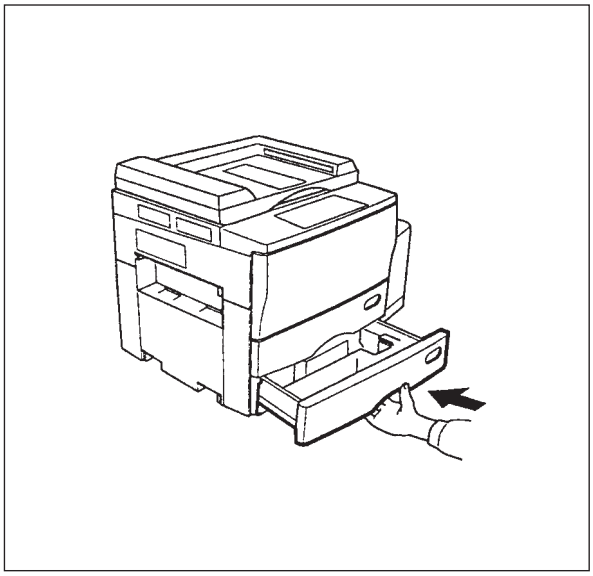

(12) Open the front cover.

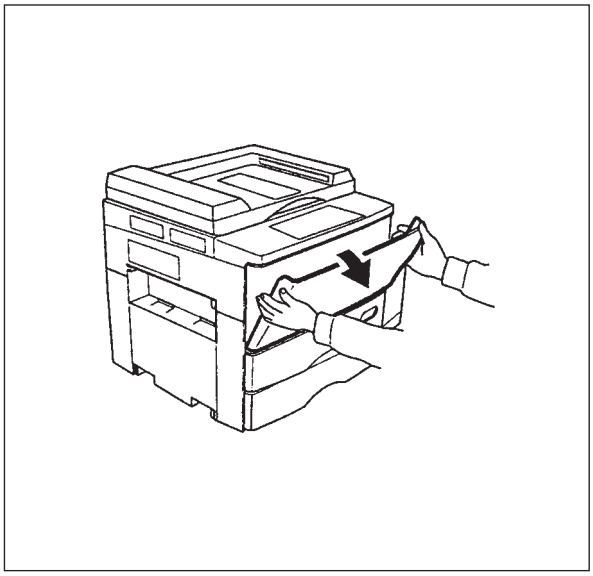

(13) Remove the packing screws (four).

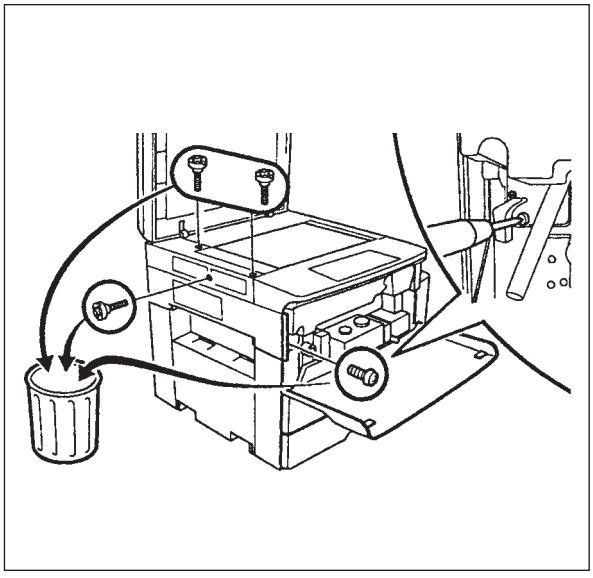

(14) Open the upper unit.

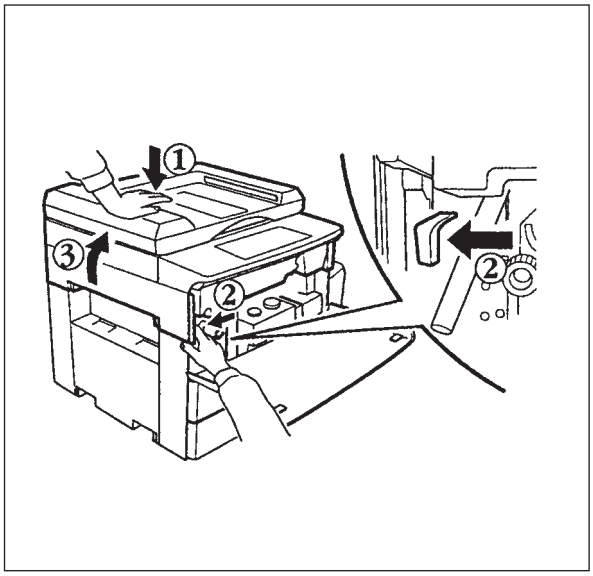

(15) Remove the pressure release bracket (2 pcs.) from the fuser unit.

- Remove the toner cartridge.
  Accessories vary according to the destination.

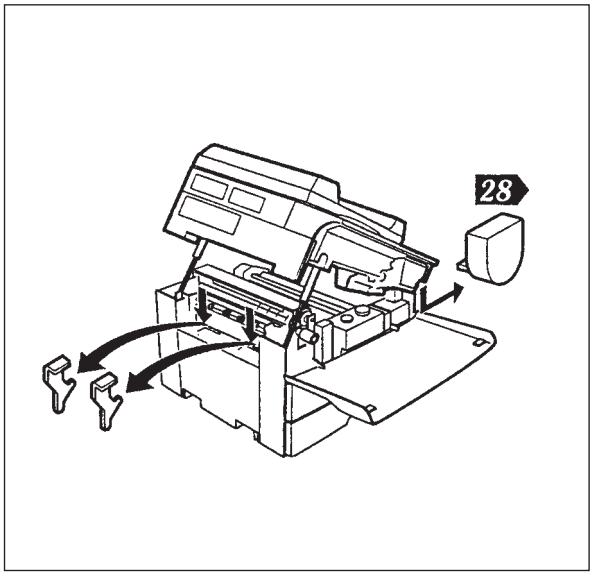

(16) Remove the screw (1) and connector (1), then the process unit.

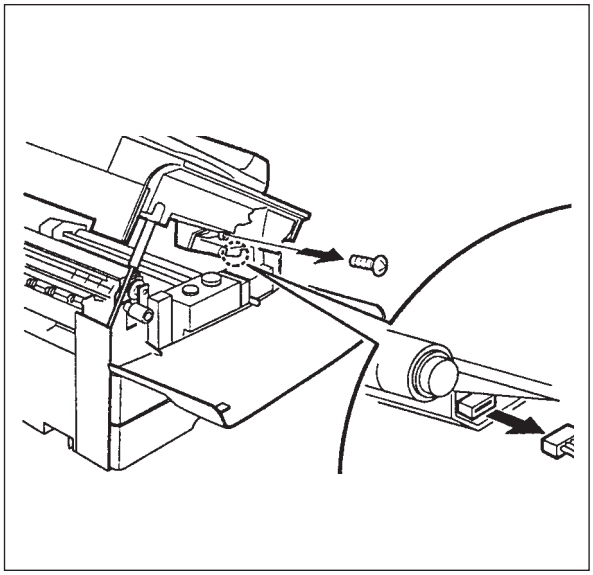

(17) Place the process unit on a flat surface. Raise the lever located on each side of the process unit in the direction of the arrow.

- Remove the developer unit from the process unit.

Note: If the photoconductor is exposed to fluorescent light or external light for long time, it may suffer from light-caused fatigue. So, be sure to cover the process unit with, for example, a suitable cloth.

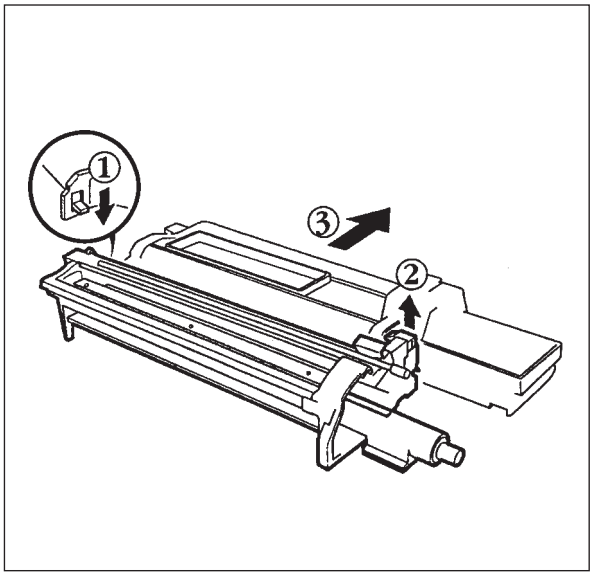

(18) Remove the top cover of the developer unit.

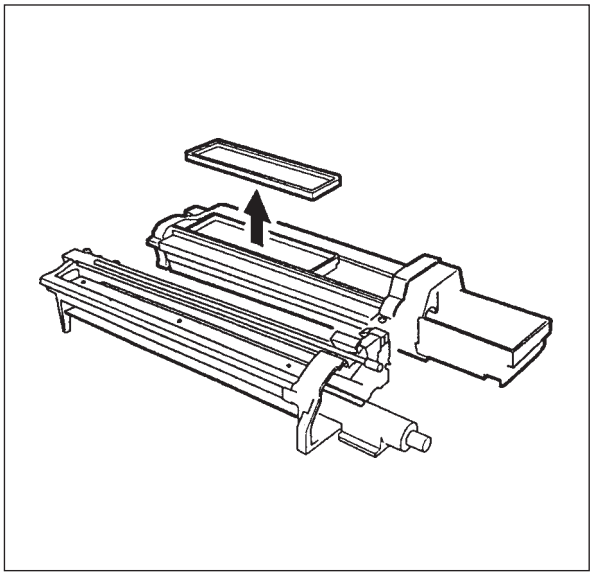

(19) Pour in the developer material.

Note: Before pouring in the developer material, be sure to shake the developer bottle fully.

By rotating the magnetic roller, check to make sure that the developer material is transported properly.

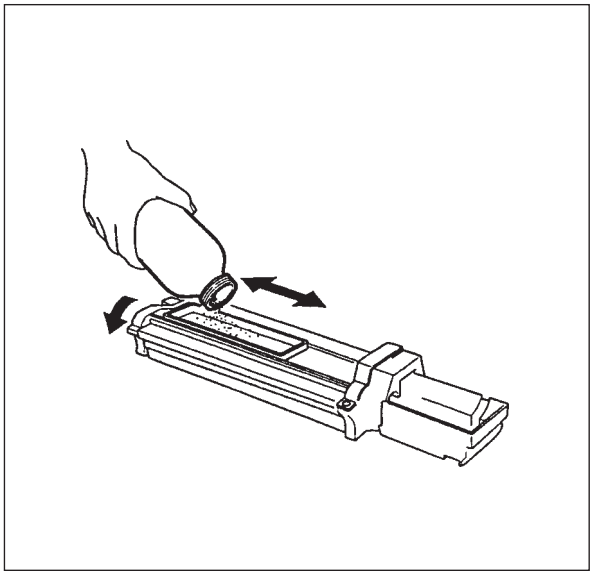

(20) Reinstall the top cover.
Be sure to install the top cover firmly.

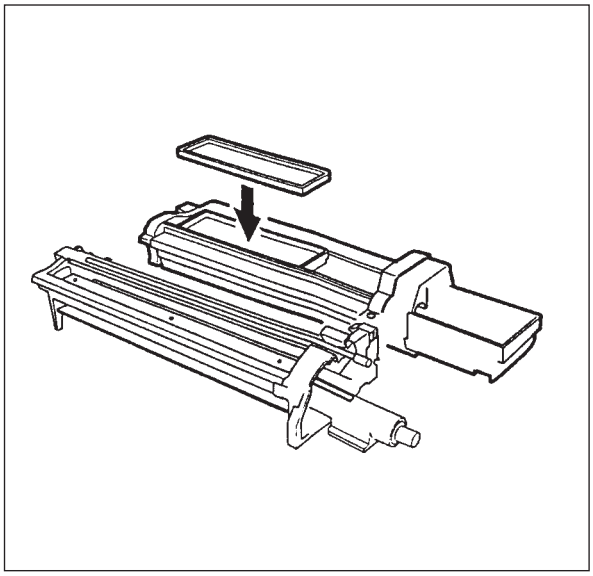

(21) After placing the developer unit in the process unit, move down the lever on each side to fix the developer unit.

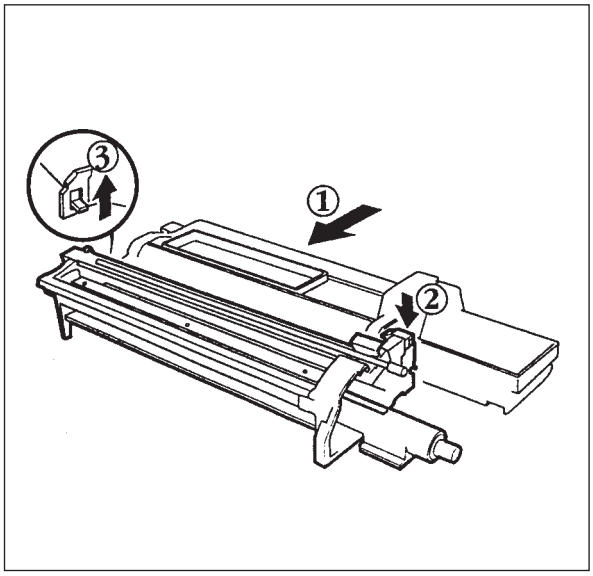

(22) Reinstall the process unit into the machine.
Reinstall the screw and connector.

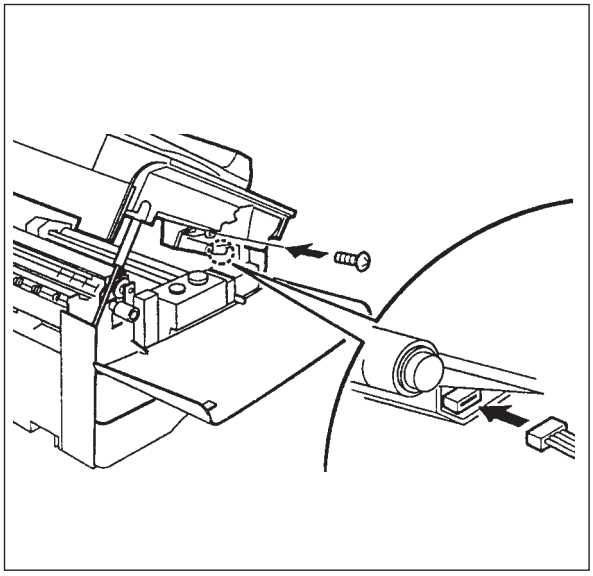

⚠WARNING

- Be careful not to catch your fingers between the two units when the upper unit is pressed down.

(23) Close the upper unit and the front cover.

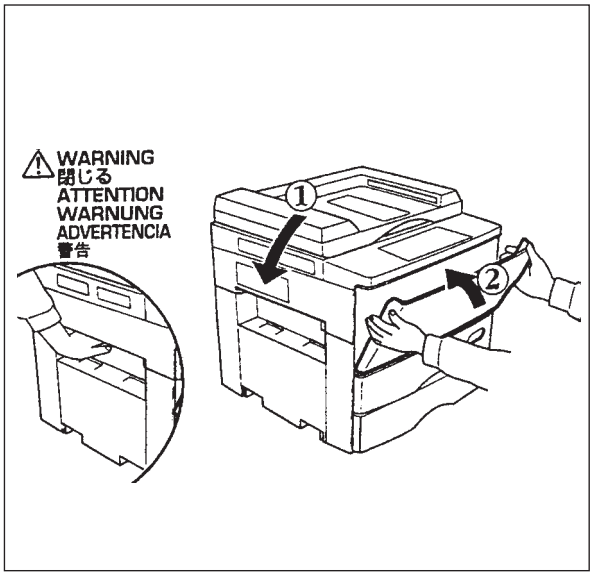

(24) Connect the power cable to the outlet.

- Install the operator's manual pocket.
- Connect the ADF's connector to the connector section marked "ADF".

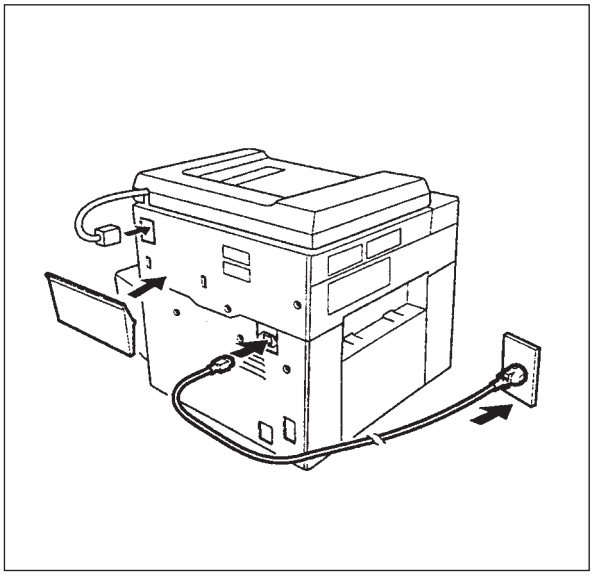

(25) Turn on the copier main switch.

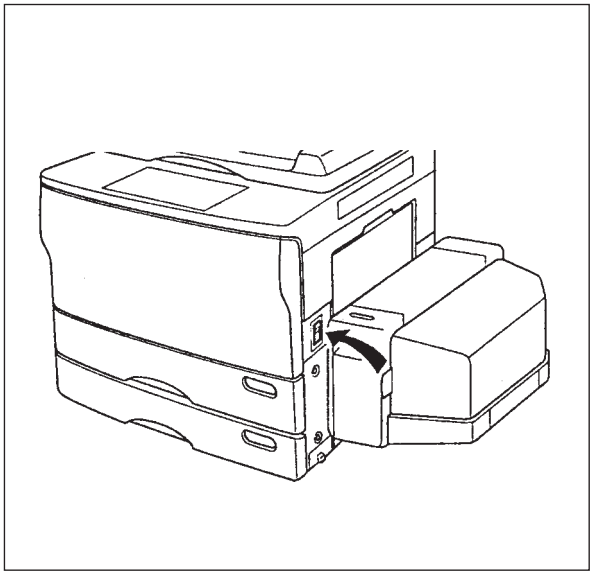

(26) Automatic adjustment of the auto-toner sensor

1. When the power switch is turned on, the auto-toner sensor is automatically adjusted by the following procedure.
2. “UA” is shown on the message display. The automatic adjustment of the auto-toner sensor starts.
3. The machine starts its operation. The value on the message display changes.
4. About 2 to 3 minutes later, the value on the message display stabilizes at 235~245.
5. The automatic adjustment of the auto-toner sensor is complete and “Install new cartridge” is shown on the message display.
   - If the adjustment has finished abnormally, the machine stops its operation and displays the CALL SERVICE. Then, for the subsequent adjustment of the auto-toner sensor, follow the procedure described in the Service Manual.

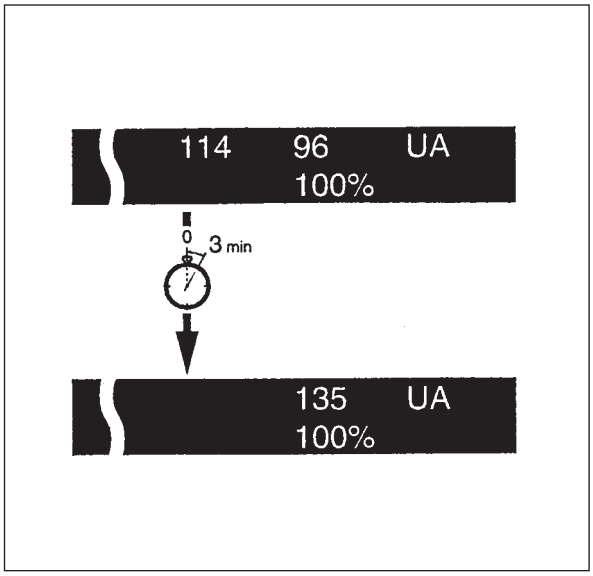

(27) **<Procedure for installing the toner cartridge>**

Open the front cover.

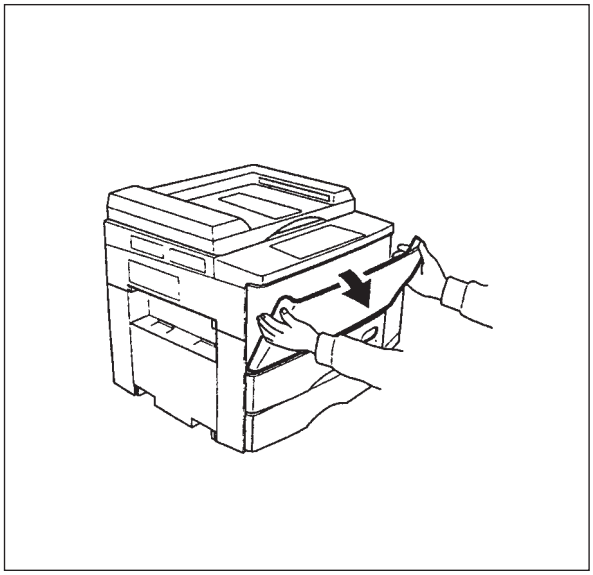

(28) Shake the new toner cartridge to the right and to the left 5 or 6 times to loosen the toner inside.

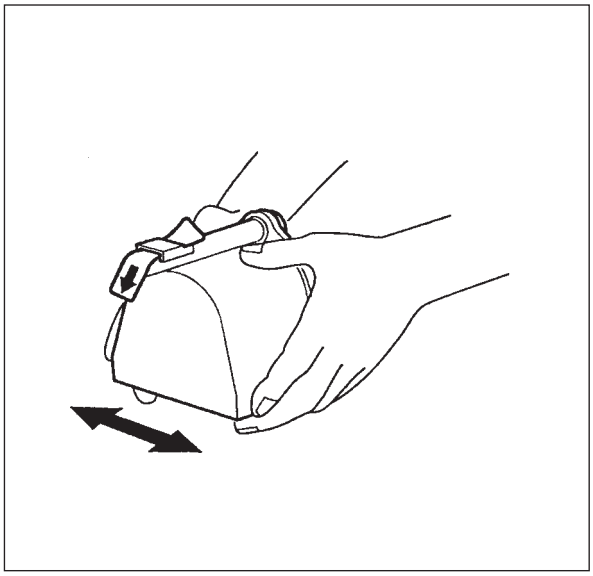

(29) Pull to remove the seal from the new toner cartridge.

- Do not shake the toner cartridge after removing the seal (the toner may spill).

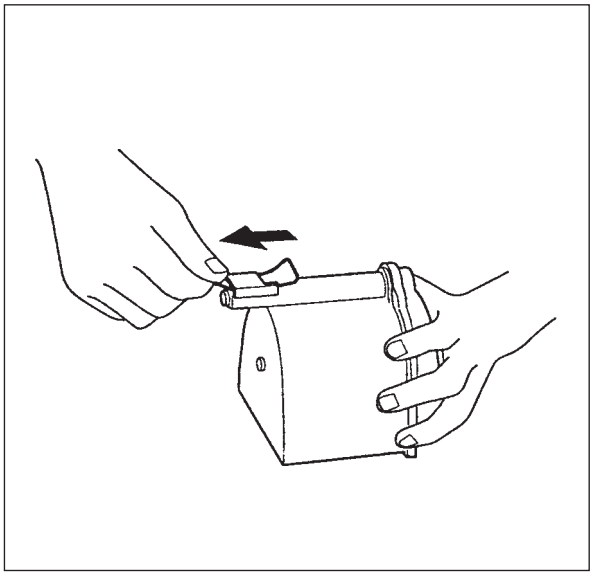

(30) Install the new toner cartridge in the machine.

- Push the toner cartridge fully in until it is locked securely.

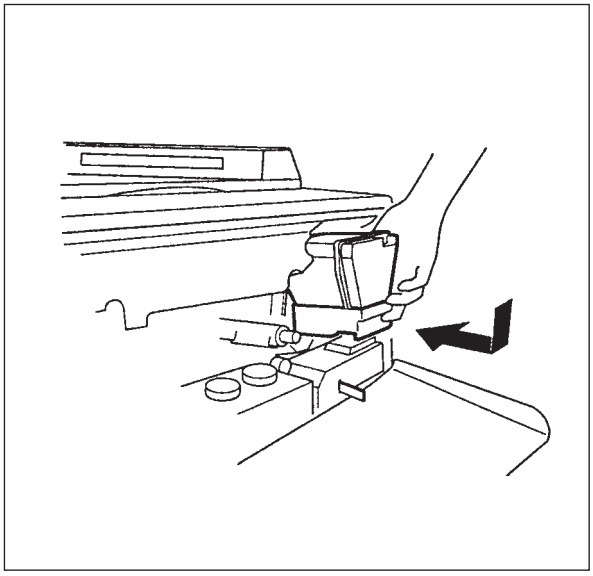

(31) Close the front cover.

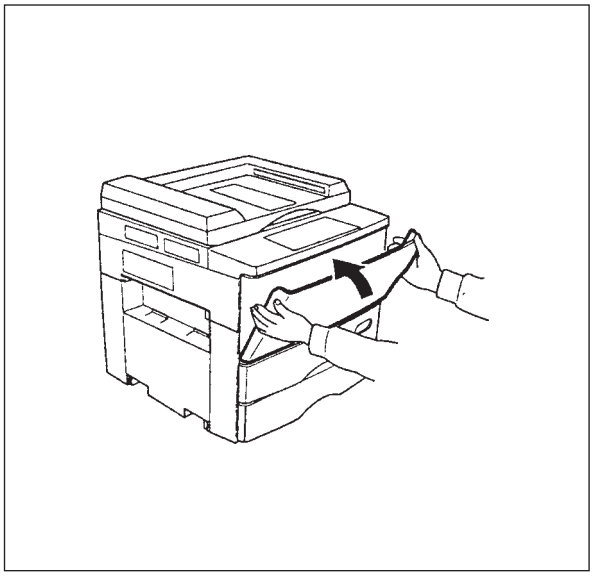

(32) Install the 4 plastic covers to the outer covers.
- The copy receiving tray should be installed in the slots in the exit cover.

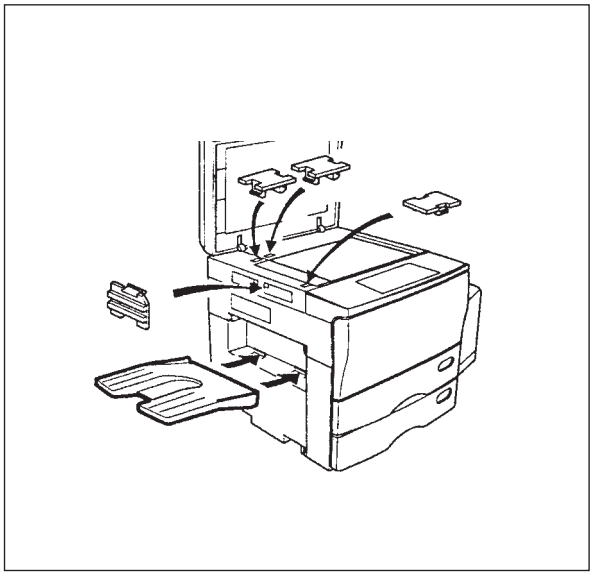

(33) Unpacking the accessory package.
- Original feed tray 1 (34)
- Screw (M4 × 6) (silver) 2 (35)

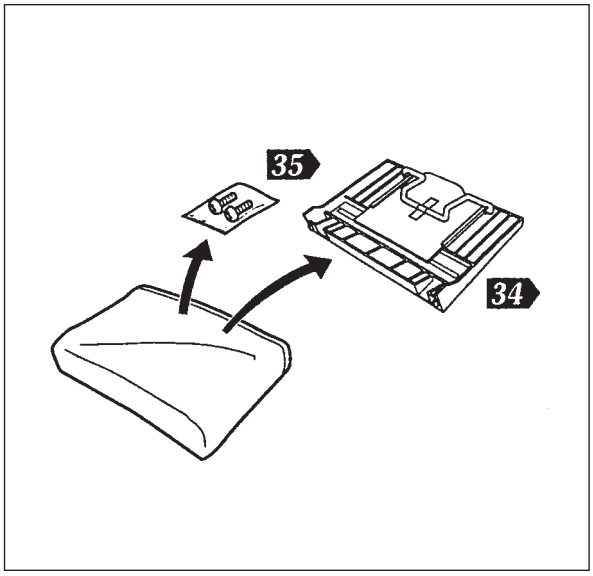

(34) Remove tape.

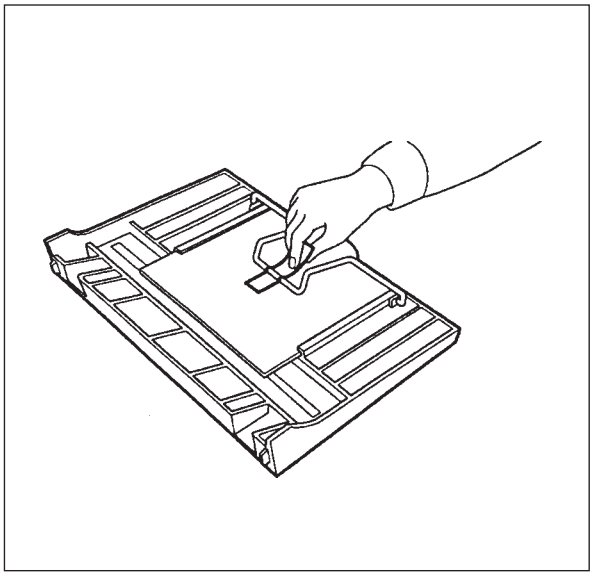

(35) Fix the original feed tray temporally by screw (M4 × 6, silver, 2)

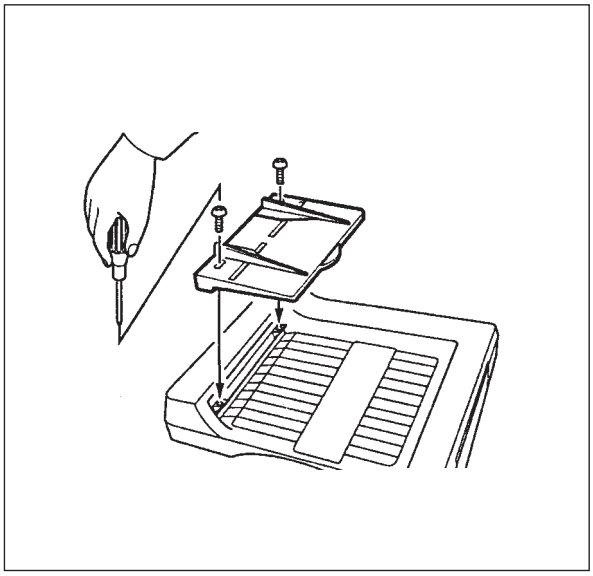

(36) Adjust the original feed tray.

- Prepare an A4 (or Letter) sized test original by drawing a line in the center of the sheet, as shown.
- Place the test original ① face up in the tray. Adjust the side guides to the edges of the original.
- Press PRINT to make a copy. Fold the copy in half to check that the center line is copied in the center of the sheet.
  If not, loosen the two screws and adjust the position of the original feed tray. Repeat the procedure until the center line on the copy is in the fold. After the adjustment, tighten the two screws of the original feed tray.

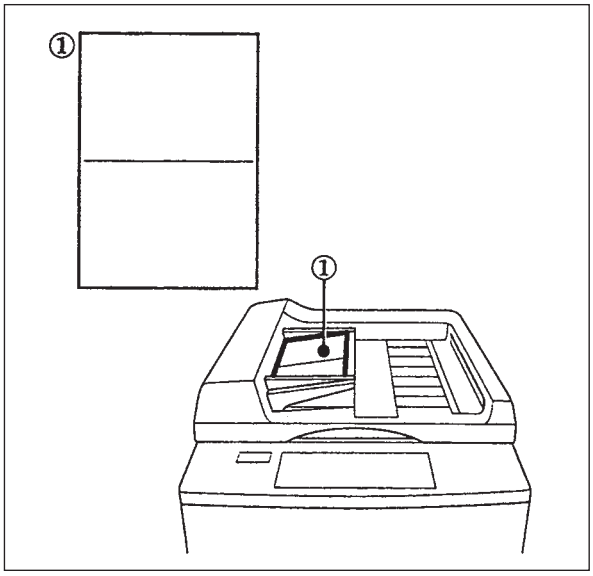

(37) Put the original on the glass.

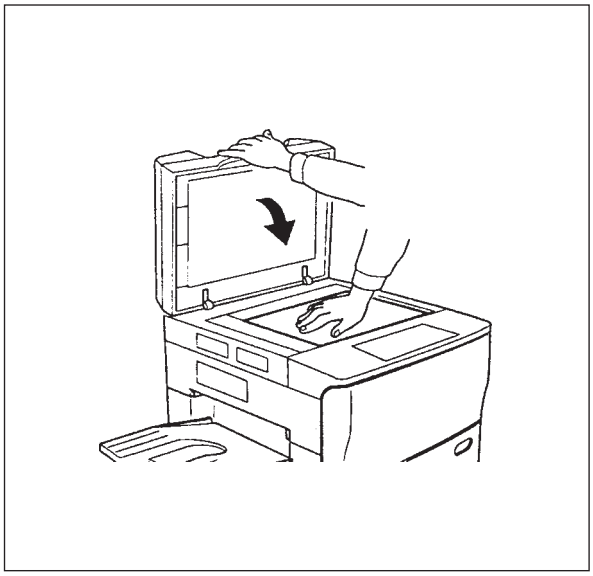

<Final Check>

(38) Making copies from the cassette and the bypass, check the following.

- Paper feeding from the cassette is correct.
- Paper feeding from the bypass feed guide is correct.
- Automatic duplexer operation is correct (if ADU is installed).
- Light distribution is correct.
- Fixing and cleaning are correct.
- Exposure level is correct.
- Control panel displays and key operation are correct.
  - * Basic operations
  - * Special features
  - – Automatic paper selection (APS), Automatic magnification selection (AMS)
  - – Duplex mode (if ADU is installed)
  - – Enlarging and reducing modes
  - – Interrupting mode
  - – Dual-page copying
  - – Edge erase copying
  - – User set
  - – Image shifting
  - – Copy-mode memory

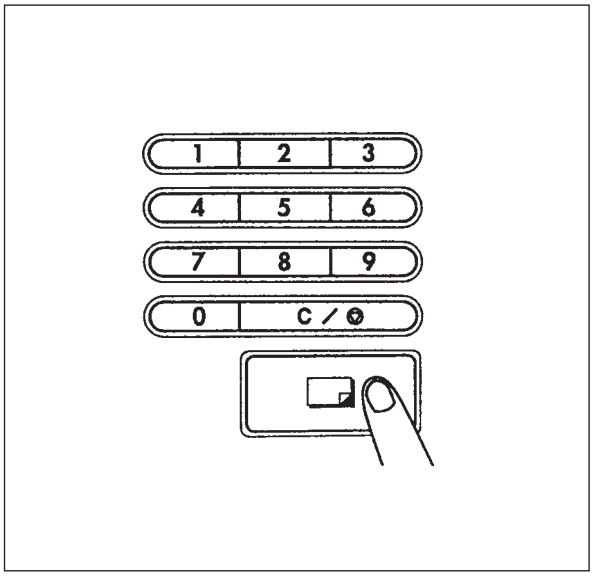

Note: The packing material should be disposed of properly.

17.3 Key Copy Counter MU-8/MU-10

To install the key copy counter, the following parts are required:

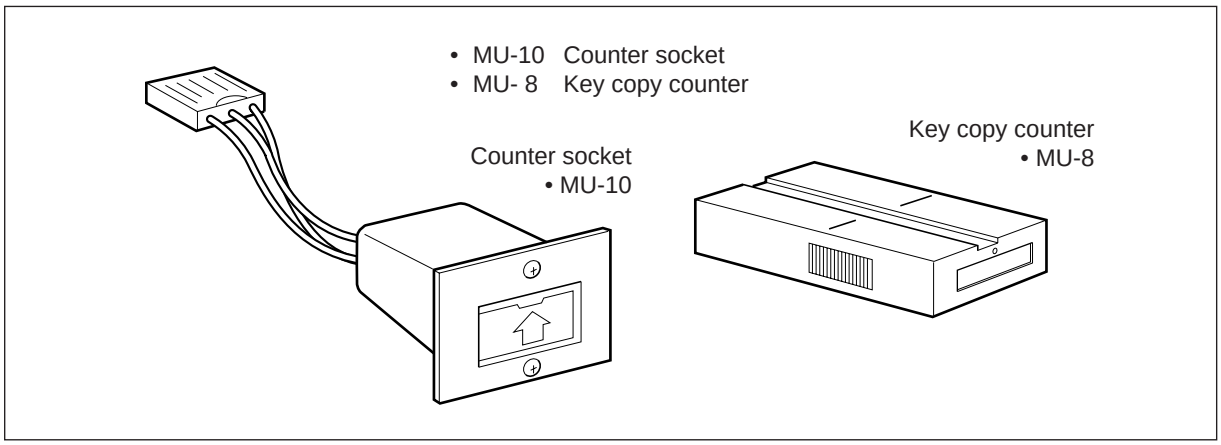

(1) Remove the upper feed cover.
Cut the window for the counter.

(2) Remove the blind plate (1 screw) for the 200V machine.

(3) Pull out the harness connector from the opening in the machine frame.
Disconnect the short connector from the harness.

Note: Remove the rear cover if the harness connector is in the back etc.

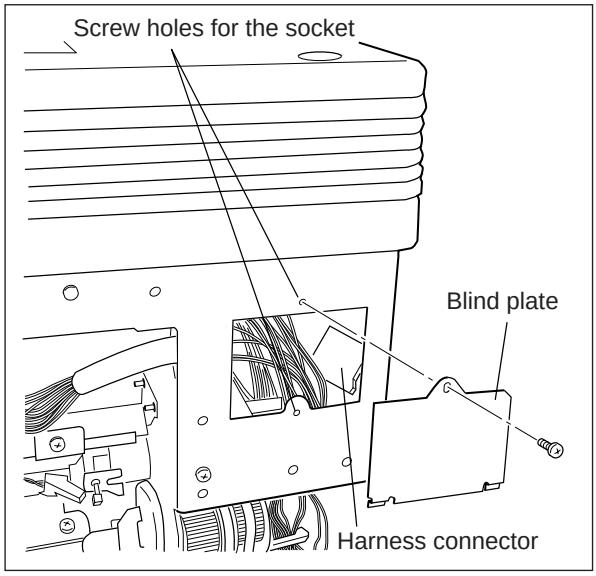

(4) Insert the socket connector into the harness connector.
(5) Install the counter socket to the frame (2 M3 screws).
(6) Reinstall the upper feed cover.

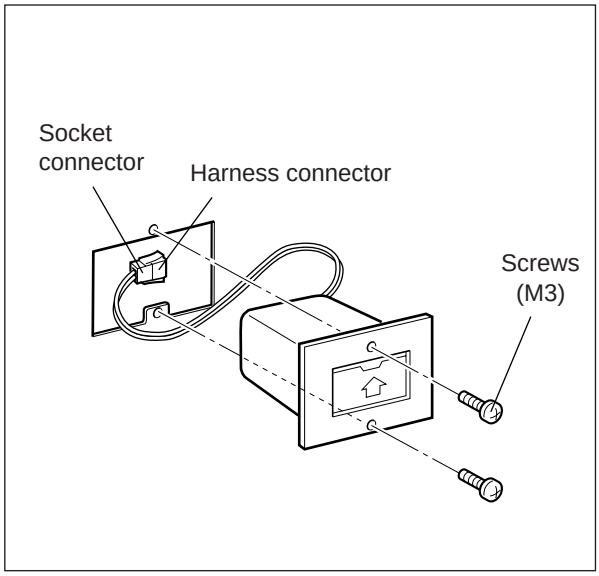

(7) Insert the key copy counter with its arrow mark facing up as shown.

