TOSHIBA

SERVICE MANUAL
PLAIN PAPER COPIER
4560/70



Click the Page Only button to close the overview area of the window.

Click the Bookmarks and Page button to open the Contents and display bookmarks created for the document. Click a bookmark's name to go to the Page marked by that bookmark.

Click the Thumbnails and Page button to open the overview area and display thumbnail images of each document page. Click a thumbnail to go to the page marked by that thumbnail.

Copyright TOSHIBA CORPORATION 1995
ALL RIGHTS RESERVED

GENERAL PRECAUTIONS REGARDING THE INSTALLATION AND SERVICE FOR THE COPIER 4560/4570

The installation and service should be done by a qualified service technician.

1. Transportation/Installation

- When transporting/installing the copier, use two persons and be sure to use the positions as indicated below.

  The copier is fairly heavy and weighs approximately 95kg (210lb), therefore pay full attention when handling it.

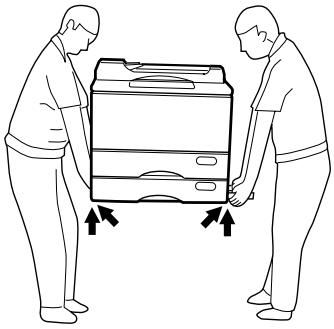

2. Installation

- Be sure to use a dedicated outlet with AC 115V/15A (220V, 230V, 240V/10A) or more for its power source.
- The copier must be grounded for safety.

  Never ground it to a gas pipe or a water pipe.
- Select a suitable place for installation.

  Avoid excessive heat, high humidity, dust, vibration and direct sunlight.
- Also provide proper ventilation as the copier emits a slight amount of ozone.
- To insure adequate working space for the copying operation, keep a minimum clearance of 80 cm (32") on the left, 80 cm (32") on the right and 10 cm (4") in the rear.
- After having installed the copier, be sure to push the carrying handles into the copier and fasten them with screws.

3. Service of Machines

- Basically, be sure to turn the main switch off and unplug the power cord during service.
- Be sure not to touch high-temperature sections such as the exposure lamp, the fuser unit, the damp heater and their periphery.
- Be sure not to touch high-voltage sections such as the chargers and the high-voltage transformer.
- Be sure not to touch rotating/operating sections such as gears, belts, pulleys, etc.
- When servicing the machines with the main switch turned on, be sure not to touch live sections such as the lamp terminal, etc. and rotating/operating sections.
- Use suitable measuring instruments and tools.

4. **Main Service Parts for Safety**
   - The breaker, door switch, fuse, thermostat, thermofuse, thermistor, etc. are particularly important for safety. Be sure to handle/install them properly.

5. **Cautionary Labels**
   - During servicing be sure to check the rating plate and the cautionary labels such as “Unplug the power cord during service”, “Hot area” etc. to see if there is any dirt on their surface or whether they are properly stuck to the copier.

6. **Disposition of Consumable Parts/Packing Materials**
   - Regarding the recovery and disposal of the copier, supplies, consumable parts and packing materials, it is recommended to follow the relevant local regulations or rules.

7. **When parts are disassembled, reassembly is basically the reverse of disassembly unless otherwise noted in this manual or other related documents. Be careful not to reassemble small parts such as screws, washers, pins, E-rings, toothed washers in the wrong places.**

8. **Basically, the machine should not be operated with any parts removed or disassembled.**

9. **Precautions Against Static Electricity**
   - The PC board must be stored in an anti-electrostatic bag and handled carefully using a wristband, because the ICs on it may become damaged due to static electricity.

     Caution: Before using the wrist band, pull out the power cord plug of the copier and make sure that there is no uninsulated charged objects in the vicinity.

1. SPECIFICATIONS • ACCESSORIES • OPTIONS • SUPPLIES

1.1 Specifications

Copy process		Indirect electrophotographic process (dry)
Type		Desk top (console when the pedestal is used)
Exposure Type		Slit exposure with fixed table
Acceptable originals	Kind	Sheets, books, and 3-dimensional objects. When the document feeder is used: Sheet originals only (60 g/m^2~90 g/m^2) (16 lb.~24 lb.)
	Maximum size	A3 (Ledger)

Copy paper				
	Cassette	Duplexing	Manual	Note
Size	A3~A5-R		A3~A6-R	Adjustable to
	(Ledger~Statement-R)			Unfixed, Arbitary sizes
Thickness (Weight)	64~80 (17~22)		64~130 (17~34)	Unit: g/m^2 (Unit: lb.)
Special paper	–	–	OHP film etc.	Toshiba recommended

Copy speed

Paper size	Cassette	Manual	LCF	
A4, B5, A5-R LT, ST-R	45	40	45	CPM
A4-R, B5-R LT-R	34	34	—	
B4, FOLIO LG, Computer	29	29	—	
A3 LD	24	24	—	
Reduction/ Enlargement	23	23	23	

Manual feeding represents the value when the size is set.

System copy speed (BLI format)

Mode		CPM
Original → Copy	Number of copies	
1 → 1	1 set	36
	3 set	42
	5 set	43
1 → 2	1 set	13
	3 set	25
	5 set	30
2 → 2	1 set	10
	3 set	21
	5 set	27
2 → 1	1 set	18
	3 set	30
	5 set	35

*Ten originals (A4) are set in the RADF. This includes the first copy time.

First copy	Approx. 3.3sec. (Actual-size A4 or Letter from large capacity feeder)
Warm-up time	Approx. 240sec.
Multiple copying	1~999, keyboard entry
Reproduction ratio	
Actual ratio	100% or 101% (Setting mode)
Zoom ratio	50~200% (Multiple reduction and enlargement in 1% steps)

Paper supply	Automatic feeding: Upper deck: Automatic duplexing unit (ADU) Lower deck: Front loading cassette (600 sheets) Manual feeding: 50 sheets
Toner supply	Automatic density detection and replenishment Toner cartridge replacement
Exposure	Automatic control and manually selectable (9 steps)
Weight	Copier: 95kg
Power source	115 V ~ 60 Hz, 12A For the U.S.A. and Canada 220-240 V ~ 50/60 Hz, 8A For Europe
Power consumption	1.5 kW (115 V), 1.7 kW (220 V/240 V)
Counter	7-digit total counter

Machine size

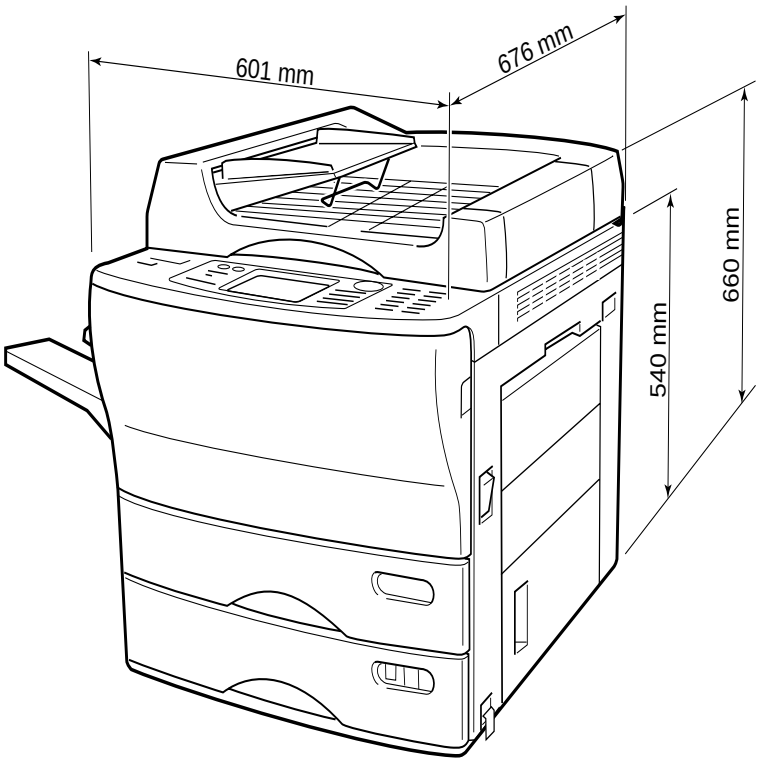

1.2 Accessories

Copy receiving tray	:	1 pc.
Operator's manual	:	1 pc.
Set-up report	:	1 pc.
Drum	:	1 pc.
Developer	:	1 bottle
Toner	:	1 pc.

*Accessories vary according to the destination.

1.3 Options

Paper feed pedestal: PFP	KD-1003A (1 cassette), KD-2009A (2 cassettes)
Paper feed unit (cassette modular unit)	MY-1006
Large capacity feeder: LCF	MP-1501 MP-4001
Sorter	MG-2009A (20 bins, hanging type) MG-2010 (20 bins, stapler) MG-2012 (20 bins, stapler, hanging type) MG-2015 (20 bins, multi position stapler)
Sorter kit	KN-2060S02 (For MG-2009A) KN-3560S01 (For MG-2012)
Sorter staple cartridge	STAPLE-400 (For MG-2010, 12) STAPLE-700 (For MG-2015)
Work tray	KK-2060
Key copy counter	MU-8/MU-10 (6 digit)

*Options vary according to the destination.

1.4 Supplies

Drum	OD-4560
Developer	D-4560
Toner	T-3560

2. OUTLINE OF THE MACHINE

2.1 Sectional Views and Electrical Parts Location Diagram

2.1.1 Sectional view

[A] Front view

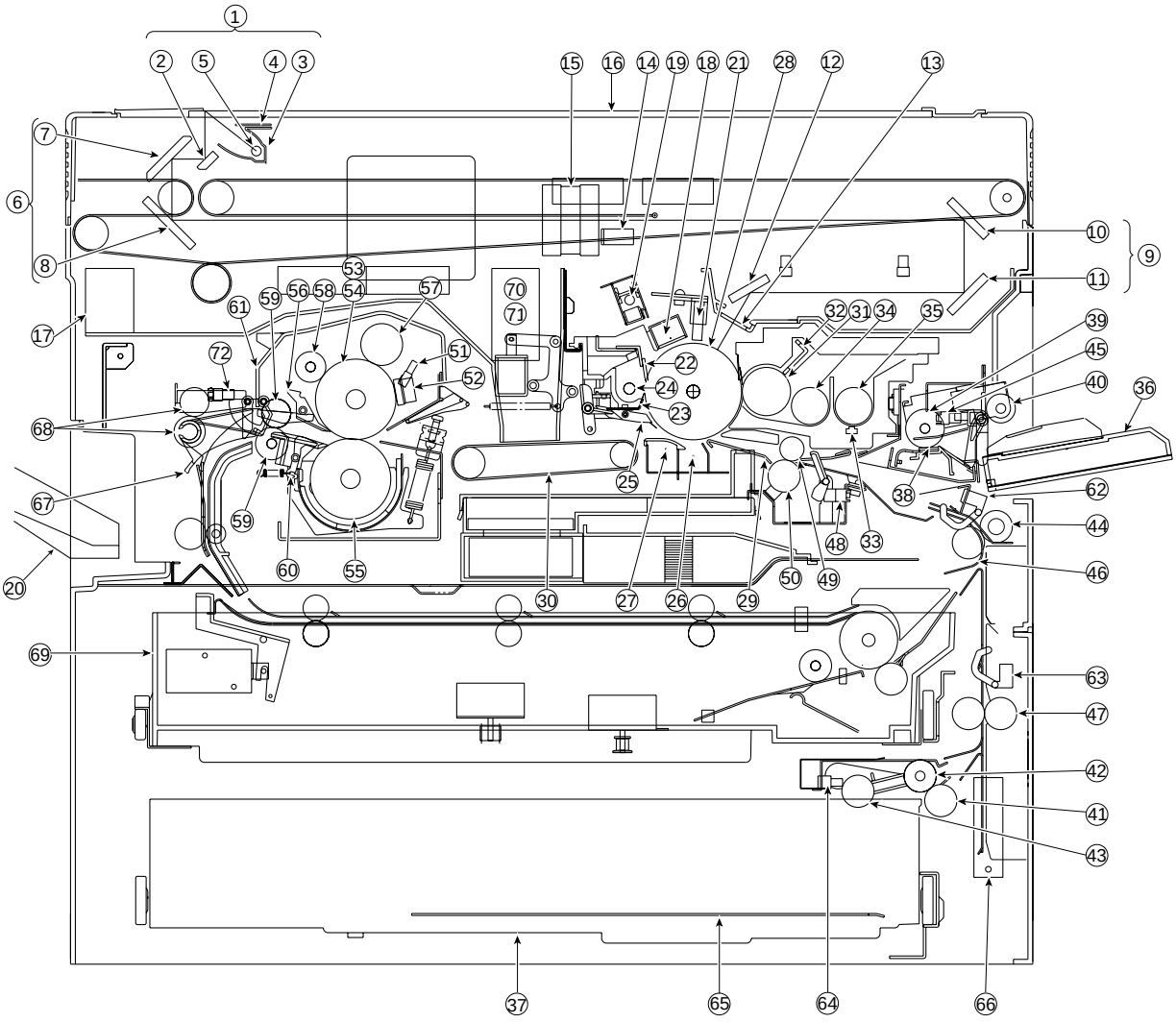

Front view (For details of the ADU and RADF, refer to chapter 13, ADU and chapter 18,RADF .)

No.	Name	No.	Name
1	Carriage 1	37	Cassette
2	Mirror 1	38	Manual feed separation pad
3	Reflector	39	Manual feed roller
4	Light distribution adjustment plates	40	Manual pickup roller
5	Exposure lamp	41	Cassette separation roller
6	Carriage 2	42	Cassette feed roller
7	Mirror 2	43	Cassette pickup roller
8	Mirror 3	44	Upper transport roller
9	Mirror unit	45	Manual feed switch (S6)
10	Mirror 4	46	Paper guide
11	Mirror 5	47	Lower transport roller
12	Mirror 6	48	Aligning switch (S8)
13	Slit glass	49	Aligning roller (U)
14	Auto exposure sensor	50	Aligning roller (L)
15	Lens	51	Thermistor-2 (THMS2)
16	Original glass	52	Thermostat (THERMO)
17	Ozone filter	53	Heater lamp
18	Main charger	54	Heat roller (upper side)
19	Discharge lamp	55	Pressure roller (lower side)
20	Receiving tray	56	Separation claw (for heat roller)
21	LED eraser array	57	Cleaning roller
22	Main blade	58	Cleaning felt roller
23	Recovery blade	59	Fuser exit roller
24	Toner recovery auger	60	Separation claw
25	Separation claw (for drum)	61	Fuser cover
26	Transfer charger	62	Paper stop switch-1 (S7)
27	Separation charger	63	Paper stop switch-2 (S16)
28	Drum	64	Paper-empty switch-2 (S14)
29	Bias guide	65	Cassette tray
30	Transport belt	66	Cassette size switch-2 (S15)
31	Magnetic roller	67	Exit/ADU selection gate
32	Leveller (doctor)	68	Exit roller
33	Auto-toner sensor	69	ADU
34	Mixer 1	70	Exit fan-1 (M7)
35	Mixer 2	71	Exit fan-2 (M15)
36	Sheet bypass guide	72	Exit switch (S9)

[B] Rear side view

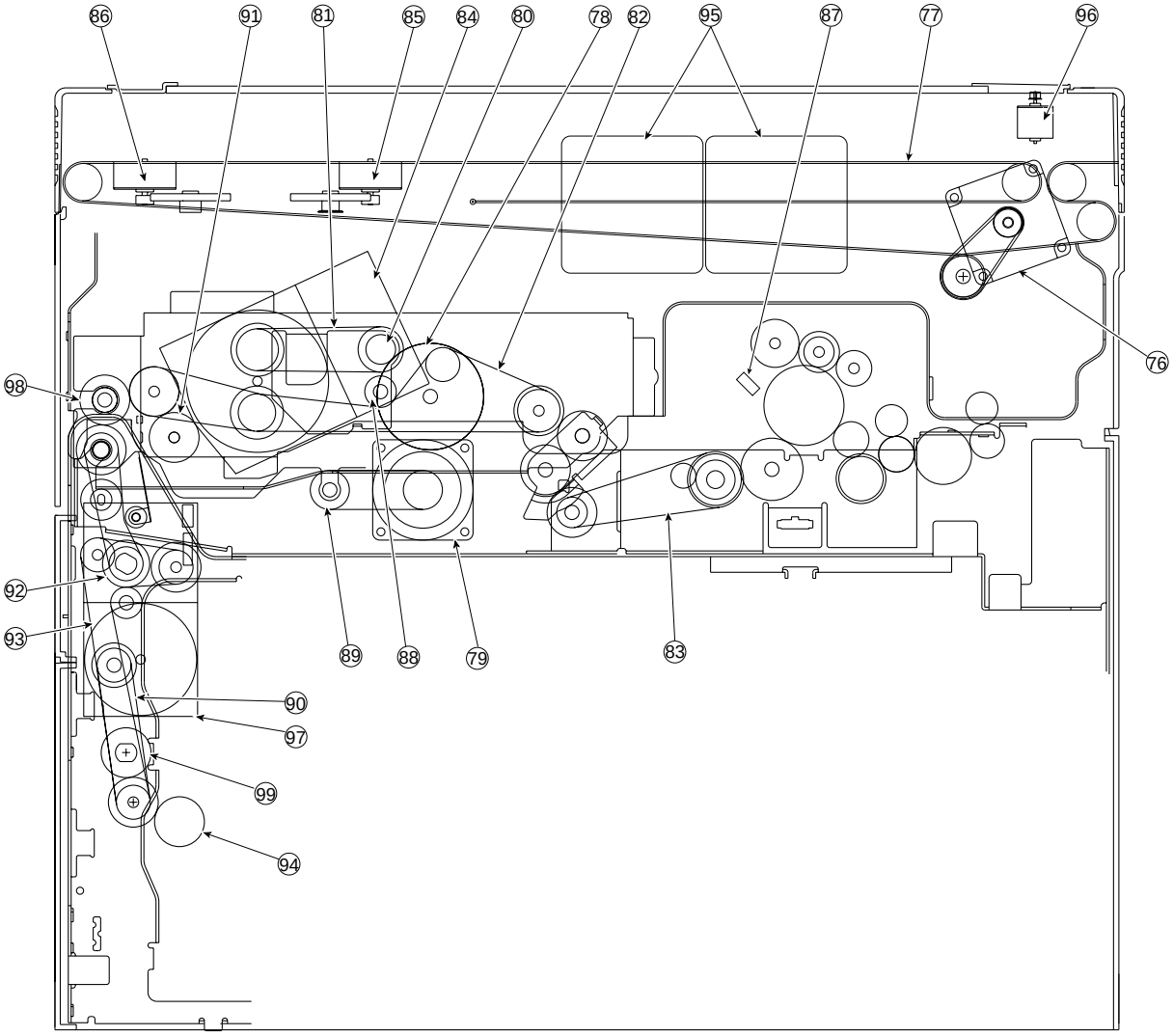

No.	Name
76	Scanning motor (M2)
77	Carriage drive wire
78	Drum gear
79	Aligning motor (M17)
80	Drum driving gear
81	Drum belt
82	Belt-1 for fuser drive
83	Belt-2 for fuser drive
84	Main motor (M1)
85	Lens motor (M3)
86	Mirror motor (M4)
87	Thermistor-1 (THMS1)
88	Developer unit drive gear
89	Aligning roller
90	Paper feed belt
91	Manual feed clutch (CLT4)
92	Transport roller clutch (CLT6)
93	Transport roller drive belt
94	Cassette feed clutch (CLT3, 5)
95	Optical fan (M6,12, 18)
96	Document motor (M11)
97	Transport motor (M16)
98	Transport roller clutch (CLT7)
99	Transport roller clutch (CLT1)

2.1.2 Electrical parts layout

[A] DC electrical parts (except motors)

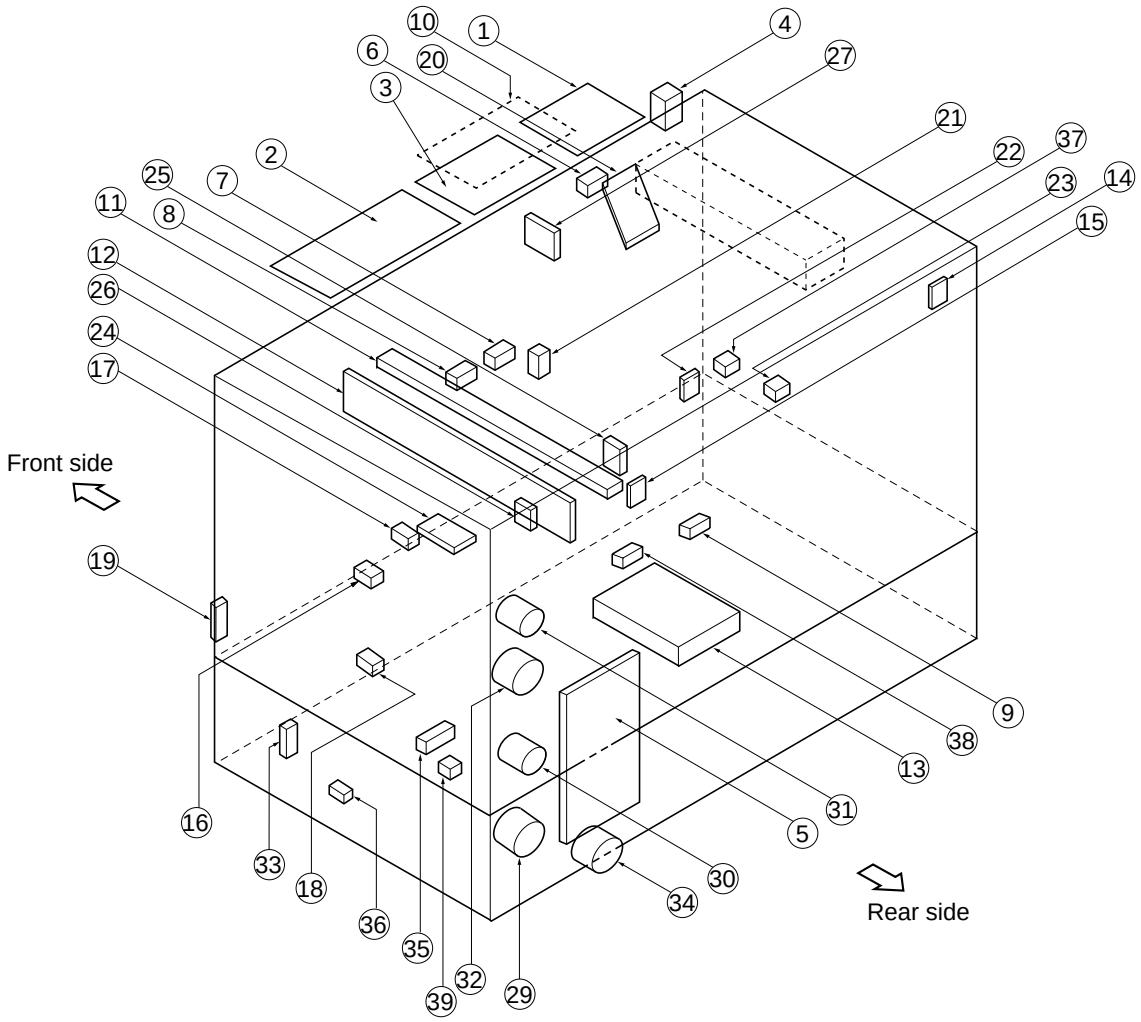

No.	Name	No.	Name
1	Control panel key PC board (PWA-KEY2)	20	Auto paper sensor-1 (APS-3B)
2	Key PC board (PWA-KEY1)	21	Drum separation claw solenoid (SCRP-SOL) (SOL1)
3	Liquid crystal module (LCD)	22	Exit switch (EXIT-SW) (S9)
4	Total counter (T-CTR)	23	Heat-roller thermistor 1 (THMS1-HTR)
5	Logic PC board (PWA-LGC)	24	Toner sensor (TNR-ATC)
6	Auto paper sensor-2 (APS-R)	25	Lens switch (LNS-SW) (S11)
7	Auto paper sensor-3 (APS-C)	26	Mirror switch (MRR-SW) (S12)
8	Auto paper sensor-4 (APS-F)	27	Automatic exposure PC board (PWA-AES)
9	Toner-full switch (T-FUL-SW) (S13)	29	Transport-roller clutch (RGT1-CLT) (CLT1)
10	Control panel PC board (PWA-PNL)	30	Transport-roller clutch (RGT2-CLT) (CLT6)
11	Discharge lamp PC board (PWA-ERS)	31	Transport-roller clutch (RGT3-CLT) (CLT7)
12	LED eraser array PC board (K-DCH)	32	Manual-feed roller clutch (MFED-CLT) (CLT4)
13	High-voltage power supply (PS-HVT)	33	Size switch 2 (SIZE2-SW) (S15)
14	Home switch (HOME-SW) (S10)	34	Feed-roller clutch 2 (FED2-CLT) (CLT5)
15	Platen switch (PTN-SW) (S27)	35	Paper-empty switch 2 (EMP2-SW) (S14)
16	Manual feed switch (M-FED-SW) (S6)	36	Paper stop switch 2 (PSTP2-SW) (S16)
17	Aligning switch (PSTPO-SW) (S8)	37	Heat-roller thermistor-2 (THMS2-HTR)
18	Paper stop switch 1 (PSTP1-SW) (S7)	38	Drum thermistor (DRM-THMS)
19	Side door switch (U-COV-SW) (S4)	39	Tray-up switch (T-UP2-SW) (S29)

[B] DC electrical parts (motors)

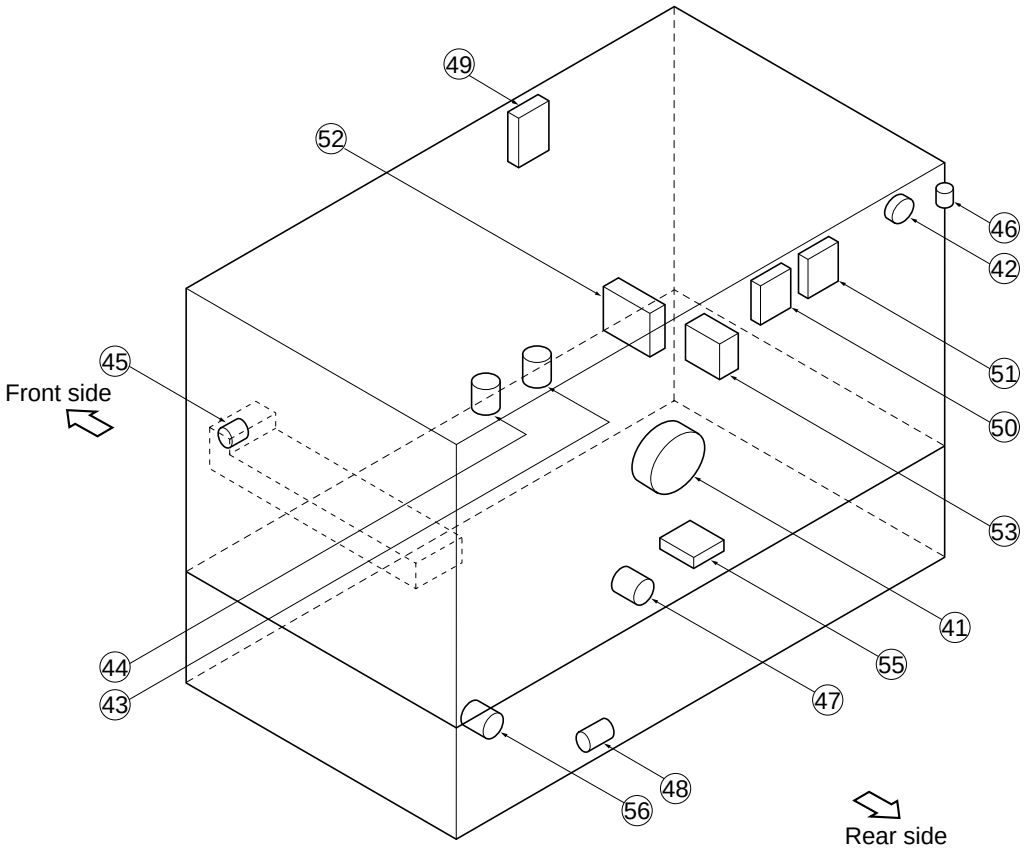

No.	Name	No.	Name
41	Main motor (MAIN-MOT) (M1)	49	Optical fan-F (OPT-FAN-F) (M12)
42	Scanning motor (SCN-MOT) (M2)	50	Optical fan-R1 (OPT1-FAN-R) (M6)
43	Lens motor (LNS-MOT) (M3)	51	Optical fan-R2 (OPT2-FAN-R) (M18)
44	Mirror motor (MRR-MOT) (M4)	52	Exit fan (EXIT1-FAN) (M15)
45	Toner motor (TNR-MOT) (M9)	53	Exit fan (EXIT2-FAN) (M7)
46	Document motor (DCM-MOT) (M11)	55	Developer unit fan (DEV-FAN) (M19)
47	Aligning motor (RGT-MOT) (M17)	56	Transport motor (FEED-MOT) (M16)
48	Tray-up motor-2 (T-UP2-MOT) (M14)		

[C] AC electrical parts

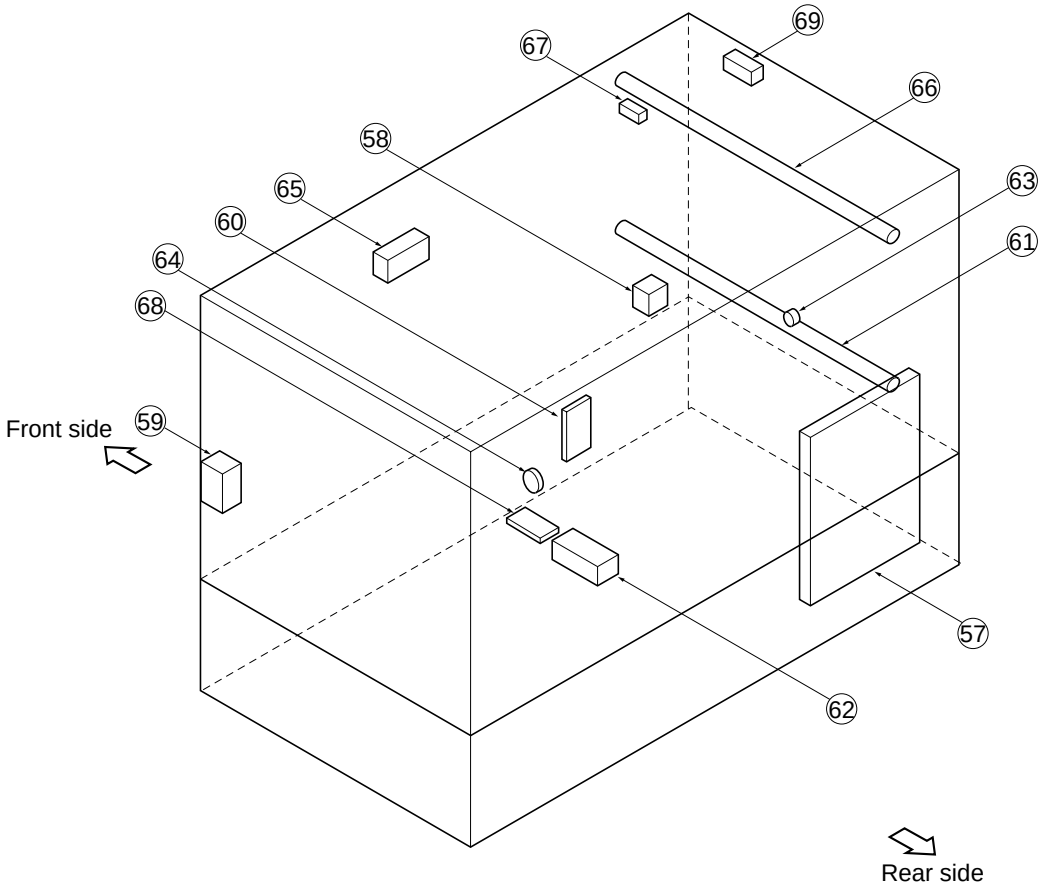

No.	Name	No.	Name
57	SW power supply (PS-ACC)	64	Thermostat (Option)
58	Door switch (DOOR-SW) (S2)	65	Damp heater U1 (D-HTR-U1) (Option)
59	Main switch (MAIN-SW) (S1)	66	Exposure lamp (EXPO-LAMP)
60	Lamp regulator PC board (PWA-LRG)	67	Thermofuse (FU-EXPO)
61	Heater lamp (HTR-LAMP)	68	Fuse PC board (PWA-FUS) (Option)
62	Damp heater L (D-HTR-L) (Option)	69	Damp heater U2 (D-HTR-U2) (Option)
63	Thermostat (K-THERMO)		

2.2 Symbol and Function of Electrical Parts

(1) Motors

Symbol	Code name	Function	Remarks	Parts list	
				Page	Item
M1	MAIN-MOT (Main motor)	Drives the drum, developer, heat roller and transport belt	IC motor	10	37
M2	SCN-MOT (Scanning motor)	Scans the optical system	Pulse motor	5	23
M3	LNS-MOT (Lens motor)	Drives the lens unit	Pulse motor	11	23
M4	MRR-MOT (Mirror motor)	Drives the mirror unit	Pulse motor	11	23
M6	OPT1-FAN-R (Optics fan-R1)	Cools the optical system	IC motor:□ 80	5	8
M7	EXIT2-FAN (Exit2-fan)	Cools the drum and cleaner	IC motor:□ 60	4	14
M9	TNR-MOT (Toner motor)	Replenishes the toner	Brush motor	24	30
M11	DCM-MOT (Document motor)	Drives copy-area indicators	Pulse motor	9	2
M12	OPT-FAN-F (Optical fan-F)	Cools the optical system	IC motor:□ 60	4	14
M14	T-UP2-MOT (Tray-up motor-2)	Drives the lower cassette tray to move it up/down	Brush motor	12	36
M15	EXIT1-FAN (Exit1-fan)	Cools the drum and cleaner	IC motor:□ 60	4	14
M16	FEED-MOT (Transport motor)	Drives transport roller	IC motor	14	20
M17	RGT-MOT (Aligning motor)	Drives aligning roller	Pulse motor	6	42
M18	OPT2-FAN-R (Optical fan-R2)	Cools the optical system	IC motor:□ 80	5	8
M19	DEV-FAN (Developer fan)	Developer unit suction	IC motor	6	36

(2) Electromagnetic spring clutches and solenoid

Symbol	Code name	Function	Remarks	Parts list	
				Page	Item
CLT1	RGT1-CLT (Transport-roller clutch-1)	Transmits transport-roller-1 drive.		13	29
CLT4	MFED-CLT (Manual-feed roller clutch)	Transmits manual-feed roller clutch drive.		15	17
CLT5	FED2-CLT (Feed-roller clutch-2)	Transmits feed-roller clutch drive. (Lower cassette)		12	24
CLT6	RGT2-CLT (Transport-roller clutch-2)	Transmits transport-roller-1 drive.		13	29
CLT7	RGT3-CLT (Transport-roller clutch-3)	Transmits transport-roller-2 drive.		10	30
SOL1	SCRP-SOL (Drum separation claw solenoid)	Drum separation claw drive		4	42

(3) Counters

Symbol	Code name	Function	Remarks	Parts list	
				Page	Item
T	T-CTR (Total counter)	Total counter	7-digit	3	32
K	K-CTR (Key-copy counter)	Individual counter	6-digit (option)	101	5

(4) Switches

Symbol	Code name	Function	Remarks	Parts list	
				Page	Item
S1	MAIN-SW (Main switch)	Power supply	Tumbler type	6	3
S2	DOOR-SW (Door switch)	For safety, cancels abnormal condition	Push switch	6	4
S4	U-COV-SW (Side door switch)	For safety, detects open/closed condition of paper jam release cover	Push switch	2	27
S6	M-FED-SW (Manual-feed switch)	Detects manual feeding	Photointerruptor	15	3
S7	PSTP1-SW (Paper stop switch-1)	Detects paper in front of the upper transport roller	Photointerruptor	14	15
S8	PSTP0-SW (Aligning switch)	Detects paper in front of the aligning roller	Photointerruptor	16	20
S9	EXIT-SW (Exit switch)	Detects exiting paper	Photointerruptor	29	8
S10	HOME-SW (Home switch)	Detects home position of the optical system	Photointerruptor	11	8
S11	LNS-SW (Lens switch)	Detects home position of the lens unit	Photointerruptor	11	8
S12	MRR-SW (Mirror switch)	Detects home position of the mirror unit	Photointerruptor	11	8
S13	T-FUL-SW (Toner-full switch)	Detects when the used toner bag is full	Push switch	10	2
S14	EMP2-SW (Paper-empty switch-2)	Detects lack of paper in the lower cassette	Photointerruptor	12	32
S15	SIZE2-SW (Size switch-2)	Detects lower cassette size	Push switch	14	31
S16	PSTP2-SW (Paper stop switch-2)	Detects paper in front of the lower transport roller	Photointerruptor	2	26
S27	PTN-SW (Platen switch)	Detects open/closed condition of the platen cover	Photointerruptor	5	38
S29	T-UP2-SW (Tray-up-2 switch)	Detects the position of the lower cassette tray	Photointerruptor	12	32

(5) Heaters and lamps

Symbol	Code name	Function	Remarks	Parts list	
				Page	Item
EXP	EXPO-LAMP (Exposure lamp)	Exposes the original	Halogen lamp 300W	19	13
HTR	HTR-LAMP (Heater lamp)	Fixing	Halogen lamp 900W (100V series) 1100W (200V series)	26	22
ERS	ERS-LAMP (Discharge lamp)	Discharges the drum	Fuse type	4	12
DCH	DCH-LED (LED eraser array)	To interrupt the charge	LED	4	10
DHU1	D-HTR-U1 (Damp heater U1)	Keeps optical system warm (option)	Cement resistor	11	39
DHU2	D-HTR-U2 (Damp heater U2)	Keeps optical system warm (option)	Cement resistor	11	37
DHL	D-HTR-L (Damp heater L)	Keeps the drum and transfer/separation charger case warm (option)	Cement resistor	7	30

(6) PC boards

Symbol	Code name	Function	Remarks	Parts list	
				Page	Item
LGC	PWA-LGC (Logic PC board)	Controls the entire copier		8	15
PNL	PWA-PNL (Control panel PC board)	Controls the control panel		3	33
KEY1	PWA-KEY1 (Key PC board-1)	Controls operation keys		3	11
KEY2	PWA-KEY2 (Key PC board-2)	Controls operation keys		3	14
LRG	PWA-LRG (Lamp regulator PC board)	Controls exposure lamp		5	20
DCH	K-DCH (LED eraser array PC board)	Turns ON and drives the LEDs during reduction		4	10
ERS	PWA-ERS (Discharge lamp PC board)	Discharge lamp		4	12
AES	PWA-AES (Automatic exposure PC board)	Reads dark/light of the original		18	37
FUS	PWA-FUS (Fuse PC board)	Fuse for the damp heater circuit		7	31

(7) Transformers

Symbol	Code name	Function	Remarks	Parts list	
				Page	Item
HVT	PS-HVT (Charging transformer)	Generates high voltage electricity for charging (negative voltage)	Mono unit type	7	27
	(Transfer/separation transformer)	Generates high voltage electricity for transfer/separation and developing bias voltage			
	(Transfer bias transformer)	Generates bias voltage to raise transfer efficiency			
ACC	PS-ACC (Power supply for all)	Power supply for entire copier power		8	7

(8) Others

Symbol	Code name	Function	Remarks	Parts list	
				Page	Item
ATS	SNR-ATC (Auto-toner sensor)	Reads toner density with a magnetic sensor		24	33
THMS1	THMS1-HTR (Heat-roller thermistor-1)	Detects temperature of the heat roller		26	6
THMS2	THMS2-HTR (Heat-roller thermistor-2)	Detects the temperature of the heat roller end		26	6
THERMO	K-THERMO (Thermostat)	Prevents abnormal heating of heat roller		26	20
FU	FU-EXPO (Thermofuse)	Prevents abnormal heating of the exposure lamp		19	12

2.3 Wire Harness Location Diagram

[A] Location diagram for upper unit

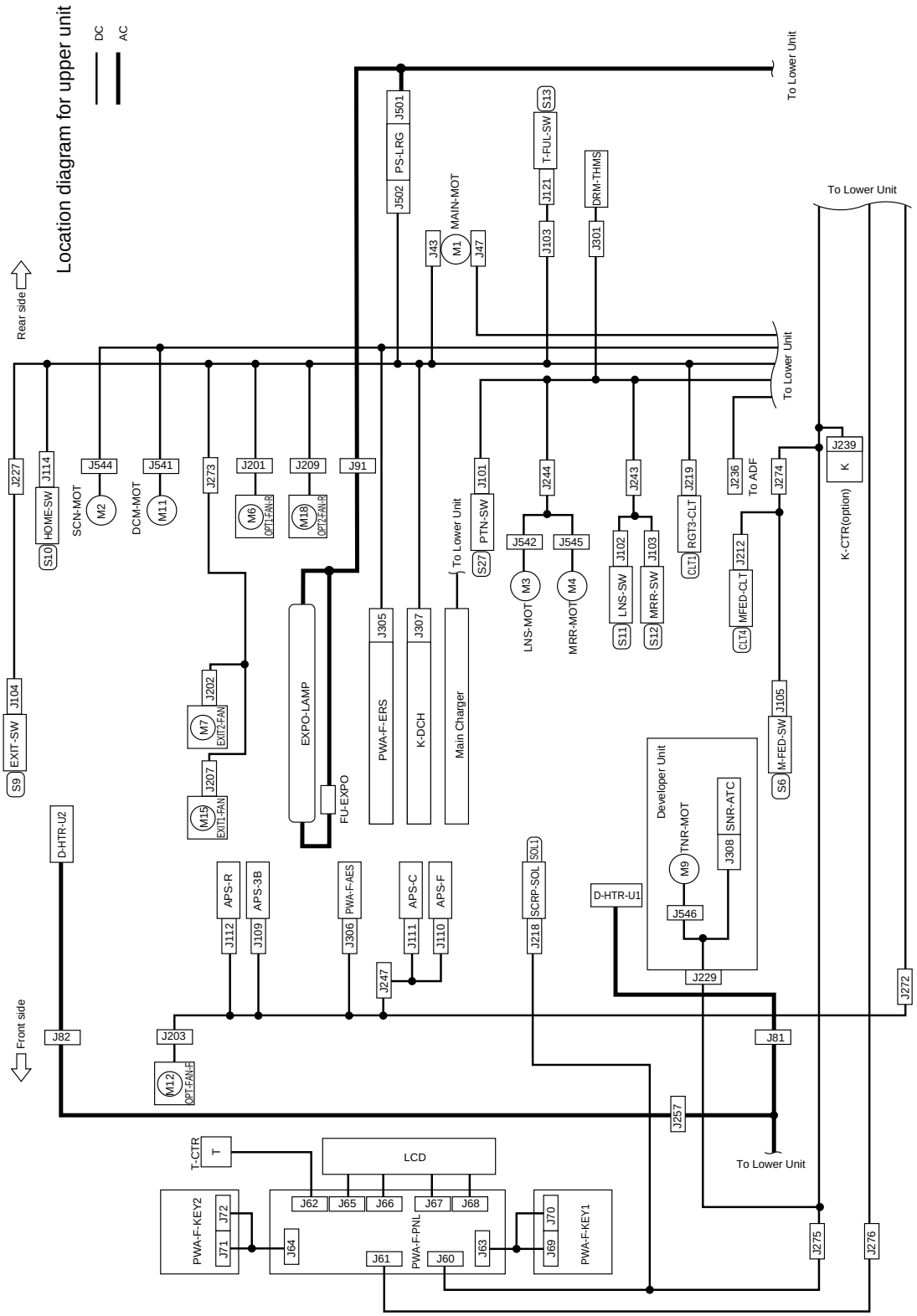

[B] Location diagram for lower unit

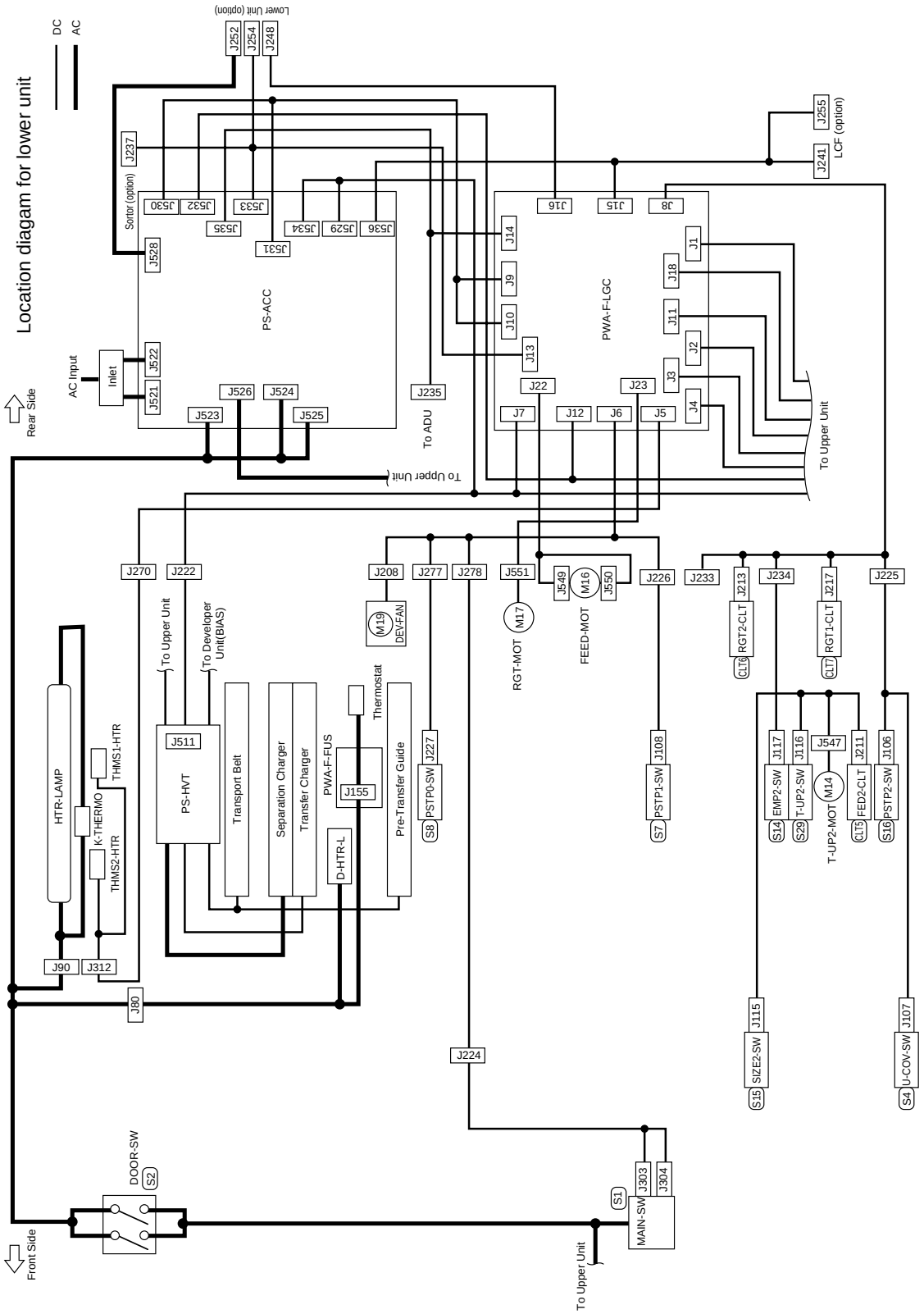

2.4 Removal of Covers and PC Boards

2.4.1 Removal of covers

[A] Front cover

(1) Open the front cover.

(2) Remove the pins on the hinges at both ends (1 each).

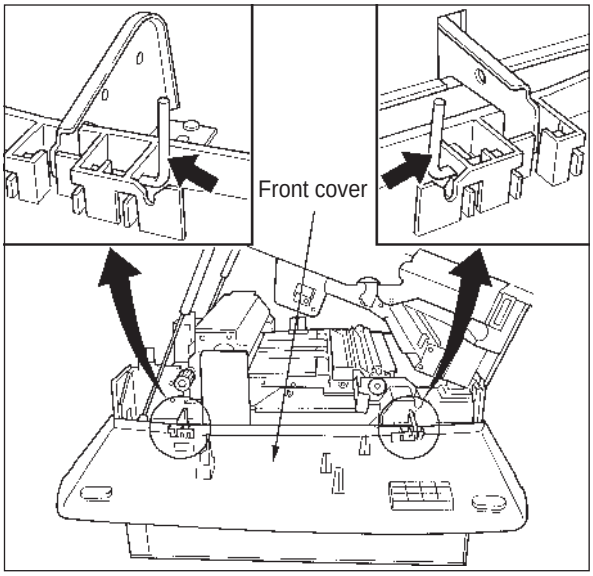

[B] Upper rear cover

(1) Remove 4 screws.

[C] Lower rear cover

(1) Remove the upper 3 screws.

(2) Loosen the lower 2 screws.

[D] Upper feed cover

(1) Open the front cover and the bypass tray and then remove 2 screws.

[E] Feed cover (left and right)

(1) Remove the paper feed cover.

(2) When removing the left feed cover, open the front cover.

(3) Remove the screws (2 on each side).

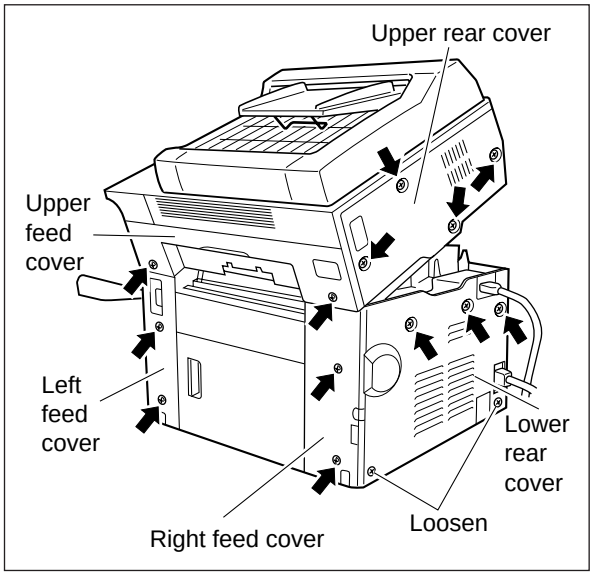

[F] Upper exit cover

(1) Remove 2 screws.

(2) Open the front cover and remove the screw.

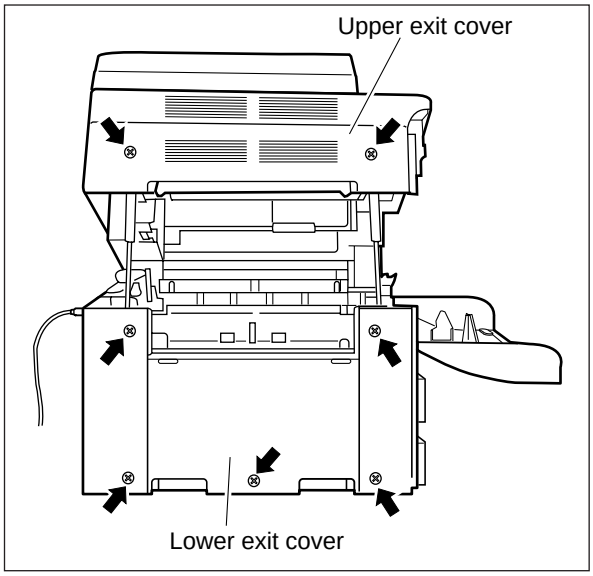

[G] Lower exit cover

(1) Lift the upper unit.

(2) Remove 5 screws.

[H] Rear top cover

(1) Remove the original cover.

(2) Remove 4 screws.

[I] Right top cover (feed side)

(1) Remove 2 screws.

[J] Left top cover (exit side)

(1) Remove 2 screws.

[K] Glass fix

(1) Remove 2 screws.

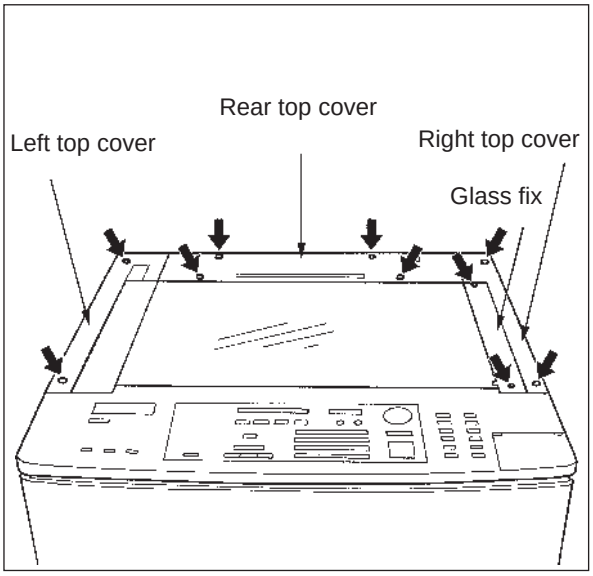

[L] Upper inner cover

(1) Remove the process unit.

(2) Remove 3 screws.

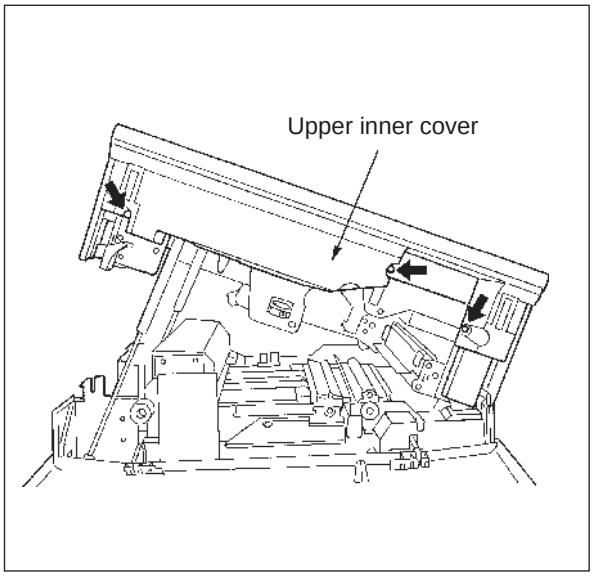

[M] Middle inner cover

(1) Remove the screw.

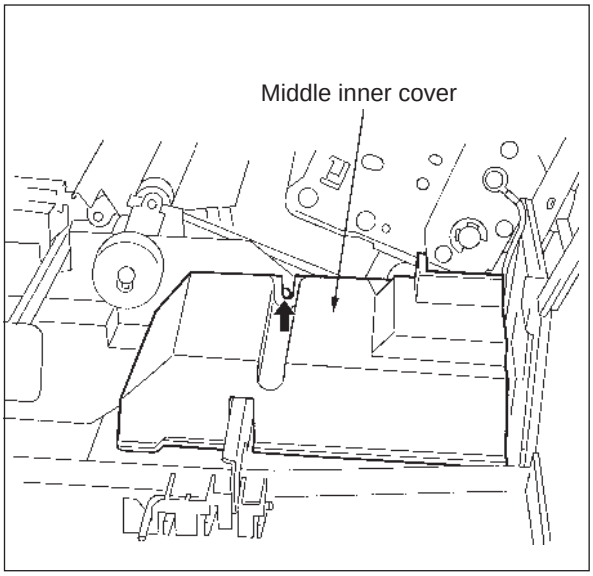

[N] Door switch cover

(1) Remove the fuser connector cover (1 screw).

(2) Remove the door switch cover (1 screw).

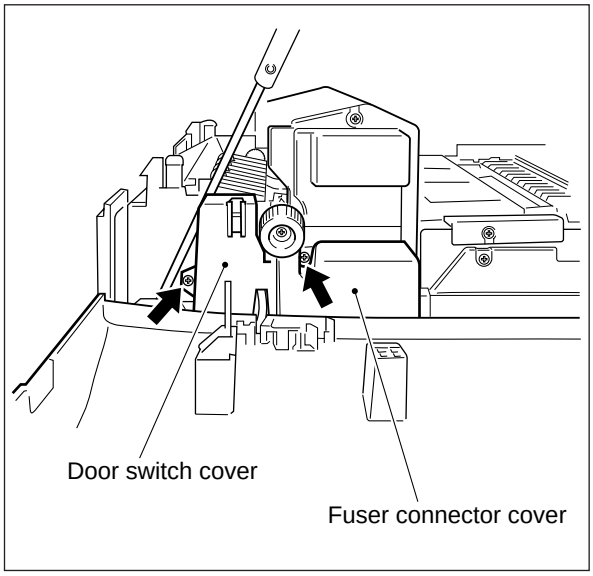

[O] Lower inner cover

(1) Remove the toner bag.

(2) Remove the middle inner cover.

(3) Remove 1 screw.

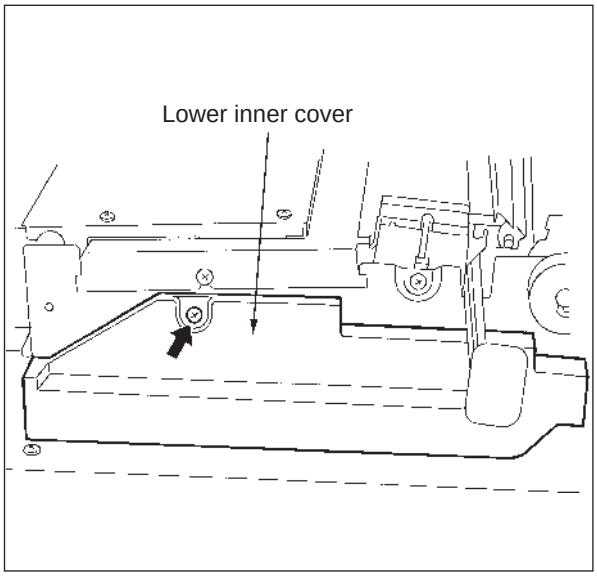

2.4.2 Removal of main PC boards

[A] Logic PC board (PWA-LGC)

(1) Remove the lower rear cover.
(2) Remove 20 connectors.
(3) Remove the lock supports (4 pcs.)
(4) Remove the logic PC board.

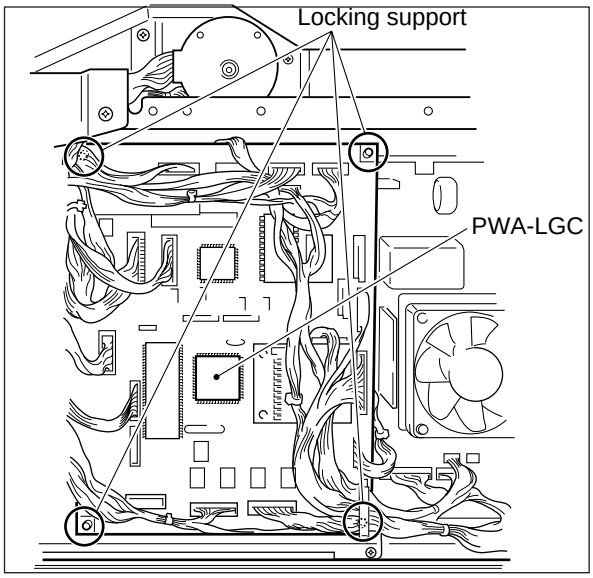

[B] Power supply PC board (PS-ACC)

(1) Remove the connector bracket (2 screws).
(2) Remove 14 connectors.
(3) Remove 4 screws.
(4) Remove the power supply PC board.

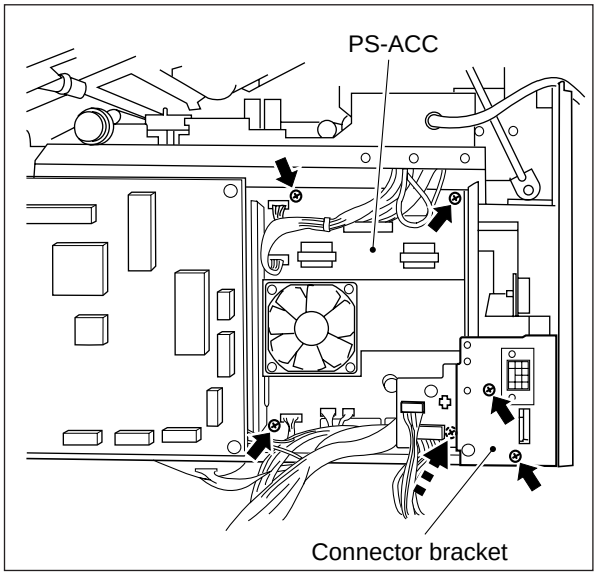

[C] Lamp regulator PC board (PWA-LRG)

(1) Remove the upper rear cover.
(2) Remove 2 connectors.
(3) Remove the lamp regulator PC board (4 locking supports).

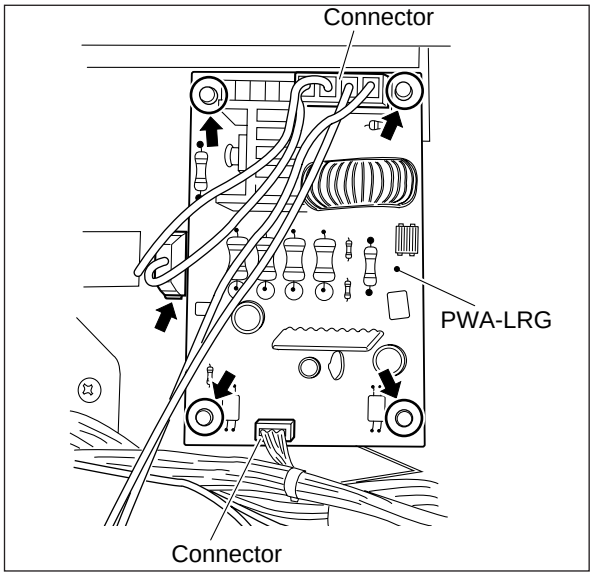

[D] ADU drawer connector

(1) Remove the logic PC board.

(2) Remove the bracket for the logic PC board (3 screws).

Remove the connector J535 on the PS-ACC.

(3) Remove the bracket for the ADU drawer connector (2 screws).

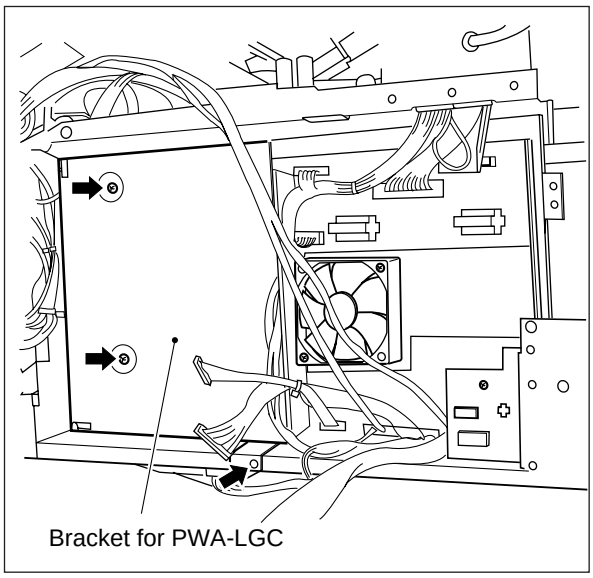

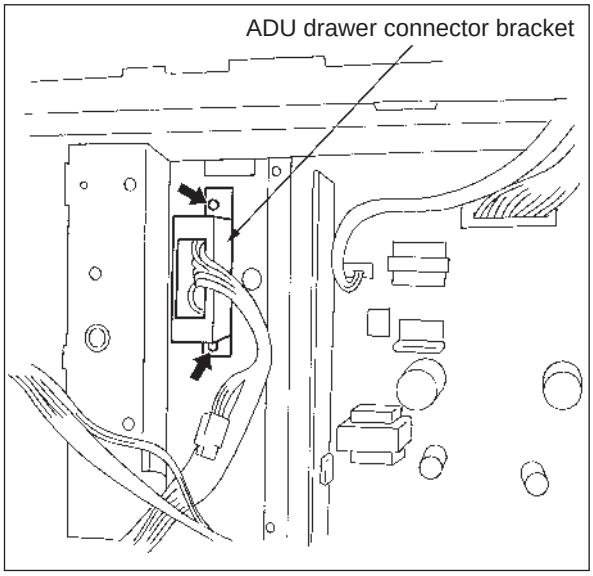

3. COPYING PROCESS

3.1 Copying Process

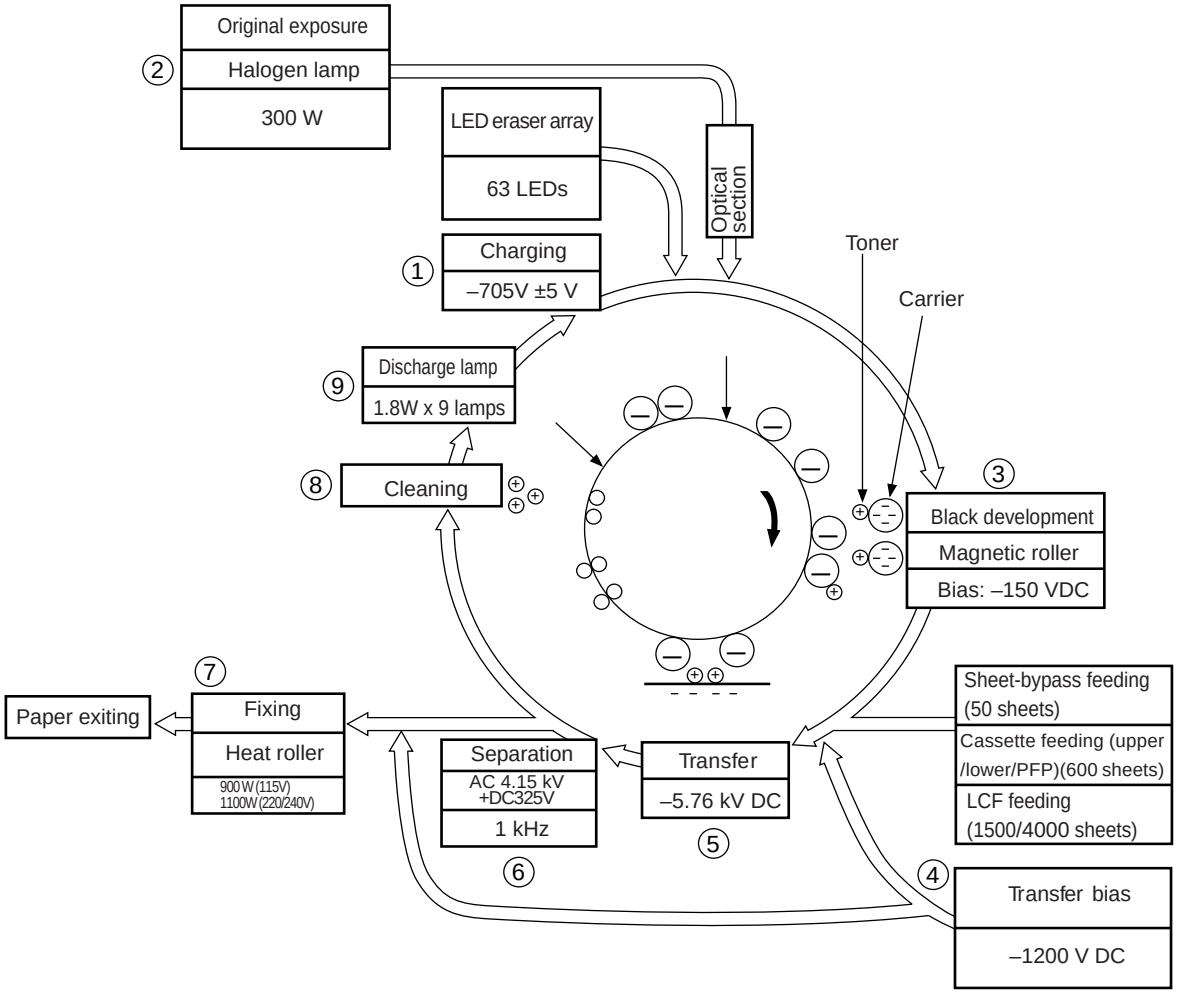

① Charging ⇩ : Negatively charges surface of the photosensitive drum.

② Exposure ⇩ : Forms an electrical image on the drum.

③ Development ⇩ : ⊕ toner adheres to surface of photosensitive drum and forms a visible image.

④ Transfer bias ⇩ : Increases transfer efficiency.

⑤ Transfer : Transfers the visible image from the drum onto the transfer (copy) sheet.

⑥ Separation ⇩ : Separates the transfer sheet, along with the toner, from the drum.

⑦ Fixing ⇩ : Fixes the toner on the transfer sheet by applying heat and pressure.

⑧ Cleaning ⇩ : Mechanically removes any remaining toner on the drum.

⑨ Discharge lamp : Discharges any remaining charge from the drum.

3.2 Comparison with the 2060/2860 of Copying Process Conditions

Process	2060/2860	4560/4570
1. Drum	OD-2060 (OPC ø60)	OD-4560 (OPC ø60)
(1) Sensitivity	Highly sensitized drum	(1) ←
(2) Charger grid voltage	DC –635V Scolotron system Output adjustable by using the digital keys	(2)–705 V DC ←
2. Main charger	Variable output (fixed current) using the digital keys	←
3. Exposure (1) Light control	Automatic exposure and manual 9-step LED setting	(1) ←
(2) Light source	300W halogen lamp stabilized with regulator (light intensity remains constant even when voltage varies)	(2) ←
4. Development (1) Magnetic roller	One magnetic roller (with two shaft mixers)	(1) ←
(2) Auto-toner	Magnetic bridge-circuit system	(2) ←
(3) Toner replenishment	Toner cartridge system	(3) ←
(4) Toner-empty detection	Intensity sensing system	(4) ←
(5) Toner	T-2060	(5) T-3560
(6) Developing material	D-2060	(6) D-4560
(7) Developer bias	–100 V DC, adjustable using the digital keys	(7) –150 V DC, adjustable using the digital keys
5. Transfer bias	–990 V DC	–1200 V DC
6. Transfer	Adjustable output (fixed current) using the digital keys	←
7. Separation	Adjustable output (independently adjustable using the digital keys)	←

Process	2060/2860	4560/4570
8. Discharge		
(1) Discharging position	Discharge by exposure after cleaning	(1) ←
(2) Discharge lamp	Discharge by tungsten lamp	(2) ←
9. Cleaning		
(1) System	Blade system	(1) ←
(2) Recovered toner	Non-reusable	(2) ←
10. Fixing		
(1) System	Long-life heat roller system	(1) ←
• Fixing	• Fixing roller: Aluminum roller coated with Teflon (ø40)	• ←
• Pressure	• Pressure roller: Silicon rubber roller with PFA tube. (ø35)	• ←
• Lamp rating	Infrared heat • 900W (100V series) • 1030W (200V series)	Infrared heat • ← • 1100W (220/240V)
(2) Cleaning	Cleaning with blade and silicon-impregnated roller	(2) Cleaning with (cleaning) felt roller and silicon-impregnated roller
(3) Heater-temperature control	ON/OFF control by thermistor	(3) ←
11. Control	Microcomputer	←

4. COPIER OPERATION

4.1 Operation Outline

Copier operation
- Operation during warm up and standby
- Copying operation
  - Automatic-feed copying using PRINT key
  - Bypass-feed copying
  - Interrupt copying

4.2 Description of Operation

4.2.1 Operation up to standby state after power on

(1) Initial operation

- The main switch is turned ON.
- Copy quantity indicator “0” and “WAIT WARMING UP” are displayed.
- Initialization of the optical system
  - ~ Carriages move to their home position and then stop.
  - ~ Lens and mirror units move to their home position and then stop.
  - ~ Indicators perform the initial operation and move to a position indicating the copy area.
- Initialization of the paper feed section
  - ~ Each slot’s cassette trays move upward. If they were raised already, they are not moved.

(2) Pre-running

65 seconds after power is turned ON

~Main motor rotates ~ Fuser unit drive section rotates: Pre-running

||

Pressure roller is warmed

After pre-running for 15 sec., the main motor stops

~ Fuser unit drive section stops

(3) When the heat roller temperature is sufficient for fixing, the heater lamp turns OFF, and the copier enters the standby mode (Copy quantity indicator "1" and "READY" are displayed).

4.2.2 Standby (ready)

- The exit fan motors (M7, M15) rotate at low speed.
- All keys on the control panel are operable.

  When there is no key input for a set amount of time, the copy quantity “1” will be shown, the reproduction ratio will indicate “actual size”, and the exposure will be set at automatic.

4.2.3 Automatic feed copying using the PRINT key

(1) PRINT key is pressed
- Main, transfer, and separation chargers, transfer bias, discharge lamp and LED eraser array are turned ON.
- Optical fan motors (M6, M12, M18), exit fan motors (M7, M15) and developer unit fan (M19) rotate at high speed.

(2) Cassette feeding
- Transport motor (M16) and Transport roller clutch (CLT1, 6) are turned ON.
- Feed clutch (CLT5) is turned ON
  ~ Pick-up roller, paper feed roller, separation roller and transport roller rotate.
- Main motor is turned ON
  ~ Drum, developer unit, transport belt, heat roller and exit roller rotate.
- Paper reaches the transport roller
  ~ Paper stop switch-2 (S16) is turned ON. After a set amount of time, the feed clutch (CLT5) is turned OFF.

* Paper reaches the aligning roller. Paper stop switch-1 (S7) is turned ON.
  ~ Aligning operation
  After a set amount of time, the feed roller stops rotating (CLT1).

(3) Carriage operation
- Exposure lamp is turned ON.
  Carriages -1 and -2 scan in a forward direction.
  ~ Scanning motor (M15) is turned ON. At this time, if the toner density of the developer material is lower than the set value, the copier enters the toner supply operation.
  ~ Toner motor (M9) is turned ON.

(4) A set time lag after the carriage operation;
Aligning motor (M17) and Transport roller clutch (CLT7) are turned ON:
  ~ paper is sent to the transfer unit.
The counter is increased by 1.

(5) Termination of carriage scanning.
- Scanning motor (M2) is turned OFF.
- Main charger and exposure lamp are turned OFF.
- Transport roller clutch (CLT7) and Aligning motor (M17) are turned OFF. (Timing of the shutting off depends on paper size.)

(6) Exit operation
- Exit switch (S9) detects the passing of the paper trailing edge.
- Main motor (M1), transfer and separation chargers, transfer bias, discharge lamp, and LED eraser array are turned OFF.

- Optical fan motors (M6, M12, M18) and developer unit fan (M19) stop, and exit fan motors (M7, M15) rotate at low speed.
- Carriages and indicators move to the position indicating copy area.
- The copier enters the standby mode.

Timing chart for two A4 actual-size cassette feedings

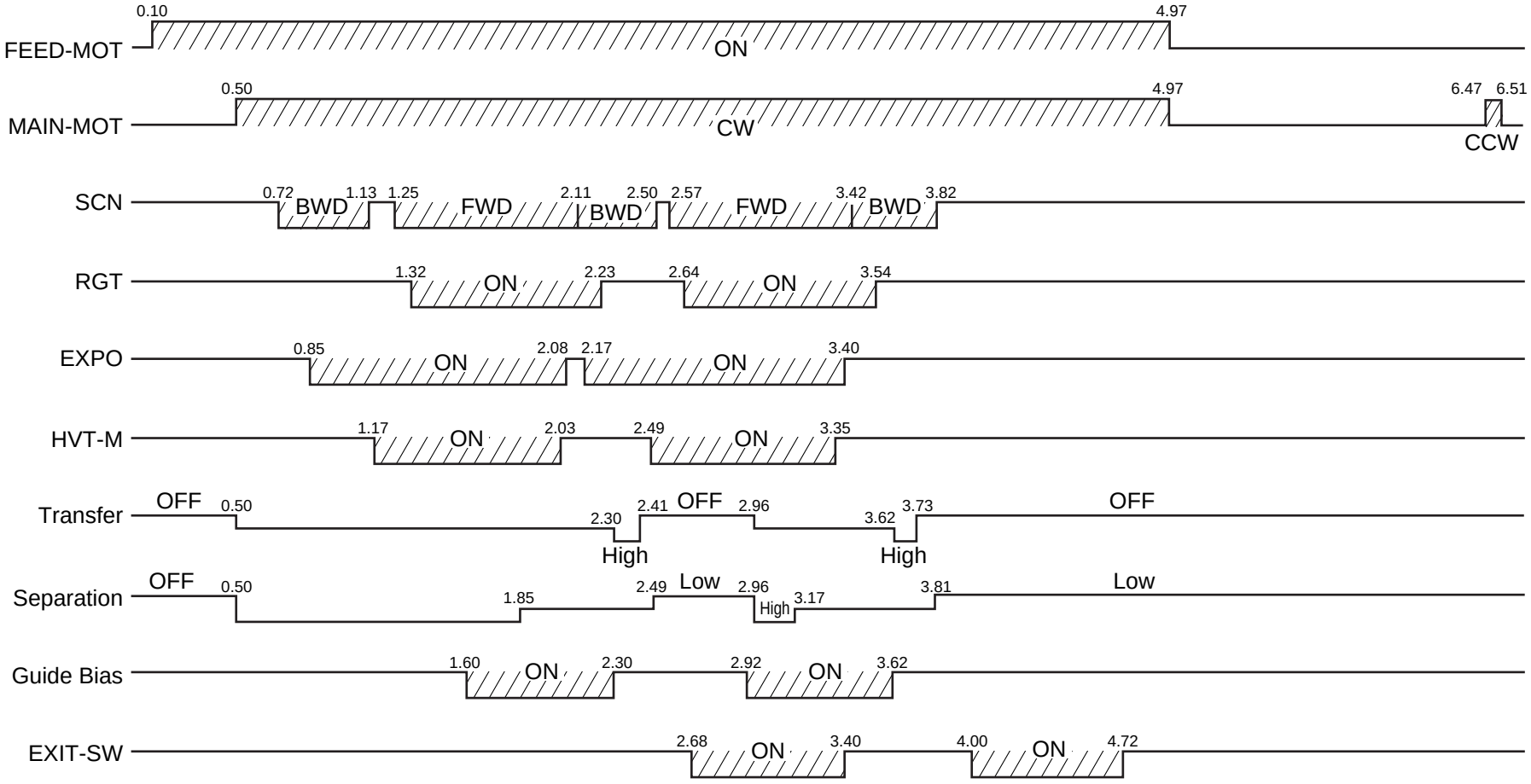

Nov. 1997 © TOSHIBA

4.2.4 Bypass-feed copying

(1) A sheet of paper is inserted through the bypass guide
- Manual feed switch (S6) is turned ON.

(2) PRINT key is pressed
- The main, transfer and separation chargers, transfer bias, discharge lamp, and LED eraser array are turned ON.
- Optical fan motors (M6, M12, M18), exit fan motor (M7, M15) and developer unit fan (M19) rotate at high speed.
- Main motor (M1) is turned ON

  ~ Drum, developer unit, transport belt, heat roller, and exit roller rotate.

(3) Sheet-bypass feeding
- Manual feed clutch (CLT4) is turned on

  ~ Manual feed roller is lowered.

  ~ Manual feed roller, paper feed roller, and separation roller rotate.

– Aligning operation –
- Paper reaches the aligning roller

  ~ Paper stop switch1 (S7) is turned ON.

  After a set time lag, the manual feed clutch (CLT4) is turned OFF and paper feeding is terminated.

(4) The operation is the same as in (3) through (6) of “4.2.3 Automatic Feed Copying Using the PRINT key”.

4.2.5 Interrupt copying

(1) The INTERRUPT key is pressed.
- Interruption LED is turned ON.

  The copying operation is temporarily halted and carriages-1 and -2 return to their home position. The copying mode is set to automatic exposure and 1-to-1 reproduction ratio. Register remains unchanged.

(2) The preferred copying modes are specified.

(3) After interrupt copying is terminated, when the INTERRUPT key is pressed again, the interrupt LED goes OFF and the copier returns to the conditions before the interruption.

(4) PRINT key is pressed

The copying operation before the interruption is resumed.

4.3 Fault Detection

If a fault occurs in the copier, a symbol corresponding to the type of fault will be displayed in order to draw the attention of the operator.

- Classification of faults
  - A) Faults which can be cleared without turning OFF the door switch (yellow flashing display on the display panel).
    - (1) ADD PAPER
    - (2) BYPASS MISFEED
    - (3) INSERT KEY COPY COUNTER
    - (4) CASSETTE MISFEED
  - B) Faults which cannot be cleared without turning OFF the door switch (red flashing display on the display panel).
    - (1) CLEAR PAPER
    - (2) ADD TONER (yellow flashing display)
    - (3) REPLACE TONER BAG
  - C) Faults which cannot be cleared unless the main switch (S1) is turned OFF.
    - (1) SERVICE CALL

A-1) ADD PAPER ()

[In the case of the copier and PFP cassettes]

- When the cassette is not installed, the size switch (S15) detects the absence of the cassette.

⇩

When the cassette is not installed.
When the cassette is installed but there is no paper in the cassette.

~Size switches are all switched off.

Paper empty status.

↓

Signal sent to control circuit.

↓

The ADD PAPER display will flash. 

* The PRINT key will not function.

[In the case of the LCF and the pedestal]

By combining the operation of the tray motor and the condition of the tray-up switch and the empty switch, the CPU detects whether or not there is paper.

- When the power is turned ON or when the LCF door is opened/closed (for the pedestal: when the power is turned ON or when the cassette is removed) ~
  The PFC (Paper Feed Controller) causes the LCF to initialize.

↓

Detects whether or not there is paper

↓

- Tray motor comes ON ~ The tray rises.

↓ At this time, both tray-up and LCF empty switches are OFF.

- A fixed time later, if the tray-up switch is not turned ON:

||

The tray is not normal → The "ADD PAPER" is displayed regardless of paper being present or not.

↕

Removing/reinstalling the LCF or turning the machine OFF/ON clears this condition. (For the pedestal, turn the power OFF/ON.)

↓

- Within a fixed time, the tray-up switch is turned ON:
  ~ The tray motor stops.
  At this time, if the empty switch is ON ~ It is determined there is paper.
  At this time, if the empty switch is OFF ~ It is determined there is no paper.

↓

The "ADD PAPER" is displayed.

- During copying, sheets of paper are fed and when the paper supply becomes low →
  The tray-up switch goes OFF → The PFC turns ON the tray motor ~ The tray moves up.
  The tray-up switch comes ON → The tray motor stops.
- During copying, when the empty switch goes OFF despite the tray-up switch being ON

↓

It is determined there is no paper.

↓

"ADD PAPER" is displayed.

↓

Copying stops.

A-2) BYPASS MISFEED ( )

- During sheet bypass copying

The manual feed clutch (CLT4) has been turned ON

↓

The paper-stop switch-1 (S7) comes ON

* If the paper-stop switch-1 (S7) does not come ON within the specified time:

↓

BYPASS MISFEED

↓

The BYPASS MISFEED symbol is displayed

↓

Copying cannot be started

↓

Clearing method: Remove the paper from the sheet-bypass guide. The manual-feed switch (S6) goes OFF.

A-3) INSERT KEY COPY COUNTER ( )

- If the copy counter (optional) is installed in the copier and is then withdrawn:

The INSERT KEY COPY COUNTER display appears

↓

Copying is not possible

- If the counter is withdrawn during copying, the machine will stop after the paper being copied has exited.

B-1) CLEAR PAPER ( )

- Leading-edge jam detection by the exit switch (S9): (E01)

The aligning motor is turned ON

↓ 1.313 sec.*

The exit switch (S9) comes ON

* When the exit switch (S9) has not come ON after 1.313 seconds have elapsed.

↓

The CLEAR PAPER symbol (E01) appears and copying will stop.

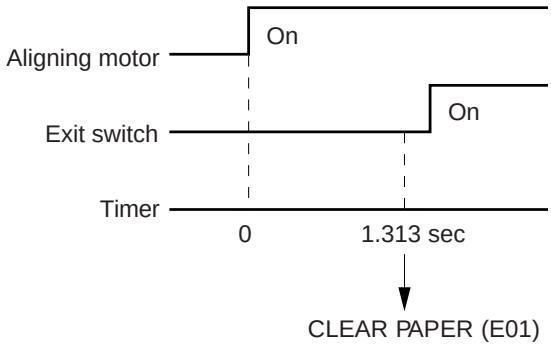

- Trailing-edge detection by the exit switch (S9): (E02)

  Aligning motor goes OFF.

  ↓ 1.396 sec*

  The exit switch (S9) goes OFF (detects paper exit)

  * When the exit switch (S9) does not go OFF even after 1.396 seconds:

  ↓

  The CLEAR PAPER symbol appears (E02), and copying stops.

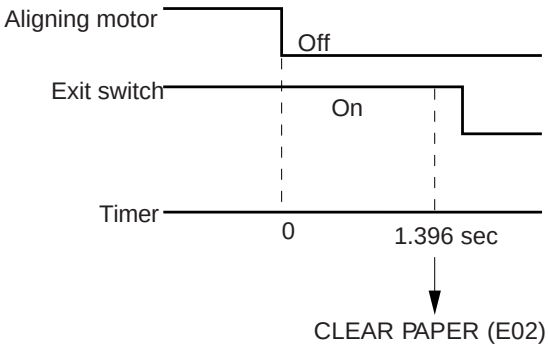

- Immediately after power ON

  ↓

  Exit switch (S9) is detecting paper (ON)

  ↓

  CLEAR PAPER (E03)

- If the front cover is opened during copying

  ↓

  CLEAR PAPER (E04)

- Leading edge jam detection by the paper stop switch in front of the aligning roller:

  After the leading edge of the paper passes the transport rollers, if the paper stop switch-1 (S7) is not turned ON within a fixed time

  ↓

  Paper misfeeding (E05)

- During paper feeding from the ADU:

  After the feed clutch is turned ON, if the paper stop switch (S16) does not come ON within a fixed time.

  ↓

  Paper misfeeding (E11)

- During paper stacking in the ADU:

  If the ADU jam switch (SA4) does not detect any paper at the fixed timing

  ↓

  Paper misfeeding (E08)

- During paper feeding from the copier and the pedestal:
  After the feed clutch is turned ON, if the paper stop switches (S7/S16) do not come ON within a fixed time
  ↓
  Paper misfeeding (E13 – E19)
  E13 – E19: The error code is different according to the cassette used.

B-2) ADD TONER ( )

Toner density has become low
↓
Toner empty detection: Auto-toner sensor
↓
Control circuit: → the ADD TONER symbol appears: the copying is not possible
Clearing method: Replace the toner cartridge and close the front cover.
Toner supply operation: copying is possible

B-3) REPLACE TONER BAG ( )

The toner bag becomes full of toner
↓
The toner-recovery auger moves towards the rear of the copier: the toner-full switch (S13) will be turned ON.
↓
REPLACE TONER BAG display

- When the toner-full switch (S13) comes ON during copying
  ↓
  Copying will stop after the last sheet has exited during copying
  Clearing method: Replace with a new toner bag.

C-1) Service call

If the CLEAR/STOP key and the “8” key are pressed simultaneously when the SERVICE CALL symbol is flashing, one of the error codes will appear on the message display.
For the contents of the error codes, refer to the “SERVICE HANDBOOK”.

4.4 Flow Charts

4.4.1 Power on to ready

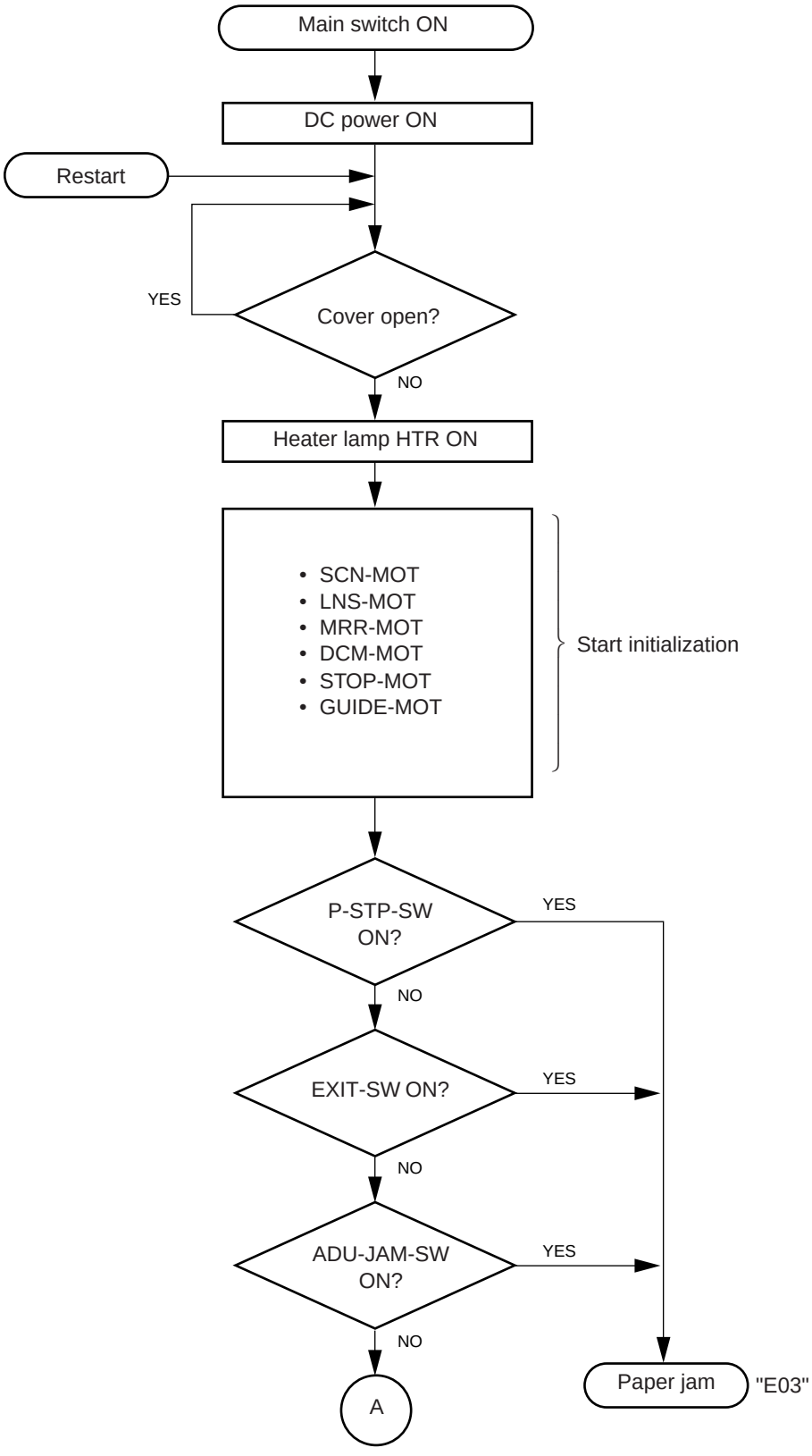

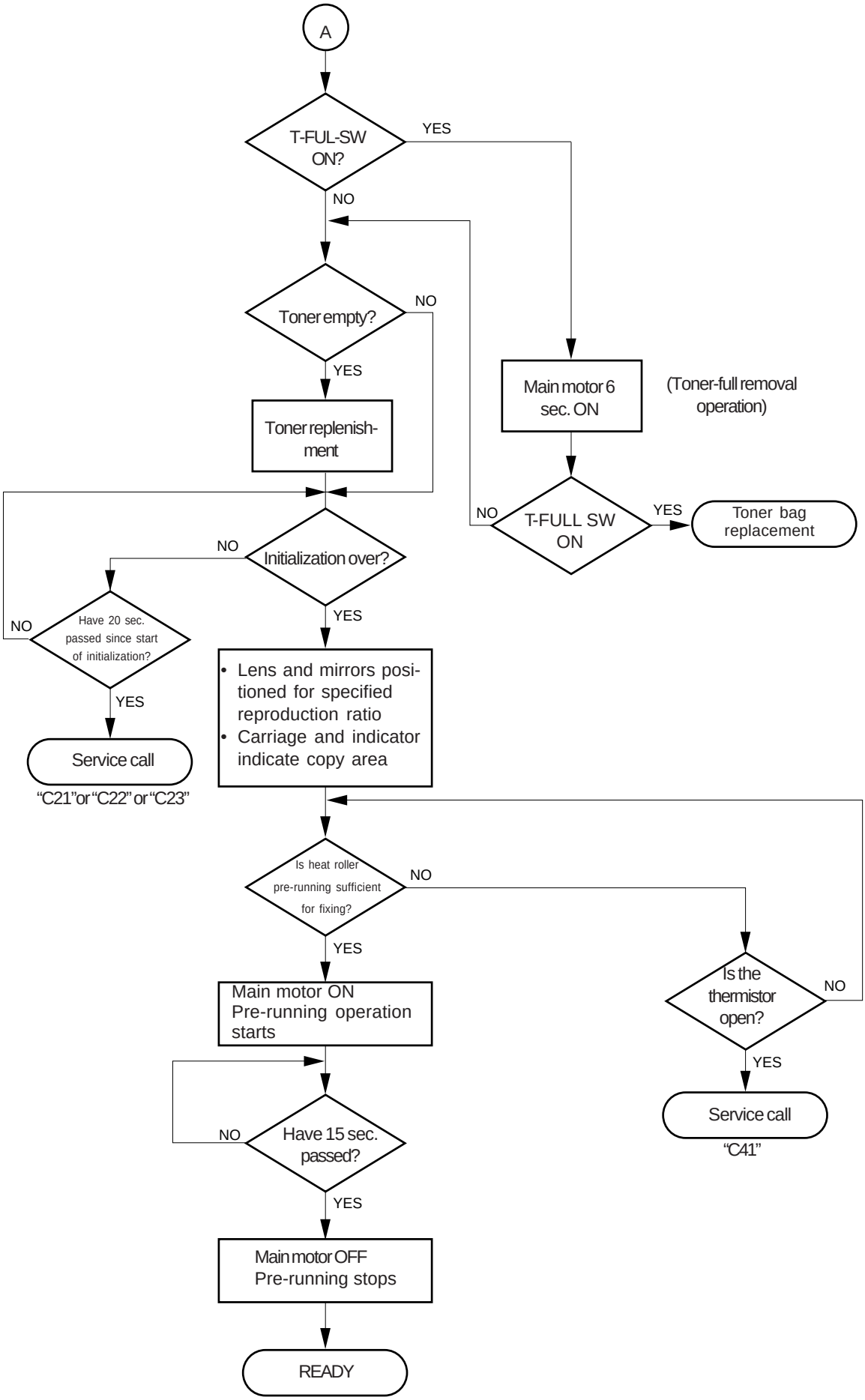
A
T-FUL-SW ON?
YES
NO
Toner empty?
NO
YES
Toner replenish-ment
Main motor 6 sec. ON
(Toner-full removal operation)
T-FULL SW ON
NO
YES
Toner bag replacement
Initialization over?
NO
YES
Have 20 sec. passed since start of initialization?
NO
YES
Service call
"C21" or "C22" or "C23"
• Lens and mirrors positioned for specified reproduction ratio
• Carriage and indicator indicate copy area
Is heat roller pre-running sufficient for fixing?
NO
YES
Is the thermistor open?
NO
YES
Service call
"C41"
Main motor ON
Pre-running operation starts
Have 15 sec. passed?
NO
YES
Main motor OFF
Pre-running stops
READY

4.4.2 Automatic feed copying

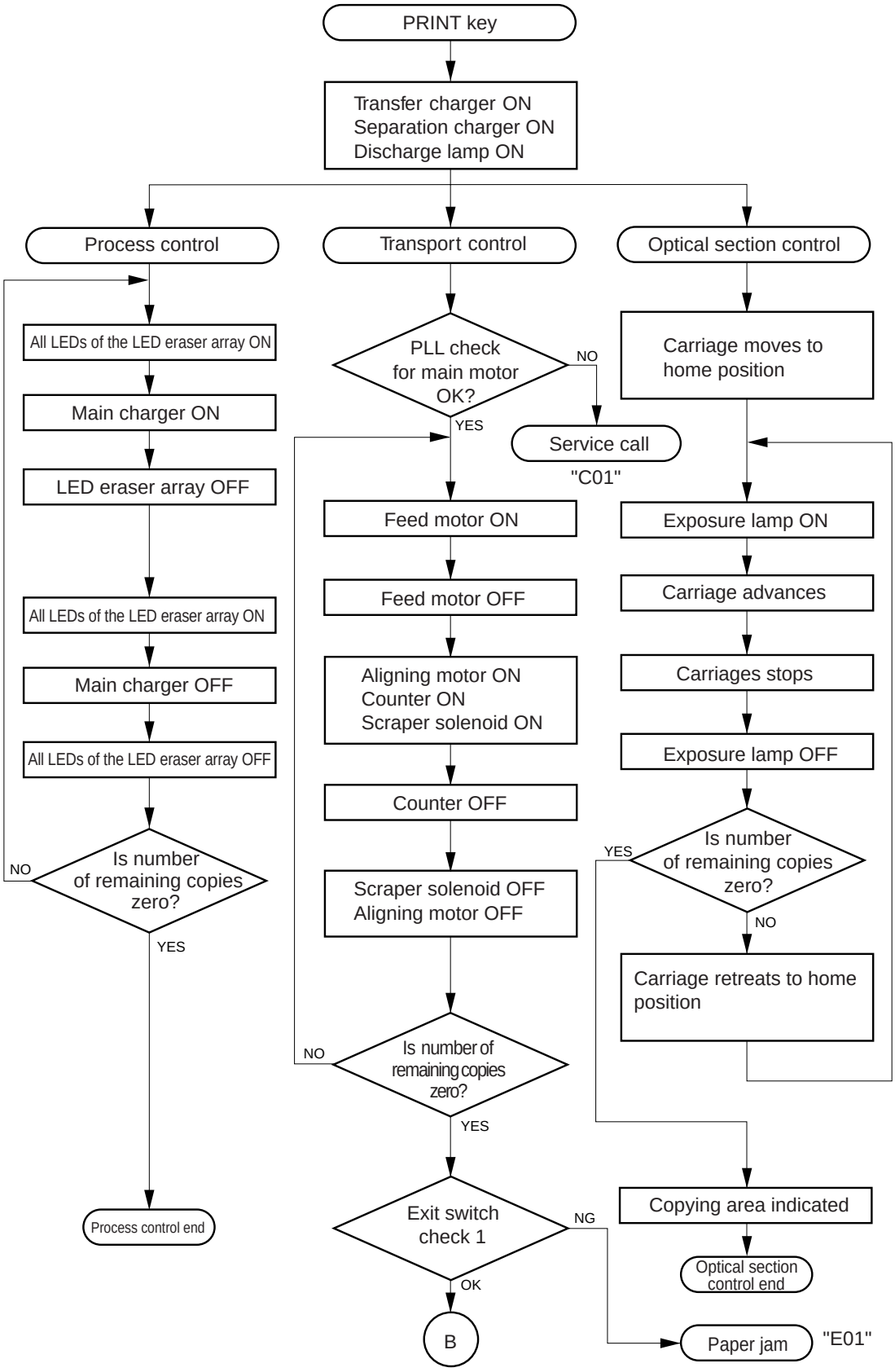

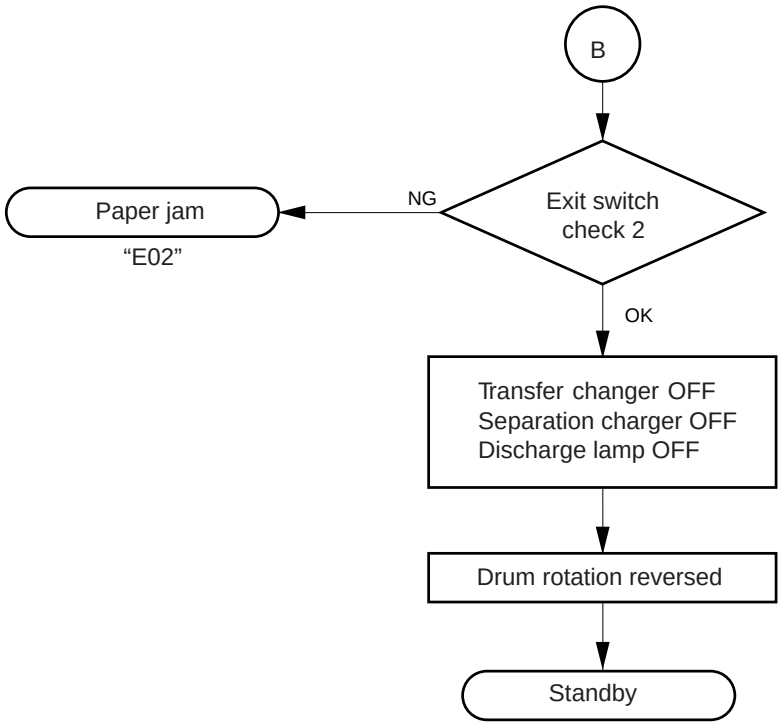
B
Exit switch check 2
NG
Paper jam
“E02”
OK
Transfer changer OFF
Separation charger OFF
Discharge lamp OFF
Drum rotation reversed
Standby

5. DISPLAY UNIT

The display unit consists of key switches for copier operation/selection of each mode, LEDs and an LCD displaying the copier state or messages.
Particularly, when the operator's attention is recommended, a graphic symbol lights or flashes and the message indicating that condition is displayed.

5.1 Detailed Drawing of the Control Panel and the Display Panel

For the U.S.A. and Canada

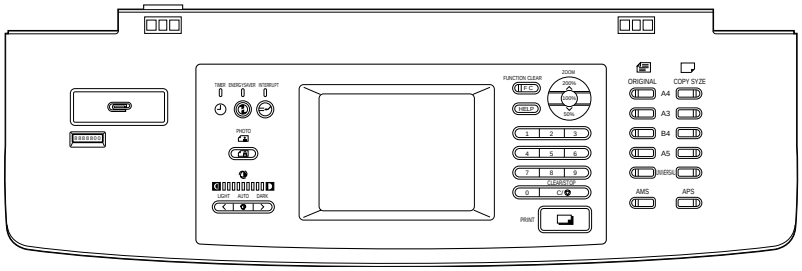

For Europe

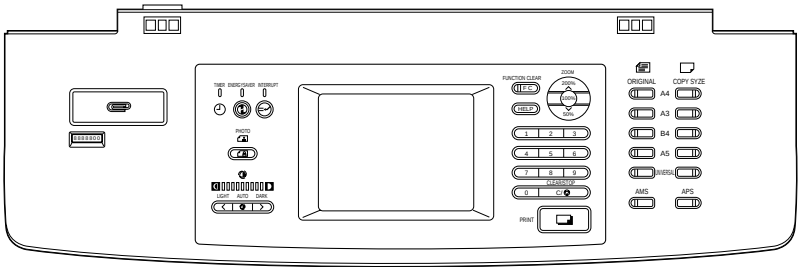

Arrangement of the control panel

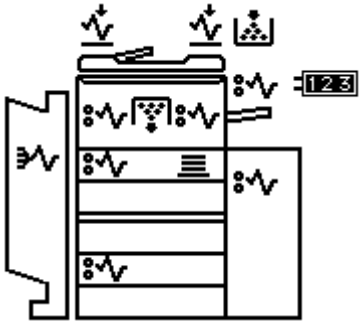

Details of the display panel

5.2 Items Shown on the Display Panel

5.2.1 Display during normal copying

No.	Message	Copier status	Notes
1	WAIT WARMING UP	Warming up • When the power switch is turned ON, this message is displayed until the copier is ready to make copies.	• When the power switch is turned on, the copy quantity is set to 0 and the copy reproduction ratio to 100%
2	READY	Ready for copying • This message is displayed when the copier is ready to make copies and the copier waits for the operator to specify the copying conditions. • If no key is pressed within 45 seconds the copier returns to its initial state.	• The copy quantity display shows 1. When the digital keys are pressed, the display changes to show the set number. • Pressing the CLEAR/STOP key resets the copy quantity to 1. • Manual copying is possible.
3	COPYING	Copying is in progress • This message is displayed when the PRINT key is pressed. • The copying operation ends when the copy quantity display reaches 1.	• After the copying operation has ended, the copy quantity indicator returns to the quantity that was set.
4	SAVING ENERGY PRESS PRINT	Preheating	• Press the ENERGY SAVER key or PRINT key to clear.
5	PLACE NEXT ORIGINAL	Copier is waiting in the ADU duplex mode (see Fig.2.1Ⓐ)	This message is displayed when using ADF single-sided copying or when not using the ADF.
6	————	Timer OFF • No message is displayed in the display panel except for the timer LED.	Released by pressing the PRINT key.

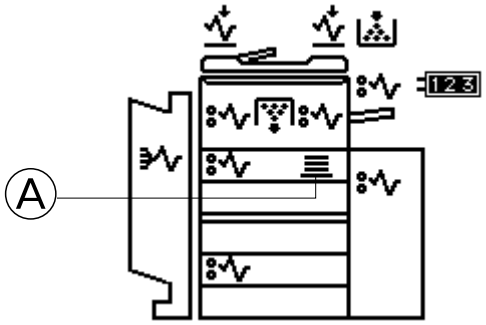

Fig. 2.1

5.2.2 Display in the event of faulty conditions

No.	Message	Copier status	Notes
7	ADD PAPER	Load copy paper • This message is flashed when there is no paper in a cassette. • The copier indicates which cassette is empty (see Fig.2.2-1Ⓐ). • Manual copying is possible	• Load the selected cassette with paper.
8	ADD TONER	Add toner • This message is displayed when there is no toner in the hopper (see Fig.2.2-1Ⓑ). • The message is displayed and the copier stops.	• Canceled after the toner is supplied and the front cover is closed.
9	INSERT KEY COPY COUNTER	Key copy counter not inserted • This message is displayed if the key copy counter is taken out when the copier is ready or is copying (see Fig.2.2-1Ⓒ). • If the key copy counter is taken out after the PRINT key is pressed, the copier stops after copying. The counter counts.	• Canceled and returned to normal conditions by inserting the key copy counter.
10	DISPOSE OF TONER	Replace toner bag • This message is displayed when the toner bag is full (see Fig.2.2-1Ⓓ). The copier stops.	• Open the front cover and replace the toner bag. Canceled after the toner bag is replaced and the front cover is closed.

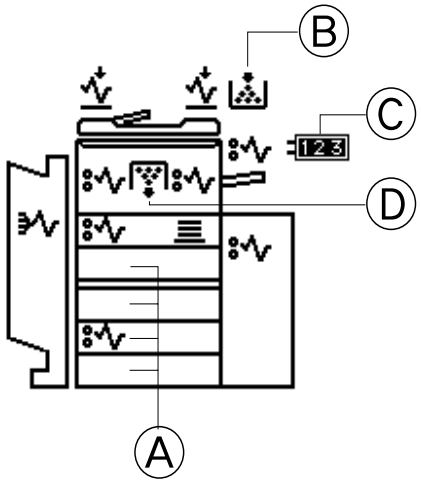

Fig. 2.2-1

No.	Message	Copier status	Notes
11	PAPER MISFEED IN BYPASS	Paper jam in manual feed tray • This message is displayed when paper jams in the manual feed tray(see Fig. 2.2-2 Ⓐ)	Normal status is restored automatically by removing the jammed paper from the manual feed tray.
12	MISFEED IN COPIER	Paper jam in copier • This message is displayed when paper jams inside the copier(see Fig2.2-2 Ⓑ) Misfeed from cassette • This message is displayed when paper fed from a cassette does not arrive at the paper-stop switch within a set time (see Fig.2.2-2 Ⓒ and Ⓕ).	Open the front cover, lift the upper unit and gently remove the jammed paper. Remove the cassette and gently remove the jammed paper.
13	MISFEED IN DOC.FEEDER	Original jam • This message is displayed when paper jams in the document feeder (see Fig. 2.2-2 Ⓓ)	Open the ADF feed cover and gently remove the jammed original.
14	MISFEED IN SORTER	Paper jam in sorter • This message is displayed when paper jams in the sorter (see Fig.2.2-2 Ⓔ)	Gently remove the jammed paper from the sorter and open and close the front cover.
15	MISFEED IN DUPLEXER	Paper jam in ADU (see Fig.2.2-2 Ⓖ)	Open the front cover and gently remove the jammed paper.

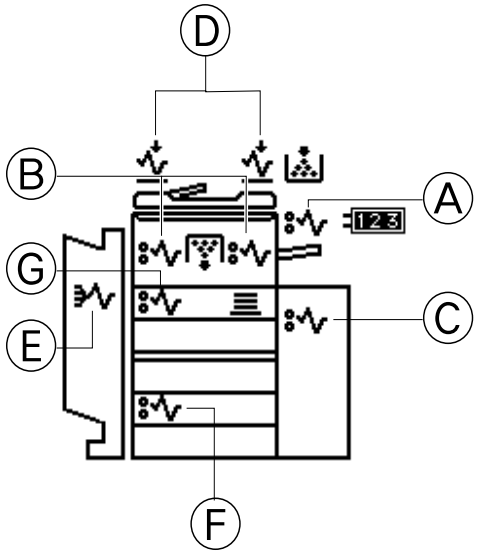

Fig. 2.2-2

No.	Message	Copier status	Notes
16	CALL FOR SERVICE	This message is displayed if a motor, sensor or switch, etc., does not function correctly.	Turn off the power switch, correct the cause of the problem and then turn on the power again.
17	TIME FOR PERIODIC MAINTENANCE CALL FOR SERVICE	PM cycle display • This message is displayed when the copier is ready for periodic maintenance. • Copies can be made.	Have the service center carry out periodic maintenanace.

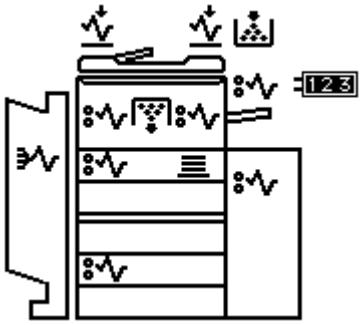

Fig. 2.2-3

5.3 Relationship between Copier Conditions and Operator's Actions

Operation / Condition	PRINT key	CLEAR/ STOP key	Digital keys	REPRO-DUCTION RATIO selection key	EXPOSURE key	ORIGINAL SIZE key	COPY SIZE key	INTER-RUPT key	ENERGY SAVER key	Sheet bypass
Warming up	–	O	O	O	O	O	O	O	O	O
Ready	O	O	O	O	O	O	O	O	O	O
Reproduction-ratio changing	–	O	O	O	O	O	O	O	O	O
Copying	–	O	–	–	O	–	–	O	–	O
Add paper	–	O	O	O	O	O	O	O	O	O
Add toner	–	O	O	O	O	O	O	O	O	O
Key copy counter not inserted (optional)	–	O	O	O	O	O	O	O	O	O
Bypass misfeed	–	–	–	–	–	–	–	–	–	–
Replace toner bag	–	–	O	O	O	O	O	O	O	O
Clear paper	–	–	–	–	–	–	–	–	–	–
Service call	–	–	–	–	–	–	–	–	–	–
Interrupt mode	O	–	–	O	O	O	O	O	–	O
Energy-saving mode	O	–	–	–	–	–	–	–	O	–

O: Machine operates or indicates in accordance with the operator's action. – : Operation is ignored.

(1) By pressing the ENERGY SAVER key or the PRINT key, the energy-saving mode will be canceled.

(2) During copying, avoid changing exposure as far as possible.

(3) The function of the CLEAR/STOP key changes in the following manner according to the machine status.

During copying ..... Interruption of the copying (Stop function ..... The copy quantity indicator will not change.)

When not copying .... When pressed once, the copy quantity indicator returns to "1".

(4) During copying, avoid sheet bypass feeding because of possible paper jamming.

Note: The interrupt mode will be automatically canceled when the machine is not used for 45 seconds.

5.4 Description of Operation

5.4.1 Dot matrix LCD display circuit

(1) Structure

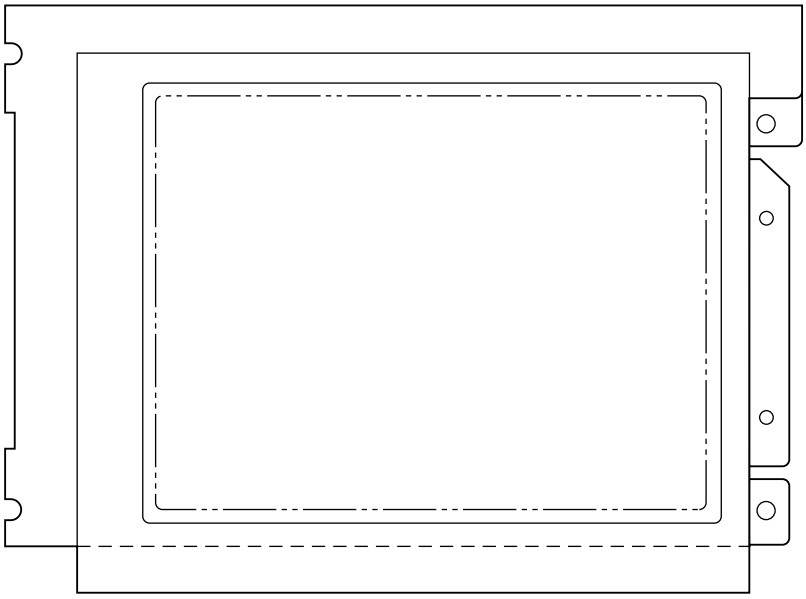

Fig. 4.1-1

The liquid crystal module comprises an STN black-and-white mode transparent liquid crystal that has a 320 x 240 dots display area, driver LSI, frame, printed circuit board and side-type CFL backlight.

*STN:Super Twisted Nematic

(2) Block diagram

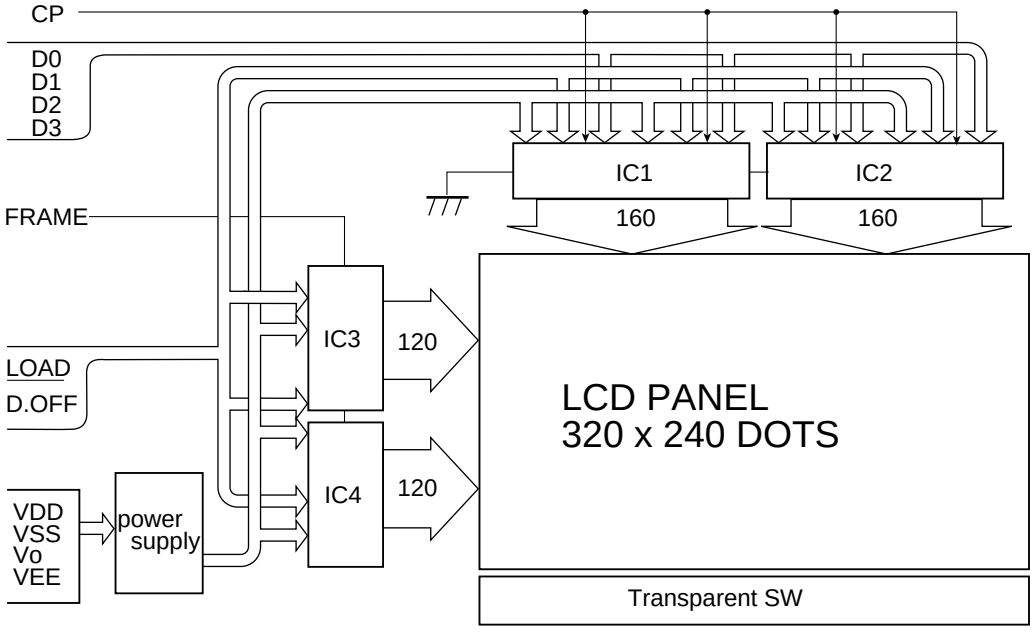

Fig. 4.1-2

(3) Drive

- LED control: Driven by liquid crystal controls in the panel board
- What character is displayed in what position: Controlled by IC7 (main processor) and IC4 (liquid crystal controller) in the panel circuit
- Message data, executable programs, and character codes: Stored in the PROM on the panel board.
- Each character on the liquid crystal is made up of 16 x 16 dots or 16 x 8 dots. The whole panel consists of 320 x 240 dots.

Graphic data are written by the main CPU to the liquid crystal controller at the RAM address corresponding to the position at which it is to be displayed. The LCD controller then sends the data to the LCD.

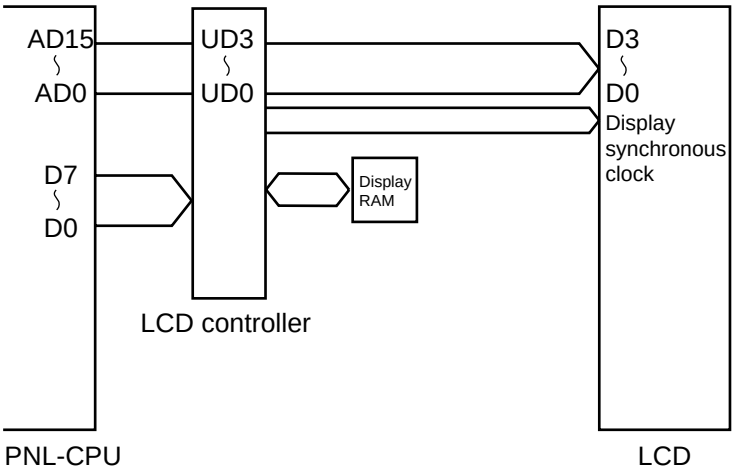

Fig. 4.1-3

Data Transmission Method

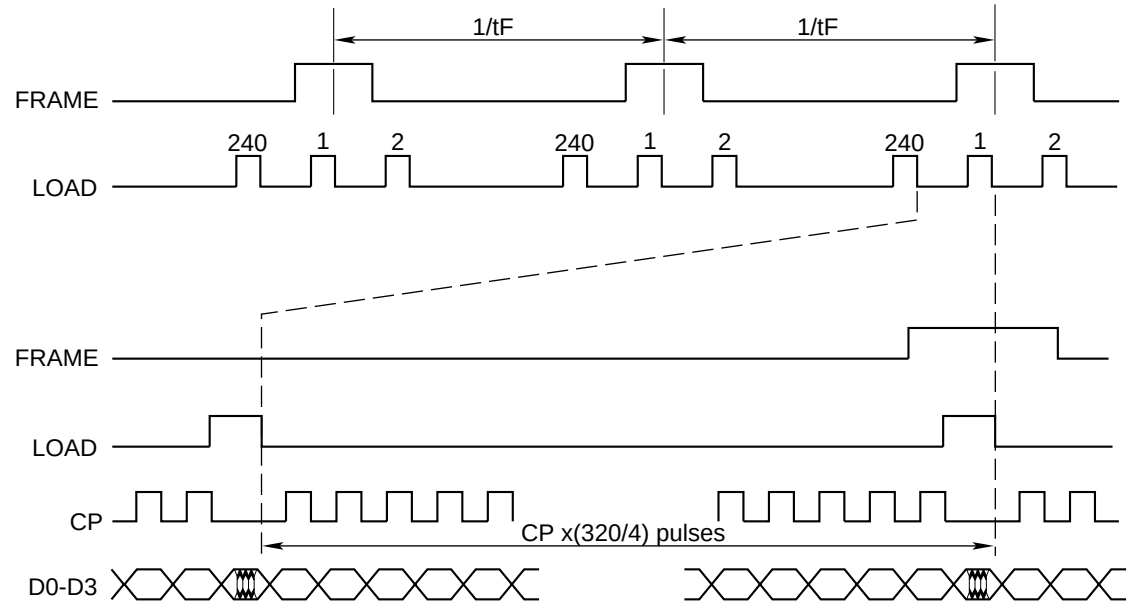

5.4.2 LED display circuit

(1) LED display method

For example, the following shows how the LED LP12 (APS) lights up for displaying “automatic paper sensing”.

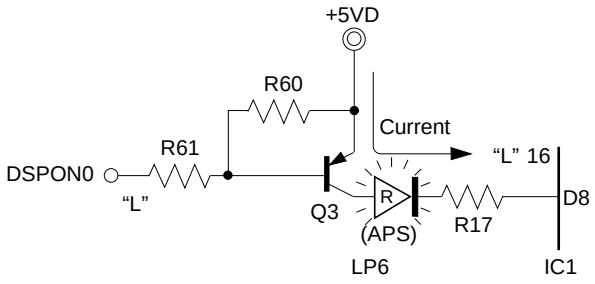

When DSPON0 signal becomes “L” level, transistor Q3 is turned ON. Further, when IC1 pin16 (D8) becomes “L” level, current flows from +5VD to LP6 (APS) through the transistor. In this way LP6 (APS) lights up.

(2) The actual circuit is controlled as follows.

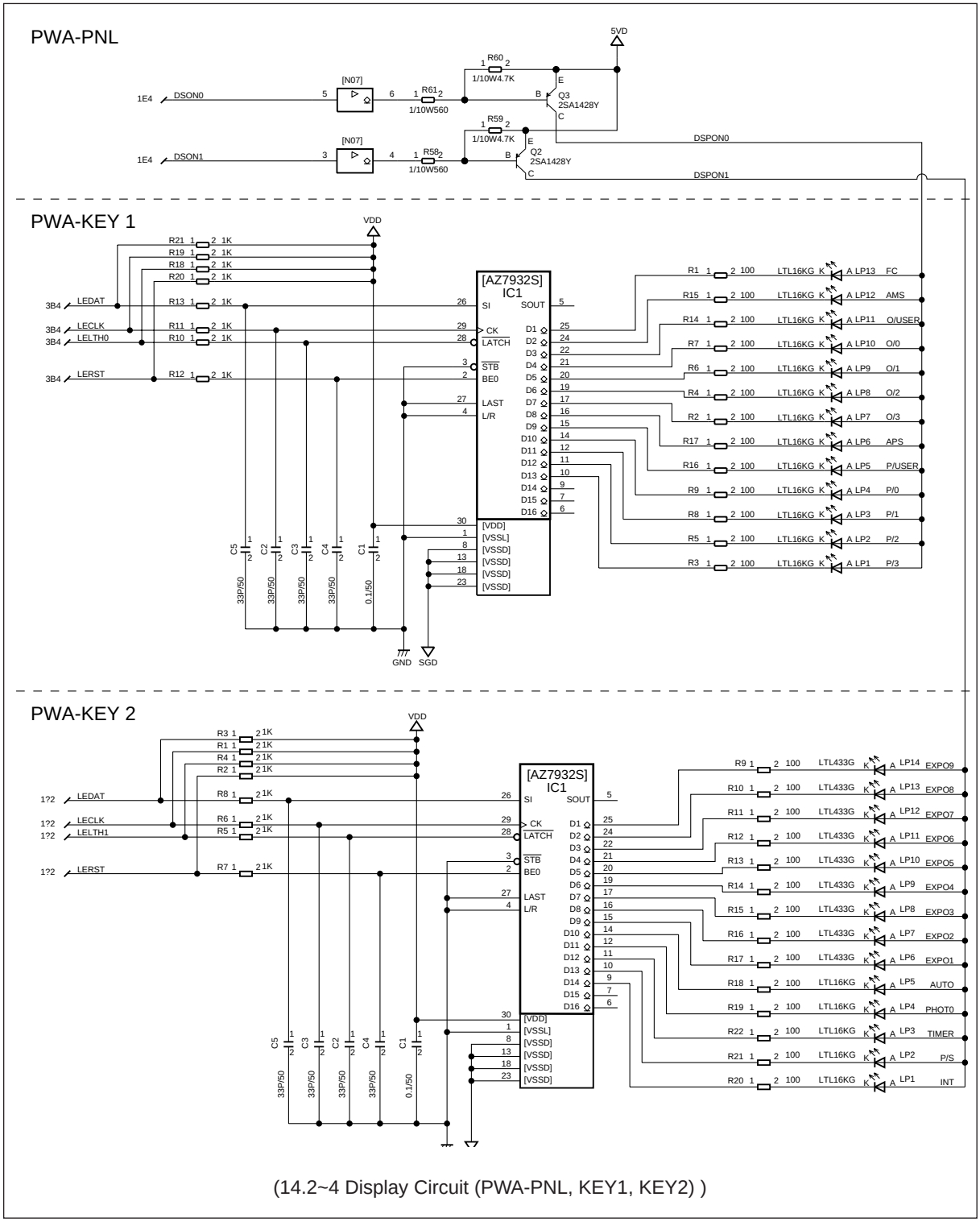

(14.2~4 Display Circuit (PWA-PNL, KEY1, KEY2))

- The signals of DSPON0 and DSPON1 become “H” level by one turn every 6 msec.
- Q2 (or Q3) is turned ON when DSPON0 (or DSPON1) is “L” level.
- LED ON/OFF signal from PNL is inputted to the SIN (pin 26) terminal of IC1 through LEDAT signal line. (Serial data)
- The LED ON/OFF signal is inputted to IC1 in serial is outputted to output terminals of D1 – D16 in parallel.

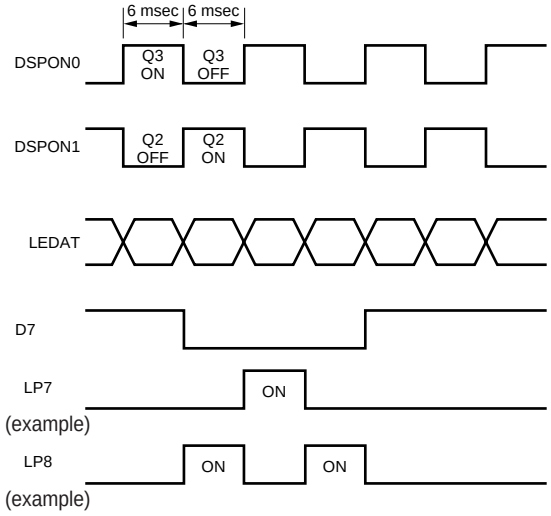

(3) Condition of LED lighting

① The transistor (Q2 or Q3) connected on the anode side of the LED is ON status.

② Output connected on the cathode side of the LED is “L” level.

When the above conditions ① and ② are fulfilled, the LED lights.

Refer to the following LED names which are ON/OFF-controlled by DSPON0/DSPON1 signals.

Transmission order	LP	Signal	DSP-ON-0	IC7932	LP	Signal	DSP-ON-1	IC7932
1				IC1-6				IC1-6
2				IC1-7				IC1-7
3				IC1-9	1	INT	Interruption	IC1-9
4	1	P/3	Paper size	IC1-10	2	P/S	Energy saving	IC1-10
5	2	P/2	Paper size	IC1-11	3	TIMER	Timer	IC1-11
6	3	P/1	Paper size	IC1-12	4	PHOTO	Photo mode	IC1-12
7	4	P/0	Paper size	IC1-14	5	AUTO	Automatic exposure	IC1-14
8	5	P/USER	Paper size (user adjustment)	IC1-15	6	EXPO1	Exposure display 1 (L MAX.)	IC1-15
9	6	APS	Automatic paper selection	IC1-16	7	EXPO2	Exposure display 2	IC1-16
10	7	0/3	Original size	IC1-17	8	EXPO3	Exposure display 3	IC1-17
11	8	0/2	Original size	IC1-19	9	EXPO4	Exposure display 4	IC1-19
12	9	0/1	Original size	IC1-20	10	EXPO5	Exposure display 5	IC1-20
13	10	0/0	Original size	IC1-21	11	EXPO6	Exposure display 6	IC1-21
14	11	0/USER	Original size (user adjustment)	IC1-22	12	EXPO7	Exposure display 7	IC1-22
15	12	AMS	Automatic magnification selection	IC1-24	13	EXPO8	Exposure display 8	IC1-24
16	13	FC	All clear	IC1-25	14	EXPO9	Exposure display 9 (D MAX.)	IC1-25

For the DSP-ON-0 signal, LEDs and ICs on PWA-KEY1
For the DSP-ON-1 signal, LEDs and ICs on PWA-KEY2

6. DRIVE SYSTEM

6.1 Construction of Drive System

The drive system drives the drum (cleaner unit), developer unit, transport belt, heat roller, exit roller, transport roller, cassette feed roller and aligning roller.

The drive system is driven by the main motor, the aligning motor and the feed motor.

6.2 Description of Operations

- Drum drive (Cleaner unit) ..... Main motor rotation is transmitted to the drum drive pulley via the timing belt, and drives the drum gear.
- Developer unit drive ..... Main motor rotation is transmitted to the developer unit drive gear via the gear.
- Heat roller drive ..... Main motor rotation is transmitted to the heat roller gear via timing belt and gears, and drives the heat roller.
- Transport belt ..... Transport belt gear is driven by the heat roller gear via the idle gear.
- Exit roller ..... Exit roller gear is driven by the heat roller gear via the idle gear.
- Aligning roller ..... Aligning motor rotation is transmitted to the aligning roller via the timing belt.
- Transport roller ..... Main motor rotation and feed motor rotation are transmitted to the transport roller clutches via timing belts and gears.
- Cassette feed roller ..... Feed motor rotation is transmitted to the cassette feed roller via timing belts and gears.

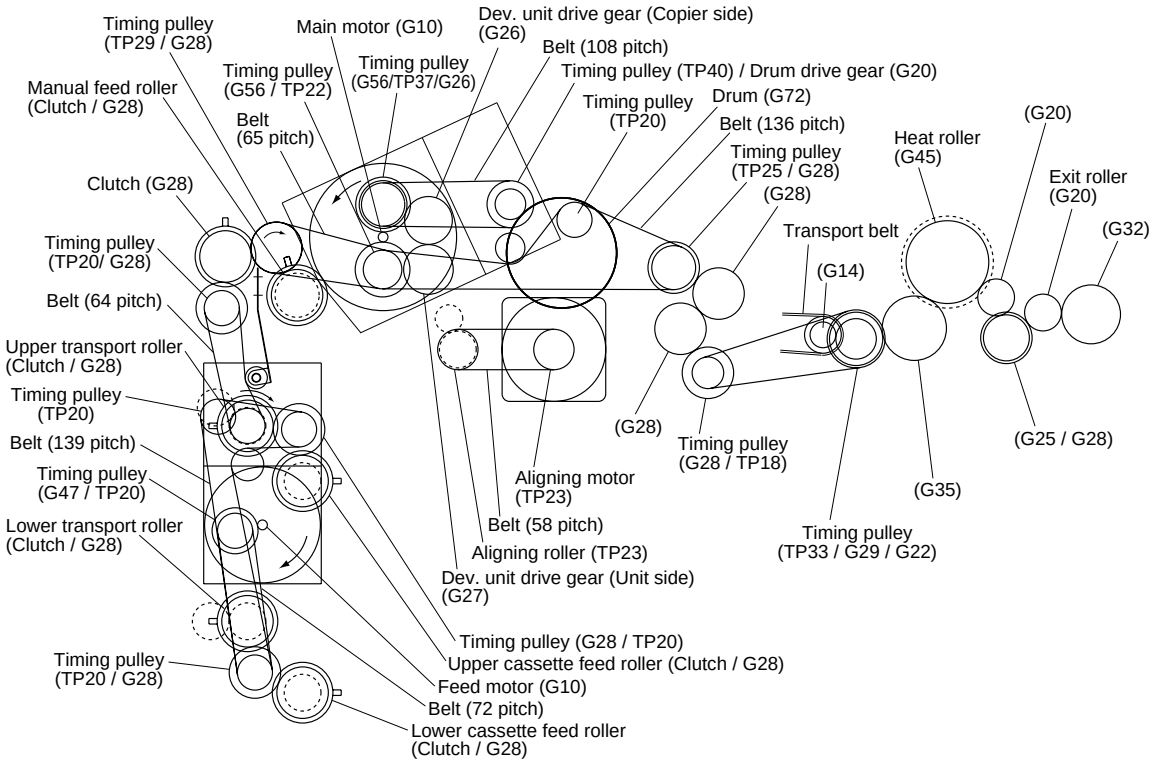

Drive system (Rear side view)

6.3 Disassembly and Replacement

[A] Main motor

(1) Remove the upper rear cover, the lower rear cover, the upper feed cover and the lower feed cover.

(2) Remove the rear inner cover (SU)(2 screws) and the rear inner cover (U) (3 screws).

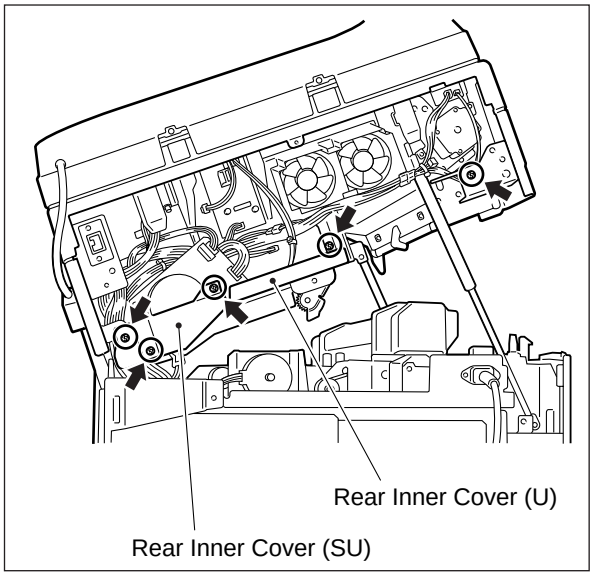

(3) Remove the main motor (2 connectors and 2 screws).

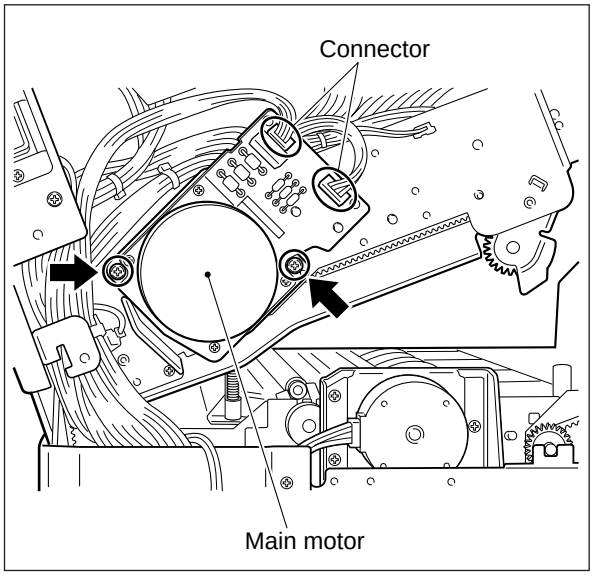

[B] Clamshell fulcrum drive unit

(1) Remove the wire harness from the M band of the clamshell fulcrum bracket.

(2) Remove the clamshell fulcrum drive unit (1 connector and 3 screws).

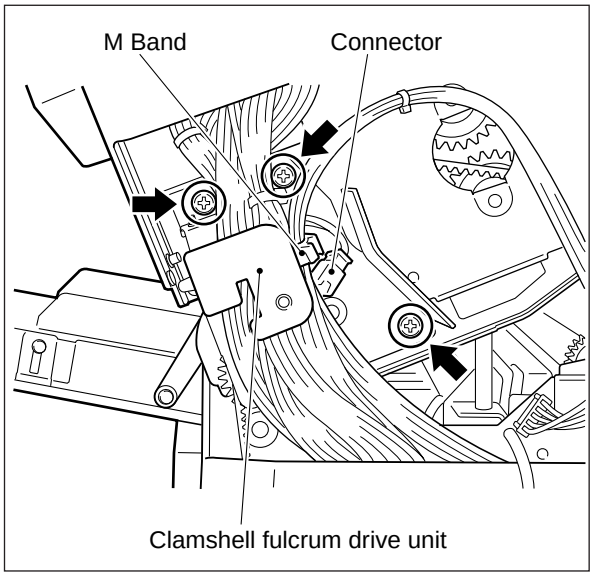

[C] Main drive unit

(1) Remove the main drive unit (1 connector and 4 screws).

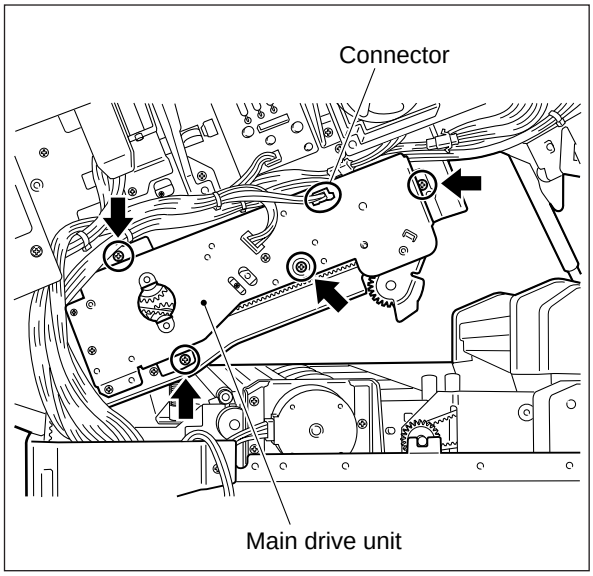

Note: Main drive unit gears.

The drum drive gear and pulley are press-fitted to their shafts.

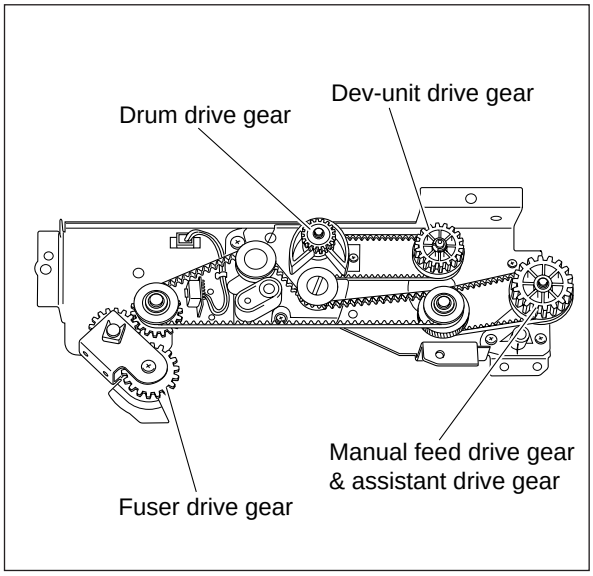

[D] Feed drive unit

(1) Remove the lower frame reinforcement bracket (3 screws).

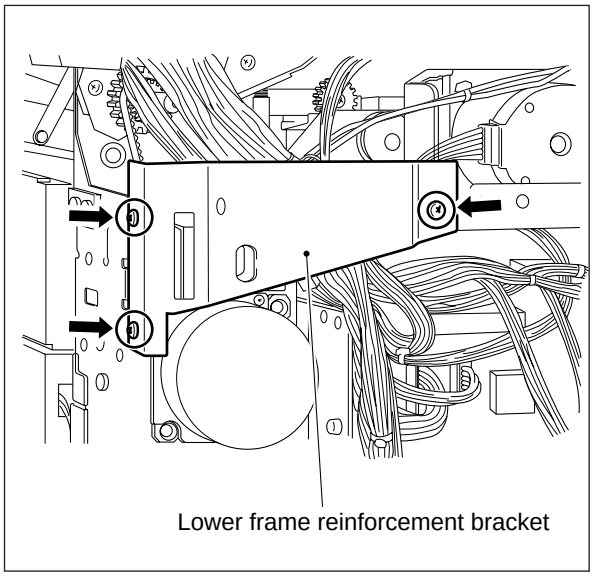

(2) Remove the feed motor (2 connectors and 2 screws).

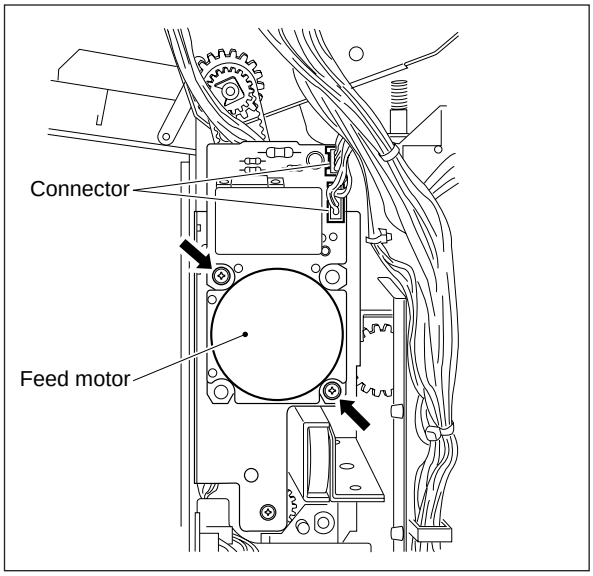

(3) Remove the feed motor bracket (3 screws).

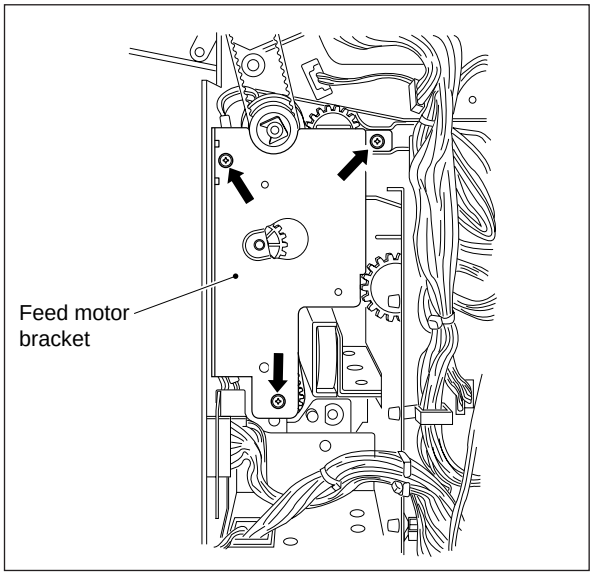

(4) Remove 2 belts .

(5) Remove the stop ring, one-way clutch and pulley and then take out one clutch (setscrew). Then remove one more clutch.

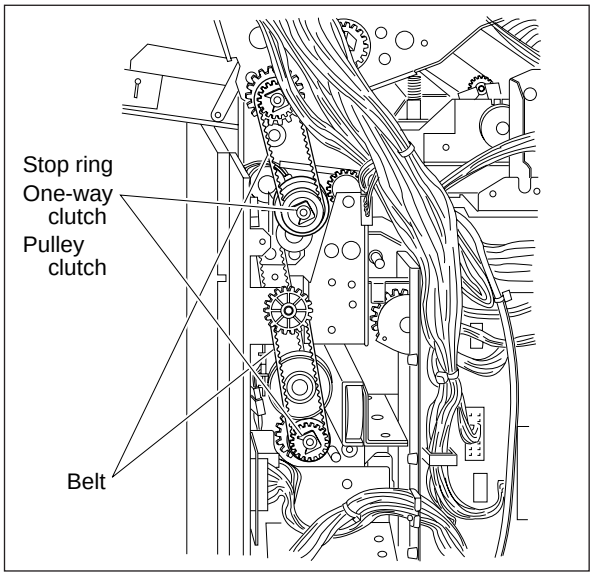

(6) Remove the clutch bracket (1 screw).

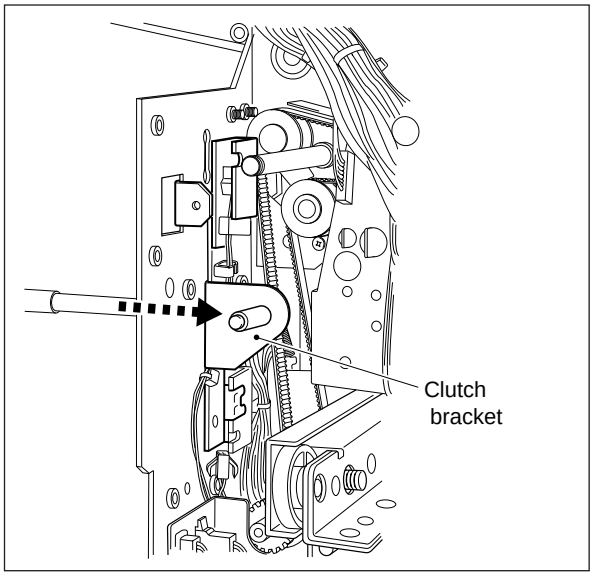

[E] Aligning motor

(1) Remove the aligning motor (1 connector and 3 screws).

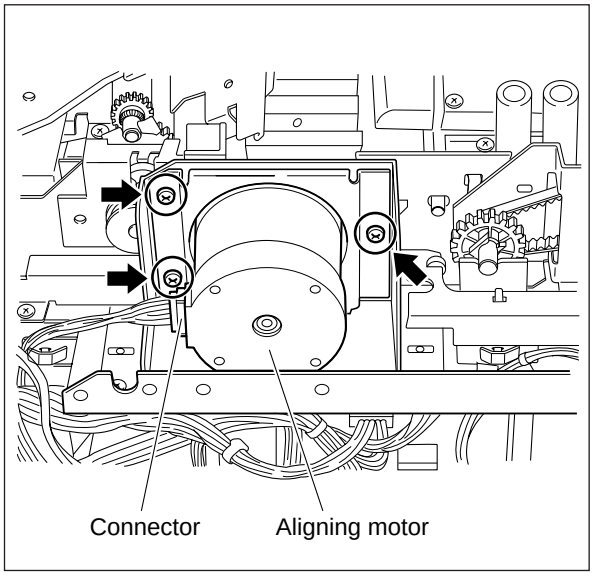

6.4 Main Motor, Transport Motor

6.4.1 Motor drive

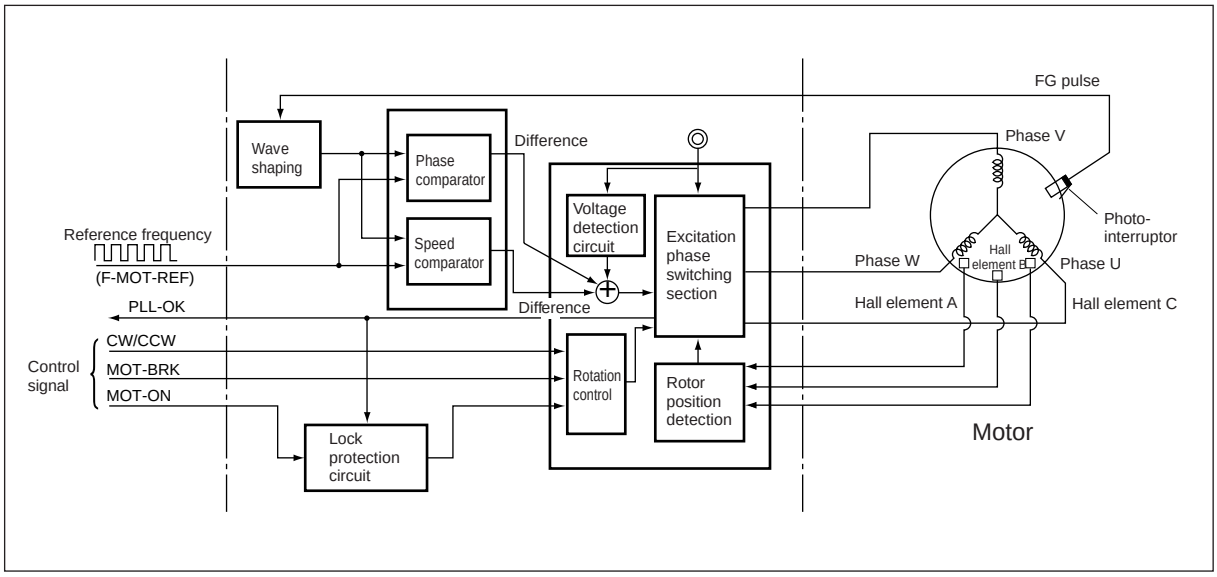

(1) The LGC transmits control signals for motor rotation.
Main motor: MAIN-CW/CCW: Direction of rotation, MAINMOT-ON: Motor rotation command
Transport motor: FEED-CW/CCW, FEEDMTR-ON

(2) The excited phase switching unit excites each phase on motor Motor runs.

(3) Hall elements A to C are used to detect the rotation position of the motor (or rotor).

(4) The excited phase switching unit switches the excitation for each phase.
(By repeating (2) through (4) above, the motor keeps running.)

(5) The FG pulse is generated by the FG pulse pattern and the N/S magnets of the rotor installed on the motor.

(6) The phases and velocities of the FG pulse and the reference frequency from the LGC are compared and the differences are added to IC3. Further to this are added the fluctuations in the supply voltage. (Signal generation)

(7) Changes the switching timing for the excited phase switching unit to match the signal amount obtained in step (6).
In other words, control is performed to equalize the FG pulse and reference frequency. The motor runs at a constant speed. (Locked range state.)

(8) When the motor enters the locked range state, the excited phase switching unit transmits the PLL-OK signal to the LGC. (“L” level).

(9) When the MOT-BRK from LGC enters “L” level, the motor rotation is braked, and when the MOT-ON signal enters “H” level, the main motor stops.

Note: Main motor and transport motor control signals

Signal	Main motor	Transport motor
	M1	M16
Control signal CW/CCW	MAIN-CW/CCW	FEED-CW/CCW
MOT-ON signal	MAIN MOT-ON	FEED MTR-ON

6.4.2 Control signals

(1) CW/CCW signal (LGC → MOT: Input)

Switches the rotation direction of motor.

When this signal becomes “L” level, the main motor rotates counterclockwise as viewed from the rear side, and drives the developer unit, drum, heat roller, etc.

When this signal is “H” level, the transport motor rotates clockwise as viewed from the rear side, and drives the transport-roller.

(2) PLL-OK signal (MOT → LGC: Output)

When the cycle of FG pulse deviation from the reference frequency is within fixed range, this state is specified as lock range (normal rotation), and this PLL-OK signal becomes “L” level. Also, at this time, the LED “ED1” light comes ON.

(3) F-MOT-REF signal (LGC → MOT: Input)

This signal is a reference clock signal for the motor to rotate at a fixed speed.

(4) MOT-FG signal

Generates the FG signal during motor rotation

(5) MOT-BRK signal (LGC → MOT: Input)

When it becomes “L” level, the motor rotation is broken down.

(6) MOT-ON signal (LGC → MOT: Input)

This signal is motor ON/OFF control signal.

When it becomes “L” level, the main motor rotates.

When it becomes “H” level, the transport motor rotates.

Signal level of motor circuit

Signal names and connector		“H” level	“L” level
J43	J549		
Main motor	Transport motor		
MAIN-CW/CCW	FEED-CW/CCW	CW direction	CCW direction
PLL-OK		Defective control	Normal
F-MOT-REF		Reference clock	
MOT-FG		Rotation pulse signal	
MOT-BRK		Brake OFF	Brake ON
MAINMOT-ON	FEEDMTR-ON	Main motor OFF Transport motor ON	Main motor ON Transport motor OFF

* The signal names indicate a level in the connector J43, respectively.

7. OPTICAL SYSTEM

7.1 Functions

In this copier, the surface of the original is directly exposed to light, and the reflected light is conducted to the surface of the drum via the mirror, lens, and slit.

The whole original image is reflected on the drum surface through the light source being scanned from the leading edge to the trailing edge.

This area where functions as above are performed is called the optical section, located at the upper side of the copier.

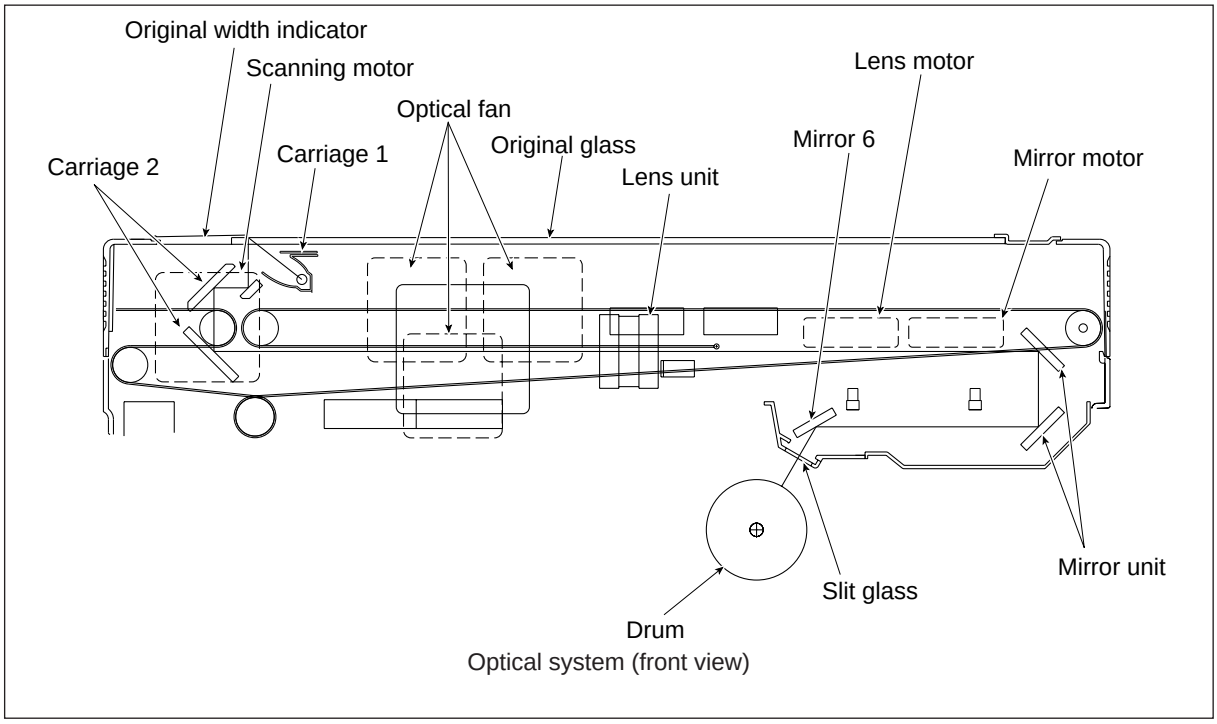

Optical system (front view)

7.2 Construction

The construction and purpose of the optical section are the following:

(1) Original glass

The original is placed on this glass. Light from the exposure lamp exposes the surface of the original through this original glass.

(2) Carriage 1

Carriage 1 consists of the exposure lamp, reflector, mirror 1, thermofuse, and light distribution adjustment plates, etc. Carriage 1 is scanned by the scanning motor. The relation between the scanning speed and the drum rotation speed is specified as follows. In actual-size copying, both speeds are the same. The reproduction ratio of the direction of paper transport (lengthwise reproduction ratio) is specified by this scanning speed being changed. In enlargement copying, the scanning speed is slower than the drum rotation speed, and in reduction copying it is faster.

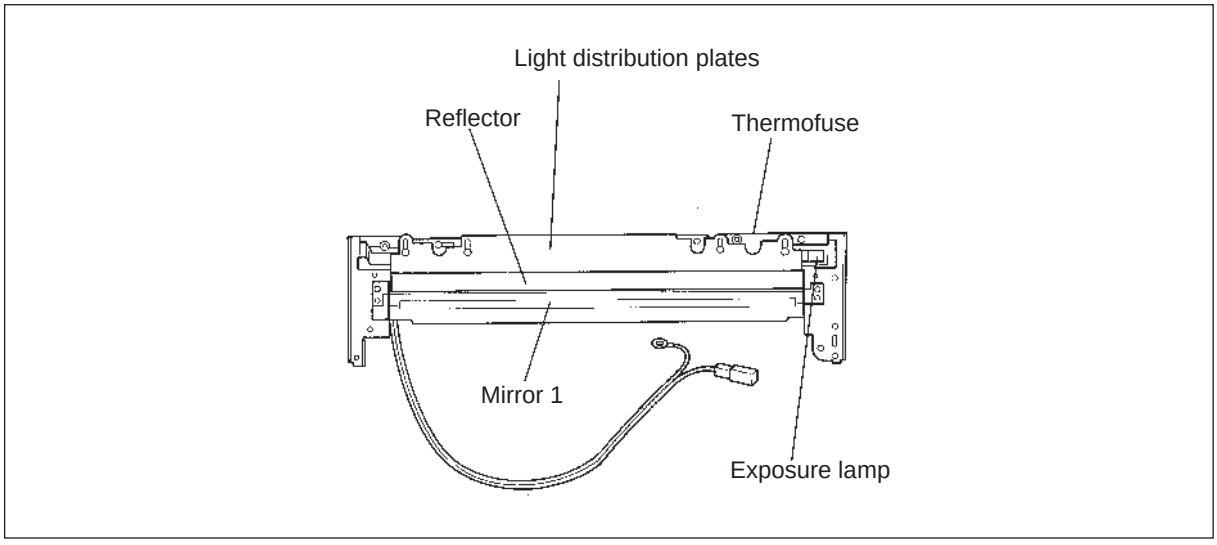

a. Exposure lamp

The light source for exposing the original to light.

b. Reflector

The reflection plate for using the exposure lamp effectively.

The sub-reflector is slit for optical path width cutting.

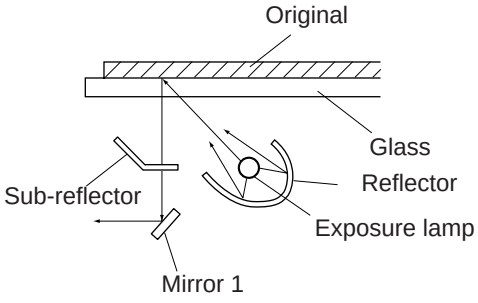

c. Mirror 1

The mirror for conducting the reflected light from the original to mirror 2 (mentioned later).

d. Thermofuse

Prevents the exposure lamp from an increase in temperature due to excessive lighting.

e. Light distribution adjustment plates

It is positioned to shield the light irradiated from the reflector on the surface of original, and adjusts the light intensity.

If the positions for the installation of this adjustment plate at the front or rear side are shifted, and the light intensity is different at both sides, this may cause uneven light distribution.

(3) Carriage 2

Consists of mirror 2 and 3, conducts the reflected light from mirror 1 to the lens via mirror 2 and 3. This is also scanned by the scanning motor in the same way as carriage 1.

The scanning speed is half that of carriage 1.

(The scanning distance is also half.)

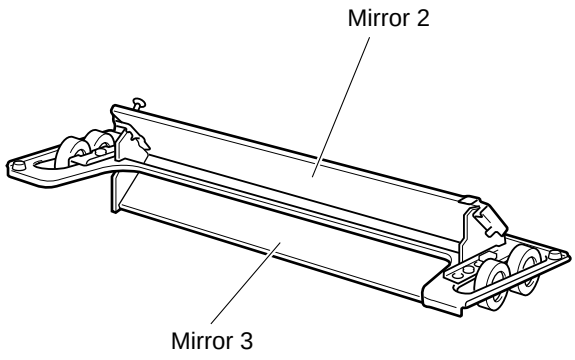

Carriage 2

(4) Lens unit

It is driving by the lens motor. The reflected light from mirror 3 is reversed at the lens focus, and conducted to mirror 4 (mentioned later).

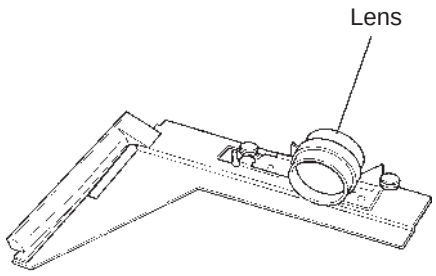

Lens unit

(5) Mirror unit

The mirror unit consists of mirror 4 and 5, and conducts the reflected light passing the lens to mirror 6 via mirror 4 and 5. This is driven by the mirror motor. Changing of positions of the lens unit and mirror unit alters the reproduction ratio of the vertical direction of paper transport (lateral reproduction ratio).

When the distance of the light path is equal between the original surface and the lens focus and the lens focus and the drum surface, actual-size copying is obtained.

When the former is longer, reproduction copying is performed, and when shorter, enlargement copying.

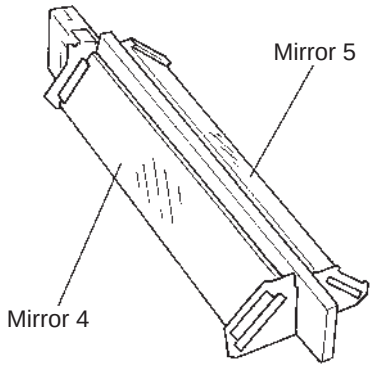

Mirror unit

(6) Mirror 6

Conducts the reflected light from mirror 5 to the slit.

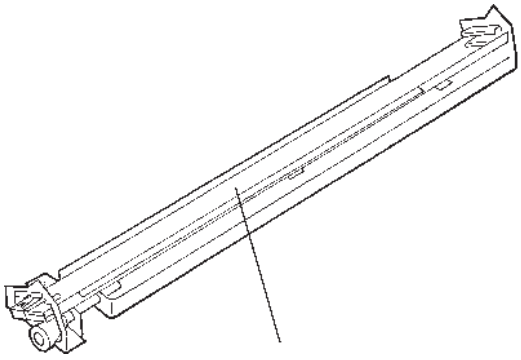

(7) Slit (glass)

The sub-reflector performs slit functions therefore the slit glass only protects the optical section from toner dust, etc.

(8) Copy-area indicator unit

This is located inside the original scale. This is for indication of the maximum area in which the copy can be made at that time.

The indicator is driven by the document motor. The original range is indicated with the copy-area indicator and orange line on carriage 1.

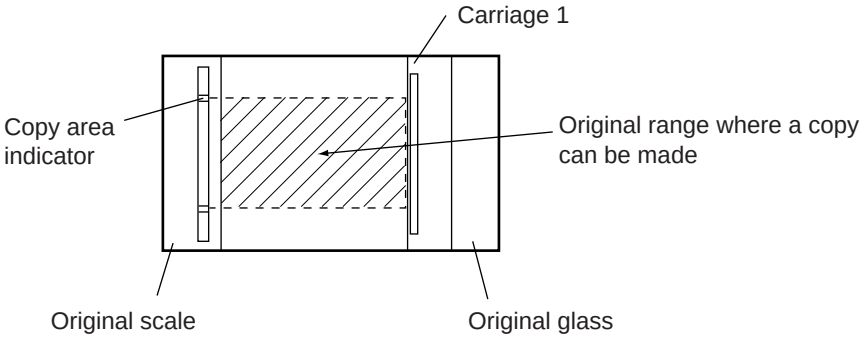

7.3 Description of Operation

7.3.1 Scanning motor

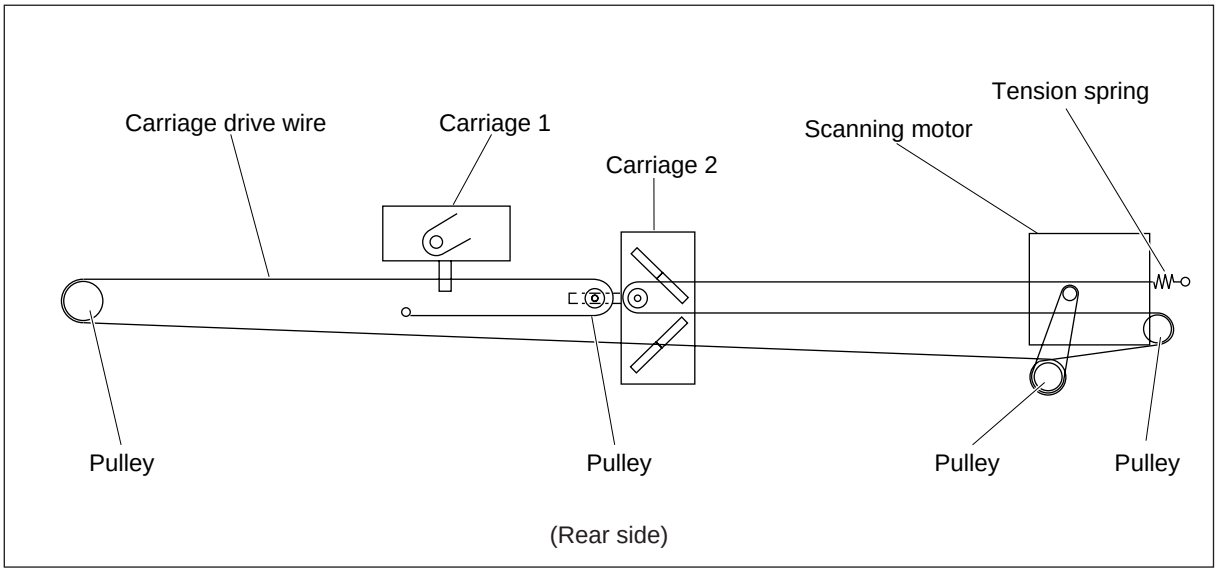

The scanning motor rotation is transmitted to carriages 1 and 2 via the timing belt and the carriage drive wire. Carriage 1 and 2 are first moved to home position. The home position is detected when carriage 1 passes the home switch. When the PRINT key is pressed, carriages 1 and 2 scan the original.

7.3.2 Mirror motor/lens motor

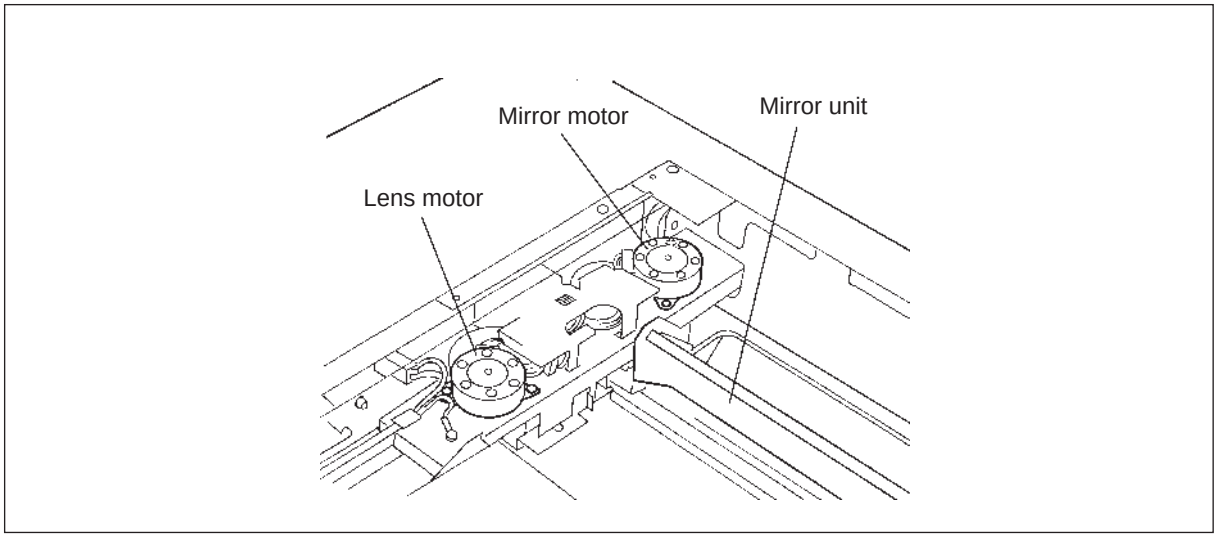

Lens motor

Gear (G18)…motor axis
↓
Gear/pulley (G88/TP16)
↓
Timing belt (pitch length: 810)
↓
Lens unit

Mirror motor

Gear (G18)…motor axis
↓
Gear (G88/G10)
↓
Rack gear (G22)
↓
Mirror unit

Immediately after the power is switched ON:

- If the lens/mirror switch is ON, the lens unit is transported to the exit side. Then the mirror unit is transported to the feed side, and it is positioned for actual size copying.
- If the lens/mirror switch is OFF, the switches are turned ON by the lens unit, then the mirror unit in that order and both units are positioned for actual-size copying.

When the reproduction ratio is selected, the lens unit and the mirror unit are positioned accordingly using the actual-size position as the starting (standard) position.

7.3.3 Document motor

The front and rear copy area indicators are set at home position, that is, for maximum width, via the timing belt. When the paper size or reproduction ratio is changed, the indicators are positioned for the specified size and the original setting position is indicated on the glass.

7.3.4 Optical fan motor

Stops during standby and rotates during copying, and cools the optical section.

7.4 Pulse Motor Drive

7.4.1 Pulse motor drive circuit (constant current type)

The scanning motor (M2) is driven by hybrid IC STK6713BMK4 of the unipolar constant current chopper drive. The driving circuits of A and $\overline{A}$ phases are shown below. Since B and $\overline{B}$ phases are exactly the same, they are omitted here.

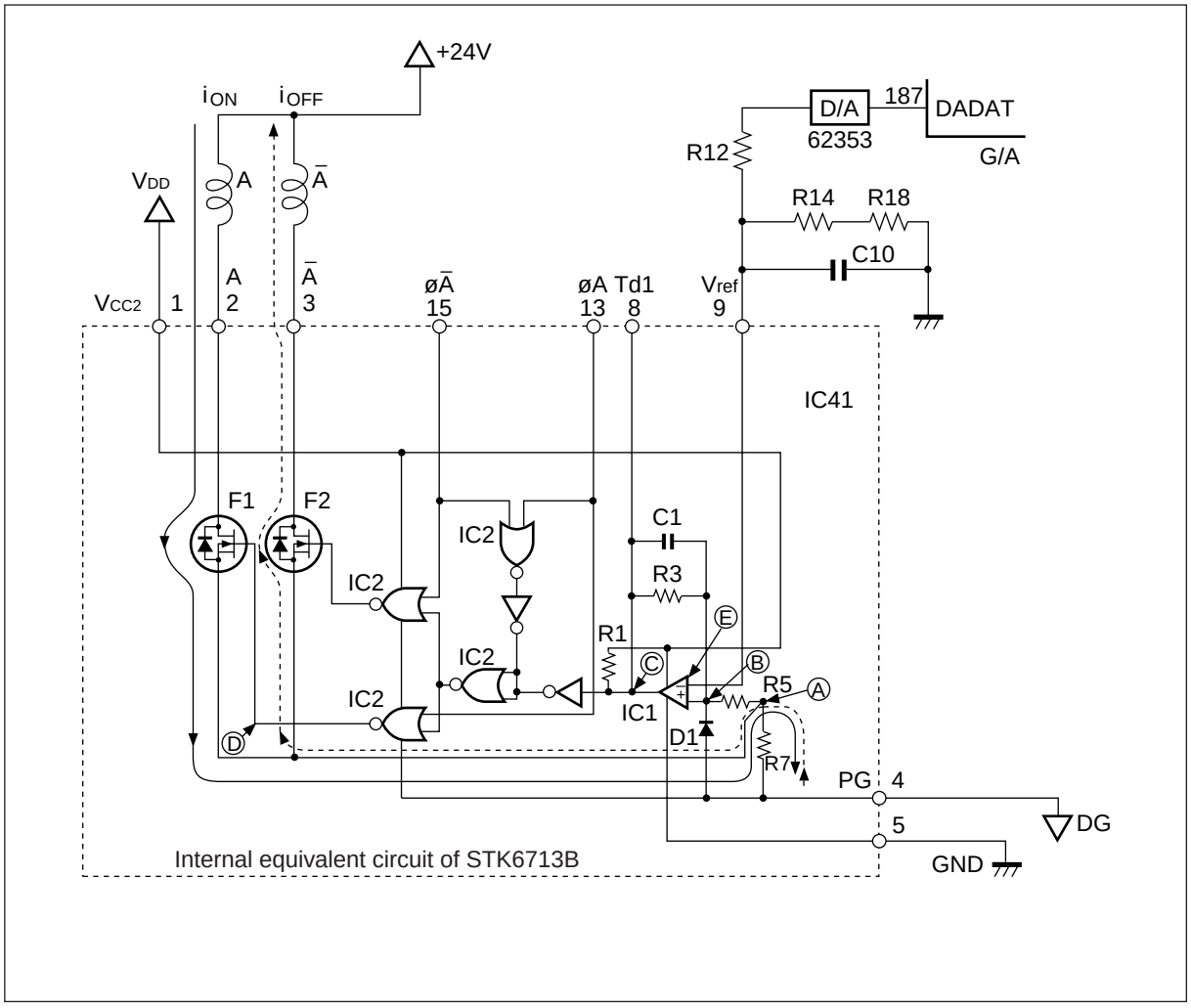

The circuit configuration on the inside of the IC is composed of each phase excitation switching section (IC2), driver (F1, F2), comparator (IC1), and current detection resistor (R7).

The following explains the circuit operation when the A phase is excited.

– Process when the A phase is excited –

① øA phase becomes “L” level (ø$\overline{A}$ is “H” level).

② Reverse input Ⓔ of the comparator (IC1) is applied with the reference voltage which depends on the resistance-divided voltage of the R12, R14, and the R18.
Non-reverse input Ⓑ is “L” level. Therefore, the output Ⓒ of IC1 becomes “L” level.

③ According to step ① and ②, Ⓓ of IC2 becomes “H” level, and F1 is turned ON (conductive condition).

④ Current flows into the coil A from the power supply of +24V, and it gradually increases.

⑤ The terminal voltage of the current detection resistor R11 increases, and Ⓒ becomes “H” level and F1 goes OFF from the moment when voltage Ⓑ becomes higher than voltage Ⓔ.

⑥ Because the winding method of coil A and $\overline{A}$ is bipolar winding, the energy stored in coil A is induced in coil $\overline{A}$, and is discharged using the coil $\overline{A}$.
That is, A current flows in the direction of DG (Drive Ground), R7, F2 diode and coil A.

⑦ When the voltage stored in the condenser C1 lowers, and becomes lower than voltage Ⓔ, Ⓒ becomes “L” level and F1 comes ON again, and the winding current of A phase increases.

⑧ In this manner, the ON/OFF operation of the motor current (constant current chopping operation) is repeated.

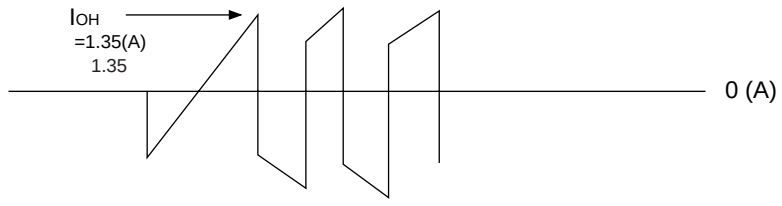

Motor input current waveform

In the case of the excitation of $\overline{A}$ phase, ø$\overline{A}$ becomes “L” level and F2 comes ON, the same operation is performed.

The limit of winding value is changed in high torque and low torque by the D/A output. In low torque the current is lower, in high torque the current is higher.

Low torque : I_{OH} = 1.2 (A)
High torque: I_{OH} = 1.35 (A)

Waveform time chart of each section

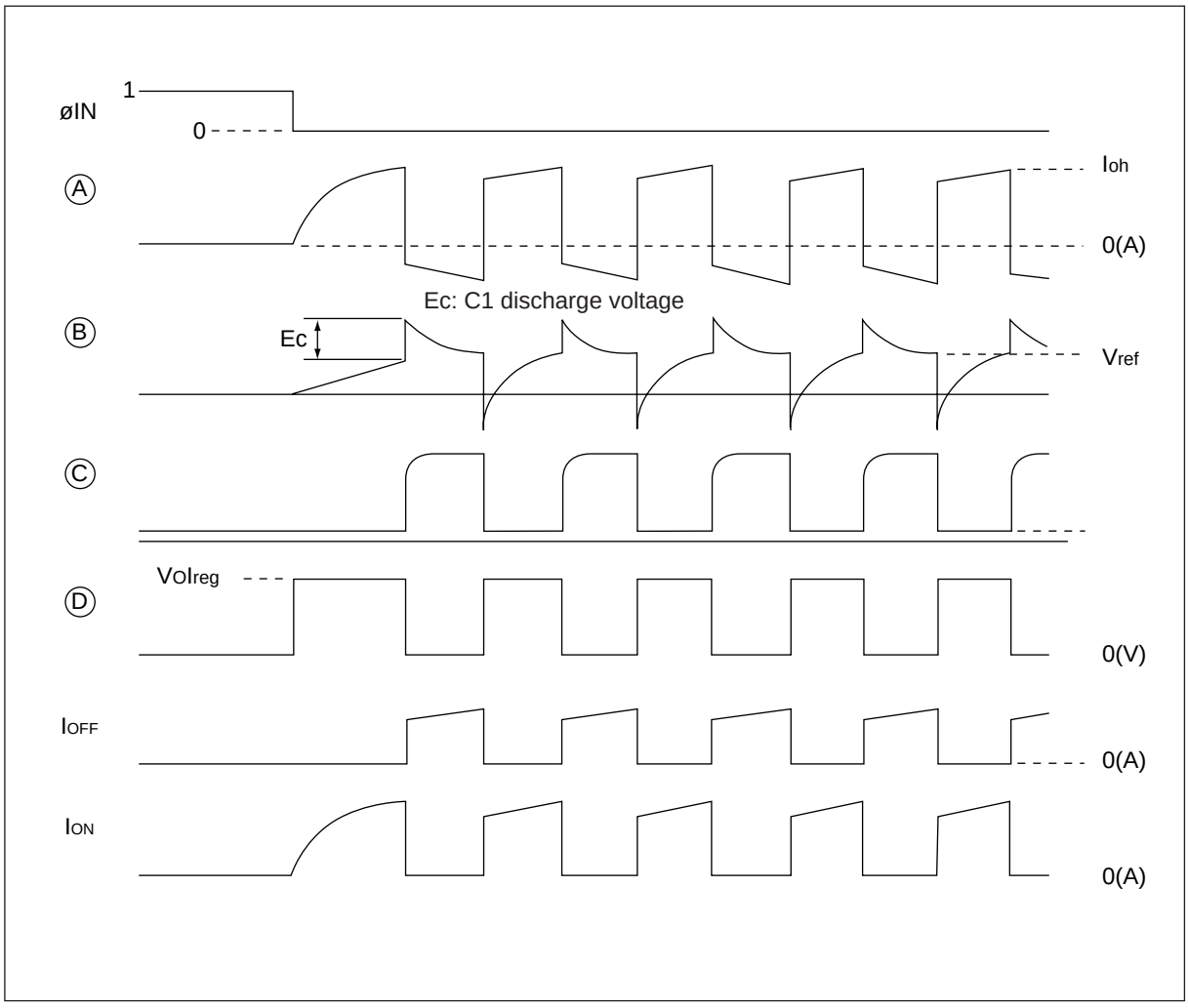

Equivalent circuit

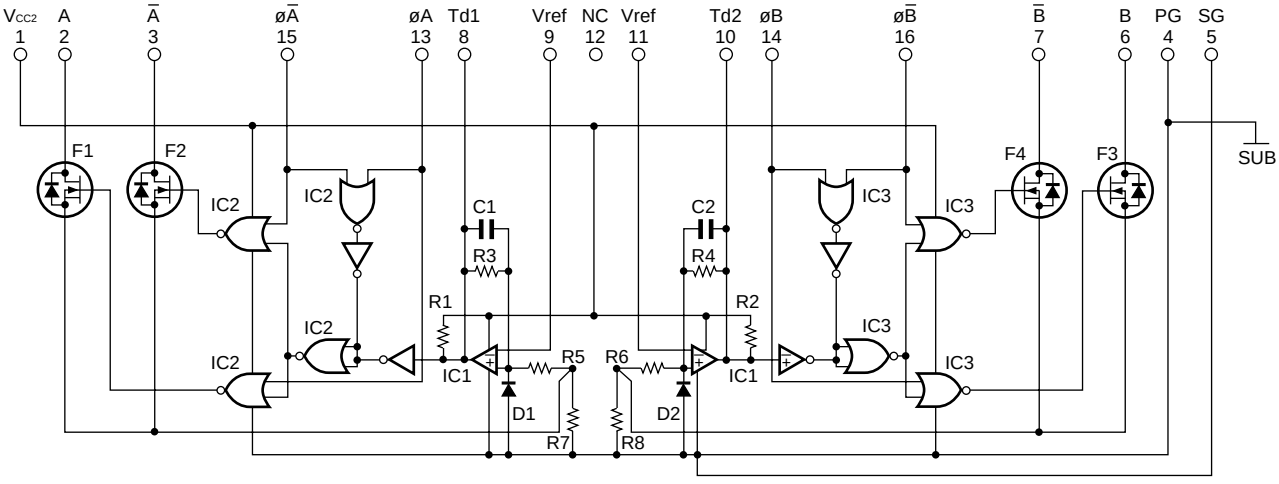

7.4.2 Pulse motor drive circuit (constant voltage type)

- Lens motor (M3) (LNS-MOT) ~Driven by IC3 (Logic PC board: TD62308F)
- Mirror motor (M4) (MRR-MOT) ~Driven by IC4 (Logic PC board: TD62308F)
- Document motor (M11) (DCM-MOT) ~Driven by IC2 (Logic PC board: TD62308F)

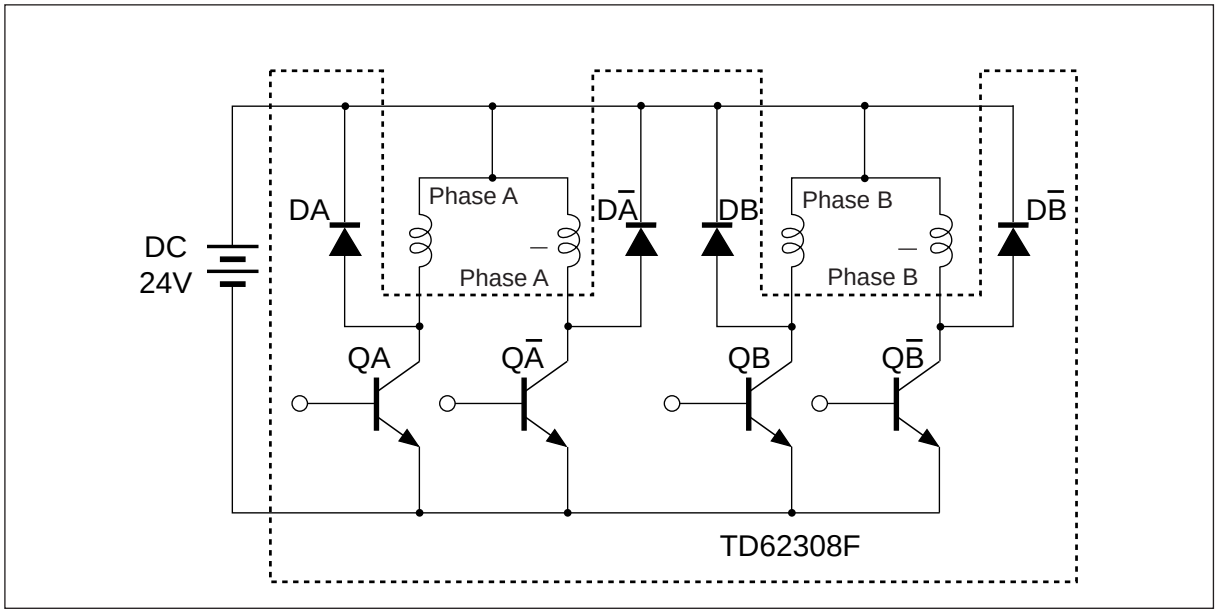

In the case of 2-phase excitation, the figure on the right shows the signals applied to the base of transistors QA, QB, $\overline{QA}$, and $\overline{QB}$.

An ON/OFF combination of the transistor is switched.

↓

The combination of the current flowing phases is switched.

↓

The motor rotates.

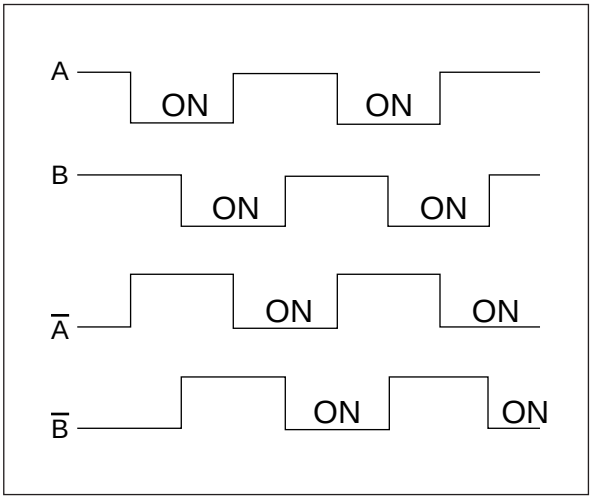

7.5 Exposure Control Circuit

7.5.1 Introduction

The exposure control circuit is composed of four blocks as follows.

① Lamp regulator	Applies a pulse duty ratio corresponding to PWM signal to the exposure lamp.
② Automatic exposure sensor circuit	Generates an AES signal indicating the density of the original by sensing the light reflected by the surface of the original.
③ Exposure step	Detects the exposure position set by the operator's key input.
④ Arithmetic and control unit	Determines the lamp voltage by computation on the basis of AES and exposure step, and outputs the PWM signal to the lamp regulator.

Note: The ON/OFF state of the exposure lamp is controlled by a special signal (EXPON; J2-A18), distinct from the PWM signal.

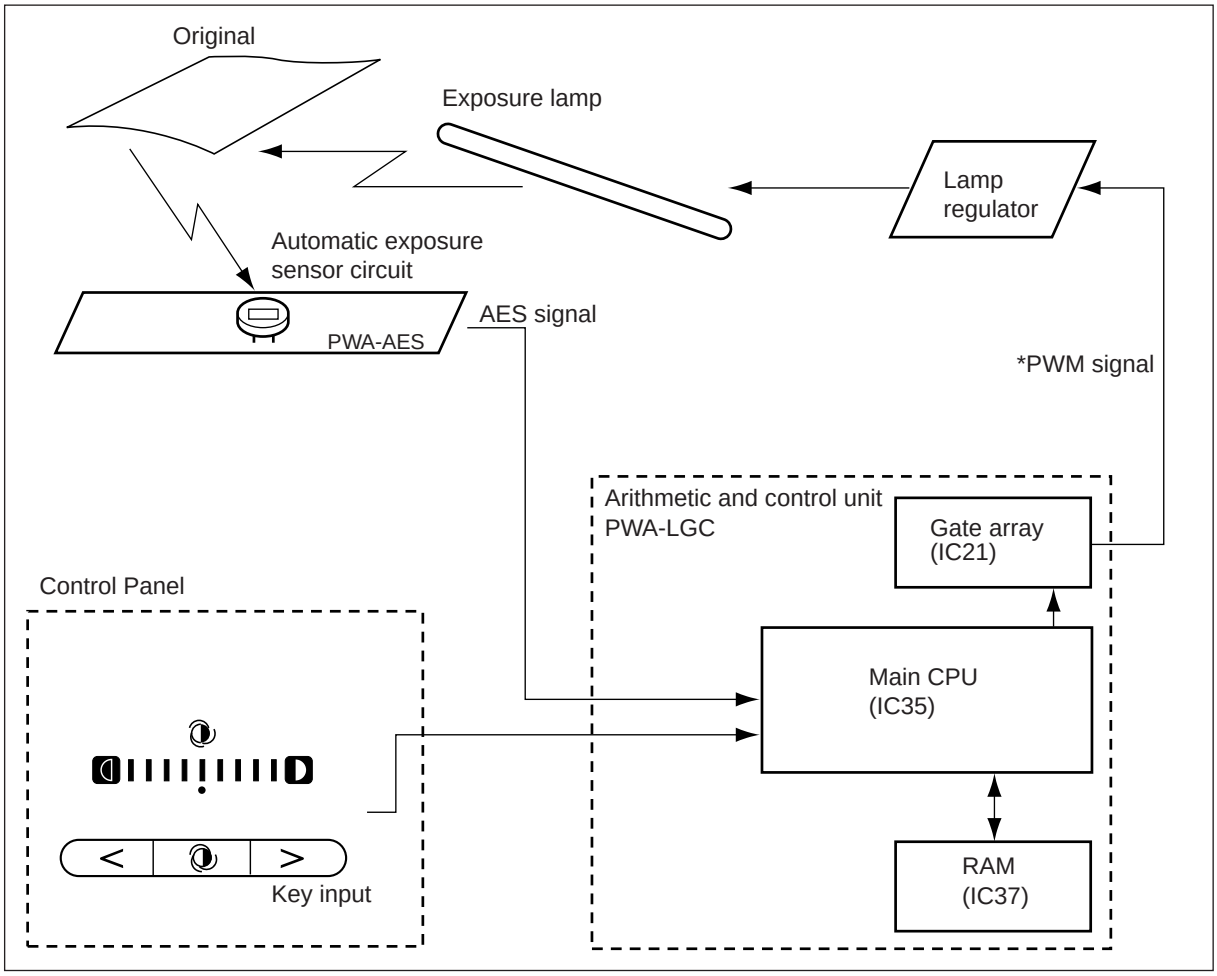

The exposure control circuit has the following two functions:

Ⓐ Manual exposure mode ..... A constant lamp voltage corresponding to the set exposure step on the exposure lamp is applied.

Ⓑ Automatic exposure mode ..... The quantity of light reflected by the surface of the original, which varies infinitely with the lightness and darkness of the surface of the original, is detected by the automatic exposure sensor circuit, and the voltage applied to the exposure lamp is continually varied accordingly; a high lamp voltage being impressed for dark originals and a low lamp voltage for light originals.

7.5.2 Operation of lamp regulator

A typical characteristic curve is shown in the following diagram.

By means of a phase-angle control system, a lamp voltage corresponding to the PWM pulse duty ratio input is generated even if some fluctuation occurs in the AC input voltage.

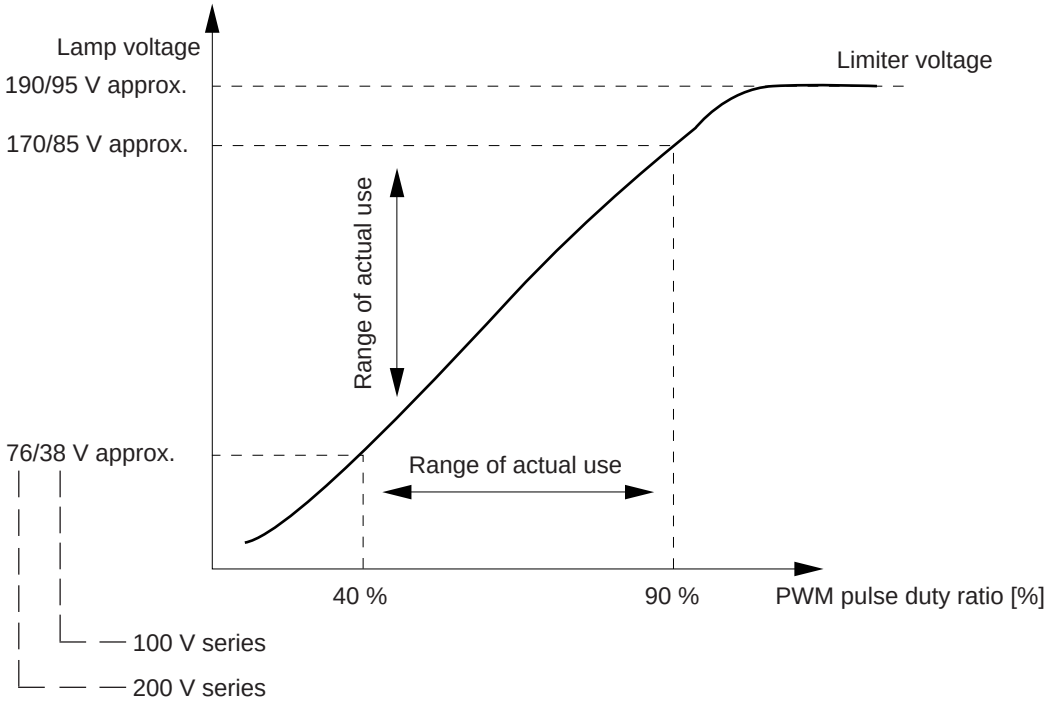

[Characteristic curve of the lamp regulator]

7.5.3 Automatic exposure sensor circuit

By the action of IC1, the incidence of light upon photocell PD1 is generated as an AES signal on J11-B4 (PWA-LGC).

Dim reflected light → Small AES output

Intense reflected light → Large AES output

7.5.4 Arithmetic and control unit

The arithmetic and control unit is composed of the following four blocks.

① AD converter

The AES signal is input into the analog input terminals of the CPU (IC35) and converted to digital.

② SRAM with built-in battery (BC-RAM)

Consists of IC37, which stores exposure adjustment data to ensure that optimum exposure is performed for each reproduction ratio and for automatic exposure.

③ Main CPU (IC35)

Incorporates software which computes the voltage to be applied to the lamp in accordance with the copying mode, such as enlargement/reduction, automatic exposure, and manual exposure, and the adjustment data in BC-RAM.

④ PWM timer circuit

Consists of the circuit shown in figure below.

The data resulting from the computation performed by the CPU described in item ③ above, are converted to PWM signals by the gate array, and output to J2-A17 via IC18 from the PWM output terminal of the gate array.

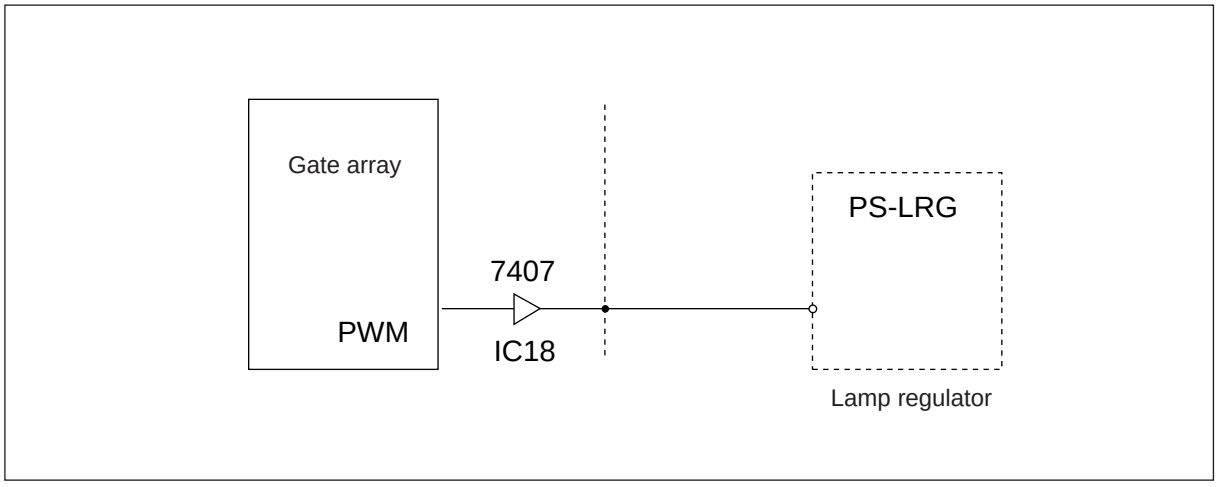

7.5.5 Lamp regulator circuit

The lamp regulator monitors the AC input voltage to control the exposure lamp to a fixed intensity.

(Method)

- The AC input voltage is detected.

↓

- The waveform rectifying circuit rectifies the AC input voltage to a DC voltage approximated to the effective value of the input voltage.

↓

- This DC voltage and pulse signal are rectified, and compared with the reference voltage and amplified.

↓

- According to the output, the trigger pulse generation circuit generates a trigger pulse synchronous with the power source frequency.

↓

- The energization angle of the TRIAC is controlled.

II

Makes the voltage at both ends of the lamp constant.

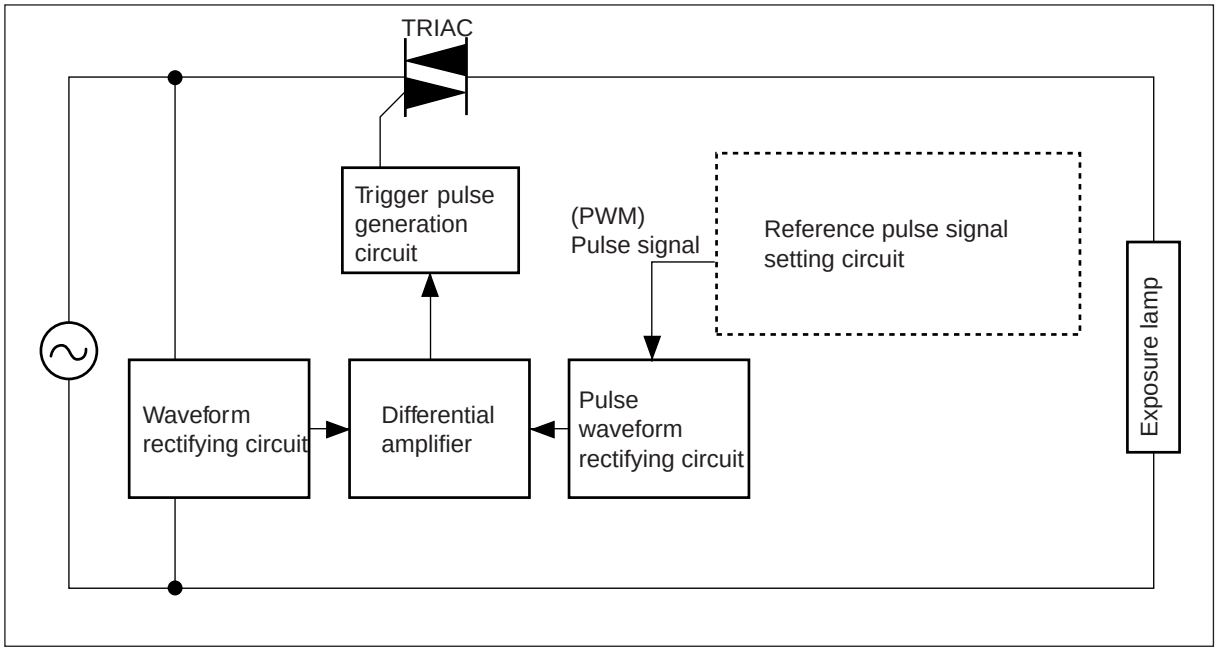

7.6 Automatic Original-Size Detection Circuit

This circuit detects the original size (standard sizes only) using the 3-beam type reflecting photosensor and 2 – 3 reflecting photosensors (3 for A4 series, 2 for LT series) on the base frame of the optical unit.

7.6.1 Principle of original-size detection

On the base frame of the optical unit, the reflecting photosensor (3-beam type) and 2 – 3 reflecting photosensors (3 for A4 series, 2 for LT series). Each photosensor consists of an infrared light emitting diode (light-emitting side LED) and a phototransistor (light-receiving side). When an original is placed on the original glass, the light emitted by the LEDs is reflected by the original and led to the phototransistor. In this way, the presence or absence of an original is detected by whether reflected light exists or not.

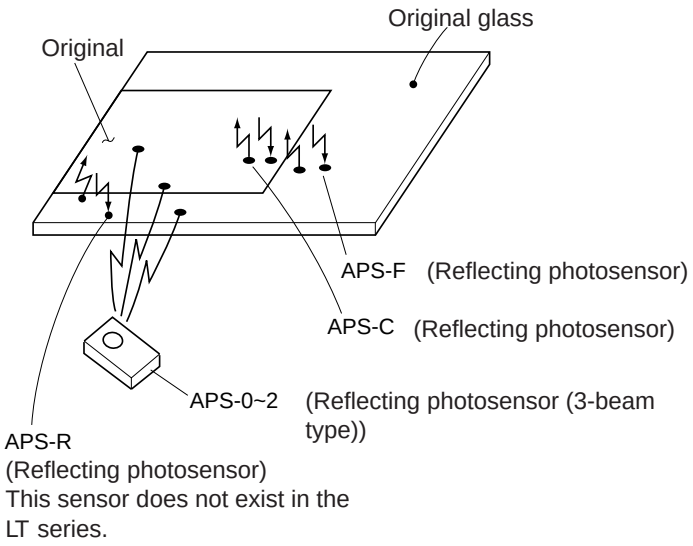

7.6.2 Original size detection

(1) If the copier is set in the original size detection mode, the carriage is set at its home position.

(2) Detection is performed in an instant when the original cover is opened and each sensor receives the reflecting light and the conditions of the matrix shown in (4) are satisfied.

(3) Original size detection is performed when the output signals from each sensor are input to the gate array (IC21) and the main CPU (IC35). IC21 and IC35 are on the logic PC board.

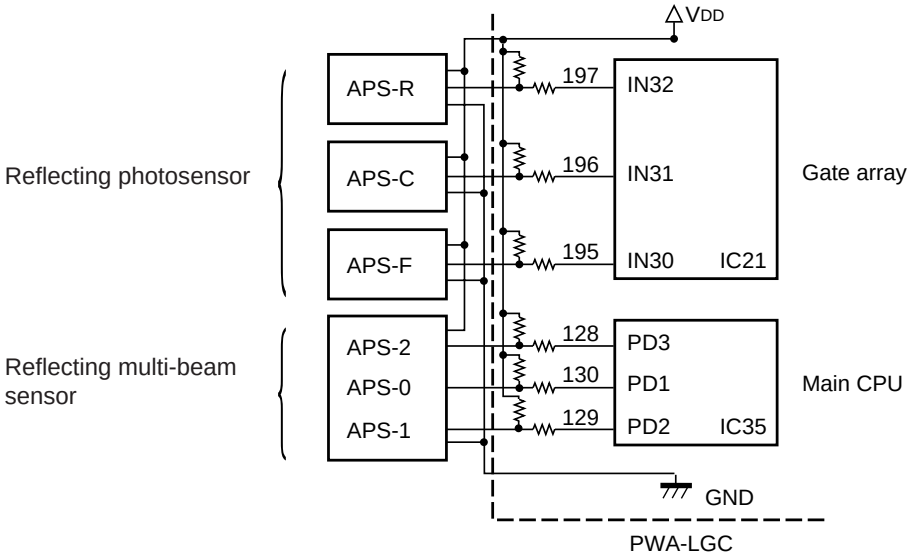

Original size detection circuit

Original size is determined by a combination of the presence/absence of the original. Combination charts for size determination of A4 series and LT series are shown below in input level at ports PD1 ~ PD3 (Main CPU: IC35) and ports IN30 ~ IN32 (Gate array: IC21).

* LT series does not use IN32.

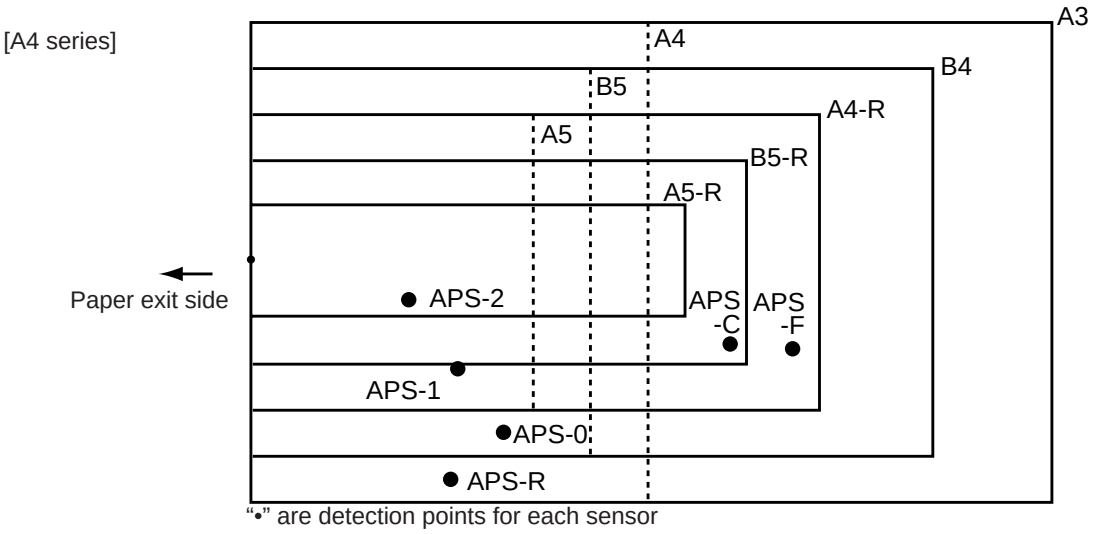

Sensor detection points

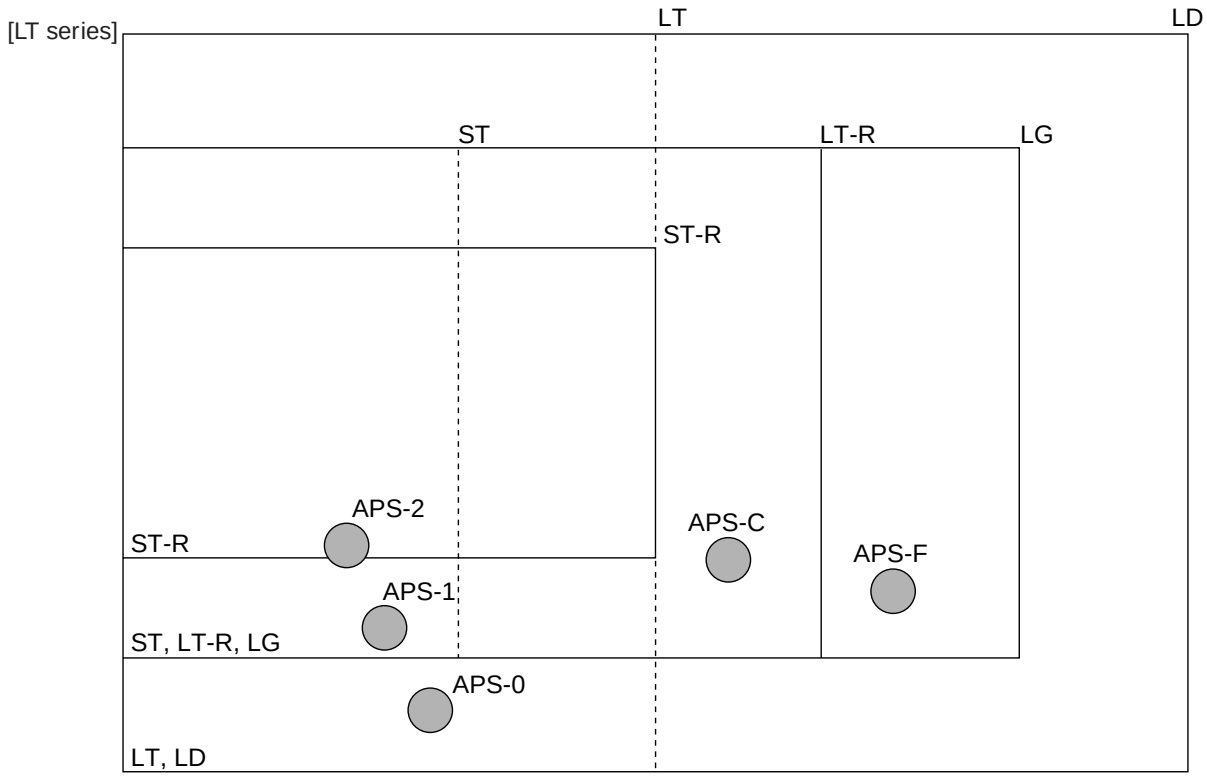

[A4 series]

Main CPU (IC35) Port Input Level			Gate array (IC21)			
(APS-2) PD3	(APS-1) PD2	(APS-0) PD1	(APS-F) IN30	(APS-C) IN31	(APS-R) IN32	Original size
H	H	H	H	H	H	No original
L	L	H	H	H	H	A5
L	L	L	H	H	H	B5
L	H	H	H	H	H	A5-R
L	L	L	H	H	L	A4
L	*	H	H	L	H	B5-R
L	L	H	L	L	H	A4-R
L	L	L	L	L	H	B4
L	L	L	L	L	L	A3

[LT series]

Main CPU (IC35) Port Input Level			Gate array (IC21)		
(APS-2) PD3	(APS-1) PD2	(APS-0) PD1	(APS-F) IN30	(APS-C) IN31	Original size
H	H	H	H	H	No original
L	L	H	H	H	ST
L	H	H	H	H	ST-R
L	L	L	H	H	LT
L	L	H	H	L	LT-R
L	L	H	L	L	LG
L	L	L	L	L	LD

Note:

H: Original detected

L: Original not detected

*: H and L whichever is sufficient

Port input level (Main CPU: IC35, Gate array: IC21)

= Output level of each sensor

7.7 Disassembly and Replacement

7.7.1 Original glass

(1) Remove the glass fix (2 screws).

(2) Remove the original glass in the direction of the arrow.

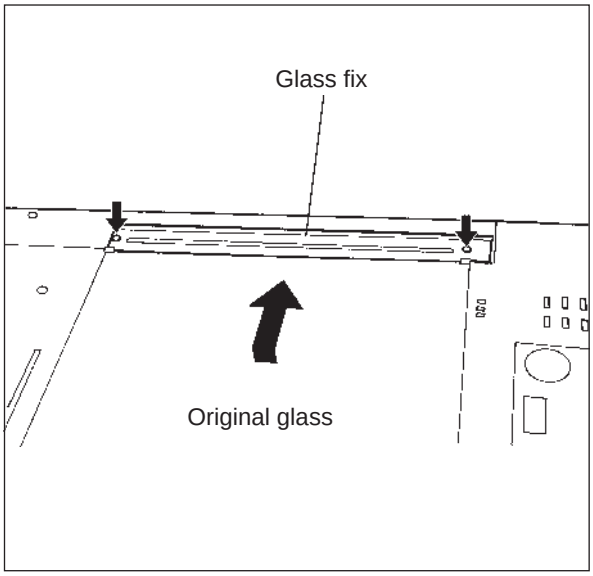

7.7.2 Automatic exposure sensor PC board (PWA-AES)

(1) Remove the original glass and move carriages 1 and 2 to the exit side.

(2) Remove the optical cover (2 screws).

Note: Be careful not to deform the black sheets of either side of the lens unit when moving the lens unit with its optical cover removed. Move the lens unit toward the paper feed side to protect the black sheet when installing the optical cover.

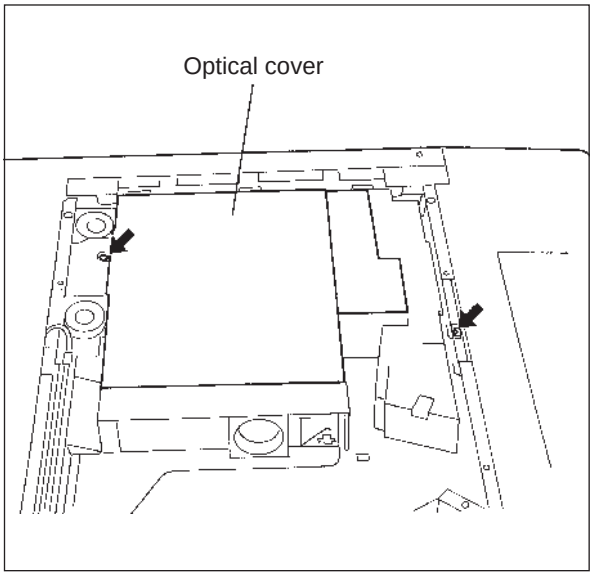

(3) Remove the automatic exposure sensor unit (1 screw).

(4) Remove the connector (1) and the screws (2) and take off the PC board.

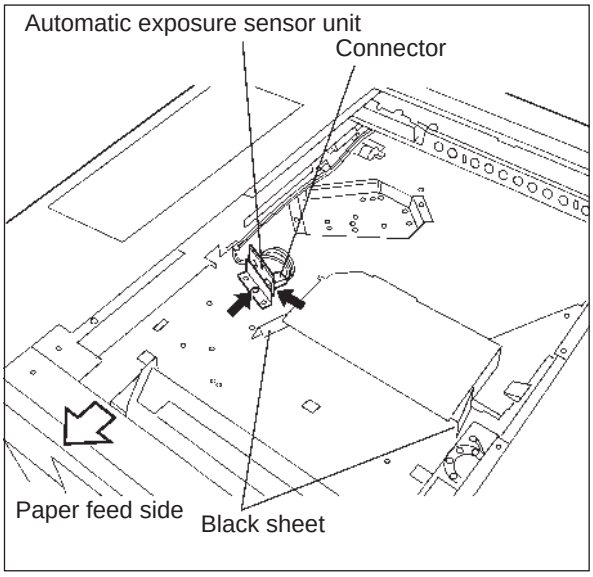

7.7.3 Optical fan (front)

(1) Open the front cover.

(2) Remove the inner cover (3 screws).

(3) Disconnect a connector and remove 2 screws.

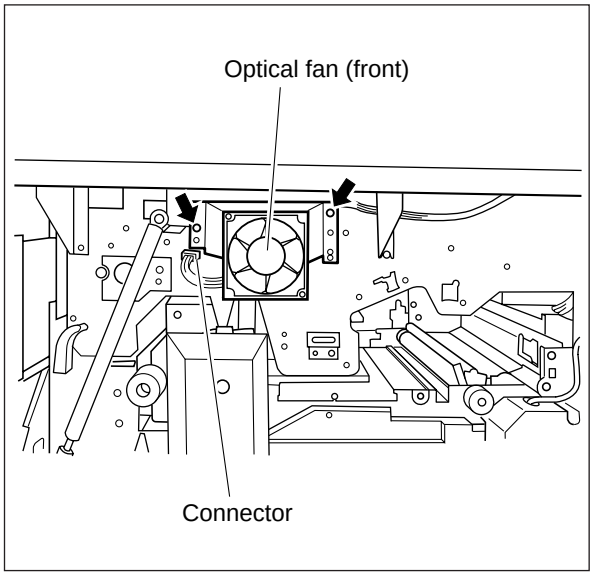

7.7.4 Optical fan (rear)

(1) Remove the upper rear cover.

(2) Remove the connector (2) and the screws (4).

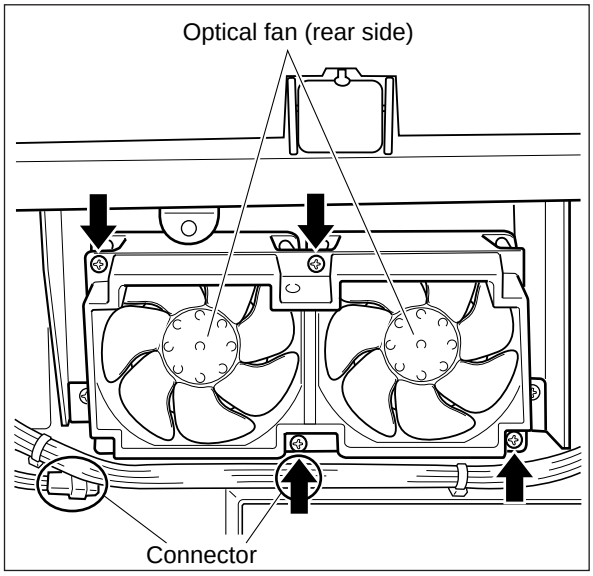

7.7.5 Lens motor/mirror motor

(1) Remove the optical cover.

(2) Remove each motor (2 screws each).

(3) Remove the each connector.

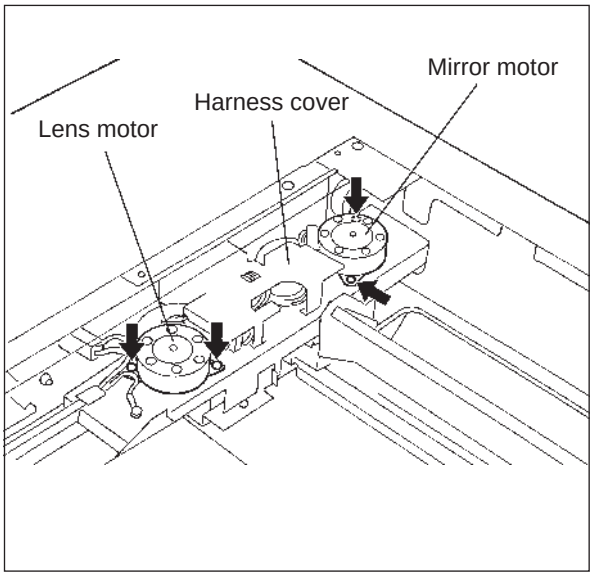

7.7.6 Automatic paper-size detector

(1) Remove the original glass.

(2) Remove the 3-beam sensor (2 screws, 1 connector).

(3) Remove the reflecting photosensors (1 screw, 1 connector).

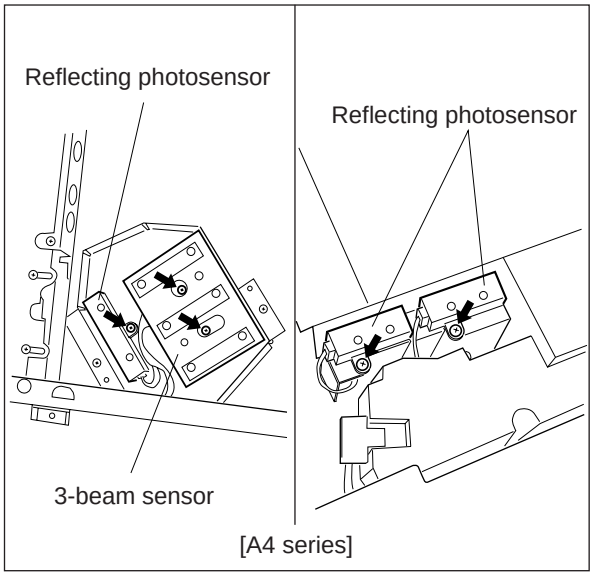

[A4 series]

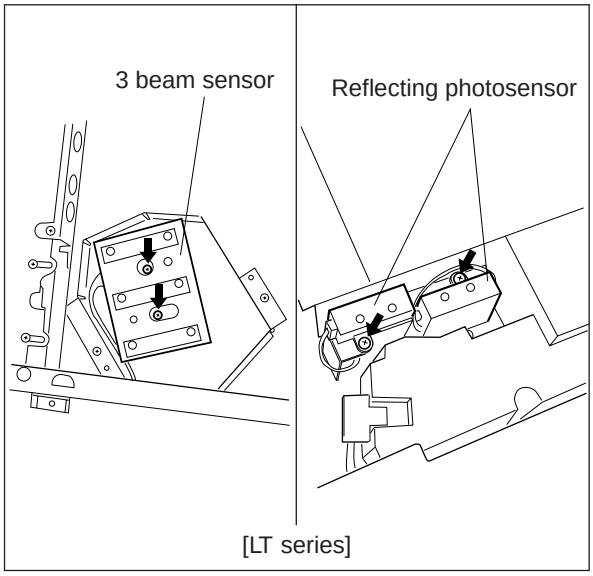

[LT series]

7.7.7 Exposure lamp and thermal fuse

(1) Remove the original glass and the rear top cover.

(2) Move the carriage 1 to the position that the lamp terminal is visible.

(3) Remove the exposure lamp while bending the power supply blade. Attention should be paid so as not to touch the lamp surface. (It may lead to uneven exposure.)

Note: During installation, position the lamp so that theTOSHIBA mark faces to the front. Moreover, the projection on the exposure lamp should face to the exit side.

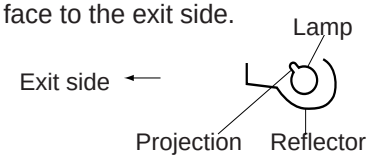

(4) To replace the thermofuse, remove the 2 screws.

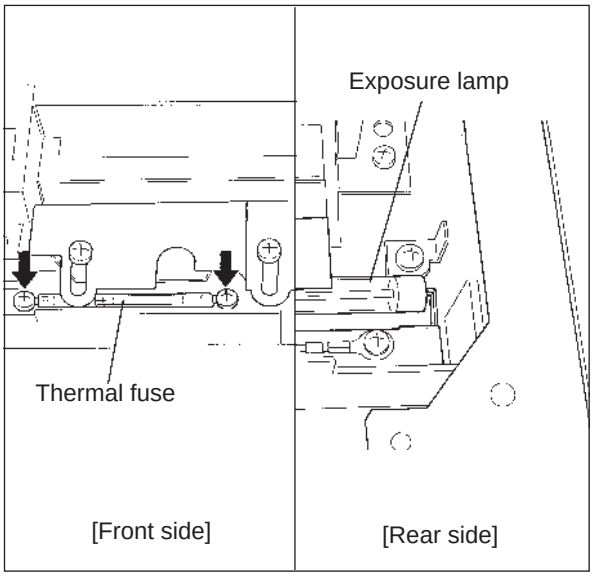

7.7.8 Copy area indicator unit

(1) Remove the left top cover, the upper rear cover and the control panel.

(2) Remove the transparent indicator cover (2 screws).

(3) Disconnect the document motor connector.

(4) To take out the document motor, disconnect a connector and remove the 2 screws.
Remove the belt.

Note: To install the belt, place both indicators against the bracket projection and set the belt in the groove on the indicator.

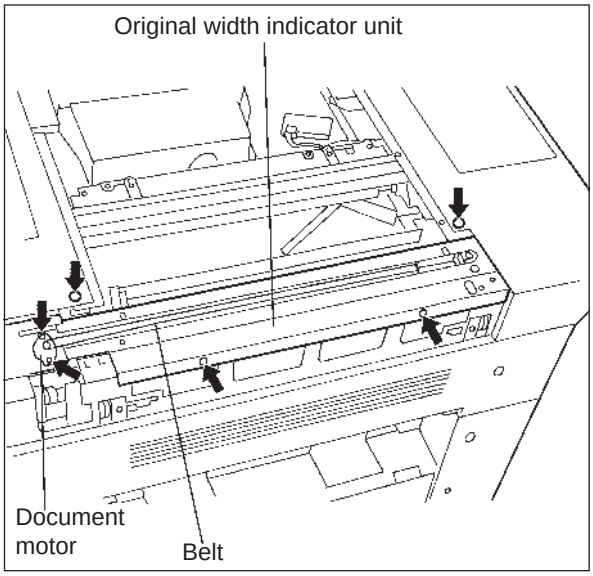

7.7.9 Scanning motor

(1) Remove the rear cover and left top cover.

(2) Disconnect the connector. Remove 2 screws, the tension spring, the wire drive belt, and the scanning motor bracket.

Note: When installing;

1. Open the upper unit.
2. Hang the wire drive belt on the scanning motor pulley.
3. Hook the tension spring on the copier's frame.
4. Hang the wire drive belt on the belt drive pulley, and temporarily loosely tighten screw B (Screw A is not installed yet).
5. Make sure 2~3 times that the scanning motor is returned to its previous position by the tension spring even if the scanning motor is rotated in the direction of the arrow C.
6. At that position, while pressing the scanning motor to the machine frame, tighten the screw A (when tightening the screw A, be careful not to move the scanning motor).
7. Tighten the screw B.

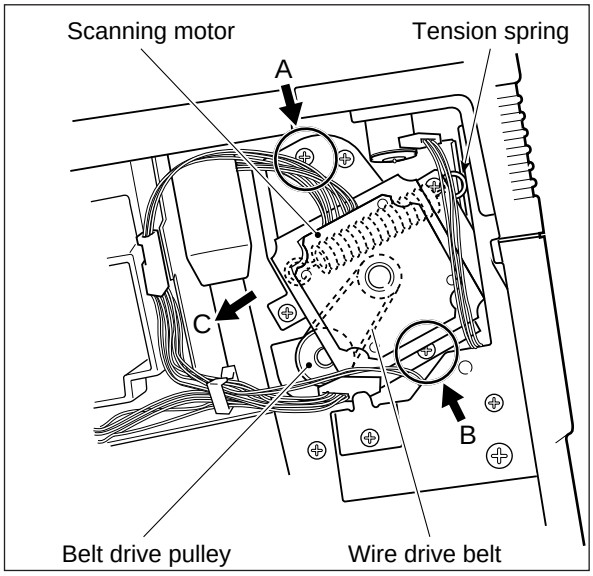

(3) Remove the 3 screws and take out the scanning motor.

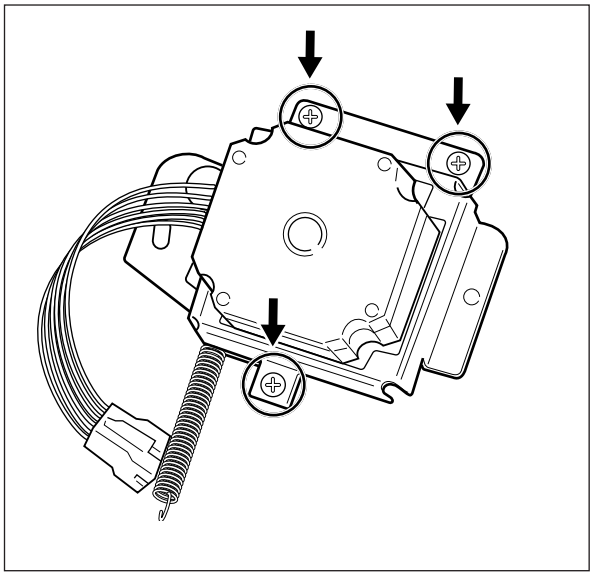

7.7.10 Home switch

(1) Remove the top left cover.

(2) Remove the connector and the 2 claws on the bracket, and then take out the home switch.

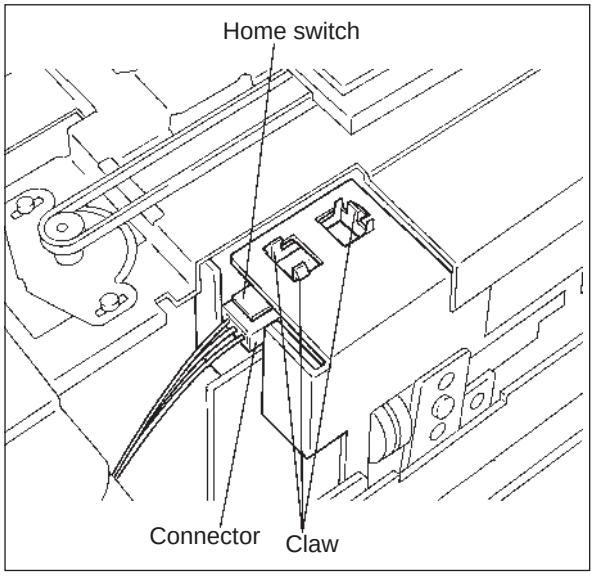

7.7.11 Platen switch

(1) Remove the upper rear cover and the rear top cover (4 screws).

(2) Remove the platen switch unit (2 screws).

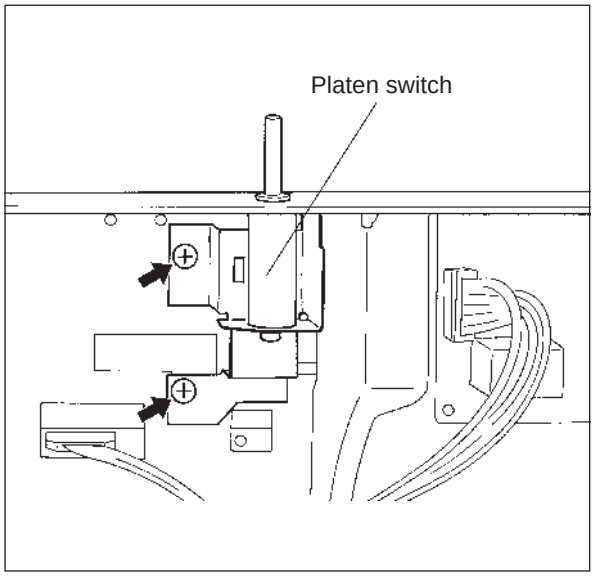

(3) Remove the platen switch actuator by pressing and turning it in the direction of the arrow (arrows ① to ③). Then remove the connector and 2 claws.

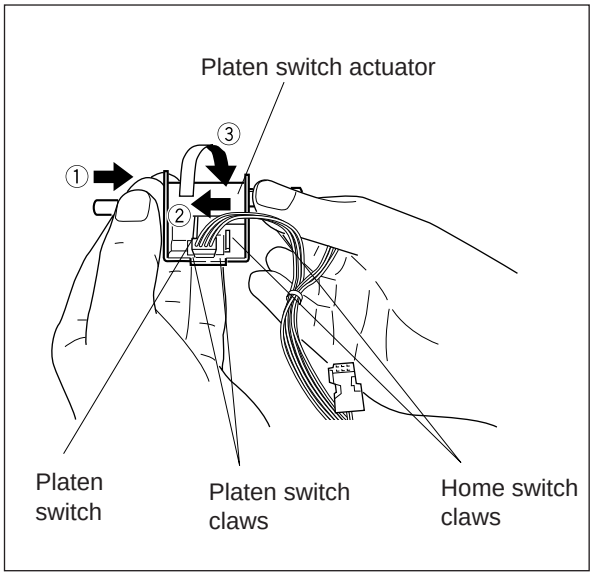

7.7.12 Carriage 1

(1) Remove the original glass, the left top cover, the transparent indicator cover, the upper rear cover and the upper exit cover.

(2) Remove the cable guide (1 screw).

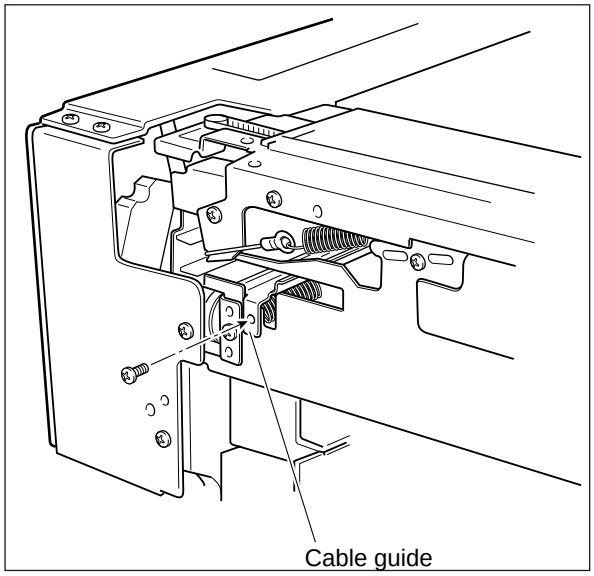

(3) Remove the 2 brackets which attach carriage 1 to the wire (1 screw each).

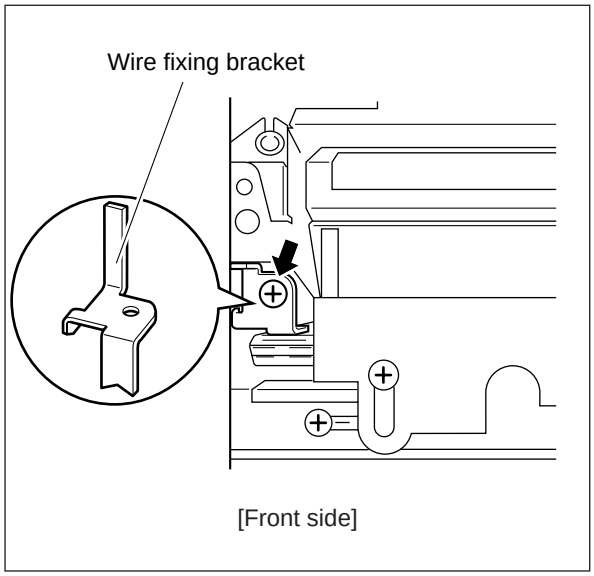

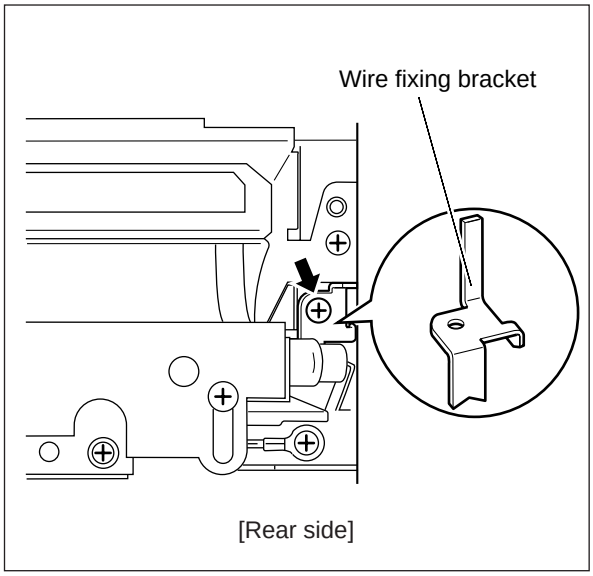

(4) Remove the cable holder.
Disconnect the connector.
Remove the earth wire (1 screw).

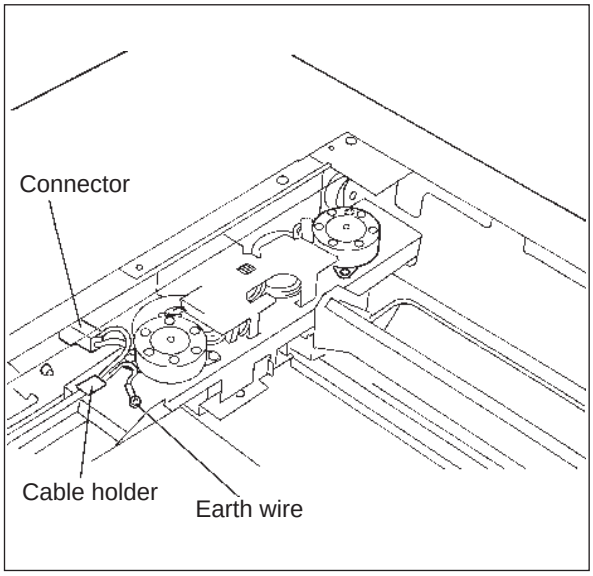

(5) Remove the cable for carriage 1 from the cable holder of carriage 2.

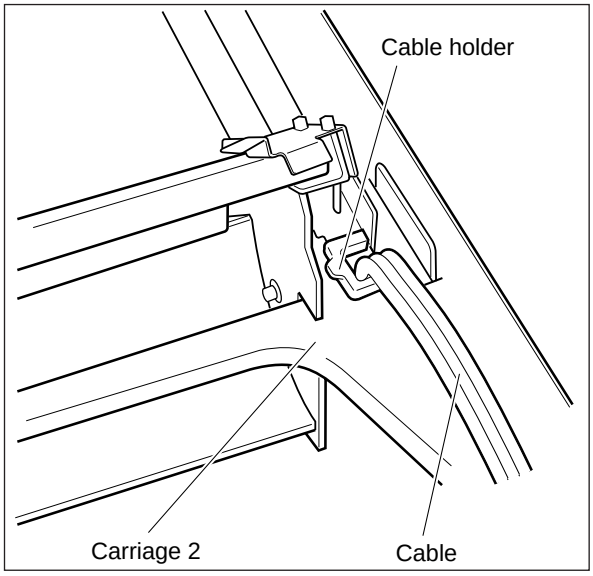

(6) Tilt the entire unit of carriage 1 and pull it out upwards.

Note: Adjustments are necessary when installing carriage 1.

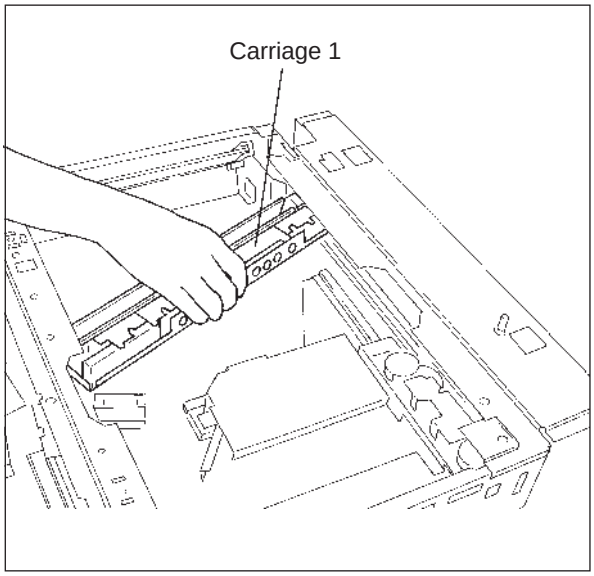

7.7.13 Mirror 1

(1) Remove the carriage 1.
(2) Remove the plate springs (2) which fix mirror 1.
(3) Remove the mirror 1.

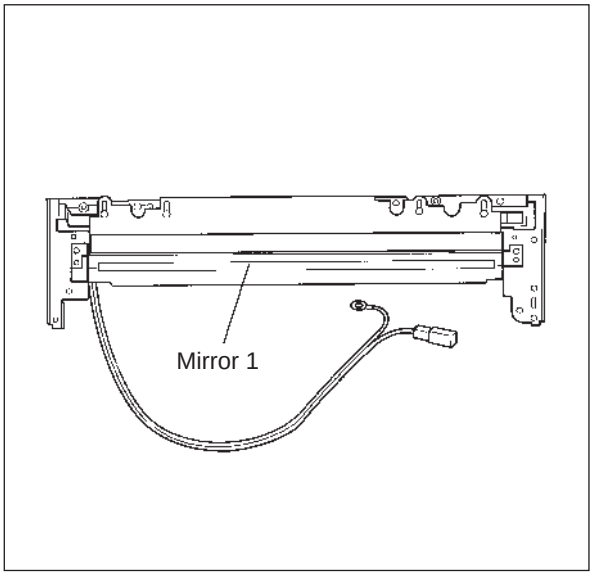

7.7.14 Lens unit

(1) Remove the lens cover.
(2) Remove the upper exit cover and the left top cover.
(3) Remove the cable guide (1 screw).
(4) Remove the lens/mirror drive unit.
(5) Remove the indicator unit.
(6) Remove the tension bracket (1 screw).

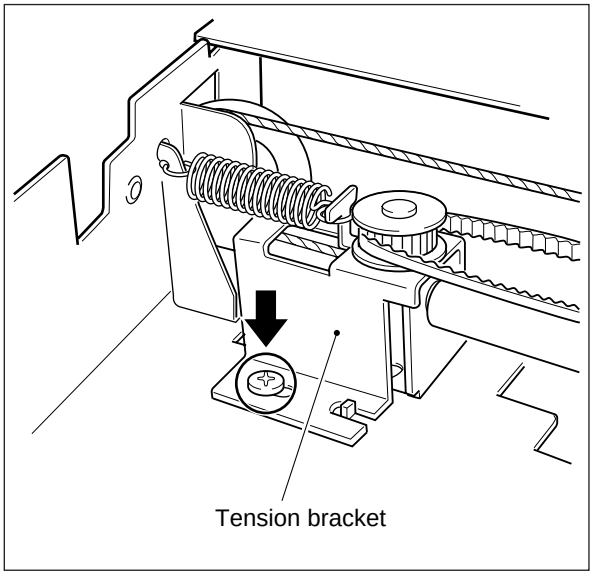

(7) Remove the lens/mirror shaft bracket (1 screw).

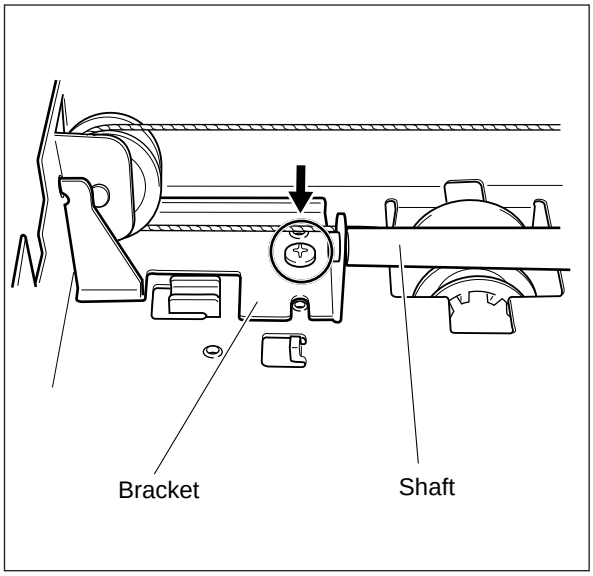

(8) Remove the lens unit from the lens/mirror shaft.

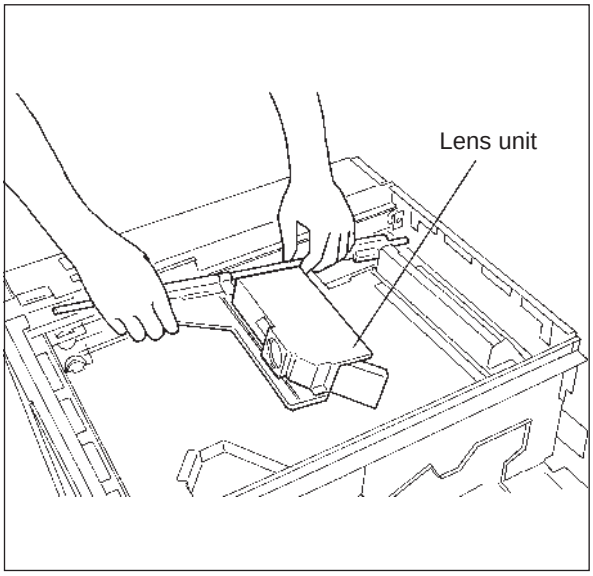

7.7.15 Mirror unit and mirrors 4 and 5

(1) Remove the lens unit.
(2) Remove the mirror unit from the lens/mirror shaft.
(3) Remove the plate springs (2 each) to take out the mirrors.

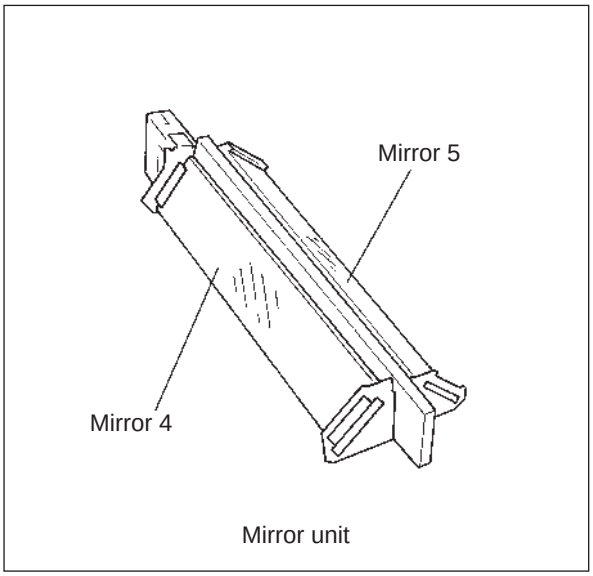

7.7.16 Lens/mirror drive unit

(1) Remove the right top cover, rear top cover, optical cover, upper rear cover, left top cover and upper exit cover.

(2) Remove the glass stay in the rear (5 screws).

(3) Remove the cable guide (1 screw).

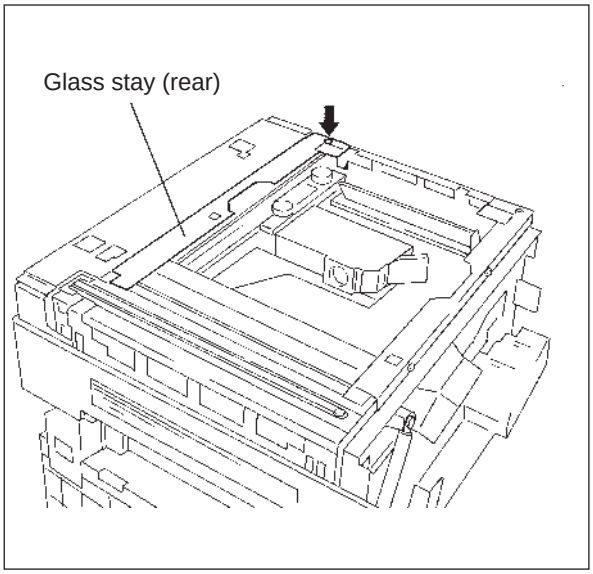

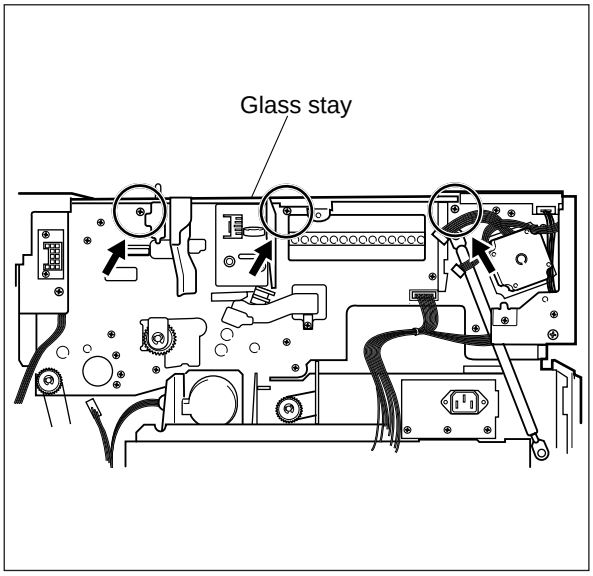

(4) Remove the cable holder and the earth wire (1 screw).

(5) Disconnect the connector from the rear side and remove the 2 screws.

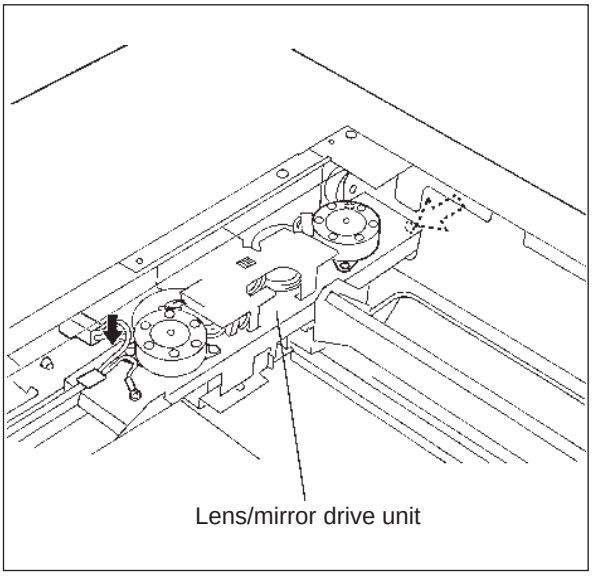

7.7.17 Lens/mirror switch

(1) Disconnect the connector. Remove the lens/mirror drive unit (2 screws).

(2) Disconnect the connector. Remove the lens/mirror switch with its bracket (2 screws).

(3) Remove the hook. Disconnect the 2 connectors. Remove the lens/mirror switch.

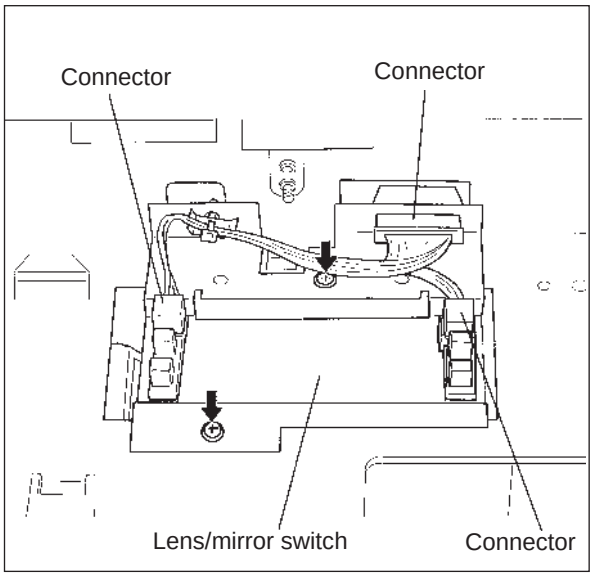

7.7.18 Carriage 2

(1) Remove carriage 1. Remove the automatic exposure sensor PC board unit.

(2) Remove the lens/mirror drive unit.

(3) Set the wire holder jig (Large) to the wire drive pulley on the front and rear.

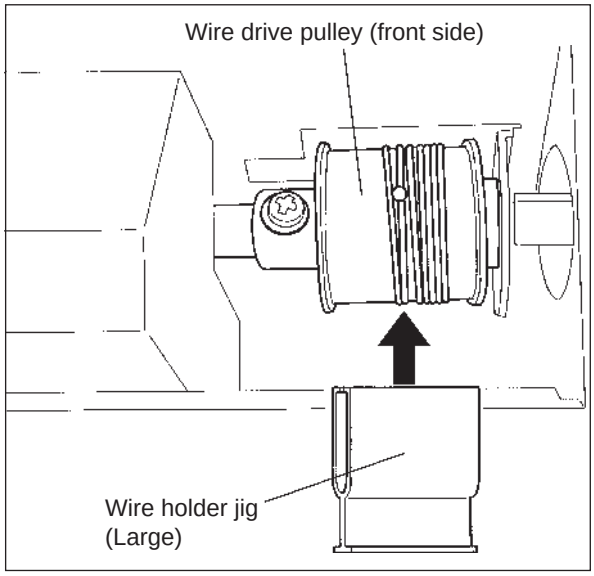

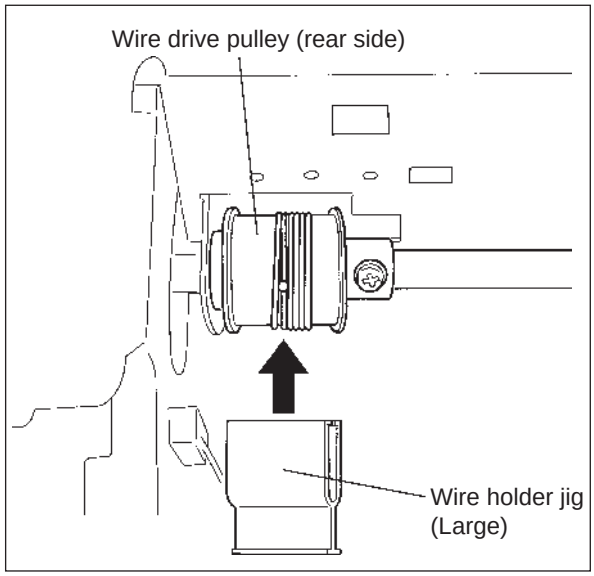

(4) Set the wire holder jig (Small) to the paper feed side pulley and the paper exit side pulley on the front and rear.

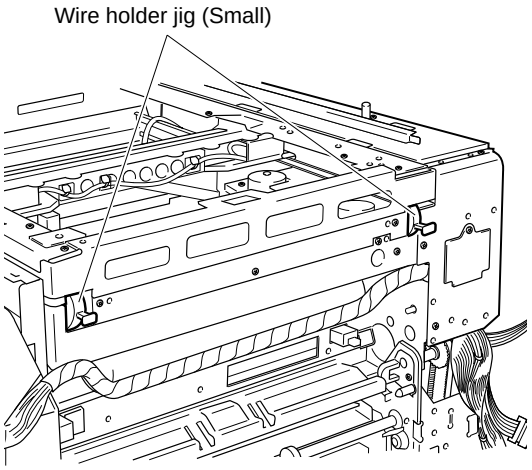

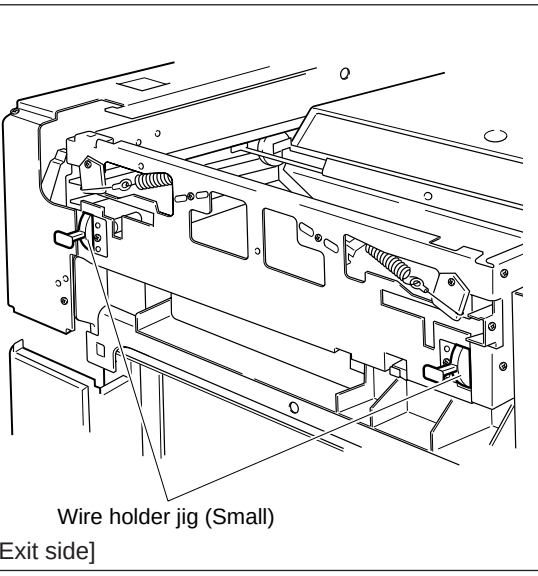

(5) Remove the tension spring from the hook on the front and rear side.

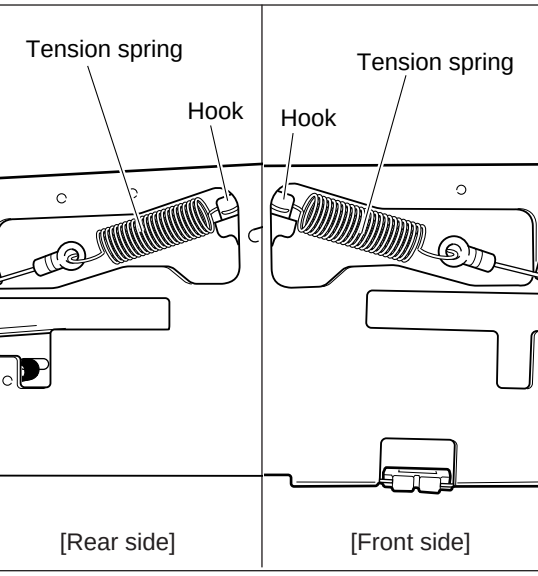

(6) Remove carriage 2.

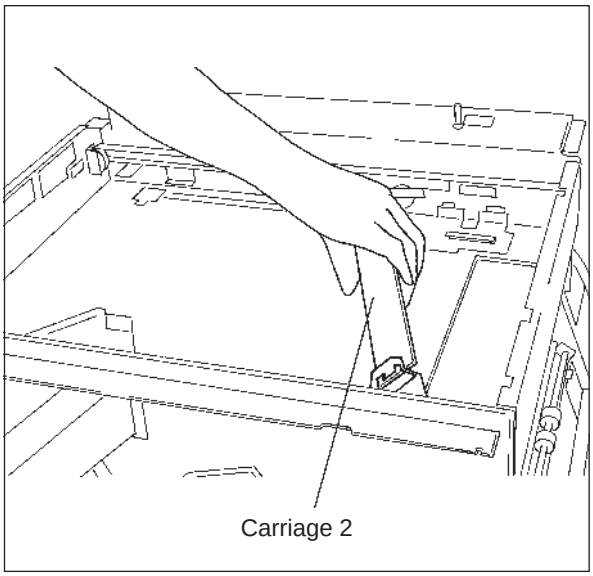

7.7.19 Mirror 2 and Mirror 3

(1) Remove carriage 2.
(2) Remove the plate springs (2 each).

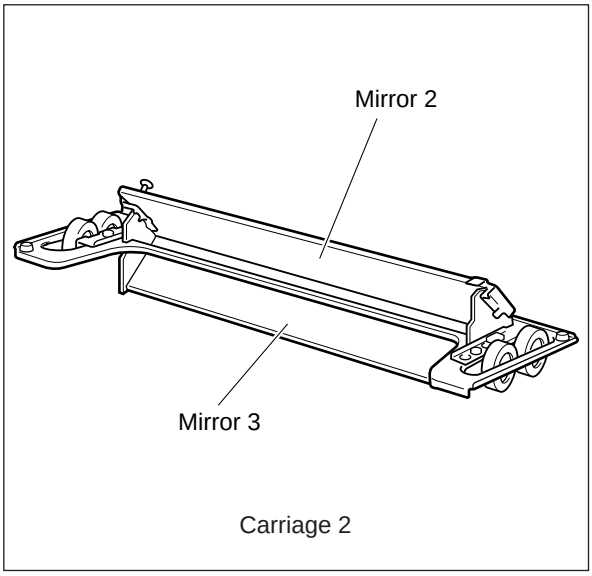

7.7.20 Upper exit roller

(1) Remove the upper exit cover and rear cover.
(2) Remove the upper exit roller unit (2 screws).
(3) Remove the upper exit roller from its fitting in the bracket.

7.7.21 Exit side ozone filter

(1) Remove the upper exit cover.
(2) Pull the ozone filter out.

Note: When replacing it with a new filter, be careful not to crush or otherwise damage it with your fingers.

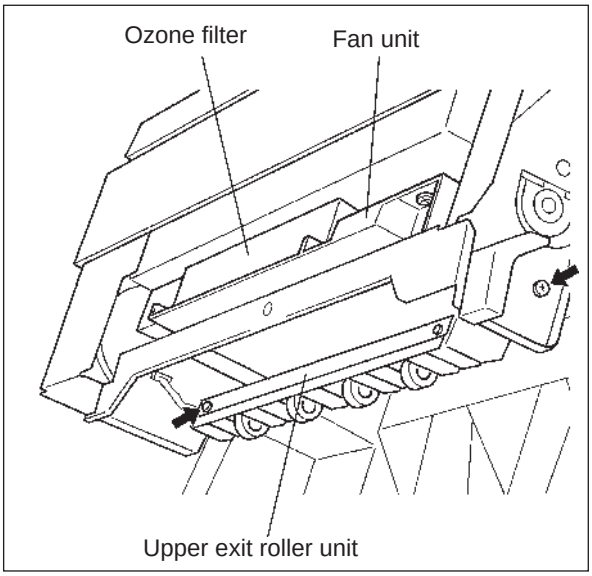

7.7.22 Exit fan motor

(1) Remove the upper exit cover and rear cover.
(2) Remove the 2 screws each which secure the upper-unit release lever and the upper exit roller unit.

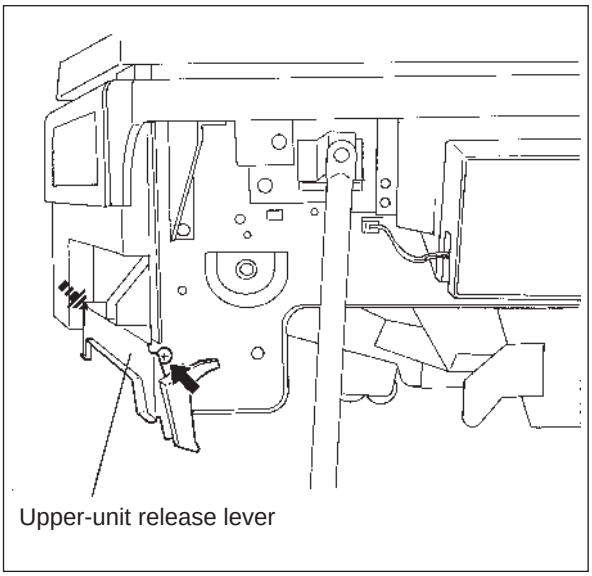

(3) Take out the 1 screw securing the fan unit.
(4) Remove the connector.
(5) Remove the exit fan motor.

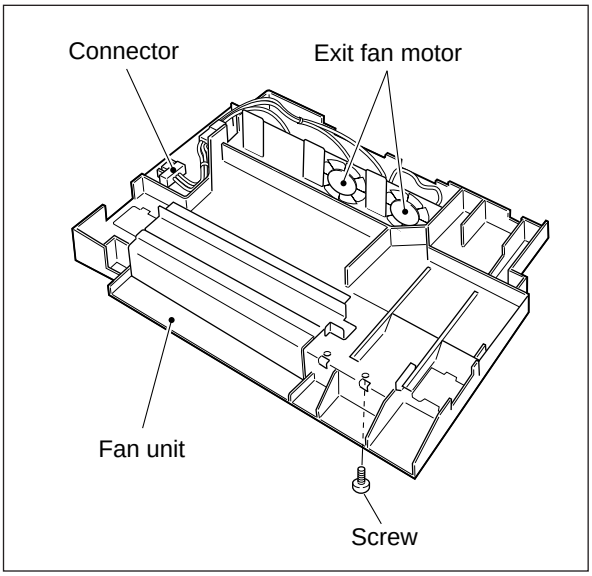

7.7.23 Carriage drive wire

(1) Remove carriages 1 and 2.
(2) Remove the scanning motor and the belt.
(3) Remove the belt drive pulley (1 screw).
(4) Remove the fan unit.

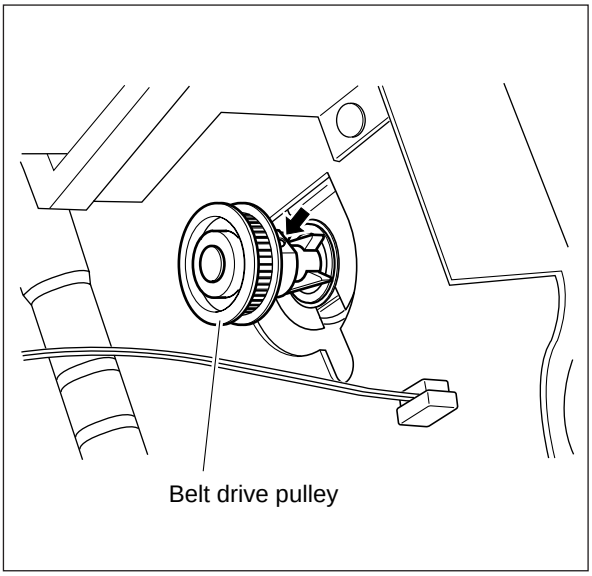

(5) Remove the stopper ring and bearing in front and rear side.
(6) Remove the whole wire drive shaft.
(7) Remove the carriage drive wire from the wire drive pulley.

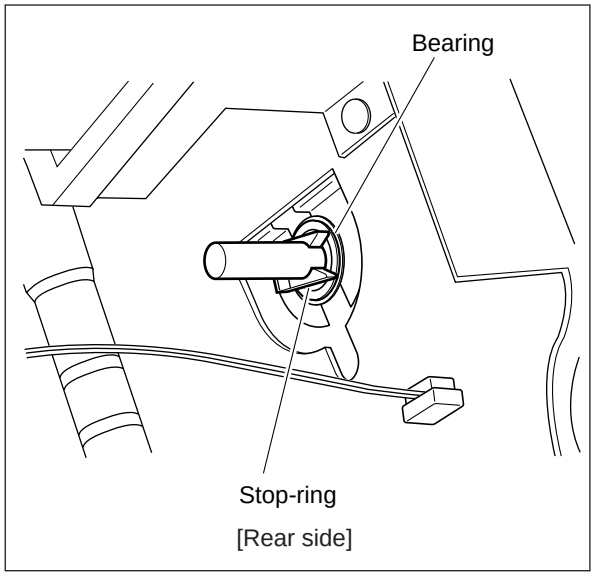

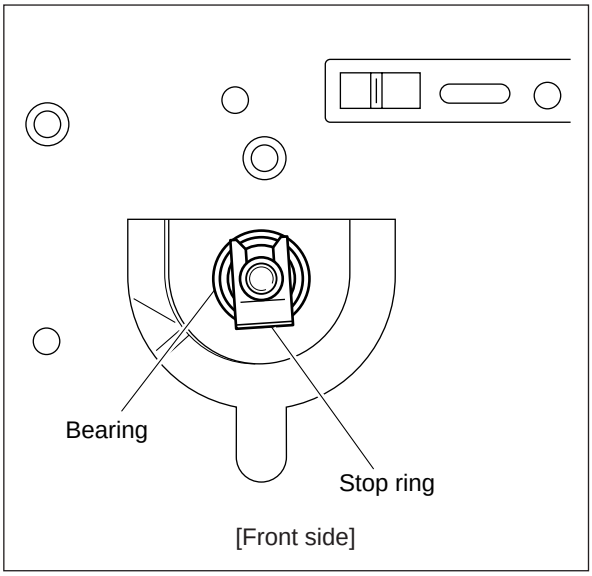

Note: How to wind the carriage drive wires

1. Fit the end “D” of the carriage drive wire in the groove of the wire drive pulley and wind the carriage drive wire in the direction and the number of turns shown in the figure on the right. (Do not allow the wire to twist while winding it.)
2. Install the wire holder jig (Large) from the side indicated with an arrow.

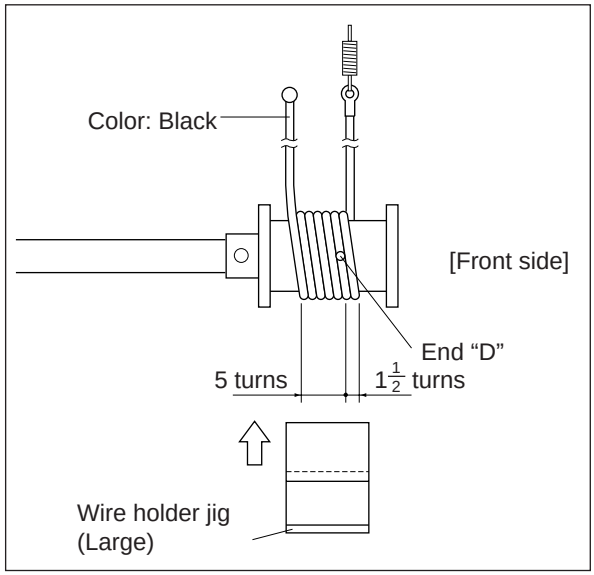

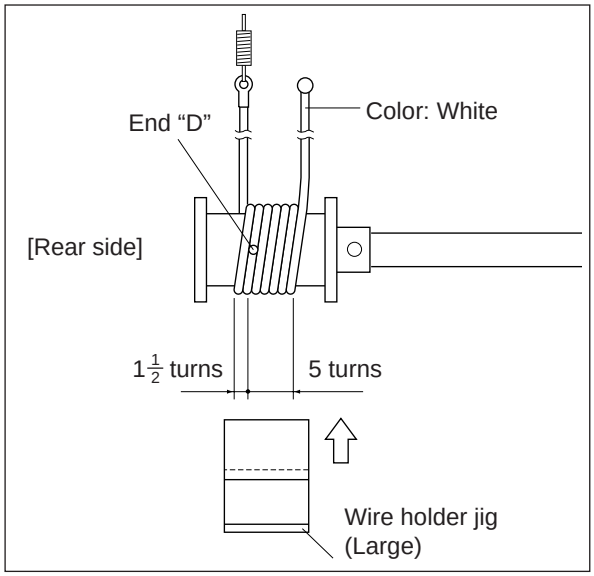

Notes: How to Lead In the Carriage Drive Wire (same procedure for the front and rear)

1. Wind the carriage drive wire around the wire drive pulley.
2. Set the wire drive shaft on which the wire drive pulley is attached on the upper unit while passing the carriage drive wire through the opening in the upper unit, and attach the bearings (front and rear) and stop rings (front and rear).

   Note: Take care to prevent the carriage drive wire from becoming scratched.

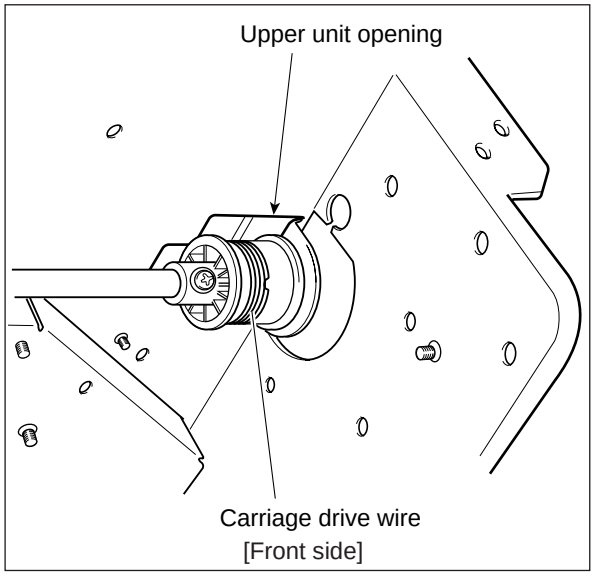

3. Rewind the wire on which the tension spring is attached on the paper exit side pulley from the bottom to the top, and fit in the wire holder jig (Small). Next, re-wind on pulley 2 on carriage 2 from the bottom to the top.

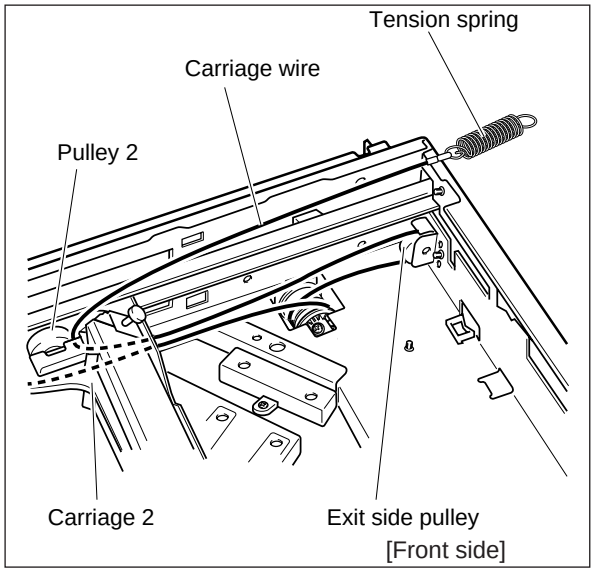

4. Rewind the wire on which the D terminal is attached on the paper feed side pulley from the bottom to the top, and fit in the wire holder jig (Small). Next, rewind on pulley 1 on carriage 2 from the top to the bottom and hang the D terminal on the hook.

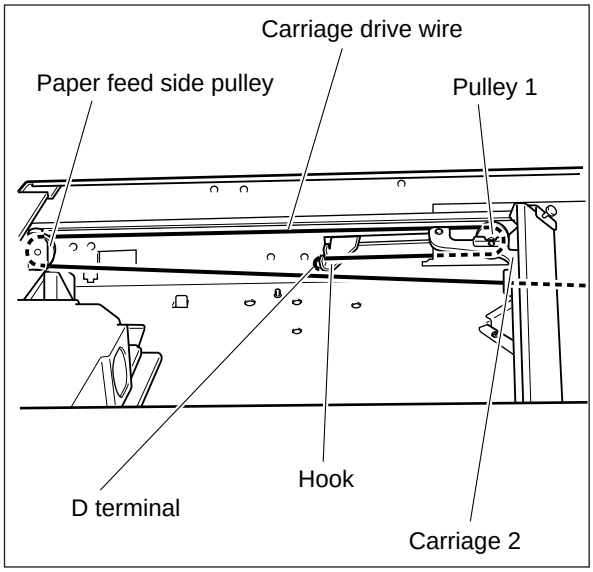

5. Lead in the wire on which the tension spring is attached as shown in the figure on the right, and hang the tension spring on the hook.

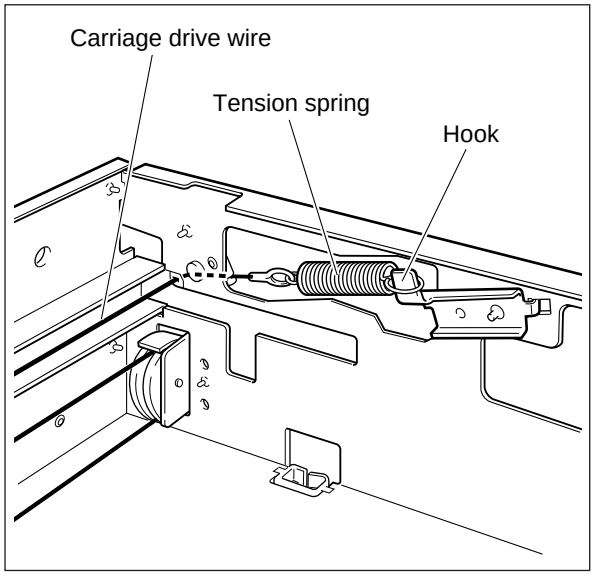

7.7.24 Slit glass, mirror 6 cover

(1) Remove the process unit.

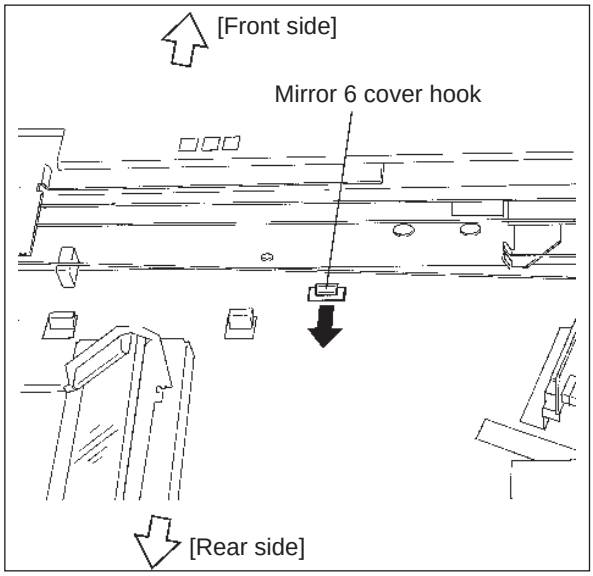

(3) Remove the mirror 6 cover (1 hook).

(4) Remove the slit glass from the mirror 6 cover releasing the claw.

Note: Be sure not to let the slit glass fall during installation or removal.

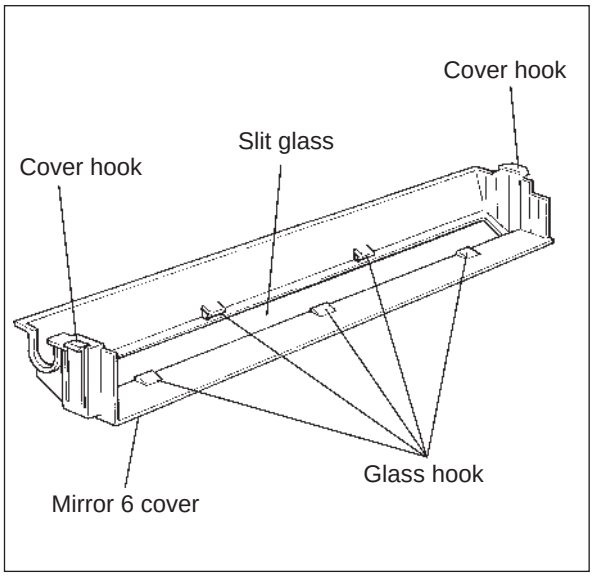

7.7.25 Mirror 6

(1) Remove the optical cover and the mirror 6 cover.

(2) Remove the mirror 6 bracket (3 screws, 2 hooks).

(3) Take out the mirror 6 bracket in the direction of the arrow.

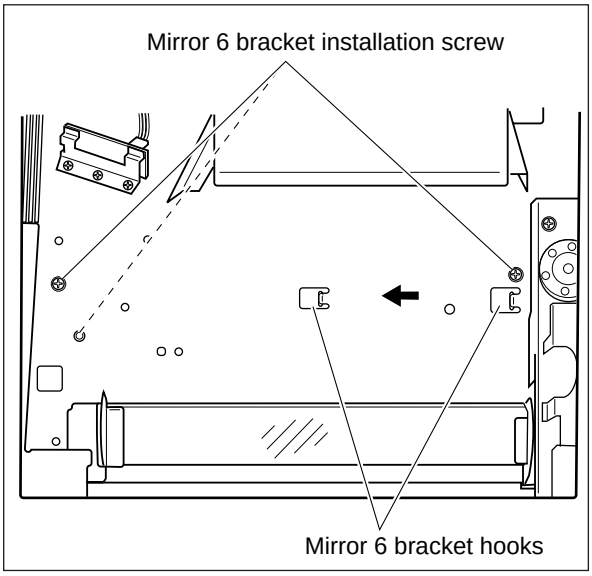

(4) Remove the 2 plate springs and take out mirror 6.

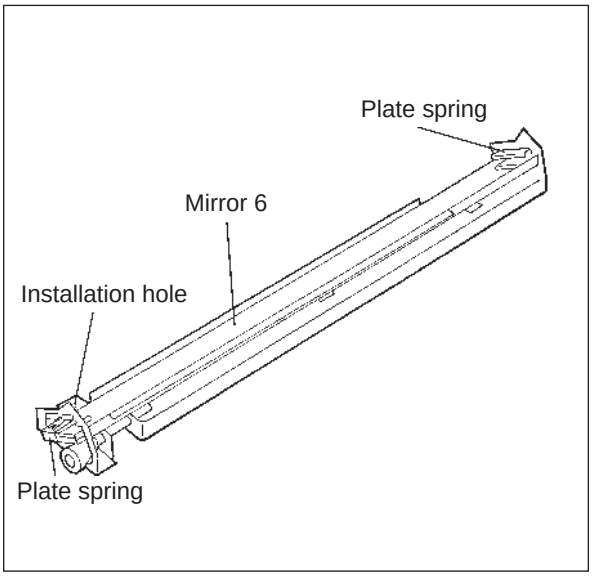

7.7.26 Upper damp heater-1

(1) Remove the optical cover and the inner cover.
(2) Remove the connector and bundling band.
(3) Remove the screw and take out the upper damp heater-1.

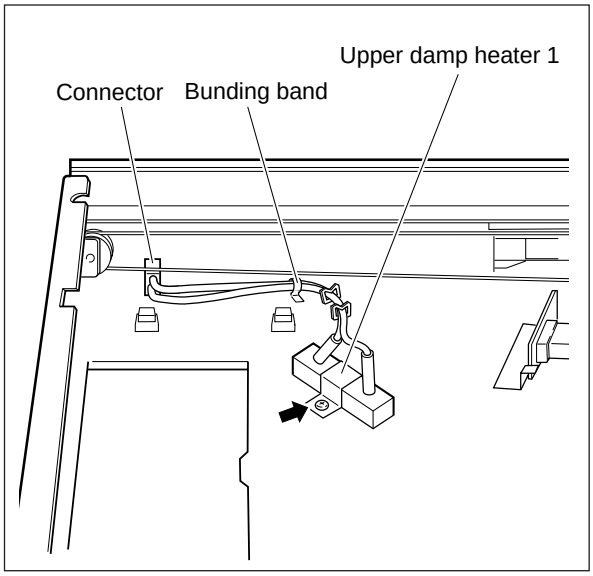

7.7.27 Upper damp heater-2

(1) Remove the original glass.
(2) Remove the upper exit cover.
(3) Remove the connector.
(4) Remove the screw and take out the upper damp heater-2

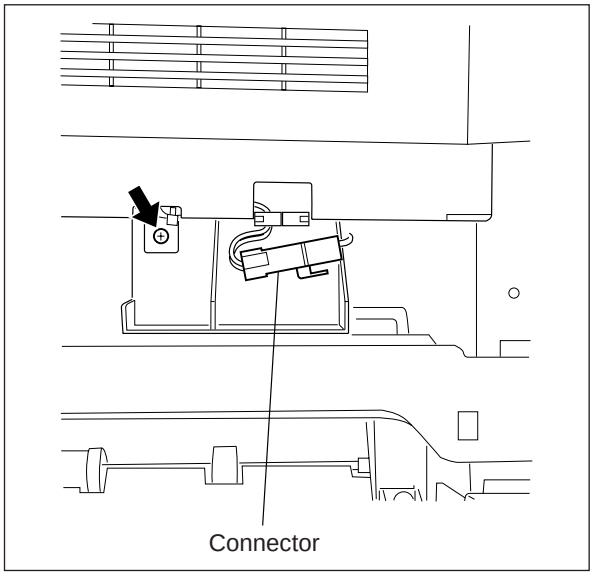

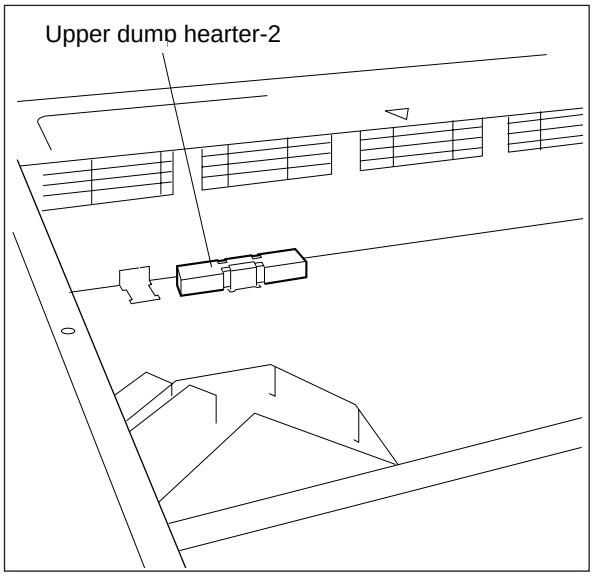

8 PAPER FEEDING SECTION

8.1 Functions

This unit sends paper which is set in the paper cassette or on the bypass tray to the transfer position.

The paper feeding section is mainly comprised of manual feed roller, pick-up rollers, paper feed rollers, separation rollers, transport rollers, aligning roller, manual feed switch, paper empty switch, paper size switch, paper feed switch, paper stop switch and also their drive mechanisms.

The following explains each part function.

(1) Pick-up roller/manual feed roller

Sends paper in the bypass tray or the paper cassette to the paper feed roller and the roller moves up and down on each occasion of paper feeding.

(2) Paper feed roller

This is the opposite of the separation roller, sending paper fed from the pick-up roller to the transport roller.

(3) Separation roller

This is the opposite of the paper feed roller. When two sheets or more are fed from the pick-up roller, the load of the torque limiter of the separation roller is greater than the friction power between the sheets of paper, the separation roller stops, causing the lower sheet also to stop and not be fed at that moment. But in the case of single sheet feeding, it rotates at the same timing as the paper feed roller so that it has the rotation force of that roller.

(4) Transport roller

Transport the paper from the feed roller to the aligning roller.

(5) Aligning roller

Paper fed from the paper feed roller is stuck against the aligning roller which is at rest, and leading edge alignment is performed.

Then the aligning roller rotates to feed paper to the developing position.

Further, the aligning roller is contacted with the brush to prevent paper dust from adhering to the aligning roller due to paper alignment.

The following explains about switches which detect paper size, paper presence and paper feeding position for ON/OFF control of each roller.

(6) Manual feed switch

Detects if paper is set in the bypass tray. If this is the case, manual paper feeding has priority over cassette paper feeding.

(7) Paper empty switch

This sensor detects paper in the paper cassette by the use of the actuator. When there is no paper in the cassette, the actuator intercepts the transmitted light in the sensor, causing a paper-empty situation to be detected.

(8) Paper size switch

Consists of four push-type switches.

In the paper cassette, tabs are installed so that any of these switches (1 to 4) is pressed when a paper cassette is installed in the copier.

Corresponding to which switch is being pressed, paper size detection is performed.

(9) Paper stop switch

Detects the leading/trailing edge of paper passing through the paper transport roller.

Jam detection such as for paper misfeeding, etc. is also used.

(10)Paper aligning switch

Detects that the leading edge of the paper has arrived at the aligning roller.

Also detects that the trailing edge of the paper has passed through the aligning roller.

If the former is detected, it reads that the aligning roller has completed paper alignment.

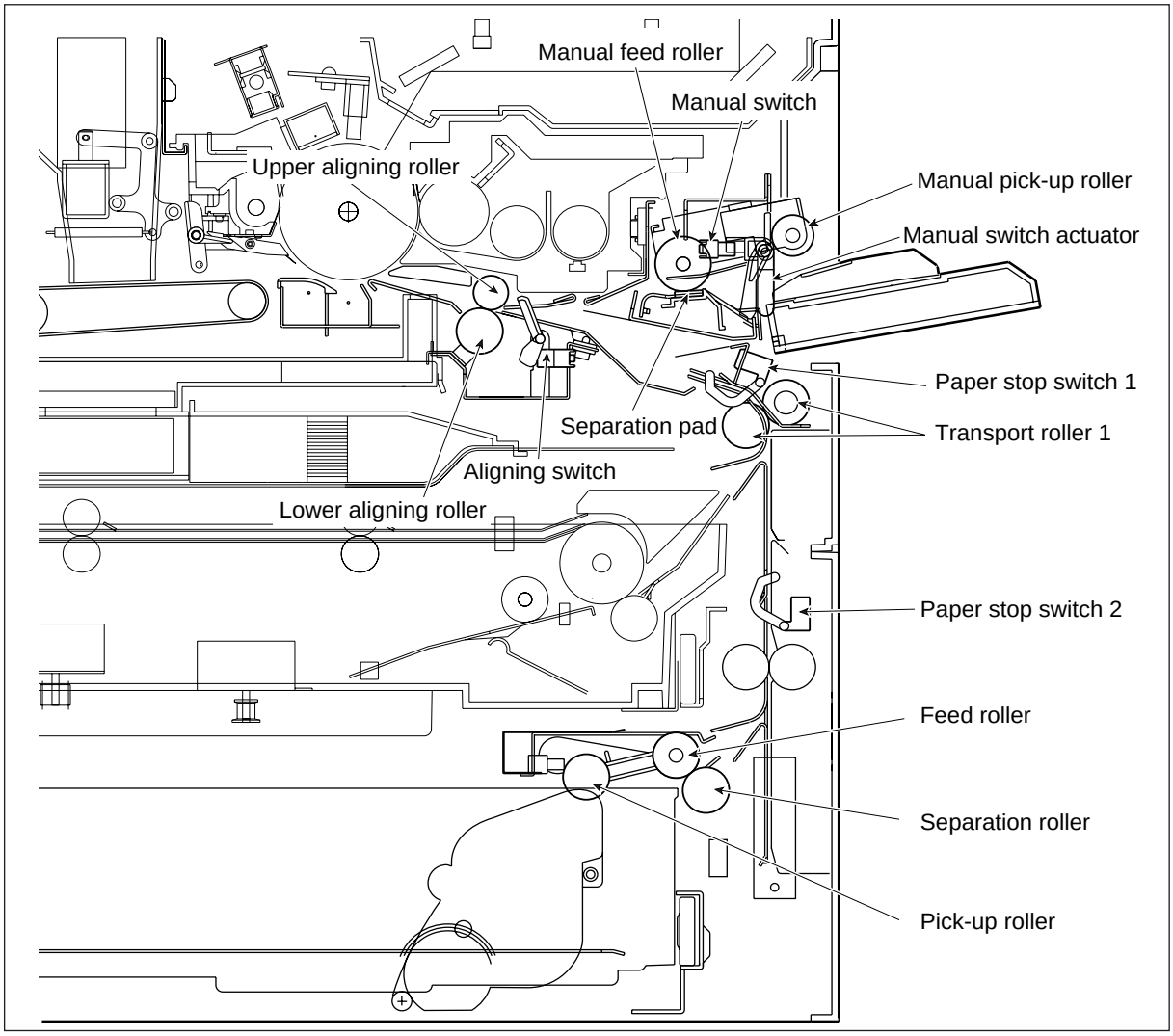

Paper feeding section sectional view (Front side)

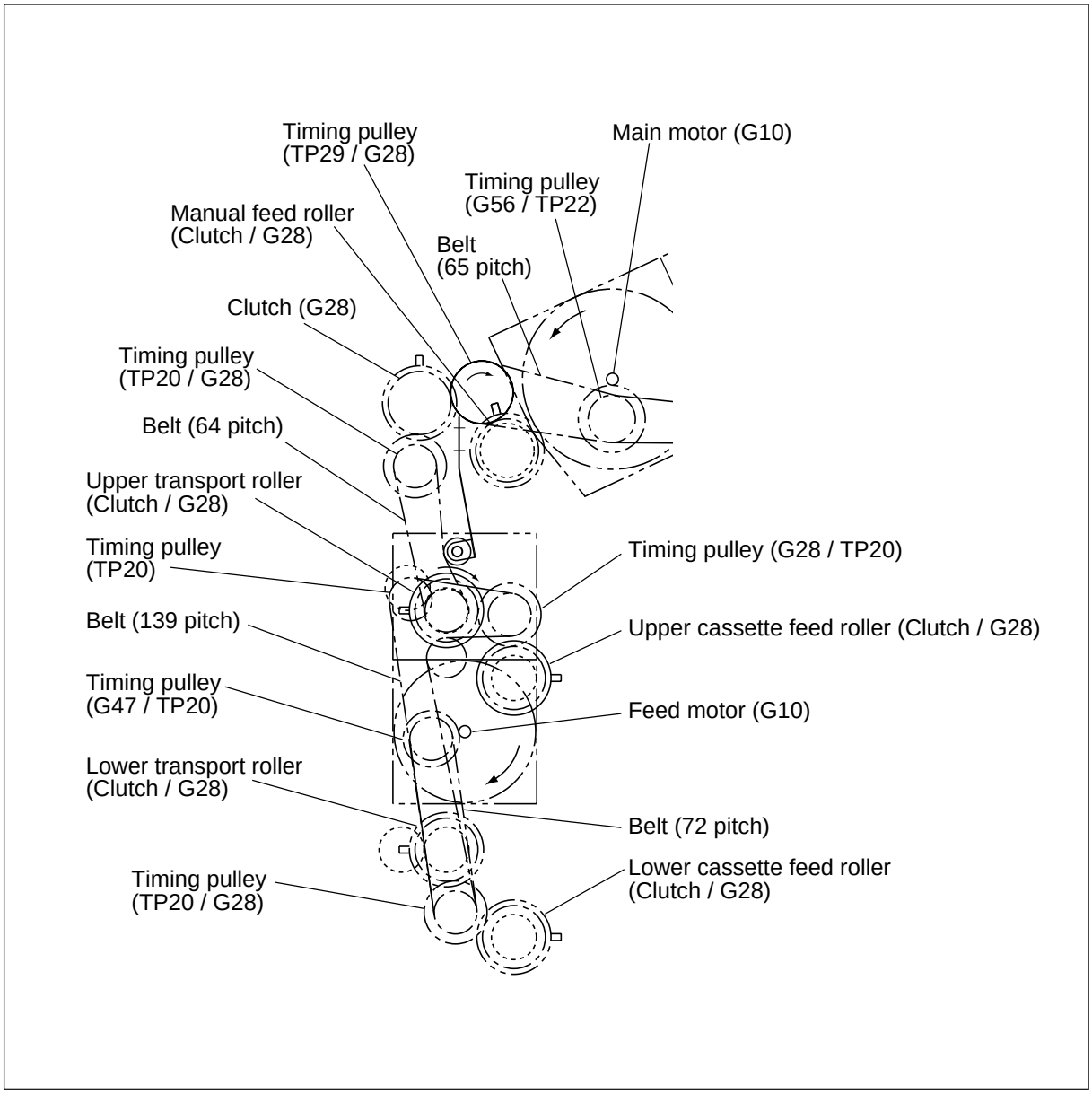

Paper feeding section drive system (Rear side)

8.1.1 Manual pick-up roller vertical movement

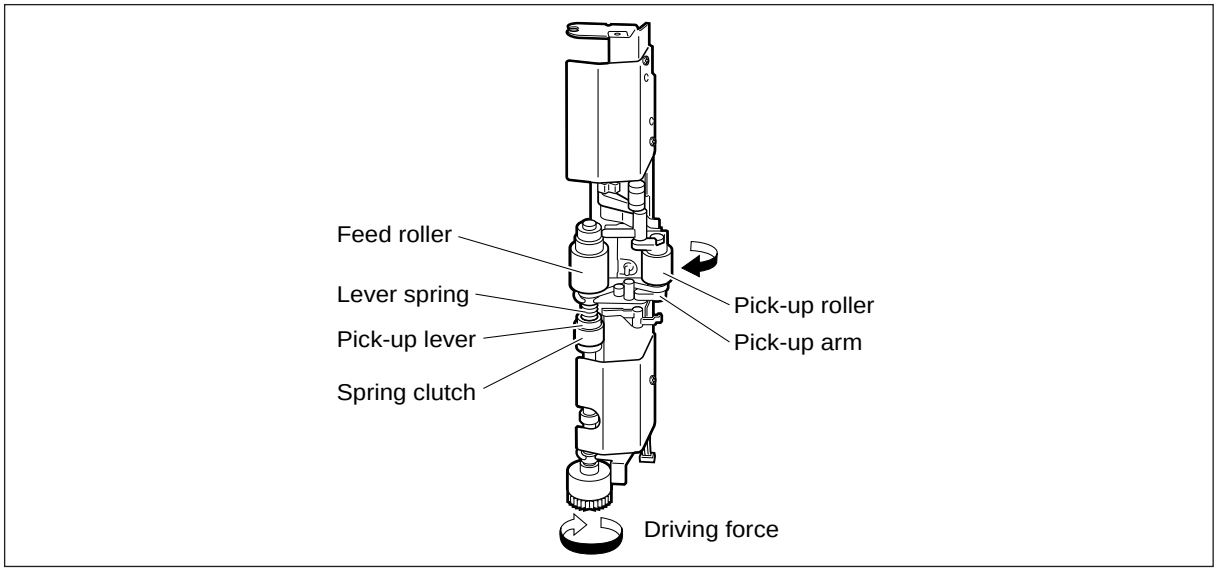

When drive power is transmitted to the feed roller, rotation power is sent to the pick-up lever via the spring clutch. Then the pick-up arm falls by its own weight and the spring clutch stops in the position in which it has bumped into the stopper.
When the drive power of the feed roller is lost, the pick-up lever is lifted up by the force of the lever spring after which the pick-up arm is also raised.

8.1.2 Cassette pick-up roller vertical movement

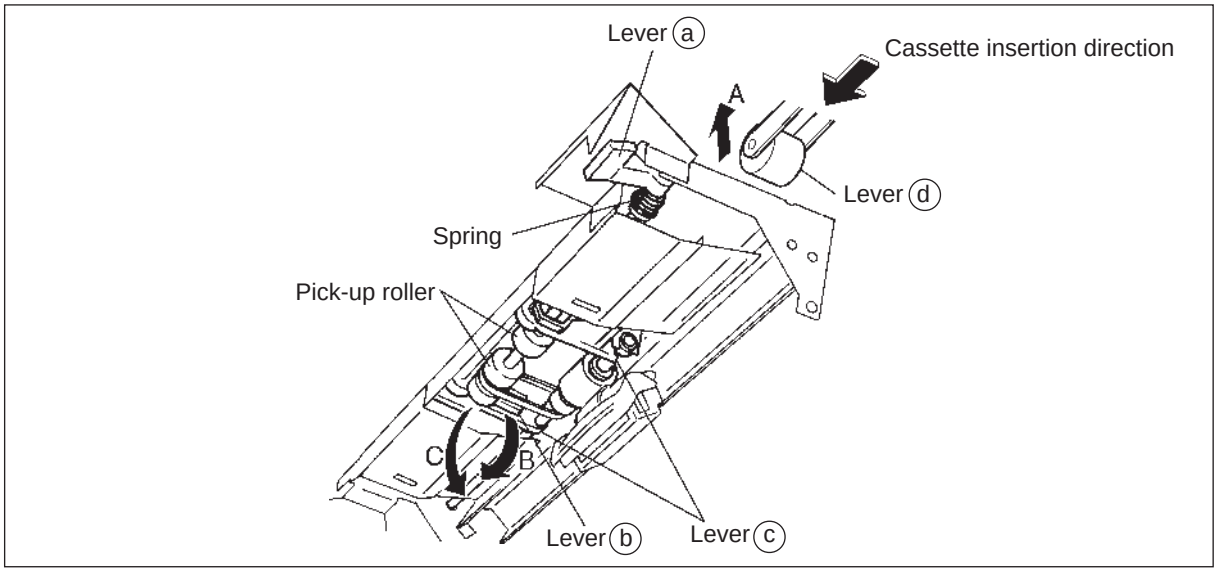

When the cassette is inserted, the cassette lever ⓓ pushes up the lever ⓐ in the direction A. Then the pick-up roller is caused to fall by its own weight due to the link mechanism of the levers ⓑ and ⓒ.

8.1.3 Paper separation operation

Since no paper separation claws are used in the cassette, a paper separation roller is installed inside the machine. The separation roller section consists of a paper feed roller, separation roller, spring joint, etc., as shown.

The feed roller is rotated by the feed clutch in the direction of the arrow ( ) at the same timing as the pick-up roller.

As shown in the lower right figure, the feeding of two sheets occurs. Since the friction between the sheets is smaller, the lower sheet is stopped being fed any further while the upper sheet is forced to be transported by the feed roller in the direction of the arrow ( ).

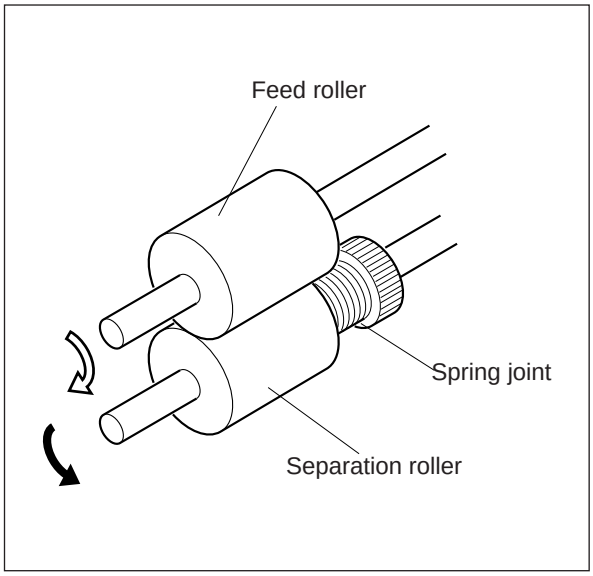

[Example]

When only one sheet of paper ① has entered into the separation roller section, since the feed roller's transporting force is stronger than the separation roller's braking force, the separation roller is forced to rotate causing the sheet to be sent toward the aligning roller ( ).

When, two sheets (① and ②) have entered into the separation roller section at the same time, since the powers of the feed roller's transporting and separation roller's braking are greater than the friction power of the paper, the paper ① is transported in the direction of the arrow ( ) and the paper ② is not transported any further by the separation roller.

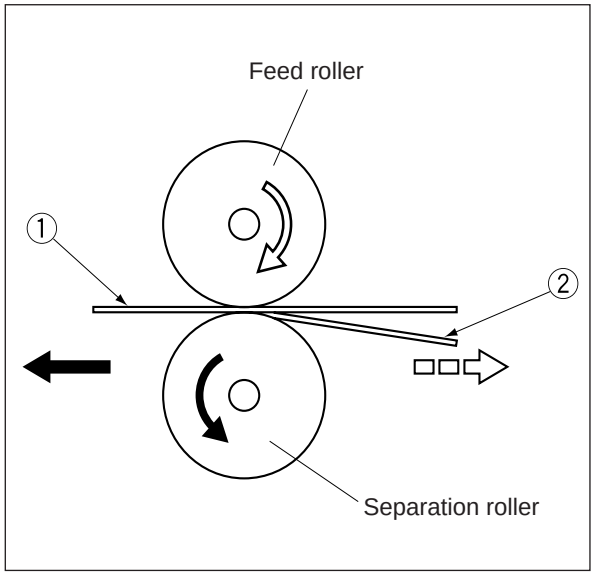

8.2 Cassette Feeding Operations

8.2.1 Operation explanation

[A] From power-on until standby status

(1) When the power is turned ON for the copier, the tray motor (M14) is set to ON and the lower tray starts to rise. When the tray is raised, the tray-up switche (S29) is turned ON (L→H), and the tray motor (M14) is turned OFF, which stops the upward motion of the tray. At this point, if the empty switche (S14) is OFF (L), it is determined that there is no paper present. If the empty switche is ON (H), it is determined that paper is present. The tray stops in its raised position regardless of whether there is paper or not.

(2) If the power is turned ON when the cassette has been removed, the tray motor for that level does not come ON. When the cassette is inserted in the slot, the tray is raised and the presence or absence of paper is determined.

(3) If either of the paper stop switches (S7/16) or the aligning switch (S8) is ON (because there is paper in the paper path) when the power is turned ON, it is determined that a paper jam has occurred and operation is not possible until the paper is removed.

[B] Standby mode

(1) After the paper supply is checked by the raising of the trays as described above, the standby mode is obtained. In the standby mode, the trays remain in their raised position.

(2) When the cassette is inserted or removed in the standby mode, the tray is raised again to check the paper supply.

[C] Manual feeding

- The manual feed switch detects the presence of manual feeding paper.
- The manual solenoid is turned ON, and the pick-up roller and the manual feed roller are rotated.
- The pick-up roller is lowered and paper feeding is started.
- The leading edge of the paper turns ON the paper aligning switch and is aligned at the aligning roller.
- The manual feed clutch is turned OFF and the pick-up roller and manual feed roller stopped rotating, and then the pick-up roller is raised.
- The aligning motor is turned ON and the paper is transported to the transfer process.

[D] Cassette feeding (upper or lower)

- The transport motor, the feed clutch and the transport clutch are turned ON, and the feed roller and the transport roller are rotated, and then paper feeding is started.
- The leading edge of the paper turns ON the paper stop switch and then the feed clutch is turned OFF.
- The leading edge of the paper turns ON the aligning switch and is aligned at the aligning roller.
- The transport clutch is turned OFF and the transport roller is stopped.
- The aligning motor is turned ON and the paper is transported to the transfer process.

8.3 Motor Drive Circuit

8.3.1 Brush motor drive circuit

Tray-up motor (T-UP-MOT) : Driven by IC9 (upper cassette)/IC3 (lower cassette) (PWA-LGC: TA8428)

The block diagram of TA8428 is shown below.

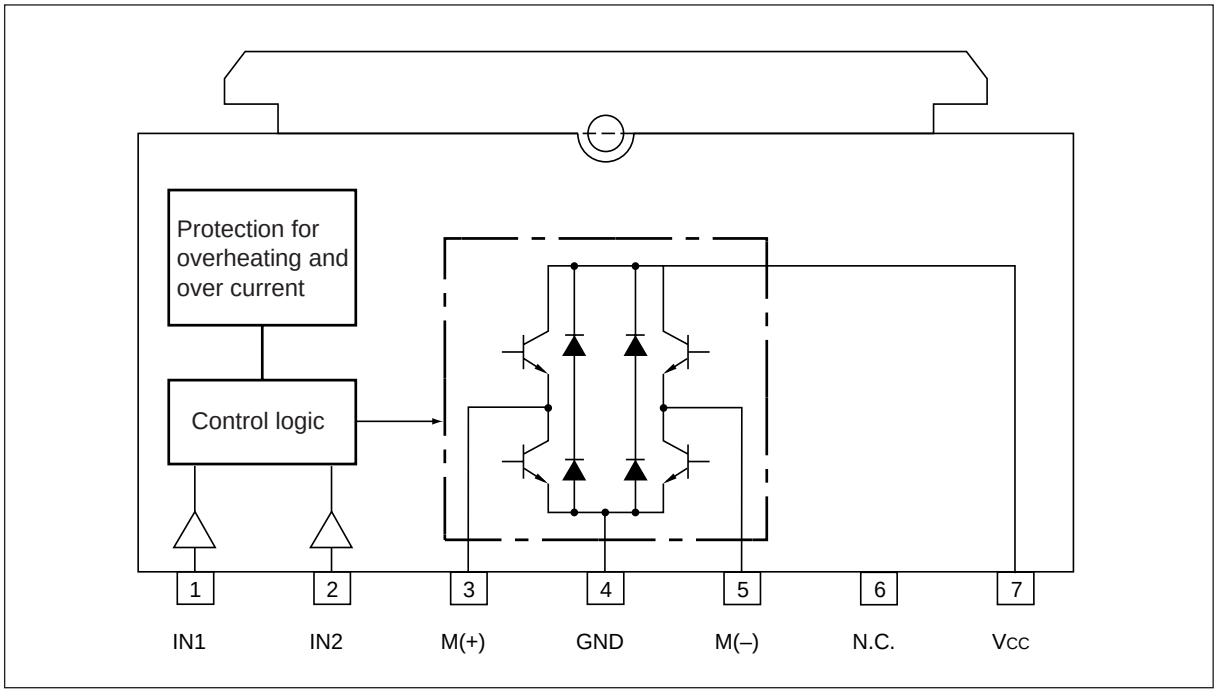

IN1 and IN2 are input terminals for the signals from the microcomputer. In the control section, the motor is controlled ON and OFF based on the signals from the microcomputer. For the control, refer to the table below.

Input		Output		Description
IN1	IN2	M (+)	M (–)	
H	H	L	L	BRAKE
L	H	L	H	CCW (upward)
H	L	H	L	CW (downward)
L	L	OFF (high impedance)		STOP

8.4 Disassembly and Replacement

8.4.1 Manual feed unit (roller)

(1) Remove the upper feed cover and left feed cover.

(2) Remove the screw, bracket in the front side and link arm fixing stop ring in the rear side, and then take out the manual feed tray unit.

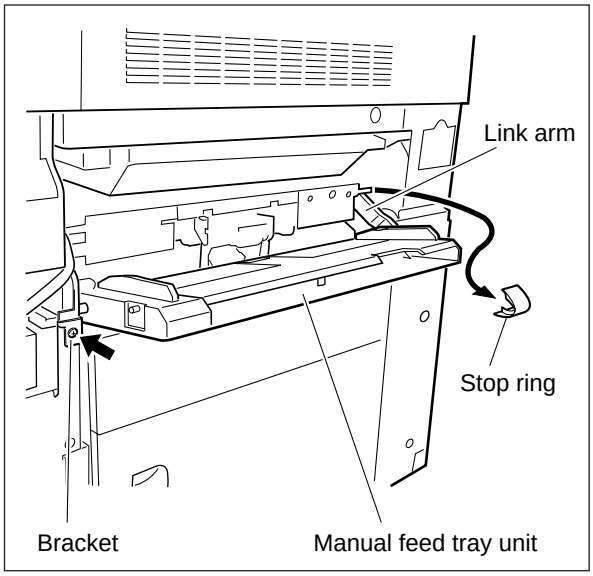

(3) Disconnect the connector of the electromagnetic clutch and sensor.

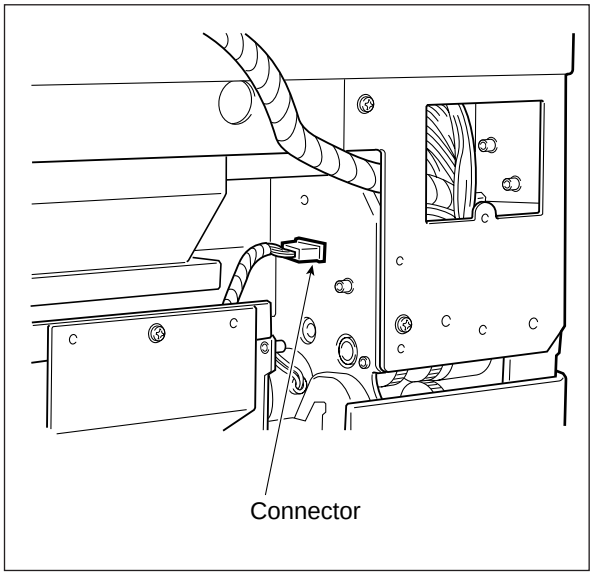

(4) Remove the stop ring on the hinge shaft on the front side.

(5) Remove the manual feed unit from the hinge shaft on the front side while sliding it towards the rear side.

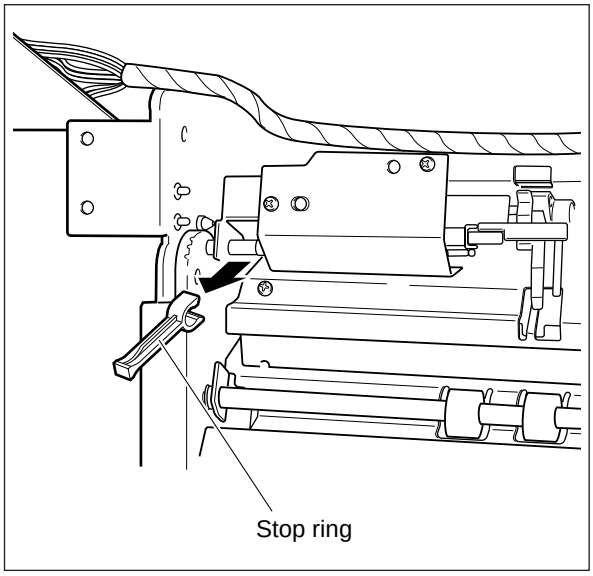

[A] Manual feed roller

(1) Remove the sensor bracket screws and pick up the bracket.

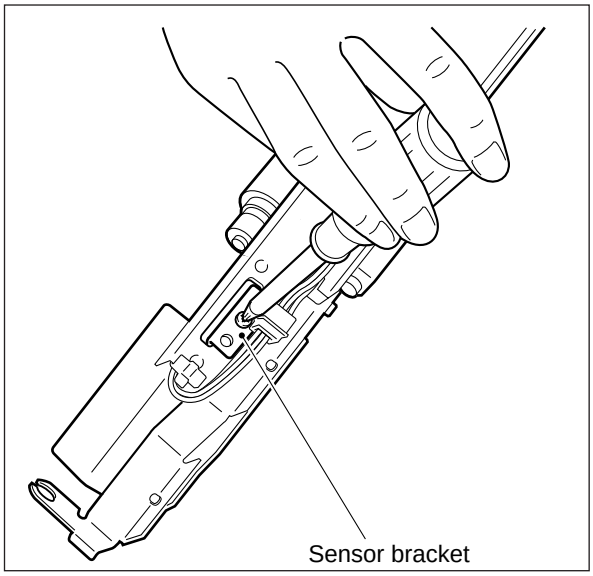

(2) Remove the stop ring. Pull out the feed roller in the direction of the arrow A.

[B] Pick-up roller

(1) Remove the stop-ring.

(2) Pull out the ø6 shaft in the direction of the arrow B.

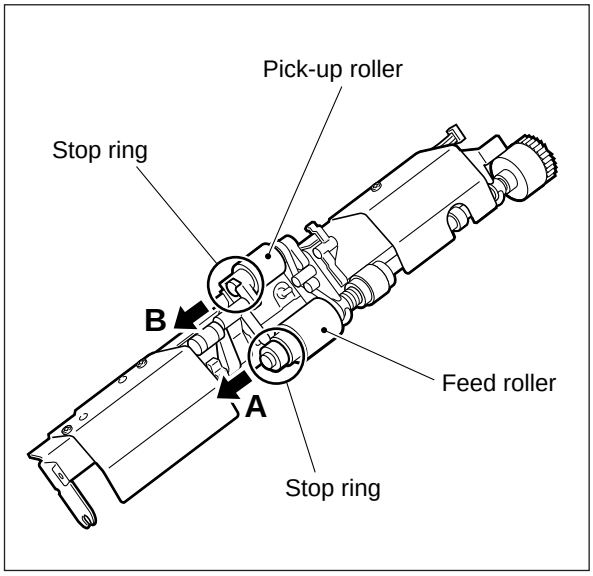

Notes: Pay attention to the following points when reassembling the manual, pick-up, feed and separation rollers.

1. Set the timing belt securely on the pulley.
2. Be careful not to mistake the setting position of the timing belt (manual feed roller).
3. Put the clip properly into the slot of the shaft.
4. Check that no oil etc. has adhered to the surface of the timing belts, pulleys and rollers.
5. Make sure of the roller orientation.

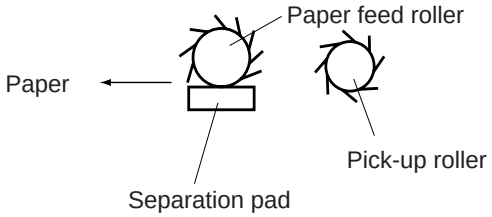

8.4.2 Separation pad

(1) Remove the manual feed unit (roller).

(2) Remove the separation pad bracket (2 screws) and then take the bracket out toward the front.

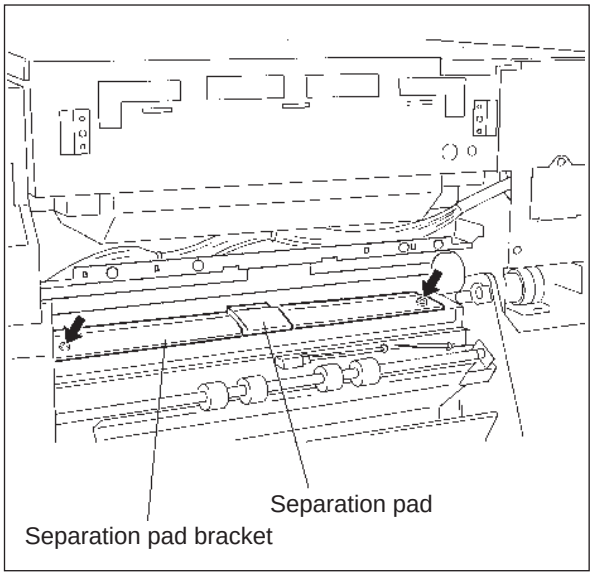

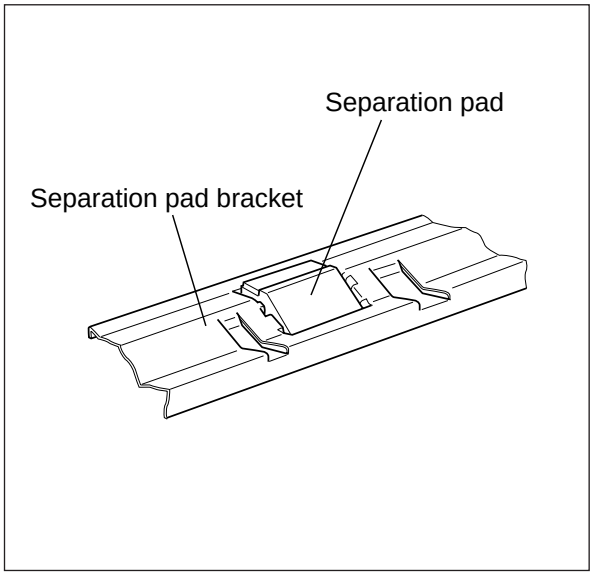

(3) Remove the spring and then the separation pad.

Note: Be careful not to damage the manual feed switch at the time of installation.

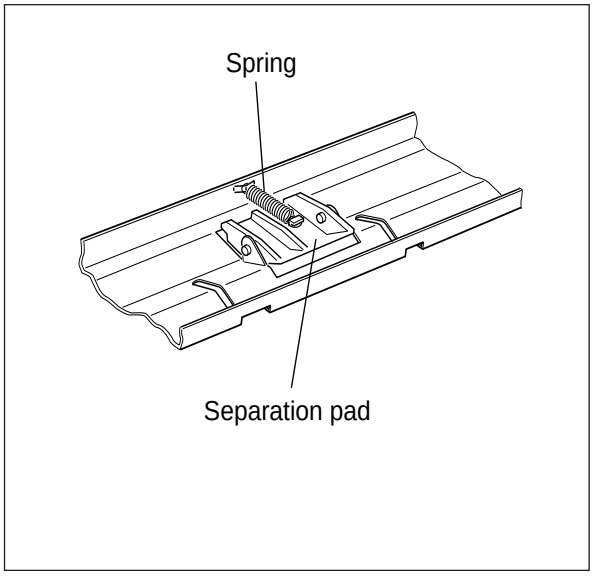

8.4.3 Aligning unit

(1) Remove the front inner cover, the lower inner cover and the transfer/separation charger unit.
(2) Disconnect the connector of the developer bias harness from the HVT transformer.
(3) Remove the aligning unit fixing screws (front: 1 pc., rear: 1pc.).
(4) Remove the stop ring from the bush disconnection inhibitor on the front and rear side. Remove the bush on the front and rear side frame. Disconnect the connector of the aligning switch.
(5) Lift up the aligning unit to the direction of the arrow A and remove it.

Note: When installing the aligning unit, securely hook the belt to the pulley.

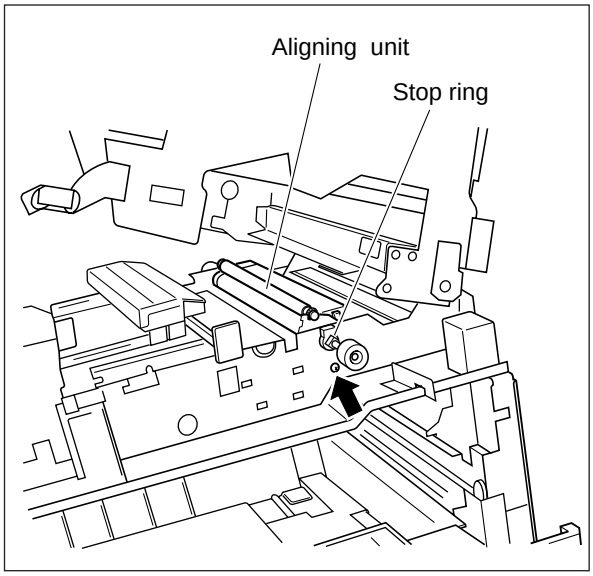

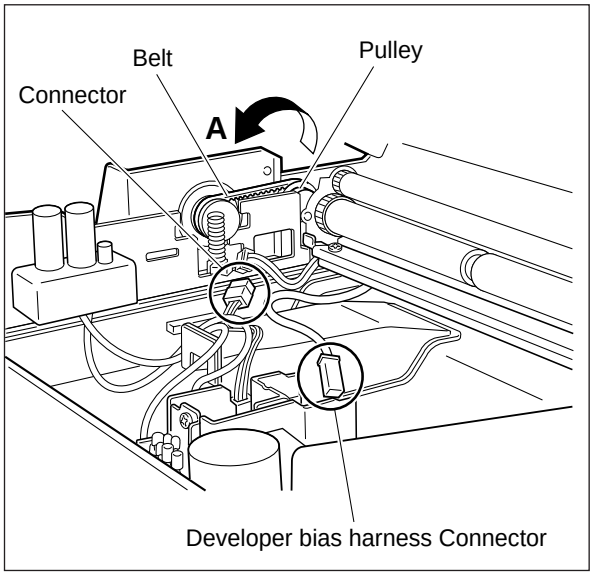

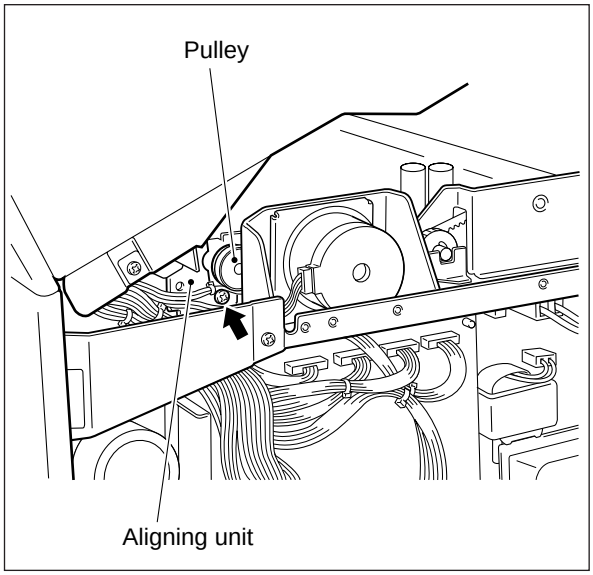

[A] Aligning roller (upper, lower)

(1) Remove the aligning guide (2 screws).
(2) Remove the brackets on the front and rear (4 screws).
(3) Remove the aligning pressure spring.
(4) Remove the bushes (upper, lower, 2 each).
(5) Lift up the aligning rollers (upper and lower) to remove them.

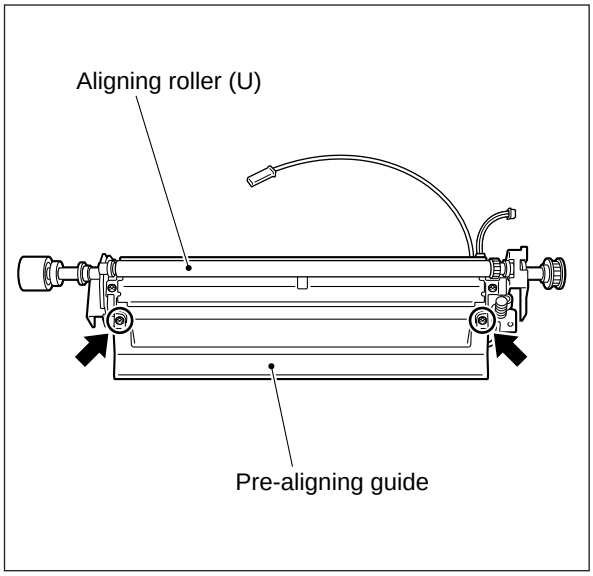

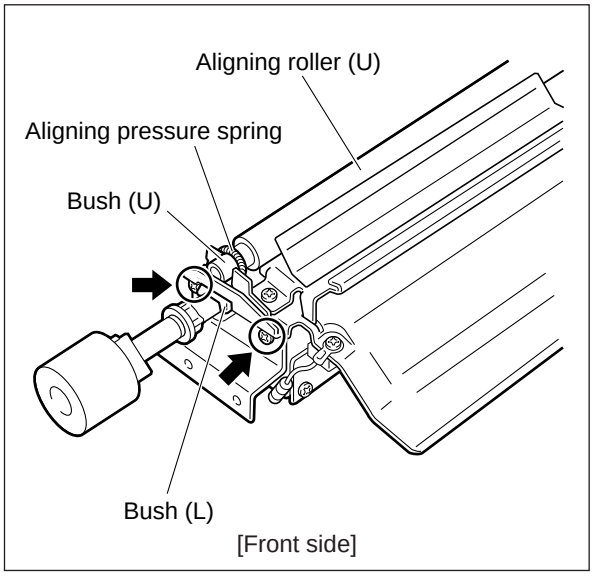

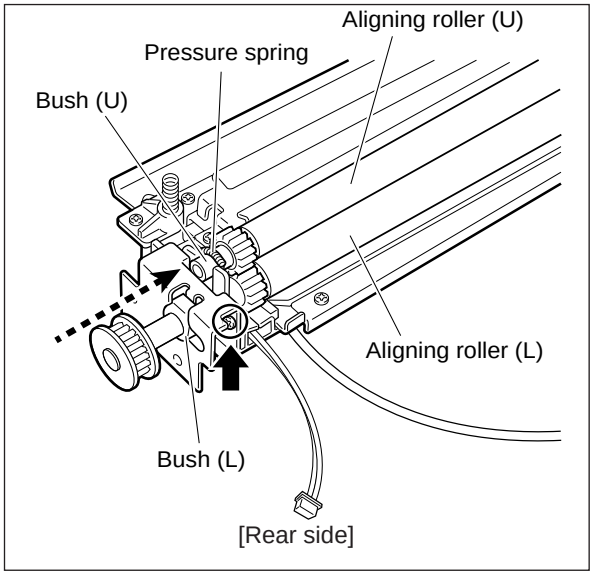

[B] Paper dust cleaning brush

(1) Remove the brush (1 screw).
(When the unit is installed in the machine, the brush can be removed/installed if the transfer/ separation charger has been taken out).

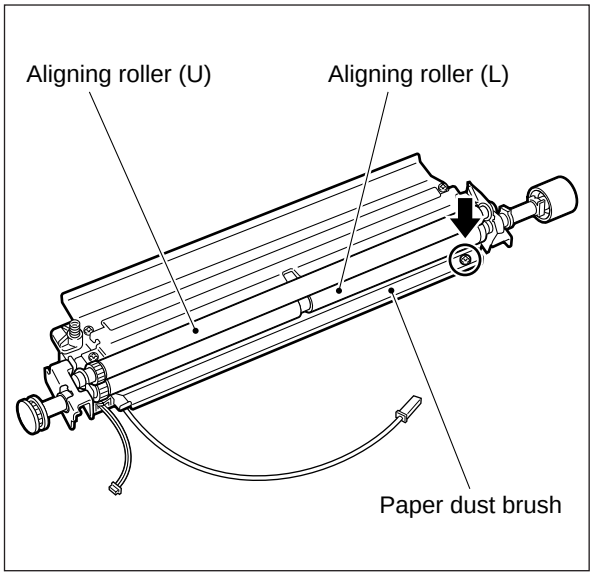

8.4.4 Cassette feed section

(1) Remove the right feed cover.
(2) Open the jam release cover.
(3) Remove the stop ring from the bottom of the hinge.
(4) Remove the harness cover.
(5) Remove the jam release cover.
(6) Disconnect the connector from the feed unit.

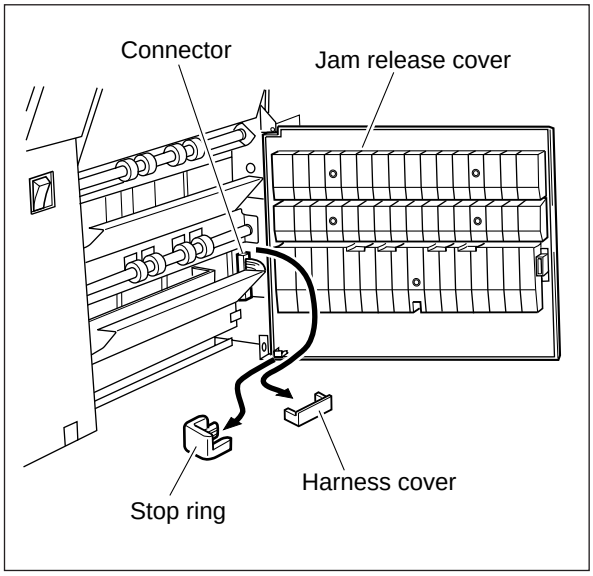

(7) Pull out the cassette.
(8) Disconnect the paper size detection switch harness from the switch.
(9) Remove the two paper feed unit fixing screws, and pull out the unit toward the front side.

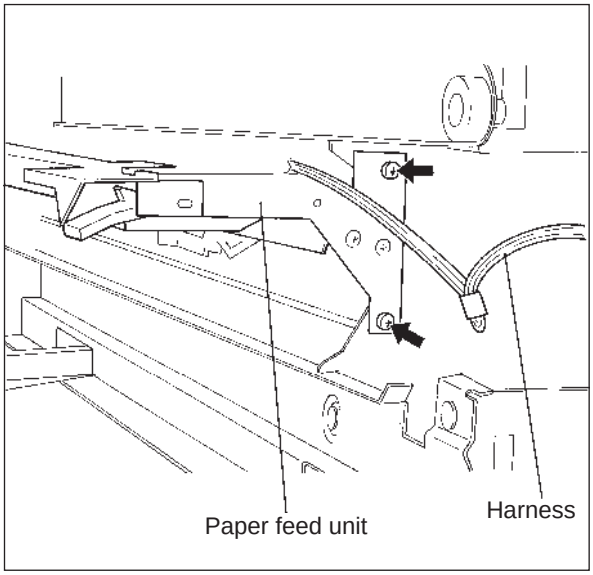

Note: If the LCF has been installed on the copier, use the following procedure to remove the harness cover and the connector.

1. Remove the right feed cover.
2. Remove the hinge stopper for the LCF in order to open it fully.
3. Open the LCF fully.
4. Remove the harness cover.
5. Disconnect the connector from the feed unit.

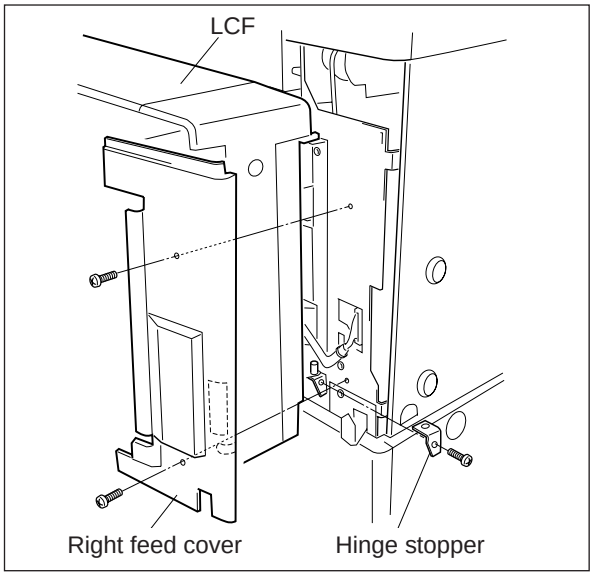

[A] Cassette feed unit (rollers)

(1) Remove the clutch bracket.

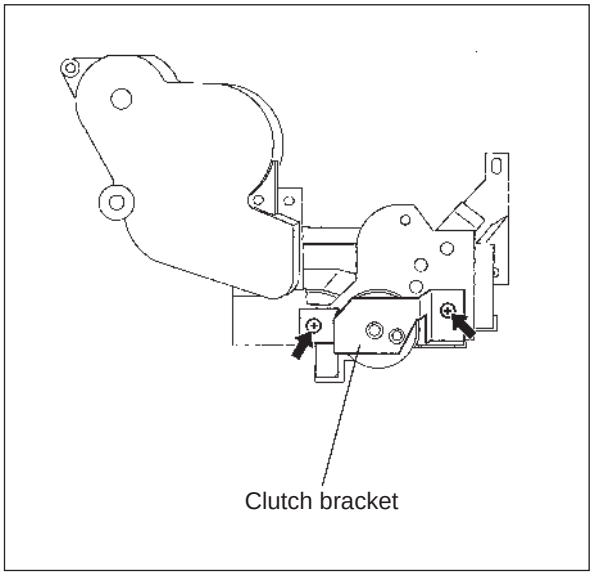

(2) Remove the separation roller holder (2 screws).
(3) Remove the pick-up roller from the arm.
(4) Slide the feed roller in the direction of the arrow A and pull out the bush from the shaft.
(5) Remove the stop-ring and pick-up arm from the shaft and pull out the feed roller.

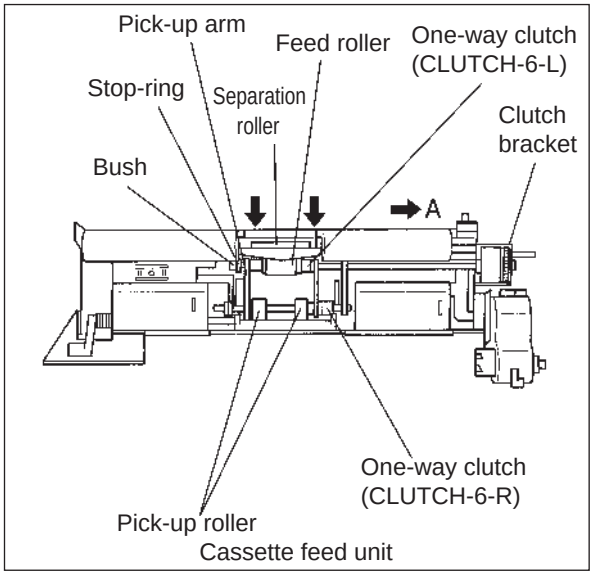

(6) Remove the lever and separation roller with shaft from the holder.

(7) Remove the cover, arbor and clutch spring, and then the separation roller from the shaft.

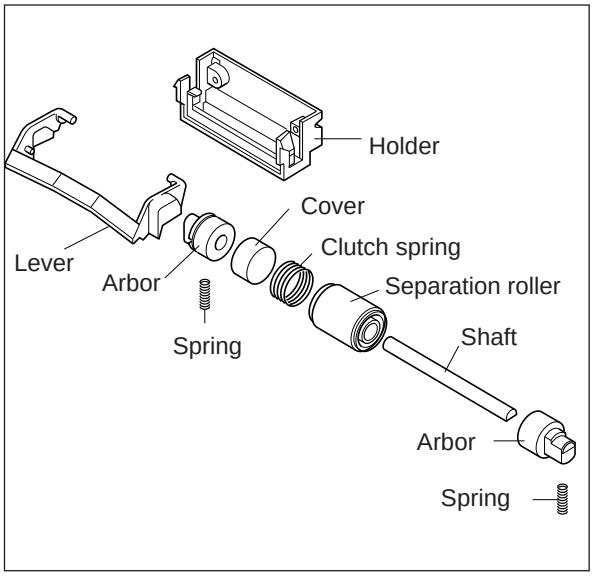

Note: When installing the manual feed, pick-up, paper feed and separation rollers, pay attention to the following items.

1. Insert a pin in the pulley.
2. Make sure the timing belt is correctly looped on the pulley.
3. Make sure the lock direction of the one-way clutch is correct.

CLUTCH-6-L

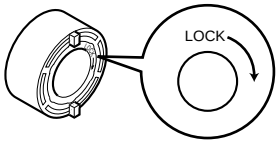

CLUTCH-6-R

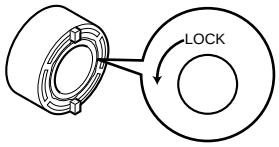

4. Make sure the clip is set in the shaft groove.
5. Make sure no oil gets on the surface of the timing belt, pulley and roller.
6. Make sure of the roller orientation.

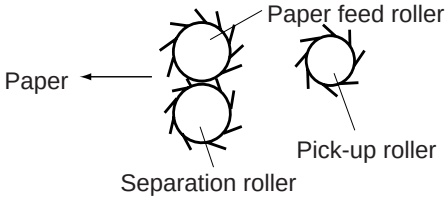

9. DRUM-RELATED SECTION

9.1 Construction

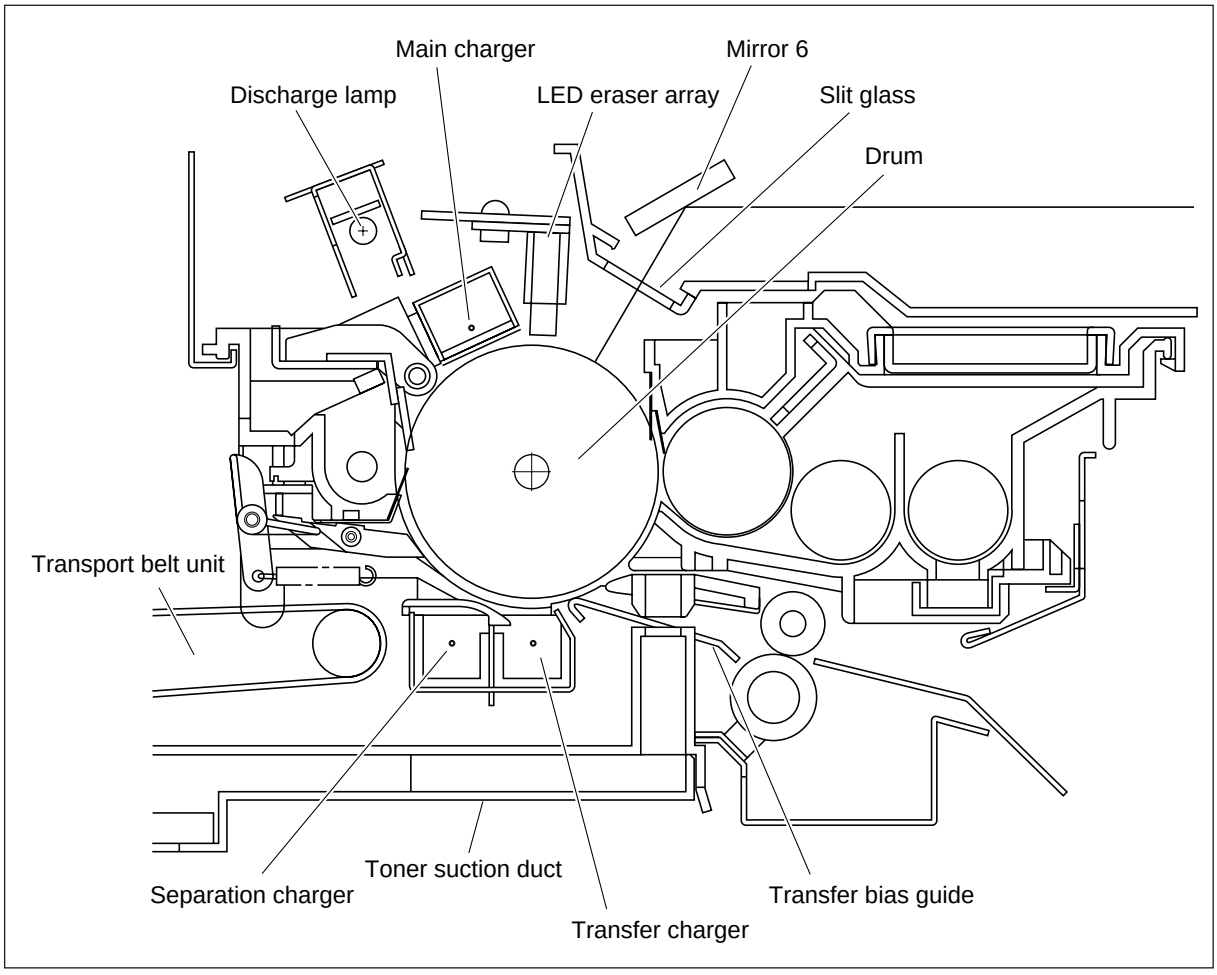

In this section, the drum-related parts including the drum are described. (The cleaner unit is excepted.) Construction of the parts is as follows.

- Upper unit
  - Drum
  - Main charger – – – – – – – – – – High-voltage transformer unit
  - LED eraser array, discharge lamp

- Lower unit
  - Transfer/separation charger – – High-voltage transformer unit
  - Transfer guide bias – – – – – –
  - Transport-belt unit – – – – – –
  - Toner suction duct – – – – – –

9.2 Drive Mechanism

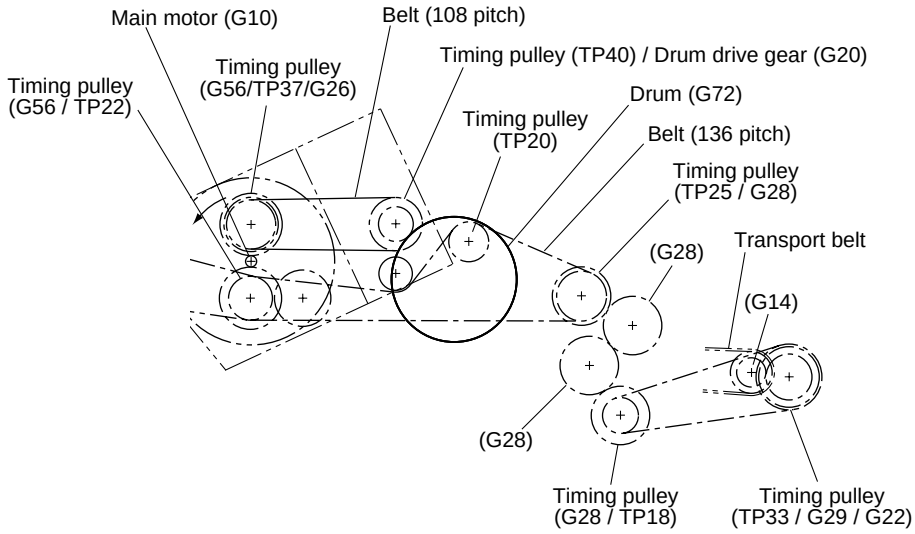

Drum / Transport belt drive

Rear side sectional view

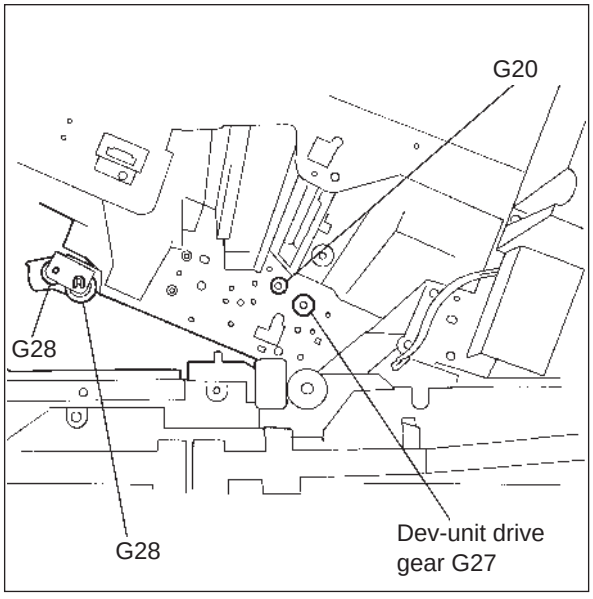

Front side view

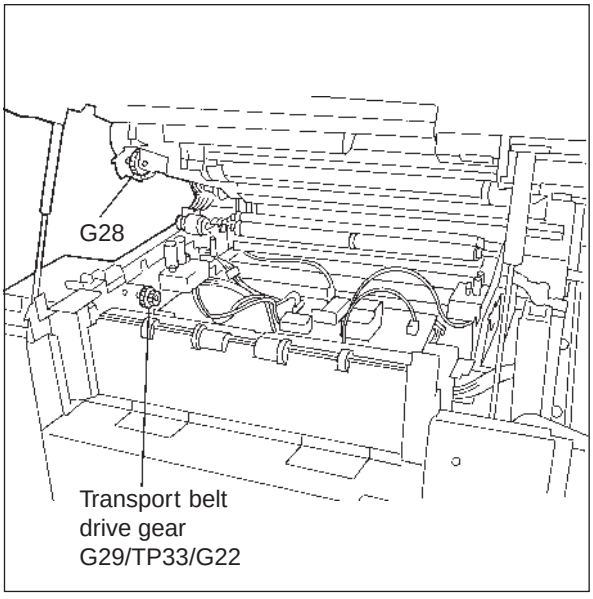

Removing fuser unit, transport belt unit and toner suction duct

• Drum drive

Gear (teeth: 20) ··· Copier rear side (inside of the rear frame)

↳ Drum gear (teeth: 72) → Drum (inside of the cleaner unit)

• Transport belt drive

Gear (teeth: 22) ··· Copier rear side (inside of the rear frame)

↳ Transport belt gear (teeth: 14) → Transport belt

9.3 Functions

9.3.1 Main charger, discharge lamp, and LED eraser array

[A] Main charger

(1) Applies a negative electrical charge to the drum (through a high-voltage transformer).

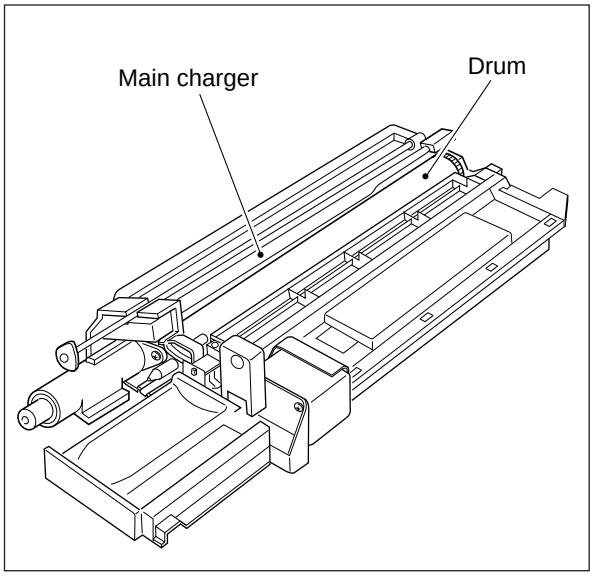

[B] Discharge lamp

(1) Remove any electrical charge remaining on the drum after cleaning.

[C] LED eraser array

(1) Remove any unrequired portion of latent image formed on the drum.

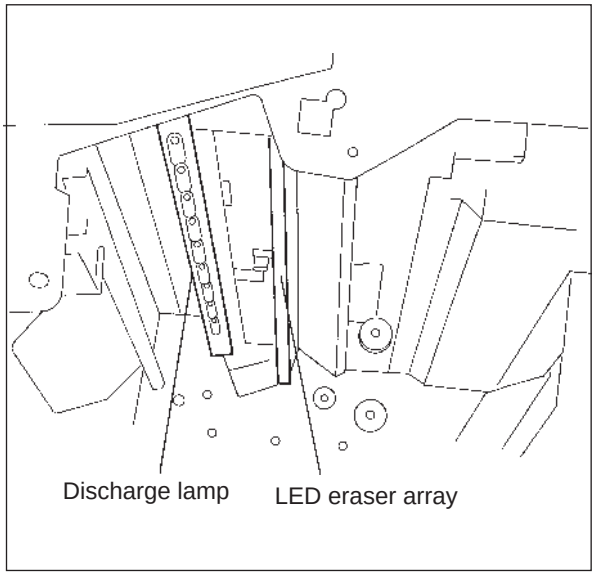

9.3.2 Transfer/separation charger, transport belt and toner suction duct

[A] Transfer charger

Transfers the toner on the drum to the copy paper (high-voltage transformer: DC).

[B] Separation charger

Separates the copy paper with toner from the drum (high-voltage transformer: AC).

[C] Transport belt

Transports the paper, which has been transferred and separated from the drum, to the fuser unit.

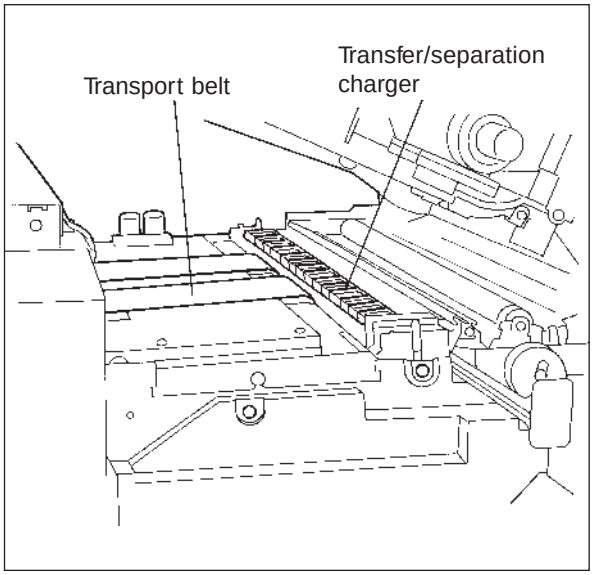

[D] Toner suction duct

Sucks in the toner that has been dispersed from the developer unit.

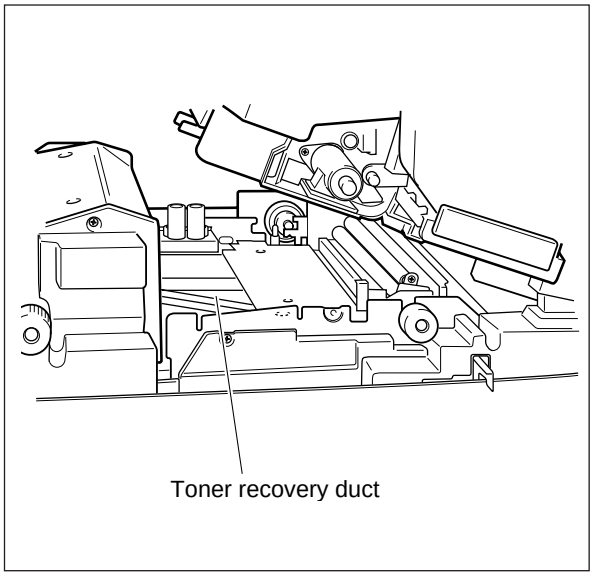

9.4 Disassembly/Replacement

Remove the switch cover and the process unit as required to create easy-to-service conditions.

9.4.1 Process unit

[A] Remove the process unit

(1) Remove the toner cartridge.
(2) Lift up the upper unit.
(3) Remove the connector cover (1 screw) (for European machines).
(4) Remove the one screw shown by the arrow. Pull out the unit to the front side.

Notes: 1. Be careful not to damage the drum.
2. Check that the drum shaft is in the cleaner unit.

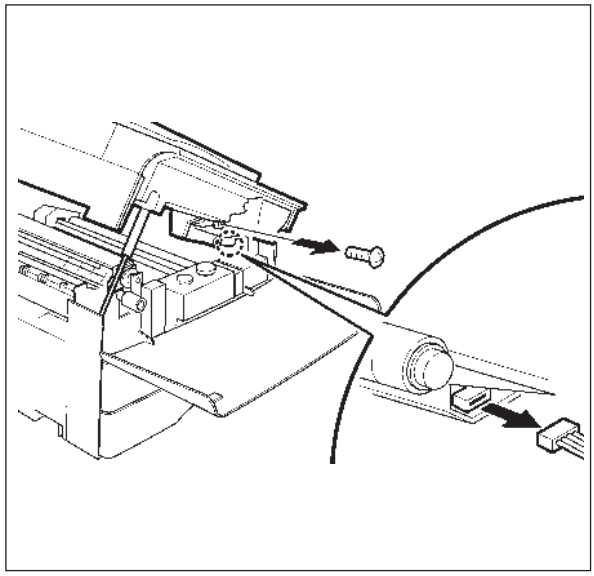

[B] Disassembly and reassembly of cleaner section and developer unit

(1) Place the process unit on the flat space. Pull up the front side and rear side lever in the cleaner section. Disconnect the developer unit from the cleaner section.

Notes: 1. Be careful not to damage the drum.
2. Check that the drum shaft is in the cleaner unit.

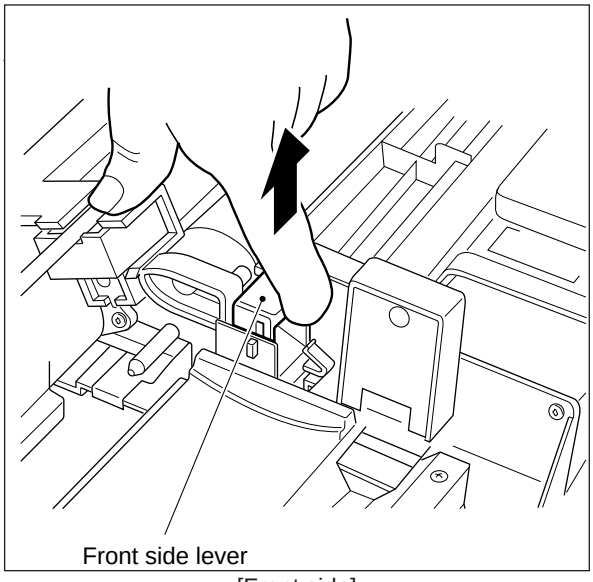

[Front side]

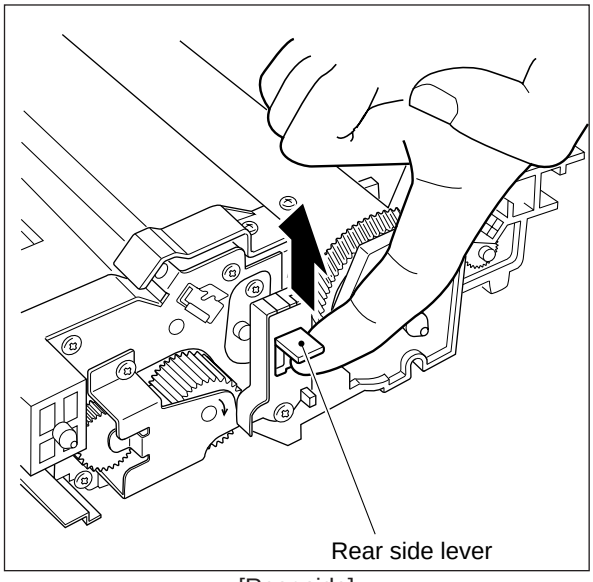

[Rear side]

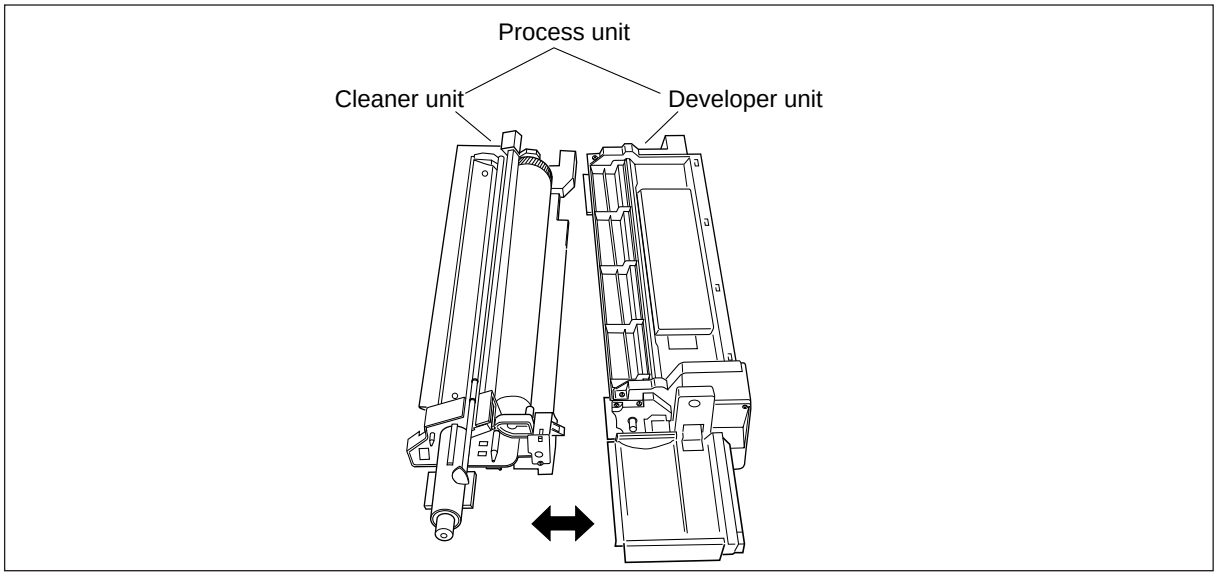

[C] Install the process unit

(1) When installing the process unit into the copier, align the two guides.
Finally, insert the positioning pin into the upper frame hole pushing the portion indicating the arrow.

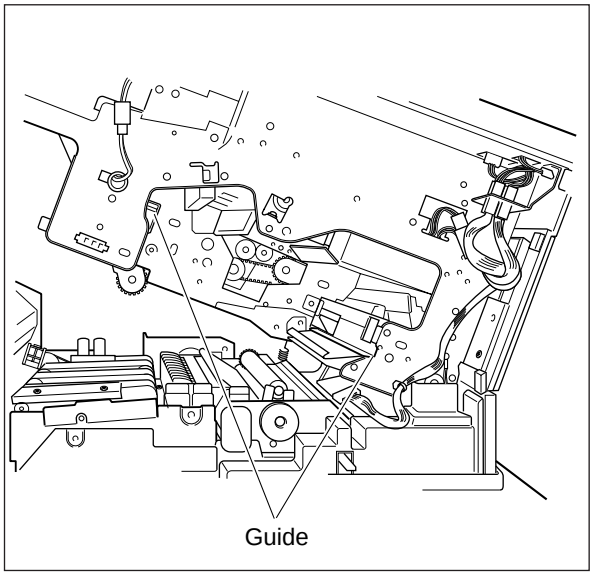

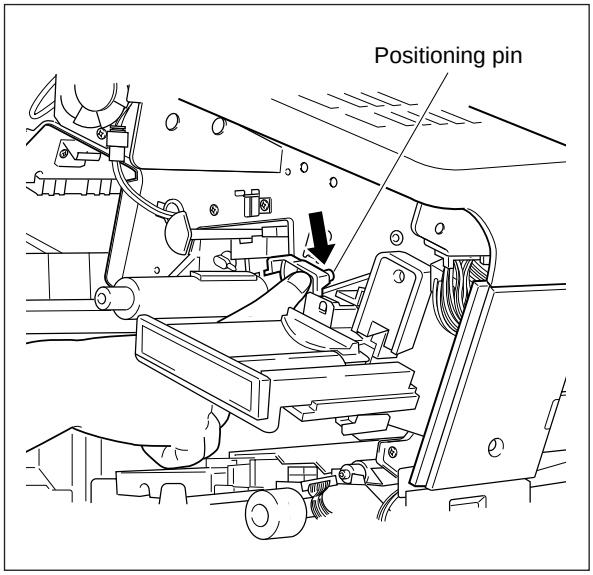

9.4.2 Discharge lamp

(1) Remove the rear cover (U).
(2) Disconnect the connector.
(3) Hold the leading edge of the PC board and pull it to the rear.

Note: When reassembling, insert the PC board firmly until it touches the bracket.

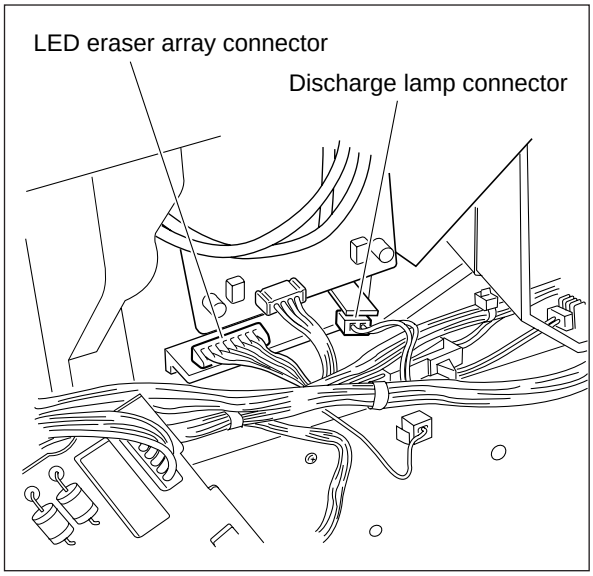

9.4.3 LED eraser array

(1) Remove the process unit and the rear cover (U).
(2) Disconnect the connector.
(3) Remove one screw and pull it to the front.

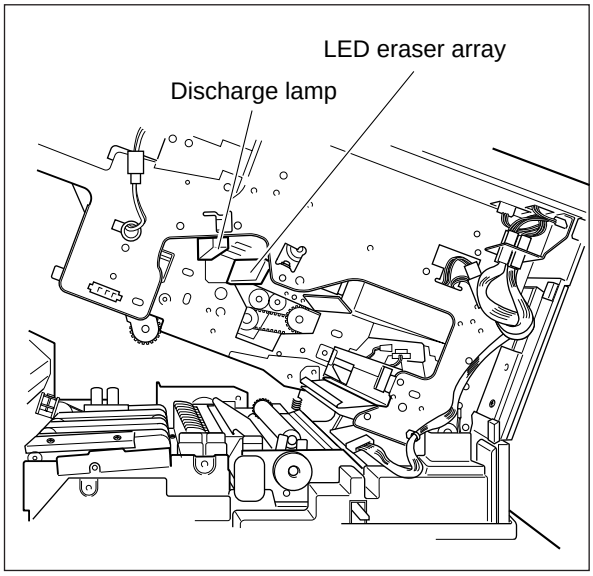

9.4.4 Main charger

(1) Remove the holder charger.

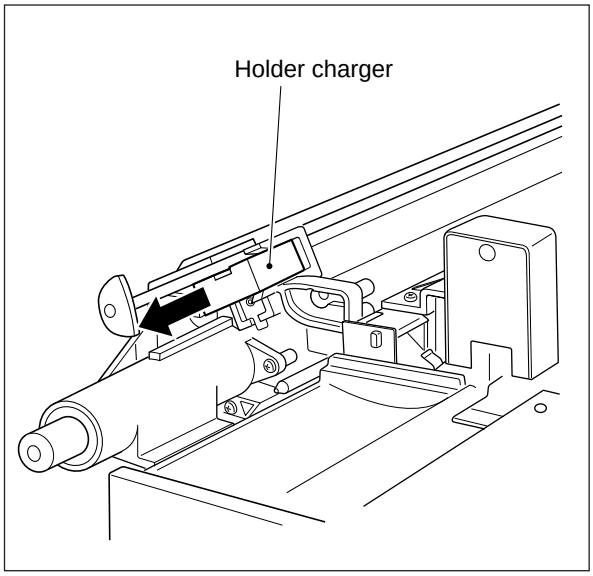

(2) Remove the main charger in the order of ①–②.

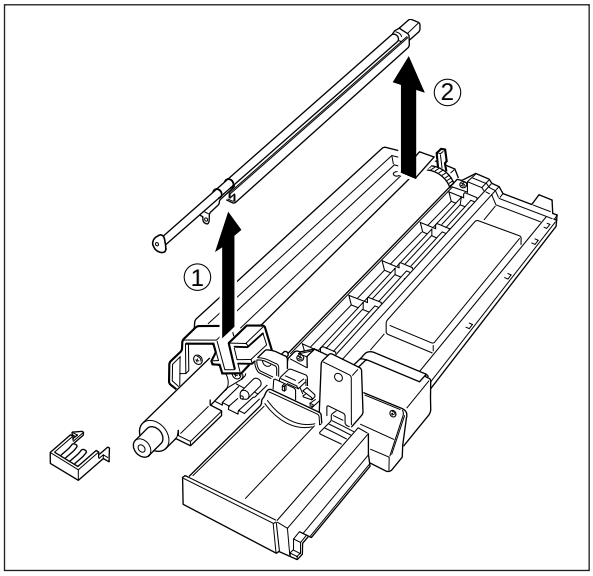

[A] Grid

(1) Pull the grid in the direction of the arrow and unhook it.

Note: During replacement, do not touch the mesh section of the grid with your bare hands.

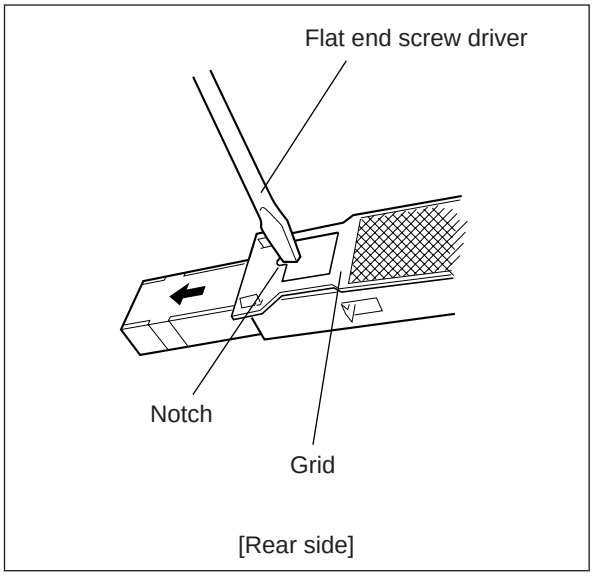

[B] Replacement of charger wire

Total length: 353 mm
Tungsten wire: ø0.06 mm

(1) Remove the terminal cover at the front and rear.

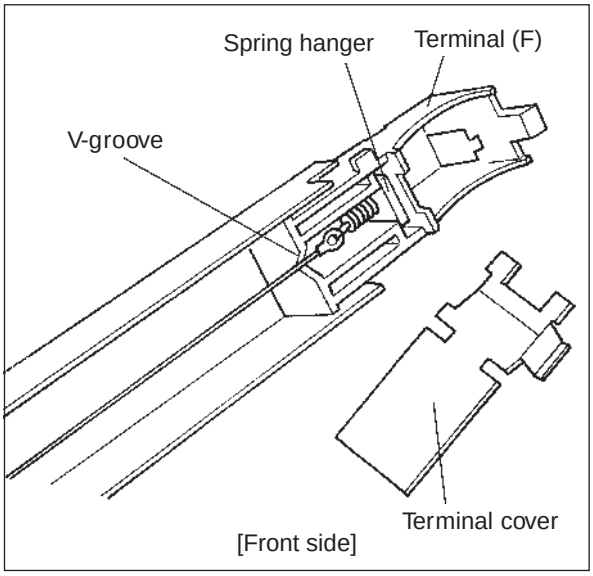

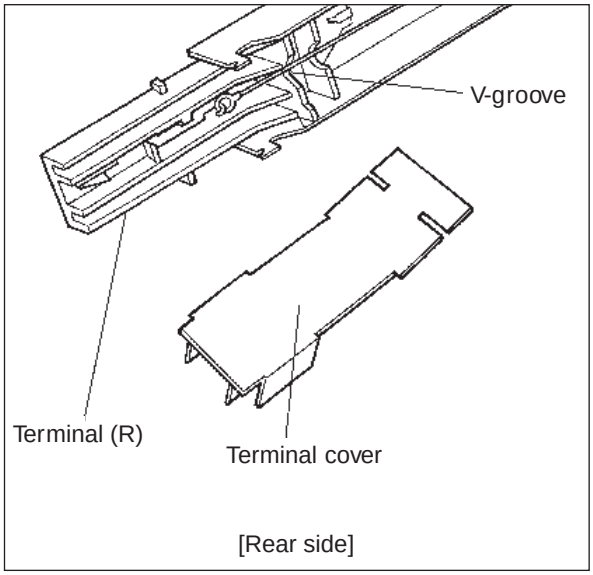

Notes: 1. Pay attention to the direction of the spring hanger on the front.
2. Insert it fully in the V-groove on the front and rear.
3. The wire must not be kinked.
4. Do not touch the wire directly with your hands.
5. It is easy to replace the charger wire when the rear side terminal is put on the holder charger.

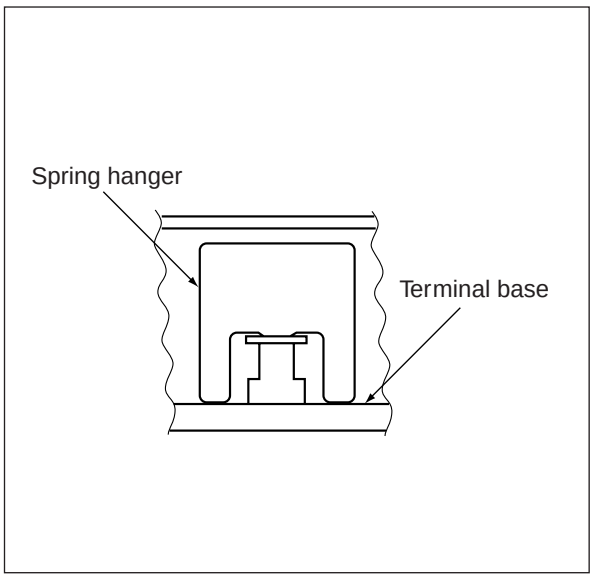

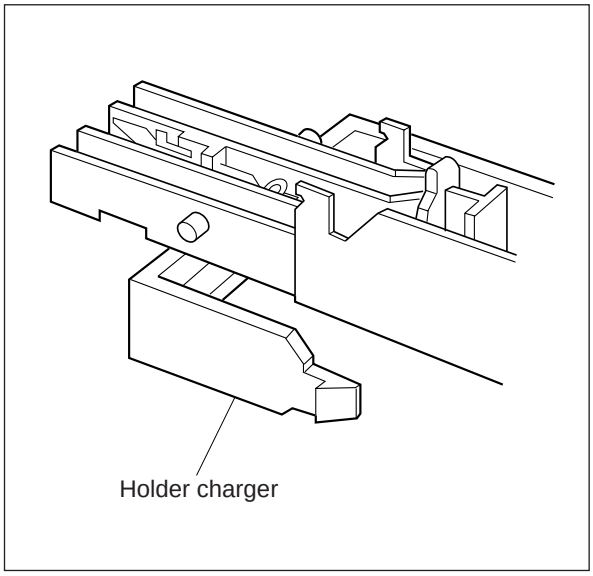

[C] Replacing the cleaning pad:

(1) Remove the charge wire.
(2) Remove the rear terminal.
(3) Move the cleaning pad to the rear side.
(4) Remove the pad holder snap from the shaft.

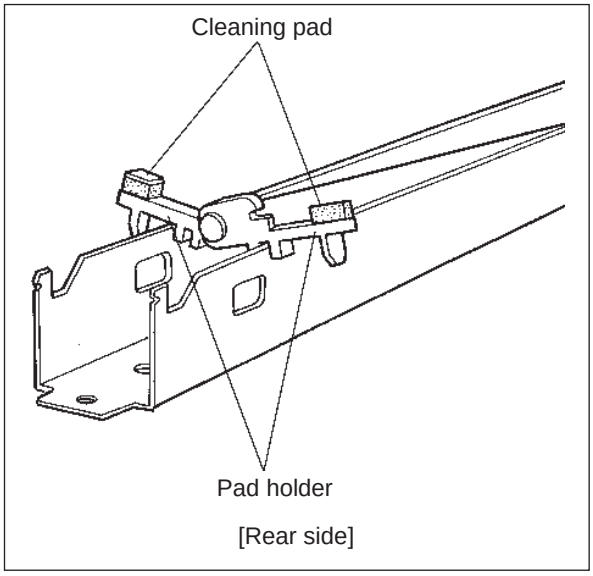

Notes: 1. When reassembling, pay attention to the direction in which the pad holder faces.
2. When moved to the rear, the pads (2 pcs.) should be clearly away from the wires.

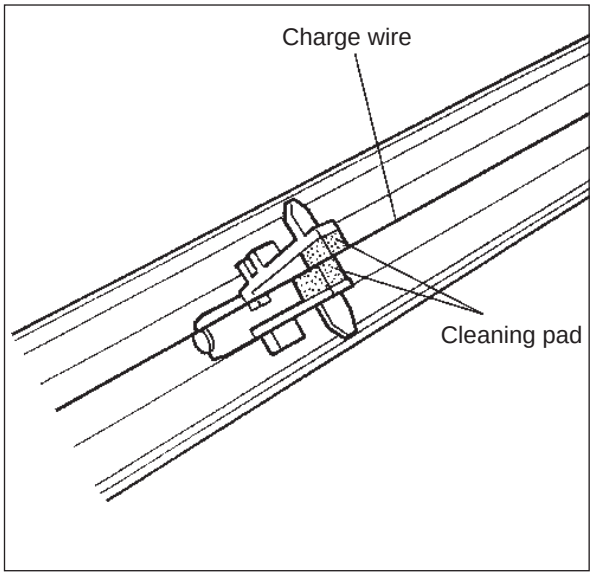

9.4.5 Transfer/separation charger

(1) Remove 1 screw.

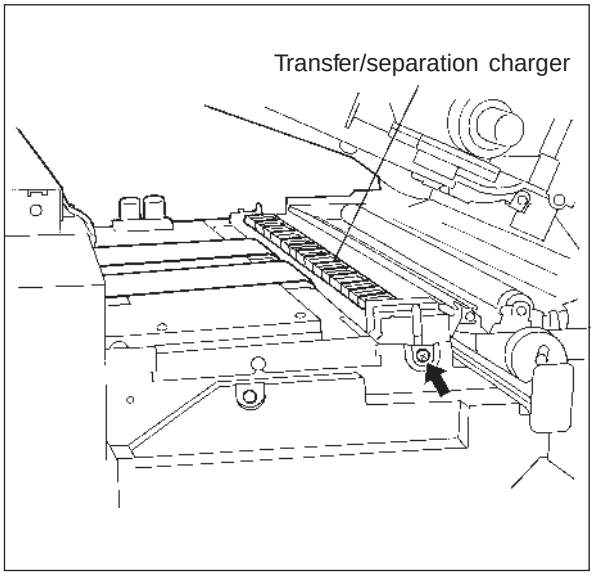

(2) Remove 1 connector.

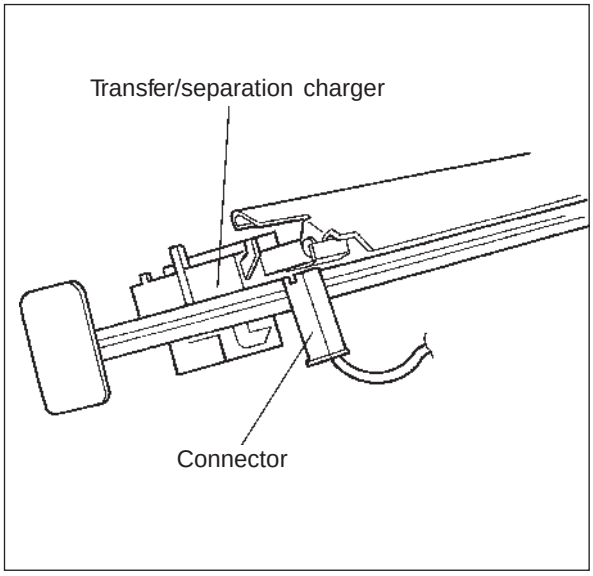

Notes: 1. When fitting the transfer/separation charger, insert it in the placement groove on the rear frame. Also check that it can be pushed up by the spring and moves up and down.

2. Do not forget to insert the connector.

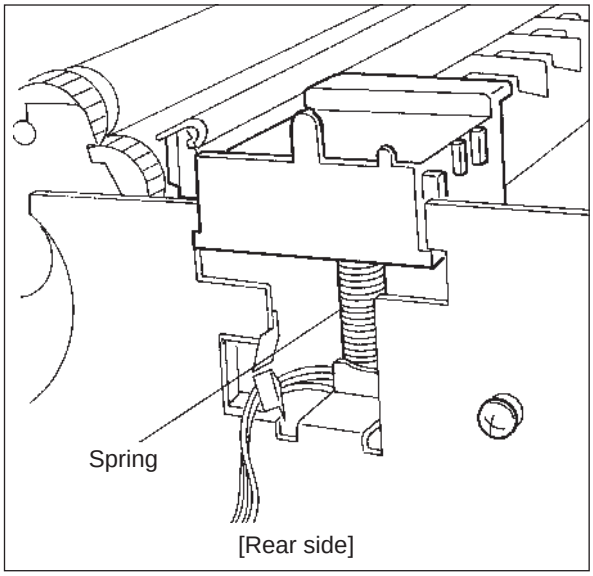

[A] Replacing the charger wire:

(Total length: 353 mm
Gold-plated tungsten wire: ø0.06 mm

(1) Remove the terminal cover on the front and rear. In the case of the separation charger, remove the supporter.

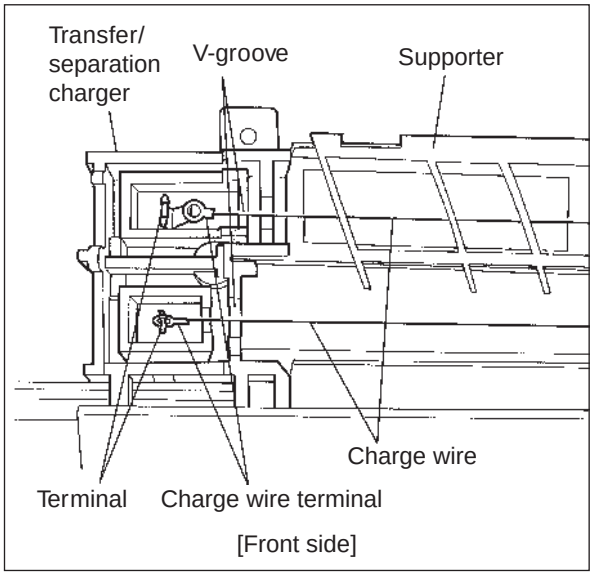

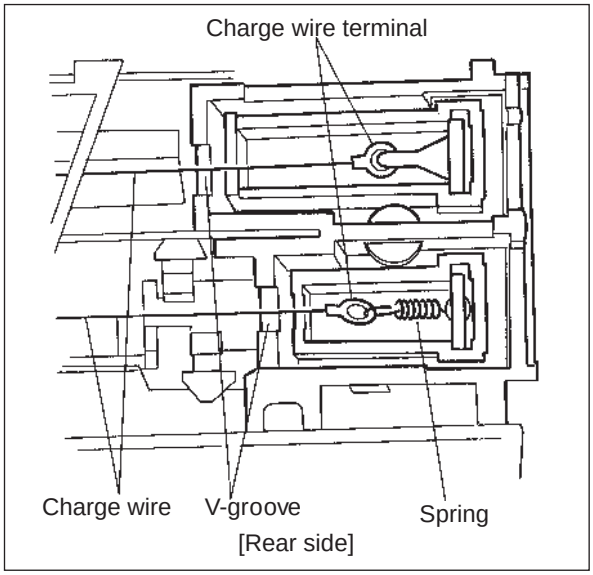

Notes: 1. Pay attention to the direction of the spring hanger on rear.
2. Ensure that the charge wires are firmly inserted in V-slots at the front and rear.
3. The wire must not be kinked.
4. Do not touch the wire directly with your hand.
5. Insert the supporter securely into the hook or slot.

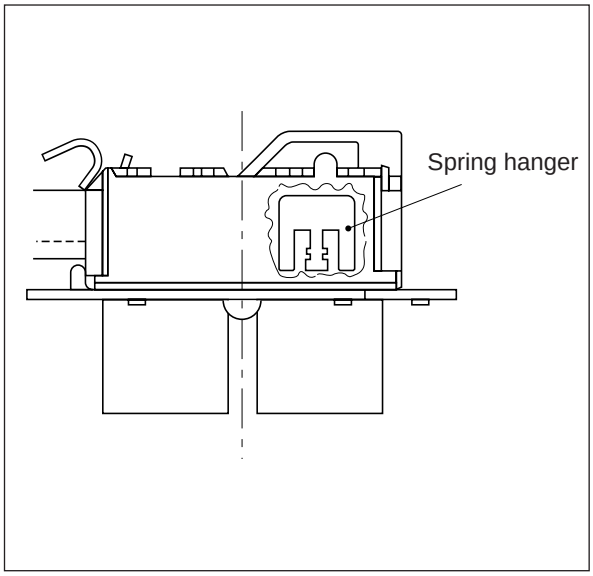

[B] Replacing the cleaning pad:

(1) Remove the charge wire.
(2) Remove the rear terminal.
(3) Move the cleaning pad to the rear side.
(4) Remove the pad holder snap from the shaft.

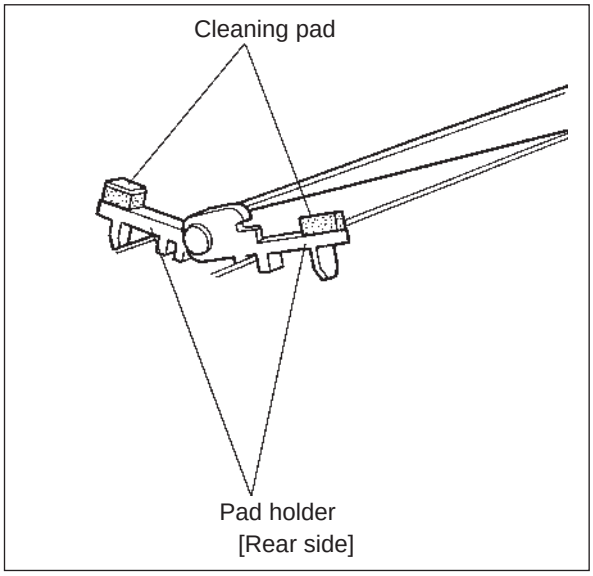

Notes: 1. When reassembling, pay attention to the direction in which the pad holder faces.
2. When moved to the rear, the pads (2 pcs.) should be clearly away from the wires.

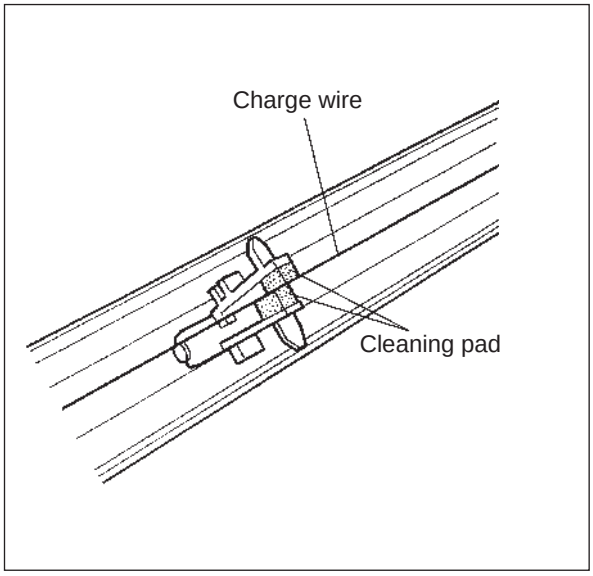

9.4.6 Transport belt unit

(1) Remove the toner bag.

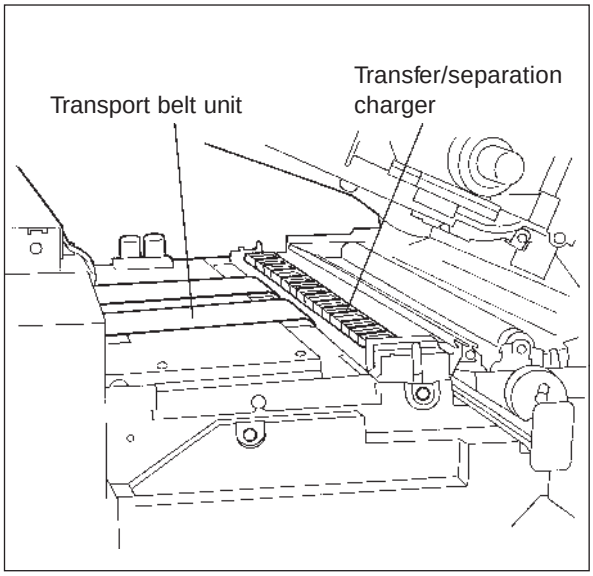

(2) Remove the screw, disconnect the 2 connectors on the front side, and take out the transport belt unit.

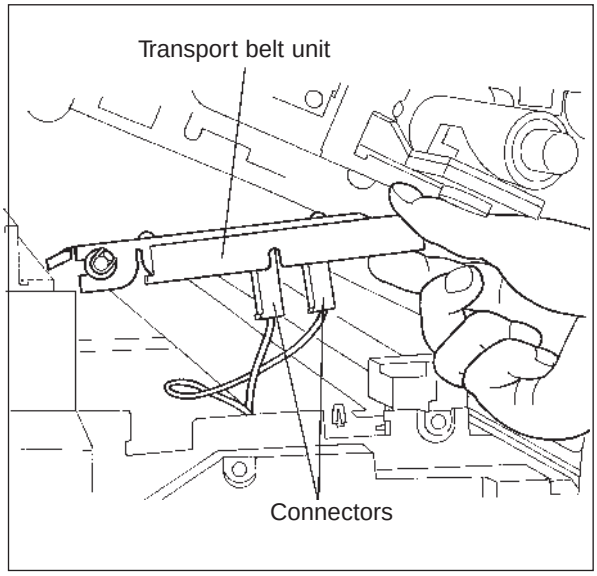

[A] To place the belt:

(1) Remove the idle roller on the drum side.
(2) Remove the stop-ring and the shaft.
(3) Remove the belt case (4 screws).
(4) Remove the belt.

Note: The belt position for installation is shown in the figure below.

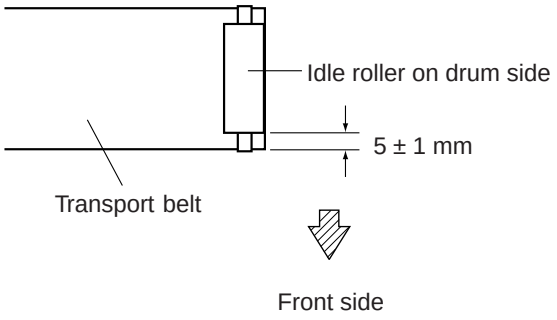

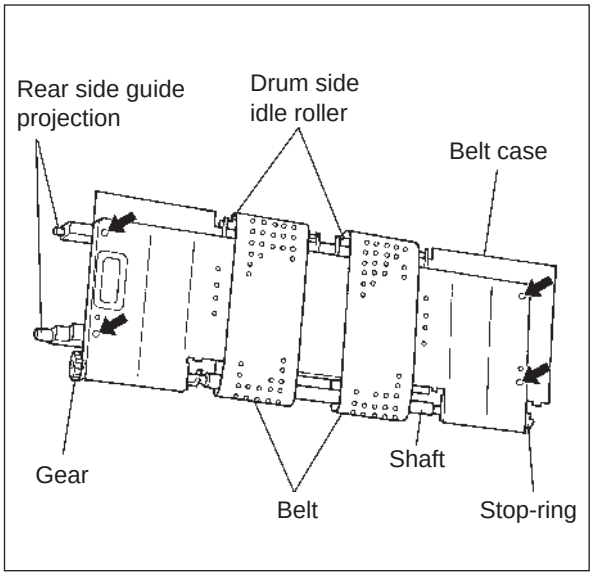

Notes: 1. To reinstall the transport-belt unit in the copier, fit its rear guide projection (2) in the hole in the rear copier frame and the front guide projection in the cut-out portion of the front copier frame.
2. Check that the gears on the front and rear are properly engaged.

9.4.7 Toner suction duct unit

(1) Remove the transfer/separation charger and transport belt unit.
(2) Remove the screw and take out the toner suction duct.

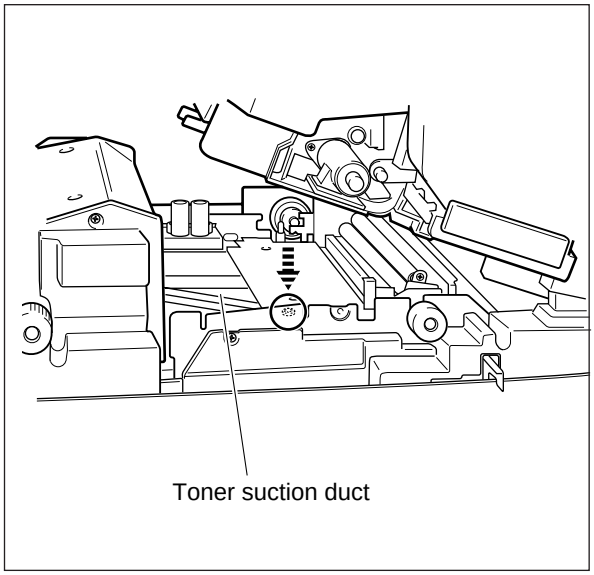

(3) Remove the cover on the toner suction duct together with the protection bracket (5 hooks).

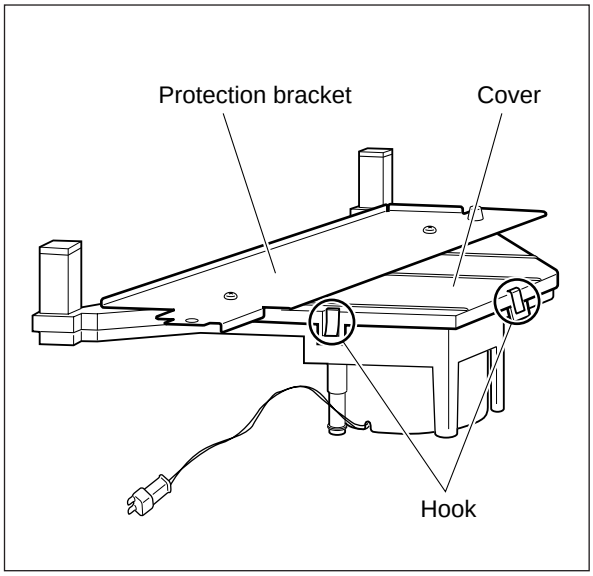

(4) Remove the air filter.

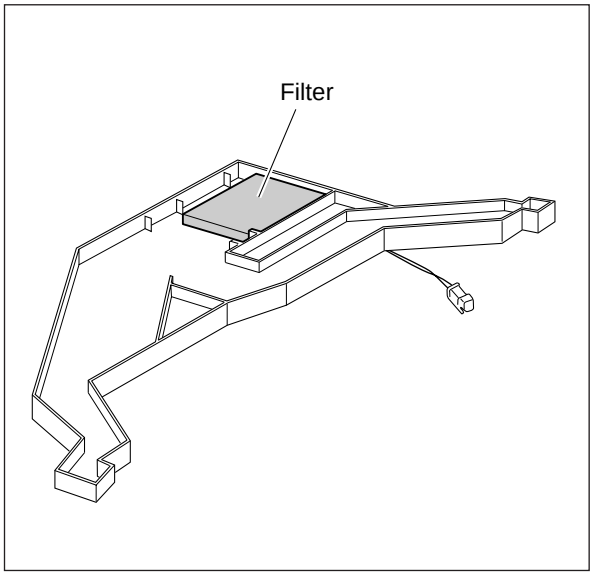

9.4.8 High-voltage transformer for main charger, transfer/separation and transfer bias

(1) Remove the transfer/separation charger and the transport belt unit.

(2) Remove the screw and take out the toner suction duct.

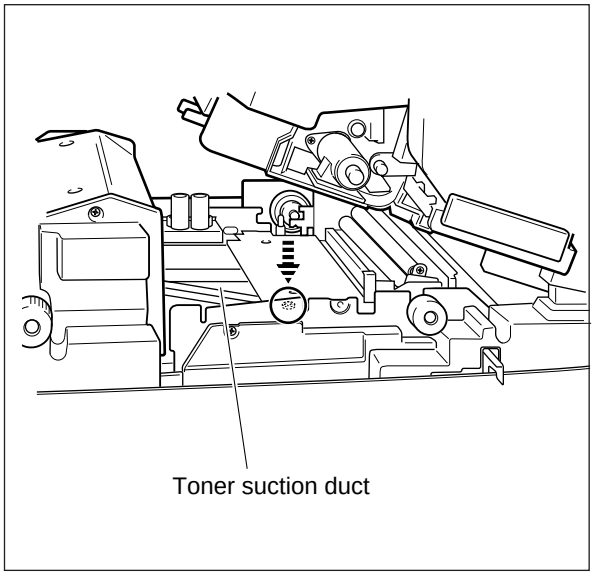

(3) Remove the connectors for the transfer/separation charger (front side) and the main charger (rear side).

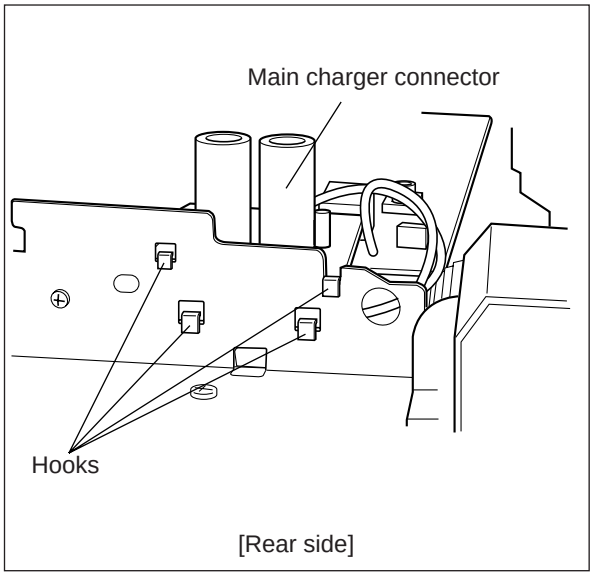

(4) Remove the 2 connectors and 3 screws and take out the high-voltage transformer.

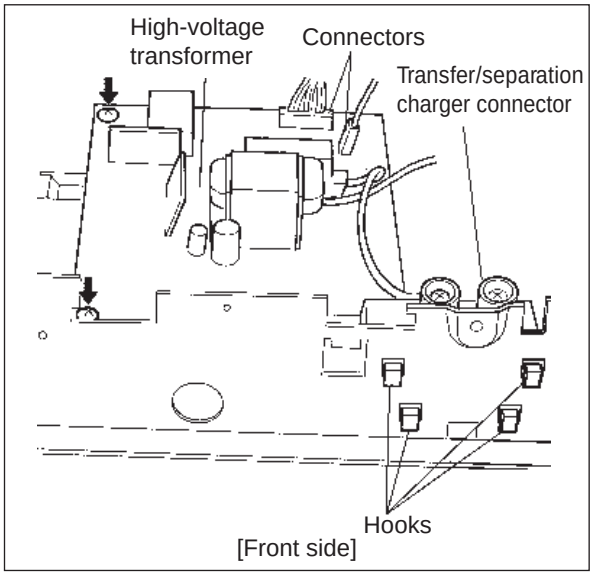

9.4.9 Lower damp heater, fuse PC board, and thermostat

(1) Remove the transfer/separation charger, transport-belt unit and toner suction duct unit.
(2) Remove the screw, pull out the connector, and take out the entire bracket.
(3) Pull out the connector on the fuse PC board and the 2 Faston terminals for the thermostat. Remove the screw and the washer. Take out the lower damp heater.
(4) Remove the connector and take off the fuse PC board from the lock support.
(5) Pull out the 2 Faston terminals, remove the screw and take off the thermostat.

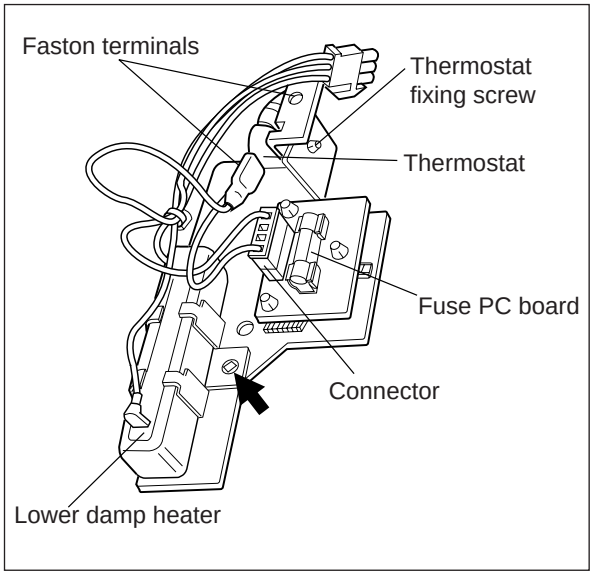

9.5 Charging, Transfer, Separation, Developer Bias Control Circuit

9.5.1 Outline

- Circuit to create the output control voltage Vc of the charging/transfer/separation/developer bias.
- Vc is varied → output current or voltage varies linearly.

9.5.2 Operation explanation

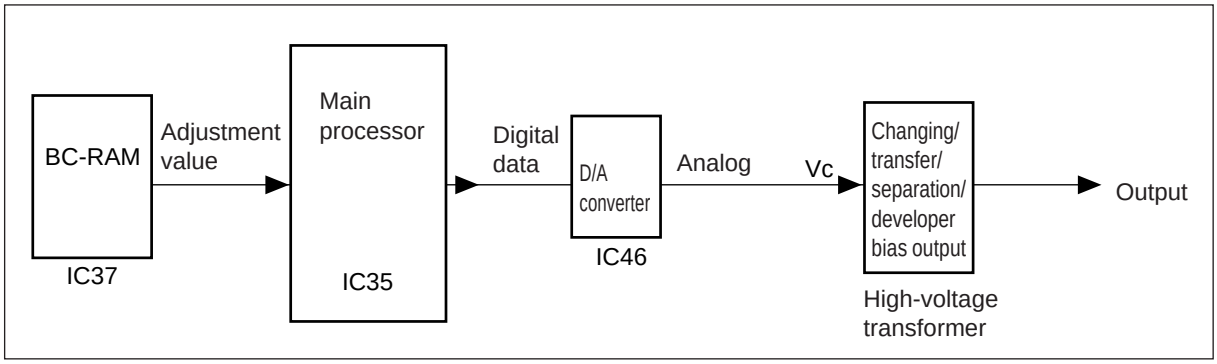

- Charging/transfer/separation/developer bias output adjustment value inside BC-RAM is output to the main processor.

↓

- Outputs control voltage data from the main processor to the D/A converter.

↓

- Analog conversion by the D/A converter.

↓

- Outputs control voltage Vc to the charging/transfer/separation/developer-bias transformer.

↓

- Charging/transfer/separation/developer-bias transformer generates an output current or voltage proportional to control the voltage Vc.

  * Adjustment of control voltage Vc (adjustment data change) is performed in the AJ mode.

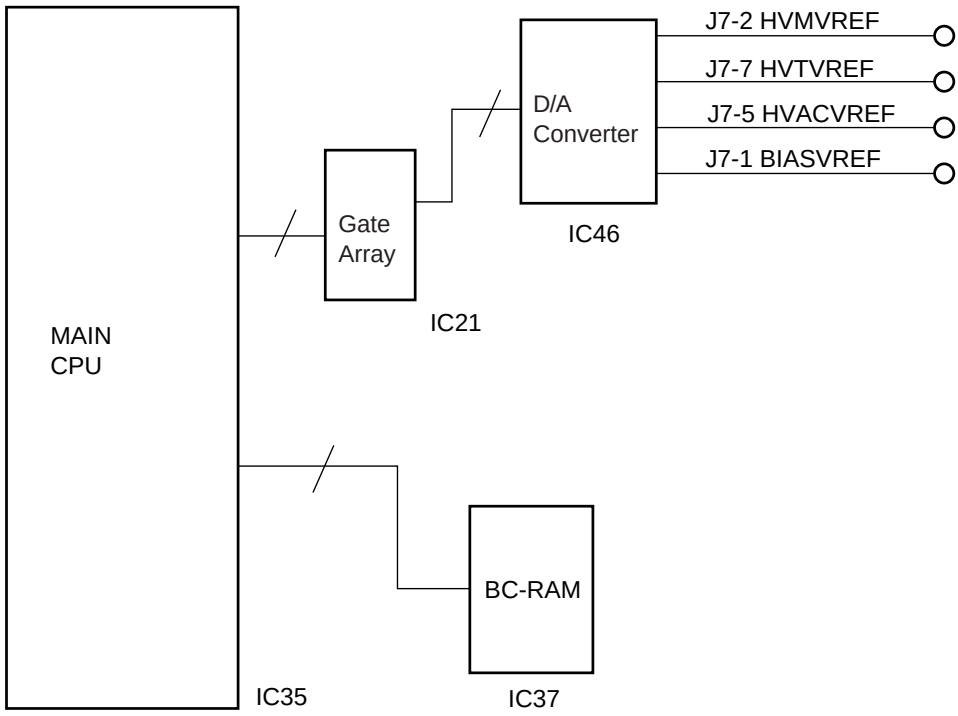
J7-2 HVMVREF
J7-7 HVTVREF
J7-5 HVACVREF
J7-1 BIASVREF
D/A
Converter
IC46
Gate
Array
IC21
MAIN
CPU
IC35
BC-RAM
IC37

10. DEVELOPER UNIT

10.1 Construction

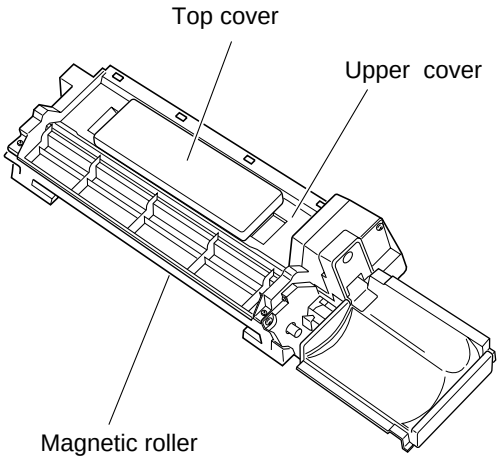

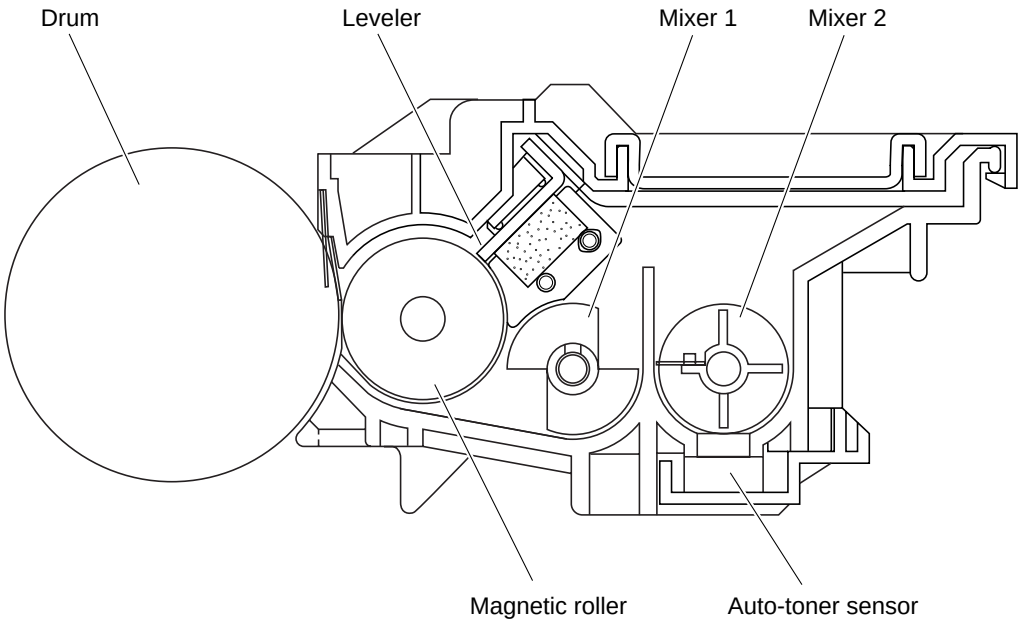

Front side sectional view

10.2 Developer drive

10.2.1 Magnetic roller, mixer 1 and mixer 2

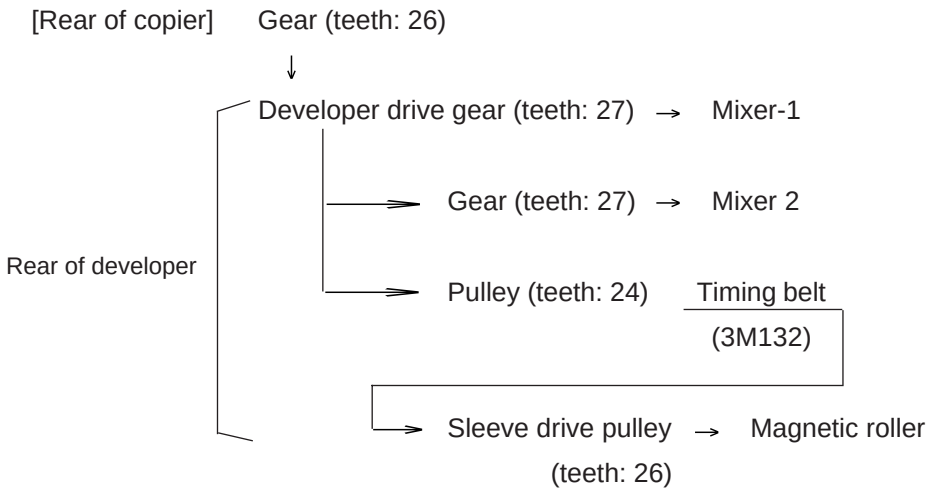

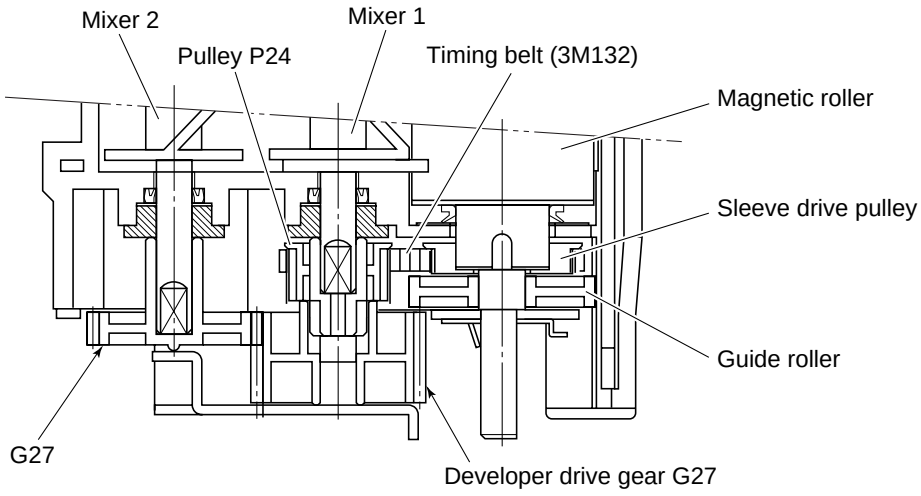

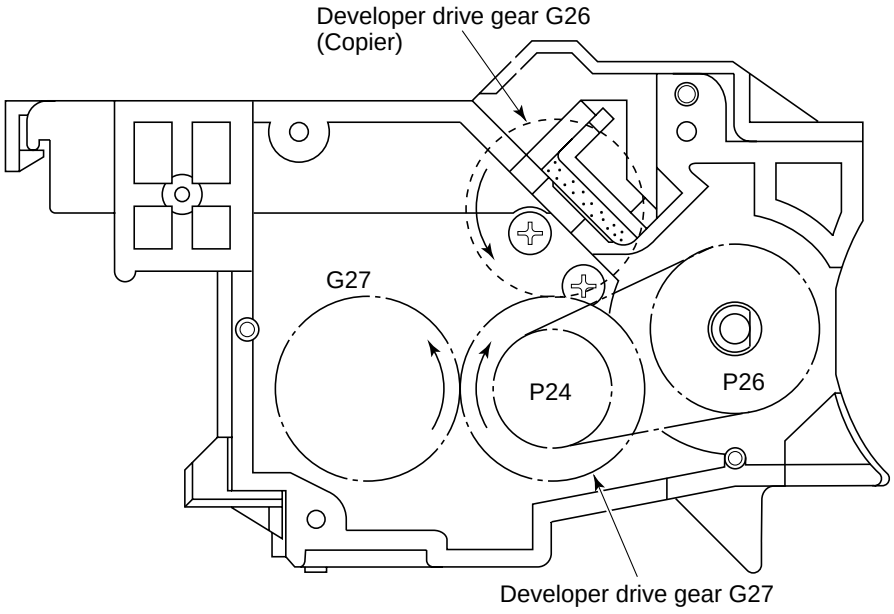

[Rear side]

10.2.2 Toner cartridge

[Developer unit front side] Toner cartridge drive motor

↓

Drive gear (teeth: 32)

↓

Toner cartridge (toner replenishment)

↑

Mix toner with mixer 1 and 2.

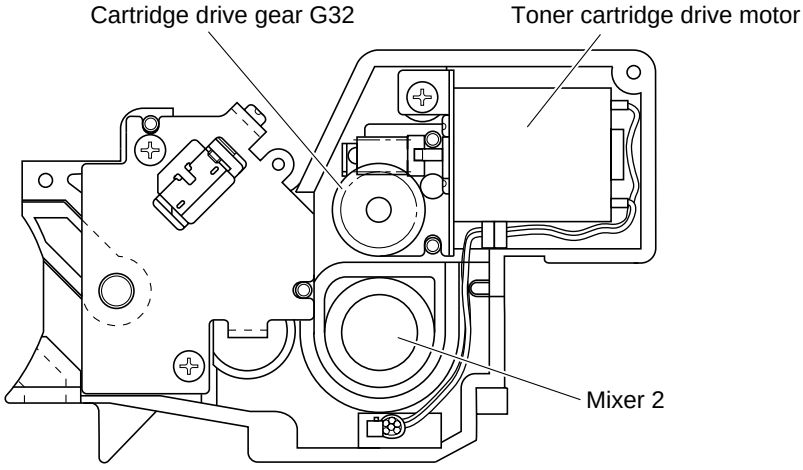

[Front side]

10.3 Disassembly/Replacement

10.3.1 Disassembly and reassembly of developer unit from the process unit

(Refer to 9.4.1 Process unit)

10.3.2 Pouring in developer material

(1) Remove the upper cover (2 screws).

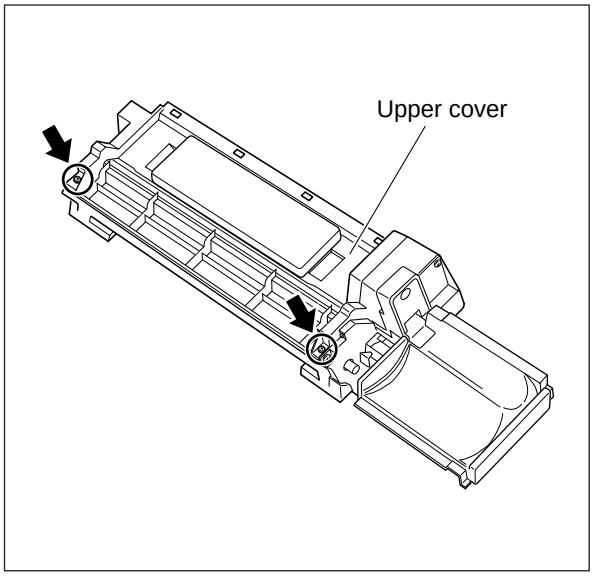

(2) Remove the cap of the developer material bottle. Pour the developer material into the developer unit.

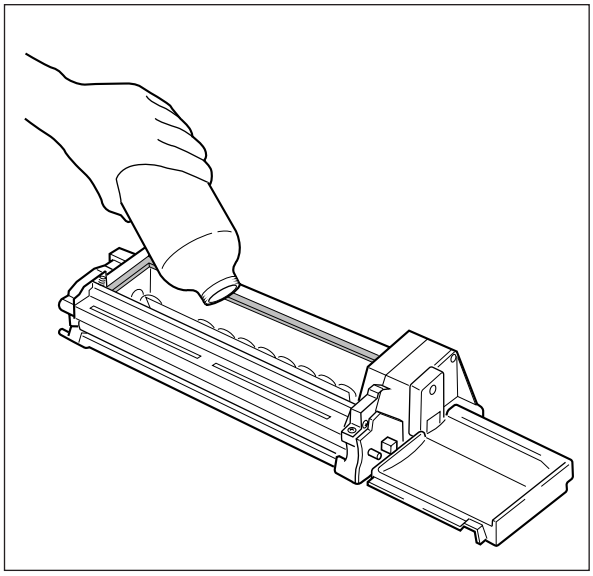

(3) After the pouring in has been completed, turn the gear in the direction of the arrow, and cause the developer material to be transported onto the magnetic roller.
You can only touch the gear in the range indicated in the figure.

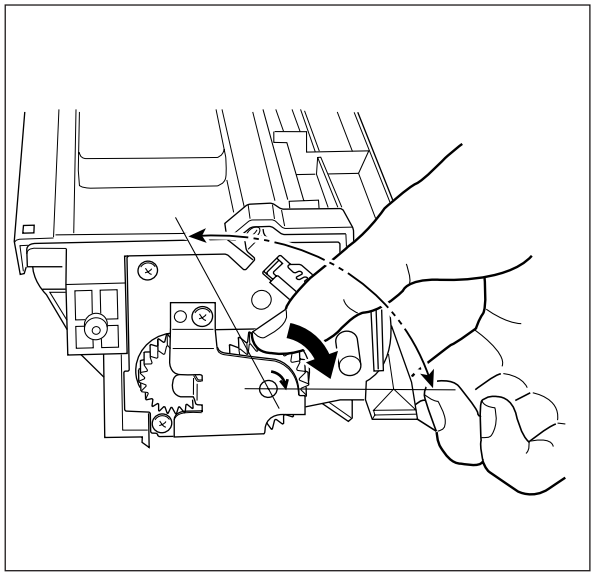

(4) Install the upper cover. After fully inserting the hooks (four places), fasten with screws.

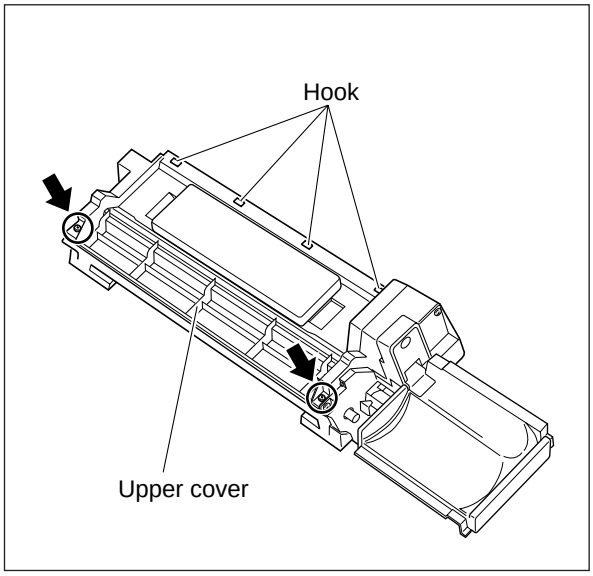

(5) Pay attention to the overlapping between the side seal (front, rear) and the rubber seal. (Be careful when reassembling the upper cover.) The side seal must come between the outer rubber seal and inner one.

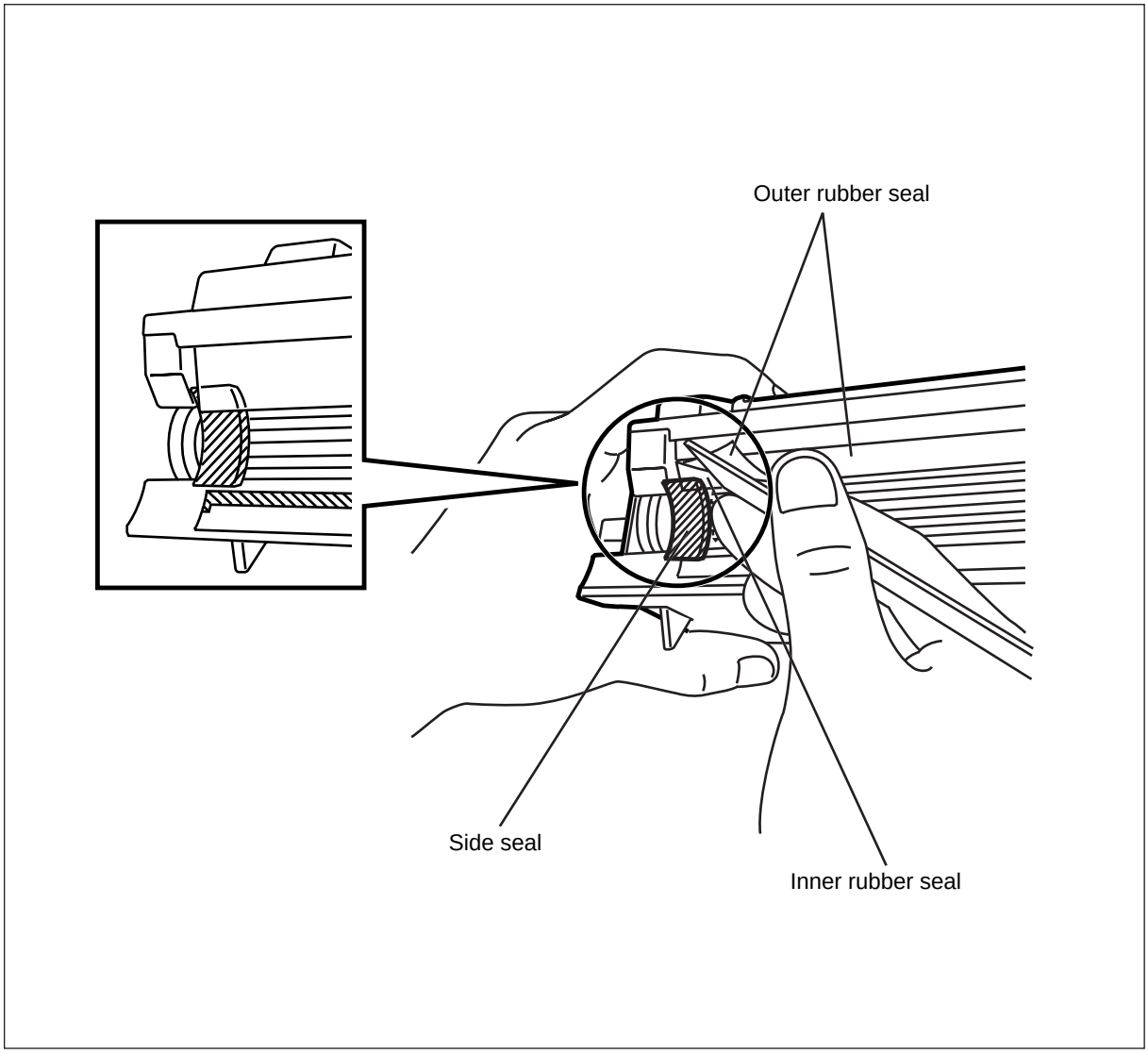

10.3.3 Discharging developer material

(1) Set the cap jig on the toner replenishment orifice on the developer unit as shown in the figure. (This is done to prevent the developing material around the toner replenishment orifice from splattering into the toner cartridge drive unit when the developer unit is turned upside down.)

(2) Remove the upper cover (2 screws).

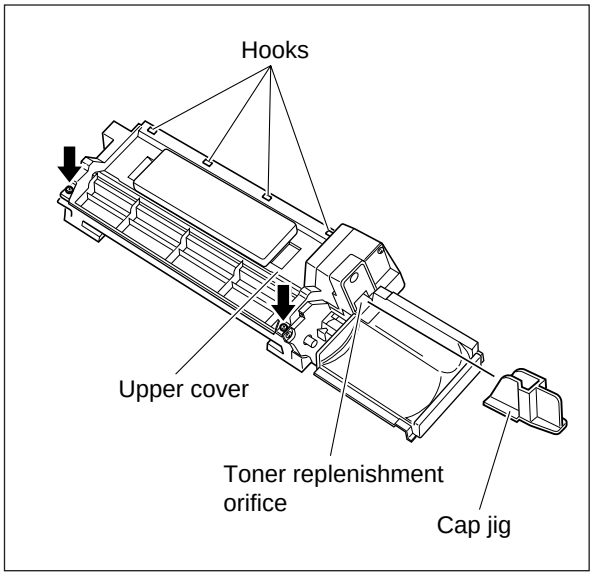

(3) Incline the developer unit and discharge developer material from the position indicated by the arrow.

Notes: 1. Do not discharge developer material from the toner replenishment orifice, as the developer will adhere to the gear of the toner cartridge drive motor, causing the motor to seize.

2. Take care to avoid the connector becoming smeared with developer material when discharging is performed.

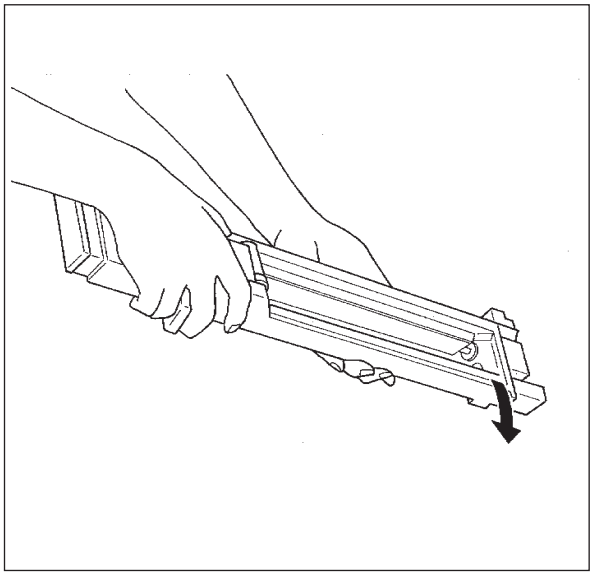

10.3.4 Guide roller

[A] Front side

(1) Discharge the developer material.

(2) Remove the holder bracket (2 screws).

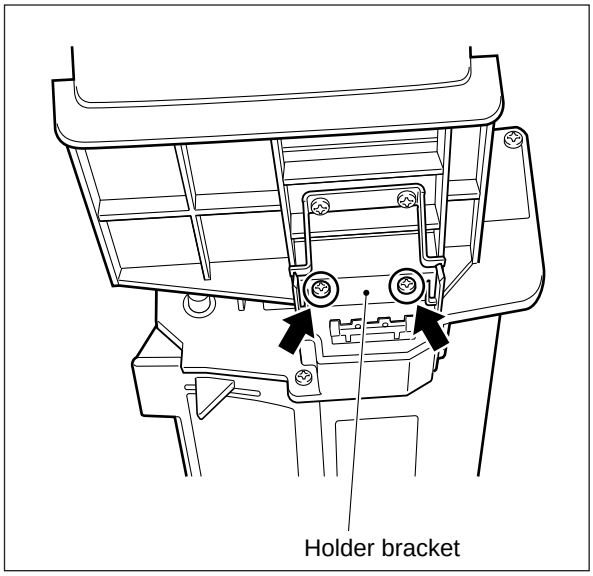

(3) Remove the connector from the holder bracket.

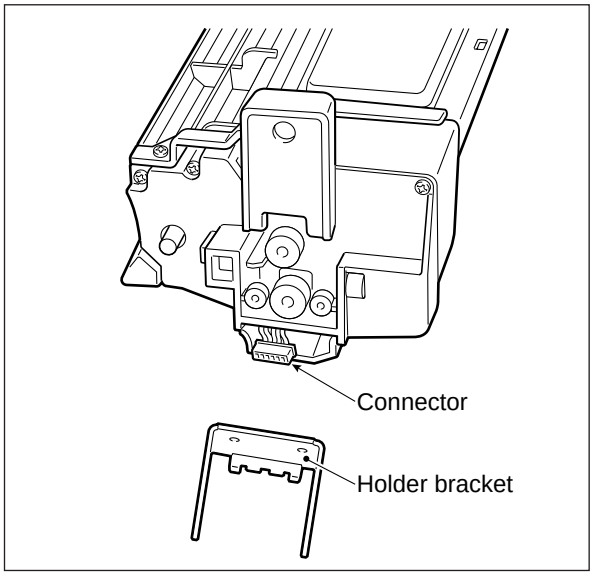

(4) Remove the nozzle (3 screws).

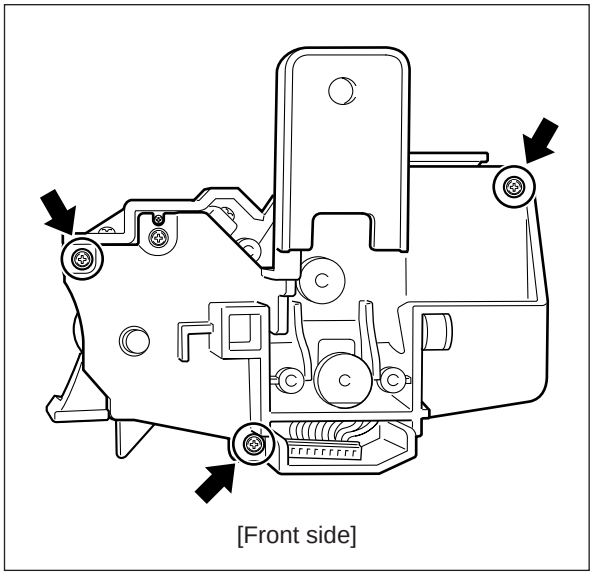

(5) Remove the plate (3 screws, coil spring).

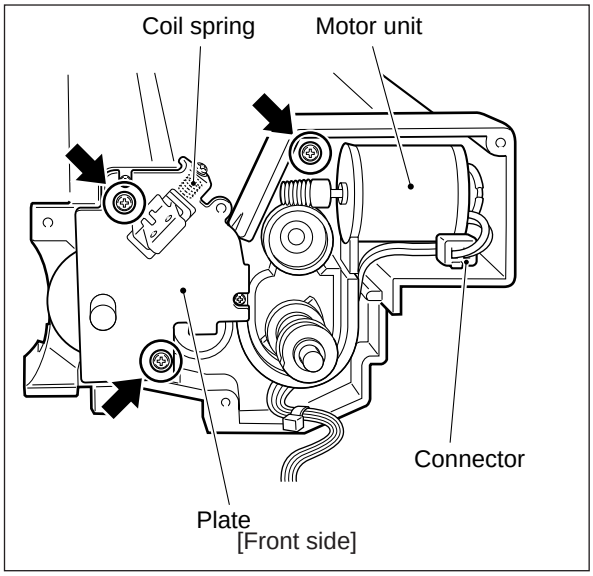

(6) Replace the guide roller.

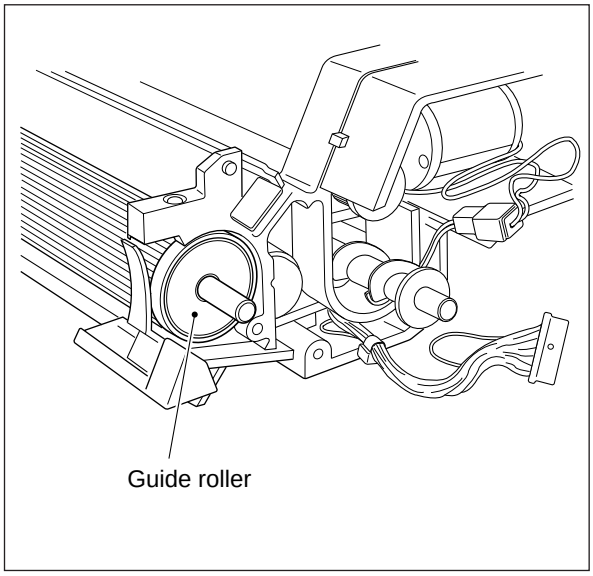

[B] Rear side

(1) Remove the adjustment plate (1 screw).

(2) Remove the plate (4 screws and 1 coil spring).

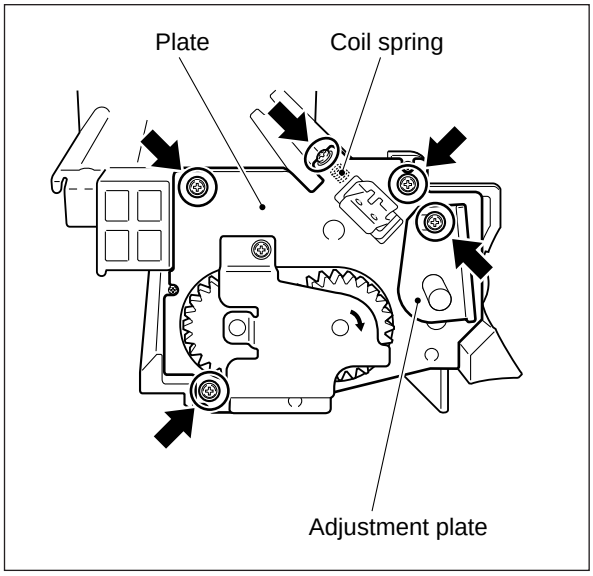

(3) Replace the guide roller.

Notes: 1. The guide roller is common to the front and rear.

2. After reassembly, adjust the polarity position and the doctor sleeve gap according to the method given in the Service Handbook.

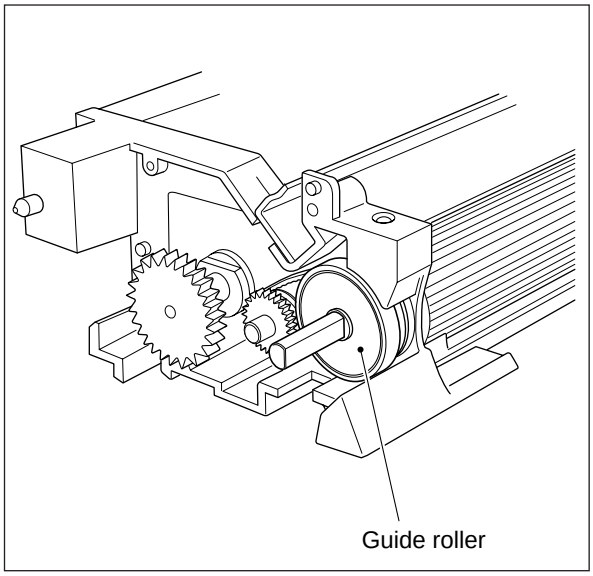

10.3.5 Toner cartridge drive

(1) Discharge the developer material.

(2) Remove the toner holder bracket, nozzle and side plate.

(3) Pull out the harness and disconnect the connector. Remove the motor unit (1 screw).

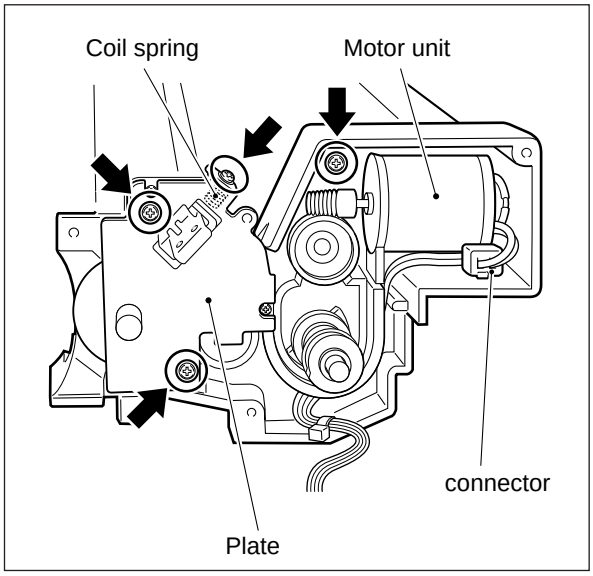

(4) Remove the motor (2 screws).
Replace the motor.
When the gear is defective, replace the entire unit.

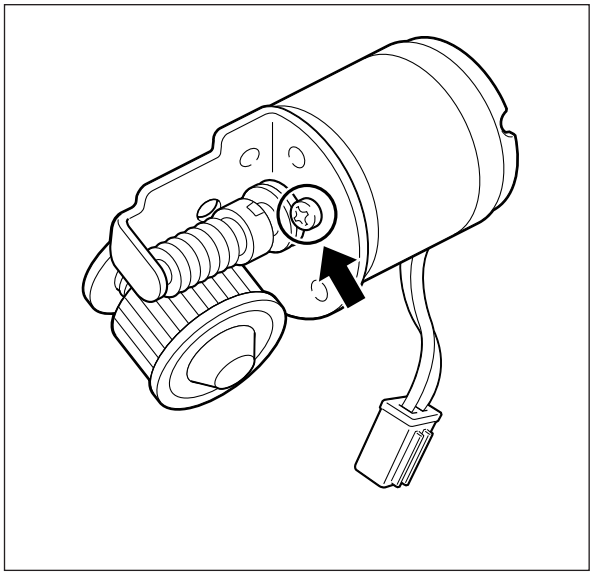

10.3.6 Auto toner sensor

(1) Discharge the developer material.

(2) Reverse the developer unit and remove the harness cover (3 screws).

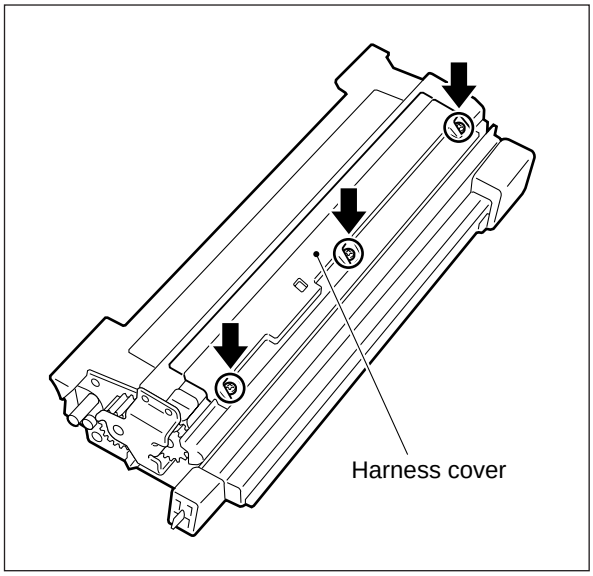

(3) Remove the toner sensor (1 connector, 1 screw). Replace the sensor.

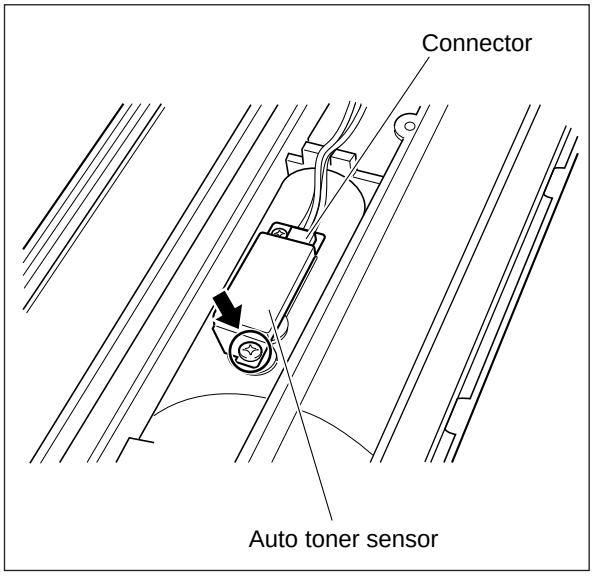

10.3.7 Magnetic roller

(1) Discharge the developer material.

(2) Remove the toner holder, nozzle, plate and guide roller.

(3) Remove the leveler (2 screws).

(4) Remove the sleeve drive pulley.

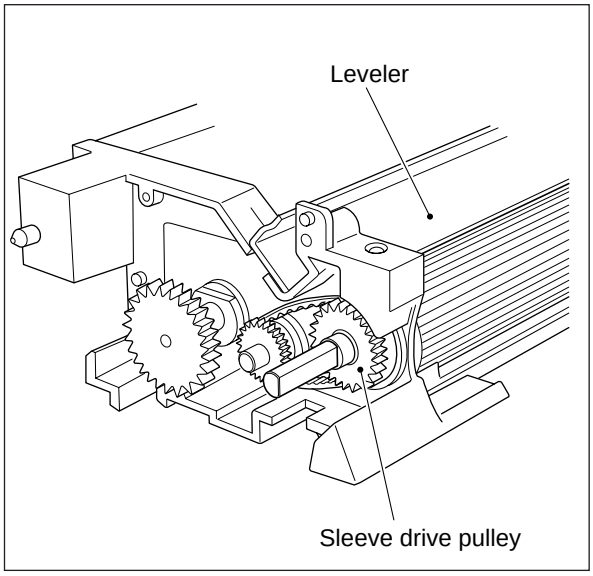

(5) Peel off the seal and then remove the magnetic roller bearing. Shifting the magnetic roller in the direction of the arrow, remove it from the slit in the frame and pull it out towards the front.

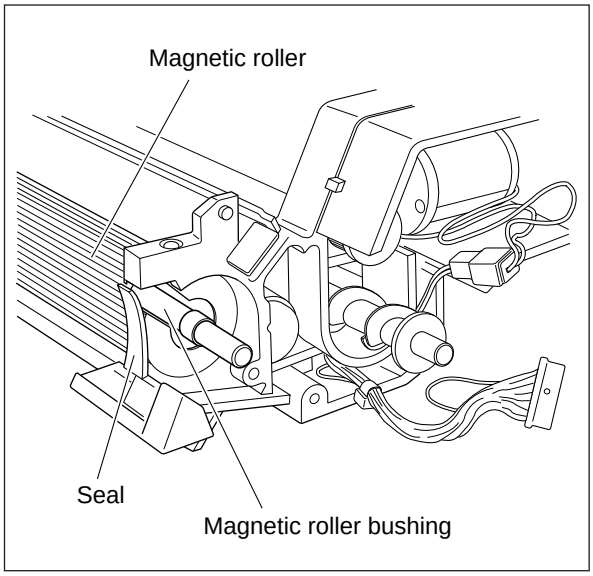

(6) Remove the V-ring.

Notes: 1. Pay attention to the direction (obverse/reverse) of the V-ring when reassembling.

2. After reassembly, adjust the polarity position and the doctor sleeve gap according to the method given in the Service Handbook.

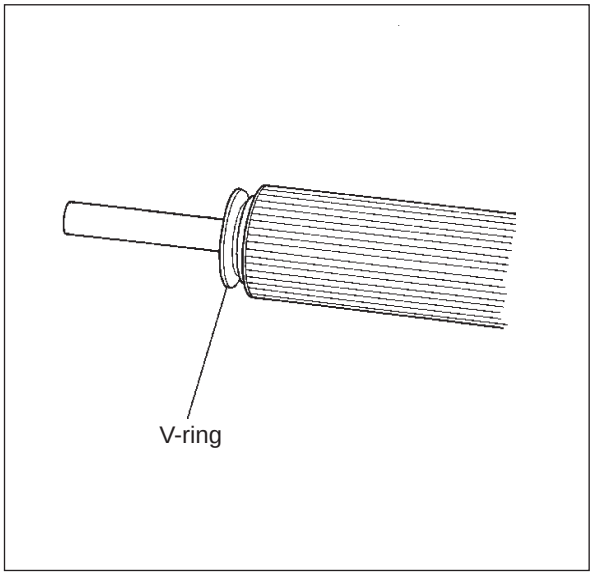

10.4 Brush Motor (Toner Motor (M 9)) Drive Circuit

The toner motor is provided to supply toner for the developer unit.

The toner motor is driven by transistor 2SD1417 (Q2 on the logic PC board), and its circuit is structured as follows.

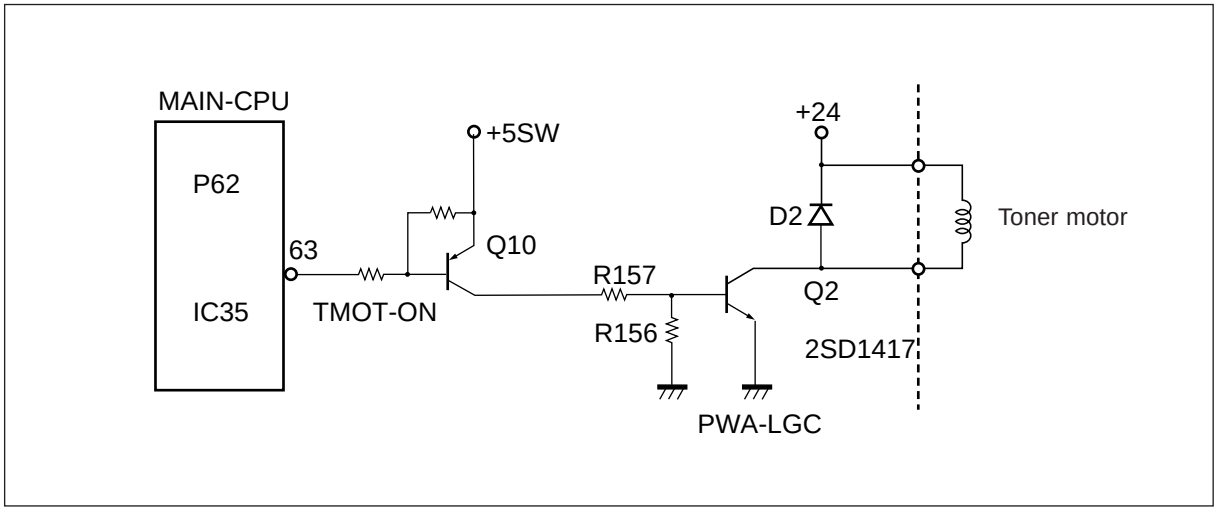

The motor winding is connected to the +24V at its (+) side and to the collector of Q2 at its (–) side.

– When P62 (TMOT-ON signal) of the main-CPU becomes “L” level –

- Q10 is turned ON →Q2 is turned ON
- The +24V power supply supplies current in Q2 via the motor winding→ the motor rotates

– When TMOT-ON signal becomes “H” level –

- Q10 is turned OFF →Q2 is turned OFF
- The current which was flowing in the motor winding flows via the route of diode D2.
  - ~ It decreases at the rate of the time constant determined by the inductance and resistance of the winding.

10.5 Auto-Toner Sensor Circuit

10.5.1 Brief description

- Functions of the auto-toner circuit.
  - Detects the density of the toner in the developer material.
    ~ Density drops toner supply.
  - Detects that the toner in the toner cartridge has been used up (toner empty).
- Configuration of auto-toner circuit.
  - Auto-toner sensor: Detects toner density.
  - Control section: Performs control to maintain the toner in the developer material at a constant specific density.
  - Toner motor: Replenishes the toner in the developer material.
  - Display unit: Displays the toner-empty status.

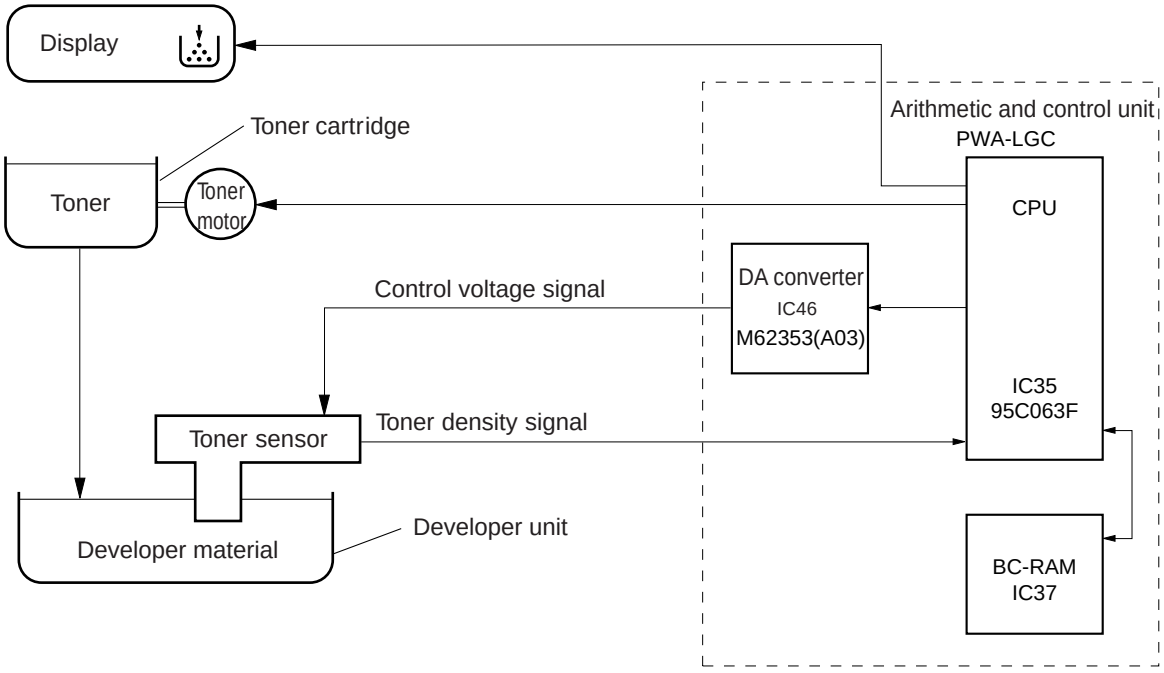

11. CLEANER UNIT

11.1 Construction

The cleaner unit consists of a drive section, main blade, recovery blade, toner-recovery auger, and toner bag (see Chapter 9 for the main charger).

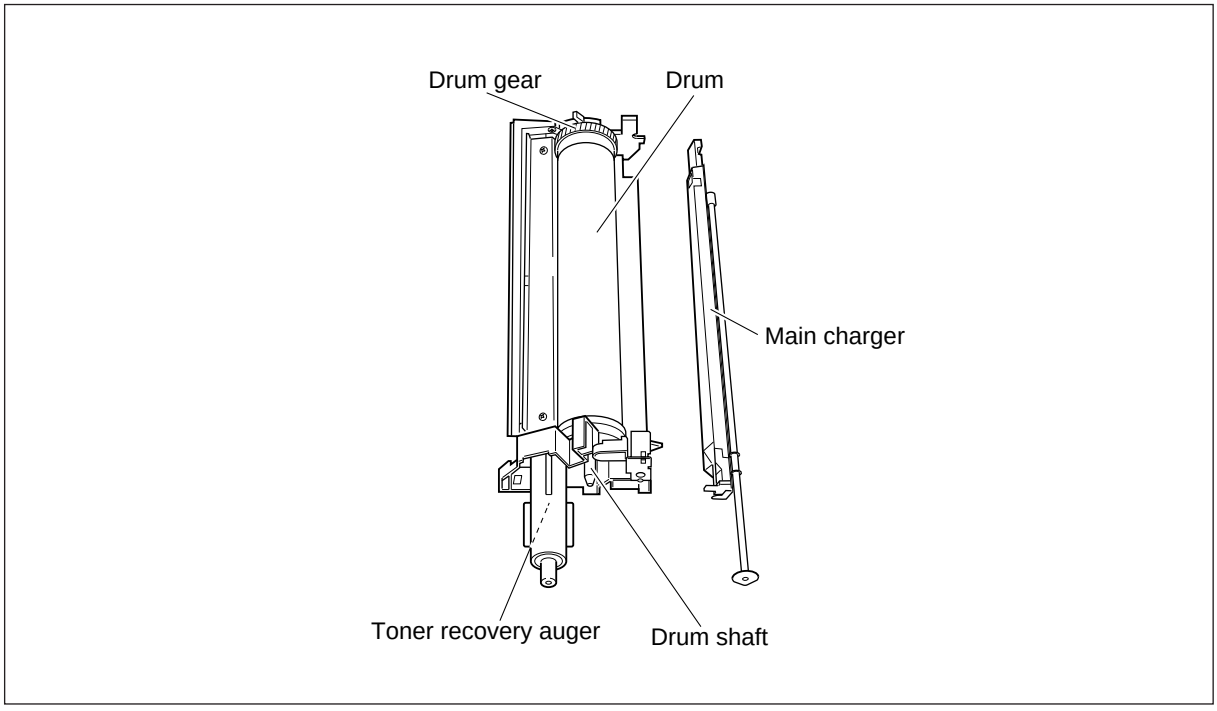

When the main charger has been removed

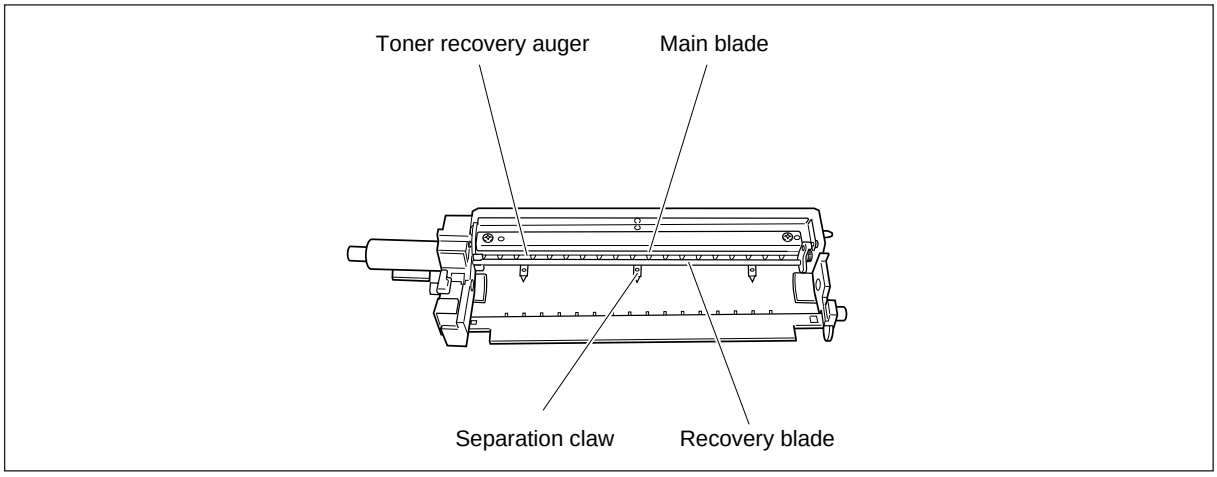

When the drum has been removed

11.2 Drive system

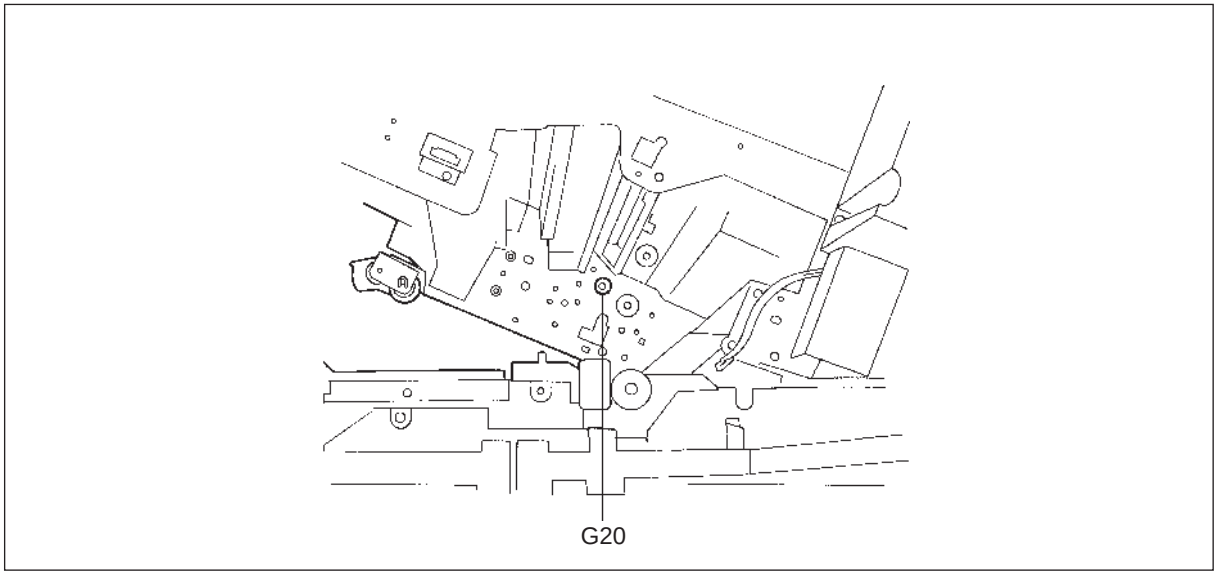

Front view

- Drum/toner recovery auger drive

Gear (teeth: 20)-----Rear of machine (inside frame)
→ Drum gear (teeth: 72) → Drum
→ Gear (teeth: 23) → Toner recovery auger
↓
Toner-full switch

11.3 Description of Functions

[A] Main blade

Scrapes off residual toner on the drum surface. The blade is pushed against the drum at a constant pressure by the pressure spring.

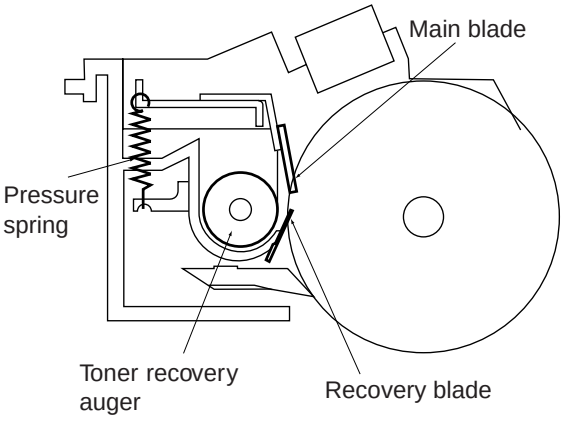

Front cross-section view

Note: When the blade is released from the drum such as for adjustment of the high- voltage transformer, rotate the blade pressure release cam in the direction of the arrow.

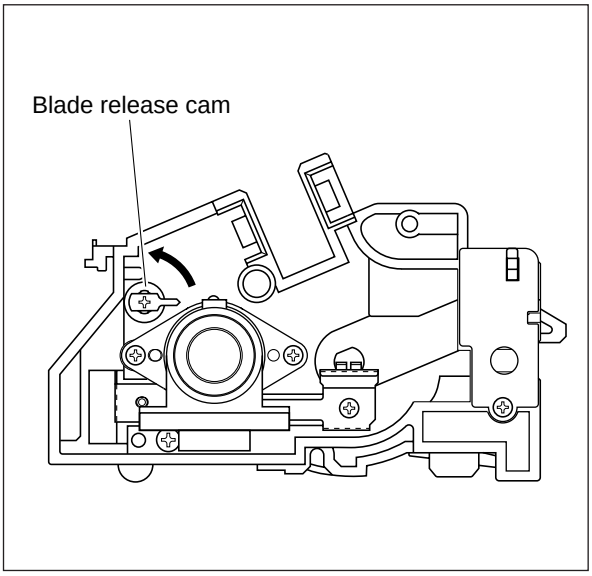

[B] Recovery blade

Catches the toner scraped off by the main blade.

[C] Toner recovery auger

Transports scraped off residual toner into the toner bag.

[D] Toner bag

The toner scraped off by the cleaner blade is carried by the recovery auger into the toner bag.

[E] Toner-full switch

When the toner bag becomes full of recovered toner, the recovery auger is pushed back towards the rear, causing the toner-full switch S13 to come on.

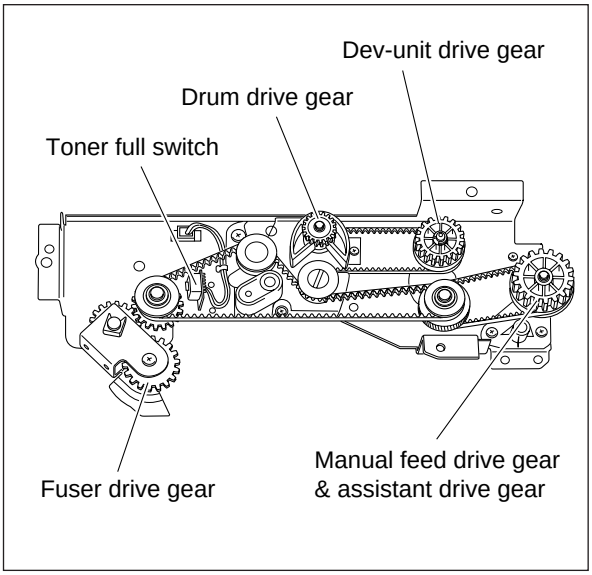

11.4 Disassembly/Replacement

11.4.1 Cleaner unit

(1) Remove the toner cartridge.
(2) Lift up upper unit.
(3) Pull out the process unit.
(4) Disconnect the cleaner unit from the developer unit.

Notes: 1. Be careful not to damage the drum.
2. Check that the drum shaft is in the cleaner unit.
3. In this copier's cleaner unit, the main blade is in constant contact with the drum. Consequently, when fitting a new drum to the cleaner unit, release the main blade pressure by turning the blade pressure-release cam.
4. After applying powder to the entire drum, turn the cam and bring the main blade in contact with the drum.
5. When rotating the cam, use a screw-driver to perform certain operations.
6. When holding the cleaner unit, do not touch the separation claw lever shaft to avoid bending it.

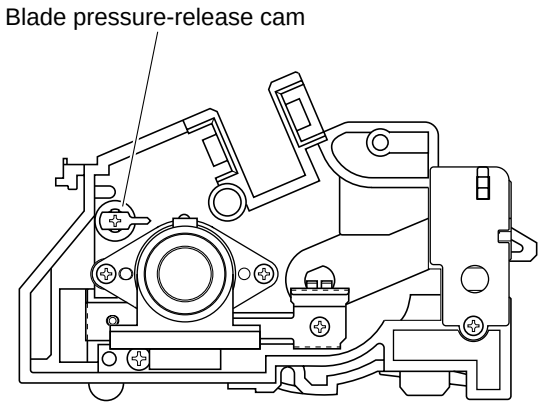

Blade pressure-applied cam position (for copying)

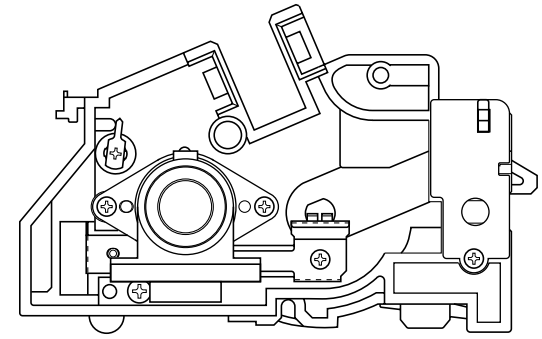

Blade pressure-released cam position

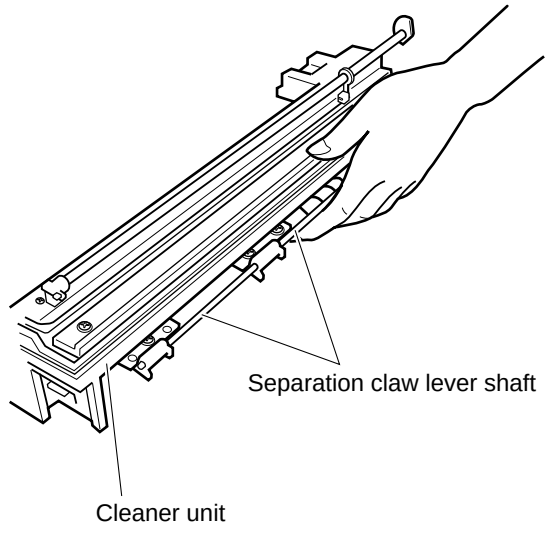

(5) Pull out the drum shaft from the rear after let down the drum shaft stopper lever.

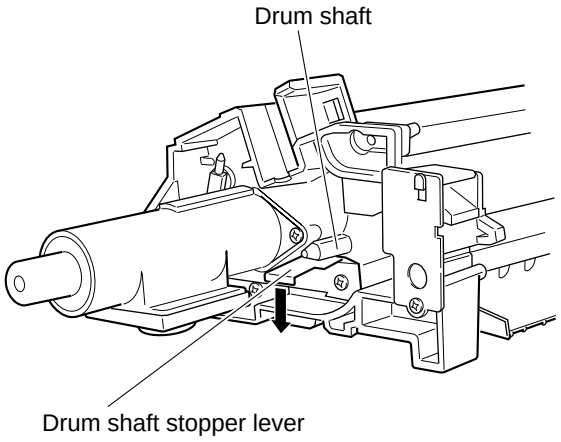

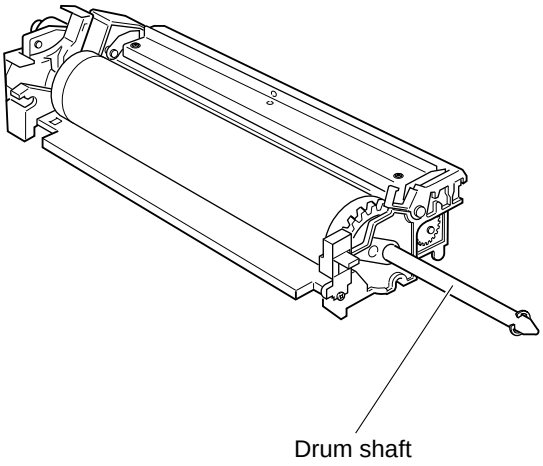

(6) When removing the drum from the cleaner unit, hold the side of the drum as shown (in the diagram), and slowly take it out.

Note: When reinstalling the drum in the cleaner unit, the drive gear should be installed to the rear.

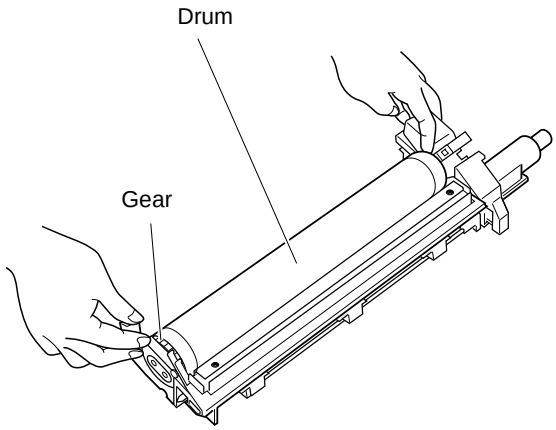

11.4.2 Main blade

(1) Remove the main charger.
(2) Remove the spring.
(3) Remove the 2 screws.
When reassembling, secure with the screws in the following order:
①→②

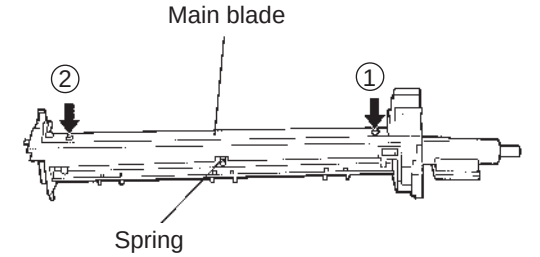

11.4.3 Recovery blade

(1) Turn the cleaner unit upside down.
(2) Remove the spring.
(3) Remove the separation claw lever.
(4) Remove the separation claw holder (4 screws).
(5) Remove the recovery blade (2 screws).

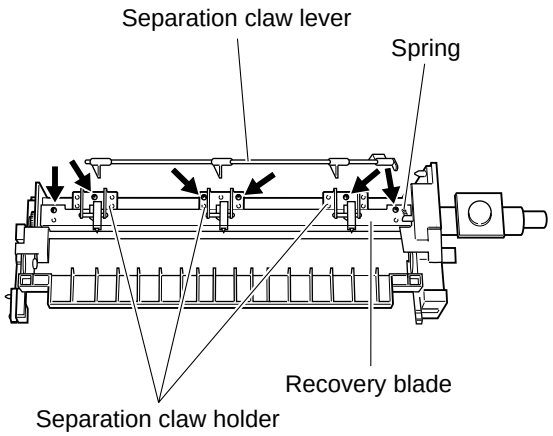

11.4.4 Separation claw

(1) Turn the cleaner unit upside down.
(2) Remove the spring.
(3) Remove the separation claw lever.
(4) Remove the 4 screws and take out the separation claw with the holder.
(5) Remove the separation claw from its fitting.

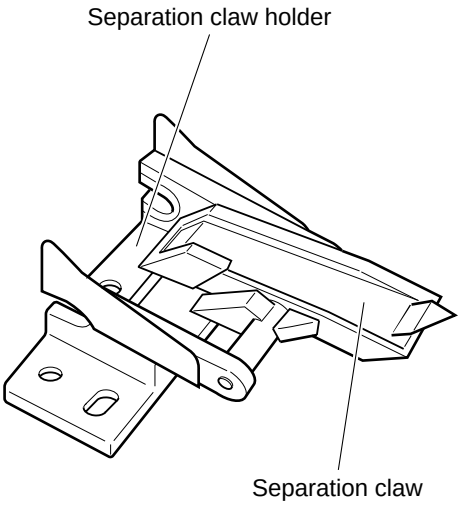

11.4.5 Charger output adjustment block

(1) Remove the cleaner unit.
(2) Remove the inner cover (upper).
(3) Remove the connector of the solenoid.
(4) Remove a screw.

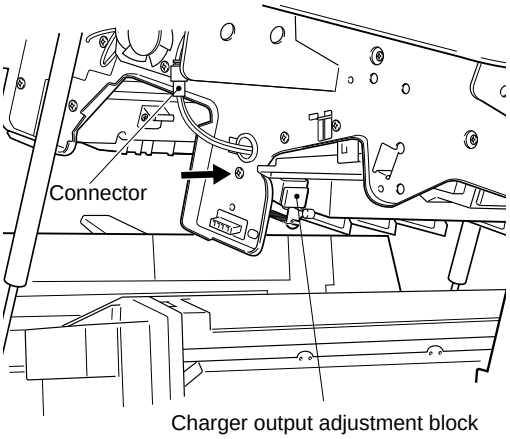

11.4.6 Drum separation claw solenoid

(1) Remove the charger output adjustment block.

(2) Remove a spring.

(3) Remove a screw.

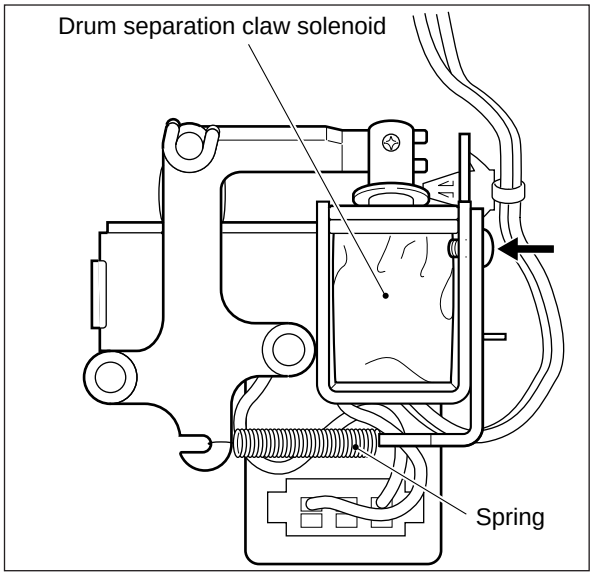

11.4.7 Toner-full switch

(1) Remove the main motor (2 screws).

(2) Remove the drive unit (5 screws).

(3) Remove the toner-full switch.

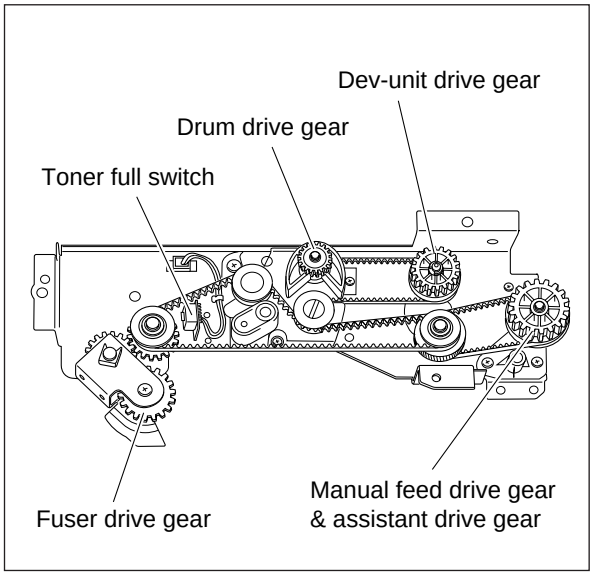

12 FUSER UNIT/PAPER-EXIT UNIT

12.1 General Description

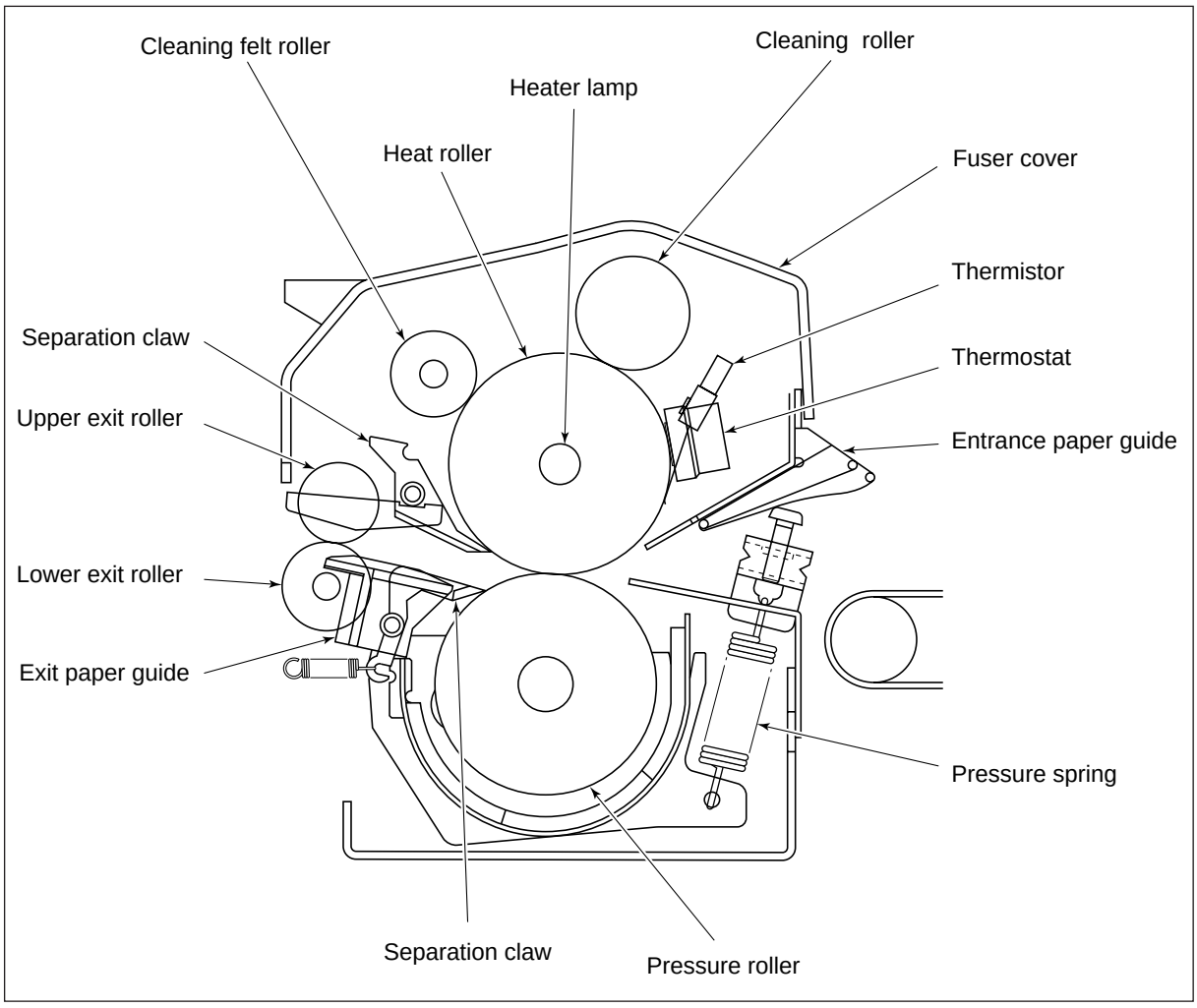

Heat and pressure are applied to the transfer paper which has been separated from the drum, and the toner image is fixed there. The transfer paper which has completed the fixing process exits onto the receiving tray through the paper exit unit.

The fuser unit comprises the heater lamp, heat roller, pressure roller, separation claws, cleaning felt roller, cleaning roller, thermistor, thermostat, etc. The paper exit unit consists of exit rollers, exit paper guide, etc.

12.2 Description of Operations

(1) Fuser unit

Heat and pressure are applied to the paper which has been separated from the drum and transported into the fuser unit and the toner image is fixed there. Steady pressure is applied always to the upper and lower rollers by springs and they are rotated by the main motor. (The upper roller (heat roller) has a heater lamp, but it does not rotate.)

The paper which has been fixed is smoothly removed from the heat roller by the use of the separation claws.

The detection unit monitors the heat roller temperature using a thermistor, and when the temperature becomes abnormally high, the power supply to the heater lamp is stopped by a thermostat.

(2) Paper-exit unit

The upper and lower exit rollers rotate using the gear drive from the fuser unit.

The paper which has completed the fixing process exits smoothly onto the receiving tray through the upper and lower exit rollers.

12.3 Functions of Each Part

(1) Heater lamp

This halogen lamp is located inside the heat roller and applies heat to the heat roller. The heater lamp is secured as it is while the heat roller rotates.

(2) Heat roller

This roller is made of aluminum whose heat conductivity is relatively good, and has heat applied by the heater lamp. Steady pressure is applied to both the heat and pressure rollers (mentioned later). Fixing is performed by the transfer paper to be passed through between the two rollers as above so that the toner image faces the heat roller. The toner is fused by the heat roller, the heat conductivity rate is increased by the pressure roller, causing the toner to permeate the paper fiber. However, during this process, a problem may occur. That is, because the toner is fixed by contacting with the heat roller, the toner may adhere to the roller (called “offset phenomenon”). Therefore, for easier removal of the toner from the heat roller, a Teflon coating has been applied on the surface of the heat roller.

(3) Pressure roller

This is made of rubber for smooth application of pressure to the heat roller. The pressure roller always has pressure applied by springs.

(4) Heat roller separation claws/pressure roller separation claws

By the use of the heat roller separation claws/pressure roller separation claws, the paper which has been fixed to the both heat and pressure rollers is smoothly removed.

(5) Cleaning roller

This cleans the toner remaining on the drum at the fixing process. The cleaning roller is located so that it can come in contact with the heat roller. The silicon oil soaked in the pressure roller is evaporated by the heat roller, causing it to adhere to the surface of the heat roller. As a result, the cleaning of the toner on the heat roller can be smoothly performed.

(6) Cleaning felt roller

This cleans the toner remaining on the drum at the fixing process. The cleaning felt roller is located so that it can come in contact with the heat roller. The cleaning felt roller does not contain silicon oil.

(7) Thermistor-1

The surface temperature of the heat roller should be maintained within a fixed range, (actually, around 200 °C), i.e. higher than the minimum temperature at which improper fixing may occur, lower than the maximum temperature at which “baking” may occur. The thermistor detects the surface temperature of the heat roller. If the temperature is lower than the standard temperature, it turns ON the heater lamp, if higher, it turns it OFF.

(8) Thermistor-2

Temperature distribution in the axis of the heat roller may differ greatly at its center and ends by conditions. Thermistor-2 detects the temperature at the heat roller end.

When either thermistor-1 or -2 detects a temperature above the specified ones, the heater lamp is turned OFF by their thermal controls.

(9) Thermostat

When the surface temperature of the heat roller becomes excessively high due to thermistor failure, etc., the thermostat stops the power supply to the heater lamp.

As the thermostat used in this copier is a type which protects against abnormal operation, when it detects an abnormal operation, it is set to stay OFF. Therefore, during repair, this should be replaced together with other damaged parts in the fuser unit.

(10) Exit rollers

Through the exit rollers, the paper removed by the heat roller separation claws or pressure roller separation claws exits smoothly onto the receiving tray via the ADU exit roller.

12.4 Heater Control Circuit

12.4.1 Temperature detection unit

To maintain the heat roller temperature, this unit detects the heat-roller temperature by means of thermistor-1, and then performs heater lamp ON/OFF control.

The thermistor is an electrical element whose resistance decreases as its detected temperature increases. If the thermistor is open-circuited, the control circuit erroneously determines that the fuser temperature is extremely low and continues to energize the heater lamp. As a result, the fuser temperature rises abnormally high, possibly activating the thermostat provided for safety purposes. The CPU works to detect the breakage of the thermistor and prevents the condition mentioned above.

The following abnormalities are detected:

(1) Abnormal detection during warming up

Maximum 25 sec. after the power has been turned ON, if the thermistor-1 output voltage does not exceed 0.078 V, CALL SERVICE (C41) is displayed.

(2) Abnormal detection during standby/copying (Thermistor-1)

If the thermistor-1 output voltage decreases to and remains at 0.078 V or lower for 260 msec. or more, CALL SERVICE (C43) is displayed.

(3) Abnormal detection during standby/copying (Thermistor-2)

If the thermistor-2 output voltage decreases to and remains at 0.192 V or lower for 260 msec. or more, CALL SERVICE (C45) is displayed.

(4) C40 error counter control

- For improved fuser-unit safety, the CPU works as follows: After the C41 error occurs two times in succession, even when the power is turned ON, the heater will not come ON and the C41 error will be immediately displayed.
- However, with “1” or less stored in the C40 counter, if the copier becomes ready correctly, the C40 counter clears to “0”.
- After CALL SERVICE (C41 – C45) has occurred and the thermistor, heater lamp, etc. have been repaired (or replaced), if turning ON the power switch does not cause the heater to energize resulting in a C40 error, check the C40 counter (08-code 89) and reset it to “0”.

Surface temperature of heat roller: 200°C (Thermistor resistance value: about 3.2 kΩ)

Reference

1. A value other than 0, 1, 2, 3, 4, 5, 6, 7, 8 or 9 is never written in the C40 counter.
   - At power ON, if the heater is not turned ON and the copier goes into the C40 CALL SERVICE, check the C40 counter to see if it is 2 or more. If it is 2 or more, be sure to check the thermistor and heater lamp, and after repair, reset the C40 counter (08-code 89) to 0 and then turn ON the power switch.
   - If the value of the C40 counter is more than 10 (11, for example), it may be possible that BC-RAM or the data in it have been destroyed by charger leaking, etc. In this case, check the guide bias, high-voltage transformers, charger wires, etc. for any defects. Also, all the data inside BC-RAM need to be rechecked.
2. Relationship between the output voltage and the fusing temperature.
   - 200°C corresponds to approx. 2.5V and 0.078 V corresponds to approx. 40°C.
3. Relationship between heat roller surface temperature and thermistor-1 resistance.

Temperature	Thermistor resistance	Heater lamp state
Less than 200°C	More than 3.2 KΩ	ON
200°C	3.2KΩ	Maintains previous status
More than 200°C	Less than 3.2 KΩ	OFF

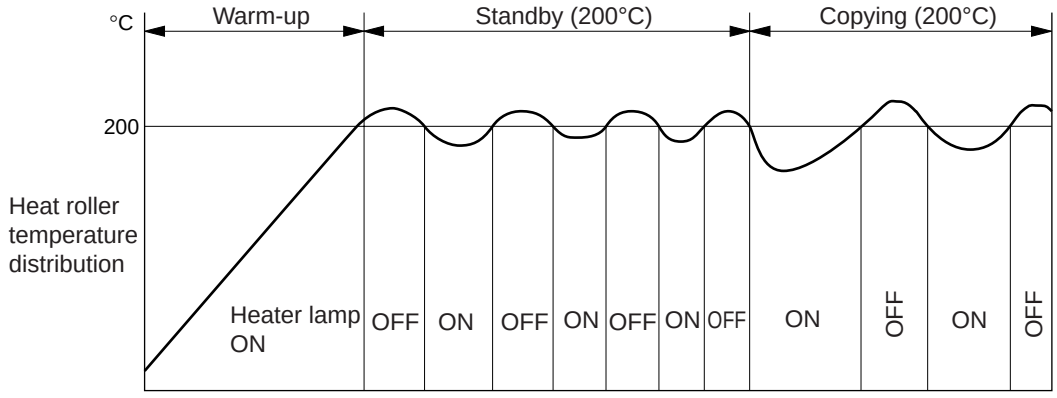

4. Temperature control at heat roller ends
   During multicopying, the temperature at each end (no paper-contact area) of the heat roller normally tends to rise higher that the controlled temperature of the paper-contact area. Therefore, the circuit is so devised that if the temperature in the no paper-contact area rises to 245°C, the second thermistor detects this, causing the heater to be turned OFF immediately regardless of the temperature in the paper-contact area.

12.4.2 Detection of thermistor burnout

* Since thermistor burnout detection circuits of the thermistor-1 and -2 are common, it is explained with the thermistor-1.

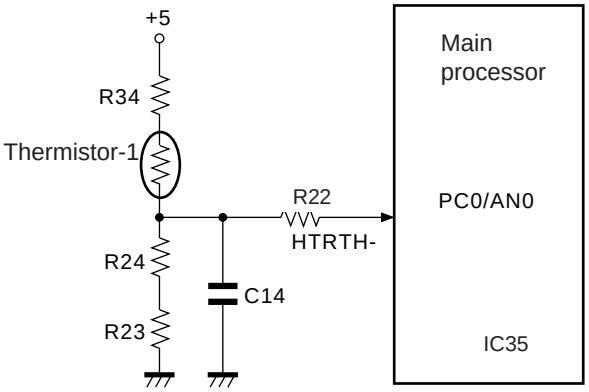

- The input voltage is obtained by voltage dividing R34, thermistor, R24 and R23.
- The surface temperature of the heat roller changes.
  →The thermistor resistance value changes
  →The input voltage also changes
- The main processor detects an abnormality
  ⇒thermistor broken

12.4.3 Control for abnormal heater condition

When something abnormal occurs in the heater turn-on circuit, such as a shorted TRIAC, it may become incapable of ON/OFF control. In this case, the microcomputer detects abnormal temperatures through the first and second thermistors, determines the corresponding error codes and counter values, and causes the main power to be switched OFF to protect the fuser unit.

(1) Temperature detection

The following abnormal temperatures are detected by the respective thermistors:

First thermistor: 230°C

Second thermistor: 270°C

(2) Error codes

"C44": Displayed when keys C/S + 8 are pressed simultaneously at the time of Call Service.

Counter value "9": Displayed when you input "89" in the AD (0 + 8) mode.

(3) Machine condition

After de-energizing all outputs (heater lamp, exposure lamp, control-panel displays, motors, etc.), the microcomputer causes the main power to be switched OFF.

(4) Corrective action

After the error code and counter value in (2) have been determined, abnormal temperature detection in (1) continues. So, if the main switch is turned ON immediately, it will be turned OFF again as long as the temperature on the heater surface remains above the abnormal detection temperatures of thermistors. Thereafter, this will be repeated. So, after waiting for the heater surface temperature to drop, turn ON the main switch and you can check the counter value before the main switch is turned OFF again. After confirming that an abnormal heater condition has occurred, repair the problem and then clear code 89 of the AD (0 + 8) mode with "0". After that, you can bring the copier into its normal operating condition.

12.5 Disassembly and Replacement

12.5.1 Fuser unit

(1) Remove the used toner bag and door switch cover (1 screw each).

(2) Remove the 2 connectors on the front side.

(3) Remove the 1 screw which secures the fuser unit.

Note: Use the original hole (round) when securing it again.

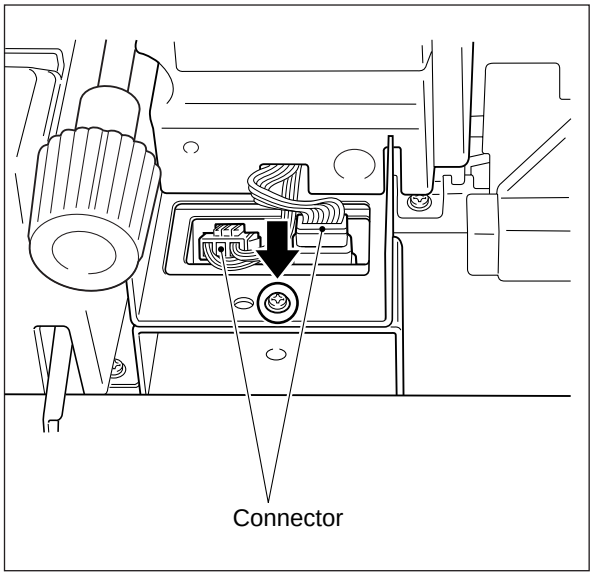

(4) Slide the entire unit to the front side, unhook the stud from the copier frame and remove it.

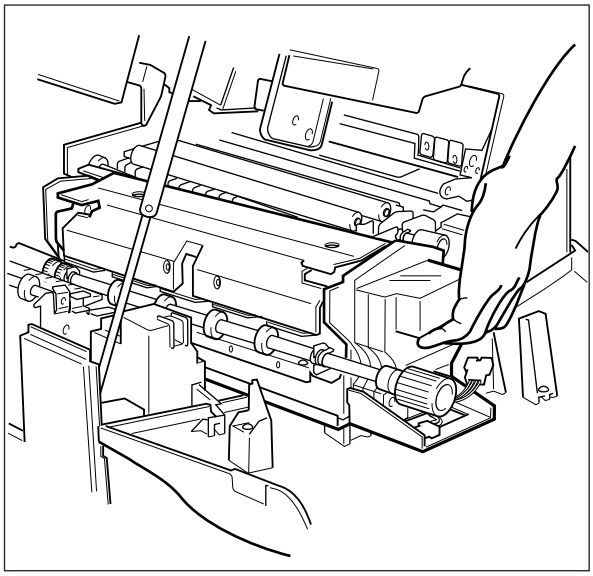

12.5.2 Heater lamp

(1) Remove the fuser unit.

(2) Remove the fuser cover (2 screws).

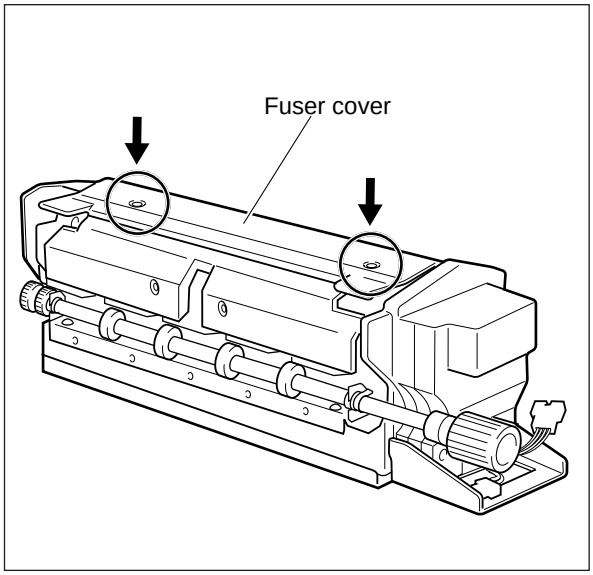

(3) Remove the lamp terminal fixing screws (2 screws).

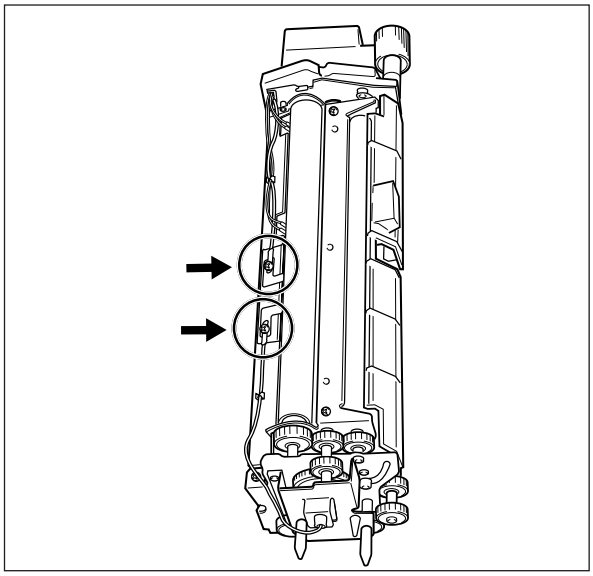

(4) Remove the lamp holder bracket at the front side (1 screw).

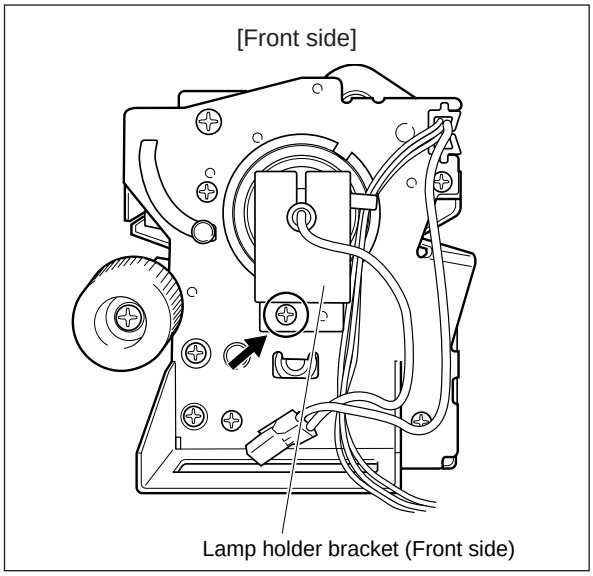

(5) Remove the lamp holder bracket on the rear side (3 screws).

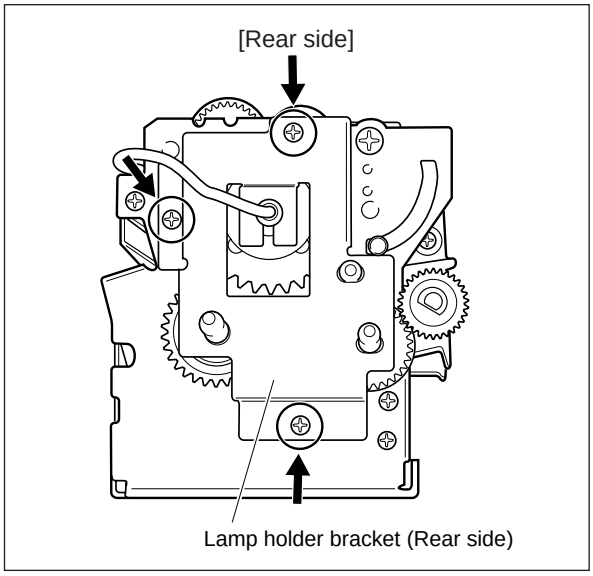

(6) Pull the heater lamp out towards the front side.

Notes: 1. Do not touch the heater lamp surface directly with your hands.

2. Set the TOSHIBA mark facing the front side.

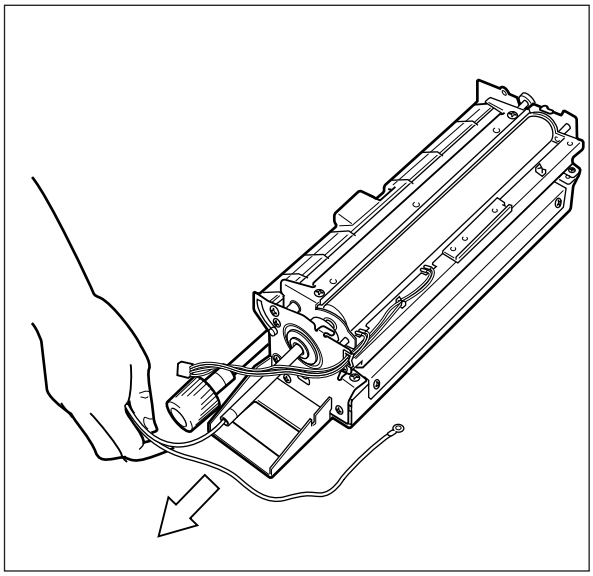

12.5.3 Heat roller

(1) Remove the heater lamp.

(2) Remove the separation claw unit (2 screws each, golden).

(3) Remove the pressure bracket. (2 screws).

(4) Lift up the cleaning felt roller and cleaning roller to remove them.

(5) Remove the support bracket (2 screws).

(6) Remove the bracket fixing the thermistor and thermostat (2 screws).

Note: Be careful not to deform the root of the thermistor harness when removing the bracket.

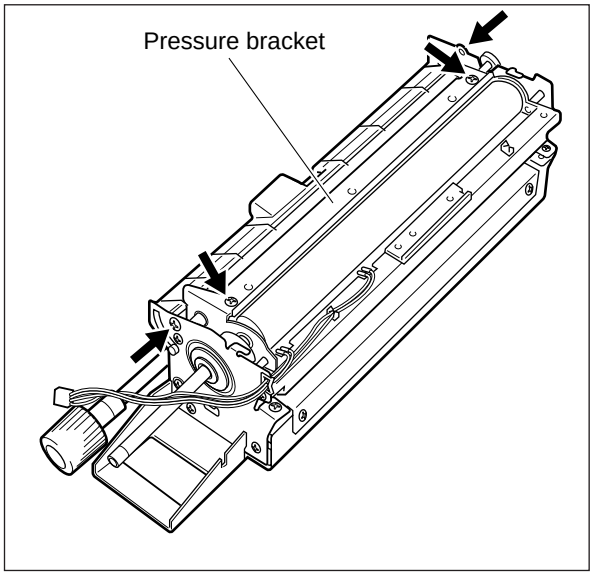

(7) Remove the stay bracket (2 screws).

(8) Remove the C-ring at the front and rear side, and the gear at the rear side.

(9) Release the pressure (2 screws).

(10) Remove the ball bearing from the frame.

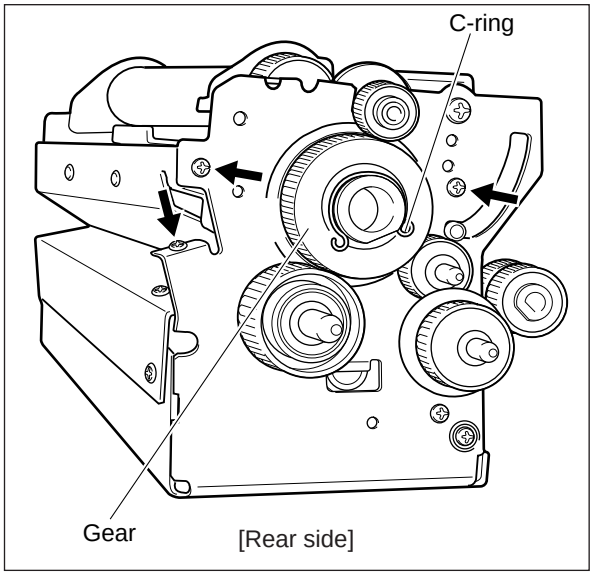

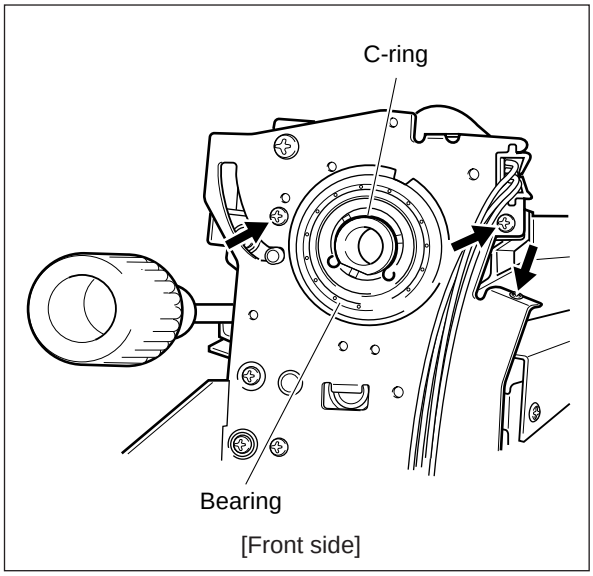

(10) Slide the heat roller to the rear side and pull it off from the front side frame, then take out the heat roller toward the upper side.

Note: Be careful not to damage the heat roller surface by knocking it against the bracket, etc.

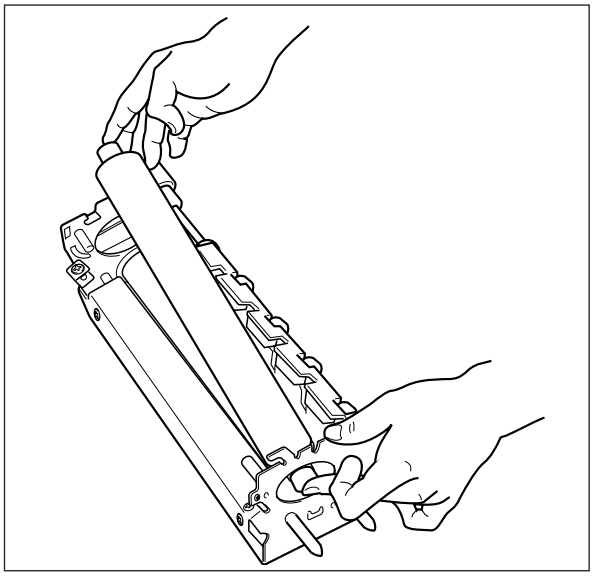

12.5.4 Pressure roller

(1) Remove the fuser unit.

(2) Remove the heat roller.

(3) Turn the pressure roller separation claw unit (2 screws, black color).

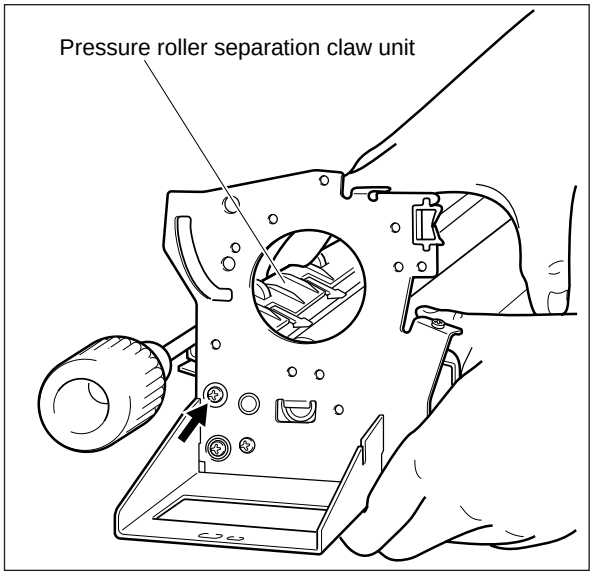

(4) Take off the entrance paper guide by unscrewing the two screws.

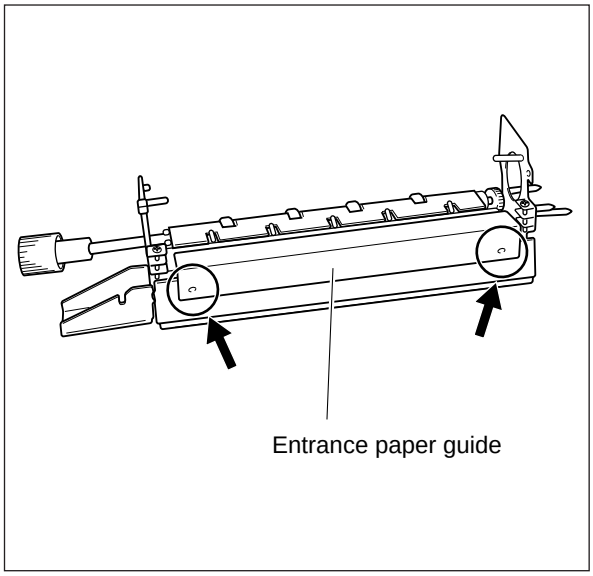

(5) Lift up the pressure roller holding both ends, and take the pressure roller out with its bearings.

Note: When installing the pressure roller, make sure the bearing grooves on both the front and rear are set in the pressure levers.

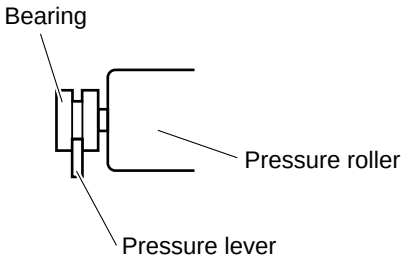

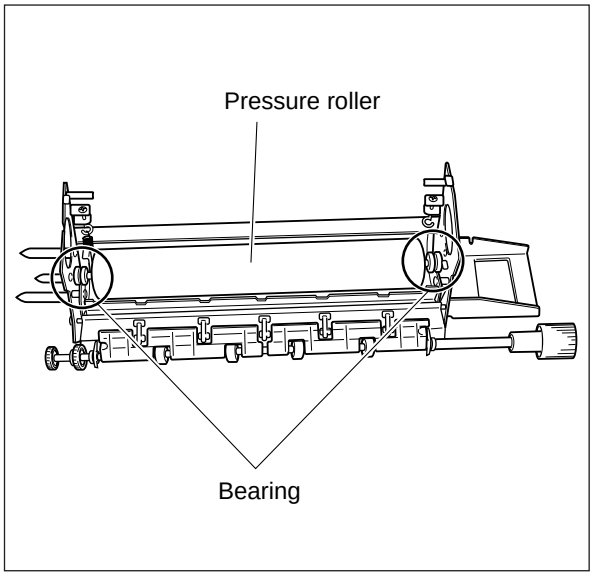

12.5.5 Cleaning felt roller, cleaning roller

(1) Remove the pressure bracket (2 screws).

(2) Remove the roller by lifting it.

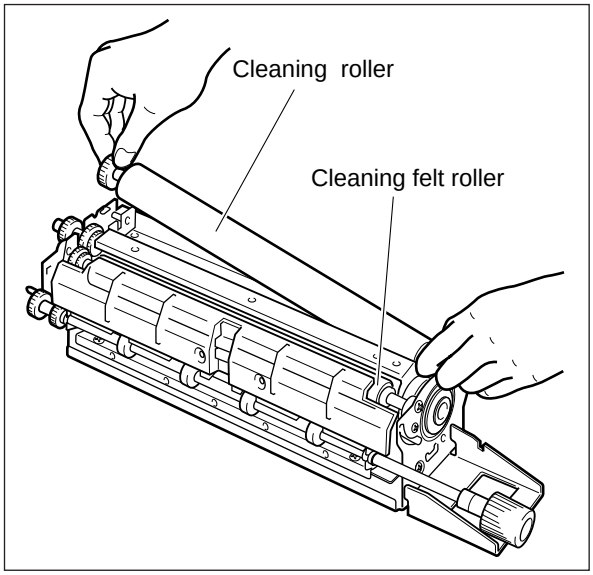

12.5.6 Heat roller separation claw

(1) Remove the separation claw unit (2 screws, golden color).

(2) Draw out the shaft (1 screw).

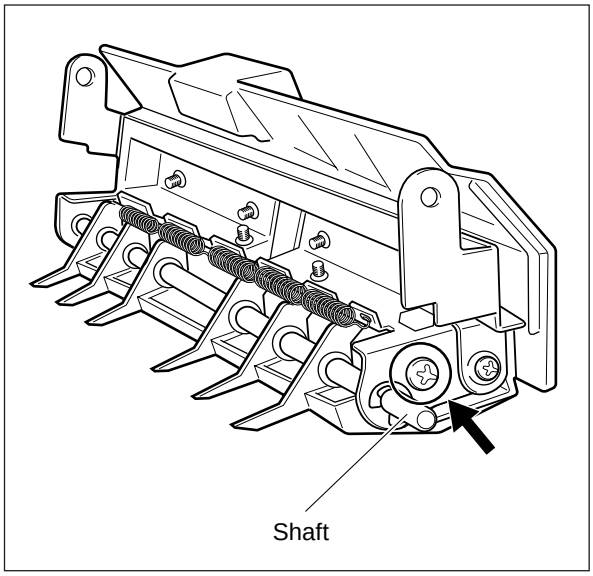

(3) There are 6 separation claws in all. Remove them all from their each spring.

Note: Check that the edges (tips) of the claws are not chipped.

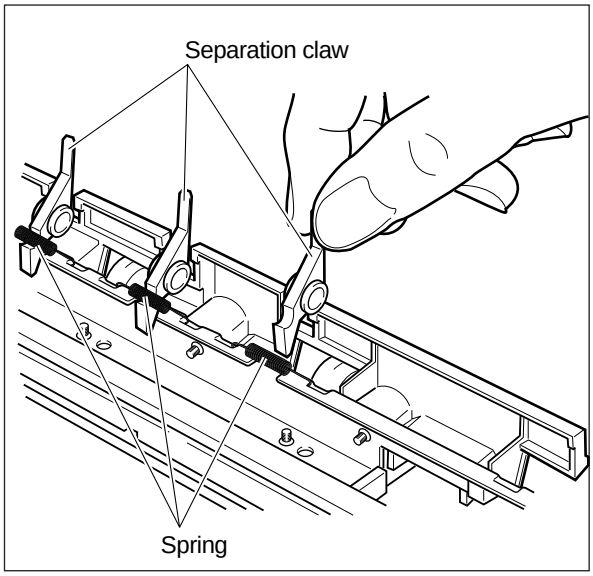

12.5.7 Thermistor and thermostat

(1) Remove the bracket on which the thermistor and thermostat are attached (2 screws).

(2) Remove the 2 thermistors (1 screw each).

- Be careful not to deform the root of the thermistor harness.

(3) Unscrew 2 screws and take off the thermostat from the holder.

Note: When installing, make sure the thermistor and thermostat both contact the heat roller surface evenly.

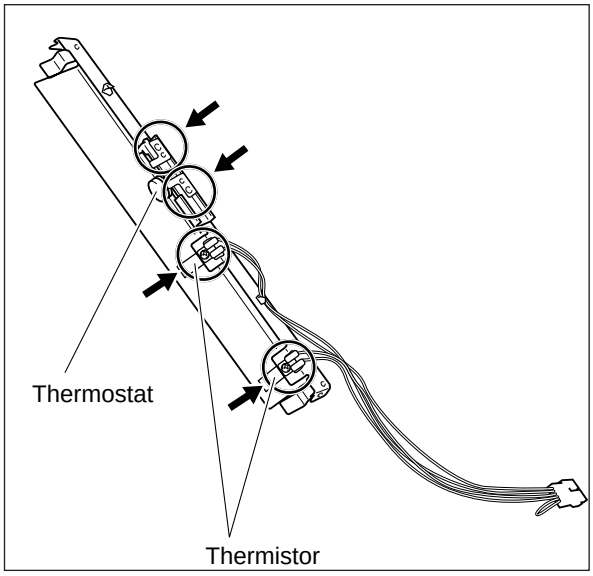

12.5.8 Lower exit roller

(1) Remove the fuser unit.

(2) Remove the pressure roller separation claw unit (2 screws). Refer to 12.5.4(3).

Note: Attach the stop-ring as shown in the figure below.

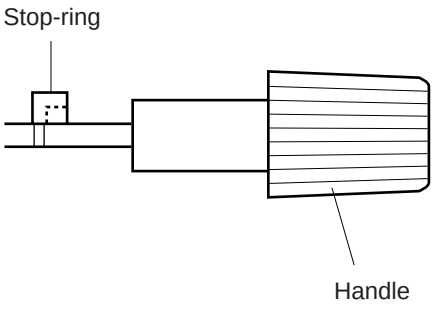

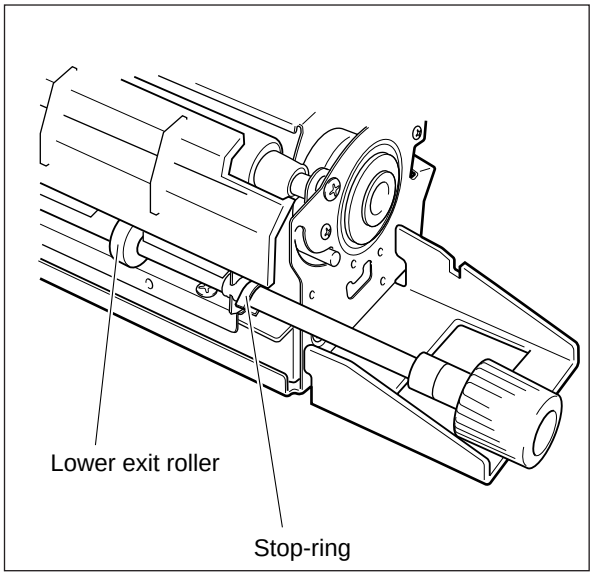

12.5.9 Pressure roller separation claw

(1) Remove the pressure roller separation claw unit (4 screws).Refer to 12.5.4.

(2) Remove the spring and the pressure roller separation claw.

(3) There are 5 separation claws in all. Remove them as described in (2).

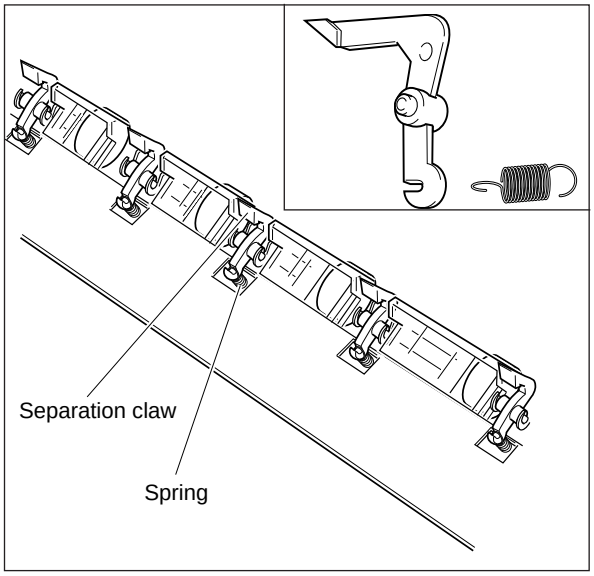

12.5.10 Fuser entrance paper guide

(1) Remove the fuser cover (2 screws).

(2) Remove the bracket (2 screws).

Note: Be careful not to damage the mylar sheets sticked on the bracket.

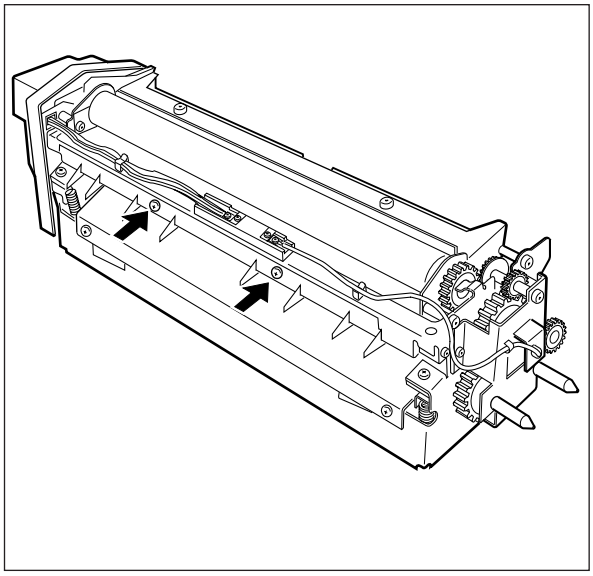

13. Automatic Duplexing Unit (ADU)

13.1 Specifications

Type:	Unit type
Function:	Feeding for duplex copying
Paper sizes:	50 sheets stackable: A3, B4, A4, B5, A5, Folio (for Europe) Ledger, Legal, Letter, Computer, Statement (for U.S.A. and Canada)
Type of paper:	Toshiba-recommended paper 64~80 g/m^2 (17~22 lb) (sheets of paper)
Max. number of copies in multicopying:	1~50 sheets
Dimensions:	W598 x D620 x H110 mm
Weight:	Approx. 10 kg
Power Source:	Supplied from the copier

Note: Specifications are subject to change without notice.

13.2 Names of Various Components

13.2.1 Front-side view

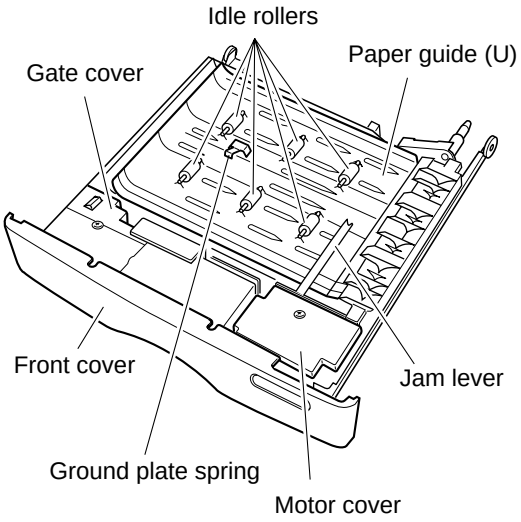

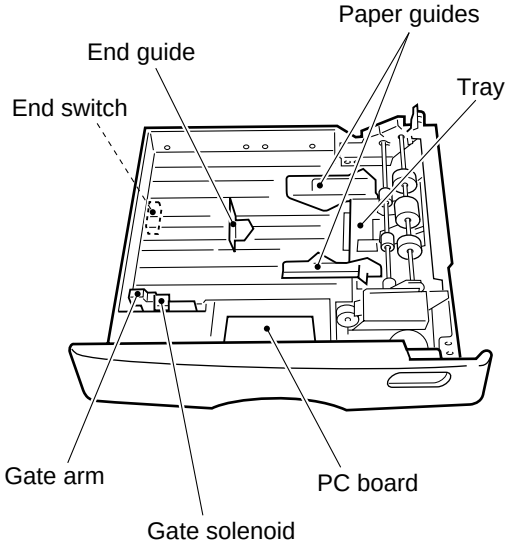

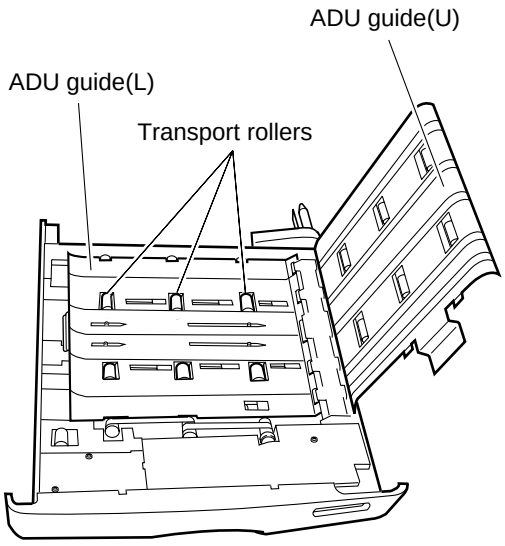

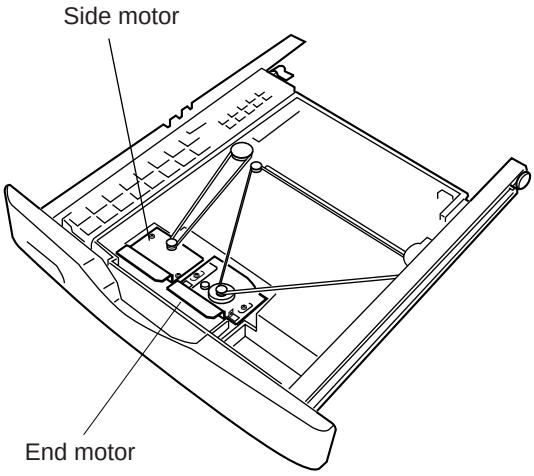

13.2.2 Rear-side view

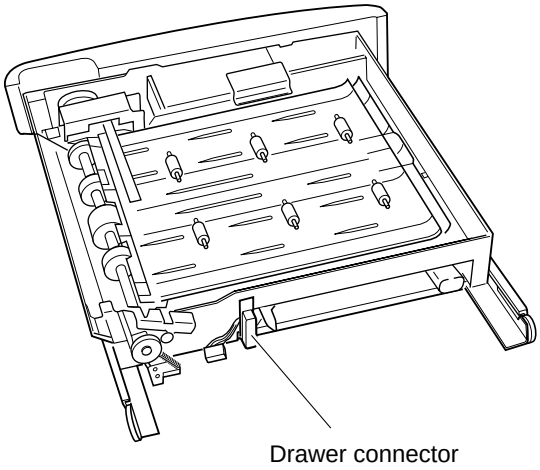

13.2.3 Feed-side section

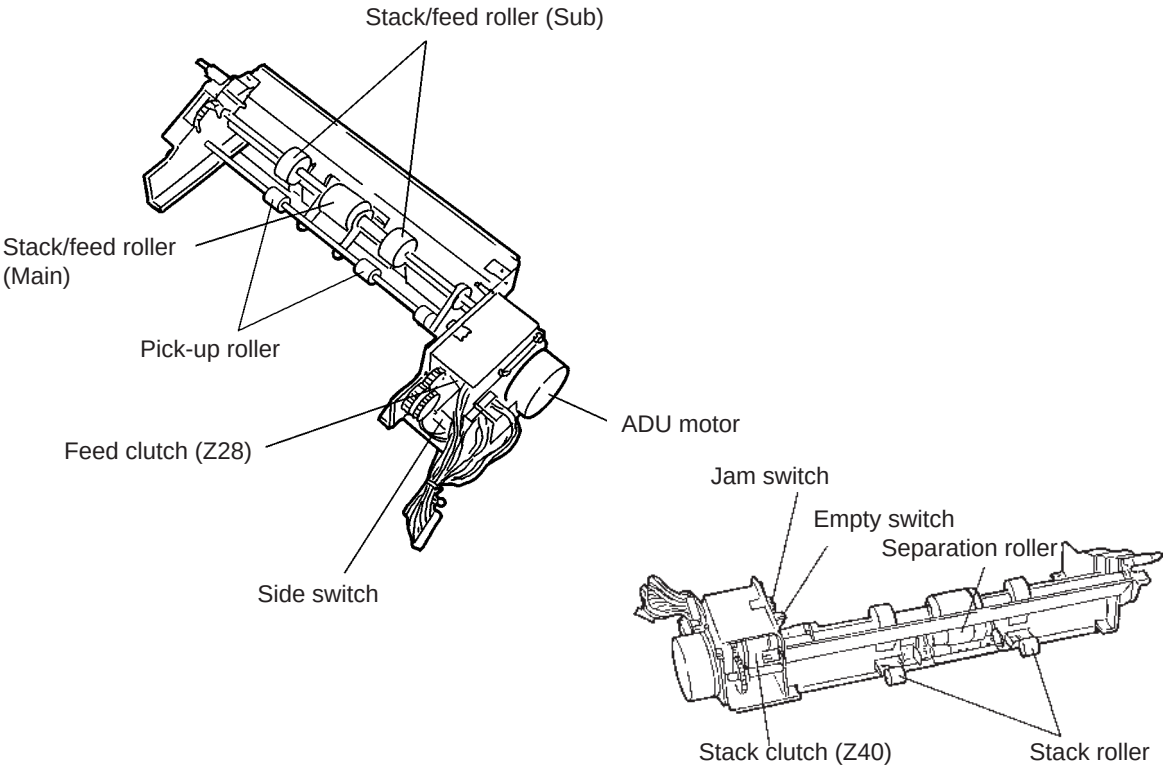

13.2.4 Copier's exit-side section

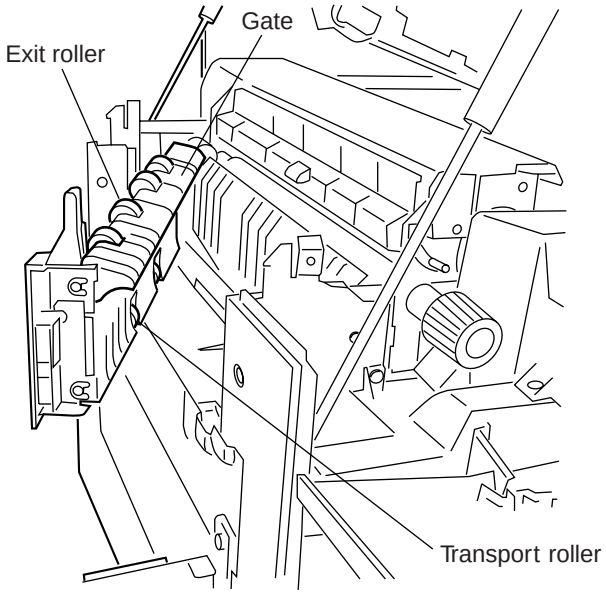

13.2.5 Sectional view

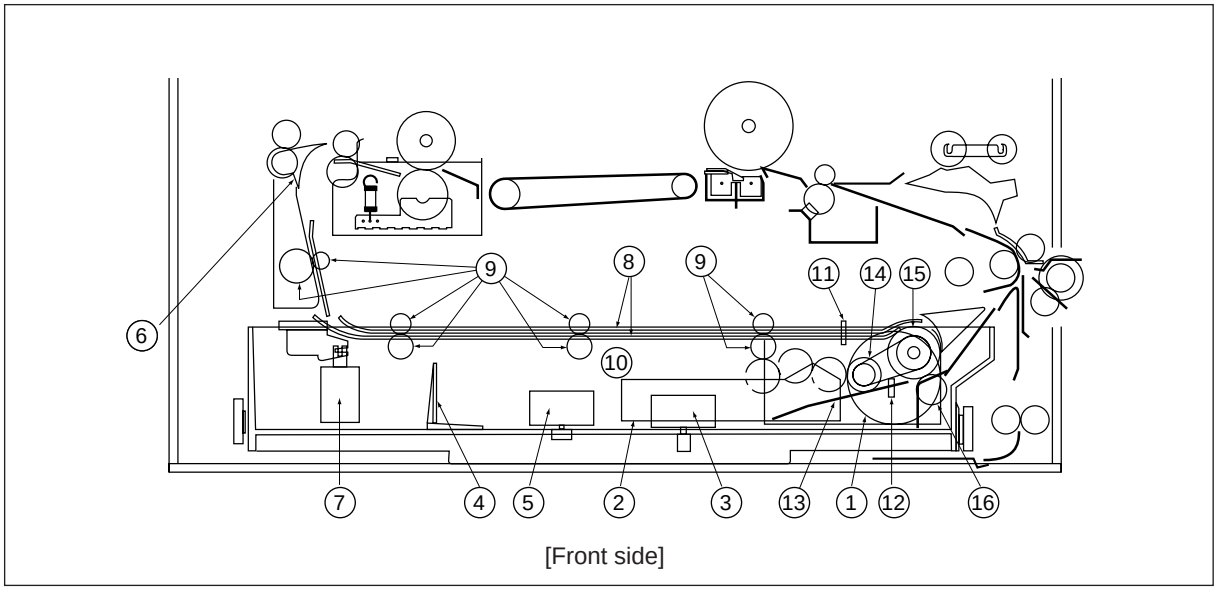

[Front side]

①	ADU motor	⑨	Transport roller
②	Side guide	⑩	Stacking section
③	Side motor	⑪	Jam switch
④	End guide	⑫	Empty switch
⑤	End motor	⑬	Tray
⑥	EXIT/ADU selection gate	⑭	Pickup roller
⑦	Gate solenoid	⑮	Stack/feed roller
⑧	Open guide	⑯	Separation roller

13.3 Description of ADU Operation

13.3.1 Paper stacking operation

When the ADU (duplex copying) mode is selected and the PRINT key is pressed on the copier's control panel, the ADU motor starts rotating, and the side guides and the end guide in the stacking section are moved to the positions corresponding to the selected size of paper by their respective motors. Then, the stack clutch comes ON, the transport roller rotates and the EXIT/ADU selection gate is switched in the direction of the stacking section by the gate solenoid.

The copy paper which has exited from the copier is sent into the ADU's open guide by the EXIT/ADU selection gate. This paper is further carried by transport rollers into the stacking section, where the paper is stacked face up. This operation is repeated until the specified number of sheets are stacked.

At the start of the stacking operation, the side guides are set with a 5 mm gap relative to each side of the paper, and each time 5 sheets are stacked consecutively during stacking, the side guides perform a paper aligning operation.

A jam switch is provided to have paper jams in the open guide detected. The empty switch is to detect whether or not paper is present in the stacking section.

13.3.2 Duplex copying

After the paper stacking operation, when a second original is set and the PRINT key is pressed, the ADU motor starts rotating, causing the elevator arm to rotate. This will cause the tray positioned under the stacked sheets of paper to rise, making the sheets come into contact with the rotating pick-up roller and sending the topmost sheet out. The separation roller rotates with the feed roller. At this time, if two or more sheets are sent out, the separation roller stops rotating, causing the lower sheet(s) to stop its movement.

The sheet of paper thus sent out is carried by the copier's upper transport roller to the copier's aligning roller and aligned. The sheet is then copied on the side not copied previously. The sheet copied on both its sides passes through the copier's exit roller and over the EXIT/ADU selection gate which is already positioned in the direction of exiting, further passing through the exit roller to exit finally into the receiving tray.

13.4 Drive System

13.4.1 Driving of the EXIT/ADU gate

When the gate solenoid is turned ON, the arm rotates and pushes up the lever, causing the gate to open. The copied sheet is then transported to the ADU's stacking section. When the gate solenoid is turned OFF, the arm is pulled back to its original position by a spring, causing the gate to close, and the copied sheet will exit.

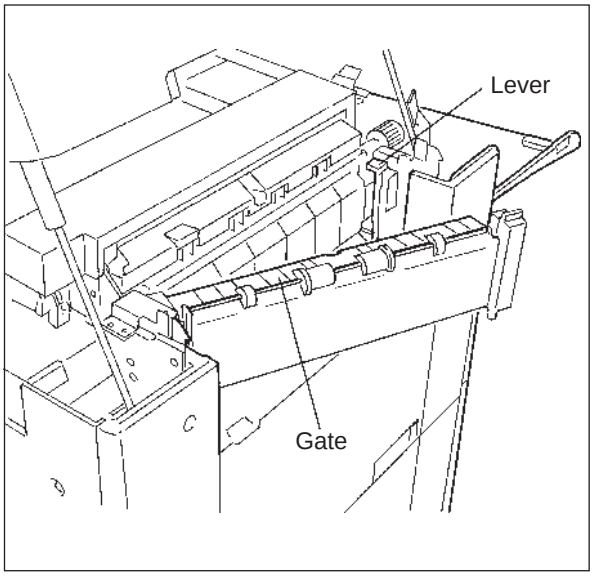

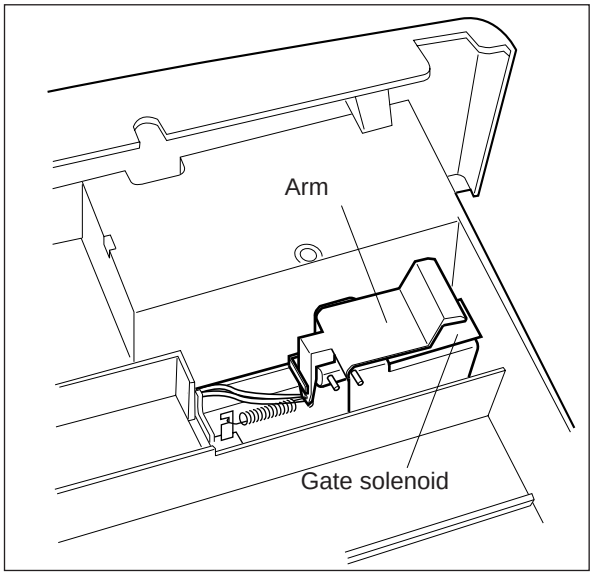

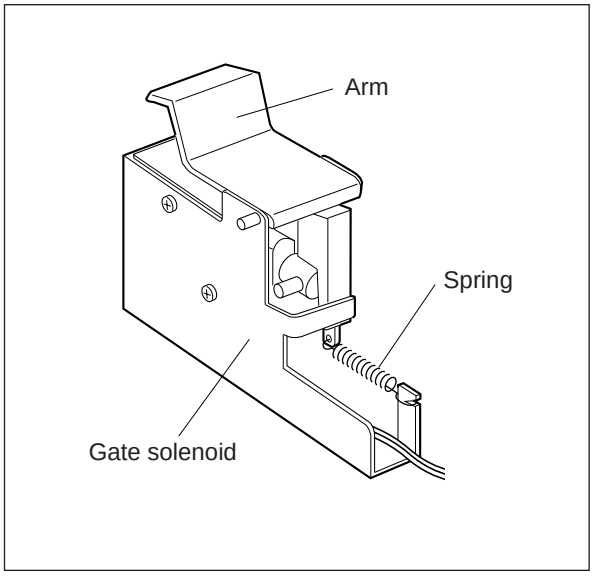

13.4.2 Driving of the stack guides

(1) Side guides

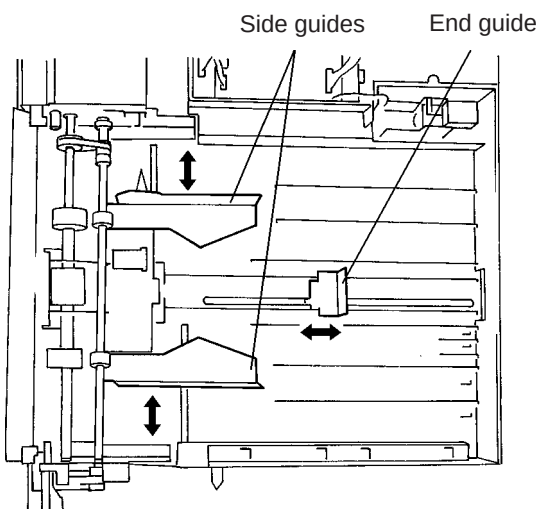

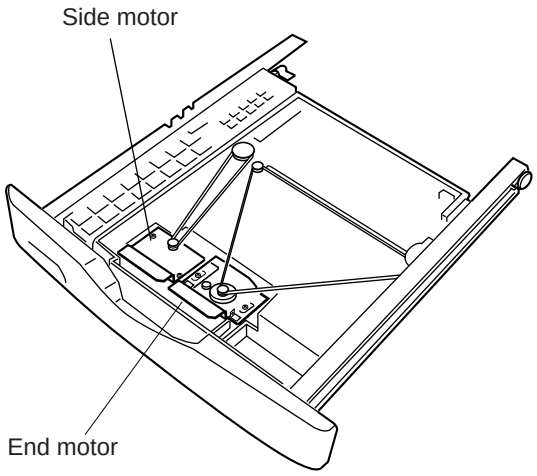

The side motor rotates corresponding to the size of paper selected, causing the side guides to move to the positions specified. In addition, each time five sheets are stacked, the side motor performs paper aligning by moving the side guides to the right and left.

(2) End guide

The end motor rotates corresponding to the size of paper selected, causing the end guide to move to the position specified.

13.4.3 Driving of the ADU pick-up roller, ADU feed roller and ADU transport rollers

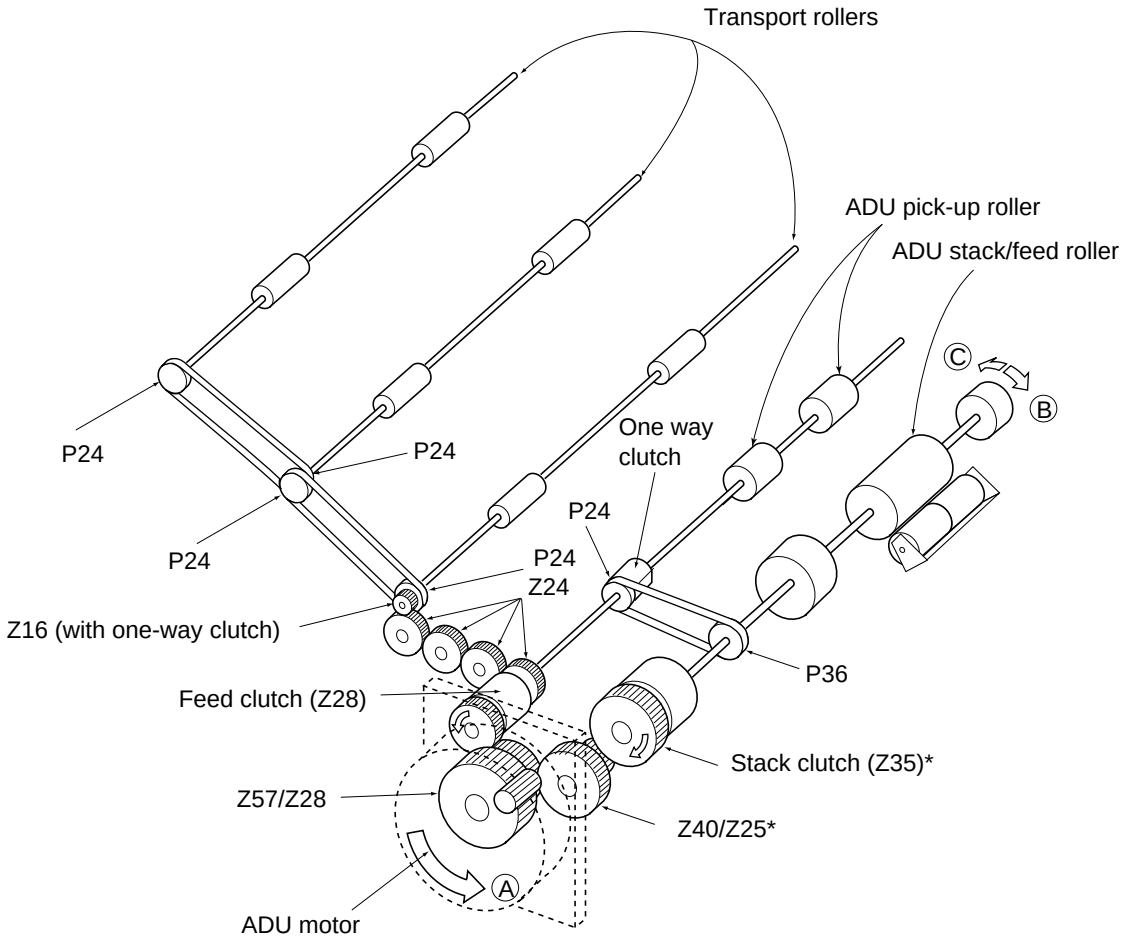

The parts indicated with '*' marks are exclusive to this machine.

- When the ADU motor rotates in the direction of the arrow Ⓐ and the stack clutch (Z35) energizes, the transport rollers are rotated and the ADU stack/feed roller is rotated in the direction of the arrow Ⓑ (in the stacking direction).
- When the ADU motor rotates (arrow Ⓐ) and the feed clutch (Z28) energizes, the pick-up roller and the ADU stack/feed roller are rotated in the feeding direction (arrow Ⓒ).
  At this time, the transport rollers do not rotate since a one-way clutch is contained inside of the gear (Z16) on the transport roller shaft.

13.5 Disassembling and Reassembling Various Parts

13.5.1 Removing the ADU covers

[A] Motor cover and gate cover

(1) Remove one screw fastening each cover.

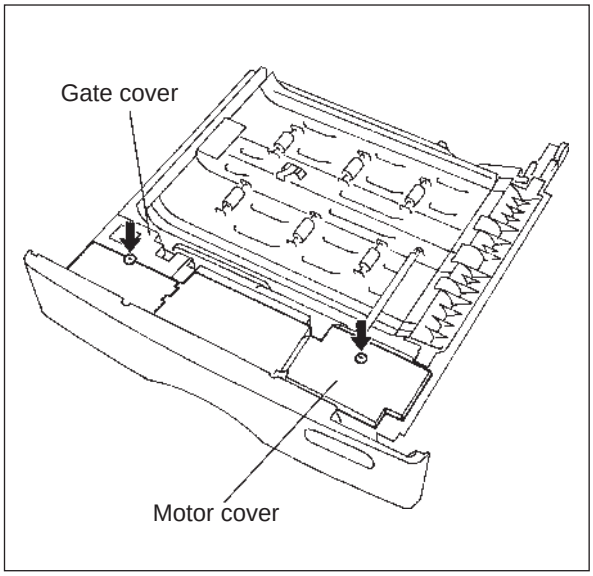

[B] Lower cover

(1) Place the ADU upside down.

(2) Remove the 7 screws fastening the cover.

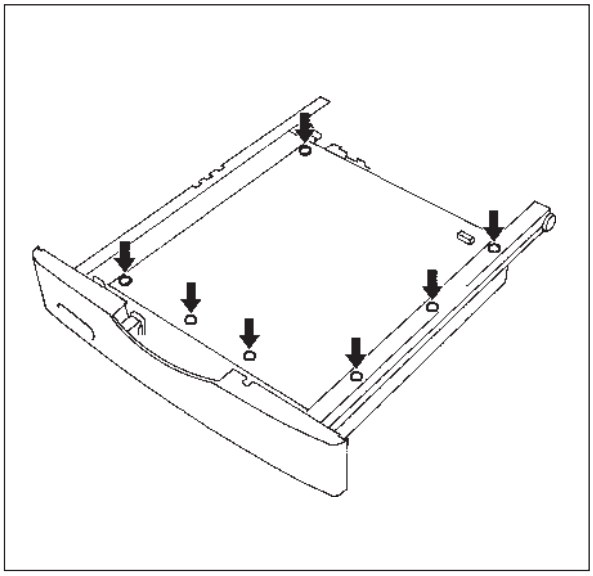

13.5.2 Transport system

[A] ADU vertical transport roller, exit roller and EXIT/ADU selection gate

(1) Open the front cover and the clamshell. To remove the ADU exit unit, open the unit and remove the screw of the unit's pivot bracket located at the rear. Remove the bracket.

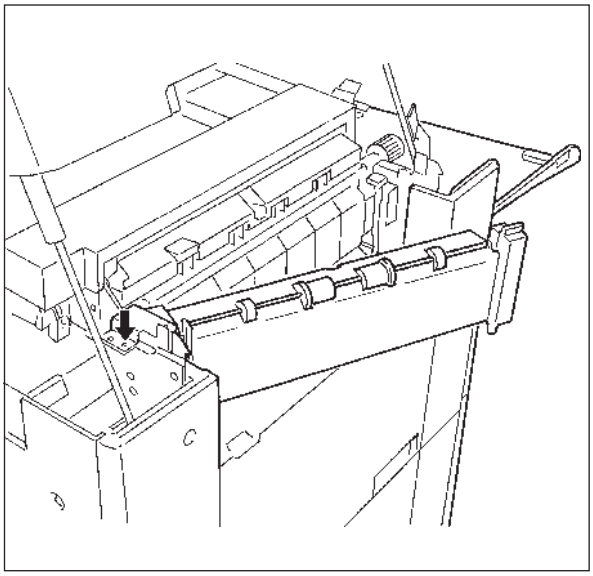

(2) Lift the rear side of the unit and pull out the pivot.

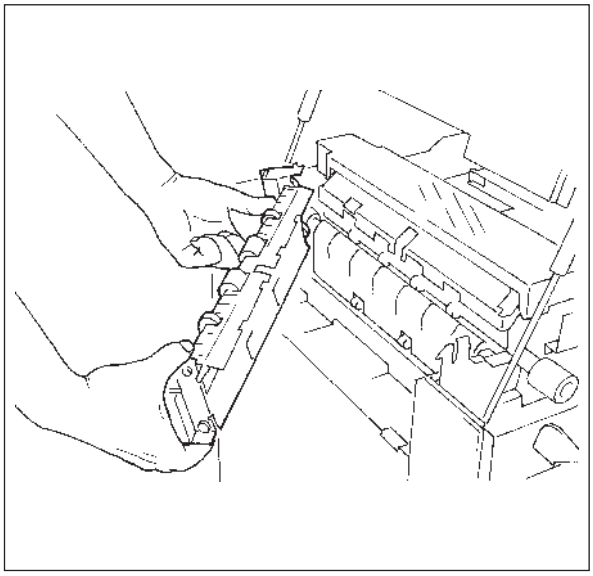

(3) Take out two screws from the ADU exit unit and remove the vertical transport guide unit.

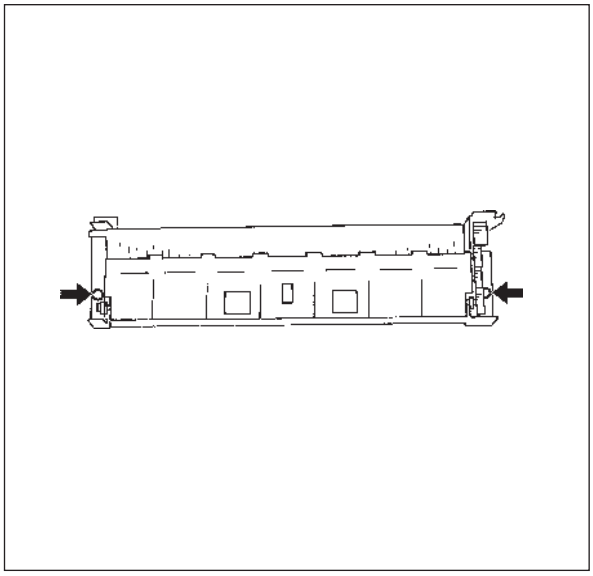

(4) To take out the vertical transport roller, remove the stop-ring and bushing at the front, and the gear and bushing at the rear.

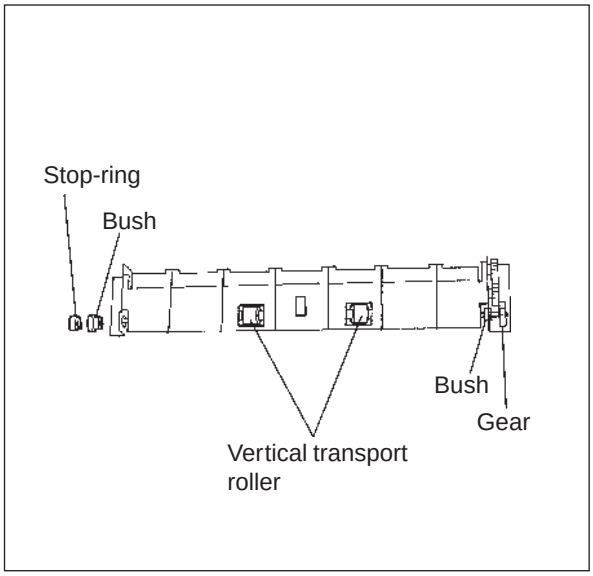

(5) To take out the EXIT/ADU selection gate and exit roller, remove the stop-ring and bushing at the front, and the gear and bushing at the rear, from the exit roller of ADU exit unit whose vertical transport guide unit has already been extracted.

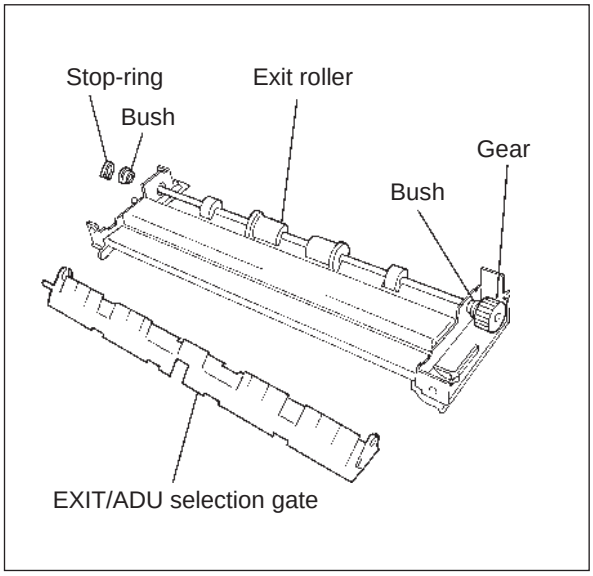

[B] Transport rollers 1, 2 and 3

(1) Take out the upper paper guide by removing its two screws.

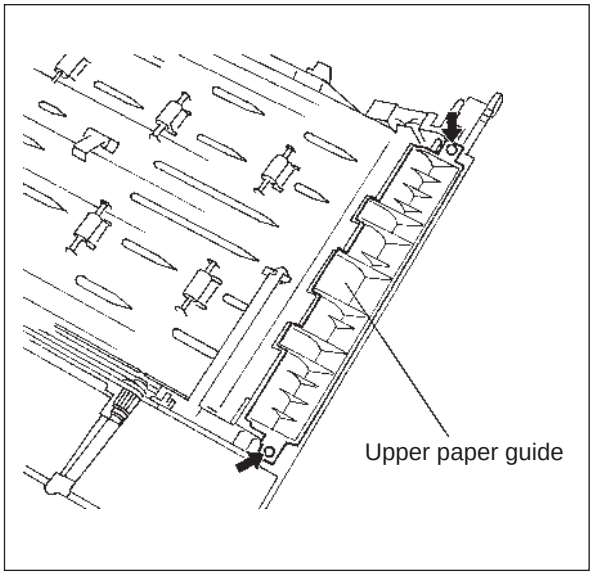

(2) Remove the stop-ring securing the open guide stopper.

Take out the open guide stopper from the open guide (lower) while pushing it toward the rear.

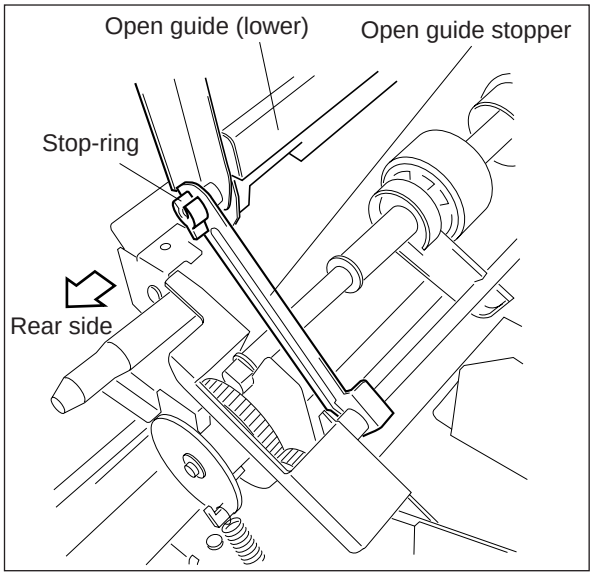

(3) To remove the open guide units (upper and lower), remove the stop-ring (rear) and the snap pin (front and rear, 1 each), push the units toward the rear to have the front stud disengaged, and then take out the units toward the front.

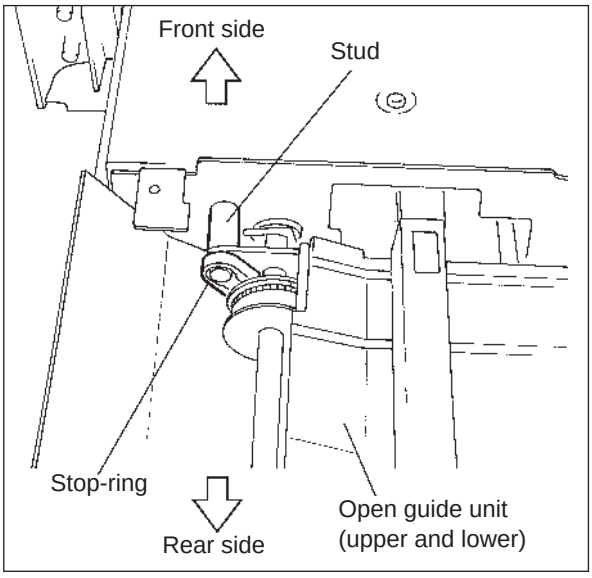

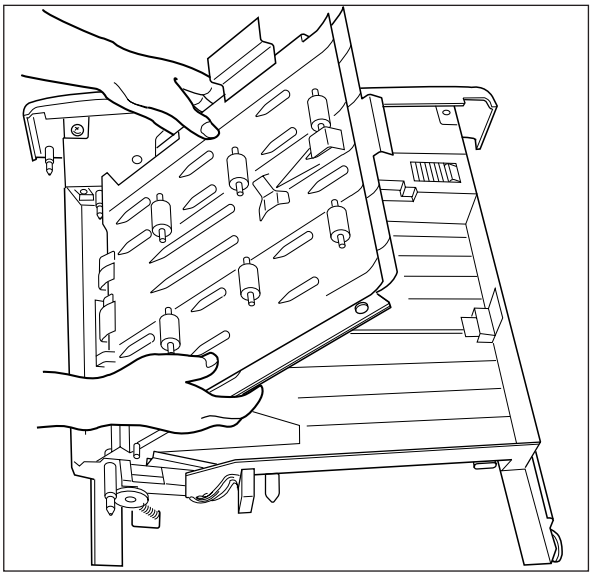

[B-1] Removing the transport roller 1

(1) Remove the open guide unit (lower), and two stop-rings, guide roller, gear, pulley, pin and bushing at the front.

(2) Remove the stop-ring and bushing at the rear.

(3) Remove the timing belt, bring the transport roller 1 near to the front and then take it out toward the rear.

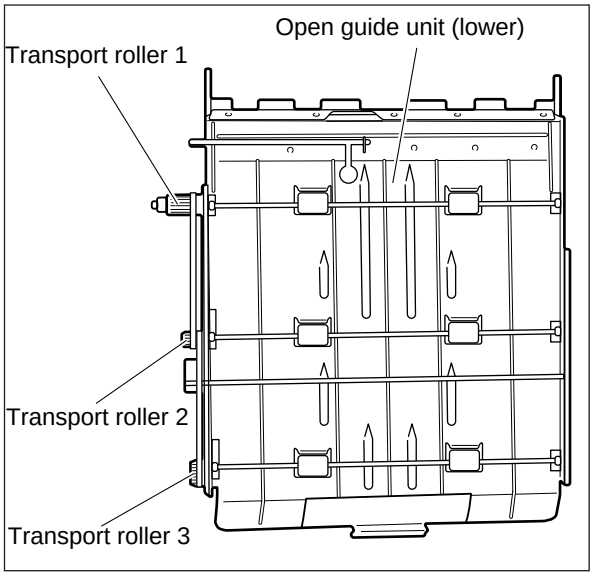

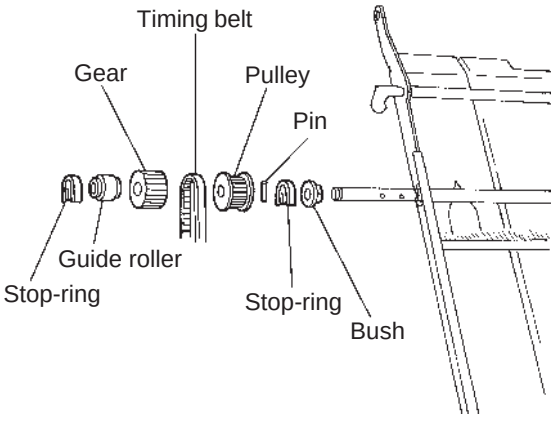

Transport roller 1, front side

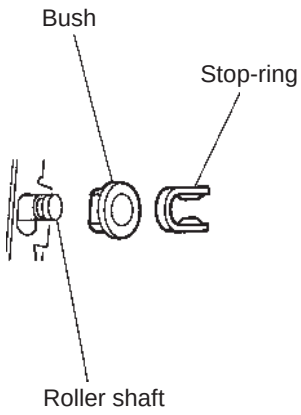

Transport roller 1, 2, 3, rear side

[B-2] Removing the transport roller 2

(1) Remove the open guide unit (lower), and the stop-ring, two pulleys, two pins and bushing at the front.
(2) Remove the stop-ring and bushing at the rear.
(3) Remove the timing belt, bring the transport roller 2 near to the front and then take it out toward the rear.

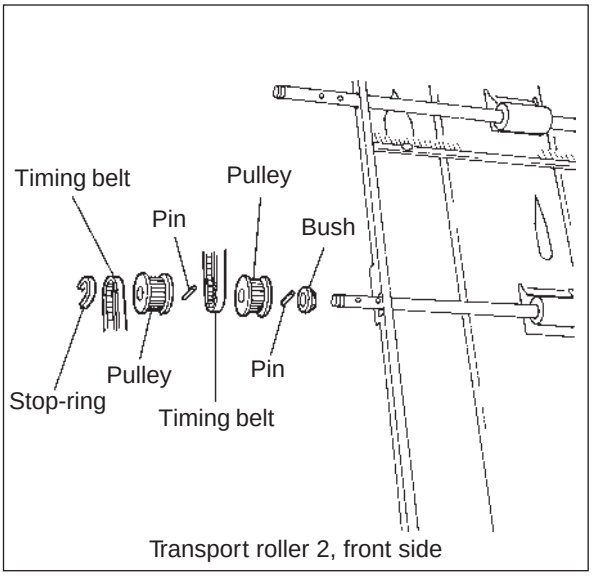

Transport roller 2, front side

[B-3] Removing the transport roller 3

(1) Remove the open guide unit (lower), and the stop-ring, pulley, pin and bushing at the front.
(2) Remove the stop-ring and bushing at the rear.
(3) Remove the timing belt, bring the transport roller 3 near to the front and then take it out toward the rear.

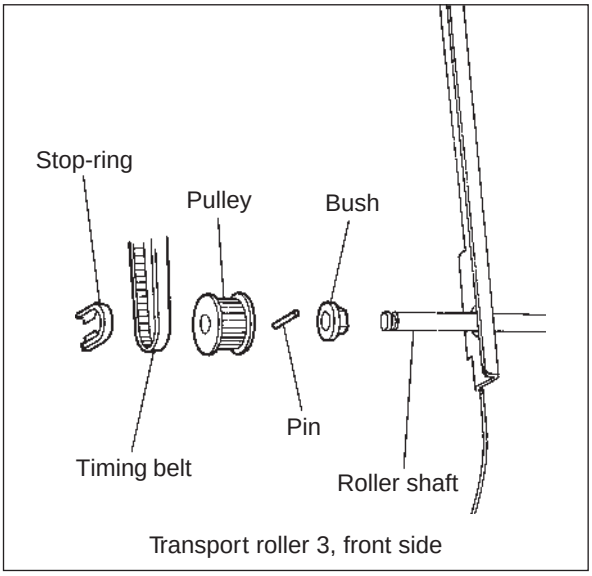

Transport roller 3, front side

[C] ADU pick-up roller

(1) Take out the upper paper guide by removing two screws.
Take out the open guide stopper from the lower open guide after removing one stop-ring.
(2) Take out the open guide unit (upper and lower) by removing one stop-ring and two snap pins.
(3) Remove the stacker from the pick-up roller shaft.
(4) Remove the stop-ring on each end of the ADU pick-up roller shaft and the gear of the rear side, and push the bushing to the inside.
(5) Remove the four pick-up roller guides from the pick-up roller shaft by pushing them downward, and lift the rear end of the shaft.

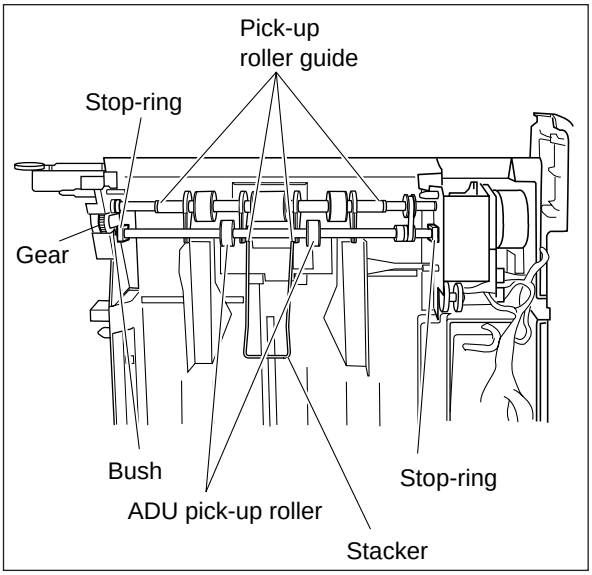

(6) Remove the bushing from the rear end of the pick-up roller shaft and the stop-ring at the rear of the pick-up roller. Then, take the pick-up roller (2 pieces) out toward the rear.

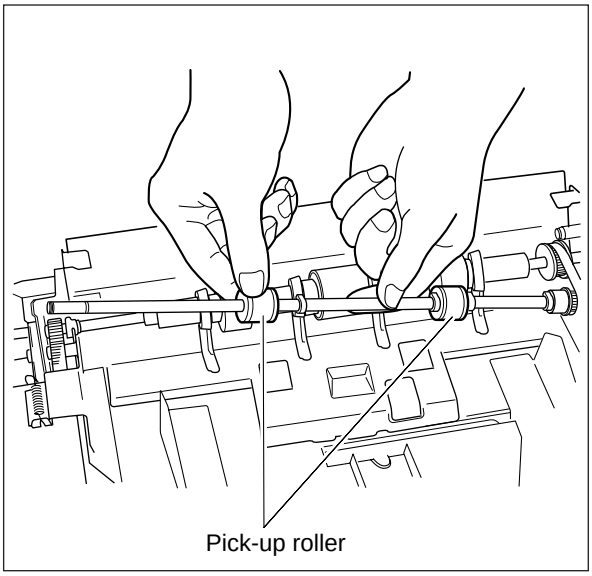

[D] ADU stack/feed rollers (Main and sub)

(1) Take out the upper paper guide by removing two screws.
Take out the open guide stopper from the open guide (lower) after removing one stop-ring.

(2) Remove the open guide units (upper and lower) by removing two stop-rings and one snap-ring.

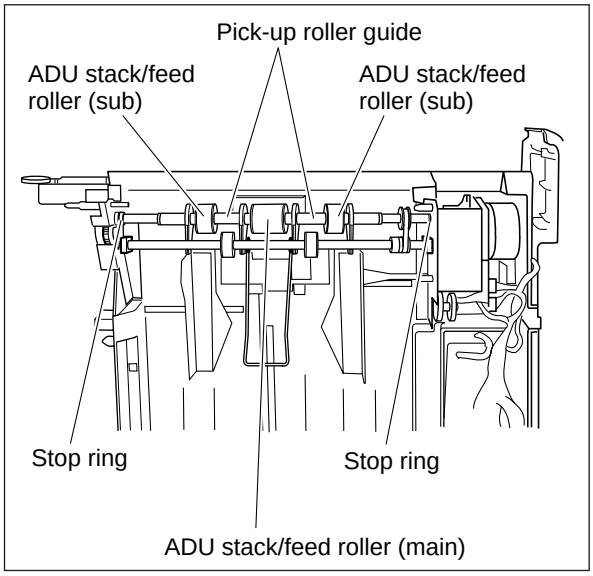

(3) Remove the stop-ring on each end of the ADU stack/feed roller shaft, and push the bushing toward the inside.

(4) Remove the four pick-up roller guides from the pick-up roller shaft by pushing them downward. Then, lift the rear end of the shaft.

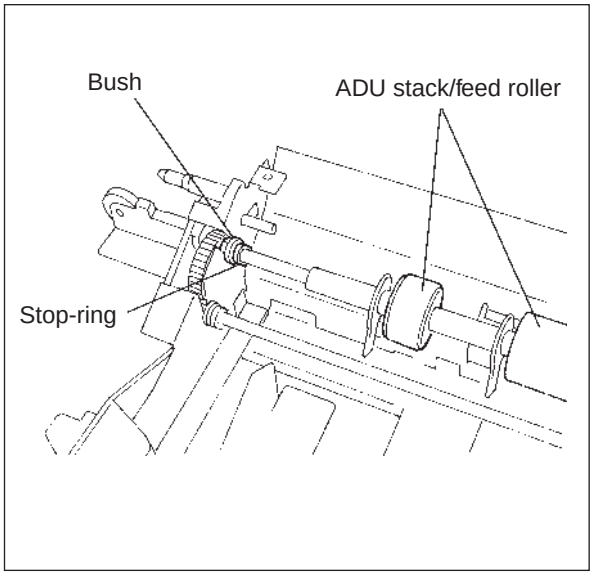

(5) Remove the bushing from the rear end of the stack/feed roller shaft, and the stop-ring and pick-up roller guide at the rear.

(6) After removing the front stop-ring, move the roller and the entire guide toward the front and remove the pin.

(7) From the rear, take out the sub-stack/feed roller, pick-up roller guide, pin and main stack/feed roller, pick-up roller guide, pin and sub-stack/feed roller in this order.

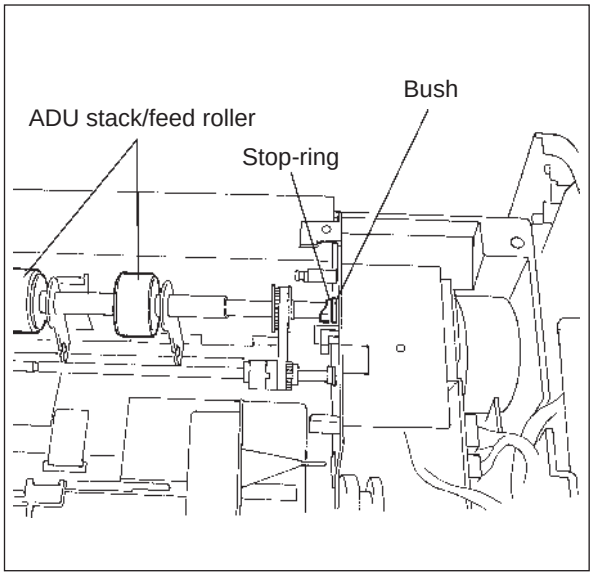

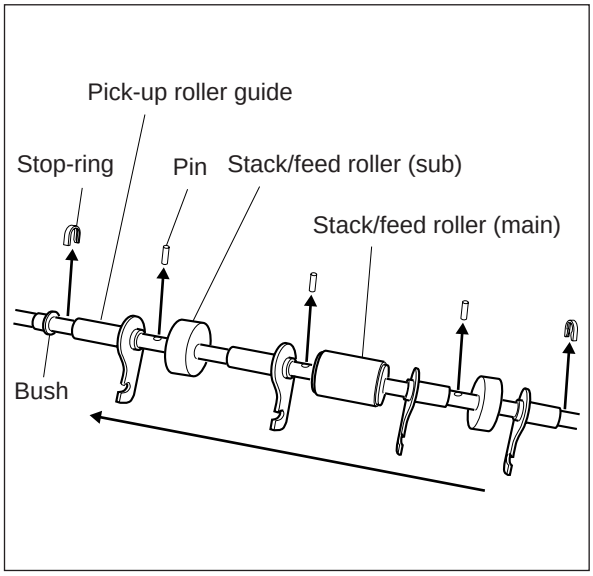

[E] ADU separation roller

(1) Remove the two screws of the ADU separation roller.

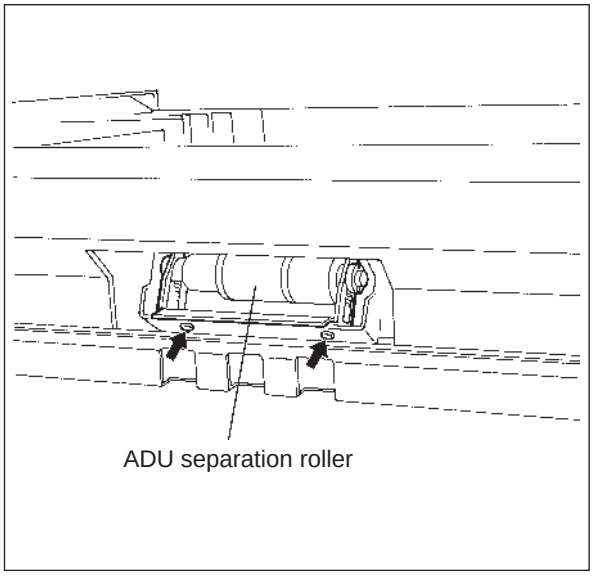

(2) Take out the unit toward the feed side.

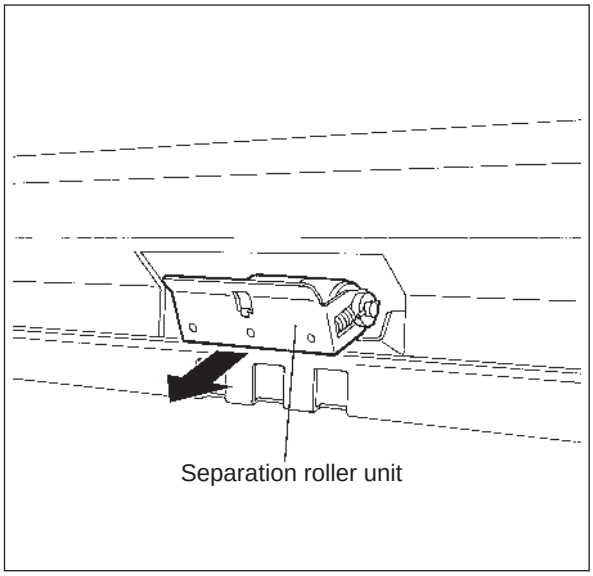

(3) Remove the stop-ring, pull out the shaft, and take out the separation roller.

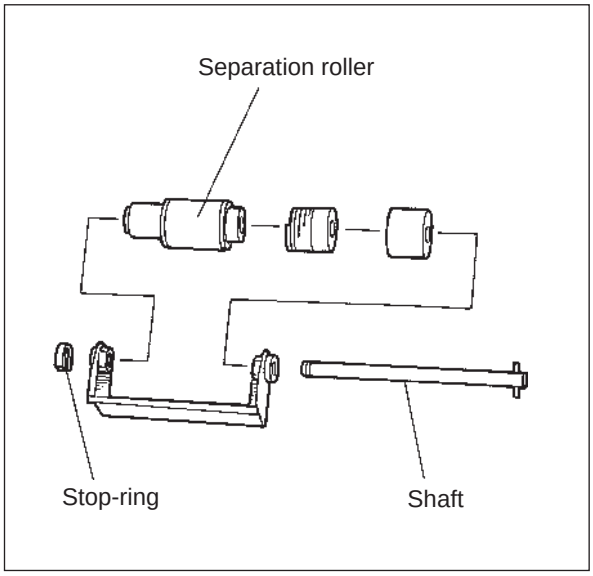

13.5.3 Drive system

[A] ADU motor

(1) Remove the upper paper guide by unscrewing two screws.
Take out the open guide stopper from the open guide (lower) after removing one stop-ring.

(2) Take out the open guide unit (upper and lower) by removing two stop-rings and one snap pin.

(3) Remove the motor cover by unscrewing a screw.

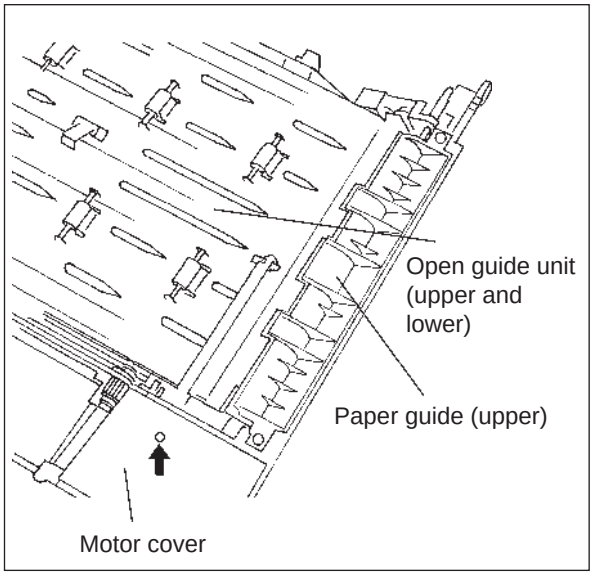

(4) Remove the spring on the rear.

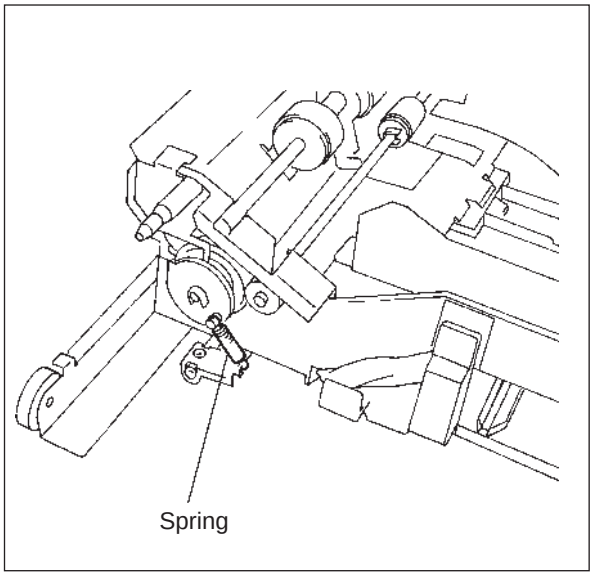

(5) Move the side guides toward the center. Take out the ADU feed unit by unscrewing four screws.

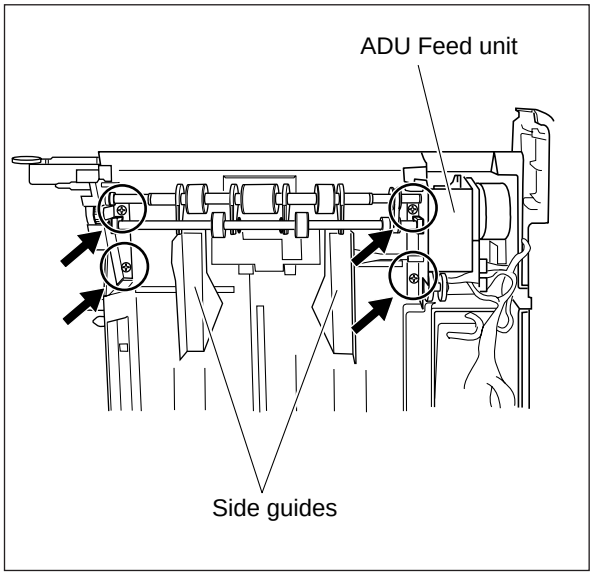

(6) Remove two screws and take out the ADU motor.

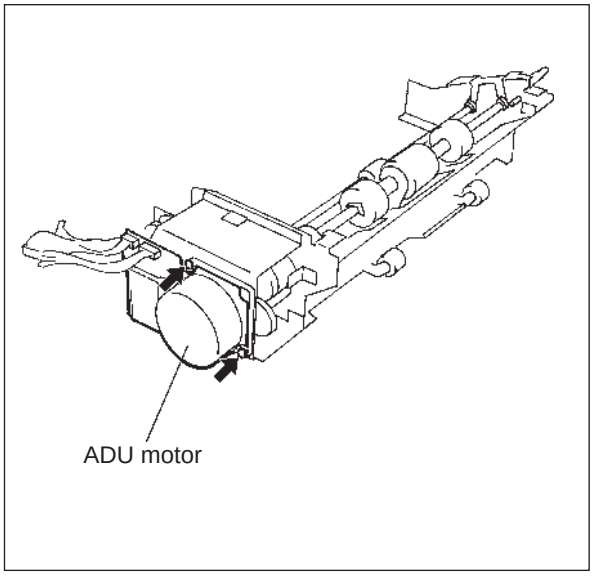

[B] Feed clutch and stack clutch

(1) Remove the ADU motor bracket from the ADU feed unit by unscrewing four screws.

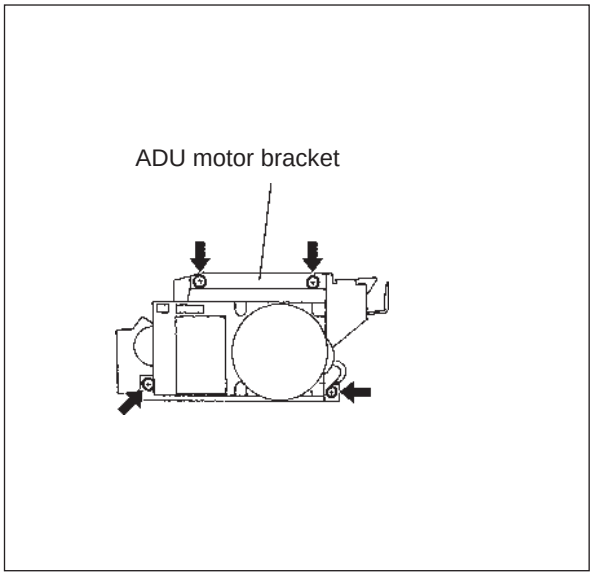

(2) Remove the switch bracket by unscrewing a screw.

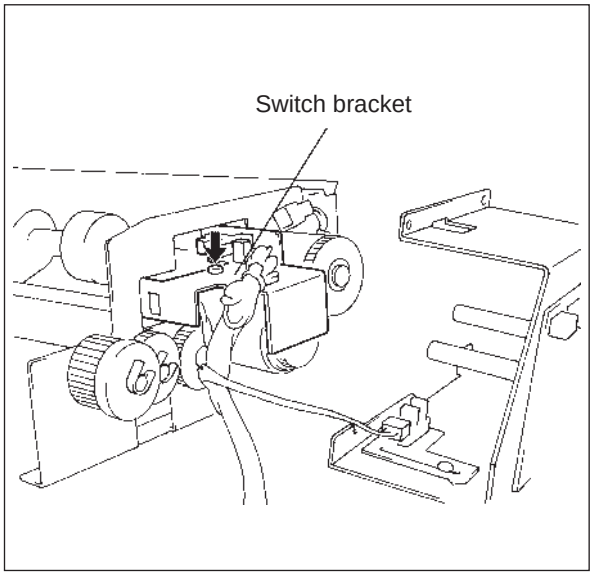

(3) Disconnect the connectors of the feed clutch and stack clutch. Loosening two setscrews of each of the feed and stack clutches, take them out from their shafts.

(4) Align the end surface of the shaft and clutch, then securely tighten the two setscrews at this position when reassembling the feed and stack clutches.

* Make a gap of approx. 0.5 mm between the feed clutch and the gear, and also between the stack clutch and the bush.

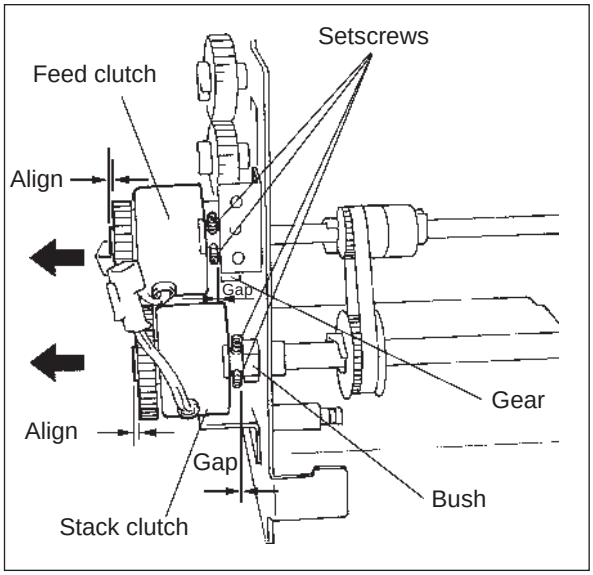

[C] Gate solenoid

(1) Remove the gate cover and motor cover by unscrewing each screw.

(2) Disconnect the gate solenoid connector and take out the gate unit by removing two screws.

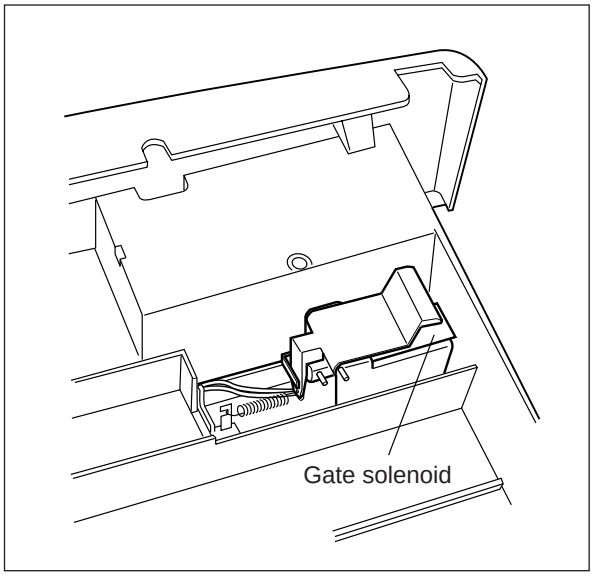

(3) Remove the gate solenoid by unscrewing two screws.

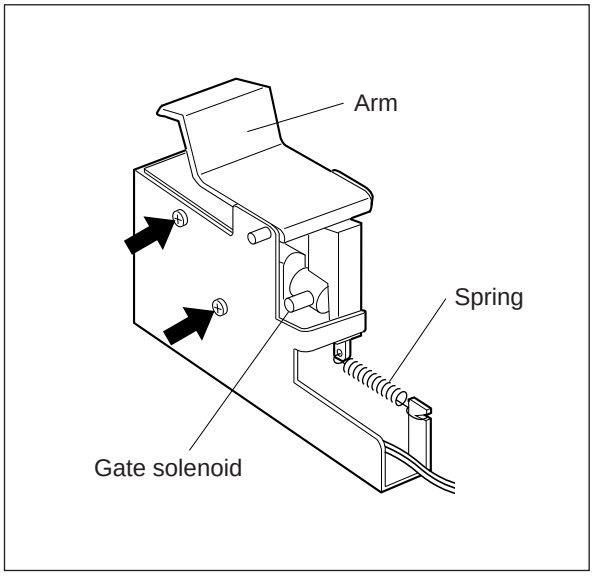

[D] Side motor and end motor

(1) Place the ADU upside down.

(2) Remove the lower cover by unscrewing 7 screws.

(3) Unscrew two screws, take out the timing belt, and remove the side motor bracket.

(4) The end motor can be removed by the same procedure.

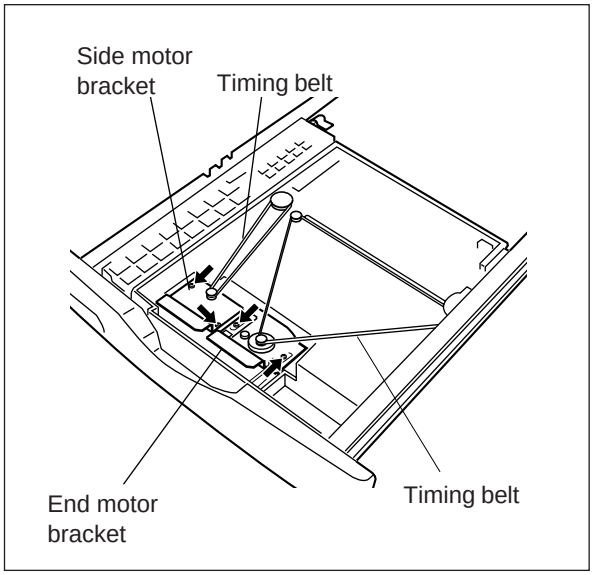

(5) Remove the side motor and the end motor from their brackets by unscrewing two screws for each.

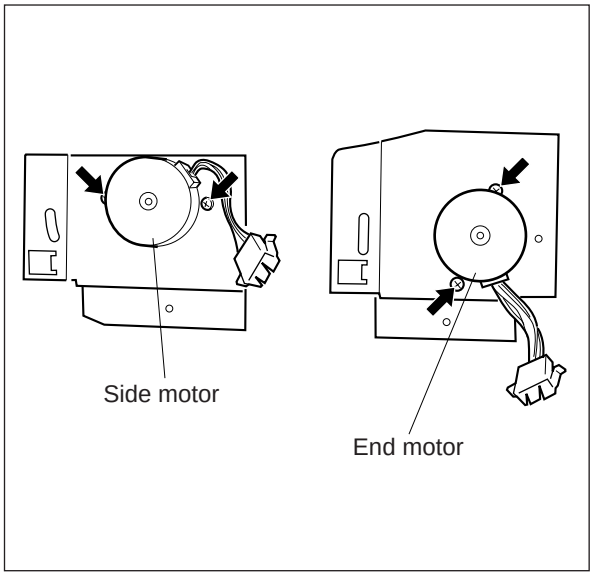

(6) Fix the side motor bracket at the position of 21 ± 0.5 mm from the case when reassembling.

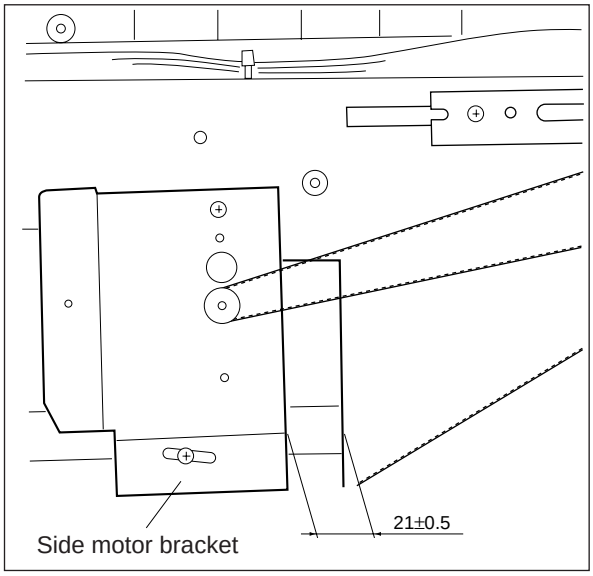

13.5.4 Various switches

[A] Jam switch and empty switch

(1) Remove the ADU feed unit.
(2) Remove the switch bracket.
(3) Unlatch the claws of the switches.
(4) Disconnect the connector.

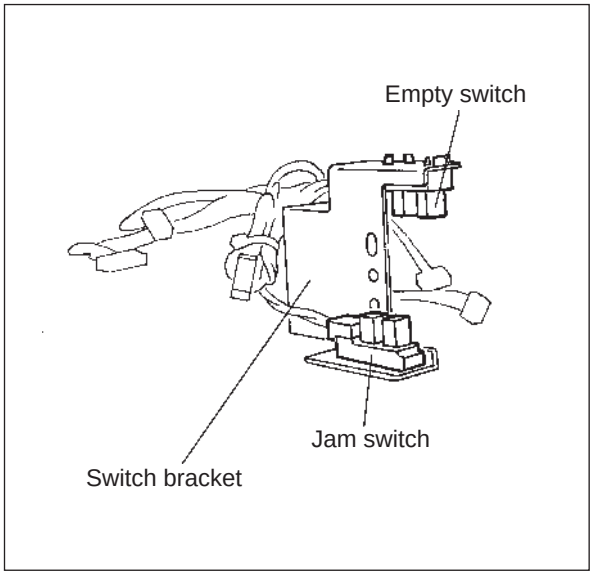

[B] Side switch

(1) Remove the ADU feed unit.
(2) Remove the ADU motor bracket.
(3) Disconnect the connector.
(4) Remove the guide switch bracket from the ADU motor bracket by unscrewing a screw.

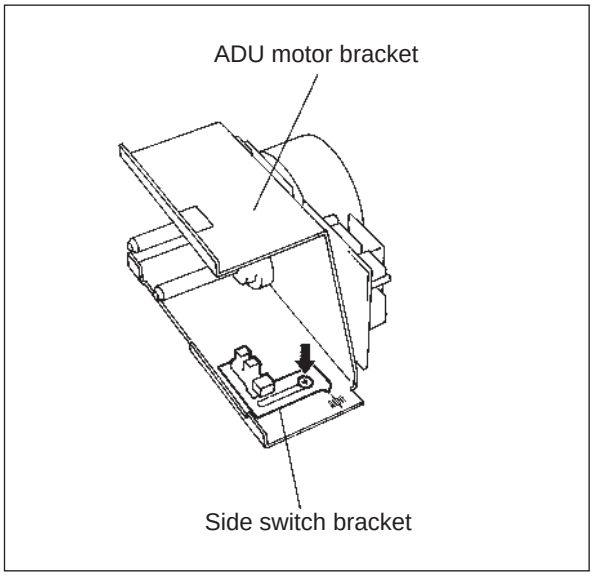

(5) Unlatch the claws of the switch.

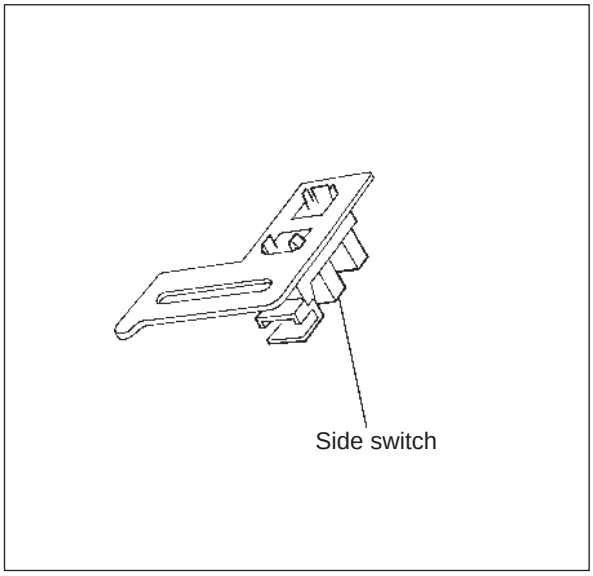

[C] End switch

(1) Remove the upper paper guide and the open guide units (upper and lower).
(2) Place the ADU upside down and remove the lower cover.
(3) Remove the rail guide.

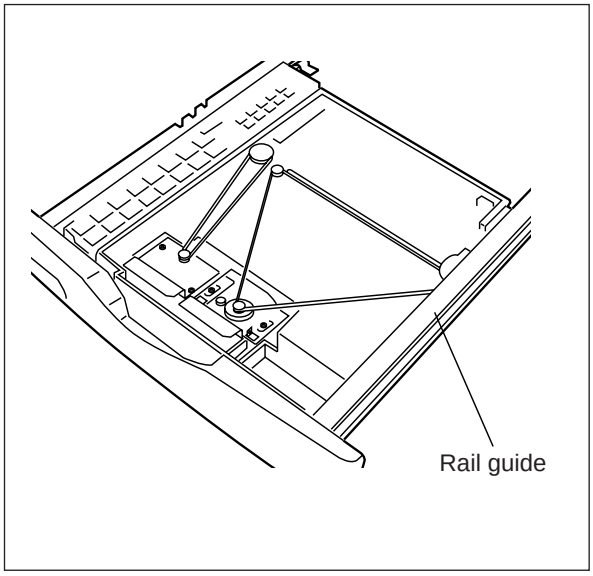

(4) Disconnect the switch connector and unlatch the claws of the switch.

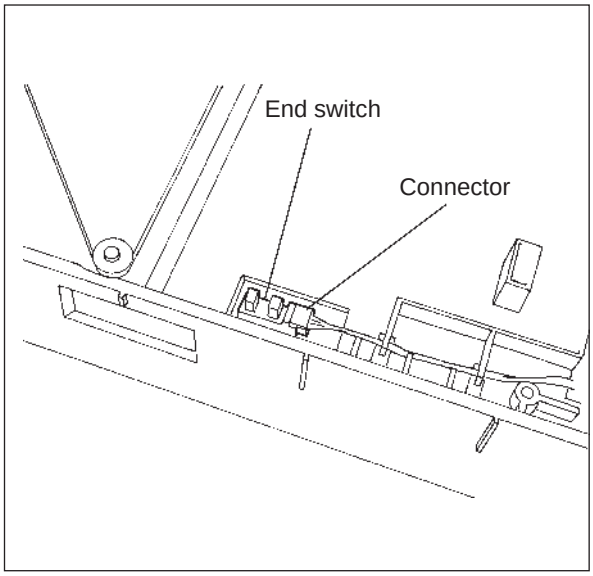

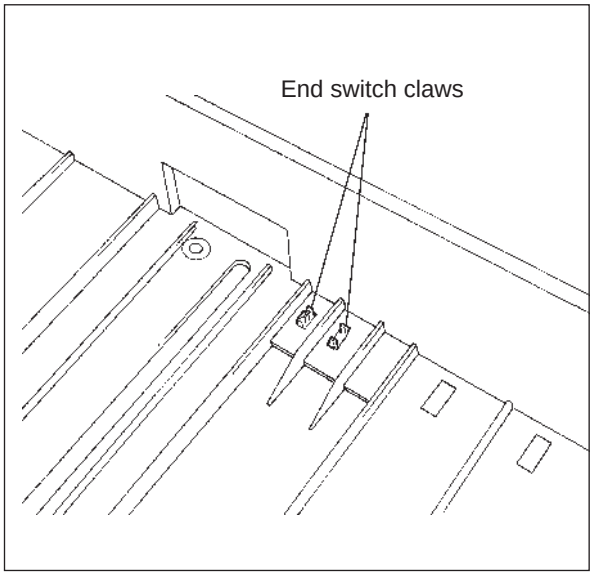

13.6 Symbols and Functions of Electrical Parts

13.6.1 Motors (M)

Symbol	Abbreviation	Function	Remarks
DM1	ADU-MOT (ADU motor)	Drives paper transport rollers.	Brushless motor
DM2	END-MOT (End motor)	Drives the end guide in the stack section.	Pulse motor
DM3	SID-MOT (Side motor)	Drives the side guides in the stack section.	Pulse motor

13.6.2 Solenoids

Symbol	Abbreviation	Function	Remarks
SOL1	STSOL (Gate solenoid)	Used to open and close the gate.	

13.6.3 Clutches

Symbol	Abbreviation	Function	Remarks
CLT1	FEDCLT (Feed clutch)	Used for paper re-feeding.	
CLT2	STCLT (Stack clutch)	Used for stacking operation.	

13.6.4 Switches and sensors

Symbol	Abbreviation	Function	Remarks
SA1	END-SW (End switch)	Detects the end guide position in the stack section.	Semiconductor sensor
SA2	SID-SW (Side switch)	Detects the side guide position in the stack section.	Semiconductor sensor
SA3	EMP-SW (Empty switch)	Detects when the ADU cassette runs out of paper.	Semiconductor sensor
SA4	JAM-SW (Jam switch)	Detects the passage of paper through the guide up to the stack section.	Semiconductor sensor

13.7 Layout for Electrical Parts

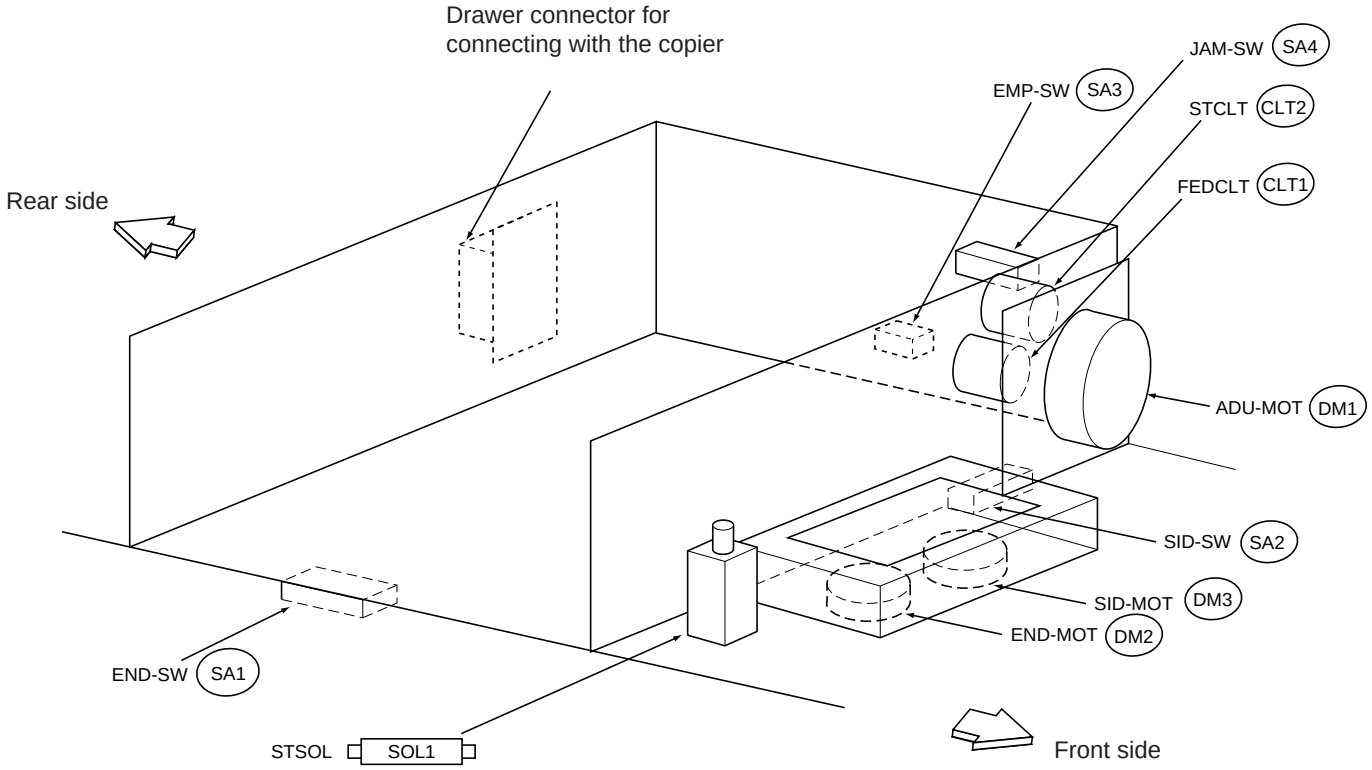

13.8 Description of Operation

13.8.1 General operation

(1) Initializing

When the power switch is turned ON or when the front cover is opened/closed or when the ADU is pulled out/pushed in, this operation is performed.

(2) Stacking operation

This is an operation in which sheets of paper fed from the cassette and copied on their surface (first side) are sent into the ADU stack section and stacked there.

(3) Duplex copying

Sheets of paper which have been copied on their first sides are automatically sent into the copier and copied on their reverse surface (second side).

(4) ADU paper feeding

This operation causes sheets of paper to be fed from the ADU into the copier.

13.8.2 Description of each operation

[A] Initializing

[A-1] Initializing when the power switch is turned ON

(1) When the power switch is turned ON, the end motor (END-MOT) (DM2) rotates to move the end guide in the stack section to its home position.

(2) The side motor (SID-MOT) (DM3) rotates to move the side guides to their home position.

[A-2] Initializing when the copier's front cover is opened/closed

(1) The operation in step (1) above is performed.

[A-3] Initializing when the ADU is pulled out/pushed in

(1) The end motor (END-MOT) (DM2) rotates to move the end guide to its home position once, then moves it to the position corresponding to the selected size of paper.

(2) The side motor (SID-MOT) (DM3) rotates to move the side guides to their home position once, then moves them to the position corresponding to the selected size of paper.

[B] Stacking operation

(1) When the [PRINT] key is pressed, the SID-MOT (DM3) and END-MOT (DM2) are rotated to move the side and end guides to the position corresponding to the specified size of paper, and the ADU-MOT (DM1) is rotated clockwise to transport the paper. STSOL (□ [SOL 1] □) is energized to position the EXIT/ADU selection gate in the direction of stacking, and STCLT (CLT2) is energized to rotate the ADU transport rollers in the direction of stacking.

(2) Jam detection inside the ADU is performed as follows:

JAM-SW (SA4) is checked if it is turned ON within a specified period of time after the copied paper turned ON the copier's exit switch. The switch is also checked if it is turned OFF within a specified period of time after the exit switch was turned OFF by the paper.

(3) Each time five sheets of paper are stacked in the ADU, the side motor (SID-MOT) (DM3) is rotated to move the side guides so that the sheets stacked are aligned, then the side guides are returned to their previous position.

(4) The above procedure (2)~(3) is repeated until the specified number of copies are made.

(5) After the final sheet is stacked in the ADU stack section, STSOL (□ SOL 1 □), STCLT (CLT2) and ADU-MOT (DM1) are turned off.

[C] Feeding from ADU

(1) When the PRINT key is pressed, the SID-MOT (DM3) is rotated to move the side guides to the specified size of paper and ADU-MOT (DM1) is rotated clockwise and FEDCLT (CLT1) is turned ON, causing the ADU feed roller and pick-up roller to rotate.

(2) Due to the operation in (1), the ADU tray is raised, causing the copy paper to come into contact with the pick-up roller for paper feeding.

(3) A sheet of paper is fed out of the ADU and transported toward the copier's aligning roller.

(4) When the sheet pushes the copier's paper transport switch ON, FEDCLT (CLT1) is turned OFF, causing the pick-up roller and feed roller to stop rotating.

(5) Then, the copier's aligning roller starts rotating, and the copying process commences.

(6) The above procedure (2)~(5) is repeated until the specified number of copies are made. When copies are finished, ADU-MOT (DM1) stops its rotation.

[D] Duplex copying

(1) When the first-side copying operation is started, ADU-MOT (DM1) is rotated, and the side and end guides are moved to the position of specified paper size by the SID-MOT (DM3) and END-MOT (DM2).

Additionally, the STSOL (□ SOL 1 □) and the STCLT (CLT2) are turned ON in the same way as the [B] Stacking operation.

(2) The first-side copied sheet is transported into the ADU from the copier exit switch and gate sections, and then stacked through the JAM-SW (SA4).

The ADU inside jam symbol comes ON when the JAM-SW (SA4) is not turned ON within a specified time after the copier exit switch is turned ON, or the JAM-SW is not turned OFF within a specified time after the copier exit switch is turned OFF.

(3) Each time five sheets of paper are stacked, the stacked sheets are aligned by the side motor SID-MOT (DM3) moving the side guides.

(4) The above procedure (2)~(3) is repeated until the specified number of sheets are stacked.

(5) The final sheet is stacked in the ADU, and then STSOL (□ SOL 1 □) and STCLT (CLT2) are turned OFF.

(6) When the RADF is not used, ADU-MOT (DM1) is stopped once to turn over the original. After turning over the original, ADU-MOT (DM1) is rotated again to make a copy of the next original in step 7 or later.

When the RADF is used, ADU-MOT (DM1) is not stopped since the original is turned over continuously.

(7) When the second-side copying is started, the side guides are moved by the SID-MOT (DM3) to the specified size position.

(8) When the FEDCLT (CLT1) is turned ON, the ADU paper feed tray is lifted up, and also the pickup and feed rollers are driven, then one sheet of paper is separated and fed.
When the sheet reaches the copier's transport switch, the FEDCLT (CLT1) is turned OFF.
The ADU feed jam symbol comes ON when the copier's transport switch is not turned ON within a specified time after the FEDCLT (CLT1) is turned ON.

(9) The above step (8) is repeated until the specified number of copies are made. After copying has been finished, ADU-MOT (DM1) is stopped.

13.8.3 Meaning of signals

Signal name	Meaning of signals		Remarks
	"L" LOW level	"H"HIGH level	
FEDCLT	Paper feeding from ADU	–	
STCLT	Paper stacking in ADU	–	
STSOL (Gate solenoid)	ADU stacking Send paper into ADU	Normal paper existing	
JAM-SW (Jam switch)	No paper on ADU stack path	Paper on ADU stack path	
EMP-SW (Empty switch)	No paper in ADU stack section	Paper in ADU stack section	
SID-SW (Side switch)	–	Side guide home position (Photosensor shielded)	L: OFF H: ON
END-SW (End switch)	–	End guide home position (Photosensor shielded)	L: OFF H: ON

13.8.4 Detection of abnormal status

When an abnormal condition is detected inside the ADU, a symbol corresponding to the condition is shown on the copier's control panel. The following kinds of abnormal status may be encountered:

(1) Abnormal statuses which can be cleared without pulling out/pushing in the ADU:
- Paper misfeeding which occurs while paper is being fed from the stack section.

(2) Abnormal statuses which can be cleared by pulling out/pushing in the ADU:
- Paper misfeeding in the paper stack section.

(3) Abnormal statuses which can be cleared only by turning OFF/ON the copier's power switch:
- When the side guides or end guide cannot be initialized to their correct positions.

[A] Paper misfeeding

(1)Paper misfeeding during duplex copying:

While paper is fed from the ADU, if the copier's P-STP-SW is not turned ON within about 1 sec. after FEDCLT (CLT1) was energized, it is judged that paper misfeeding has occurred during ADU paper feeding, and a paper misfeed symbol is displayed. This condition can be cleared by opening/closing the copier's side cover.

(2)Paper misfeeding during paper stacking:

During paper stacking, if the ADU's JAM-SW (SA4) is not turned ON within about 3 sec. after the copier's EXIT-SW was turned ON/OFF, it is judged that paper misfeeding has occurred inside the ADU. To clear this condition, pull out the ADU, remove the misfed sheet, then push in the ADU. (If necessary, open/close the copier's front cover.)

[B] Abnormal statuses at power ON

(1)Paper remaining in the stack section at power ON:

If a sheet of paper is left in the stack section when the power is turned ON, a symbol indicating that paper is still there is displayed on the copier's control panel when the duplexing mode is selected. This mode cannot be started until the paper is removed.

(2)Misfed paper remaining inside the ADU when the power is turned ON:

If a misfed sheet of paper remains on the ADU's paper path when the power is turned ON, the ADU misfeed symbol is shown. To clear this condition, pull out the ADU, remove the misfed sheet and then push in the ADU. (If necessary, open/close the copier's front cover.)

[C] "Serviceman Call" errors

(1)The paper side guides and end guide cannot be initialized :

During the initialization of the SID-MOT (DM3) and END-MOT (DM2) , if the respective home switch positions are not detected, a message will be displayed indicating that the ADU cannot function.

13.8.5 Flow charts

[A] General flow charts

(1) Duplex copying from single-sided originals

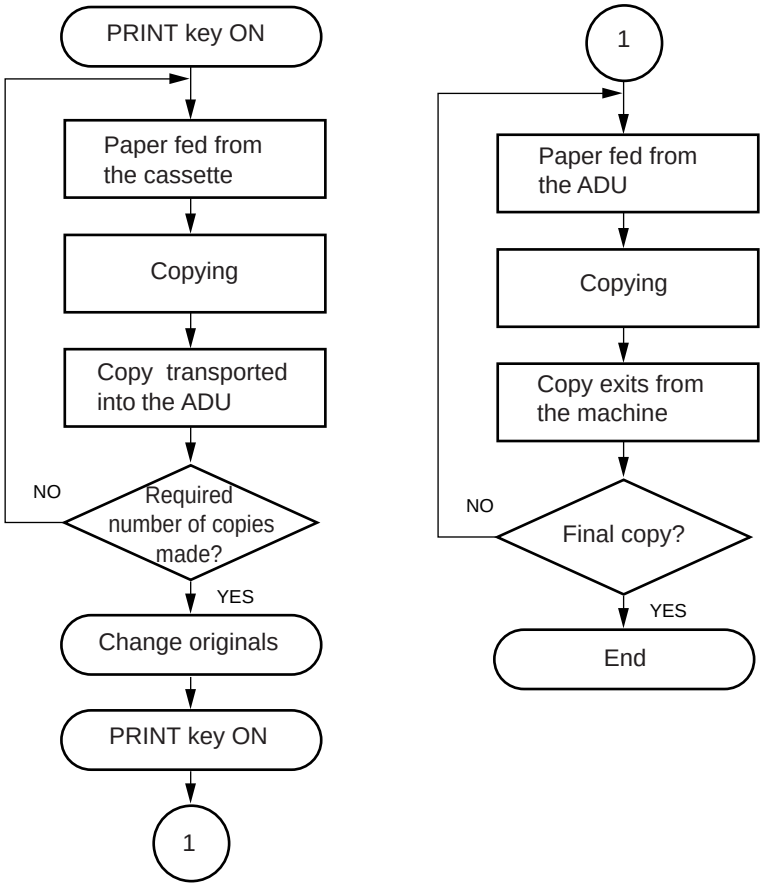

(2) Duplex copying from single-sided originals through ADF

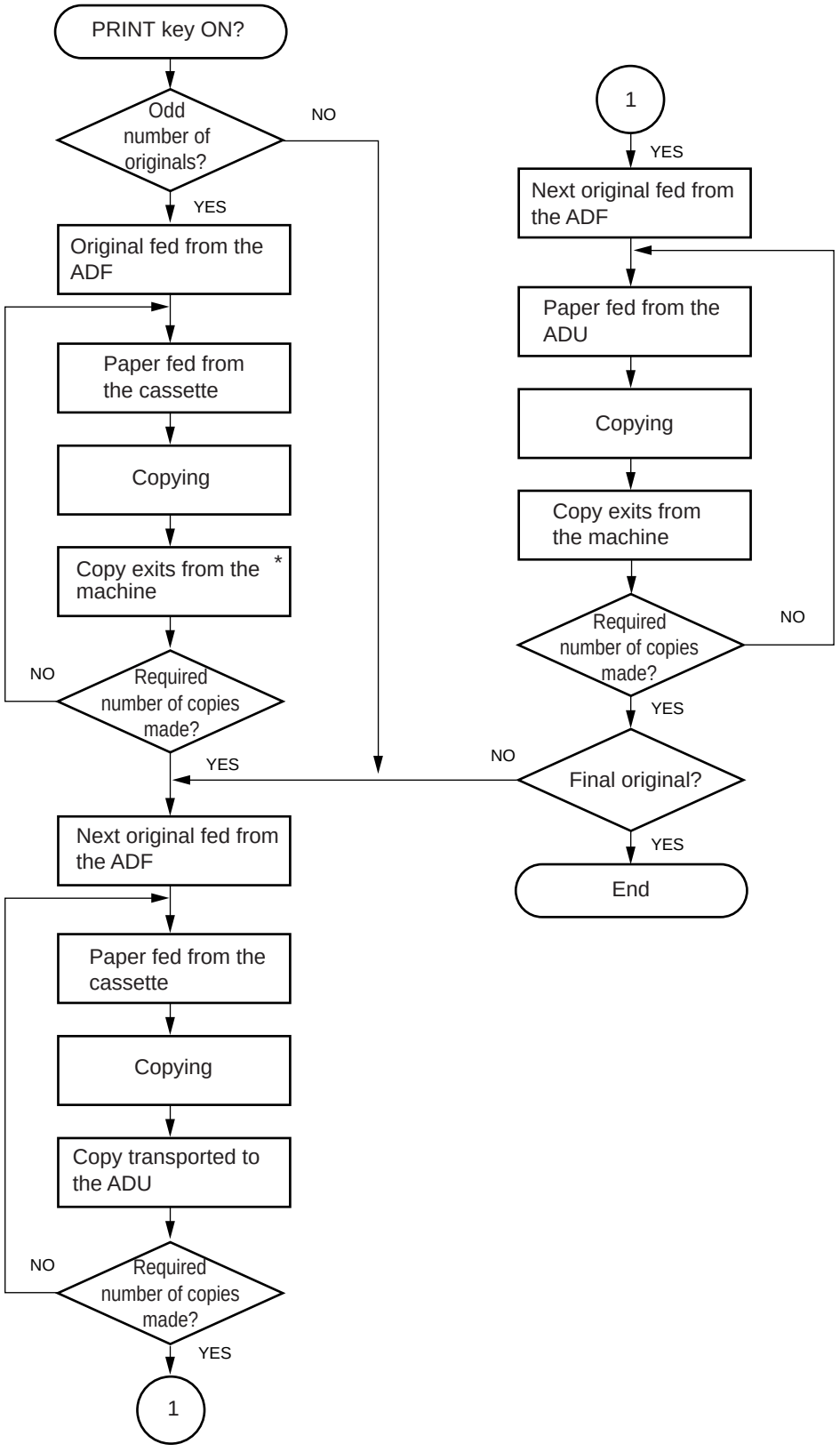

(3) Duplex copying from two-sided originals

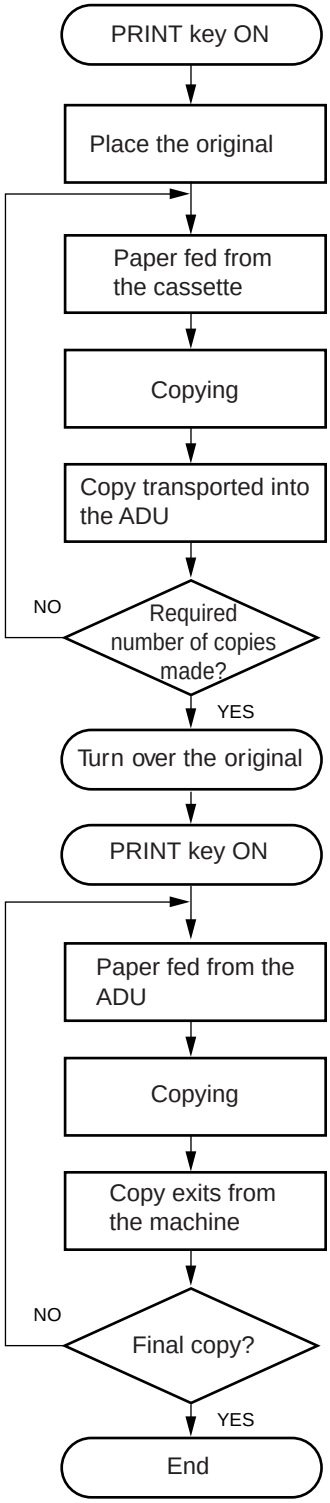

(4) Duplex copying from two-sided originals through RADF

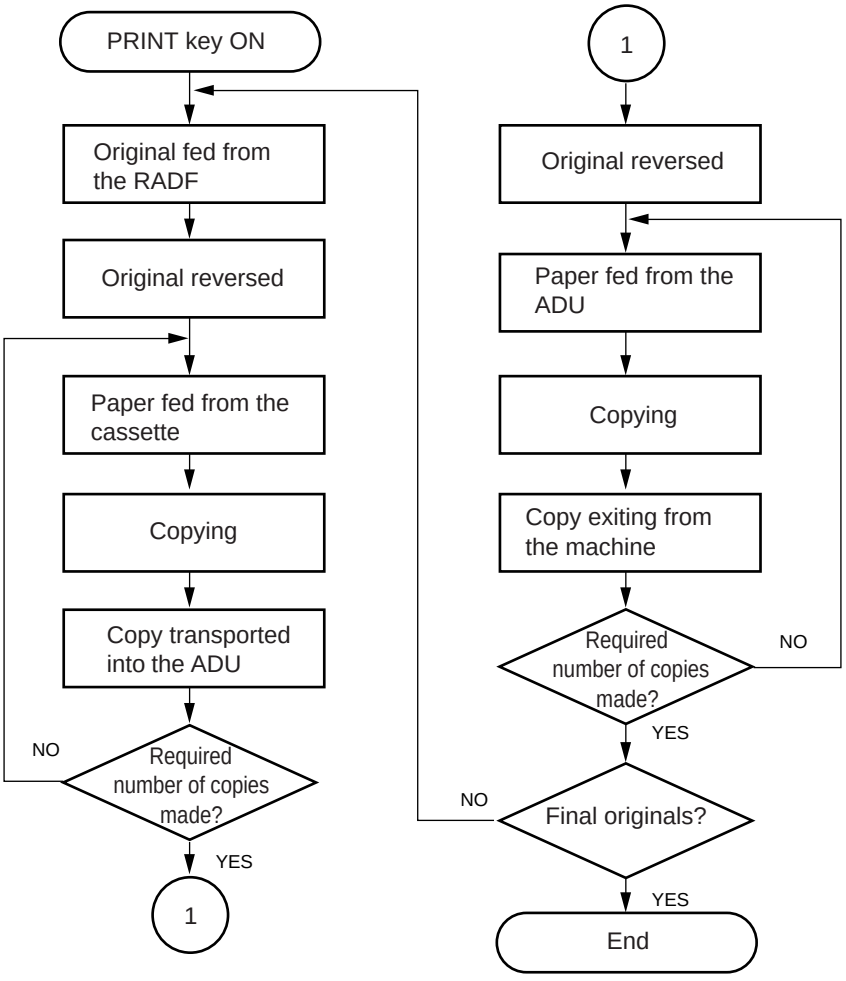

(5) Duplex copying from two-page originals

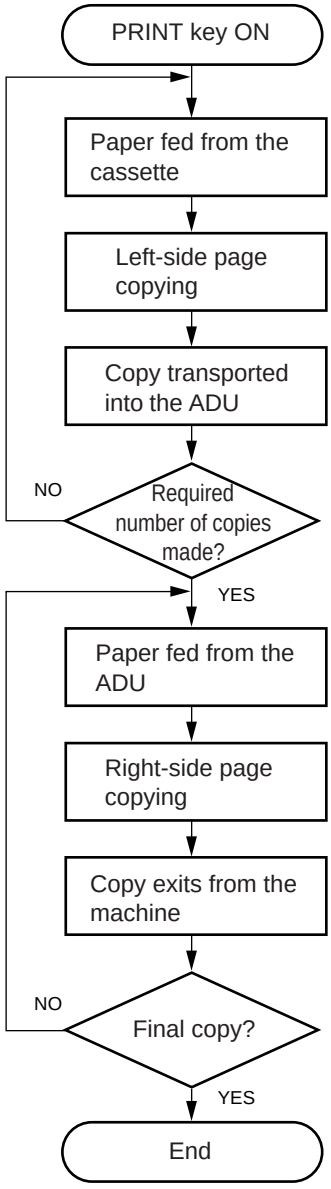

(6) Duplex copying from book originals

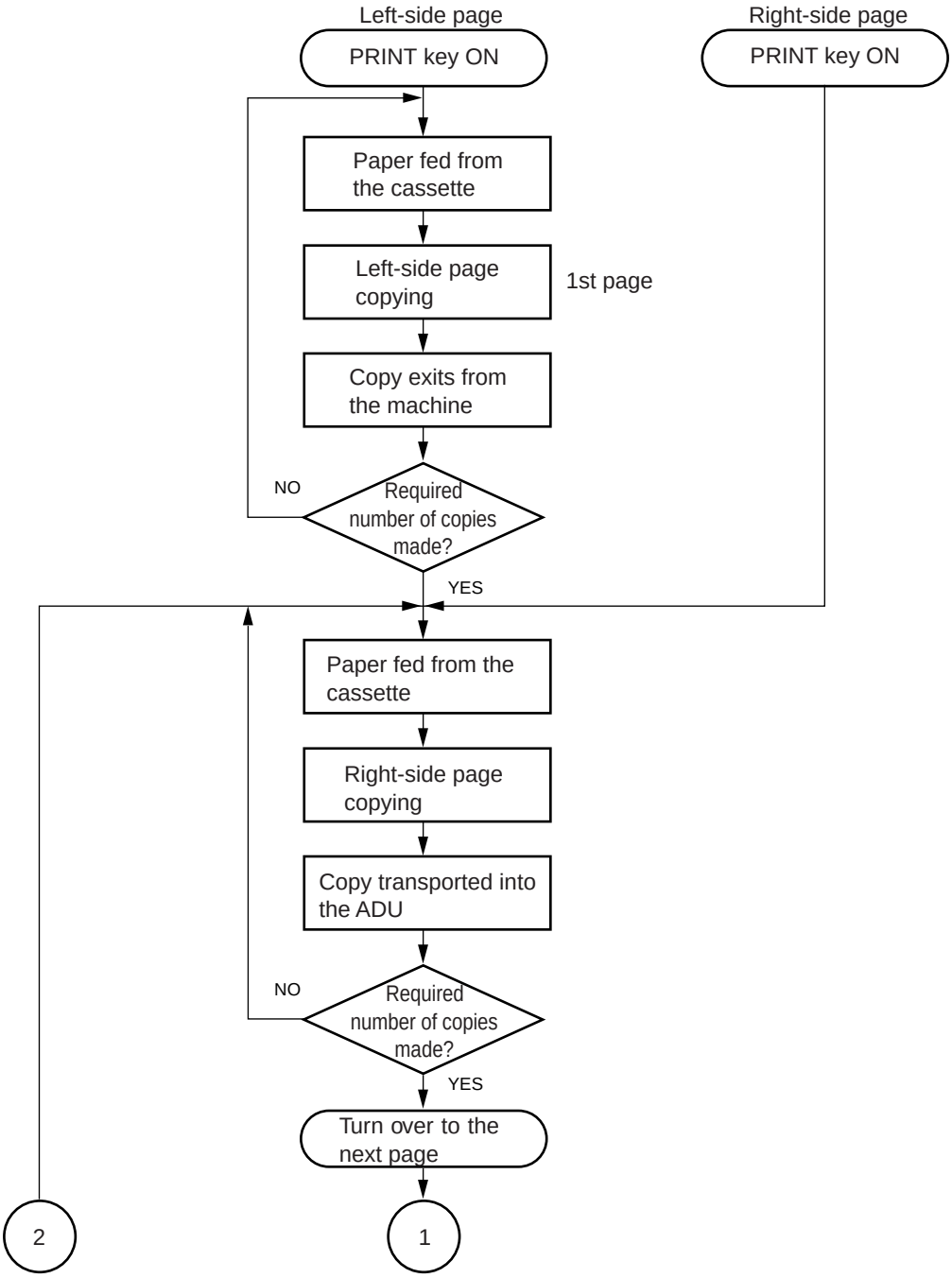

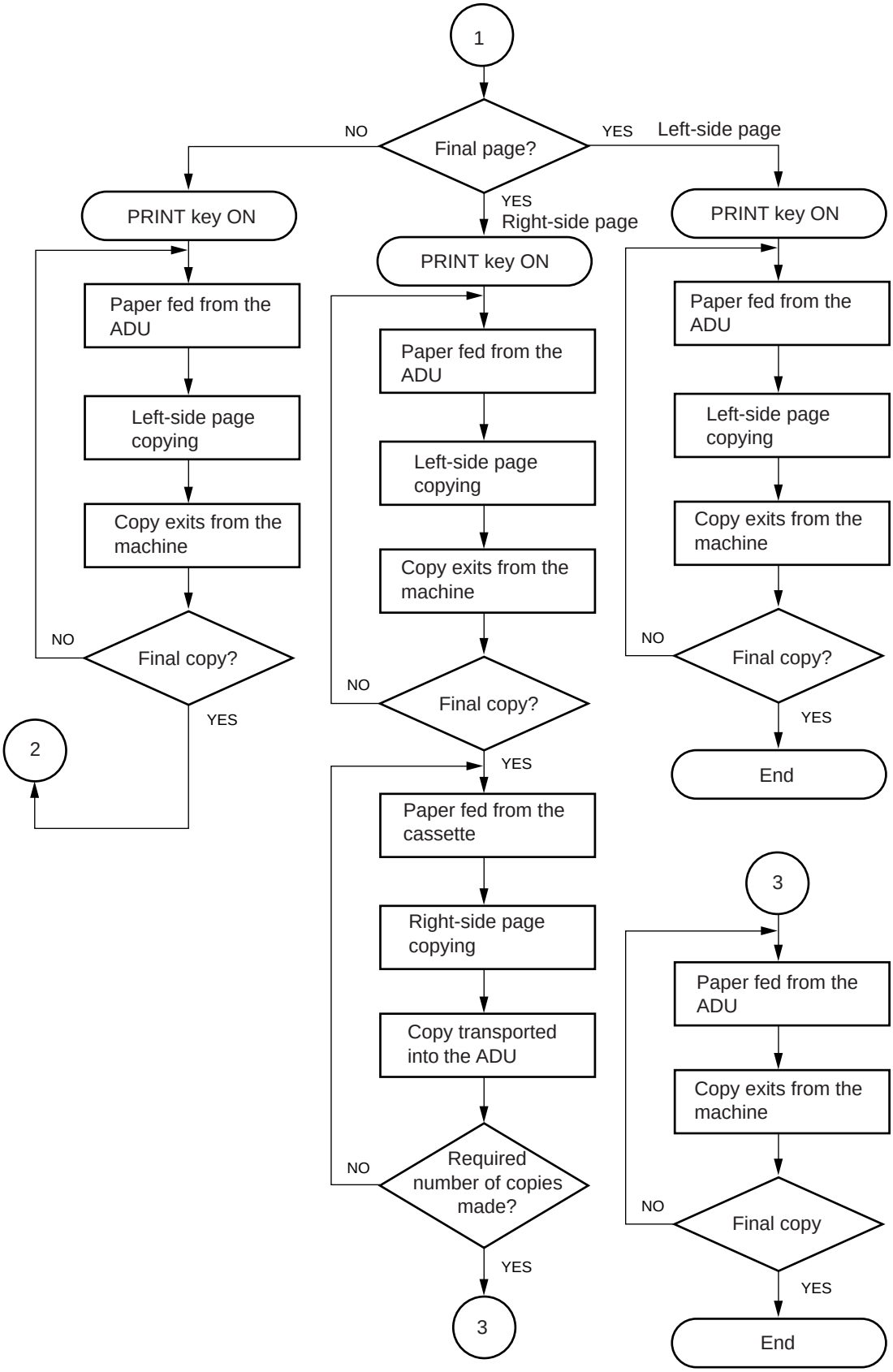
1
Final page?
NO
YES
Left-side page
YES
Right-side page
PRINT key ON
PRINT key ON
PRINT key ON
Paper fed from the ADU
Left-side page copying
Copy exits from the machine
Final copy?
NO
YES
2
Paper fed from the ADU
Left-side page copying
Copy exits from the machine
Final copy?
NO
YES
Paper fed from the cassette
Right-side page copying
Copy transported into the ADU
Required number of copies made?
NO
YES
3
Paper fed from the ADU
Left-side page copying
Copy exits from the machine
Final copy?
NO
YES
End
3
Paper fed from the ADU
Copy exits from the machine
Final copy
NO
YES
End

[B] Control flow charts

(1) Stacking operation

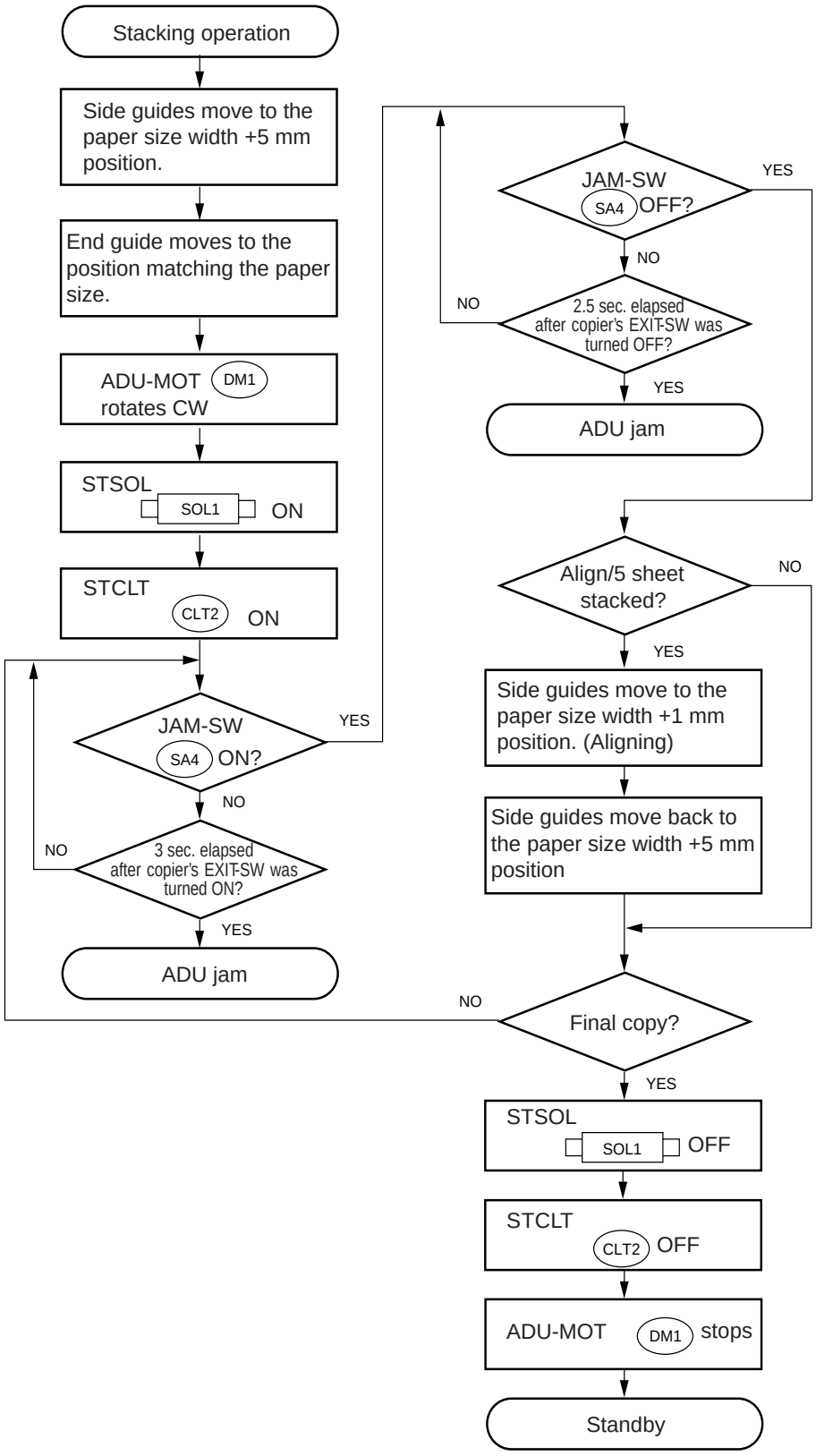

(2) Duplex copying operation

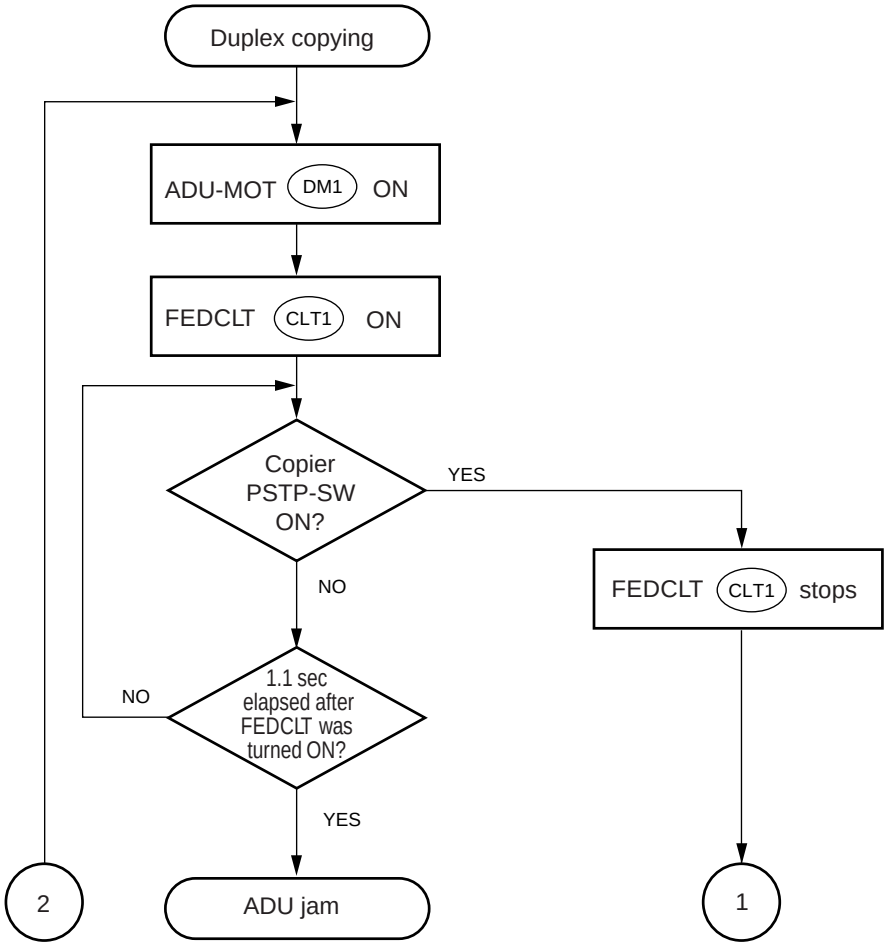

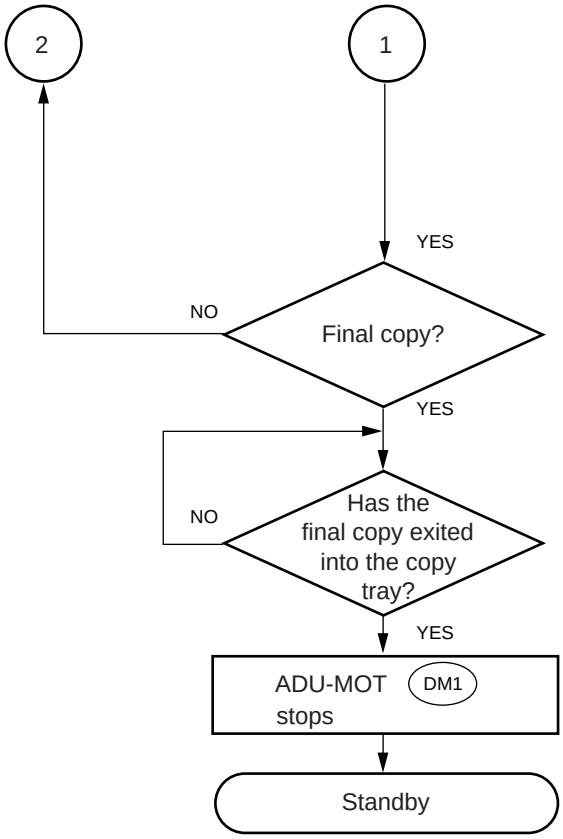
2
1
YES
NO
Final copy?
YES
NO
Has the final copy exited into the copy tray?
YES
ADU-MOT stops
DM1
Standby

13.8.6 Timing charts

(A) Timing for ADU stacking (A4 size, feeding from the copier's two cassettes)

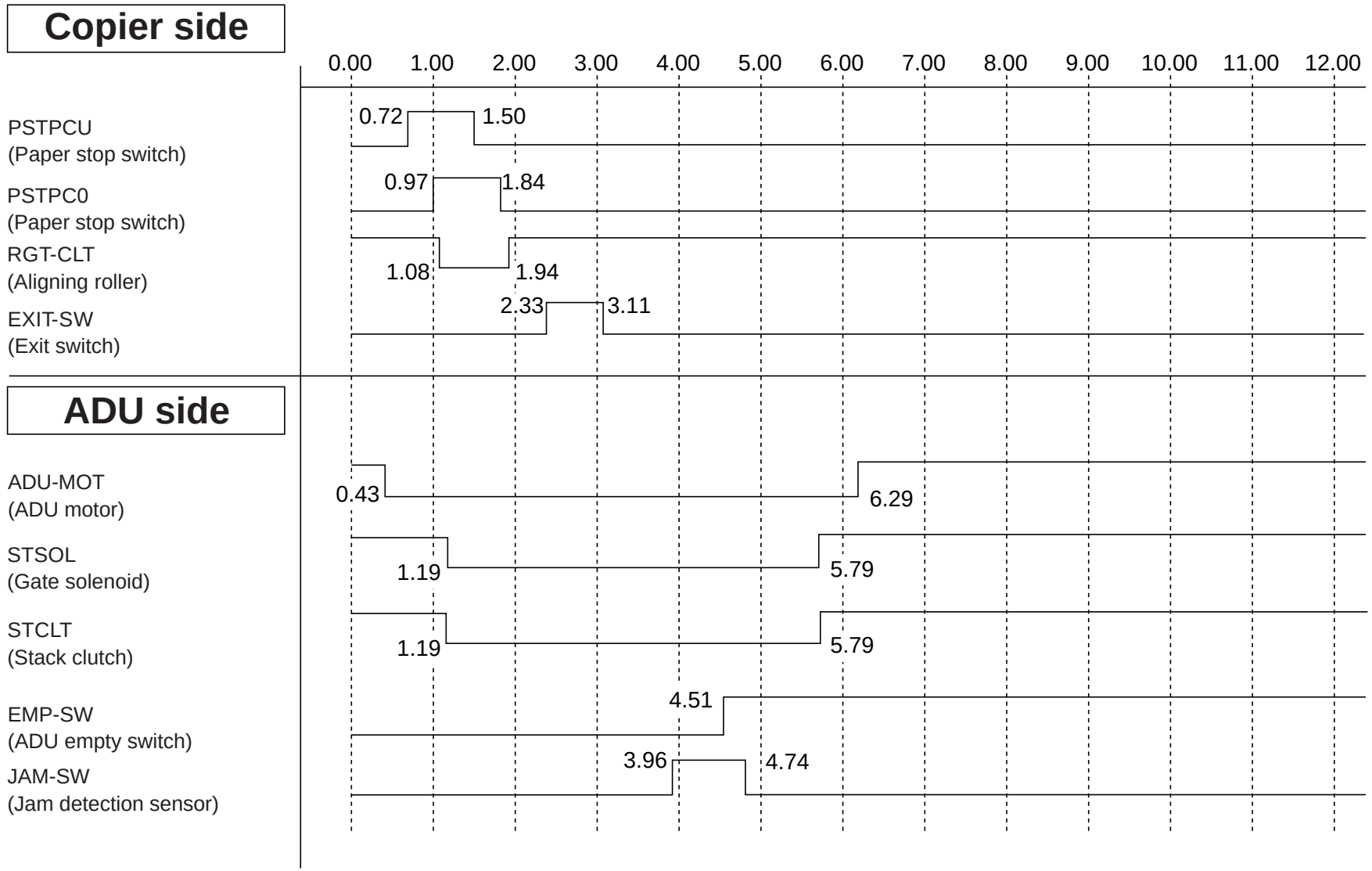

(B) Timing for ADU re-feeding (A4 size, single-sheet stacking)

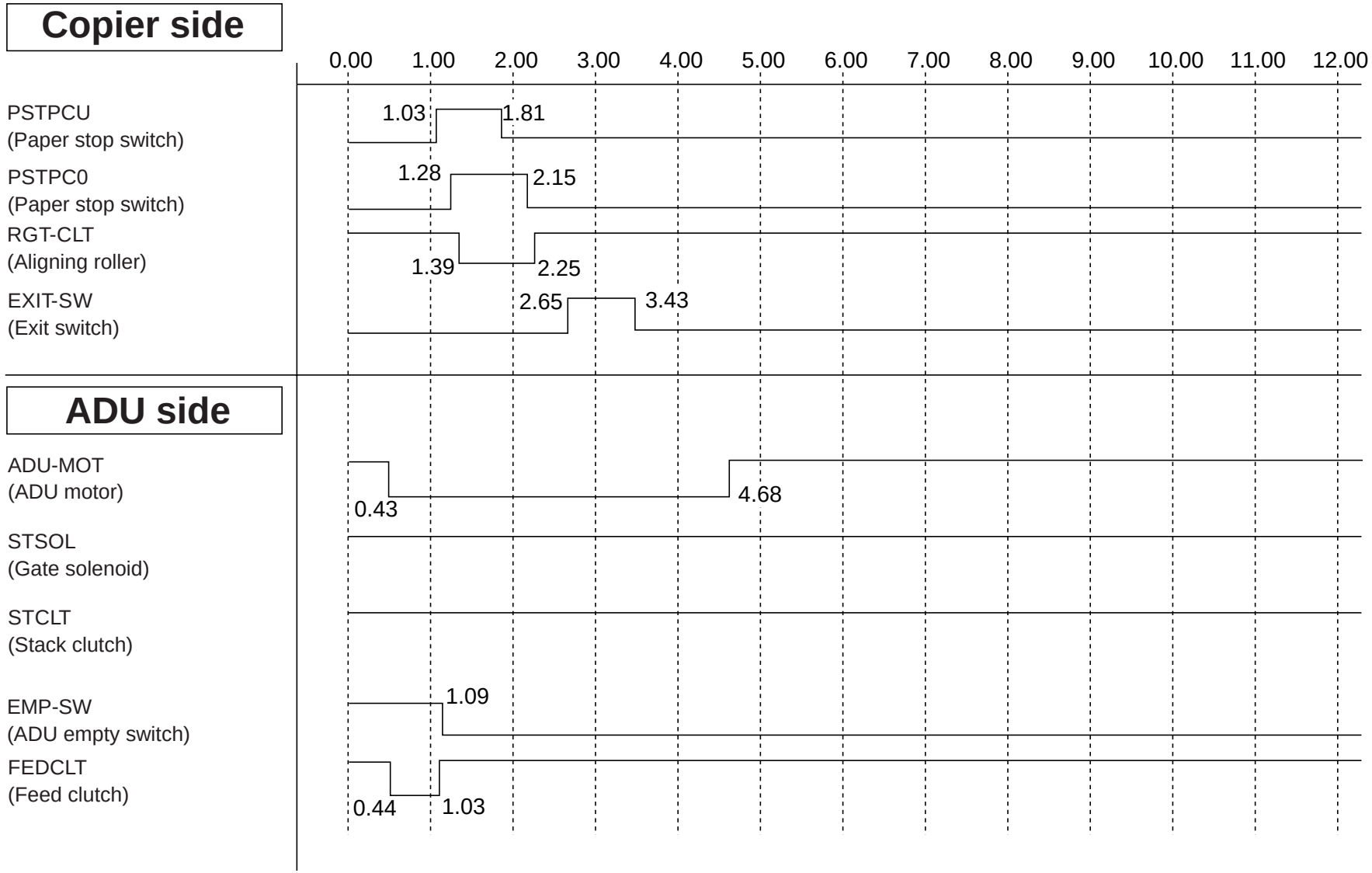

Nov. 1997 © TOSHIBA

13.8.7 Harness connection diagram

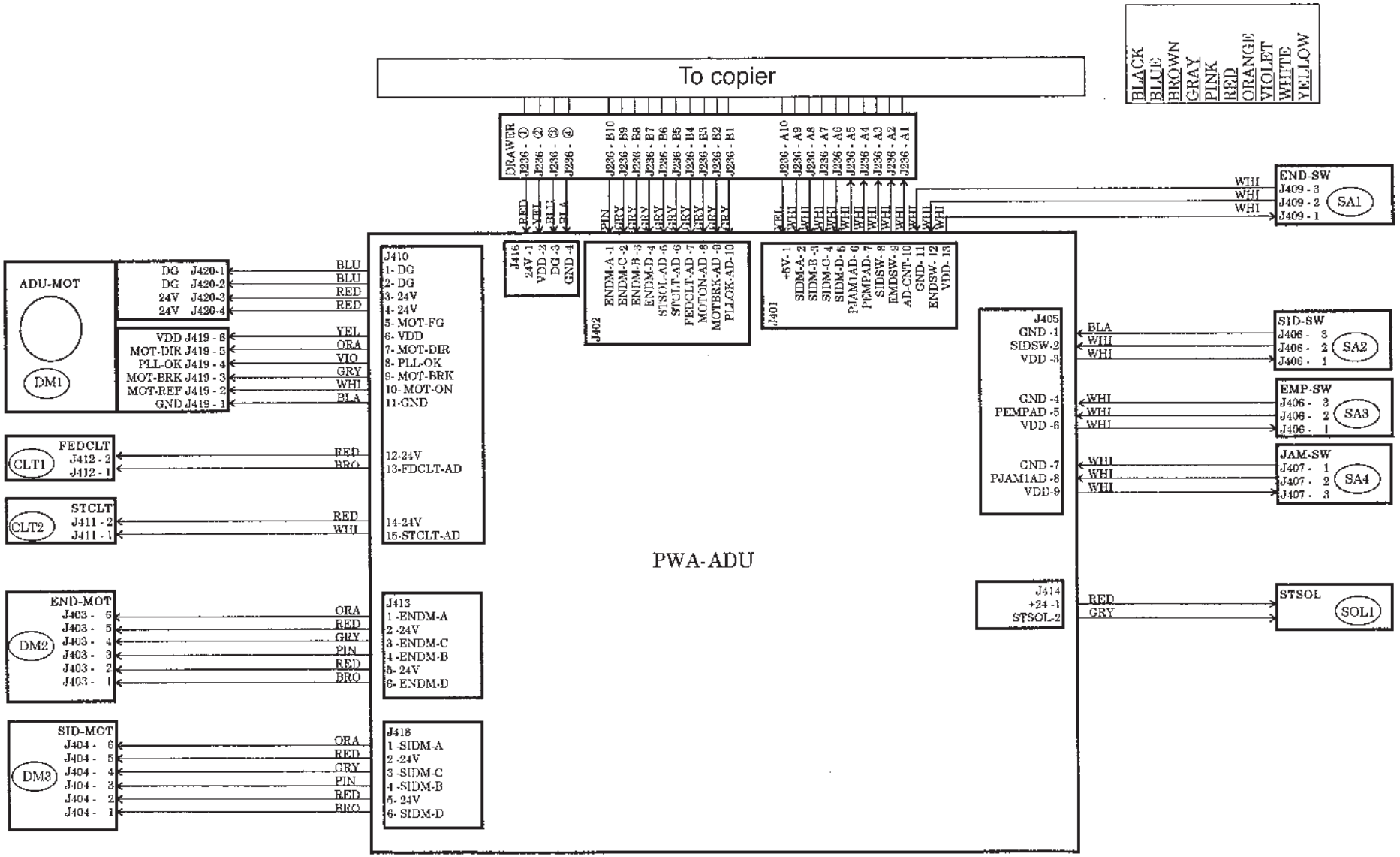

13.8.8 Circuit diagrams (1/2)

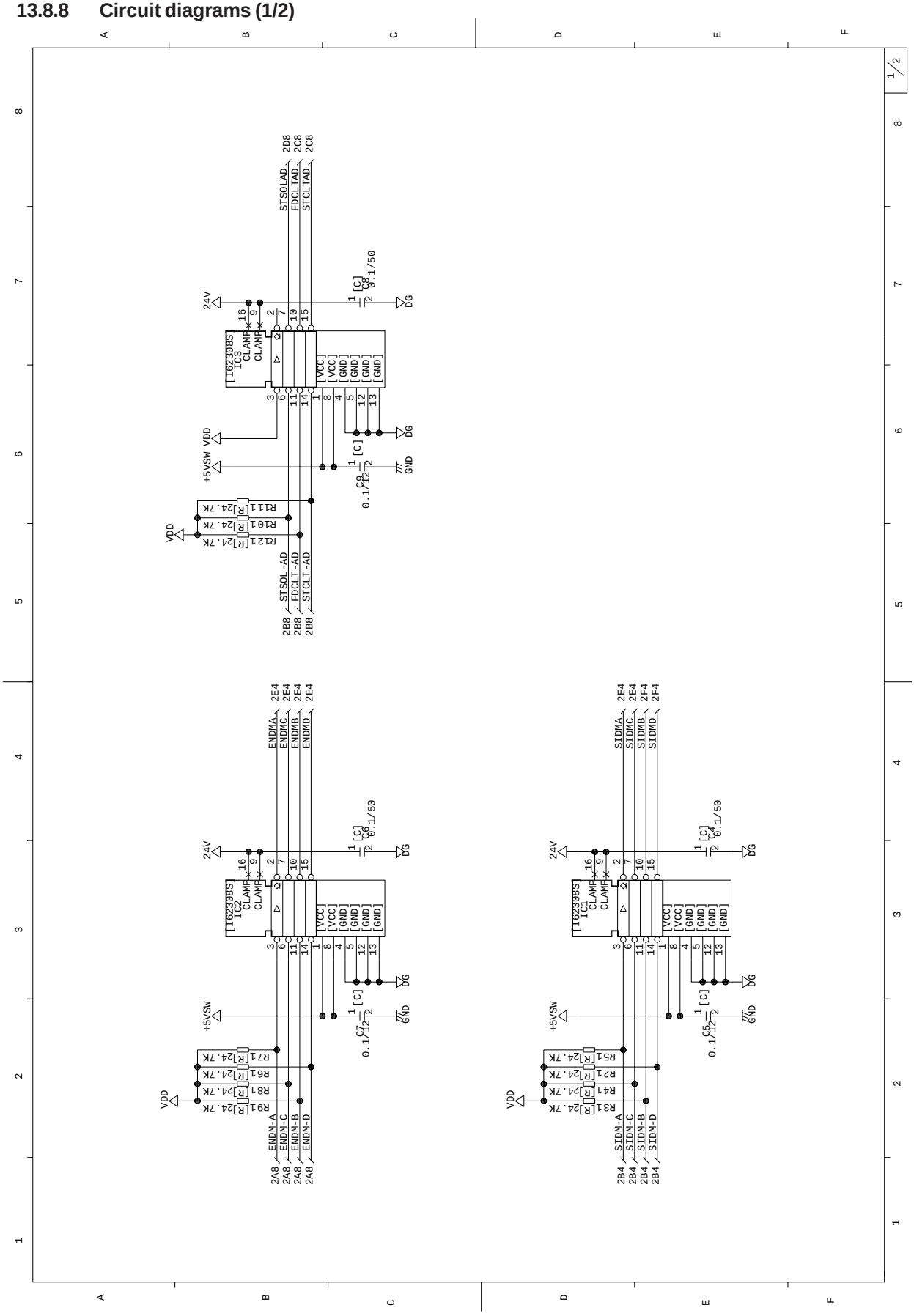

Circuit diagrams (2/2)

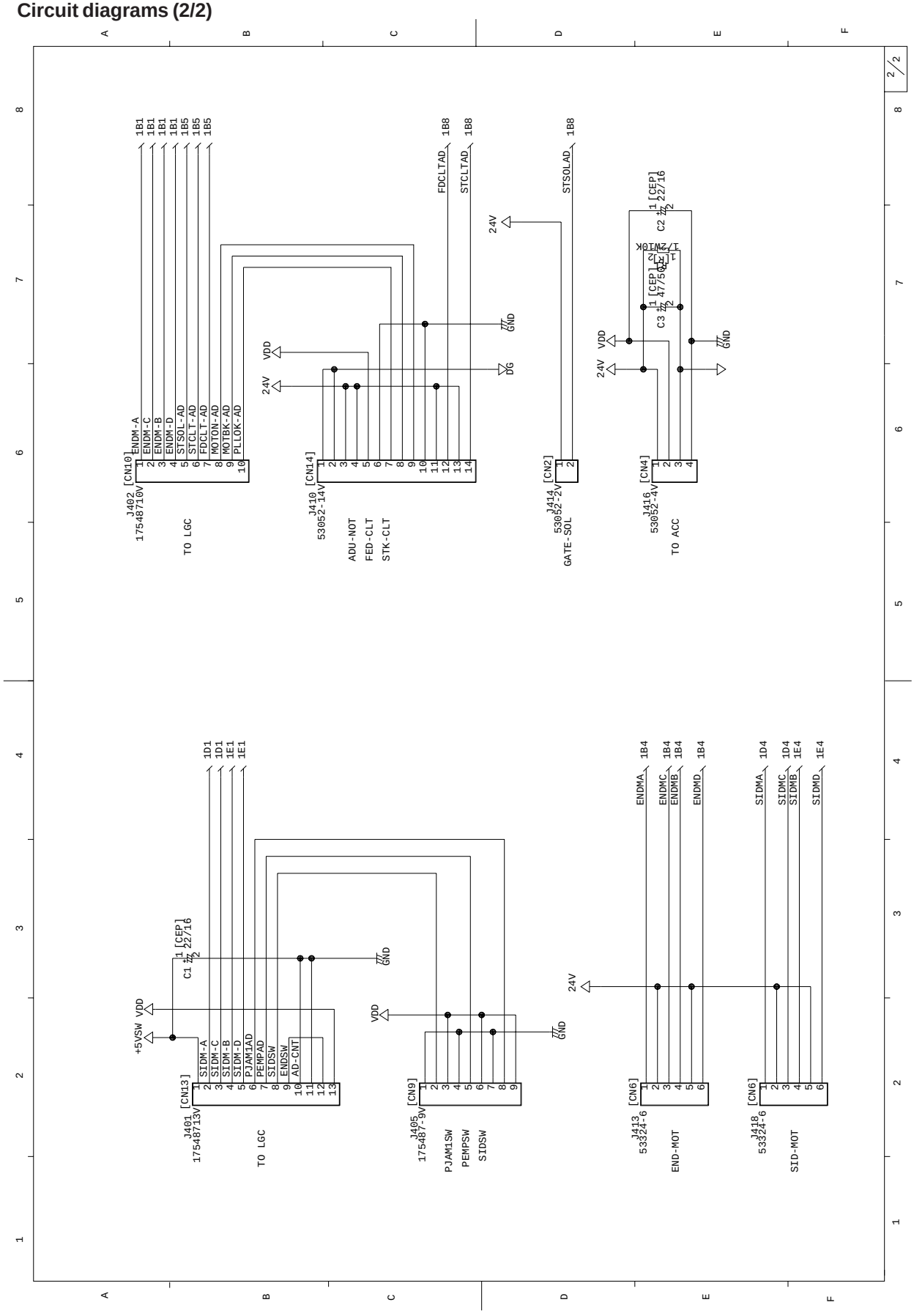

13.8.9 PC board assembly

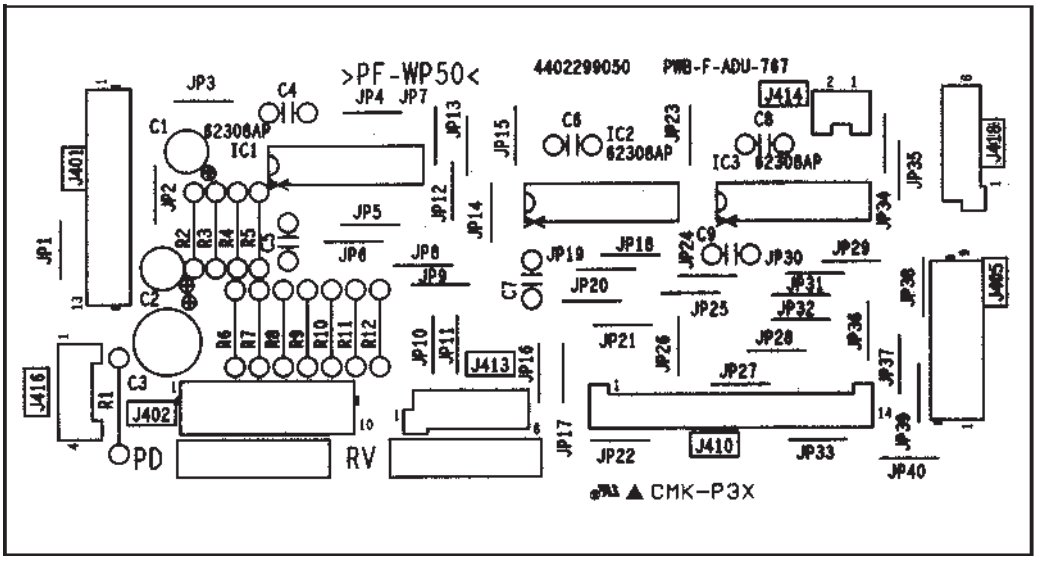

14. ELECTRIC CIRCUIT DIAGRAM

14.1 Logic Circuit (PWA-LGC)

HINT

How to search for where a signal in a circuit diagram has jumped to.

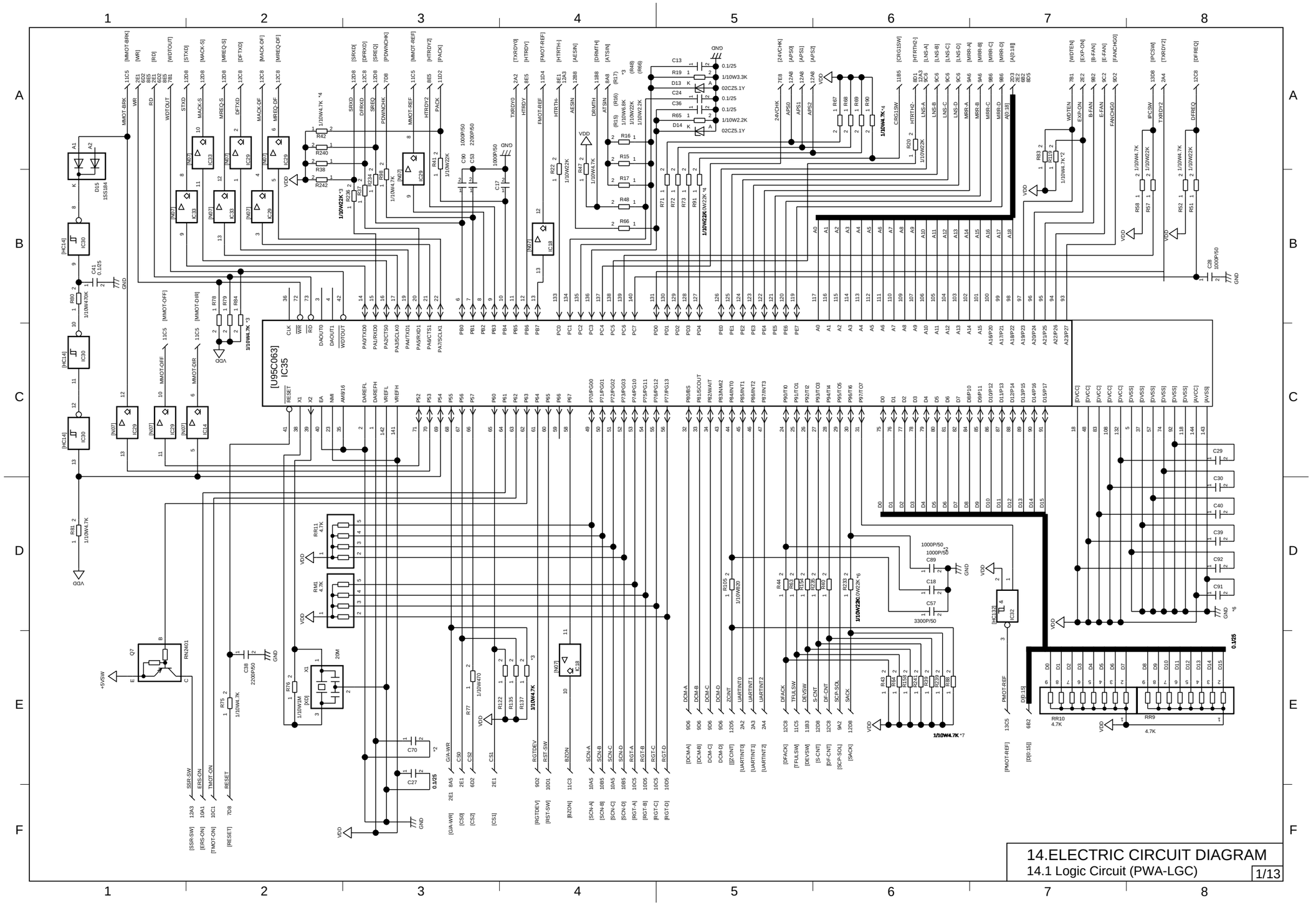
14.ELECTRIC CIRCUIT DIAGRAM
14.1 Logic Circuit (PWA-LGC)
1/13
[U95C063] IC35
RESET
X1
X2
EA
NMI
AM4916
DAREFL
DAREFH
VREFL
VREFH
P0 P1 P2 P3 P4 P5 P6 P7
P70/PG00
P71/PG01
P72/PG02
P73/PG03
P74/PG10
P75/PG11
P76/PG12
P77/PG13
P80/BS
P81/SCOUT
P82/WAIT
P83/NMI2
P84/NT0
P85/NT1
P86/INT2
P87/INT3
P90/T0
P91/T01
P92/T2
P93/T23
P94/T4
P95/T05
P96/T6
P97/T07
D0 D1 D2 D3 D4 D5 D6 D7 D8 D9 D10 D11 D12 D13 D14 D15
P00/TXD0
PA0/RXD0
PA2/CTS0
PA3/SCLK0
PA4/TXD1
PA5/RXD1
PA6/CTS1
PA7/SCLK1
PB0 PB1 PB2 PB3 PB4 PB5 PB6 PB7
PC0 PC1 PC2 PC3 PC4 PC5 PC6 PC7
PD0 PD1 PD2 PD3 PD4
PE0 PE1 PE2 PE3 PE4 PE5 PE6 PE7
A0 A1 A2 A3 A4 A5 A6 A7 A8 A9 A10 A11 A12 A13 A14 A15
A16/P20 A17/P21 A18/P22 A19/P23 A20/P24 A21/P25 A22/P26 A23/P27
[VCC] [VCC] [VCC] [VCC] [VSS] [VSS] [VSS] [VSS] [VSS] [AVCC] [AVSS]
C29 C30 C40 C39 C92 C91
RR9 4.7K
RR10 4.7K
RR11 4.7K
RR12 4.7K
X1 20M
C70 C27 C38 C28
Q7 RN2401
+5VSW
SSR-SW
ERS-ON
TMOT-ON
RESET
[MMOT-BRK] [MR] [RD] [WDTOUT] [STXD] [MACK-S] [MREQ-S] [DFTXD] [MACK-DF] [MREQ-DF]
[SRXD] [DFRXD] [SREQ] [PDWNCHK] [MMOT-REF] [HTRDY2] [PACK]
[TXRDY0] [HTRDY] [FMOT-REF] [HTRTH-] [AESIN] [DRMTH] [ATSIN]
[24VCHK] [APS0] [APS1] [APS2]
[CRG1SW] [HTRTH2-] [LNS-A] [LNS-B] [LNS-C] [LNS-D] [MRR-A] [MRR-B] [MRR-C] [MRR-D] [A[0:18]]
[WDTEN] [EXP-ON] [B-FAN] [E-FAN] [FANCHK0]
[PCSW] [TXRDY2] [DFREQ]
[MMOT-OFF] [MMOT-DIR]
[DCM-A] [DCM-B] [DCM-C] [DCM-D] [ZCINT] [UARTINT0] [UARTINT1] [UARTINT2] [DFACK] [TFULSW] [DEVSW] [S-CNT] [DF-CNT] [SCP-SCL] [SACK]
[SCN-A] [SCN-B] [SCN-C] [SCN-D] [RGT-A] [RGT-B] [RGT-C] [RGT-D]
[RGTDEV] [RST-SW] [BZON] [CS0] [CS1] [CS2] [GA-WR]
[PMOT-REF] [D[0:15]]
[SSR-SW] [ERS-ON] [TMOT-ON] [RESET]
VDD GND
1/10W4.7K *4
1/10W2K *3
1/10W2K *4
1/10W4.7K *3
1/10W4.7K *7
1/10W2K *6
1/10W4.7K *2
1/10W3.3K
02CZ5.1Y
1/10W2.2K
0.1/25
1000P/50
3300P/50
2200P/50
1/10W470
1/10W1M
1/10W820
1/10W22K
1/10W4.7K
1/10W2K
1/10W1K
1/10W680
1/10W10K
1/10W2.2K
1/10W2K
1/10W4.7K
1/10W4.7K
1/10W2K
1/10W4.7K
1/10W2K
1/10W4.7K
1/10W2

HINT

How to search for where a signal in a circuit diagram has jumped to.

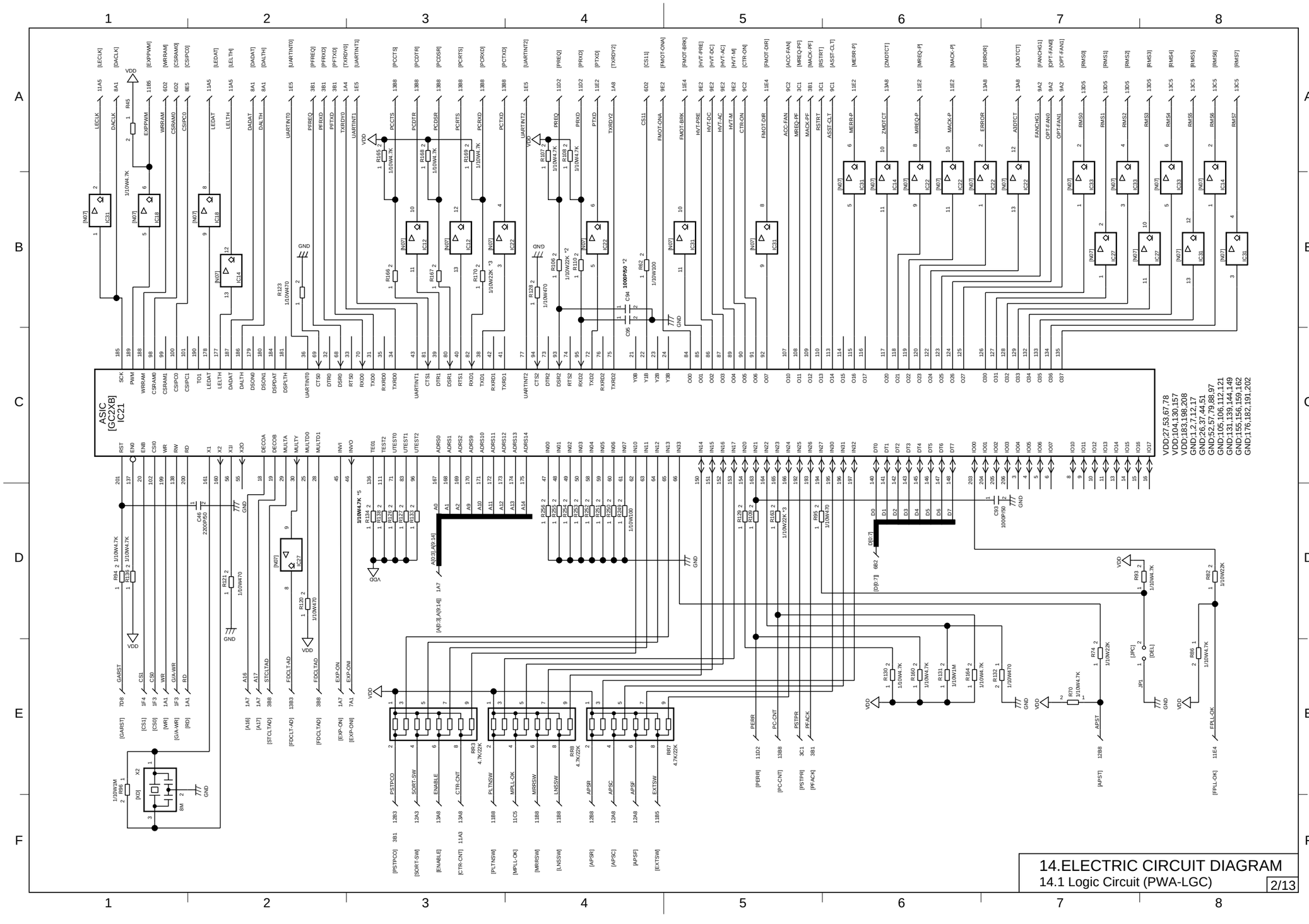

 Nov. 1997 © TOSHIBA

HINT

How to search for where a signal in a circuit diagram has jumped to.

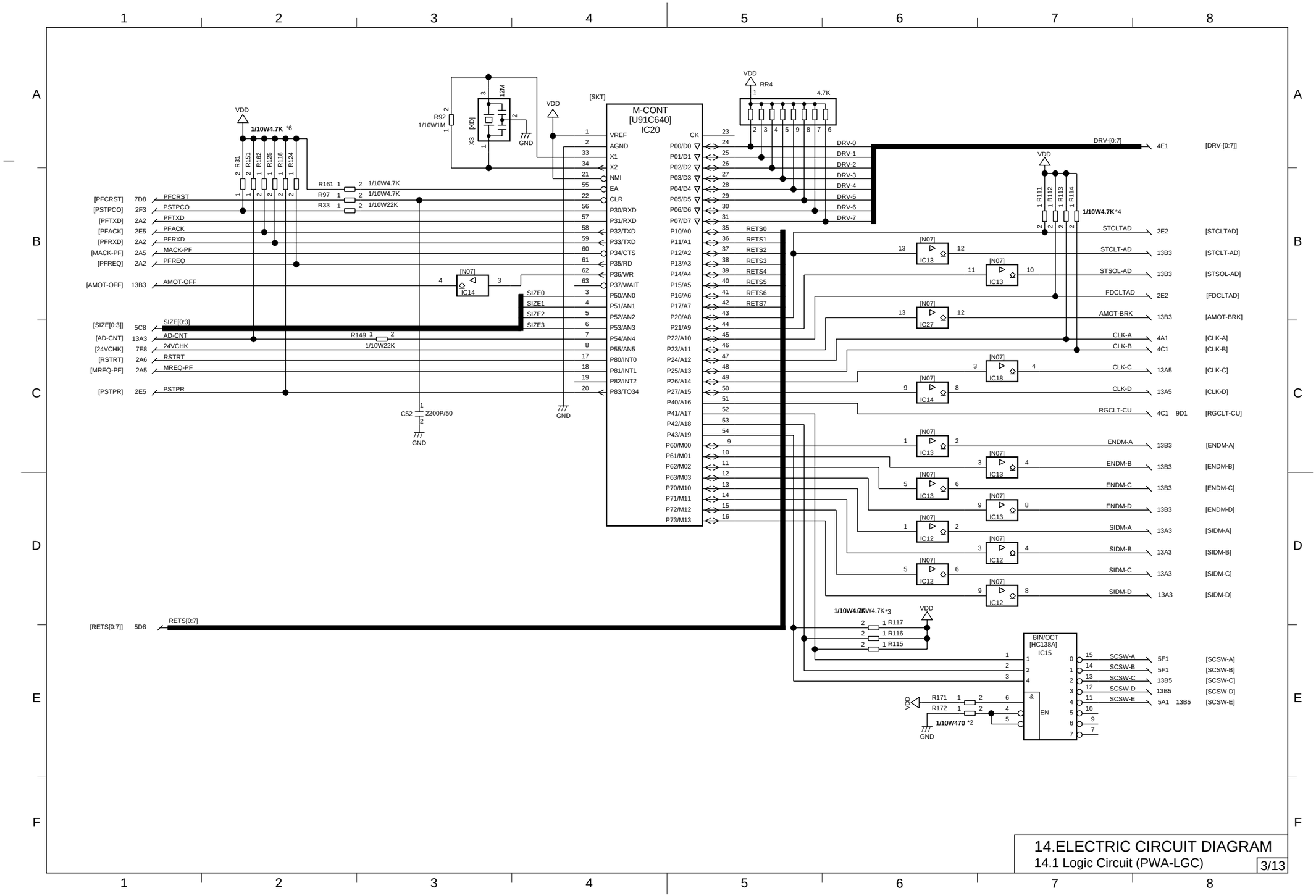

HINT

How to search for where a signal in a circuit diagram has jumped to.

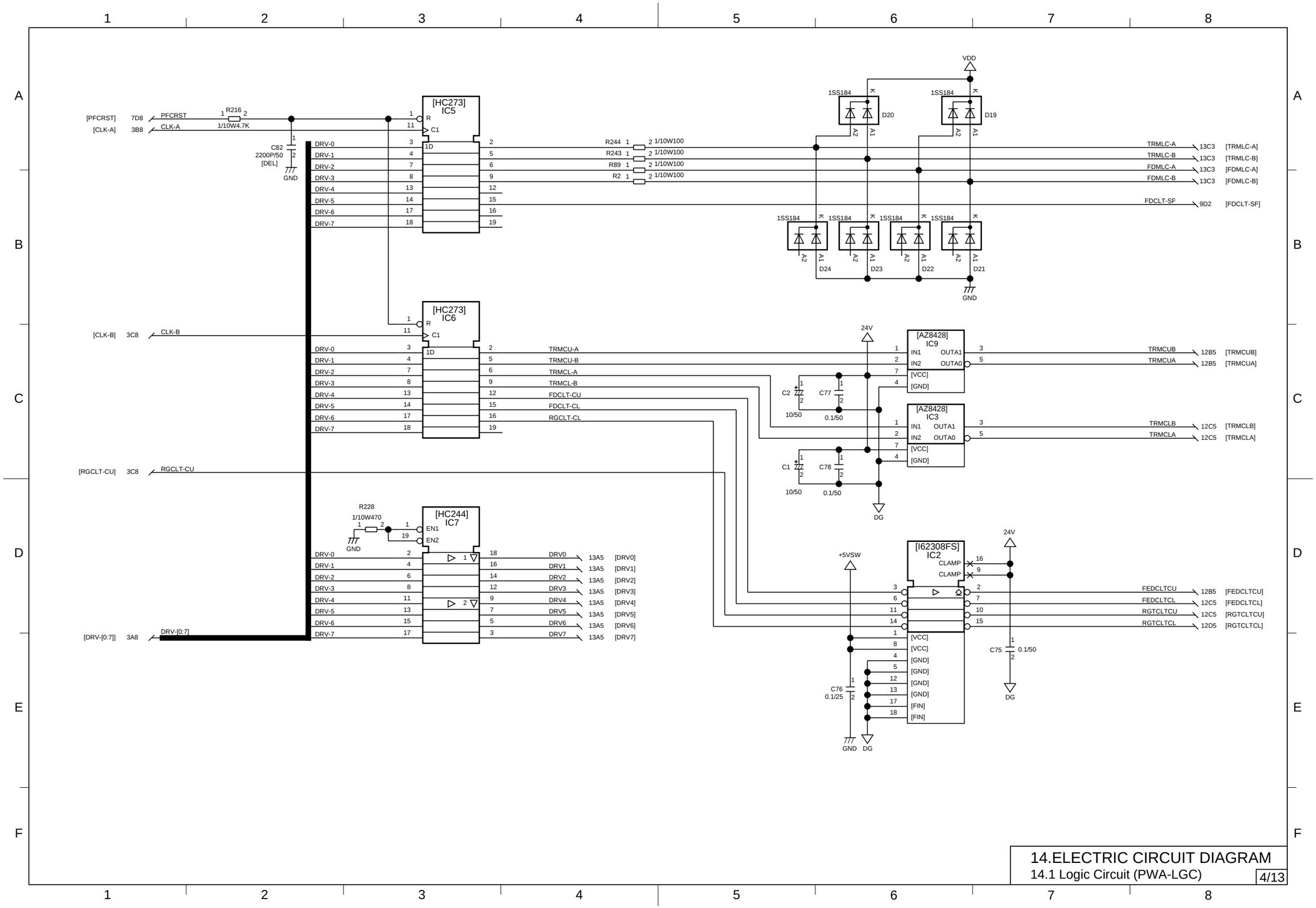

 Nov. 1997 © TOSHIBA

HINT

How to search for where a signal in a circuit diagram has jumped to.

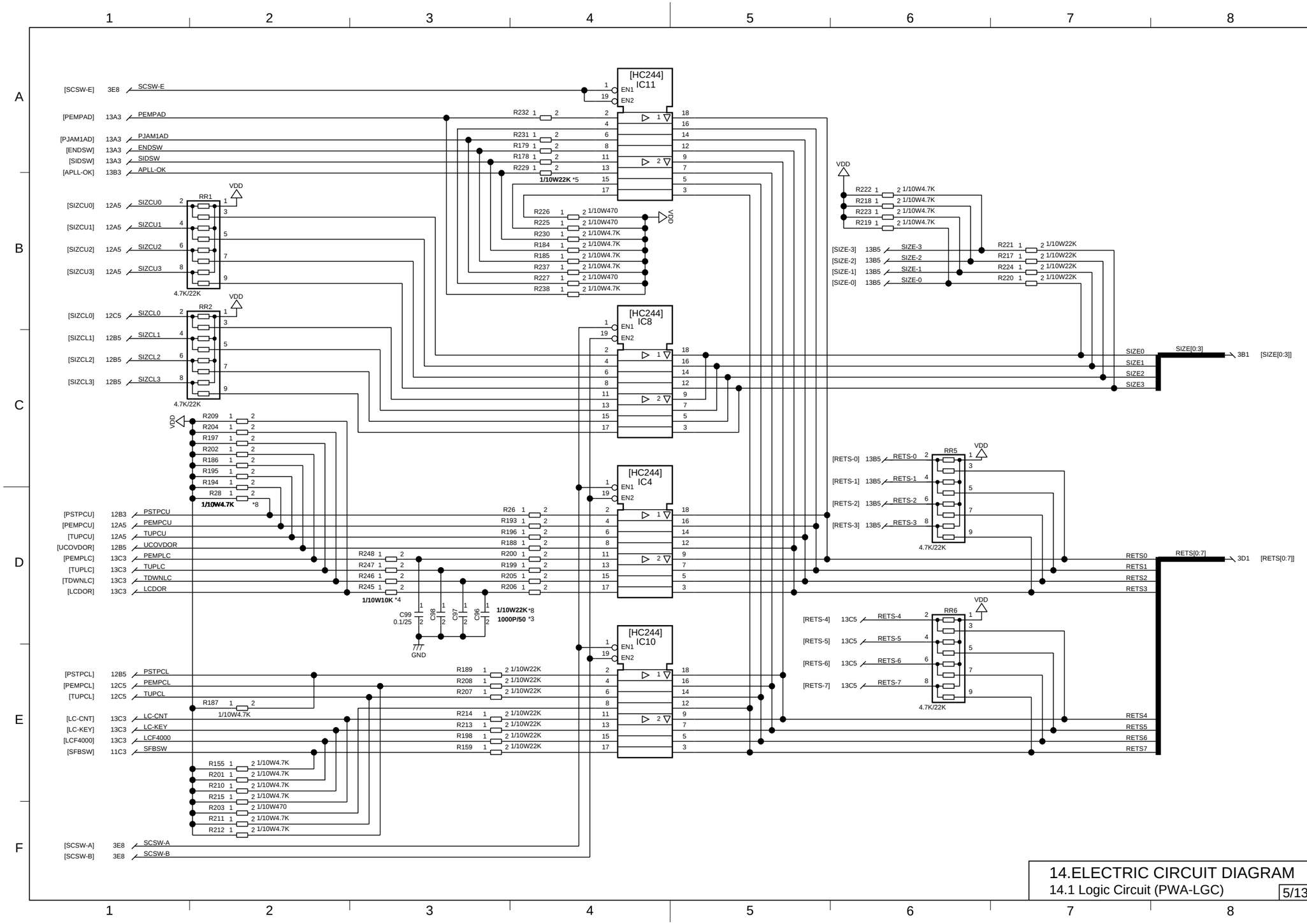

HINT

How to search for where a signal in a circuit diagram has jumped to.

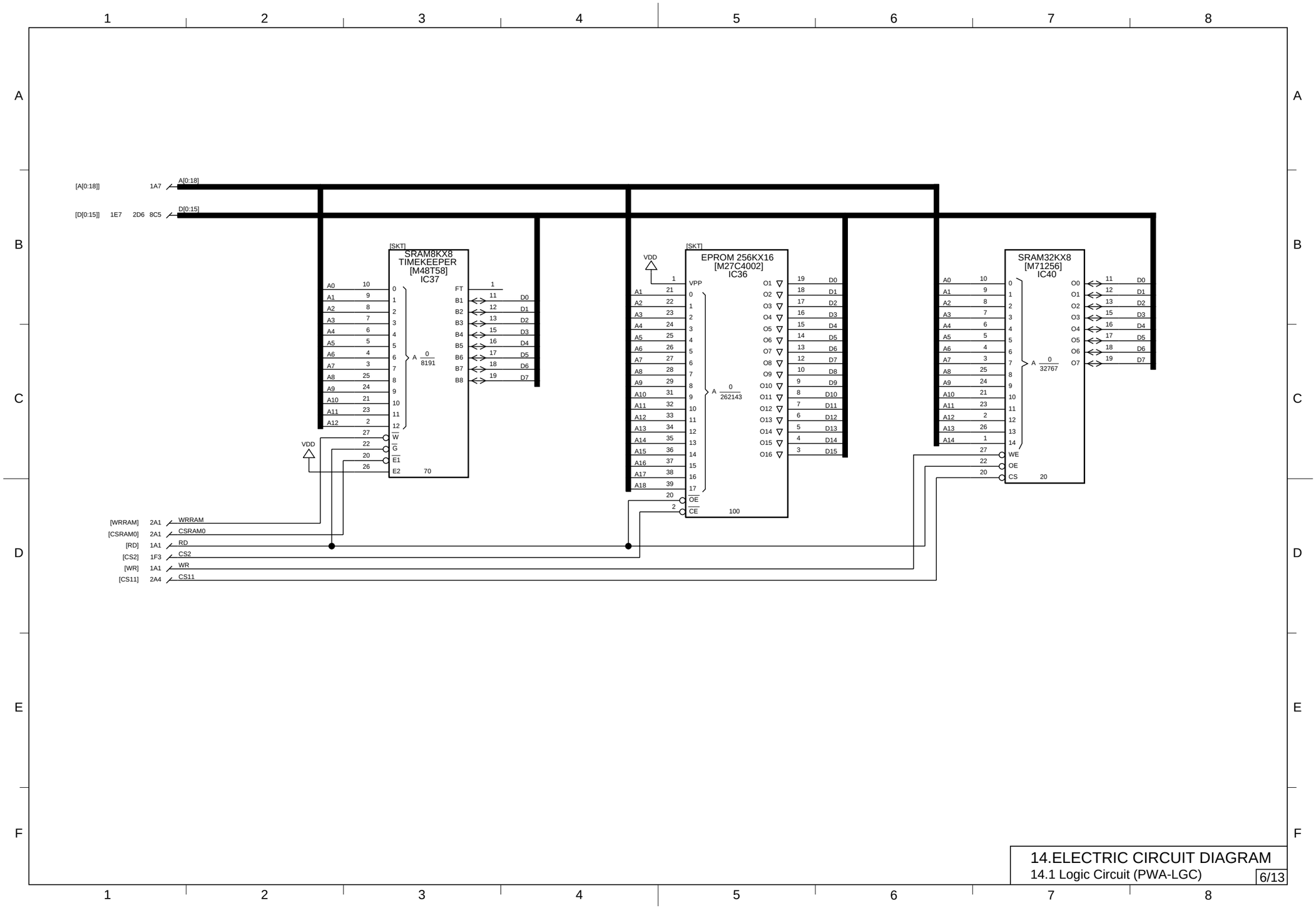

 Nov. 1997 © TOSHIBA

HINT

How to search for where a signal in a circuit diagram has jumped to.

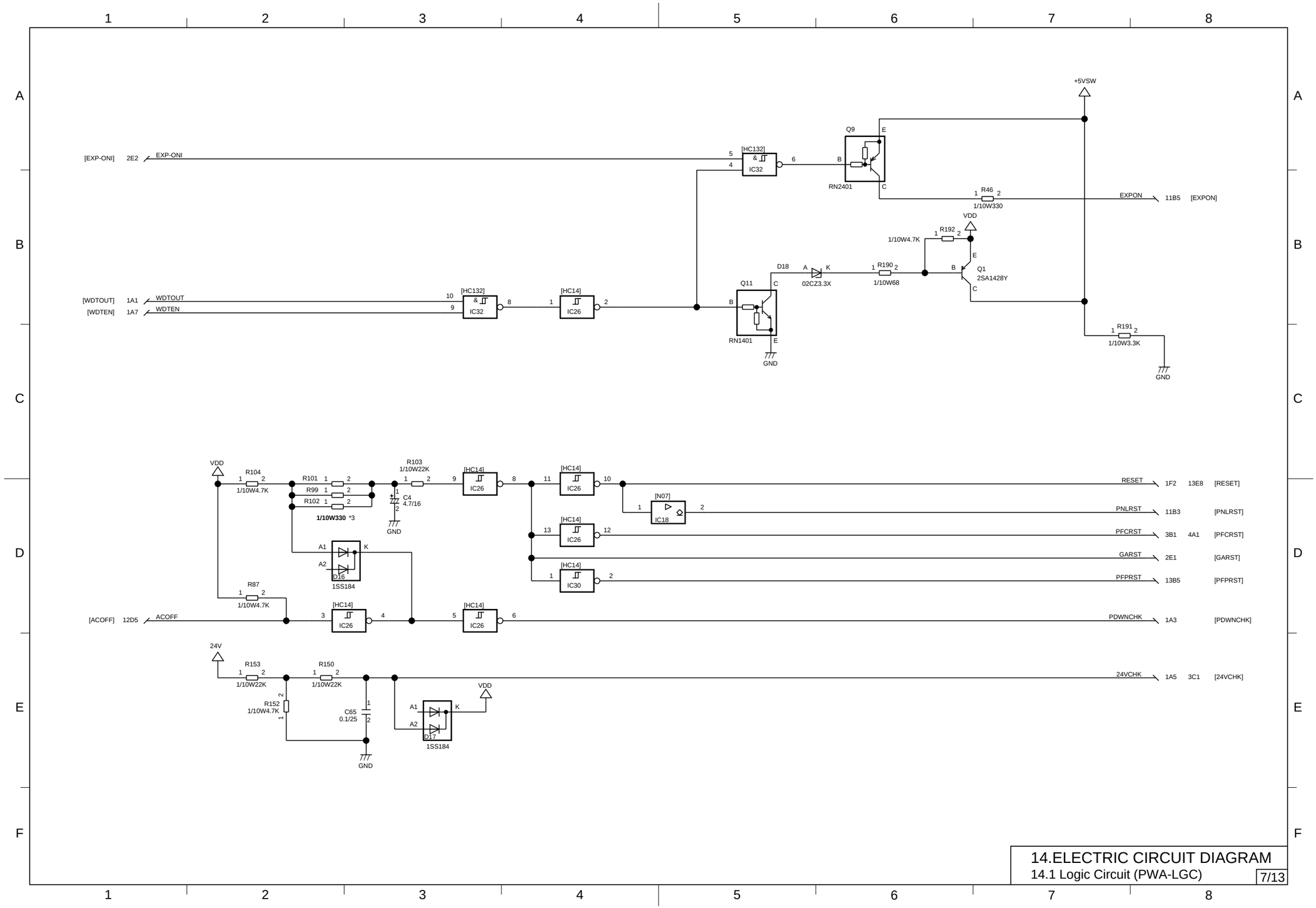

14.ELECTRIC CIRCUIT DIAGRAM

14.1 Logic Circuit (PWA-LGC) 7/13

HINT

How to search for where a signal a circuit diagram has jumped to.

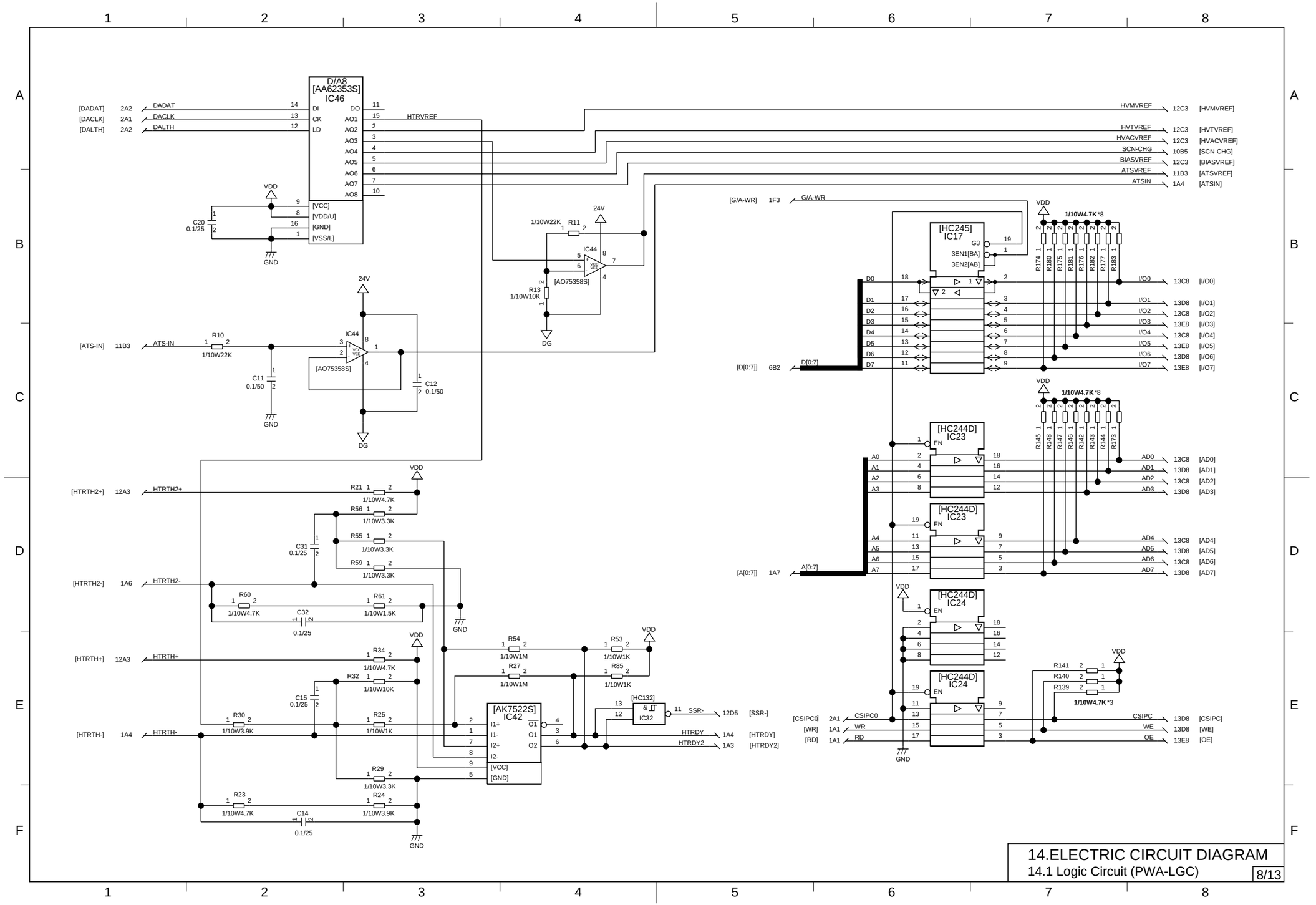

14.ELECTRIC CIRCUIT DIAGRAM

14.1 Logic Circuit (PWA-LGC)

8/13

Nov. 1997 © TOSHIBA

HINT

How to search for where a signal in a circuit diagram has jumped to.

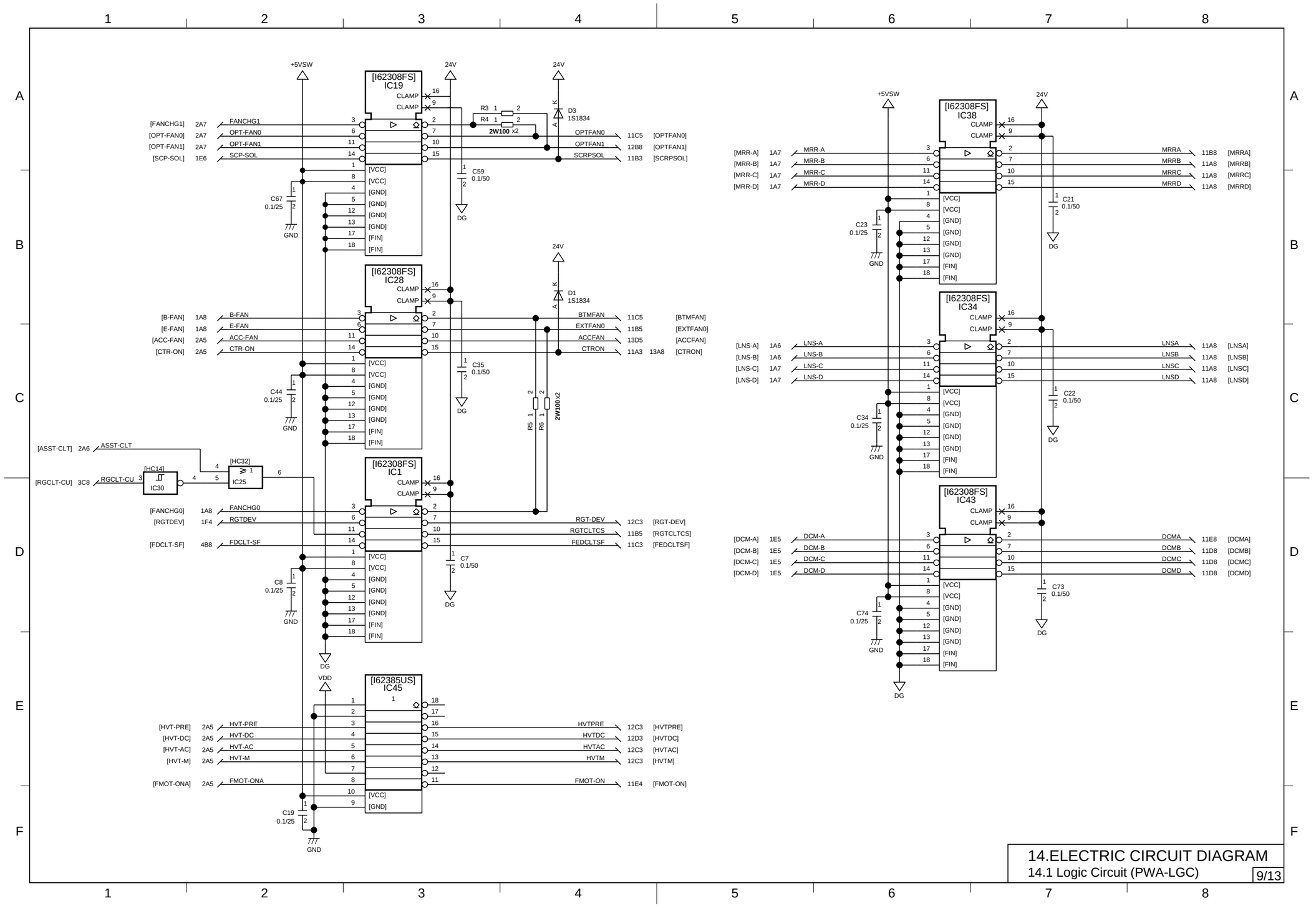

HINT

How to search for where a signal in a circuit diagram has jumped to.

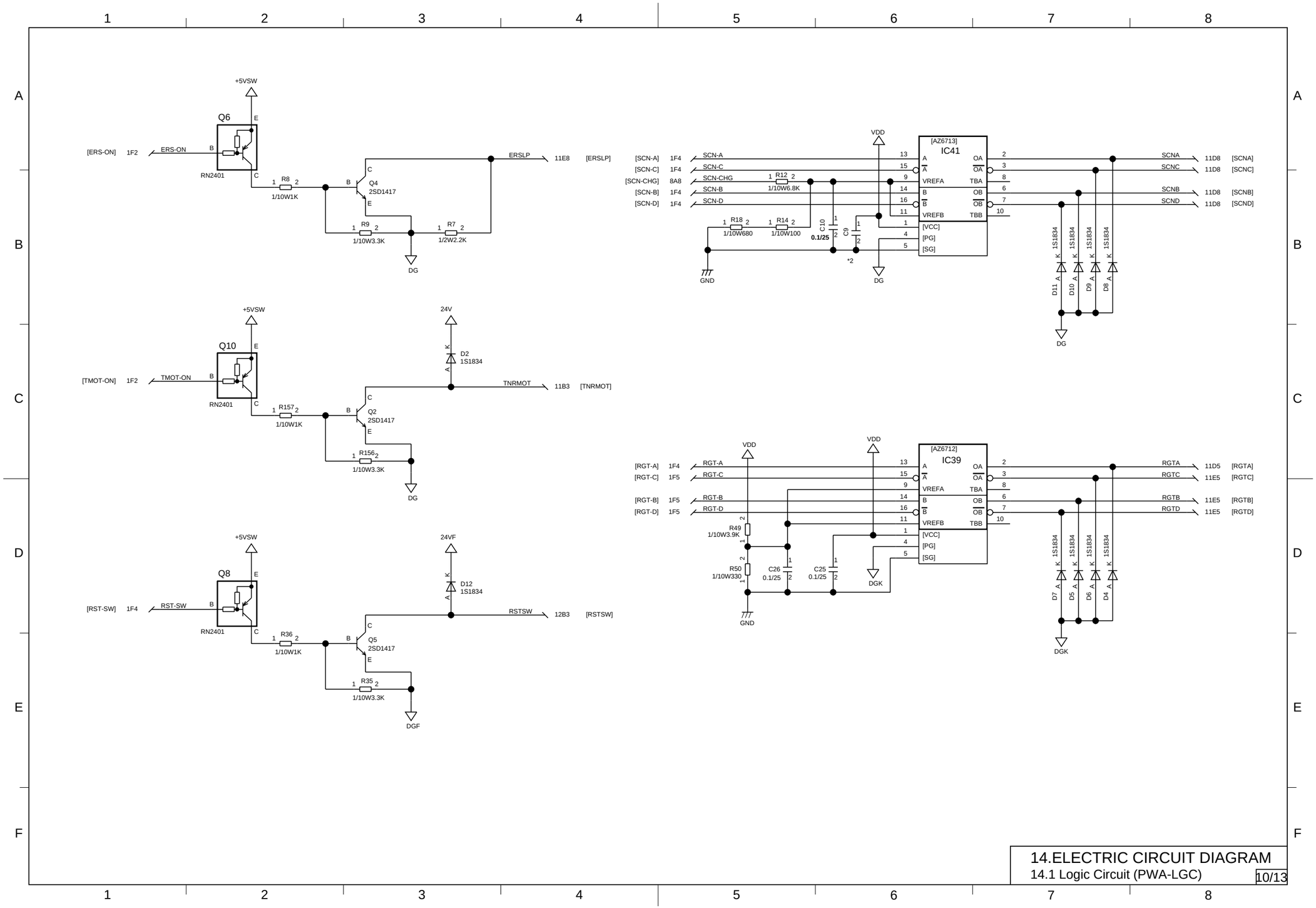

14.ELECTRIC CIRCUIT DIAGRAM

14.1 Logic Circuit (PWA-LGC) 10/13

 Nov. 1997 © TOSHIBA

HINT

How to search for where a signal in a circuit diagram has jumped to.

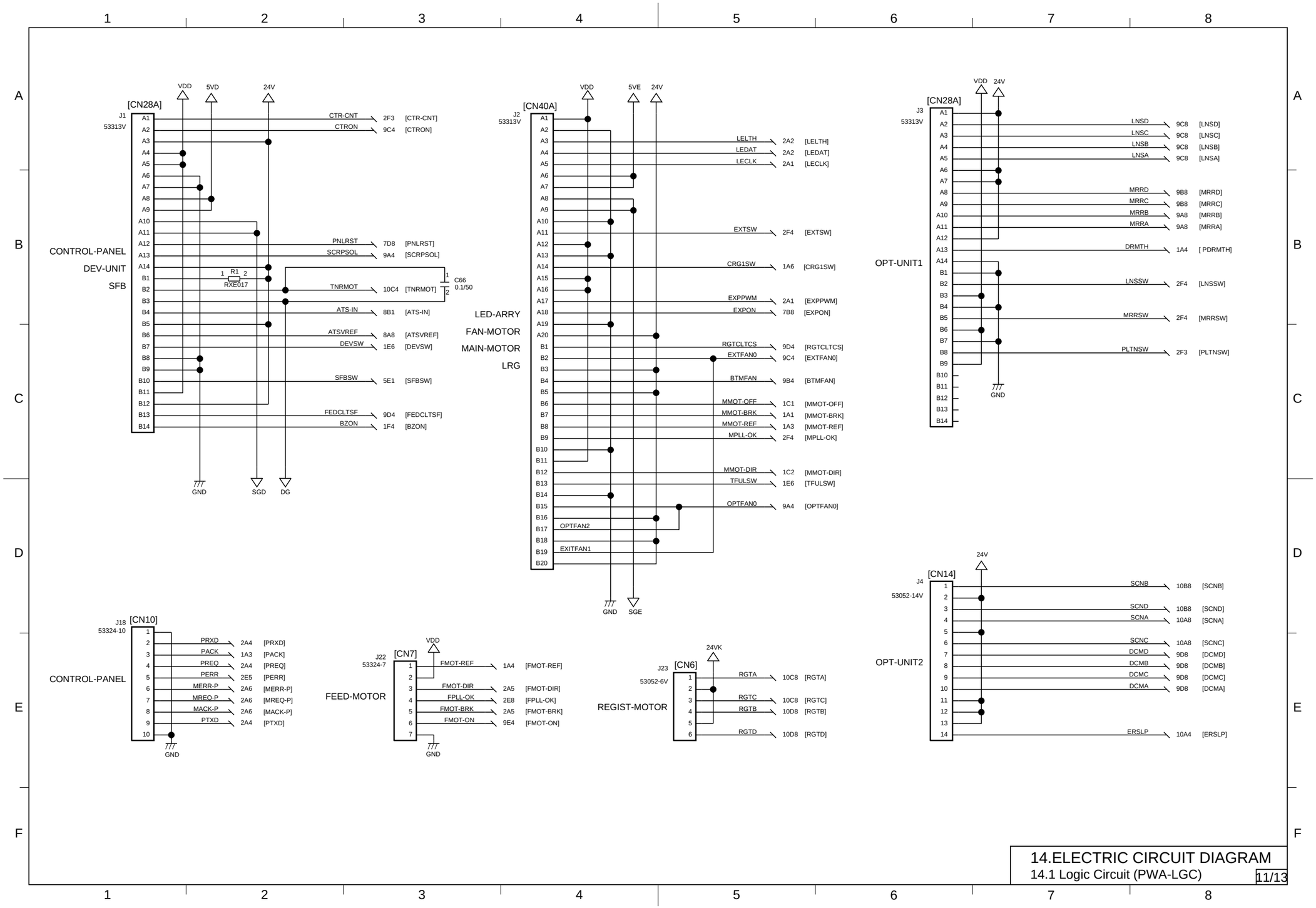

HINT

How to search for where a signal in a circuit diagram has jumped to.

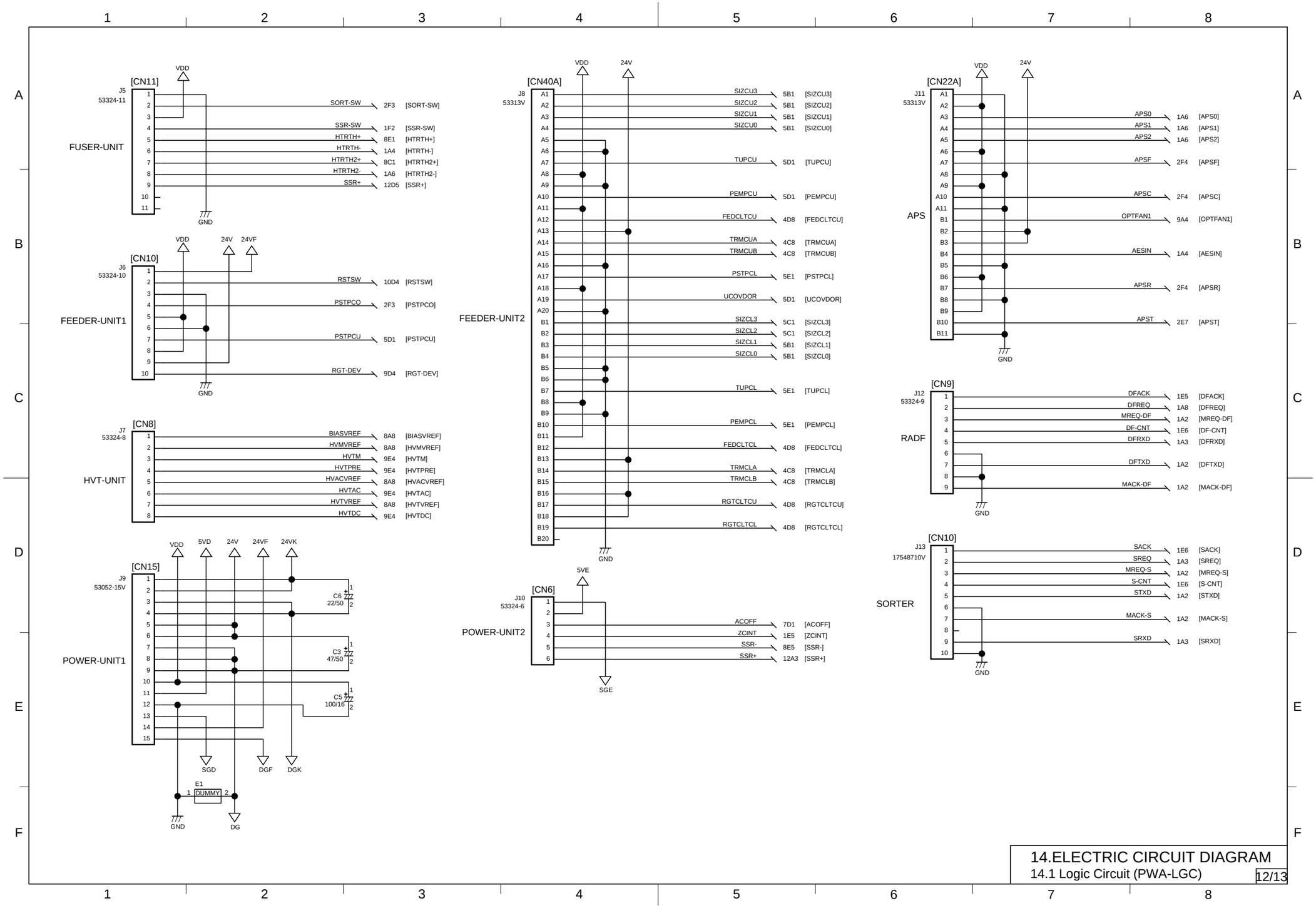

HINT

How to search for where a signal in a circuit diagram has jumped to.

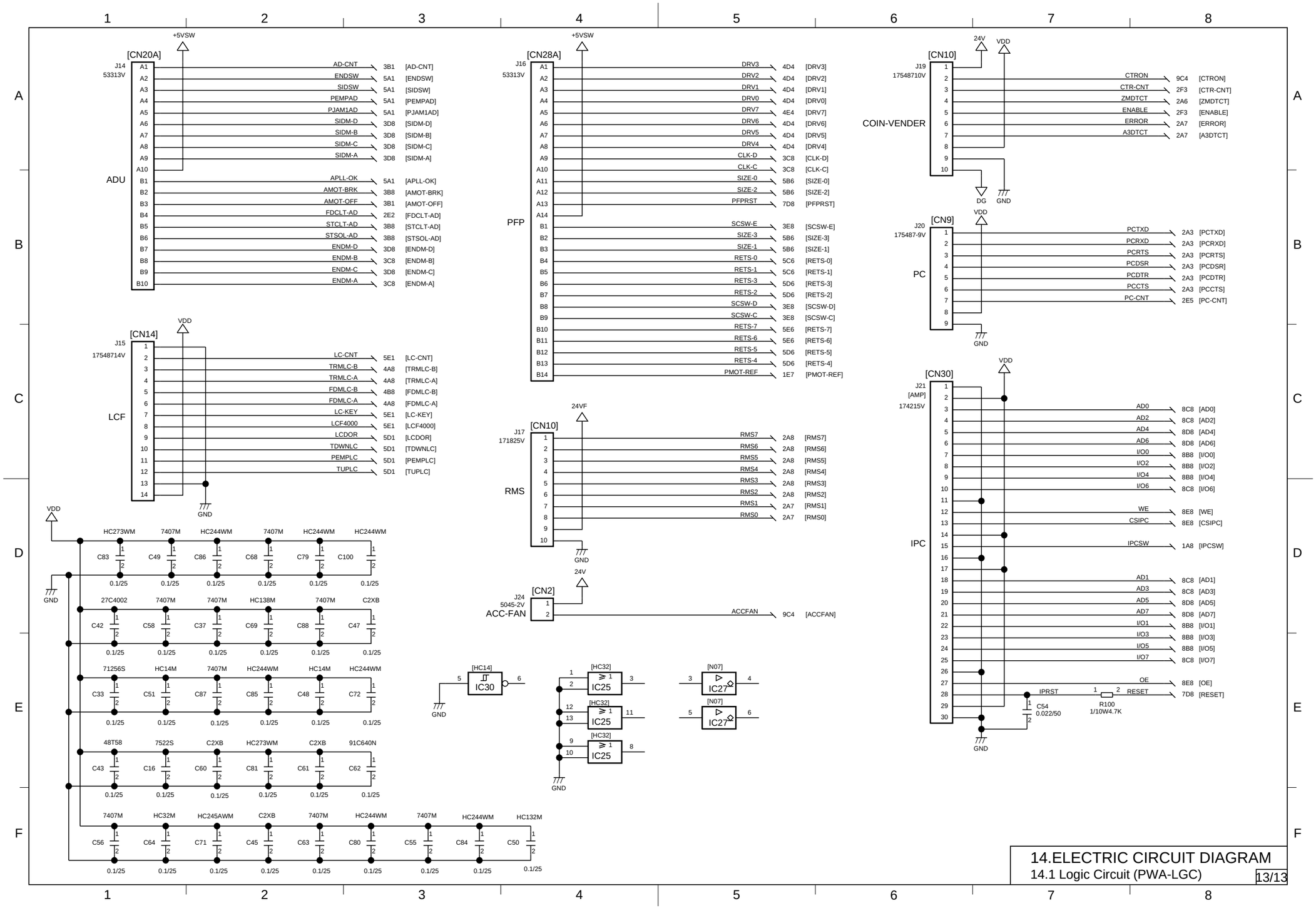

HINT

How to search for where a signal in a circuit diagram has jumped to.

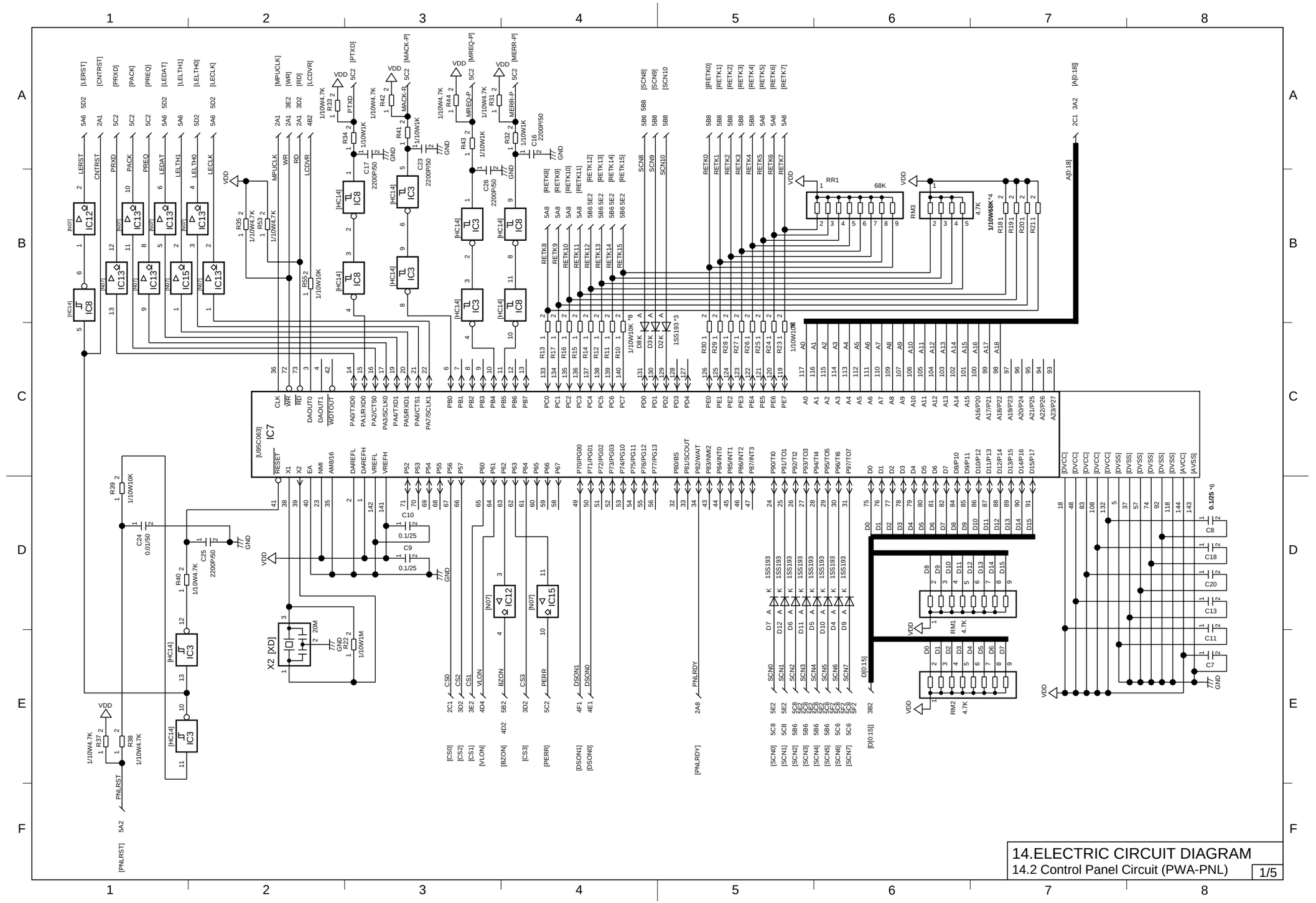

 Nov. 1997 © TOSHIBA

HINT

How to search for where a signal in a circuit diagram has jumped to.

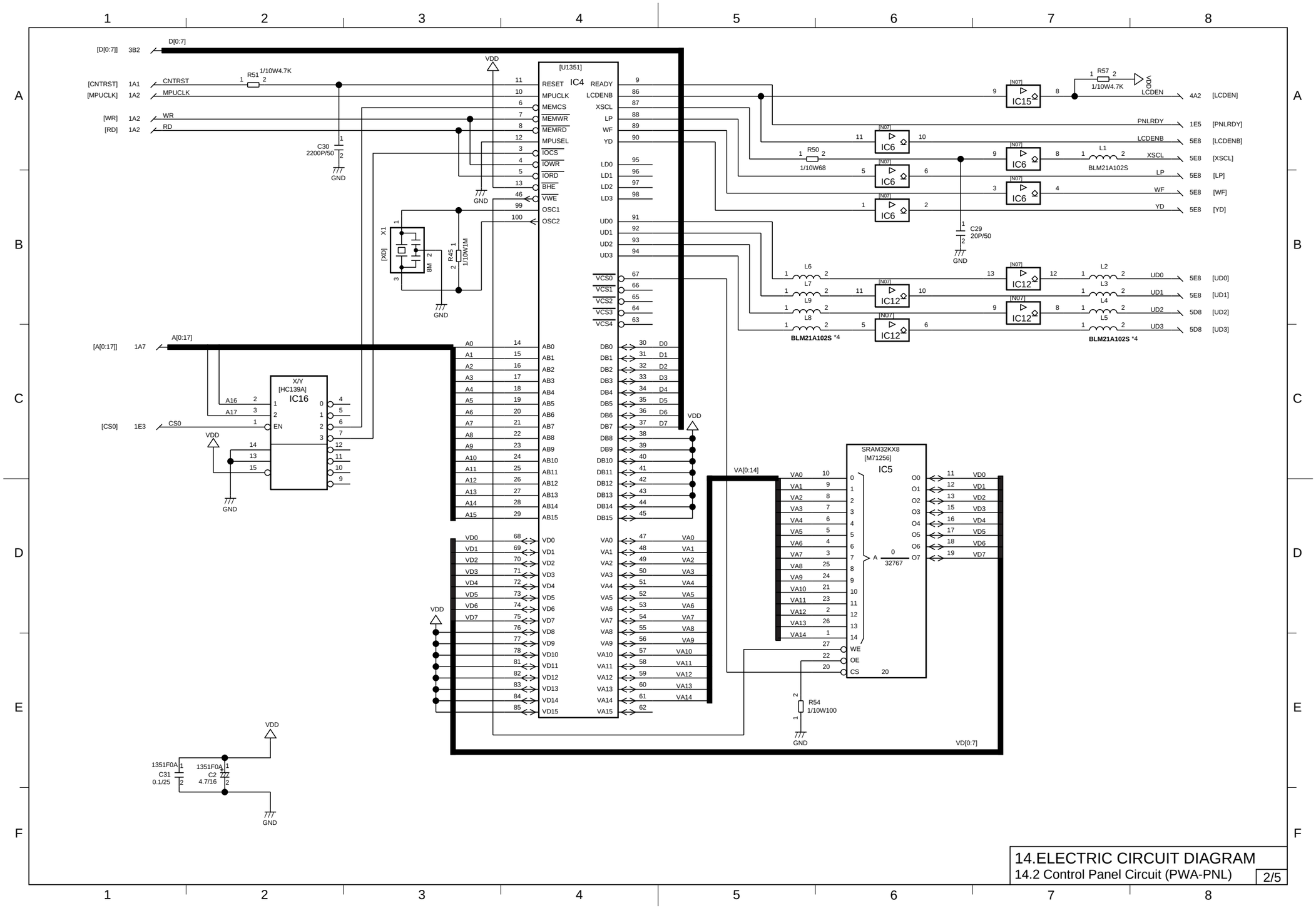

HINT

How to search for where a signal in a circuit diagram has jumped to.

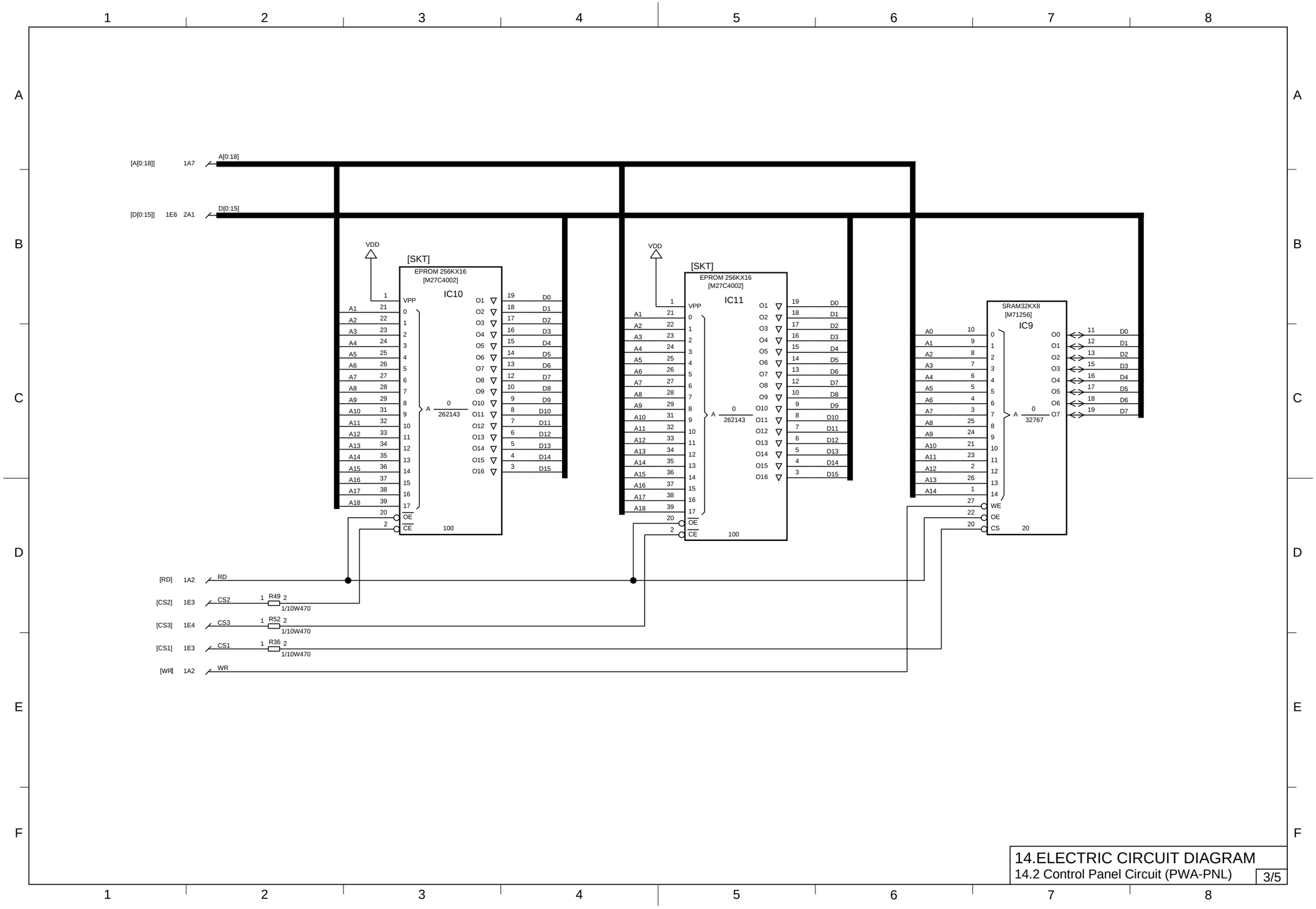

 Nov. 1997 © TOSHIBA

HINT

How to search for where a signal in a circuit diagram has jumped to.

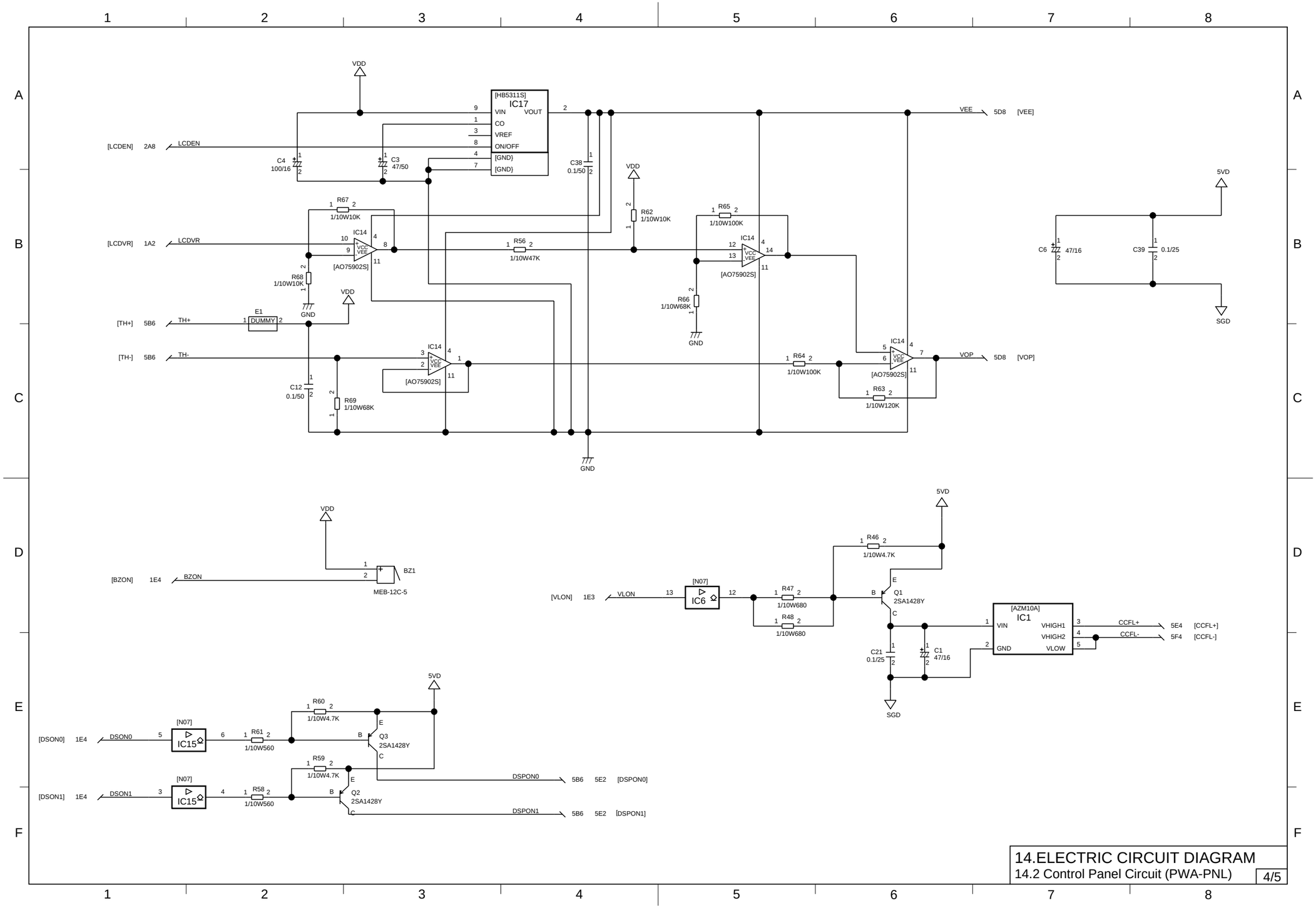

14.ELECTRIC CIRCUIT DIAGRAM

14.2 Control Panel Circuit (PWA-PNL) 4/5

HINT

How to search for where a signal in a circuit diagram has jumped to.

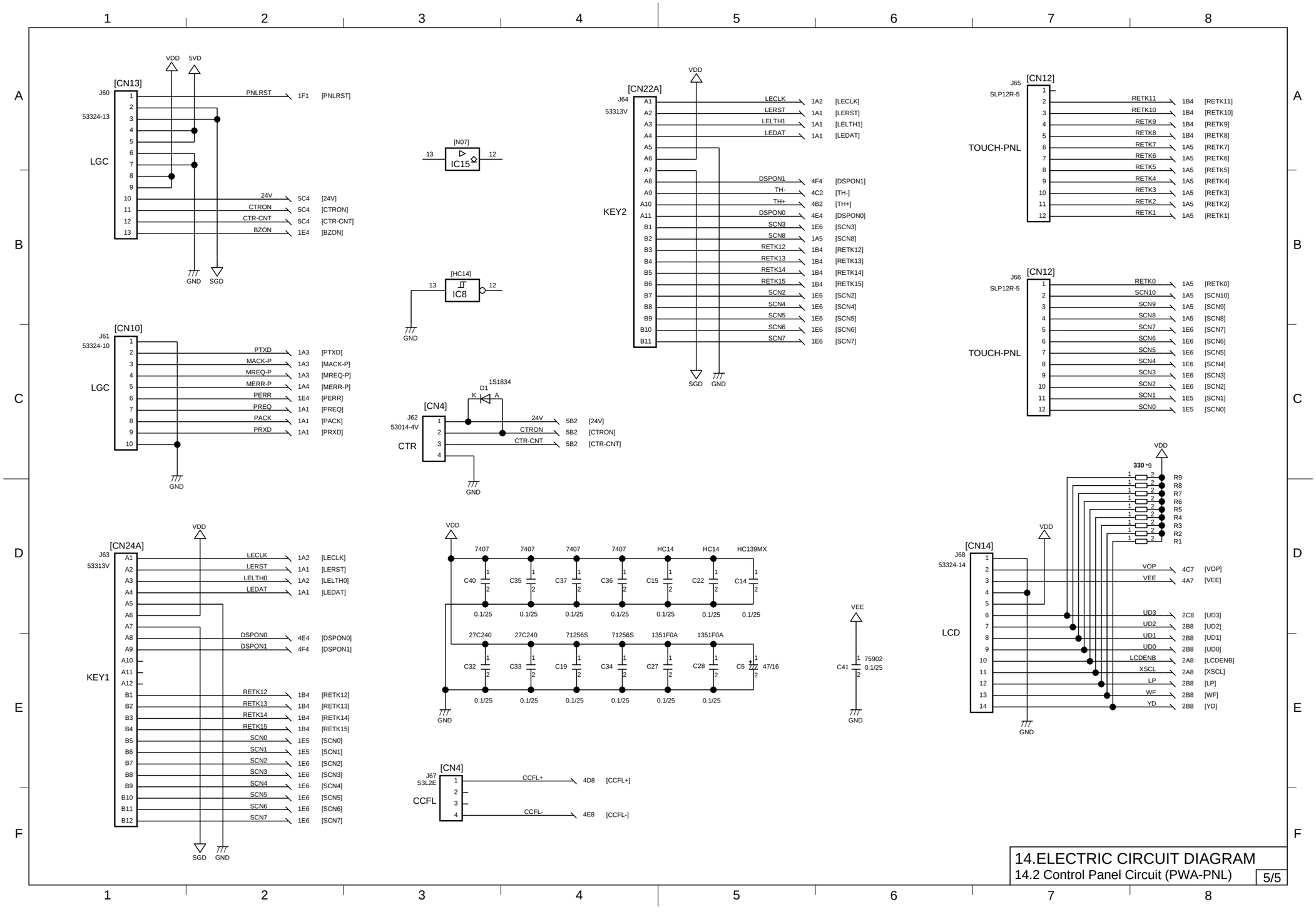

14.ELECTRIC CIRCUIT DIAGRAM

14.2 Control Panel Circuit (PWA-PNL) 5/5

Nov. 1997 © TOSHIBA

14.3 Control Key 1 Circuit (PWA-KEY1)

HINT

How to search for where a signal in a circuit diagram has jumped to.

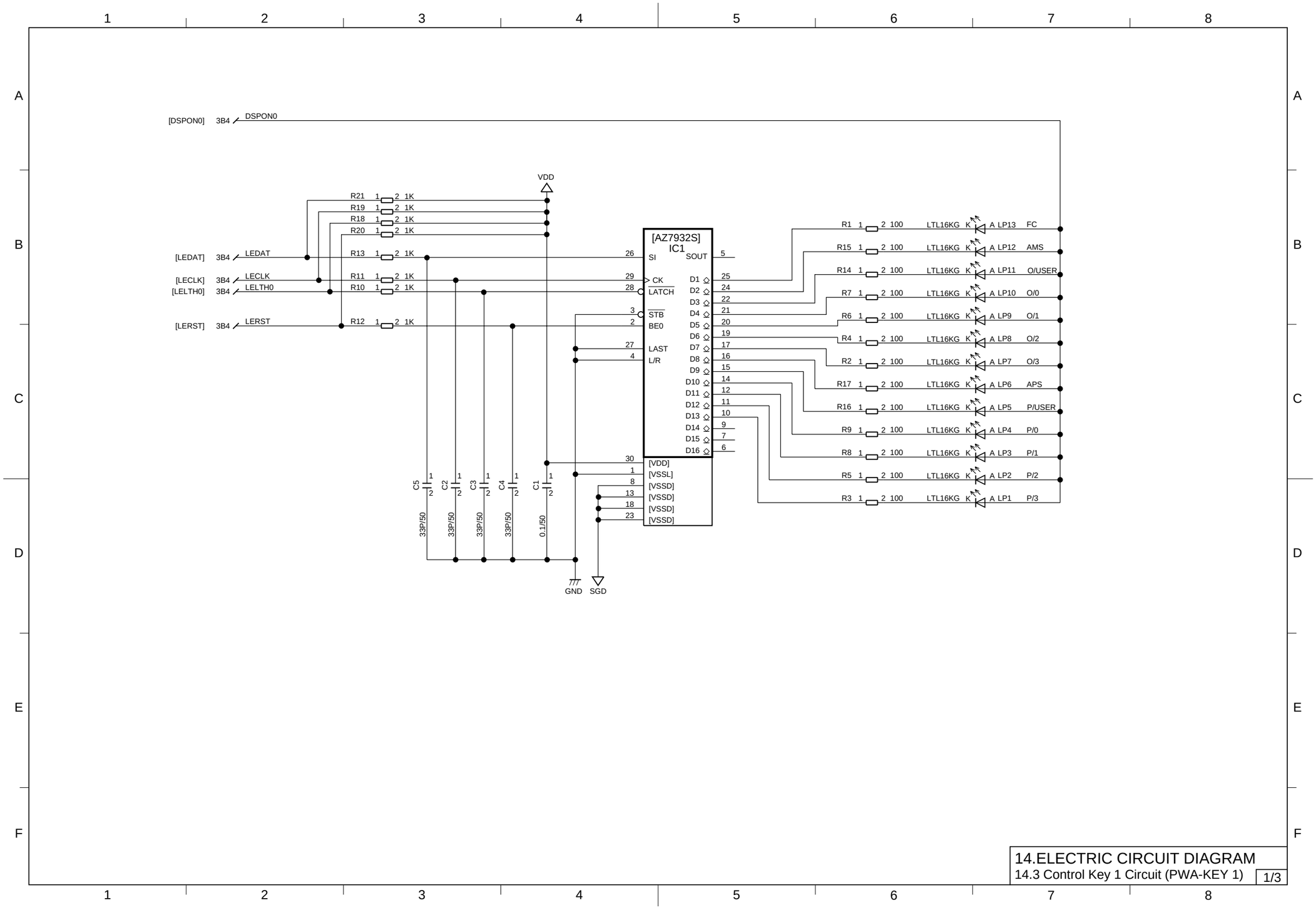

HINT

How to search for where a signal in a circuit diagram has jumped to.

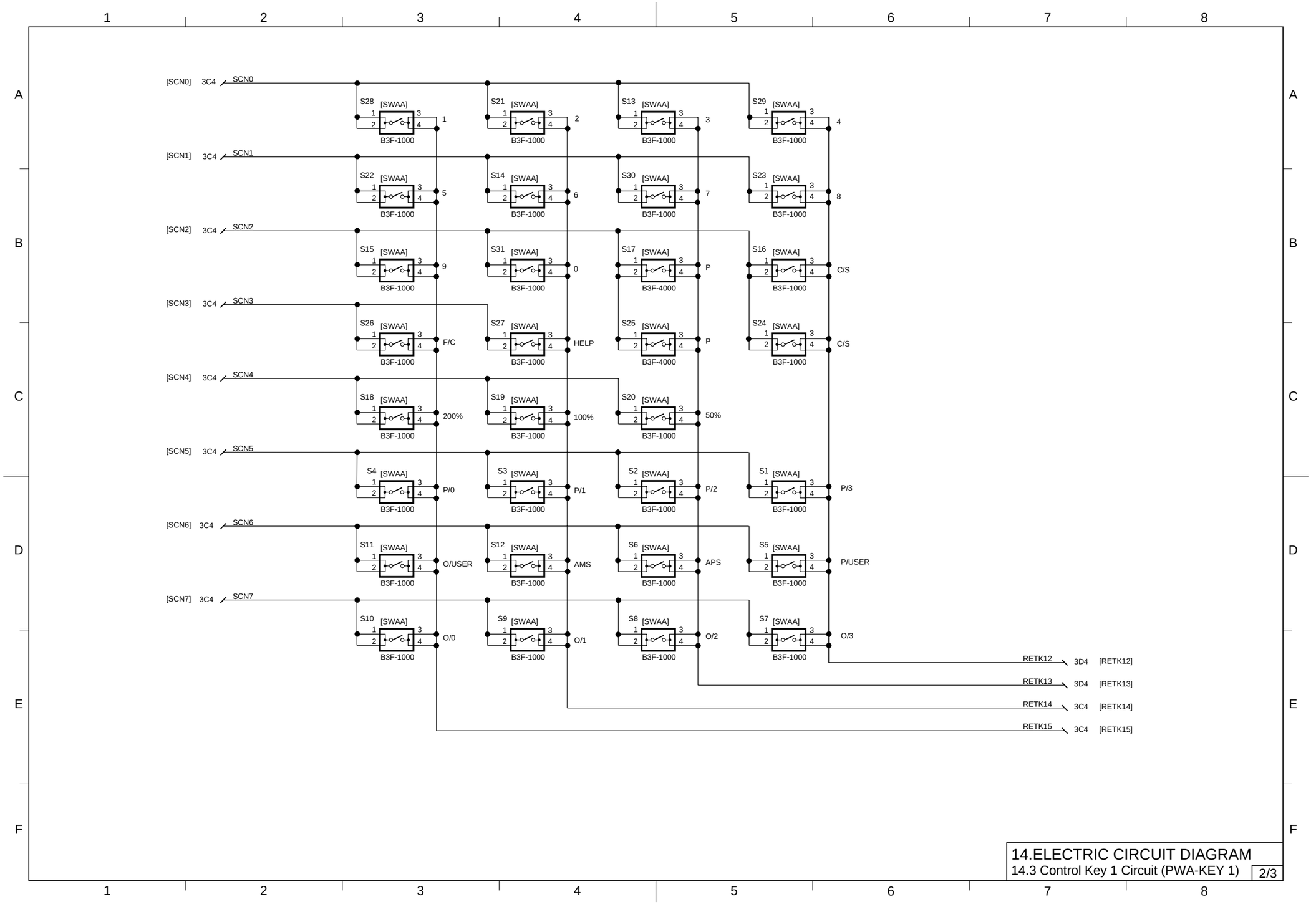

 Nov. 1997 © TOSHIBA

HINT

How to search for where a signal in a circuit diagram has jumped to.

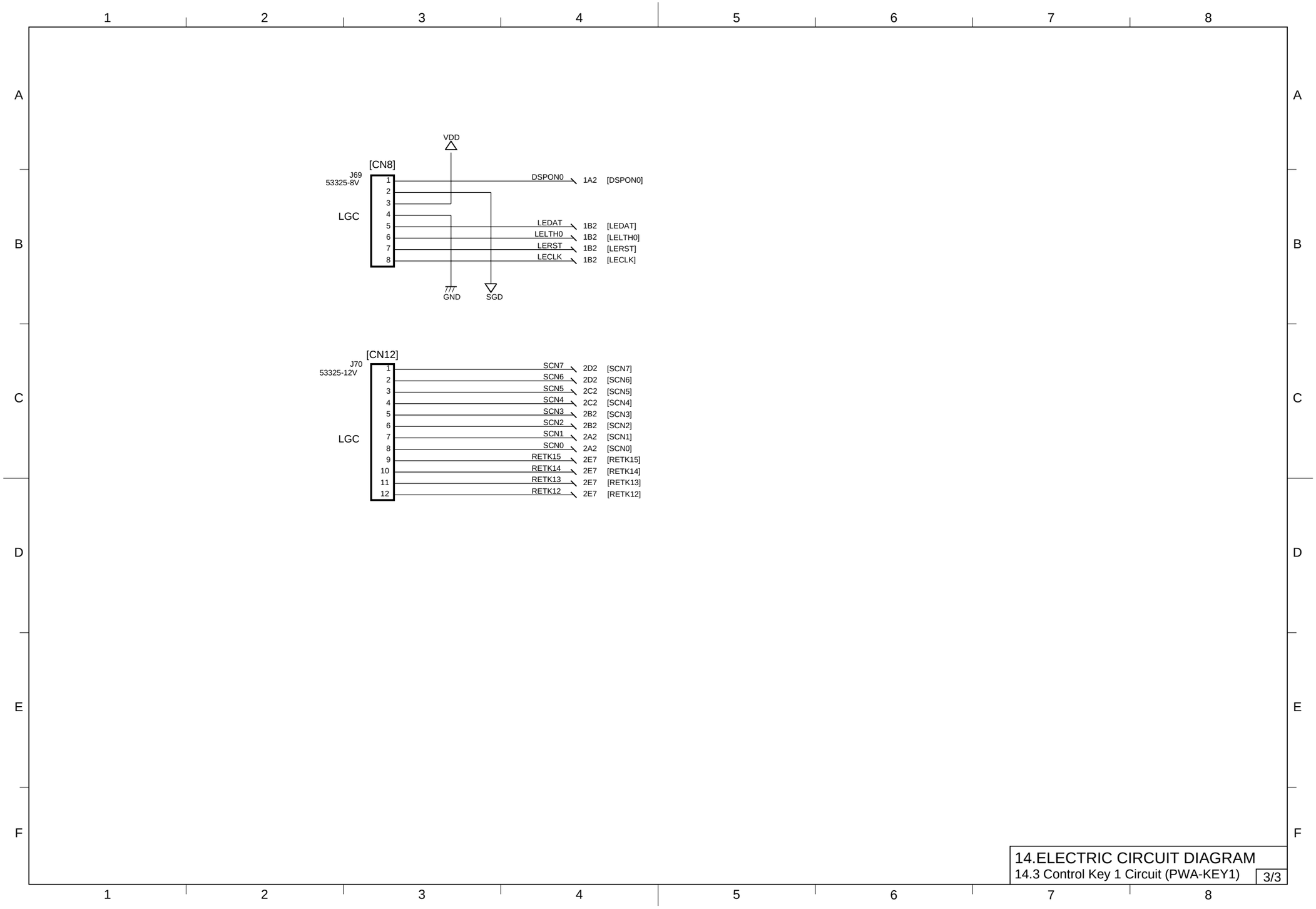

14.4 Control Key 2 Circuit (PWA-KEY2)

HINT

How to search for where a signal in a circuit diagram has jumped to.

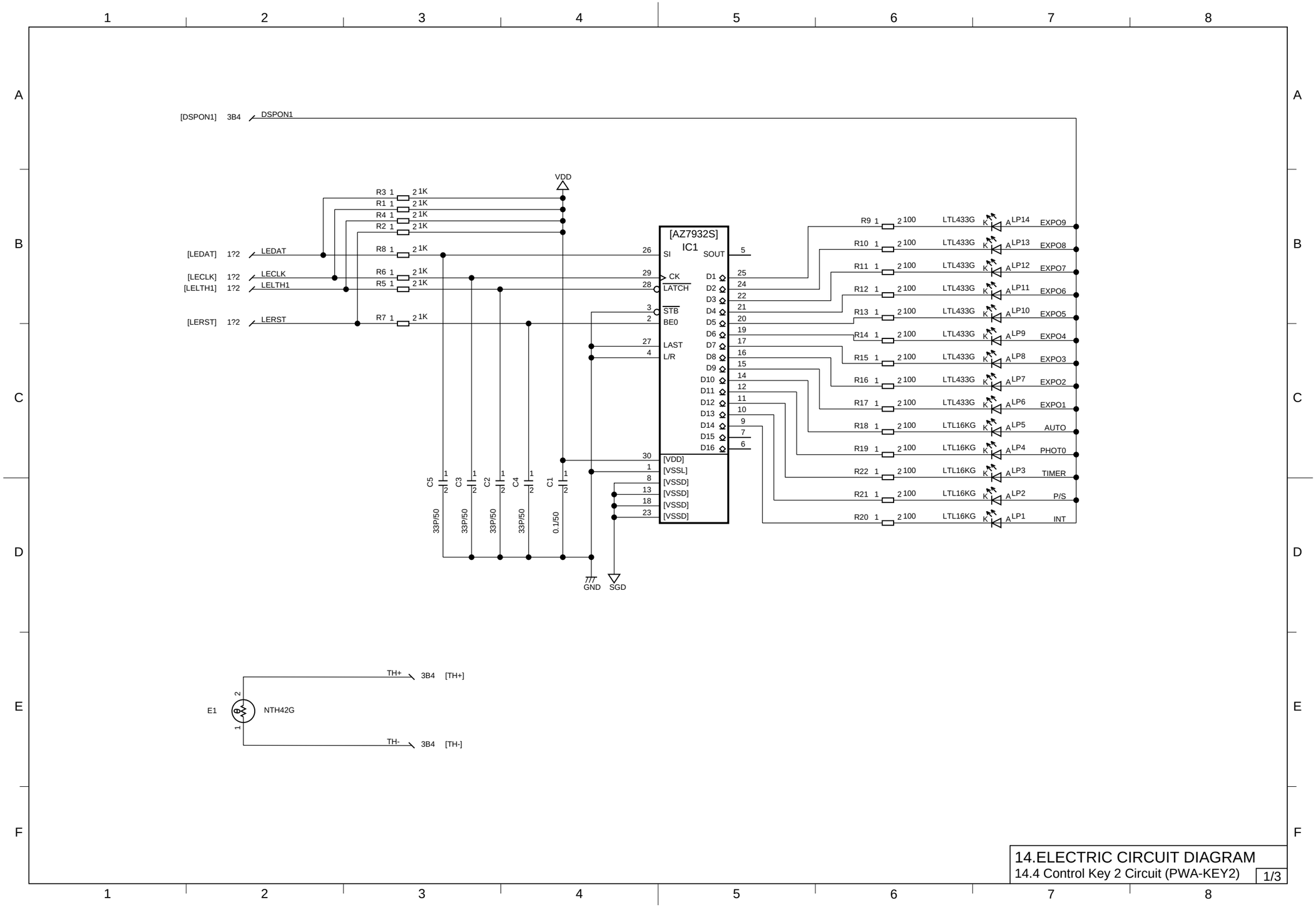

Nov. 1997 © TOSHIBA

HINT

How to search for where a signal in a circuit diagram has jumped to.

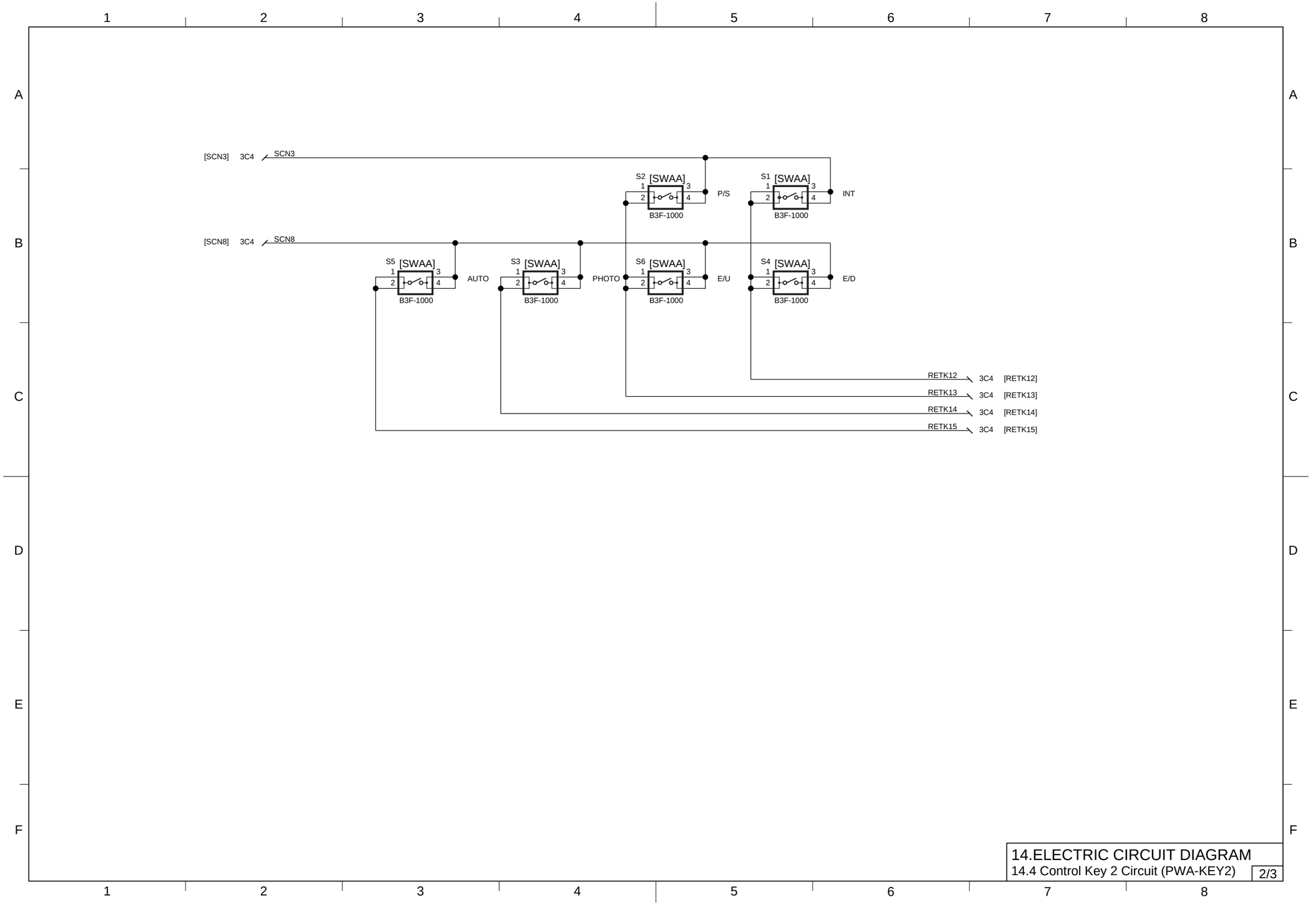

HINT

How to search for where a signal in a circuit diagram has jumped to.

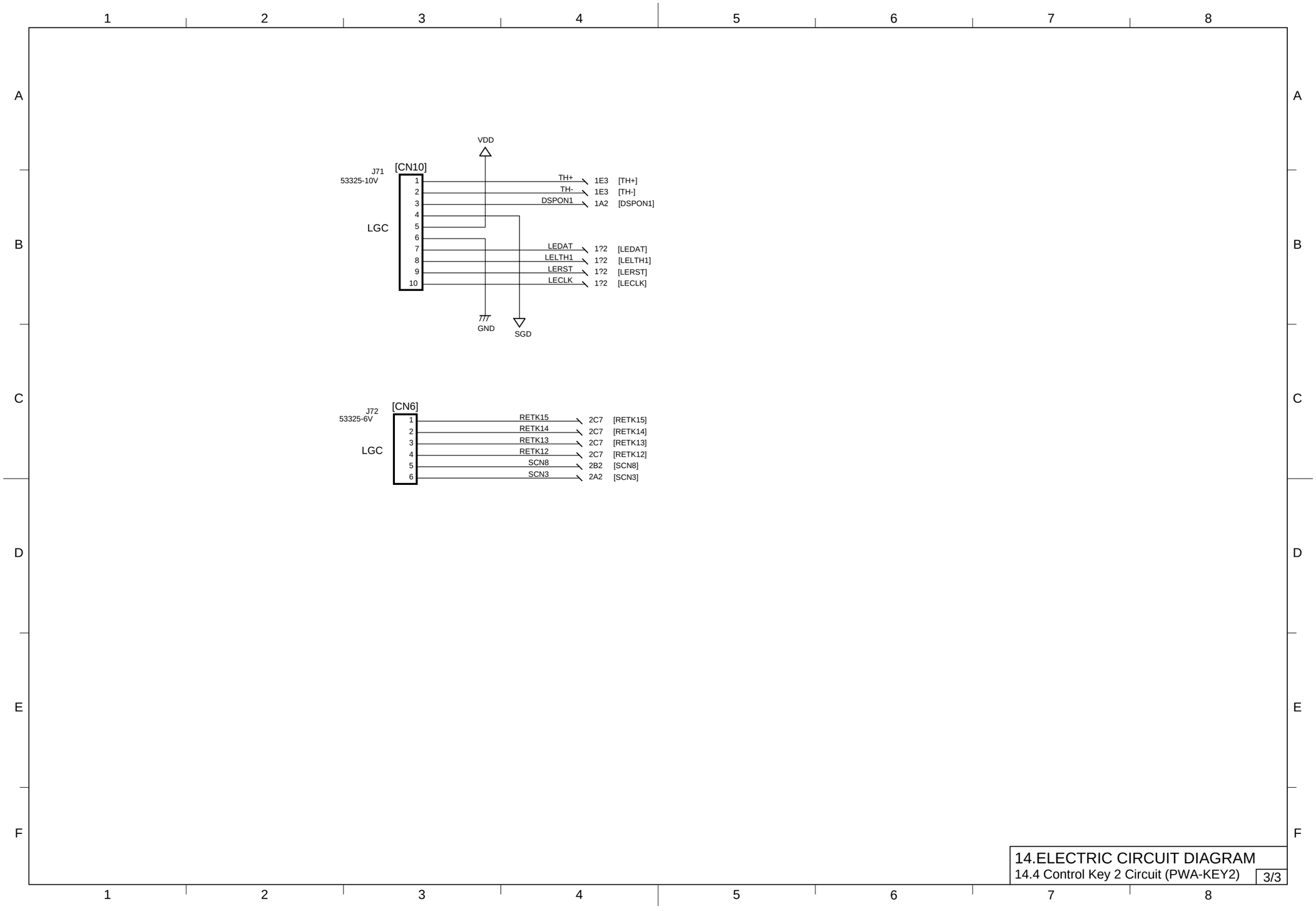

 Nov. 1997 © TOSHIBA

14.5 Power Supply Circuit (PS-ACC)

[A] 115V

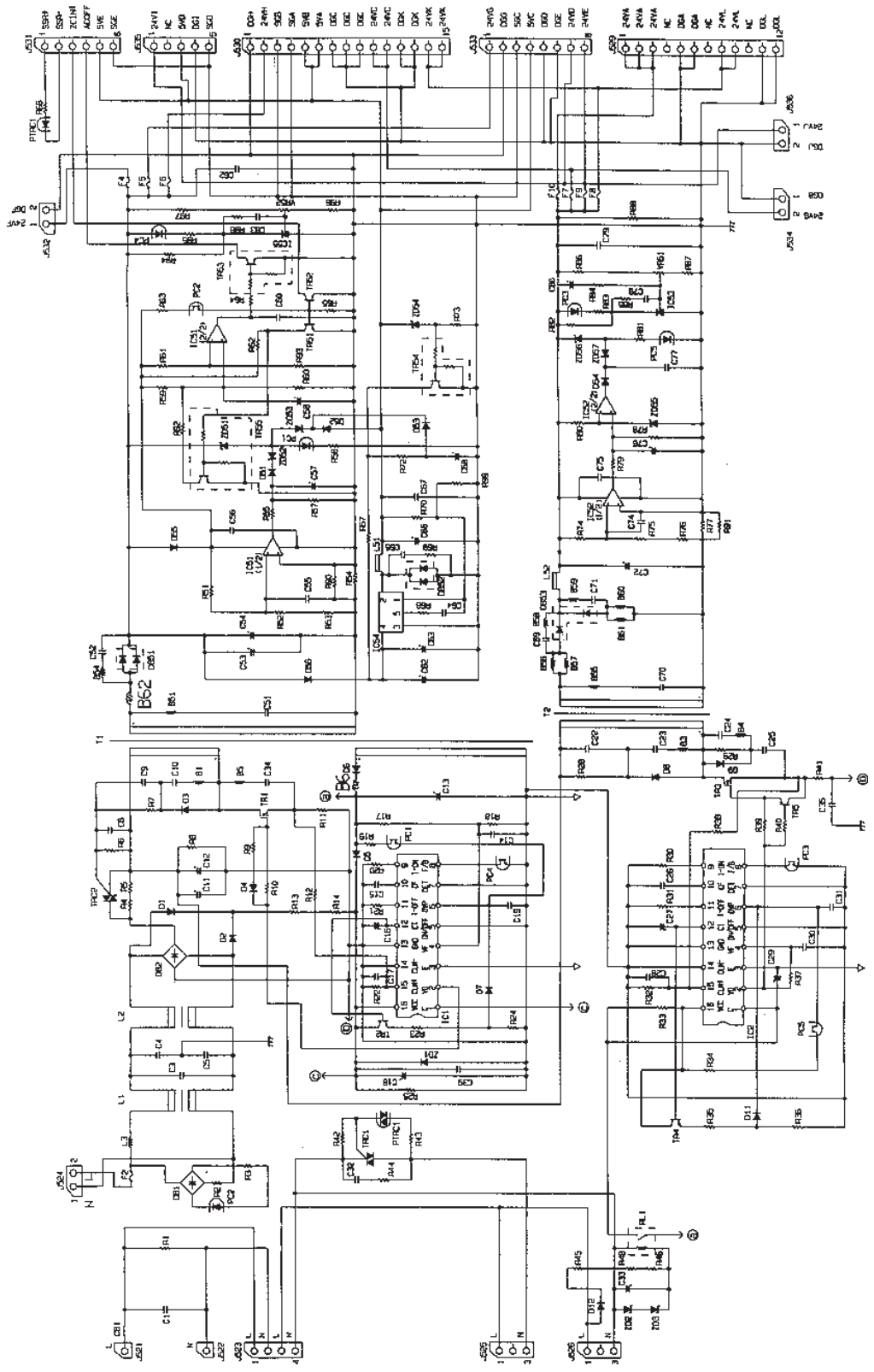

[B] 230V

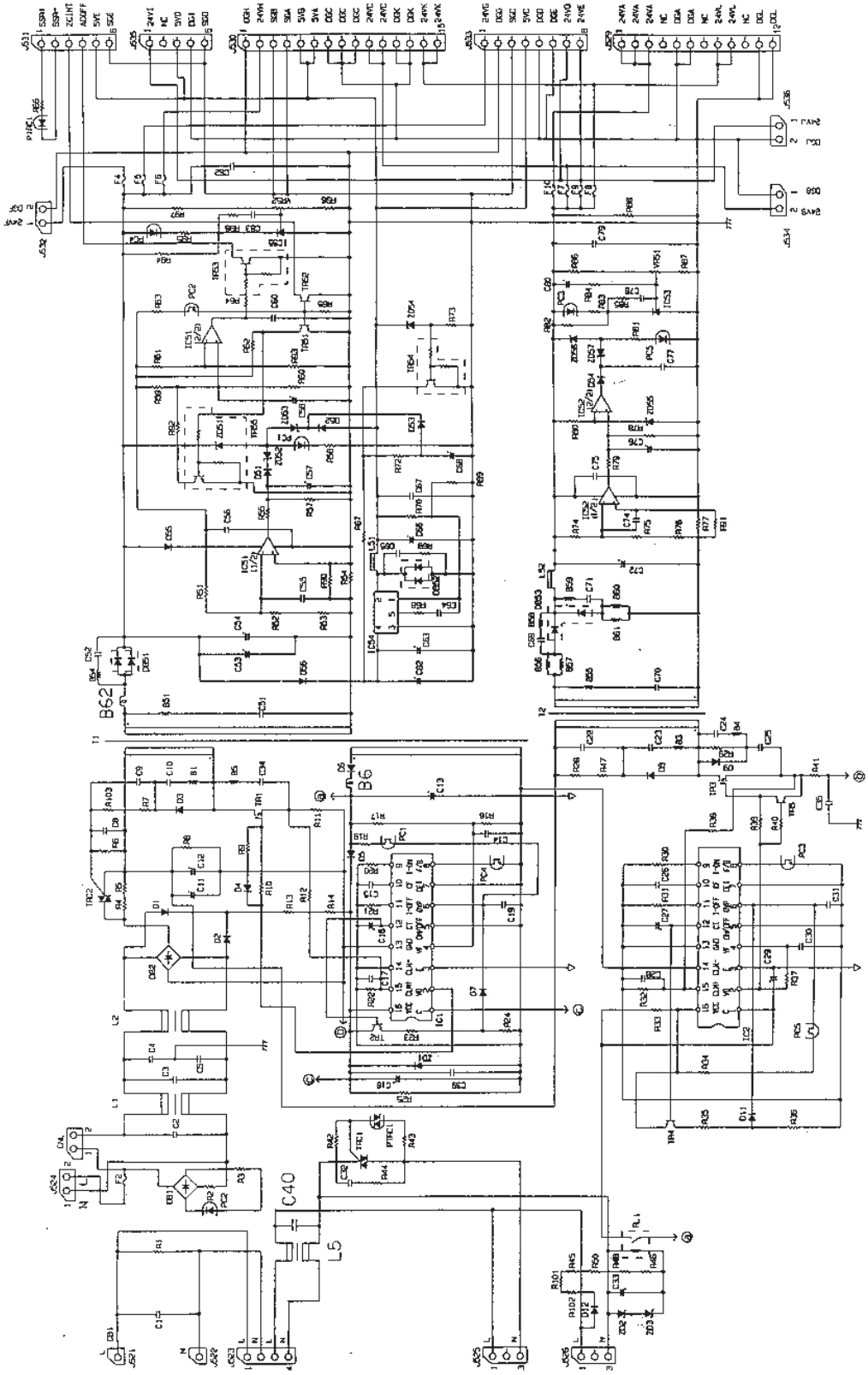

15. POWER STABILIZING CIRCUIT

15.1 Power Circuit

This power circuit has the following 3 DC outputs.

DC output	Rating	Main load
5V	5V±5%	LED eraser array, LCD, LED, logic IC power supplies
24VA – C, K, L	24V±10%	Motors, clutches, high-voltage transformer, scanning motor
24VD – J	24V±10%	RADF, optional sorter, main switch

15.2 Description of Operation

When the main switch on the copier is turned ON, AC power is supplied to the switching power supply, and then the 5V power supply for the logic ICs, and the 24VD – J DC power supply for the RADF and sorter are turned ON. At this time, if the door switch is ON (closed), the 24VA – C, K, L DC voltages are turned ON.

Each of these power circuit is provided with overcurrent protection fuses (excluding 5V) and an overcurrent protection unit is provided in the circuit to protect the copier's power circuit in case of an overload or a power output short.

When these functions are in operation, remove the cause of the overload or short. When a fuse has blown, replace the fuse. Or, when overcurrent protection in the circuit is in operation, turn the main switch OFF then ON again to enable circuit operation.

The power circuit is also provided with an overvoltage protection function. This function prevents the power supply from being turned ON to protect electrical components if two different voltages short. If this happens, remove the cause of the short, and turn the main switch OFF then ON again to enable circuit operation.

15.3 DC Voltage Applications and Related Fuse Numbers

Voltage	Load	Fuse Numbers
+5V	For LSIs, logic ICs, LED eraser array, LCD, and display LEDs.	—
ACOFF ZCINT	For detection of abnormalities in the power supply, and exposure lamp control.	—
+24VA	Main motor (M1)	F10
+24VB +24VC	Scanning motor (M2), lens motor (M3), mirror motor (M4), tray-up motor (M14), exit fan (M7, 15), OPT fan (M6, 12,18), toner motor (M9), document motor (M11), transport clutch (CLT1), feed clutch (CLT4 – 7), total counter, Developer unit fan (M19), high-voltage power supply	F7
+24VD, E	PFP (pedestal)	F9
+24VI	ADU	
+24VJ	LCF	
+24VF	RADF	F4
+24VG	Sorter	F5
+24VH	Reset switch (main switch) drive, remote monitoring	F6
+24VK +24VL	Aligning motor (M17), Transport motor (M16)	F8

[A] DC voltage check

DC output voltages can be checked on the following connector pins.

Voltage	Connector	Pin
24VA	J529	1
24VB	J534	2
24VC	J530	11
24VD	J533	7
24VE	J533	8
24VI	J535	1
24VJ	J536	1
24VF	J532	1
24VG	J533	1
24VH	J530	2
5V	J531	5
24VK	J530	15
24VL	J529	8

15.4 AC Voltage

① Heater lamp voltage

② Lamp regulator voltage

③ Damp heater voltage

15.5 Output Sequence

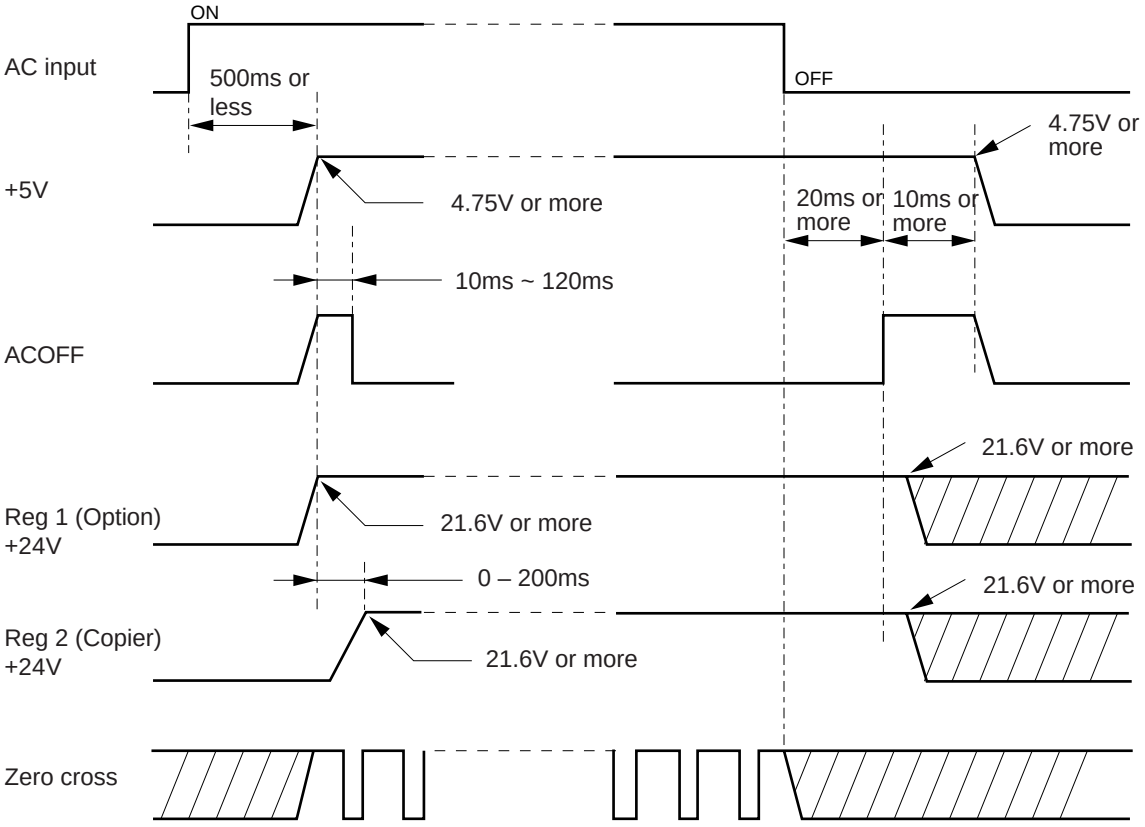

16. PC BOARD ASSEMBLY

16.1 PWA-LGC

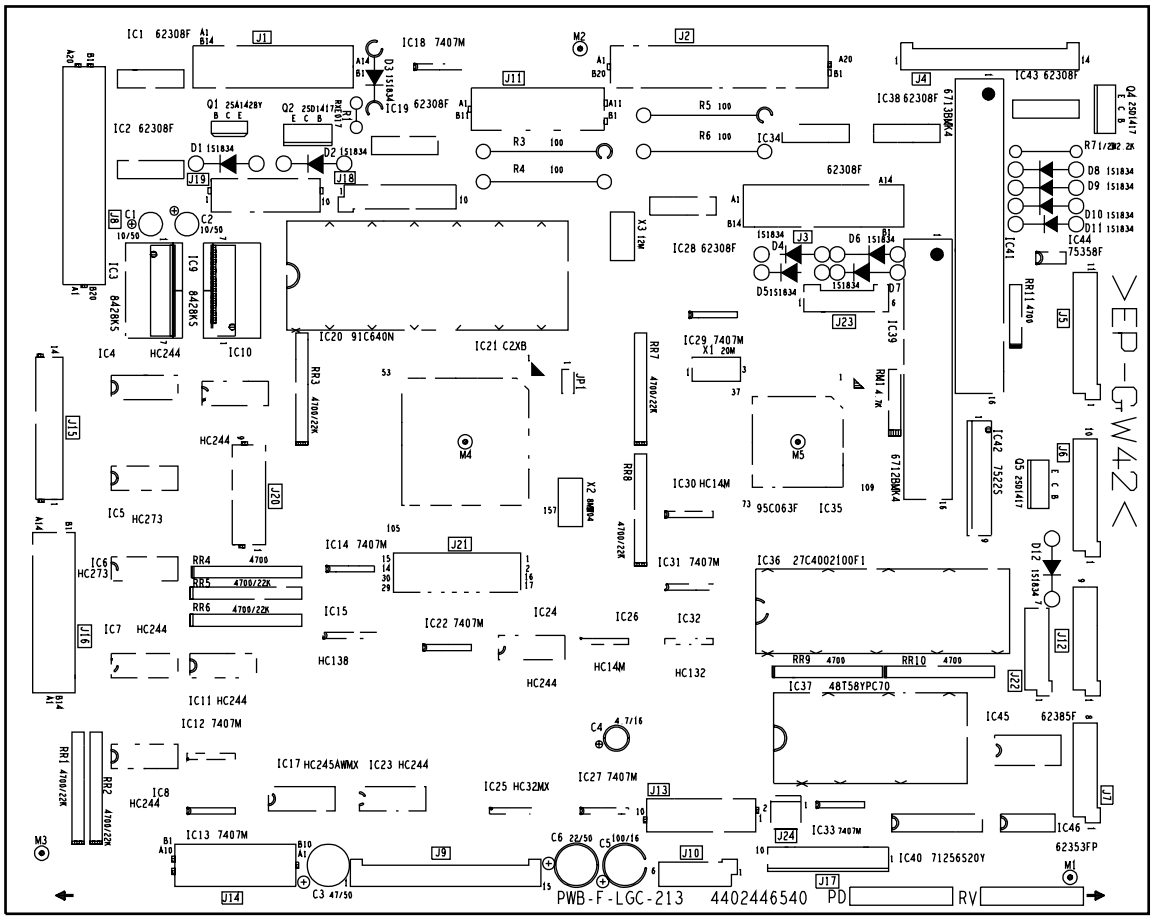

16.2 PWA-PNL

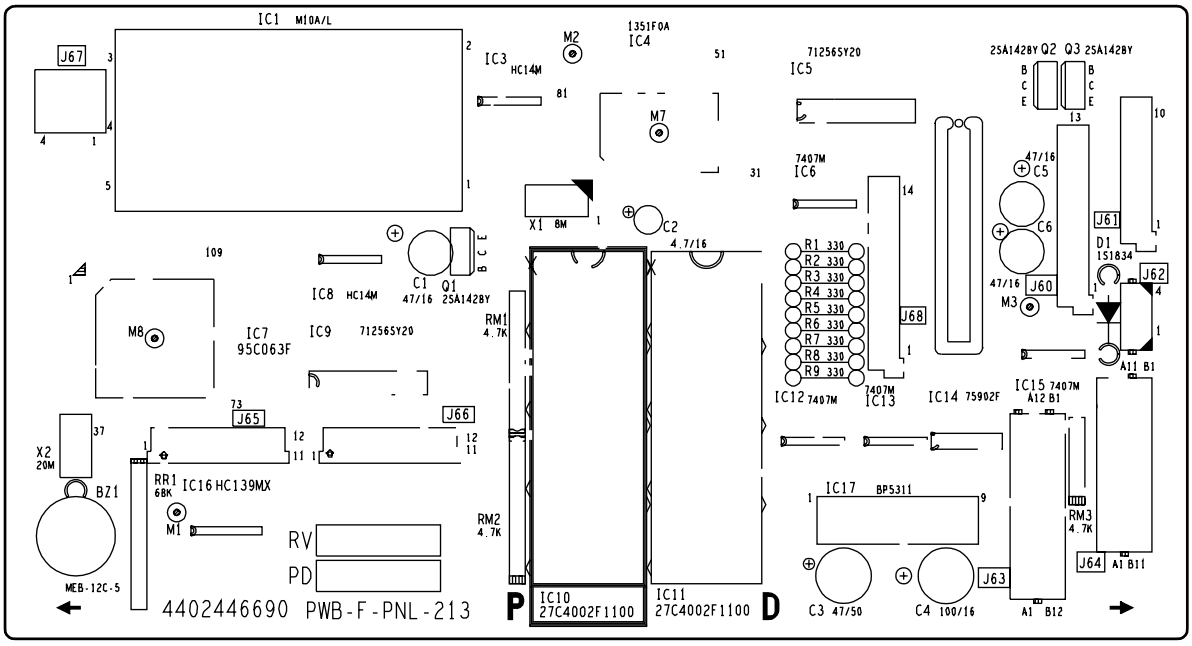
IC1 M10A/L
J67
IC3 HC14M
M2
IC4 1351F0A
IC5 712565Y20
Q2 Q3 2SA1428Y
M7
IC6 7407M
C5 47/16
C6
J61
D1 1S1834
J62
J60
M3
X1 8M
C2 4.7/16
R1 330
R2 330
R3 330
R4 330
R5 330
R6 330
R7 330
R8 330
R9 330
J68
IC8 HC14M
C1 47/16
Q1 2SA1428Y
M8
IC7 95C063F
IC9 712565Y20
RM1 4.7K
IC12 7407M
IC13 7407M
IC14 75902F
IC15 7407M
J65
J66
X2 20M
BZ1
MEB-12C-5
RR1 6BK
IC16 HC139MX
M1
RV
PD
IC17 BP5311
RM2 4.7K
RM3 4.7K
J63
J64
C3 47/50
C4 100/16
4402446690 PWB-F-PNL-213
P
IC10 27C4002F1100
IC11 27C4002F1100
D

16.3 PWA-KEY1

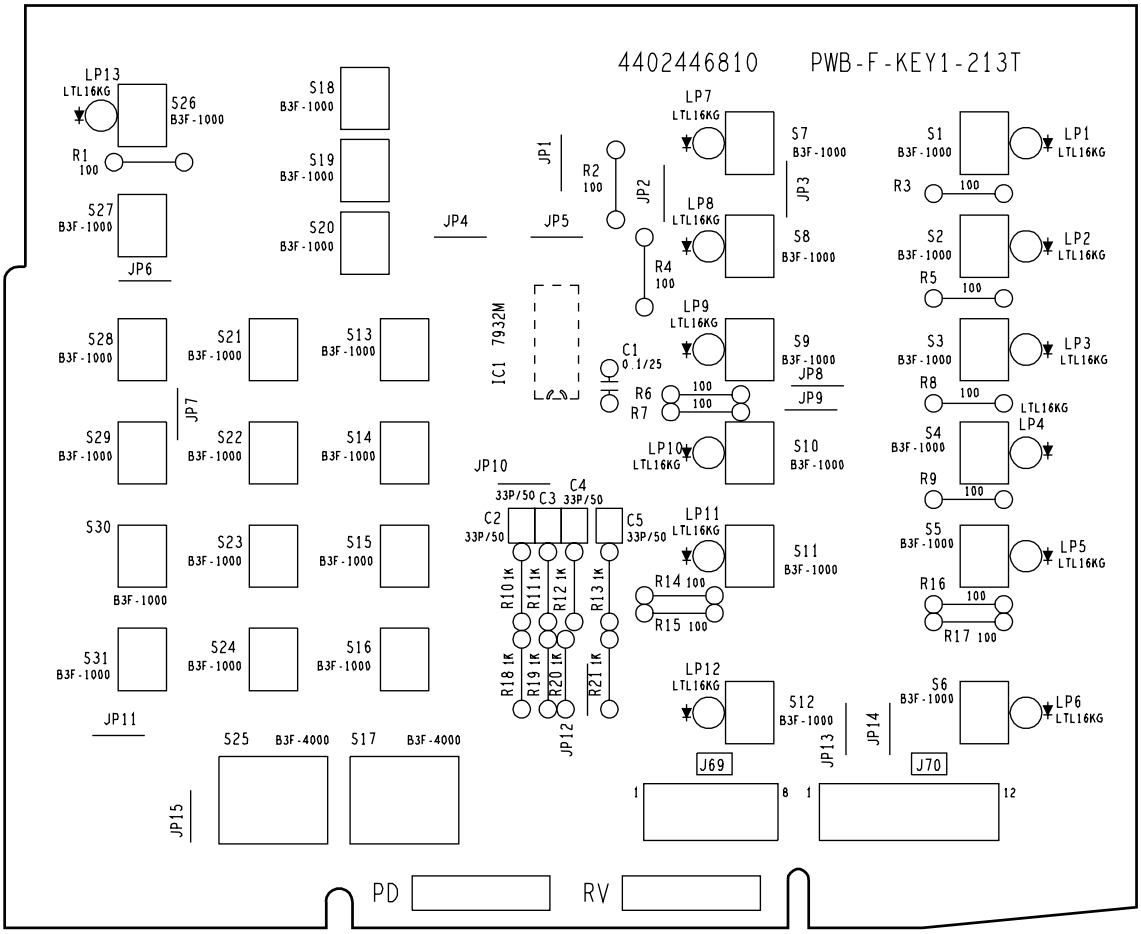

16.4 PWA-KEY2

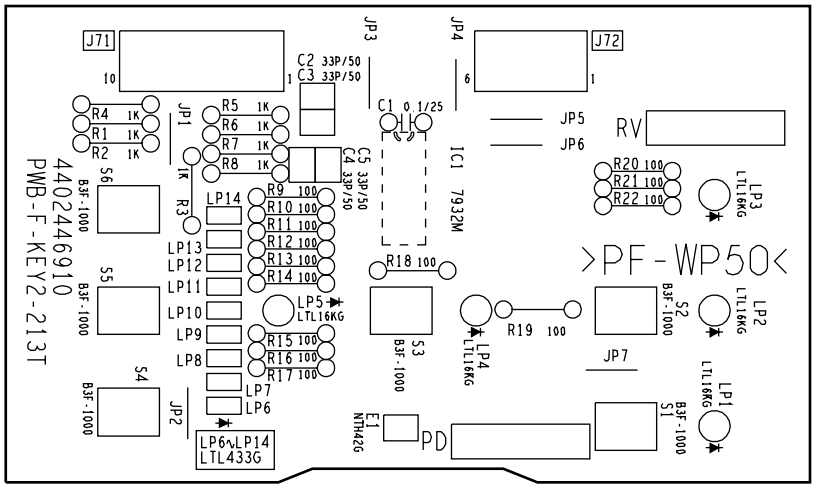

16.5 PWA-ERS

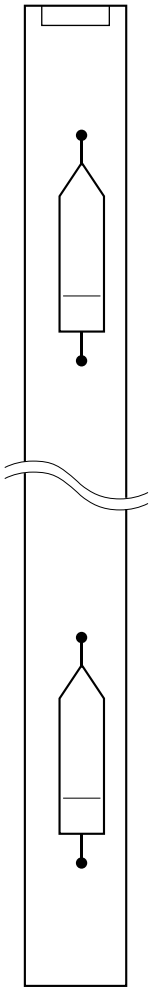

16.6 PS-ACC

[A] 115V

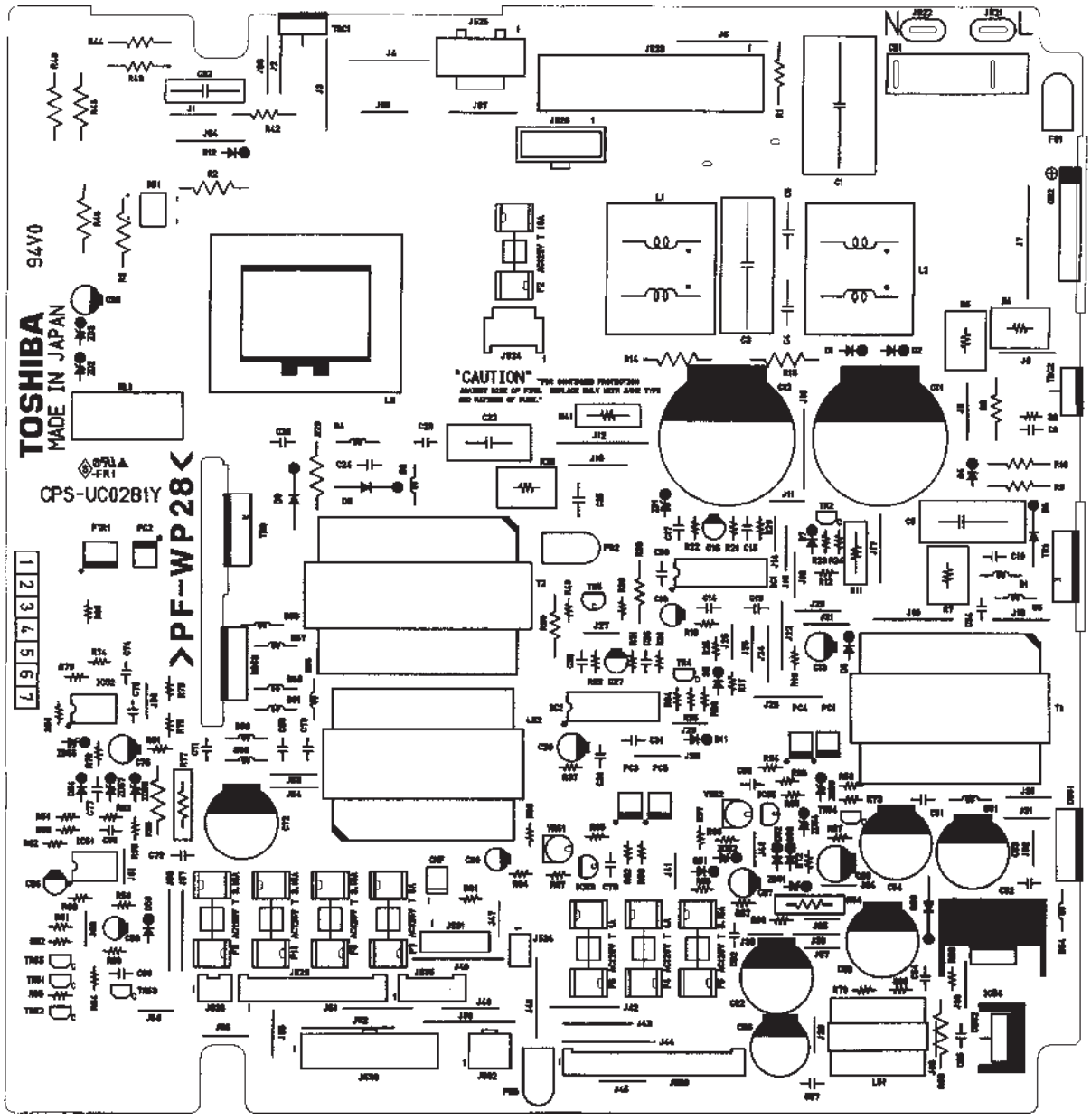

[B] 230V

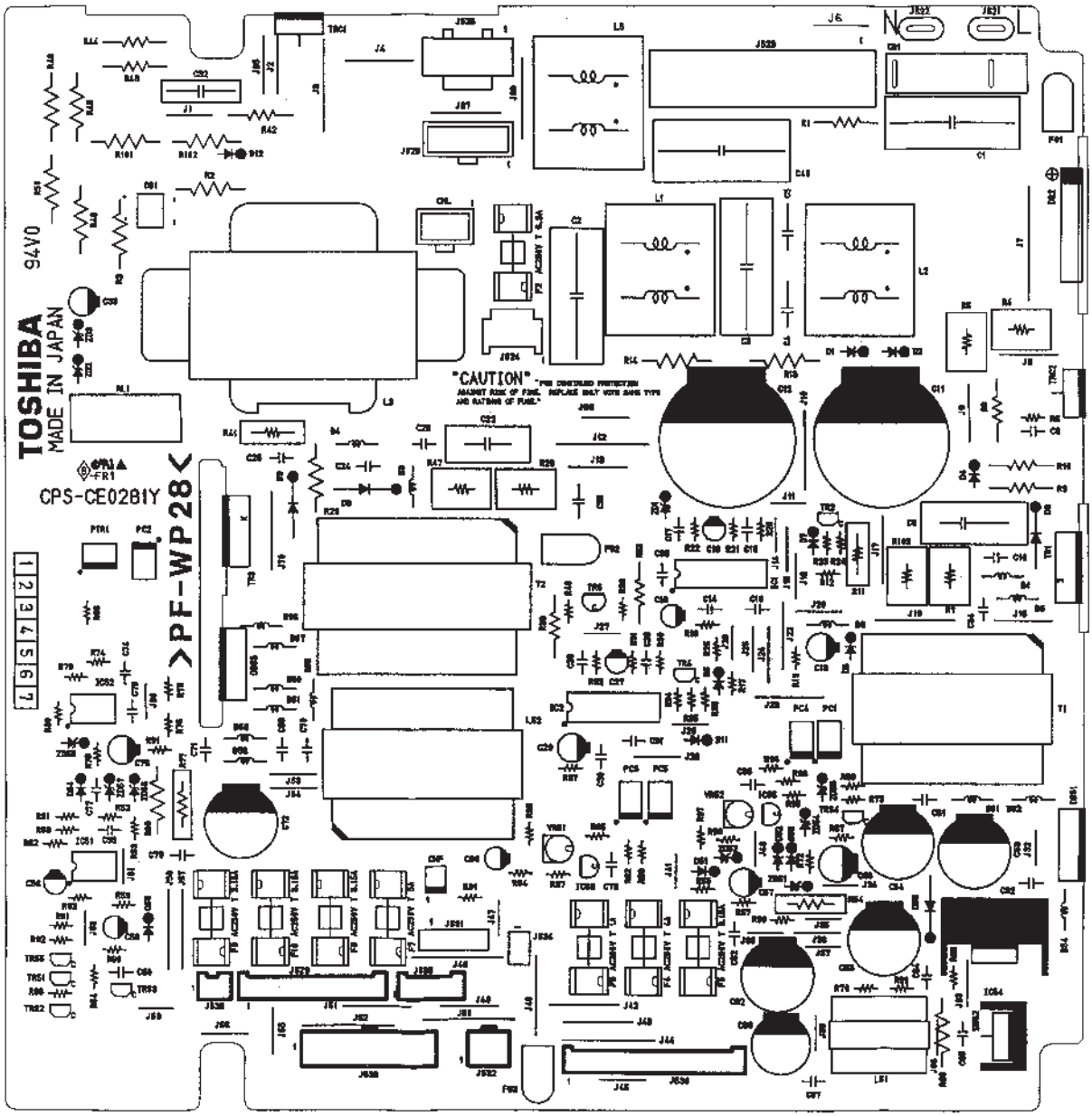

16.7 PS-HVT

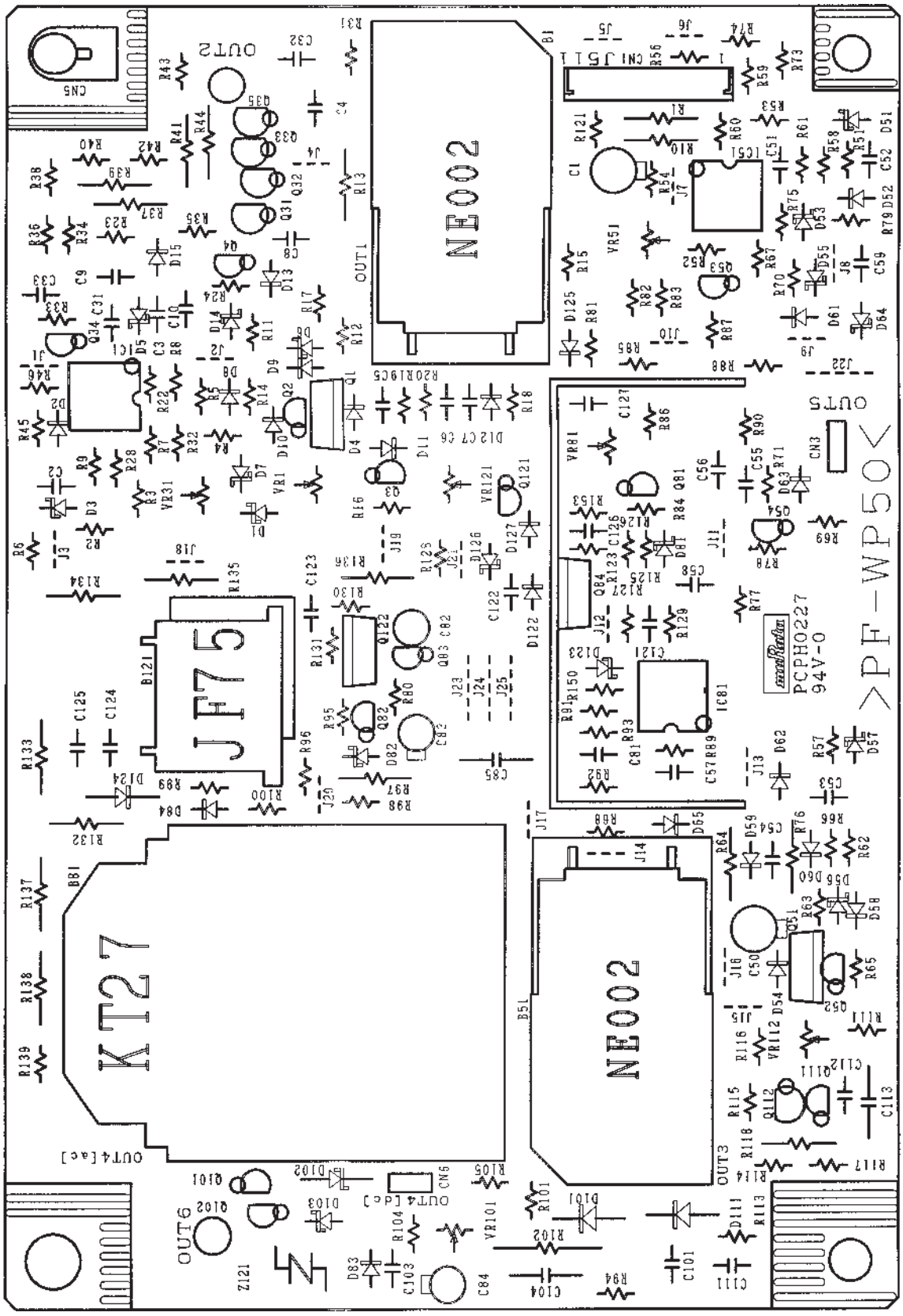
NE002
JF75
KT27
NE002
PCPH0227
94V-0
OUT1
OUT2
OUT3
OUT4 [a.c]
OUT4 [d.c]
OUT5
OUT6

17. WIRE HARNESS CONNECTION DIAGRAM

17.1 AC Wire Harness

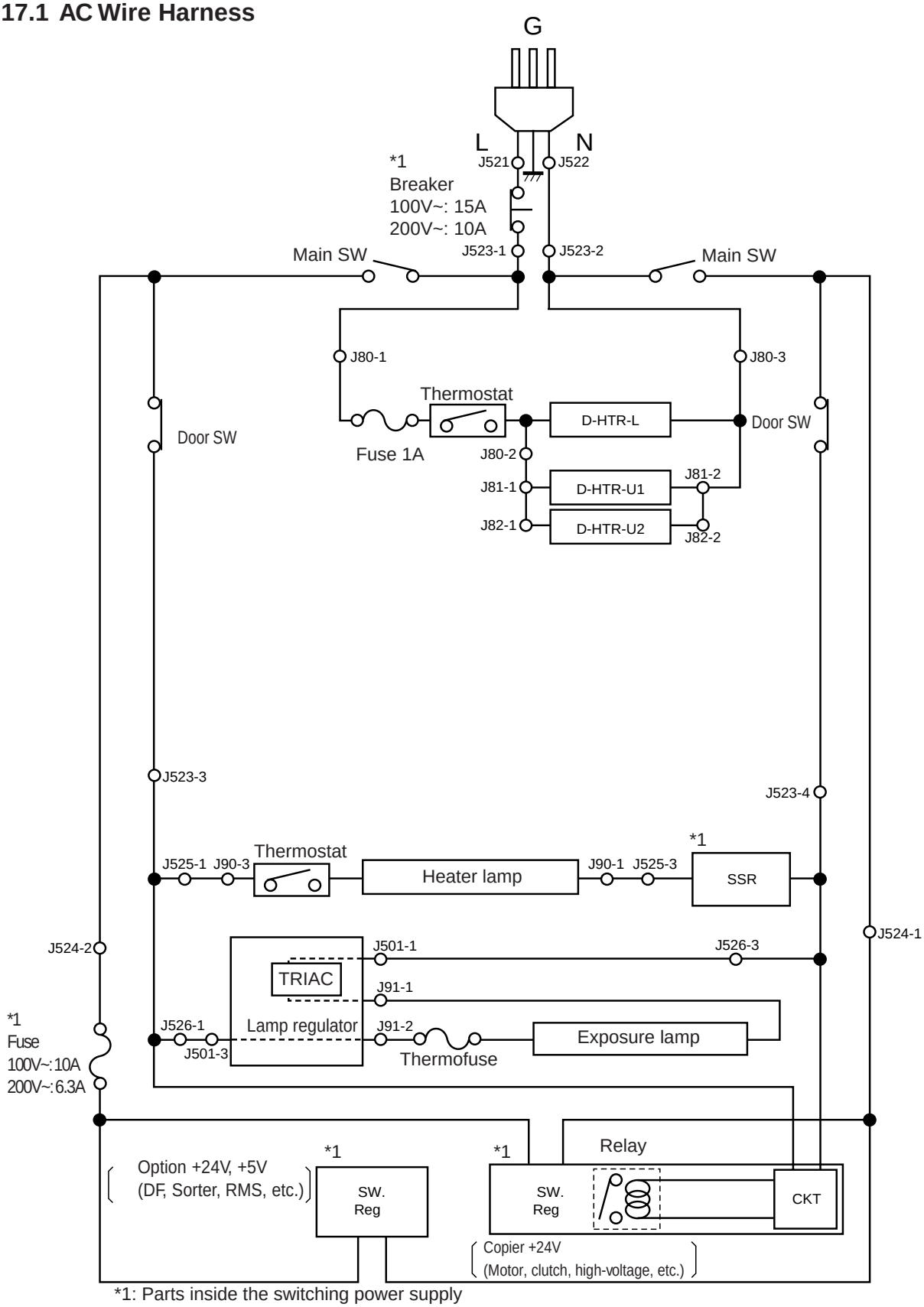

*1: Parts inside the switching power supply

17.2 DC Wire Harness Connection Diagram

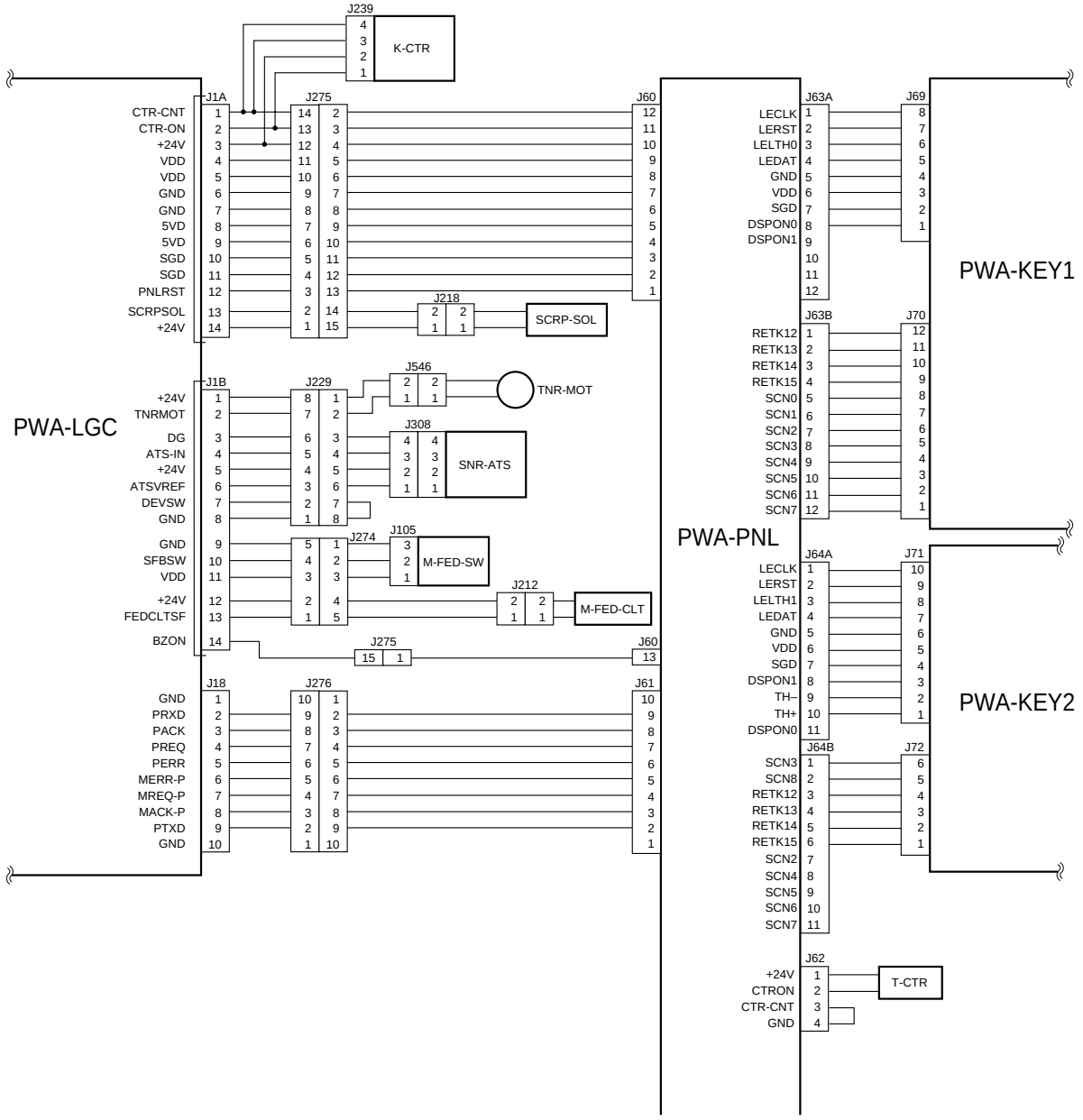

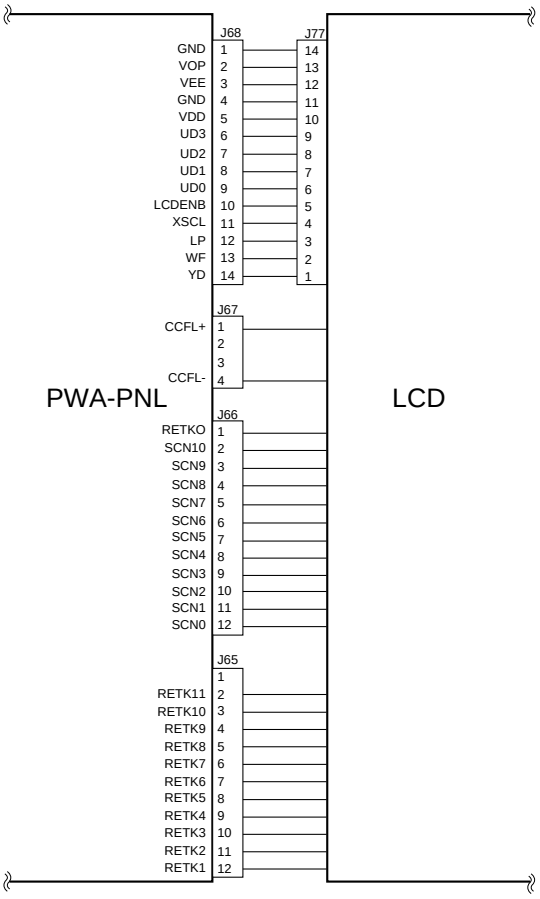
J68
J77
GND 1 14
VOP 2 13
VEE 3 12
GND 4 11
VDD 5 10
UD3 6 9
UD2 7 8
UD1 8 7
UD0 9 6
LCDENB 10 5
XSCL 11 4
LP 12 3
WF 13 2
YD 14 1
J67
CCFL+ 1
2
3
CCFL- 4
PWA-PNL
LCD
J66
RETKO 1
SCN10 2
SCN9 3
SCN8 4
SCN7 5
SCN6 6
SCN5 7
SCN4 8
SCN3 9
SCN2 10
SCN1 11
SCN0 12
J65
1
RETK11 2
RETK10 3
RETK9 4
RETK8 5
RETK7 6
RETK6 7
RETK5 8
RETK4 9
RETK3 10
RETK2 11
RETK1 12

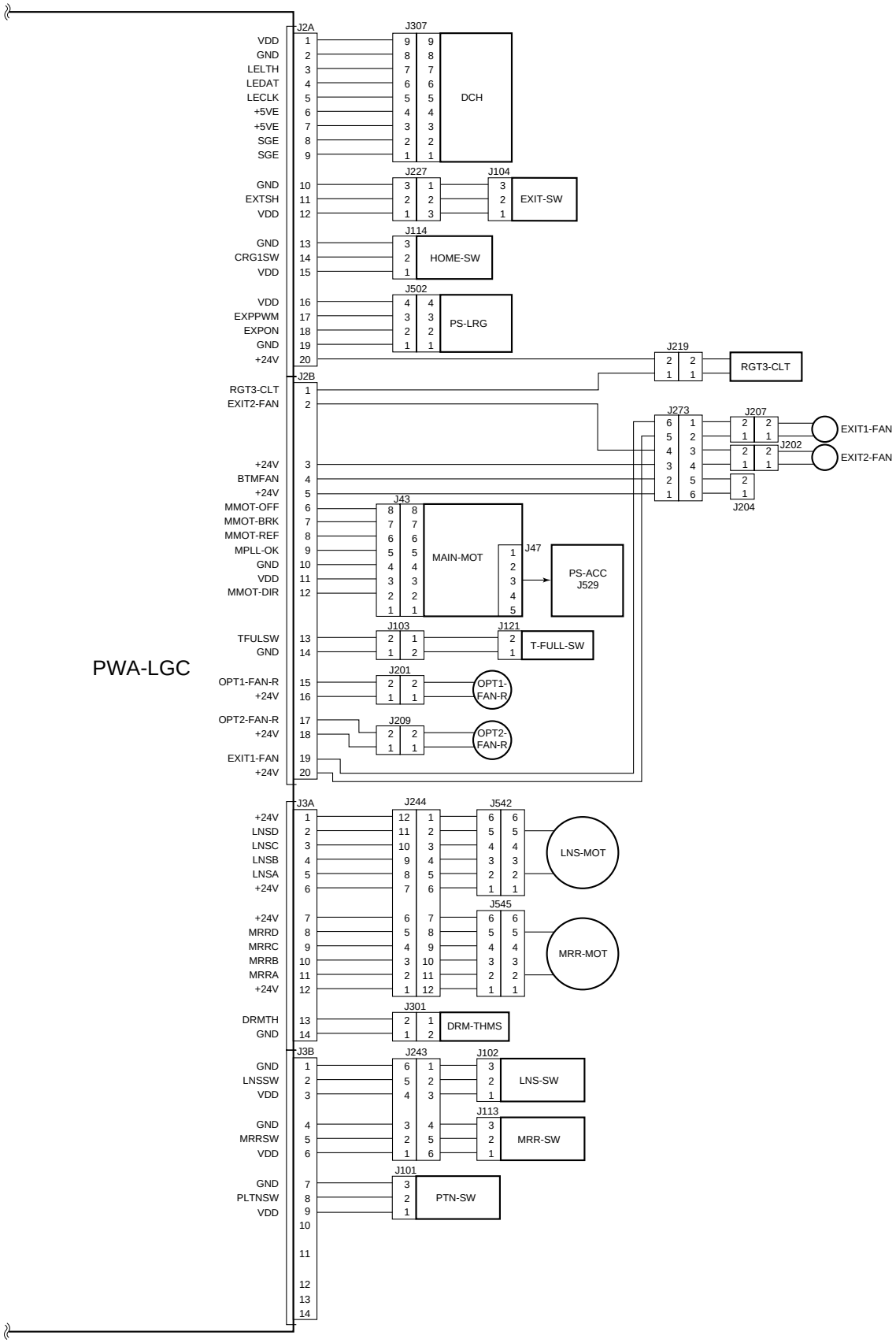
PWA-LGC
J2A
VDD 1
GND 2
LELTH 3
LEDAT 4
LECLK 5
+5VE 6
+5VE 7
SGE 8
SGE 9
GND 10
EXTSH 11
VDD 12
GND 13
CRG1SW 14
VDD 15
VDD 16
EXPPWM 17
EXPON 18
GND 19
+24V 20
J307
DCH
J227
J104
EXIT-SW
J114
HOME-SW
J502
PS-LRG
J219
RGT3-CLT
J2B
RGT3-CLT 1
EXIT2-FAN 2
+24V 3
BTMFAN 4
+24V 5
MMOT-OFF 6
MMOT-BRK 7
MMOT-REF 8
MPLL-OK 9
GND 10
VDD 11
MMOT-DIR 12
TFULSW 13
GND 14
OPT1-FAN-R 15
+24V 16
OPT2-FAN-R 17
+24V 18
EXIT1-FAN 19
+24V 20
J273
J207
J202
J204
EXIT1-FAN
EXIT2-FAN
J43
MAIN-MOT
J47
PS-ACC
J529
J103
J121
T-FULL-SW
J201
OPT1-FAN-R
J209
OPT2-FAN-R
J3A
+24V 1
LNSD 2
LNSC 3
LNSB 4
LNSA 5
+24V 6
+24V 7
MRRD 8
MRRC 9
MRRB 10
MRRA 11
+24V 12
DRMTH 13
GND 14
J244
J542
LNS-MOT
J545
MRR-MOT
J301
DRM-THMS
J3B
GND 1
LNSSW 2
VDD 3
GND 4
MRRSW 5
VDD 6
GND 7
PLTNSW 8
VDD 9
10
11
12
13
14
J243
J102
LNS-SW
J113
MRR-SW
J101
PTN-SW

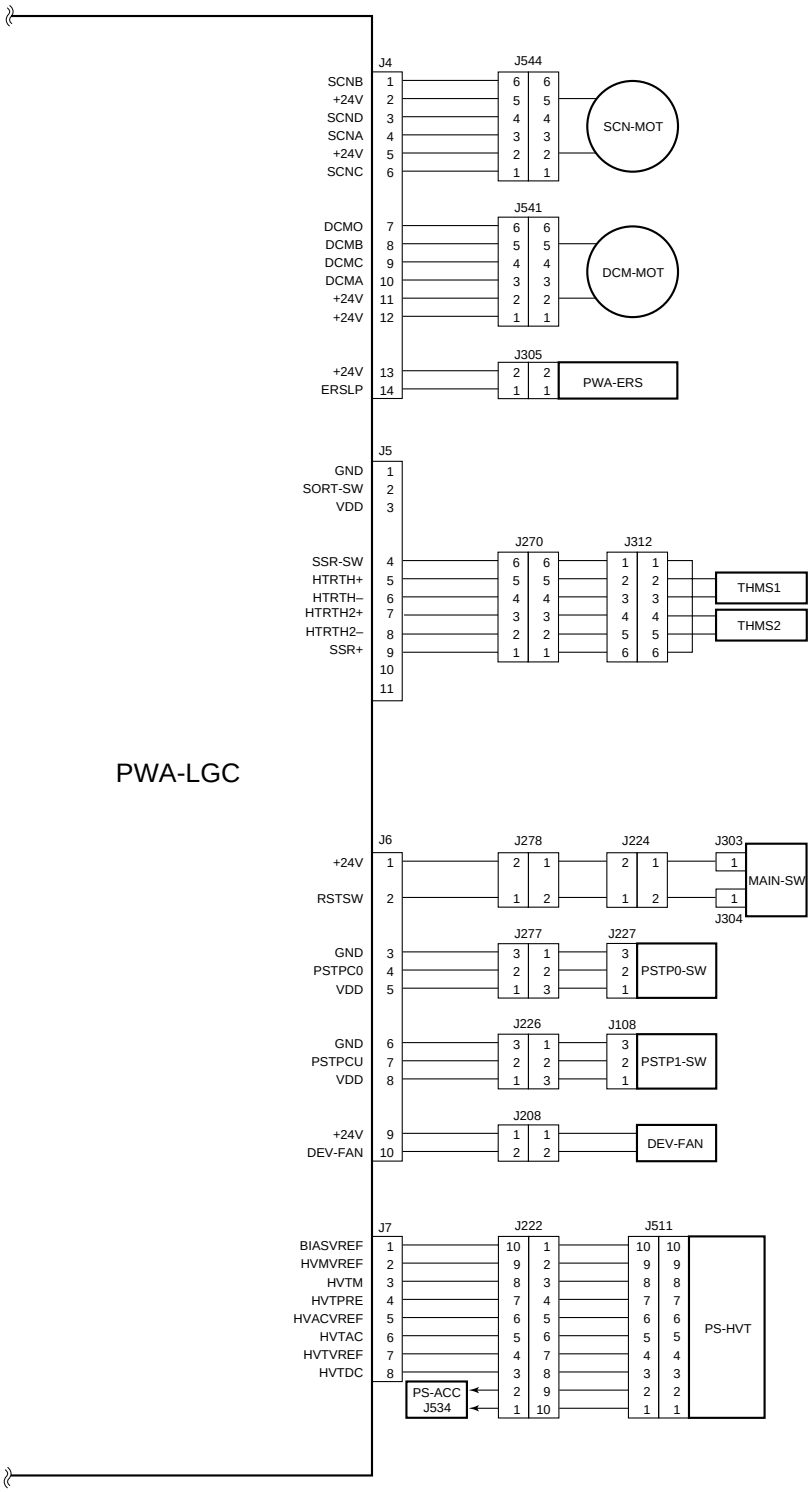
PWA-LGC
J4
SCNB 1
+24V 2
SCND 3
SCNA 4
+24V 5
SCNC 6
J544
SCN-MOT
DCMO 7
DCMB 8
DCMC 9
DCMA 10
+24V 11
+24V 12
J541
DCM-MOT
+24V 13
ERSLP 14
J305
PWA-ERS
J5
GND 1
SORT-SW 2
VDD 3
SSR-SW 4
HTRTH+ 5
HTRTH– 6
HTRTH2+ 7
HTRTH2– 8
SSR+ 9
10
11
J270
J312
THMS1
THMS2
J6
+24V 1
RSTSW 2
J278
J224
J303
MAIN-SW
J304
GND 3
PSTPC0 4
VDD 5
J277
J227
PSTP0-SW
GND 6
PSTPCU 7
VDD 8
J226
J108
PSTP1-SW
+24V 9
DEV-FAN 10
J208
DEV-FAN
J7
BIASVREF 1
HVMVREF 2
HVTM 3
HVTPRE 4
HVACVREF 5
HVTAC 6
HVTVREF 7
HVTDC 8
PS-ACC
J534
J222
J511
PS-HVT

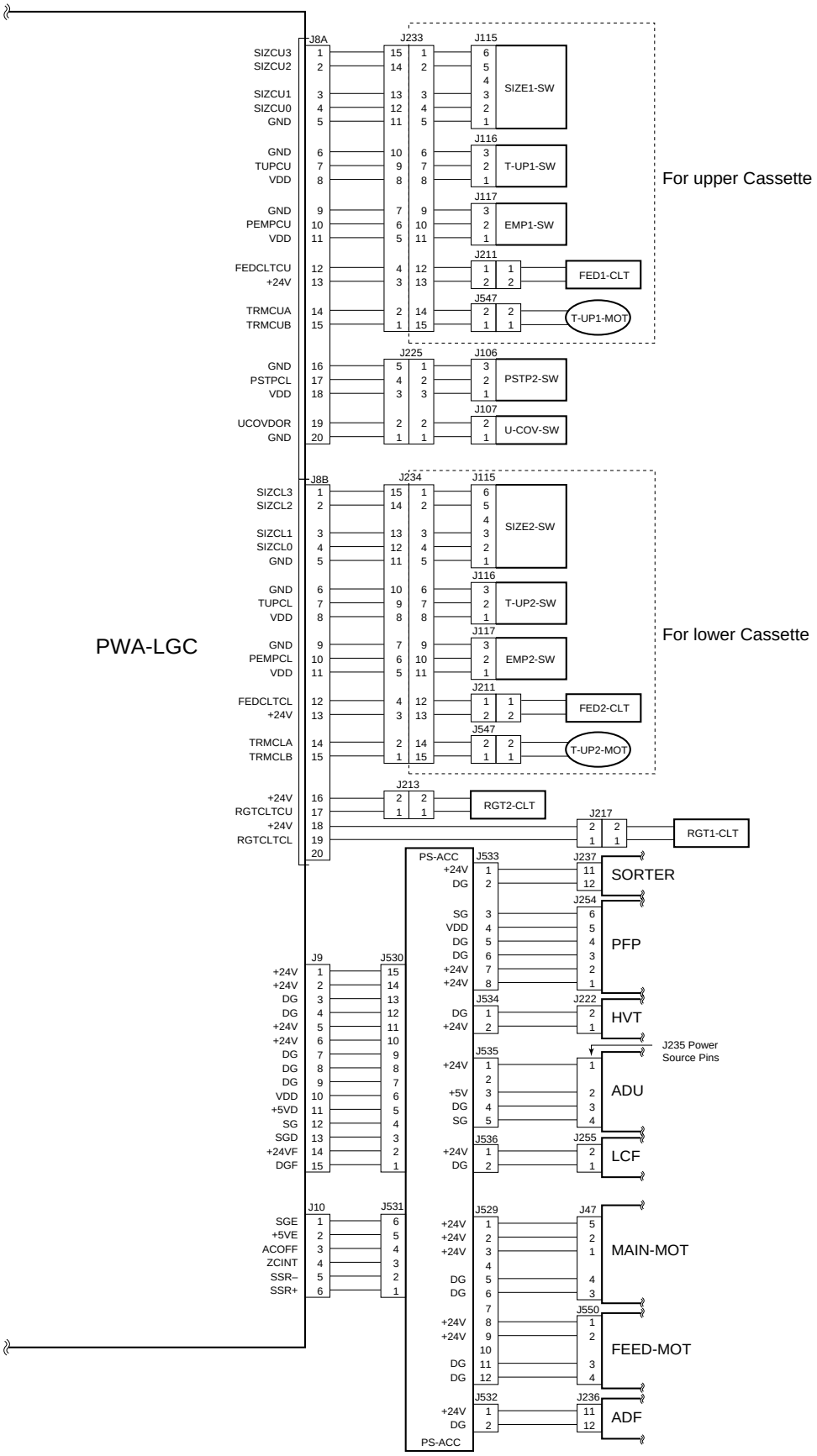
PWA-LGC
J8A
J233
J115
SIZE1-SW
J116
T-UP1-SW
J117
EMP1-SW
J211
FED1-CLT
J547
T-UP1-MOT
For upper Cassette
J225
J106
PSTP2-SW
J107
U-COV-SW
J8B
J234
J115
SIZE2-SW
J116
T-UP2-SW
J117
EMP2-SW
J211
FED2-CLT
J547
T-UP2-MOT
For lower Cassette
J213
RGT2-CLT
J217
RGT1-CLT
PS-ACC
J533
J237
SORTER
J254
PFP
J534
J222
HVT
J535
J235 Power Source Pins
ADU
J536
J255
LCF
J9
J530
J10
J531
J529
J47
MAIN-MOT
J550
FEED-MOT
J532
J236
ADF

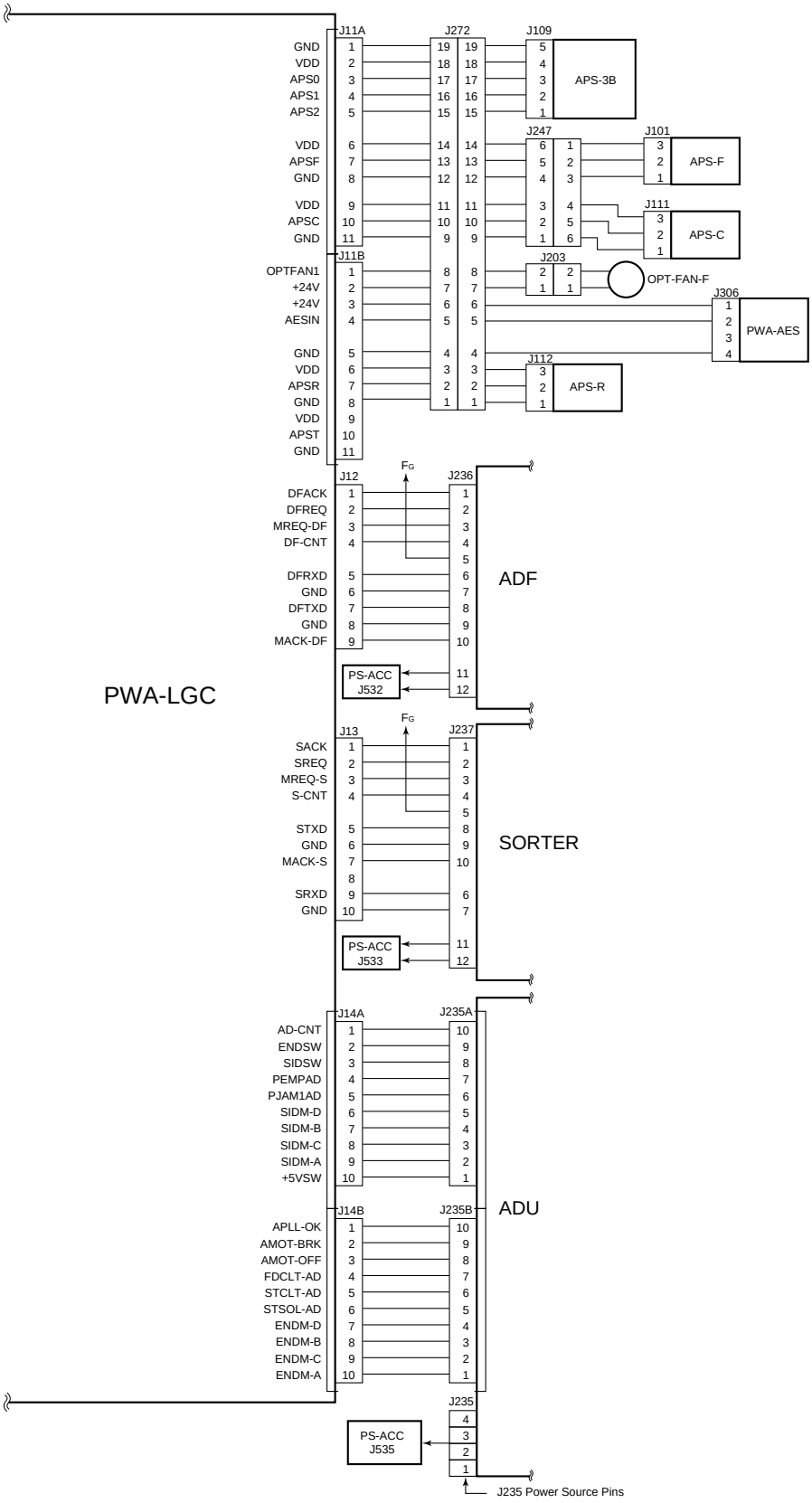
PWA-LGC
J11A
J272
J109
APS-3B
J247
J101
APS-F
J111
APS-C
J11B
J203
OPT-FAN-F
J306
PWA-AES
J112
APS-R
GND
VDD
APS0
APS1
APS2
APSF
APSC
OPTFAN1
+24V
AESIN
APST
J12
J236
ADF
DFACK
DFREQ
MREQ-DF
DF-CNT
DFRXD
DFTXD
MACK-DF
PS-ACC
J532
J13
J237
SORTER
SACK
SREQ
MREQ-S
S-CNT
STXD
SRXD
MACK-S
PS-ACC
J533
J14A
J235A
ADU
AD-CNT
ENDSW
SIDSW
PEMPAD
PJAM1AD
SIDM-D
SIDM-B
SIDM-C
SIDM-A
+5VSW
J14B
J235B
APLL-OK
AMOT-BRK
AMOT-OFF
FDCLT-AD
STCLT-AD
STSOL-AD
ENDM-D
ENDM-B
ENDM-C
ENDM-A
J235
PS-ACC
J535
J235 Power Source Pins

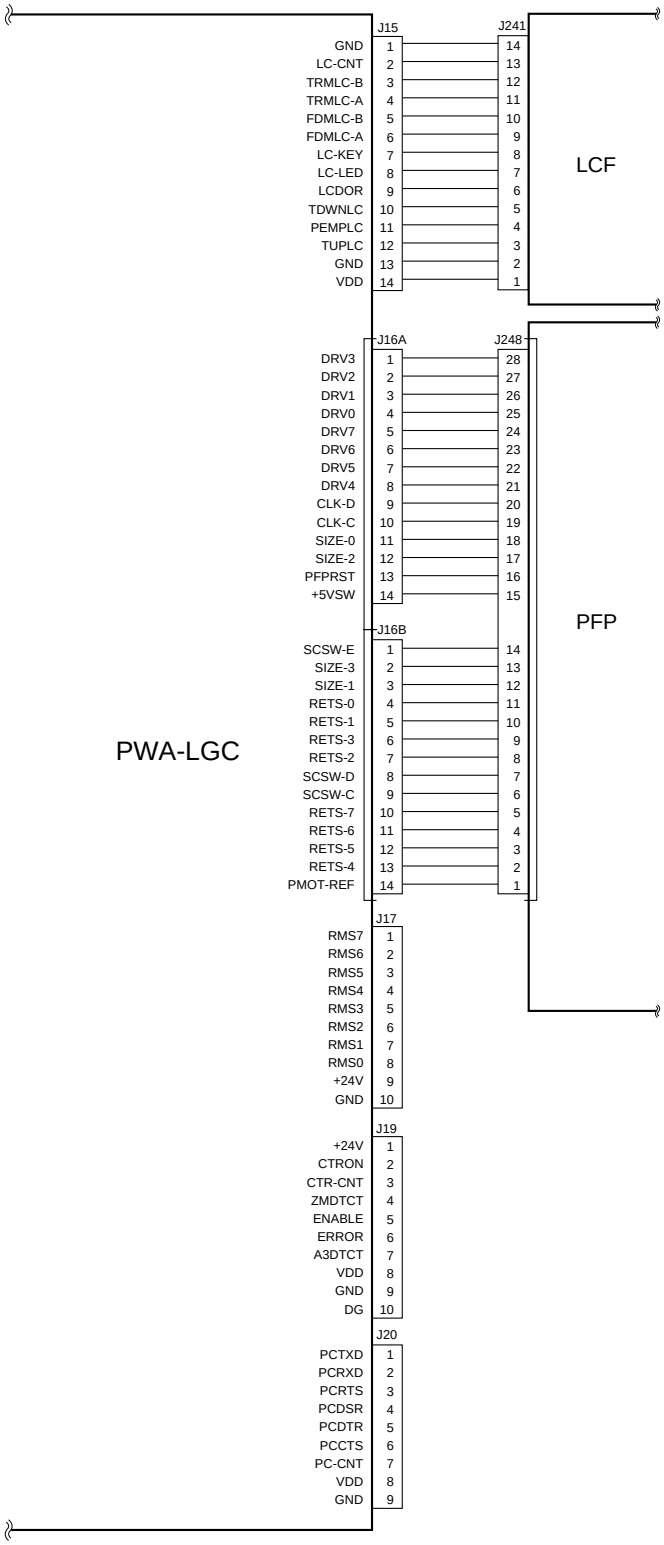
PWA-LGC
J15
GND 1
LC-CNT 2
TRMLC-B 3
TRMLC-A 4
FDMLC-B 5
FDMLC-A 6
LC-KEY 7
LC-LED 8
LCDOR 9
TDWNLC 10
PEMPLC 11
TUPLC 12
GND 13
VDD 14
J241
14 13 12 11 10 9 8 7 6 5 4 3 2 1
LCF
J16A
DRV3 1
DRV2 2
DRV1 3
DRV0 4
DRV7 5
DRV6 6
DRV5 7
DRV4 8
CLK-D 9
CLK-C 10
SIZE-0 11
SIZE-2 12
PFPRST 13
+5VSW 14
J248
28 27 26 25 24 23 22 21 20 19 18 17 16 15
J16B
SCSW-E 1
SIZE-3 2
SIZE-1 3
RETS-0 4
RETS-1 5
RETS-3 6
RETS-2 7
SCSW-D 8
SCSW-C 9
RETS-7 10
RETS-6 11
RETS-5 12
RETS-4 13
PMOT-REF 14
14 13 12 11 10 9 8 7 6 5 4 3 2 1
PFP
J17
RMS7 1
RMS6 2
RMS5 3
RMS4 4
RMS3 5
RMS2 6
RMS1 7
RMS0 8
+24V 9
GND 10
J19
+24V 1
CTRON 2
CTR-CNT 3
ZMDTCT 4
ENABLE 5
ERROR 6
A3DTCT 7
VDD 8
GND 9
DG 10
J20
PCTXD 1
PCRXD 2
PCRTS 3
PCDSR 4
PCDTR 5
PCCTS 6
PC-CNT 7
VDD 8
GND 9

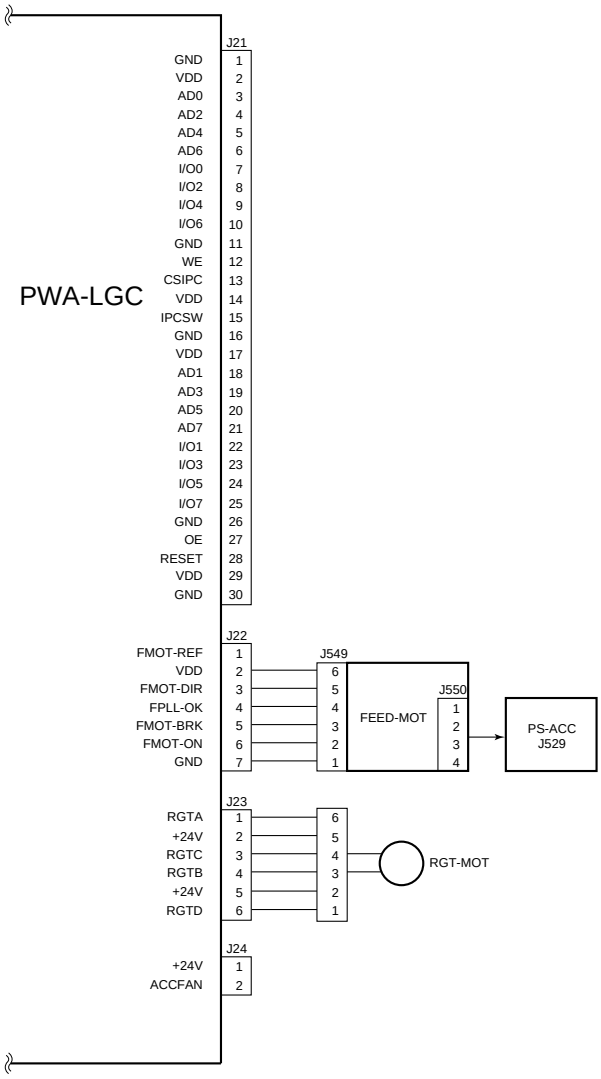
PWA-LGC
J21
GND 1
VDD 2
AD0 3
AD2 4
AD4 5
AD6 6
I/O0 7
I/O2 8
I/O4 9
I/O6 10
GND 11
WE 12
CSIPC 13
VDD 14
IPCSW 15
GND 16
VDD 17
AD1 18
AD3 19
AD5 20
AD7 21
I/O1 22
I/O3 23
I/O5 24
I/O7 25
GND 26
OE 27
RESET 28
VDD 29
GND 30
J22
FMOT-REF 1
VDD 2
FMOT-DIR 3
FPLL-OK 4
FMOT-BRK 5
FMOT-ON 6
GND 7
J549
6 5 4 3 2 1
FEED-MOT
J550
1 2 3 4
PS-ACC
J529
J23
RGTA 1
+24V 2
RGTC 3
RGTB 4
+24V 5
RGTD 6
6 5 4 3 2 1
RGT-MOT
J24
+24V 1
ACCFAN 2

18. REVERSING AUTOMATIC DOCUMENT FEEDER (RADF)

18.1 Specifications

Number of Originals	Up to 50 originals (A4/60~80 g/m^2 or Letter/16~22 lb.) can be set at a time.
Feeding Speed	Approx. 45 originals/minute (A4 or Letter, side feeding) when installed on the 4560
Acceptable Original Size	Minimum : A5-R or Statement-R, Personal check Maximum : A3 or Ledger Paper weight: 60~90 g/m^2 16~24 lb.
Power Source	Supplied from the copier
Power Consumption	60W
Dimensions	W597 x D494 x H120 (W23.5" x D19.4" x H4.7")
Weight	Approx. 9.5 Kg or 20.9 lb.

Specifications are subject to change without notice.

18.2 Construction

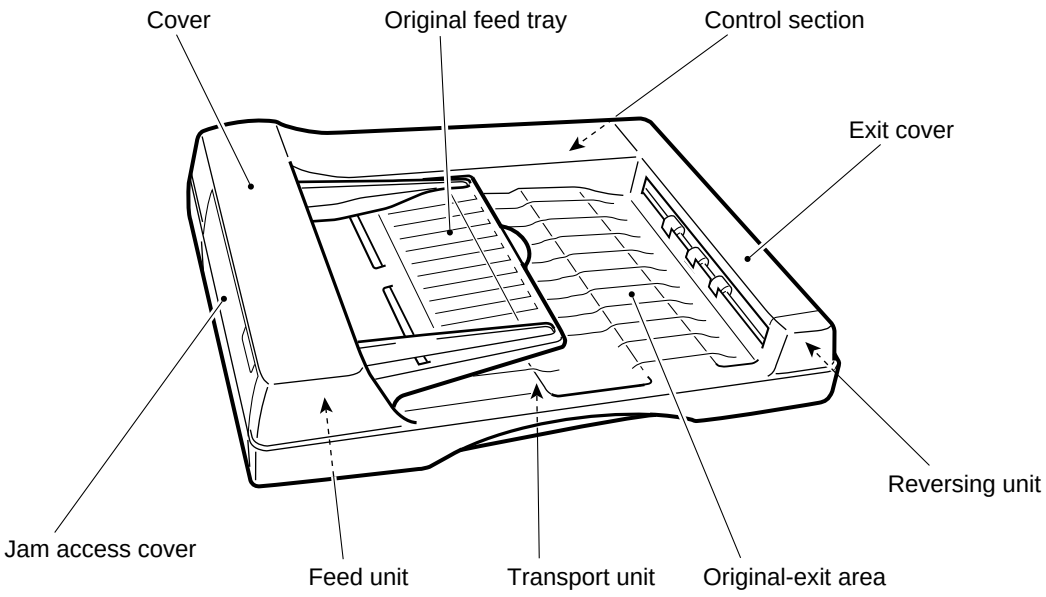

	Mechanical	Electrical
Feed unit	• Pick-up roller • Feed roller • Separation pad • Aligning roller • Jam access cover	• Drive motor • Transport clutch, Feed clutch • Empty sensor • Aligning sensor • Size sensor • Feed-cover switch • ADF set switch
Transport unit	• Transport belt • Belt rollers • Belt holding rollers	—
Reversing unit	• Reversing roller • Exit roller • Exit cover	• Exit sensor • Exit-cover switch
Tray	• Tray • Side guide • Fold-out holder	—
Control section	—	• PC board
Other	• Cover • Hinges	—

18.3 Front Section and Drive System Diagrams

18.3.1 Front section diagram

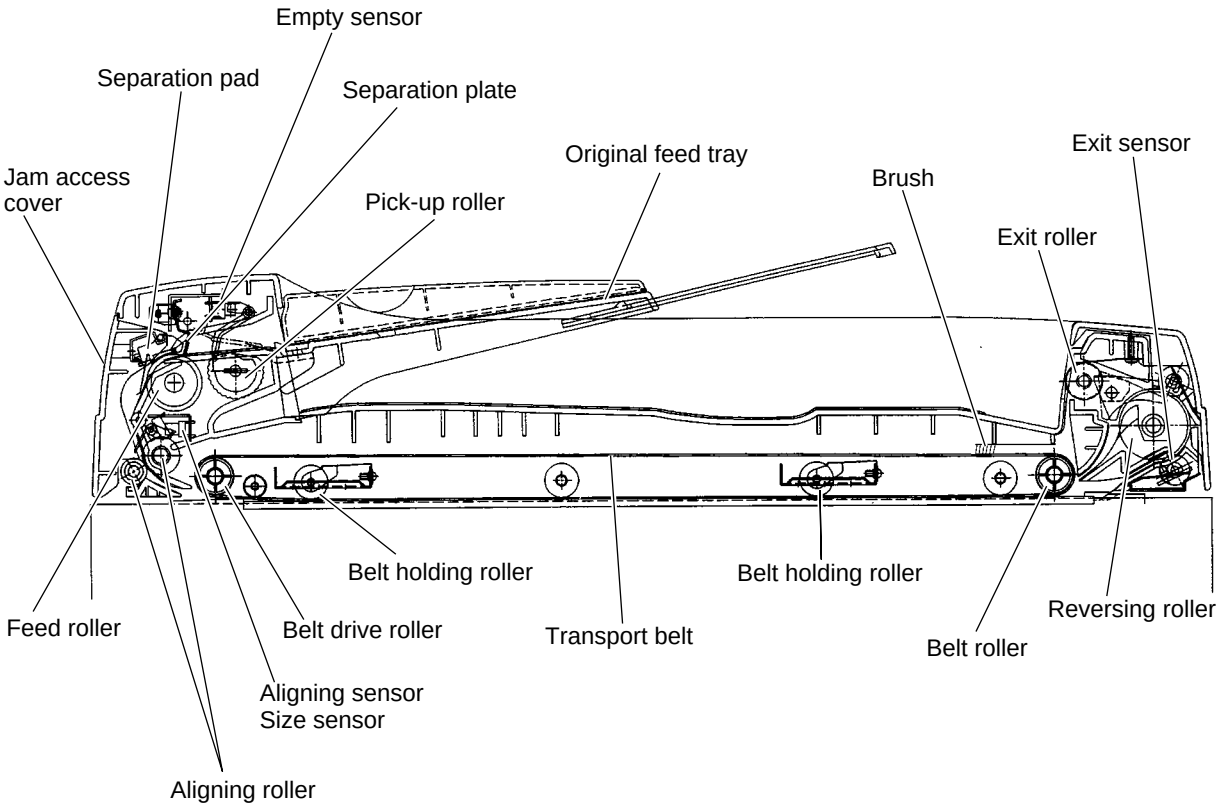

18.3.2 Drive system diagram

(1) Drive motor rotates clockwise (viewed from front side).

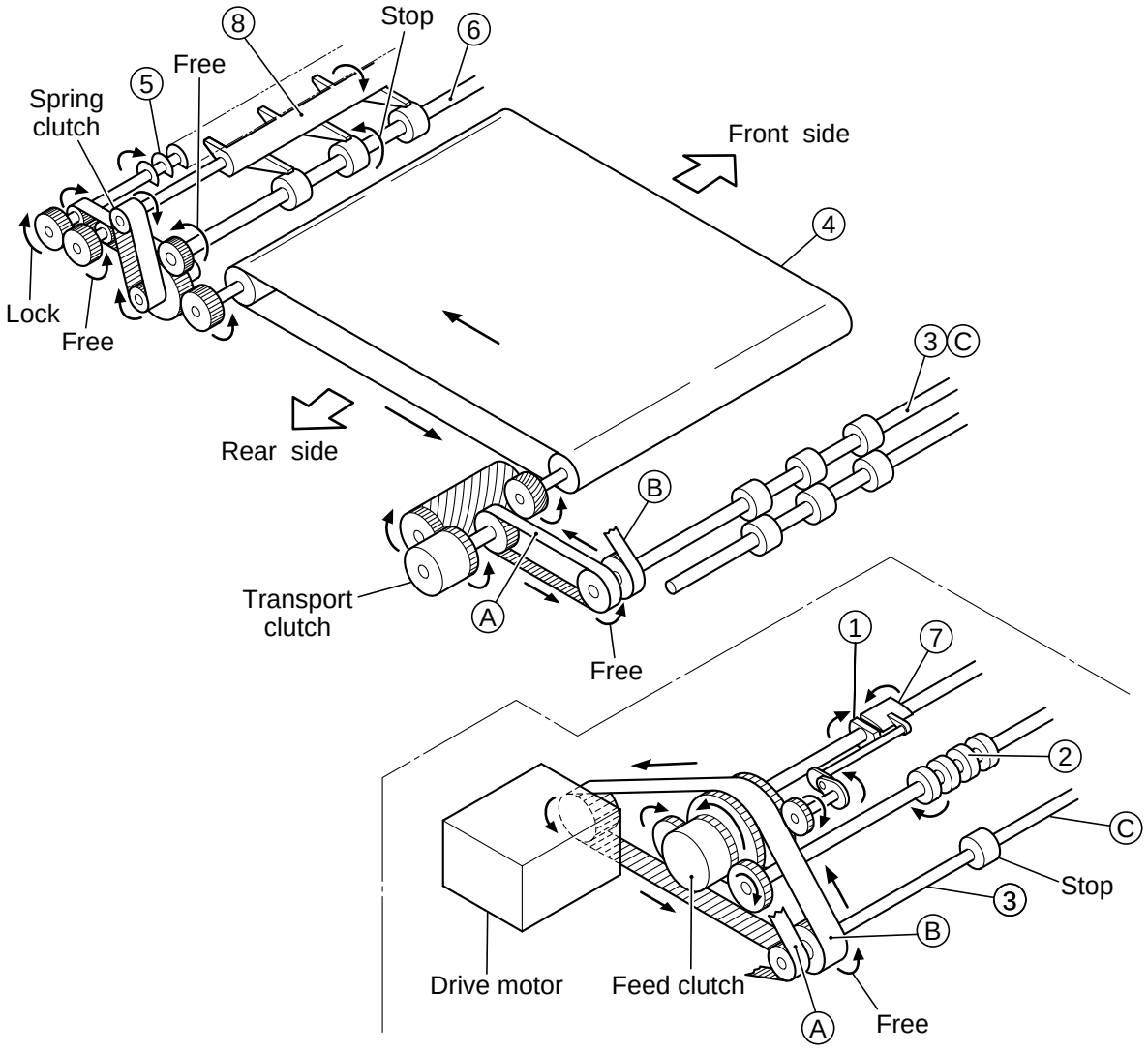

①	Rotates in pick-up roller CCW direction.	: When feed clutch is ON
②	Rotates in feed roller CCW direction.	: When feed clutch is ON
③	Aligning roller stops.	
④	Rotates in transport belt CW direction.	: When transport clutch is ON
⑤	Rotates in reversing roller CCW direction.	: When transport clutch is ON
⑥	Exit roller stops.	
⑦	Weight falls.	
⑧	Flapper rises.	: When transport clutch is ON

(2) Drive motor rotates counterclockwise (viewed from front side).

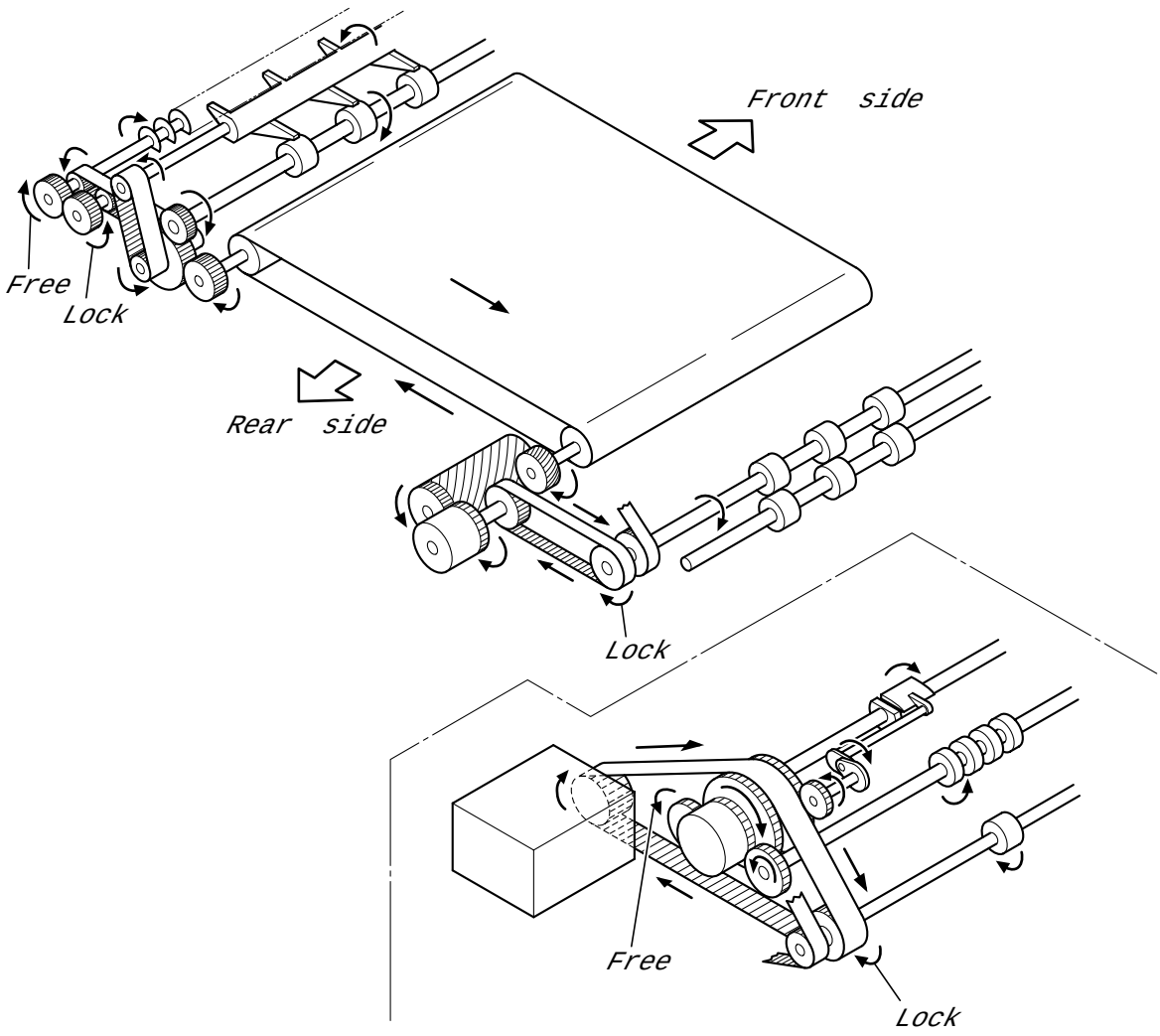

① Pick-up roller stops.
② Feed roller stops.
③ Rotates in aligning roller CCW direction.
④ Rotates in transport belt CCW direction. : When transport clutch is ON
⑤ Rotates in reversing roller CCW direction. : When transport clutch is ON
⑥ Rotates in exit roller CCW direction. : When transport clutch is ON
⑦ Weight rises.
⑧ Flapper falls. : When transport clutch is ON

18.4 Description of Drive Operation

18.4.1 Original feed and discharge

A. Single-side original feed

Operation from original feed to discharge (start of original feed → separation → aligning → transport → stop at exposure position → copy → original discharge) is described in steps A-1 to A-8.

B. 2in1 original feed

Operation from original feed to discharge (start of 1st original feed → separation → aligning → transport → stop → start of 2nd original feed → separation → aligning → splicing → transport → stop at exposure position → copy → original discharge) is described in steps B-1 to B-10.

C. Dual-side original feed

Operation from original feed to discharge (start of original feed → separation → aligning → transport → reversal → stop at exposure position → copy → original discharge) is described in steps C-1 to C-8.

A-1 Original loading

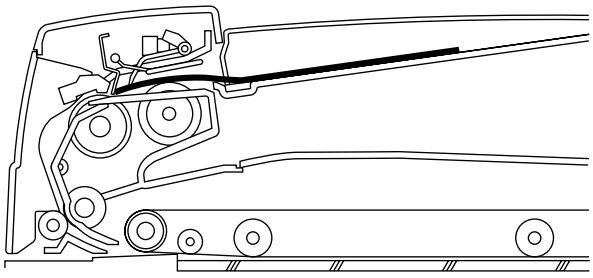

- Drive motor : Turns OFF.
- Feed clutch : Turns OFF.
- Transport clutch : Turns OFF.
- Weight : Rises.
- Pick-up roller : Stops.
- Feed roller : Stops.
- Aligning roller : Stops.
- Transport belt : Stops.

- The original is loaded.

A-2 Original alignment after PRINT button ON

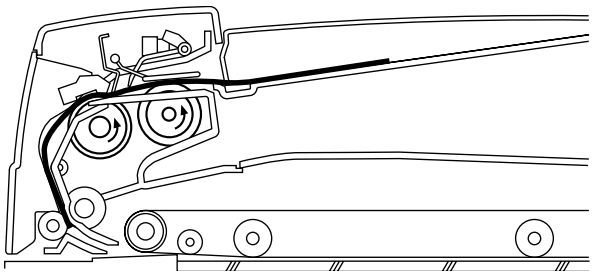

- Drive motor : Rotates in reverse direction.
- Feed clutch : Turns ON.
- Transport clutch : Turns OFF.
- Weight : Falls.
- Pick-up roller : Rotates.
- Feed roller : Rotates.
- Aligning roller : Stops.
- Transport belt : Stops.

- The original is fed for a fixed number of pulses after the aligning sensor turns ON, and the motor stops.

A-3 Drive motor ON =original transport to copy glass surface

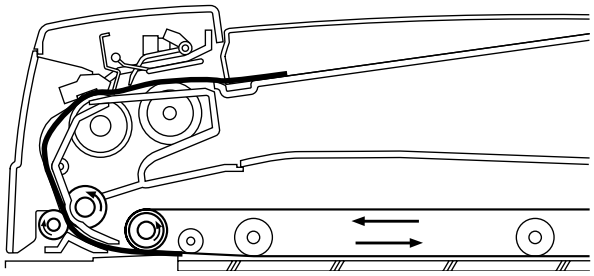

- Drive motor : Rotates in forward direction.
- Feed clutch : Turns OFF.
- Transport clutch : Turns ON.
- Aligning roller : Rotates.
- Transport belt : Rotates in forward direction.

- The aligning sensor turns OFF, and the original is transported for a fixed number of pulses.

A-4 Original stop = original feed completion

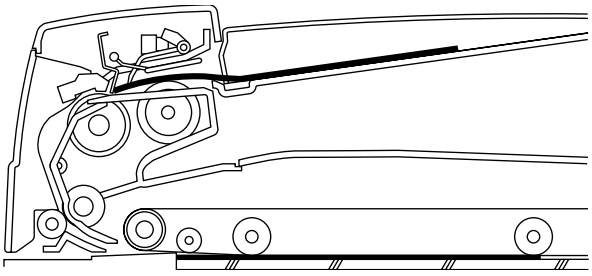

- After a fixed amount of time has elapsed since the motor stopped, the transport clutch is turned OFF to complete original feed.

A-5 From start of advance feed of next original to original alignment (A4 original wide, letter-size original wide)

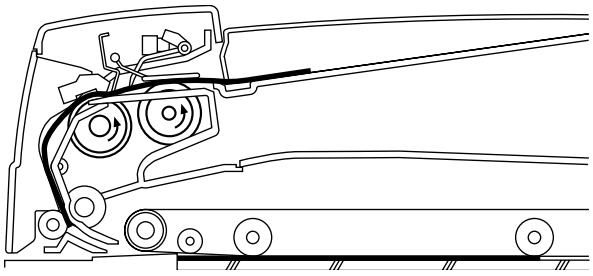

- Drive motor : Rotates in reverse direction.
- Feed clutch : Turns ON.
- Transport clutch : Turns OFF.
- Weight : Falls.
- Pick-up roller : Rotates.
- Feed roller : Rotates.
- Aligning roller : Stops.
- Transport belt : Stops.

- If the original that was fed in A-4step is A4-wide or letter-size wide, the original on the tray is fed in advance to start two-step pre-feeding.
- The original is fed for a fixed number of pulses after the aligning sensor turns ON, and the motor stops.

A-6 From start to completion of two-step pre-feeding (A4 original wide, letter-size original wide)

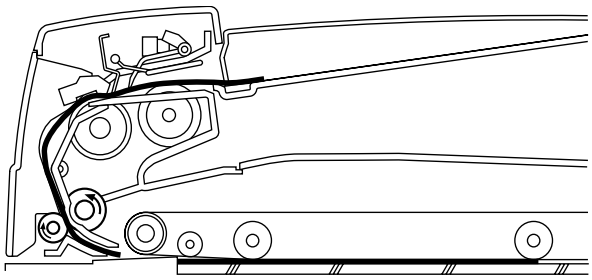

- Drive motor : Rotates in forward direction.
- Feed clutch : Turns OFF.
- Transport clutch : Turns OFF.
- Weight : Rises.
- Pick-up roller : Stops.
- Feed roller : Stops.
- Aligning roller : Rotates.
- Transport belt : Stops.

- The motor is rotated in the forward direction for a fixed number of pulses, and stops.

A-7 Start of original discharge

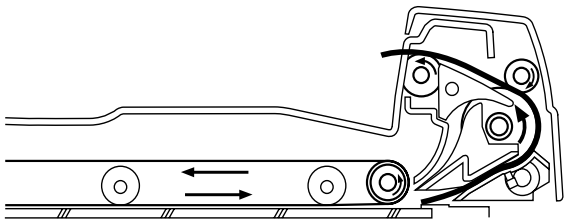

- Drive motor : Rotates in forward direction.
- Transport clutch : Turns ON.
- Transport belt : Rotates in forward direction.
- Reversing roller : Rotates.
- Exit roller : Rotates.

- Forward rotation of the motor lowers the flapper, and the original is discharged.

A-8 Completion of discharge

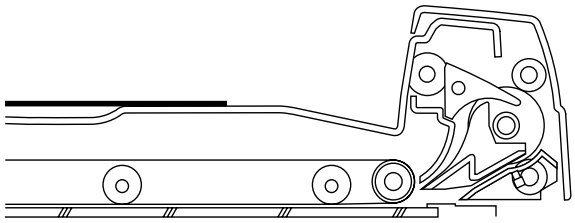

- After a fixed amount of time has elapsed since the motor stopped, the transport clutch is turned OFF to complete original discharge.

B-1 Original loading

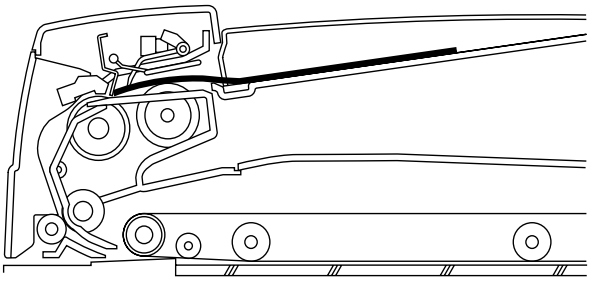

- Drive motor : Turns OFF.
- Feed clutch : Turns OFF.
- Transport clutch : Turns OFF.
- Weight : Rises.
- Pick-up roller : Stops.
- Feed roller : Stops.
- Aligning roller : Stops.
- Transport belt : Stops.

- The original is loaded.

B-2 From PRINT button ON to 1st original alignment

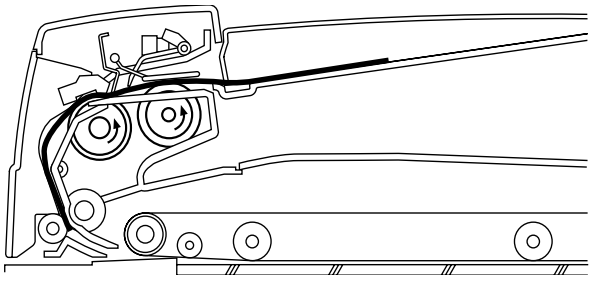

- Drive motor : Rotates in reverse direction.
- Feed clutch : Turns ON.
- Transport clutch : Turns OFF.
- Weight : Falls.
- Pick-up roller : Rotates.
- Feed roller : Rotates.
- Aligning roller : Stops.
- Transport belt : Stops.

- The original is fed for a fixed number of pulses after the aligning sensor turns ON, and the motor stops.

B-3 Transport of 1st original to pause position after drive motor ON

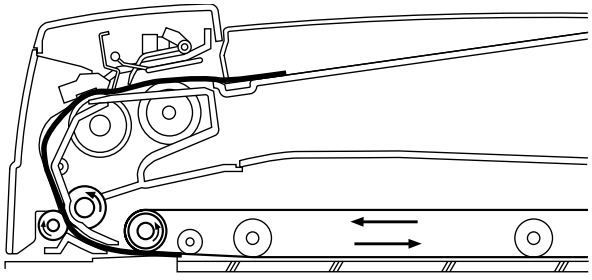

- Drive motor : Rotates in forward direction.
- Feed clutch : Turns OFF.
- Transport clutch : Turns ON.
- Aligning roller : Rotates.
- Transport belt : Rotates in forward direction.

- The aligning sensor turns OFF, and the original is transported for a fixed number of pulses.

B-4 From drive motor ON to 1st original pause

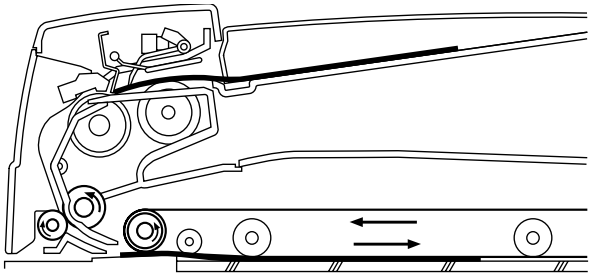

- Drive motor : Rotates in forward direction.
- Feed clutch : Turns OFF.
- Transport clutch : Turns ON.
- Aligning roller : Rotates.
- Transport belt : Rotates in forward direction.

- The original is fed for a fixed number of pulses after the aligning sensor turns OFF, and the motor stops.
- The trailing edge of the 1st original exits the original feed section, and is positioned on the original stopper.

B-5 To alignment of 2nd original

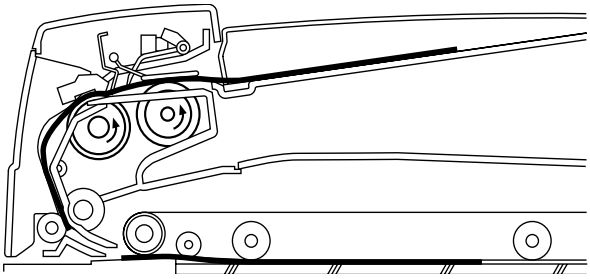

- Drive motor : Rotates in reverse direction.
- Feed clutch : Turns ON.
- Transport clutch : Turns OFF.
- Weight : Falls.
- Pick-up roller : Rotates.
- Feed roller : Rotates.
- Aligning roller : Stops.
- Transport belt : Stops.

- The original is fed for a fixed number of pulses after the aligning sensor turns ON, and the motor stops.

B-6 To completion of splice

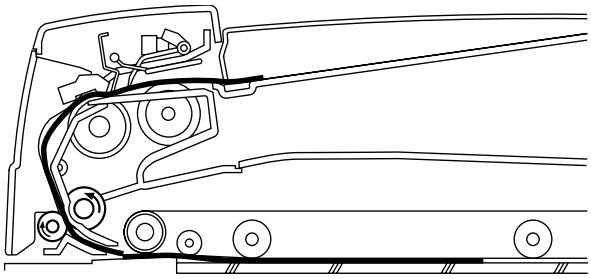

- Drive motor : Rotates in forward direction.
- Feed clutch : Turns OFF.
- Transport clutch : Turns OFF.
- Aligning roller : Rotates.
- Transport belt : Stops.

- The motor is rotated in the forward direction for a fixed number of pulses, and the leading edge of the 2nd original is spliced with the trailing edge of the 1st original.

B-7 Transport to copy glass surface

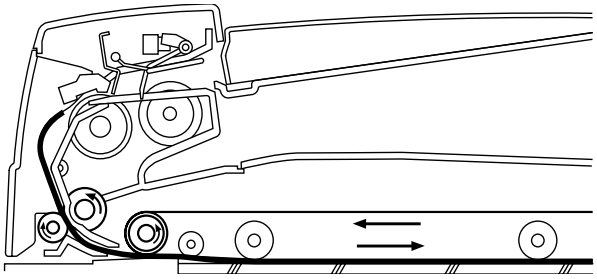

- Drive motor : Rotates in forward direction.
- Feed clutch : Turns OFF.
- Transport clutch : Turns ON.
- Aligning roller : Rotates.
- Transport belt : Rotates in forward direction.

- The aligning sensor turns OFF, and the original is transported for a fixed number of pulses.

B-8 Completion of original feed

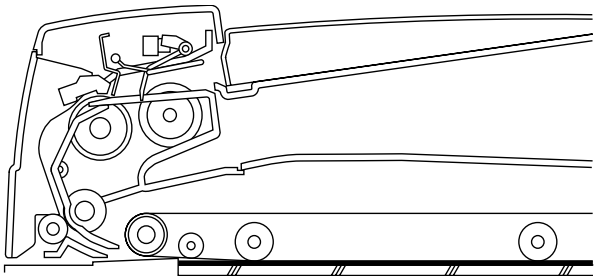

- The original is fed for a fixed number of pulses after the aligning sensor turns OFF, and the motor stops.
- After a fixed amount of time has elapsed since the motor stopped, the transport clutch is turned OFF to complete original feed.

B-9 Discharge of original

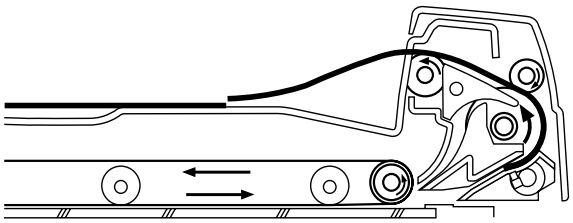

- Drive motor : Rotates in forward direction.
- Transport clutch : Turns ON.
- Transport belt : Rotates in forward direction.
- Reversing roller : Rotates.
- Exit roller : Rotates.

- Forward rotation of the motor lowers the flapper, and the original is discharged.

B-10 Completion of discharge

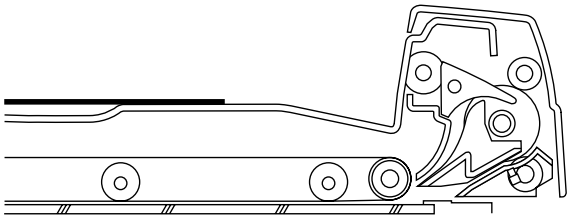

- After a fixed amount of time has elapsed since the motor stopped, the transport clutch is turned OFF to complete original discharge.

C-1 Original loading

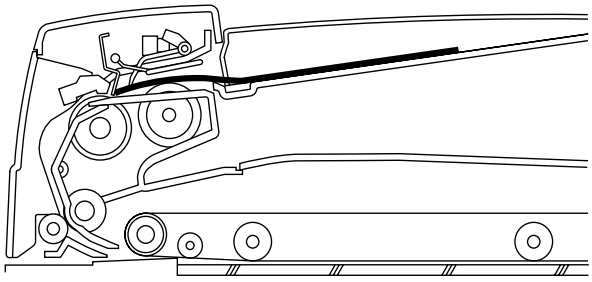

- Drive motor : Turns OFF.
- Feed clutch : Turns OFF.
- Transport clutch : Turns OFF.
- Weight : Rises.
- Pick-up roller : Stops.
- Feed roller : Stops.
- Aligning roller : Stops.
- Transport belt : Stops.

- The original is loaded.

C-2 From PRINT button ON to original alignment

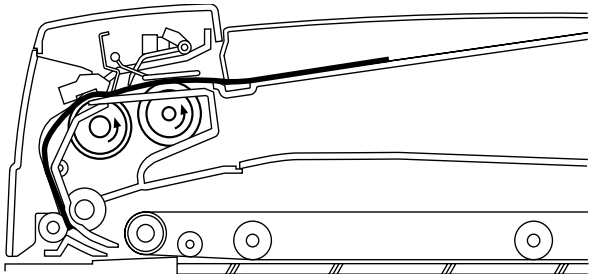

- Drive motor : Rotates in reverse direction.
- Feed clutch : Turns ON.
- Transport clutch : Turns OFF.
- Weight : Falls.
- Pick-up roller : Rotates.
- Feed roller : Rotates.
- Aligning roller : Stops.
- Transport belt : Stops.

- The original is fed for a fixed number of pulses after the aligning sensor turns ON, and the motor stops.

C-3 Drive motor ON = Original transport to copy glass surface

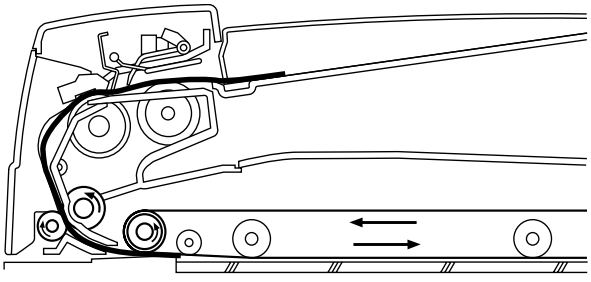

- Drive motor : Rotates in forward direction.
- Feed clutch : Turns OFF.
- Transport clutch : Turns ON.
- Aligning roller : Rotates.
- Transport belt : Rotates in forward direction.

- The original is fed out to the copy glass surface.

C-4 To forward rotation stop

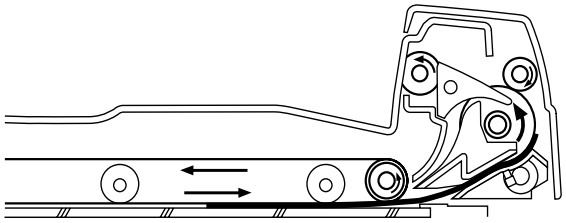

- Drive motor : Rotates in forward direction.
- Feed clutch : Turns OFF.
- Transport clutch : Turns ON.
- Transport belt : Rotates in forward direction.
- Reversing roller : Rotates.

- The motor stops when the original has been transported by about 25 mm after the exit sensor turns ON.

C-5 Original reversal

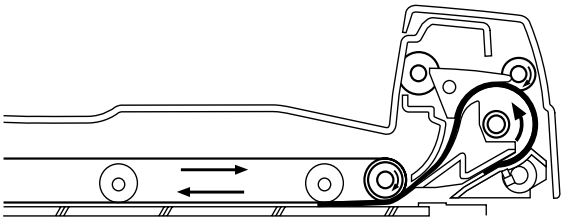

- Drive motor : Rotates in reverse direction.
- Feed clutch : Turns OFF.
- Transport clutch : Turns ON.
- Transport belt : Rotates in reverse direction.
- Reversing roller : Rotates.

- Reverse rotation of the motor raises the flapper, and the original is reversed.
- The original is fed for fixed number of pulses and the motor stops.

C-6 Completion of original feed

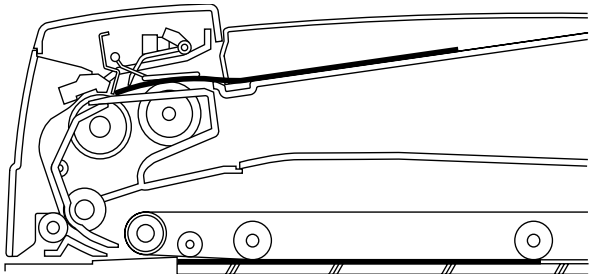

- After a fixed amount of time has elapsed since the motor stopped, the transport clutch is turned OFF to complete original feed.

C-7 Original discharge

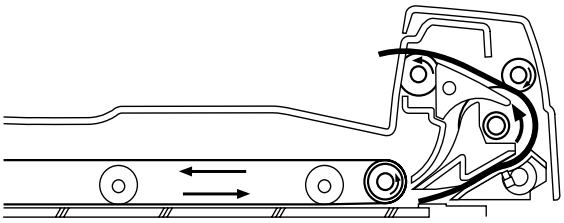

- Drive motor : Rotates in forward direction.
- Transport clutch: Turns ON.
- Transport belt : Rotates in forward direction.
- Reversing roller : Rotates.
- Exit roller : Rotates.

- Forward rotation of the motor lowers the flapper, and the original is discharged.

C-8 Completion of discharge

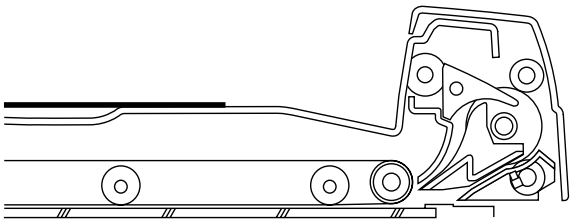

- After a fixed amount of time has elapsed since the motor stopped, the transport clutch is turned OFF to complete original discharge.

18.4.2 Description of original feeder operation

A. Single-side original feed operation

1. When the original is placed on the original feed tray, the original is detected by the empty sensor, and the ORG-RDY signal is set.
2. When the ORG-IN signal is received from the main unit, DF-ACT is set, and original replacement is started. When a fixed amount of time has elapsed since the feed clutch turned ON, the motor is driven in the reverse direction to start original feed.
3. After being driven for a fixed number of pulses after the leading edge of the original arrived at the aligning sensor, the motor is stopped. When the leading edge of the original arrives at the aligning roller, aligning is carried out. At the same time, the state of the size width sensor is stored to memory. When a fixed amount of time has elapsed since the motor stopped, the feed clutch is turned OFF.
4. When a fixed amount of time has elapsed since the transport clutch turned ON, the motor is driven in the forward direction to feed the original onto the glass surface. At the same time, travel size detection is started (resumed when there is two-step pre-feeding).
5. The PRE-STP signal is set by the set timing of the PRE-STP signal.
6. When the trailing edge of the original exits the aligning sensor, the DF-ACT signal is reset, travel size detection ends, and the original size is detected together with the state of the size width sensor stored to memory in 3. and 11. When the original is an irregular size, or when the original size is different from the size of the original that passed through previously, the original size data is transmitted to the main unit.
7. The ORG-STP signal is set by the set timing of the ORG-STP signal.
8. After being driven for a fixed number of pulses after the trailing edge of the original has exited the aligning sensor, the motor is stopped, and the original is placed at the exposure position. When a fixed amount of time has elapsed since the motor stopped, the transport clutch is turned OFF, and single-side feed ends.
9. When the fed original is A4-size (landscape) or letter-size (landscape), the DF-SGL signal is reset and the original is on the tray, the PRE-FED signal is set, and pre-feeding operation is started. Otherwise, operation starts from 14.
10. When a fixed amount of time has elapsed since the feed clutch turned ON, the motor is driven in the reverse direction to start pre-feeding operation.
11. The same operation as 3. is carried out, and pre-feeding operation ends.
12. The motor is driven in the forwards direction to start two-step pre-feeding operation. At the same time, travel size detection is started. After being driven for a fixed number of pulses, the motor is stopped. When a fixed amount of time has elapsed since the motor stopped, the transport clutch is turned ON, two-step pre-feeding operation ends, and the machine stands by.
13. When the next ORG-IN signal is received, the PRE-FED signal is reset, and operation is resumed from 4. However, note that the transport clutch is turned ON at 12., so the transport clutch is not turned ON.

14. When the original feed size is not A4 (landscape) or letter (landscape), and the DF-SGL signal is set when original feed ends at 8., the DF-ACT signal is set when the next ORG-IN signal is received, and the transport clutch is turned ON.

    After a fixed amount of time has elapsed, the motor is driven in the forward direction to start pre-discharge operation. Pre-discharge operation is carried out to completely discharge the discharged original. After being driven for a fixed number of pulses, the motor is stopped. When a fixed amount of time has elapsed since the motor stopped, the transport clutch is turned OFF, and the pre-discharge operation ends.
15. Original replacement is started. When a fixed amount of time has elapsed since the feed clutch was turned ON, the motor is driven in the reverse direction to start the original feed operation.
16. From then on, operations from 3.are repeated.
17. When the ORG-OUT signal is received at 13. and 14., the DF-ACT signal is set, and the transport clutch is turned ON. When a fixed amount of time has elapsed, the motor is driven in the forward direction to discharge all originals being transported.
18. After being driven for a fixed number of pulses after the trailing edge of the final original has passed the exit sensor (exit inversion sensor). the motor is stopped. When a fixed amount of time has elapsed after the motor has stopped, the transport clutch is turned OFF.
19. The DF-ACT signal is reset, and the discharge of the final original ends.

B. Dual-side original feed operation

1. When the original is placed on the original feed tray, the original is detected by the empty sensor, and the ORG-RDY signal is set.
2. When the ORG-IN signal is received from the main unit, DF-ACT is set, and original replacement is started. When a fixed amount of time has elapsed since the feed clutch turned ON, the motor is driven in the reverse direction to start original feed.
3. After being driven for a fixed number of pulses after leading edge of the original arrives at the aligning sensor, the motor is stopped. When the leading edge of the original arrives at the aligning roller, aligning is carried out. At the same time,the state of the size width sensor is stored to memory. When a fixed amount of time has elapsed since the motor stopped, the feed clutch is turned OFF.
4. When a fixed amount of time has elapsed since the transport clutch turned ON, the motor is driven in the forward direction to fed the original onto the glass surface. At the same time, travel size detection is started.
5. When the trailing edge of the original exits the aligning sensor, travel size detection ends, and the original size is detected together with state of the size width sensor stored to memory in 3. When the original is an irregular size, or when the original size is different from the size of the original that passed through previously, the original size data is transmitted to the main unit.
6. After being driven for a fixed number of pulses after the leading edge of the final original has arrived at the exit sensor (exit inversion sensor), the motor is stopped.

7. When a fixed amount of time has elapsed after the motor has stopped, the motor is driven in the reverse direction, and inversion is started.
8. When the trailing edge of the original has exited the exit sensor, the ORG-FAC signal is reset. However, note that this sometimes happens after 9., 10. and 11. according to the length of the original.
9. The DF-ACT signal is reset by the reset timing of the DF-ACT signal.
10. The PRE-STP signal is reset by the set timing of the PRE-STP signal.
11. The ORG-STP signal is reset by the set timing of the ORG-STP signal.
12. After the motor starts to be driven in the reverse direction for a fixed number of pulses, the motor is stopped, and the original is placed at the exposure position. When a fixed amount of time has elapsed since the motor stopped, the transport clutch is turned OFF, and dual-side feed ends.
13. When the next ORG-IN signal is received, the DF-ACT signal is set, and the transport clutch is turned ON. After a fixed amount of time has elapsed, the motor is driven in the forward direction, and dual-side feed starts.
14. The same operation as in 6. and 7. are carried out.
15. When the trailing edge of the original exits the exit sensor, the ORG-FAC signal is set.
16. The same operations as in 9., 10. and 11. are carried out.
17. After being driven for a fixed number of pulses after motor is driven in the reverse direction, the motor is stopped, and the original is placed at the exposure position. When a fixed amount of time has elapsed since the motor stopped, the transport clutch is turned OFF, and dual-side original feed operation ends.
18. When the next ORG-IN signal is received, the DF-ACT signal is set, and the transport clutch is turned ON. After a fixed amount of time has elapsed, the motor is driven in the forward direction to start pre-discharge operation. Pre-discharge operation is carried out to completely discharged original. After being driven for a fixed number of pulses, the motor is stopped. When a fixed amount of time has elapsed since the motor stopped, the transport clutch is turned OFF, and the pre-discharge operation ends.
19. Original replacement is started. When a fixed amount of time has elapsed since the feed clutch is turned ON, the motor is driven in the reverse direction to start the original feed operation.
20. From then on, operations from 3. are repeated.
21. When the ORG-OUT signal is received at 13., the DF-ACT signal is set, and the transport clutch is turned ON. When a fixed amount of time has elapsed, the motor is driven in the forward direction, and the same operation as in 14., 15.and 17. are carried out. After the front side of the original is placed, operation is started from 23.
22. When the ORG-OUT signal is received at 18., the DF-ACT signal is set, and the operation is started from 23.
23. When a fixed amount of time has elapsed after the transport clutch is turned ON, the motor is driven in the forward direction to discharge all originals being transported.

24. After being driven for a fixed number of pulses after the trailing edge of the final original has passed the exit sensor (exit inversion sensor), the motor is stopped. When a fixed amount of time has elapsed after the motor has stopped,the transport clutch is turned OFF.
25. The DF-ACT signal is reset, and the discharge of the final original ends.

C. 2in1 original feed operation

1. When the original is placed on the original feed tray, the original is detected by the empty sensor, and the ORG-RDY signal is set.
2. When the ORG-IN signal is received from the main unit, DF-ACT is set, and original replacement is started. When a fixed amount of time has elapsed since the feed clutch turned ON, the motor is driven in the reverse direction to start original feed.
3. After being driven for a number of pulses after the leading edge of the original arrives at the aligning sensor, the motor is stopped. When the leading edge of the original arrives at the aligning roller, aligning is carried out. At the same time, the state of the width sensor is stored to memory. When a fixed amount of time has elapsed since the motor stopped, the feed clutch is turned OFF.
4. When a fixed amount of time has elapsed since the transport clutch turned ON, the motor is driven in the forward direction to feed the 1st original to just before the exposure position. At the same time, travel size detection is started.
5. When the trailing edge of the 1st original exits the aligning sensor, travel size detection ends, and the original size is detected together with the state of the size width sensor stored to memory in 3 and stored to memory.
6. After being driven for a fixed number of pulses after the trailing edge of the original has exited the aligning sensor, the motor is stopped, and the 1st original is placed just before the exposure position. When a fixed amount of time has elapsed after the motor has stopped, the transport clutch is turned OFF.
7. The PRE-FED signal is set, and the feed clutch is turned ON. When a fixed amount of time has elapsed, the motor is driven in the reverse direction to start the original feed operation of the 2nd original.
8. The same operation as 3. is carried out.
9. The motor rotates in the forward direction, and joining of the 1st and 2nd originals is stated. At the same time, the travel size detection of the 2nd original is started. After being driven for a fixed number of pulses, the motor is stopped to joining.
10. When a fixed amount of time has elapsed since the motor stopped, the transport clutch is turned ON, and after a future fixed amount of time has elapsed, the motor is driven in the forward direction to feed the 2nd original to the glass surface.
11. The PRE-STP signal is set by the set timing of the PRE-STP signal.

12. When the trailing edge of the 2nd original exits the aligning sensor, the DF-ACT and PRE-FED signals are reset. Travel size detection also ends, and the 2nd original size is detected together with the state of the size width sensor stored to memory in 3.

    The sizes of the 1st and 2nd originals are compared, and when the larger of the two original sizes is irregular, or when the original size is different from the size of the original that passed through previously, the size data of the larger original is transmitted to the main unit.
13. The ORG-STP signal is set by the set timing of the ORG-STP signal.
14. After being drivien for a fixed number of pulses after the trailing edge of the 2nd original has exited the aligning sensor, the motor is stopped, and the original is placed at the exposure position. When a fixed amount of has elapsed since the motor stopped, the transport clutch is turned OFF, and 2 in 1 original feed operation ends.
15. When the next ORG-IN signal is received, the DF-ACT signal is set, and the transport clutch is turned ON. After a fixed amount of has elapsed, the motor is driven in the forward direction to start pre-discharge operation. Pre-discharge operation is carried out to completely discharge the discharged original. After being driven for a fixed number of pulses, the motor is stopped. When a fixed amount of time has elapsed since the motor stopped, the transport clutch is turned OFF, and the pre-discharge operation ends.
16. Original replacement is started. When a fixed amount of time has elapsed since the feed clutch is turned ON, the motor is driven in the reverse direction to start the original feed operation.
17. From then on, operation from 3. are repeated.
18. When the ORG-OUT signal is received at 16., the DF-ACT signal is set. When a fixed amount of time has elapsed after the transport clutch is turned ON, the motor is driven in the forward direction to discharge all originals being transported.
19. After being for a fixed number of pulses after the trailing edge of the final original has passed the exit sensor (exit inversion sensor), the motor is stopped. When a fixed amount of time has elapsed after the motor has stopped, the transport clutch is turned OFF.
20. The DF-ACT signal is reset, and the discharge of the final original ends.

18.5 Names and Functions of Electrical Parts

18.5.1 Functions of electrical parts

(1) Motor

Symbol	Name	Function	Remarks
MOT	MOT (Drive motor)	Driving of pick-up roller, feed roller, aligning roller, transport belt, reversing roller and exit roller	Pulse motor

(2) Electromagnetic clutches

Symbol	Name	Function	Remarks
PASUCLU	PASUCLU (Feed clutch)	Transmitting of drive of pick-up roller and feed roller	Electromagnetic clutch
DRVCLU	DRVCLU (Transport clutch)	Transmitting of drive of transport belt, reversing roller and exit roller	Electromagnetic clutch

(3) Sensors

Symbol	Name	Function	Remarks
EMPS	EMP-SNS (Empty sensor)	Original detection sensor for originals on original feed tray	Semiconductor sensor
REGS	REG-SNS (Aligning sensor)	Original detection sensor for aligning	Semiconductor sensor
SIZES1	SIZE-SNS1 (Size sensor 1)	Original width detection sensor 1	Semiconductor sensor
SIZES2	SIZE-SNS2 (Size sensor 2)	Original width detection sensor 2	Semiconductor sensor
EXITS	EXIT-SNS (Exit sensor)	Original detection sensor at exit section	Semiconductor sensor
DFSW	DF-SW (ADF set switch)	Detection switch for opening/closing ADF unit	Reed switch
JAMSW	JAM-SW (Feed-cover switch)	Detection switch for opening/closing feed unit	Reed switch
EXITSW	EXIT-SW (Exit-cover switch)	Detection switch for opening/closing exit unit	Reed switch

18.5.2 Electrical parts location diagram

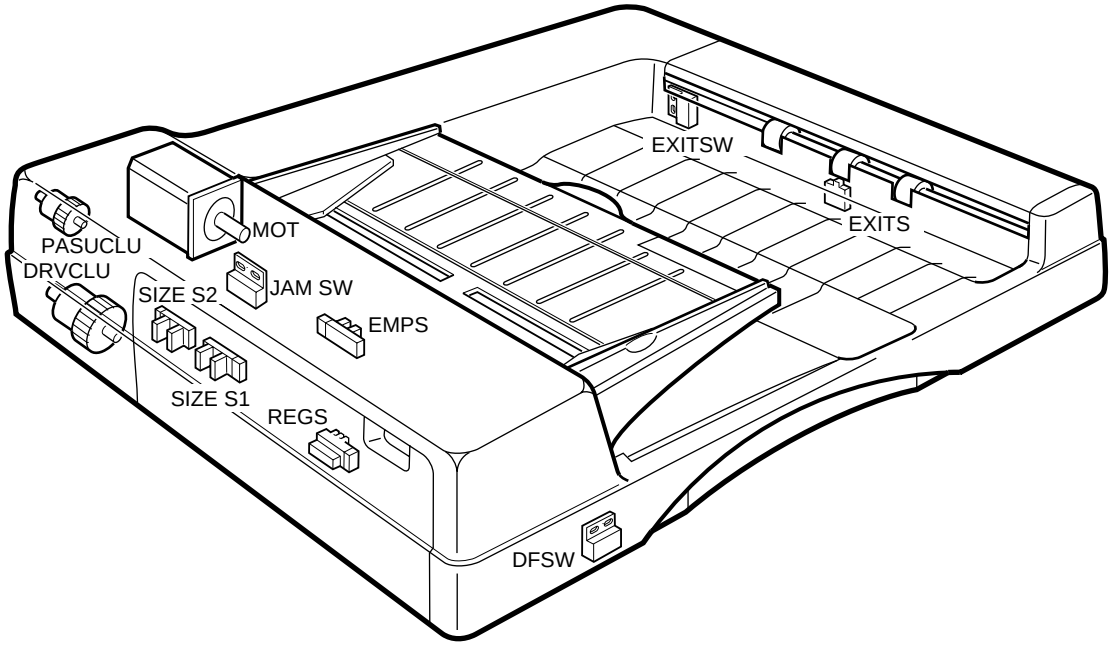

PASUCLU	Feed clutch
JAMSW	Feed-cover switch
DRVCLU	Transport clutch
MOT	Drive motor
SIZE S1	Size sensor 1
EMPS	Empty sensor
REGS	Aligning sensor
SIZE S2	Size sensor 2
DFSW	ADF set switch
EXITS	Exit sensor
EXITSW	Exit-cover sensor

18.5.3 Block diagram for electrical signals

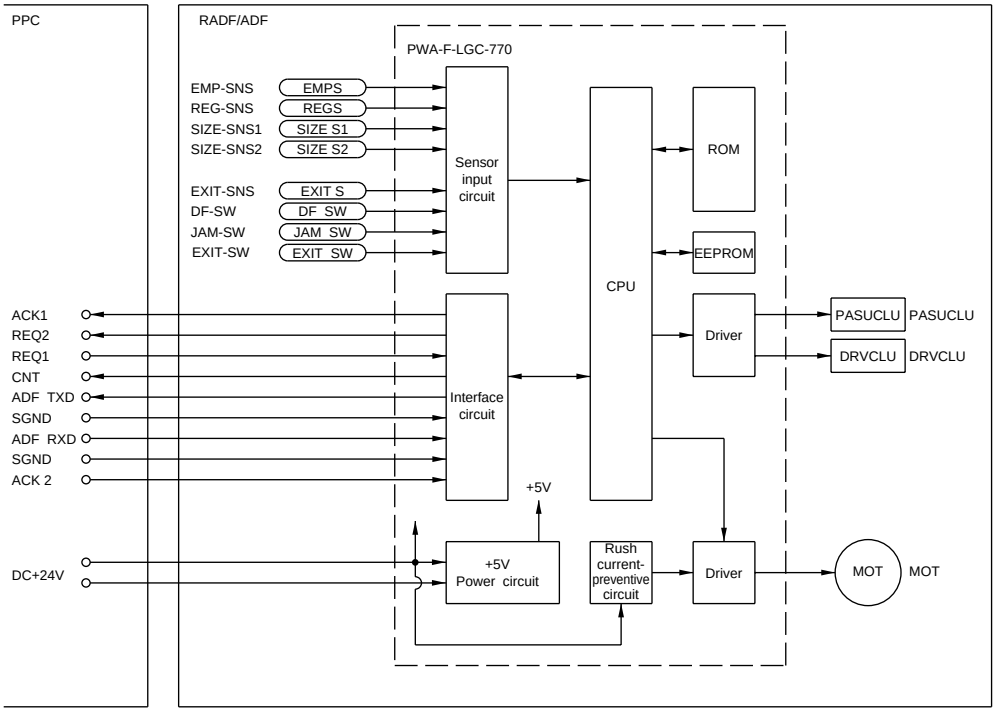

18.6 Description of Interface Signals

The sending and receiving of signals between the copier and the ADF is conducted by using the six lines as shown below:

REQ 1 .....Communication request signal (from the copier to the ADF)
REQ 2 .....Communication request signal (from the ADF to the copier)
ACK 1 .....Communication request response signal (from the ADF to the copier)
ACK 2 .....Communication request response signal (from the copier to the ADF)
ADFRXD .....Data sent from the copier to the ADF
ADFTXD .....Data sent from the ADF to the copier.

Since data transmission between the copier and the ADF (ADFRXD and ADFTXD) is conducted by means of serial transmission, it is not possible to check for the correct data transmission in the field.

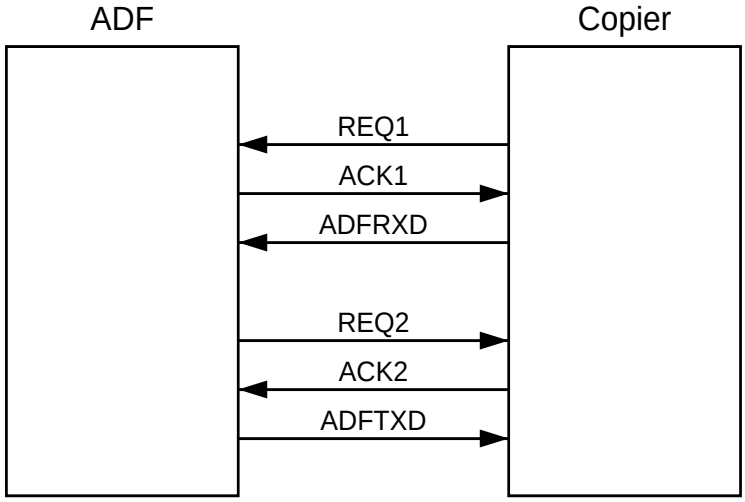

18.7 About Original Jams and ADF Errors

18.7.1 Type of jam

(1) Feed unit jam : Original has not arrived at aligning sensor during pre-feeding
Original has not arrived during feed of 1st original in 2in1 feed
Original is retained at aligning sensor during feed in regular mode

(2) Transport jam : Original has not arrived at the exit sensor(exit inversion sensor)during discharge
Original has not arrived at the exit sensor(exit inversion sensor)during dual-side feed

(3) Exit jam : Original is retained at the exit sensor(exit inversion sensor)during discharge
Original is retained at the exit sensor(exit inversion sensor)during dual-side feed

(4) Two-original(2in1)jam in : Original has not arrived at aligning sensor during feed of 2nd original in feed unit 2in1 feed

18.7.2 Jam timer

Category	Function	Pulse Value	Timer Value(sec)
Feed unit	Until aligning sensor turns ON after of pre-feeding	1318	0.96
	Until aligning sensor turns ON after start of pre-feeding of 1st original in 2in1 feed	1318	0.96
	Until aligning sensor turns ON after start of pre-feeding of 2nd original in 2in1 feed	1318	0.96
	Until aligning sensor turns OFF from start of transport by aligning roller after aligning during dual-side feed	2620	1.12
	Until aligning sensor turns OFF from start of transport by aligning roller after aligning 1st original in 2in1 feed	2620	1.12
	Until aligning sensor turns OFF from start of original feed after joining 2nd original has ended in 2in1 feed	2433	1.1 (Note 1)
Transport section	Until the exit sensor (exit inversion sensor) turns ON after start of discharge	3437	1.35
	Until the exit sensor (exit inversion sensor) turns ON after start of dual-side inversion	3067	1.3
	Until the exit sensor (exit inversion sensor) turns ON after start of dual-side discharge	3067	1.3
	Until the exit sensor (exit inversion sensor) turns ON after start of dual-side original feed	3437	2.1
Exit section	Until the exit sensor (exit inversion sensor) turns OFF after exit sensor (exit inversion sensor) turns ON during discharge	2699	1.1
	Until original feed ends after start of motor reverse drive in the dual-side mode	2215	(Note 2)

• Feed per pulse = 0.24mm/pulse

Note 1 If the aligning sensor turns ON when the original is transported for a fixed number of pulses after transporting to the exposure position after the original has been joined, the 2nd original is regarded as a 2in1 impossible size. At the same time that feed of the 2nd original is resumed, counting of the pulses is continued, and the jam is regarded as an aligning sensor retention jam when the above jam pulses are counted.

The above timer values are the times obtained by subtracting the scan time from the time from start of original feed after joining up to end of resumed of the 2nd original.

Note 2 Pulses from start of dual-side inversion to end of inversion are managed. If the exit sensor (exit inversion sensor) turns ON when the pulses is incremented, this is regarded as a exit sensor (exit inversion sensor) retention jam.

18.7.3 Type of errors

(1) Poor aligning sensor adjustment.
(2) Poor exit sensor adjustment.
(3) Poor EEPROM initialization.

18.8 Detection of Original Sizes

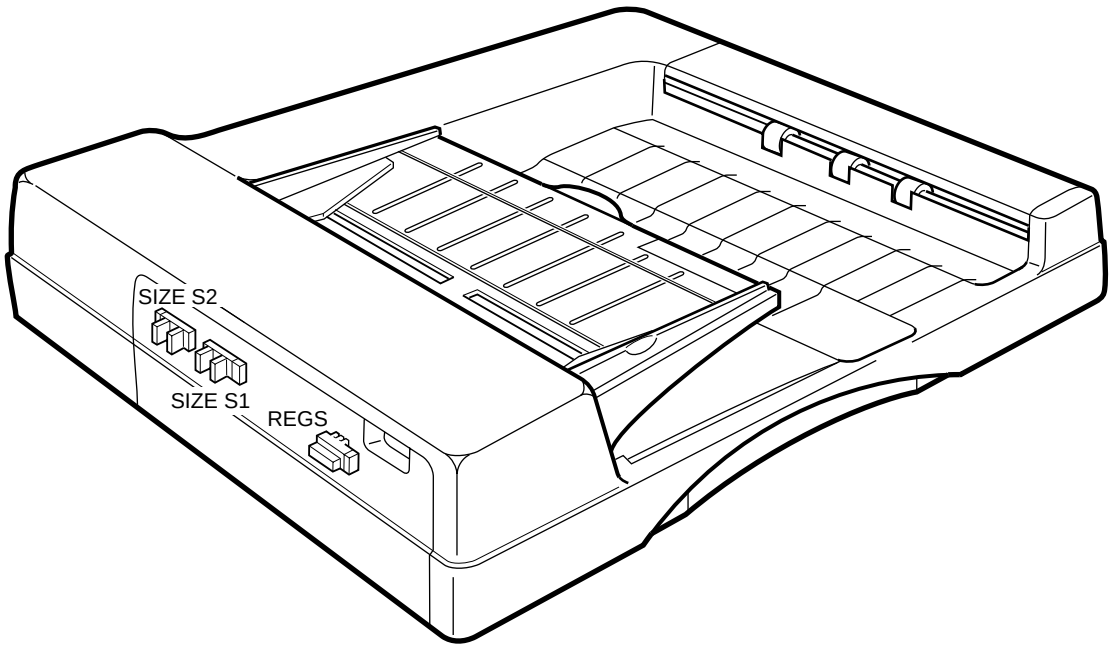

The size of originals is determined by both the number of pulses generated until the original passes the aligning sensor and its width roughly detected by the size sensor 1.

(1) Each time the ADF feeds in an original, it detects its size and lets the copier know the lengthwise feed and widthwise directions in millimeters, respectively.

(2) Method of detecting the size of originals

The length of the original is measured by using the number of drive motor clock pulses generated from the start of original transporting (when the aligning roller starts rotating) until the aligning sensor is turned off (when the trailing edge of the original passes the sensor). Since A4 widthwise and A5 lengthwise cannot be distinguished by the length in the feed direction alone, the size sensor 1 is used roughly to know the width of the original, permitting its size to be determined (for A4 widthwise, the size sensor 1 is turned on).

Note that the size sensor 2 is used to distinguish between A4 widthwise and Letter widthwise. A4 widthwise is 210 mm and Letter widthwise is 216 mm, respectively, in the feed direction. Since the difference is only 6 mm, judgement would be difficult. So the size sensor 2 is additionally used to distinguish between A4 and Letter sizes. The size sensor 2 is turned on for A4 lengthwise which is 297 mm and off for Letter lengthwise which is 279 mm.

For U.S.A. and Canada

Size sensor 1	Size sensor 2	Range (mm)	Original size data (Feed direction)	Original size data (Widthwise direction)	Size
OFF	OFF	~129	Raw data	216	Irregular size
OFF	OFF	130~150	140	216	ST(139.7)
OFF	OFF	151~205	Raw data	216	Irregular size
OFF	OFF	206~226	216	140(139.7)	ST-R(215.9)
OFF	OFF	227~248	Raw data	140	Irregular size
OFF	OFF	249~267	257	182	B5-R(257.0)
OFF	OFF	268~269	Raw data	182	Irregular size
OFF	OFF	270~289	280	216(215.9)	LT-R(279.4)
OFF	OFF	290~307	297	210	A4-R(297.0)
OFF	OFF	308~319	Raw data	210	Irregular size
OFF	OFF	320~340	330	210	FOLIO(330.0)
OFF	OFF	341~345	Raw data	210	Irregular size
OFF	OFF	346~366	356	216(215.9)	LG(355.6)
OFF	OFF	367~	Raw data	216	Irregular size
ON	ON/OFF	~171	Raw data	257	Irregular size
ON	OFF	172~192	182	257	B5(182.0)
ON	ON/OFF	193~199	Raw data	257	Irregular size
ON	ON	200~226	210	297	A4(210.0)
ON	OFF	200~226	216	280(279.4)	LT(215.9)
ON	ON/OFF	227~345	Raw data	280	Irregular size
ON	OFF	346~366	356	258(257.2)	COMPUTER(355.6)
ON	ON/OFF	367~413	Raw data	258	Irregular size
ON	ON	414~426	420	297	A3(420.0)
ON	OFF	427~442	432	280(279.4)	LEDGER(431.8)
ON	ON/OFF	443~	Raw data	280	Irregular size

For Europe

Size sensor 1	Size sensor 2	Range (mm)	Original size data (Feed direction)	Original size data (Widthwise direction)	Size
OFF	OFF	~137	Raw data	210	Irregular size
OFF	OFF	138~158	148	210	A5(148.0)
OFF	OFF	159~199	Raw data	210	Irregular size
OFF	OFF	200~220	210	148	A5-R(210.0)
OFF	OFF	221~246	Raw data	148	Irregular size
OFF	OFF	247~267	257	182	B5-R(257.0)
OFF	OFF	268~273	Raw data	182	Irregular size
OFF	OFF	274~288	280	216(215.9)	LT-R(279.4)
OFF	OFF	289~307	297	210	A4-R(297.0)
OFF	OFF	308~319	Raw data	210	Irregular size
OFF	OFF	320~340	330	210	FOLIO(330.0)
OFF	OFF	341~345	Raw data	210	Irregular size
OFF	OFF	346~366	356	216(215.9)	LG(355.6)
OFF	OFF	367~	Raw data	216	Irregular size
ON	ON/OFF	~171	Raw data	257	Irregular size
ON	OFF	172~192	182	257	B5(182.0)
ON	ON/OFF	193~199	Raw data	257	Irregular size
ON	ON	200~226	210	297	A4(210.0)
ON	OFF	200~226	216	280(279.4)	LT(215.9)
ON	ON/OFF	227~353	Raw data	280	Irregular size
ON	OFF	354~374	364	257	B4(364.0)
ON	ON/OFF	375~413	Raw data	257	Irregular size
ON	ON	414~426	420	297	A3(420.0)
ON	OFF	427~442	432	280(279.4)	LEDGER(431.8)
ON	ON/OFF	443~	Raw data	280	Irregular size

The size sensor 2 is used only for distinguishing A4 from Letter.
(Although the sensor is also on for A3, it is ignored.)

(3) Outline of operation

① Drive motor clock pulses are counted from the start of original transporting until the aligning sensor is turned off. In addition, the status of the size sensor 1 is detected for determining the original size.

② After the original size has been determined, the size data of the feed direction and the widthwise size data created by inferring from that of the feed direction are sent out to the copier.

18.9 Flow Chart

A. From power ON to READY

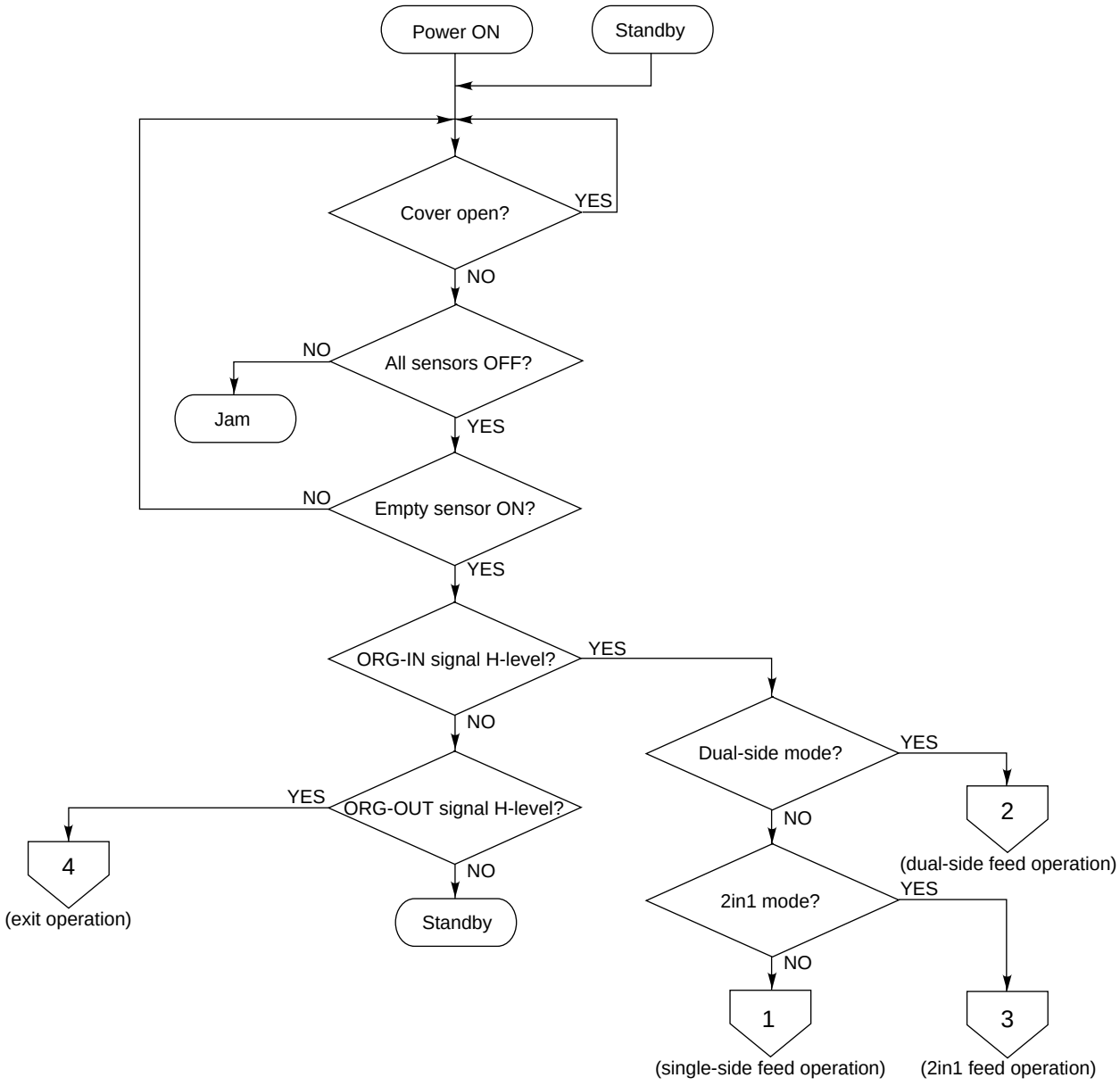

B. Single-side feed operation

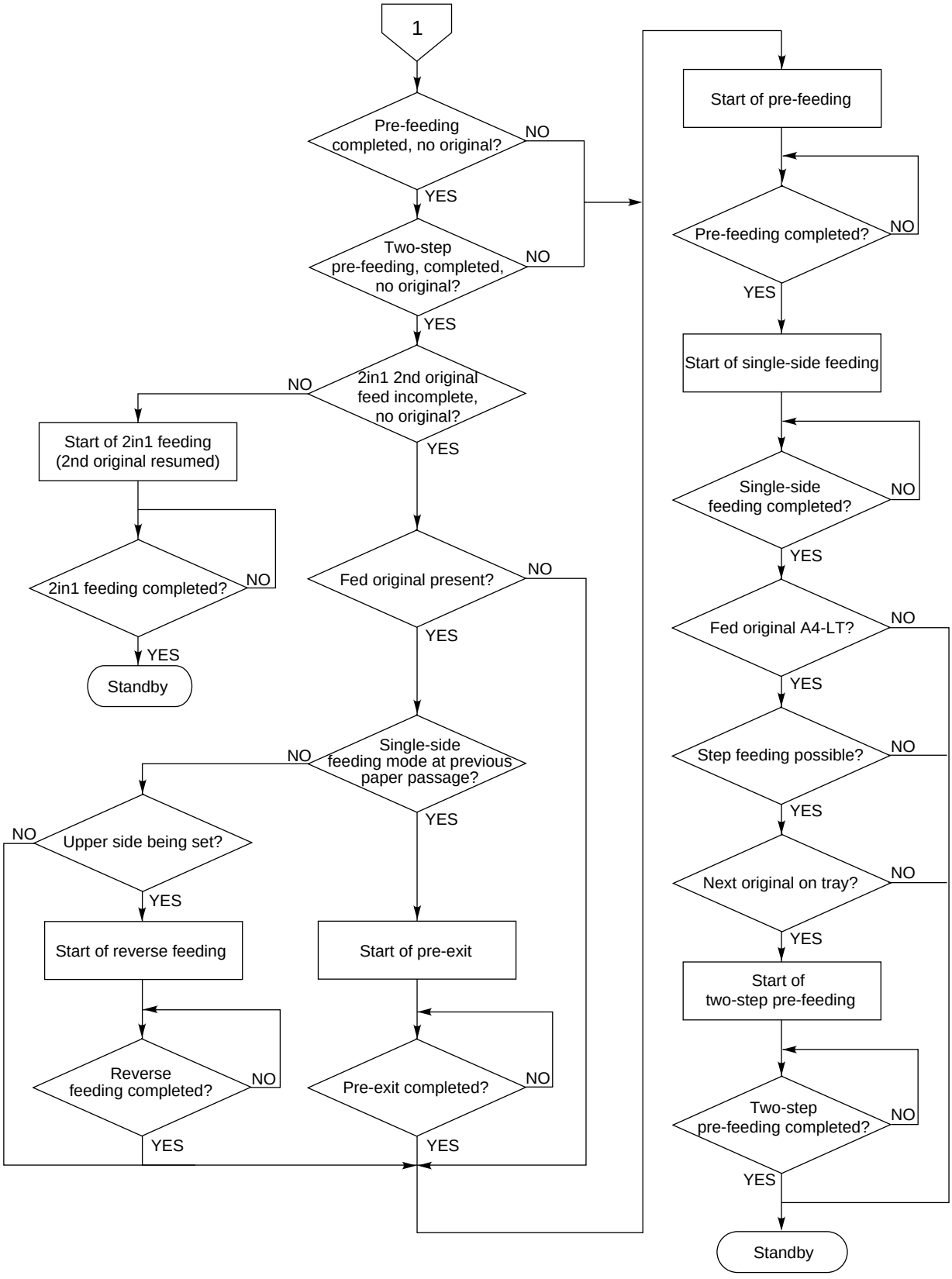

C. Dual-side feed operation

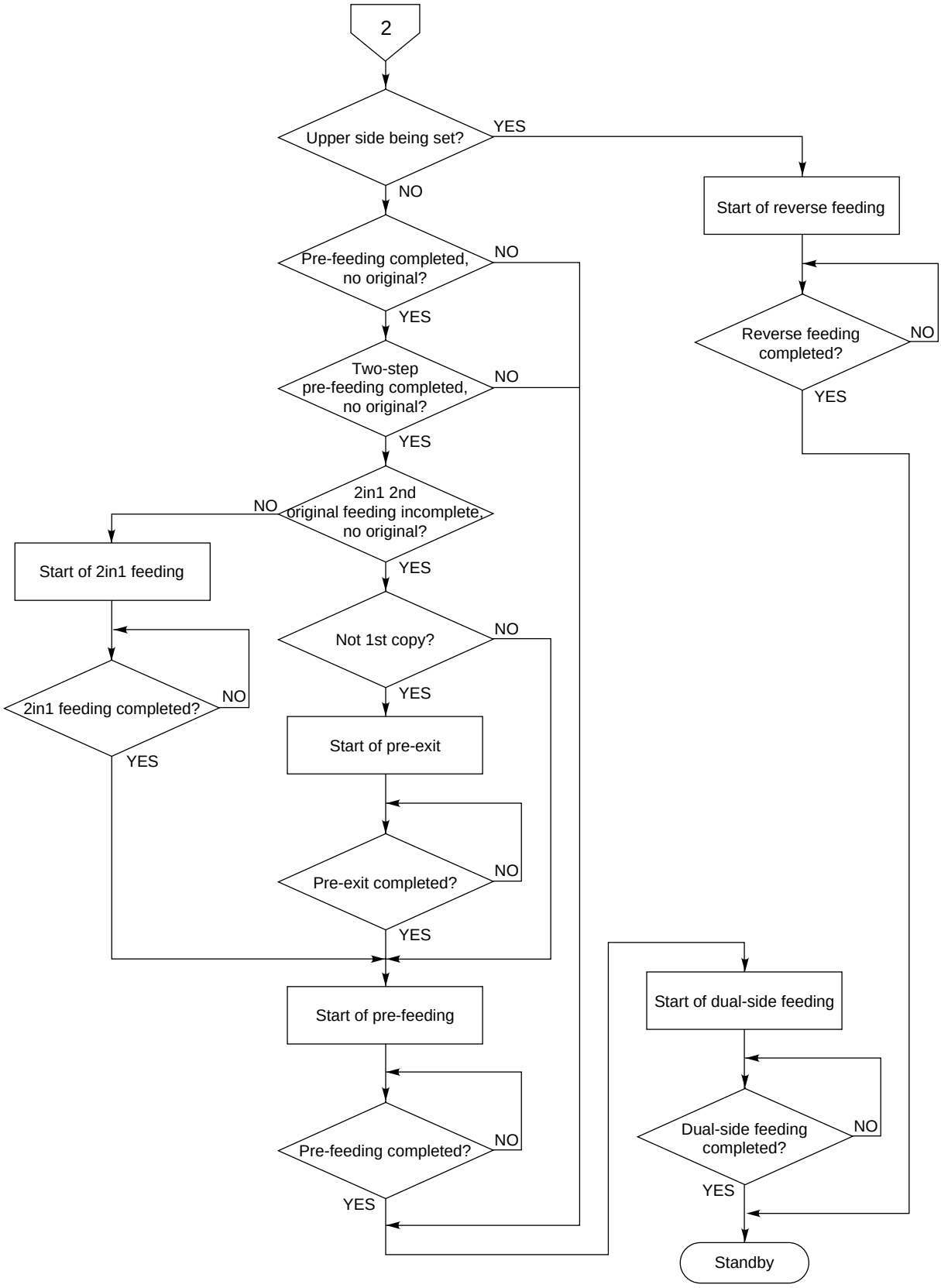

D. 2in1 feeding operation

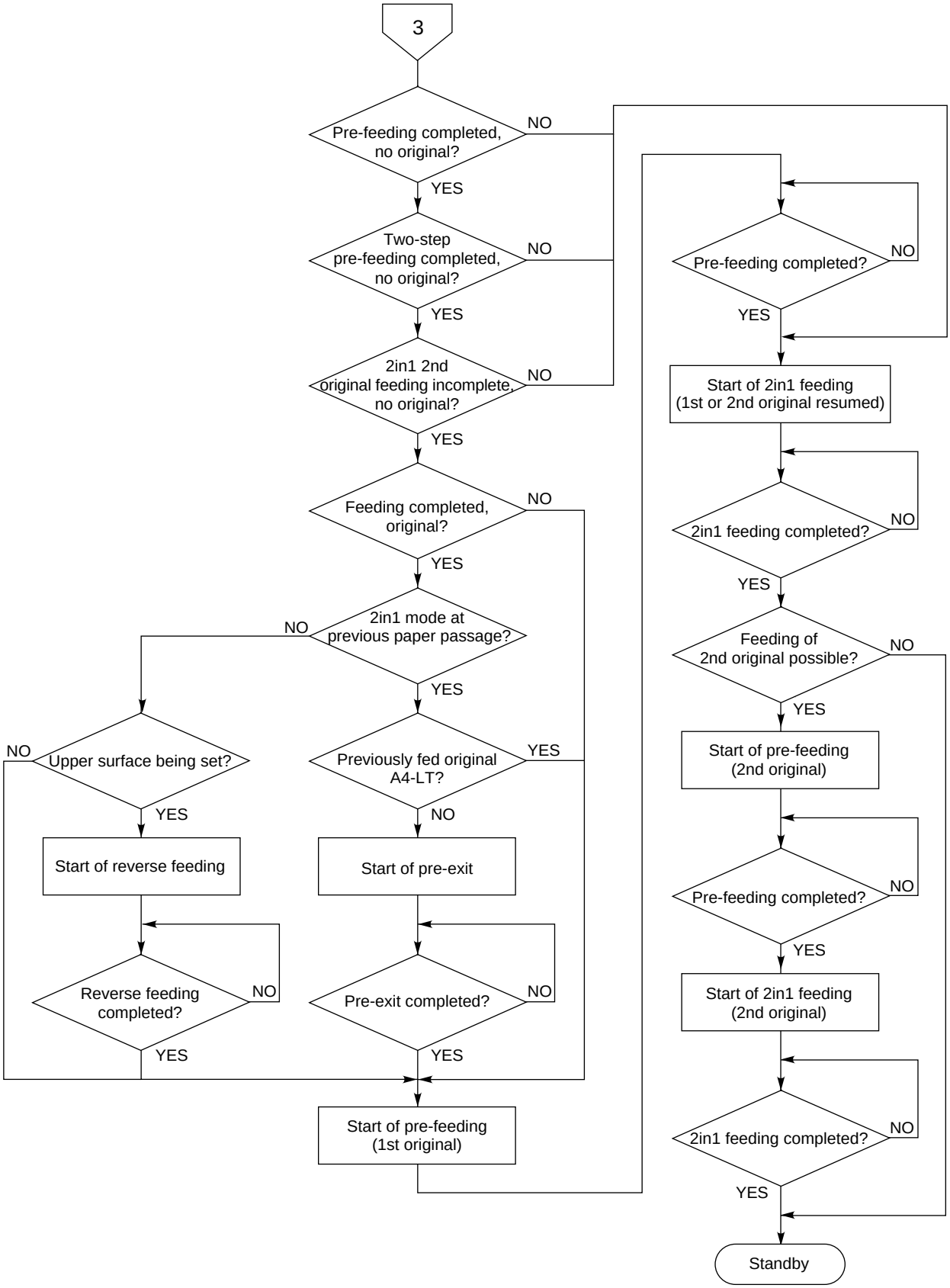

E. Pre-feeding operation

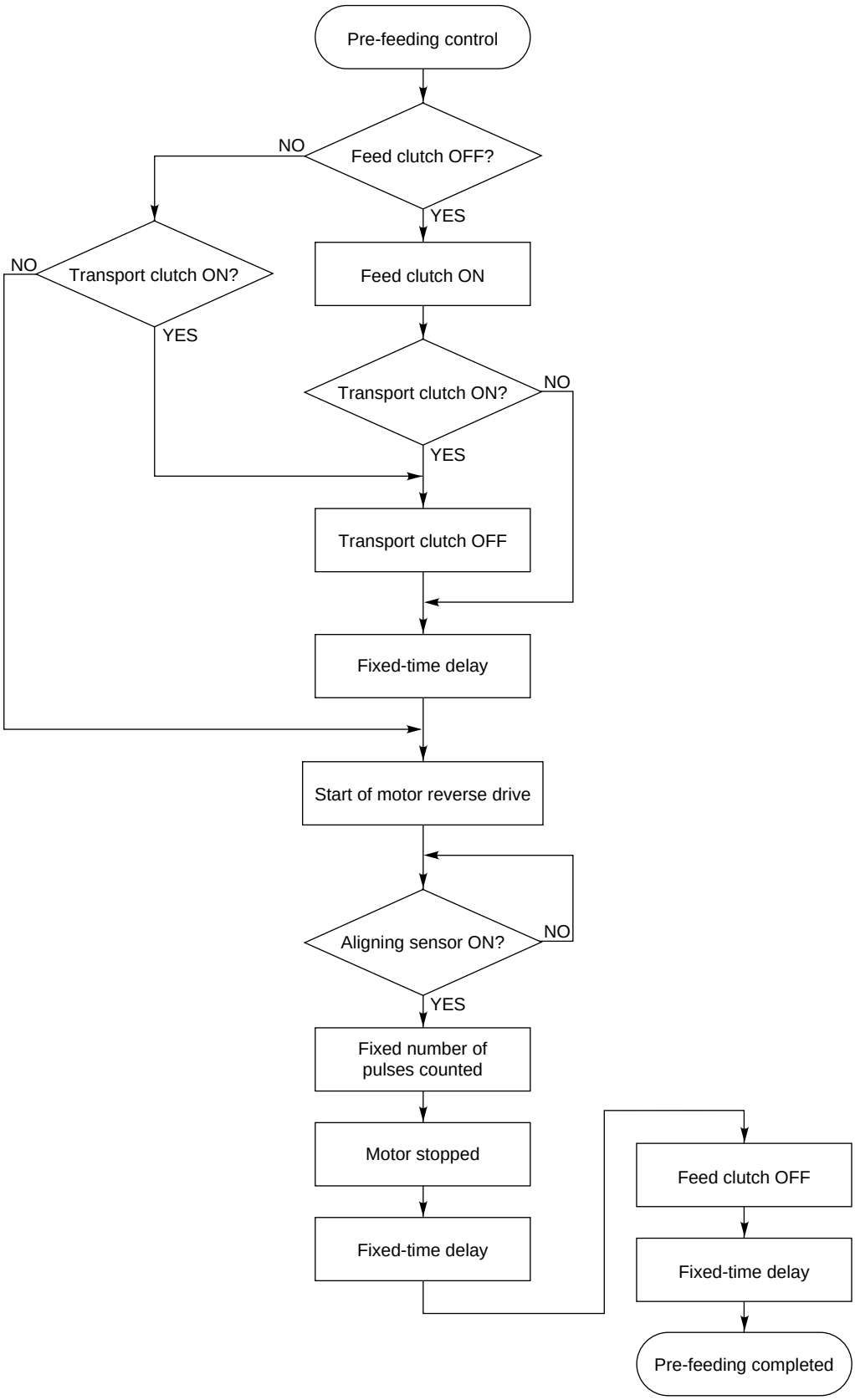

F. Two-step pre-feeding

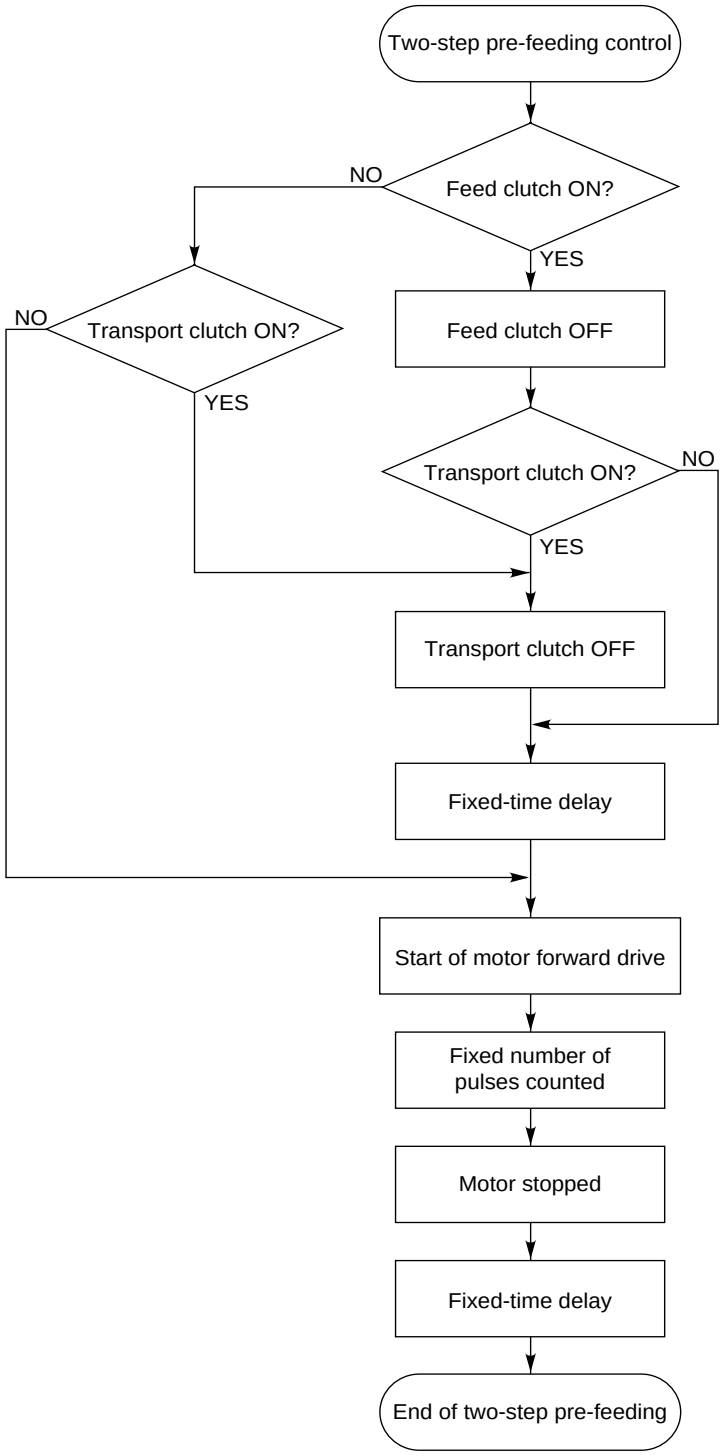

G. Exit operation

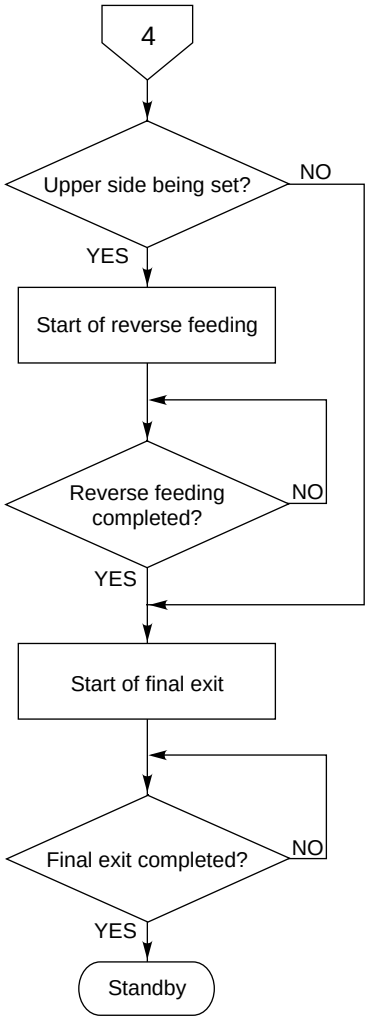

H. Single-side feeding control

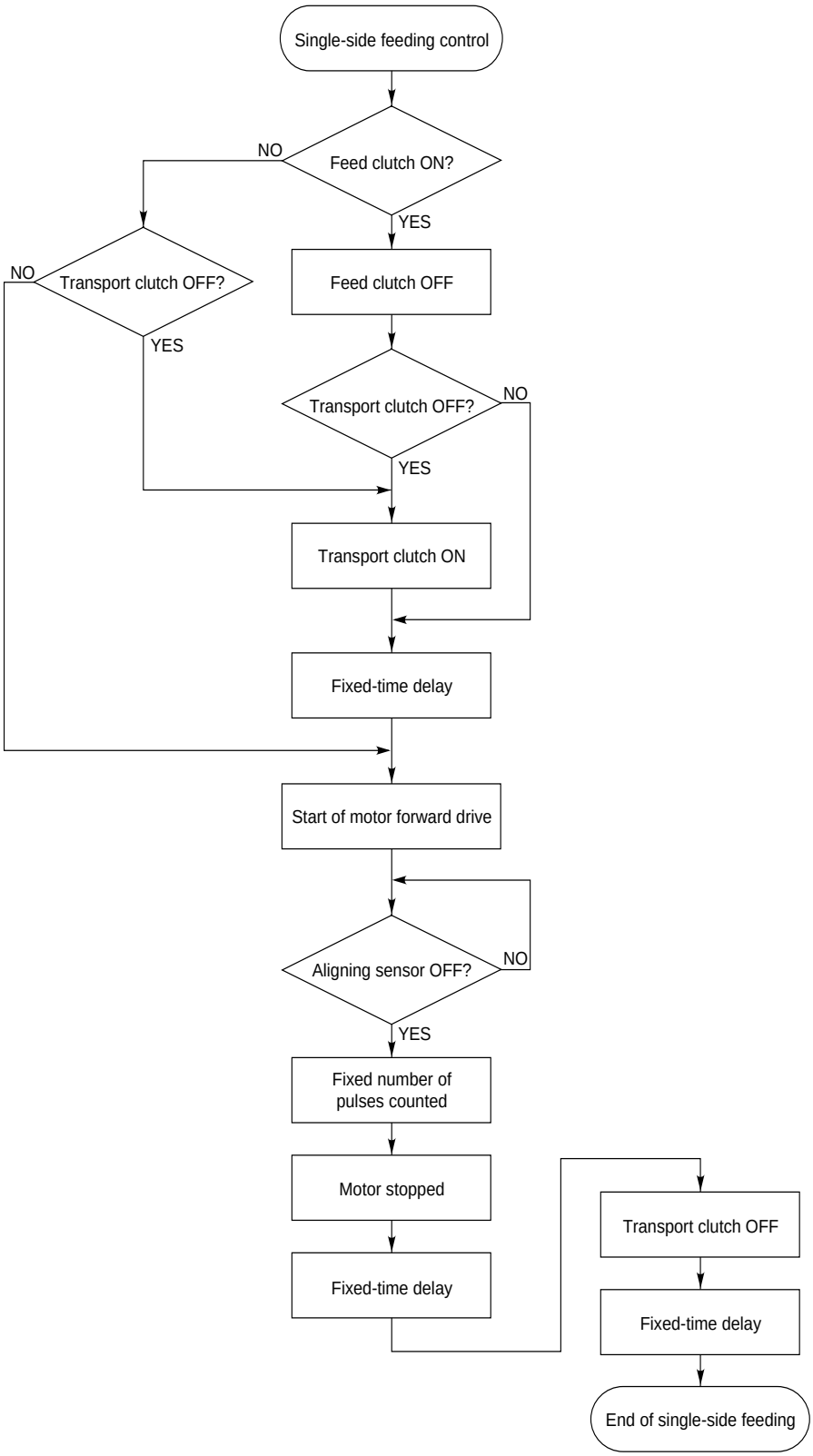

I. Dual-side feeding control

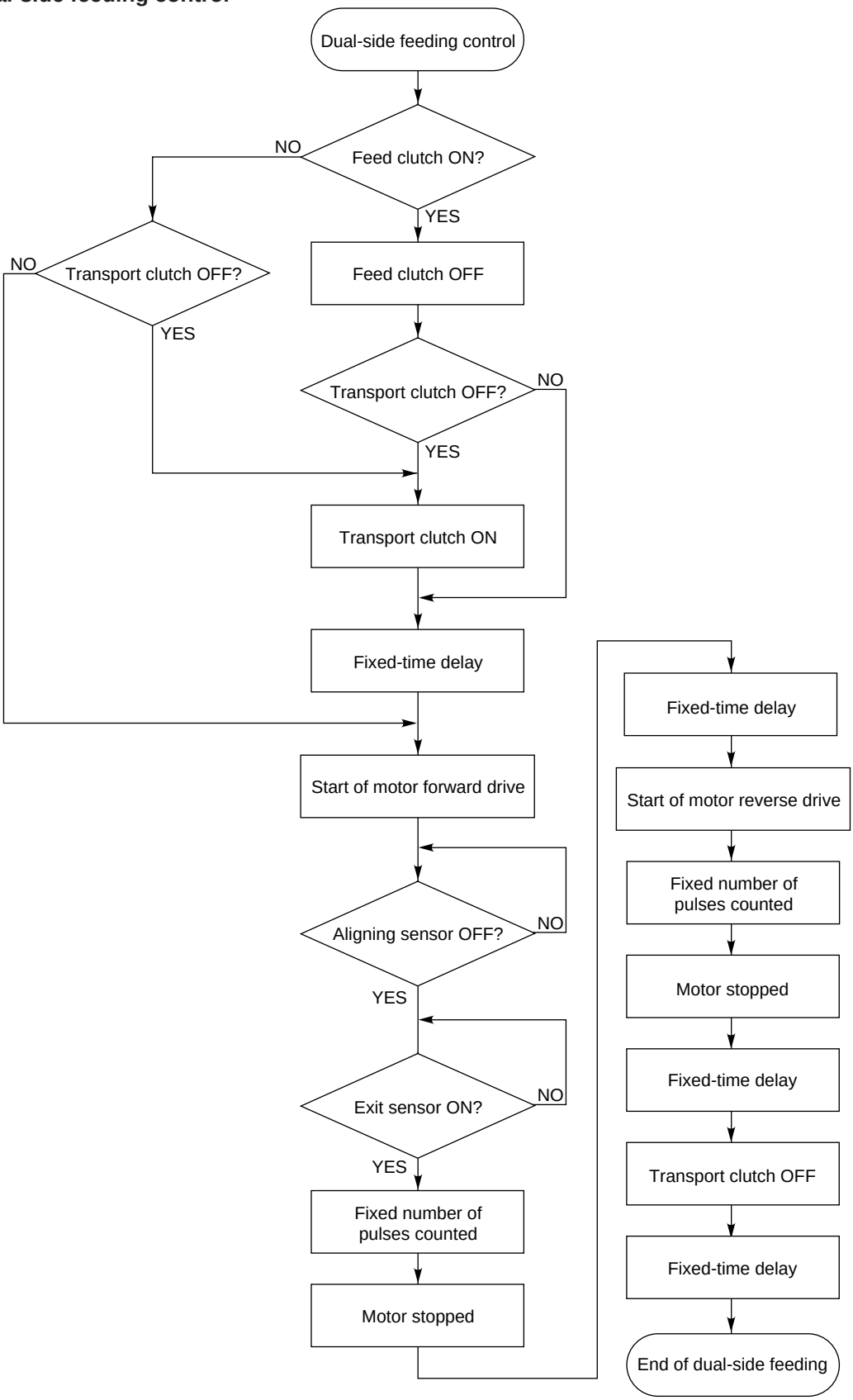

J. Reverse feeding control

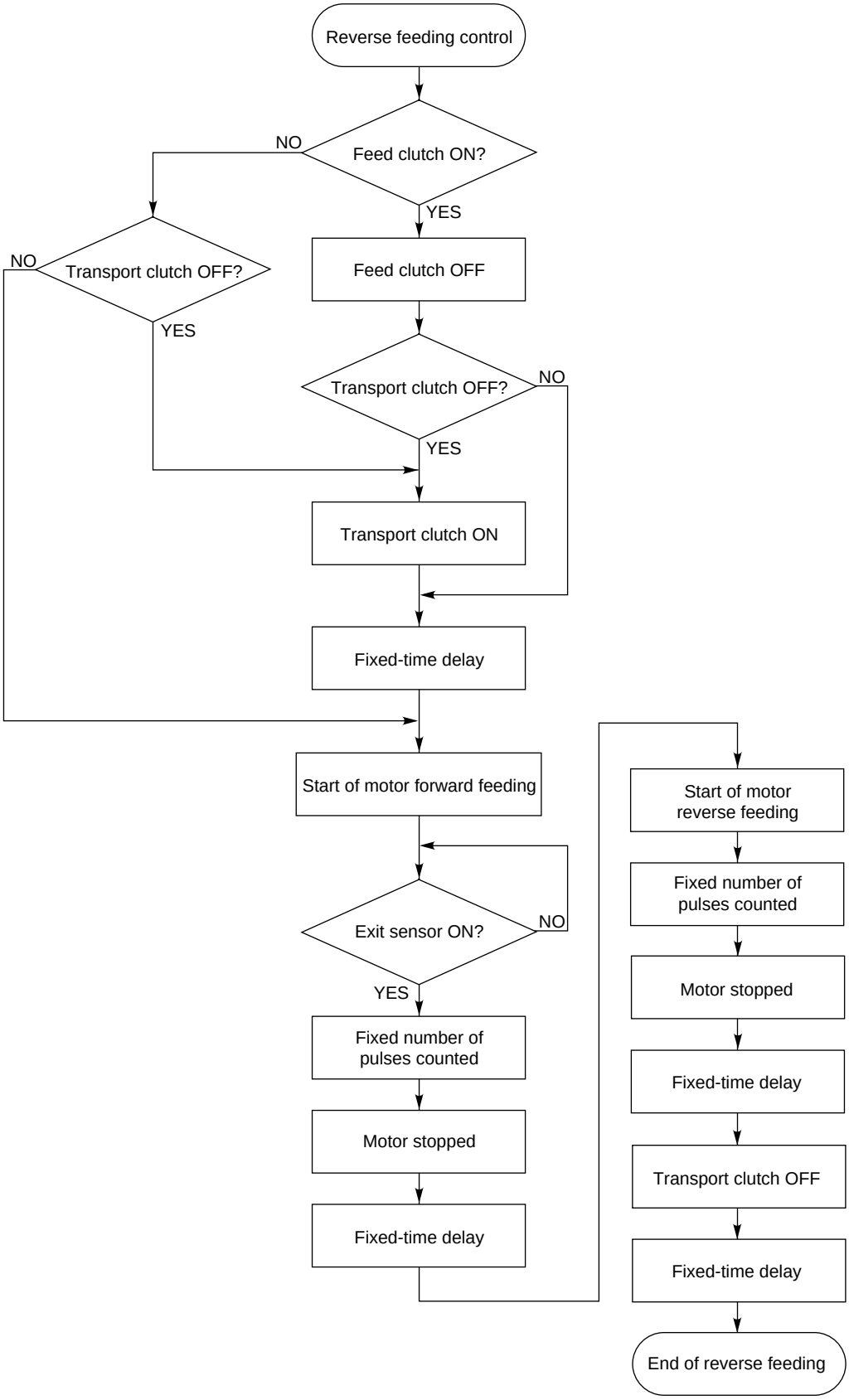

K. 2in1 feeding control

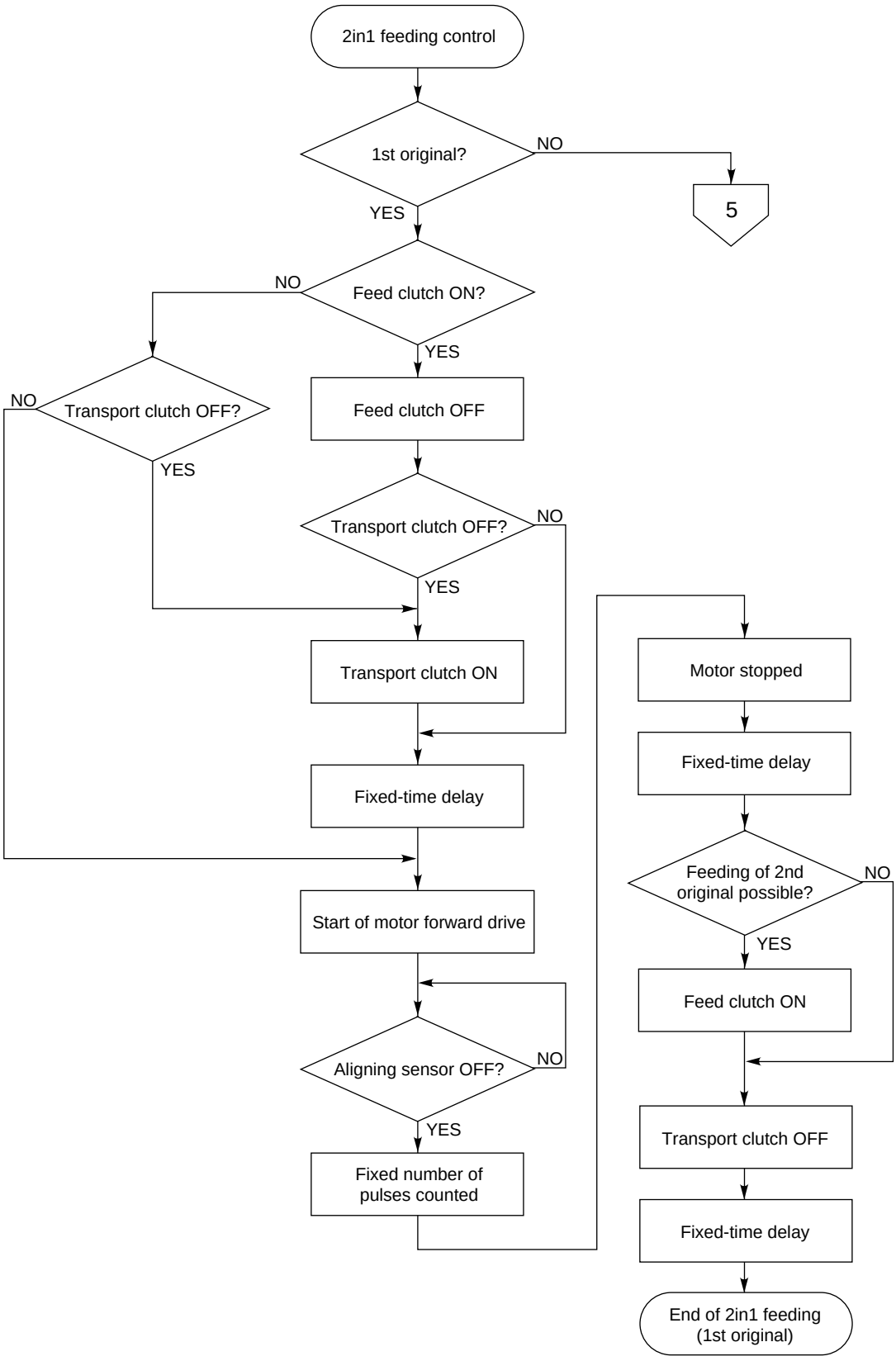

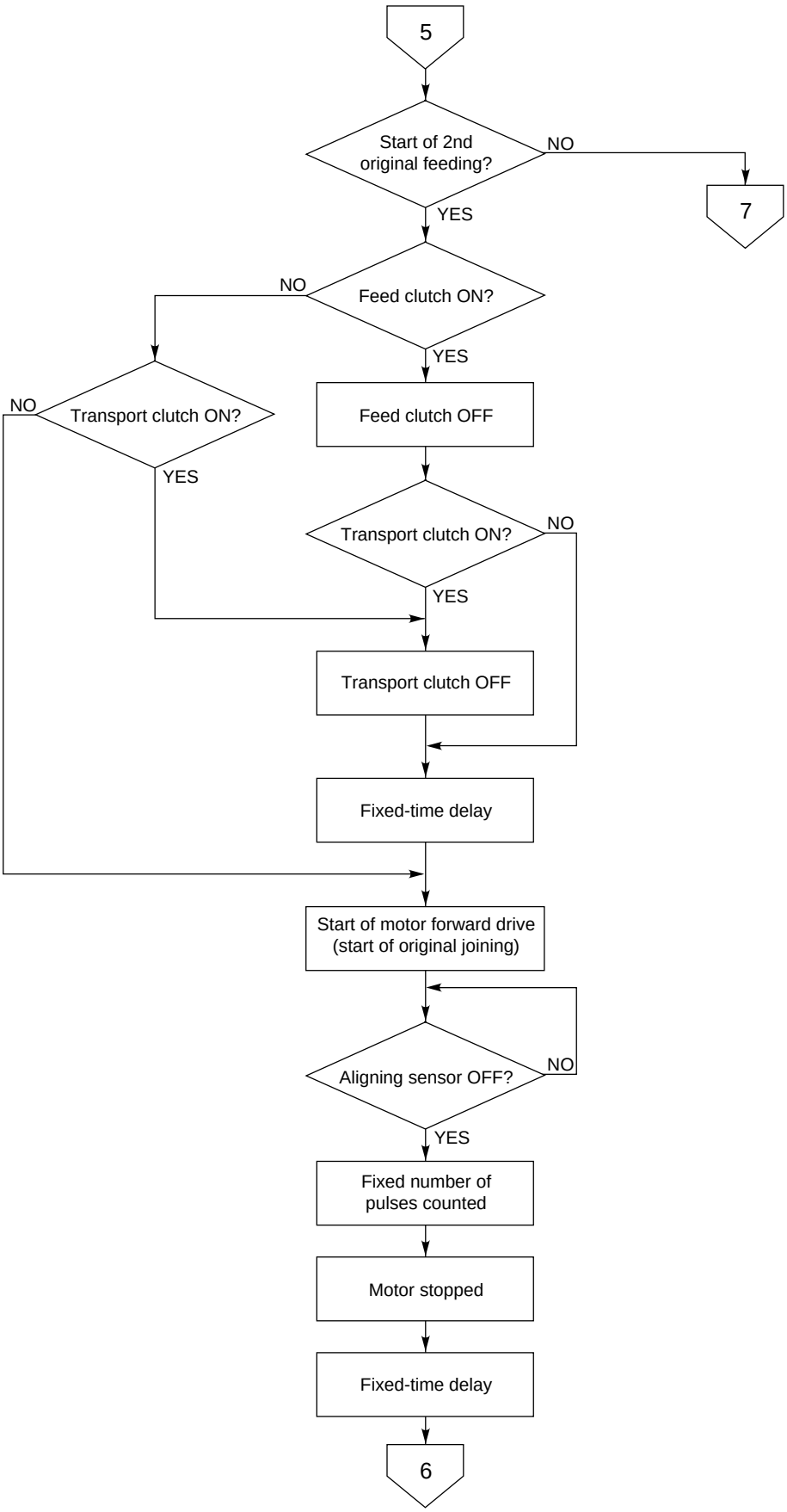
5
Start of 2nd original feeding?
NO
7
YES
Feed clutch ON?
NO
YES
Transport clutch ON?
NO
YES
Feed clutch OFF
Transport clutch ON?
NO
YES
Transport clutch OFF
Fixed-time delay
Start of motor forward drive (start of original joining)
Aligning sensor OFF?
NO
YES
Fixed number of pulses counted
Motor stopped
Fixed-time delay
6

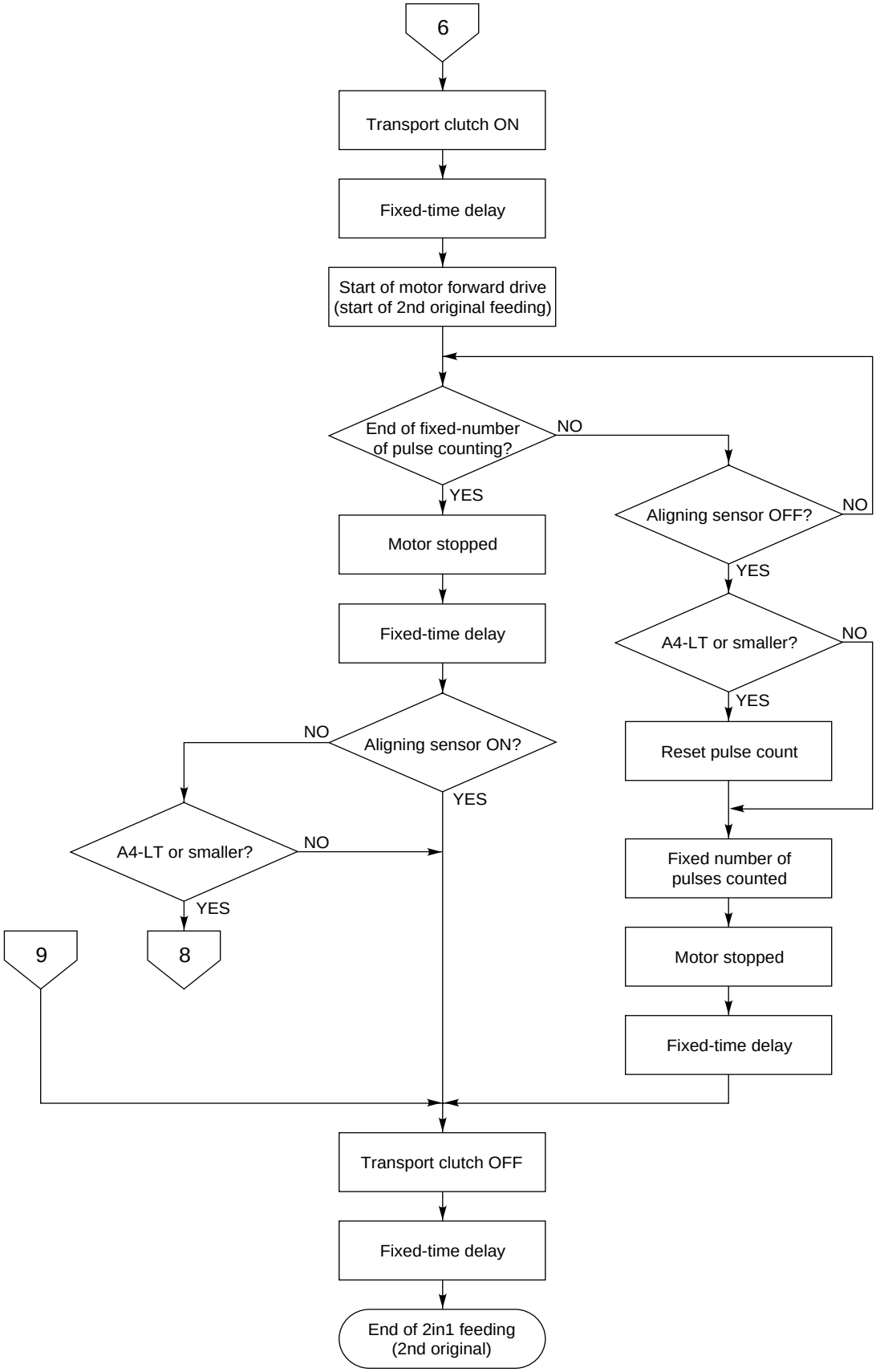
6
Transport clutch ON
Fixed-time delay
Start of motor forward drive
(start of 2nd original feeding)
End of fixed-number
of pulse counting?
NO
YES
Aligning sensor OFF?
NO
YES
Motor stopped
Fixed-time delay
A4-LT or smaller?
NO
YES
Reset pulse count
Aligning sensor ON?
NO
YES
A4-LT or smaller?
NO
YES
Fixed number of
pulses counted
9
8
Motor stopped
Fixed-time delay
Transport clutch OFF
Fixed-time delay
End of 2in1 feeding
(2nd original)

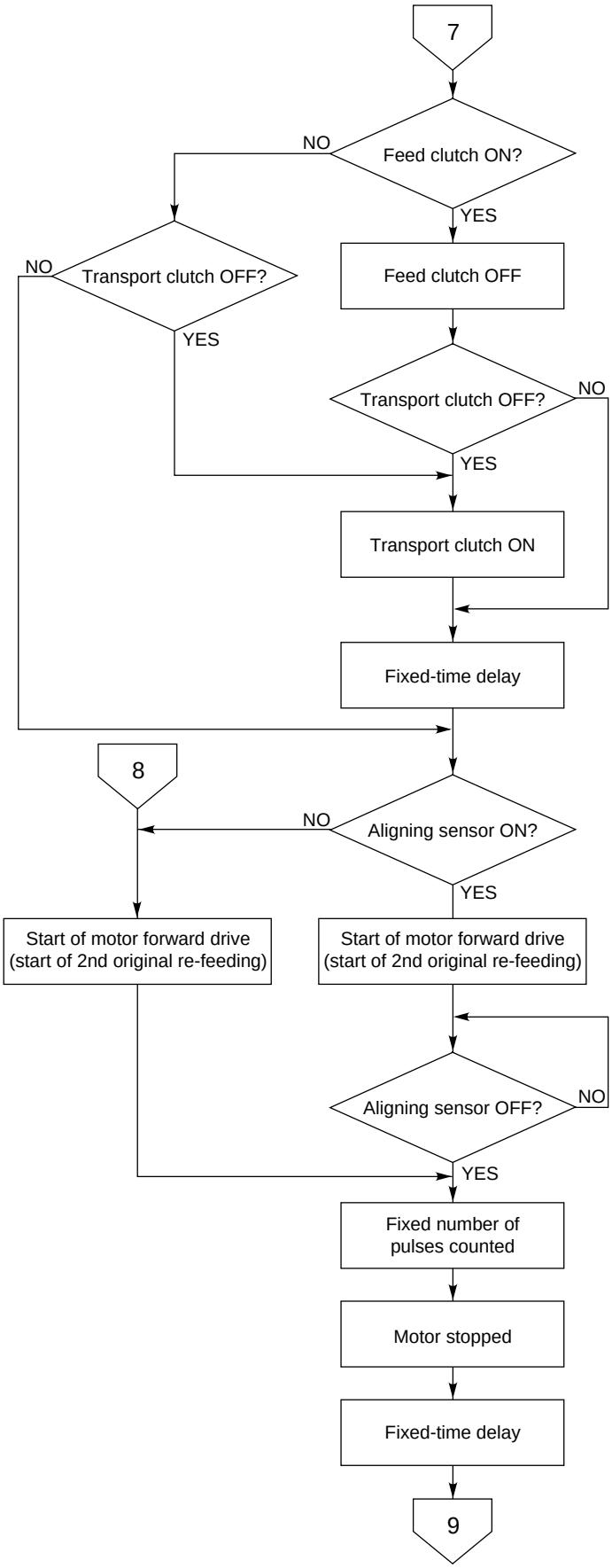
7
Feed clutch ON?
NO
YES
Feed clutch OFF
Transport clutch OFF?
NO
YES
Transport clutch OFF?
NO
YES
Transport clutch ON
Fixed-time delay
8
Aligning sensor ON?
NO
YES
Start of motor forward drive
(start of 2nd original re-feeding)
Start of motor forward drive
(start of 2nd original re-feeding)
Aligning sensor OFF?
NO
YES
Fixed number of
pulses counted
Motor stopped
Fixed-time delay
9

L. Pre-exit control

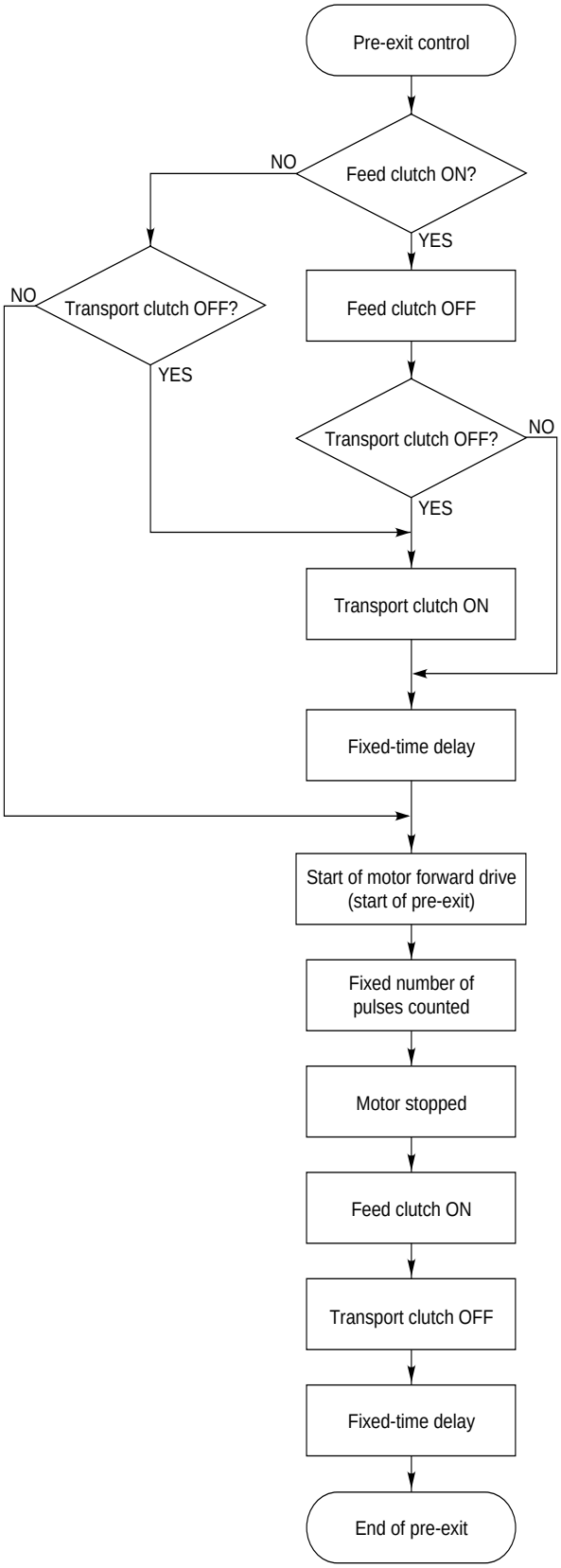

M. Final exit control

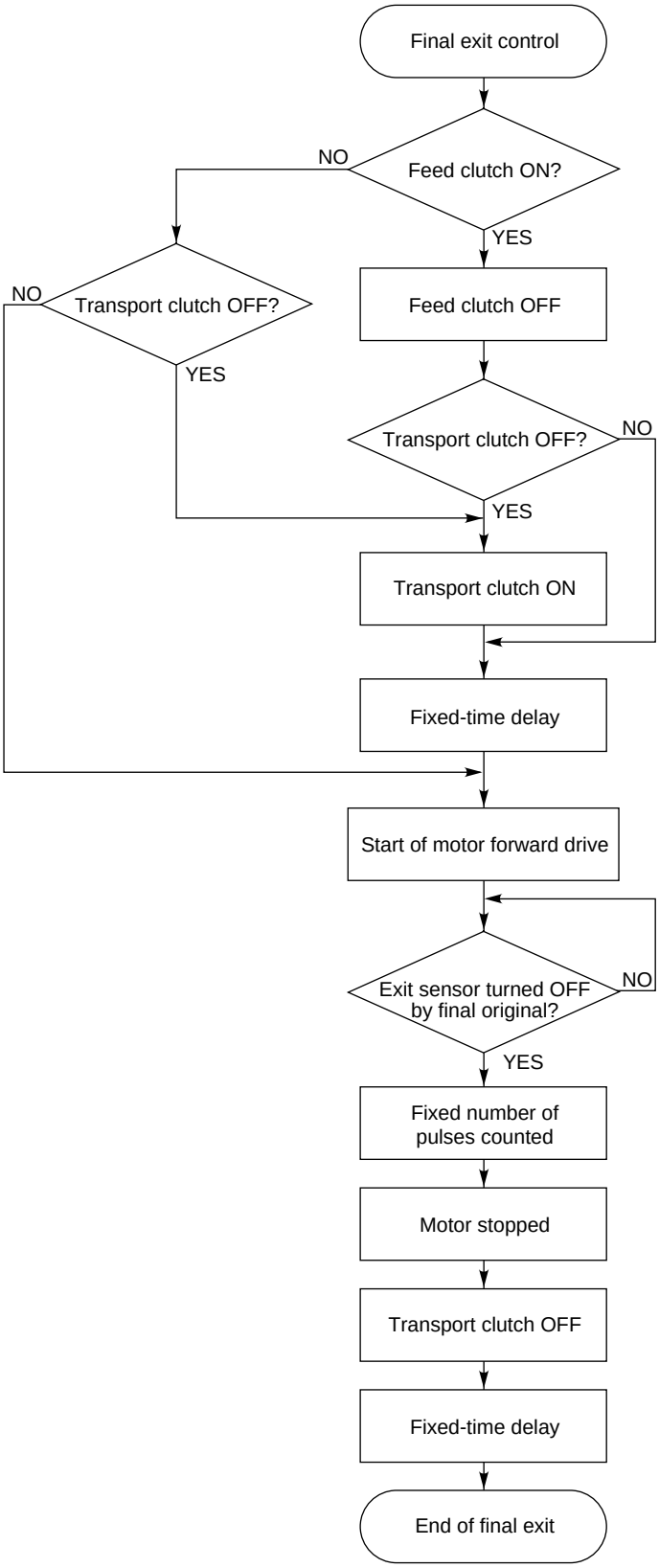

18.10 Timing Chart

A. Three A4 single-side copying

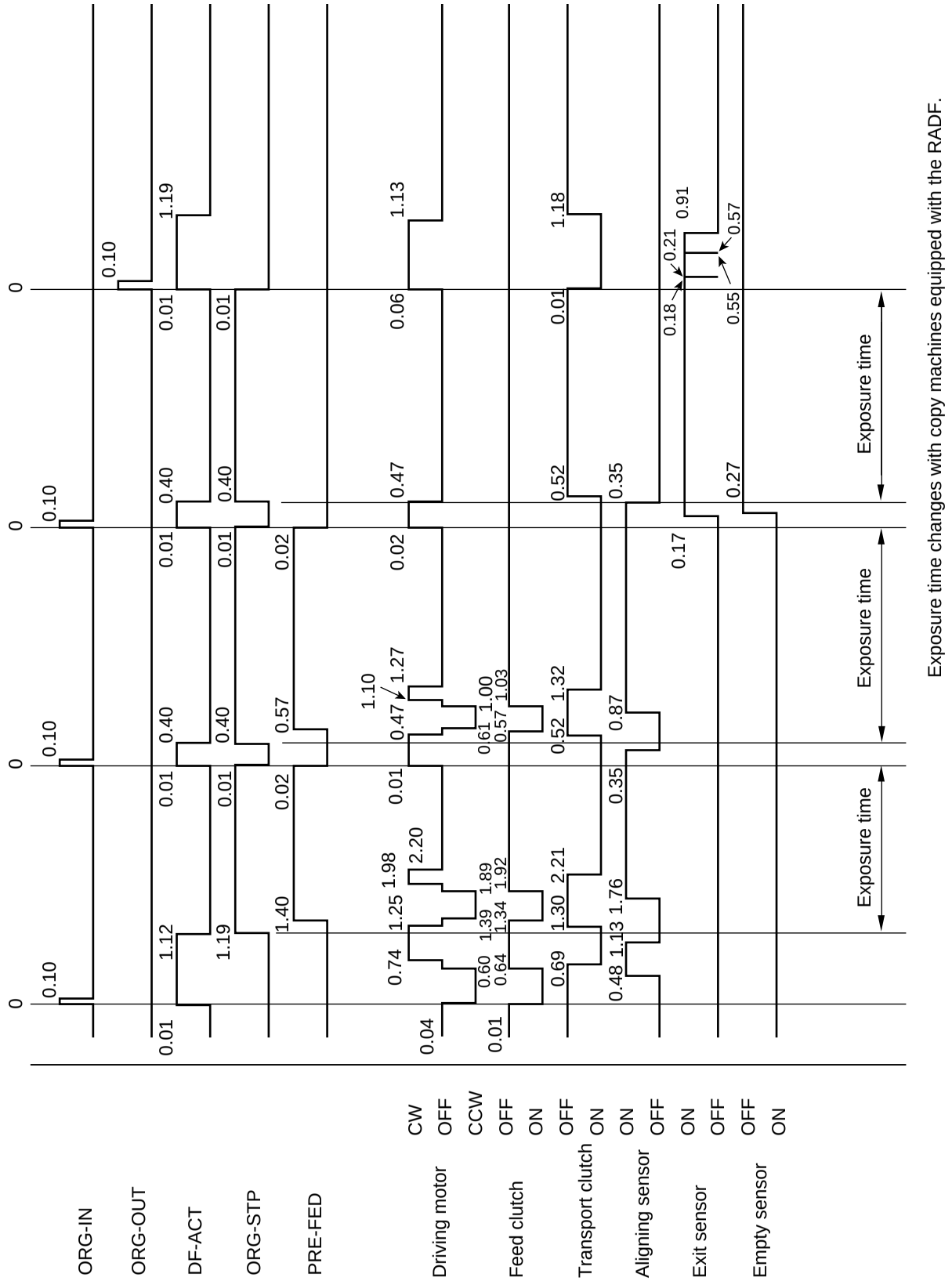

B. Two A3 single-side copying

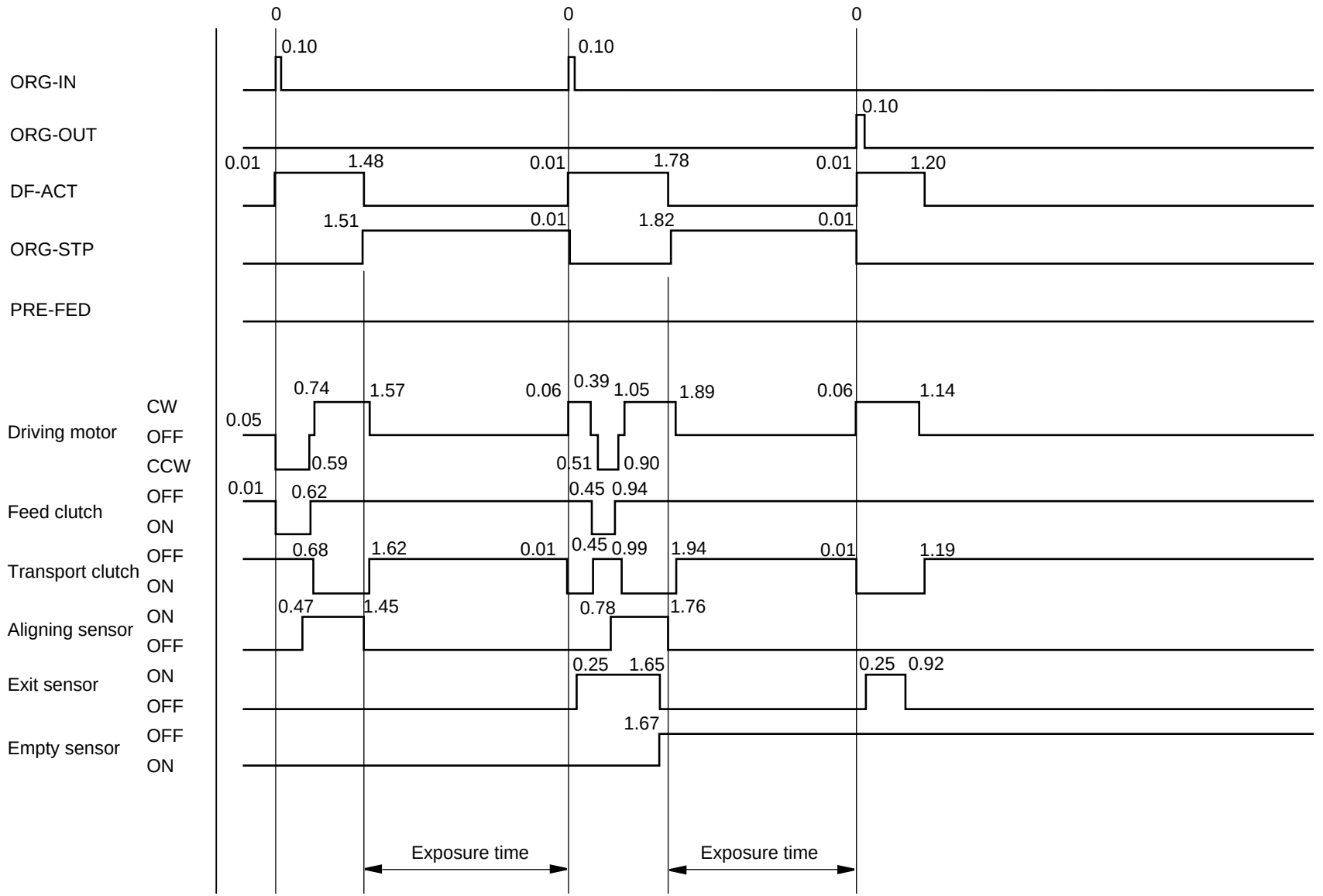

Exposure time changes with copy machines @equipped with the RADF.

Nov. 1997 © TOSHIBA

C. Two A4 duplex copying

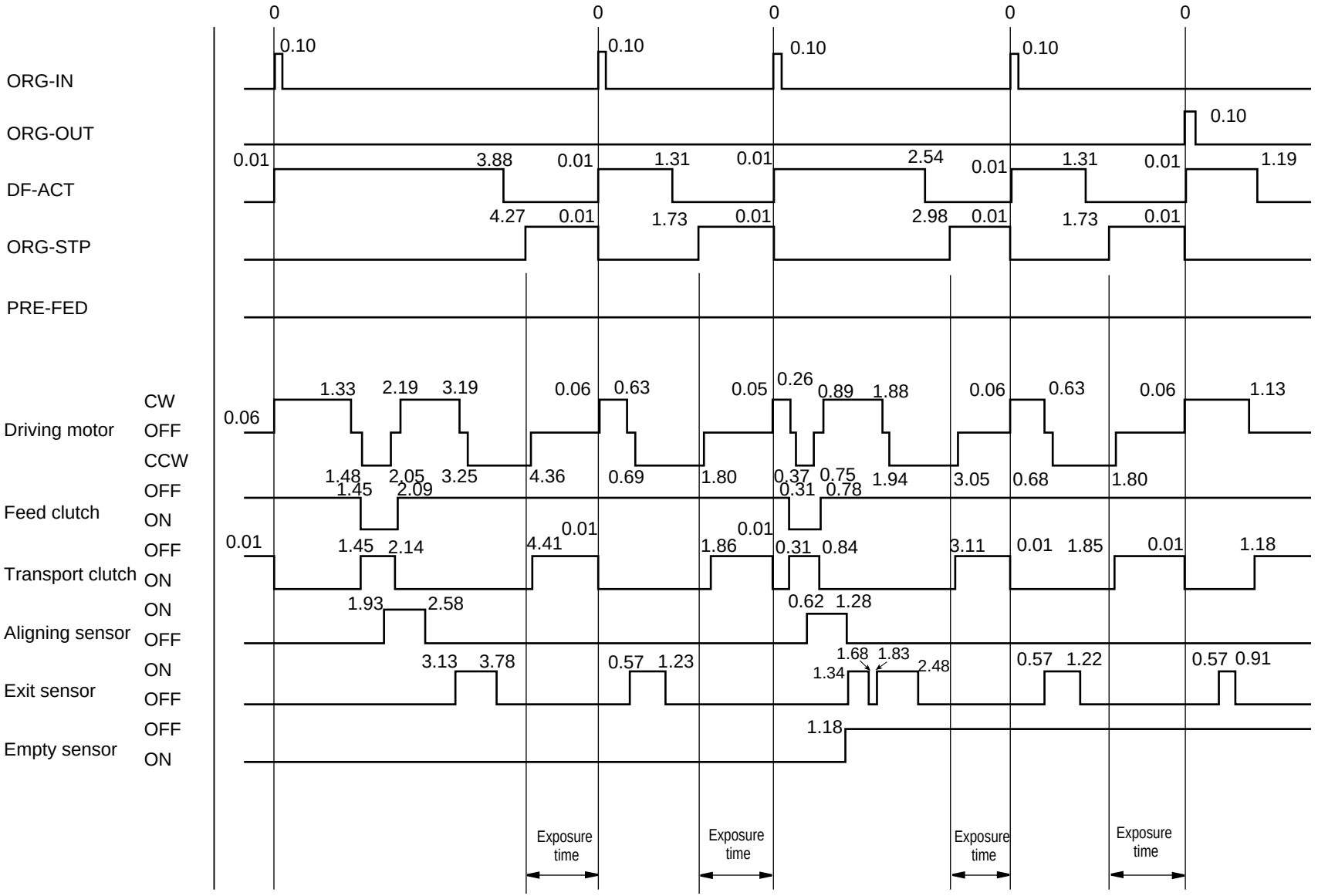

Exposure time changes with copy machines @equipped with the RADF.

D. Two A3 duplex copying

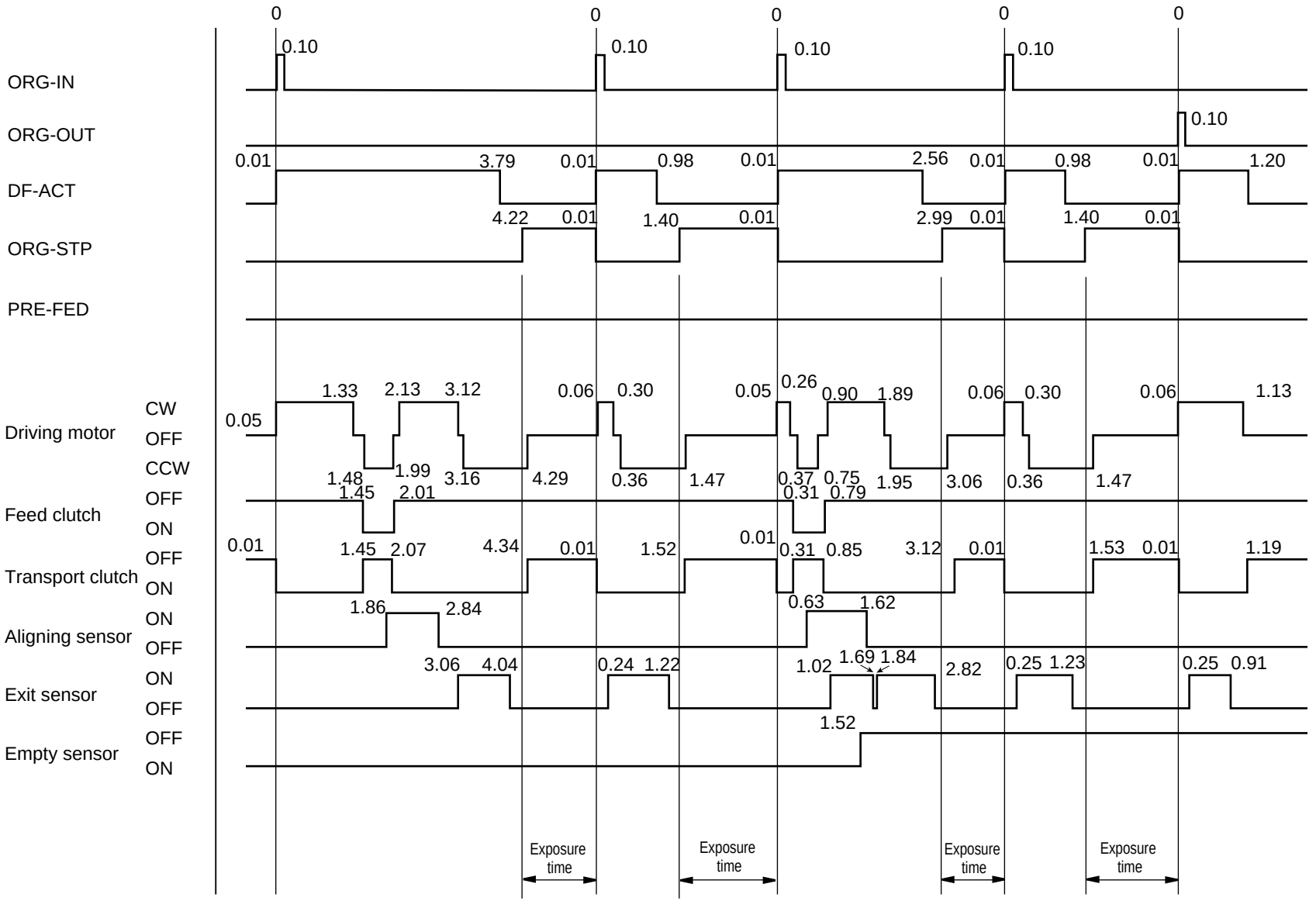

Exposure time changes with copy machines @equipped with the RADF.

Nov. 1997 © TOSHIBA

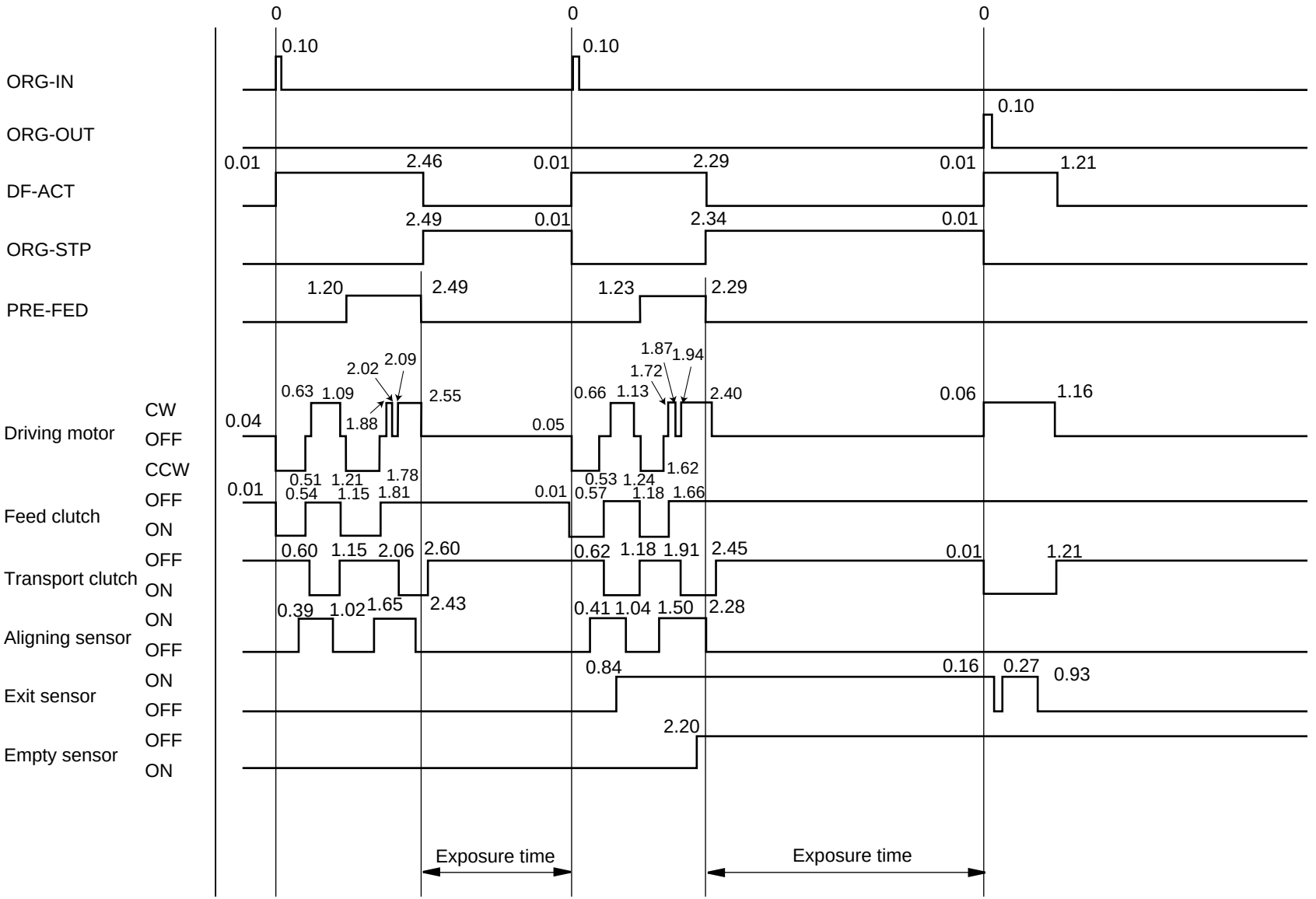

Exposure time changes with copy machines @equipped with the RADF.

18.11 Explanation of Circuits

18.11.1 Input circuit for the aligning sensor and exit sensor

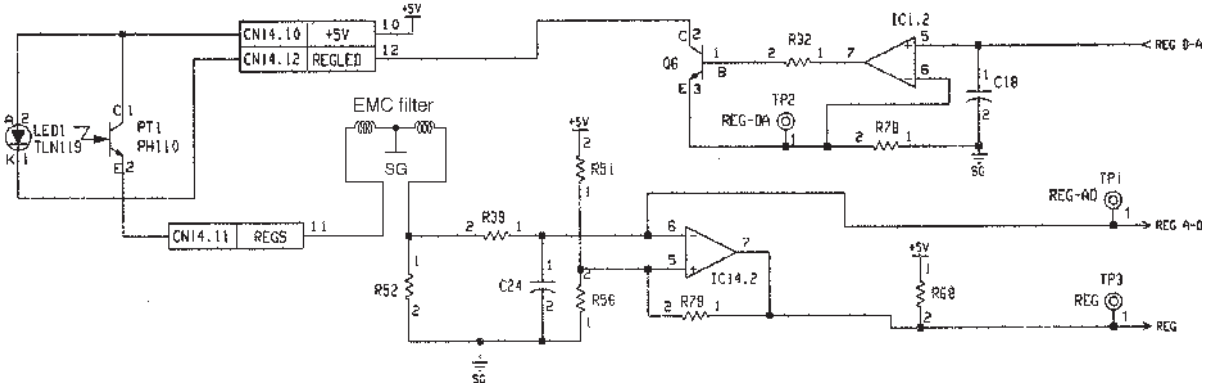

Since the aligning sensor is the same input circuit as the exit sensor, the explanation for the exit-sensor input circuit is omitted. Details for the aligning sensor are given below.

This is an input circuit for the aligning sensor. It consists of a voltage-current conversion circuit for adjusting the light amount of infrared LEDs and a voltage comparison circuit which compares the output voltage of phototransistors (PT1) with the reference voltage for converting the voltage to digital signals.

A mirror-reflective type sensor, the aligning sensor consists of a pair of light-emitting elements (infrared LEDs) whose optical axis is in the same direction as that for the light-receiving elements (PT1). On the axis extended from each element, a mirror is provided. When there is no original between each element, the ultrared light beam emitted from the LED is reflected at PT1 with a high reflectance. On the other hand, when an original is present, the light beam to the mirror and the reflected light from the mirror are shielded, causing the ultrared light entering into PT1 to become extremely small.

When much light enters into PT1 (when no original is present), optical current flowing through PT1 increases, causing the voltage at IC14-pin 6 to increase due to voltage drop by R52. IC14 is an op amp and comprises a voltage comparator circuit. It compares the reference voltage applied to pin 5 (non-inverting input terminal) and the signal voltage at pin 6 (inverting input terminal). When the voltage at pin 6 is higher, the output (IC14-pin 7) becomes L level. Conversely, when the light entering into PT1 is small (an original is present), the voltage at IC14-pin 6 becomes lower, resulting in IC14-pin 7 becoming H level. R39 and C24 comprise a noise filter.

In addition, in order to restrict variance in the sensitivity of sensors, this circuit is equipped with an automatic sensitivity adjustment function. This function, by maintaining the PT1 voltage at a fixed value for all machines when no original is present, eliminates variance in the sensitivity of sensors occurring due to difference in machines. The PT1 voltage is adjusted by varying the intensity of the ultrared light emitted from the LEDs.

For automatic sensitivity adjustment, when the adjustment mode for sensor sensitivity is selected, the PT1 output voltage (analog value) is measured at the A-D input terminal of CPU. So that the PT1 output voltage becomes a preset voltage, the D-A output voltage is varied and using the voltage-current conversion circuit consisting of IC1, Q6, R78, etc., LED current is adjusted. This D-A output voltage is a value unique to each machine and is memorized in EEPROM (IC7).

18.11.2 +5V power circuit

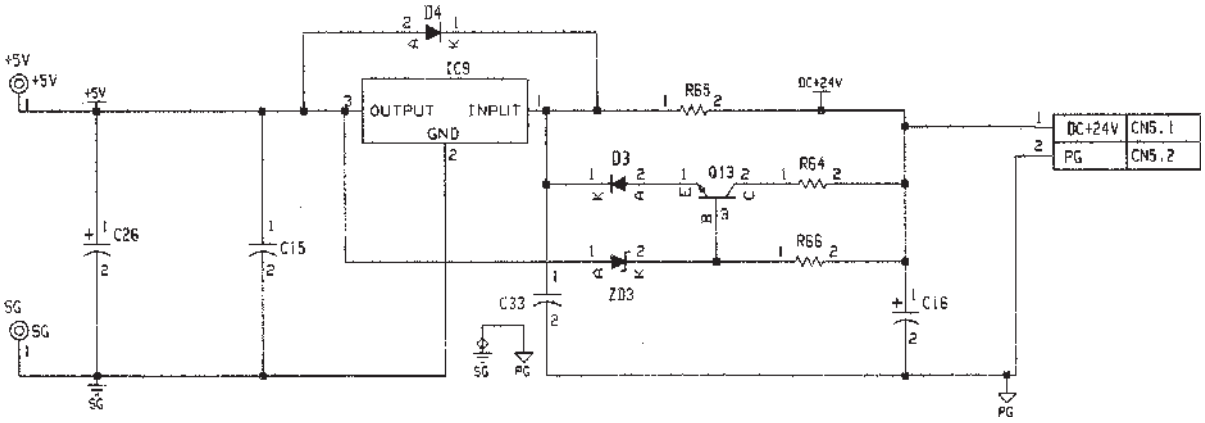

This is a circuit which generates DC +5V voltage supplied to CPUs, logic ICs, etc. DC +24V supplied from CN5 is dropped to +5V by a 3-terminal regulator IC9. In this circuit, R65 and R64 are protective resistors which compensate for the power loss occurring due to the generation of +5V. When current consumption for the +5V line is approx. 80 mA or less, the power loss is compensated for by R65 and IC9 but when the consumption current value exceeds 80 mA, the input voltage at IC9-pin 1 decreases due to voltage drop in R65. When the emitter voltage of Q13 becomes 0.6V lower than its base voltage, Q13 starts conducting and by making excess current flow through R64, shares a part of the power loss.
In this way, by varying the protective resistance value with the magnitude of consumption current, the heat caused by the power loss is distributed and dissipated.

18.11.3 Pulse motor drive circuit

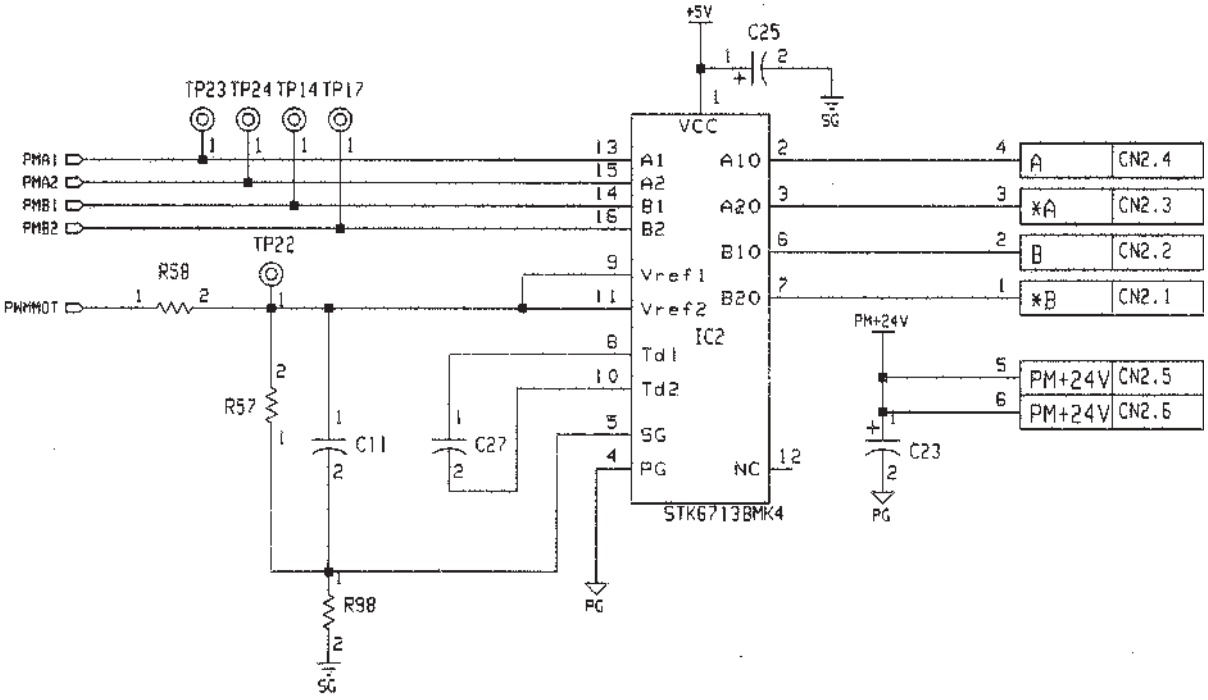

This circuit controls motor drive start/stop, rotation direction and motor current.

Motor rotation speed and rotation direction are controlled by outputting the following pulse motor drive excitation pattern signals from the CPU (PMA1/2, PMB1/2). The PWM signal output from the CPU (PWMMOT) is divided and integrated by R58, R57 and C11, and converted to a fixed voltage. After conversion, this fixed voltage is input to IC2 (pins 9 and 11) to set the motor current value.

Any motor current value is obtained by varying the duty of the PWM signal.

(Excitation pattern) 2-phase excitation

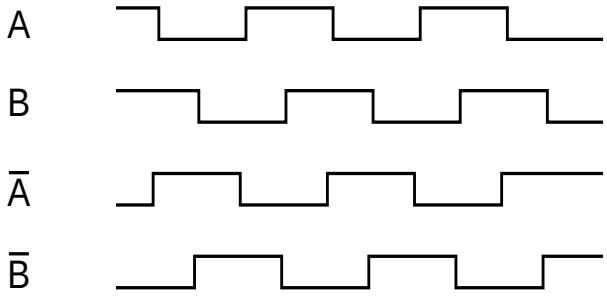

(Description of STK6713BMK4 Internal Circuit Operation)

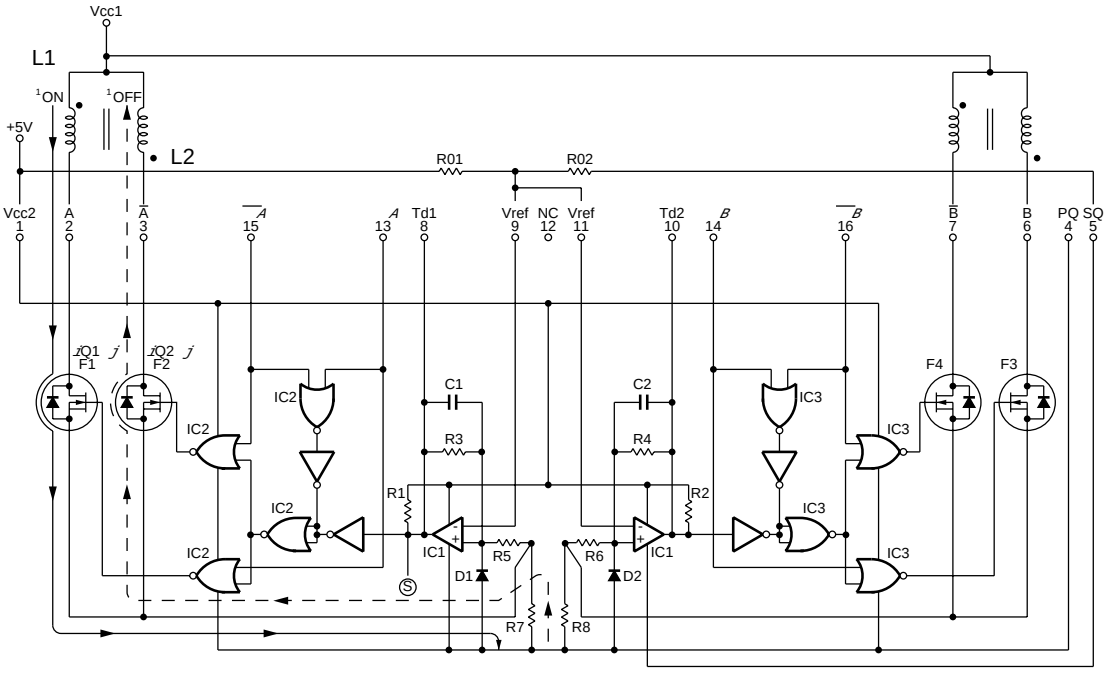

The figure above shows the equalizing circuit of the STK6713BMK4. The circuit comprises a phase driver, comparator, PWM excitation selector and current detection resistor.

When a L-level signal is input to ϕA and a H-level signal is input to $\phi\overline{A}$, Q1 turns ON. As the + terminal of IC1 (comparator) becomes L-level, the output S of IC1 becomes L-level. As current iON of the A coil passing through Q1 increases, the voltage across the terminals of source resistor R7 also increases, output Ⓢ becomes H-level from the moment that the voltage across pin 8 and R_{02} becomes equal, and Q1 is turned OFF.

The energy accumulated at coil L1 of the pulse motor is induced to L2. At this time, the current flowing to L2 is taken as i_{OFF}. The energizing time of i_{OFF} is the time up to when the voltage accumulated at capacitors C1 at both ends of R3 becomes equal to the voltage across both terminals of R_{02}. When the voltage is equal, output Ⓢ is inverted, and becomes L-level, so motor coil current i_{ON} increases to the voltage level of R02 again. In this way, the motor current is turned ON/OFF, that is, current chopping operation is repeatedly carried out.

The same operation is carried out for other phases.

(Motor rotation amount input circuit)

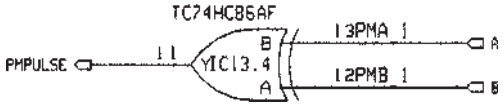

This circuit is for improving stop positional accuracy by counting the number of steps of the pulse motor. A pulse of cycle twice the step of the pulse motor is output from the output obtained by inputting PMA1 and PMB1 from amount the 2-phase excitation pulses to EXOR (IC13). When both edges of this pulse are detected by the CPU interrupt terminal, the number of motor steps can be counted.

18.11.4 Rush current limitation circuit

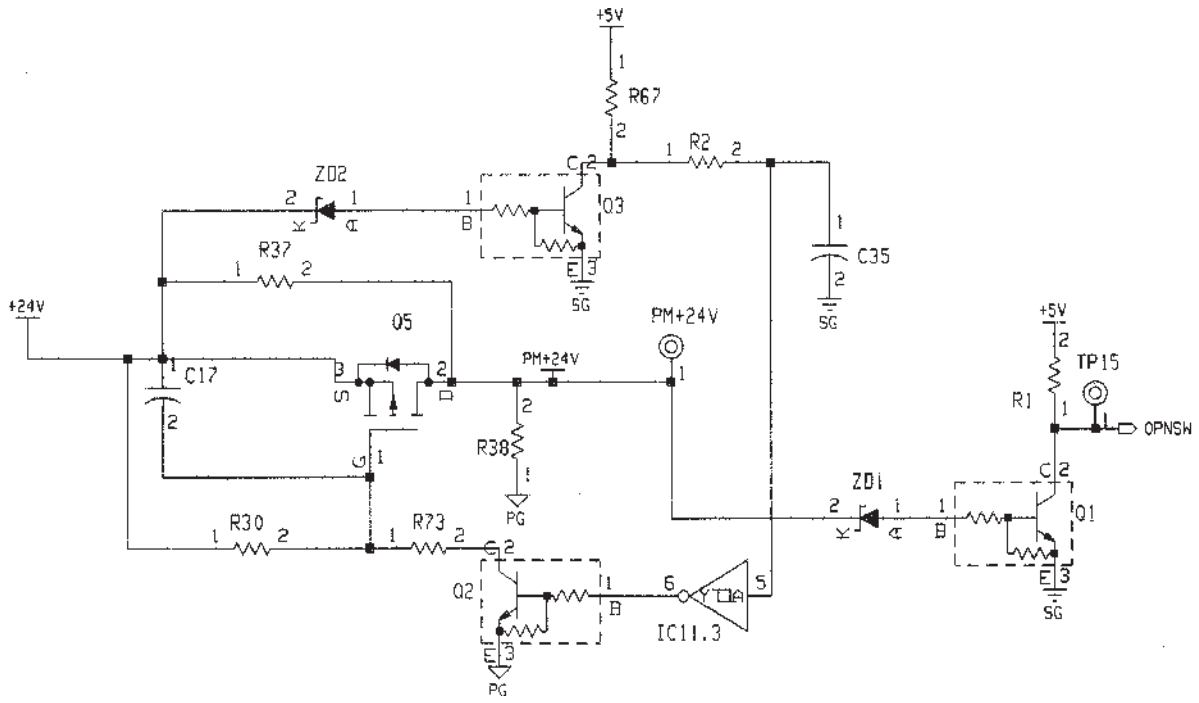

This circuit is for suppressing rush current, that flows to current regeneration capacitor C23 included in the driver motor drive circuit, to a fixed value. This circuit comprises a limiting resistor and FET Q5 that causes current to flow at steady operation.

During the times that the ZD2 cathode reaches 16 V from when the ADF open/close switch, feed cover switch and exit cover switch close, base current is not supplied to Q3 causing the circuit to become OFF, and IC11 pin 5 becomes H-level. At this time, as base current is not supplied to Q2 and the circuit is OFF, Q5 becomes OFF and the current flows through R37.

On the other hand, when the cathode of ZD2 exceeds 16 V, base current flows to Q3, and the circuit becomes ON. After a delay according to the time constant of R2 and C35, IC11 pin 5 becomes L-level. For this reason, base current is supplied to Q2, the circuit becomes ON and Q5 becomes ON. As a result, the current that had been flowing to R37 up till now, flows through Q5, and the current limitation is released.

R38 is a discharging resistor for immediately withdrawing the loaded accumulated to C23 when the ADF open/close switch, feed cover switch and exit cover switch become open.

18.11.5 Reset circuit

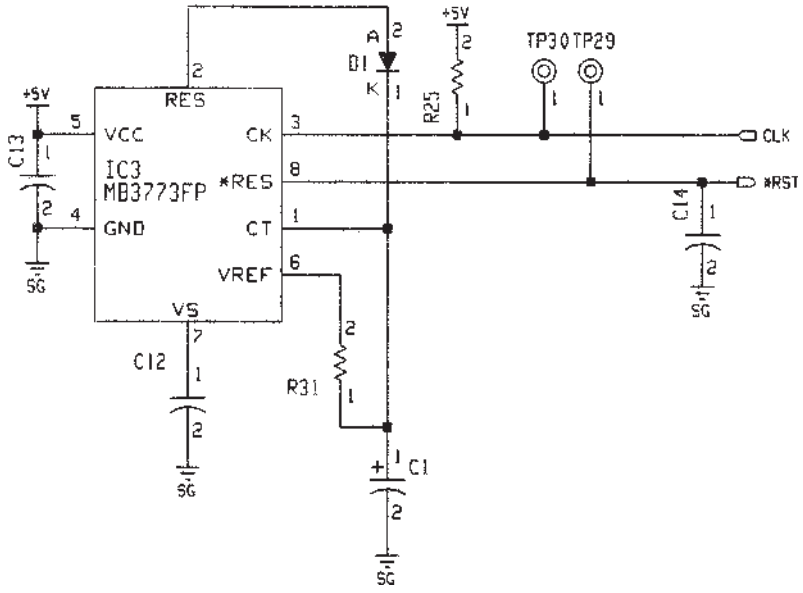

This circuit generates the CPU reset signal at instantaneous disconnection and drop in the power voltage. This circuit has a watchdog timer for analyzing CPU system operation.

After the power is turned ON, IC3 pin 8 is normally H-level. However, when a power OFF or an error causes the 5 V power supply to drop to 4.2 V or less, IC3 pin 8 becomes L-level to reset the CPU and stop system operation.

During normal operation, a clock of fixed cycle is input to IC3 pin 3 from the CPU to clear the watchdog timer built into IC3. However, if a system error causes the clock from the CPU to stop being input, IC3 pin 8 becomes L-level to reset the CPU and stop the system.

R31 is normally not mounted as it is a resistor for stopping the watchdog timer.

18.11.6 EEPROM circuit

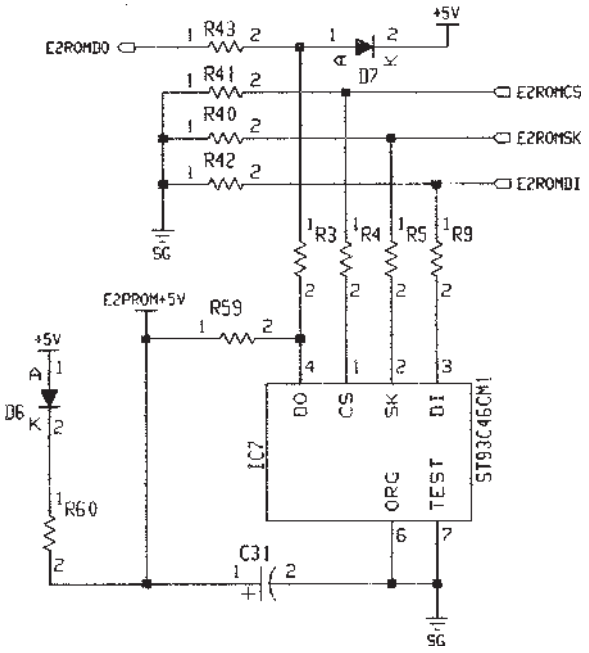

This circuit is the EEPROM and peripheral circuit. It is used for storing data of each of the ADFs.

This EEPROM is memory for storing adjustment values (e.g. reflective sensor sensitivity data or set position data on the copy glass) and counter values (e.g. number of discharged sheets). Data manipulation with the CPU is carried out on the 3-lead serial interface. Once data is stored to EEPROM, it is held in memory and does not disappear even if the power is turned OFF.

IC7 pin 1 is the chip select terminal, and is H-level during data manipulation.

IC7 pin 2 is the serial clock terminal. Serial data is transmitted synchronized with the clock input to this terminal.

IC7 pin 3 is the serial data input terminal, and pin 4 is the serial data output terminal.

D6, R60 and C31 comprise the circuit for holding the power of IC7 until writing ends even if something causes the power voltage to drop during writing of data.

18.12 Explanation of I/O Signals

18.12.1 REQ1, ACK2, ADFRXD signals

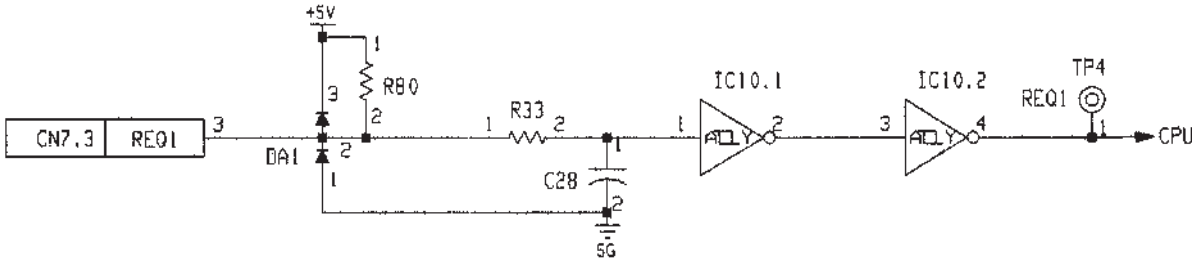

This is the communications input circuit for the main unit PPC. “1” indicates 5 V, and “0” indicates 0 V. Connector logic and CPU input port logic are the same.

18.12.2 ACK1, REQ2, ADFTXD signals

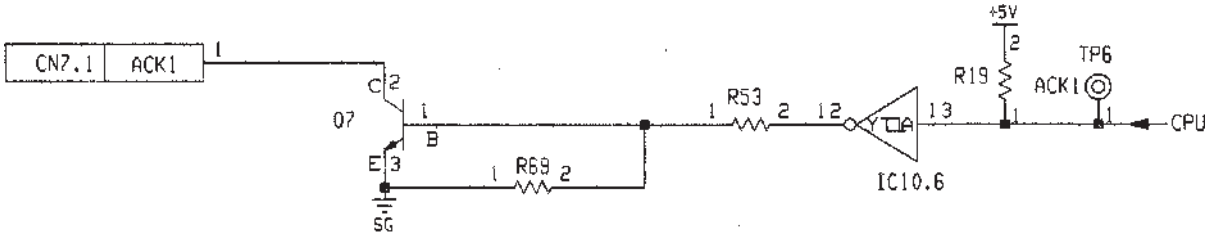

This is the communications input circuit for the main unit PPC. “1” indicates 5 V, and “0” indicates 0 V. Connector logic and CPU output port logic are the same.

18.12.3 Sensor input circuit

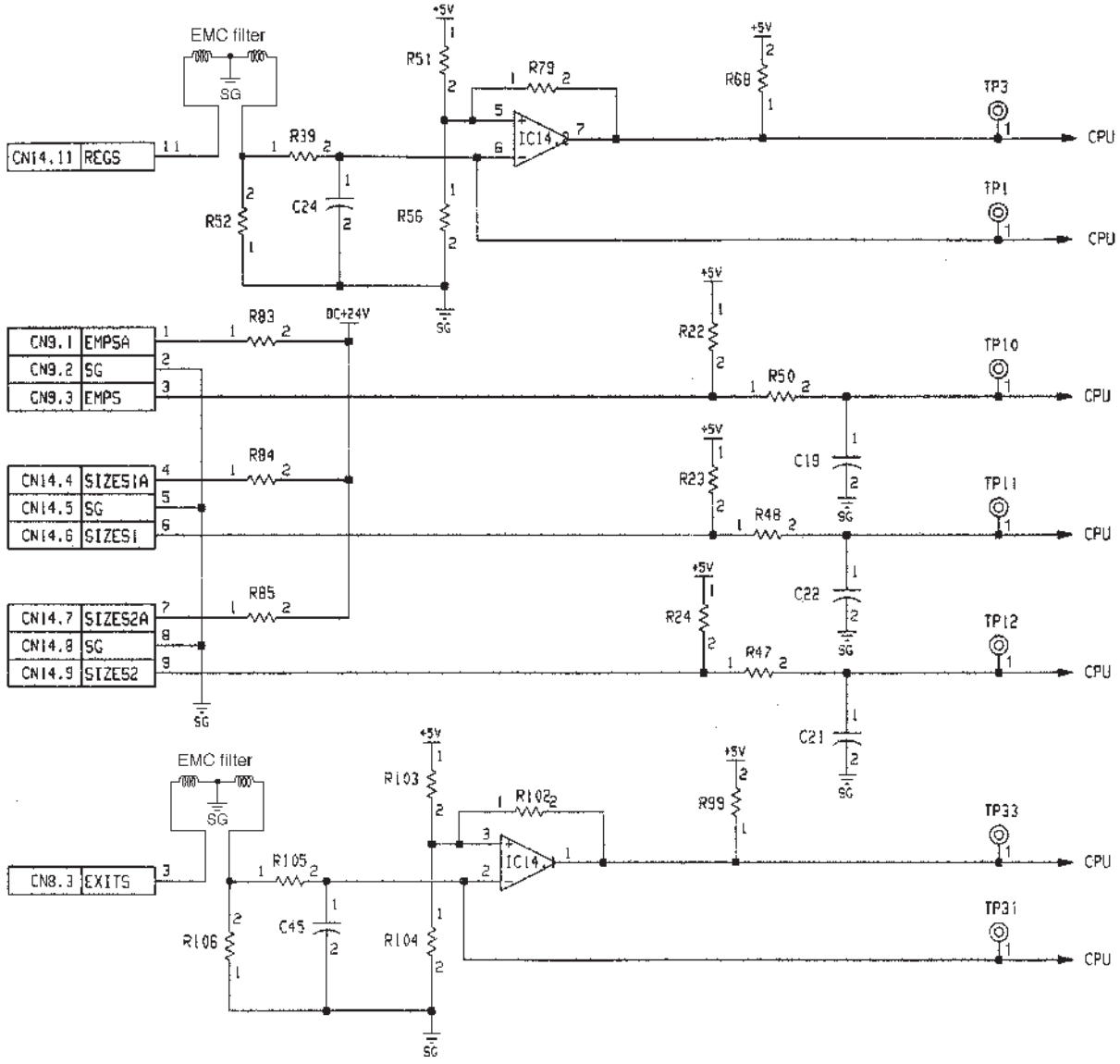

This is the input circuit from the photosensors. The following tables show the signal logic.

Sensor name	Connector level 5V (“1”)	Connector level 0V (“0”)
EMPS (empty sensor)	No original	Original detected
REGS (aligning sensor)	No original (connector voltage 2 V or more)	Original detected (connector voltage less than 2 V)
SIZES1 (size sensor 1)	Original detected	No original
SIZES2 (size sensor 2)	Original detected	No original
EXITS (exit sensor):	No original (connector voltage 2 V or more)	Original detected (connector voltage less than 2 V)

18.12.4 Pulse motor output circuit

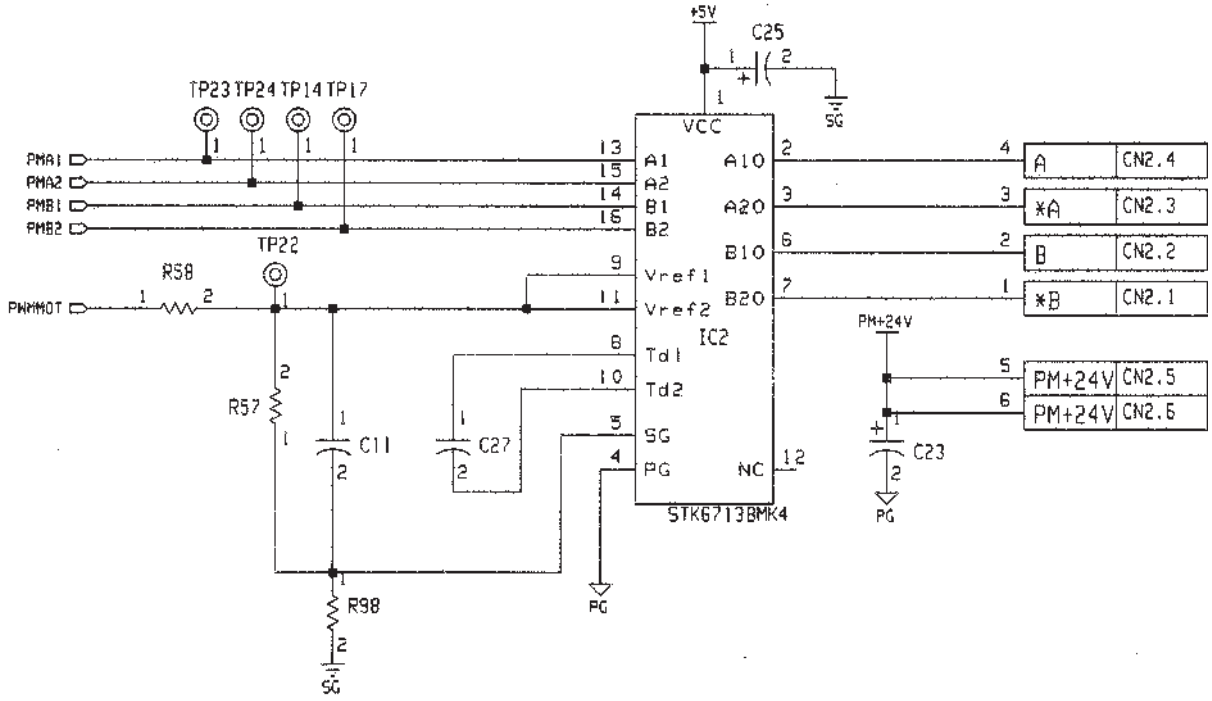

This is the pulse motor output circuit.

Motor rotation speed and rotation direction is controlled by inputting the pulse motor drive excitation pattern signals to PMA1/2 and PMB1/2. The motor current is set by inputting the PWM signal to PWMMOT.

18.12.5 Clutch output circuit

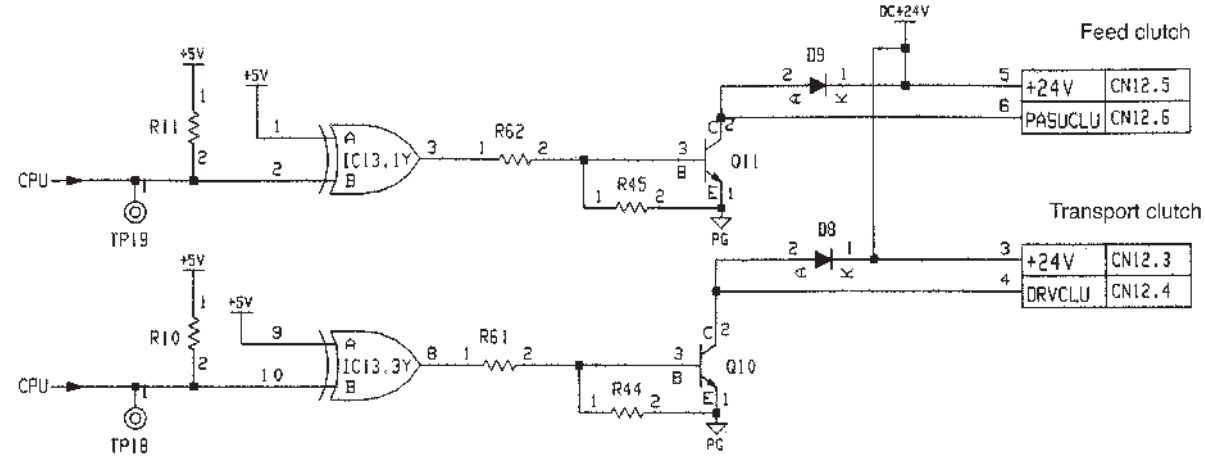

This is the drive circuit of the electromagnetic clutch. The clutch is turned ON when the input signal is "0" (0 V) in any case.

18.12.6 Open switch input circuit

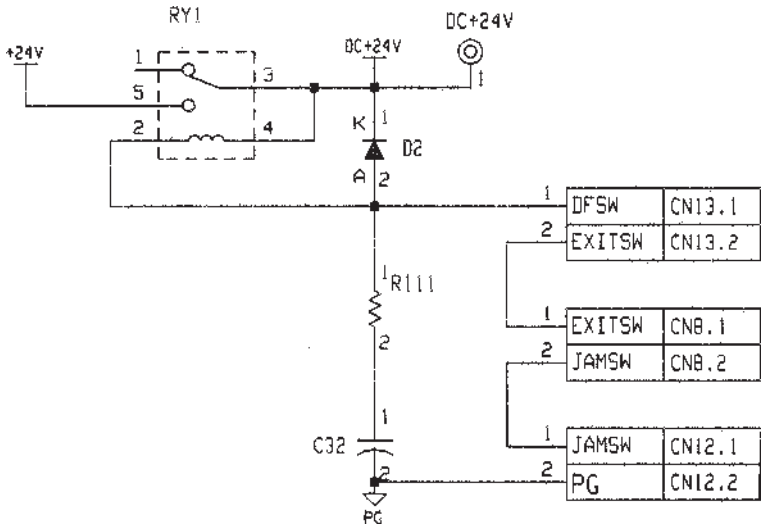

When all of the three reed switches are ON, the relay coil is excited, and +24 V power is supplied to the drive circuit.

The voltage of CN13.1 is 0 V when the three reed switches are ON, and 24 V when one of the reed switches is OFF.

18.13 Disassembly

18.13.1 Transport unit

(1) Remove the four clips holding the transport unit.

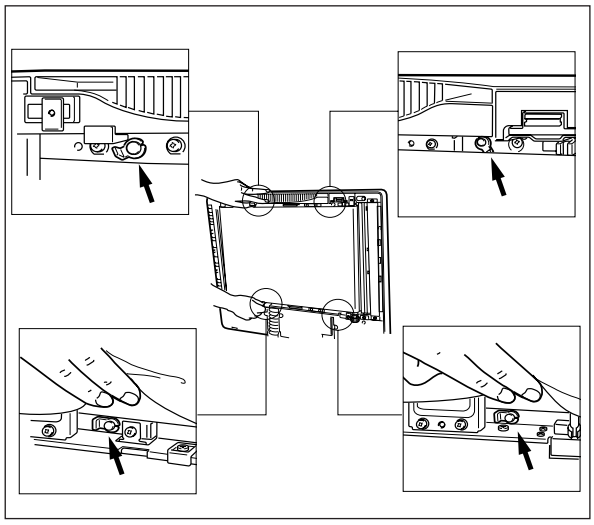

(2) Pull out the upper part (front side) of the transport unit toward you to disengage the belt for driving.

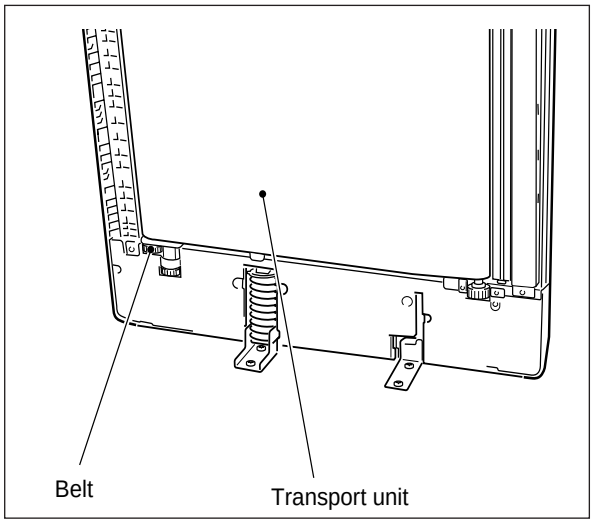

Note: After fixing the clip, move the knob section to the side of the frame.

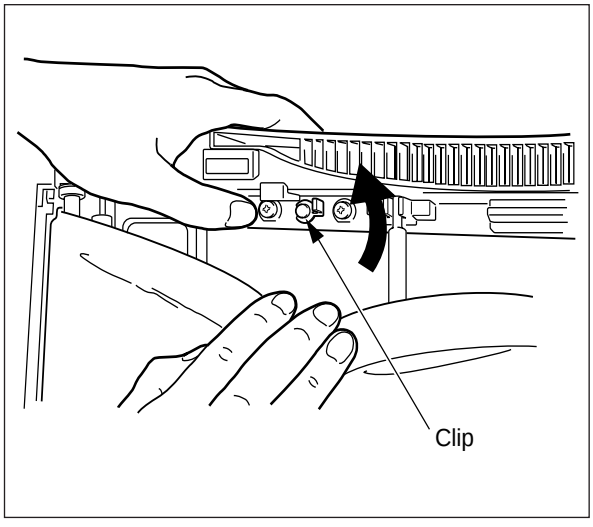

18.13.2 Transport belt

(1) Remove the transport unit.

(2) Loosen the two screws (front and rear) holding the belt tension plate.

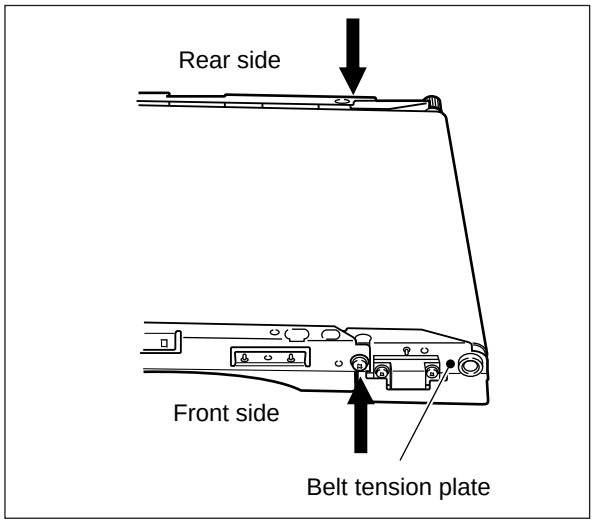

(3) Rotate the belt tension plate toward you to loosen the transport belt.

(4) Remove the transport belt.

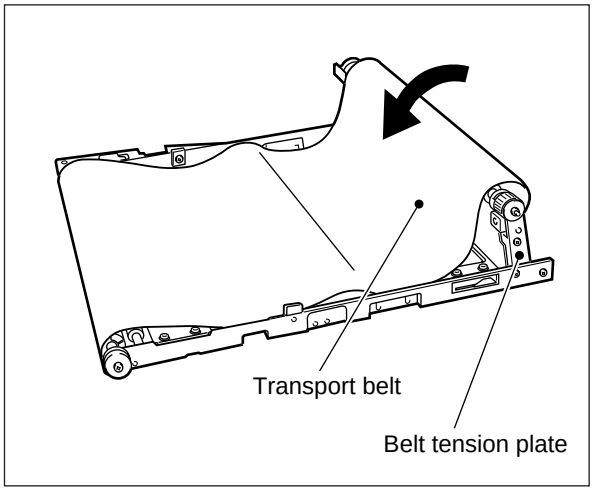

Note: During reassembly, the edge of the transport belt should be inside the side frame of the transport unit. After reassembly, check that the belt is not deviated to one side (should be on the center.)

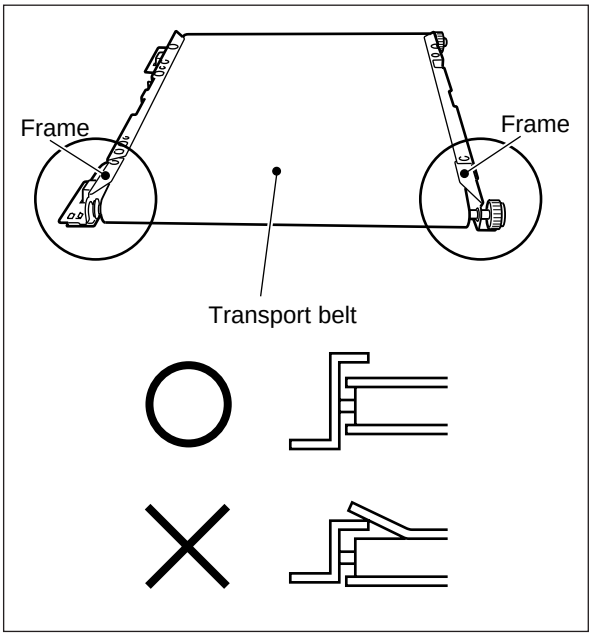

18.13.3 Belt holding roller/brush

(1) Remove the transport belt.

Belt holding roller

(1) Replace the belt holding roller on the feed side after removing the rubber roller on the feed side. The belt holding roller on the exit side should be replaced by having the belt tension plate inclined. (There is no need to remove the rubber roller.)

Note: During the replacement of the belt holding roller, never remove the side frame of the transport unit. (Do not remove the screws which are fastening the side frame except when replacing the side frame.)

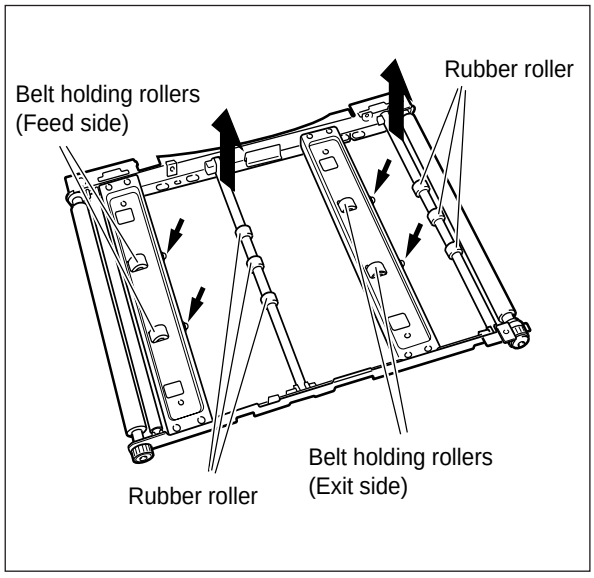

Brush

(1) Remove two screws and take out the brush holding bracket.

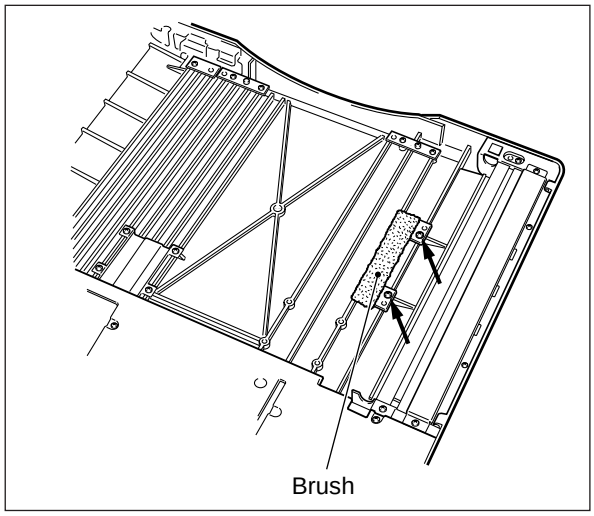

18.13.4 Original feed tray

(1) Remove two M4 screws and take out the tray in an upward direction.

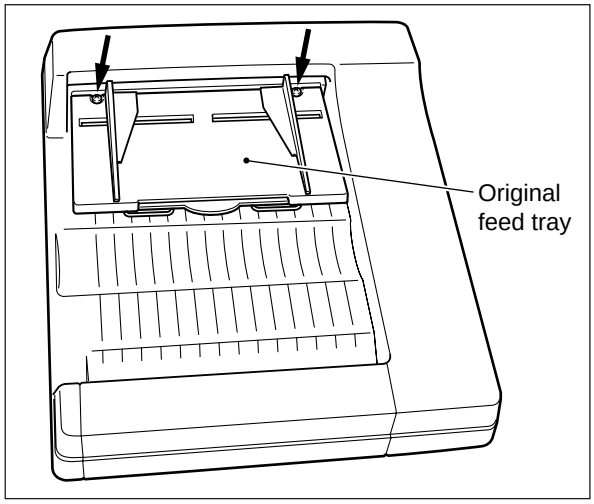

18.13.5 Feed unit

(1) Remove the original feed tray.

(2) Disconnect one connector at the rear and remove two screws, then move the ADF unit toward the rear to take it out in an upward direction.

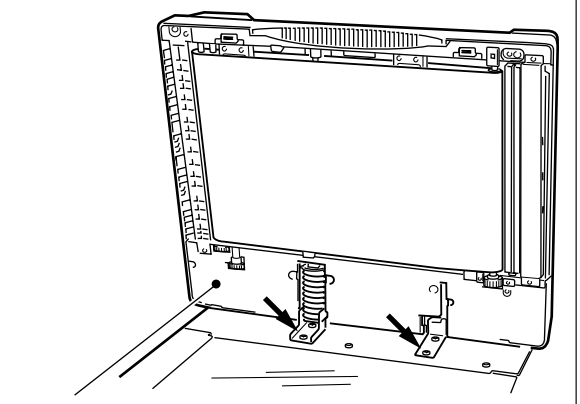

(3) Place the entire unit upside down and remove the transport unit and the cover (3 screws).
Note: (M4×8)

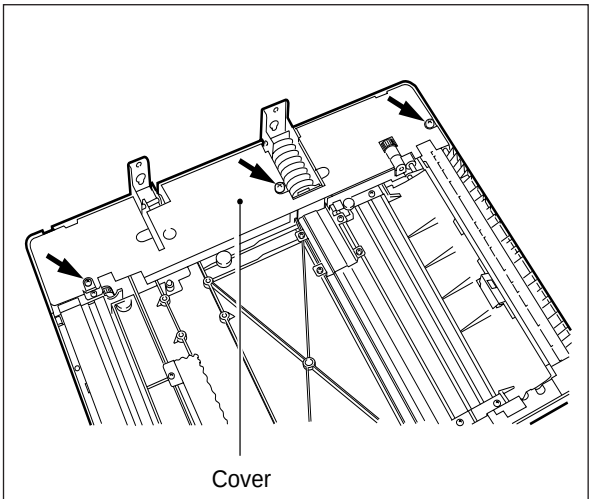

(4) Remove five connectors from the PC board.

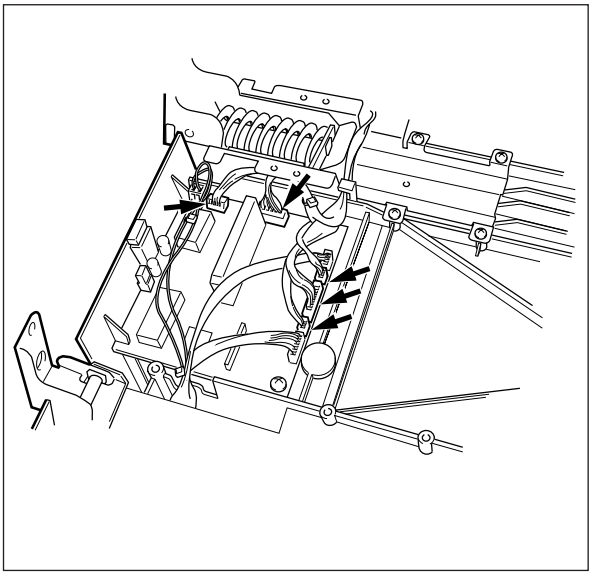

(5) Open the jam access cover and loosen the one screw.

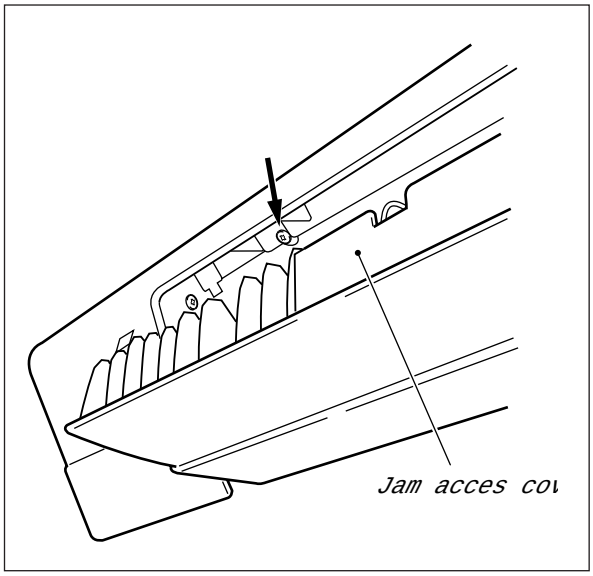

(6) Remove seven screws and take out the feed unit.

Note: (M4×12) .... 6 pieces (PTBR)
(M4× 8) ..... 1 piece Ⓐ (BID)

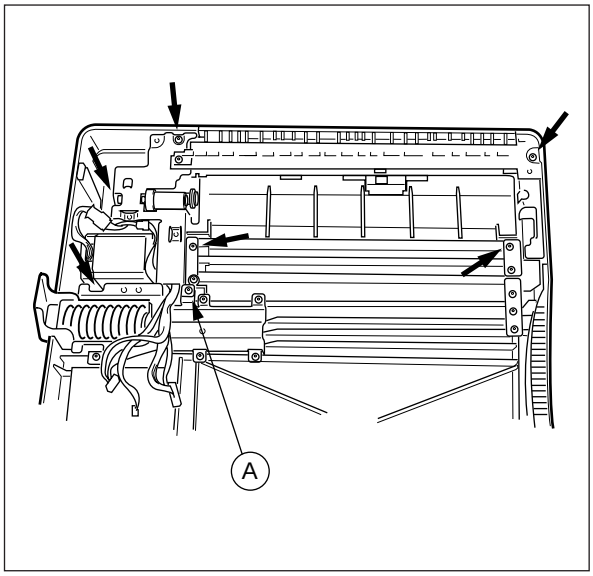

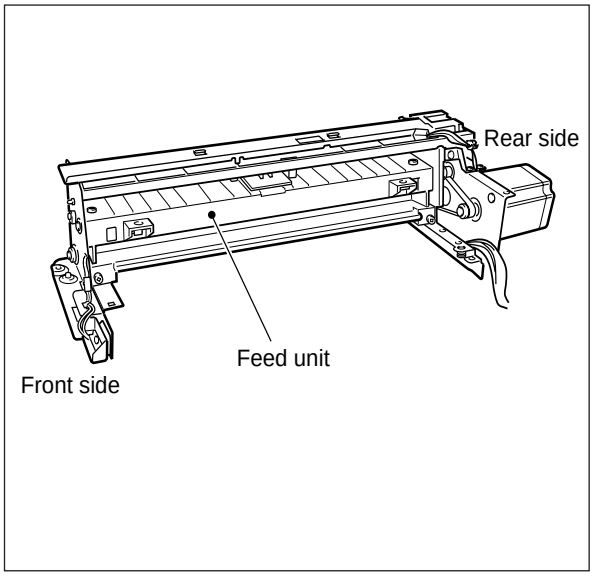

18.13.6 Drive motor

(1) Loosen the one screw holding the timing belt tensioner

(2) Disconnect the one connector of the motor.

Note: Do not remove the spring hooked on the belt tensioner.

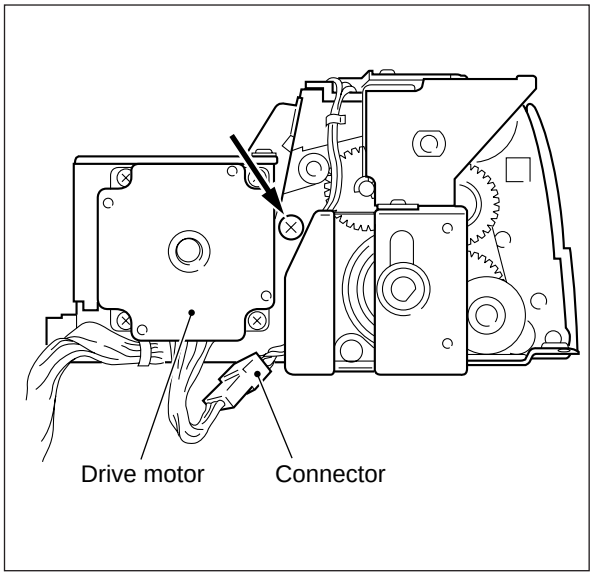

(3) Remove the two screws holding the motor.

Note: Whenever reinstalling, secure the belt tensioner after all the parts.

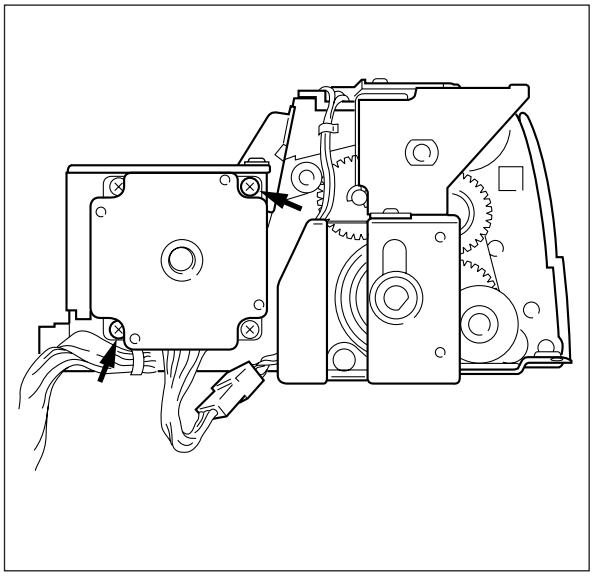

18.13.7 Electromagnetic clutch

(1) Remove one harness band, one spring and three screws.

Note: One of the three screws is shorter (M3×4) Ⓑ.

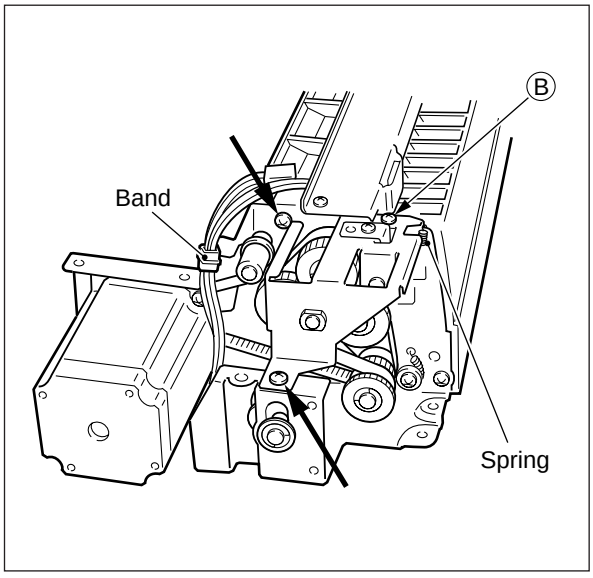

(2) Pull out the clutch with the pin in the direction of the arrow.

(3) Remove the pin and the claw, then draw the shaft.

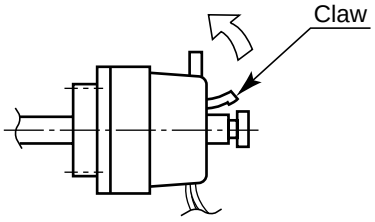

(4) When the connector is removed, the clutch can be taken out.

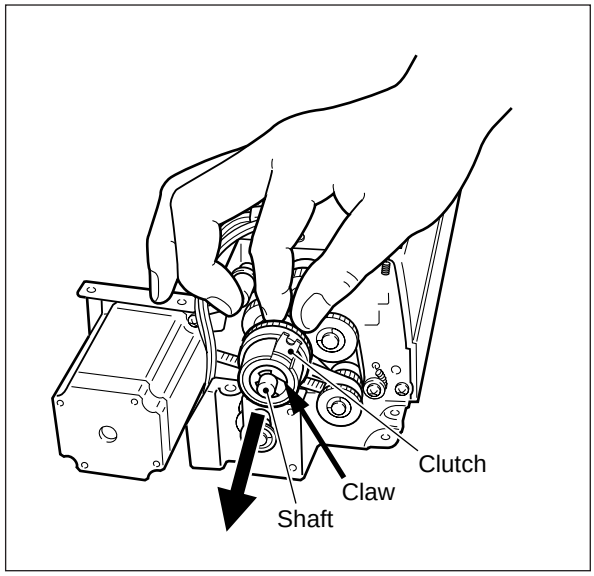

18.13.8 Jam access cover

(1) Remove the feed unit.

(2) When two shouldered screws (front and rear) are removed, the jam access cover can be taken out.

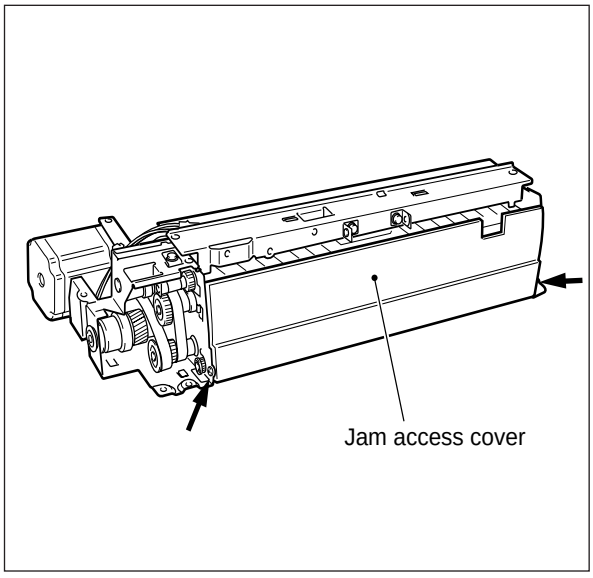

18.13.9 Separation unit

(1) Open the jam access cover.

(2) Remove two screws and take out the separation unit.

(3) Draw the holder from the bracket.
(Be careful to prevent the pressure spring coming off.)

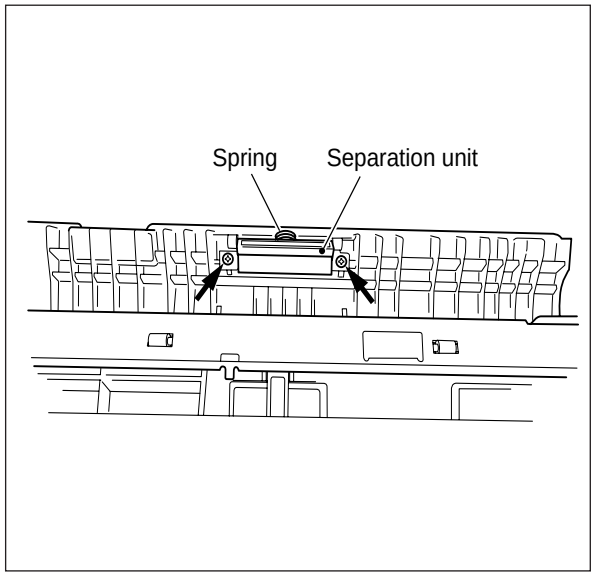

18.13.10 Separation plate

(1) Remove the feed unit.
(2) Open the jam access cover.
(3) Remove two screws.

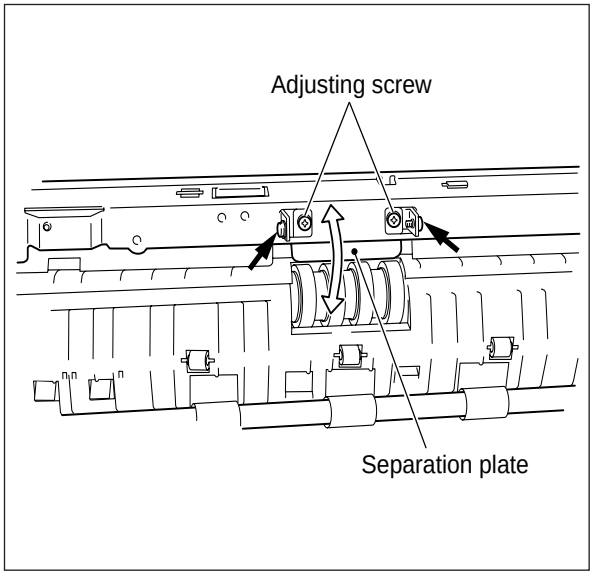

18.13.11 Aligning roller (L)

(1) Remove the feed unit.
(2) Remove the jam access cover.
(3) Remove an E-ring, bushing and coil spring from the front and rear sides.
(4) Slide the aligning roller (L) to pull it out.

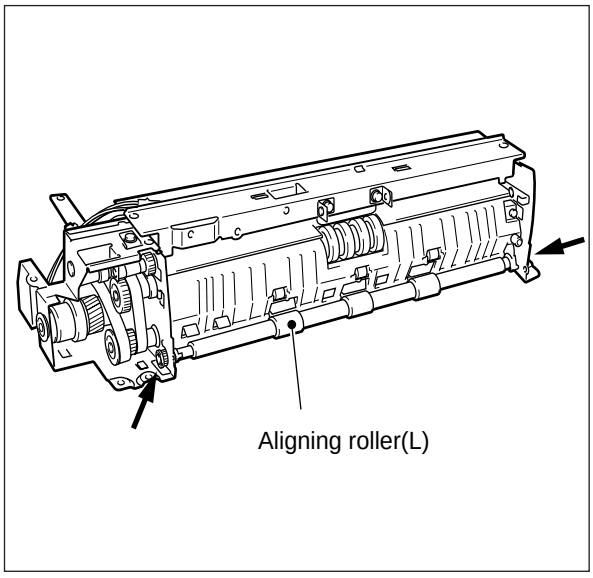

18.13.12 Aligning sensor and size sensors 1 and 2

(1) Remove the feed unit.
(2) Remove four screws

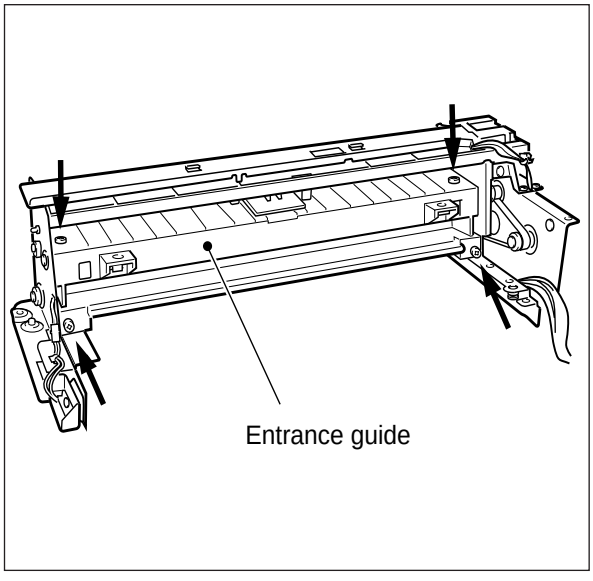

(3) While pushing up the empty sensor upward, pull out the guide.

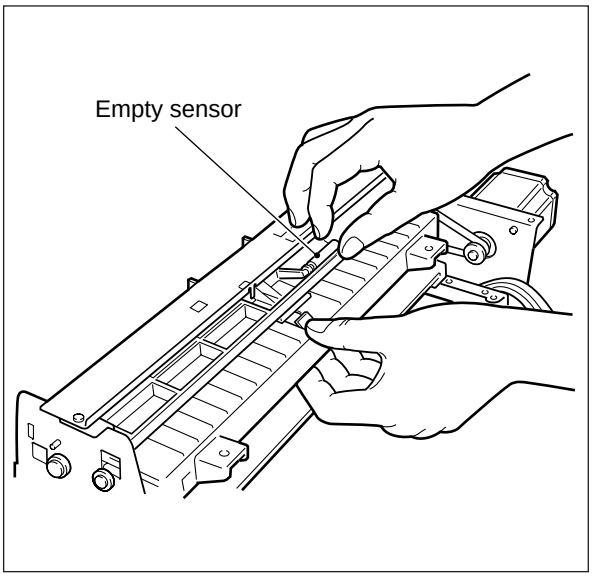

(4) Remove each screw and then disconnect the sensor from the connector.

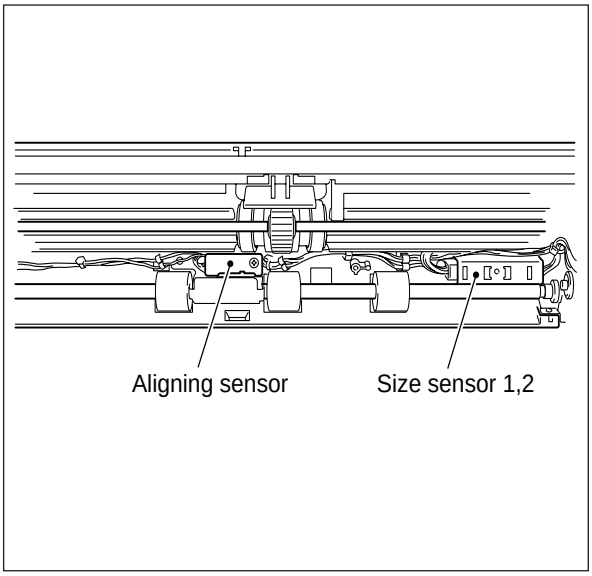

18.13.13 Feed roller

(1) Remove the feed unit.
(2) Remove the entrance guide.
(3) Remove the gear of the drive section (1 E-ring).
(4) Remove two E-rings of the frame inner side.
(5) Remove the front side E-ring holding the feed rolller, and then extract the roller.

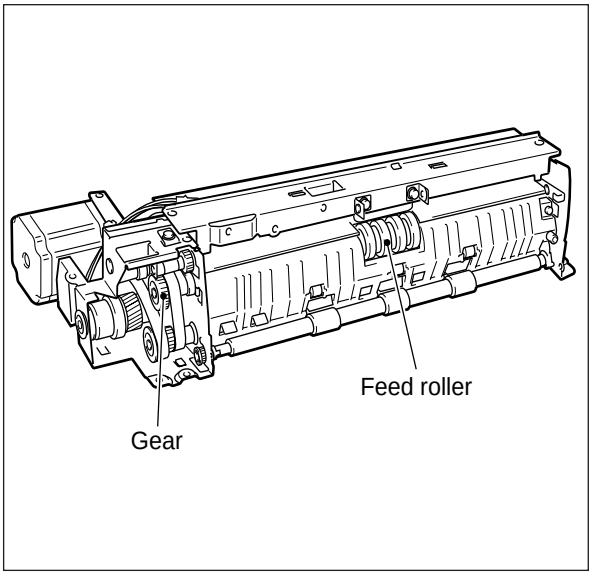

18.13.14 Pick-up roller/aligning roller (R)

(1) Remove the feed unit.

Pick-up roller

(2) Remove the entrance guide.
(3) Remove the gear (spring clutch) of the drive section (1 pierce-ring).
(4) Remove one front side pierce-ring.
(5) Remove one pierce-ring holding the roller, and then pull out the roller.

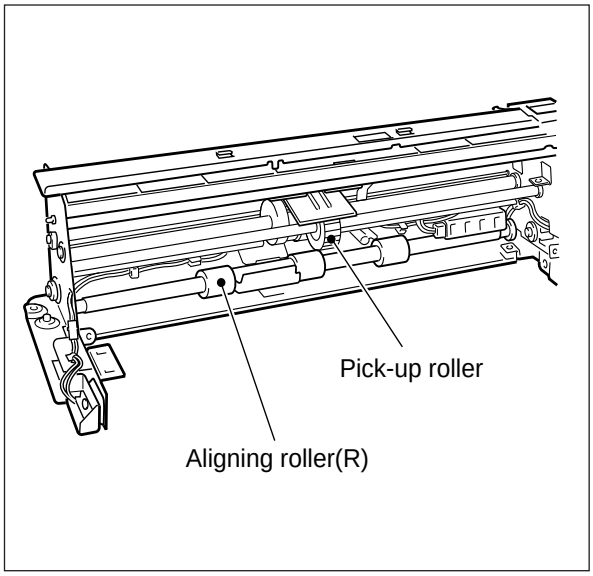

Aligning roller (R)

(2) Remove the entrance guide, and then the aligning sensor.
(3) Remove the pulley of the drive section (2 E-rings).
(4) Remove the bearing and two E-rings, and then extract the roller.

18.13.15 Reversing unit

(1) Remove the ADF unit.
(2) Remove the transport unit and the cover.
(3) Remove the connector from the PC board.
(4) Remove earth wires (at 2 places) attached in the hinge portion.

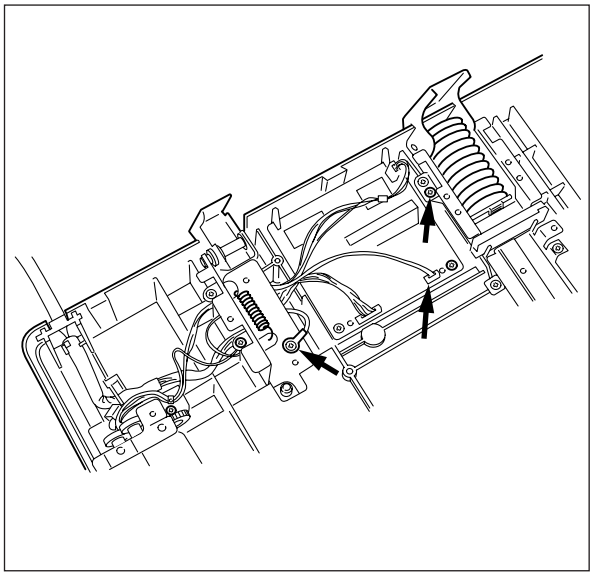

(5) When 3 screws (1 earth wire) are removed, the reversing unit can be taken out.

Note: When reinstalling, temporarily secure the reversing unit, after having mounted the transport unit, fix the reversing unit.

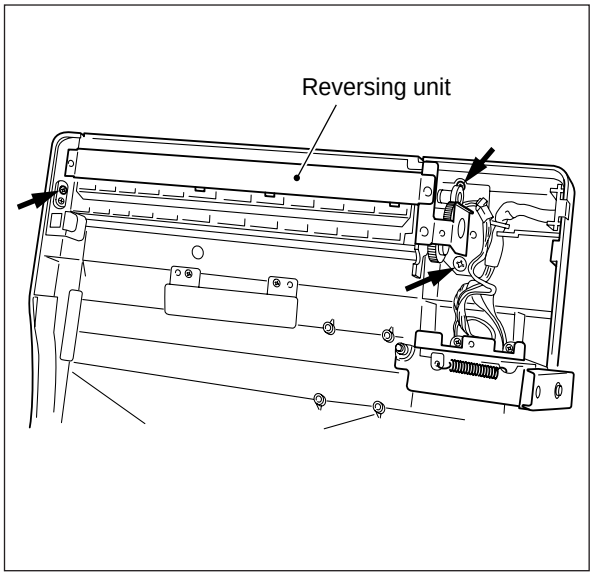

18.13.16 Exit cover

(1) Remove the reversing unit.

(2) Take out two screws (front and rear) and remove the cover.

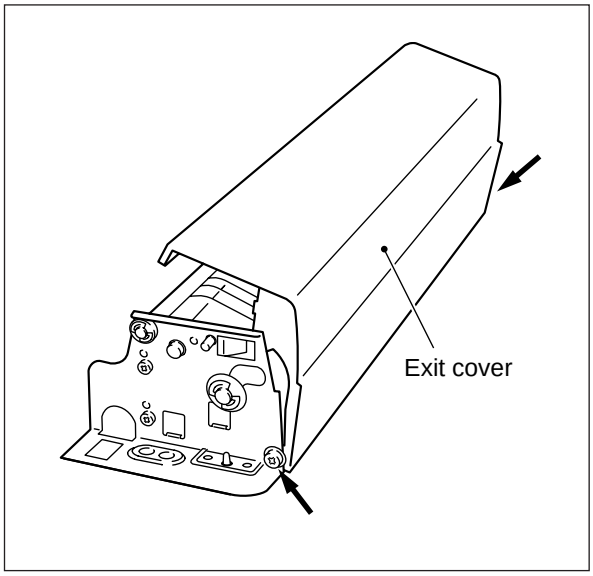

18.13.17 Reversing roller

(1) Remove the reversing unit.

(2) Remove the bracket of the drive section (2 screws).

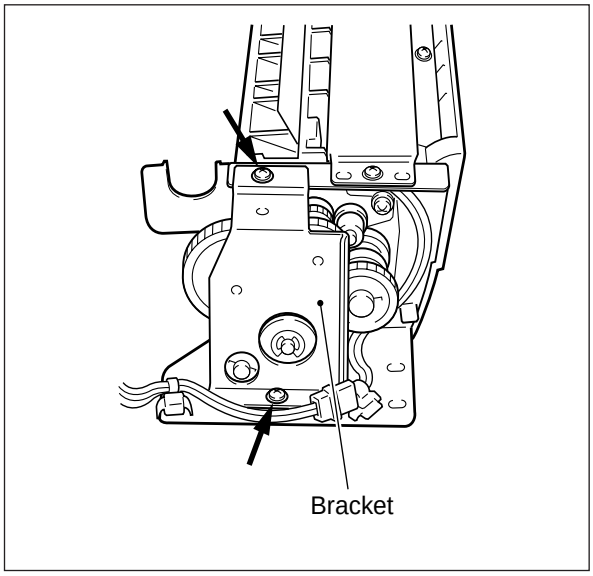

(3) Remove two idle gears (one of the two gears is fixed with the grip ring).
(4) Remove the bushing of the reversing roller front side (1 E-ring).
(5) Tilting the reversing roller, remove the rear side E-ring, and then the gear (spring clutch).
(6) Pull out the roller.

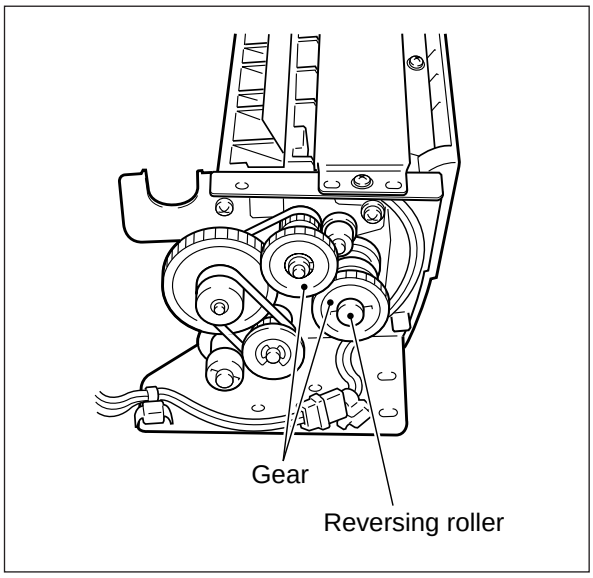

18.13.18 Exit sensor

(1) Remove the stay (4 screws).

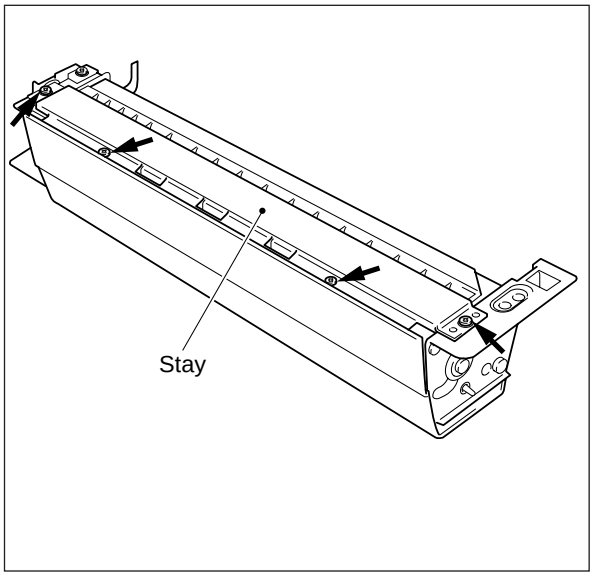

(2) Remove the sensor board from the guide (1 screw).

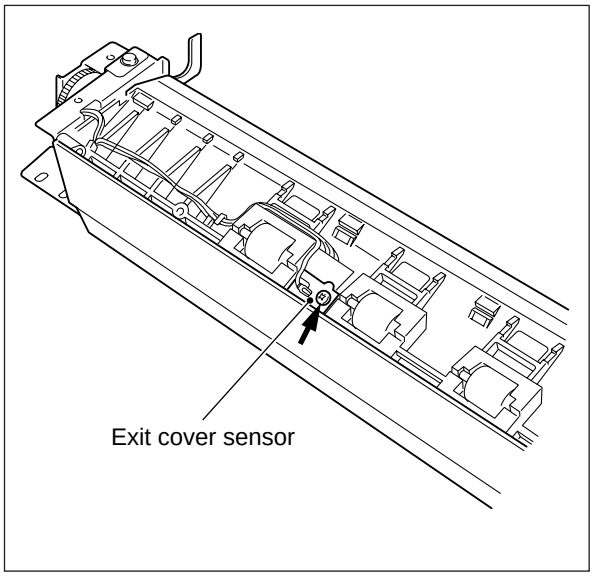

18.13.19 PC board

(1) Remove the ADF unit.
(2) Remove the cover.
(3) Remove the eight connectors.
(4) Remove two screws, and slide the PC board to remove it from the rear side hook portion.

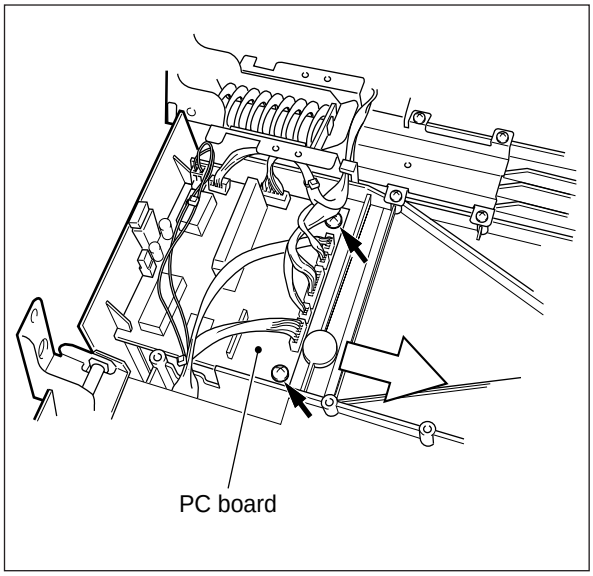

18.14 Troubleshooting of the RADF

18.14.1 Mechanical troubleshooting

(1)

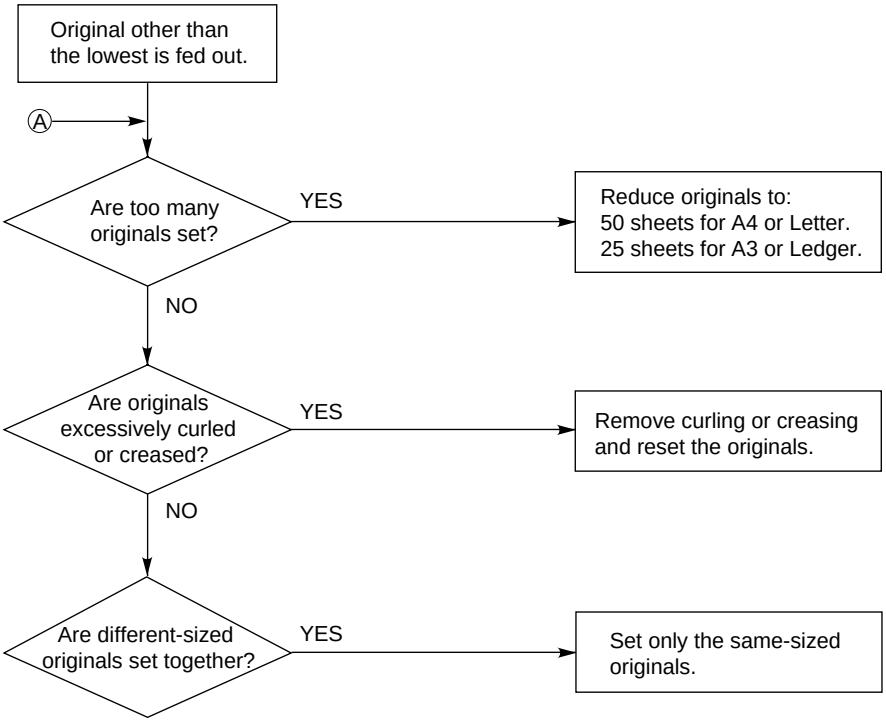

(2)

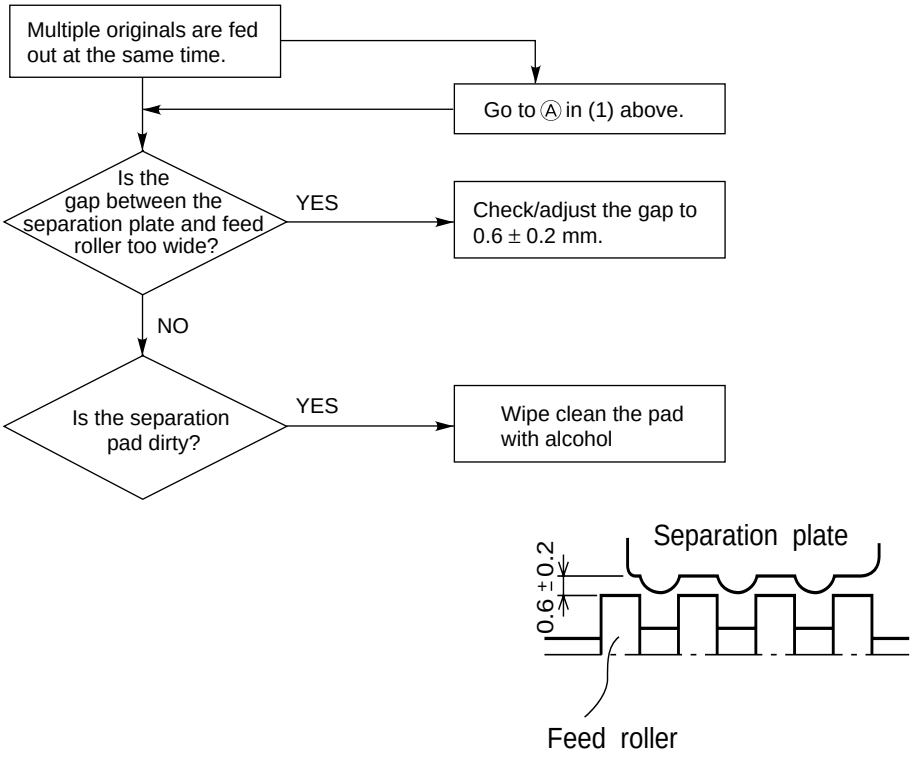

(3)

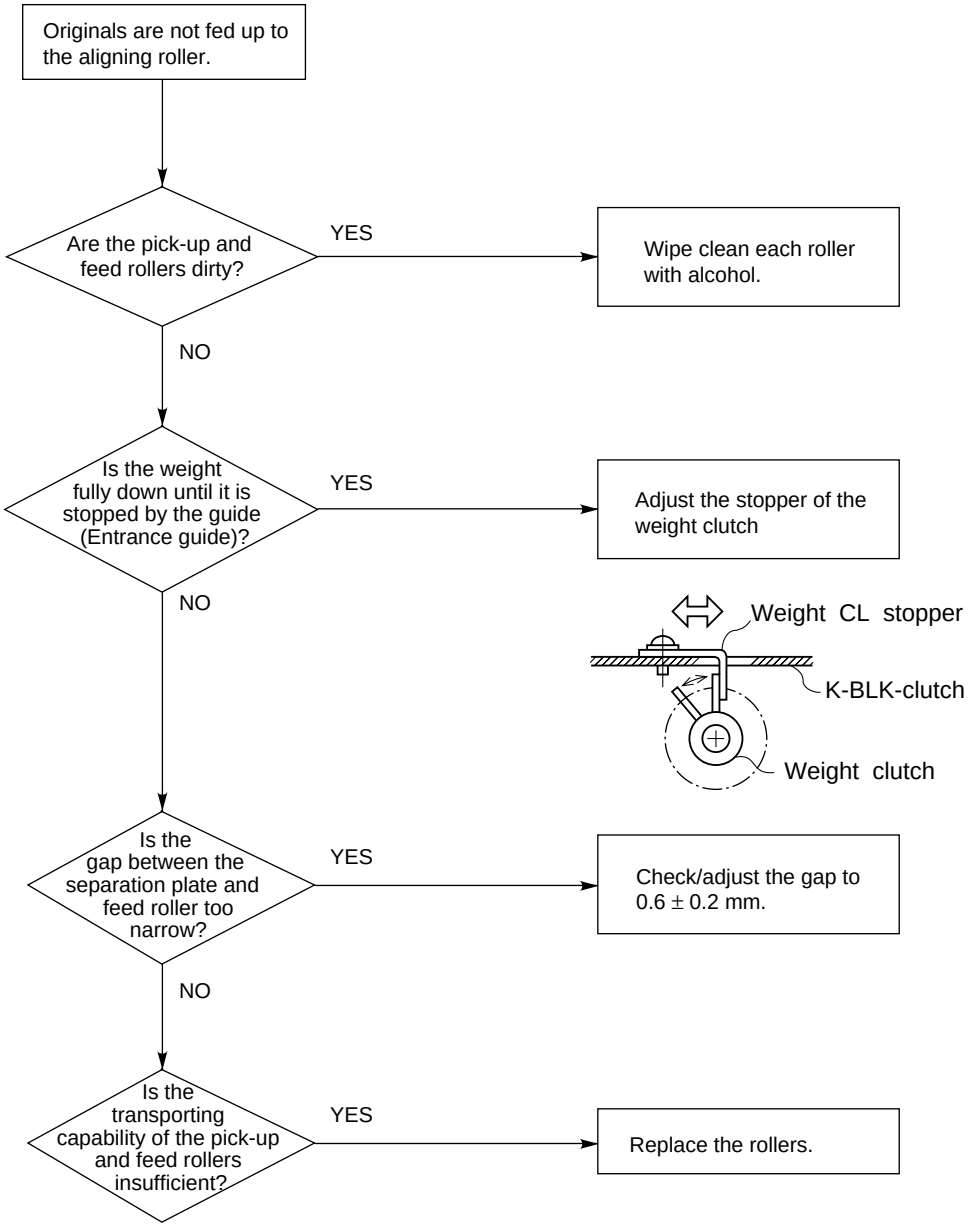
Originals are not fed up to the aligning roller.
Are the pick-up and feed rollers dirty?
YES
Wipe clean each roller with alcohol.
NO
Is the weight fully down until it is stopped by the guide (Entrance guide)?
YES
Adjust the stopper of the weight clutch
NO
Weight CL stopper
K-BLK-clutch
Weight clutch
Is the gap between the separation plate and feed roller too narrow?
YES
Check/adjust the gap to 0.6 ± 0.2 mm.
NO
Is the transporting capability of the pick-up and feed rollers insufficient?
YES
Replace the rollers.

(4)

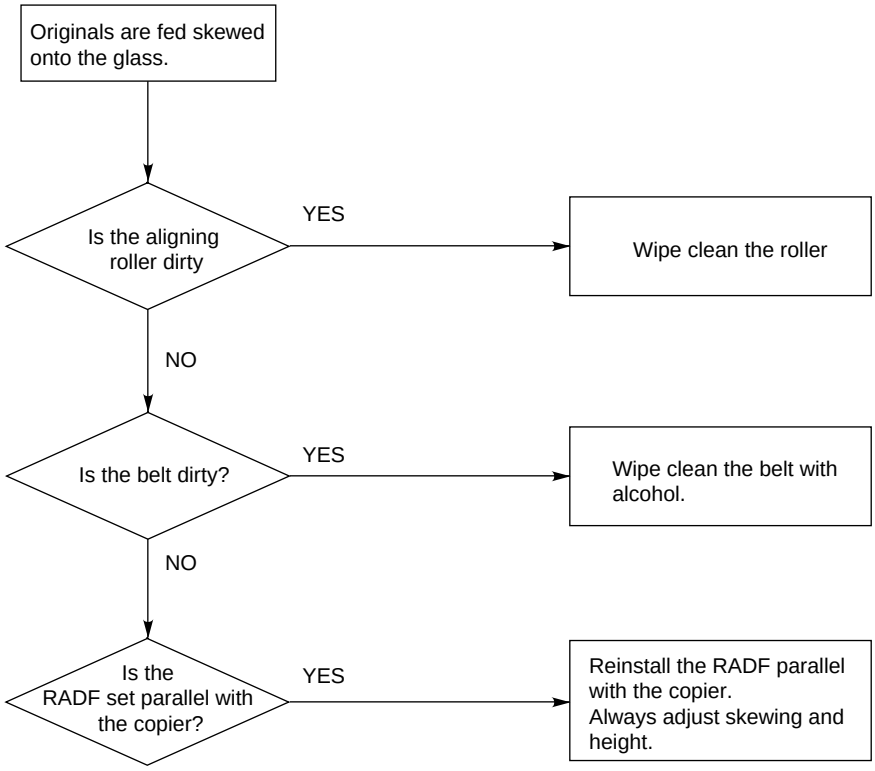
Originals are fed skewed onto the glass.
Is the aligning roller dirty
YES
Wipe clean the roller
NO
Is the belt dirty?
YES
Wipe clean the belt with alcohol.
NO
Is the RADF set parallel with the copier?
YES
Reinstall the RADF parallel with the copier.
Always adjust skewing and height.

(5)

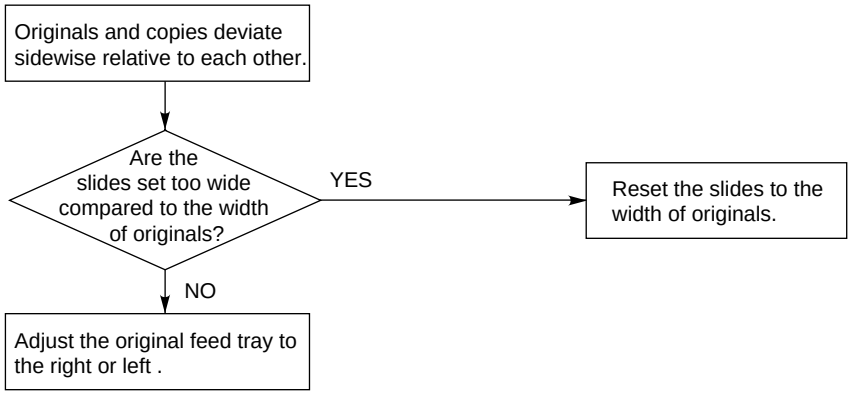
Originals and copies deviate sidewise relative to each other.
Are the slides set too wide compared to the width of originals?
YES
Reset the slides to the width of originals.
NO
Adjust the original feed tray to the right or left .

18.14.2 Electrical troubleshooting

(1) The ADF does not operate (excluding when the jam access and ADF covers are open).

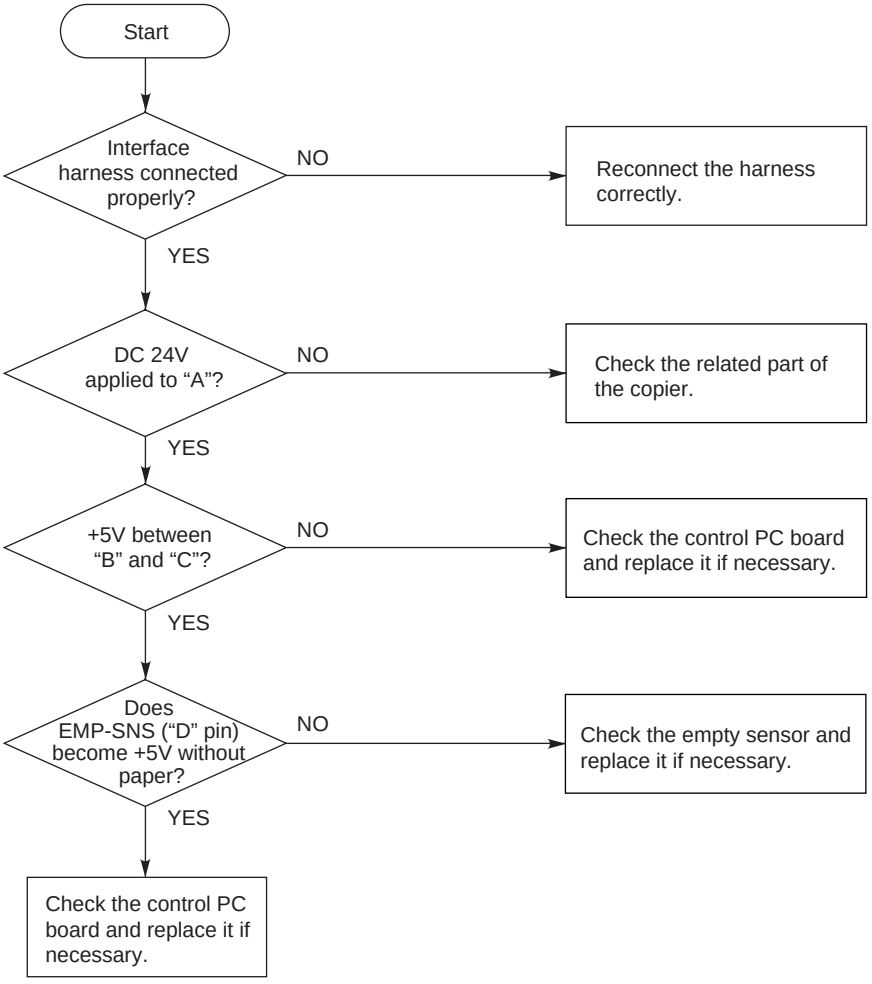

“A”	“B”	“C”	“D”
CN5	TP(+5V)	TP(SG)	CN9-3

(2) Motor fault

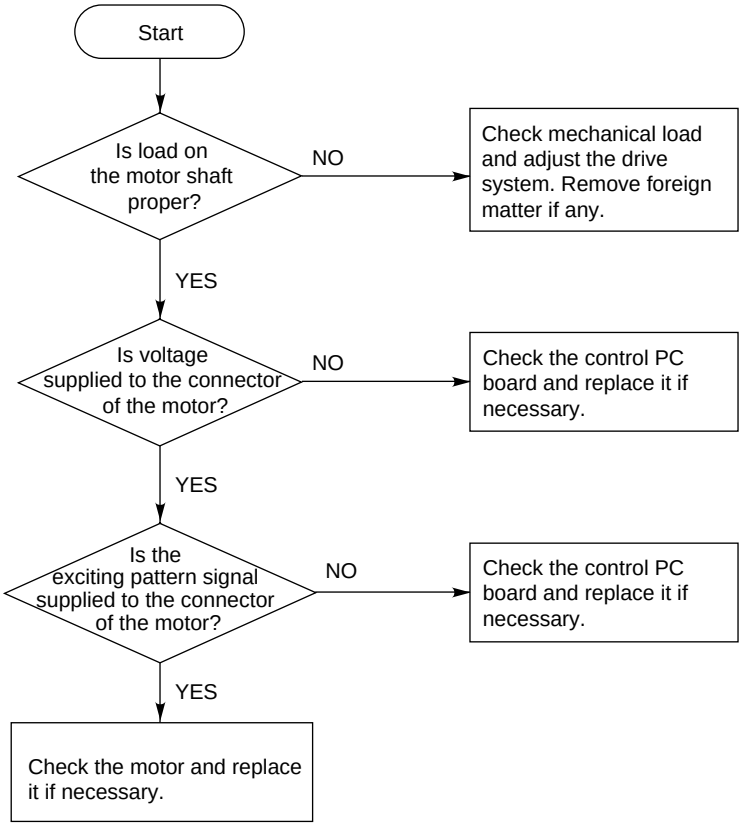

(3) Communication error

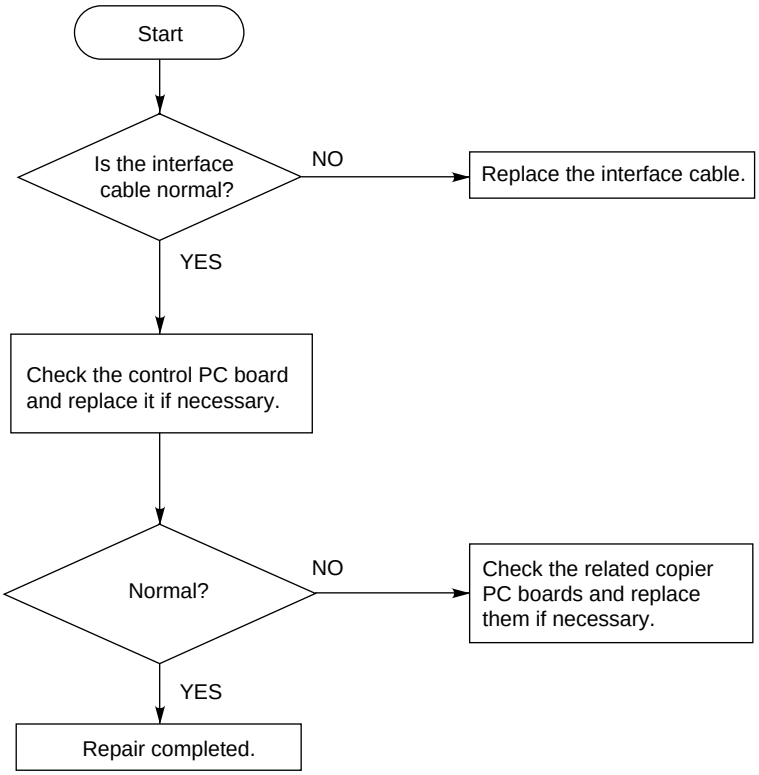

(4) Size detection failure

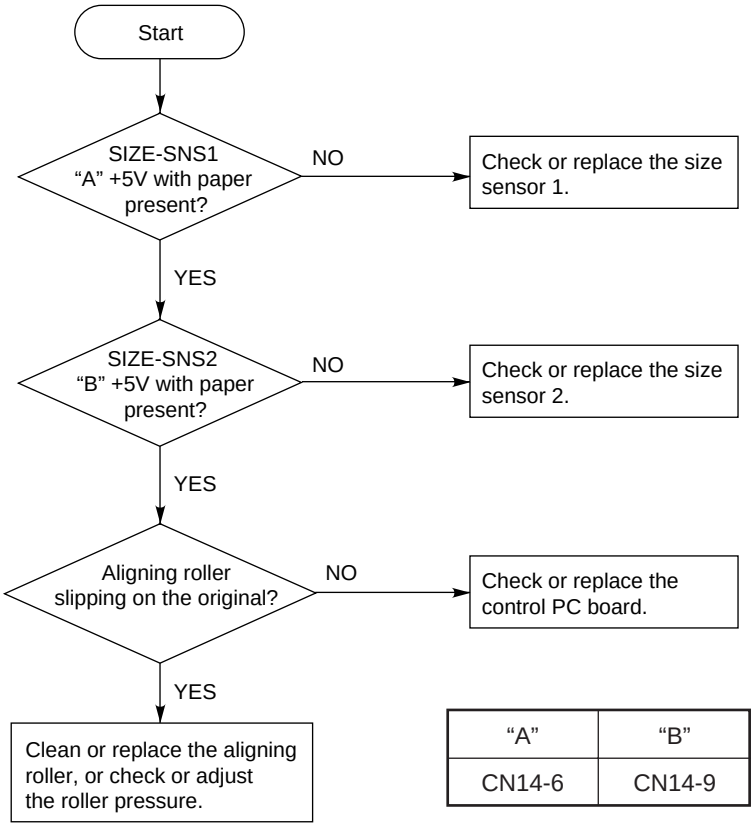

"A"	"B"
CN14-6	CN14-9

(5) Original's pre-feed stop position failure

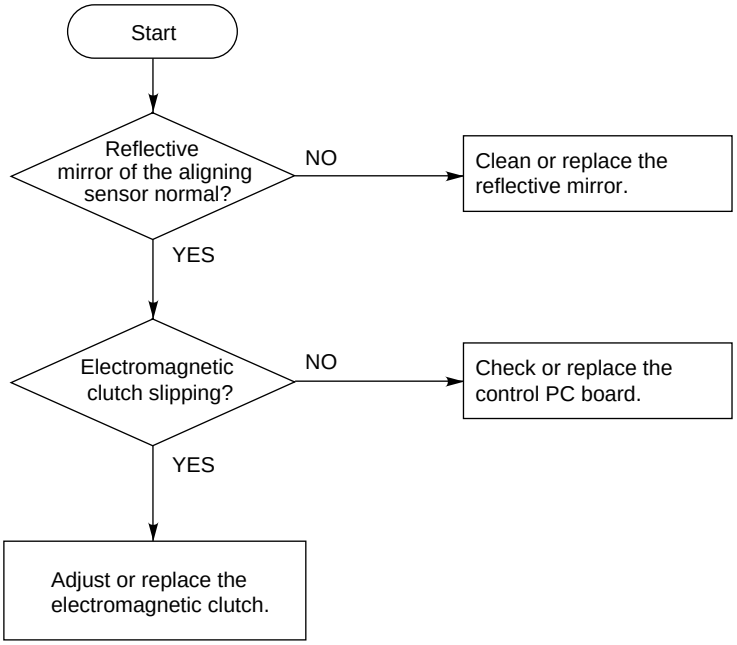

18.15 PC Board Assemblies

18.15.1 PWA-F-LGC-770

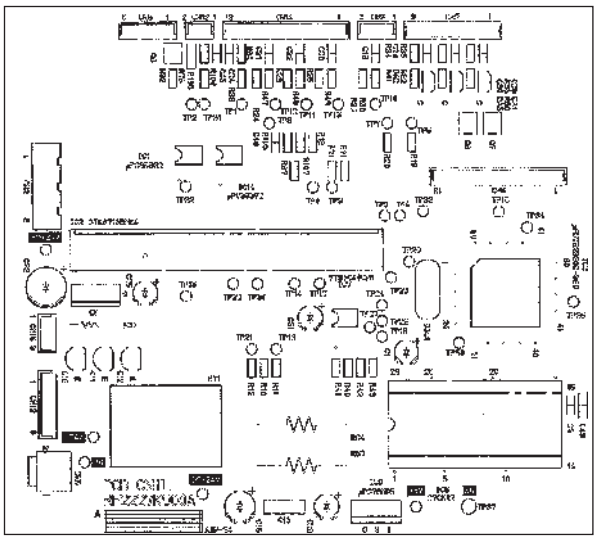

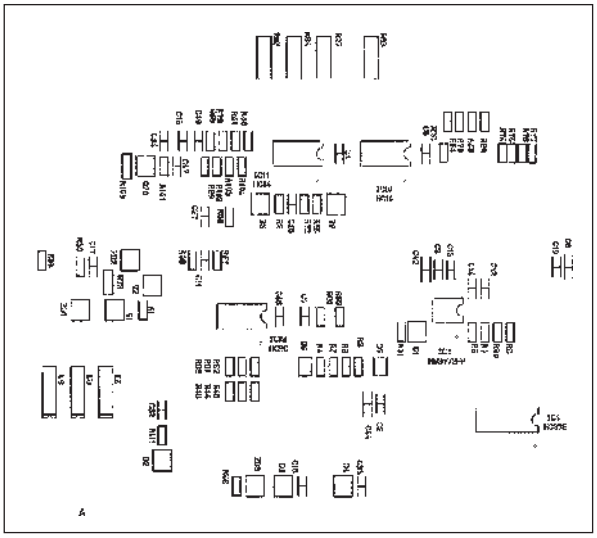

18.15.2 PWA-F-RGS-770

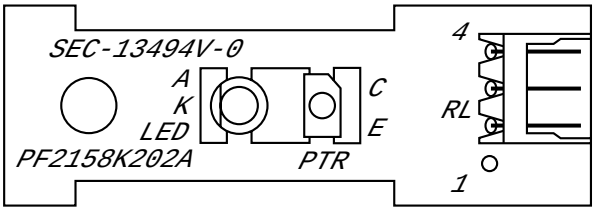

18.15.3 PWA-F-SEN-770

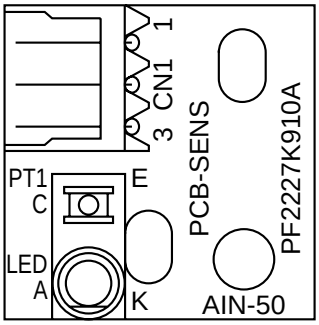

18.16 Circuit Diagrams/Wire Harness

18.16.1 General circuit diagram

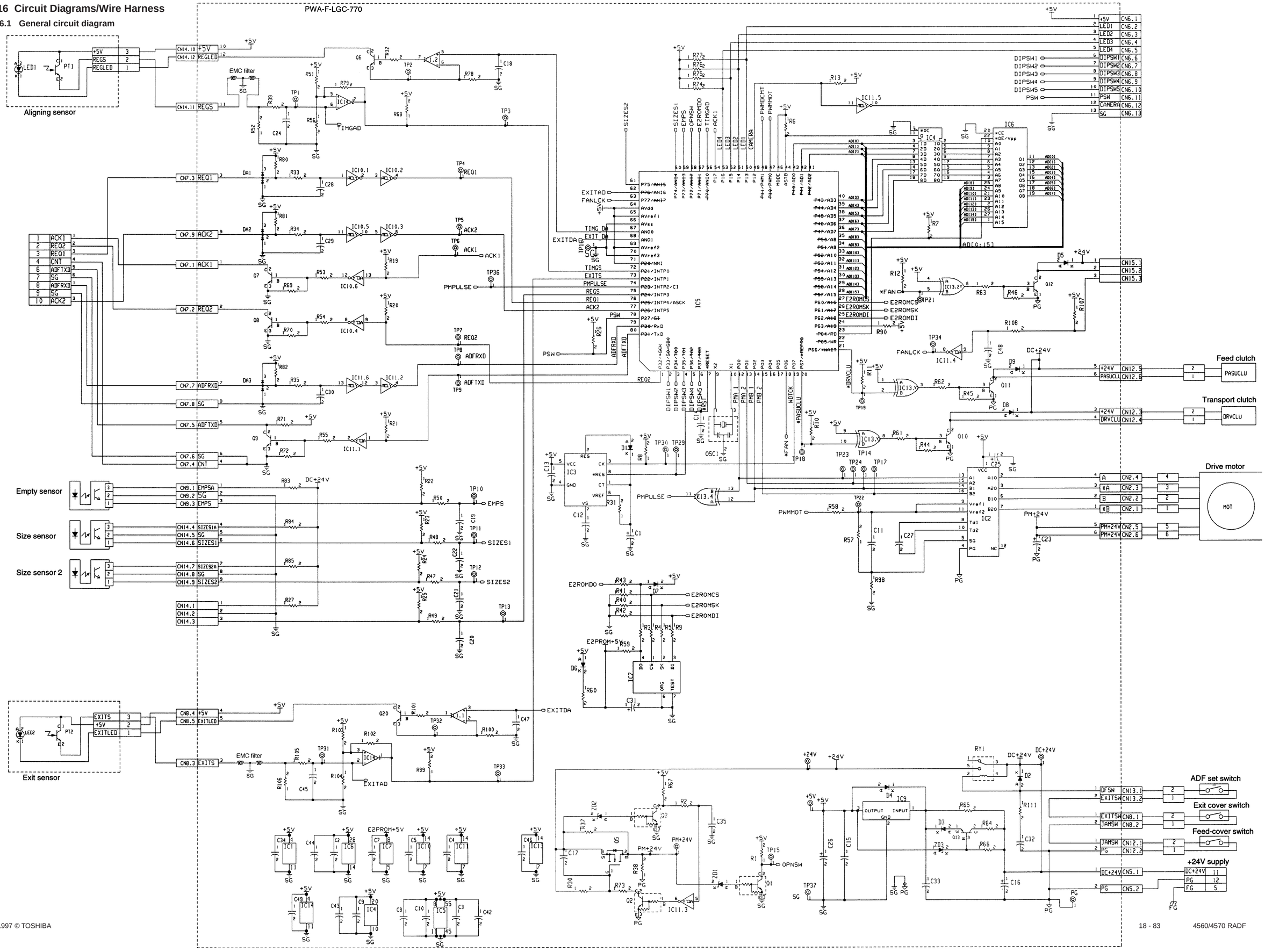

18.16.2 Control PC board circuit (PWA-F-LGC-770)

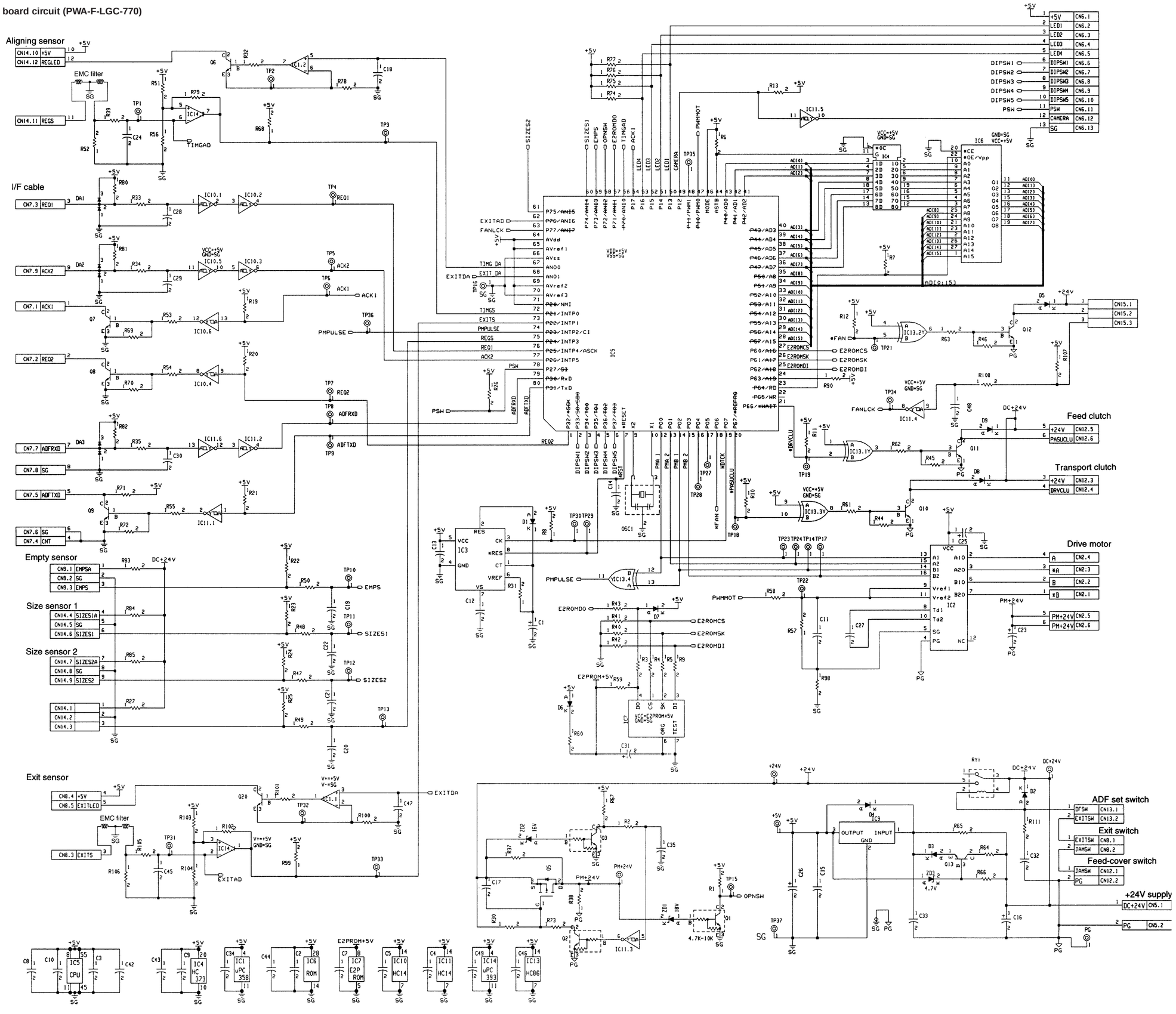

Nov. 1997 © TOSHIBA

18.16.3 Harness connection

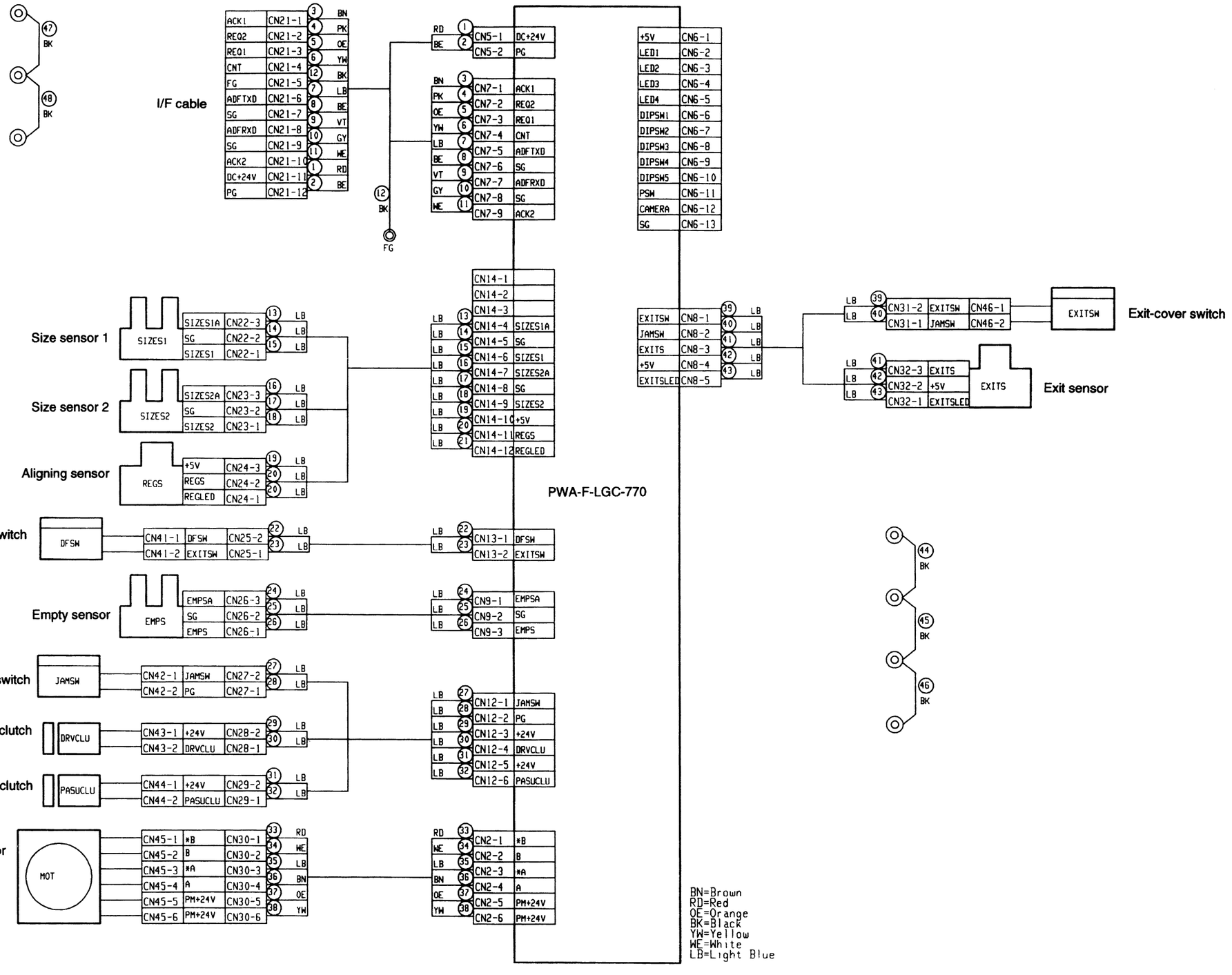

18.17 Affixing Position for Mylar Sheets

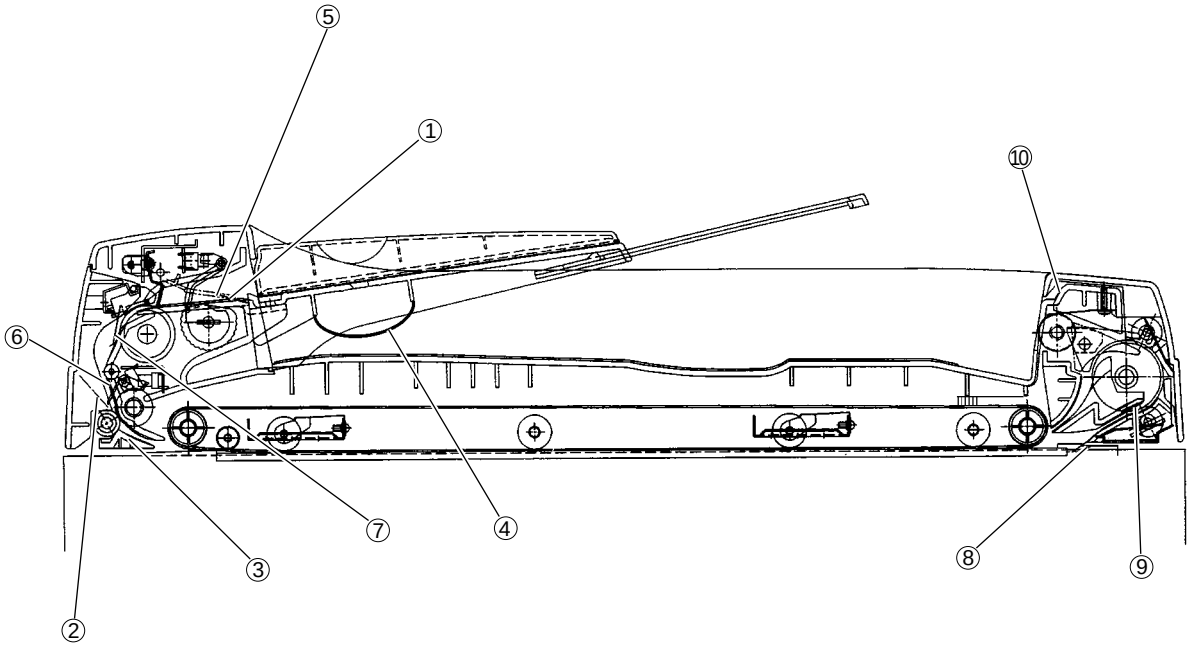

Note: Before affixing mylar sheets, clean the affixing surfaces.

① Jump mylar

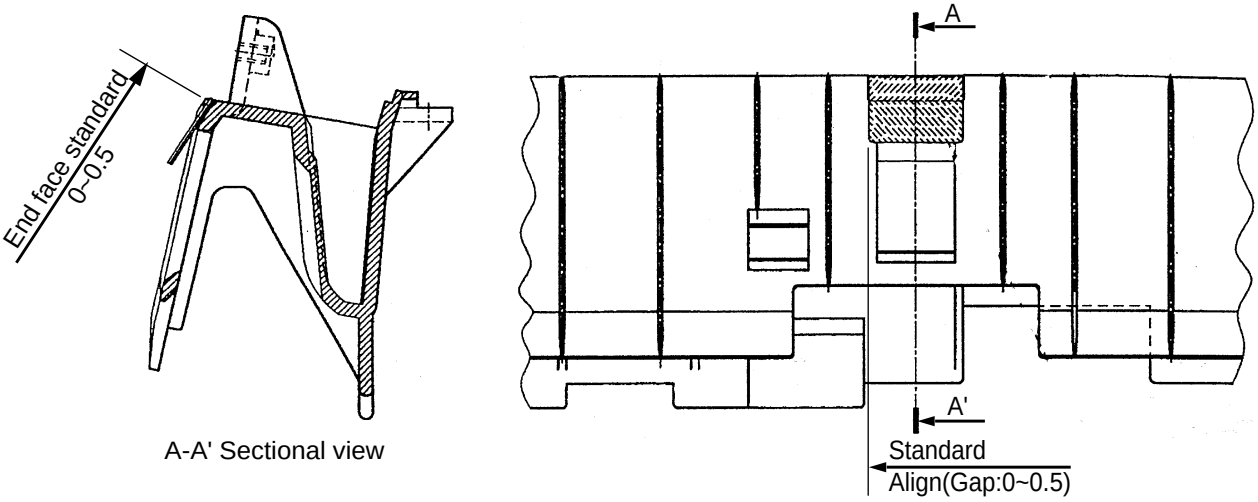

A-A' Sectional view

② Mirror sheel

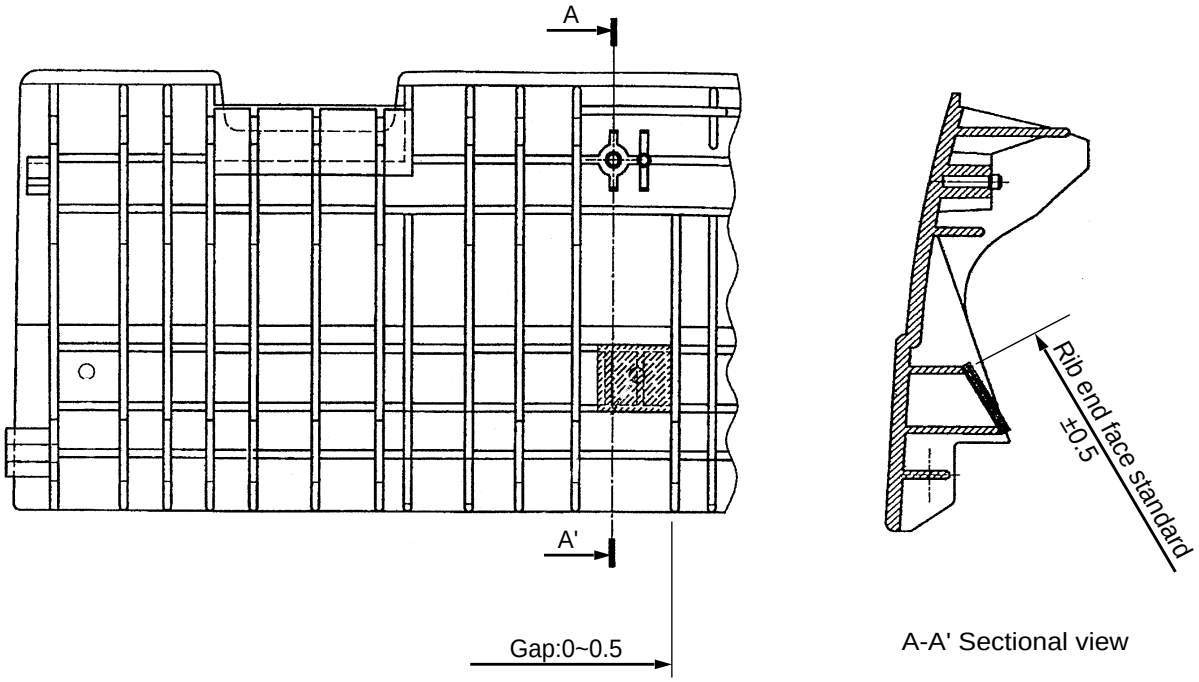

A-A' Sectional view

③ Guide mylar (1)

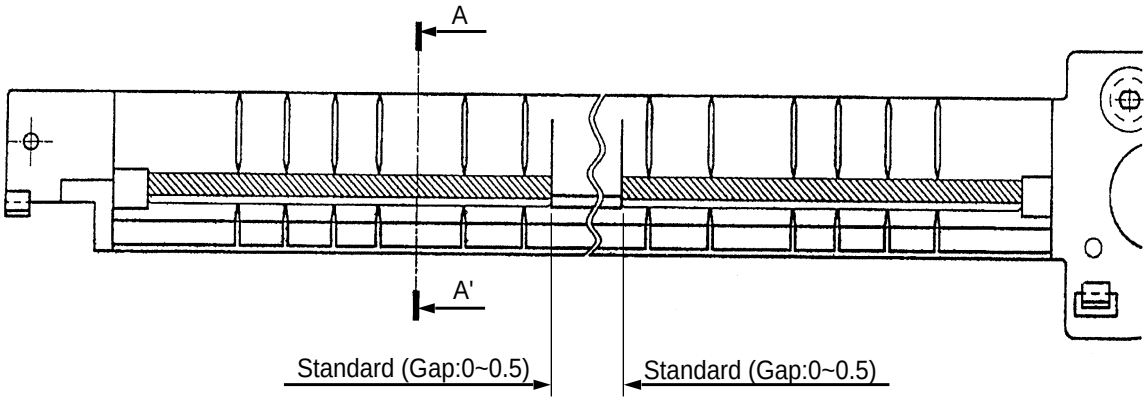

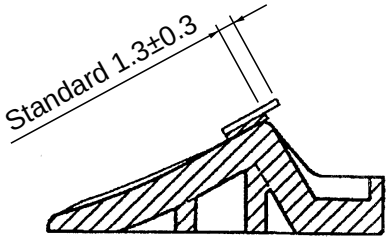

A-A' Sectional view (S=2/1)

④ Tray mylar

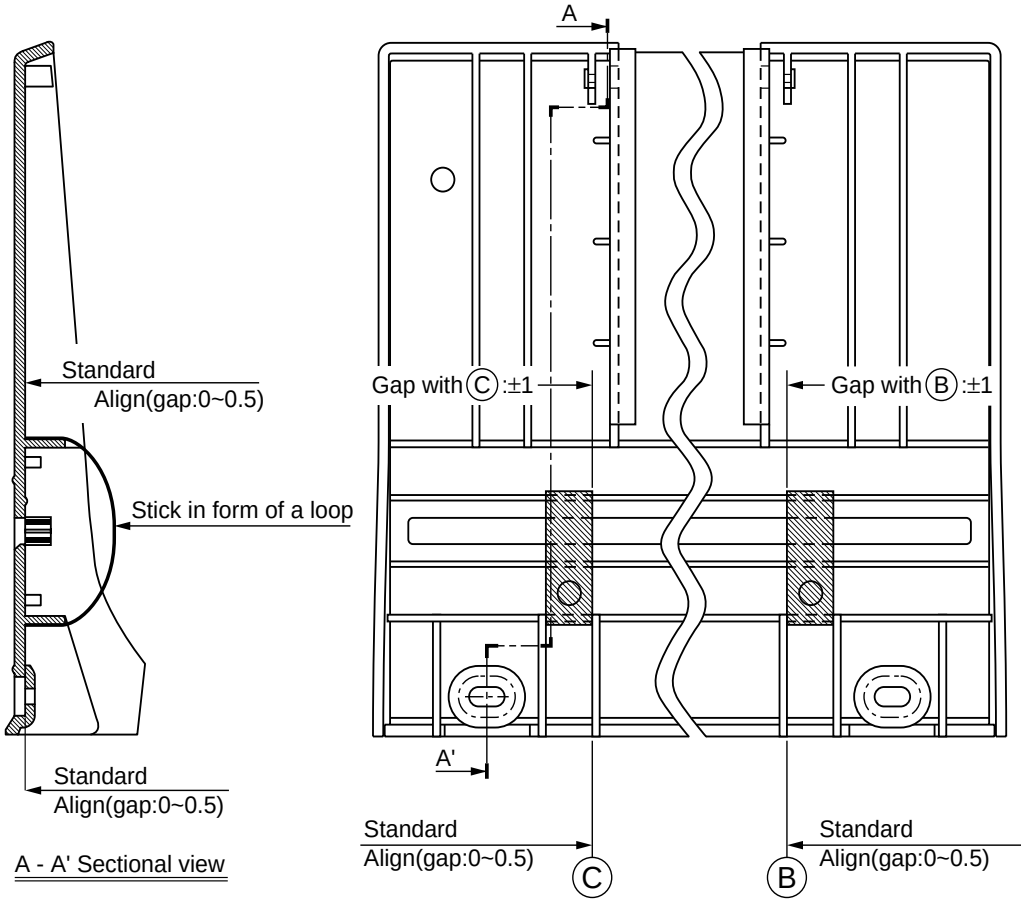

⑤ Original-holding mylar / sub-mylar

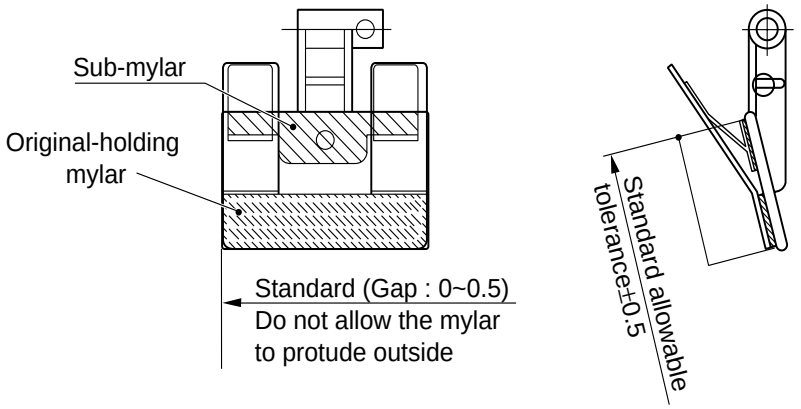

⑥ Guide mylar (2)

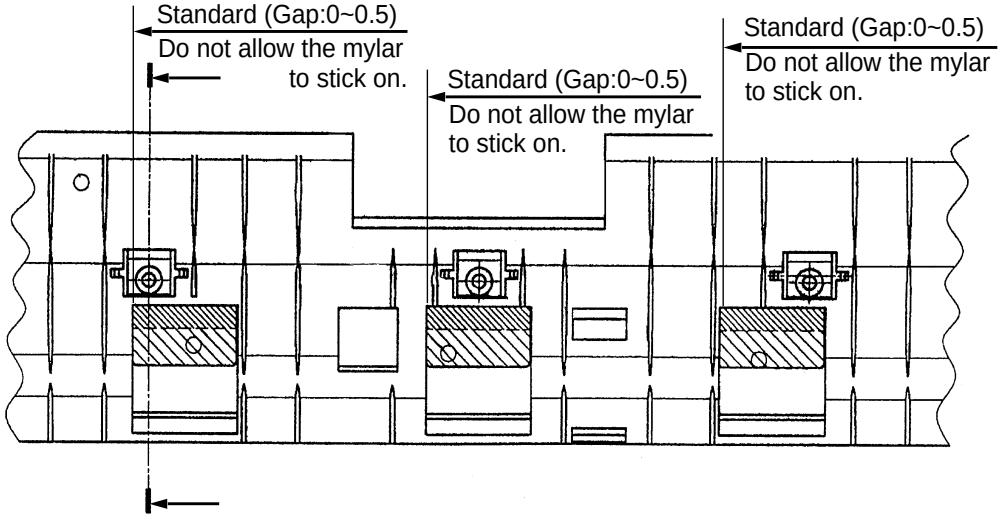

⑦ Aligning mylar

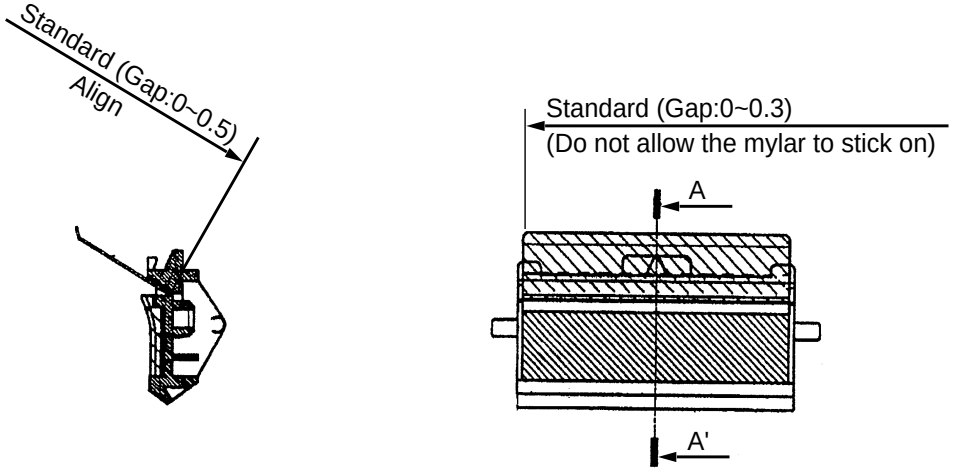

⑧ Pick-up mylar

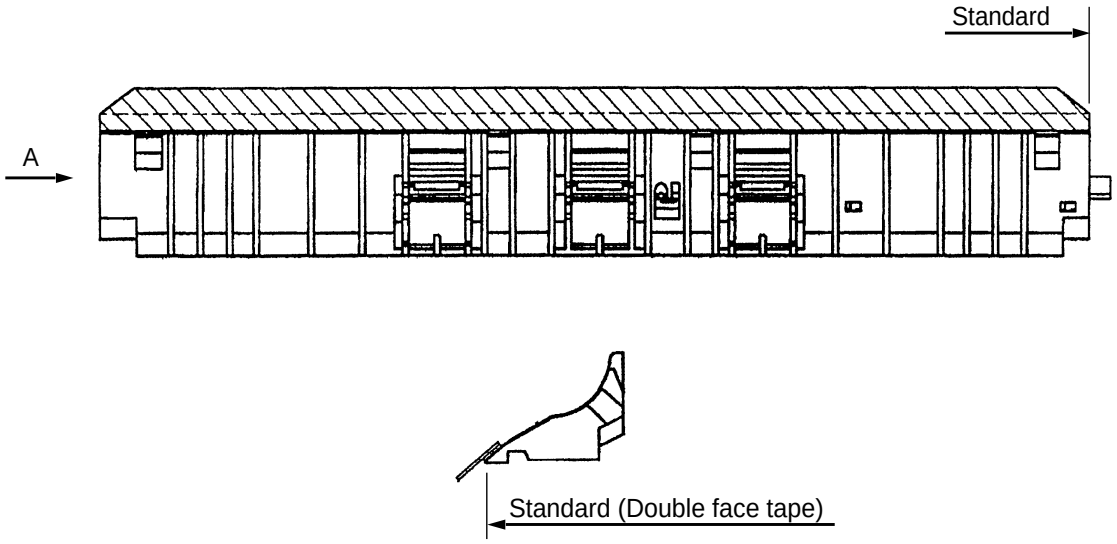

Arrow A

⑨ Reversing mirror sheel

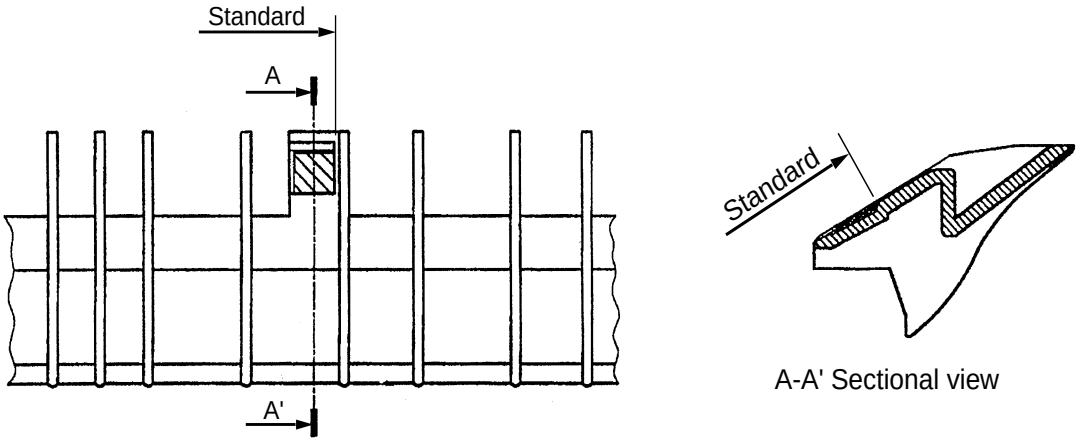

A-A' Sectional view

⑩ Discharge brush

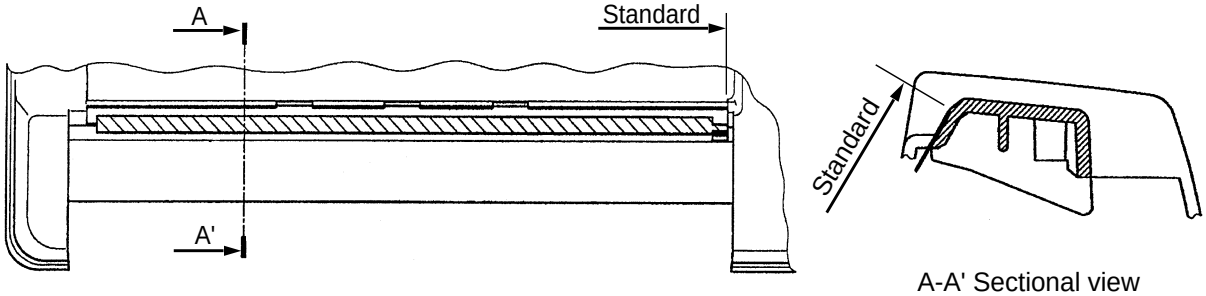

A-A' Sectional view

19. UNPACKING and INSTALLATION INSTRUCTIONS

19.1 4560/4570

<<Unpacking procedure>>

Unpack the copier carton box.

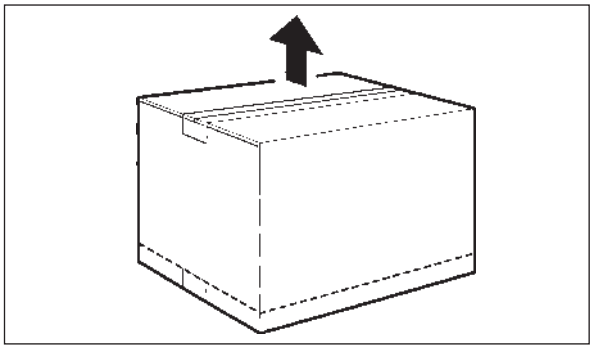

<<Unpacking the accessory package>>

Open the accessory package box and take out the accessories and other packing materials.

The following items are supplied as accessories.

- Copy receiving tray
- Setup report
- Operator's manual/pocket
- Easy setup instructions
- Plastic covers (4pcs.)
- Power cord
- Developer
- Drum
- Large-capacity feeder (for 4570)
- Original feeding tray

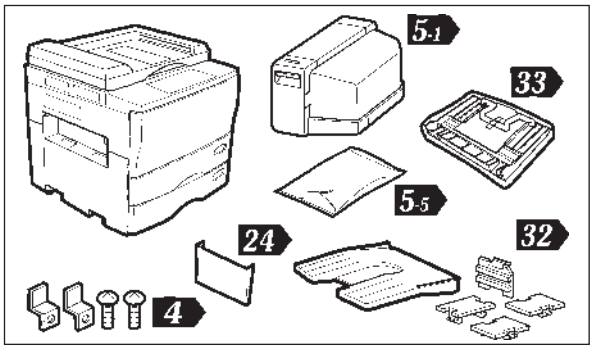

(5-1 and 5-5 are for 4570)

<<Installation>>

(1) • When carrying the machine, hold the left and right handles of the machine firmly and move it horizontally.
• Set the machine on an appropriate stand.

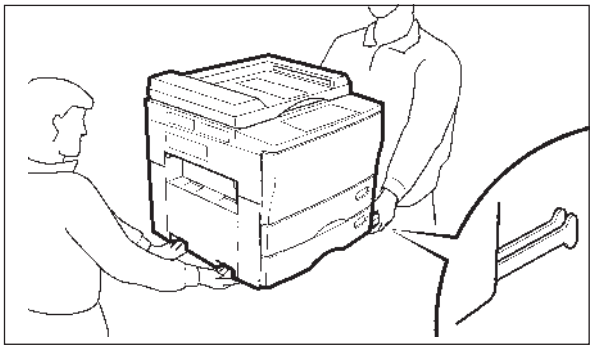

(2) Fix the handles.

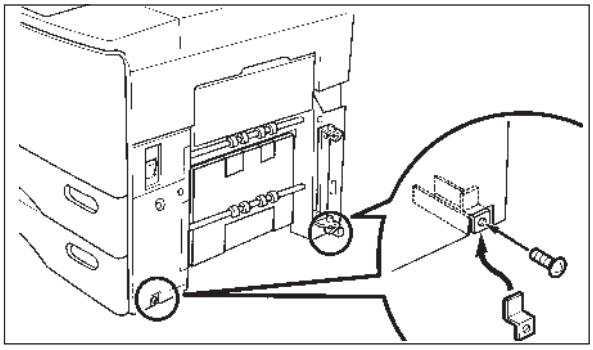

<<LCF Setup>> (For 4570)

(1) Remove the packing materials of the large capacity feeder.

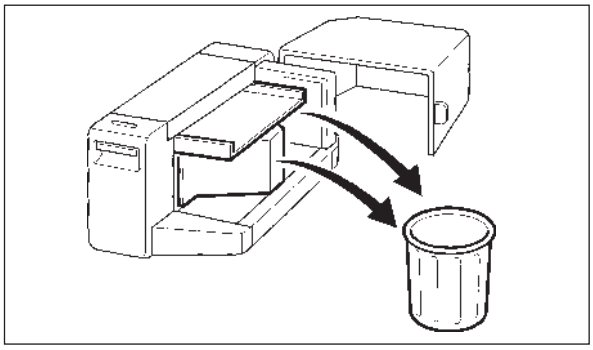

(2) Remove the packing materials of the transport guide.

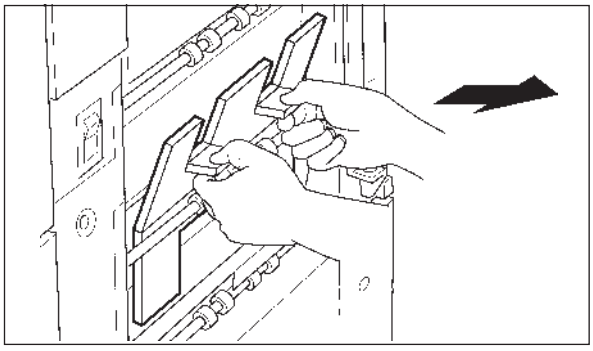

(3) Install the large-capacity feeder to the hinge.

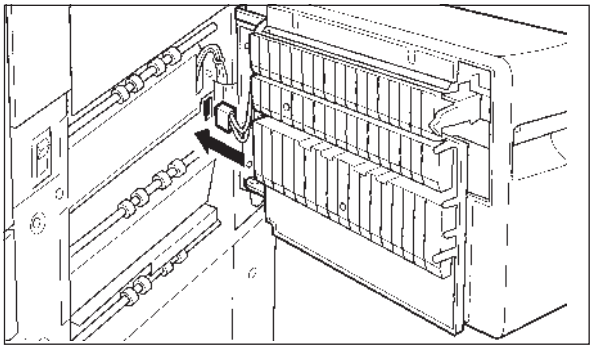

(4) Connect the connector of the large-capacity feeder.

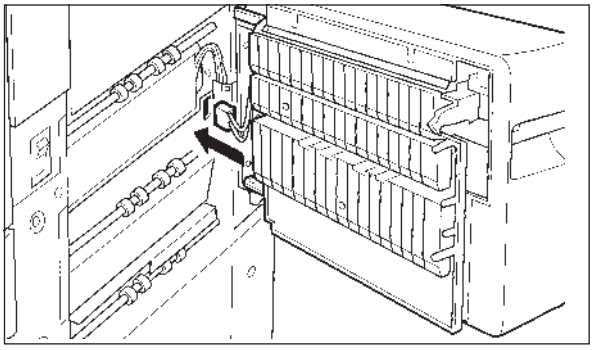

(5) Remove the following parts from the accessory package.
Harness cover (L) 1pc 5-6
Harness cover (U) ... 1pc 5-7
Earth screw, harness clamp .. 1each 5-8
Hinge stopper, fixing screw ... 1each 5-9
Hinge cover, fixing screw ... 1pc, 2 screws 5-11

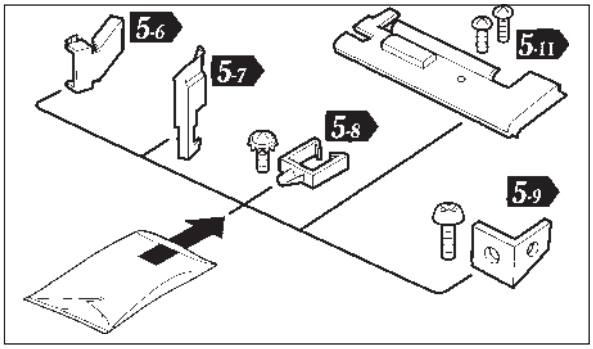

(6) Install the harness cover (L).

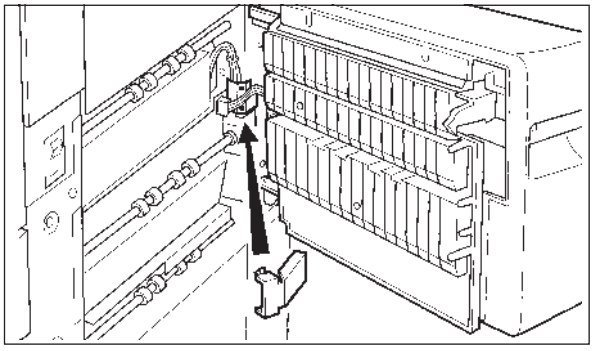

(7) Install the harness cover (U).

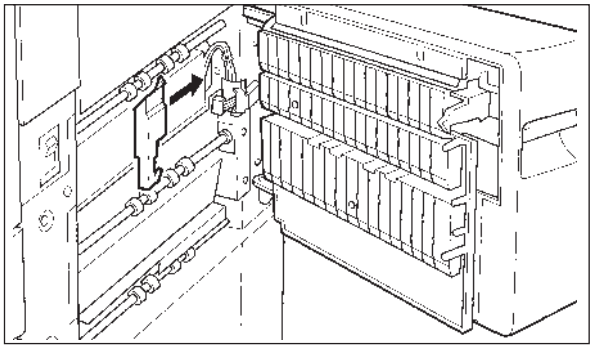

(8) Install the harness clamp and the earth (ground) in the rear side of the large-capacity feeder.

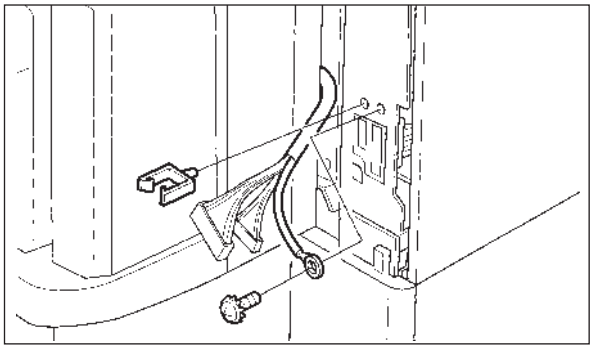

(9) Install the hinge stopper.

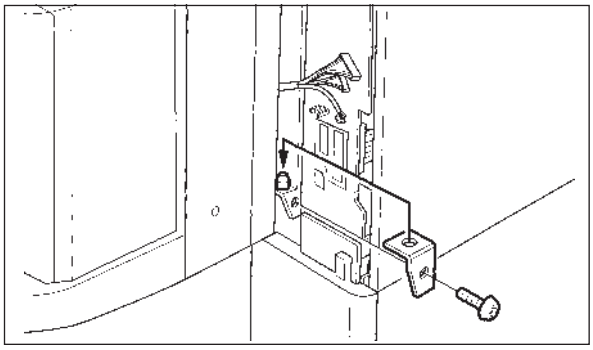

(10) Connect the connector of the rear side.

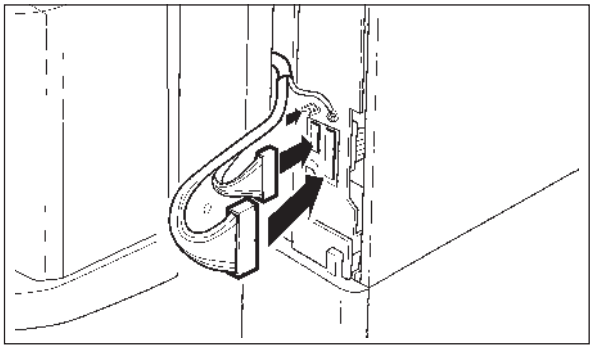

(11) Install the hinge cover.

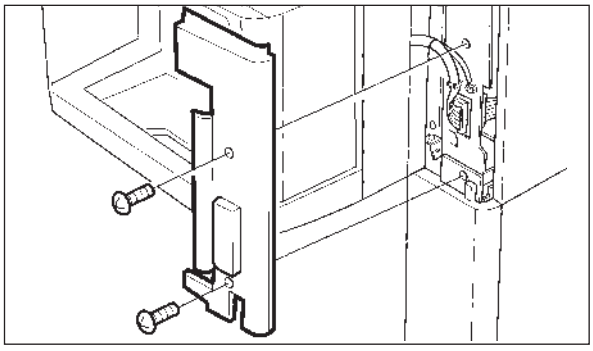

<<ADU Setup>>

(1) Draw out the automatic duplexing unit.

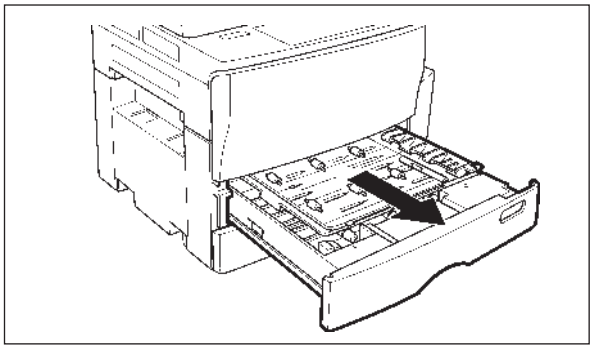

(2) Remove 2 brackets fixing the open guide and one stopper.

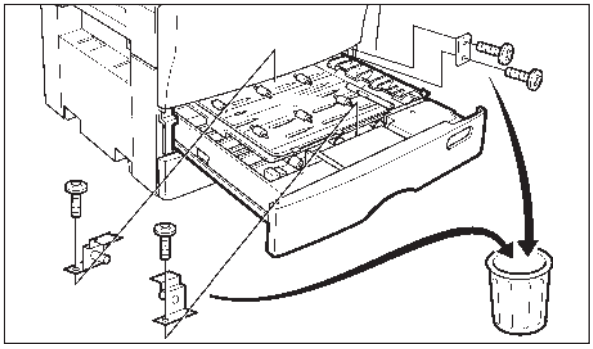

(3) Remove packing materials from the inside of the automatic duplexing unit.

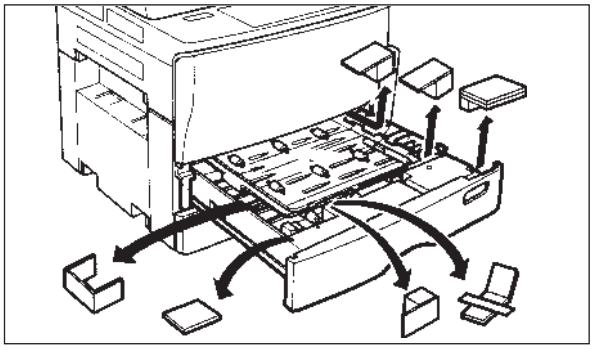

(4) Push the automatic duplexing unit into the machine until it stops.

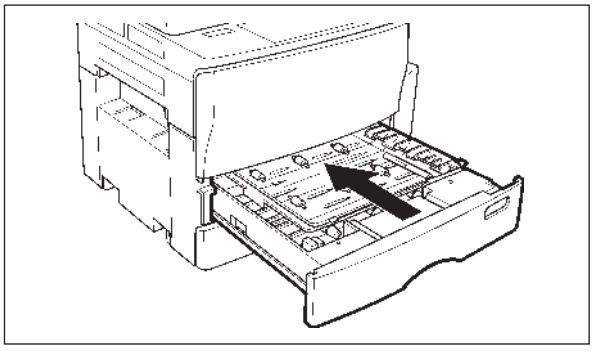

(5) Draw out the cassette.

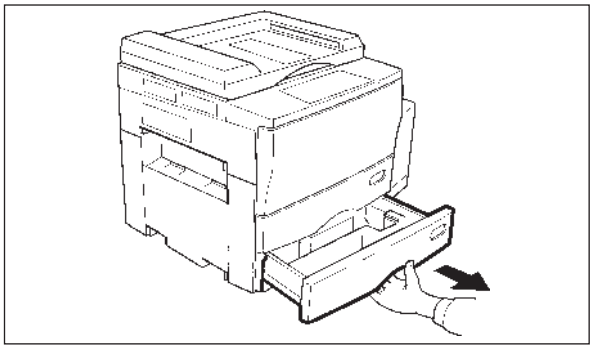

(6) • Remove the packing materials from the inside of the cassette.
• Remove the power cord and the developer bottle.

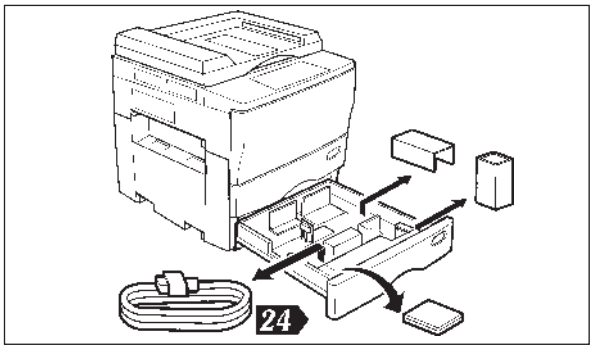

(7) Remove the paper from the paper package.

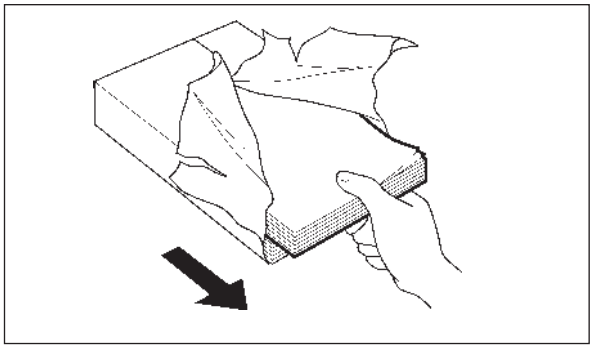

(8) Set the paper for the cassette.

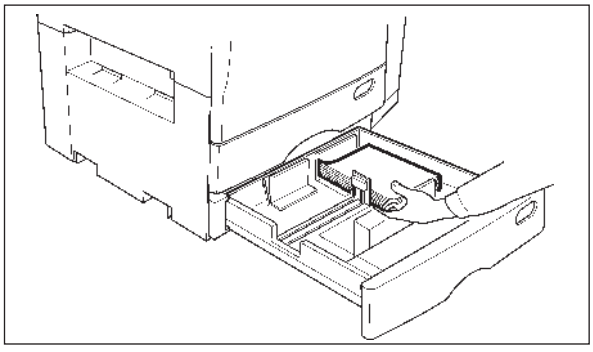

(9) Insert the cassette gently.

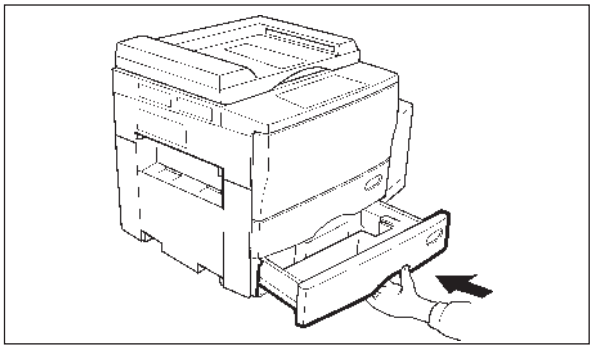

<<Packing material removal>>

(1) Open the front cover.

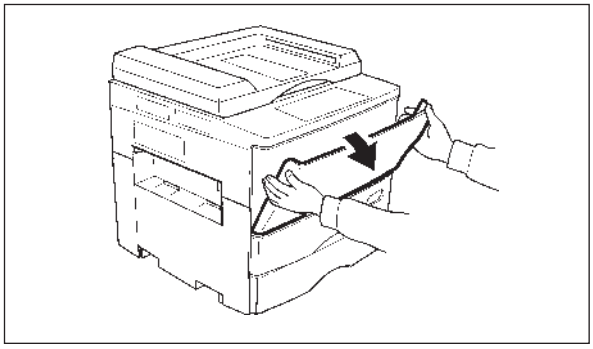

(2) Remove the packing screws.

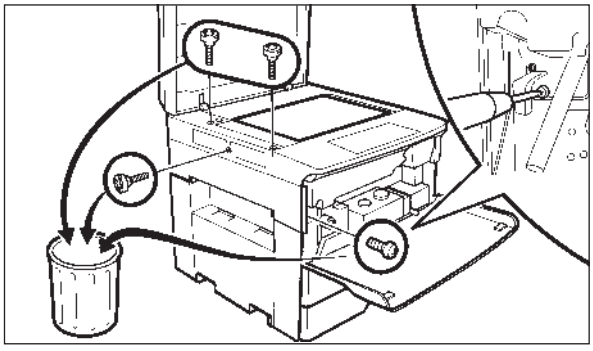

(3) Open the upper unit.

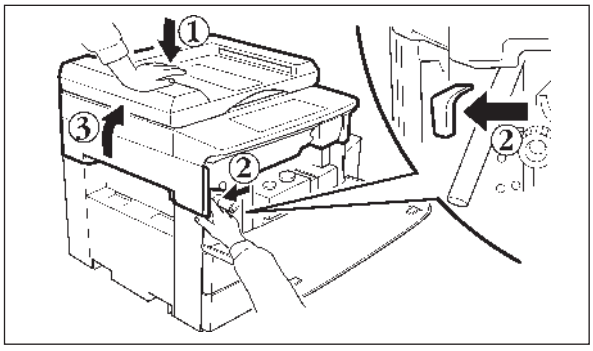

(4) Remove the pressure release brackets (3pcs.) from the fuser unit.

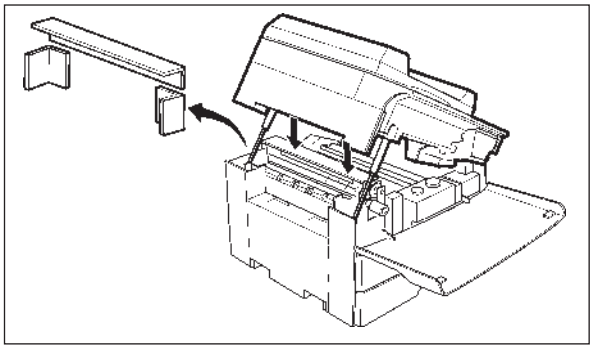

<<Developer unit setup>>

(1) Remove the process unit.

• Remove the screw and the connector and then the process unit.

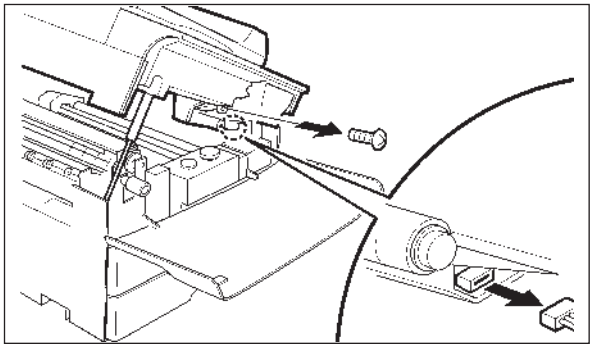

(2) • Place the process unit on a flat surface.

• Raise the lever located on each side of the process unit in the direction of the arrow.

• Remove the developer unit from the process unit.

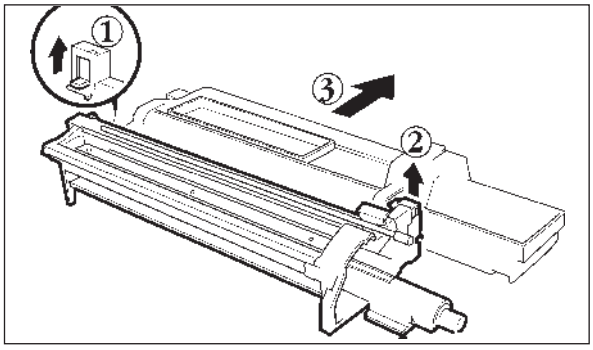

Note: When the drum is exposed to fluorescent light or external light for a long time, it may suffer from light-caused fatigue. So, be sure to cover the process unit with, for example, a suitable cloth.

(3) Remove the top cover of the developer unit.

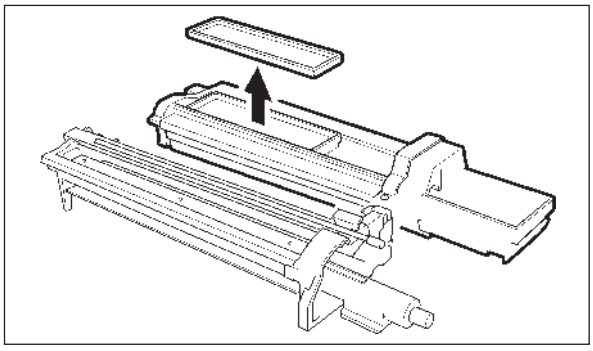

(4) • Pour in the developer material.

Note: Before pouring in the developer material, be sure to shake the developer bottle fully.

• By rotating the magnetic roller, check that the developer material is being transported properly.

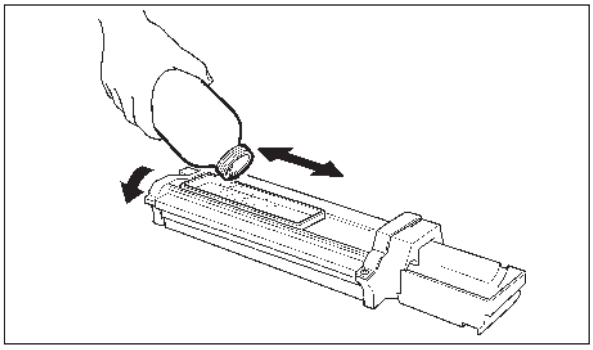

(5) • Reinstall the top cover.

Be sure to install the top cover firmly.

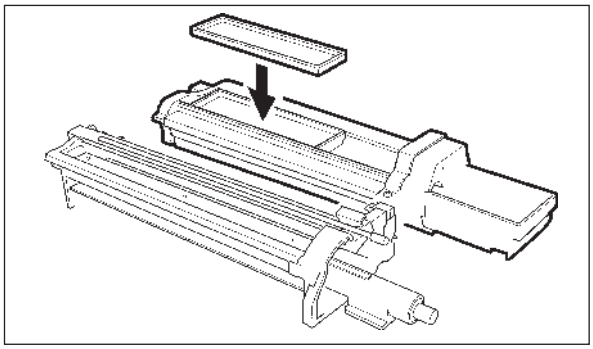

(6) After placing the developer unit in the process unit, move down the lever on each side to fix the developer unit.

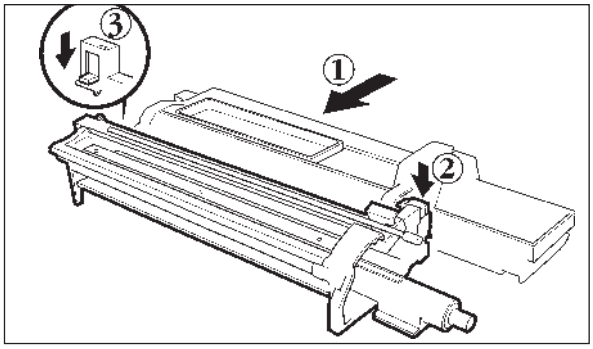

(7) • Reinstall the process unit into the machine.

• Reinstall the screw and the connector.

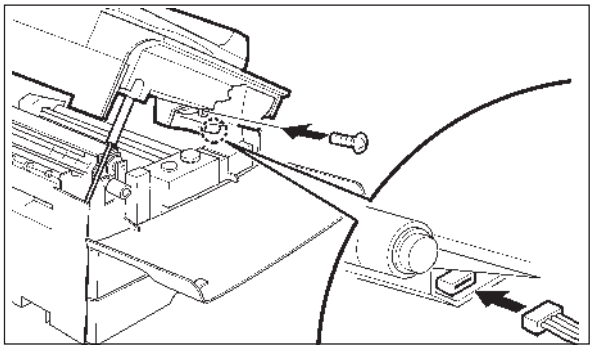

(8) • Close the upper unit.

⚠ Warning

- Be careful not to catch your fingers between the two units when the upper unit is pressed down.

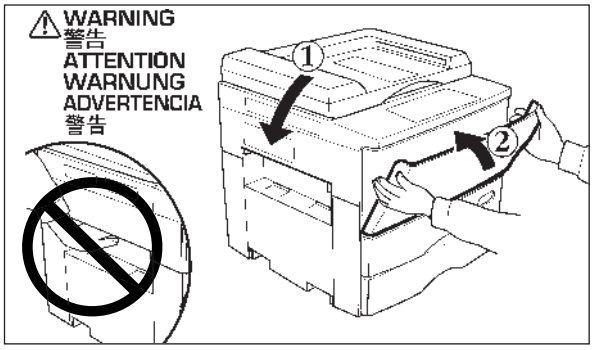

(9) • Connect the power cable to the outlet.

- Install the operator's manual pocket.

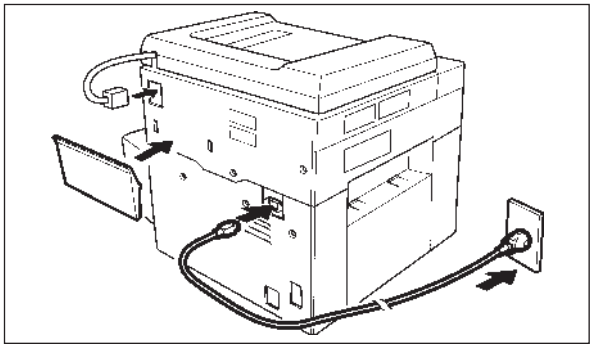

(10) Turn on the main switch of the copier.

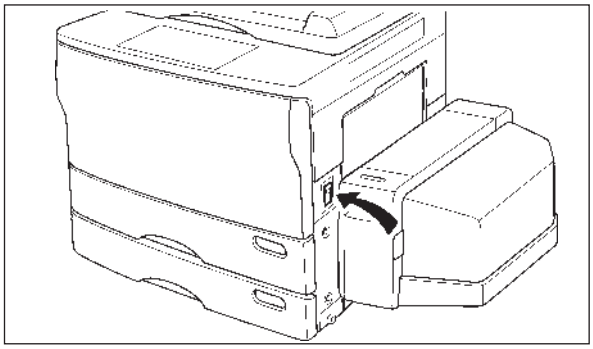

<<Automatic adjustment of the auto-toner sensor>>

(1) When the power switch is turned on, the auto-toner sensor is automatically adjusted by the following procedure.

(2) "UA" is shown on the copy quantity display. The automatic adjustment of the auto-toner sensor starts.

(3) The machine starts its operation.
The output value of the toner sensor is shown on the display and changes quickly.

(4) About 2 minutes and 30 seconds later, the value on the display stabilizes at 230~250.

(5) About 30 seconds later, the automatic adjustment of the auto-toner sensor is complete and "UA" is shown on the copy quantity display.

- If the adjustment has finished abnormally, the machine stops its operation and displays the CALL SERVICE Symbol. Then for the subsequent adjustment of the auto-toner sensor, follow the procedure described in the Service Manual.

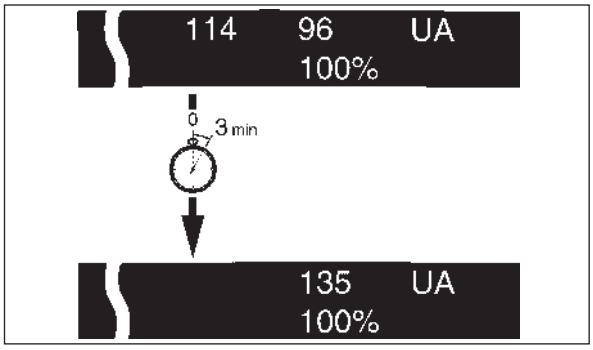

<<Procedure for installing the toner cartridge>>

(1) Open the front cover.

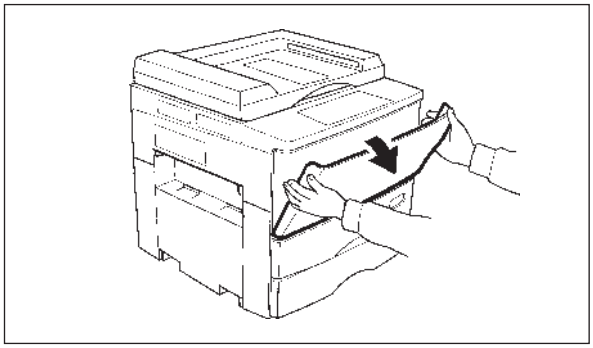

(2) Shake the new toner cartridge to the right and to the left 5 or 6 times to loosen the toner inside.

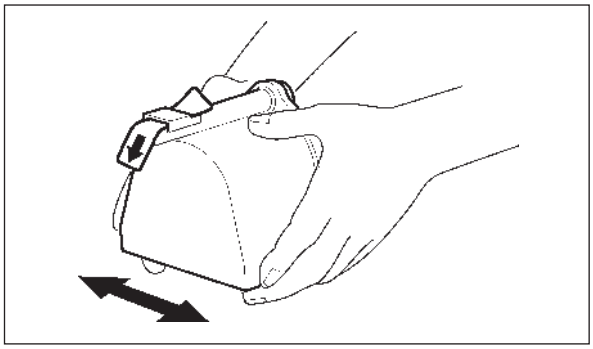

(3) Pull to remove the seal from the new toner cartridge.

• Do not shake the toner cartridge after removing the seal (the toner may spill).

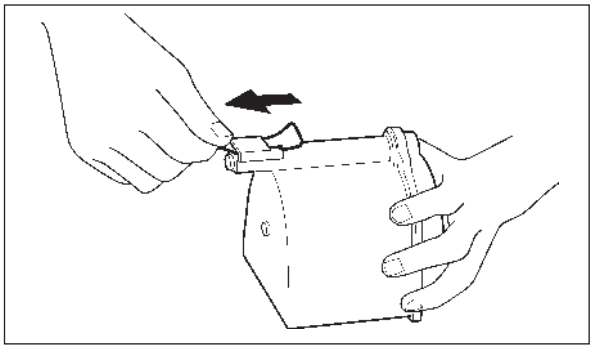

(4) Install the new toner cartridge in the machine.

• Push the toner cartridge fully in until it is locked securely.

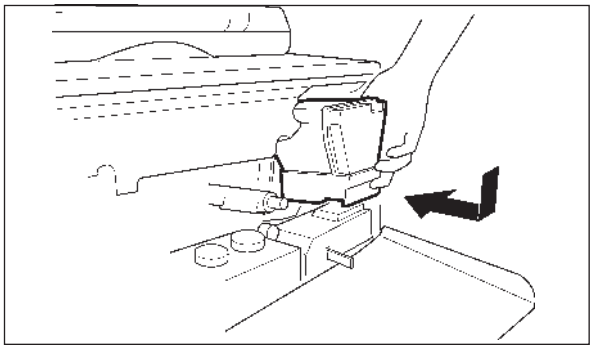

(5) Close the front cover.

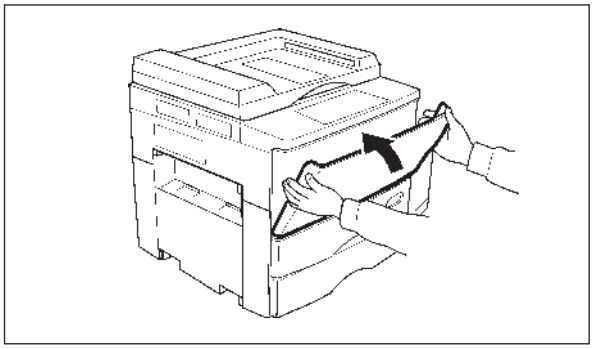

<<Accessory parts attachment>>

• Install 4 plastic covers to the outer covers.

• The copy receiving tray should be installed in the slots in the exit cover.

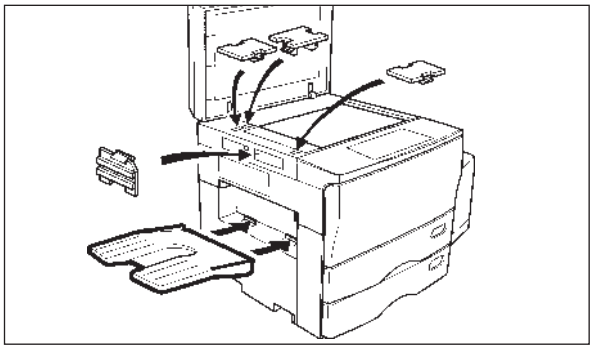

<<ADF Setup>>

(1) Take out the following parts from the accessory package.
- Original feed tray 1pc. 33
- Screws to fix the original feeding tray 2pcs. 34

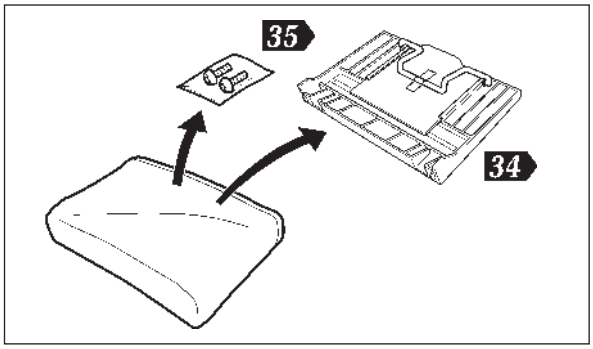

(2) Remove the adhesive tape from the original stopper.

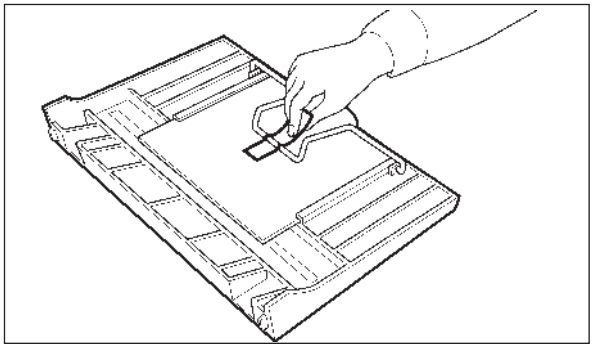

(3) Install the original feed tray onto the ADF.

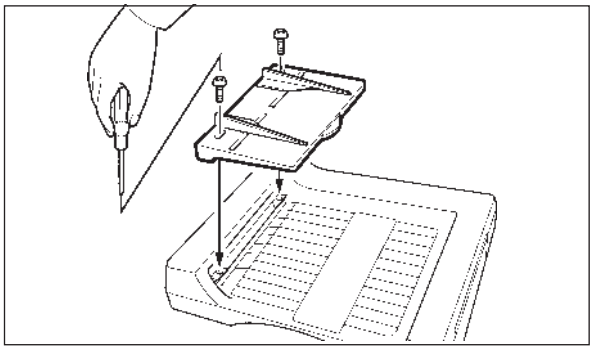

(4) Original feed tray center adjustment

① Prepare an A4 [or Letter] sized test original by drawing a line in the center of the sheet, as shown.

② Place the test original ① face up in the tray. Adjust the side guides to the edges of the original.

③ Press PRINT to make a copy. Fold the copy in half to check that the center line is copied in the center of the sheet.

If not, loosen the two screws and adjust the position of the original feed tray. Repeat the procedure until the center line on the copy is in the fold. After the adjustment, tighten the two screws of the original feed tray.

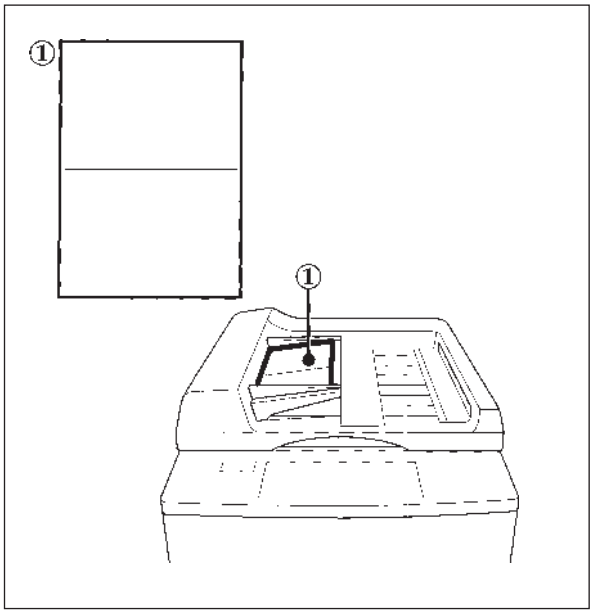

<<Final check>>

(1) Put the original on the glass.

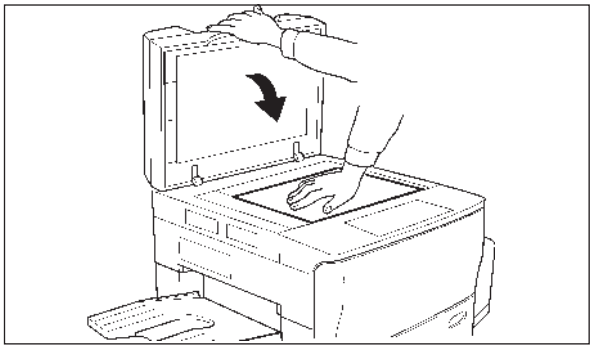

(2) Making copies from the cassette and the by-pass, check the following.

- Paper feeding from each paper feed unit is correct.
- Paper feeding from the bypass feed guide is correct.
- Automatic duplexer operation is correct.
- Fixing and cleaning are correct.
- Lignt distribution is correct.
- Exposure level is correct.
- Control panel displays and key operation are correct.

  *Basic operations

  * Special features

  –Automatic paper selection (APS), Automatic magnification selection (AMS)

  –Duplex mode

  –Enlarging and reducing modes

  –Interruption mode

  –Dual-page copying

  –Edge erase copying

  –User setting

  –Image shifting

  –Mode memory

  –Trimming and masking

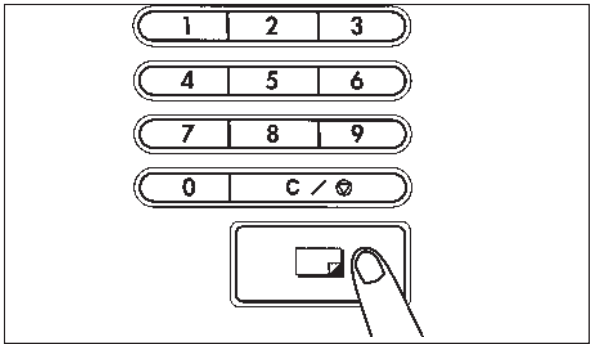

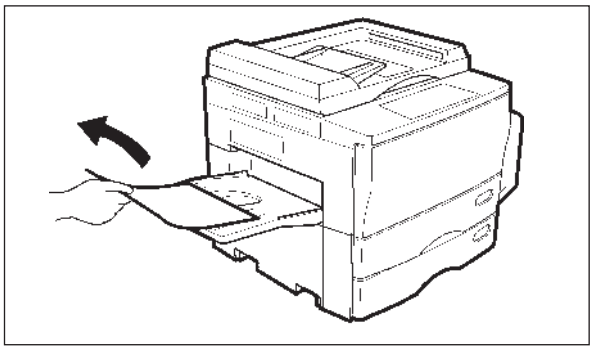

Note: The packing material should be disposed of properly.

19.2 Paper Feed Unit MY-1006

✻According to the application PPC models, there is possibility of changing these figures.

(1) Unplug the power cable from the outlet.

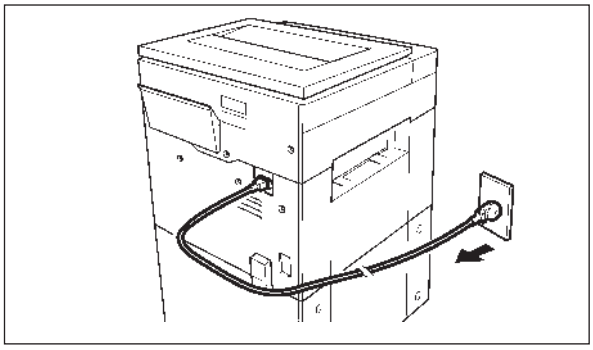

(2) Open the carton box.

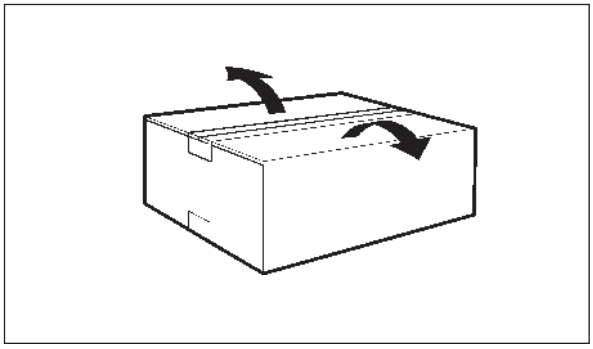

(3) Remove the contents from the box.

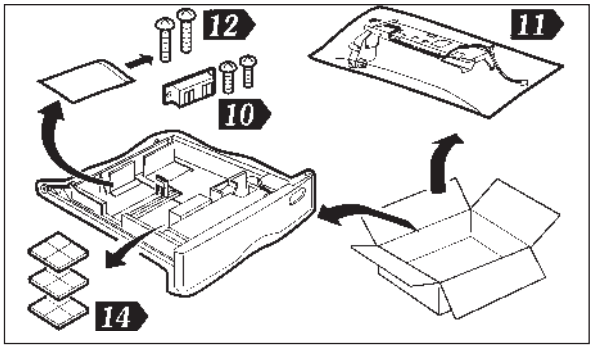

(4) • Open the front cover.
• Lift up the upper unit.
(This is if the MY-1006 is installed to the copier.)

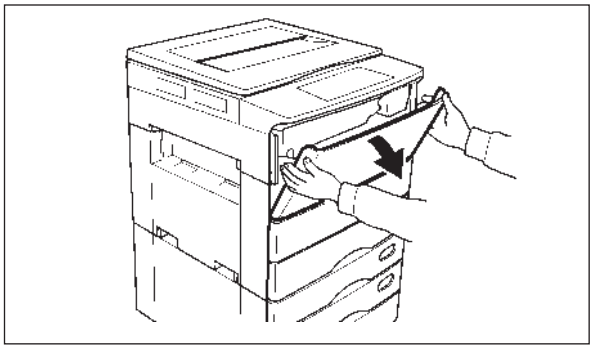

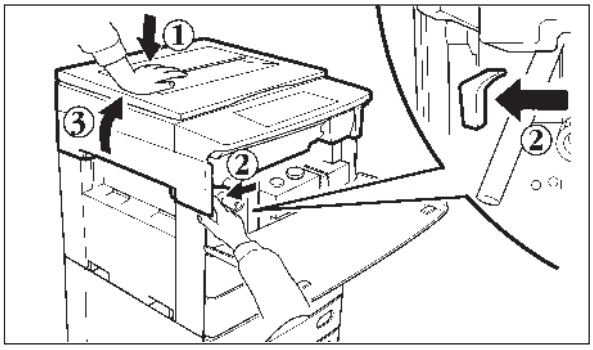

(5) Remove all the cassettes.

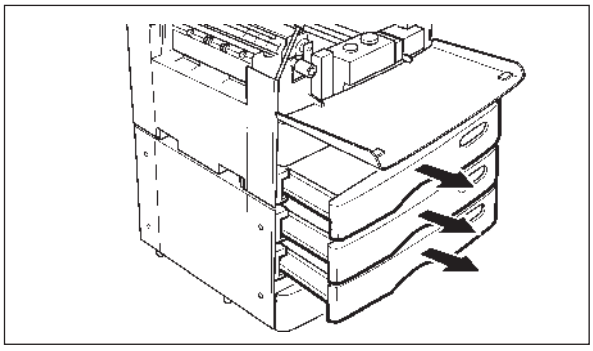

(6) Remove the slot cover (2 screws) from the corresponding slot.

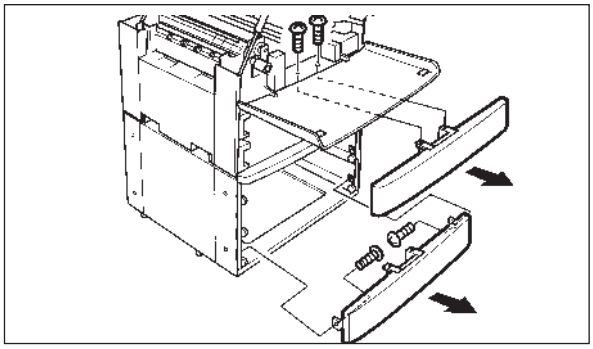

(7) Open the right side cover.

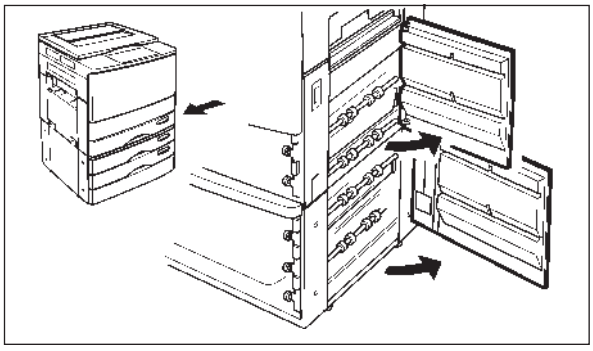

(8) Remove the connector cover for the corresponding slot.
Remove the 2 screws for the lower slot of the PFP.

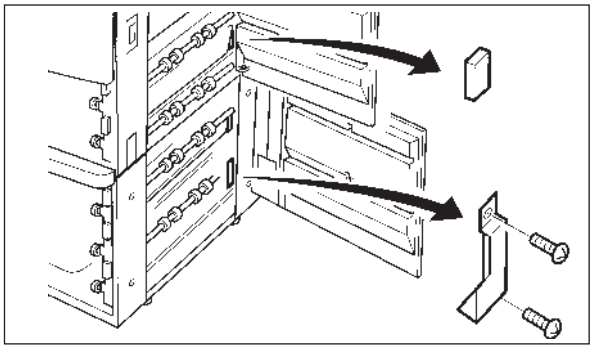

(9) Install the switch for the corresponding slot (2 screws).

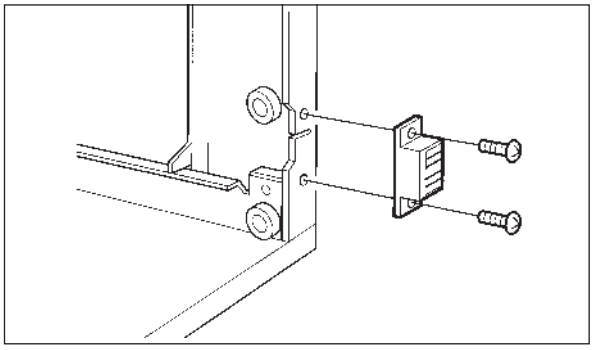

(10) Remove the paper feed unit from the package.

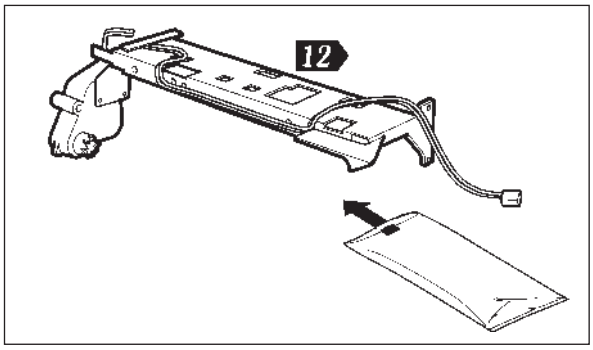

(11) Install the paper feed unit (2 screws).
Connect the connector.

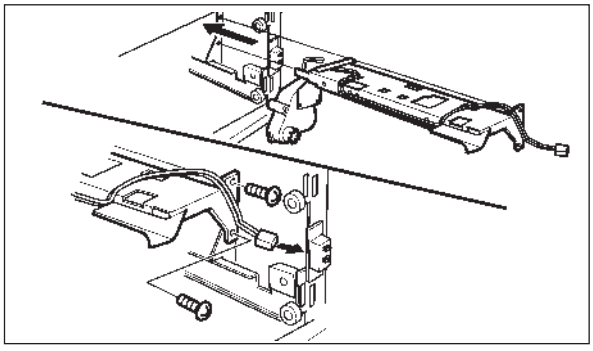

(12) Install the connector of the paper feed side.

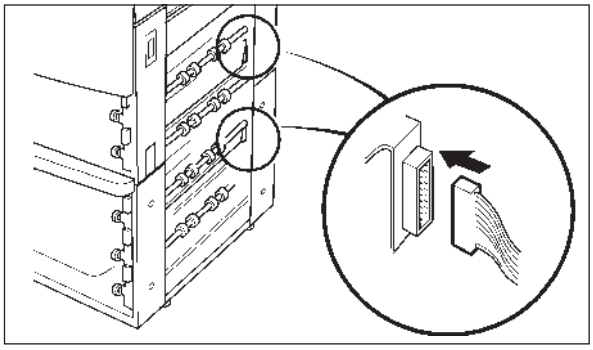

(13) Reinstall the connector cover to its original position.
Install the size plate to the cassette.
Install the cassette.

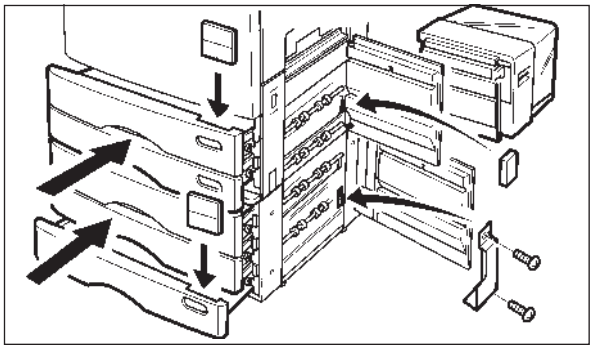

19.3 Key Copy Counter MU-8/MU-10

To install the key copy counter, the following parts are required:

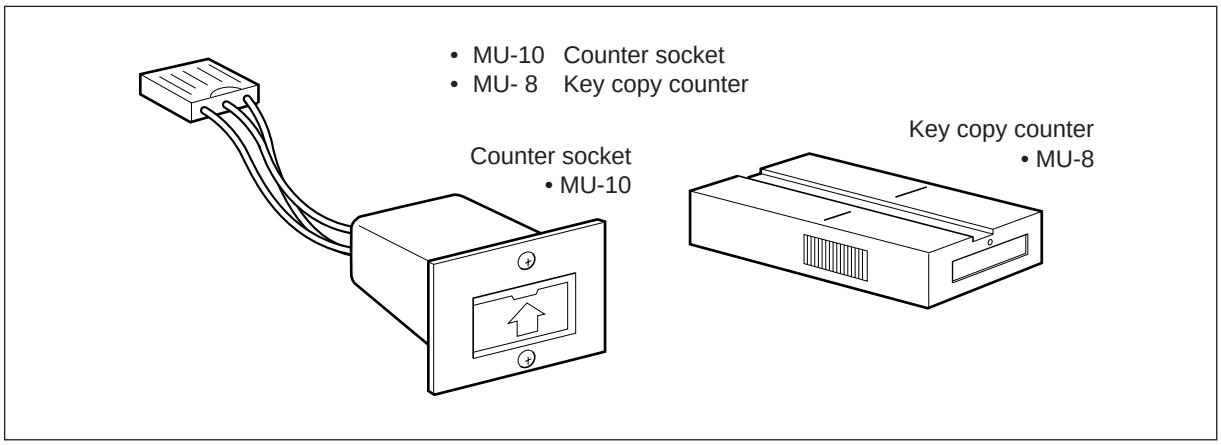

(1) Remove the upper feed cover.
Cut the window for the counter.

(2) Remove the blind plate (1 screw) for the 200V machine.

(3) Pull out the harness connector from the opening in the machine frame.
Disconnect the short connector from the harness.

Note: Remove the rear cover if the harness connector is in the back, etc.

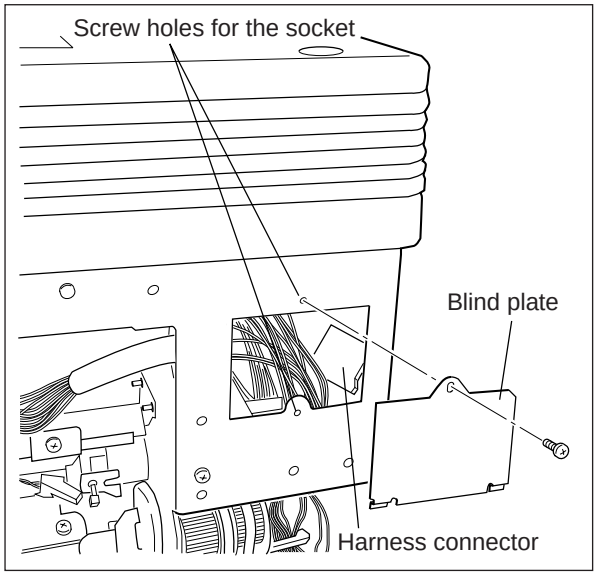

(4) Insert the socket connector into the harness connector.

(5) Install the counter socket to the frame (2 M3 screws).

(6) Reinstall the upper feed cover.

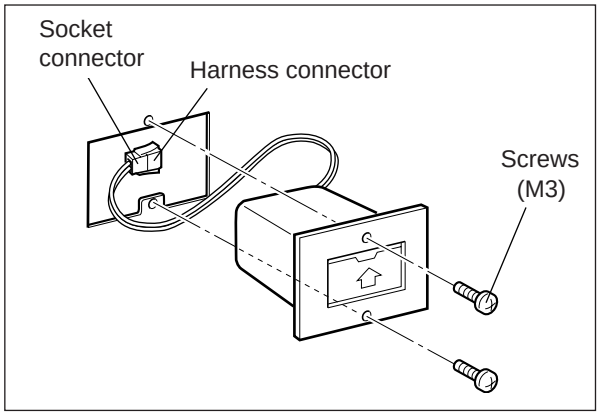

(7) Insert the key copy counter with its arrow mark facing up as shown.

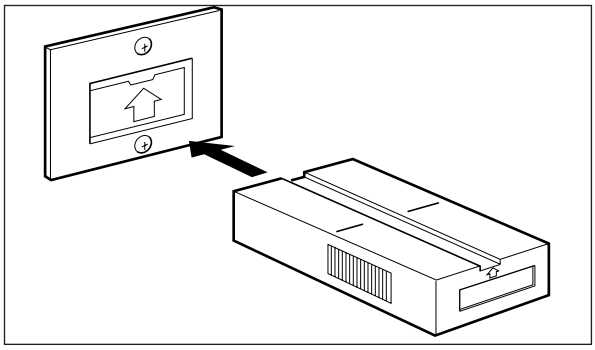

19.4 Installation of Red Filter (Service Part)
(This filter improves the reproduction of red originals.)

<Procedure>

(1) Remove the original glass, optical cover and lens cover.

(2) Set the red filter on the lens unit bracket at the feed side.

