TOSHIBA

SERVICE MANUAL
SORTER
MG-2012

Click the Page Only button to close the overview area of the window.

Click the Bookmarks and Page button to open the Contents and display bookmarks created for the document. Click a bookmark's name to go to the Page marked by that bookmark.

Click the Thumbnails and Page button to open the overview area and display thumbnail images of each document page. Click a thumbnail to go to the page marked by that thumbnail.

Copyright TOSHIBA CORPORATION 1995
ALL RIGHTS RESERVED

General Precautions for Installation/Servicing/Maintenance

The installation and service should be done by a qualified service technician.

1. When installing the Stapler Sorter MG-2012 to the Plain Paper Copier, be sure to follow the instructions described in the “Unpacking/Set-Up Procedure for the MG-2012” booklet which comes with each unit of the MG-2012.
2. The MG-2012 should be installed by an authorized/qualified person.
3. Before starting installation, servicing or maintenance work, be sure to unplug the copier first.
4. When servicing or maintaining the MG-2012, be careful about the rotating or operating sections such as gears, pulleys, sprockets, cams, belts, etc.
5. When parts are disassembled, reassembly is basically the reverse of disassembly unless otherwise noted in this manual or other related materials. Be careful not to assemble small parts such as screws, washers, pins, E-rings, toothed washers to the wrong places.
6. Basically, the machine should not be operated with any parts removed or disassembled.
7. Delicate parts for preventing safety hazard problems (such as breakers, thermofuses, fuses, door switches, sensors, etc. if any) should be handled/installed/adjusted correctly.
8. Use suitable measuring instruments and tools.
9. During servicing or maintenance work, be sure to check the serial No. plate and other cautionary labels (if any) to see if they are clean and firmly fixed. If not, take appropriate actions.
10. The PC board must be stored in an anti-electrostatic bag and handled carefully using a wristband, because the ICs on it may be damaged due to static electricity. Before using the wrist band, pull out the power cord plug of the copier and make sure that there is no uninsulated charged objects in the vicinity.
11. For the recovery and disposal of used MG-2012s, consumable parts and packing materials, it is recommended that the relevant local regulations/rules should be followed.
12. When the sorter is to be carried, be sure to have two persons do this, holding the locations shown in the figures.

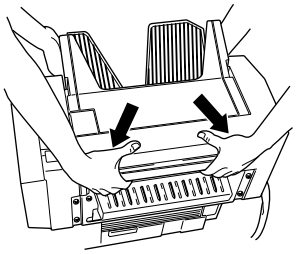

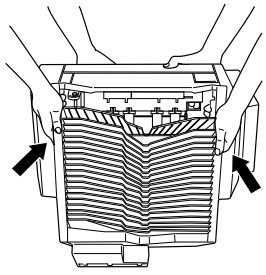

13. Install the sorter as shown in the figure below making sure that the cord is not nipped.

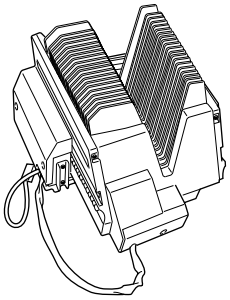

Copyright 1997
Toshiba Corporation

CHAPTER 1

GENERAL DESCRIPTION

I. FEATURES ---------- 1-1
II. SPECIFICATIONS ---------- 1-2
III. NAMES OF PARTS ---------- 1-4
IV. OPERATING THE MACHINE ---------- 1-6

I. FEATURES

1. Light, Compact Design

This sorter has been designed to be lighter and more compact than conventional 20-bin stapler sorters. It uses less parts and features the same stacking performance as conventional sorters. At the same time, reliability and serviceability have been improved.

2. Applicable on a Wide Variety of Models

This sorter employs a straight path as its paper-feeding system, which allows it to be used on a wide variety of copiers.

II. SPECIFICATIONS

Item	Specifications
Stacking	Face up Moving bin slot
Copy paper type	Plain (64 to 200 g/m^2) A5-R/ST-R to A3/LD
Number of bins	20 bins
Stacking volume per bin	Non sort mode: 100 sheets Sort mode: 50 sheets (A4, LT-R, B5, A5, ST-R, A4-R, LT, B5-R) 25 sheets (A3, LD, B4, LG) Group mode: 30 sheets (A4, LT, B5, A5-R, ST-R, A4-R, LT-R, B5-R) 25 sheets (A3, LD, B4, LG, LT) Cascade mode: 600 sheets (A4-R, A4, B5-R, B5, A5, LT-R, LT, ST-R) 500 sheets (A3, B4, LD, LG)
Bin shift time	10 sec (approx.; from 20th bin to bin home position)
Control panel	Staple key
Display	Stapling Ready, Add Staple
Stapling method	Punching by rotating cam
Stapling position	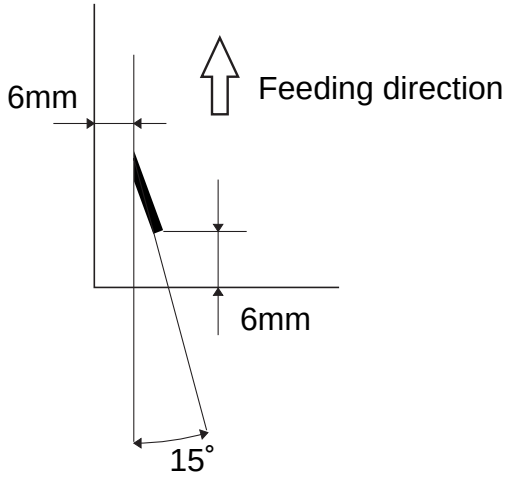

Item		Specifications
Manual stapling		Possible
Stapling force		50 sheets (80 g/m^2; otherwise, stack thickness of 5.5 mm or less)
Staples		Special staples (cartridge; 5,000 staples) 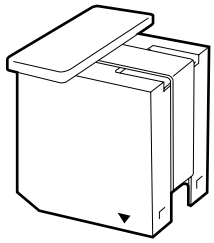
Staple detection		Provided (Add Staple indicator turns on if fewer than 40 staples after stapling)
Paper size		A3, A4, B4, B5, A4-R, LD, LG, LT, LT-R
Operating environment	Temperature	As per copier
	Humidity	As per copier
Power supply		24 V (from copier)
Maximum power consumption		50 W (approx.)
Weight		22.5 kg (approx.)
Dimensions (widthXdepthXheight)		434X594X624 (mm)

Specifications subject to change without notice.

III. NAMES OF PARTS

A. Exterior View

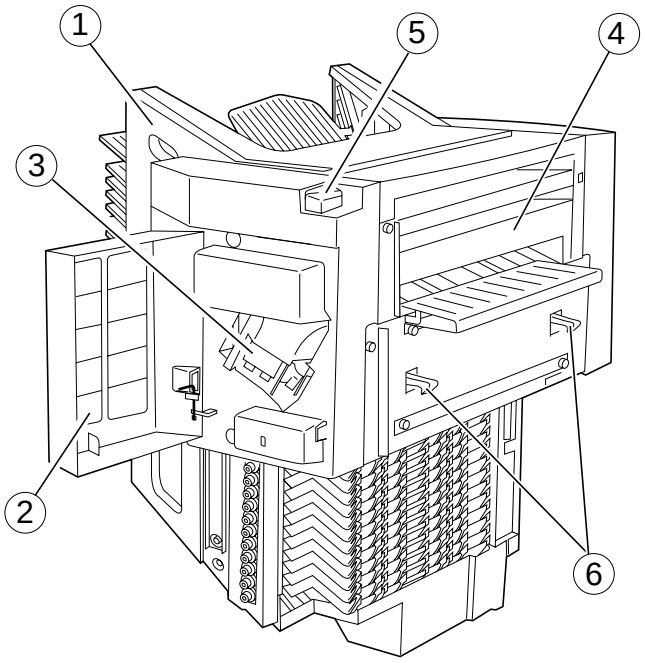

① Bin unit
② Stapler unit cover
③ Stapler unit
④ Feeding guide unit
⑤ Latch lever
⑥ Latch

Figure 1-301

B. Cross Section

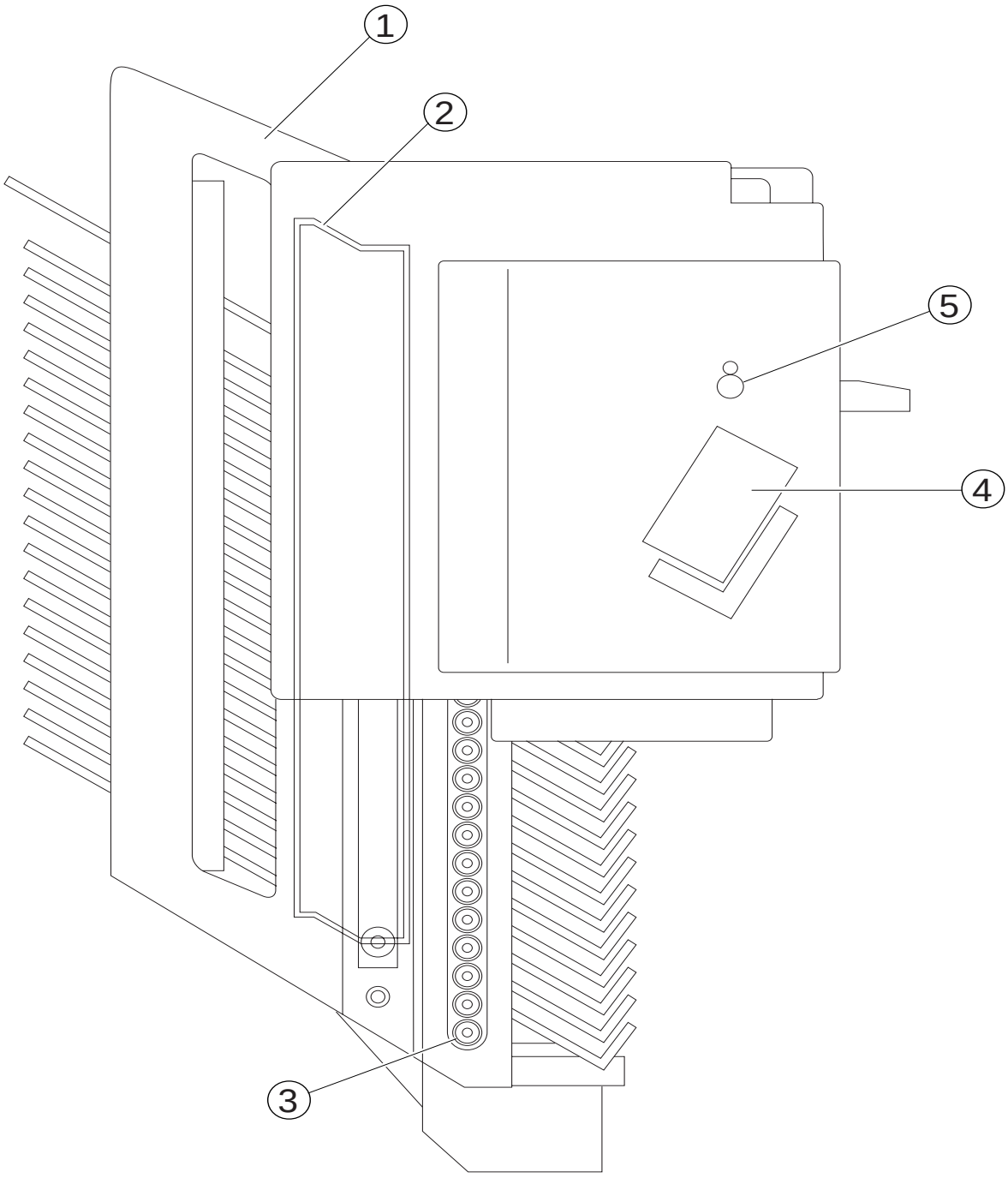

① Bin unit
② Guide bar
③ Roll
④ Stapler unit
⑤ Feed roller

Figure 1-302

IV. OPERATING THE MACHINE

A. Control Panel

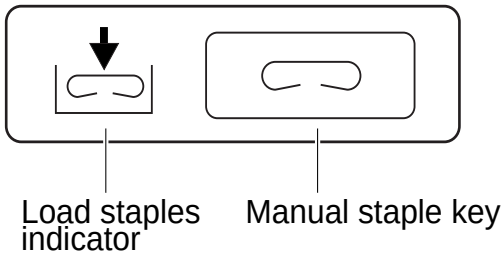

Figure 1-401

Ref.	Key	Description	Remarks
1	Staple key	Press it to start manual stapling or manual feed staple mode. A press during stapling operation will stop the operation. Flashes in response to a staple jam.	During manual stapling operation, operation can not be stopped.
2	Load Staples indicator	Turns on when staples are running out.	Turns on if no more than 40 staples remain after stapling operation.

Table 1-401

B. Stapling Operation

Depending on the mode selected on the copier and how copies are made, the copies delivered to the bins are stapled as follows:

MODE	Non sort	Sort	Group	Staple Sort
With DF	—	Manual Stapling	—	Auto Stapling
Without DF	—	Manual Stapling	—	Manual Stapling

Table 1-402

1. Auto Stapling

This mode uses a DF, and the copies delivered to the bins are stapled automatically.

- If the original is set on the original feed tray, the copies may be stapled manually.

2. Manual Stapling

When copies are made after selecting sort mode, the Staple key turns on. If you want to staple the copies, press the Staple key. (The copies in the bins will be stapled in sequence.)

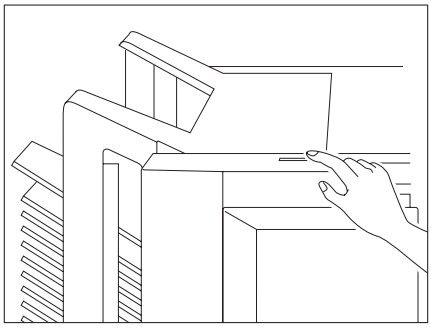

Figure 1-402

Reference:

If you want to stop stapling, press the Staple key once again.

3. Manual Insert Stapling

In addition to stapling copies delivered by the sorter, you can staple sheets placed from outside the bin.

1) Remove all sheets from the bin.
   - The bin unit will return to the home position.
2) Check to make sure that the bin unit is at the home position.
   - If the bin unit is not at the home position, turn off and then on the copier.
3) Put paper into the No. 1 bin while butting the paper against the guide plate at the front.
   - The Staple key will turn on.

■ Limit the number of sheets to 50 (80 g/m^2, otherwise, stack thickness of 5.5 mm or less).

4) Press the Staple key.

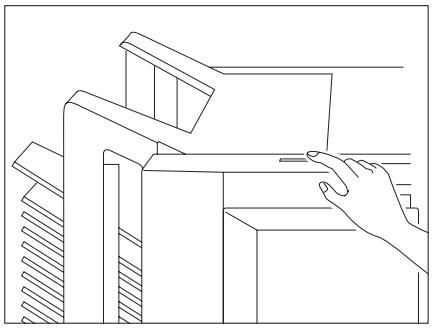

Figure 1-403

C. Replenishing the Stapler with Staples

The Add Staple LED will turn on when the staple cartridge starts to run out of staples. Go through the following steps to replenish it with staples:

Caution:

RepMeated removal/installation of the staple cartridge can lead to staple jams. Advise the user not to repeat it except when replenishing the stapler unit with staples or when removing a staple jam.

1) Open the stapler unit cover.
2) Lift up the staple cartridge release lever to remove the staple cartridge.

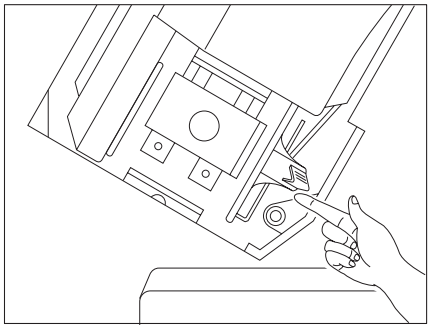

Figure 1-404

3) Remove the empty staple cartridge.

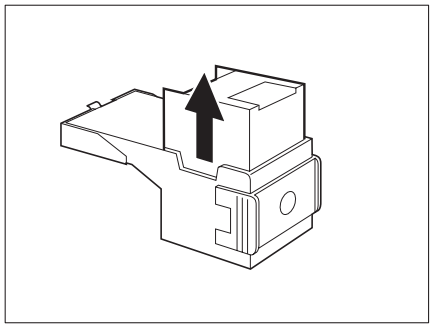

Figure 1-405

4) Set new staples in the cartridge securely.

■ Do not peel the sticker used to hold the staples before setting the staples into the cartridge.

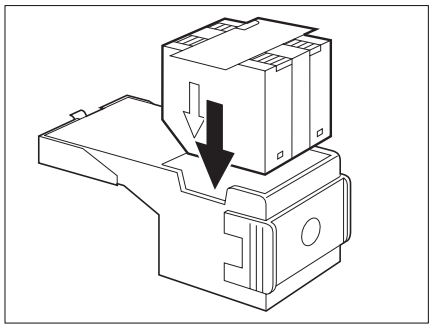

Figure 1-406

5) Pull straight out the seal used to hold the staples together.

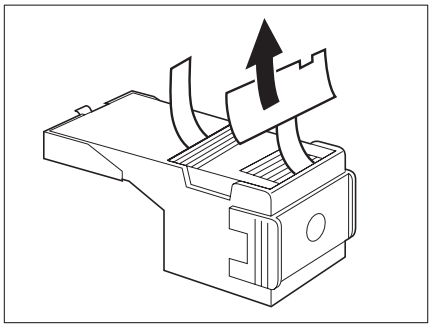

Figure 1-407

6) Set the staple cartridge.

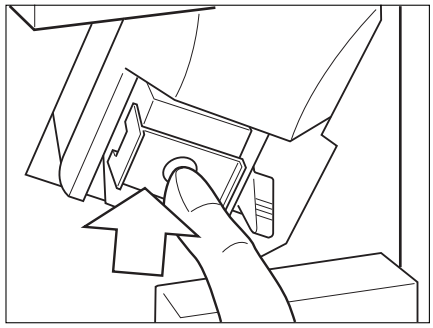

Figure 1-408

7) Close the front door.

The stapler unit is automatically in the "staple-empty" condition until staples are aligned at the stapling position.

D. Removing a Staple Jam from the Stapler

The Staple key will start to flash if a staple jam occurs in the stapler. Go through the following to remove it:

1) Remove the staple cartridge.
2) Lower the face plate and remove all jammed staples.

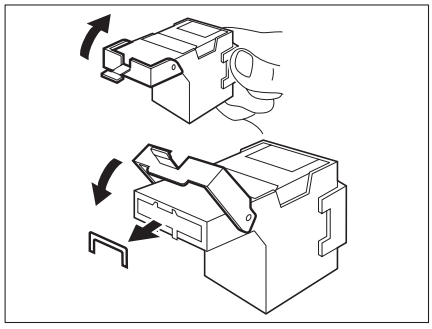

Figure 1-409

3) Close the face plate and insert the staple cartridge.

E. Removing a Paper Jam in the Sorter

1. Feeding Assembly

1) Press the latch lever and pull the sorter away from the copier.

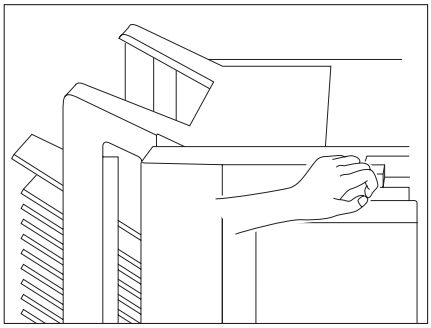

Figure 1-410

2) Remove the jammed paper.

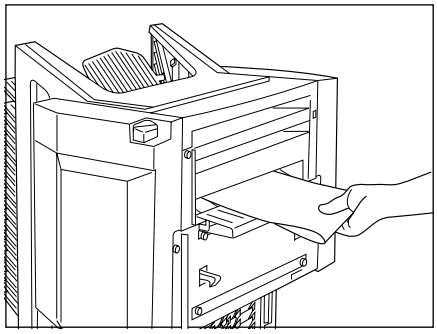

Figure 1-411

3) If you can see paper from the bins, insert your hand from the bin side and draw out the jammed paper.

4) Install the sorter to the copier.

CHAPTER 2

OPERATIONS AND TIMING

In outline diagrams, ▬▬ represents mechanical drive paths, and ⟶ indicates electrical signal paths.

Signals in digital circuits are identified as '1' for High and '0' for Low. The voltage of signals, however, depends on the circuit.

Nearly all operations of the product are controlled by a microprocessor; the internal workings of the processor are not relevant to the serviceman's work and, therefore, are left out of the discussions. By the same token, no repairs are prescribed for the PCBs at the user's premises; for this reason, PCBs are discussed by means of block diagrams rather than circuit diagrams.

For the purpose of explanation, discussions are divided into the following: from sensors to DC controller PCB input ports; from DC controller output ports to loads; and minor control circuits and functions.

I. BASIC CONSTRUCTION ---------- 2-1
II. BASIC OPERATION ---------- 2-7
III. FEEDING DRIVE SYSTEM ---------- 2-12
IV. STAPLER UNIT DRIVE SYSTEM ---------- 2-18
V. BIN UNIT DRIVE SYSTEM ---------- 2-28
VI. POWER SUPPLY ---------- 2-38

I. BASIC CONSTRUCTION

A. Functional Construction

The machine consists of six functional blocks: namely, control panel, feeding drive system, bin unit drive system, stapler unit drive system, guide bar drive system, and control system.

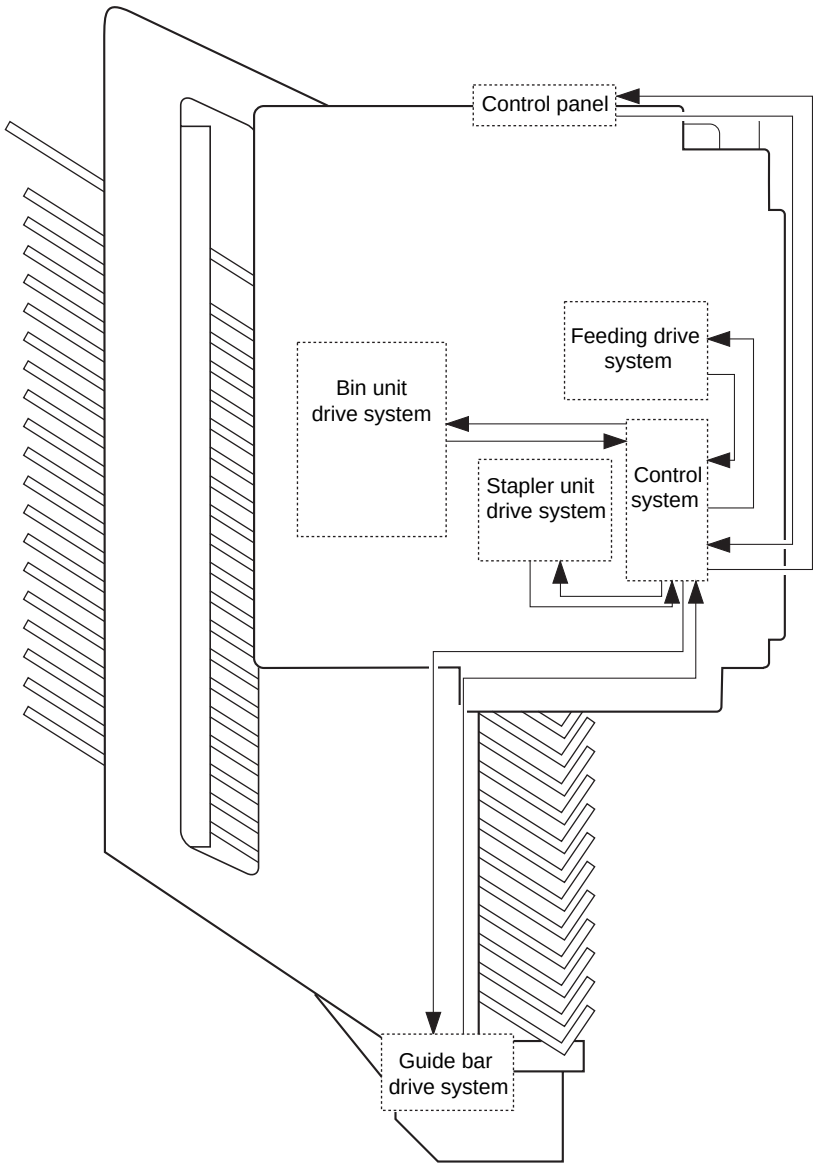

Figure 2-101

B. Outline of the Electrical Circuitry

The machine's electrical mechanisms are controlled by its sorter controller. The ICs on the sorter controller have the following functions:

Notation	Description
Q1	controls sequence
Q2	controls sensor adjustment values, operation modes
Q3	contains the sequence program
Q4	controls communication with the copier

Table 2-101

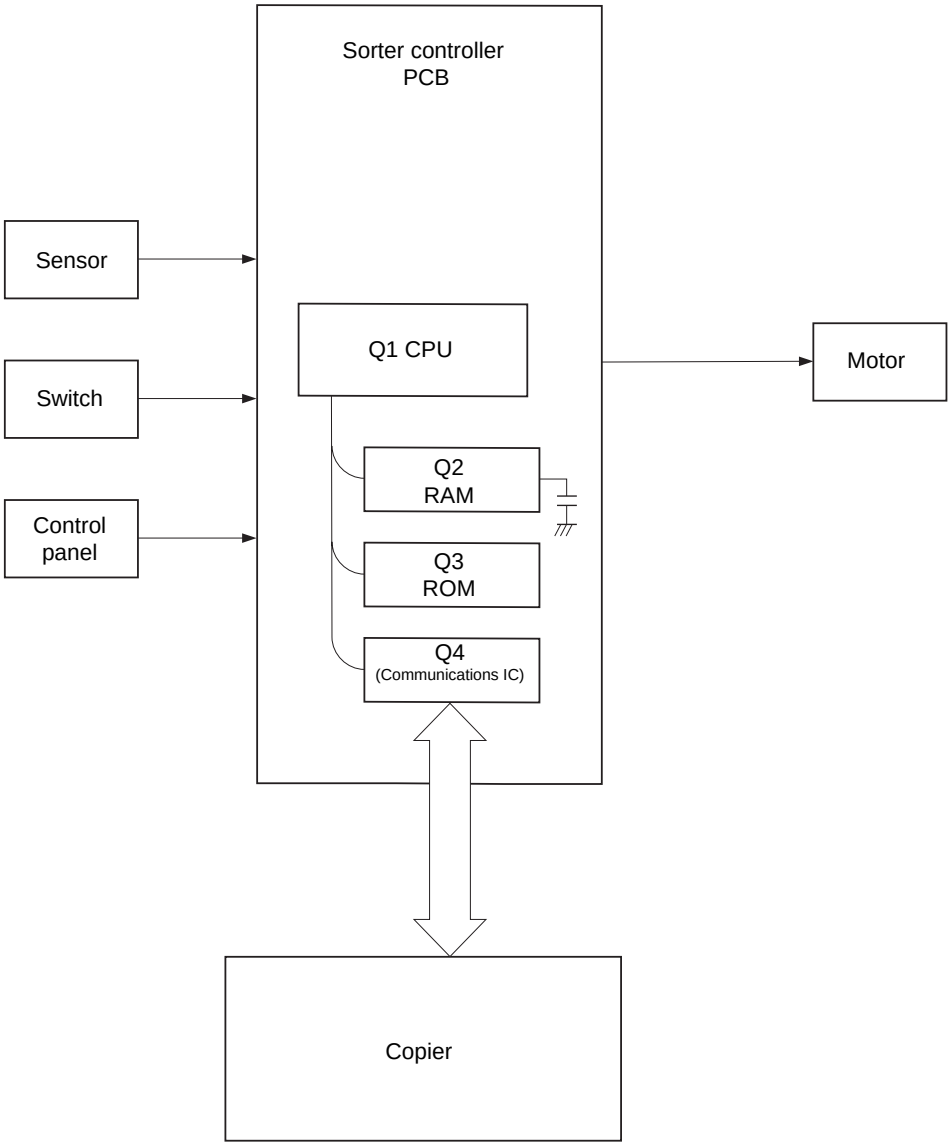

Figure 2-102

C. Inputs to the Sorter Controller

Output to the Sorter Controller (1/1)

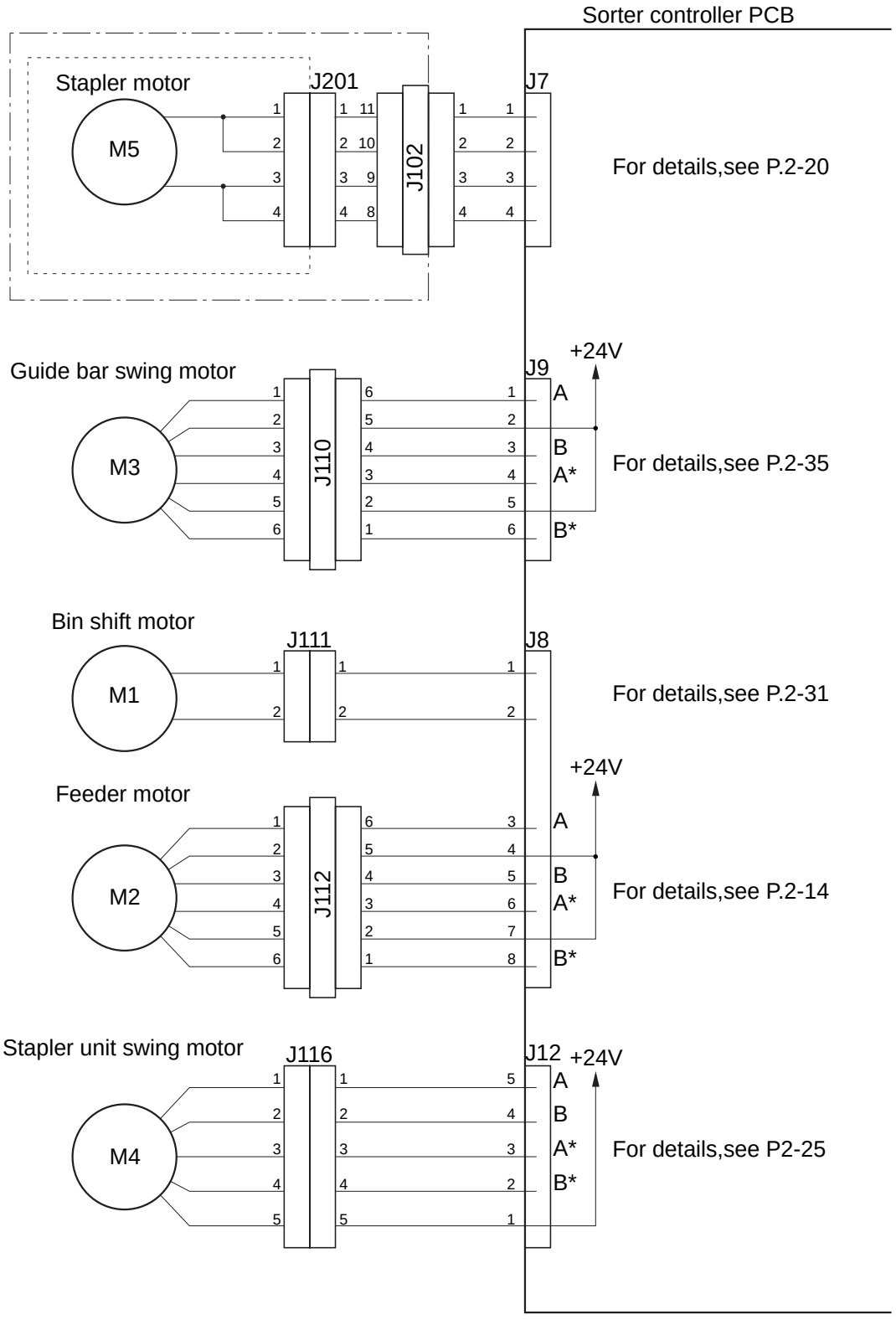

Figure 2-103

Inputs to the Sorter Controller (1/2)

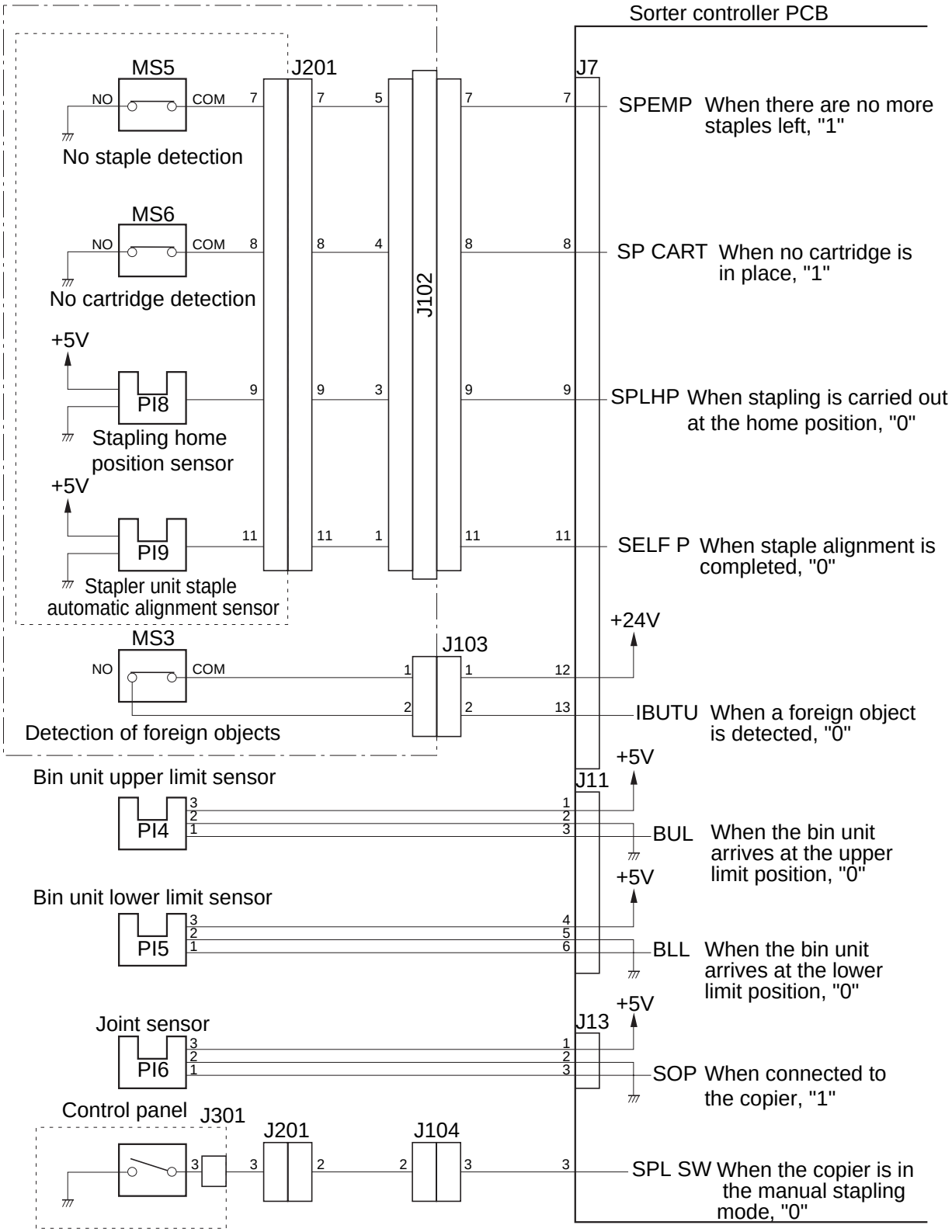

Figure 2-104

Inputs to the Sorter Controller (2/2)

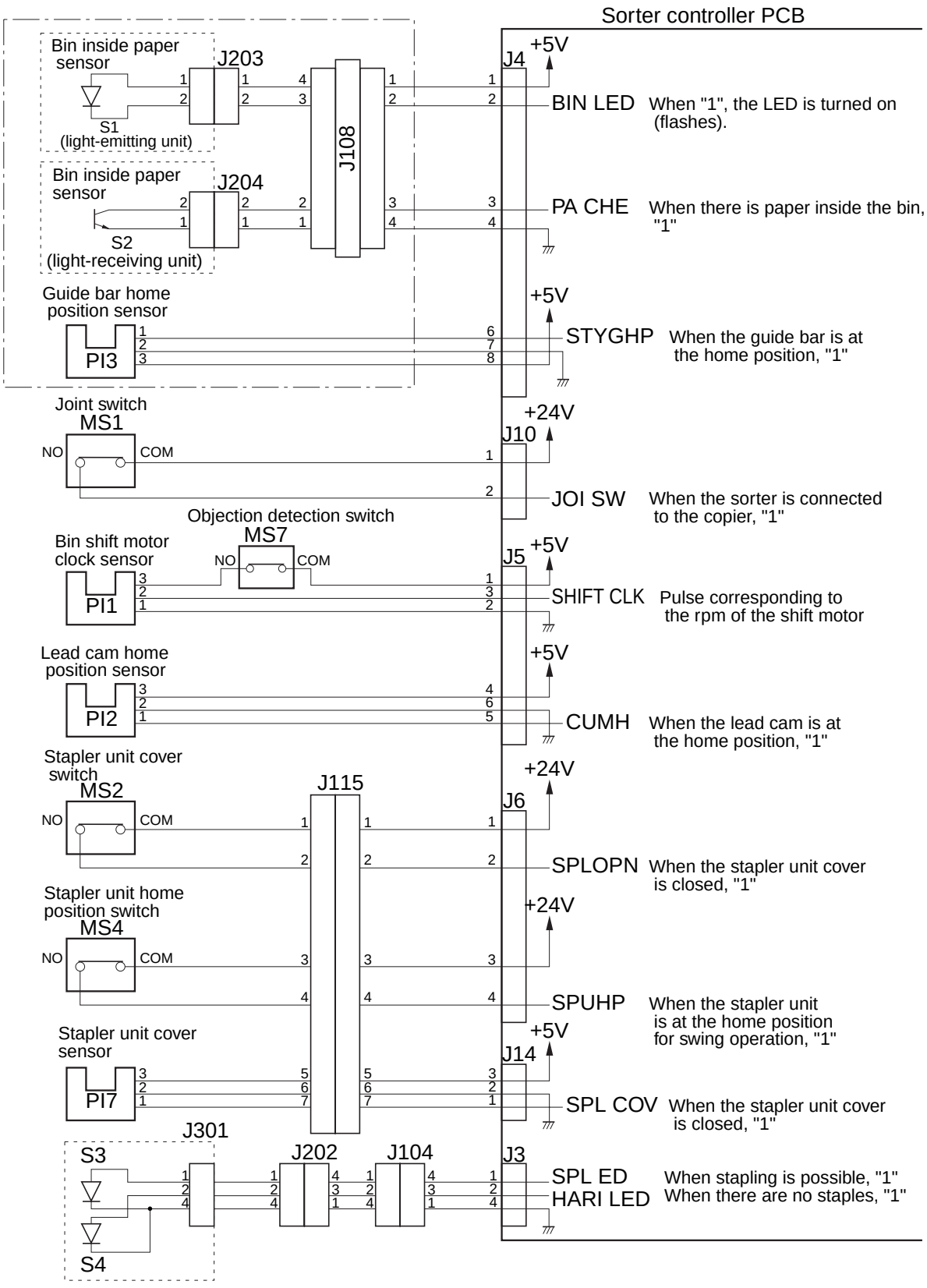

Figure 2-105

D. Communication between Copier and Sorter

1. Outline

The state signal and data are exchanged between the CPU(Q1)/IPC(Q4) on the sorter-controller circuit board and the copier as shown in Figure 2-106. These communication operation is controlled by each microprocessor.

Caution

When the self diagnosis mechanism has been activated because of an error in communication, turn off the copier once; then, detach the sorter from the copier, and turn on the copier to continue , making copies.

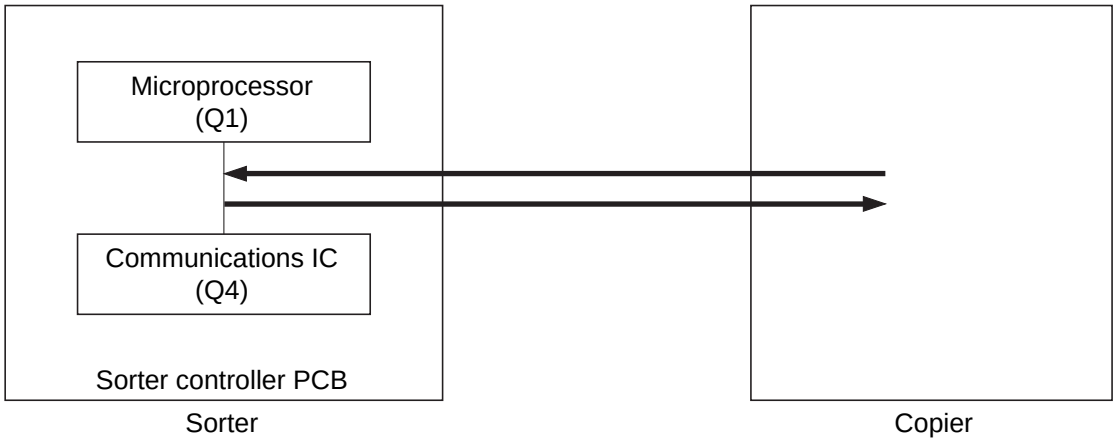

Figure 2-106

II. BASIC OPERATION

A. Outline

The machine sorts or staples delivered copies according to the operation modes selected on the copier.

Using the keys on the machine's control panel, you may specify how the copies should be stapled.

The machine provides the following four operation modes:

1. non-sort mode
2. sort mode
3. group mode
4. staple sort mode

1. Non-Sort Mode

This sorter is provided with a cascade stack function. This function stacks 30 or 25 sheets at a time from bin No.1 according to the paper size. When paper is stacked up to bin No.20, the sorter and copier stop operating. Remove all copies in the bins and press the Copy Start key to resuming making the remaining copies.

(The method of specifying the number at which copying is stopped and resumed when the maximum stacking load of the copier is exceeded varies according to the copier's specifications.)

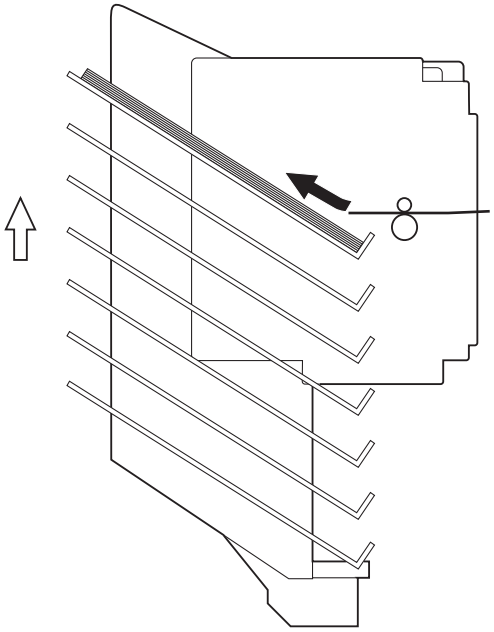

Figure 2-201

2. Sort, Group, Staple Sort Modes

The copies are delivered to the sort bin.

In these modes, the bin unit moves up and down to sort the copies.

If desired, the copies delivered to each bin will be stapled.

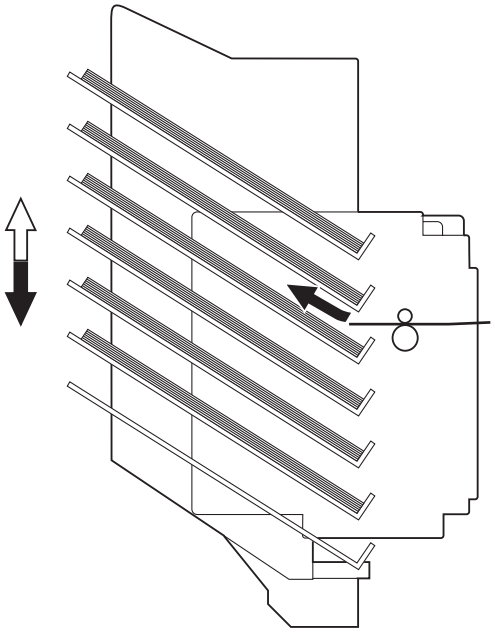

Figure 2-202

B. Basic Operation

Go through the following for an idea of how operations are executed in each mode:

1. Non-Sort Mode

① The copier's Copy Start key is pressed.

② The copy is delivered to the sort bin.

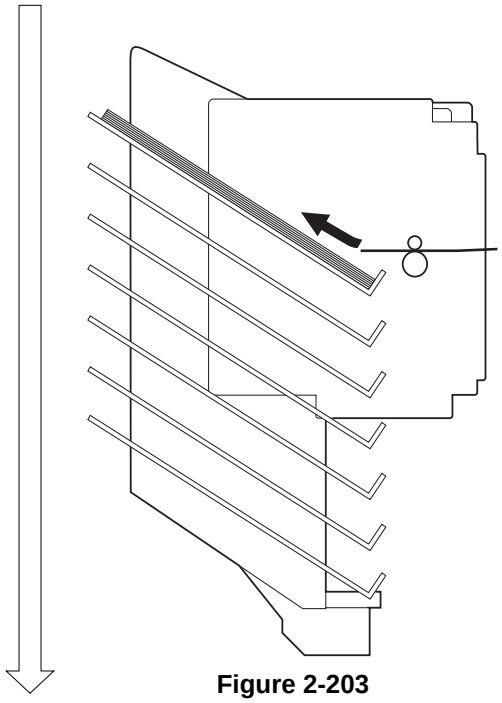

Figure 2-203

③ As many copies as specified are delivered and the operation ends.

2. Sort Mode

① The copier's Copy Start key is pressed.

②The guide bar moves to a position one half the paper size +8 mm from the paper delivery center.

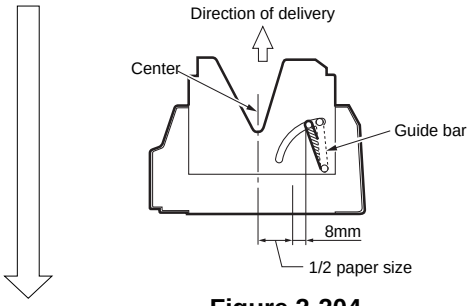

Figure 2-204

③ Each time delivery is made, the guide bar swings to butt the stack against the guide plate, thereby putting it into order; then, the bins shift by a single bin.

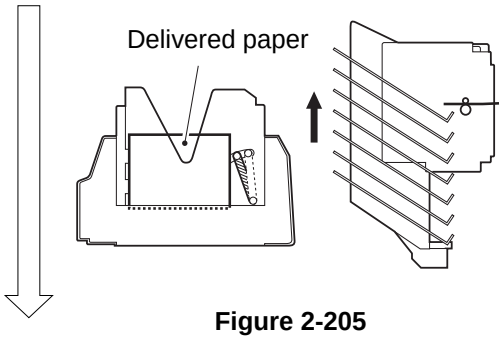

Figure 2-205

④ As many copies as specified are made.

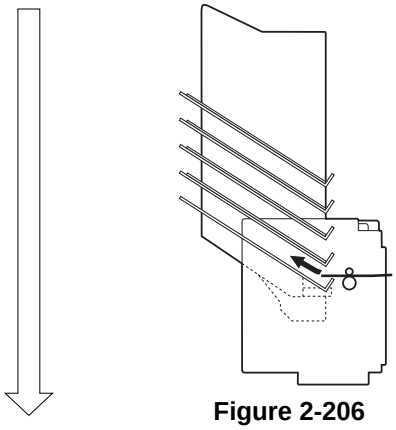

Figure 2-206

⑤ The original is replaced, and reverse sorting is executed.

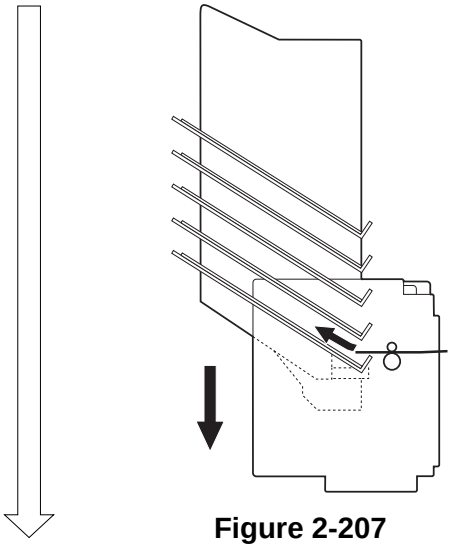

Figure 2-207

⑥ The operation is repeated for as many times as there are originals.

⑦ When copying is finished, the guide bar returns to the home position.

3. Group Mode

① The copier's Copy Start key is pressed.

② The guide bar moves to a position one half paper size + 8 mm from the center of delivery.

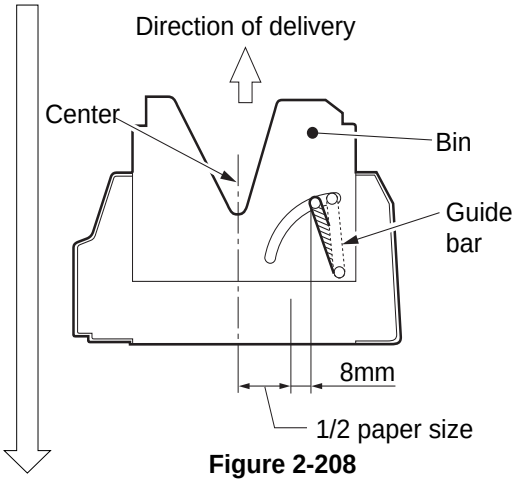

Figure 2-208

③ Each time delivery is made, the guide bar swings to butt the copies against the guide plate, thereby putting it into order.

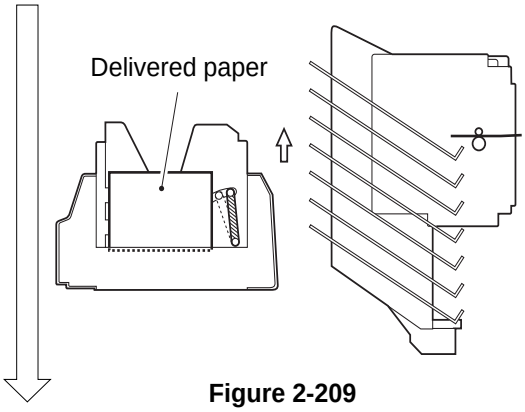

Figure 2-209

④ As many copies as set are made.

⑤ The original is replaced, and the bins shift by a single bin.

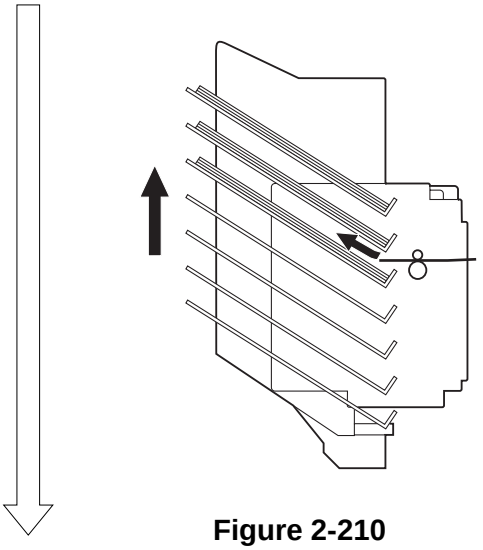

Figure 2-210

⑥ The operation is repeated for as many times as there are originals.

⑦ When copying is finished, the guide bar returns to the home position.

4. Staple Sort Mode

① The same operations as in sort mode are executed, and all copies are delivered to the bins.

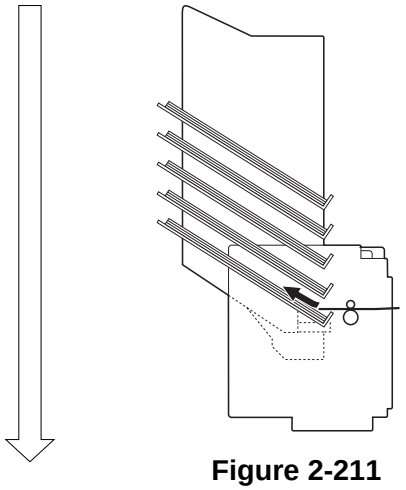

Figure 2-211

② The guide bar swings three times.

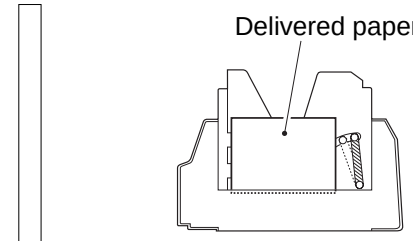

Figure 2-212

③ The guide bar puts the copies in order. The paper holding arm holds the paper in place. The stapler unit moves to the stapling position. At the same time, the paper holding arm holds down the delivered paper.

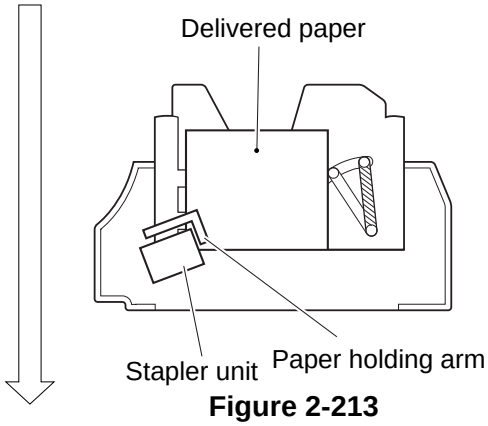

Figure 2-213

④ The stapler unit staples the copies.

⑤ The guide bar and the paper holding arm move away from the paper.

⑥ The bin units shift by a single bin.

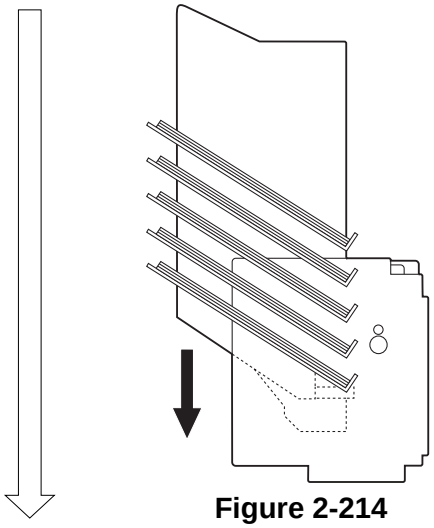

Figure 2-214

⑦ Operations ⑥ through ③ are repeated for all copies inside the bins, and the mode ends.

Reference:

You can select staple sort mode only when you are using the DF.

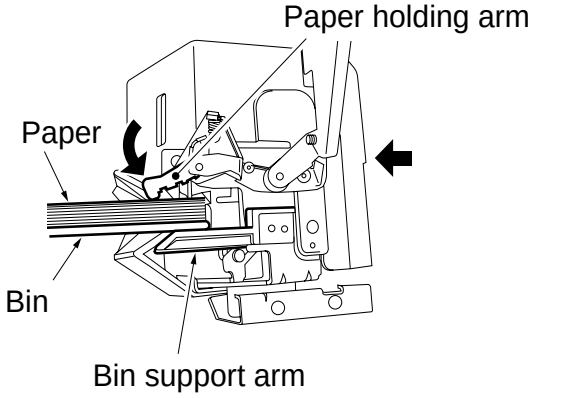

Figure 2-215

III. FEEDING DRIVE SYSTEM

A. Outline

Figure 2-301 shows the basic configuration of the feed system.

The feeding system serves to move copies from the copier to the bins using its feeding roller driven by the feeder motor (M2).

The feeding state of the paper is detected by the paper sensor (PS1) on the sorter controller PCB.

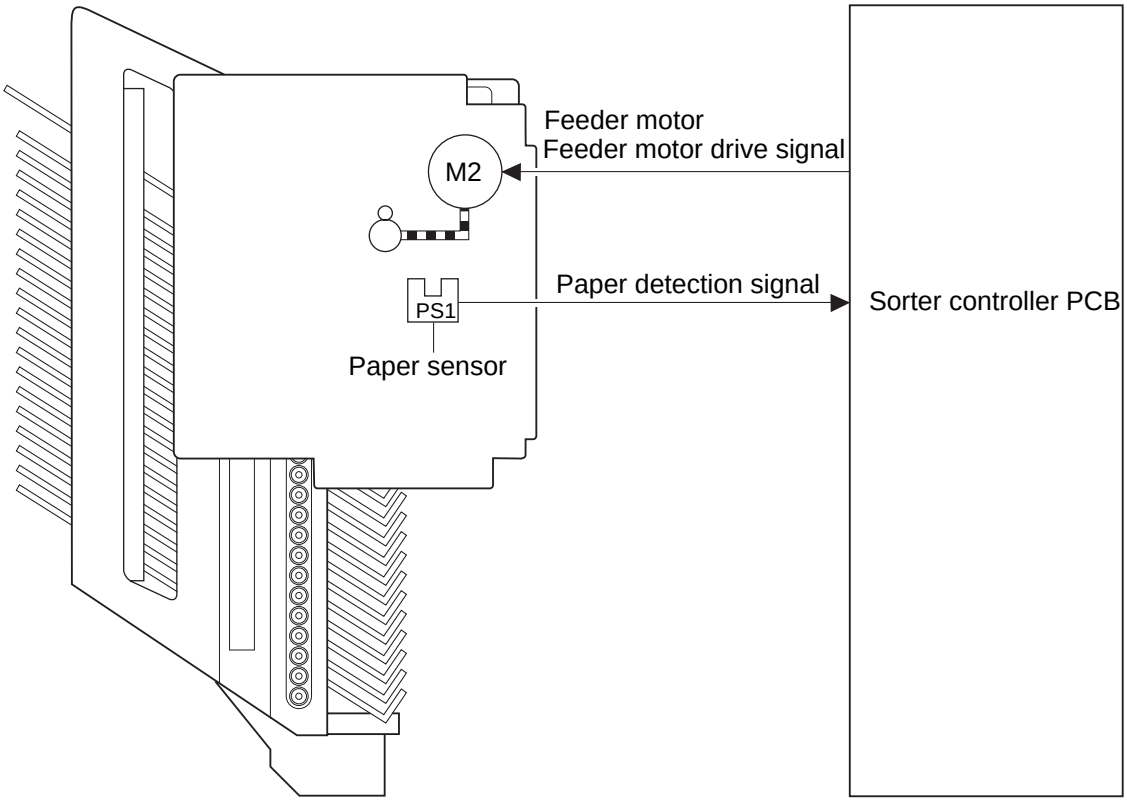

Figure 2-301

B. Controlling the Feeding Speed

1. Outline

The feed speed is controlled by the feeder motor (M2) and torque limiter.

The feeder motor just changes the feed speed according to the paper size. It rotates at a fixed speed and its speed is not controlled. The feed speed of the sorter is higher than that of the copier. When the copy paper simultaneously grips the fusing unit on the copier and the feed rollers on the sorter, the rotating speed of the feed rollers is decelerated by the torque limiter.

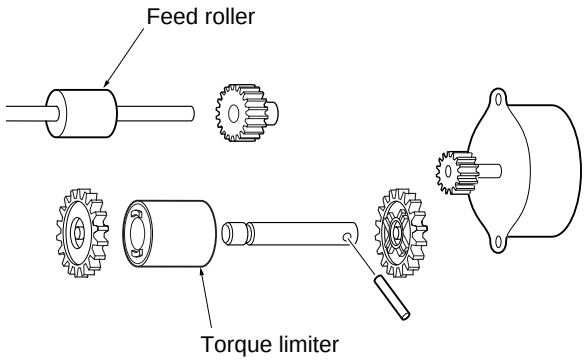

Figure 2-302

2. Processing Speed

This is the speed from the time that copy paper starts to be received from the copier up to when the copy paper is fully drawn into the sorter. This is the same speed as the processing speed of the copier.

3. Draw-In Speed, Delivery Speed

This is the paper feed speed after the copy paper has been delivered from the fusing unit in the copier. This speed changes according to the size of the paper that is being fed.

Paper size	Feeding speed
A4	600mm/sec
A4-R	650mm/sec
B4	700mm/sec
Standard-size paper other than the above	575mm/sec
Non-standard -size paper	700mm/sec

C. Controlling theFeeder Motor

Figure 2-303 shows the circuit to control the feeder motor.

A 4-phase control stepping motor is used as the feeder motor. The feed speed is controlled by the number of pulse signals A, A*, B and B* from the motor driver IC (Q23).

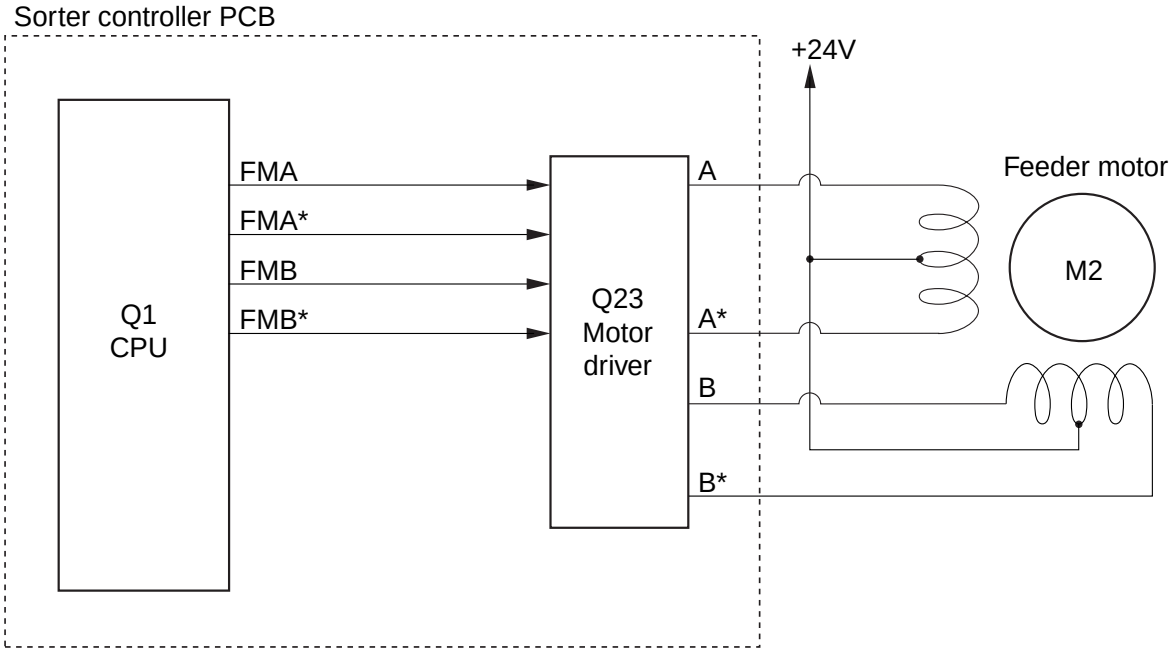

Figure 2-303

D. Overstacking

1. Outline

The number of copies that can be stacked in the bins for each mode is limited as shown in Table 2-301. The term overstacking refers to a condition in which these limits are exceeded.

Non-sort mode	Maximum stack
All sizes	100 sheets

Staple-sort mode	Maximum stack
A3, B4, LD, LG	25 sheets
A4-R, A4, B5, LT-R, LT	50 sheets

Sort mode	Maximum stack
A3, B4, LD, LG	25 sheets
A4-R, A4, B5-R, B5, A5-R, LT-R, LT, ST-R	50 sheets

Group mode	Maximum stack
A3, B4, LD, LG	25 sheets
A4-R, A4, B5-R, B5, A5-R, LT-R, LT, ST-R	30 sheets

Cascade mode	Maximum stack
A3, B4, LD, LG	600 sheets
A4-R, A4, B5-R, B5, A5-R, LT-R, LT, ST-R	500 sheets

Table 2-301

2. Operation in Overstacking Condition

The machine operates as follows if the bin stacking limit for each mode is exceeded:

a. Non-Sort Mode

Mode

- DF used
- small-size paper
- 6 originals
- copy count '50'

① The above modes are selected, and the Copy Start key is pressed.

⇩

② For each original, as many as 50 copies are delivered to the non-sort bin.

⇩

③ Operation stops upon delivering the 100st copy into the non-sort bin.

⇩

④ Remove all paper from the bin. When the Copy Start key is pressed, the remaining originals are copied.

b. Sort Mode

The Copy Start key becomes valid or invalid depending on the specifications of the copier.

c. Group Mode

The Copy Start key becomes valid or invalid depending on the specifications of the copier.

■ DF in Use

If the number of originals is greater than the 20 sheets, operation stops after delivery to the last bin. When all copies are removed from the bins and the Copy Start key is pressed, the remaining originals are copied.

■ DF Not in Use

If delivery was made all the way to the bottom-most bin, the Copy Start key will not become valid unless all copies are removed from the bins.

E. Jams

The machine sends the jam signal (SJAM) to the copier under any of the following conditions:

In response, the copier stops operation.

1. Delay Jam

The paper sensor (PS1) does not turn on within a specific period of time* after the machine has received the delivery signal from the copier.

*Differs depending on the type of copier.

* 300 mm feed time (varies according to model.)

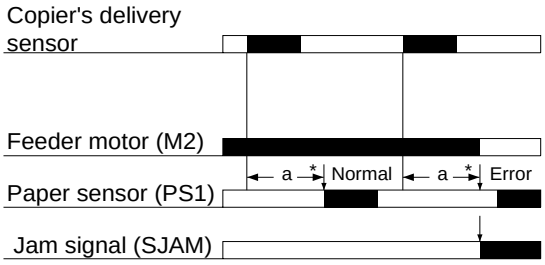

Figure 2-304

2. Stationary Jam

When paper does not leave the paper sensor within the feed time of two sheets of copy paper after the paper sensor (PS1) detects the paper:

a: Copy paper length x 2 (mm) ÷ delivery speed of copier (mm/sec)

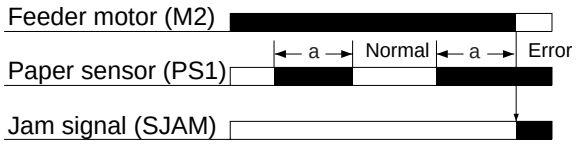

Figure 2-305

3. Power-On Jam

Power ON Jam (detected when removal of jammed paper is forgotten)

The SJAM signal is generated when the paper delivery sensor is ON when the power is turned ON.

4. Door Open Jam

The SJAM signal is generated when the front door is opened when the machine is operating or when the sorter is released from the copier.

■ When the respective jam is removed and the Copy Start key is pressed, the jam correction function turns on to make the remaining number of copies automatically. If a jam occurs inside the copier, on the other hand, all copies moving through the sorter are discharged to specific bins and the sorter stops operation.

IV. STAPLER UNIT DRIVE SYSTEM

A. Outline

The stapler unit is used to staple sheets delivered to the bins.

Stapling is driven by the stapler motor (M5).

The stapler unit is swung by the stapler unit swing motor (M4). The home position is detected at the stapler unit swing home position switch (MS4), and the stapler unit arrives at the swing position, as a result of the driving of the stepping motor for a fixed number of pulses. Paper is held during stapling by the stapler pressing down on the paper holding lever during the swing.

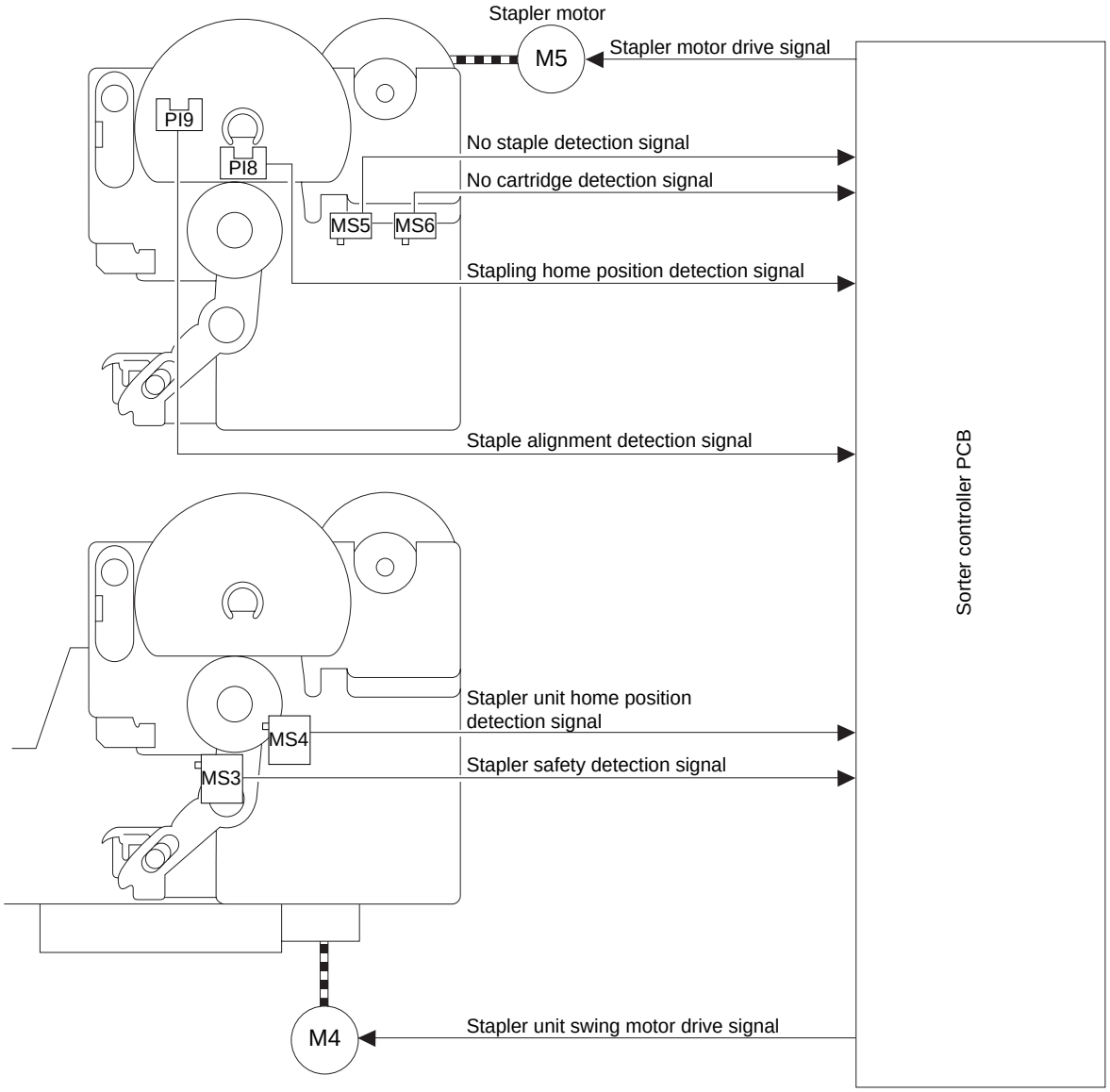

Figure 2-401

B. Stapler Unit

1. Outline

Figure 2-402 is a diagram showing how the stapler unit is constructed.

Stapling is driven by the stapler motor (M5).

Specifically, stapling is driven by the rotation of a cam, and the stapling home position sensor (PI8) detects each stapling operation.

No staple detection switch (MS5) serves to check the presence/absence of staples inside the staple cartridge.

No cartridge detection switch (MS6) detects whether there is a stapler cartridge or not.

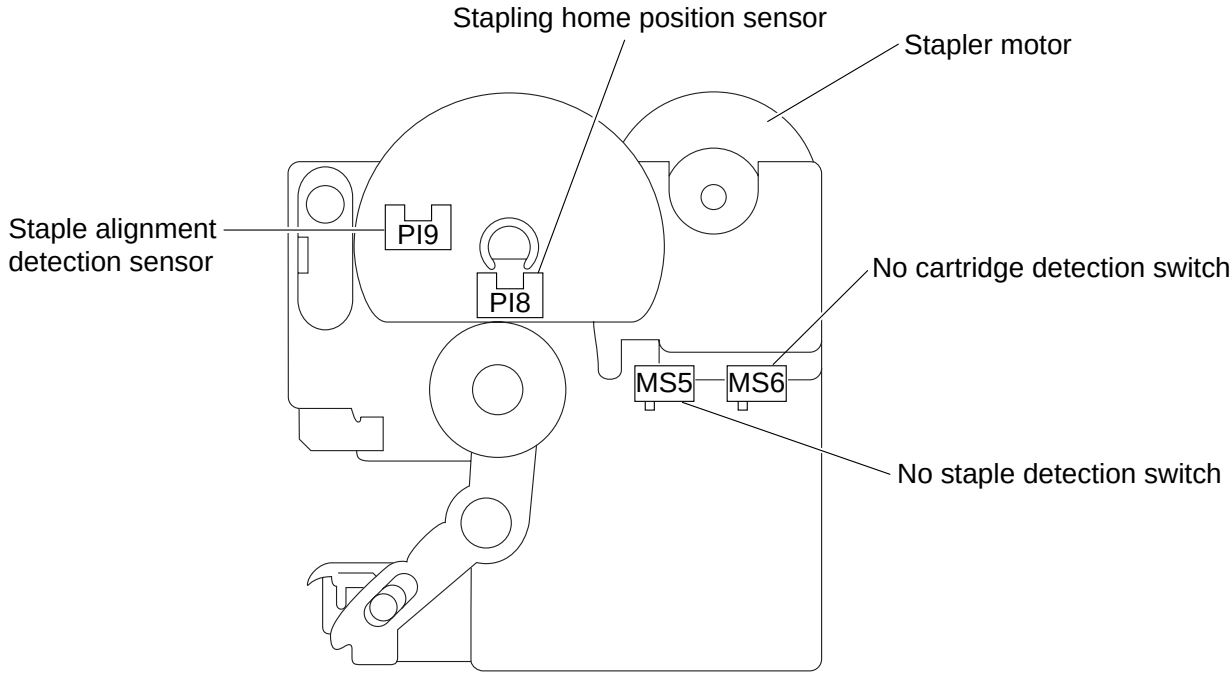

Figure 2-402

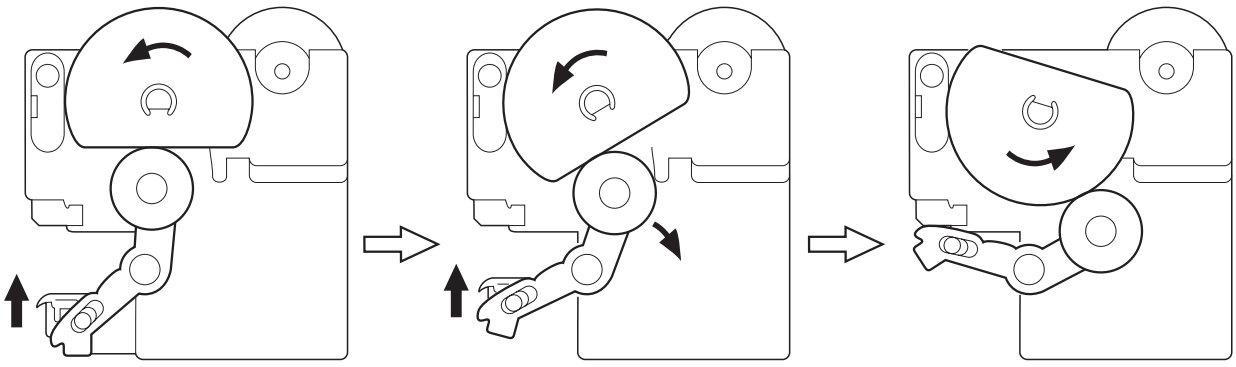

Figure 2-403 Stapler Unit Drive System

2. Controlling the Stapler Motor (M5)

a. Outline

Figure 2-404 is a block diagram showing the stapler motor control circuit. The stapler motor (M5) is a DC motor, and the circuit has the following functions:

- turns on and off the stapler motor.
- controls the direction of rotation of the stapler motor.
- protects the stapler motor from over-current.

The path through which power is supplied to the stapler motor (M5) is equipped with stapler safety switch.

The stapler safety switch (MS3) serves to cut the power used to drive the stapler motor when an object about 5.5mm thick or more enters the stapler assembly.

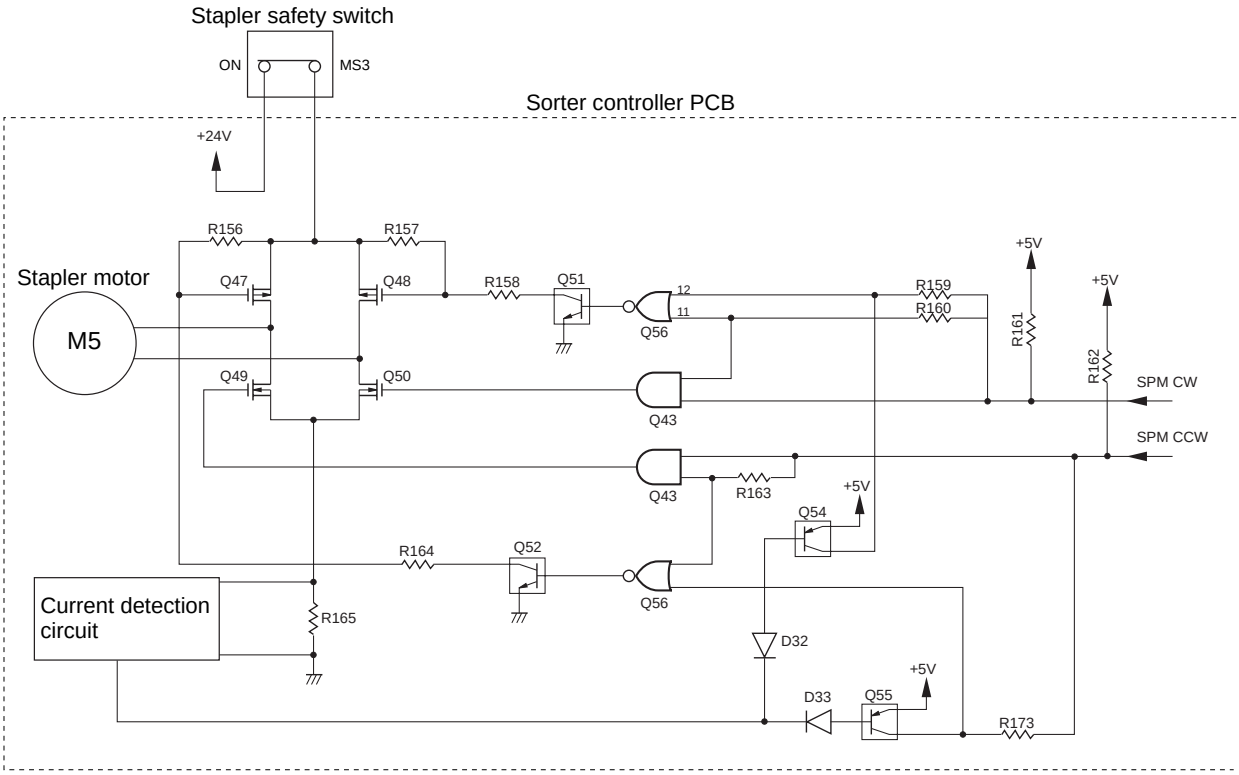

Figure 2-404

b. Turning On and Off the Stapler Motor

The stapler motor is turned on/off and its direction of rotation is controlled based on combinations of the following two control signals:

1. stapler motor clockwise rotation signal (SPMCW*)
2. stapler motor counterclockwise rotation signal (SPMCCW*)

Stapler motor rotation	SPMCW*	SPMCCW*
Clockwise rotation	1	0
Counterclockwise rotation	0	1
Stop rotation	1	1

Table 2-401

c. Protecting the Stapler Motor from Overcurrent

The current detection circuit monitors the current flowing into the stapler motor as long as the stapler motor is rotating. When overcurrent is detected, the current detection circuit turns Q54 and Q55 ON to control the stapler motor.

3. Controlling the Stapler Motor for a Staple Jam

When a staple jam or an error is detected in the stapler unit, the stapler motor (M5) is controlled as follows:

① An excess load is imposed on the stapler motor because of a staple jam.

⇩

② The stapler cannot return to the home position within 0.6 sec after it has started punching operation.

⇩

③ The stapler motor rotates counterclockwise to return the stapler to the stapling home position.

⇩

④ An error signal is sent to the copier.

4. Safety Switch (MS3)

If a finger or any object is inserted over the stapling position inside a bin, the actuator will be lowered to turn the safety switch OFF.

When the safety switch goes OFF, the stapler motor (M5) power is cut. At the same time, a signal is sent to the CPU to turn the drive signal of the stapler motor (M5) OFF to prevent stapling.

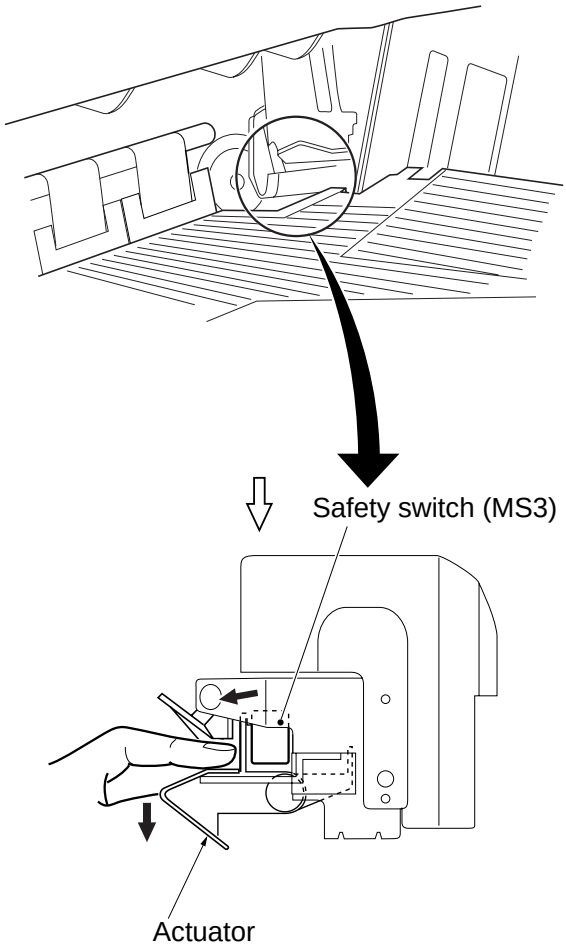

Figure 2-405

5. Stapler Unit Home Position Switch (MS4)

When the stapler unit is at the home position, the stapler unit home position switch is turned ON.

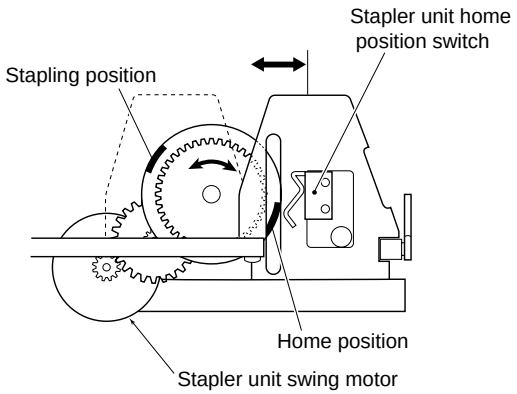

Figure 2-406

6. Absence of Staples

The presence/absence of staples inside the staple cartridge is checked by the no staple detection switch (MS5) built on the bottom of the stapler.

The staples inside the staple cartridge is pushed up by the work of a spring and a middle plate; and the staples are sent to the tip of the stapler by the staple feeding roller.

When staples exist, the no staple detection switch (MS5) is pushed by the staples, and the sorter controller recognizes the presence of staples.

When staples start to run out (about 40 staples), the no staple detection switch (MS5) closes (normally, closed), and the sorter controller recognizes the absence of staples; at this time, the sorter controller indicates the message Add Staple.

When the absence of staples is detected, no further stapling will be executed; however, if the absence is detected during continuous stapling, stapling will continue until all stacks are stapled.

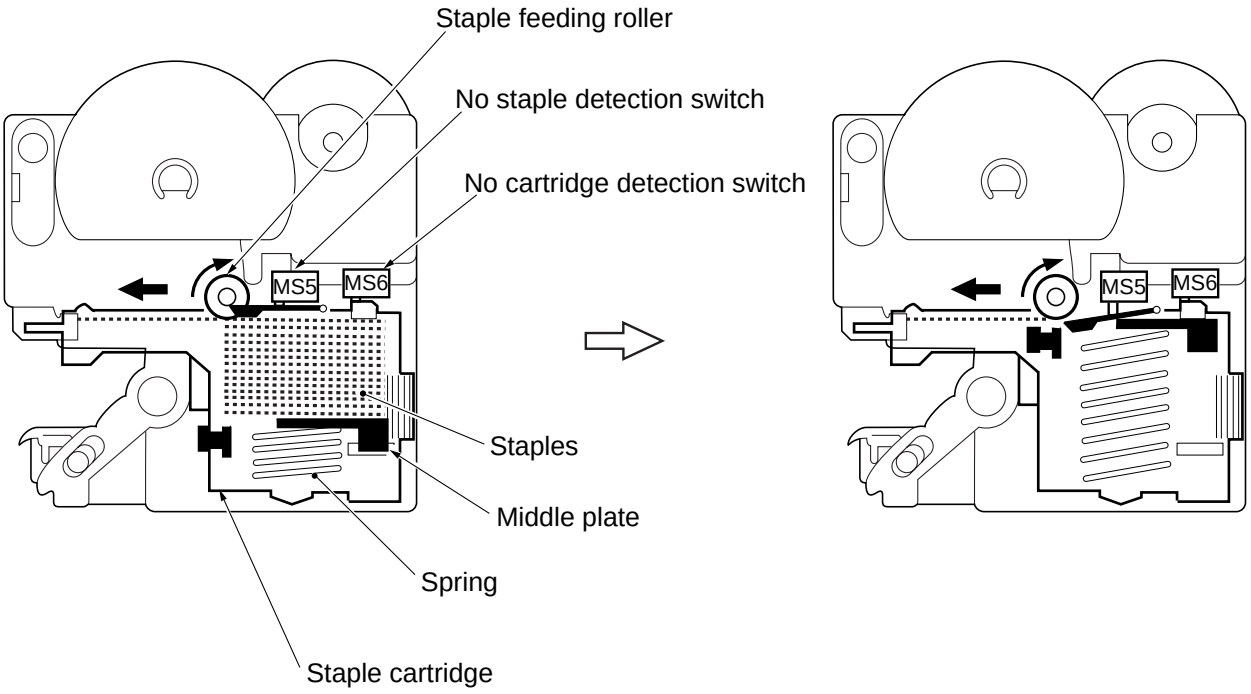

Figure 2-407

C. Controlling the Stapler Unit Swinging Operation

1. Outline

When the bins shift, the stapler unit swings so that the stapler unit will not come into contact with the paper inside the bin.

The swinging operation is driven by the stapler unit swing motor (M4).

The stapler unit home position switch (MS4) is used to detect the home position.

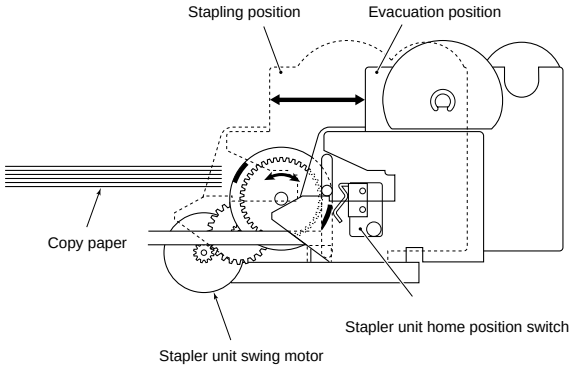

Figure 2-408 (top view)

2. Detecting the Swing Position of the Stapler Unit

The home position of the stapler unit is detected by the stapler unit home position switch (MS4).

The stapler unit home position switch (MS4) is used to detect the presence of the stapler unit at the home position.

The staple position is determined by the number of pulses that are output for driving the stapler unit swing motor (M4).

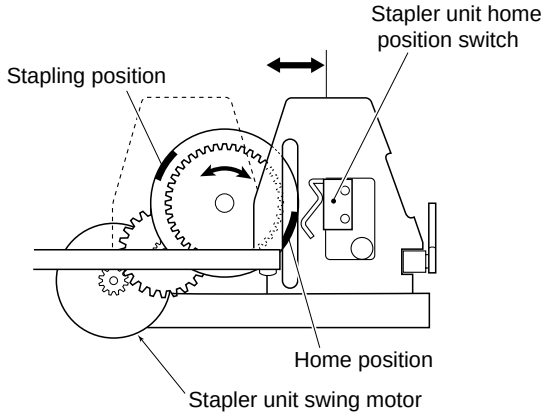

Figure 2-409

3. Controlling the Stapler Unit Swing Motor

a. Outline

Figure 2-410 shows the control circuit for the stapler unit swing motor (M4).

The stapler unit swing motor is a 4-phase control stepping motor. The stapler unit swing motor (M4) is turned ON and OFF and its direction of rotation is switched by controlling output of pulse signals A, A*, B and B*. The stapler cover switch (MS2) and fuse (ICP3) are provided in the power supply circuit of the stapler unit swing motor (M4). The power supply circuit is cut when the stapler cover is opened (stapler cover switch (MS2) related power cut) or an overcurrent flows to the circuit (fuse (ICP3) related power cut) to stop the stapler unit swing motor (M4).

Stapler unit home position switch (MS4) is provided in the power circuit.

When the stapler unit is not at the home position, the switch (MS4) prevents bin from colliding with the stapler by shutting off the power.

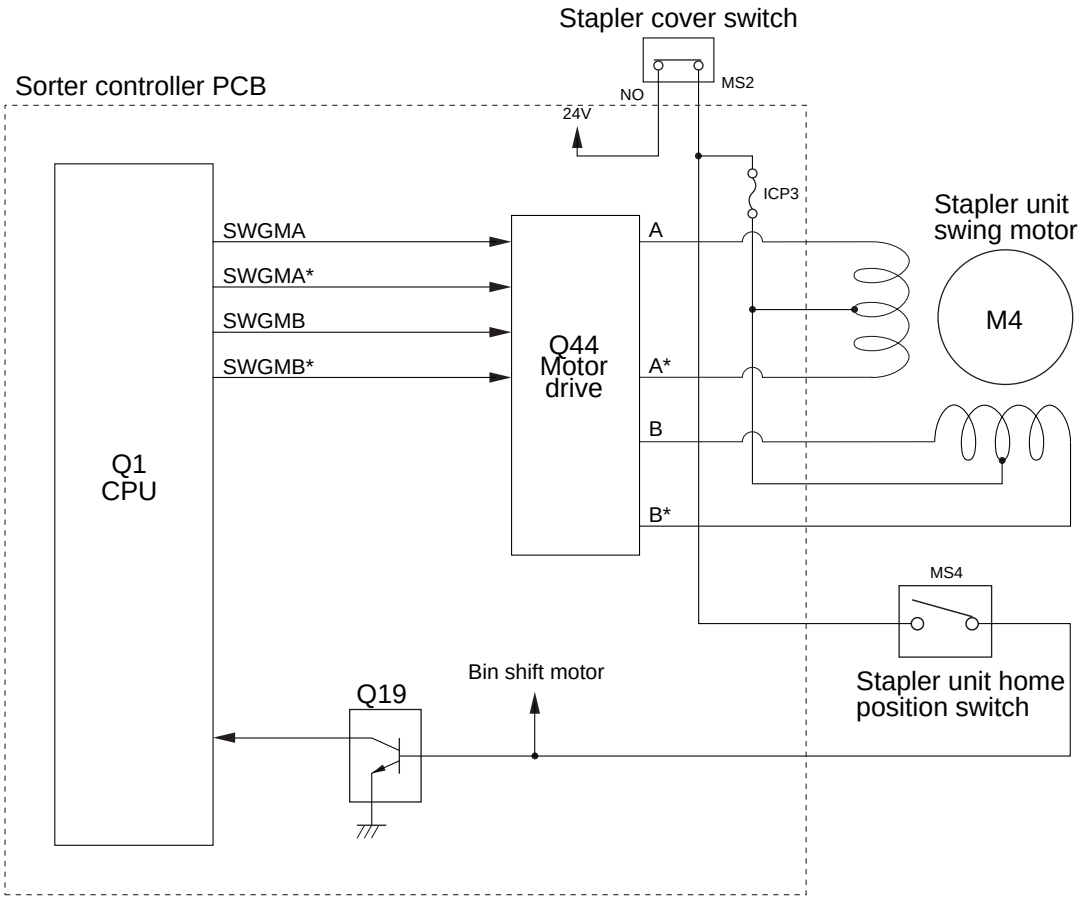

Figure 2-410

b. Operation

The microprocessor (Q1) on the sorter controller PCB receives instructions for staple modes from the copier and sends drive pulses (SPSWHA, SPSWHA*, SPSWHB, SPSWHB*) to the motor driver circuit.

The motor driver circuit drives the stapler unit drive motor (M4) based on these signals.

To hold the stapler unit swing motor (M4), the output timing of the pulse signals (A, A*, B, B*) is fixed.

D. Paper Retaining Operation

1. Outline

Paper is retained during stapling. The paper holding arm holds down the copy paper by means of staple rollers when the stapler unit swings open. At the same time, the bin support arm on the stapler unit holds the bin down from below to ensure that stapling is stable.

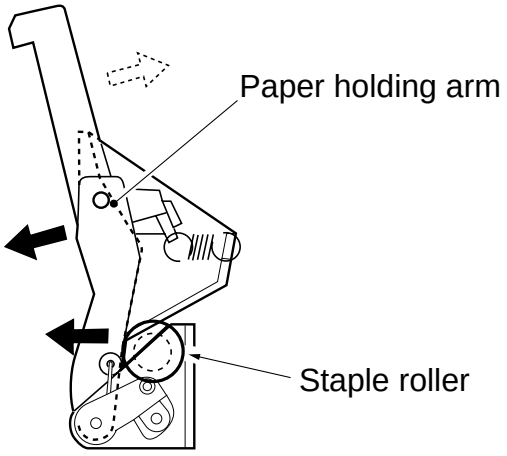

Figure 2-411

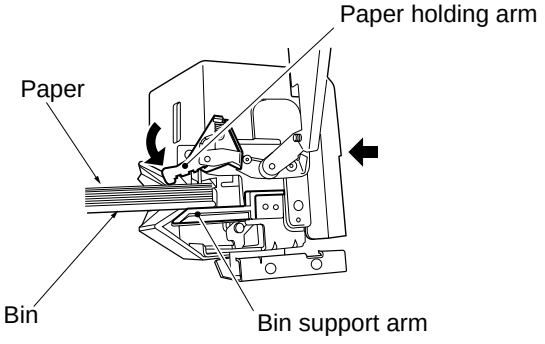

Figure 2-412

E. Sequence of Stapling Operation (3originals, 3copies)

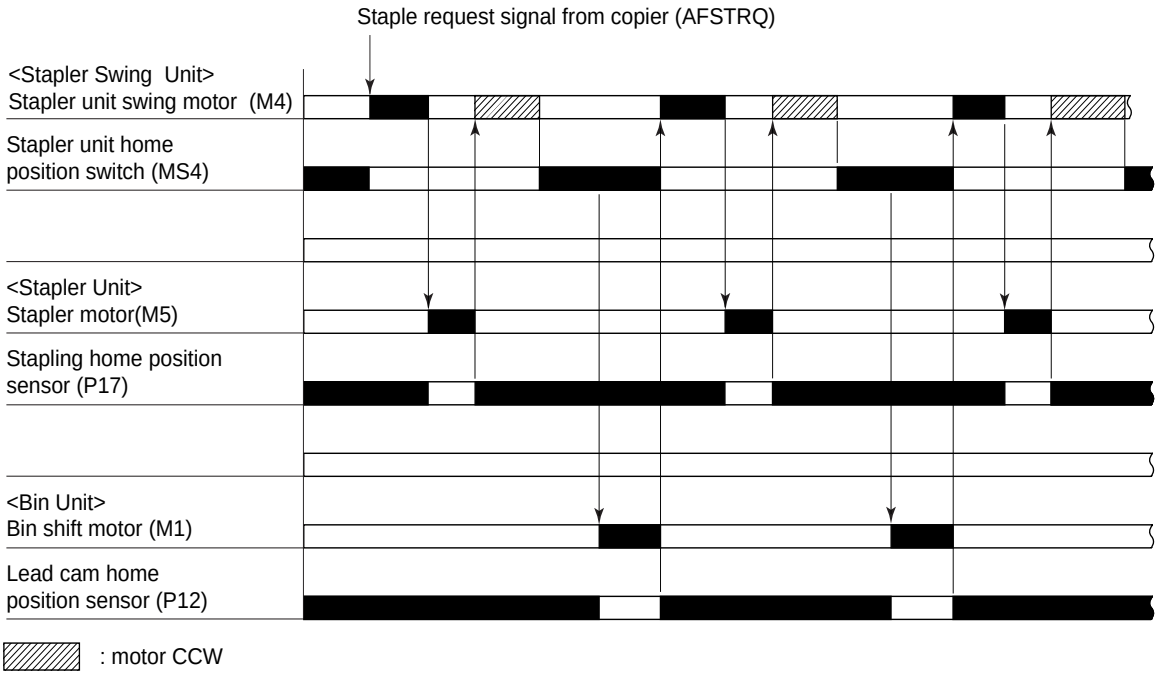

Figure 2-413

V. BIN UNIT DRIVE SYSTEM

A. Outline

The bin unit drive system consists of the following drive systems:

- bin drive system
- guide bar drive system

The bin moves up and down by the drive from the bin shift motor (M1).

The guide bar is driven by the guide bar motor (M3), serving to keep the delivered copies in order.

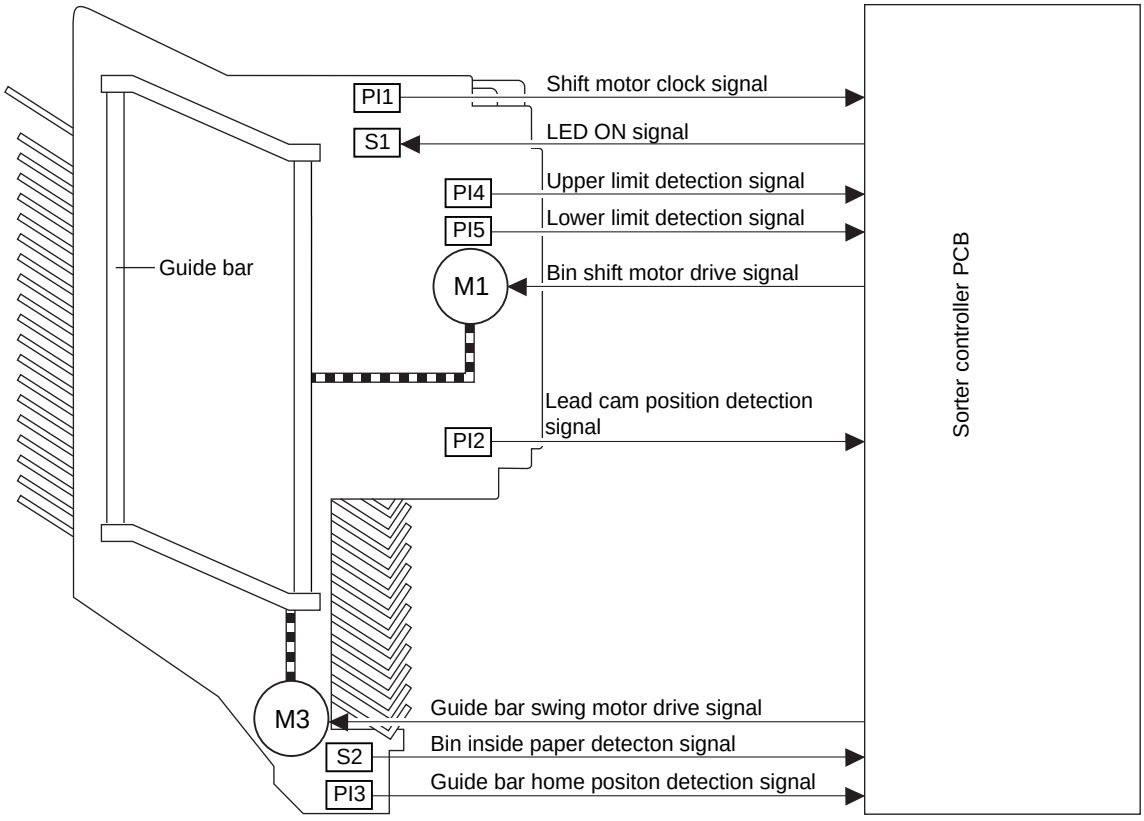

Figure 2-501

B. Bin Unit

1. Construction of the Bin Unit

The bin unit is constructed as shown in Figure 2-502.

On both ends of each bin are found rolls attached from outside the bin frame.

And the lower dummy roller (L) has the eccentric construction, which is used for adjusting the height of bin roller. (Refer to page 5-5 for adjustment.)

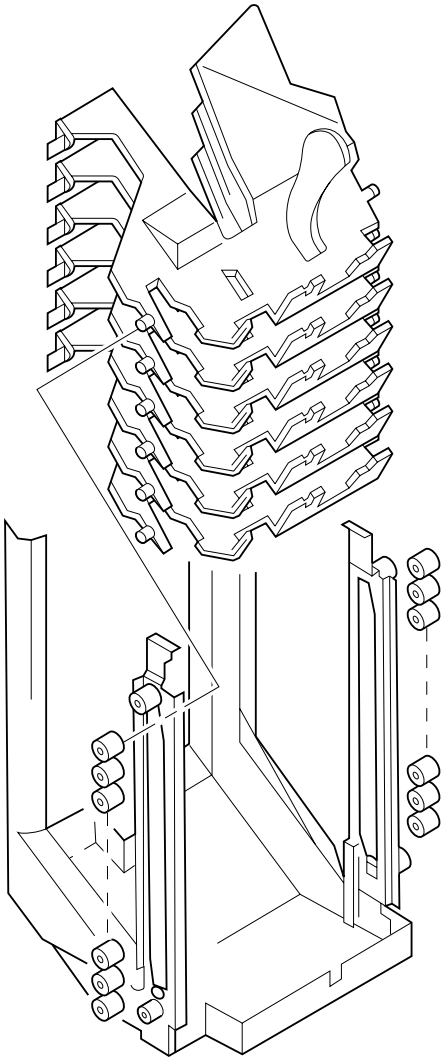

Figure 2-502

2. Lead Cams

The lead cam is installed so that it engages with the rolls of the bin unit. The lead cam is driven by the bin shift motor (M1), which is capable of rotating both clockwise and counterclockwise.

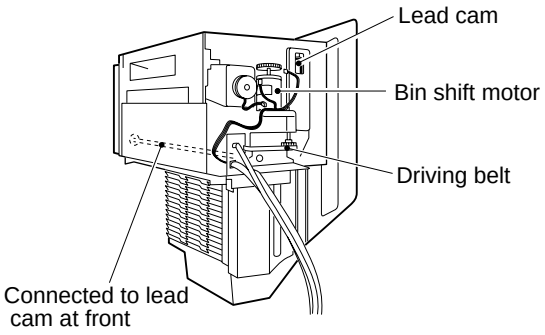

Figure 2-503

When the read cam rotates and the rolls move up and down along the slope of the lead cam, the bins connected to the rolls and the bin frame move up or down.

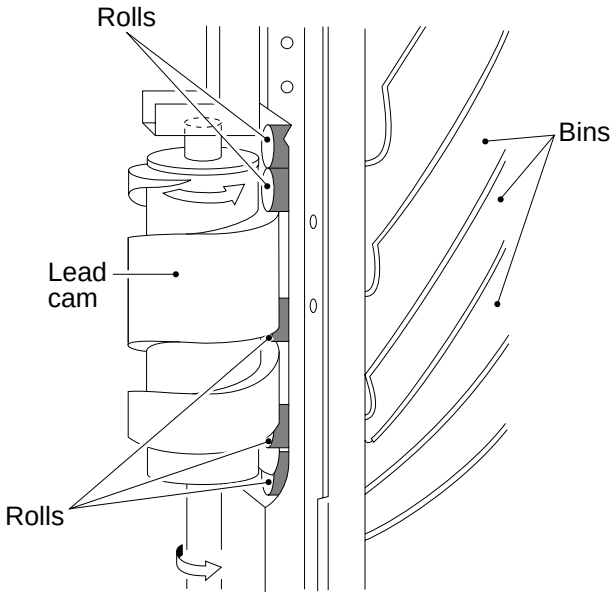

Figure 2-504

If the groove of the lead cam was sloping all the way through, the weight of the bin unit when the bins are at rest would cause the lead cam to rotate. To prevent such a problem, the groove of the lead cam is given a level portion as shown in Figure 2-505. The lead cam position sensor (PI2) serves to make sure that the rolls are at level portions when the bin unit is at rest.

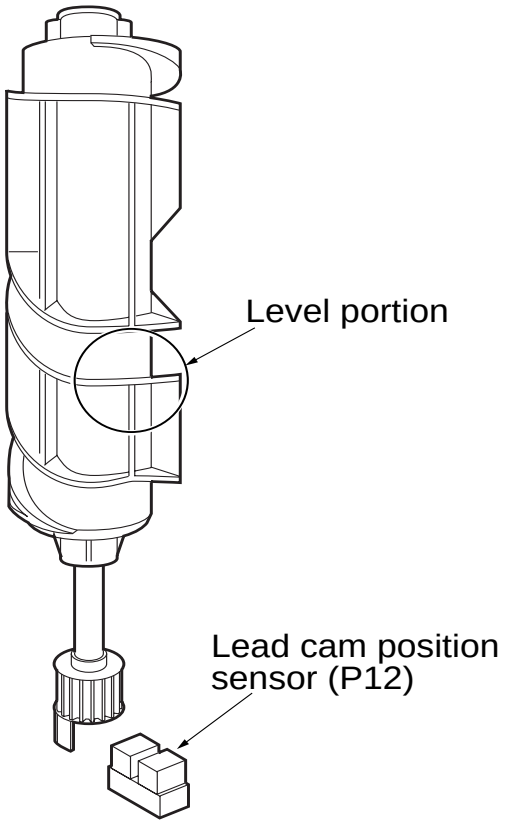

Figure 2-505

3. Controlling the Bin Shift Motor

Figure 2-506 shows the control circuit for the bin shift motor.

The bin shift motor (M1) is a DC motor. This motor is controlled by the drive circuit to raise and lower the bin unit.

The bin unit raise/lower speed is detected and controlled by the shift motor clock sensor.

The stop position of the bin unit is detected by the lead cam home position sensor.

When the stapler unit is not at the home position, the 24 V power supply is cut off by the stapler home position switch to prevent the rotation of the bin shift motor in order to avoid a collision of the bin unit and the stapler unit.

Overrun is prevented by the bin unit upper and lower limit sensors.

A current detection circuit is also provided to detect overcurrent when the bin unit contacts a foreign object to stop the bin unit.

When an obstacle is found under the bin unit raising the lead cam, the objection detection switch opens and the shift motor stops transmitting clock signals to the CPU. Therefore the CPU terminates the shift motor.

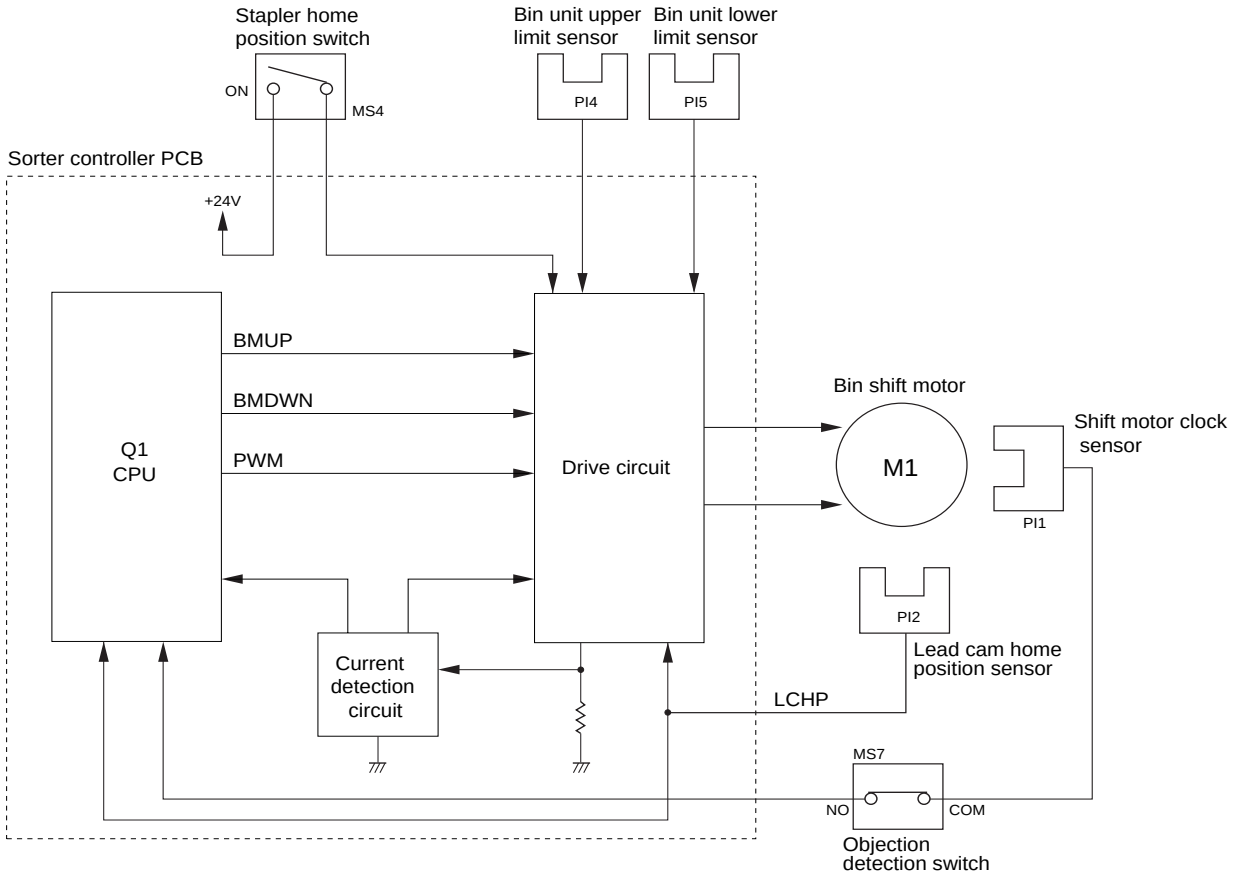

Figure 2-506

4. Controlling the Rotation of the Bin Shift Motor

The bin shift motor used to drive the lead cam is controlled based on the copy speed data from the copier so that it rotates intermittently.

The microprocessor on the sorter controller PCB controls the revolution of the bin shift motor so that a single bin shift may be executed within the gap between two sheets of copy paper.

The microprocessor on the sorter controller controls the bin shift motor as follows:

• delivery: The bin roller is swung to a position parallel to the lead cam to stop the bin roller.
• feeding: executes a single bin shift.

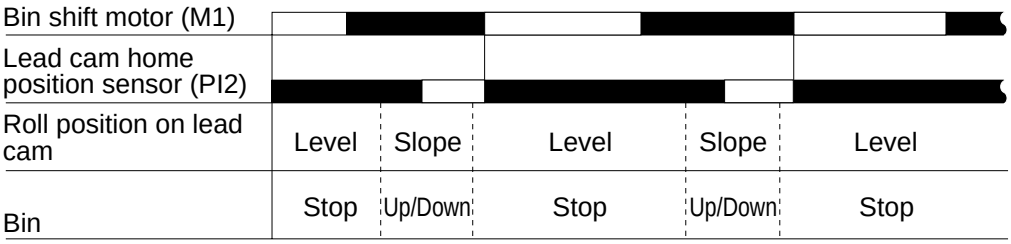

Figure 2-507

C. Controlling the Guide Bar

1. Outline

The guide bar is found inside the bin unit and is designed to swing as shown in Figure 2-508.

The guide bar has the following functions:

1. arranges copies into order

The guide bar is driven by the guide bar swing motor (M3).

The guide bar home position sensor (PI3) is used to detect the presence of guide bar at its home position.

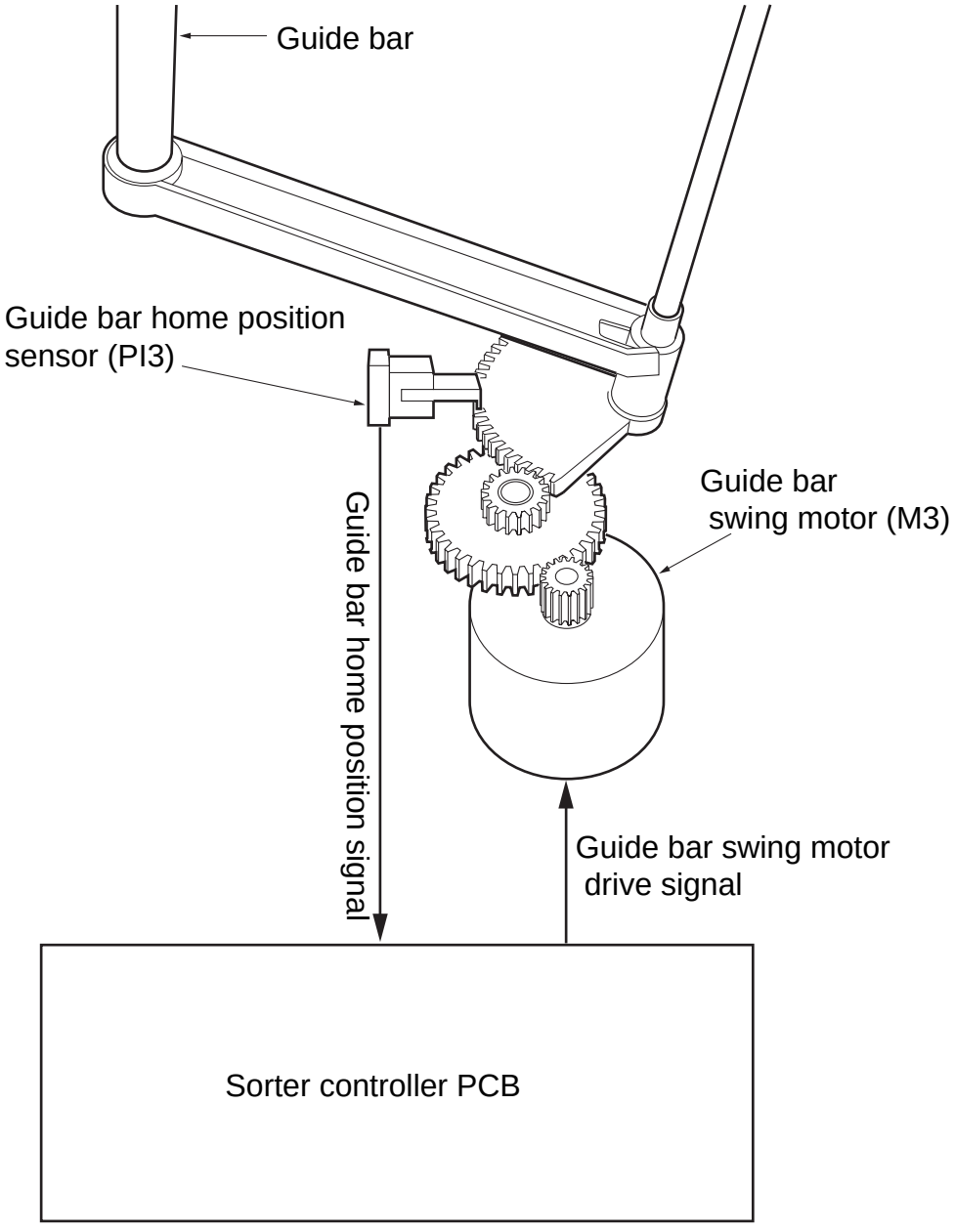

Figure 2-508

2. Putting Copies into Order

The guide bar operates to put copies into order each time a copy is delivered. It also serves to hold the copies in place at time of stapling.

The swing width of the guide bar is determined based on the paper size signal from the copier .

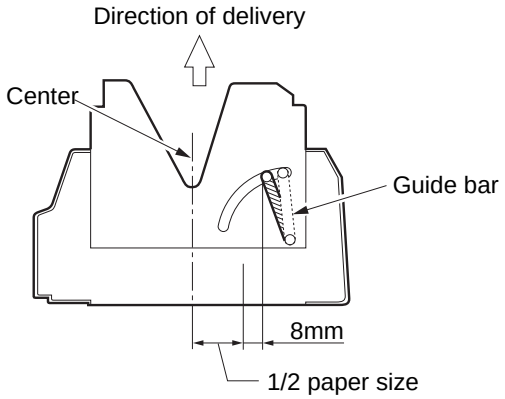

Figure 2-509

3. Controlling the Guide Bar Swing Motor (M3)

Figure 2-510 shows the circuit that controls the guide bar swing motor (M3).

The guide bar swing motor is a 4-phase control stepping motor.

The sorter controller PCB sends drive pulses (GBMA, GBMA*, GBMB, GBMB*) and the reference current level signal (GBMAJ) to the motor driver.

The motor driver controls the output timing of the pulse signals A, A*, B, and B* to turn on and off the guide bar swing motor (M3) and to change its direction of rotation.

To hold the guide bar swing motor (M3), the output timing of the pulse signals A, A*, B, and B* is fixed.

When the excess current flows into the circuit, fuse (ICP2) shuts the power supply circuit and stops the guide bar swing motor (M3).

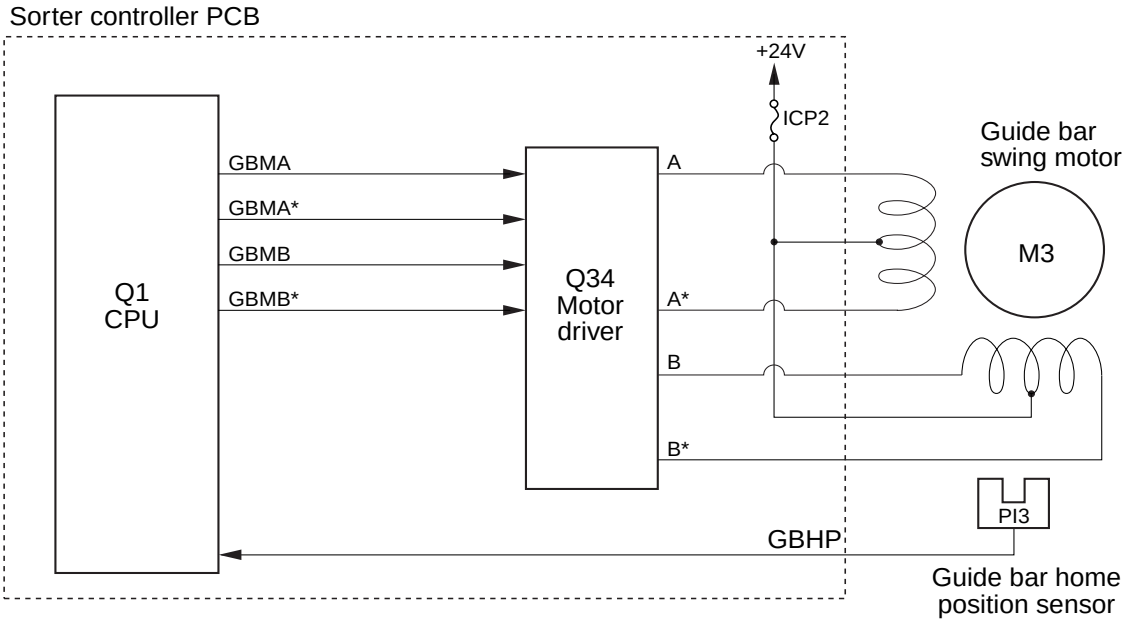

Figure 2-510

D. Bin Inside Paper Sensor

1. Outline

The bin inside paper sensor consists of a LED and a phototransistor and is used to detect the presence/absence of paper inside the bin. On this machine, the paper detection level is automatically offset at fixed intervals to prevent malfunction caused by changes in light intensity on the sensor.

Caution

While the paper detection level is being offset, erroneous offset values are memorized when the light-receiving unit (S2) senses external light and other strong light.

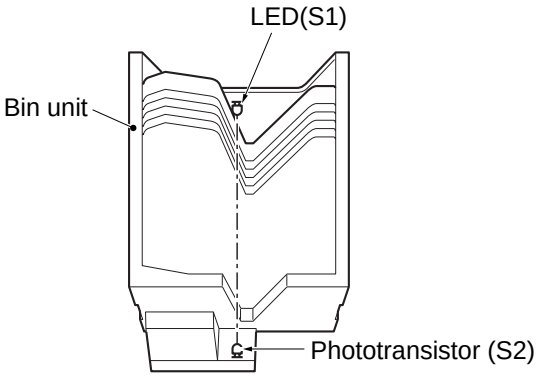

Figure 2-511

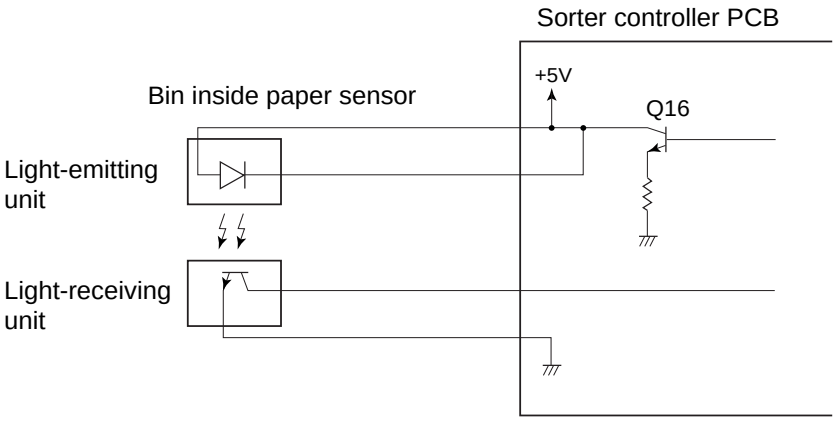

Figure 2-512

E. Other Sensors

1. Bin Unit Lower Limit Sensor (home position sensor)

The bin unit returns to the home position when the Copy Start key is turned ON or when all delivered paper in the bin is removed.

When this happens, the actuator integrated in the bin unit is released from the bin unit lower limit sensor (PI4) and the sensor comes ON. A signal is then sent to the CPU on the sorter controller PCB.

When the bin unit attempts to fall lower than the home position, the lead cam home position sensor is turned OFF and the lower limit is detected. The sorter controller PCB immediately stops the drive of the bin shift motor (M1). At the same time, the control panel on the copier indicates an error code.

2. Bin Unit Upper Limit Sensor

The bin unit upper limit sensor on this machine is detected by the actuator integrated in the bin unit and the bin unit upper limit sensor (PI5).

When an abnormality occurs and the bin unit attempts to rise above bin No.20, the actuator is released from the upper limit sensor, and the sensor is turned ON. A signal is sent to the CPU on the sorter controller PCB and the drive of the bin shift motor (M1) is immediately stopped. At the same time, the control panel on the copier indicates an error code.

■ Resetting

Turn off and then on the copier.

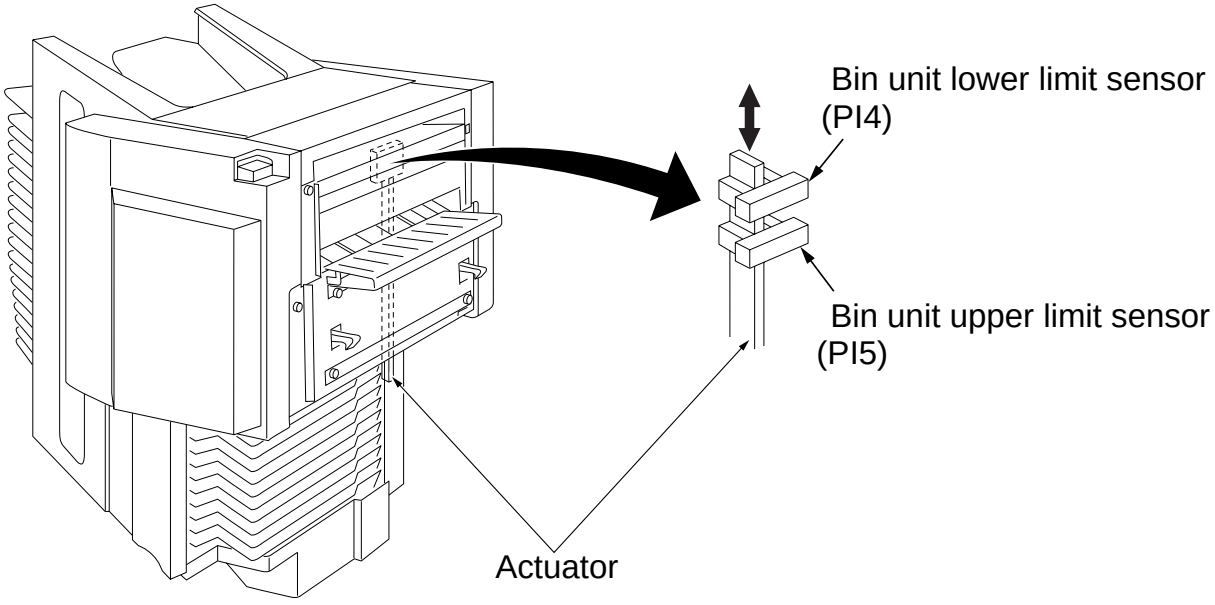

Figure 2-513

VI. POWER SUPPLY

Figure 2-601 indicates the power supply route on this machine.

This machine is supplied with 24 V power from the copier.

24VP passes through the circuit breaker and joint switch to become 24VC to be supplied to the feeder motor and the guide bar swing motor. 24VC also passes through the stapler cover switch to become 24BR to be supplied to the stapler unit swing motor. 24VR passes through the stapler home position to become 24VB to be supplied to the bin shift motor. It also passes through the obstacle detection switch to be supplied to the stapler motor.

The upper and lower limits of the bin unit on this machine are detected by a photointerruptor. The detection signal from this photointerruptor enters the CPU to control the operation of the bin shift motor.

The power supply on the logic system (5 V) is formed from the 24V power supply and is controlled by the regulator IC on the sorter control circuit PCB.

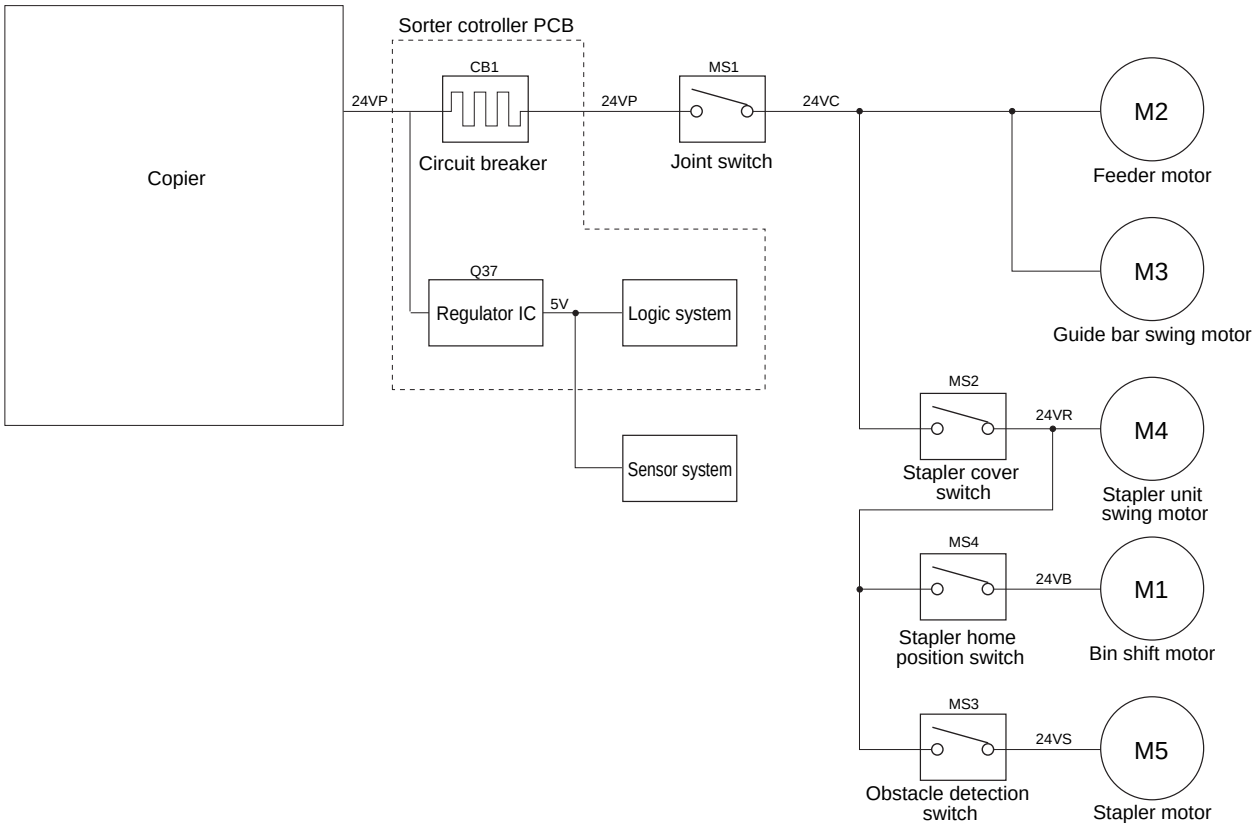

Figure 2-601

CHAPTER 3

MECHANICAL SYSTEM

1. ⚠ Disconnect the power cord for safety before disassembly or reassembly work.
2. Group the screws by type (length and diameter) and location.
3. The fixing screw for the grounding wire and varistors is fitted with a washer to ensure electric continuity; be sure to use the washer for reassembly.
4. If possible, avoid operating the machine with any of its parts removed.
5. Unless otherwise noted, reassembly is the reverse of disassembly.

I. EXTERNALS ---------- 3-1
II. BIN UNIT ---------- 3-2
III. FEEDING GUIDE UNIT ---------- 3-8
IV. STAPLER UNIT ---------- 3-9
V. STAPLER SWING UNIT ---------- 3-10

I. EXTERNALS

A. External Covers

Remove the covers as necessary to clean, inspect, or repair the inside of the machine.

Those covers that can be removed simply by removing mounting screws are omitted from the discussions.

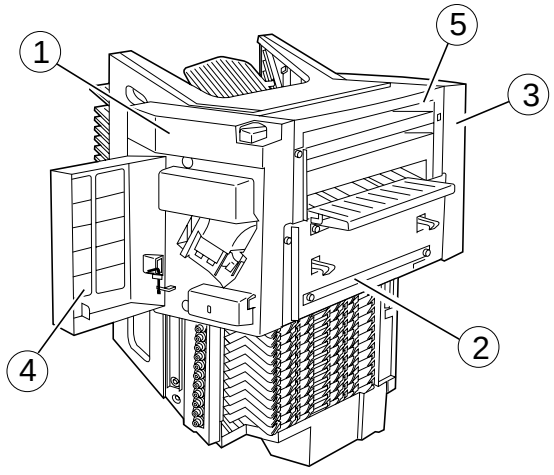

① Front cover (2)
② Right cover with entrance guide (4)
③ Rear cover (2)
④ Stapler unit cover
⑤ Feeding guide unit

Figure 3-101

The number in parentheses indicates the number of mounting screws used.

Caution:
Connectors are attached behind the control panel; take extra care not to damage them when removing the upper cover.

B. Feeding Guide Unit

1) Remove the front cover.
2) Remove the screw ② to take out the latch lever holder ①.

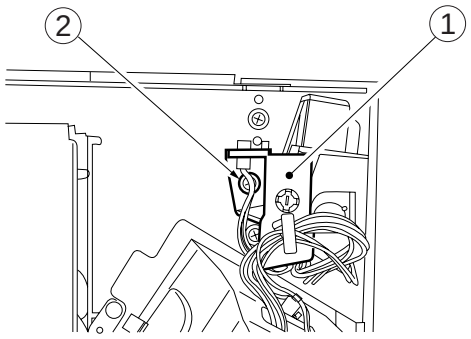

Figure 3-102

3) Remove the latch lever ③ , the latch ④ and latch stay ⑤.
4) Remove the screw ⑥ and the feeding guide unit ⑦.

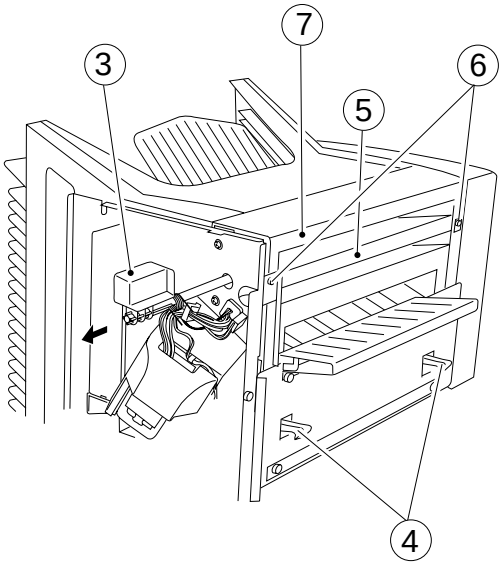

Figure 3-103

II. BIN UNIT

A. Removing the Bin Unit

1) Remove the front, right and rear covers.
2) Disconnect four connectors ① from the sorter controller PCB.
3) Remove two screws ③ to take out the signal code plate ②.

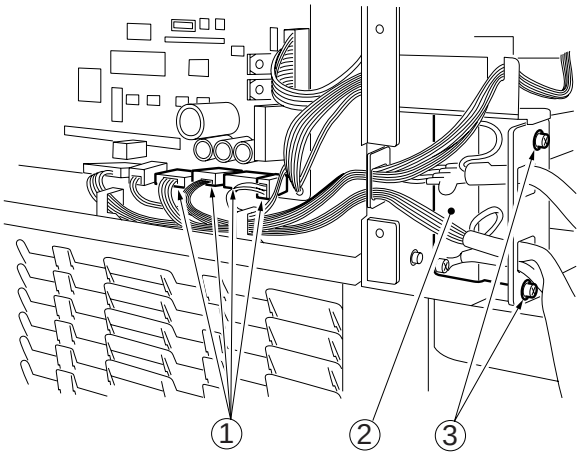

Figure 3-201

4) Remove two front screws ④ and two rear screws.
5) Lift up the hook ⑤ on the slide rail, and remove the bin unit in the direction shown in the figure.

Caution:
Bin unit weight
About 10 kg

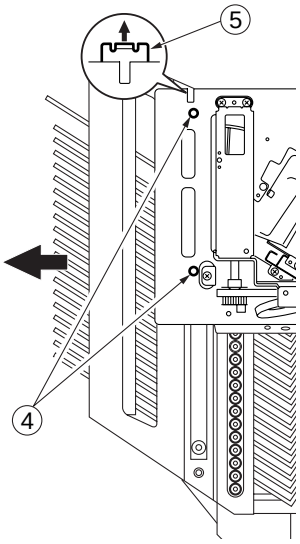

Figure 3-202

6) After removing the bin unit, place it as shown in the figure below.

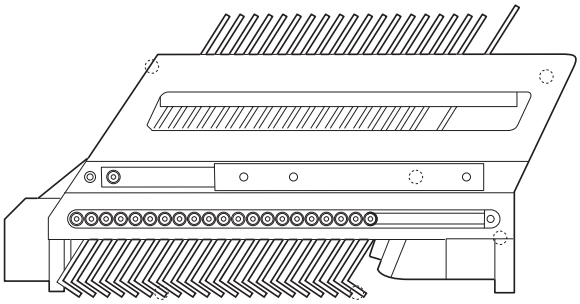

Figure 3-203

Caution

When you install the bin unit, place it on the lead cam from above the sorter body and rotate the clock disk on the shift motor to engage bins with the lead cam.

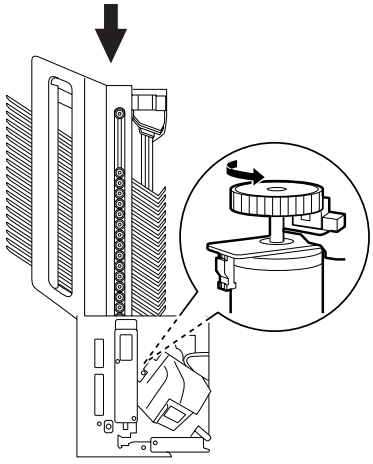

Figure 3-203-2

B. Removing the Bins

When you take out the bins, the bin rollers should be removed. However, removing them more than twice impairs their strength as they are slot-in rollers. For this reason, the bin rollers must be replaced. If you replace the No.1 to No.13 bins, you should disassemble from above. If you replace bins lower than these, you should disassemble from below.

1. Replacing the Bins from Above

1) Remove the bin unit from the sorter and place it on its side on a workbench.
2) Remove two screws (2) each at the front and rear to take out the front and rear slide rails (1).
3) Remove three front screws and four rear screws to take out bin front cover (3) and the bin rear cover.

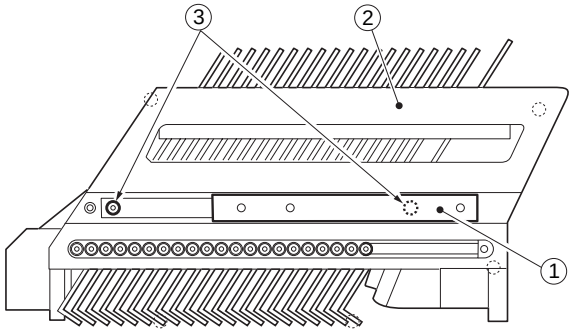

Figure 3-204

4) Remove the four screws (5) to take out the bin top cover (4).

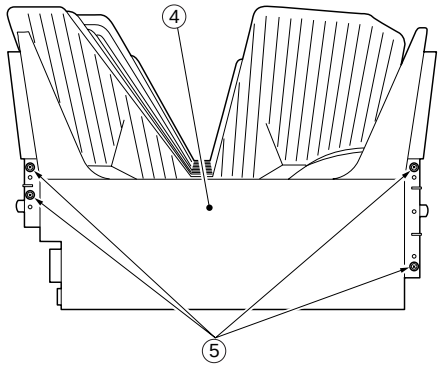

Figure 3-205

5) Remove the screw (8) to take out the spring (7) on the guide bar holder (6).

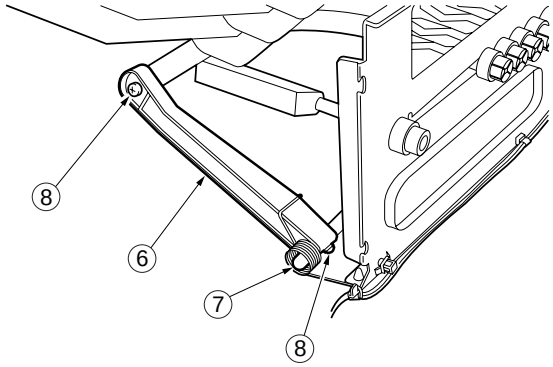

Figure 3-206

6) Remove the required number of bin roller stoppers (9) and bin rollers (10) to take out the bins.

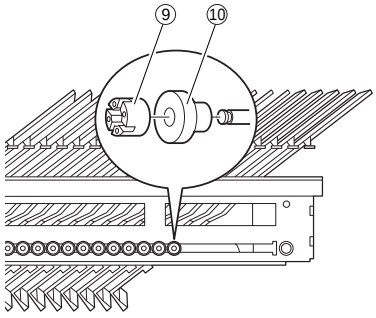

Figure 3-207

2. Replacing the Bins from Below

1) Remove the screw (2) to take out the bin lower unit cover (1).

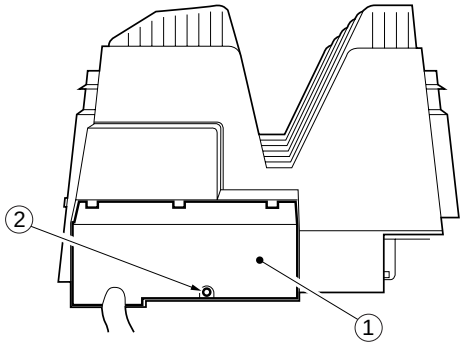

Figure 3-208

2) Remove the tie-wrap (3) and two connectors (4).

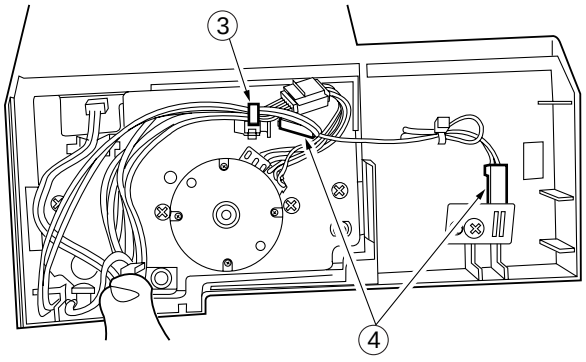

Figure 3-209

3) Draw out wiring (5) on the through sensor in the direction shown in the figure.

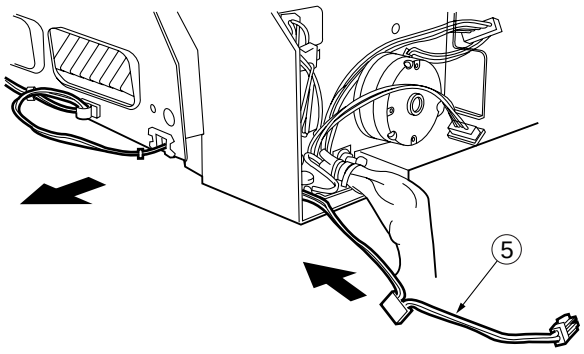

Figure 3-210

4) Remove two screws (7) on the guide bar holder (6).

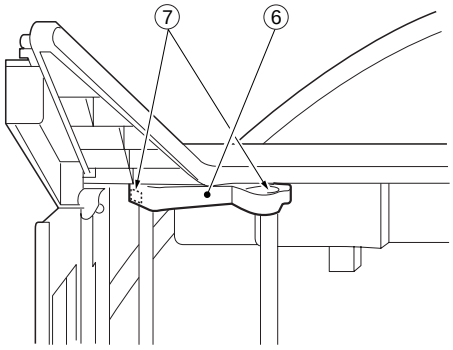

Figure 3-211

5) Remove four screws (9) to take out the bin lower unit (8). The bin lower unit must be drawn out while removing the guide bar holder from the guide bar.

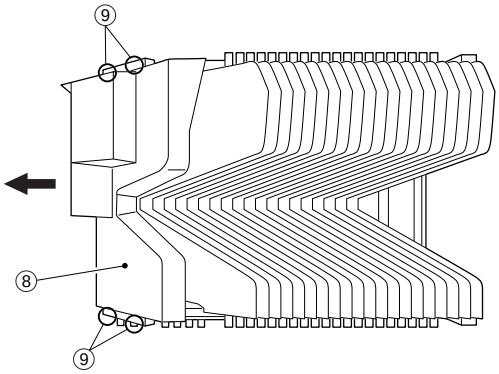

Figure 3-212

6) Remove the required number of bin roller stoppers and bin rollers to take out the bins.

Caution

When you assemble the bins, check the locks of the bin roller stoppers. Replace the locks if they are damaged. After you have assembled the bin unit, make sure that the bin roller stoppers are not loose.

C. Removing the Bin Shift Motor (M1)

1) Remove the rear cover.
2) Remove the screw ② to take out the feeder motor clock sensor installation plate ①.
3) Disconnect the connector ③ and draw the tie-wrap ④ through the hole in the plate.
4) Remove two screws ⑤ to take out the bin shift motor.

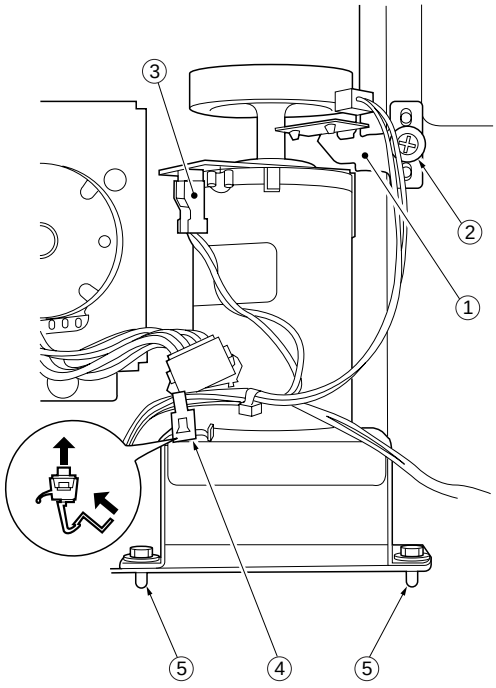

Figure 3-213

D. Lead Cam

1. Removing the Lead Cam

1) Turn the copier power ON and press SW2 on the sorter controller PCB to move the bin unit to the lowest position.

Caution

If you remove the front and rear lead cams at the same time, the bin unit will fall suddenly. For this reason, be sure to remove the lead cams one at a time.

2) Remove the E-ring ① to take out the sensor flag ② and gear ③.

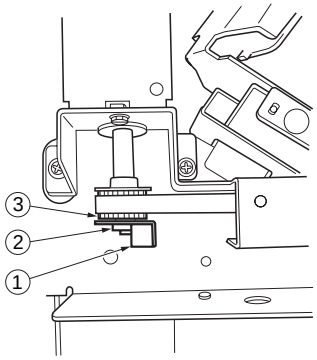

Figure 3-214

3) Remove three screws ④ to take out the lead cam unit ⑤.

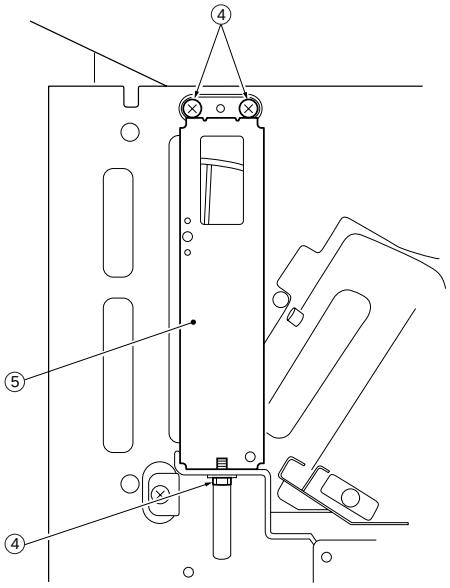

Figure 3-215

2. Adjusting the Position of the Lead Cam

1) Remove E-ring ② of gear ① for driving the front lead cam.

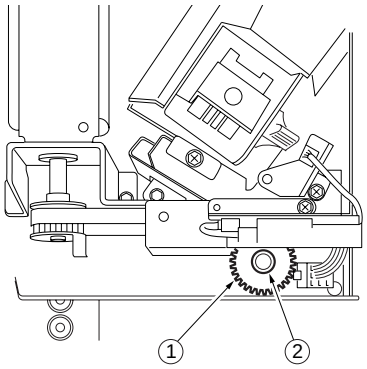

Figure 3-216

2) Adjust the engagement of the gear ① for driving the lead cams so that the tips of the blade on the front and rear lead cams are at the positions shown in the figure below.

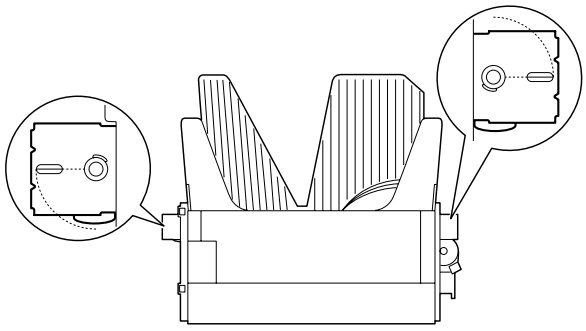

Figure 3-217

3) Attach the E-rings.

Caution:

When you assemble the flag ① for the lead cam home position, be sure to match the phases of the flag ① and tips ② on the bottom of the lead cam as shown below.

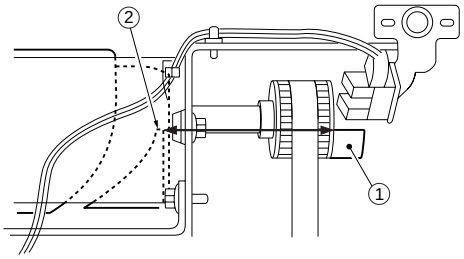

Figure 3-218

E. Removing the Guide Bar Swing Motor (M3)

1) Raise the bin to the topmost position to facilitate maintenance.
2) Remove the screw ① to take out the bin lower unit cover ②.

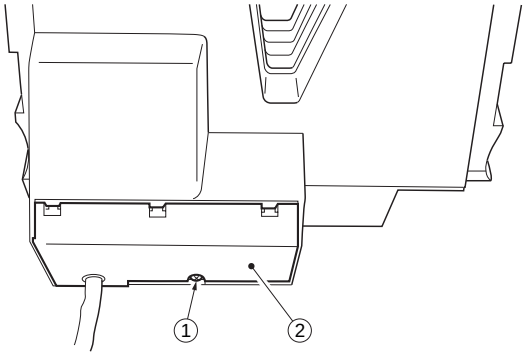

Figure 3-219

3) Disconnect the connector ③ and remove two screws ④ to take out the guide bar motor ⑤.

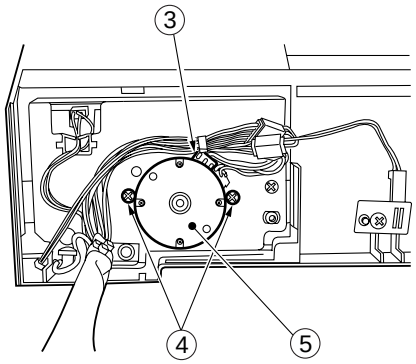

Figure 3-220

III. FEEDING GUIDE UNIT

A. Removing the Feeding Guide Unit

1) Remove the front cover.
2) Remove the screw ② to take out the latch lever holder ①.

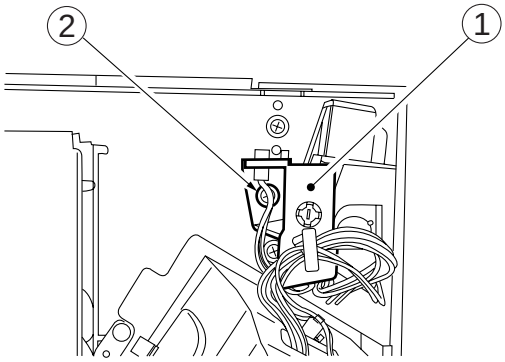

Figure 3-301

3) Remove the latch lever ③, the latch ④ and the latch stay ⑤.
4) Remove the screw ⑥ to take out the feeding guide unit ⑦.

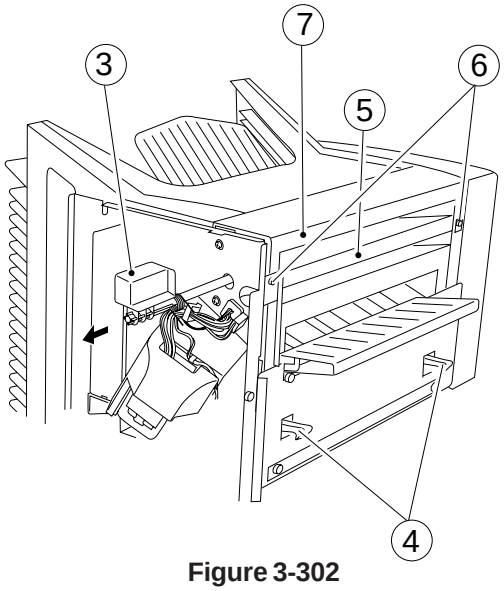

Figure 3-302

B. Removing the Feeder Motor (M2)

1) Remove the rear cover.
2) Disconnect the connector ① and remove two screws ② to take out the feeder motor ③.

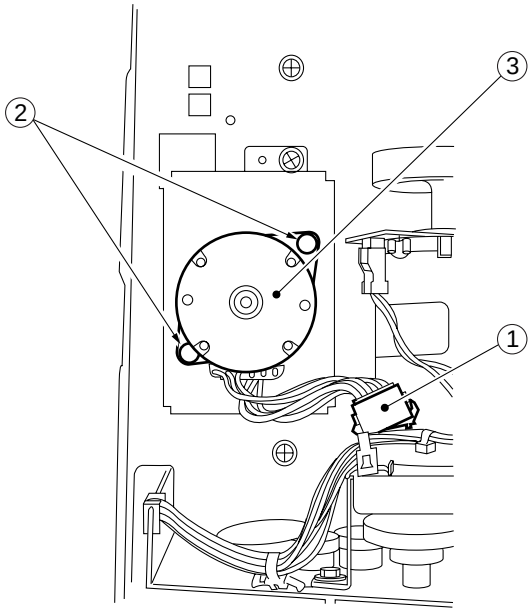

Figure 3-303

C. Removing the Feed Roller

1) Remove the right cover, front cover, feeding guide unit, rear cover and feeder motor.
2) Remove feed roller block ① and gears ②.
3) Remove screw ③, and then, remove the feed roller holder ④.
4) Remove the feed roller ⑤

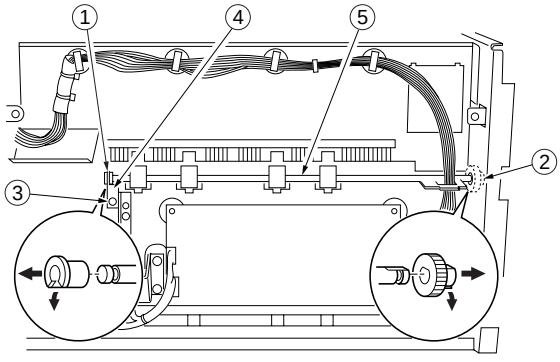

Figure 3-304

IV. STAPLER UNIT

A. Removing the Stapler Unit

1) Remove the front cover.
2) Disconnect the connector ① and two tie-wraps ②.
3) Remove the screw ③ to take out the stapler unit ④.

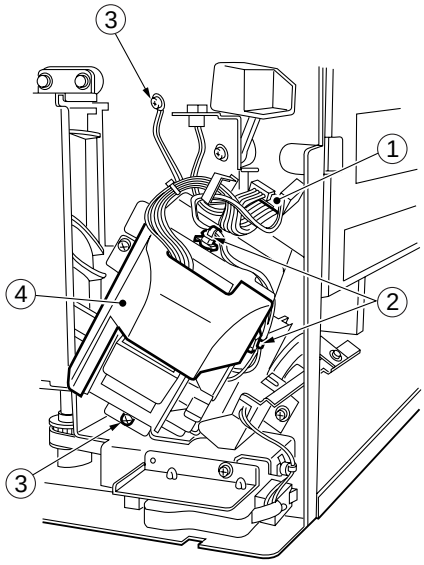

Figure 3-401

V. STAPLER SWING UNIT

A. Removing the Stapler Unit Swing Motor (M4)

1) Remove the right cover.
2) Disconnect the connector (1) and remove two screws (2) to take out the stapler unit swing motor (3).

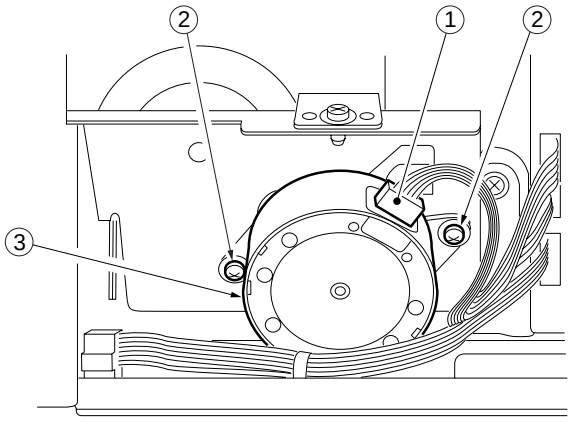

Figure 3-501

B. Removing the Stapler Swing Unit

1) Remove the right cover, stapler unit swing motor and front cover.
2) Disconnect three connectors (1) and three tie-wraps (2).
3) Remove the screw (3) to take out the stapler unit (4).
4) Remove the screw (5) to take out the stapler cover switch unit (6).

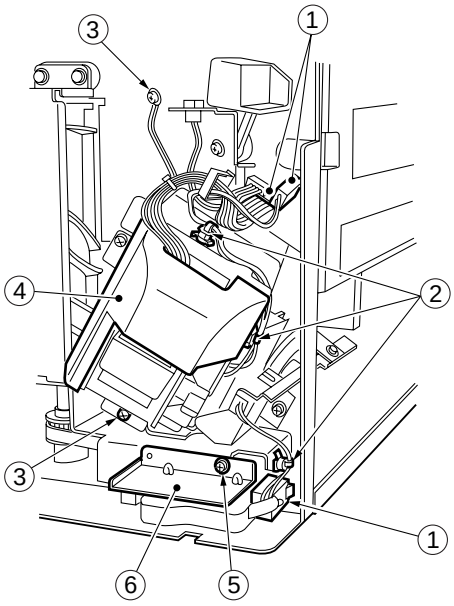

Figure 3-502

5) Remove four screws (7) to take out the stapler swing unit (8) towards you.

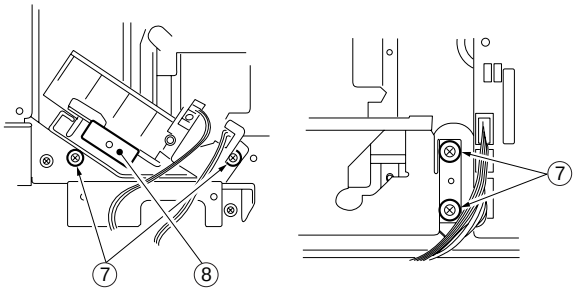

Figure 3-503

CHAPTER 4

MAINTENANCE AND SERVICING

I. PERIODICALLY REPLACED PARTS ---------- 4-1
II. DURABLES AND CONSUMABLES ---------- 4-1
III. PERIODICAL SERVICING ---------- 4-1

I. PERIODICALLY REPLACED PARTS

The machine does not have parts that must be replaced on a periodical basis.

II. DURABLES AND CONSUMABLES

Some parts of the machine may have to be replaced once or more over the period of its warranty. Replace them when they are found to be faulty.

No.	Parts name	Q'ty	Life	Remarks
1	Stapler	1	200,000*	A single staple cartridge may be used for 5,000 stapling operations.

*Stapling operations.

III. PERIODICAL SERVICING

△ : clean ● : replace × : lubricate □ : adjust ◎ : inspect

No.	Item	Maintenance intervals (see Note)	Remarks
1	Feed roller, Roll	△	
2	Feeding guide	△	
3	Static eliminating brush	△	
4	Paper sensor	△	
5	Staple pouching assembly	△	
6	Bin	△	

Note:
Provide maintenance at intervals used for the host copier (counter reading) and the minimum maintenance intervals for the machine.

CHAPTER 5

TROUBLESHOOTING MALFUNCTIONS

I. STANDARDS AND ADJUSTMENTS ---------- 5-1
II. TROUBLESHOOTING ---------- 5-7
III. ARRANGEMENT OF ELECTRICAL PARTS ---------- 5-11
IV. VARIABLE RESISTORS (VR), LIGHT-EMITTING DIODES, AND CHECK PINS BY PCB ---------- 5-15
V. SELF DIAGNOSIS ---------- 5-20

I. STANDARDS AND ADJUSTMENTS

A. Electrical

1. When Replacing the Major Parts

Major parts	Work
• Sorter controller PCB	1. Adjustment of the bin inside paper sensor sensitivity 2. Adjustment of the guide bar swing range 3. Adjustment of the stapler unit swing motor range (adjustment of the stapling position)
• Bin inside paper sensor (S1, S2)	1. Adjustment of the bin inside paper sensor sensitivity
• Guide bar home position sensor (PI3)	1. Adjustment of the guide bar swing range
• Guide bar swing motor (M3)	1. Adjustment of the guide bar swing range
• Stapler unit swing motor (M4)	1. Adjustment of the stapler unit swing motor range (adjustment of the stapling position)

Table 5-101

2. Adjusting the Bin Inside Paper Sensor Sensitivity

Make the following adjustments whenever you have replaced the following parts:

- sorter controller PCB
- bin inside paper sensor (S1, S2)

Caution:

This adjustment should be carried out with the bin unit completely assembled and attached.
If you carry out this adjustment with the covers removed, the sensor detects external light, and this may prevent correct adjustment.

Making Adjustments

1) Remove all paper from the bins.
2) Remove the right cover, and set the bits of the DIP switch (SW1) on the sorter controller PCB as follows:

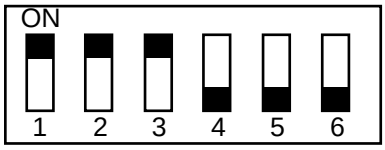

Figure 5-101

Do not change the position of pin No.6. This pin is for selecting the communication system with the copier.

3) Press the staple key on the control panel.

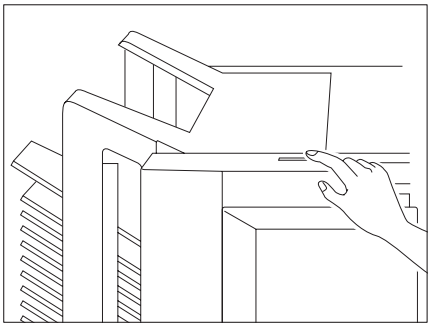

Figure 5-102

4) Check the state of the staple key:
   on: adjustment done
   flashing: adjustment error
5) If the staple key is flashing, turn off and then on the copier; then, check the bin inside paper sensor as identified by the error (light-emitting side, light-receiving side), and go back to step 1).
6) After adjustment, return the bits of the DIP switch (SW1) to their initial positions.

3. Adjusting the Guide Bar Swing Range

Make the following adjustments whenever you have replaced the following parts:

- sorter controller PCB
- guide bar home position sensor (PI3)
- guide bar swing motor (M3)

Making Adjustments

1) Obtain a single sheet of A4 or LT copy paper.
2) Remove all paper from the bins.
3) Remove the right cover, and set the bits of the DIP switch (SW1) on the sorter controller PCB as follows; be careful, as the setting differs depending on the size of the copy paper being used:

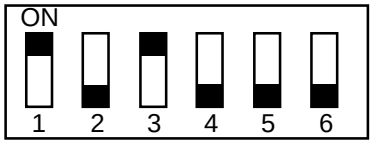

(for A4 copy paper)

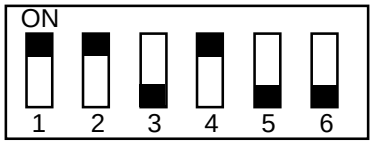

(for LT copy paper)

Figure 5-103

Do not change the position of pin No.6. This pin is for selecting the communication system with the copier.

4) Place a single sheet of A4 or LT copy paper in the bin as shown in Figure 5-104.

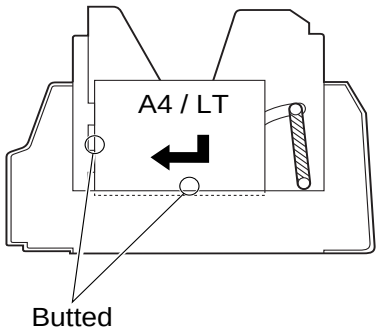

Figure 5-104 (top view)

5) Press the bin shift key (SW2, 3) to move the guide bar against the stack of copy paper.
   UP key : (SW3) to move the guide bar closer to the stack.
   DOWN key: (SW2) to move the guide bar away from the stack.

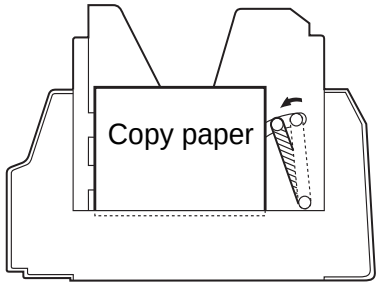

Figure 5-105 (top view)

6) While maintaining the condition in step 4), press the staple key on the control panel.
   • The guide bar returns to its home position and the adjustment value is memorized.

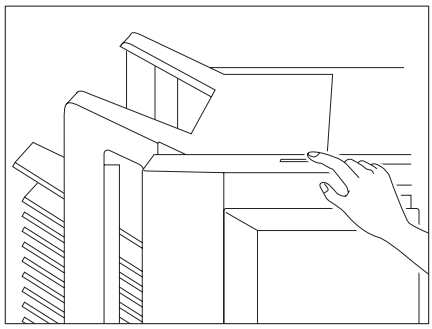

Figure 5-106

7) Check the state of the staple key.
   on: adjustment done
   flashing: adjustment error (guide bar stop position faulty)
8) If the staple key is flashing, check the guide bar home position sensor, and go back to step 4).
9) After making the adjustments, return the bits of the DIP switch (SW1) on the sorter controller PCB to their initial positions.

4. Adjusting the Stapler Unit Swing Position

(staple position adjustment)

Make the following adjustments whenever you have replaced the following parts:
- sorter controller PCB
- stapler unit swing motor
- stapler swing unit

Making Adjustments

1) Remove all paper from the bins and remove the right cover.
2) Set the bits of the DIP switch (SW1) on the sorter controller PCB as follows:

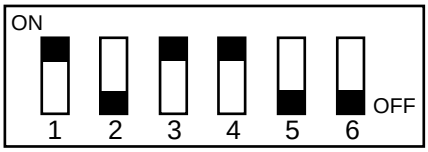

Figure 5-107

3) Place about five sheets of A4 or Letter-size copy paper in bin No.1 as shown in the figure below.

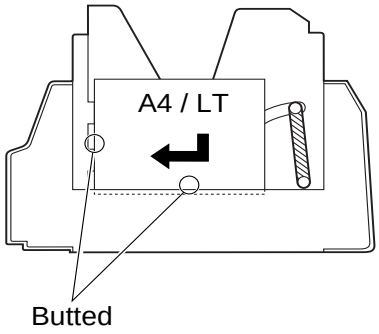

Figure 5-108

4) Press the push switch (SW3) on the sorter controller PCB to move the stapler swing unit to the staple position. To return the

stapler swing unit to its original position, press push switch (SW2).

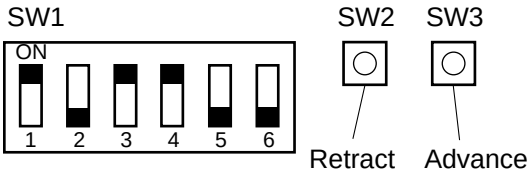

Figure 5- 109

5) Press the staple key on the sorter to staple the copy paper and check the staple position.

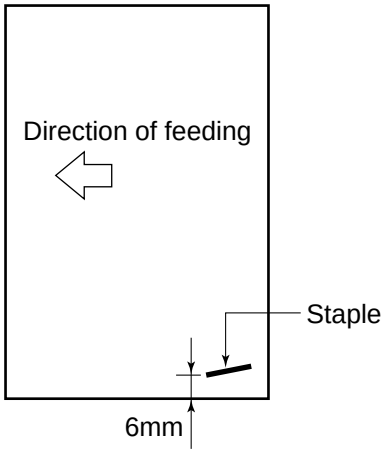

Figure 5-110

6) If the staple is stapled out of position, adjust the staple position by push switches (SW3, SW2).
7) After adjustment, return the bits of the DIP switch (SW1) to their initial positions and attach the right cover.

B. Mechanical System

1. Before Replacing the Part, Carry Out the Following Adjustment.

Part	Action
Bins & bin rolls	1. Adjusting the height of bin rolls 2. Adjusting parallelism of the guide bars

2. Adjusting the Height of the Bin Rolls

The bottom dummy roll is of an eccentric construction, allowing adjustment of the height of the bin roll and ultimately enabling adjustment of the height of contact between the tip of the lead cam and the bin roll.

If you have replaced the bin roll or re-installed it, check the dimensions; as necessary, change the angle at which at dummy roll is installed to adjust.

■ Making adjustments

Placing the bin unit upright, and measure the distance between the top dummy rol ① and the bin roll ②. If the distance is too large, turn the bottom dummy roll counterclockwise (Figure 5-111) so that the distance is as close to 97.1 mm as possible. (Turn it clockwise if the distance is too small.)

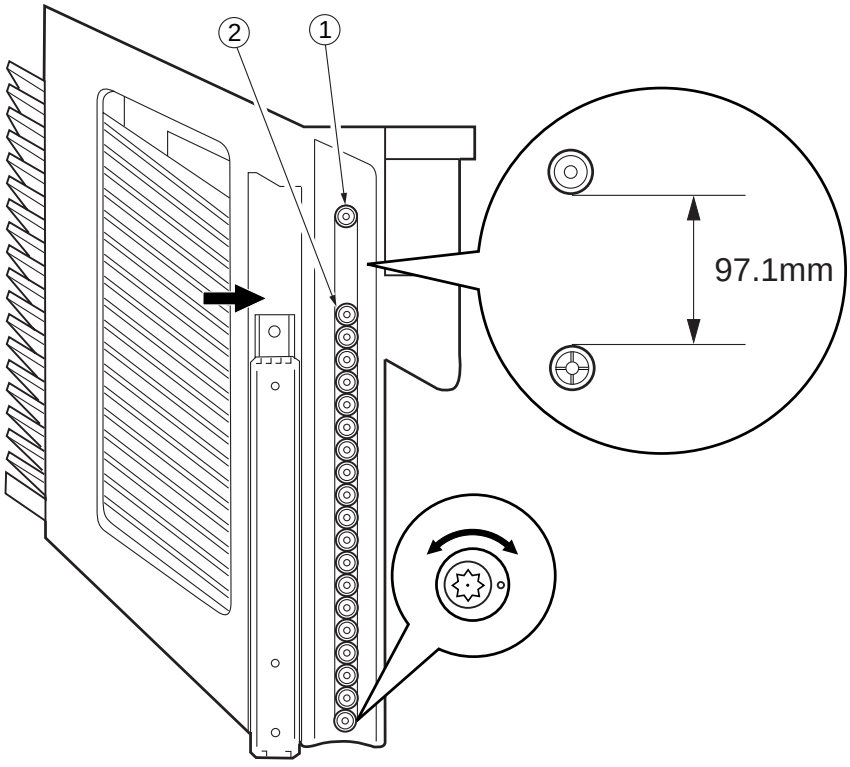

Figure 5-111

3. Adjusting Parallelism of the Guide Bars

Adjust the parallelism of the guide bars when the bin unit has been disassembled or when the upper mounting screws of the guide bars have been removed.

1) Adjustment Method
   Place about five sheets of B5 or A4-R paper in bins No.1 and No.20.
   Press the guide bar ① towards the alignment position so that it is flush against the paper.
   Check the contact between the paper in bins No.1 and No.2 and the guide bar. If the guide bar is not parallel against the side of the paper, loosen the screw ③ on the guide bar holder ② so that the guide bar becomes parallel.

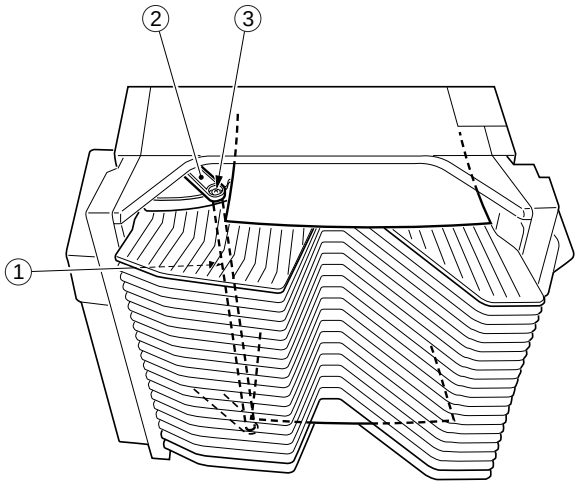

Figure 5-112

II. TROUBLESHOOTING

A. Troubleshooting Malfunctions

1. Bin inside paper sensor error (S1, S2)

Cause	Step	Checks	Results	Action
Cable	1	Is the cable between the sorter controller PCB and the bin unit connected correctly?	NO	Connect it correctly.
Cable	2	Is the cable of the bin inside sensor light-emitting unit (S1) and light-receiving unit (S2) connected correctly? (connector J302)	NO	Connect it correctly.
Bin inside sensor light-emitting unit (S1) and light-receiving unit (S2)	3	Are the bin inside paper light-emitting side (S1) and light-receiving side (S2) correctly installed?	NO	Install them correctly. If you have replaced the bin inside paper sensor light-emitting unit (S1) or light-receiving unit (S2), be sure to adjust the bin inside paper sensor sensitivity. (See p. 5-2 for details.)
Bin inside sensor light-emitting unit (S1) and light-receiving unit (S2)	4	Replace the bin inside paper sensor light-emitting unit (S1) and light-receiving unit (S2), and adjust the bin inside paper sensor sensitivity (p 5-2). Is the problem corrected?	YES	Replace the bin inside paper sensor light-emitting unit (S1) and light-receiving unit (S2), and adjust the bin inside sensor sensitivity. (See p. 5-2 for details.)
Sorter controller PCB			NO	Replace the sorter controller PCB, and adjust the bin inside paper sensor sensitivity, the guide bar swing range and the stapler unit swing motor range. (See p. 5-2 for details.)

2. Guide bar swing motor error

Cause	Step	Checks	Results	Action
Cable	1	Is the cable between the sorter controller PCB and the bin unit connected correctly?	NO	Connect it correctly.
Circuit breaker	2	Is the circuit breaker (CB1) on the sorter controller PCB on?	YES	Remove the cause that activated the circuit breaker, and press the circuit breaker.
24V power supply	3	Set the meter to the 50VDC range. Is the voltage between J1-1 (+) and J1-2 (-) on the sorter controller PCB about 24V?	NO	Check the copier's power supply.
Guide bar swing motor (M3)	4	Is there pulse output at the connectors J9-1, 3, 4, 6 on the bin unit control PCB in response to the activation of the guide bar swing motor? Moreover, is the voltage at J9-2 and -5 +24V?	YES	Check the wiring to the guide bar swing motor; if normal replace the guide bar swing motor.
Sorter controller PCB			NO	Replace the sorter controller PCB, and adjust the bin inside paper sensor sensitivity, the guide bar swing range and the stapler unit swing motor range. (See p. 5-2 for details.)

3. Stapler unit swing motor error

Cause	Step	Checks	Results	Action
Circuit breaker	1	Is the circuit breaker (CB1) on the sorter controller PCB on?	YES	Remove the cause that activated the circuit breaker, and press the circuit breaker.
24V power supply	2	Set the meter to the 50VDC range. Is the voltage between J1-1 (+) and J1-2 (-) on the sorter controller PCB about 24 V?	NO	Check the copier' s 24V power supply.
Stapler unit swing motor (M4)	3	Is there pulse output at the connectors J12-2 through -5 on the sorter controller PCB in response to the activation of the stapler unit swing motor? Moreover, is the voltage at J12-1 +24 V?	NO	Check the wiring to the stapler unit swing motor; if normal, replace the stapler unit swing motor.
Stapler unit swing home position switch (MS4)	4	Set the meter to the 50 VDC range. Make sure that the voltage across J6-3 (+) and J6-4 (-) on the sorter controller PCB is about 0 V when the stapler unit is at the swing home position sensor and about 24 V when it is not.	NO	Replace the stapler unit swing home position sensor (PI9).
Sorter controller PCB			YES	Replace the sorter controller PCB, and adjust the bin inside paper sensor sensitivity, the guide bar swing range and the stapler unit swing motor range. (See p. 5-2 for details.)

4. Bin shift motor error

Cause	Step	Checks	Results	Action
Cable	1	Is the cable between the bin drive motor and the sorter controller PCB connected correctly?	NO	Connect it correctly.
Circuit breaker	2	Is the circuit breaker (CB1) on the sorter controller on?	YES	Remove the cause that activated the circuit breaker, and press the circuit breaker.
24V power supply	3	Set the tester to the 50VDC range. Is the voltage between J1-1 (+) and J1-2 (-) on the sorter controller PCB about 24 V?	NO	Check the copier' s 24V power supply.
Bin shift motor (M1)	4	Is the voltage between J8-1 and J8-2 on the bin shift motor drive PCB in response to the activation of the bin shift motor (M1) about 24V?	NO	Check the wiring to the bin shift motor; if normal, replace the bin shift motor.
Sorter controller PCB			NO	Replace the sorter controller PCB, and adjust the bin inside paper sensor sensitivity, the guide bar swing range and the stapler unit swing motor range. (See p. 5-2 for details.)

III. ARRANGEMENT OF ELECTRICAL PARTS

A. Sensors

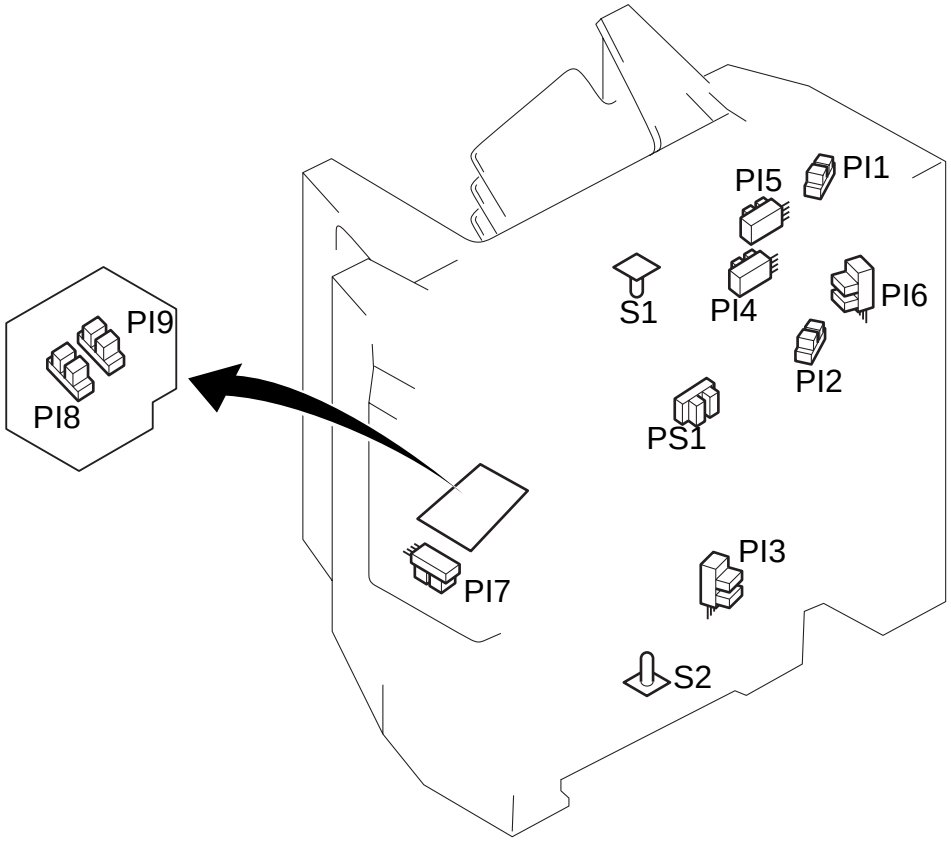

Figure 5-301

Sensors

Symbol	Description	Notation
	Bin inside paper sensor (light-emitting unit)	S1
	Bin inside paper sensor (light-receiving unit)	S2
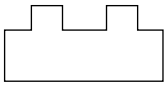	Bin shift motor clock sensor	PI1
	Lead cam home position sensor	PI2
	Guide bar home position sensor	PI3
	Bin unit upper limit sensor	PI4
	Bin unit lower limit sensor	PI5
	Joint sensor	PI6
	Stapler unit cover sensor	PI7
	Stapling home position sensor	PI8
	Staple alignment detection sensor	PI9
	Paper sensor	PS1

Table 5-301

B. Motors, Switches, Solenoids and PCBs

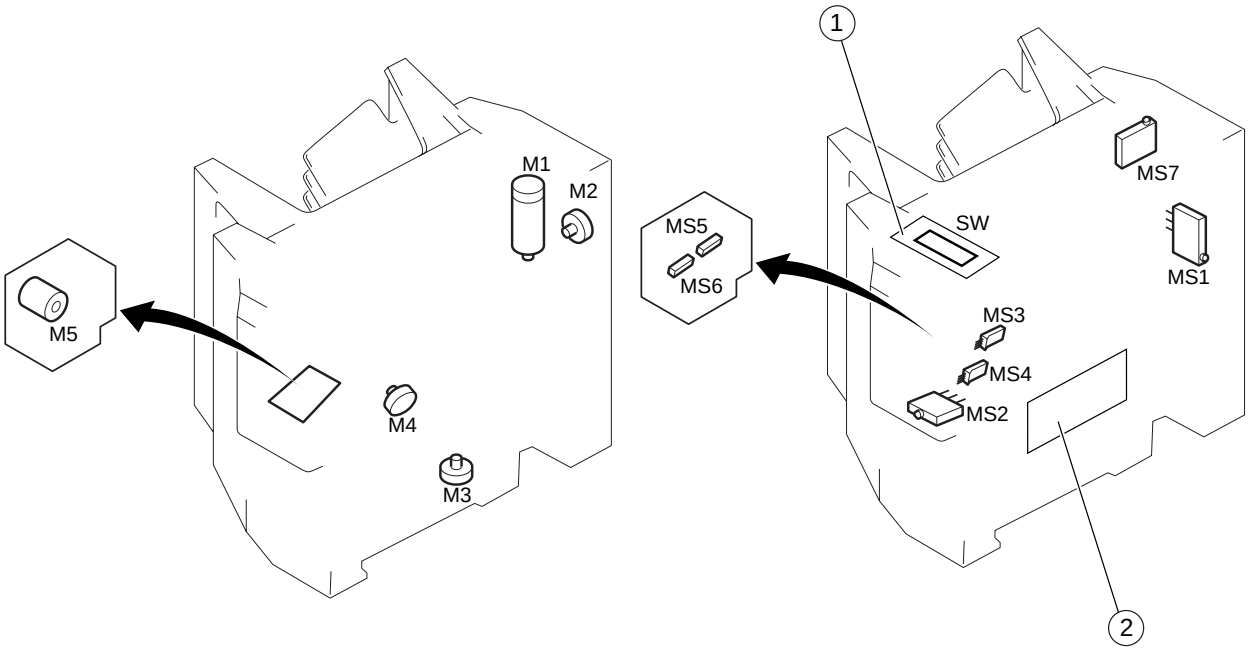

Figure 5-302

Motors, switches, solenoids and PCBs

Symbol	Description	Notation
M	Bin shift motor	M 1
	Feeder motor	M 2
	Guide bar swing motor	M 3
	Stapler unit swing motor	M 4
	Stapler motor	M 5
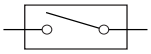	Joint switch	MS 1
	Stapler cover switch	MS 2
	Stapler safety switch	MS 3
	Stapler unit home position switch	MS 4
	No staple detection switch	MS 5
	No cartridge detection switch	MS 6
	Objection detection switch	MS 7
	Manual staple switch	SW
	Control panel PCB	①
	Sorter controller PCB	②

Table 5-302

IV. VARIABLE RESISTORS (VR), LIGHT-EMITTING DIODES, AND CHECK PINS BY PCB

Of those LEDs and check pins used in the machine, those that are needed in the field are discussed.

Caution:
Those check pins that are not covered herein are for factory use only and must not be used in the field; they require special tools and instruments and must be adjusted to high accuracy.

A. Sorter Controller PCB

Caution:
Some LEDS emit faint light even when off; this is a normal condition and should be kept in mind.

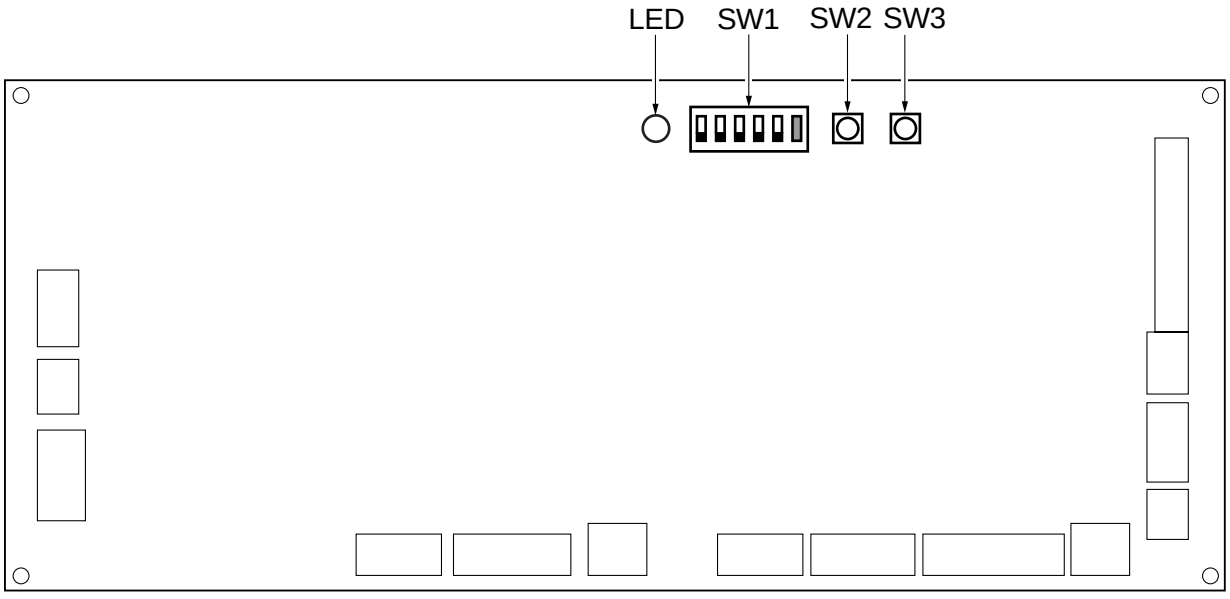

Figure 5-401

B. DIP Switch Functions

See the table for the functions of the DIP switch (DIPSW1) on the sorter controller PCB.
*1:Do not change the position of pin No.6. This pin is for selecting the communication system with the copier.

Item	Configuration	Description
Normal copying mode	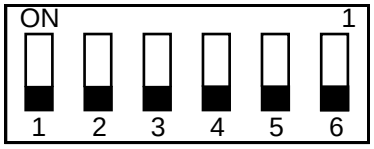	• When all bits are OFF, the machine enters normal copying mode.
Feeder motor (M2) operation mode	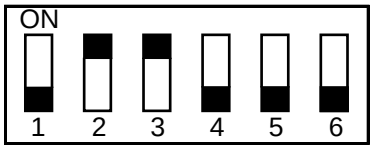	• A press on the staple key ( ) causes the feeder motor (M2) to rotate clockwise (paper feeding direction). To stop, press the staple key ( ) once again.
Ageing mode	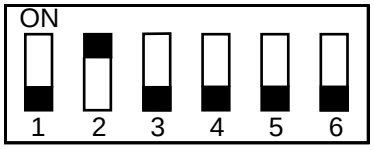	• A press on the staple key the series of staple sort operations is repeated. To stop, press the staple key once again.
Guide bar operation test	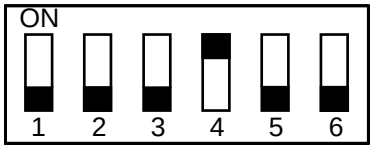	• Press the staple key to operate the guide cover. Each press of the staple key toggles operatin between A4-R, B5, LT-R and A4-R positions. Pressing the staple key again returns the guide bar to the home position it stops.
Bin movement	• All DIP switches OFF (excluding No.6)	• Each press of the push switches on the controller PCB raises and lowers bin No.1. SW3: Raises bin No.1 SW2: Lower bin No.1

Item	Configuration	Description
Sensor adjustment mode (bin inside paper sensor)	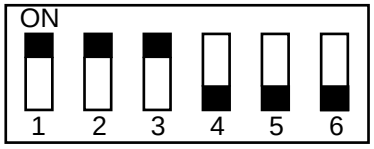	• A press on staple executes adjustment mode for the bin inside paper sensor(S1,S2). Make the following adjustments whenever you have replaced the following parts(refer to page 5-2). • sorter controller PCB • bin inside paper sensor Making Adjustments ① Remove all paper from the bins. ② Remove the sorter controller cover, and set the bits of the DIP switch on the sorter controller PCB as shown in the figure. ③ Press the staple key on the control panel. ④ Check the state of the staple key: on: adjustment done → return the bits of the DIP switch to their initial positions (all OFF) to exit this adjustment mode. flashing: adjustment error → turn off and then on the copier; then, check the bin inside paper sensor, and go back to step ①.

Item	Configuration	Description
Guide bar swing range adjustment mode	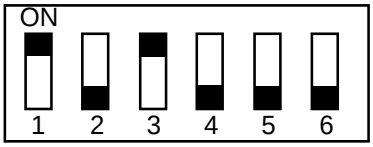 (A4) 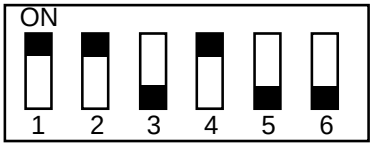 (LT) 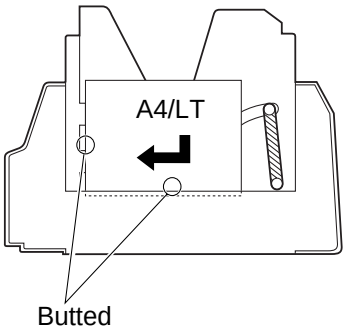 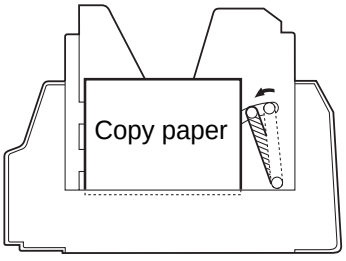	Make the following adjustments whenever you have replaced the following parts (refer to page 5-2). • sorter controller PCB • guide bar home position sensor • guide bar swing motor Making Adjustments ① Obtain 1 sheet of A4 or LT copy paper. ② Remove all paper from the bins. ③ Remove the sorter controller cover, and set the bits of the DIP switch on the sorter controller PCB as shown in the figure. ④ Place 1 sheet of A4 or LT copy paper in the bin as shown in the figure on the left so that they touch the bin raising and reference wall. ⑤ Press the BIN SHIFT key (up/down key) to move the guide bar so that it touches the paper. • up key once ····· the guide bar moves 50 pulses towards the paper. 2nd press of up key onwards ····· each press moves the guide bar towards the paper by one pulse. Holding the key down continuously moves the guide bar continuously. • down key ····· each press moves the guide bar away from the paper by one pulse. Note: Take care to prevent the guide bar from being held down too hard on the paper. This is to provide sufficient play for the leaf spring. ⑥ While maintaining the condition in step ⑤, press the staple key on the control panel. ⑦ Check the state of the staple key: on: adjustment done → return the bits of the DIP switch to their initial positions (all OFF) to exit this adjustment mode. flashing: adjustment error → check the guide bar home position sensor, and go back to step ④.

Item	Configuration	Description
Adjusting the Stapler Unit Swing Position (staple position adjustment)	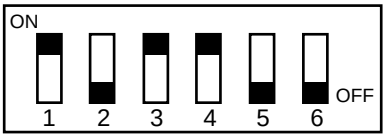 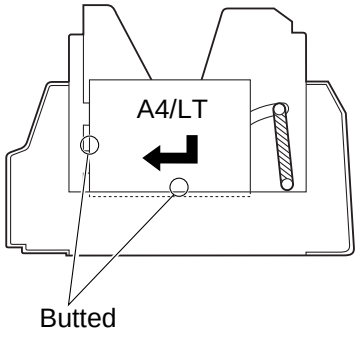 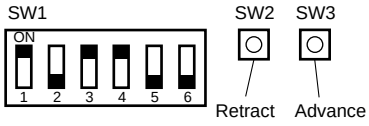 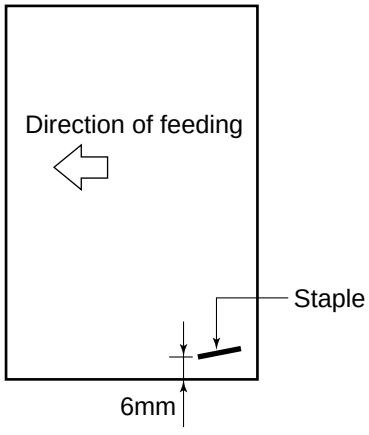	Make the following adjustments whenever you have replaced the following parts: • sorter controller PCB • stapler unit swing motor • stapler swing unit Making Adjustments ① Remove all paper from the bins and remove the right cover. ② Set the bits of the DIP switch (SW1) on the sorter controller PCB as follows: ③ Place about five sheets of A4 or Letter-size copy paper in bin No.1 as shown in the figure. ④ Press the push switch (SW3) on the sorter controller PCB to move the stapler swing unit to the staple position. To return the stapler swing unit to its original position, press push switch (SW2). ⑤ Press the staple key on the sorter to staple the copy paper and check the staple position. ⑥ If the staple is stapled out of position, adjust the staple position by push switches (SW3, SW2). ⑦ After adjustment, return the bits of the DIP switch (SW1) to their initial positions and attach

V. SELF DIAGNOSIS

The CPU (Q1) on the machine's sorter controller PC is equipped with a self diagnosis mechanism that checks the state of the machine and issues an error to the copier in response to an error.

A. Overstacking Alarm (p. 2-15)

Error	Option	Copier	Resetting
Overstacking (The number of stacked sheets has exceeded the capacity of the bin.)	Stops.	• Enters PAUSE state.	Remove all copies from the bin.

B. StaplerAlarm

Error	Option	Copier	Resetting
Staple jam	The stapler unit stops.	• If in staple sort mode, a press on the Copy Start key will issue an alarm. No copying is permitted. • If in other mode, operates normally.	Remove the staple jam, and close the front door.
The foreign matter has been inserted into the stapler.	Disables stapling operation.	• If in staple sort mode, a press on the Copy Start key will issue an alarm. No copying is permitted. • If in other mode, operates normally.	Open and close the staple cover.
More sheets than can be stapled (50) have been placed in a single bin in staple sort mode.	Disables stapling operation.	• If in staple sort mode, a press on the Copy Start key will issue an alarm. No copying is permitted. • If in other mode, operates normally.	Remove all copies from the bin.
Mixed paper sizes (horizontal direction)	• The guide bar will not swing. • Stapling will not occur.	• If in staple sort mode, a press on the Copy Start key will issue an alarm. No copying is permitted. • If in other mode, operates normally.	Remove all copies from the bin.
No staple	• Stapling will not occur.	• If in staple sort mode, a press on the Copy Start key will issue an alarm. No copying is permitted. • If in other mode, operates normally.	Set a new staple cartridge.

C. Jam

Error	Option	Copier
Feeding delay jam (p. 2-17)	Stops operation.	Stops operation.
Feeding stationary jam (p. 2-17)	Stops operation.	Stops operation.
Power-on jam (p. 2-17)	Will not operate.	Will not operate.
Door open jam (while feeding; i.e., the joint switch (MS1) or the stapler cover switch (MS2) was turned off during operation.)	Stops operation.	Stops operation.
Door open jam (while not feeding; the joint switch (MS1) or the stapler cover switch (MS2) was turned off during operation.)	Stops operation.	Stops operation.

■ Resetting
After removing the jam, turn on the joint switch (MS1).

D. Errors

Error	Description
• The automatic adjustment mechanism for the bin inside paper sensor (S1, S2) has failed.	• The bin inside paper sensor (S1, S2) cannot be adjusted automatically or an error exists in the automatic adjustment value.
• The guide bar swing motor (M3) fails to rotate.	• The input signal from the guide bar home position sensor does not change within 2000ms after the motor drive signal has been generated.
• The stapler unit swing motor (M4) fails to rotate.	• The input signal from the swing home position sensor (PI9) does not change for 1000 ms or more.
• The bin shift motor (M1) fails to rotate.	• The operation does not end within a specific period of time after the motor drive signal has been generated. time: 20000 ms for initialization 2000 ms for others • The clock signal from the clock plate sensor of the motor is absent for 250 ms or more. • The input signal from the lead cam position sensor (PI2) does not change for 2000 ms.

APPENDIX

A. GENERAL CIRCUIT DIAGRAM ----- A-1
B. SORTER CONTROLLER CIRCUIT DIAGRAM ---------- A-2
C. COMMAND LIST ---------- A-8
D. SOLVENTS/OILS TABLE ---------- A-9
E. UNPACKING AND SET-UP PROCEDURE FOR MG-2012 ---------- A-10
F. UNPACKING AND SET-UP PROCEDURE FOR KN-3560S01 ---------- A-15

A. GENERAL CIRCUIT DIAGRAM

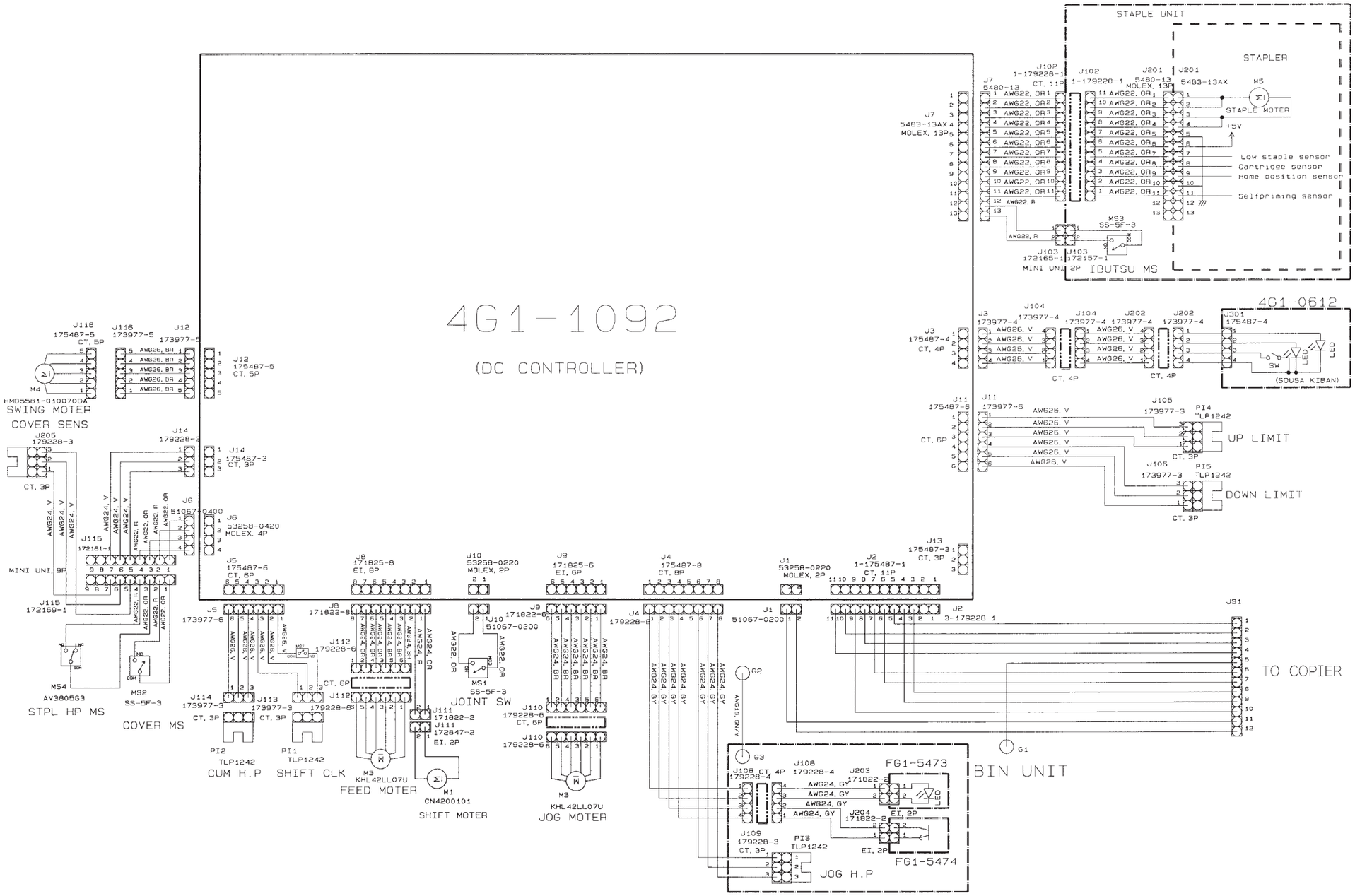

B. SORTER CONTROLLER CIRCUIT DIAGRAM

Sorter Controller Circuit Diagram (1/6) A502

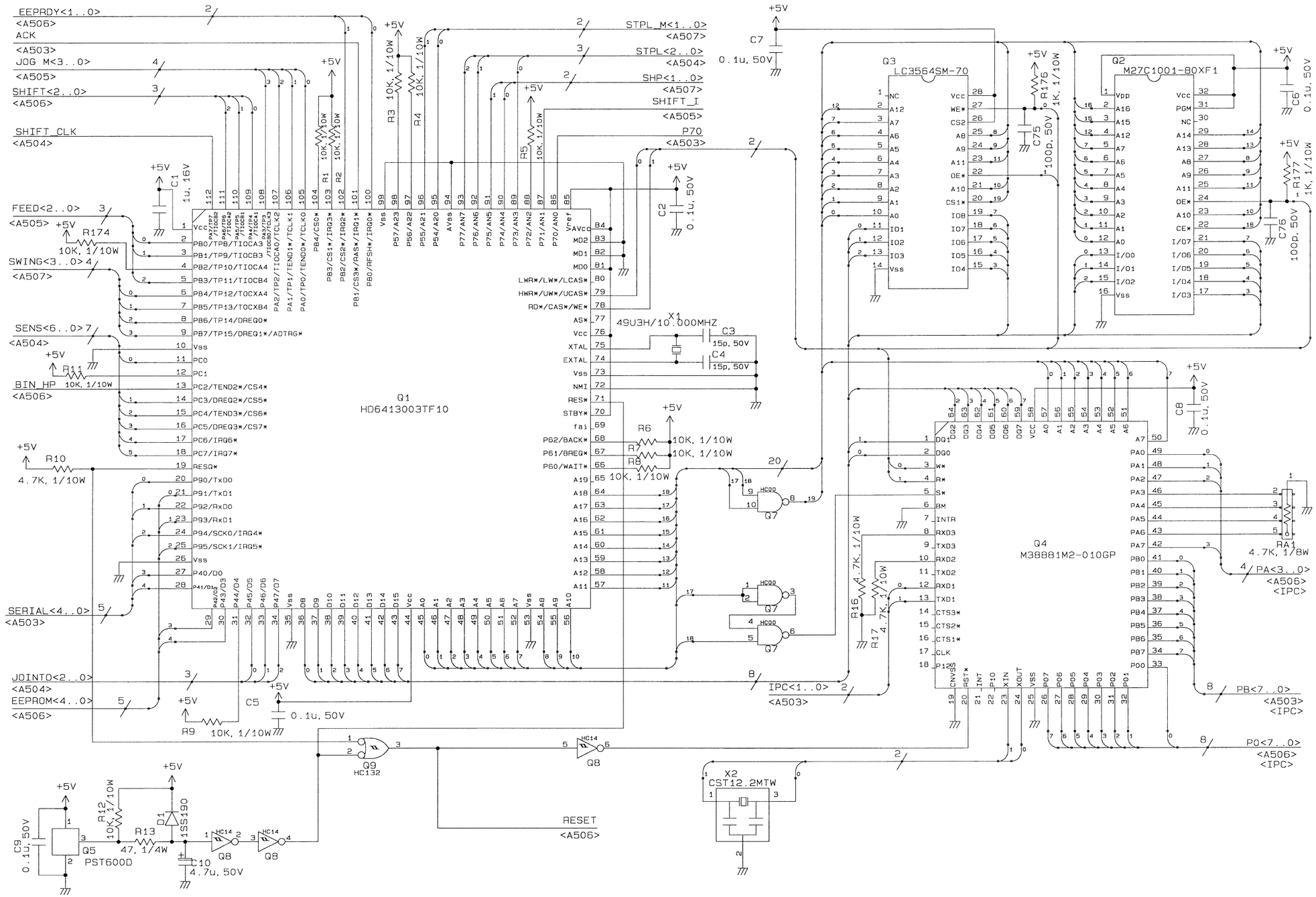

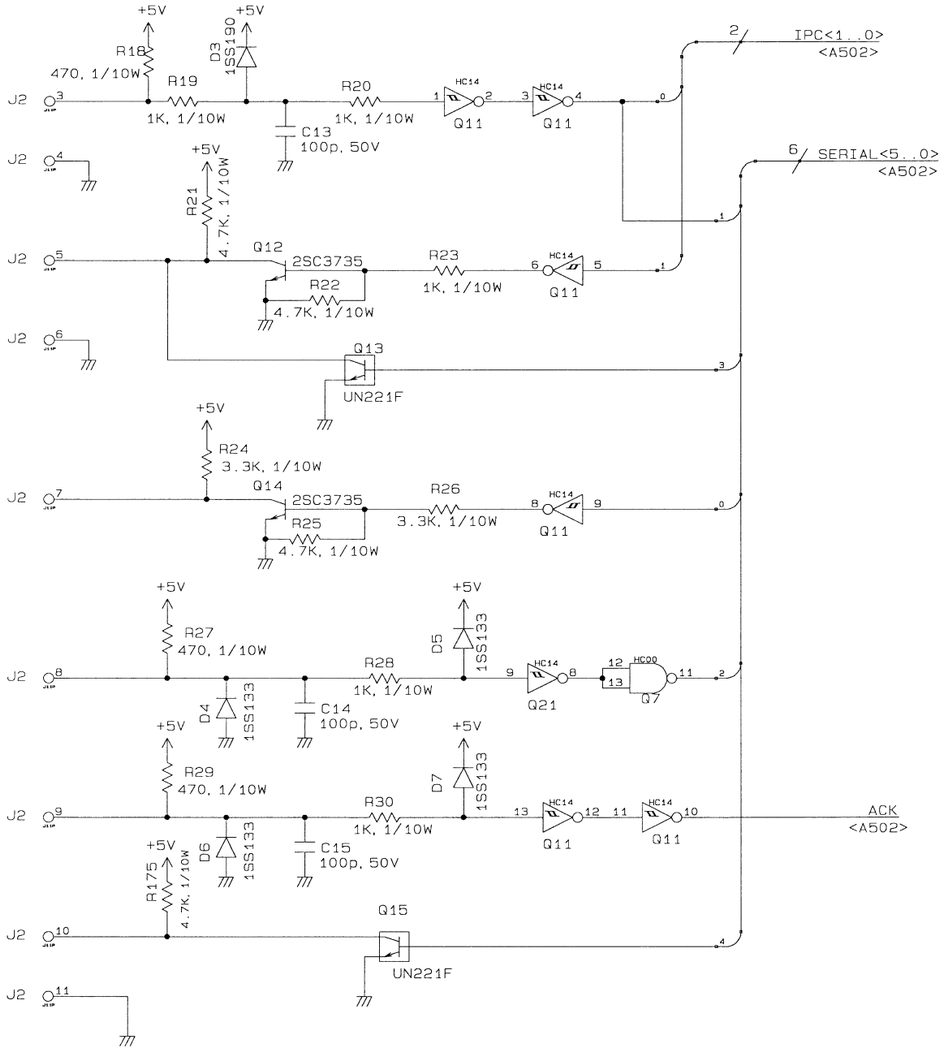
+5V
R18
470, 1/10W
R19
1K, 1/10W
D3
1S5190
R20
1K, 1/10W
C13
100p, 50V
HC14
Q11
IPC<1..0>
<A502>
SERIAL<5..0>
<A502>
J2
R21
4.7K, 1/10W
Q12
2SC3735
R22
4.7K, 1/10W
R23
1K, 1/10W
Q13
UN221F
R24
3.3K, 1/10W
Q14
2SC3735
R25
4.7K, 1/10W
R26
3.3K, 1/10W
R27
470, 1/10W
R28
1K, 1/10W
D4
1S5133
C14
100p, 50V
D5
1S5133
HC00
Q7
Q21
R29
470, 1/10W
R30
1K, 1/10W
D6
1S5133
C15
100p, 50V
D7
1S5133
R175
4.7K, 1/10W
Q15
UN221F
ACK
<A502>

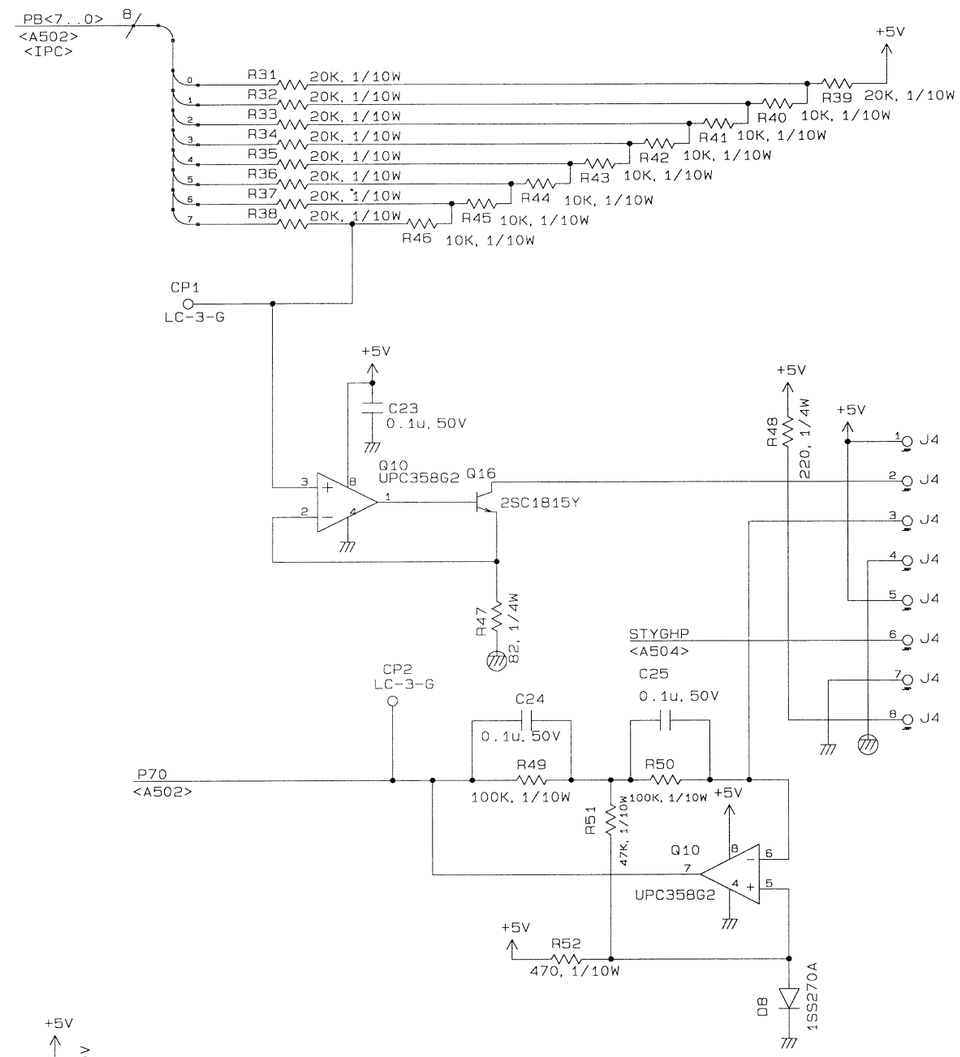
PB<7..0>
<A502>
<IPC>
R31 20K, 1/10W
R32 20K, 1/10W
R33 20K, 1/10W
R34 20K, 1/10W
R35 20K, 1/10W
R36 20K, 1/10W
R37 20K, 1/10W
R38 20K, 1/10W
R39 20K, 1/10W
R40 10K, 1/10W
R41 10K, 1/10W
R42 10K, 1/10W
R43 10K, 1/10W
R44 10K, 1/10W
R45 10K, 1/10W
R46 10K, 1/10W
CP1
LC-3-G
C23
0.1u, 50V
Q10
UPC358G2
Q16
2SC1815Y
R47
82, 1/4W
R48
220, 1/4W
J4
STYGHP
<A504>
CP2
LC-3-G
C24
0.1u, 50V
C25
0.1u, 50V
P70
<A502>
R49
100K, 1/10W
R50
100K, 1/10W
R51
47K, 1/10W
Q10
UPC358G2
R52
470, 1/10W
D8
1S5270A

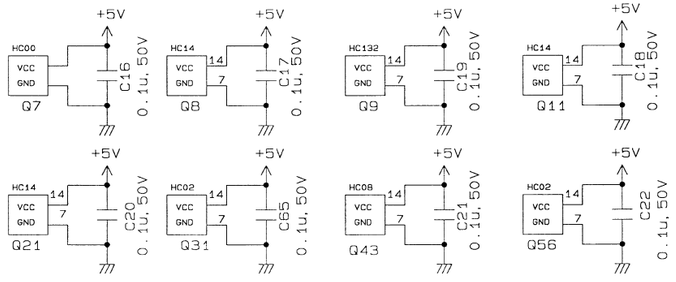
HC00
HC14
HC132
HC02
HC08
VCC
GND
Q7
Q8
Q9
Q11
Q21
Q31
Q43
Q56
C16 0.1u, 50V
C17 0.1u, 50V
C19 0.1u, 50V
C18 0.1u, 50V
C20 0.1u, 50V
C65 0.1u, 50V
C21 0.1u, 50V
C22 0.1u, 50V

Sorter Controller Circuit Diagram (3/6) A504

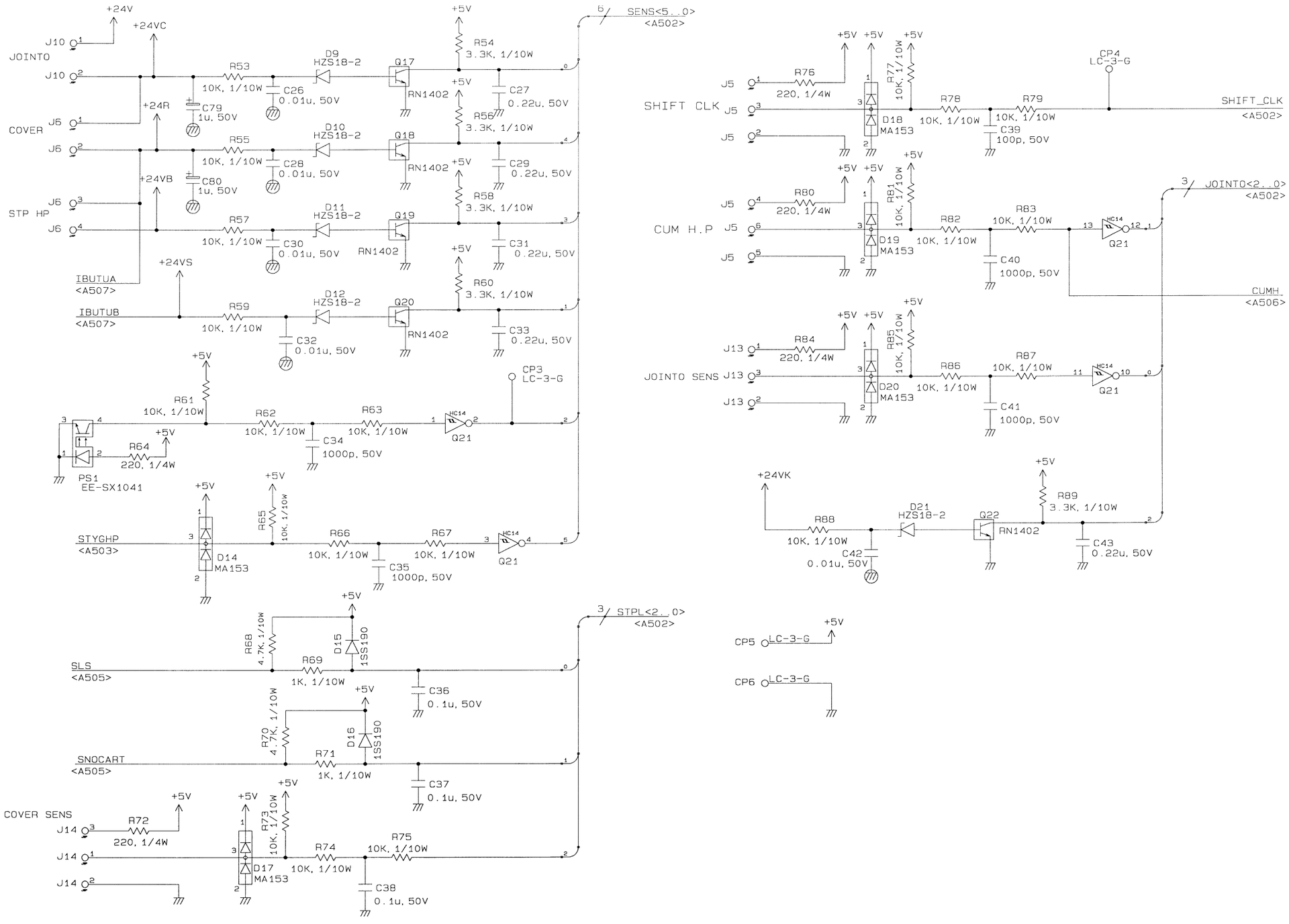

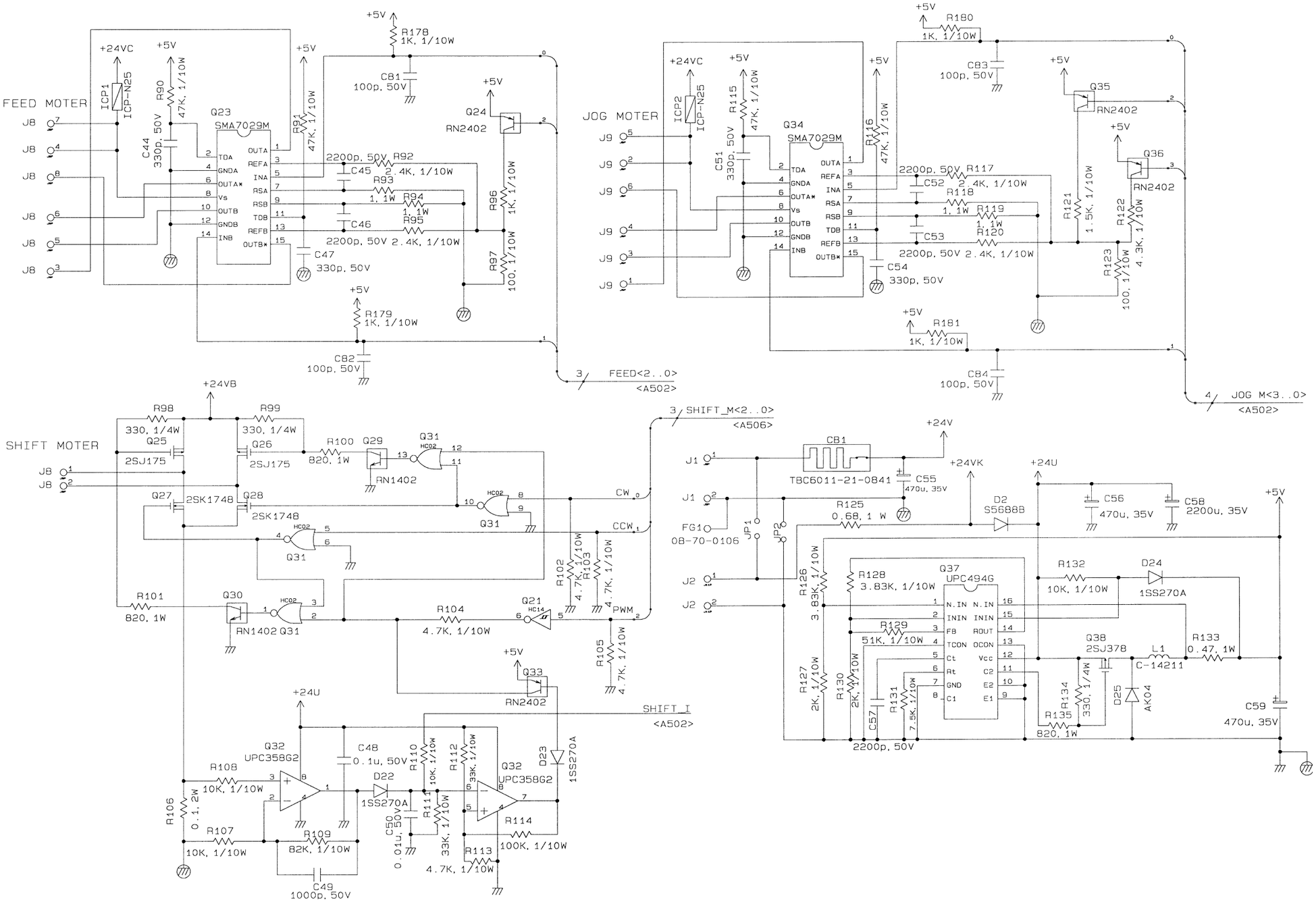
FEED MOTER
JOG MOTER
SHIFT MOTER
Q23 SMA7029M
Q34 SMA7029M
Q24 RN2402
Q35 RN2402
Q36 RN2402
Q25 2SJ175
Q26 2SJ175
Q27 2SK1748
Q28 2SK1748
Q29 RN1402
Q30 RN1402
Q31 HC02
Q32 UPC358G2
Q33 RN2402
Q21 HC14
Q37 UPC494G
Q38 2SJ378
ICP1 ICP-N25
ICP2 ICP-N25
CB1 TBC6011-21-0841
FG1 08-70-0106
JP1
JP2
D2 S5688B
D22 1SS270A
D23 1SS270A
D24 1SS270A
D25 AK04
L1 C-14211
R90 47K, 1/10W
R91 47K, 1/10W
R92 2.4K, 1/10W
R93 1, 1W
R94 1, 1W
R95 2.4K, 1/10W
R96 1K, 1/10W
R97 100, 1/10W
R98 330, 1/4W
R99 330, 1/4W
R100 820, 1W
R101 820, 1W
R102 4.7K, 1/10W
R103 4.7K, 1/10W
R104 4.7K, 1/10W
R105 4.7K, 1/10W
R106 0.1, 2W
R107 10K, 1/10W
R108 10K, 1/10W
R109 82K, 1/10W
R110 10K, 1/10W
R111 33K, 1/10W
R112 33K, 1/10W
R113 4.7K, 1/10W
R114 100K, 1/10W
R115 47K, 1/10W
R116 47K, 1/10W
R117 2.4K, 1/10W
R118 1, 1W
R119 1, 1W
R120 2.4K, 1/10W
R121 1.5K, 1/10W
R122 4.3K, 1/10W
R123 100, 1/10W
R125 0.68, 1 W
R126 3.83K, 1/10W
R127 2K, 1/10W
R128 3.83K, 1/10W
R129 51K, 1/10W
R130 2K, 1/10W
R131 7.5K, 1/10W
R132 10K, 1/10W
R133 0.47, 1W
R134 330, 1/4W
R135 820, 1W
R178 1K, 1/10W
R179 1K, 1/10W
R180 1K, 1/10W
R181 1K, 1/10W
C44 330p, 50V
C45 2200p, 50V
C46 2200p, 50V
C47 330p, 50V
C48 0.1u, 50V
C49 1000p, 50V
C50 0.01u, 50V
C51 330p, 50V
C52 2200p, 50V
C53 2200p, 50V
C54 330p, 50V
C55 470u, 35V
C56 470u, 35V
C57 2200p, 50V
C58 2200u, 35V
C59 470u, 35V
C81 100p, 50V
C82 100p, 50V
C83 100p, 50V
C84 100p, 50V
+24VC
+24VB
+24VK
+24V
+24U
+5V
FEED<2..0> <A502>
JOG M<3..0> <A502>
SHIFT_M<2..0> <A506>
SHIFT_I <A502>
CW
CCW
PWM

Sorter Controller Circuit Diagram (5/6) A506

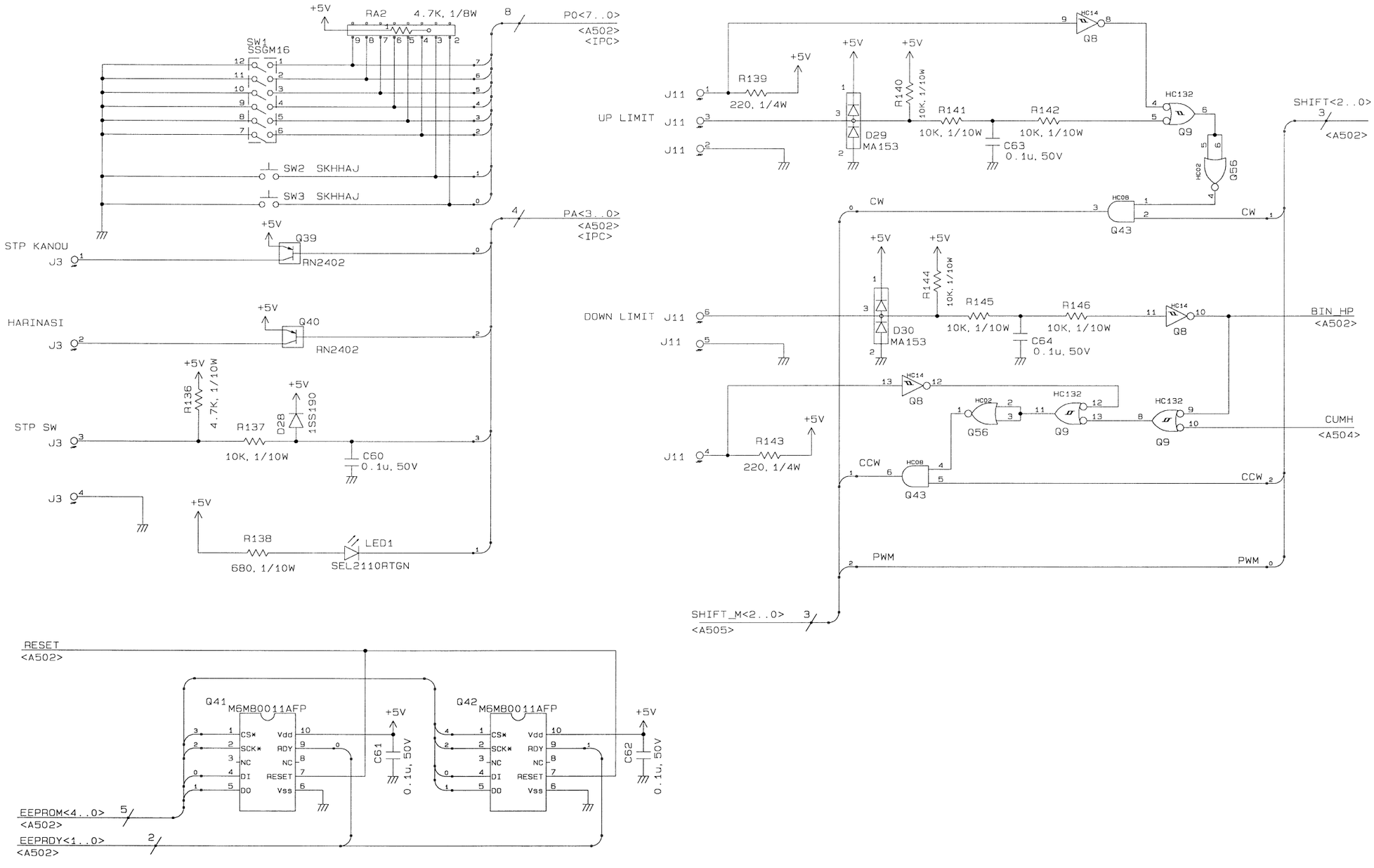

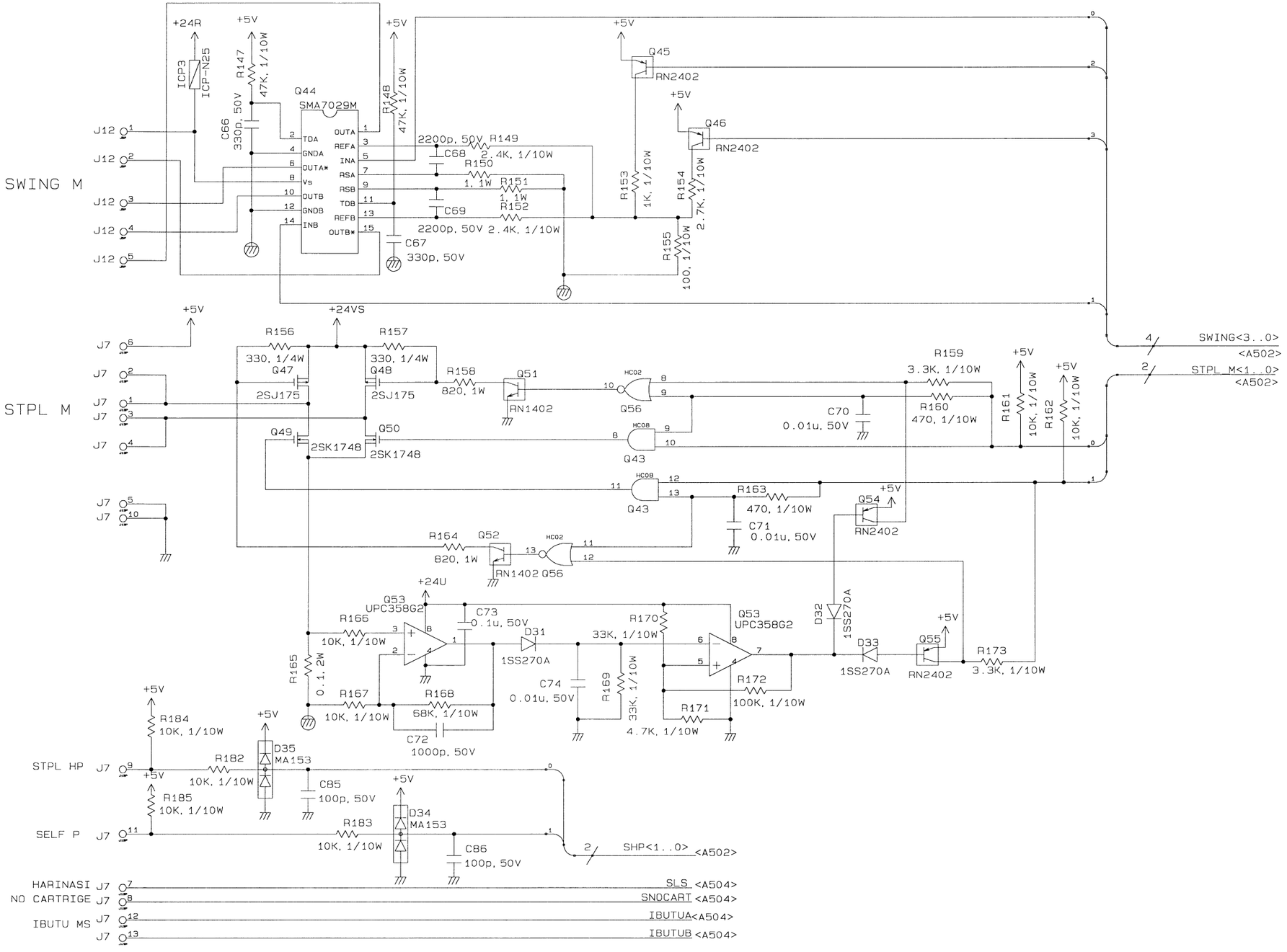
SWING M
STPL M
STPL HP
SELF P
HARINASI
NO CARTRIGE
IBUTU MS
+24R
+5V
+24VS
+24U
ICP3
ICP-N25
R147
47K, 1/10W
C66
330p, 50V
Q44
SMA7029M
TDA
GNDA
OUTA*
Vs
OUTB
GNDB
INB
OUTA
REFA
INA
RSA
RSB
TDB
REFB
OUTB*
R148
47K, 1/10W
2200p, 50V
R149
2.4K, 1/10W
C68
R150
1, 1W
R151
1, 1W
R152
C69
2200p, 50V
2.4K, 1/10W
C67
330p, 50V
Q45
RN2402
Q46
RN2402
R153
1K, 1/10W
R154
2.7K, 1/10W
R155
100, 1/10W
J12
SWING<3..0>
<A502>
STPL_M<1..0>
<A502>
R156
330, 1/4W
R157
330, 1/4W
Q47
2SJ175
Q48
2SJ175
Q49
2SK1748
Q50
2SK1748
R158
820, 1W
Q51
RN1402
HC02
Q56
HC08
Q43
R159
3.3K, 1/10W
R160
470, 1/10W
C70
0.01u, 50V
R161
10K, 1/10W
R162
10K, 1/10W
R163
470, 1/10W
C71
0.01u, 50V
Q54
RN2402
R164
820, 1W
Q52
RN1402
Q56
J7
Q53
UPC358G2
C73
0.1u, 50V
R165
0.1, 2W
R166
10K, 1/10W
D31
1SS270A
R167
10K, 1/10W
R168
68K, 1/10W
C72
1000p, 50V
R169
33K, 1/10W
C74
0.01u, 50V
R170
33K, 1/10W
R171
4.7K, 1/10W
R172
100K, 1/10W
D32
1SS270A
D33
1SS270A
Q55
RN2402
R173
3.3K, 1/10W
R184
10K, 1/10W
R185
10K, 1/10W
R182
10K, 1/10W
D35
MA153
C85
100p, 50V
R183
10K, 1/10W
D34
MA153
C86
100p, 50V
SHP<1..0>
<A502>
SLS <A504>
SNOCART <A504>
IBUTUA<A504>
IBUTUB <A504>

C. COMMAND LIST

BMDWN	BIN UNIT SHIFT MOTOR DOWM command
BMUP	BIN UNIT SHIFT MOTOR UP command
BPDN	BIN UNIT PAPER DETECTION signal
BPDY	BIN UNIT PAPER DELIVERY signal
BUL	BIN UPPER LIMIT signal
CEJCT	COPIER EJECT signal
FMHA	FEED MOTOR PHASE A EXCITATION command
FMHB	FEED MOTOR PHASE B EXCITATION command
GBHP	GUIDE BAR HOME POSITION signal
GBMA	GUIDE BAR PHASE A EXCITATION command
GBMB	GUIDE BAR PHASE B EXCITATION command
GBMON	GUIDE BAR SWING command
INT	INITIAL REQUEST command
LCHP	LEAD CAM HOME POSITION signal
REGD	REGISTRATION ROLLER DRIVE signal
SPEMP	STAPLE EMPTY signal
SPLHP	STAPLER HOME POSITION signal
SPLOPN	STAPLER COVER OPEN signal
SPLSFT	STAPLER SAIFTY DETECTION signal
SPMCW	STAPLER MOTOR DIRECTION command
SPMCCW	STAPLER MOTOR DIRECTION command
SPSWHA	STAPLER SWING MOTOR PHASE A EXCITATION command
SPSWHB	STAPLER SWING MOTOR PHASE B EXCITATION command
SPSWMD	STAPLER SWING MOTOR DRIVE signal
SPUHP	STAPLER UNIT HOME POSITION signal
TOP	TRAYY OUT-POSITION signal

D. SOLVENTS/OILS TABLE

No.	Name	Use
1	Alcohol	Cleaning;e.g.,glass, plastic, or rubber used in covers.
2	Lubricating oil	Lubricating drive and friction parts

E. UNPACKING AND SET-UP PROCEDURE FOR MG-2012

1. Unplug the power cable.

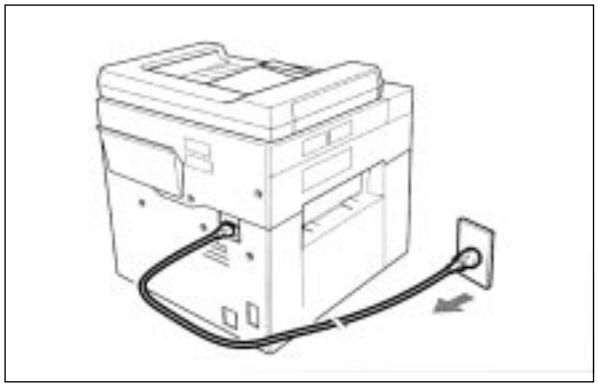

2. Open the package.

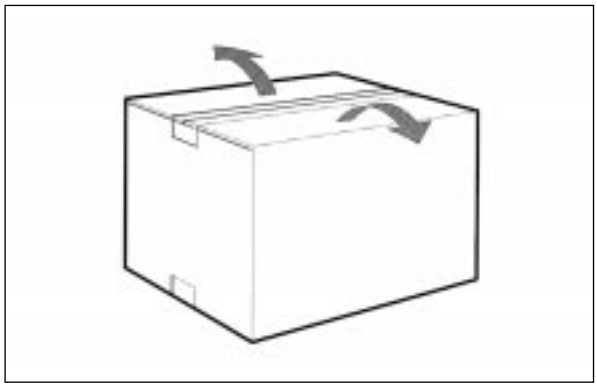

3. Take out the following contents of the package:

Screws (one set) (5)
Stabilizer bracket (9 , 10)
Fixing bracket (11)
Relay bracket (13)
Stapler position label (16)

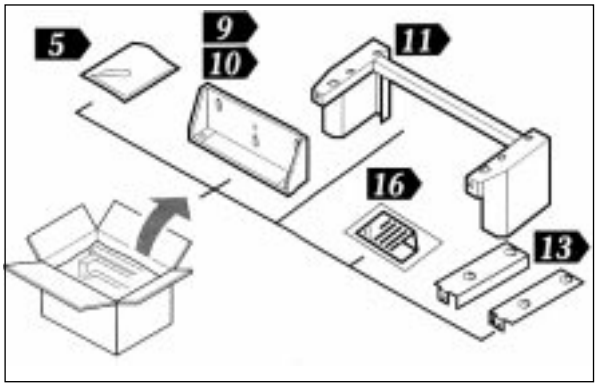

4. Draw out the sorter.

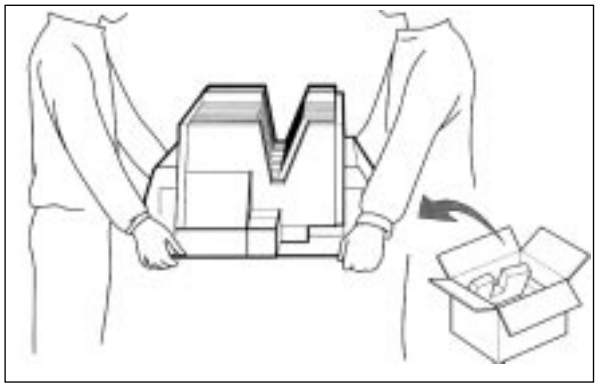

4. Remove the screws and make sure that the number of screws is correct.

2 screws : 7
2 screws : 9 10
2 screws : 12
4 screws : 13
2 screws : 15

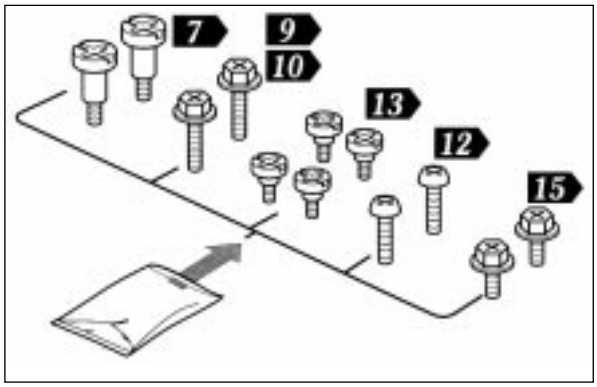

6. Remove two screws.

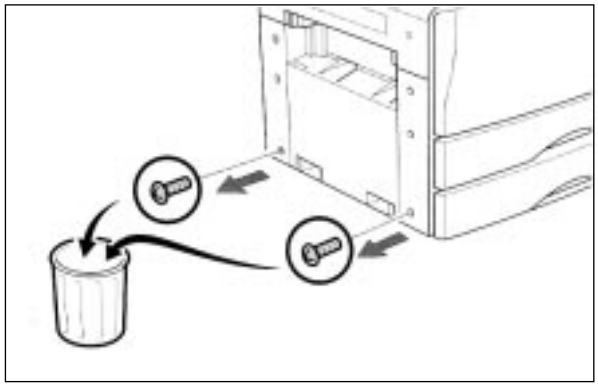

7. Attach the two stepped screws for hooking the sorter.

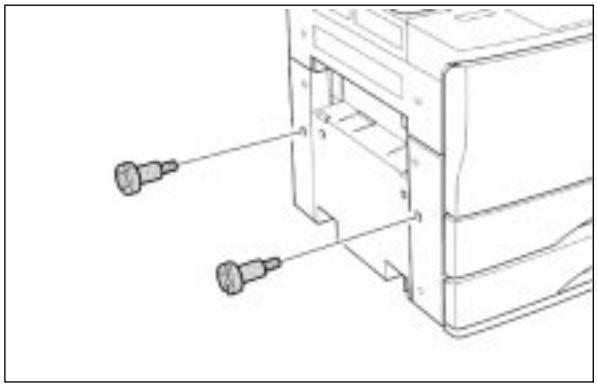

In the case of the copier only: Go to steps 8 and 9.
Int he case of the paper feed pedestal: Go to step10.
In the case of the desk:Go to step 10.

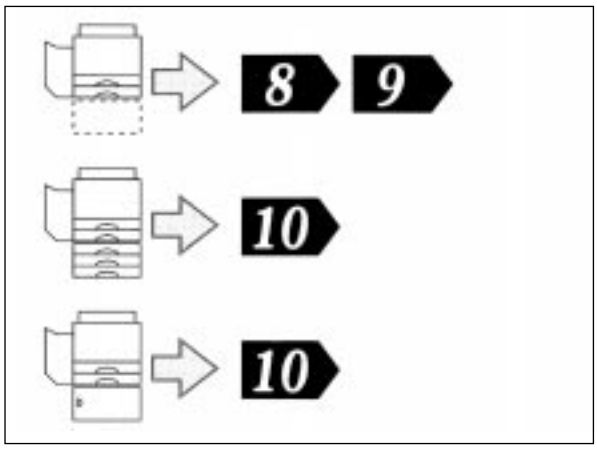

8. **(In the case of the copier only) Remove one screw.**

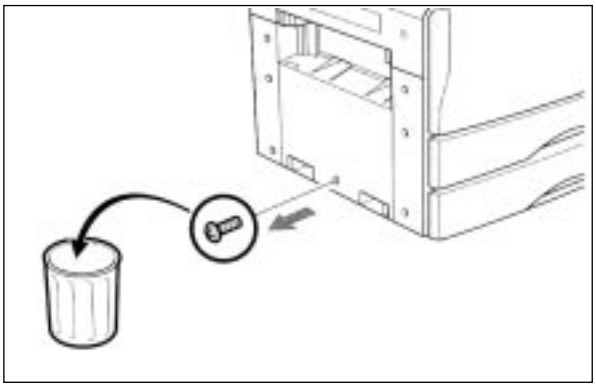

9. **Attach the stabilizer bracket with one screw. Discard the remaining screw.**

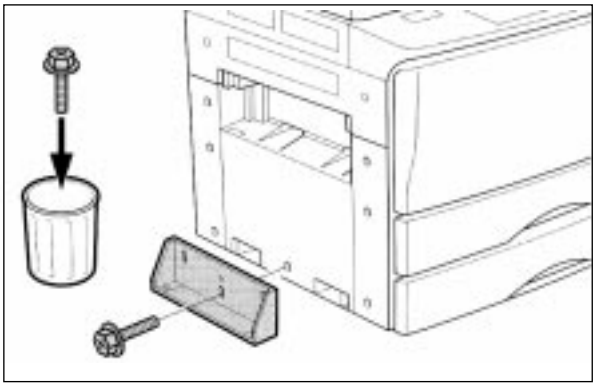

10. **(In the case of the paper feed pedestal or the desk) Attach the stabilizer bracket with two screws.**

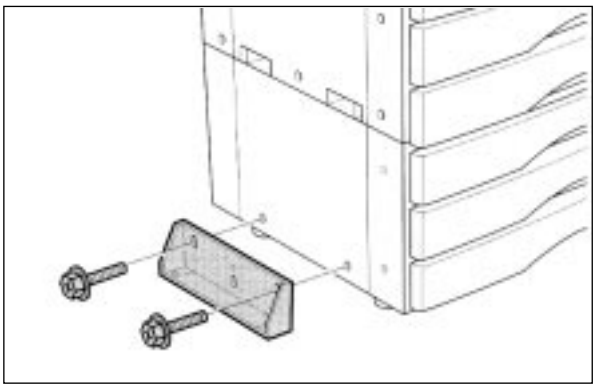

11. **Hook the fixing bracket onto the stepped screw.**

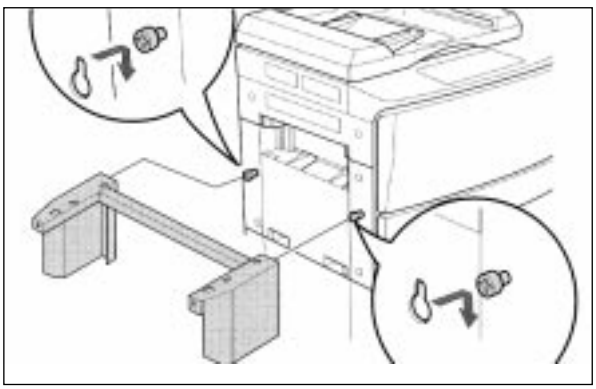

12. Fix the fixing bracket with two screws.

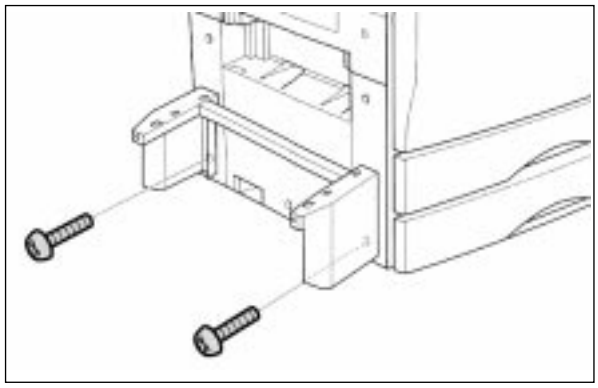

13. Attach the relay bracket onto the bottom of the sorter with four screws.

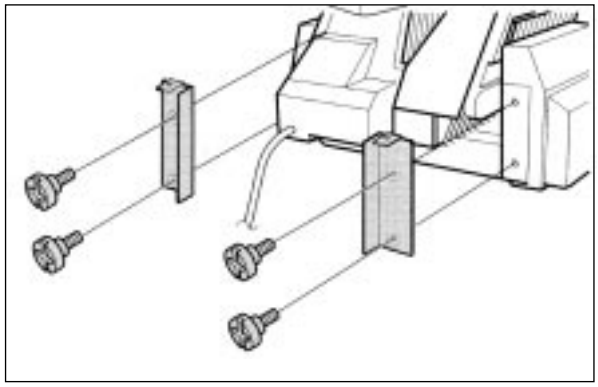

14. Place the sorter on the fixing bracket.

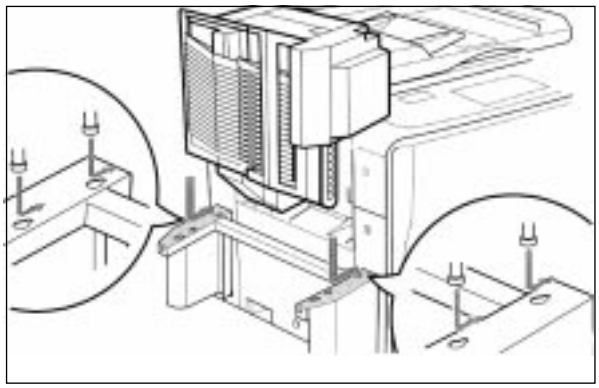

15. Fix the sorter to the fixing bracket with two screws.

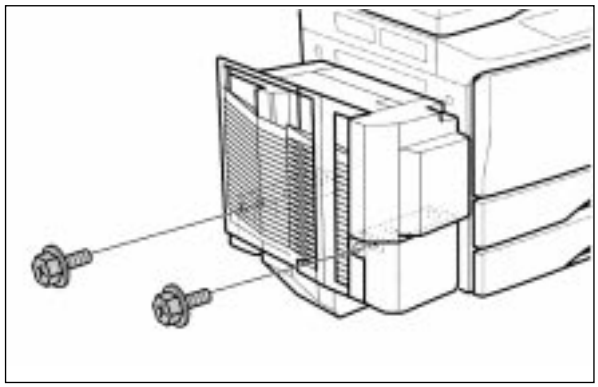

16. Affix the stapler position label on the original feed tray.

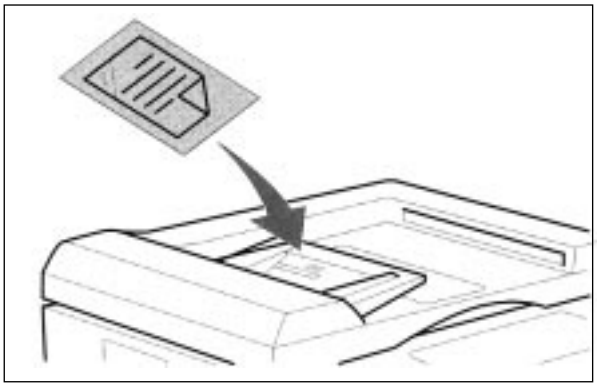

16-1. Open the stapler unit cover and remove the packaging material.

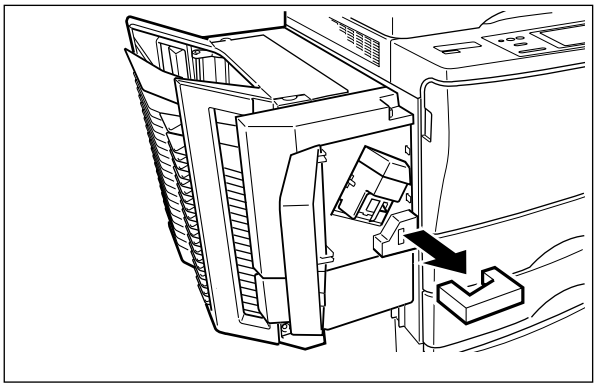

17. This completes the procedure.

F. UNPACKING AND SET-UP PROCEDURE FOR KN-3560S01

1. Unplug the power cable.

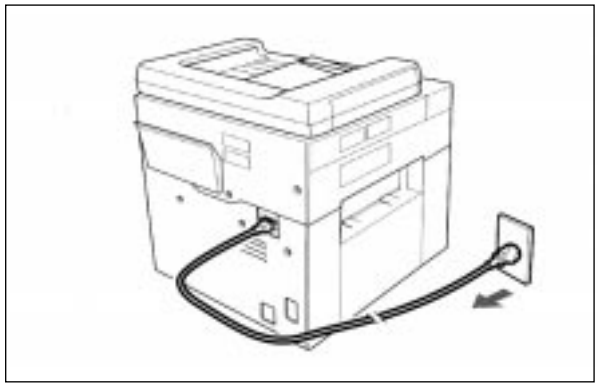

2. Open the KN-3560S01 box.

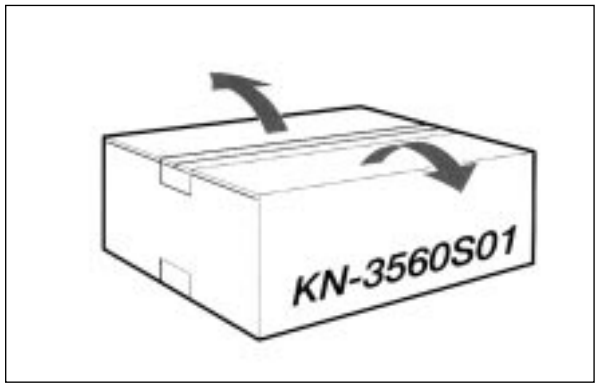

3. Take out the following contents :

Screws (one set) (4)
Mounting plate (6)
Rail kit (12)
Stay (16)

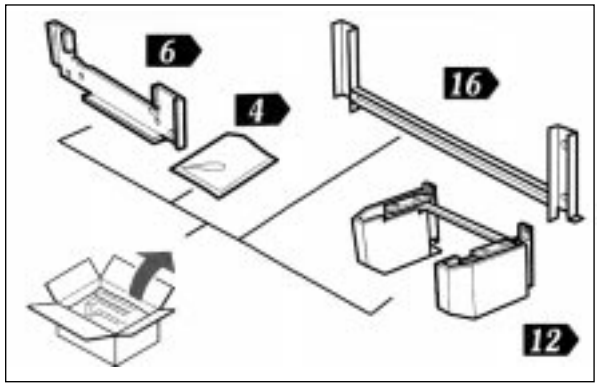

4. Remove the screws and make sure that the number of screws is correct.

6 screws (6)
2 screws (10 11)
2 screws (14)
4 screws (16)
2 screws (18)

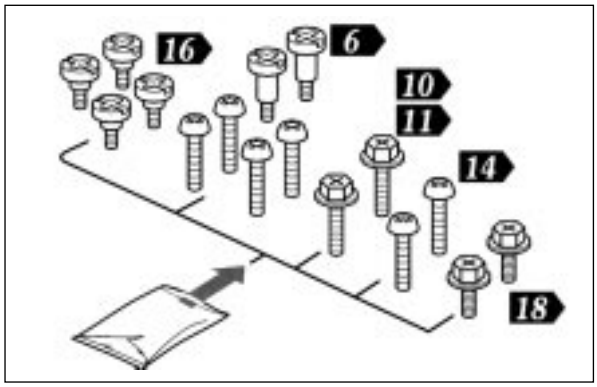

5. Remove four screws.

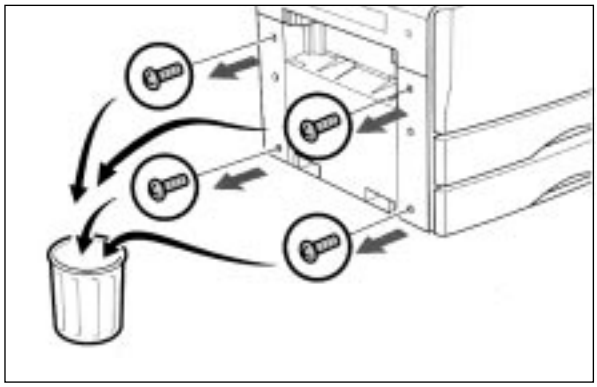

6. Attach the mounting olate with six screws.

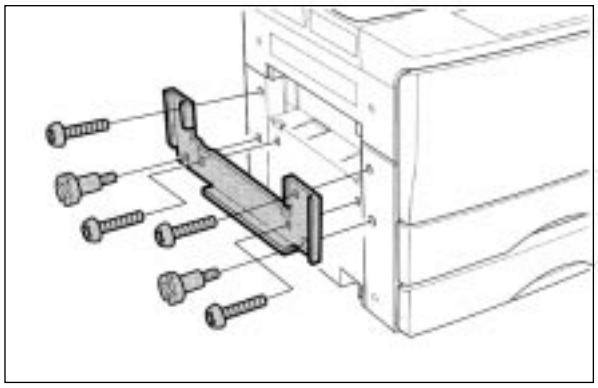

7. Open the MG-2012 box.



8. When you are attaching through using KN-3560S01, do not use the parts marked "X".

Stabilizer bracket (10 11)
Stapler position label (21)

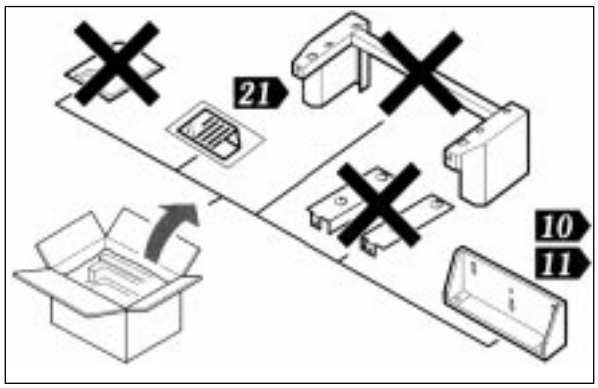

In the case of the copier only: Go to steps 9 and 10.
In the case of the paper feed pedestal: Go to step 11.
In the case of the desk: Go to step 11.

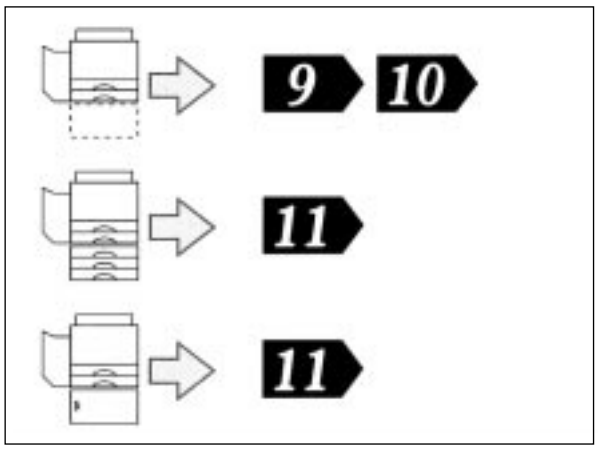

9. (In the case of the copier only) Remove one screw.

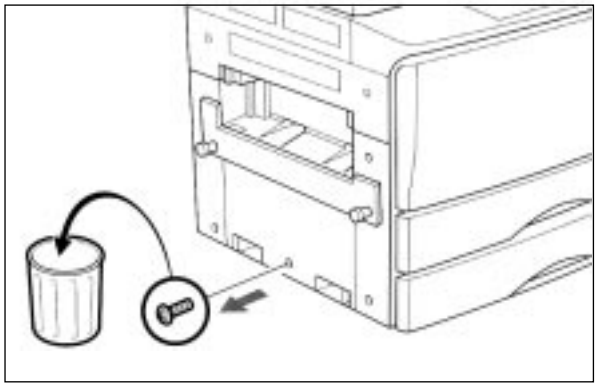

10. Attach the stabilizer bracket with one screw. Discard the remaining screw.

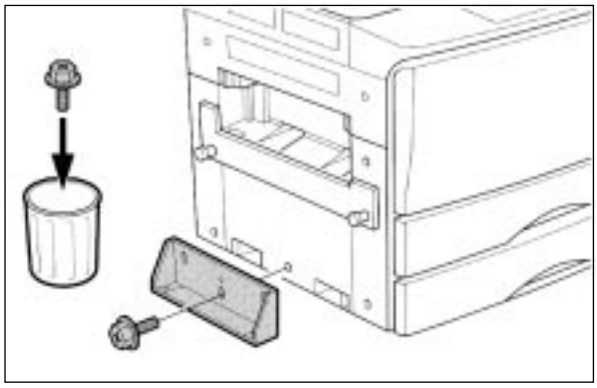

11. (In the case of the paper feed pedestal or the desk) Attach the stabilizer bracket with two screws.

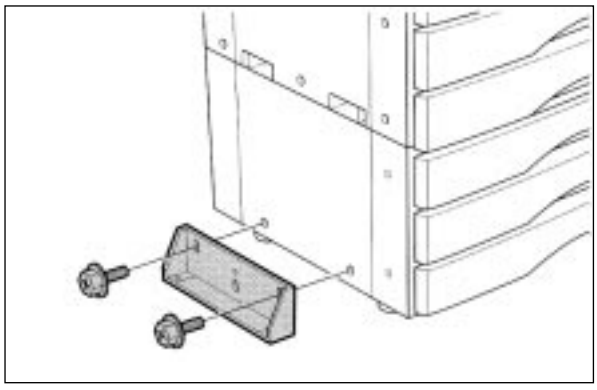

12. Hook the rail kit onto the stepped screw.

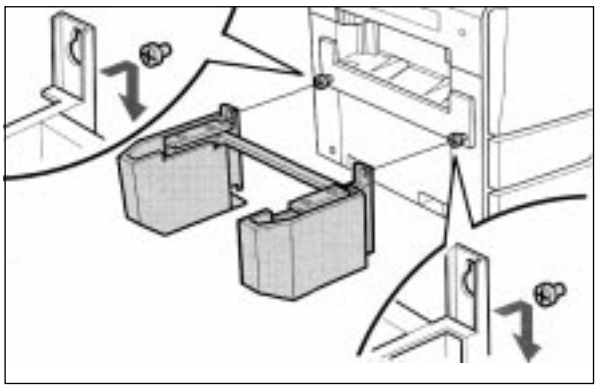

13. Draw out the rail kit.

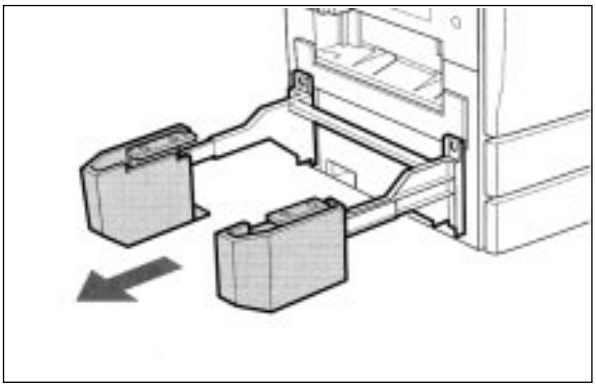

14. Fix the rail kit with two screws.

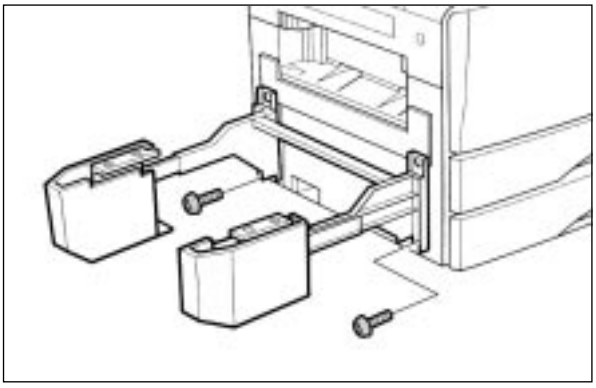

15. Remove the sorter from the box.

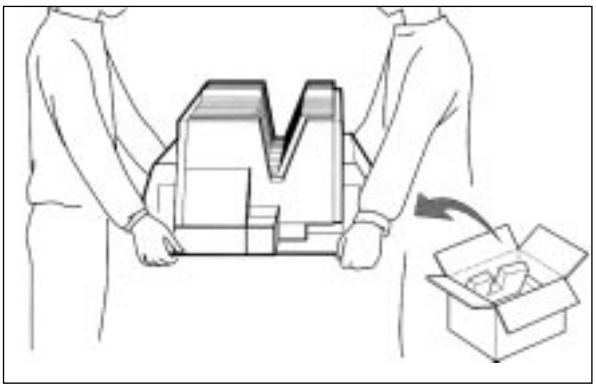

16. Attach the stay to the bottom of the sorter with four screws.

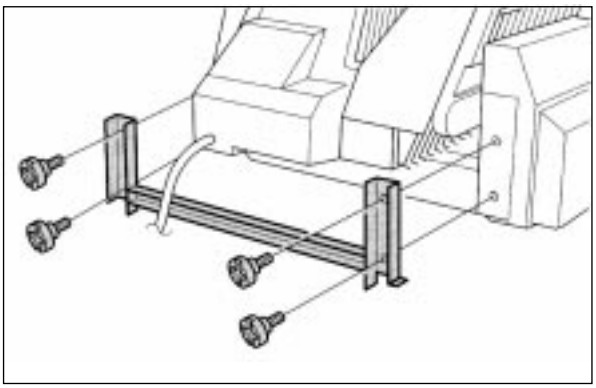

17. Place the sorter on the rail kit.

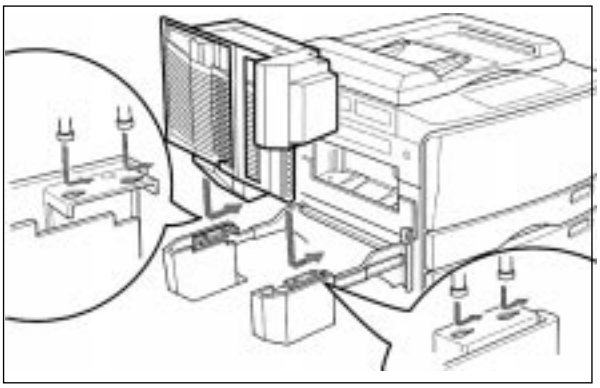

18. Fix the sorter on the rail kit with two screws.

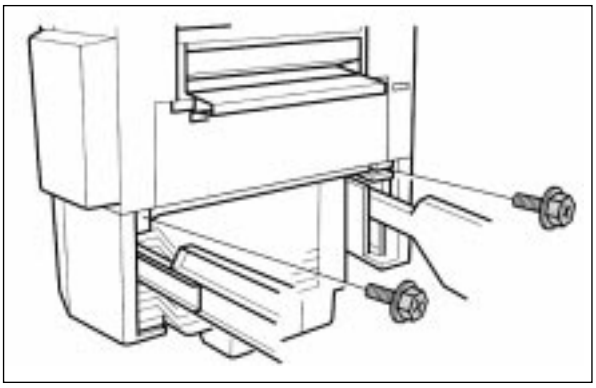

19. Remove the joint switch bracket.

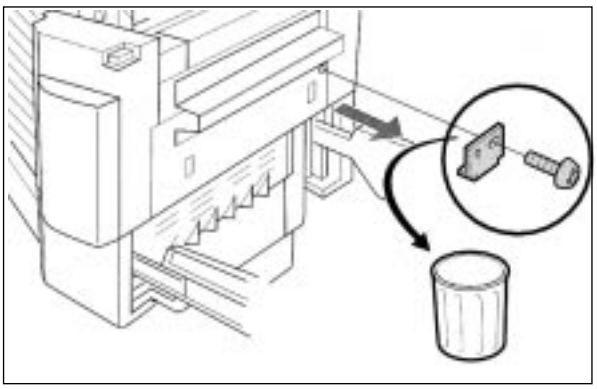

20. Connect the conector.

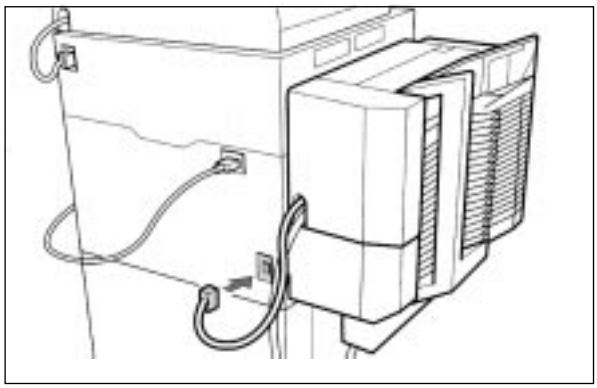

21. Affix the stapler position label on the original feed tray.

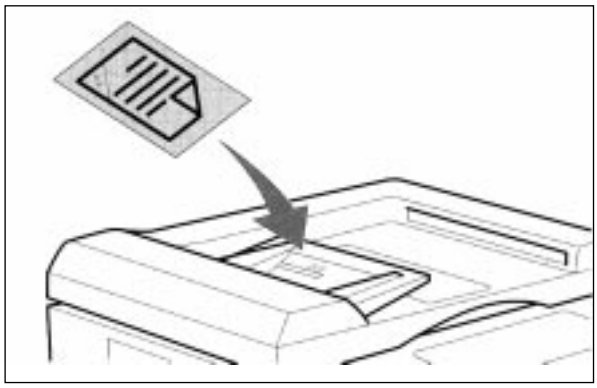

21-1. Open the stapler unit cover and remove the packaging material.

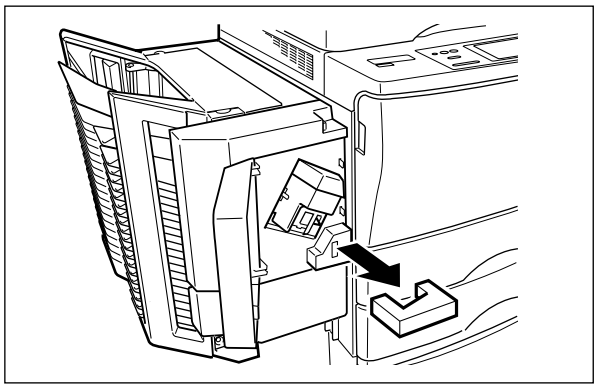

22. This completes the procedure.