TOSHIBA

SERVICE MANUAL
LARGE CAPACITY FEEDER

MP-1501



Click the Page Only button to close the overview area of the window.

Click the Bookmarks and Page button to open the Contents and display bookmarks created for the document. Click a bookmark's name to go to the Page marked by that bookmark.

Click the Thumbnails and Page button to open the overview area and display thumbnail images of each document page. Click a thumbnail to go to the page marked by that thumbnail.

Copyright TOSHIBA CORPORATION 1996
ALL RIGHTS RESERVED

TOSHIBA

MP-1501

Service Data

MECHANICAL

1. SPECIFICATIONS AND FEATURES OF LARGE CAPACITY FEEDER MP-1501

1.1 Specifications

Type ..... Add-on Attachment

Acceptable Type of Paper ..... Size : Letter (8-1/2" x 11") – For North America

: A4 (210 mm x 297 mm) – For Europe and other areas

Weight : 64 g/m^2 (17 lbs) – 80 g/m^2 (22 lbs)

Maximum Number of Sheets Accommodated ..... Approx. 1,500 (Toshiba-recommended paper)

Dimensions ..... W317 (including the portion which enters the copier) x D460 x H288 mm (Approx. 12.5" x 18.1" x 11.3")

Weight ..... Approx. 8 kg (16 lbs) with no paper loaded

Power Supply ..... DC 24 V and DC 5 V (Power is supplied from the copier)

Specifications are subject to change without notice.

1.2 Features

This large-capacity paper feeder can be used with the ED-2860 and offers the following features.

1. Paper supply of up to 1,500 sheets (A4 or Letter size), which allows you to make a large number of copies continuously without reloading copy paper.
2. Simple reloading of copy paper.
3. Easy of paper jam removal.

2. NAMES OF MAIN COMPONENTS OF MP-1501

2.1 Names of Covers

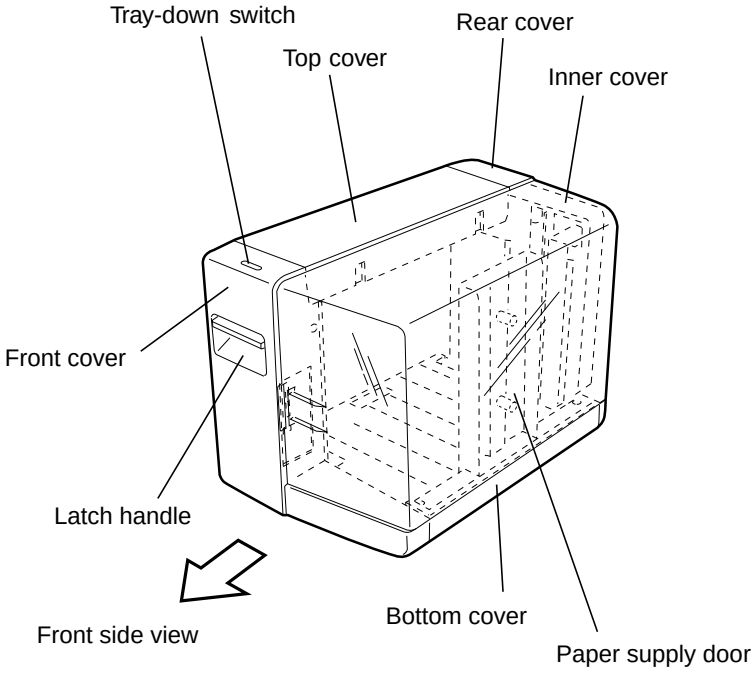

2.2 Names of Main Mechanical Parts

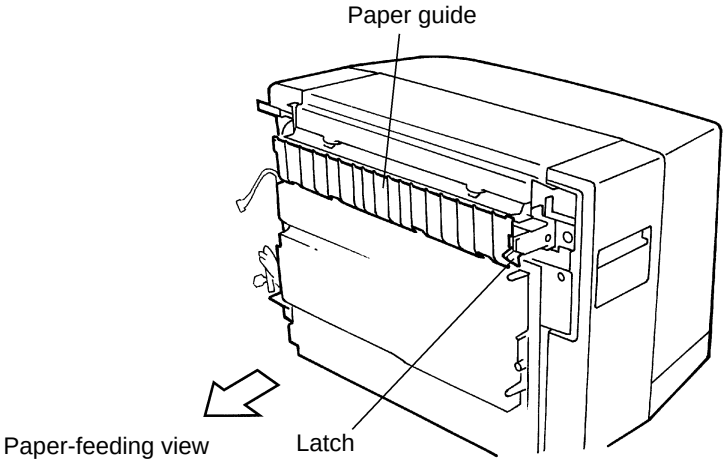

Names of Main Mechanical Parts

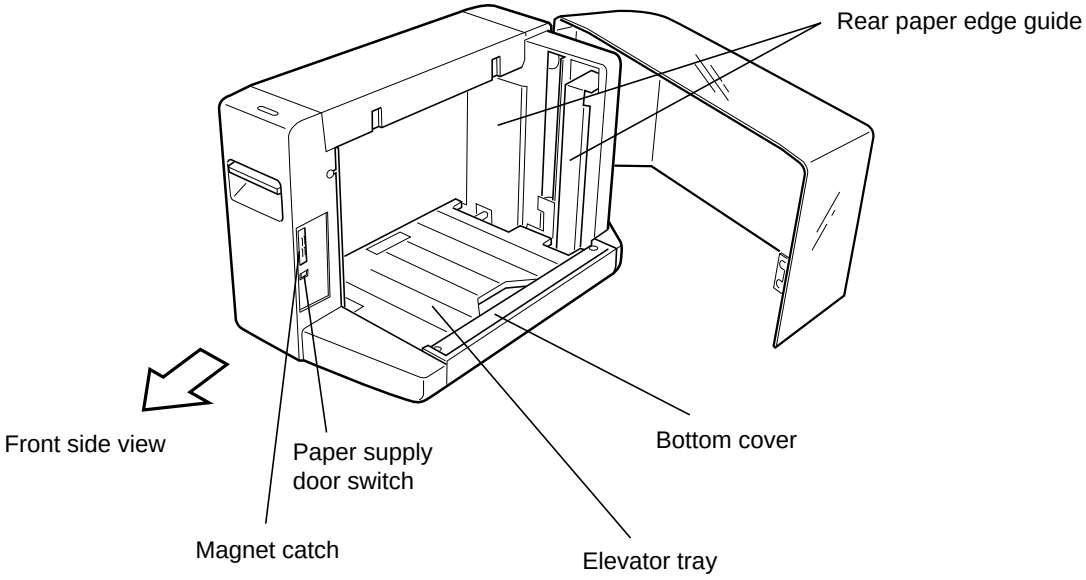

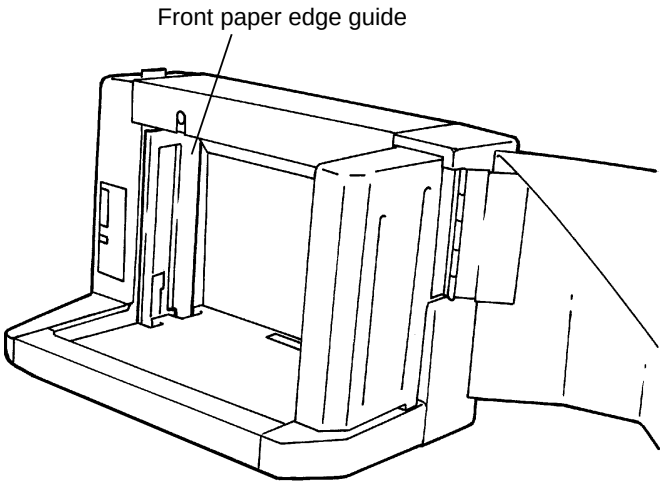

Names of Main Mechanical Parts

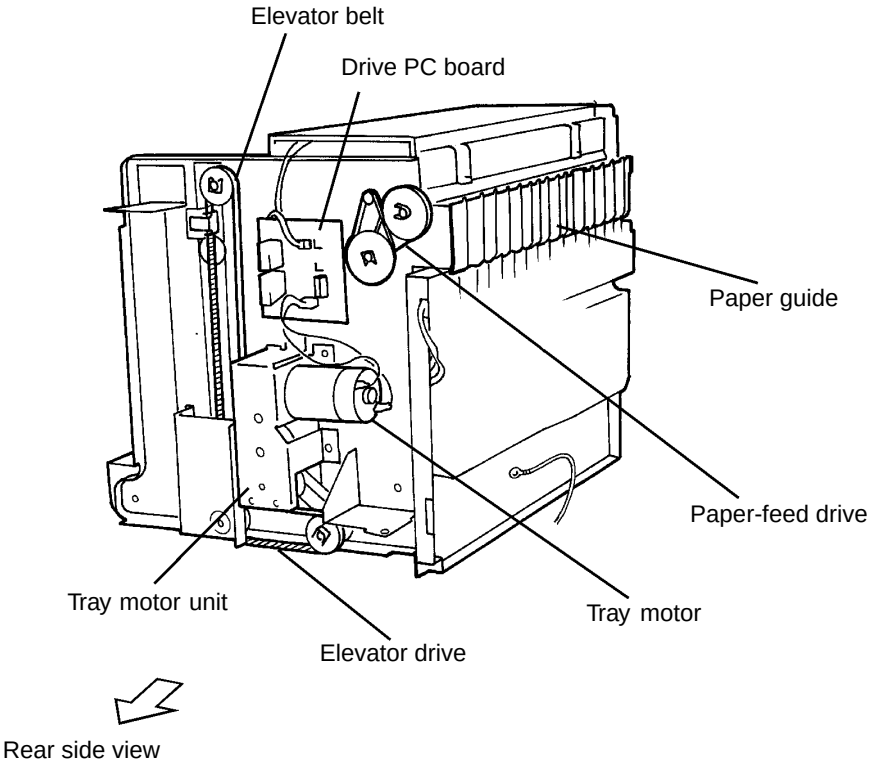

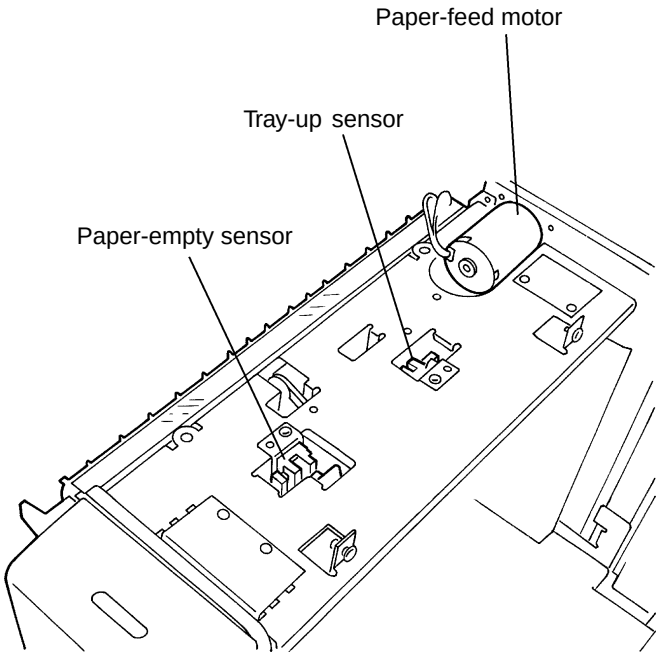

Names of Main Mechanical Parts

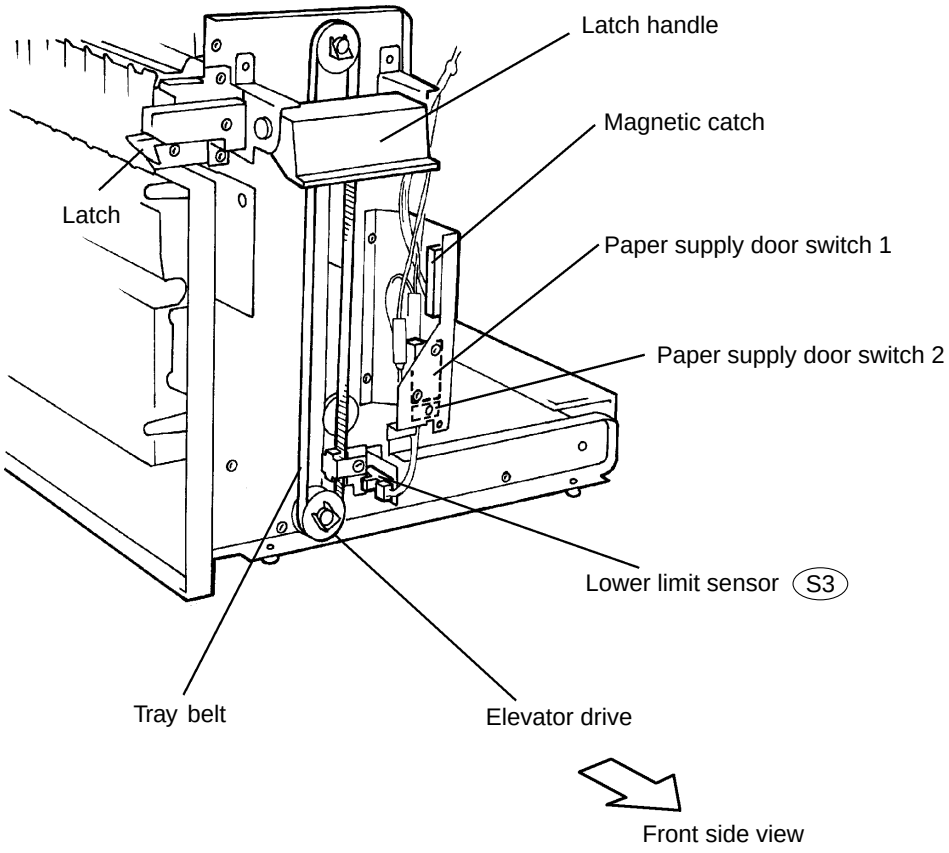

3. FRONT SECTIONAL VIEW

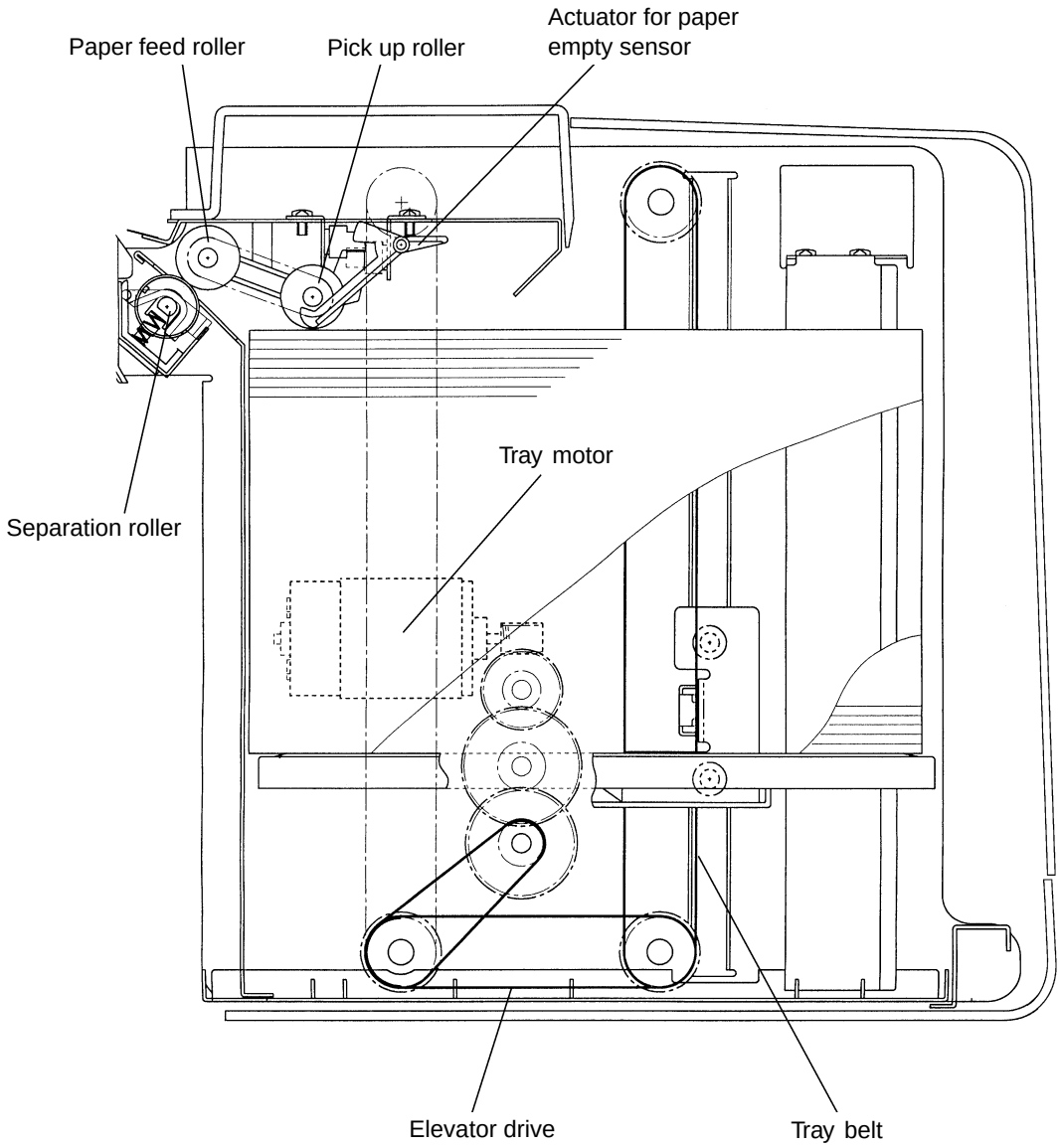

4. DESCRIPTION OF OPERATION

4.1 Paper-Empty Detection

If the paper on the elevator tray is exhausted, the actuator for the paper empty sensor will drop into the hole of the tray and the paper empty sensor will be turned ON.

And then, the ADD PAPER lamp will flash.

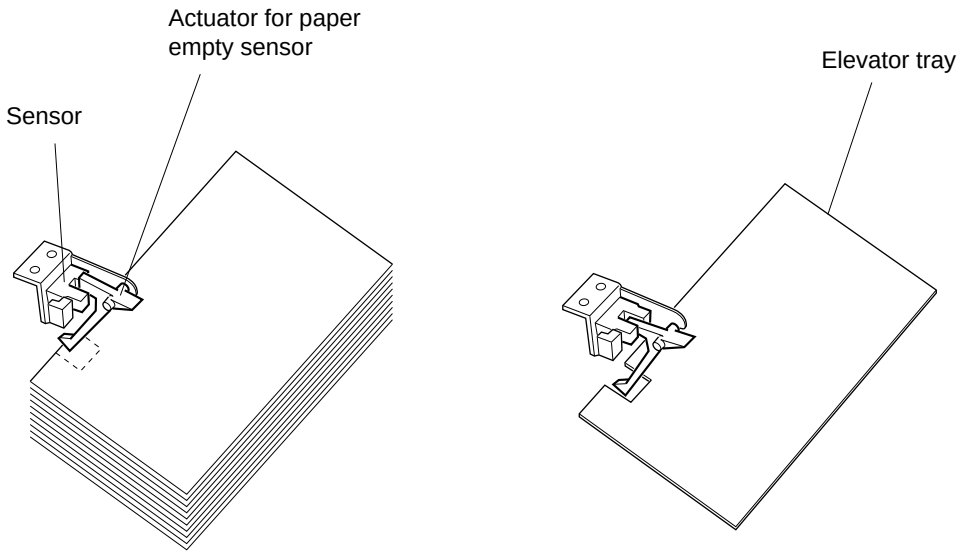

Fig. 4.1

The ADD PAPER lamp of the copier also flashes when the MP-1501 is in one of the following conditions:

- When the paper supply door of the MP-1501 is opened while the copier is in the ready condition.
- When the elevator tray is moving up.
- When a paper misfeed has occurred in the MP-1501. (In this case, the elevator tray moves down.)

After opening the paper supply door of the MP-1501, paper should be added and the paper-supply door closed, then the elevator tray is automatically moved up. When the paper on the elevator tray pushes up the actuator of the paper-empty sensor, the “paper-empty” condition is cleared.

4.2 Paper Feeding Operation

After having added paper on the elevator tray, when the paper-supply door is closed, the tray motor rotates in such a direction as to raise the elevator tray. When it reaches the paper feeding position, the tray motor stops rotating.

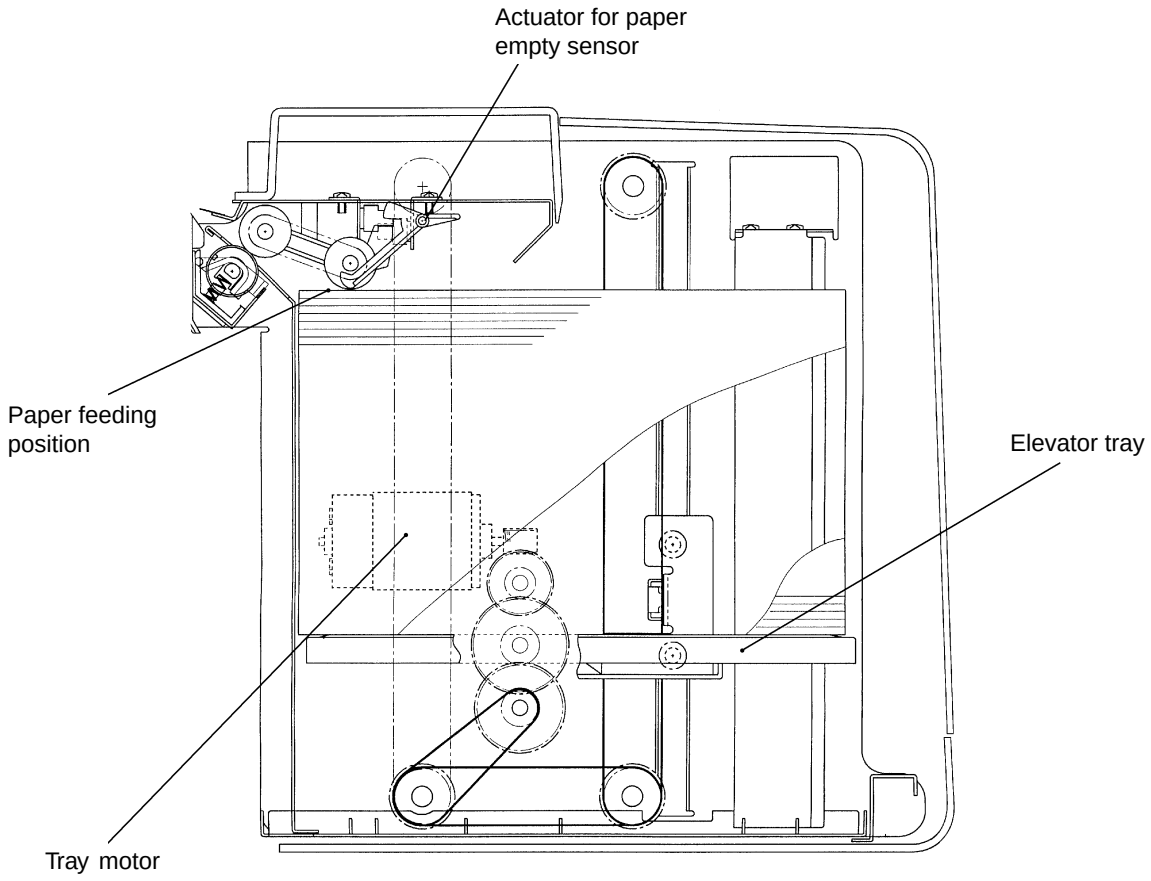

Fig. 4.2

Under this condition, if the PRINT key of the copier is pressed, the paper feed motor rotates, causing the pick-up roller to carry the paper in standby to the copier's transport roller, and then stops rotating. The transport roller sends the paper to the aligning roller. A fixed period of time after the trailing edge of the paper passes the copier's transport switch, the paper feed motor will rotate, causing the same procedure to be repeated for the number of copies specified.

4.3 Paper Feed Drive System

As shown in Fig. 4.3, when the paper-feed motor rotates in the paper feeding direction, its rotation is transmitted through pulleys and elevator belts to the pulley drive shaft. The rotation is further transmitted through a pulley and belt to the feed roller shaft and the feed roller is rotated in the direction shown.
When the paper-feed roller is rotated, a sheet of paper activates paper sensor as described in the preceding section. The paper-feed motor is then turned off to stop the rotation of the feed roller.

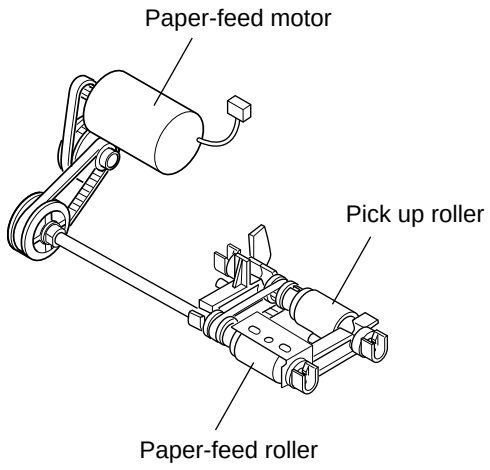

Fig. 4.3

4.4 Elevator Tray Operation

With the copier's power turned on, when the MP-1501's paper-supply door is closed, the tray motor rotates clockwise as seen at its shaft side, causing the elevator tray to rise by means of timing belts and pulleys.

When the paper on the tray pushes up the pick-up roller, the actuator of the tray-up switch is also pushed up, causing the switch to be turned on, which in turn switches off the tray motor.

Copying is started, and after 10 – 20 sheets of paper have been fed in, the pick-up roller lowers along with the actuator of the tray-up switch. When the level sensor detects this, it causes the tray motor to rotate, making the tray to rise 2 – 3 mm.

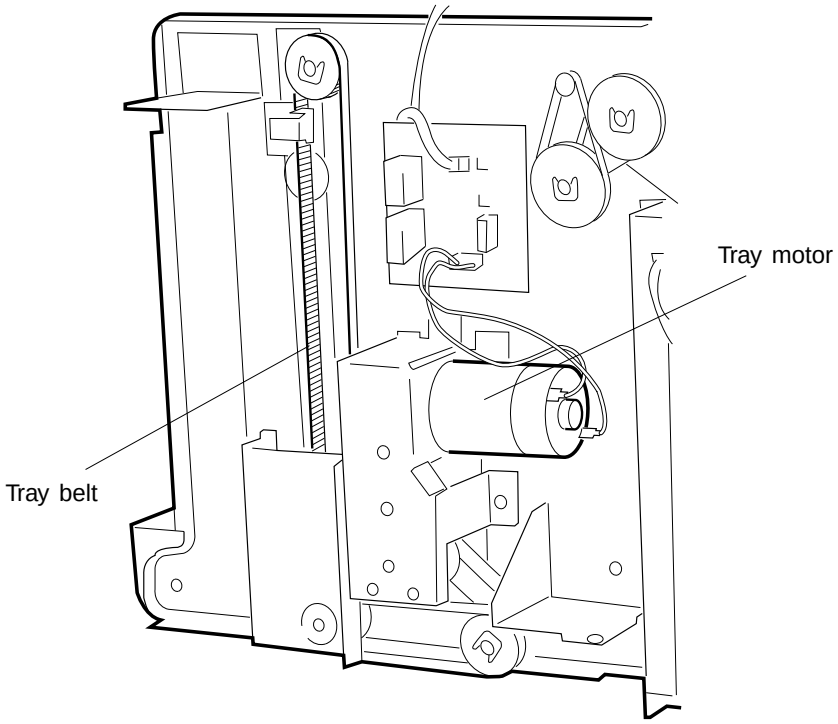

Fig. 4.4

This incremental rising of 2 – 3 mm is repeated many times, and when the paper supply on the tray finally runs out, the actuator of the empty sensor drops in the opening in the tray. The empty sensor then detects this and causes the copier's ADD PAPER lamp to flash. Also, the tray motor is rotated counterclockwise as seen at its shaft side, causing the elevator tray to move down, and when the tray pushes on the tray-down switch, the tray motor stops rotating.

While the elevator tray is moving down, opening the MP-1501 paper-supply door will cause the tray motor to stop immediately. After paper is added and the paper-supply door is closed, the tray motor rotates in reverse, causing the elevator tray to move up to the paper feeding position.

4.5 Elevator Tray Drive System

The rotation of the tray motor is transmitted through pulleys and timing belts to move up and down the elevator tray.

4.5.1 Elevator tray rising operation

When the tray motor rotates clockwise as seen from the motor shaft, each gear of the tray motor unit rotates in the direction of the arrow as shown in the drawing below to raise the elevator tray through the tray belt.

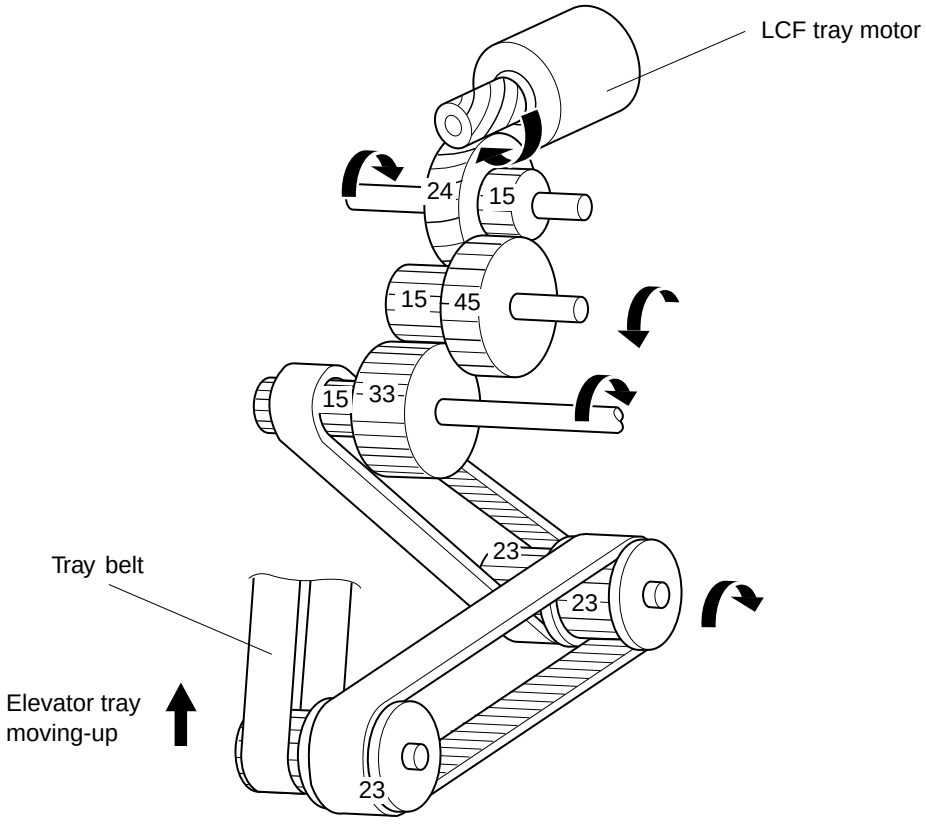

Fig. 4.5

4.5.2 Elevator tray lowering operation

The tray motor rotates in a direction reverse to that described in Sec. 4.5.1, causing the elevator tray to move down in a similar procedure.

5. REPLACEMENT AND ADJUSTMENT OF VARIOUS PARTS

5.1 Removing Covers

[A] Top cover

(1) Open the paper-supply door.

(2) Remove the two M4 screws (arrows ⓐ) from the top side, and loosen the two M4 screws (arrows ⓑ) from the paper-supply door side.

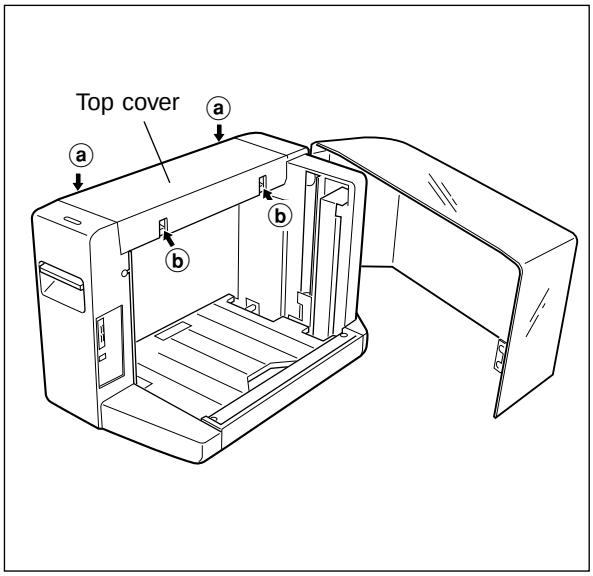

[B] Front cover

(1) Open the paper-supply door.

(2) Remove the top cover.

(3) Remove the sealed mylar with one screw.

(4) Remove the three relay connectors.

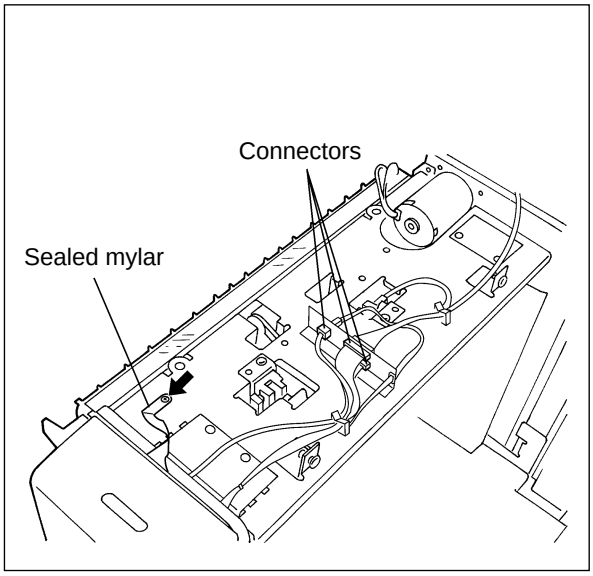

(5) Loosen two screws from the lower side, and loosen a screw from the paper-supply door.

(6) Slide out the front cover toward you.

Note: Be careful as the front cover has electrical parts attached on its inside surface.

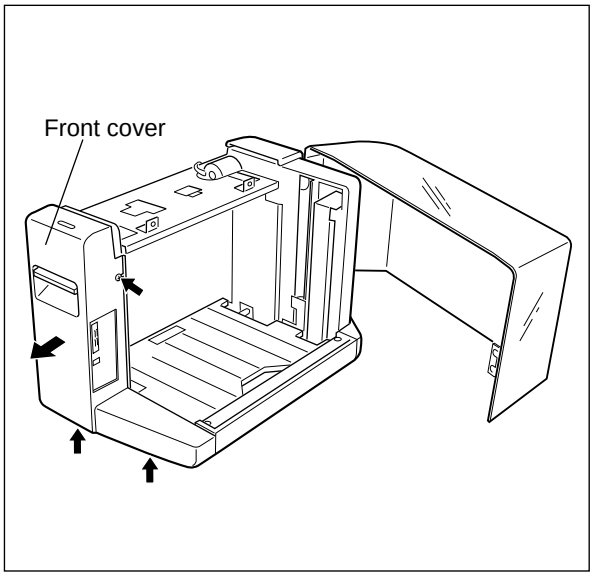

[C] Latch handle

(1) Remove the front cover.

(2) Remove one screw to remove the bracket holding one side of the latch handle.

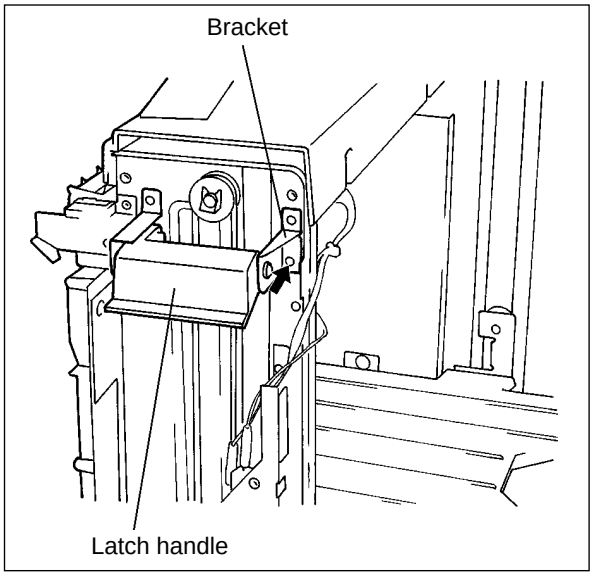

(3) Remove the latch handle.

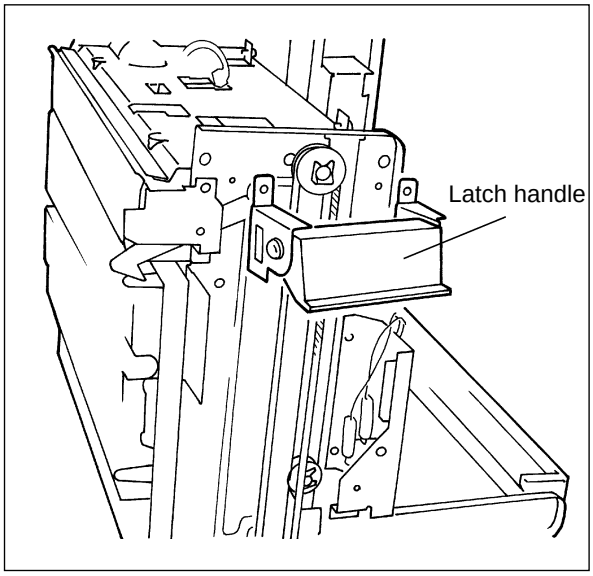

[D] Rear cover

(1) Remove the M4 screw (arrow ⓐ), and loosen the two M4 screws (arrows ⓑ).

(2) Slide out the rear cover toward you.

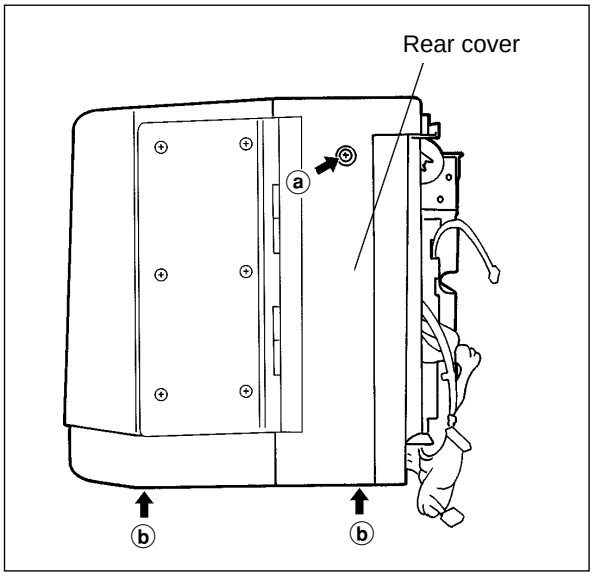

[E] Bottom cover

(1) Open the paper-supply door.

(2) Loosen the two screws.

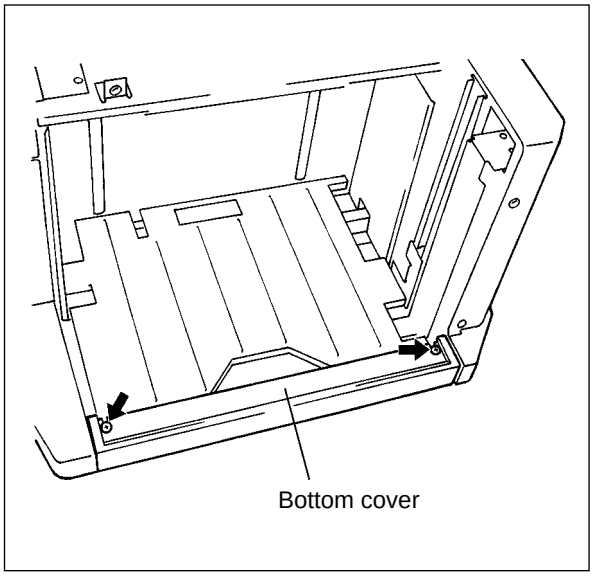

(3) Slide out the bottom cover toward you.

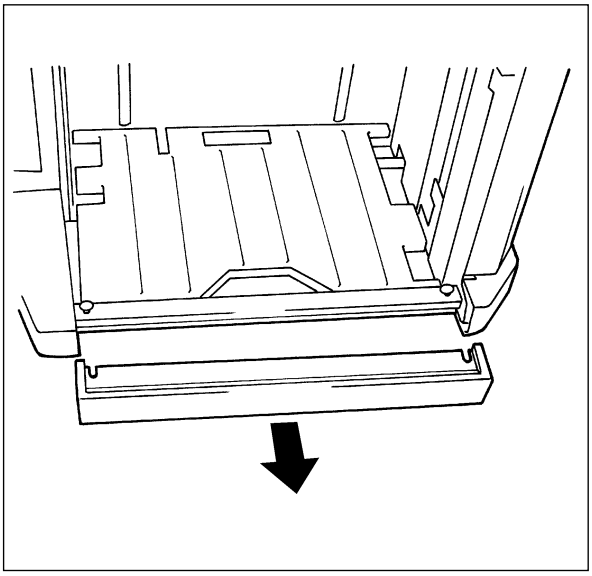

[F] Paper-supply door

(1) Remove the rear cover, referring to “[D] Rear cover”.

(2) Open the paper-supply door.

(3) Loosen the three M3 screws fastening the hinge.

(4) Slide the paper-supply door (together with the hinge) upward to detach the hinge from its screws.

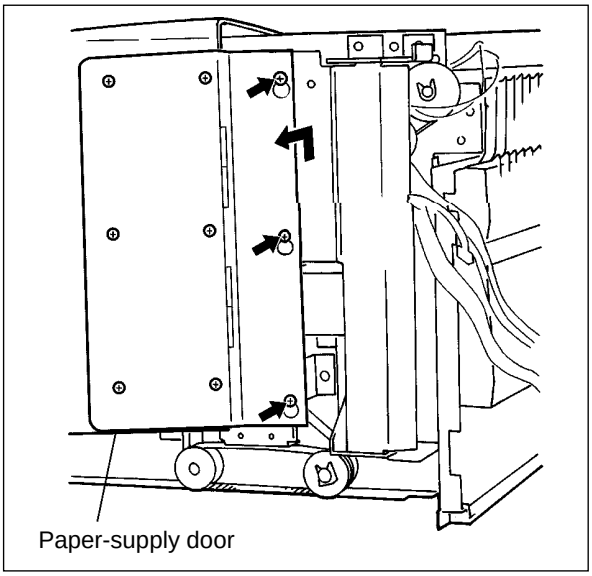

(5) Unscrew the six M4 screws fastening the paper-supply door to remove the mounting bracket from the paper-supply door.

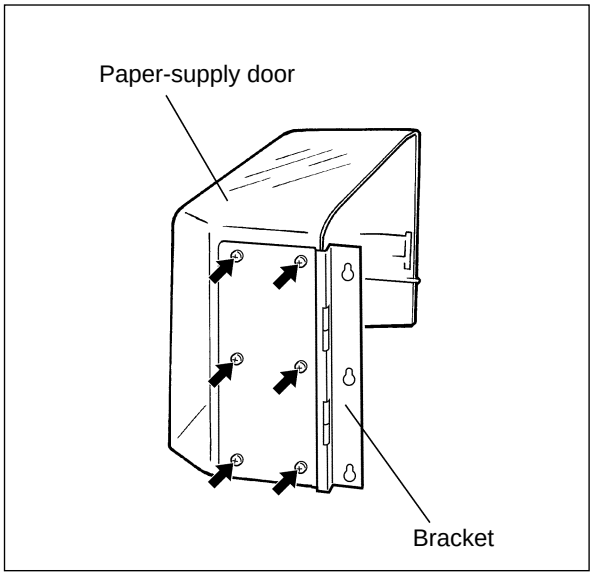

[G] Inner cover

(1) Open the paper-supply door.
(2) Remove three M4 screws.
(3) Slide out the inner cover toward you.

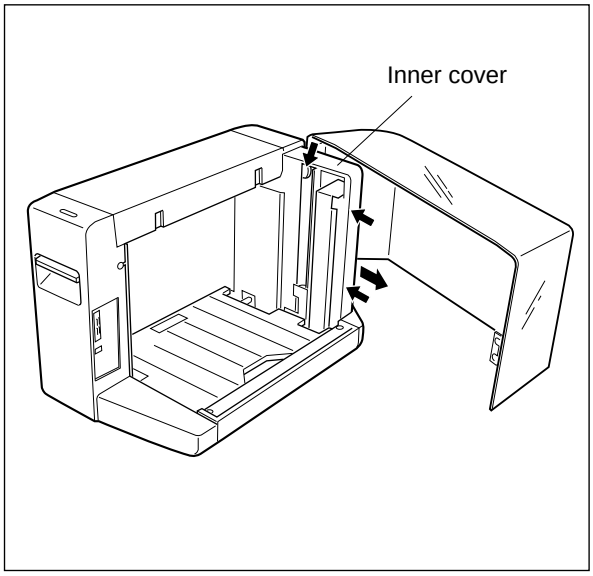

5.2 Paper-Edge Guides

Note: Both front and rear paper-edge guides are installed at different positions depending upon the size of the paper selected. The base cover, elevator tray and support brackets are each provided with mounting slots at the front and rear sides in positions corresponding to the various sizes of paper. The screws are also mounted at different positions correspondingly.

- A4 size ..... Outer slots in the frame (front and rear)
- LT size ..... Middle slots (front and rear)

Note: The front and rear paper-edge guides must be set parallel to each other, and the distance between their inner surfaces must be the paper width plus 0.5 – 1.0 mm.

(1) Remove the top cover, referring to "5.1 Removing Covers, [A] Top cover".
(2) Remove the inner cover, referring to "5.1 Removing Covers, [G] Inner cover".
(3) Remove the two M3 screws fastening the front paper-edge guide.
(4) Lifting the paper-edge guide up slightly, insert it into the A4 or Letter size positioning groove, and after confirming the screw hole positions, tighten the screws.

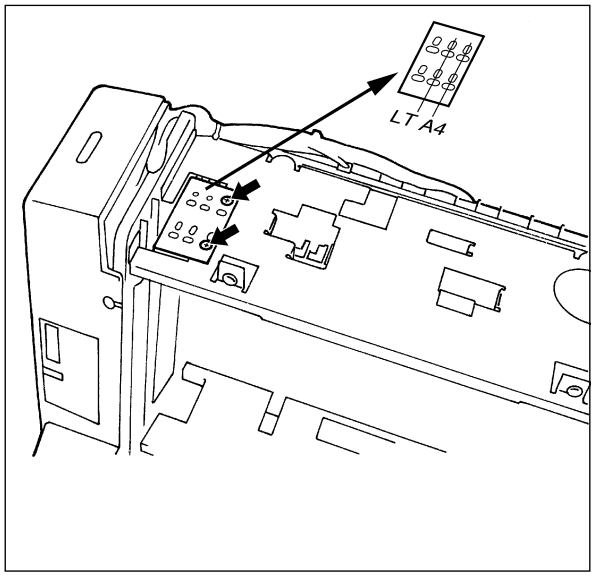

(5) Remove the two M3 screws fastening the rear paper-edge guide located near the paper-supply door.
(6) Insert the rear paper-edge guide into the A4 or Letter size positioning groove, and after confirming the screw hole positions, tighten the screws.

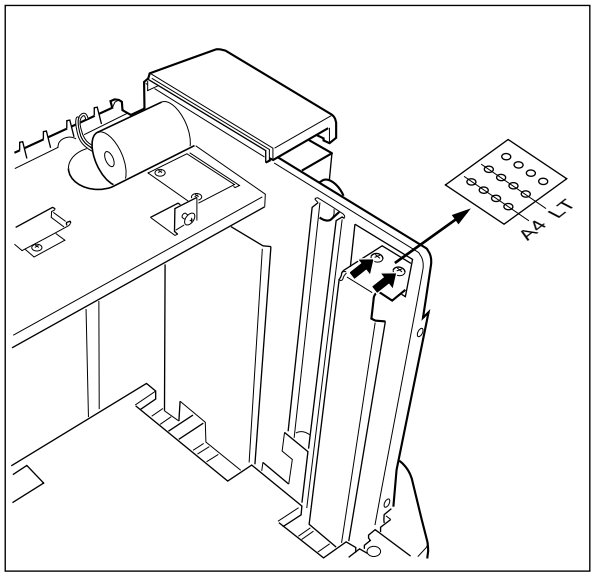

(7) Remove the two M3 screws fastening the other rear paper-edge guide.
(8) Insert the other rear paper-edge guide into the A4 or Letter size positioning groove, and after confirming the screw hole positions, tighten the screws.

Note: If the paper size is not consistent, adjust the position of the guides by using the elongated holes. Normally, the screws are tightened in the round part of the screw holes.

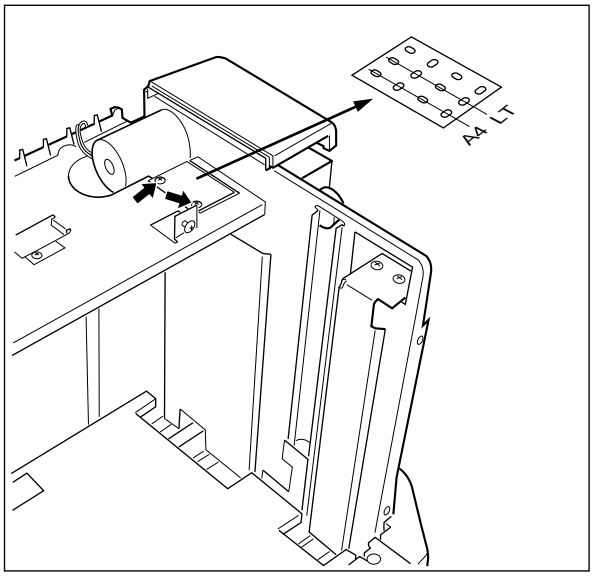

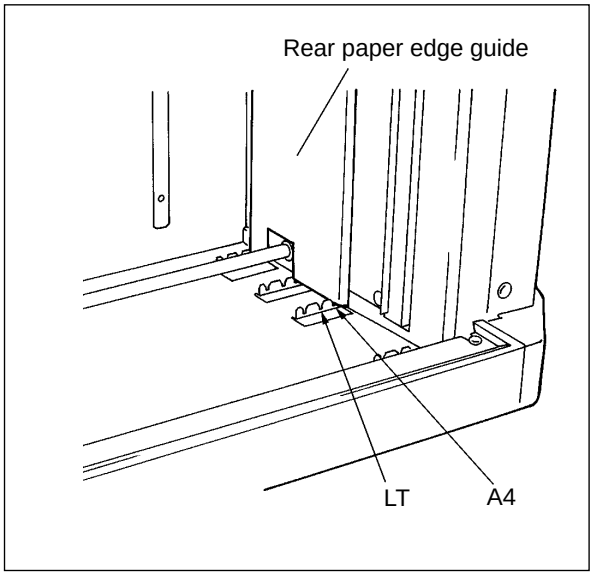

5.3 Separation Roller

(1) Unscrew the two M3 screws to remove the ASM-paper guide.

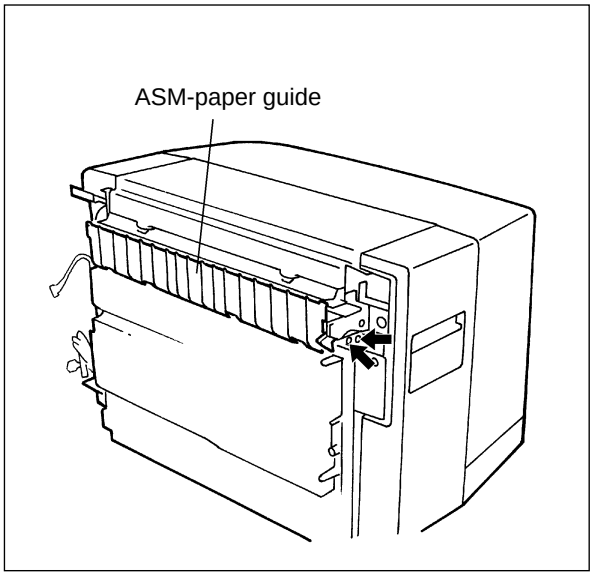

(2) Remove the stopper holder.

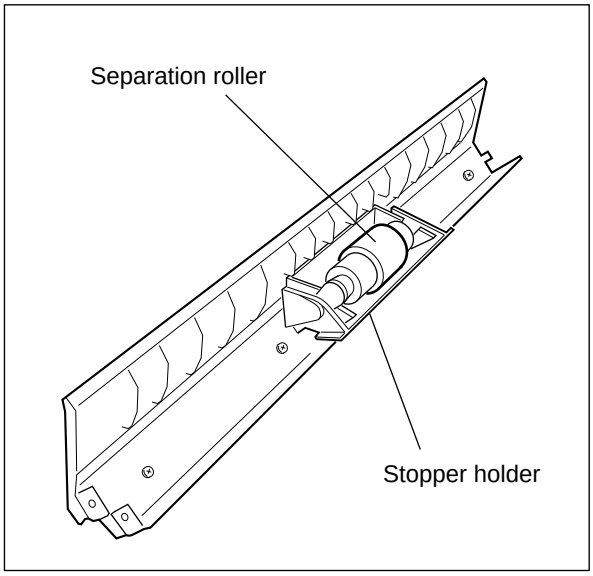

(3) Remove the separation roller.

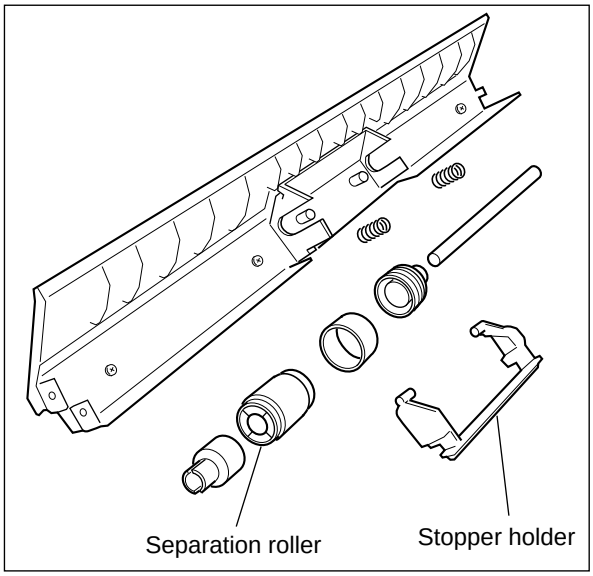

5.4 Removing the Elevator Tray

(1) Open the paper-supply door.
(2) Remove the three M4 screws from the top.
(3) Lift the elevator tray to take it out.

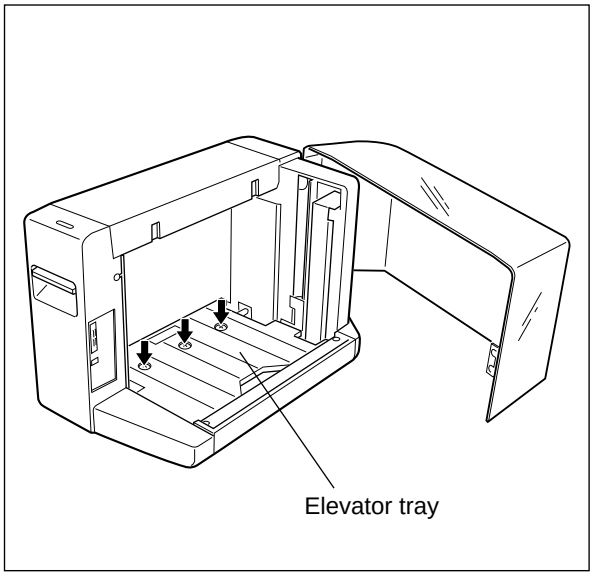

5.5 Replacing Electrical Parts

[A] Tray-down switch PC board (PWA-F-KEY-768)

(1) Remove the top cover.
(2) Remove the front cover.
(3) Remove the M3 (PTBR) screw fastening the tray-down switch PC board, and pull out the PC board from where it is held in the cover to take it out.

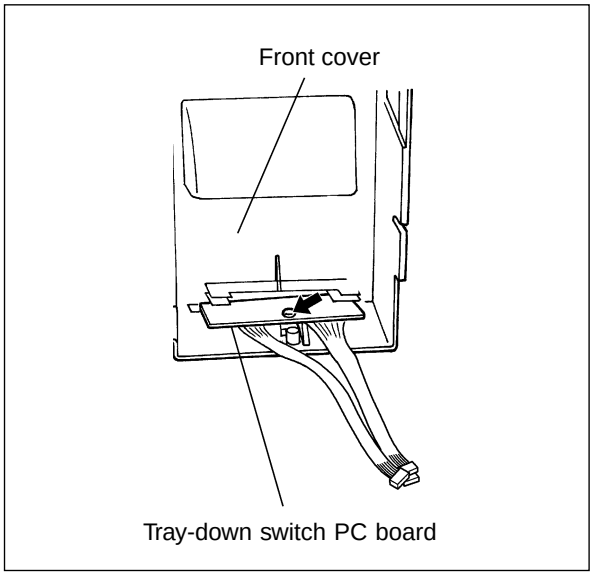

[B] Paper-supply door switch 1, switch 2

(1) Remove the top cover.
(2) Remove the front cover.
(3) Unplug the two connectors of the paper-supply door opening/closing switch.
(4) Unscrew two M3 screws, and remove the bracket on which the paper-supply door switch 1, switch 2 are mounted.

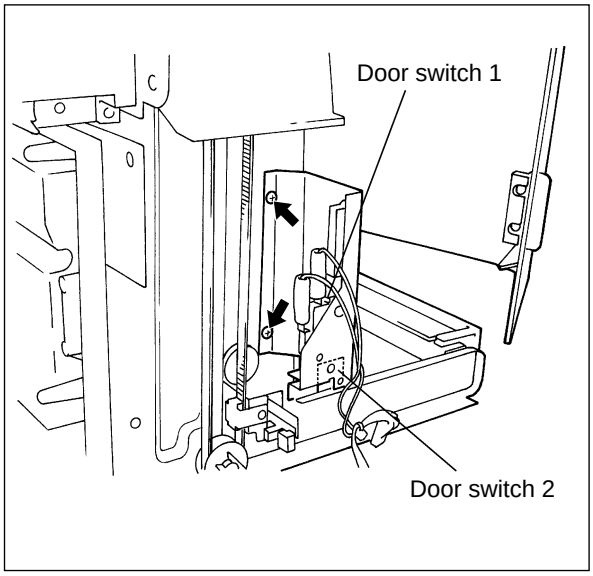

(5) Unscrew two M3 screws to remove the paper-supply door switch 1.
(6) Unscrew two M2 screws to remove the paper-supply door switch 2.

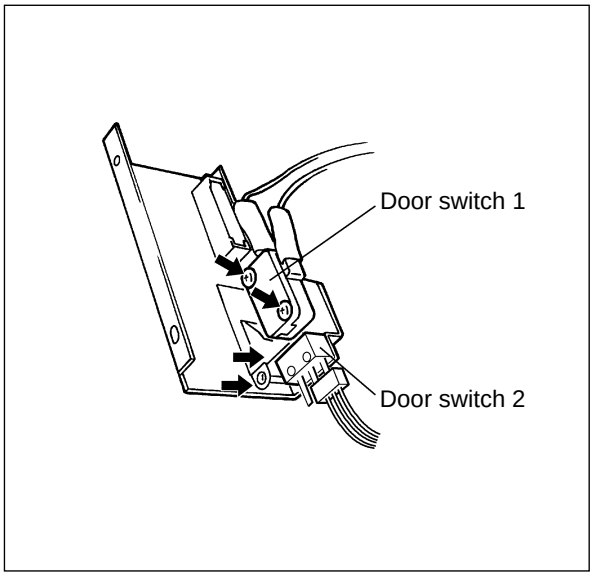

[C] Tray lower-limit sensor

(1) Remove the top cover.
(2) Remove the front cover.
(3) Unscrew the M3 screw to remove the bracket on which the tray lower-limit sensor is installed.
(4) Unplug the connector of the tray lower-limit sensor.

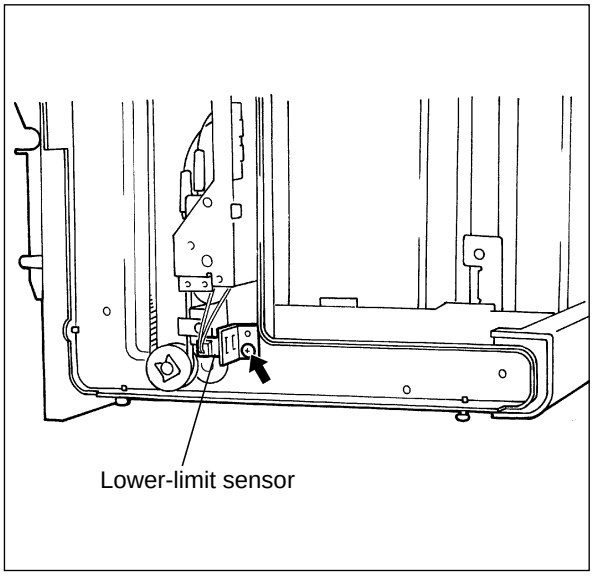

(5) Remove the tray lower-limit sensor from its bracket.

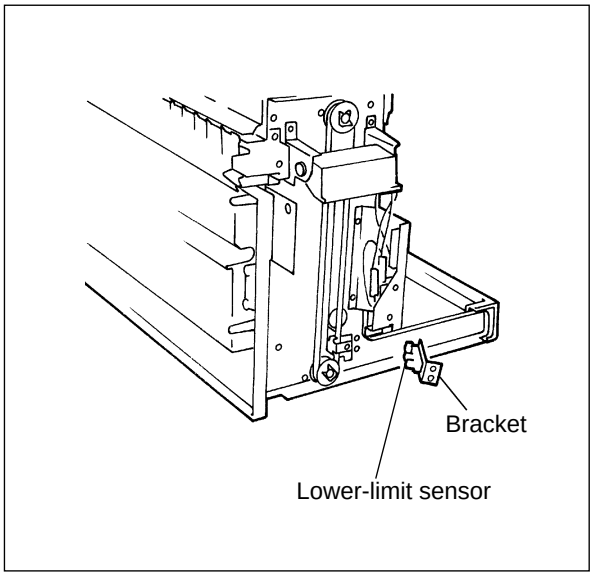

[D] Paper empty sensor

(1) Remove the top cover.

(2) Unscrew the M3 screw to remove the bracket on which the paper empty sensor is installed. Be careful as its actuator is also held by the bracket.

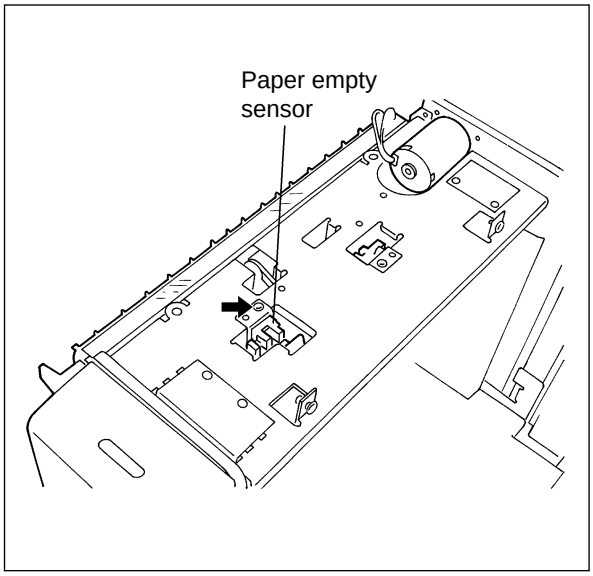

(3) Remove the actuator from its bracket.

(4) Disconnect the connector from the sensor.

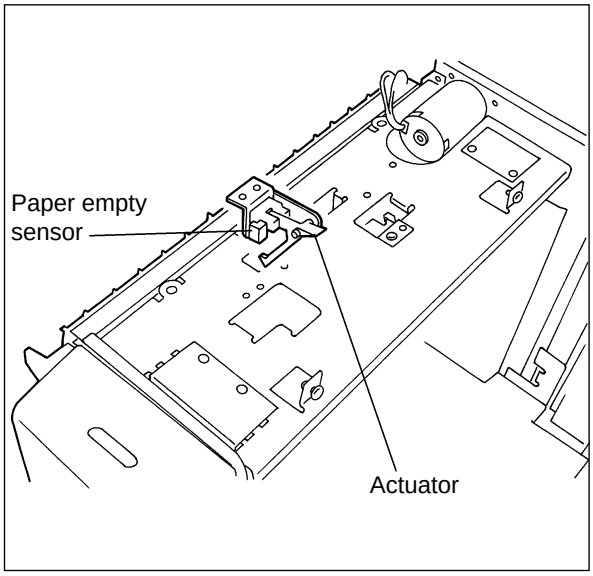

(4) Remove the paper empty sensor from its bracket.

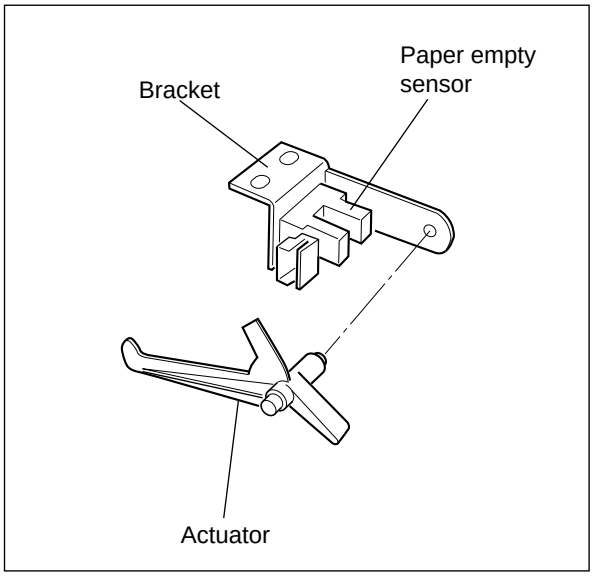

[E] Tray-up sensor

(1) Remove the top cover.

(2) Unscrew the M3 screw to remove the bracket on which the tray-up sensor is installed.

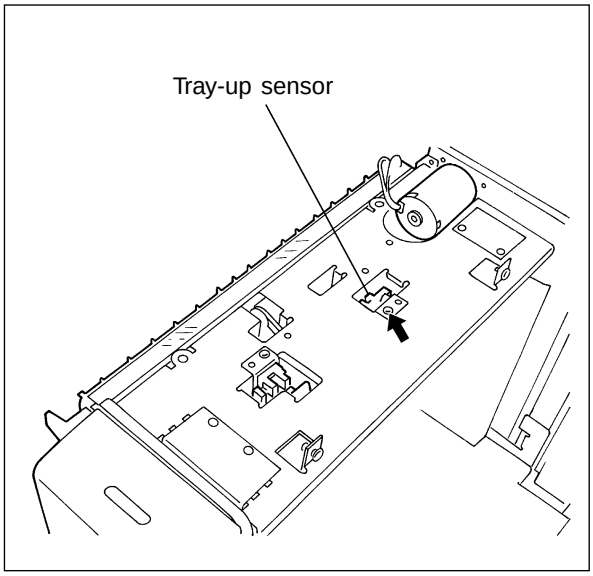

(3) Unplug the connector from the sensor.

(4) Remove the tray-up sensor from the bracket.

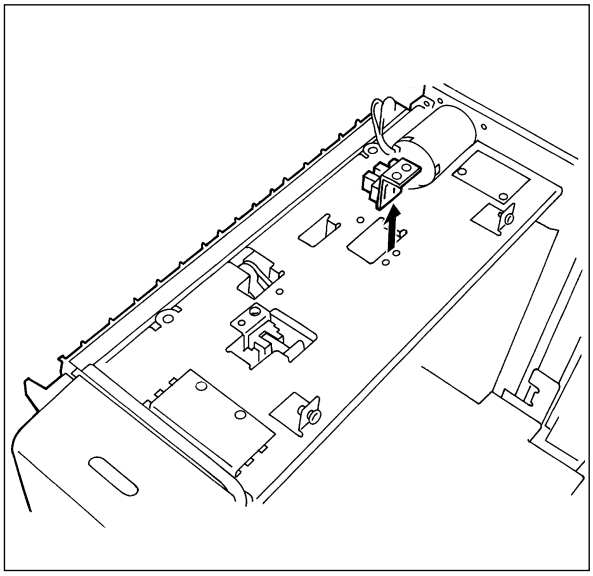

[F] Paper feed motor

(1) Remove the top cover.

(2) Remove the rear cover.

(3) Remove the inner cover.

(4) Disconnect the paper-feed motor connector.

(5) Unscrew the six M3 screws to remove the bracket which covers the driving section.

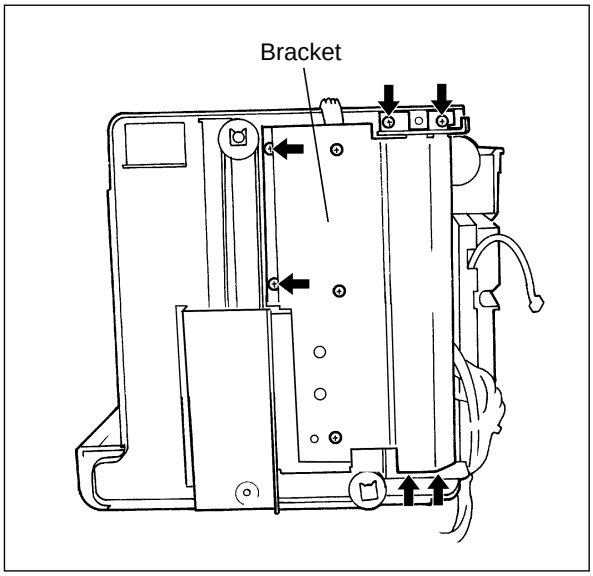

(6) Unscrew the two M3 screws to take out the paper-feed motor.

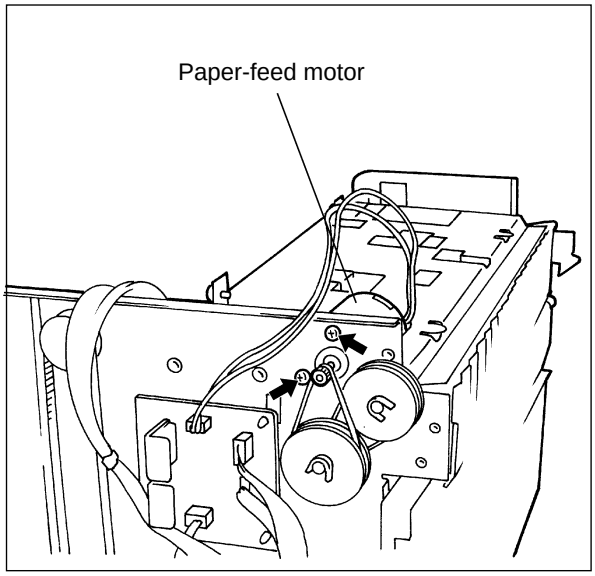

[G] Tray motor

(1) Unscrew the four M3 screws to remove the tray drive cover.

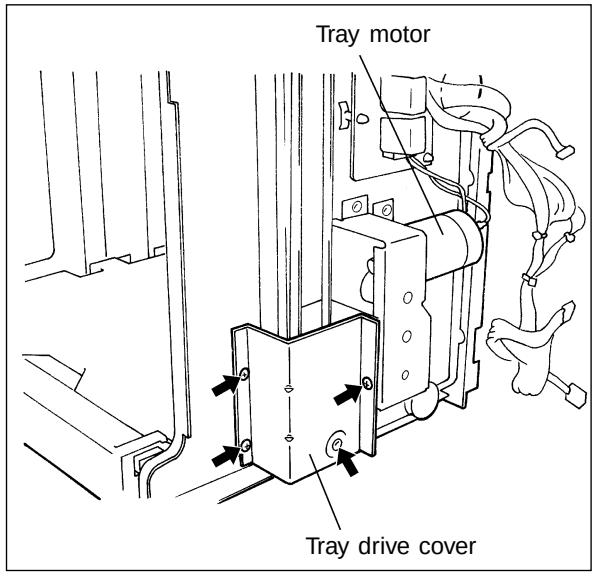

(2) Unplug the tray motor connector from the PC board.

(3) Unscrew the six M3 screws to remove the tray motor unit.

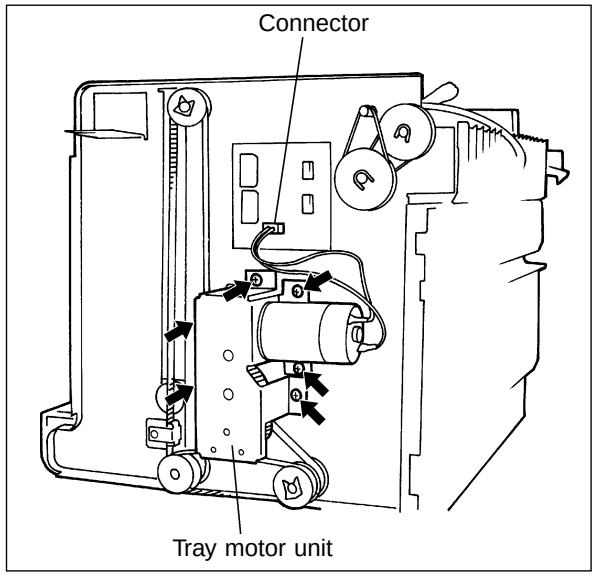

(4) Unscrew the two M3 screws to remove the tray motor from its bracket.

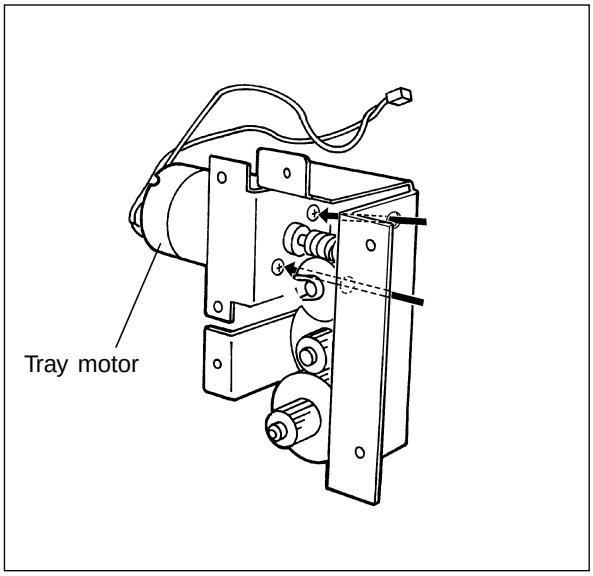

[H] Drive PC board (PWA-F-DRV-768)

(1) Unplug the connectors from the PC board.

(2) Remove the PC board by unlocking it from its three lock supports.

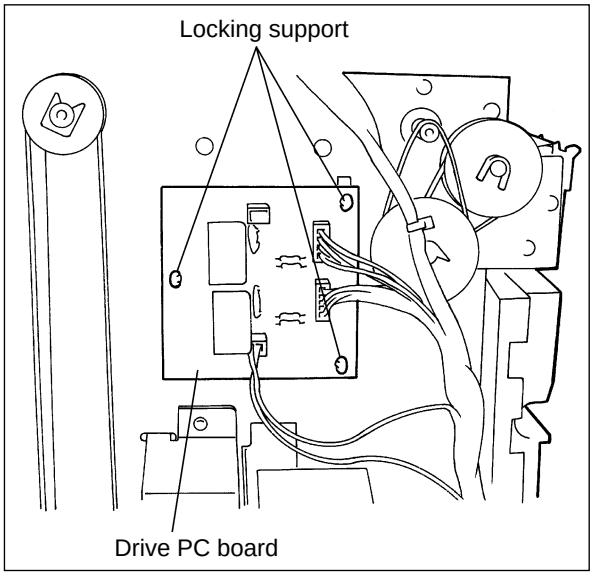

5.6 Replacing the Pick-up Roller and the Paper Feed Roller

[A] Pick-up roller

(1) Lower the elevator tray to the bottom.
(2) Remove the top cover.
(3) Remove the paper empty sensor.
(4) Remove the stop ring.
(5) Remove the weight from the shaft.
(6) Remove the shaft from the arm.
(7) Remove the pick-up roller from its shaft.

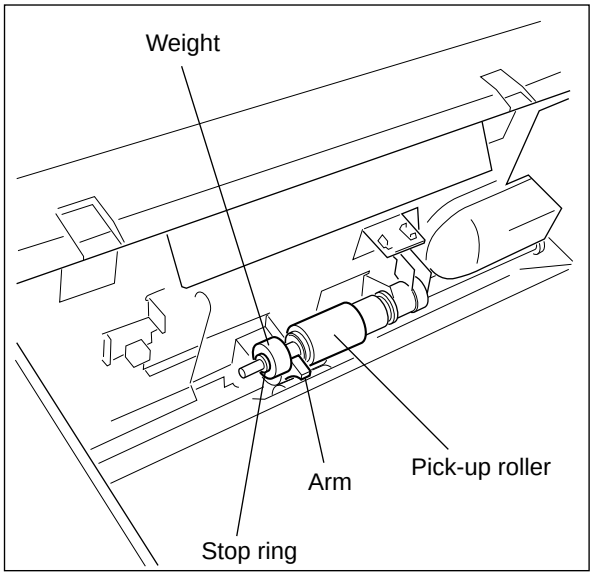

[B] Paper feed roller

(1) Lower the elevator tray to the bottom.
(2) Remove the top cover.
(3) Remove the paper-empty switch.
(4) Open the paper-supply door.
(5) Remove the stop ring.
(6) Remove the bracket which is holding the paper-feed roller shaft (one M3 screw) and bushing.

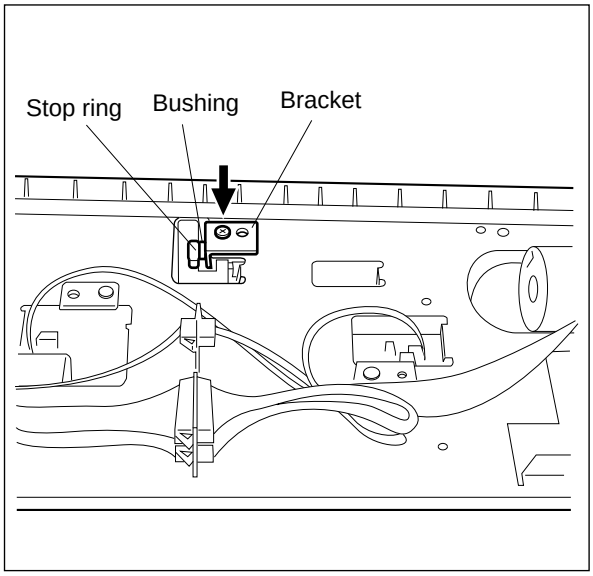

(7) Remove the arm from the shaft.

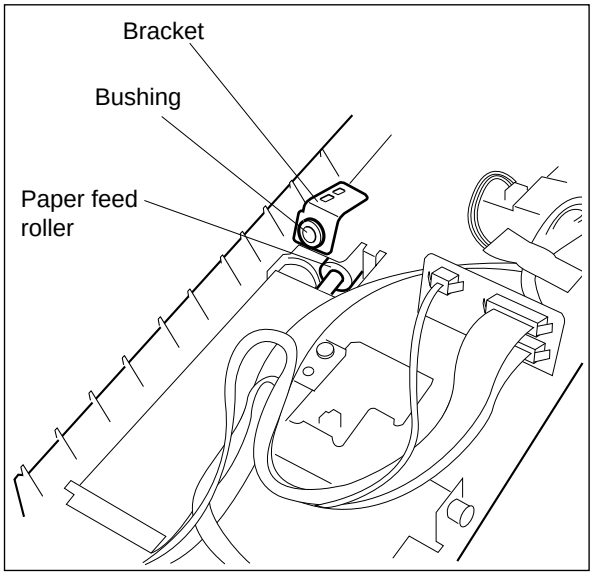

(8) Slide out the paper feed roller along the paper-feed roller shaft.

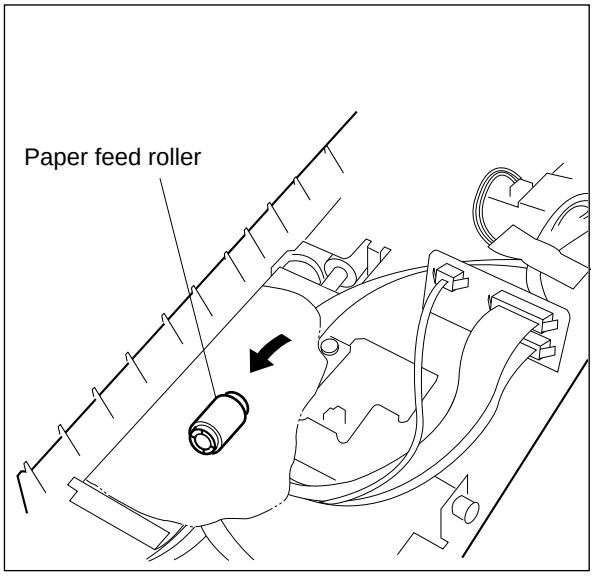

5.7 Replacing the Elevator Tray Belt

(1) Remove the top cover.
(2) Remove the front cover.
(3) Remove the rear cover.
(4) Remove the inner cover.
(5) Remove the paper-supply door.
(6) Unscrew the six M3 screws to remove the bracket which covers the driving section.
(7) Unscrew the four M3 screws to remove the tray drive cover.
(8) Pull out the tray motor connector from the PC board.
(9) Unscrew the six M3 screws to remove the tray motor unit.
(10) Unscrew the M3 screw to remove the bracket which is holding the timing belt.
(11) Remove the two stop rings which are fixing the upper and lower pulleys.

Refer to “5.5 Replacing Electrical Parts, [G] Tray motor” (page 5-12) for the steps (1) – (8) above.

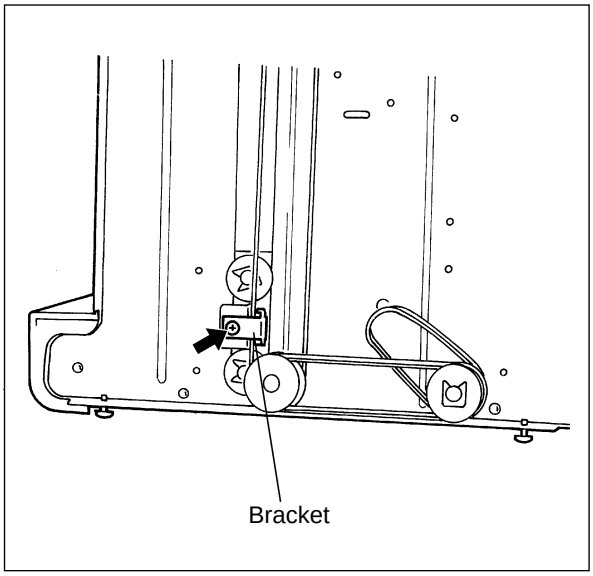

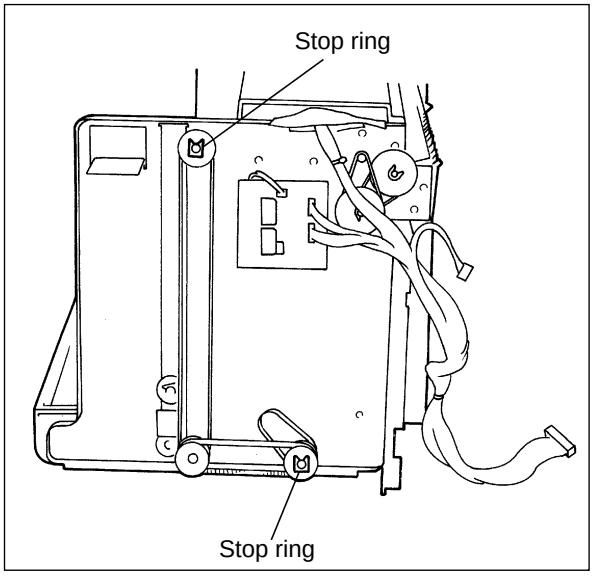

(12) Remove the timing belt and the pulley.
(13) Remove the latch handle.

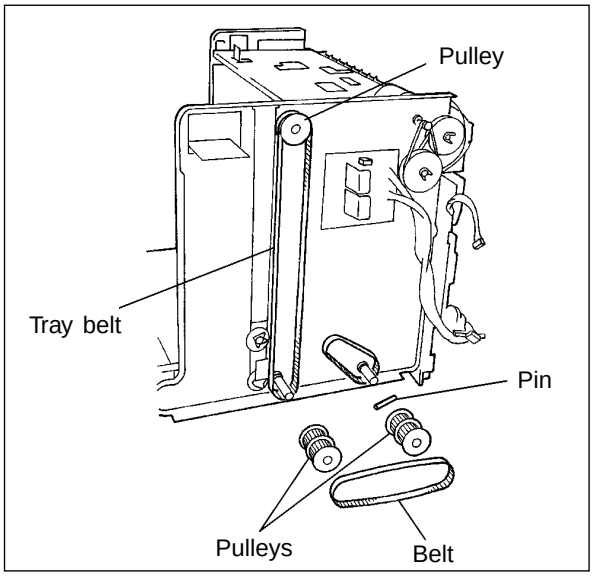

(14) Unscrew the M3 screw to remove the bracket which is holding the timing belt.

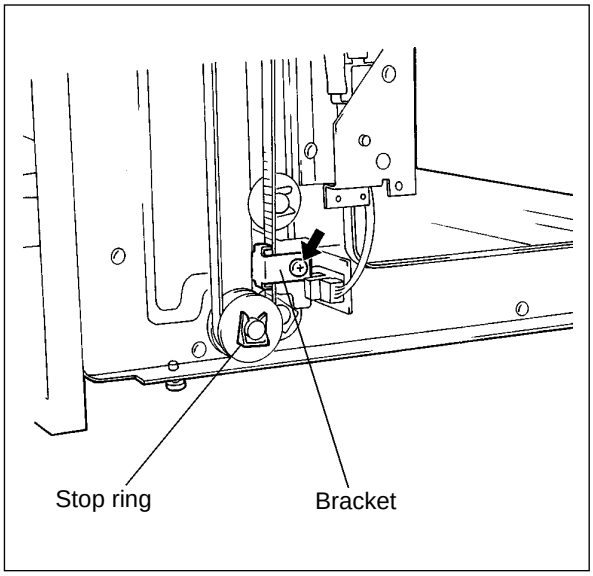

(15) Remove the two stop rings which are fixing the upper and lower pulleys, to remove the timing belt.

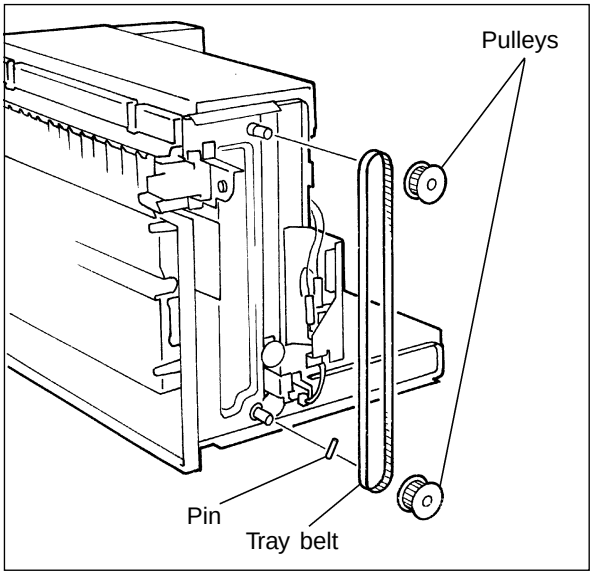

5.8 Replacing the Gears and Pulleys of the Drive Gear Unit

[A] Paper-feed drive section

(1) Remove the top cover.

(2) Remove the rear cover.

(3) Unscrew the six M3 screws to remove the bracket which covers the drive section.

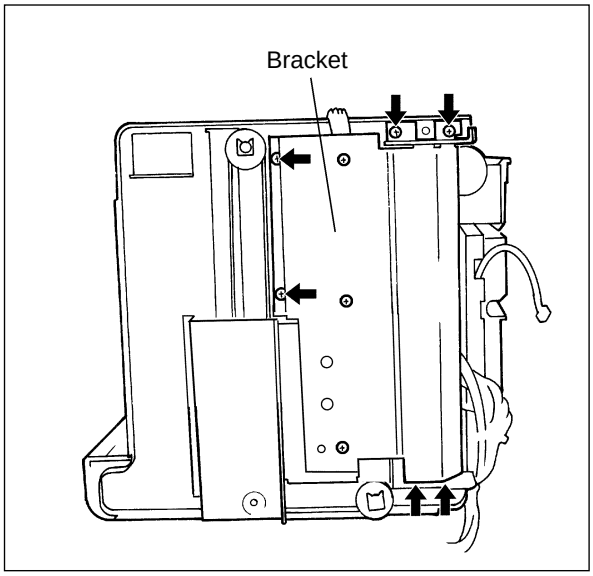

(4) Remove the two stop rings to take out the pulleys and the timing belts.

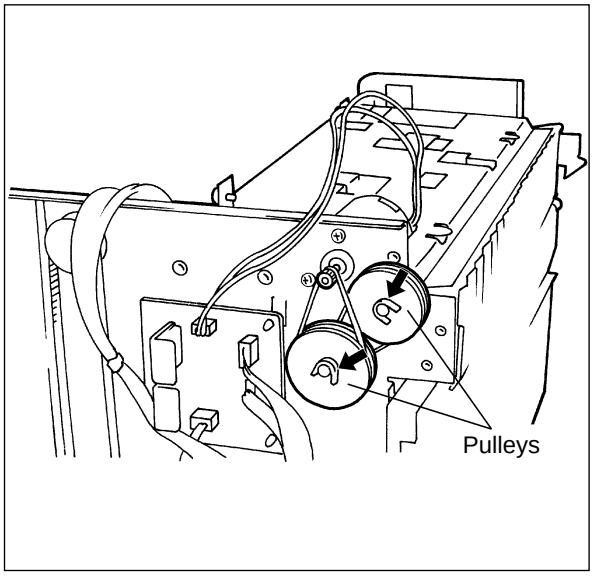

[B] Tray drive section

(1) Remove the top cover.

(2) Remove the rear cover.

(3) Unscrew the six M3 screws to remove the bracket which covers the drive section.

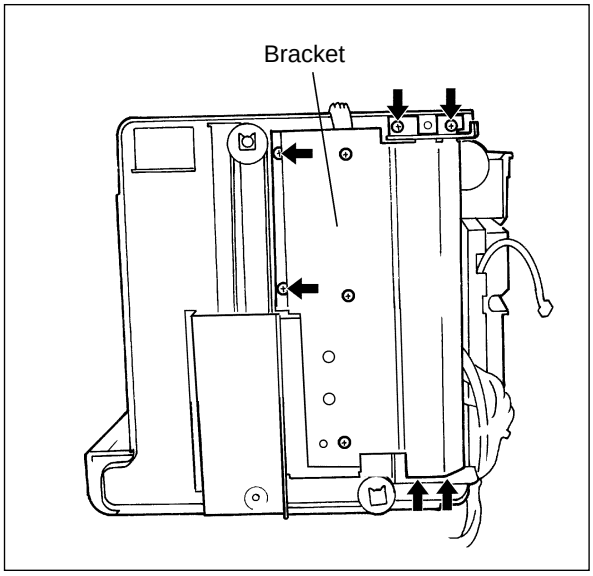

(4) Disconnect the tray motor connector from the PC board.

(5) Unscrew the six M3 screws to remove the tray drive cover.

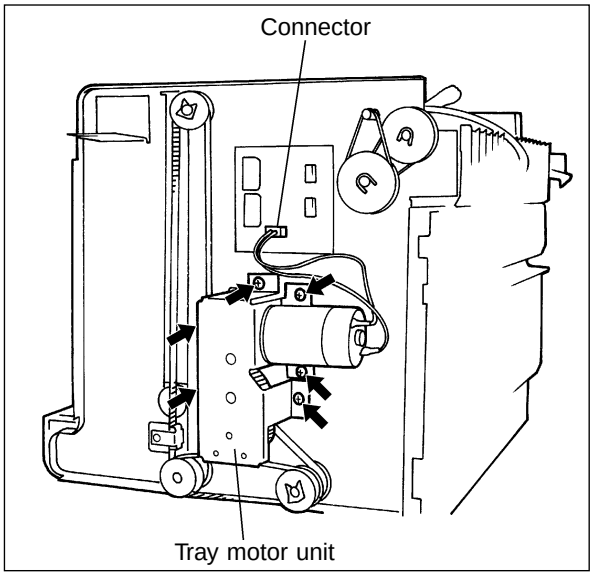

(6) Remove the stop ring to remove the gears.

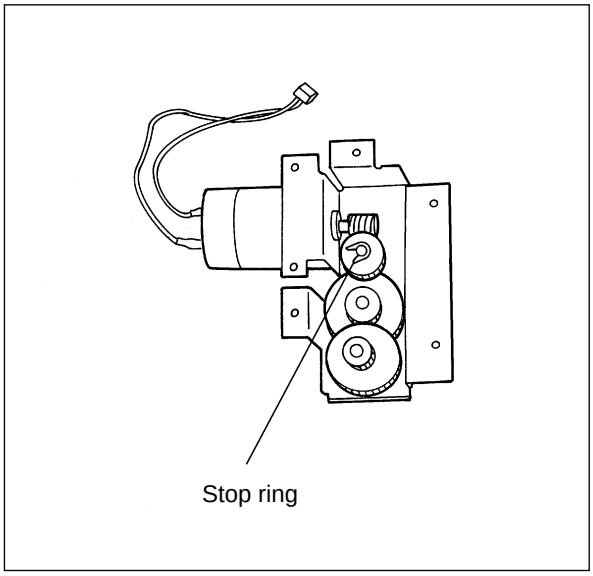

6. LUBRICATION

The teeth of the gears of the tray motor unit should be lubricated with sufficient amount of Molycoat (but not with so much as to drip).

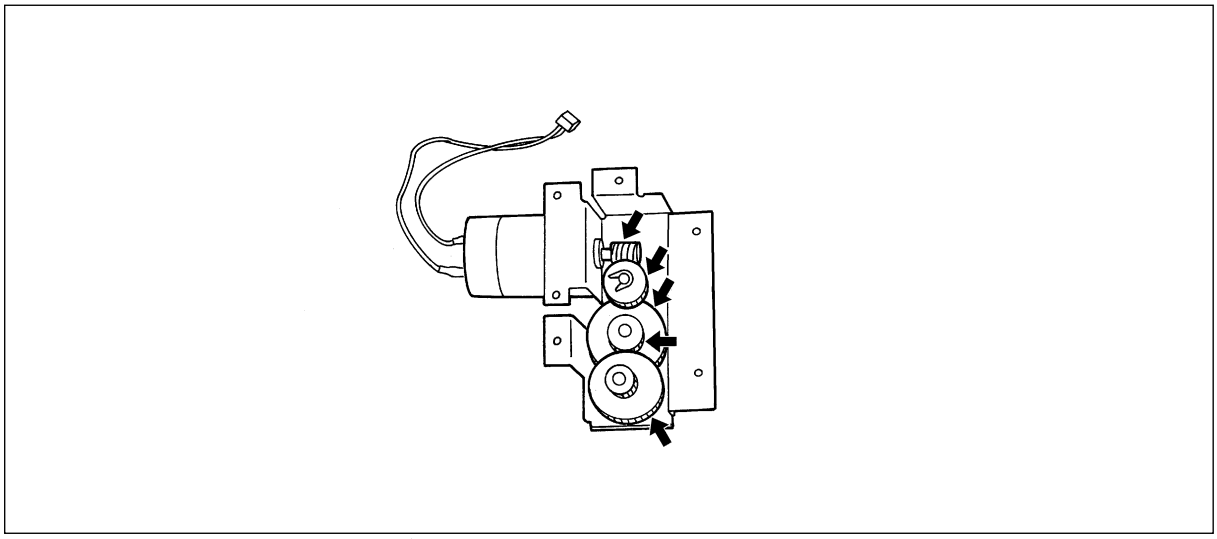

7. UNPACKING PROCEDURE

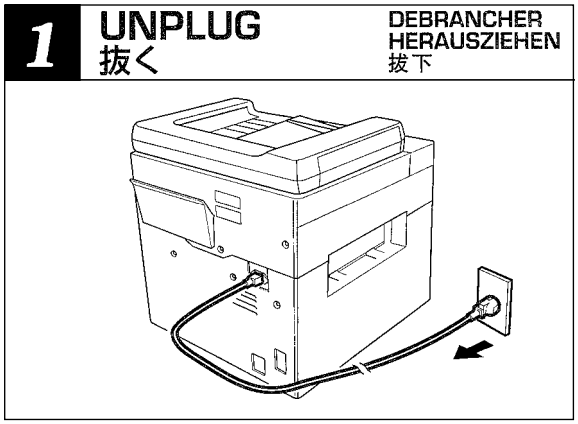

When the installation, turn off the main switch of the copier and unplug the power cable from the outlet.

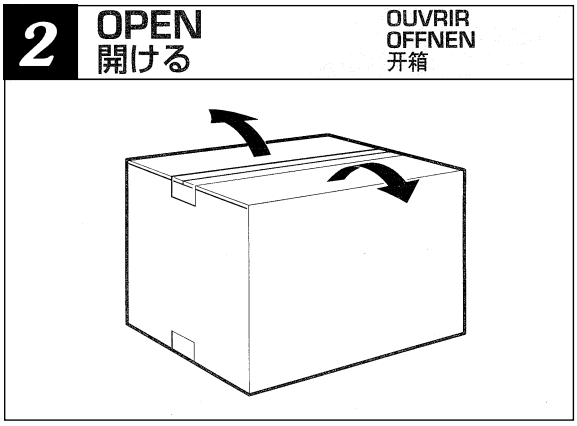

Unpacking procedure

Open the carton box.

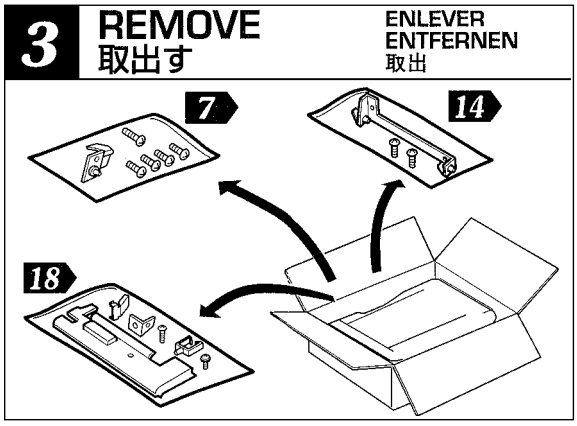

Remove the accessory packages and LCF and other packing materials.

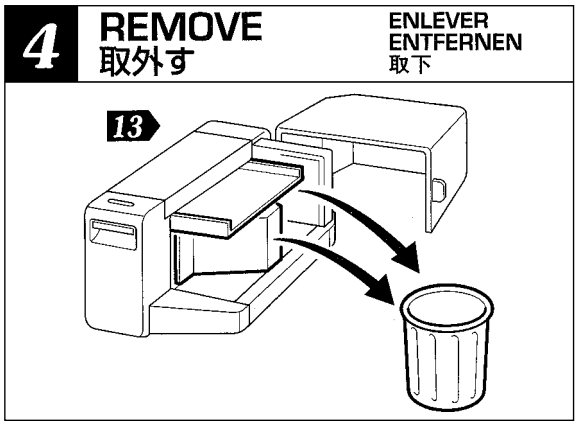

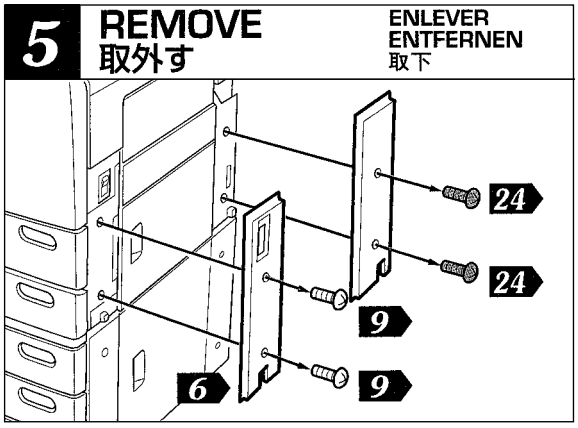

Remove the front-side and rear-side covers on the paper feed side of the copier by unscrewing two screws of each.

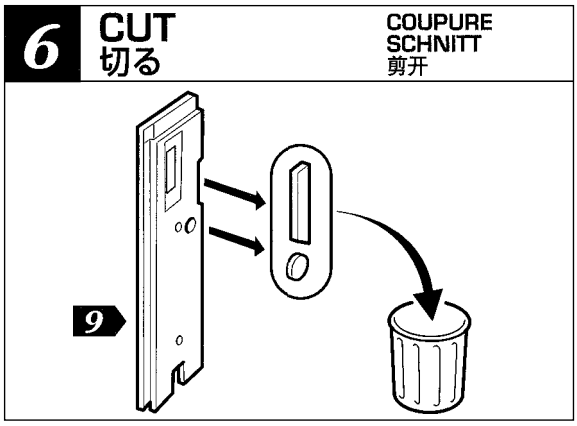

Cut out two parts along the perforated lines of the front-side cover removed in 5.

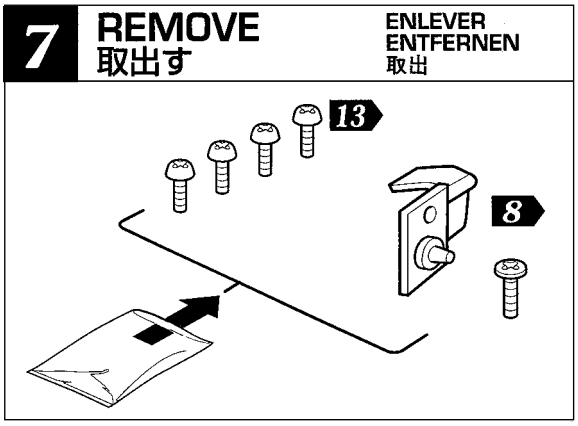

Take out the following parts from one of the accessory packages:

8	TBID screw M4	1 pc.
	Guide bracket	1 pc.
13	TBID screw M3	4 pcs.

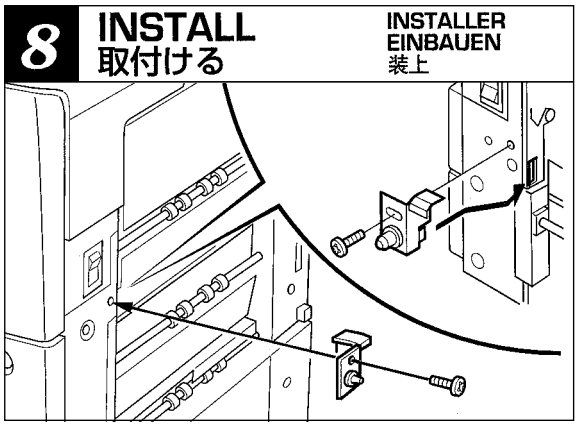

Insert the L part in the right lower part of the guide bracket (taken out of the package in 7) into the rectangle hole in the copier and fasten it with the screw (TBID screw M4) taken out of the papckage in 7.

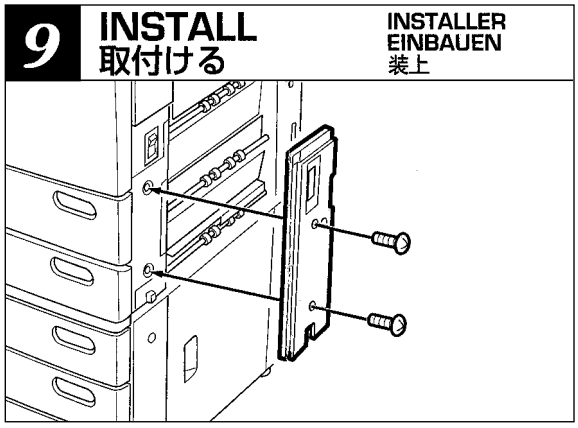

Install the paper feed-side front cover (from which parts were cut out in 6) with two screws (TBID screw M4) removed in 5.

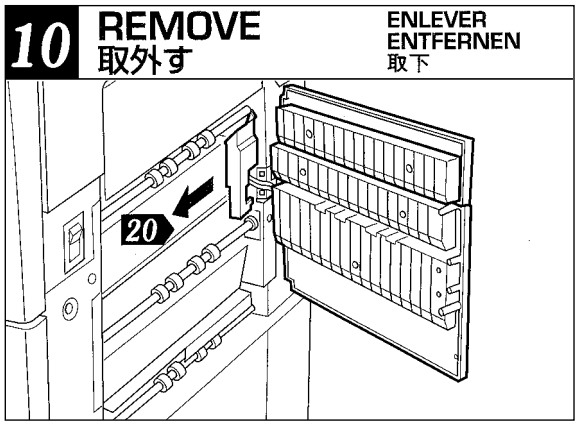

Remove the harness cover located above the hinge of the paper feed cover of the copier.

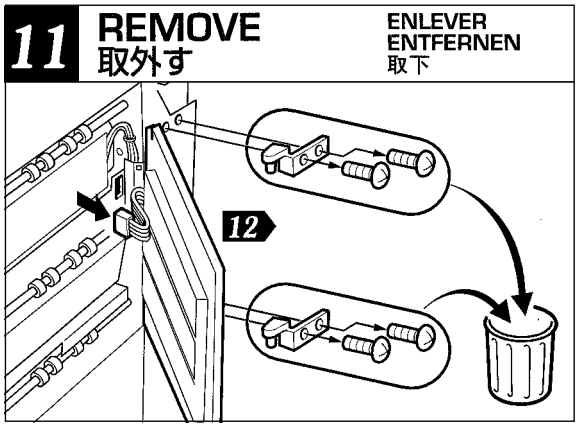

Remove the two fixing brackets of the copier's paper feed cover (two screws of each).
Remove the sensor harness connector of the paper feed cover.
Remove the paper feed cover.

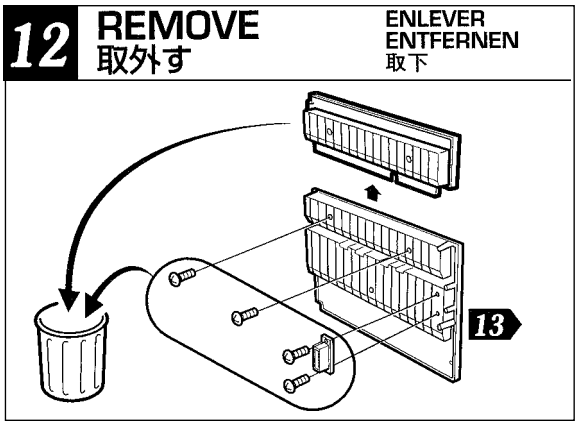

Remove the upper paper feed cover from the paper feed cover removed in the above step (two screws).
Remove the Mag-catch by unscrewing two screws.

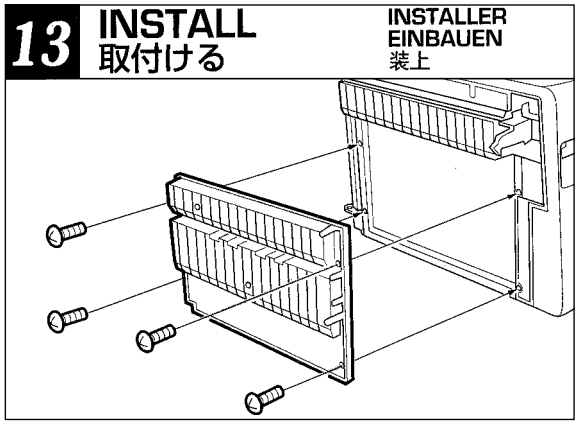

Install the lower paper feed cover removed in 12 to the LCF with four screws (TBID screw M3) taken out of the package in 7.

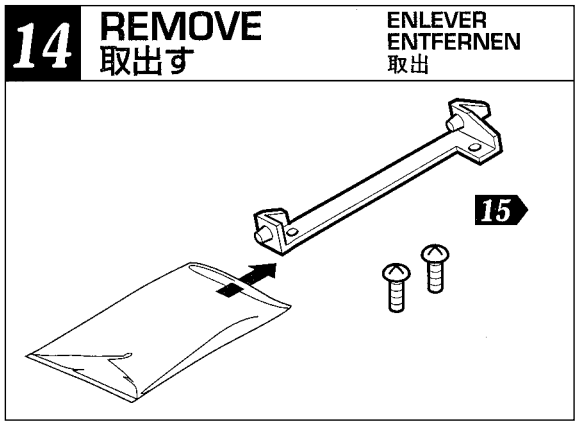

Take out the following parts from one of the accessory packages:

Hinge bracket ..... 1 pc.
TBID screw M4 ..... 2 pcs.

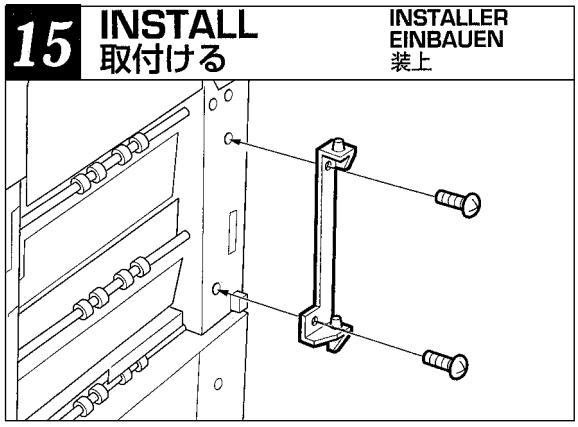

Install the hinge bracket taken out of the package in 14 to the copier with two screws (TBID screw M4) also taken out of the package in 14.

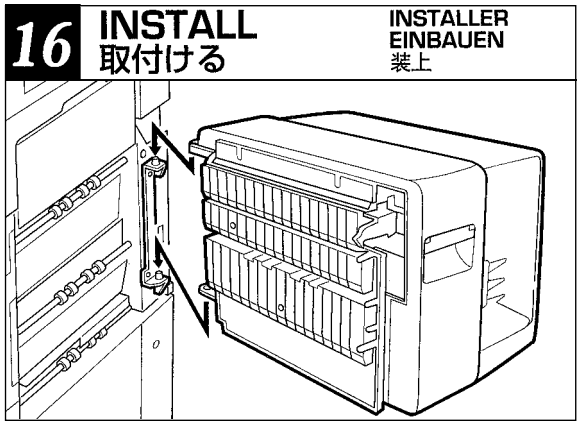

Install the LCF to the hinge bracket which was installed in the above step.

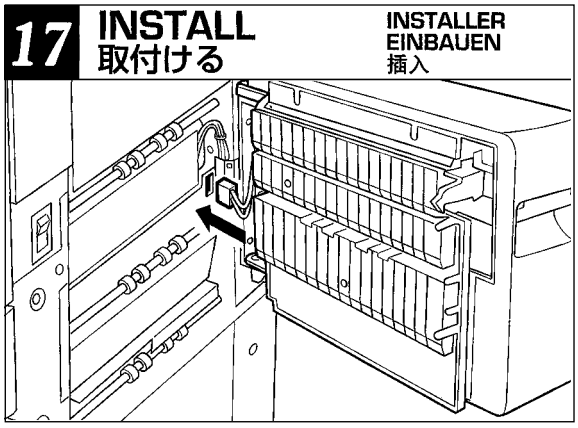

Insert the sensor harness connector of the paper feed cover (which was removed in 11) back into its original position.

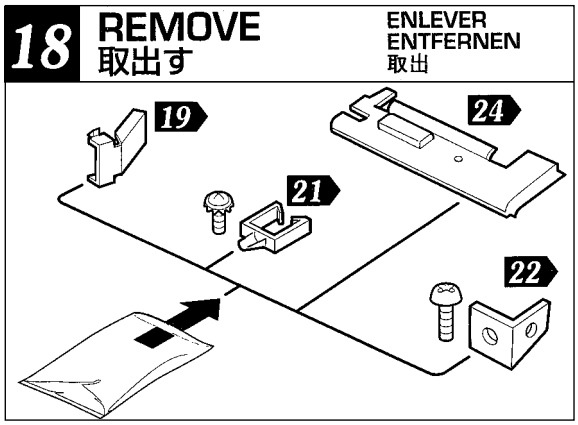

Take out the following parts from one of the accessory packages:

- 19 Harness cover ..... 1 pc.
- 21 M band ..... 1 pc.
  Screw with a toothed washer ..... 1 pc.
- 22 Stopper bracket ..... 1 pc.
  TBID screw M4 ..... 1 pc.
- 24 Dedicated LCF paper feed-side rear cover ..... 1 pc.

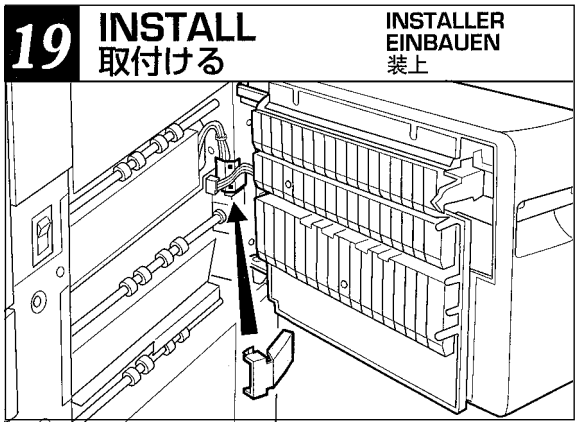

Install the harness cover taken out of the package in 18 so that it wraps the harness of the connector inserted in 11.

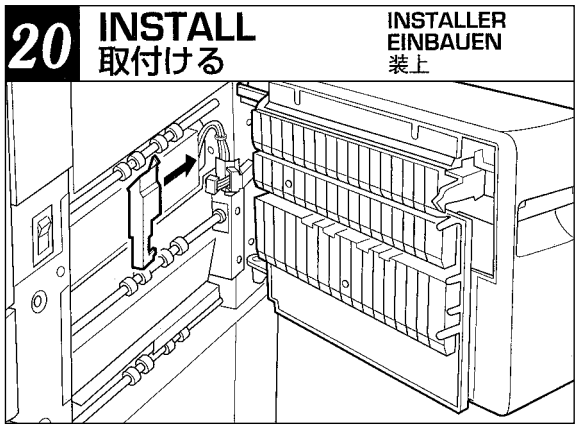

Install the harness cover removed in 10 back to its original position.

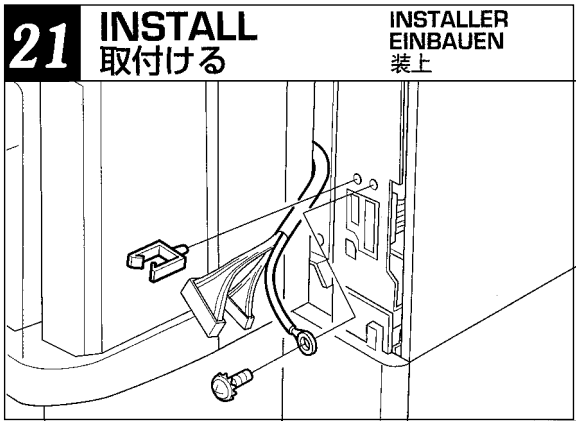

Install the M band taken out of the package in 18 into the hole and fasten the ground wire using a screw (with a toothed washer).

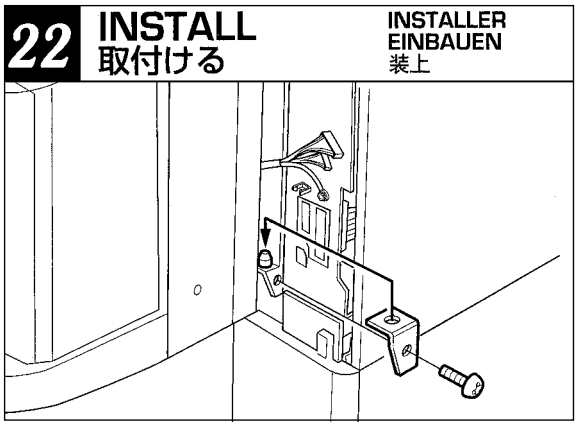

Fit the stopper bracket taken out of the package in 18 onto the hinge pin from above. Then, fasten the stopper bracket with a screw (TBID screw M4) taken out of the package in 18.

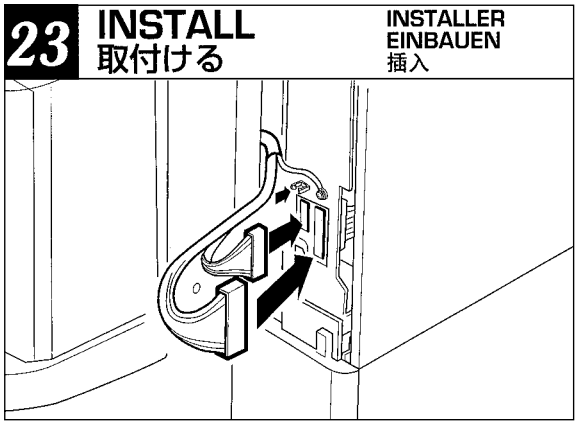

Fix the harness by means of the M band and insert the two connectors into their matching sockets.

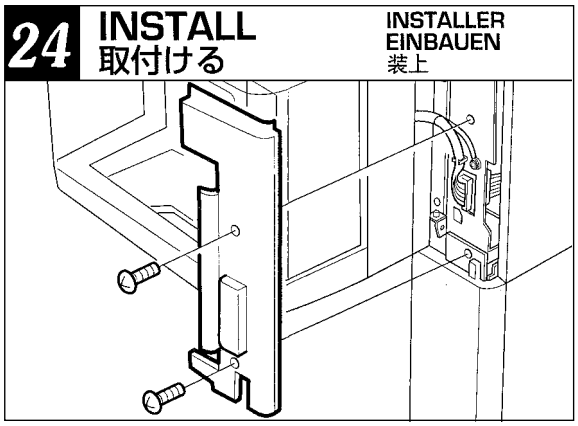

Install the dedicated LCF paper feed-side rear cover taken out of the package in 18 with two screws (TBID screw M4) removed in 5.

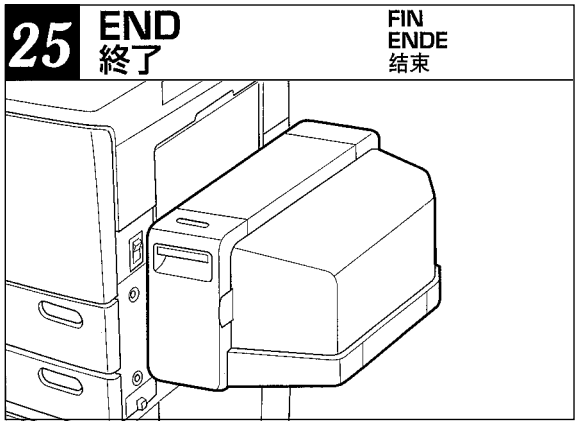

Close the LCF and this procedure is complete.

TOSHIBA

MP-1501

Service Data

ELECTRICAL

1. SYMBOLS AND FUNCTIONS OF ELECTRICAL PARTS

(1) Motor

Symbol	Name	Function
M1	Paper-feed motor	Rotates the paper feed roller to send sheets of paper to the copier.
M2	Tray motor	Moves the elevator tray up and down.

(2) Switch and Sensor

Symbol	Name	Function
S1	Tray-up sensor	Detects when the paper supply on the elevator tray decreases below the specified level and causes the motor to raise the elevator tray.
S2	Paper empty sensor	Detects when the paper supply on the elevator tray has run out.
S3	Lower limit sensor	Detects when the elevator tray has arrived at the lower limit position and then causes the tray motor to stop rotating.
S4	Door switch 1	Detects whether the paper supply door is opened or closed.
S5	Door switch 2	Detects whether the paper supply door is opened or closed. When the door is opened it cut off the DC circuit.

2. GENERAL OPERATION

2.1 Operation Immediately after Set-Up

(1) After loading the elevator tray with sheets of paper and closing the paper supply door to turn ON door switches (S4) and (S5), the tray motor (M2) is energized to raise the elevator tray.

(2) When the sheets of paper on the elevator tray pushes up the actuator of the paper empty sensor to turn it ON, the copier detects that there is a sheet of paper and the ADD PAPER message on the copier display panel disappears.

(3) When the elevator tray rises a little further to turn the tray-up sensor (S1) ON, the tray motor (M2) is stopped.

(4) When there is no paper on the tray, even if the tray rises, the paper empty sensor (S2) is not turned ON, the tray rises a little further to turn the tray-up sensor (S1) ON, and then the tray motor (M2) rotates in reverse to lower the tray. When the lower limit sensor (S3) is turned ON, the tray motor (M2) is stopped.

2.2 Operation During Copying

(1) When the PRINT key is pressed, the paper-feed motor (M1) is turned ON and the sheet of paper is sent to the copier transport roller by the pick-up and paper-feed rollers of the MP-1501.

(2) When the copier transport switch is turned ON by the leading edge of the sent paper, the paper-feed motor (M1) will be stopped and the paper-feed roller will stop rotating.

(3) When fixed time goes by after the trailing edge of the paper passes the transport switch, the paper-feed motor (M1) is turned ON, and the next sheet of paper is sent to the copier transport roller.

(4) As the operation in steps (2) and (3) above is repeated, the level of the paper supply on the elevator tray gradually decreases. After 3 – 10 sheets have been sent, the level of the paper will have decreased by 0.2 – 1.0 mm, turning the tray-up sensor (S1) OFF. As a result, the tray motor (M2) is energized to raise the elevator tray. When the tray-up sensor (S1) is turned ON, the tray motor (M2) stops.

(5) The operation in step (4) above is repeated until the paper supply on the elevator tray is depleted.

2.3 Operation When Paper Supply is Depleted

After the final sheet of paper on the elevator tray has been sent to the copier, when the actuator of the paper empty sensor (S2) drops into the hole, the paper empty sensor (S2) is turned ON, the tray motor (M2) is rotated to go down, when the elevator lower limit sensor (S3) is turned ON, the tray motor (M2) will stop to rotate, causing the ADD PAPER message to appear on the copier's display panel.

2.4 Operation When There is a Paper Misfeed

(1) If the copier transport switch remains OFF even when approximately 0.5 seconds passes after the paper-feed motor (M1) has been energized to send a sheet of paper from the elevator tray to the copier transport roller, the MP-1501 will determine that a paper misfeed has occurred, and the PAPER JAM LED will flash on the display panel of the copier.

(2) When the paper supply door is opened to clear the misfed paper and then closed, the tray motor will rotate to raise the elevator tray to the feeding position.
When the tray-up sensor (S1) is turned ON, the tray motor (M2) will stop rotating and the copier will become ready.

2.5 Other Operation

(1) While the tray motor (M2) is rotating, if the paper supply door is opened, the motor will stop rotating and when it is closed, the motor will resume rotating.
While the tray motor (M2) is rotating, if the copier's front cover is opened, the motor will stop rotating and the ADD PAPER message will appear on the copier's display panel. When the front cover is closed, the ADD PAPER message will disappear and the tray motor (M2) will resume rotating.

3. ELECTRICAL PARTS LOCATION

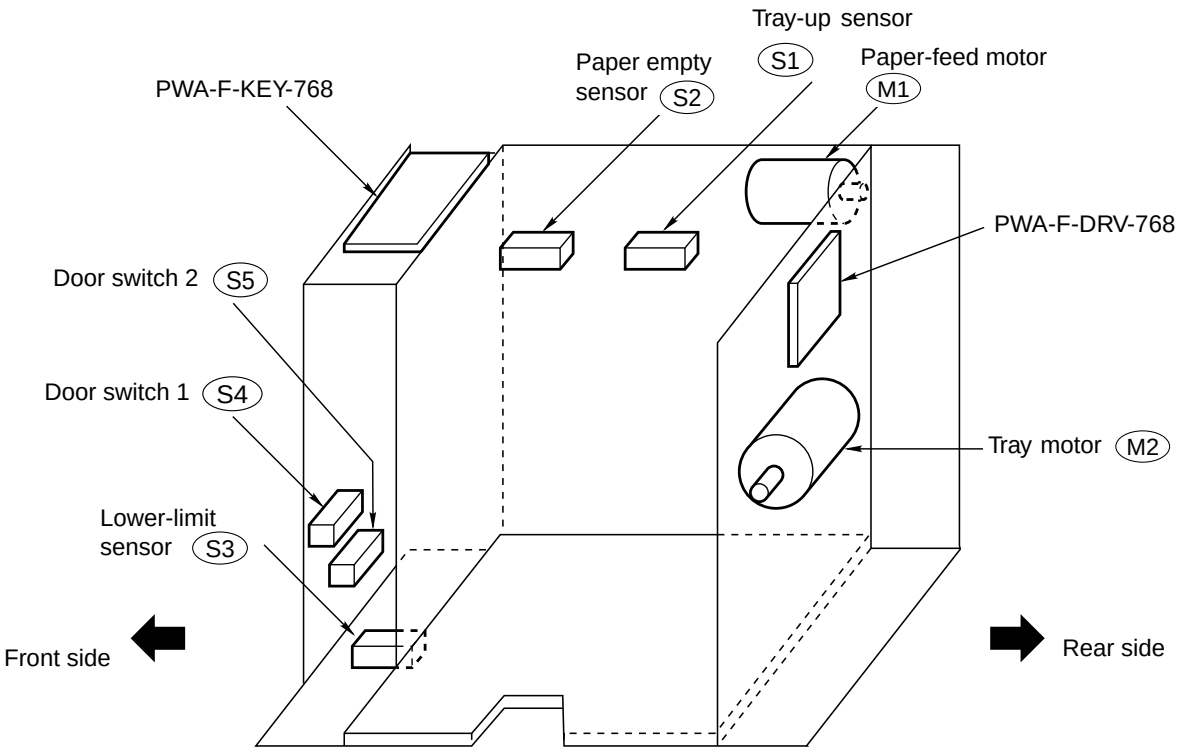

4. HARNESS CONNECTION DIAGRAM

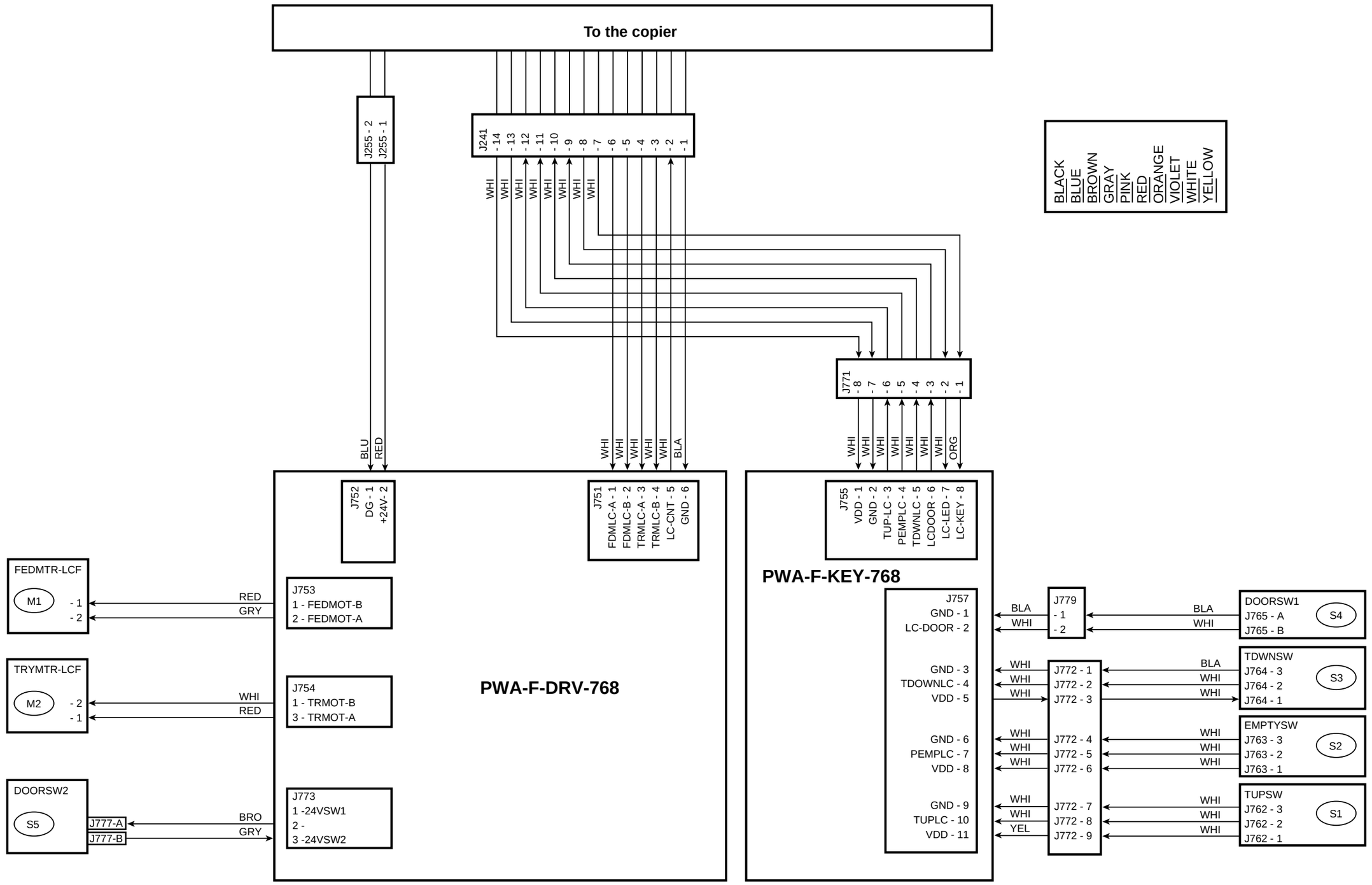

5. PC BOARD ASSEMBLY

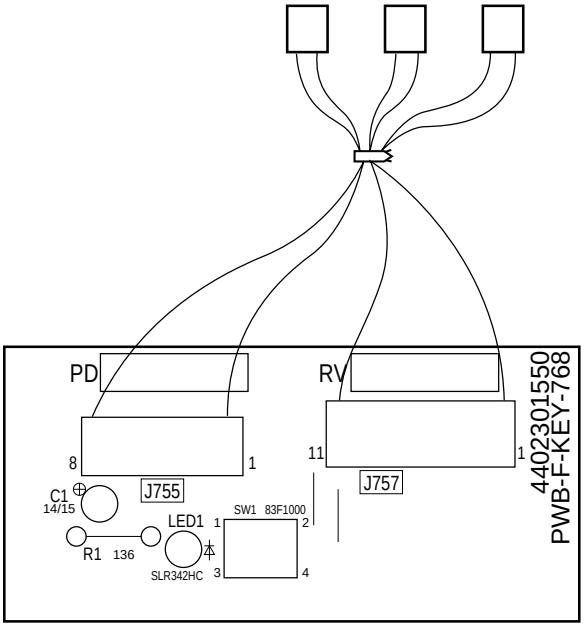

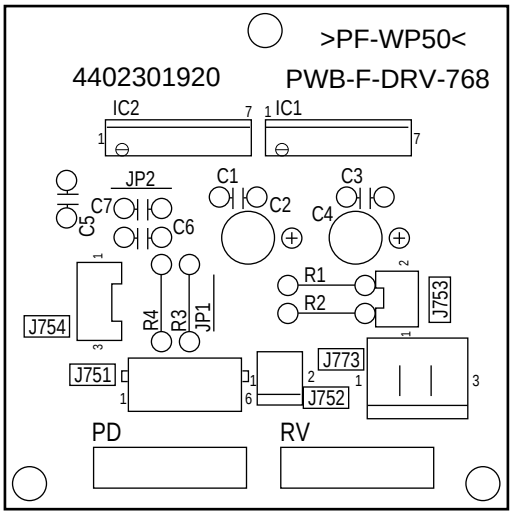

PWA-F-KEY-768

SYMBOL	REMARKS
SW1	Switch
C1	10 µ/16 V
J1, 2	Jumper wire 10 mm
J755, J757	Including wire harness

PWA-F-DRV-768

SYMBOL	REMARKS
IC1, 2	TA-8428 (S)
C1, 3	0.1 µ/50 V
C2, 4	10 µ/50 V
R1 – 4	1/4 W 4.7 kΩ
JP1, 2	Jumper wire 10 mm
J751	6 PIN CONNECTOR
J752	2 PIN CONNECTOR
J753	2 PIN CONNECTOR
J754	3 PIN CONNECTOR
J773	3 PIN CONNECTOR

6. CIRCUIT DIAGRAM

6.1 PWA-F-KEY-768

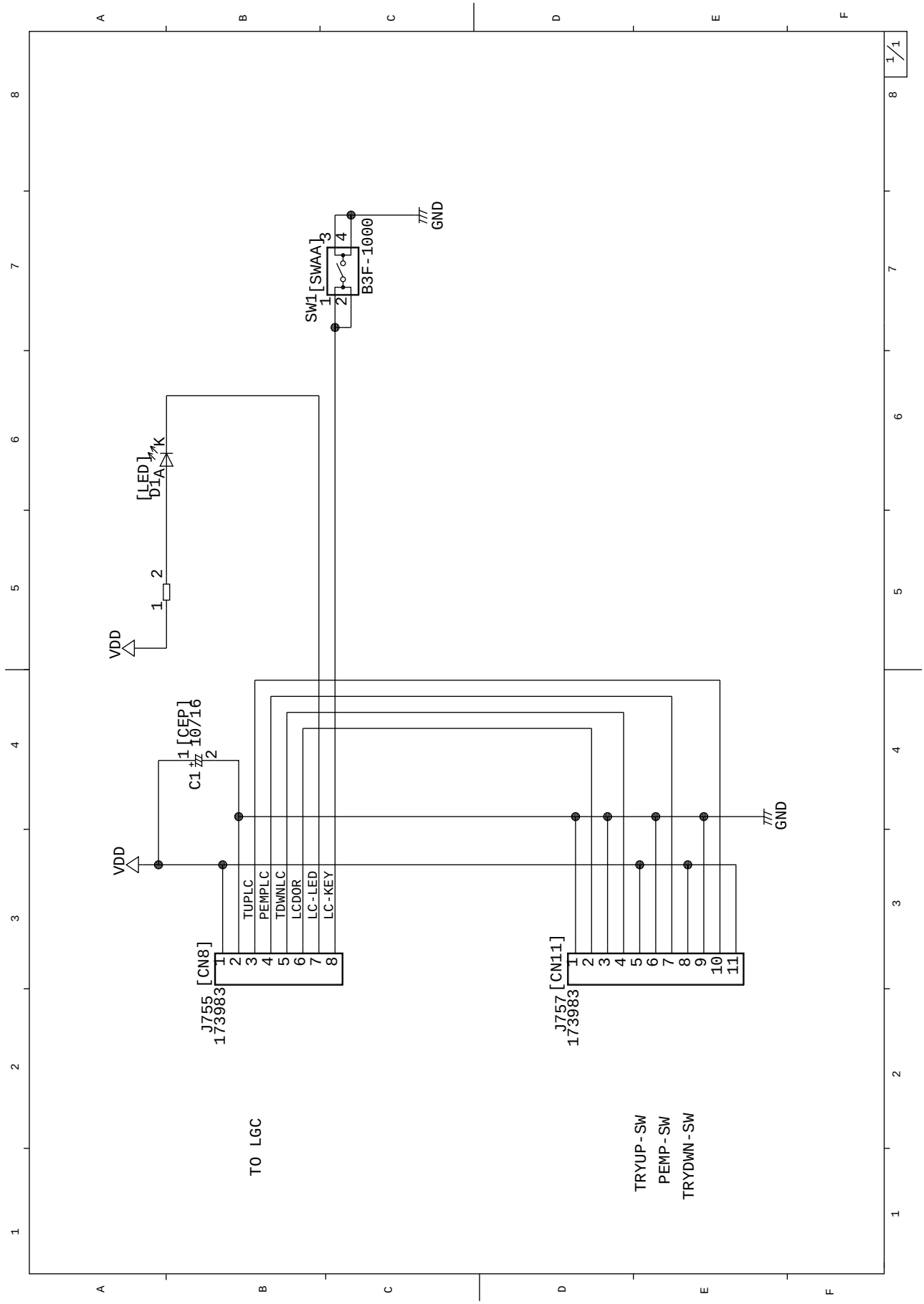

6.2 PWA-F-DRV-768

