TOSHIBA

SERVICE MANUAL
LARGE CAPACITY FEEDER
MP-4001



Click the Page Only button to close the overview area of the window.

Click the Bookmarks and Page button to open the Contents and display bookmarks created for the document. Click a bookmark's name to go to the Page marked by that bookmark.

Click the Thumbnails and Page button to open the overview area and display thumbnail images of each document page. Click a thumbnail to go to the page marked by that thumbnail.

Copyright TOSHIBA CORPORATION 1995
ALL RIGHTS RESERVED

GENERAL PRECAUTIONS FOR INSTALLATION/SERVICING/ MAINTENANCE

1. When installing the Large Capacity Feeder MP-4001 to the Copier, be sure to follow the instructions described in the “Unpacking /Set-Up Procedure for the MP-4001” sheet which comes with each unit of the MP-4001. The MP-4001 should be installed by an authorized/qualified person.
2. The MP-4001 weighs about 18 kg (39.7 lbs.). When lifting or carrying it, hold the plastic guide firmly with your right hand and (open the paper supply door) place your left hand under the top frame. Then lift or carry the MP-4001.

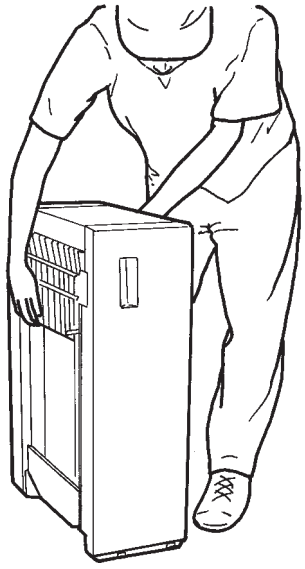

3. Before starting installation, servicing or maintenance work, be sure to turn off and unplug the copier first.
4. The MP-4001 is supplied with power from the copier, requiring no additional power source.
5. The MP-4001 should be grounded to the specified positions on the machine frame.
6. When servicing or maintaining the MP-4001, be careful about the rotating or operating sections such as gears, pulleys, sprockets, cams, belts, etc.
7. When parts are disassembled, reassembly is basically the reverse of disassembly unless otherwise noted in this manual or other related documents. Be sure to reassemble small parts such as screws, washers, pins, E-rings, toothed washers to the correct places.
8. Basically, the machine should not be operated with any parts removed or disassembled.
9. Delicate parts for preventing safety hazard problems (such as thermofuses, door switches, sensors, etc. if any) should be handled/installed/adjusted correctly.
10. During servicing or maintenance work, be sure to check the nameplate and other cautionary labels (if any) to see if they are clean and firmly stuck. If not, take appropriate actions.
11. For the recovery and disposal of used MP-4001s, consumable parts and packing materials, it is recommended that the relevant local regulations/rules should be followed.
12. **Precautions Against Static Electricity**
    - The PC boards must be stored in an anti-electrostatic bag and handled carefully using a wrist-band, because the ICs on them may be damaged due to static electricity.

      Caution: Before using the wrist-band, pull out the power cord plug of the copier, and make sure that there is no uninsulated charged object in the vicinity.
13. Use suitable measuring instruments and tools.

© Copyright TOSHIBA CORPORATION 1997
ALL RIGHTS RESERVED

TOSHIBA

MP-4001

Service Data

MECHANICAL

I. SPECIFICATIONS AND FEATURES

The large-capacity feeder MP-4001 is a slideable floor-type feeder which can hold up to 4,000 sheets of Toshiba recommended paper (A4 or Letter size). Since the MP-4001 can slide away from the copier, paper misfeeds inside the copier can be easily handled. The MP-4001 is equipped with a paper feeding mechanism, elevator-tray drive mechanism, safety switches, etc., providing a self-contained large-capacity feeder.

1.1 Specifications

Type	Hanging type	
Acceptable Type of Paper	Size	: Letter (8-1/2" x 11") – For North America
		: A4 (210 mm x 297 mm) – For Europe and other areas
	Weight	: 64 g/m^2 (17 lbs) – 80 g/m^2 (22 lbs)
Maximum Number of Sheets Accommodated	Approx. 4,000 (Toshiba-recommended paper)	
Dimensions	W300 (including the portion which enters the copier) x D478 x H728 mm (Approx. 11.8" x 18.8" x 28.5")	
Weight	Approx. 18 kg (39.7 lbs) with no paper loaded	
Power Supply	DC 24 V and DC 5 V (Power is supplied from the copier)	

Specifications are subject to change without notice.

1.2 Features

This large-capacity paper feeder can be used with Toshiba Copiers and offers the following features.

1. Paper supply of up to 4,000 sheets (A4 or Letter size), which allows you to make a large number of copies continuously without reloading copy paper.
2. Simple reloading of copy paper.
3. Easy of paper jam removal.

II. FRONT SECTIONAL AND OTHER VIEWS

2.1 Front Sectional View

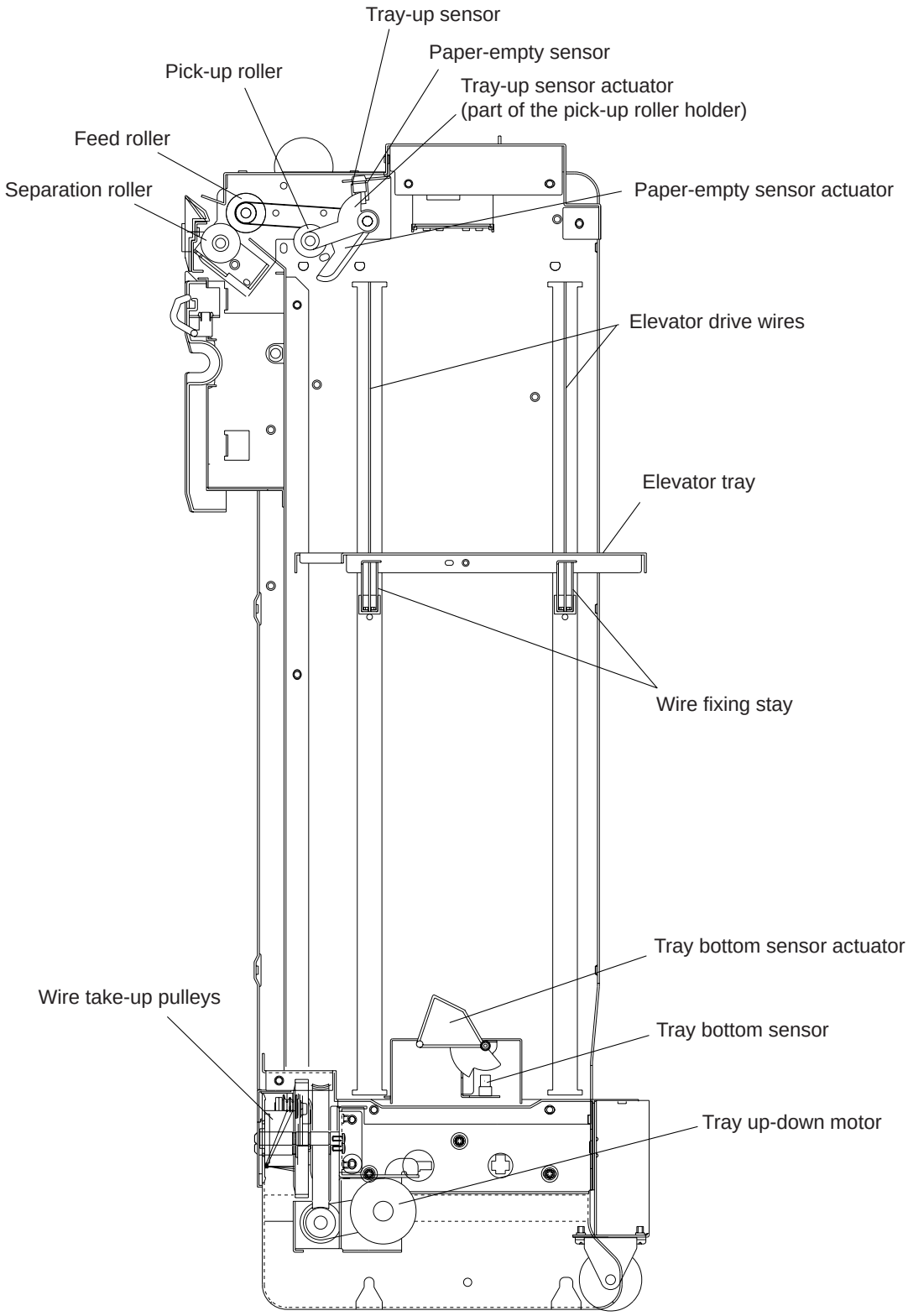

2.2 View of the Elevator Drive Mechanism

Note: The elevator wires on the rear side are arranged in the same way as on the front.

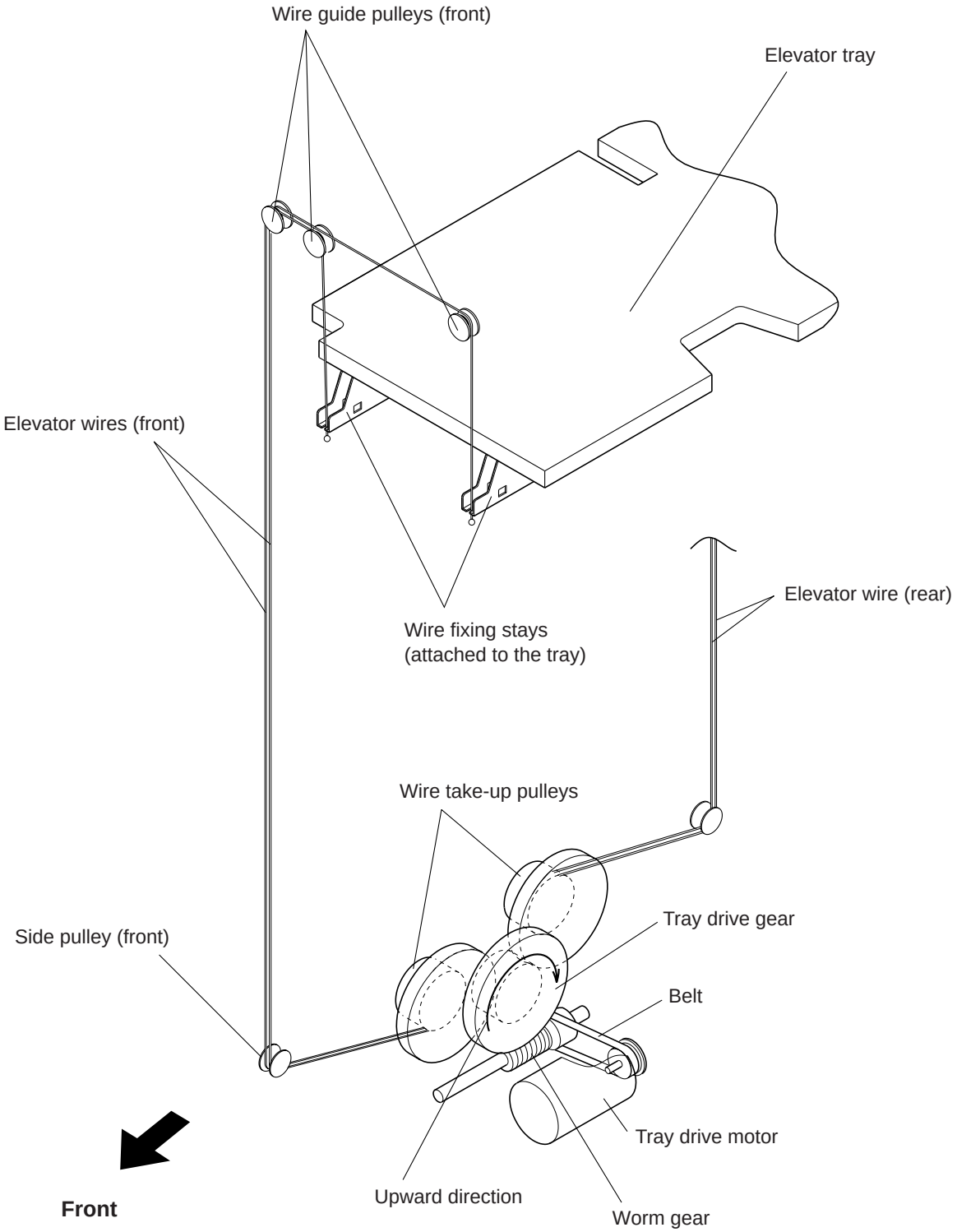

2.3 View of the Paper Feed Mechanism

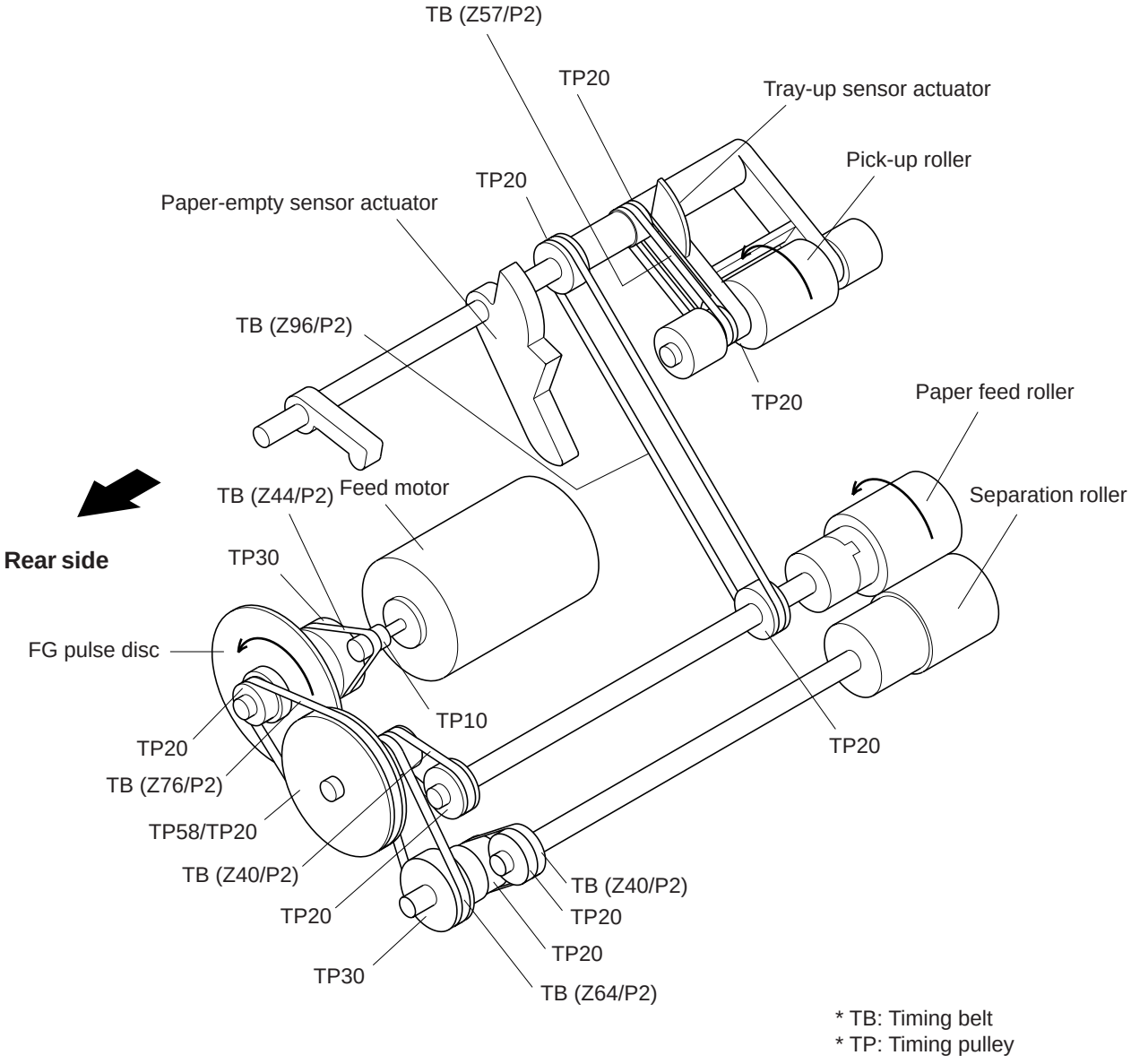

III. NAMES OF MAIN COMPONENTS

3.1 General View

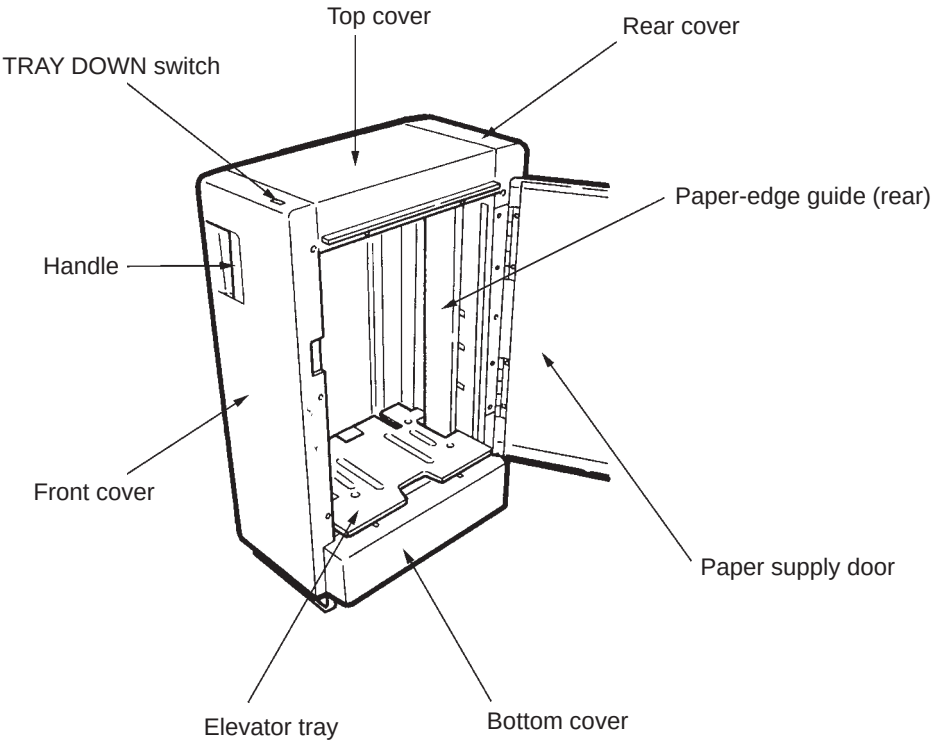

3.2 Top Side/Inner Side Parts

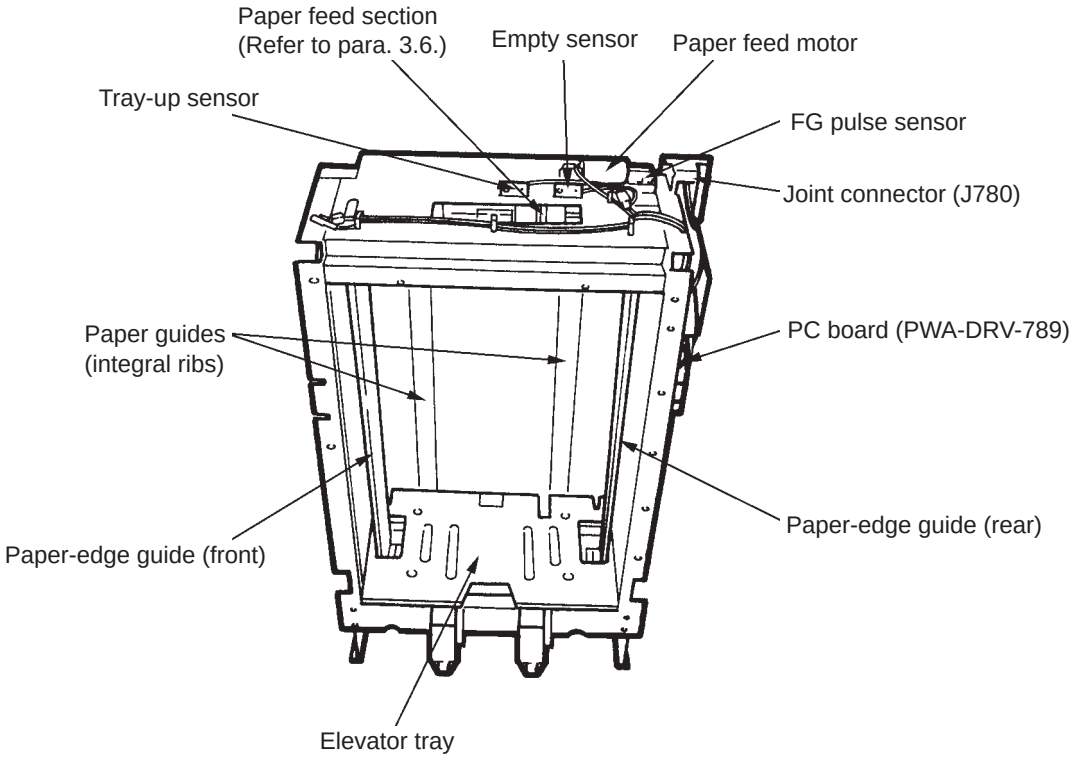

3.3 Front Side Parts

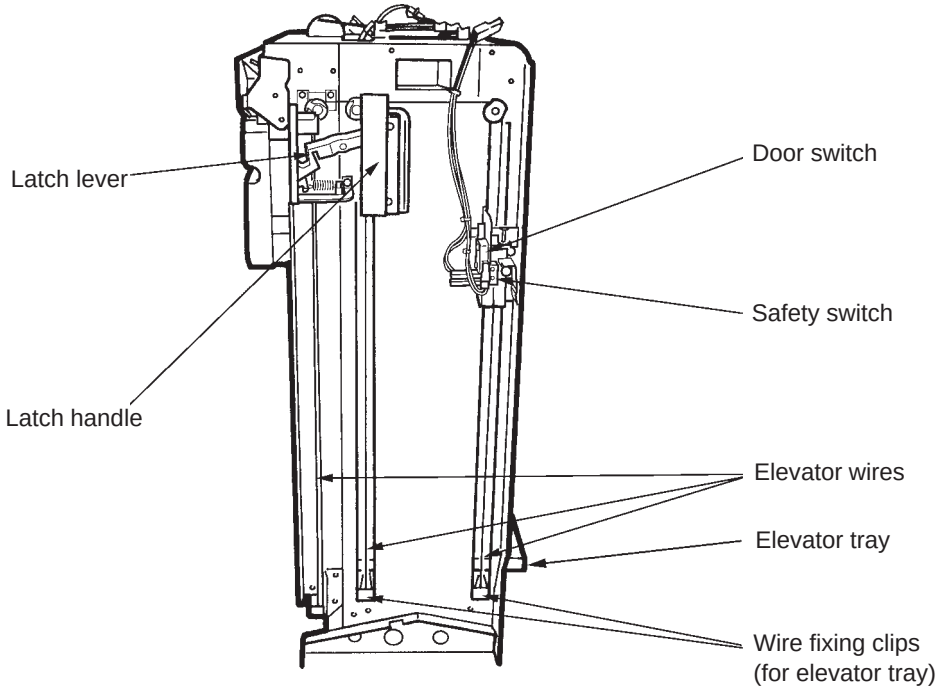

3.4 Rear Side Parts

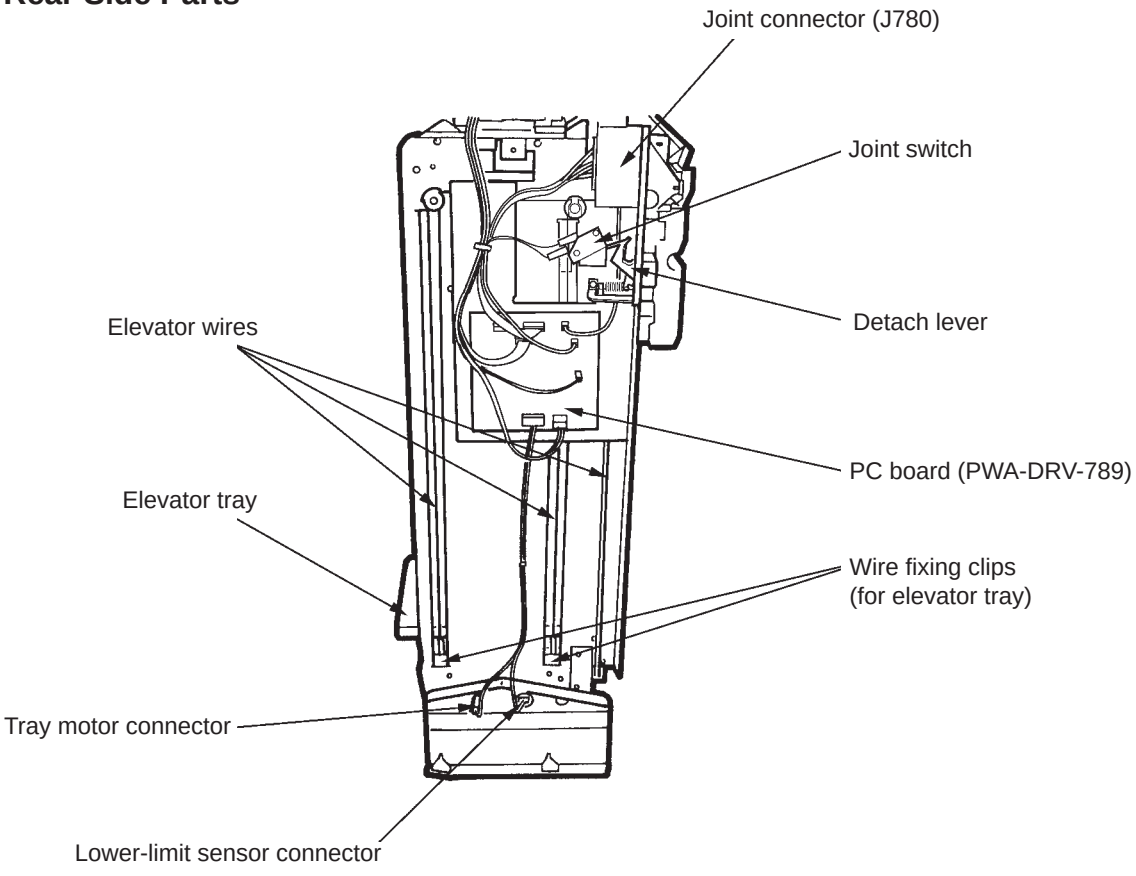

3.5 Back Side (Copier Side) Parts

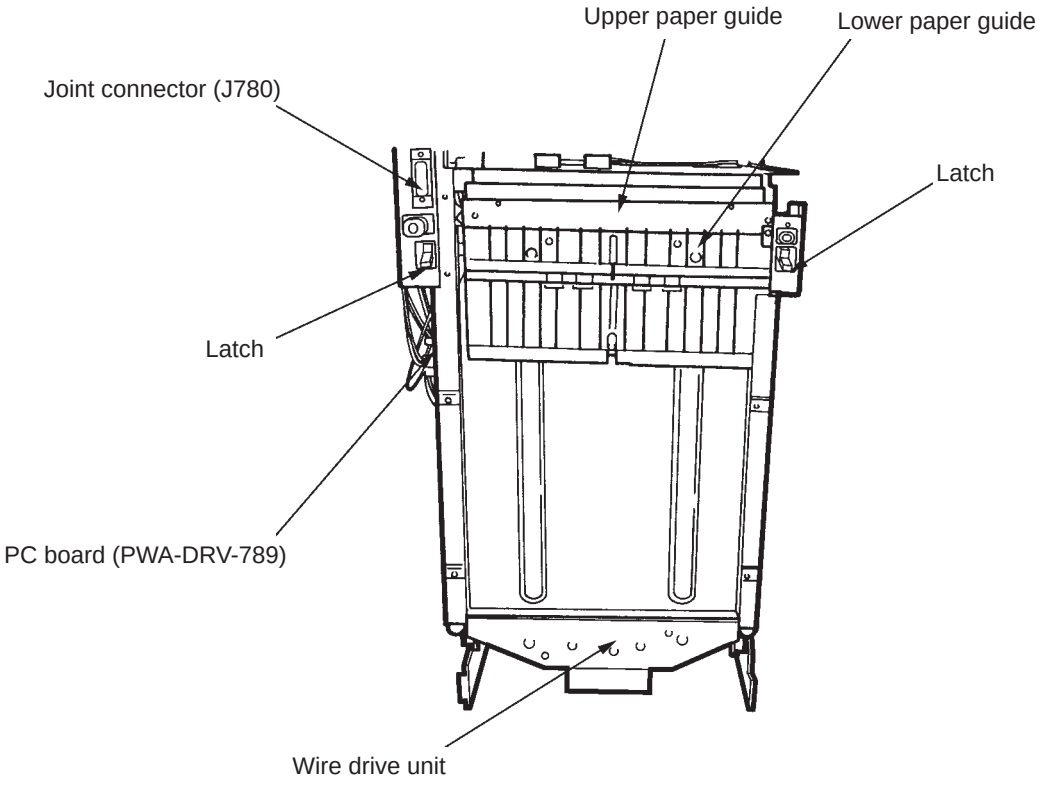

3.6 Paper Feed Section Parts

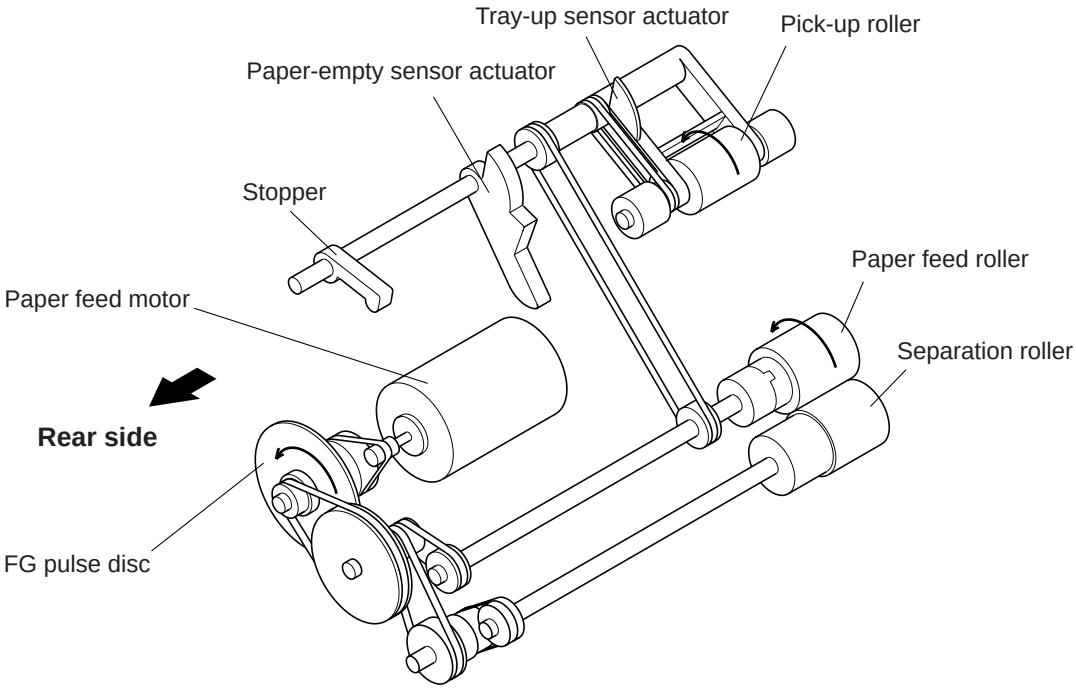

IV. DESCRIPTION OF OPERATION

4.1 Elevator Tray Up-and-Down Operation

When sheets of paper (up to 4,000) are placed on the elevator tray and the paper feed door is closed, the elevator motor is energized, moving the elevator tray upward via the elevator tray drive mechanism (Fig. 4.1-1). A few seconds later, the paper on the elevator tray actuates the paper empty sensor, causing the LCF symbol on the screen to stop flashing. The elevator tray further moves up and pushes up the pick-up roller a part of whose holder comprises the tray-up sensor actuator. It in turn actuates the tray-up sensor, causing the elevator tray to come to a stop. This is the initial paper feeding position. See Fig. 4.1-2.

When the PRINT key is pressed on the copier, the LCF paper feed motor energizes and rotates the pick-up roller and the feed/separation roller pair, causing the top sheet of paper to feed toward the copier. After a fixed interval, the next sheet is fed to the copier. This continues until 10 – 20 sheets of paper are fed, causing the pick-up roller to move down enough to de-actuate the tray-up sensor (Fig. 4.1-3). Then the elevator motor energizes again to move up the elevator tray 2 – 3 mm to the initial paper feeding position.

This operation continues until the final sheet of paper on the elevator tray is fed out into the copier. Then the paper empty sensor actuator drops into a hole in the elevator tray, de-actuating the paper empty sensor (Fig. 4.4-4). This in turn energizes the elevator motor to move the elevator tray downward. When the elevator tray actuates the tray bottom sensor, it stops at the paper adding position and causes the LCF symbol on the screen to flash.

Note: When the TRAY DOWN switch is pressed, the tray motor also energizes to move down the elevator tray even if sheets of paper are still left on the elevator tray, and de-energizes when the elevator tray actuates the bottom sensor.

While the elevator tray is moving down, if the paper supply door is opened, the tray motor also de-energizes to stop the elevator tray immediately. When the door is closed, the tray motor again energizes to move the tray up to its paper feeding position.

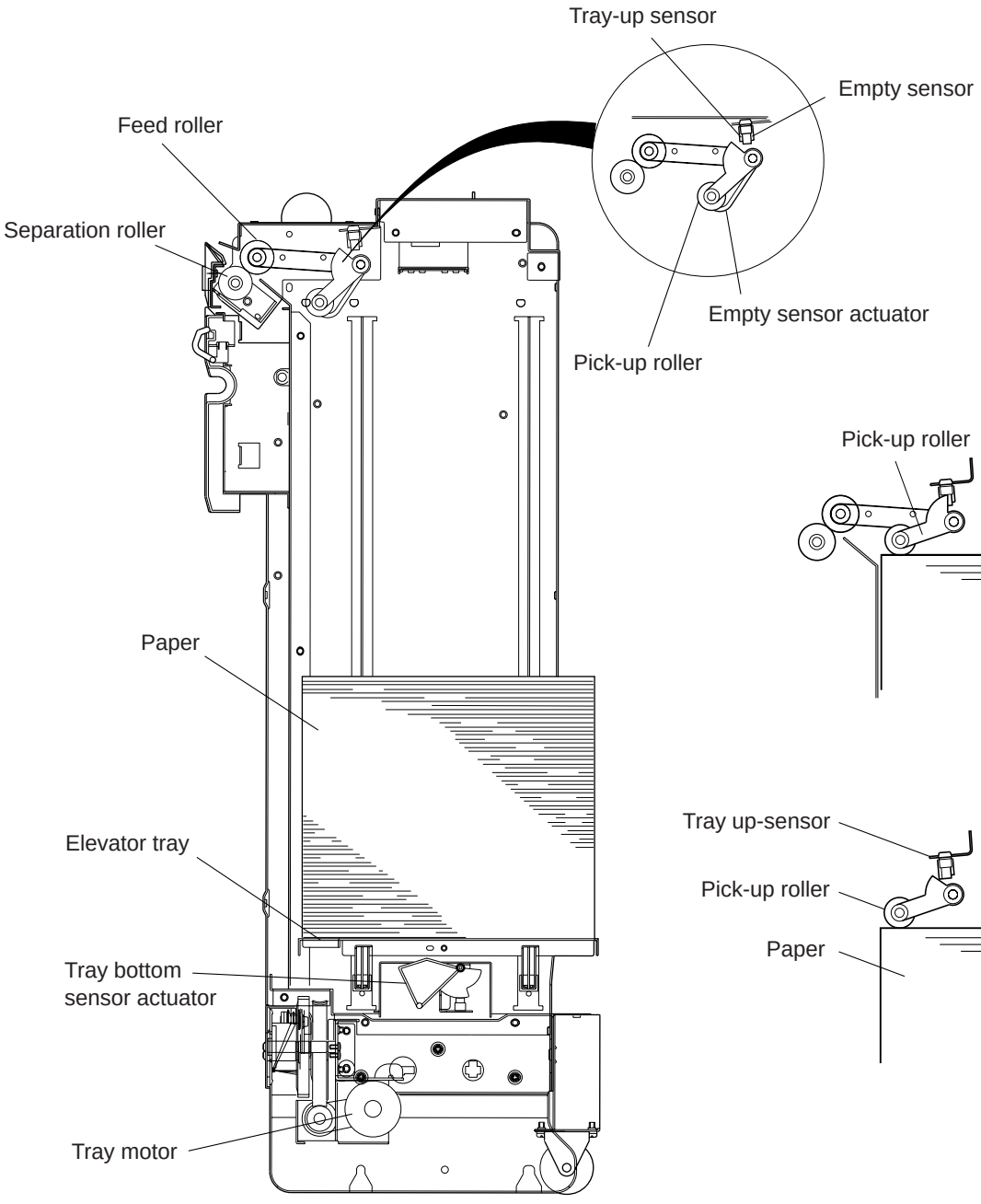

Fig. 4.1-1

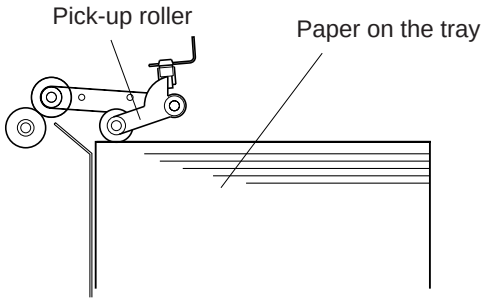

Fig. 4.1-2

Fig. 4.1-3

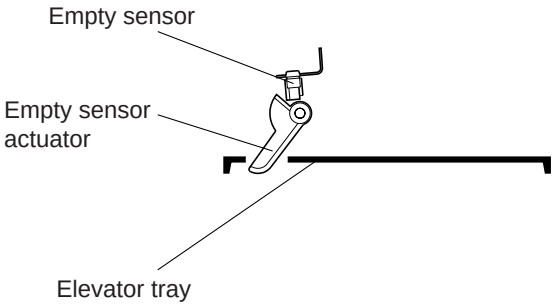

Fig. 4.1-4

4.2 Elevator Tray Drive System

The elevator tray motor, which is located at the bottom of the LCF, moves up and down the elevator tray through elevator wires at the front and rear. When the elevator motor energizes to rotate the wire drive gear via a belt and worm in the direction of the arrow (→), the wire drive gear rotates the front and rear wire take-up pulleys in the direction of each arrow (→). The wire take-up pulleys then wind up the wires to move the elevator tray upward until the paper empty sensor is activated.

When the paper on the elevator tray is exhausted or when the TRAY DOWN switch is pressed, the elevator tray motor energizes in a reverse direction, causing the wire take-up pulleys to rotate in the direction of each arrow (⇠). This causes the wire take-up pulleys to unwind the wires, allowing the elevator tray to move downward until it actuates the tray bottom senor.

While moving up or down, the elevator tray also comes to a stop if the paper supply door is opened or if the TRAY DOWN switch is pressed.

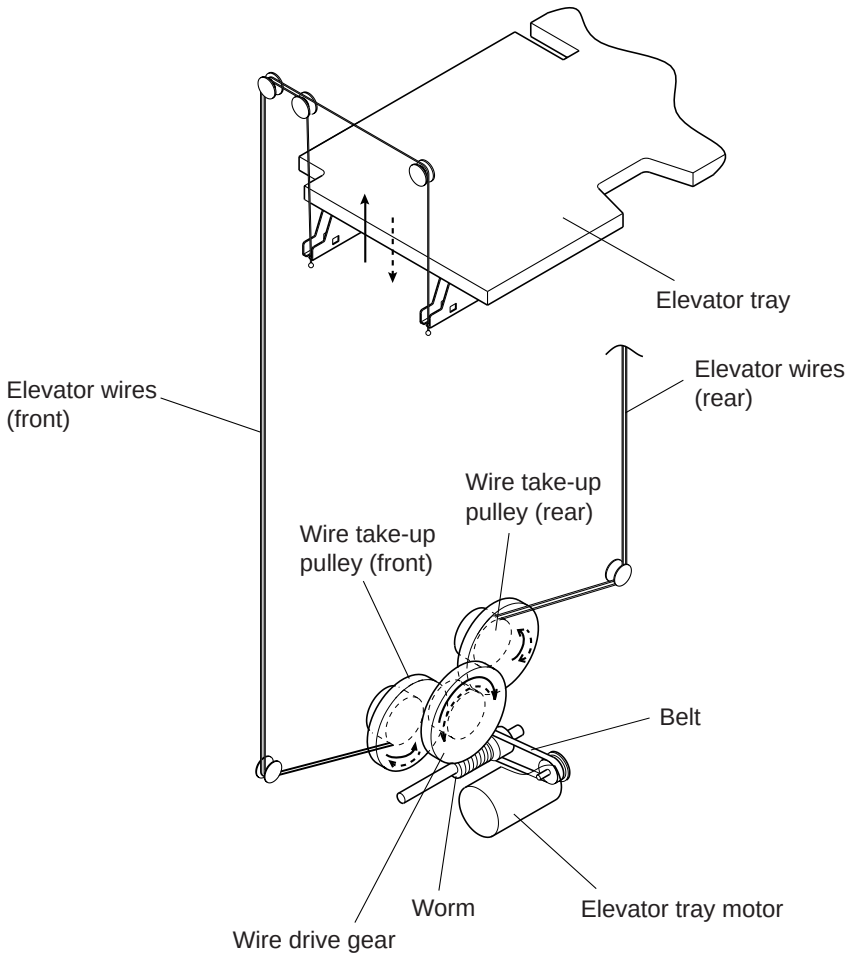

Fig. 4.2

4.3 Paper Feeding Operation

When the PRINT key is pressed with the elevator tray at the paper feeding position, the LCF paper feed motor energizes to cause the feed roller to rotate in the direction of the arrow (⟶) through pulleys and belts. The separation roller is similarly driven but in the direction of the arrow (⇢) with a light force. The pick-up roller is driven by the feed roller shaft via pulleys and belts in the direction of the arrow (⟶) and picks up the top sheet of paper on the elevator tray to the feed/separation roller pair. Even if more than one sheet is picked up by the pick-up roller, only the top sheet is sent toward the copier with other sheets rejected by the feed/separation roller pair (for details, refer to the next paragraph).

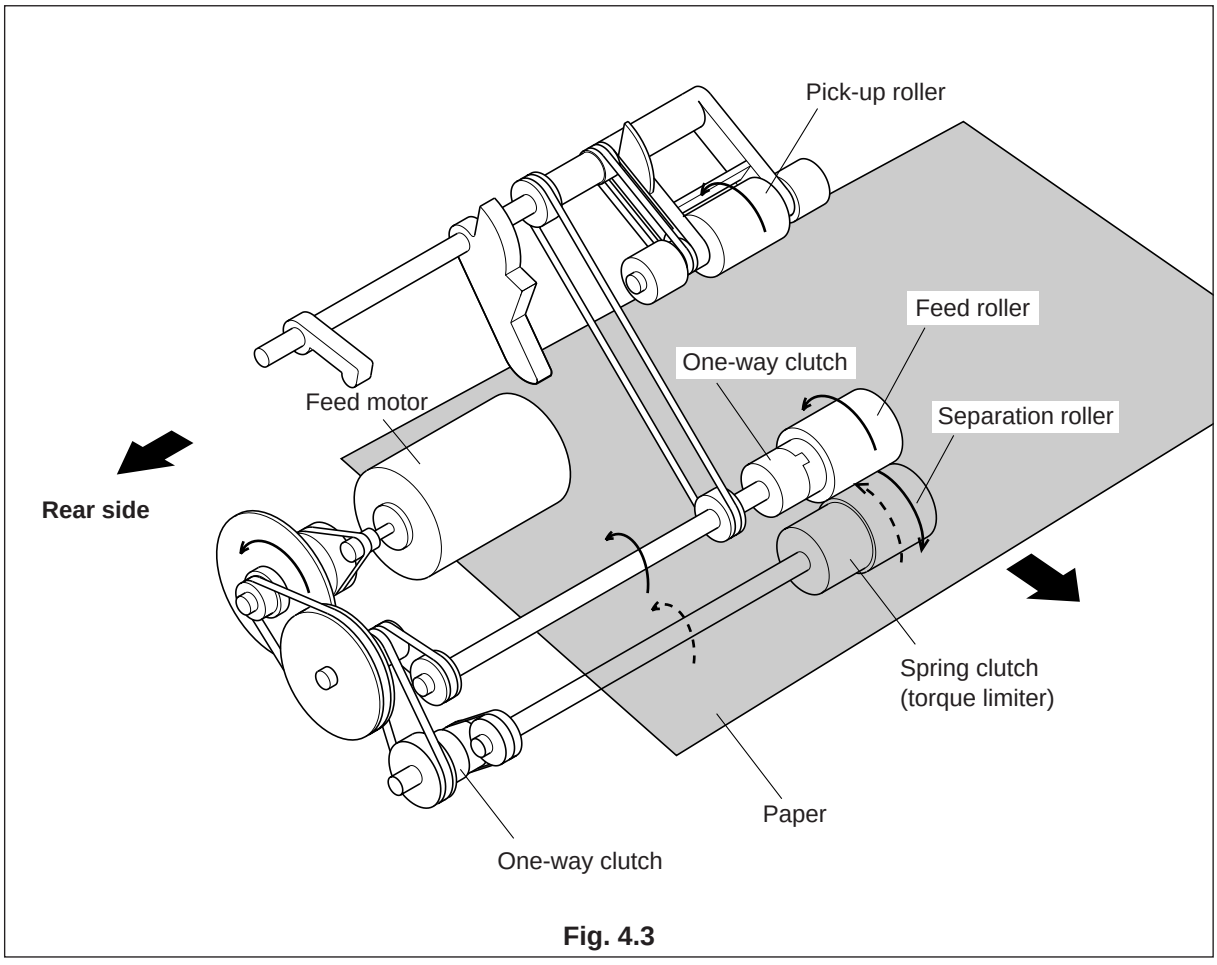

Fig. 4.3

4.4 Paper Separation Function

With this LCF, the following paper separation mechanism is employed to prevent multiple feeds and to securely feed sheets one by one to the copier.

The feed roller is rotated by the feed motor in the direction of the arrow (⟶). The separation roller is driven with a light force in the direction of the arrow (⇠) via a spring joint (torque limiter). However, when there is no paper between both rollers, the separation roller is rotated in the direction of the arrow (⟶)by the friction between both rollers. See Fig. 4.4-1.

When a sheet of paper picked up by the pick-up roller enters between the feed and separation rollers, friction between the paper and each roller is high, thus forcing the separation roller to be rotated in the direction of the arrow (⟶) and the paper to be sent toward the copier. See Fig. 4.4-2.

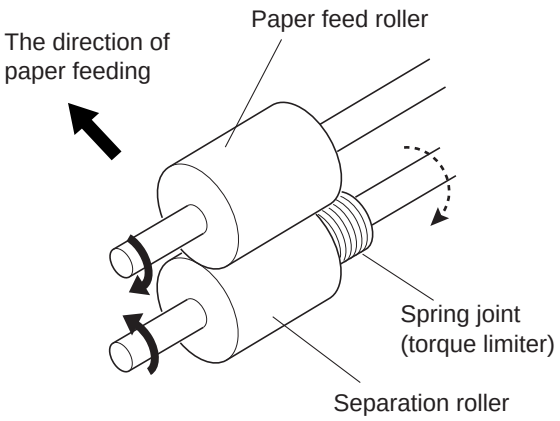

Fig.4.4-1

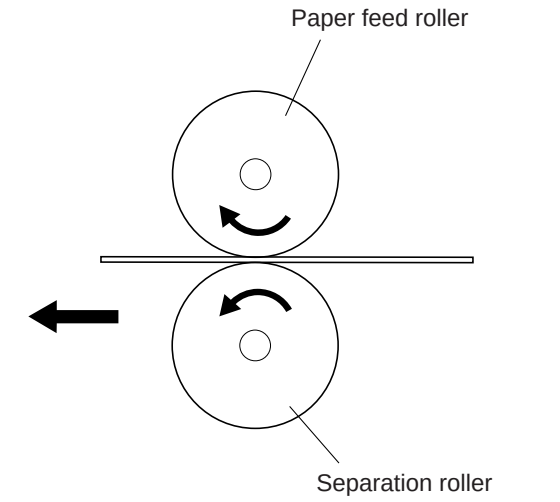

Fig.4.4-2

If two (or more) sheets are picked up and enter between the rollers, friction between the upper sheet and the feed roller and that between the lower sheet and separation roller are high, but friction between both sheets is low, thus allowing the separation roller to rotate in the direction of the arrow (⇢). See Fig. 4.4-3. This will cause the upper sheet to be carried toward the copier but the lower sheet is pulled back to the elevator tray (see Fig. 4.4-4), thus eliminating double or multiple feeds.

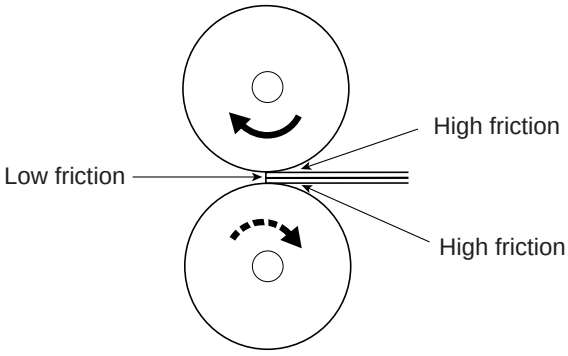

Fig.4.4-3

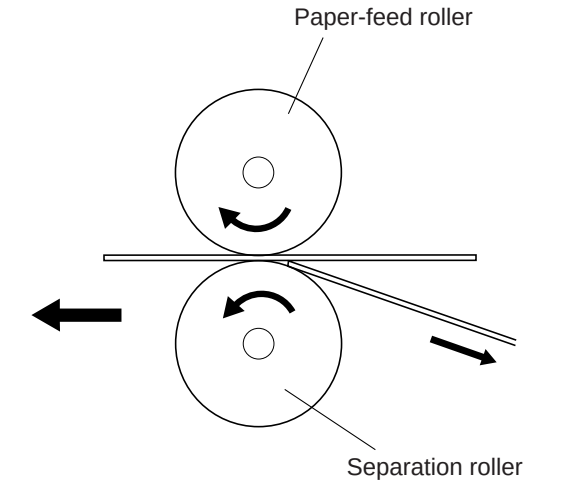

Fig.4.4-4

V. REMOVAL OR REPLACEMENT OF VARIOUS PARTS

5.1 Removing the LCF Unit

(1) Holding the LCF handle on the front side, move the LCF unit away from the copier.

(2) Remove the screws fastening the LCF unit to its slide rail unit on the front and rear.

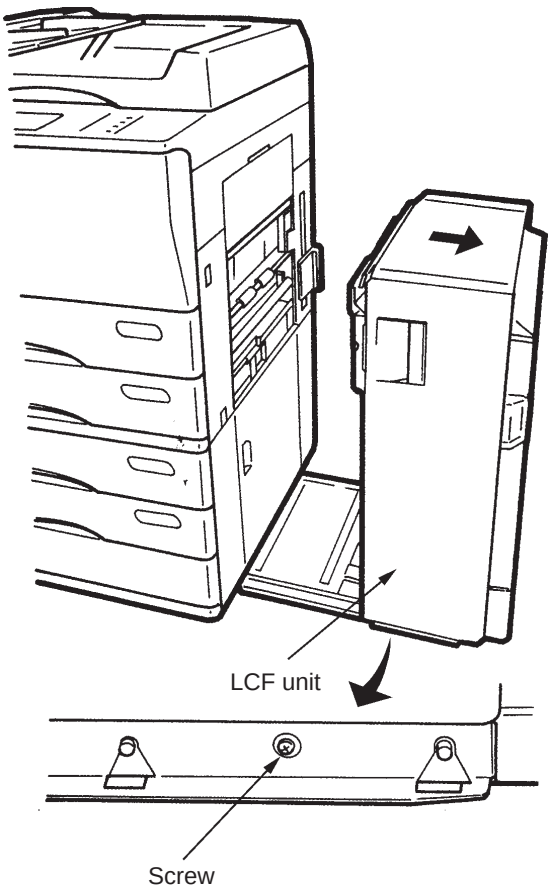

Fig. 5.1-1

(3) Open the LCF paper supply door.

(4) Hold the LCF unit firmly and lift the LCF unit out of the slide rail.

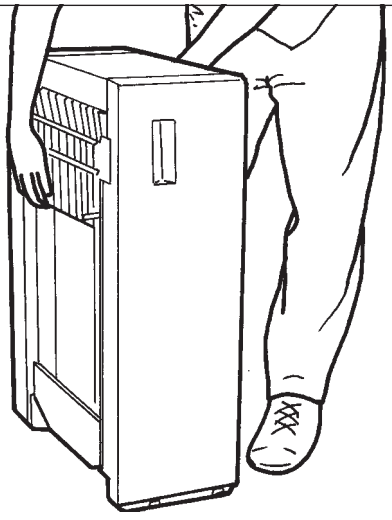

Fig. 5.1-2

5.2 Removing Various Covers

[A] Top cover

(1) Opening the paper supply door, remove two screws (ⓐ) and loosen two screws (ⓑ).

(2) Lift out the top cover.

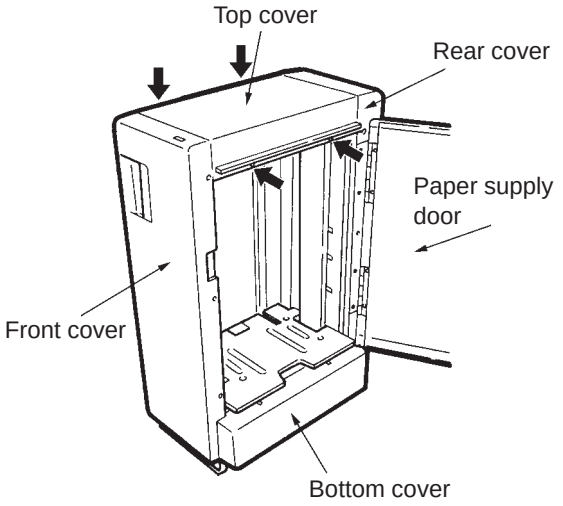

Fig. 5.2-1

[B] Front cover

(1) Remove the top cover, referring to [A].

(2) Remove the screw fastening the mylar seal to the top frame and disconnect one connector.

(3) Loosen the six screws fastening the front cover and pull it out toward you.

Note: Since various electrical components are mounted on the inside of the front cover, be careful not to damage them.

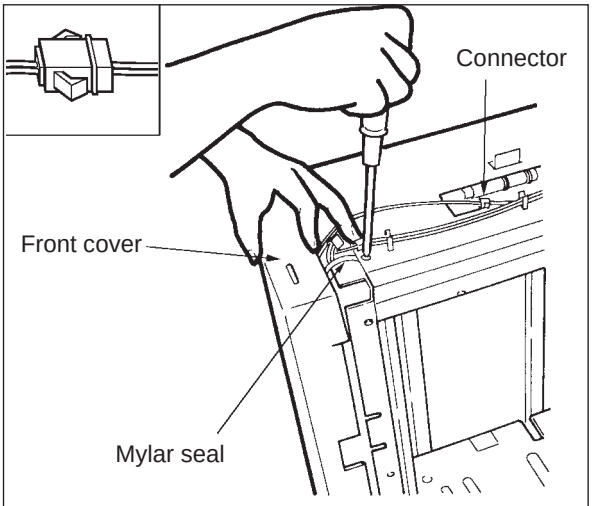

Fig. 5.2-2

[C] Rear cover

(1) Opening the paper supply door, loosen six screws and remove the screw fastening the rear cover.

(2) Pull out the rear cover toward the rear.

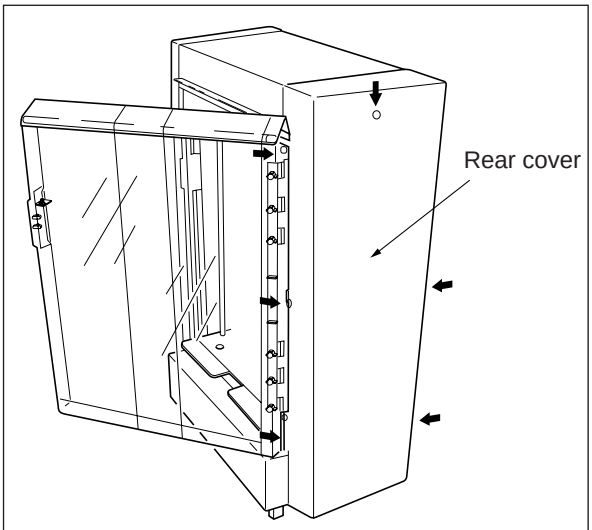

Fig. 5.2-3

[D] Bottom cover

(1) Opening the paper supply door, remove the two screws fastening the bottom cover.

(2) Lift and remove the bottom cover toward you.

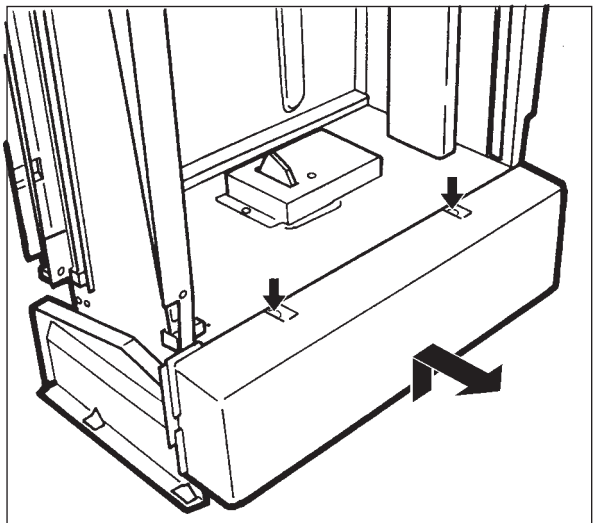

Fig. 5.2-4

[E] Paper supply door

(1) Opening the paper supply door, loosen the four screws fastening its hinge plate to the LCF frame.

(2) Lift out the paper supply door.

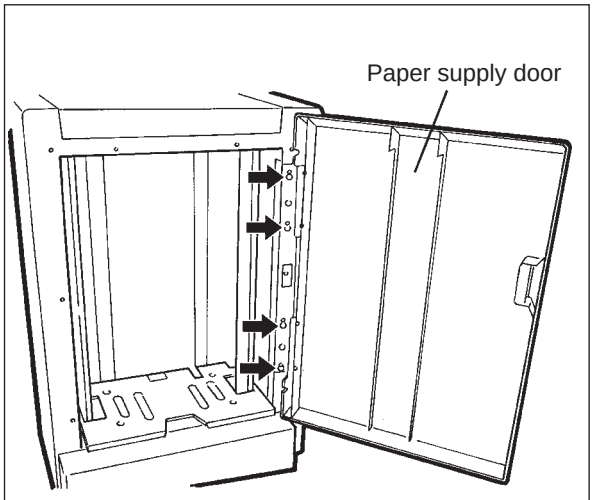

Fig. 5.2-5

5.3 Removing and Installing the Elevator Wires

[A] Removing the elevator wires

(1) Press the TRAY DOWN switch to make the elevator tray move down to the lowest position. Turn off the copier's power switch and pull away the LCF unit from the copier.

(2) Remove the LCF top cover, front cover and rear cover.

(3) Remove the drive cover (2 screws). See Fig. 5.3-1.

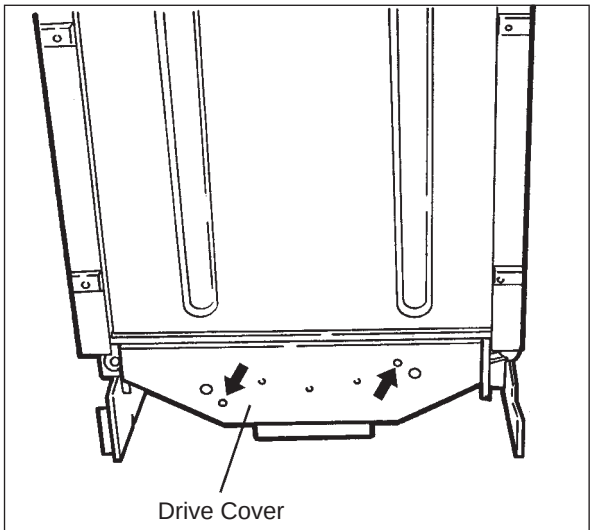

Fig. 5.3-1

(4) Remove the drive bracket (2 screws).

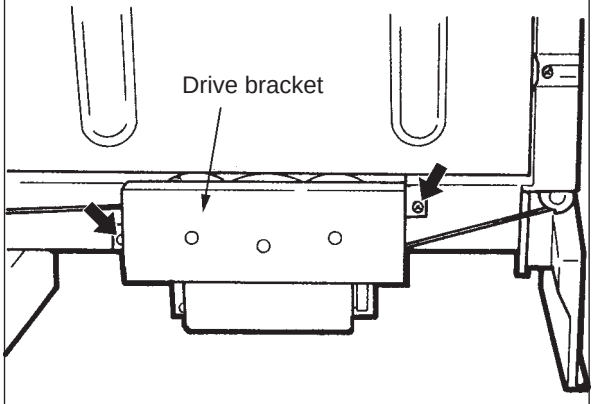

Fig. 5.3-2

(5) Remove both wire take-up pulleys from the LCF unit.

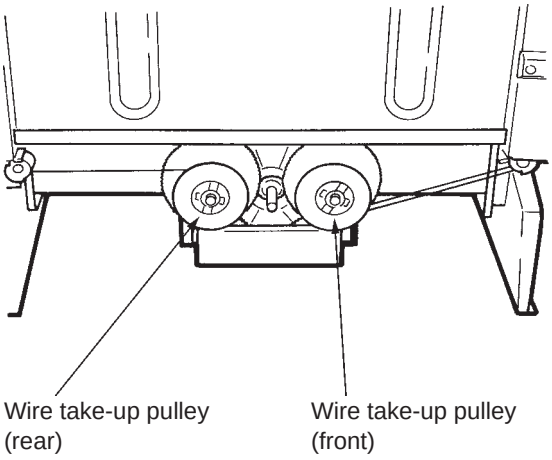

Fig. 5.3-3

(6) Disengage the claws of the gear of each wire take-up pulley to remove its flange and then remove the elevator wire.

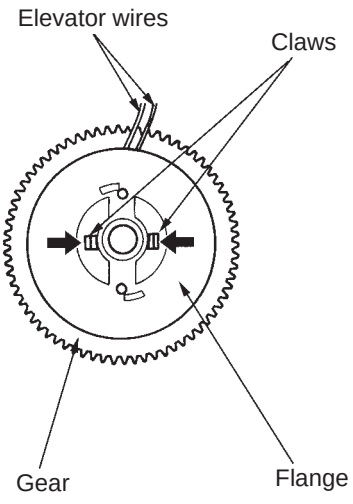

Fig. 5.3-4

(7) Remove the four clips holding the elevator wires on each of the front and rear sides.

Note: To remove one of the clips on the rear, the joint connector unit should be removed (refer to Para. 5.7 on page 5-14).

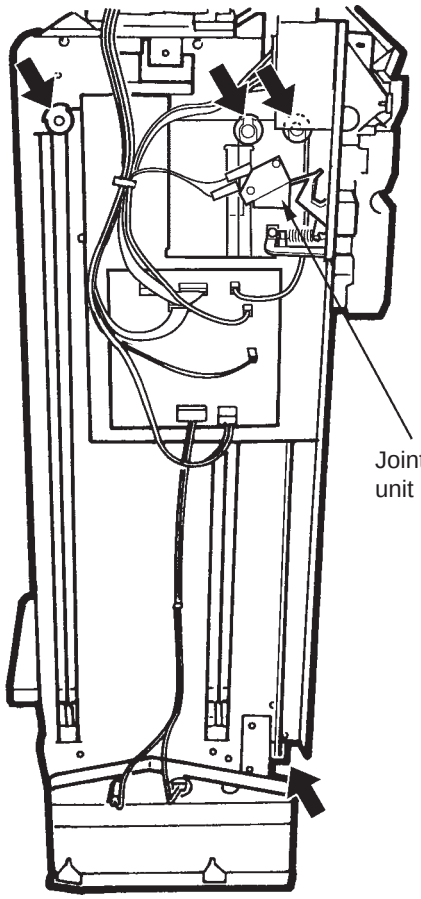

Fig. 5.3-5

(8) Remove the two wire holding clips from the elevator tray on each of the front and rear and remove the elevator wires (four in total).

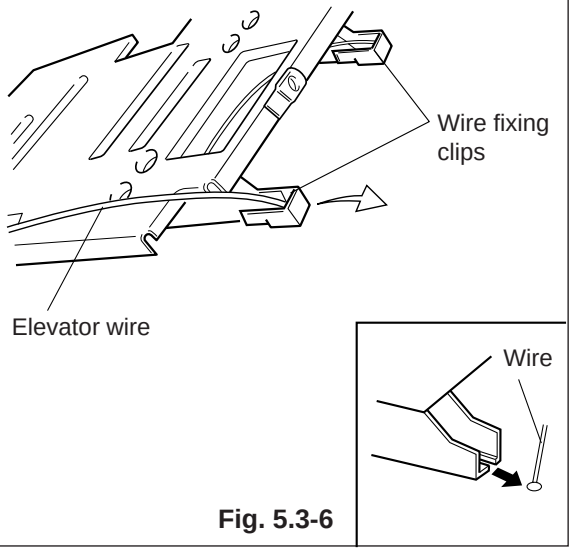

Fig. 5.3-6

[B] Installing the elevator wires

Note: Two wires, long and short, are used and arranged similarly on the front and rear sides, so the following explanation is made only about the rear side.

(1) Attach the two elevator wires to the elevator tray as shown:
- Fit the bead of the longer wire into the slot on the left side as seen at the rear and push in the holding clip.
- Attach the shorter wire in the same way.

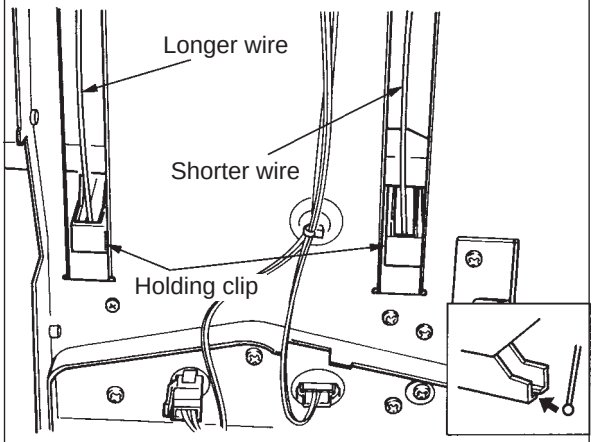

Fig. 5.3-7

(2) Place the wires on the guide pulleys:
- The longer wire should be placed in the inner grooves and the shorter wires in the outer grooves.

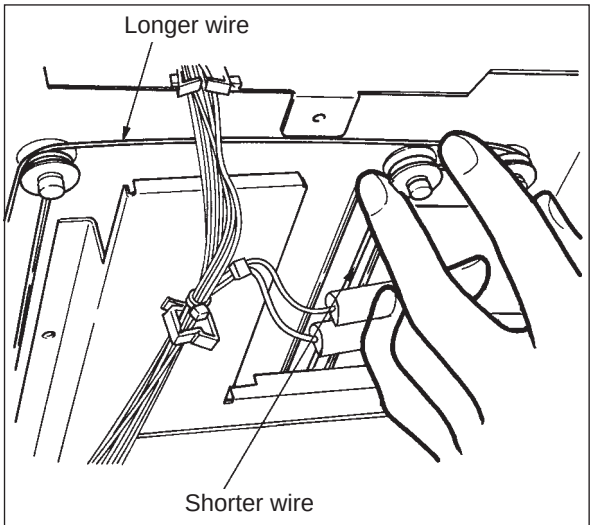

Fig. 5.3-8

(3) Both wires should be routed inside of the lever shaft, as shown. This step is for the rear side only.

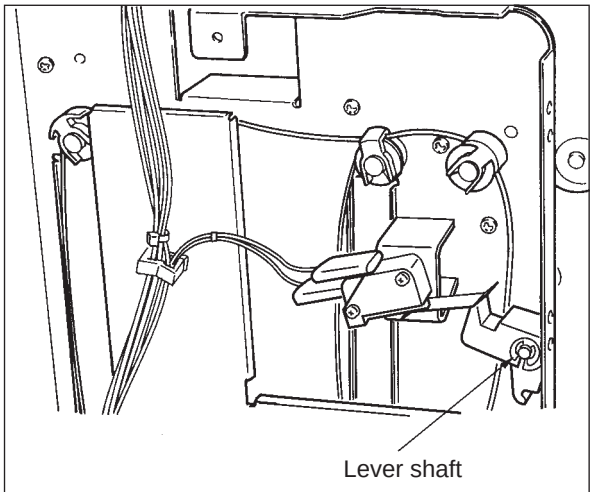

Fig. 5.3-9

(4) Place the wires in the grooves of the bottom guide pulley.
   • The longer wire should be in the inner groove.

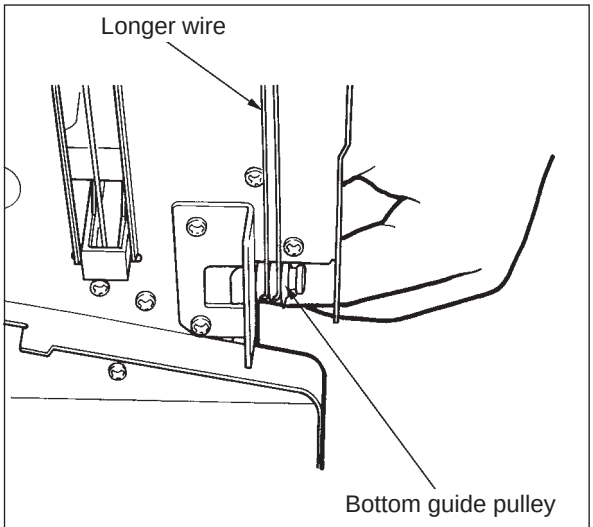

Fig. 5.3-10

(5) Fit both wires in the slot of the gear boss of the rear take-up pulley.
   • The longer wire should be put in first, then the shorter one, and snap in the flange.

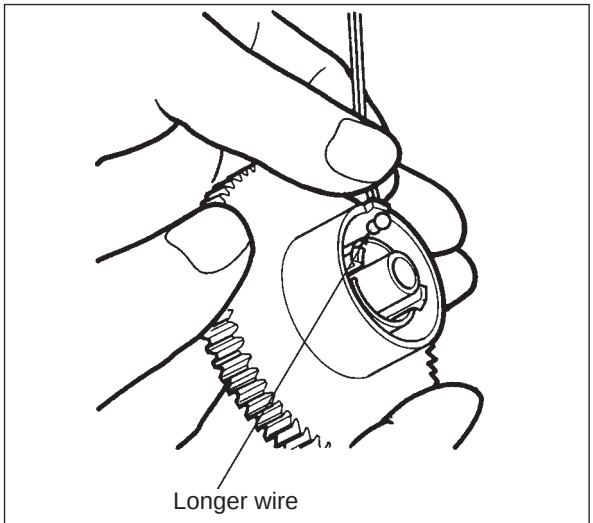

Fig. 5.3-11

(6) Place the rear take-up pulley on its shaft (don't engage the gears yet) and rotate it clockwise (arrow shown) until the elevator tray moves up to the markings (see Fig. 5.3-13) on the rear frame, then push the take-up pulley in to engage the gears.

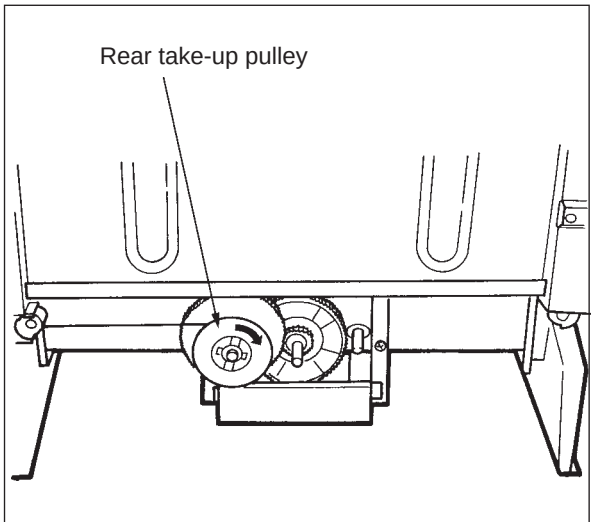

Fig. 5.3-12

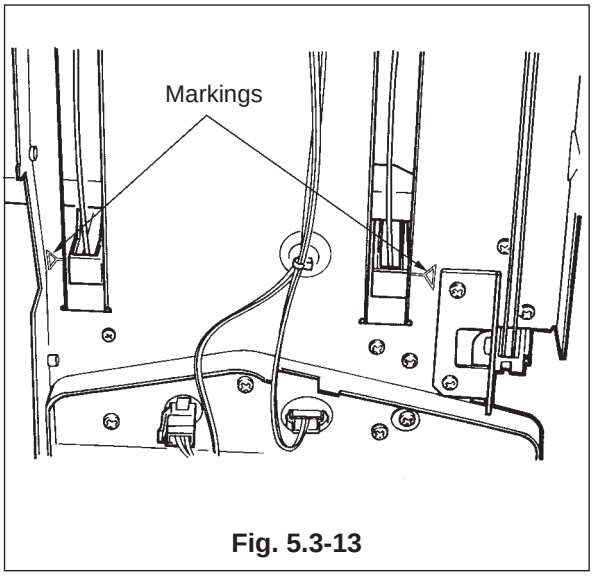

Fig. 5.3-13

(7) Follow the same steps on the front side.

(8) Reinstall the drive bracket and the drive cover.

(9) Fit the wire holding clips onto the eight wire guide pulley studs on the front and rear.

- For the wire guide pulley shown, be sure to use the clip whose wire holding portion is smaller (on both front and rear).

(10) Reinstall the joint connector to the rear frame. See para. 5.7 on page 5-14.

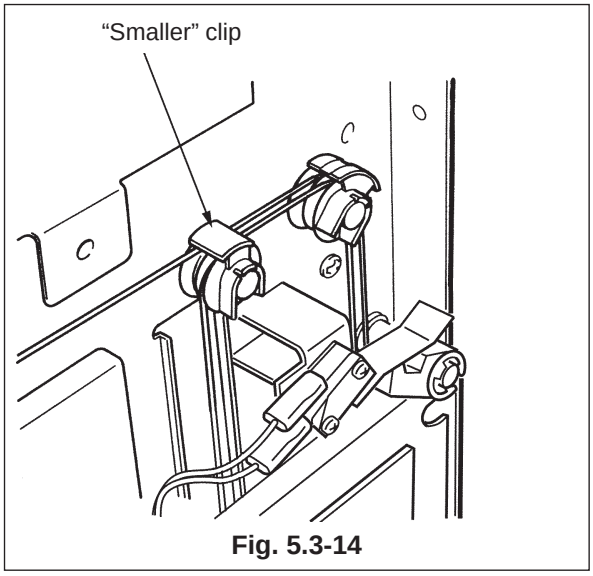

Fig. 5.3-14

5.4 Changing the Paper Size of LCF (Paper-edge guides)

[A] Arrangement of paper-edge guides

The sheets of paper set on the elevator tray are aligned on three sides by the front and rear paper-edge guides and the ribs of inner LCF frame. The paper-edge guides are adjustable in position so that A-size and Letter-size paper can be guided.

There are two slots each on the front and rear sides of the bottom plate: The two inner slots are for Letter size paper and the outer slots are for A size. Each paper-edge guide has two pairs of fixing holes for A-size and Letter-size paper.

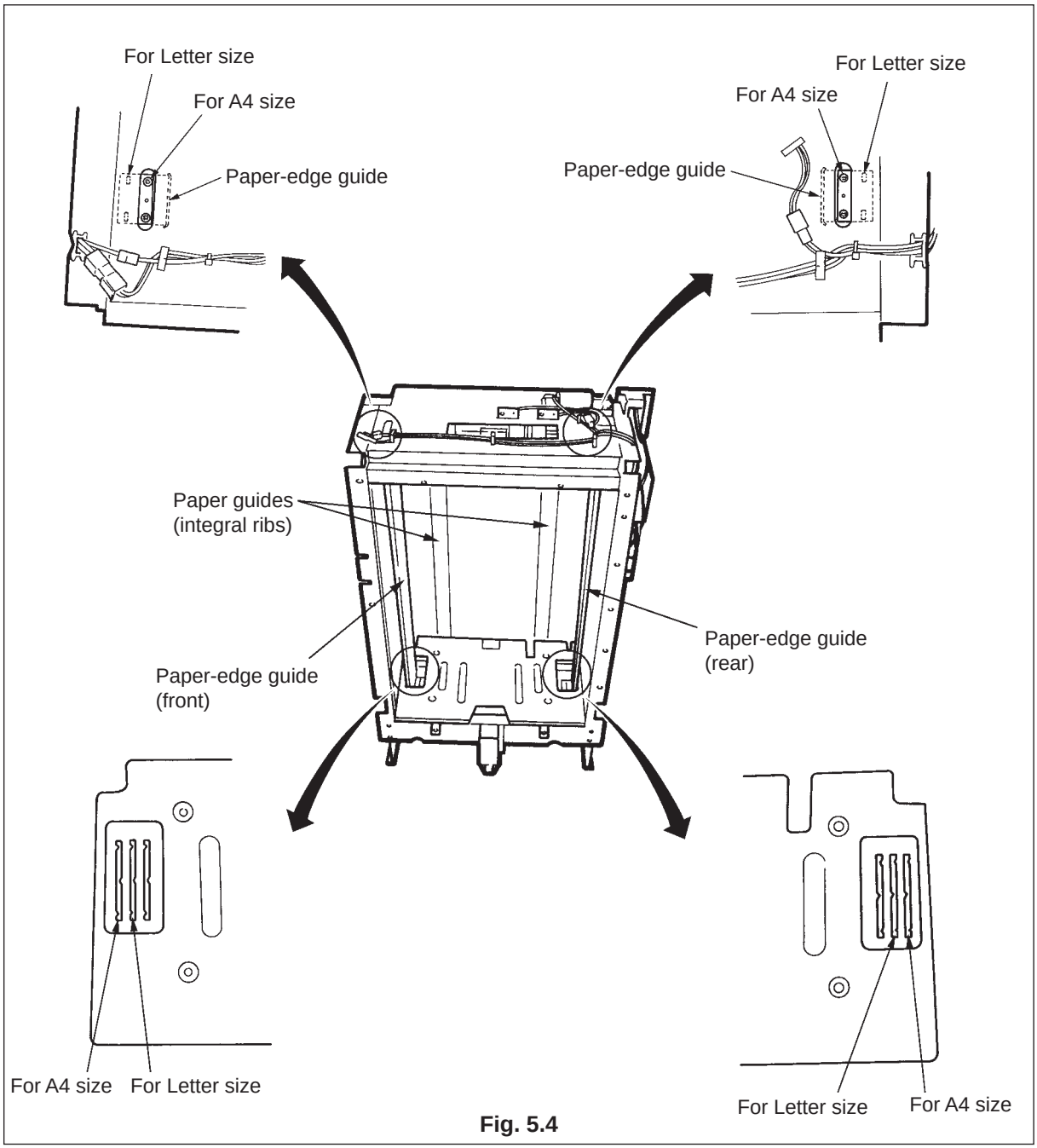

Fig. 5.4

[B] Changing the paper size (A4 size ↔ Letter size)

(1) Open the paper supply door and remove the top cover.

(2) Remove the two screws fastening each of the front and rear paper-edge guides on the top frame. See Fig. 5.4.

(3) Raise the paper-edge guides a little to disengage them from the slots in the bottom frame and fit them in the adjacent slots.

(4) Aligning the holes in the top frame and those in the paper-edge guides, fasten each of the paper-edge guide with two screws.

Note: The front and rear paper-edge guides should be parallel with each other and the distance between them should be the paper width + 0.5 – 1.0 mm. If they are not parallel, adjust and then fix them using the elongated holes in the top frame.

5.5 Replacing the Separation/Feed/ Pick-up Rollers

(1) Remove the screw fastening the upper paper transport guide.

(2) Pull the upper paper transport guide in the direction of the arrow to remove it.

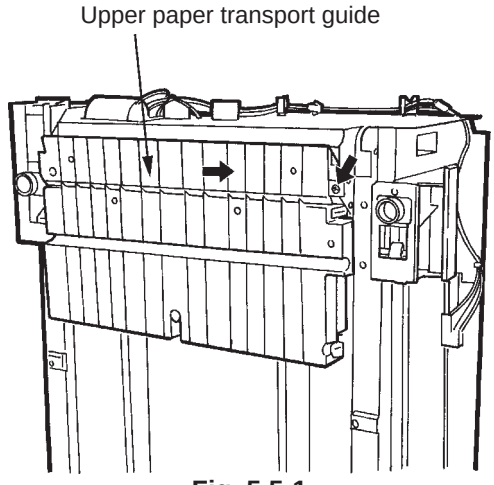

Fig. 5.5-1

(3) Snap off the clip and remove the paper separation roller.

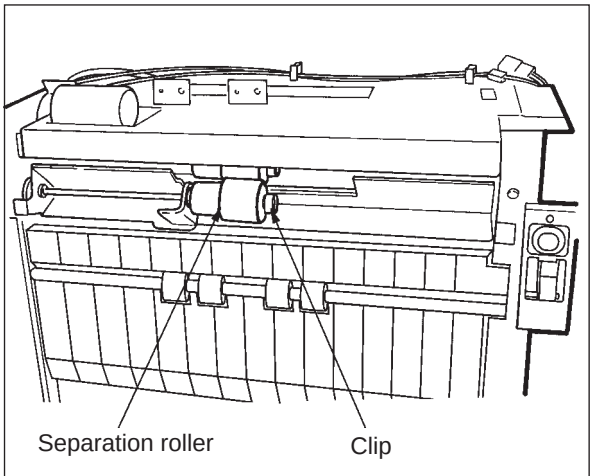

Fig. 5.5-2

(4) Following the same procedure, remove the paper feed roller.

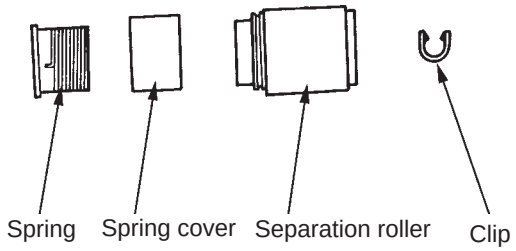

Fig. 5.5-3

(5) To remove the pick-up roller, first open the paper supply door. Then snap off the clip and remove the weight.

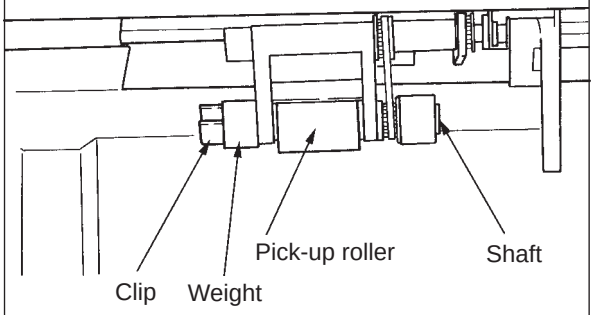

Fig. 5.5-4

(6) Remove the pick-up roller by pulling out its shaft.

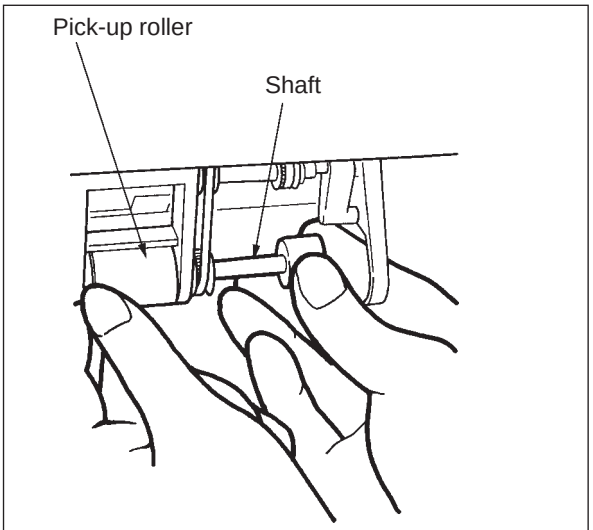

Fig. 5.5-5

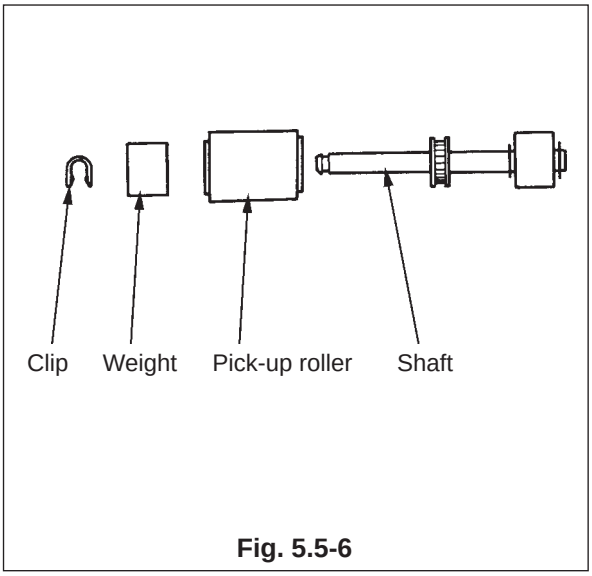

Fig. 5.5-6

(7) For reassembly, reverse the above procedure.

Note:

When replacing the upper unit paper transport guide, first fit its rear end in the slit in the rear frame. Then fasten it with a screw.

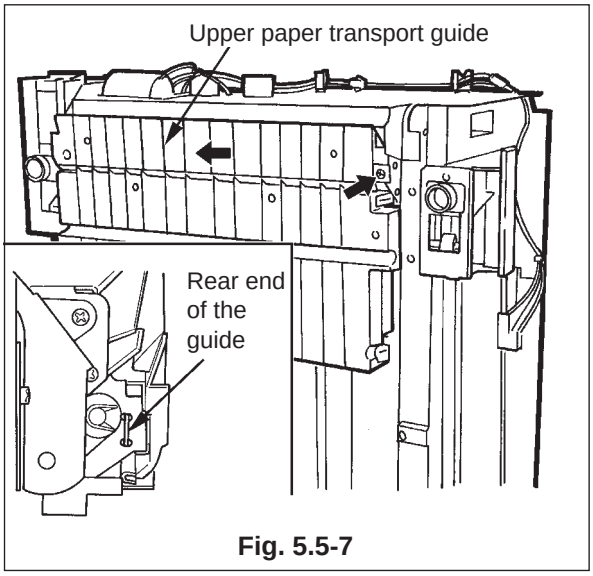

Fig. 5.5-7

Notes:

Observe the following when reassembling the pick-up roller, feed roller and separation roller:

1. Place the timing belt securely in the correct position on each pulley.
2. Snap clips securely into the grooves in the shafts.
3. Make sure that there is no oil on the timing belts, pulleys and roller surfaces.

5.6 Removing the LCF Latch Handle

(1) Remove the top cover and the front cover.

(2) Remove the two screws fastening the latch handle and take it out.

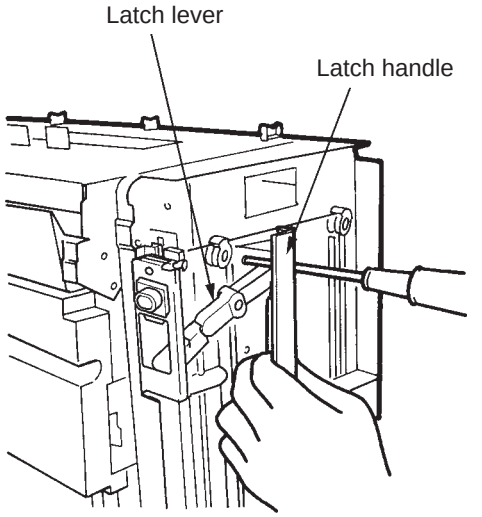

Fig. 5.6-1

(3) To install the latch handle, place its end on the rib of the latch handle, as shown, and fasten the screws.

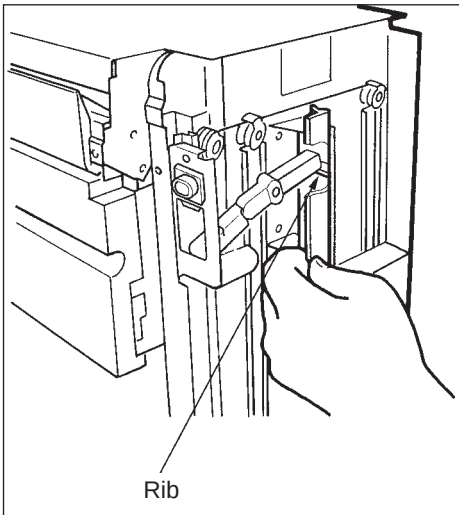

Fig. 5.6-2

(4) Check the motion of the latch lever by operating the latch handle.

(5) Reinstall the front and rear covers.

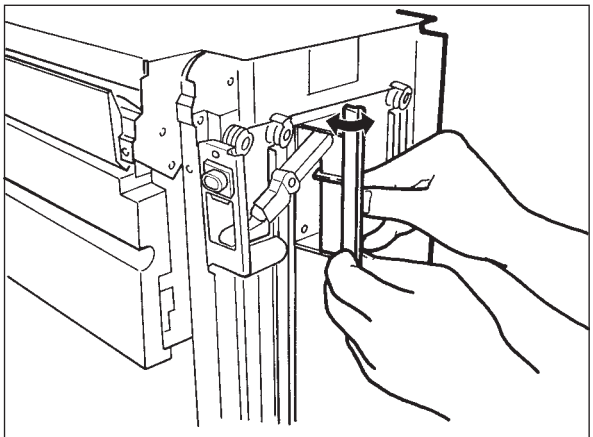

Fig. 5.6-3

5.7 Removing the Joint Connector Assembly

(1) Remove the top cover and rear cover.

(2) Remove the three screws fastening the joint connector assembly.

(3) To remove the joint connector assembly completely, pull out three connectors from the PC board and remove the ground wire additionally.

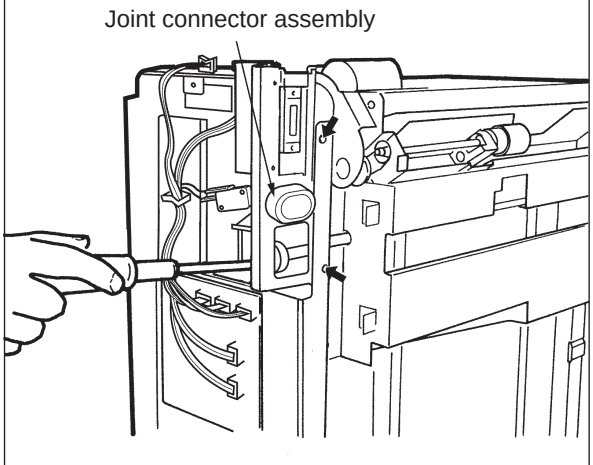

Fig. 5.7

5.8 Replacing the Joint Connector

(1) Remove the top cover and the rear cover.

(2) Remove the two screws fastening the joint connector bracket.

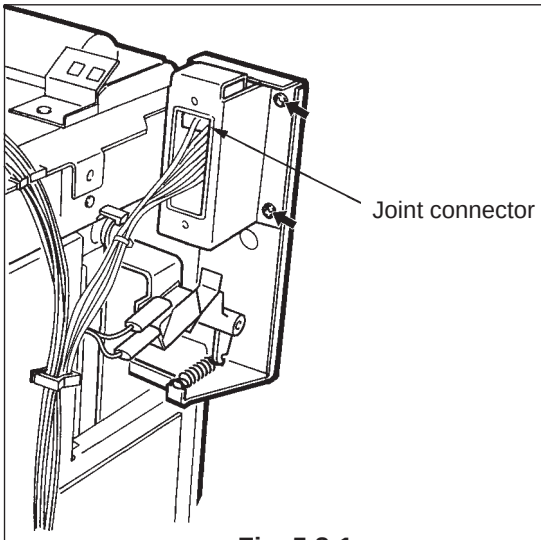

Fig. 5.8-1

(3) Pull out three connectors from the PC board and remove the ground wire and take out the joint connector.

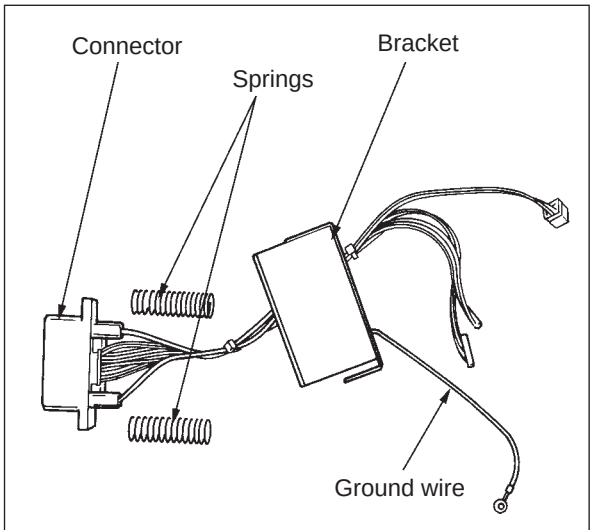

Fig. 5.8-3

(4) To reinstall, place the two springs and the connector into the bracket, and then holding the bracket as shown, hook its claw to the frame and fasten the two screws.
(5) Reconnect the three connectors and fasten the ground wire.
(6) Reinstall the rear and top covers.

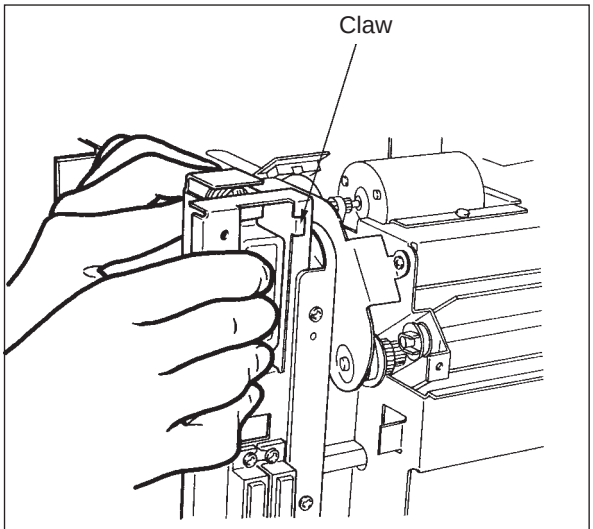

Fig. 5.8-3

5.9 Replacing the Tray Motor

(1) Press the TRAY DOWN button to move down the elevator tray to the lowest position. Then turn off the power switch and detach the LCF from the copier.
(2) Pull out the tray motor connector from the inside of the rear frame.

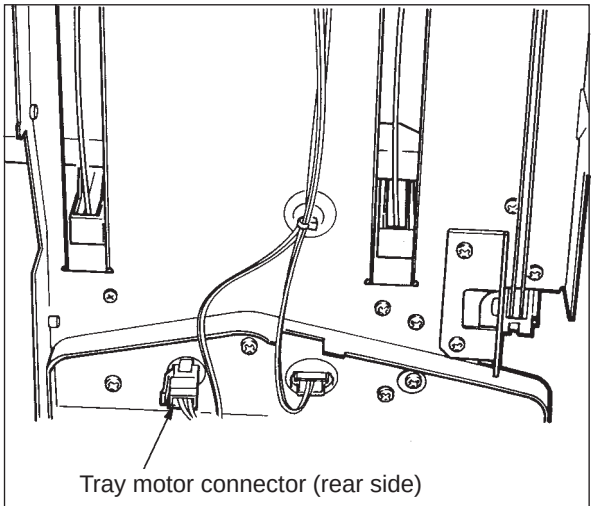

Fig. 5.9-1

(3) Remove the drive bracket (2 screws) and remove the two take-up pulleys.
(4) Remove the tray motor assembly (4 screws).

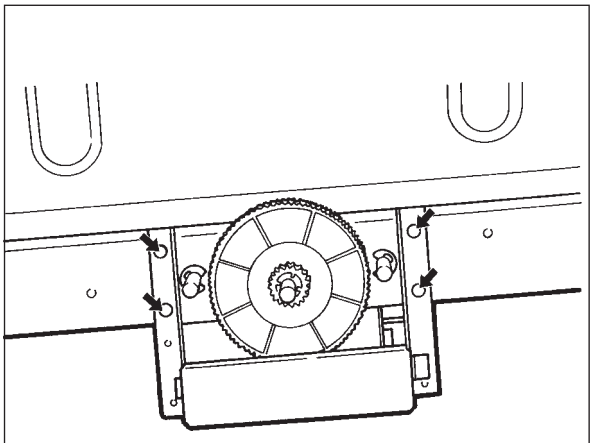

Fig. 5.9-2

(5) Remove the two screws and replace the motor along with its pulley.

(6) For reassembly, reverse the above procedure.

- However, when reinstalling the wire take-up pulleys, follow steps (6) and (7) on page 5-7.

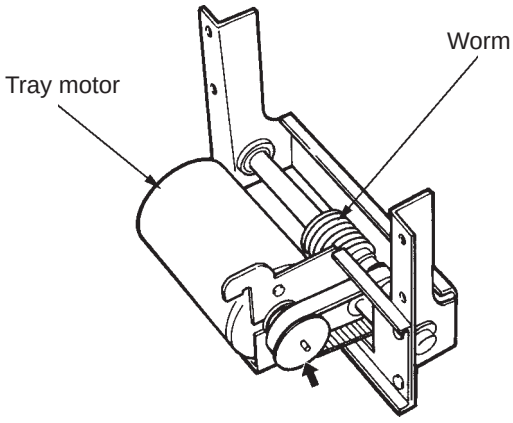

Fig. 5.9-3

5.10 Replacing the Tray Bottom Sensor

(1) With the elevator tray in a halfway or upper position, open the paper supply door.

(2) Remove the two screws fastening the bottom sensor unit and take it out.

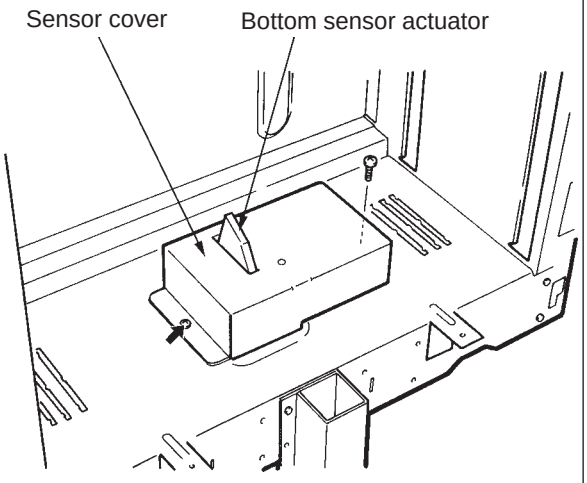

Fig. 5.10-1

(3) Remove the screw fastening the sensor bracket and pull out the connector.

(4) Unlatch the four sensor claws to replace the sensor.

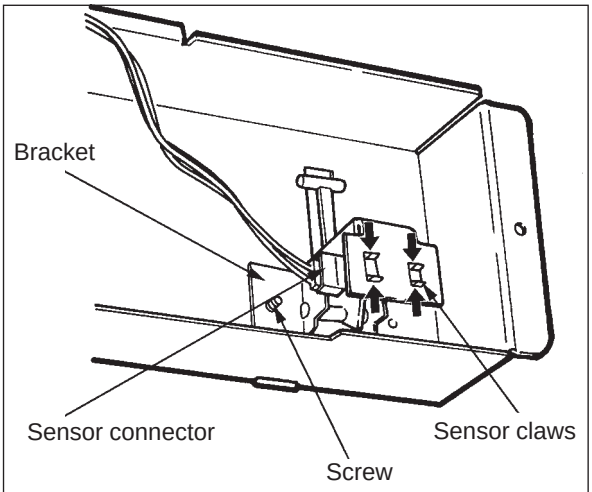

Fig. 5.10-2

(5) To reinstall the sensor actuator and spring to the bracket, first fit the spring onto the actuator pin, as shown.

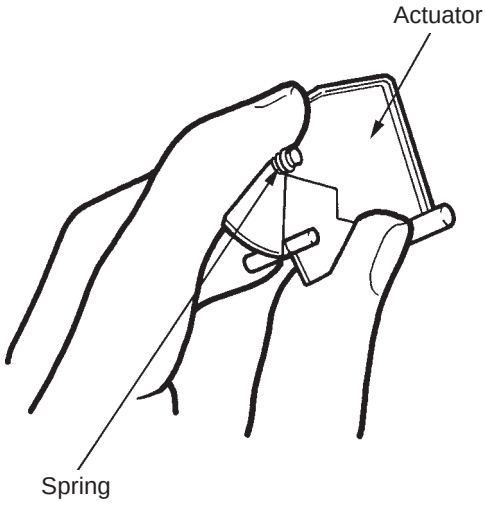

Fig. 5.10-3

(6) Then fit both pins of the actuator into the cut-outs of the bracket and fit the end of the spring in the groove of the bracket.

(7) Reinstall the bracket to the sensor cover with a screw.

- Both ends of the bracket should be fitted into the slits in the cover. See Fig. 5.10-2.

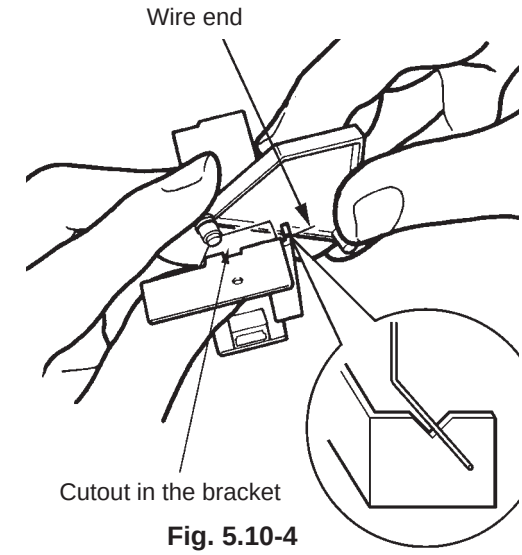

Fig. 5.10-4

5.11 Replacing the Paper Feed Motor

(1) Turn off the power switch and remove the top cover.

(2) Remove the two screws fastening the motor and take out the motor from its belt.

(3) Pull out its connector and replace the motor with a new one.

(4) Reinstall the top cover.

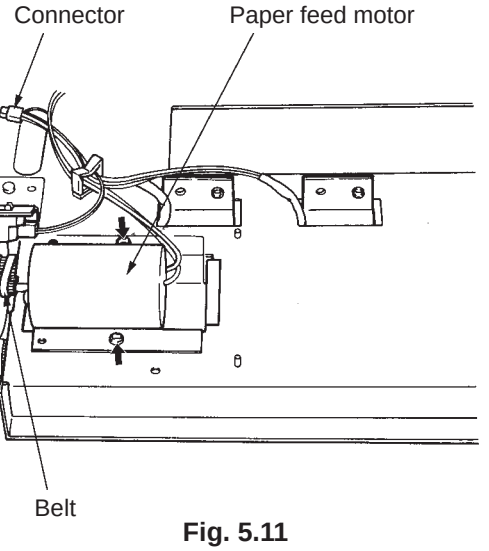

Fig. 5.11

5.12 Replacing the FG Pulse Sensor/ Paper Empty Sensor/Tray-up Sensor

Note: The above three sensors can be replaced using the same procedure.

(1) Turn off the power switch and remove the top cover.
(2) Remove the screw fastening the sensor bracket and take it out.
(3) Pull out the connector from the sensor and replace it with a new sensor.
(4) Reinstall the top cover.

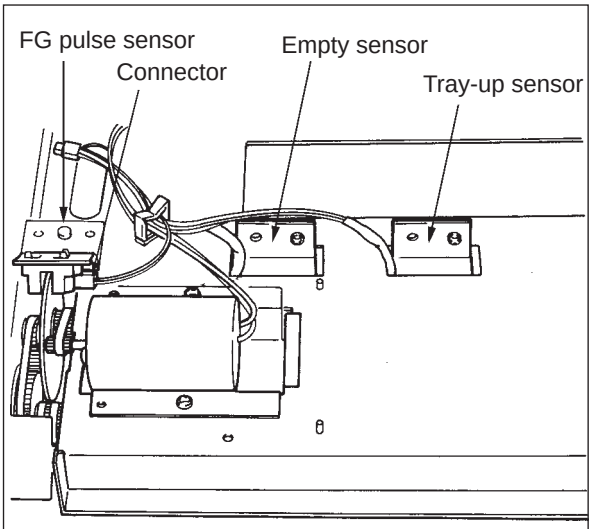

Fig. 5.12

5.13 Replacing the TRAY DOWN Sensor PC Board (PWA-F-KEY-789)

(1) Remove the top cover and front cover.
(2) Remove the M3 screw fastening the PC board to the inside of the front cover and pull out the PC board.
(3) Pull out the connector from the sensor and replace it with a new PC board.

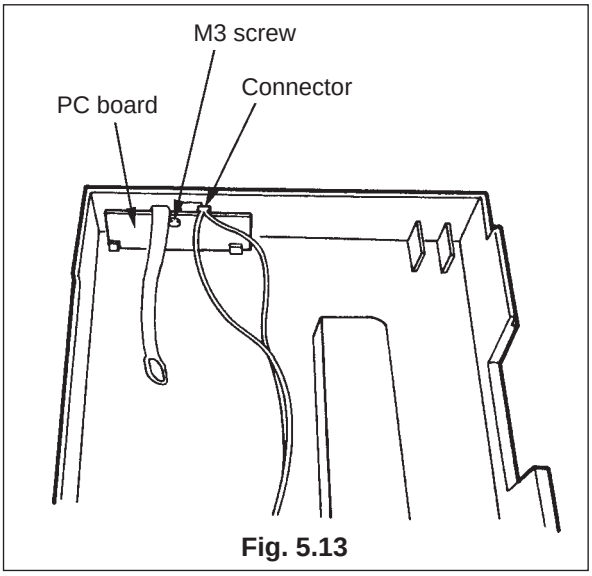

Fig. 5.13

5.14 Replacing the Door Switch and Safety Switch

Note: These two switches can be replaced using the same procedure.

(1) Turn off the power switch and remove the top cover and the rear cover, then open the paper supply cover.
(2) Remove the two screws fastening the switch, pull out its two connectors and replace the switch with a new one.
(3) Reinstall the front cover and the top cover.

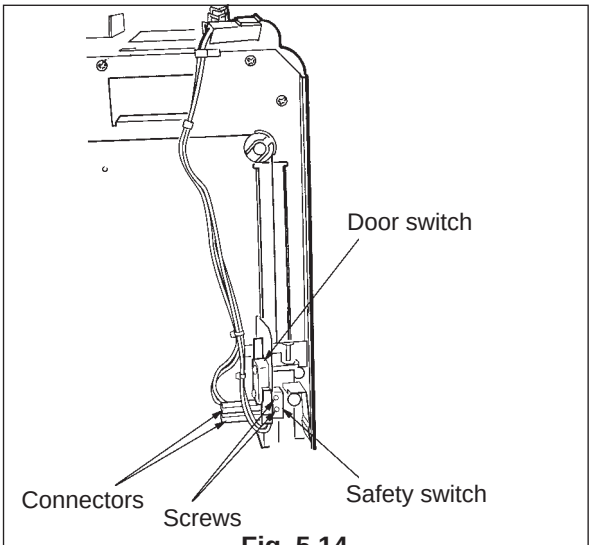

Fig. 5.14

5.15 Replacing the Joint Switch

(1) Turn off the power switch and remove the top and rear covers.
(2) Remove the two screws which fasten the joint switch.
(3) Pull out the two connectors from the switch and replace it with a new switch.
(4) Reinstall the rear and top covers.

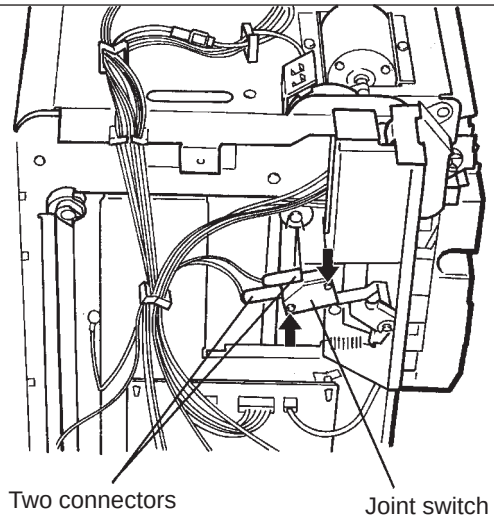

Fig. 5.15

5.16 Removing the Paper Feed Unit

Note: If any of the timing belts used with the MP-4001 is damaged or broken, the paper feed unit has to be removed to replace the belt or belts.

(1) Remove all three outside covers of the MP-4001.
(2) Remove the four connectors indicated with arrows on the top frame. Then remove the paper empty sensor and the tray-up sensor. See Para. 5.12 on page 5-2.

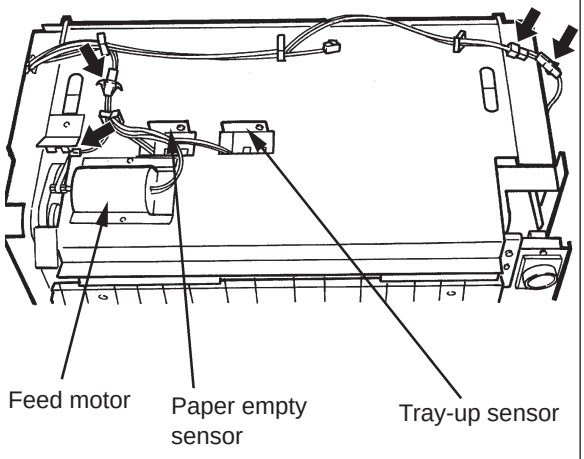

Fig. 5.16-1

(3) Remove all the wires from the top frame as shown.

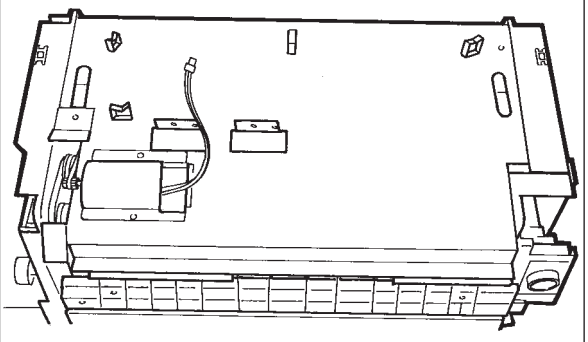

Fig. 5.16-2

(4) Remove the joint connector assembly. See Para. 5.7 on page 5-14.

(5) Remove the five screws fastening the paper feed unit on the rear side.

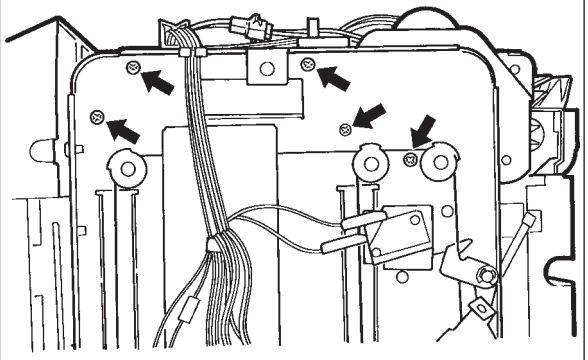

Fig. 5.16-3 Rear frame

(6) Remove the five screws fastening the paper feed unit on the front side.

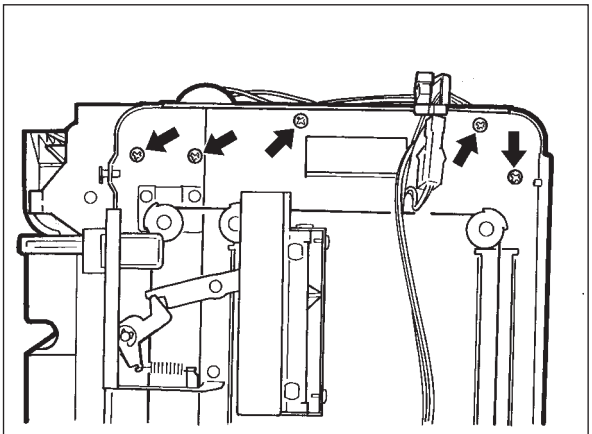

Fig. 5.16-4 Front frame

(7) Lift out the paper feed unit.

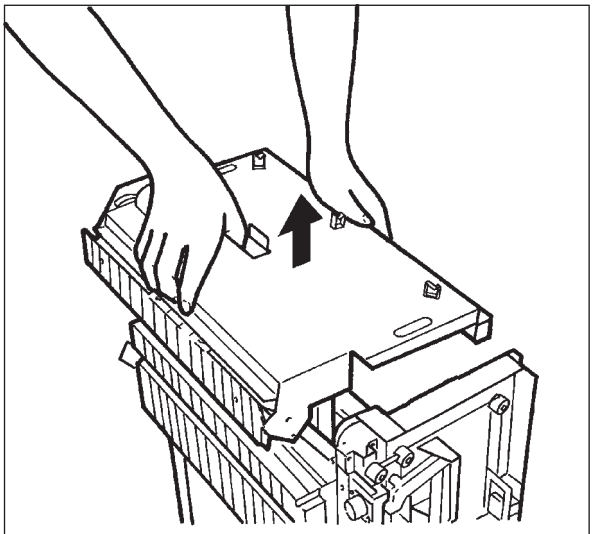

Fig. 5.16-5

(8) Remove the drive bracket on the rear side (one screw).

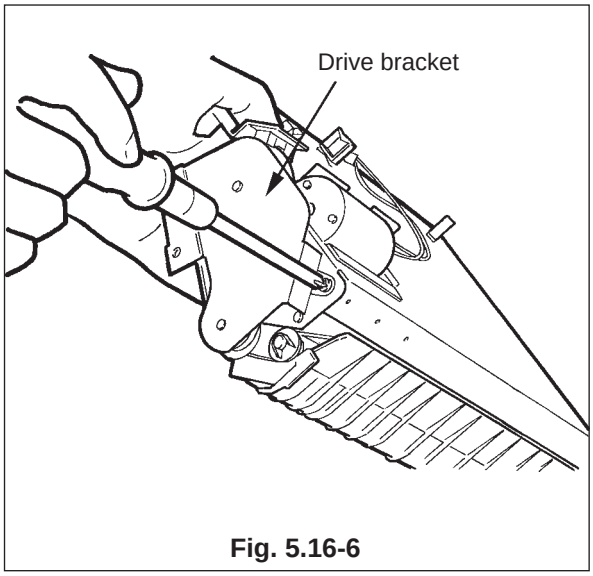

Fig. 5.16-6

(9) Now you can remove any of the five timing belts for driving the paper feed and separation rollers.

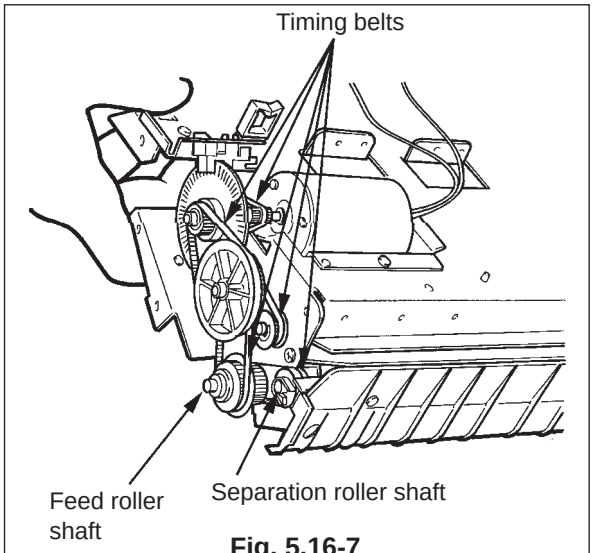

Fig. 5.16-7

(10) To remove the two timing belts which drive the pick-up roller, first remove the clip on the shaft. Move the pick-up roller unit a little to the right (arrow) to remove the pin which fixes the pulley to the shaft.

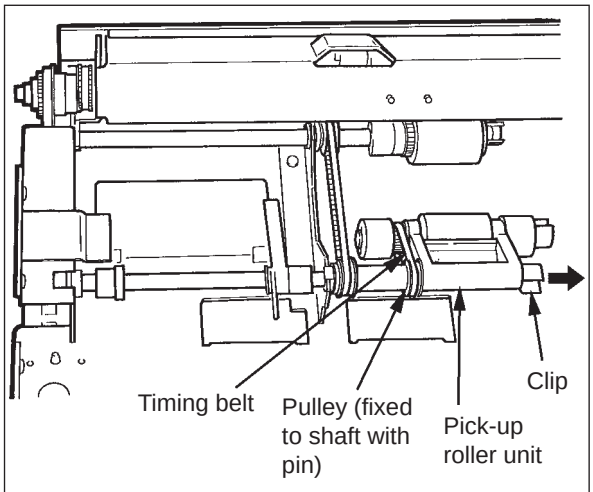

Fig. 5.16-8

(11) Then slide out the pick-up roller unit, timing belt, pulley and spacer together.

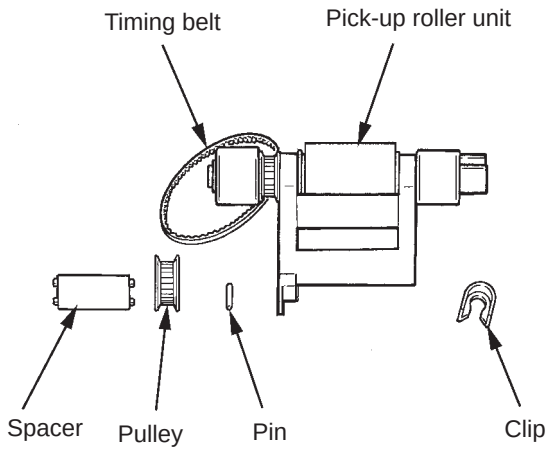

Fig. 5.16-9 Pick-up roller unit

(12) To remove the other timing belt, take out the clip and bushing from the rear side. Move the shaft to the right (arrow) to displace it from the rear frame. Displace the bushing from the inside frame.

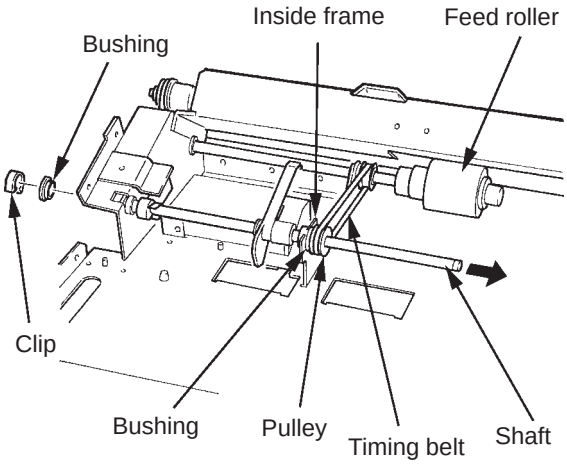

Fig. 5.16-10

(13) Then remove the shaft assembly together with the pully and timing belt.

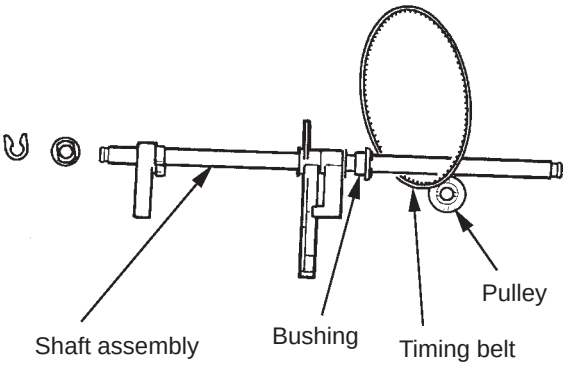

Fig. 5.16-11

(14) To reassemble the paper feed unit, basically reverse the above procedure.

Note: When reinstalling the paper feed unit to the main body of the MP-4001, hold the unit and place its surface Ⓐ against the edge Ⓑ of the main body frame. Then fit the paper feed unit in the main body.

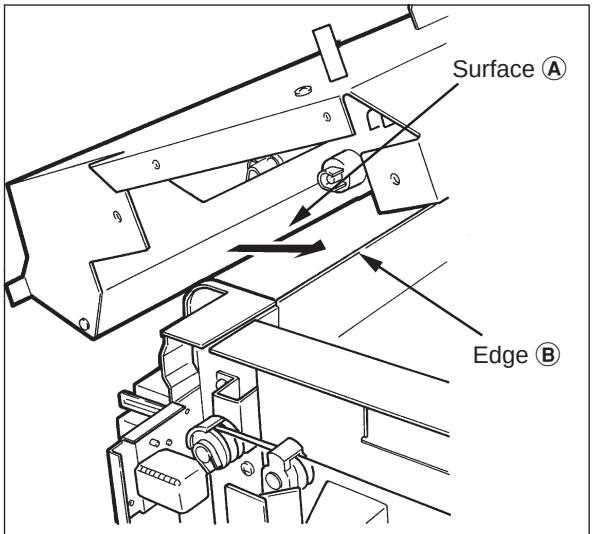

Fig. 5.16-12

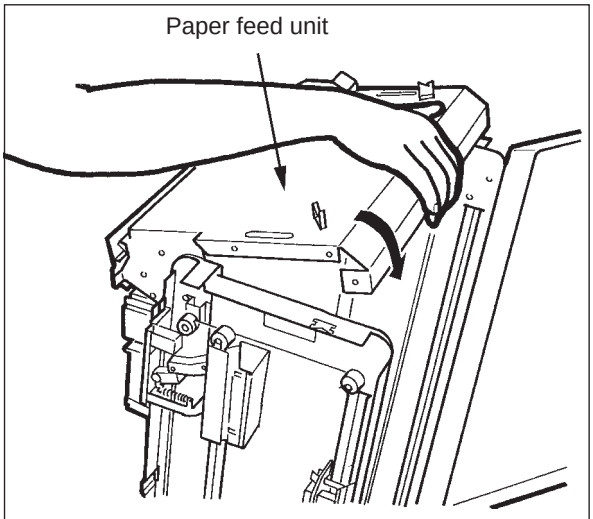

Fig. 5.16-13

VI. UNPACKING AND SET-UP INSTRUCTIONS

Note: The unpacking and set-up work should be done by a qualified service technician according to the following procedure. The slide rail unit in 18 must be installed without fail.

(1) Unplug the copier from the wall outlet.

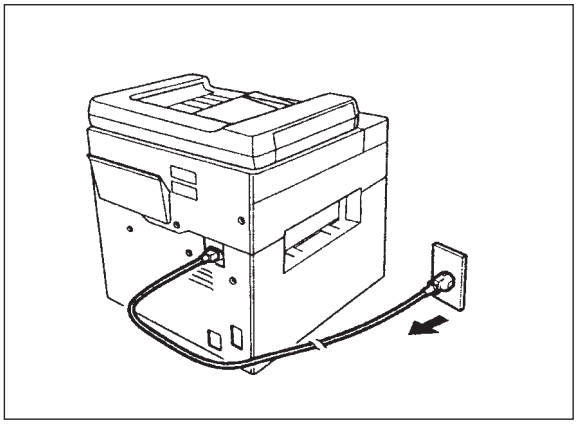

(2) Open the carton.

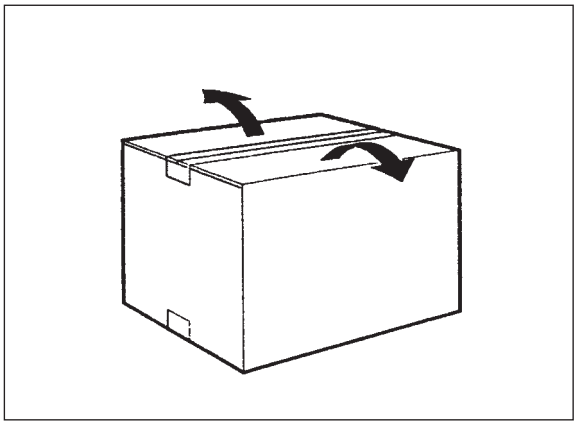

(3) Take out the large-capacity feeder MP-4001 from the carton and check the following accessories are include:

- 4 -- Bag containing screws
- 6 -- Front bracket
- 11 -- Joint connector unit
- 16 -- Joint connector cover
- 18 -- Slide rail
- 21 -- MP-4001

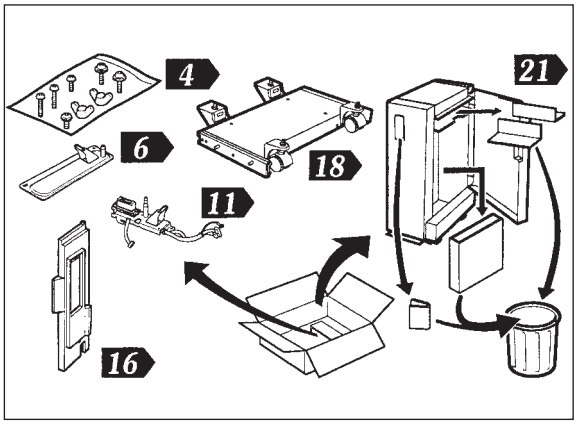

Note: The above numbers indicate the steps where the corresponding parts are used.

(4) Check that the following types of screws are included in one of the plastic bags:

- 6 ------- TBID screws M4 x 16 mm 2 pcs.
- 11 ------- TPAN screws M4 x 8 mm 2 pcs.
- 14 ------- THPAN screw M4 x 6 mm 1 pc.
- 19 ------- Wing nuts M4 2 pcs.
- 22 / 23 ZPAN screws M4 x 8 mm 2 pcs.

Note: The above numbers indicate the steps where the corresponding parts are used.

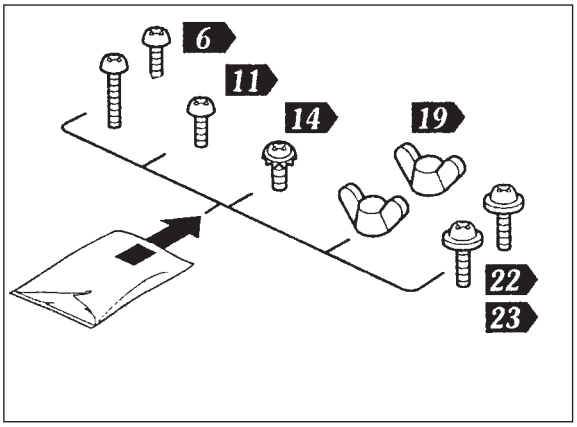

(5) Remove the two screws holding the cover plate on the rear side. These two screws will be used in step 16. Remove the two screws on the front side.

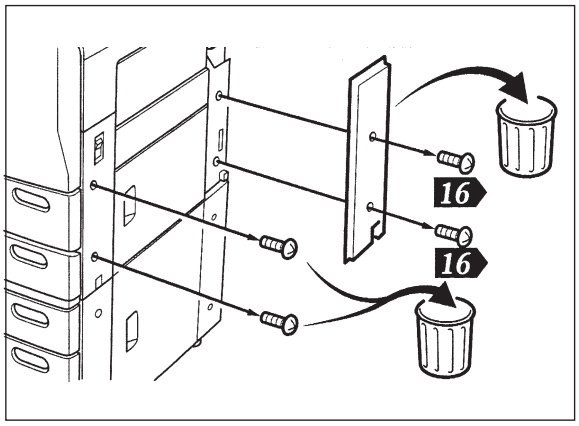

(6) Install the front bracket provided to the copier with the two TBID screws M4 x 10 mm provided.

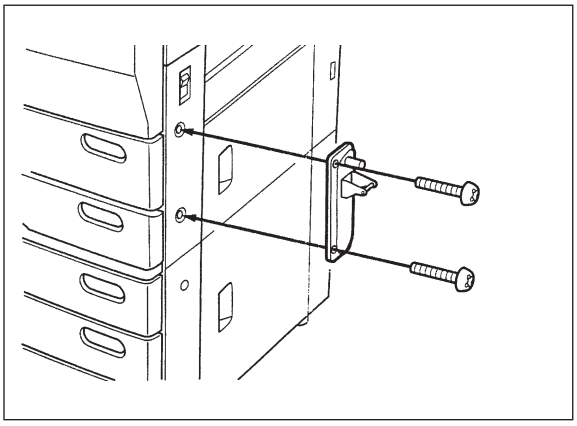

(7) Loosen each of the screws one turn (360°).

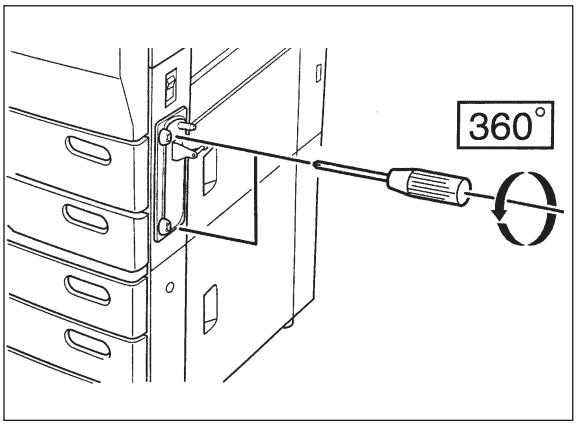

(8) Pull out the clip and remove the lower right-hand cover of the copier in the direction of the arrow ②. Then pull out its connector.

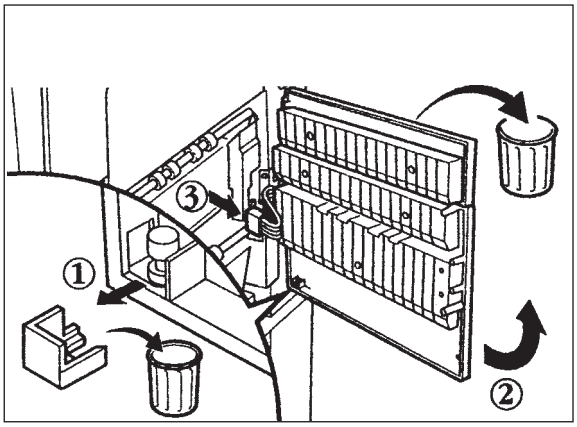

(9) Remove the upper hinge (2 screws) and the lower hinge (1 screw) for the lower right-hand cover. Then remove the connector cover by raising it slightly and then taking it out.

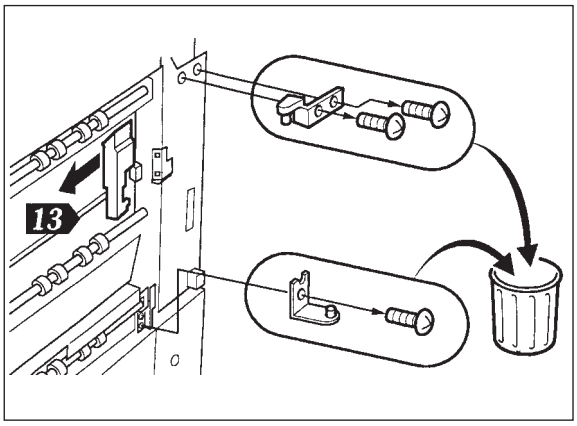

(10) Open the pedestal door and remove its lower inside cover (1 screw).

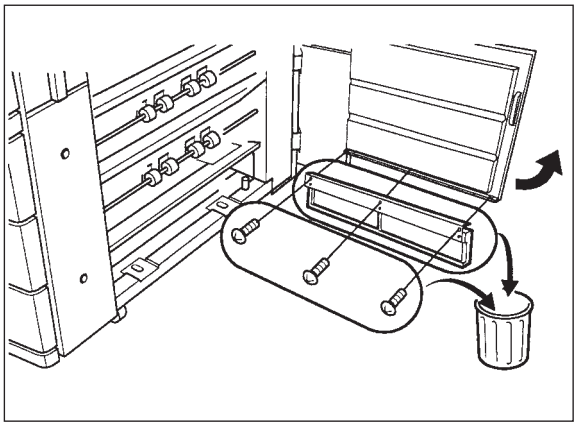

(11) Install the joint connector unit provided to the copier by hooking its two claws into the two slots in the copier and fastening it with the TPAN screw M4 x 8 mm provided.

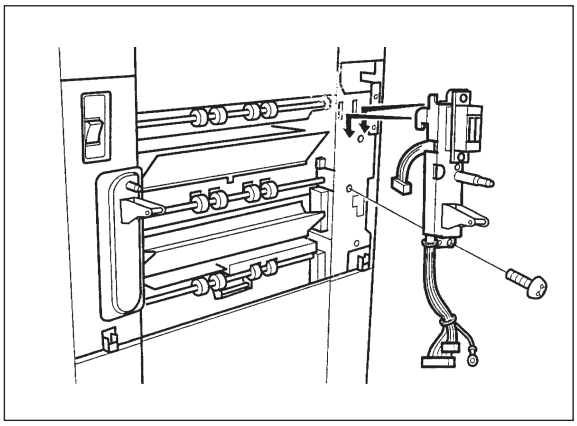

(12) Connect one of the connectors of the joint connector unit to corresponding connector in the copier, as shown.

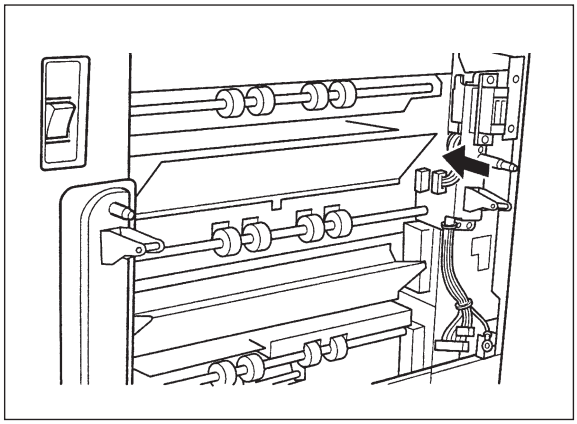

(13) Snap in the plastic connector cover, as shown.

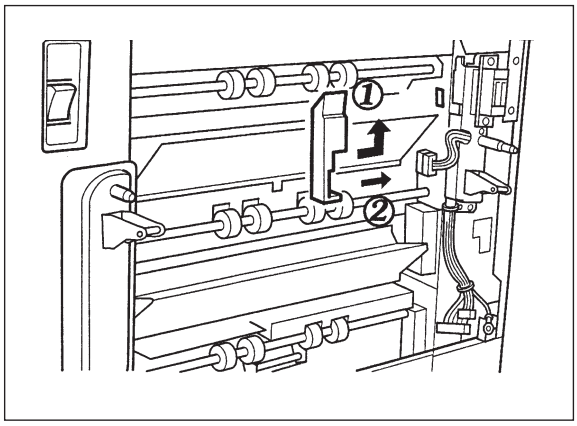

(14) Fasten the ground wire of the joint connector unit with the THPAN screw M4 x 8 mm provided.

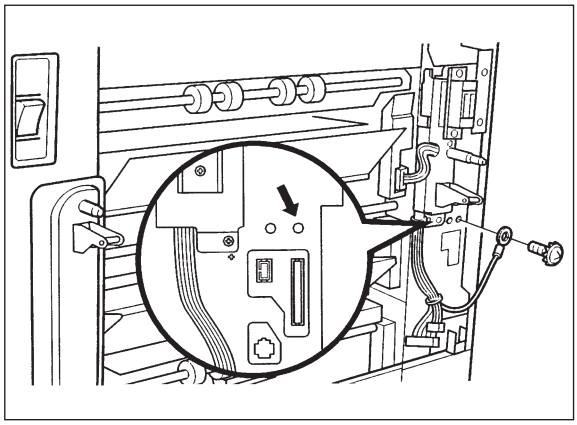

(15) Connect the other two connectors of the joint connector unit to the corresponding connectors in the copier.

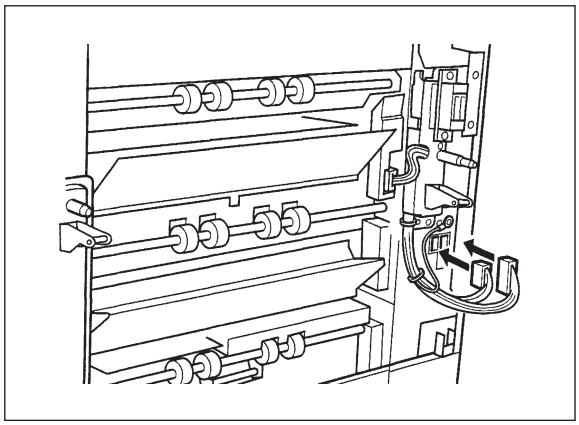

(16) Install the joint connector cover provided over the joint connector unit to the copier using the two screws removed in step 5 above.

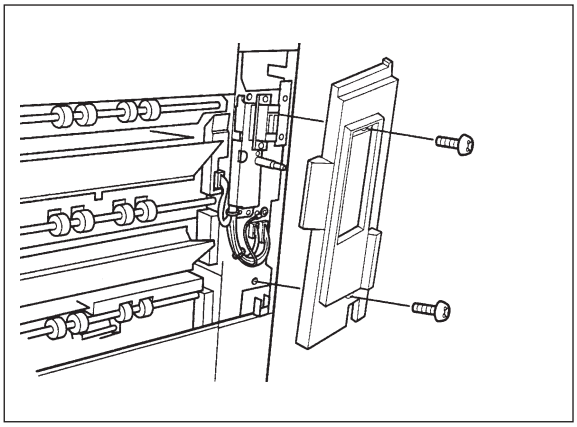

(17) Adjust the legs of the paper feed pedestal: Loosen the upper nut and adjust the leg so that all four legs contact the floor and that the pedestal stands with no tilt.

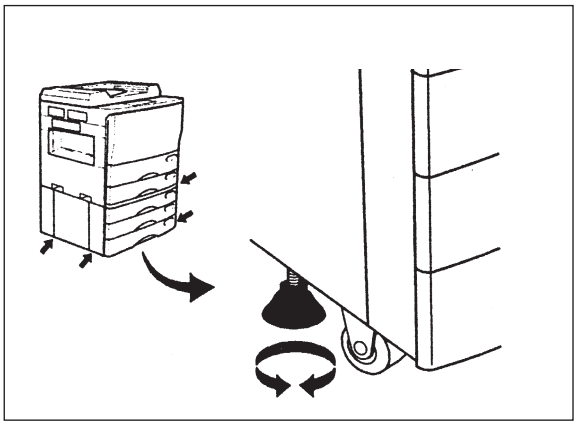

(18) Open the pedestal door. Push in the slide rail unit provided under the pedestal so that its screws fit into the corresponding holes in the pedestal.

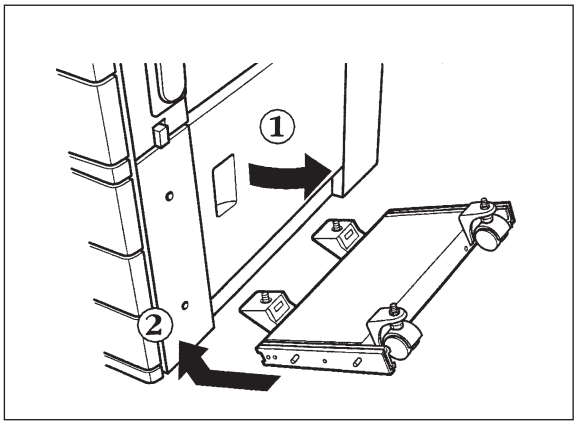

(19) Pull out the slide rail unit fully in the direction of the arrows so that the red labels on the rail unit are fully visible. Then fasten the slide rail unit to the pedestal with the wing nuts provided.

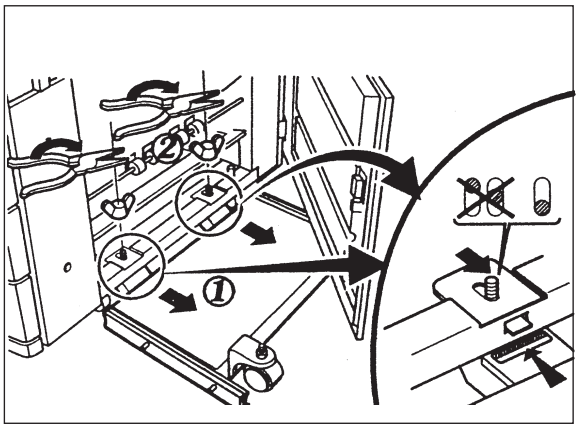

(20) Extend the slide rail fully.

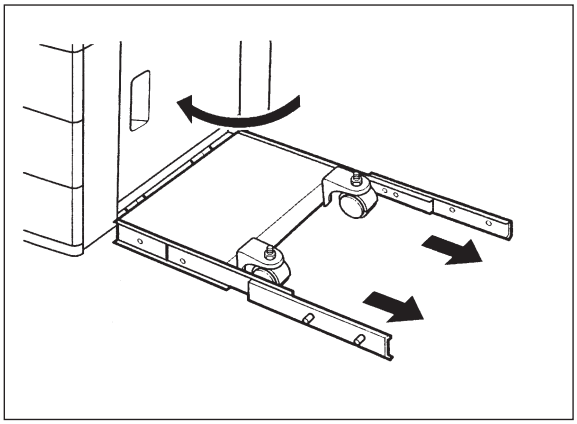

(21) Place the MP-4001 onto the slide rail slowly and carefully so that its triangular holes fit onto the pins of the slide rail at both front and rear.

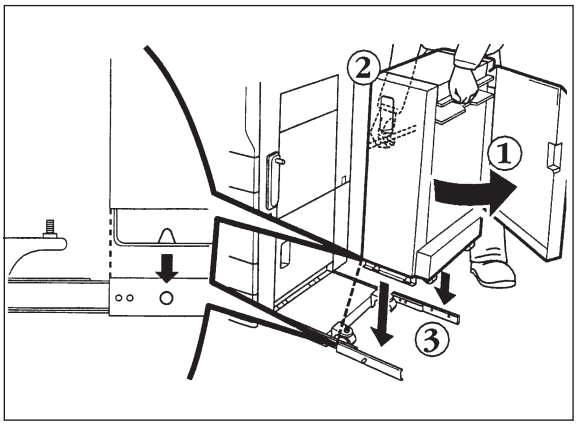

(22) Fasten the MP-4001 to the slide rail using the ZPAN screw M4 x 6 mm provided at the front side.

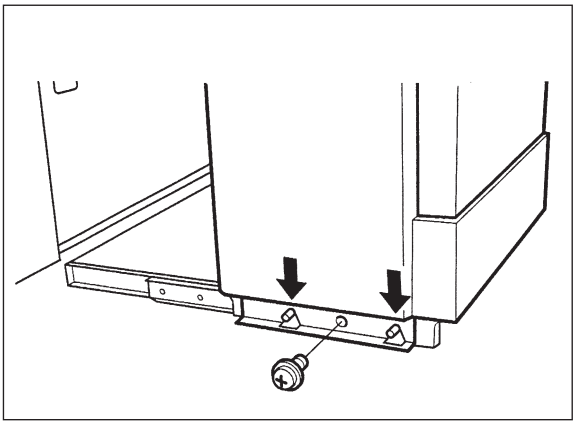

(23) Fasten the MP-4001 to the slide rail using the ZPAN screw M4 x 6 mm provided at the rear side.

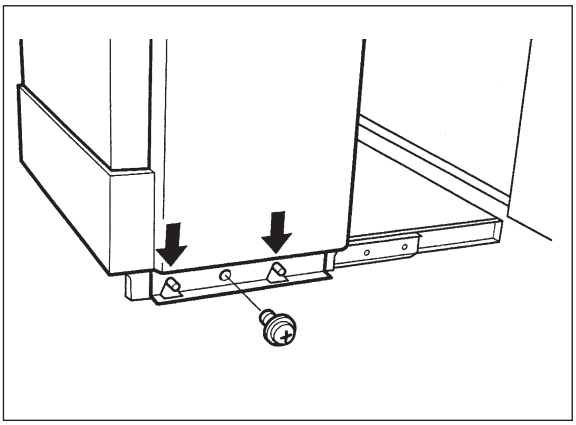

(24) Check if the MP-4001 stands parallel to the copier, as seen from the front side. If it is tilted, loosen the two nuts holding the rail castors:

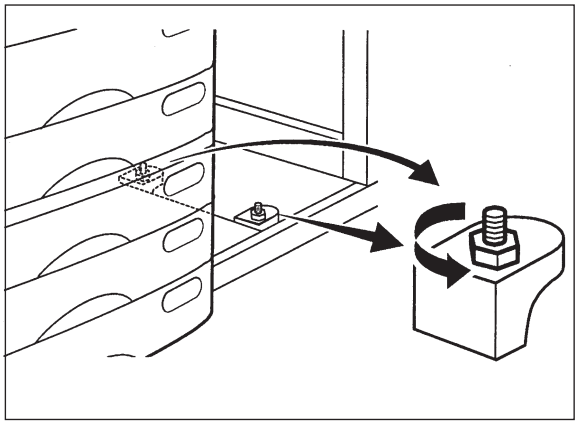

(25) If the MP-4001 is tilted in the direction of Ⓐ, adjust the castors in the direction of Ⓐ. If it is tilted in the direction of Ⓑ, adjust the castors in the direction of Ⓑ.

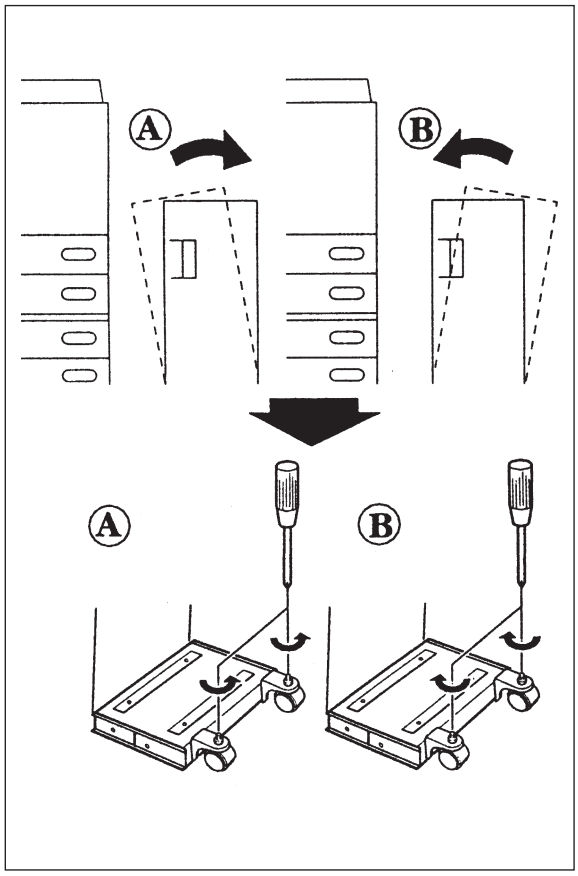

(26) Check if the guide pin on the rear side fits smoothly into the corresponding hole in the MP-4001. If it does not, adjustment is necessary:

If the guide pin deviates toward the rear Ⓐ, adjust the castors as shown in Ⓐ.

If the deviates toward the front Ⓑ, adjust the castors as shown in Ⓑ.

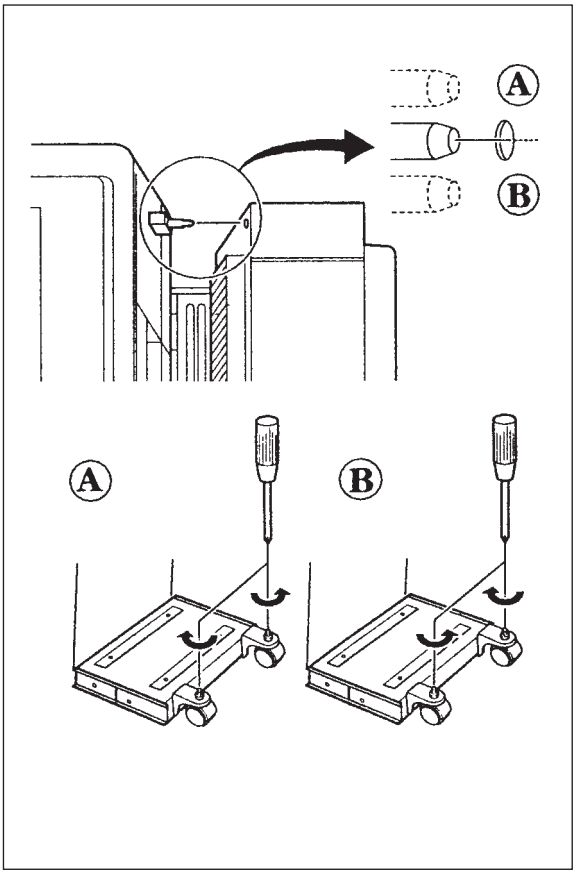

(27) Tighten the castor nuts.

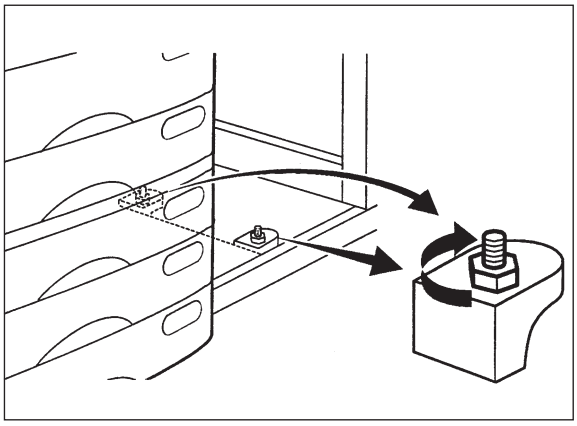

(28) Tighten the screws holding the front bracket.

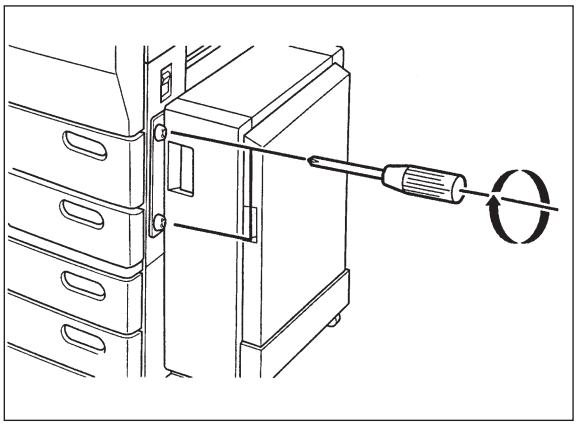

(29) This completes the installation of the MP-4001.

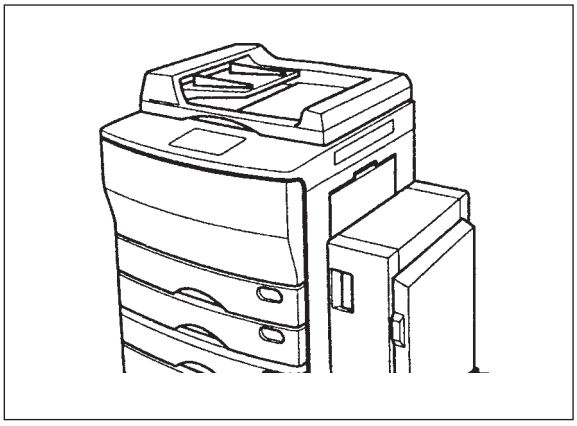

VII. MAINTENANCE

7.1 Components which require cleaning at periodic maintenance:

Parts name	Copy volume	Remarks
Feed roller	80,000 – 160,000	Clean with alcohol.
Separation roller	80,000 – 160,000	Same as above.
Pick-up roller	80,000 – 160,000	Same as above.

7.2 Components which need replacement at periodic maintenance:

Parts name	Copy volume	Remarks
Feed roller	160,000	Replace if damaged or deformed.
Separation roller	160,000	Same as above.
Pick-up roller	160,000	Same as above.

7.3 Lubrication

Note: It is desirable that the following parts be checked at each 160,000-copy periodic maintenance for lubrication. Be sure to use the designated lubricants. The numbers in the “Areas to lubricate” column indicate the precise areas to be lubricated, as shown in the illustrations on the following page.

Parts name	Designated lubricant	Areas to lubricate
Tray drive gears	White grease (Molycoat)	Shafts (1)/gear (2)/gear faces (3), FIg. 7.3-1
Worm	Same as above.	Helical tooth face (4), Fig. 7.3-2
Spring clutch	Alvania	Inside face (5)/separation roller boss (6), Fig. 7.3-3
Feed timing pulley shafts	White grease (Molycoat)	Bearing areas of shafts (7), Fig. 7.3-4
Latch lever	White grease (Molycoat)	Contact area with the latch handle (8), Fig. 7.3-5

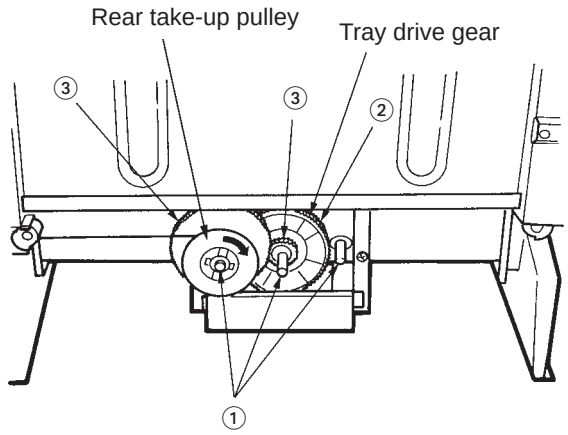

Fig. 7.3-1

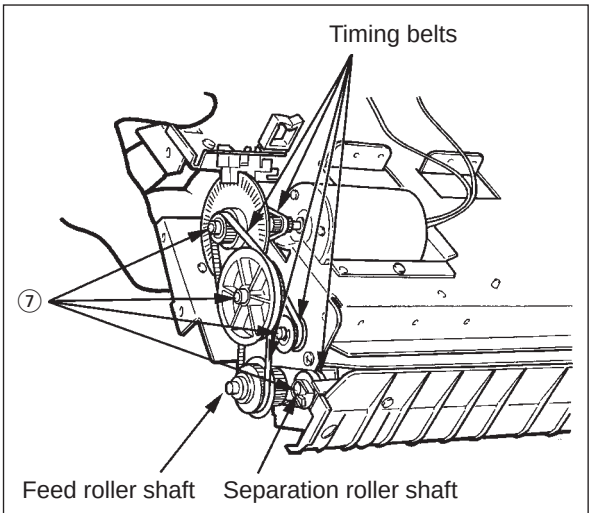

Fig. 7.3-4

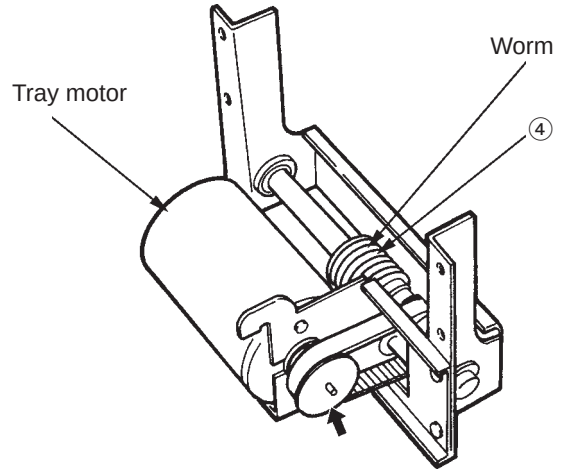

Fig. 7.3-2

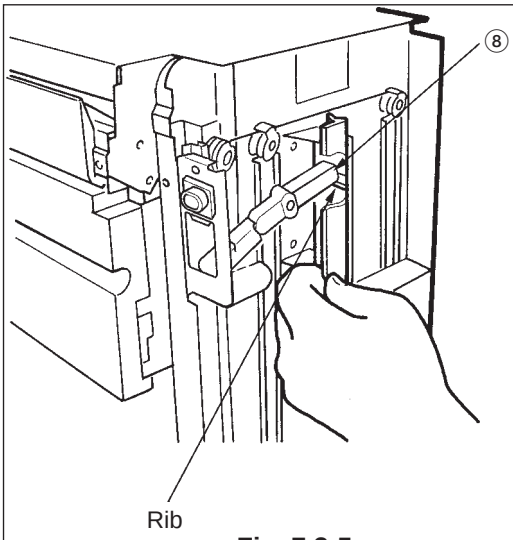

Fig. 7.3-5

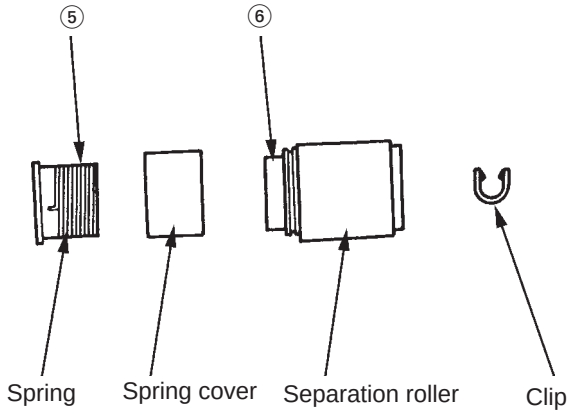

Fig. 7.3-3

TOSHIBA

MP-4001

Service Data

ELECTRICAL

I. SYMBOLS AND FUNCTIONS OF ELECTRICAL PARTS

1.1 Motors

Symbol	Name	Function
M1	Paper-feed motor	Rotates the paper feed roller to send sheets of paper to the copier.
M2	Tray motor	Moves the elevator tray upward and downward.

1.2 Switches and Sensors

Symbol	Name	Function
S1	Tray-up sensor (upper limit)	Detects when the paper supply on the elevator tray decreases below the specified level and causes the tray motor to raise the elevator tray to the paper feeding position.
S2	Paper empty sensor	Detects when the paper supply on the elevator tray has run out.
S3	Tray bottom sensor (lower limit)	Detects when the elevator tray has reached the lower limit position and causes the tray motor to stop rotating.
S4	Door switch	Detects whether the paper supply door is opened or closed.
S5	Safety switch	Detects when the paper supply door is opened and cuts off the DC circuit for safety.
S6	Tray-down sensor	When the TRAY DOWN key is pressed, this sensor is activated, causing the elevator tray to move downward.
S7	Joint switch	Detects whether the MP-4001 is joined securely to the copier.
S8	FG pulse sensor	Based on the slits in the FG pulse disc, this sensor generates pulses to control the paper feed motor.

II. ELECTRICAL SIGNALS RELATED TO THE MP-4001

Name	Signal name	Function	Content	Remarks
Feed motor	FDMLCA FDMLCB	Paper feed drive	FDMLCA: H FDMLCB: L–Paper feeding	*1
Tray motor	TRMLCA TRMLCB	Tray drive Upward/downward	TAMLCA: H TAMLCB: L–Moving upward	*2
Tray-down key	TL-KEY	Tray-down switch	L: Tray drive start	
LCF connection	LC-CNT	LCF joint detection	L: Connection	
Door switch	LC-DOR	Door open/close detection	H: Door open	
Empty switch	PEMPLC	No paper detection	H: No paper	Blocked: H
Tray-up sensor	TUPLC	Tray upper-limit detection	H: Upper limit	Blocked: H
Tray bottom sensor	TDMNLC	Tray lower-limit detection	H: Lower limit	Blocked: H
Model distinction	DIST	LCF model determination	H: MP-1501 L: MP-4001	
Joint detection	UCOVDOR	LCF detachment detection	H: Detached	
Paper stop 2	PSTP2-SW	Paper transport detection	H: Paper present	
FG pulse disc	FG-DSC	Motor speed detection		

*1

Input		Motor operation
FDMLCA	FDMLCB	
H	H	Braking
H	L	CCW as seen from the motor shaft (paper feed)
L	H	Stop
L	L	Stop

*2

Input		Motor operation
TRMLCA	TRMLCB	
H	H	Braking
L	H	CW as seen from the motor shaft (moves up)
H	L	CCW as seen from the motor shaft (moves down)
L	L	Stop

III. ELECTRICAL PARTS LOCATION DIAGRAM

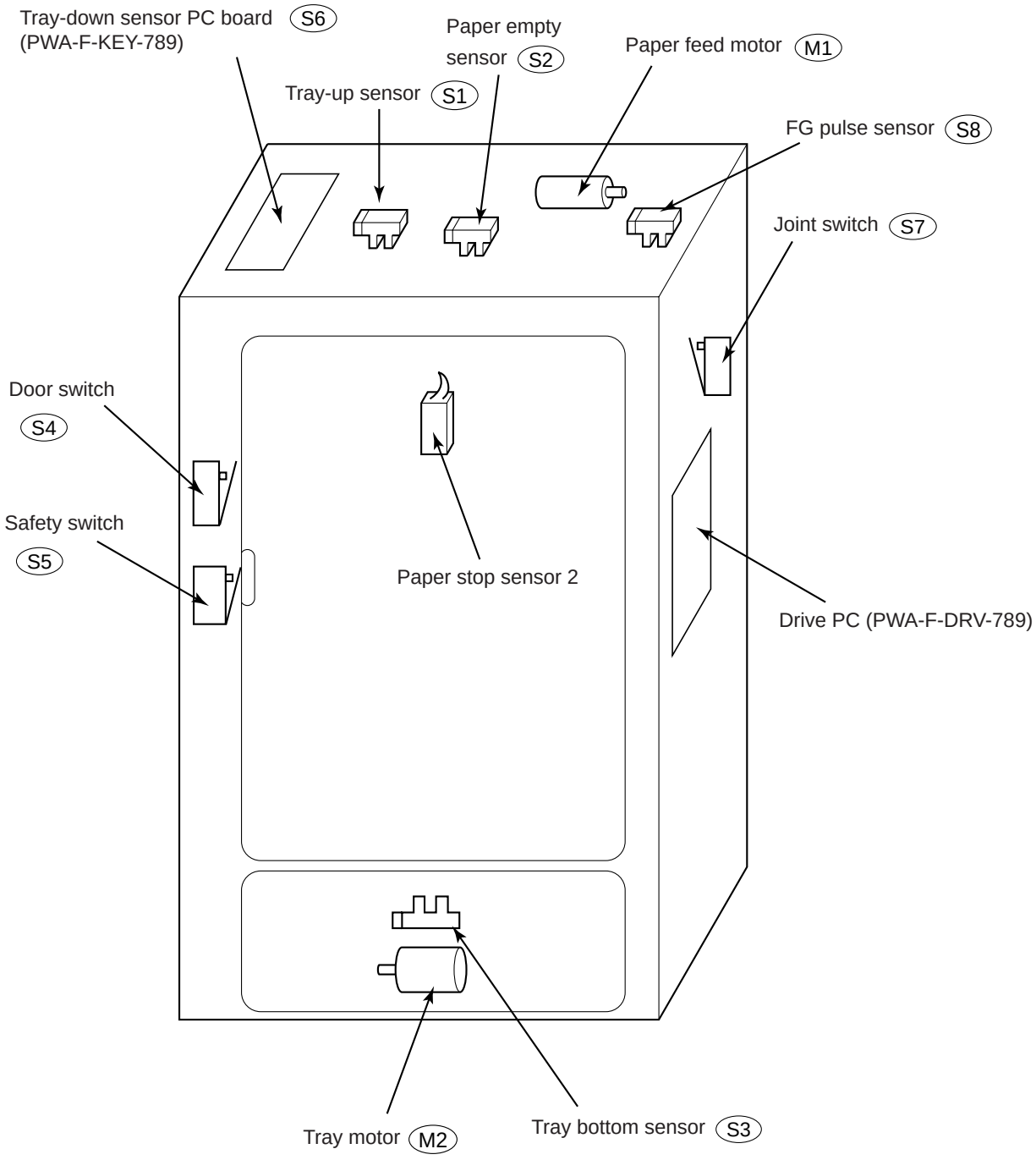

IV. GENERAL ELECTRICAL OPERATION

4.1 Operation Immediately After Set-up

(1) After loading the elevator tray with sheets of paper and closing the paper supply door to turn ON the door switch (S4) and the safety switch (S5), the tray motor is energized to raise the elevator tray.

(2) When the paper on the elevator tray pushes up the actuator of the paper empty sensor (S2) to turn it ON, the copier senses that there are sheets of paper on the elevator tray, causing the LCF symbol on the screen to stop flashing.

(3) When the elevator tray moves up a little further to turn ON the tray-up sensor (upper limit) (S1), the tray motor (M2) deenergizes to stop the elevator tray at the paper feeding position.

(4) If there is no paper on the elevator tray, the paper empty sensor (S2) is not turned ON. The elevator tray moves up a little further to turn ON the tray-up sensor (S1), which then causes the tray motor (M2) to rotate in reverse to move down the elevator tray. When the tray bottom (lower limit) sensor (S3) is turned ON, the tray motor (M2) is deenergized.

4.2 Operation During Copying

(1) When the PRINT key is pressed, the paper feed motor (M1) is turned ON, causing a sheet of paper to be sent toward the copier's transport roller by the pick-up and paper feed rollers of the MP-4001.

(2) When the copier's transport switch is turned ON by the leading edge of the paper, the paper fee motor (M1) stops, causing the paper feed roller to stop rotating.

(3) When a fixed period of time elapses after the trailing edge of the paper passed the copier's transport switch, the paper feed motor (M1) is turned ON again to feed the next sheet of paper to the copier.

(4) As the operation in steps (2) and (3) above is repeated, the level of the paper supply on the elevator tray decreases. After 3 – 10 sheets have been sent out, the paper level decreases by 0.2 – 1.0 mm, turning OFF the tray-up sensor (S1). As a result, the tray-up motor (M2) is energized to raise the elevator tray and then deenergized when the tray-up sensor is turned ON.

(5) The operation in step (4) above is repeated until the paper supply on the elevator tray is exhausted.

4.3 Operation When Paper Supply is Exhausted

(1) After the final sheet of paper on the elevator tray has been sent out to the copier, the actuator of the paper empty sensor (S2) drops into the hole in the elevator tray, turning ON the paper empty sensor (S2). This will cause the tray motor (M2) to rotate, causing the elevator tray to move down.

(2) When the tray bottom sensor (S3) is turned ON by the elevator tray, the tray motor (M2) will stop rotating, causing the LCF symbol to flash on the screen.

4.4 Operation When There Occurs a Paper Misfeed

(1) If the copier's transport switch remains OFF even when approximately 0.5 seconds passes after the paper feed motor (M1) energized to send a sheet of paper from the elevator tray toward the copier's transport roller, the MP-4001 will determine that a paper misfeed has occurred and cause the elevator tray to move down. The CLEAR PAPER symbol will then flash on the screen of the copier.

(2) When the paper supply door is opened to clear the misfed paper and then closed, the tray motor (M2) will rotate to raise the elevator tray to the paper feeding position. When the tray-up sensor (S1) is turned ON, the tray motor (M2) will stop rotating and the copier will become ready for copying.

4.5 Other Related Operation

(1) While the tray motor (M2) is rotating in either direction, if the paper supply door is opened, the motor will stop rotating. When door is closed, the motor will resume rotating.

(2) While the tray motor (M2) is rotating, if the copier's front cover is opened, the motor will stop rotating and the LCF symbol will flash on the copier's screen. When the front cover is closed, the LCF symbol will stop flashing and the tray motor (M2) will resume rotating.

V. DESCRIPTION OF CIRCUIT OPERATION

5.1 Paper Feed Motor Drive Circuit

To allow the paper feed motor to smoothly transport paper to the copier, the number of motor rotations is detected by the pulses generated by the FG pulse disc and motor rotation control IC1 (M51971L) controls the motor speed based on the number of rotations detected.

Referring to the circuit below, when FDMLCA is L and FDMLCB is H, Q3 turns on and Q4 turns off, causing the motor to rotate. When the motor speed becomes higher than the set value, 9 pin of IC1 becomes on (0V) and Q3 turns off, causing the motor speed to decrease. On the other hand, if the motor speed decreases below the set value, 9 pin of IC1 turns off (approx. 3V) and Q3 turns on, the motor is caused to adjust its speed to the set value. The above control is repeated to make the motor rotate at a constant speed all the time.

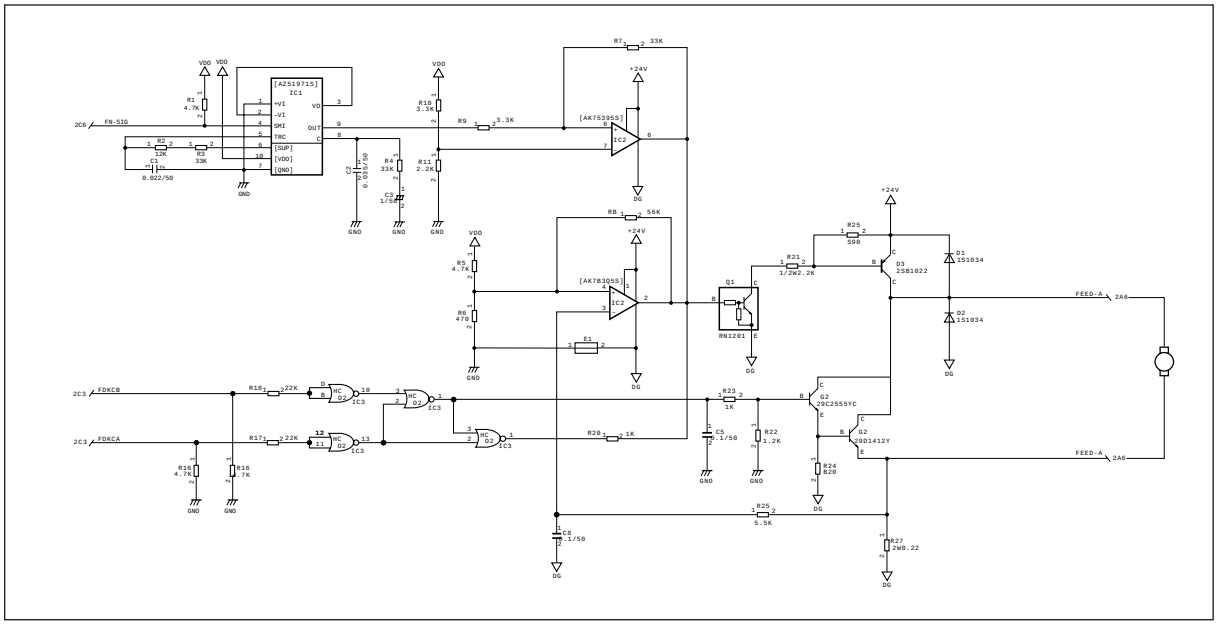

The block diagram of IC1 (M51971L) is shown below.

Block diagram

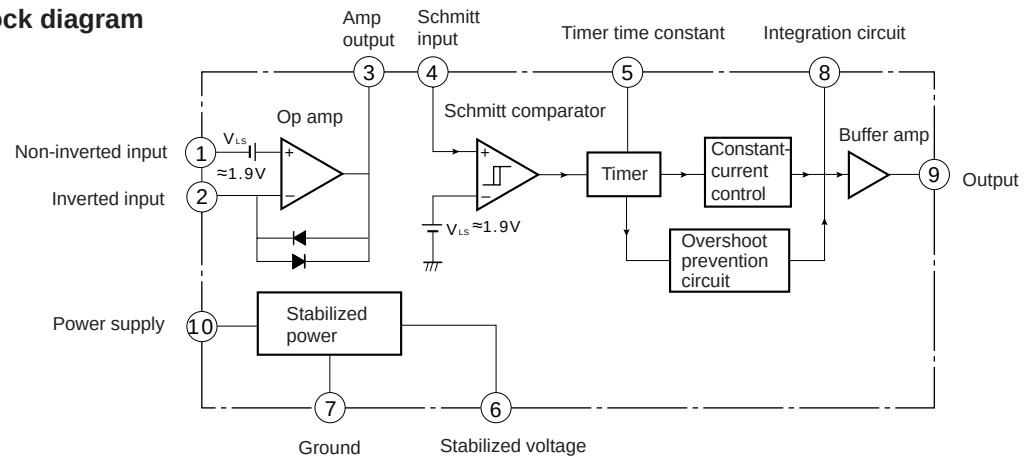

5.2 Elevator Tray Motor Drive Circuit

The tray motor is controlled by motor control IC 4 (AZB428) based on inputs, TRMLCA and TRMLCB, as follows:

Input		Motor operation
TRMLCA	TRMLCB	
H	H	Braking
H	L	CW as seen from the motor shaft (moving downward)
L	H	CCW as seen from the motor shaft (moving upward)
L	L	Stop

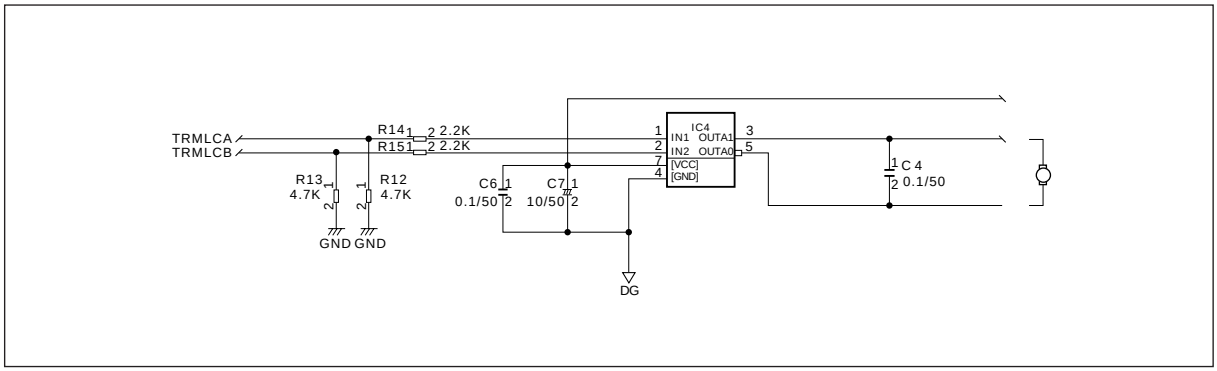

VI. WIRING DIAGRAM

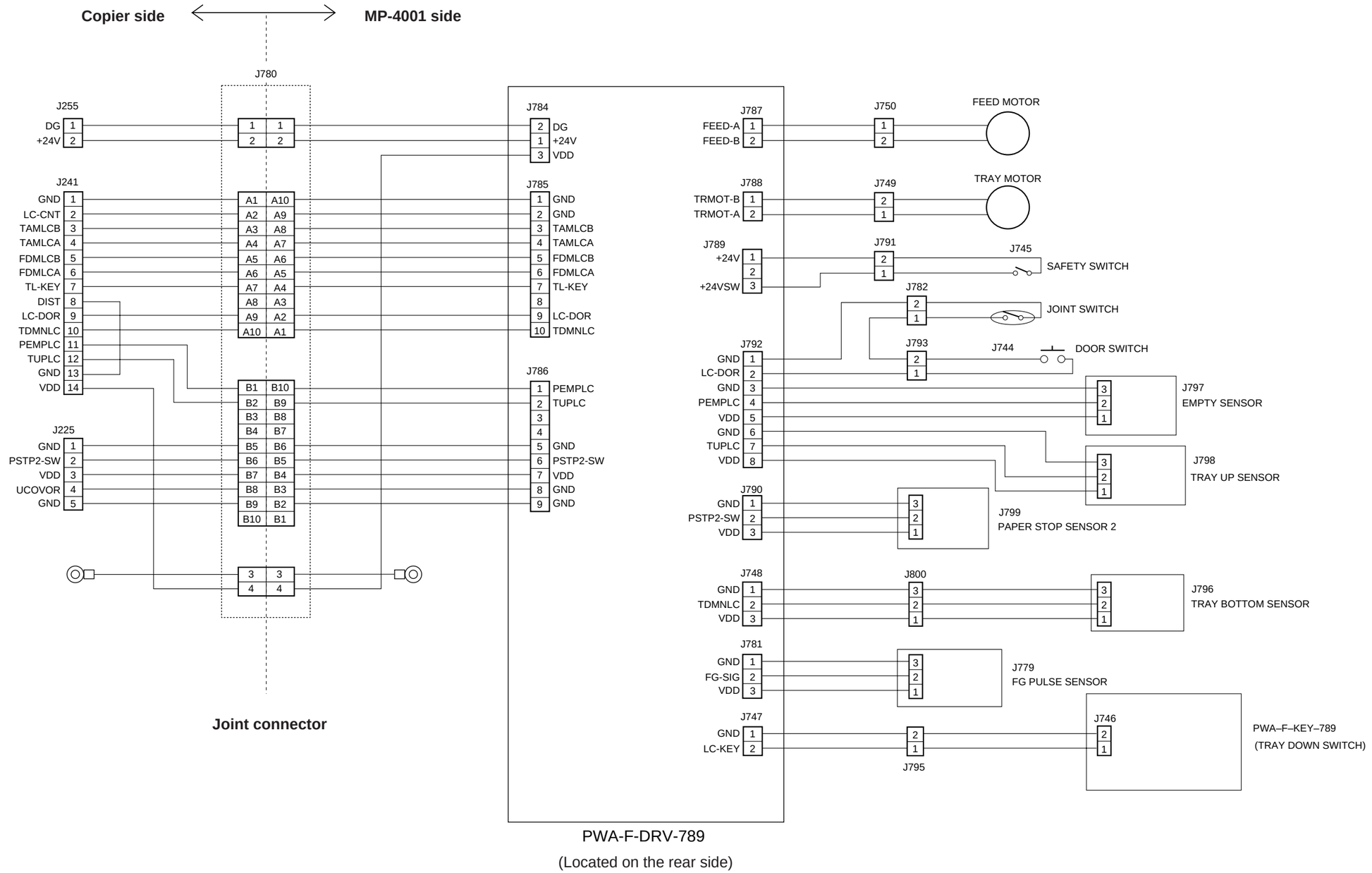

VII. GENERAL CIRCUIT DIAGRAM

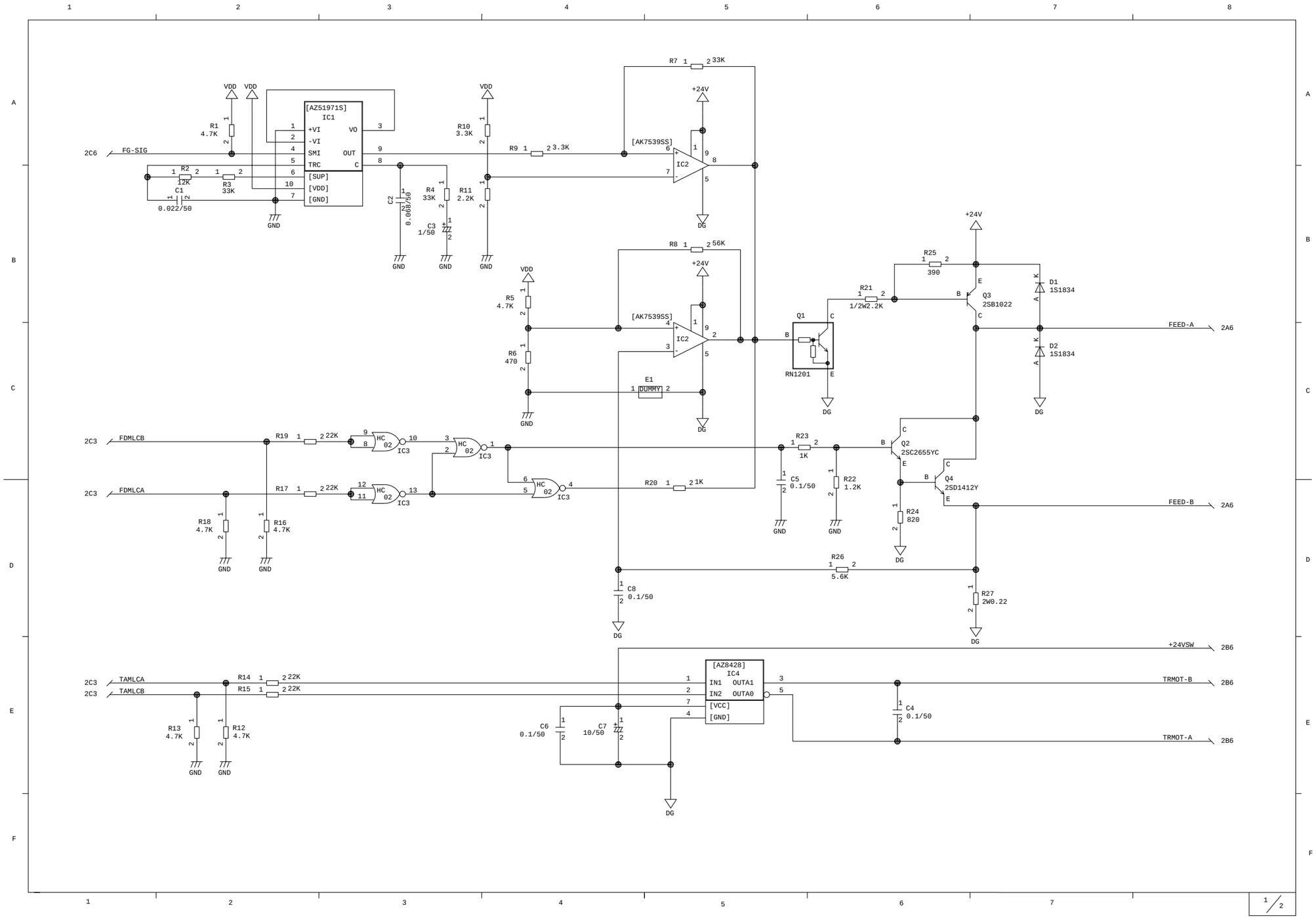

VIII. HARNESS CONNECTION DIAGRAM

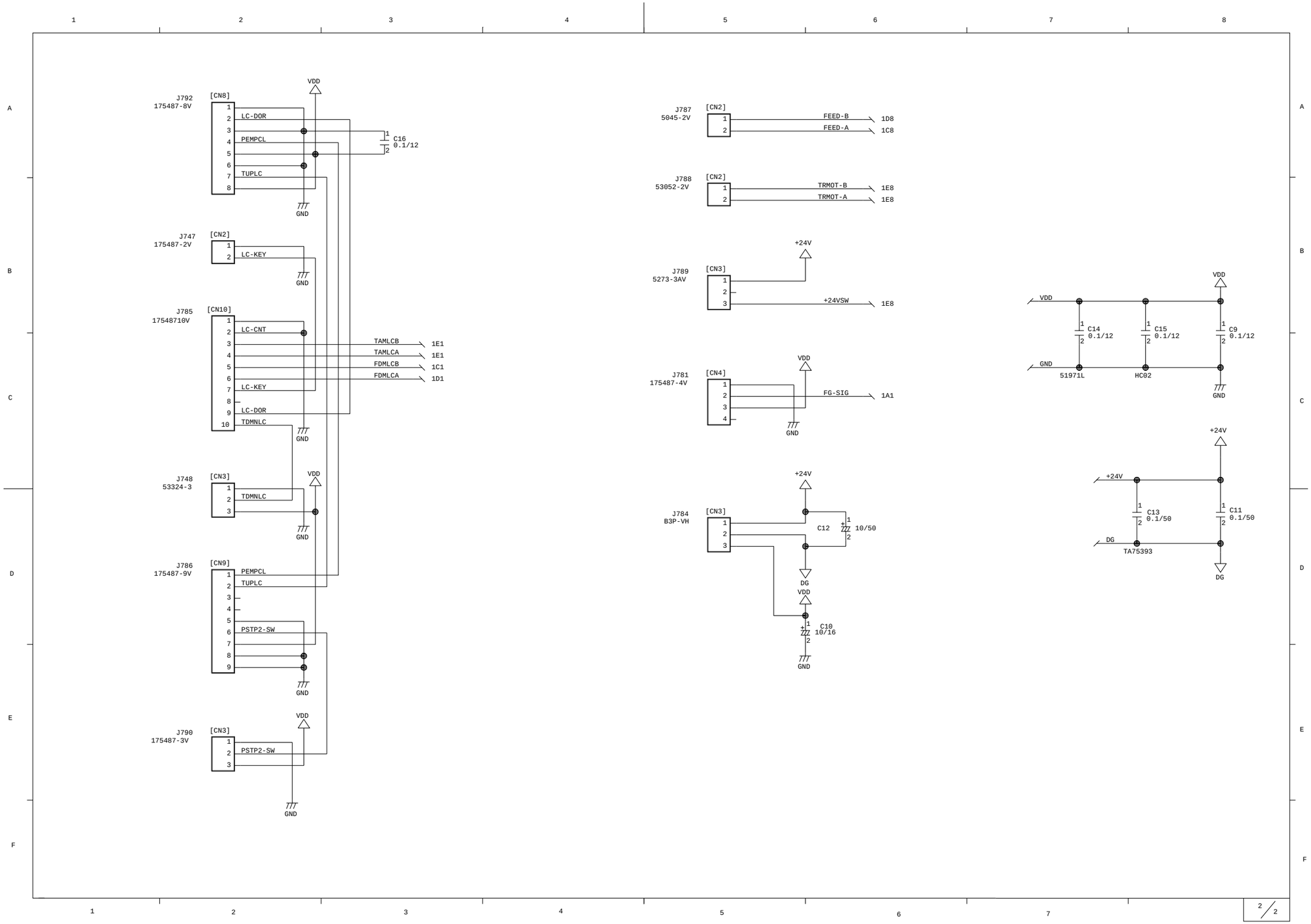

IX. PC BOARD ASSEMBLIES

9.1 PWA-F-DRV-789

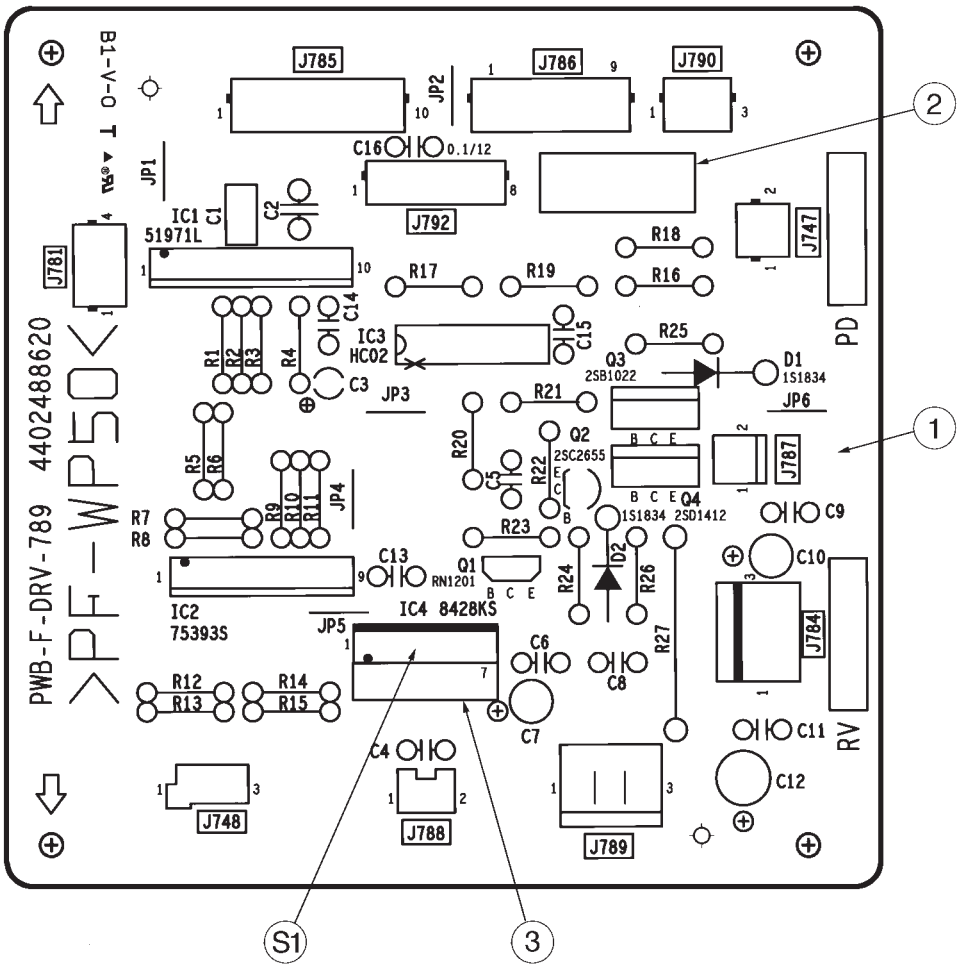

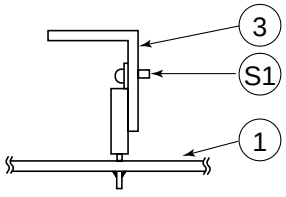

9.2 PWA-F-KEY-789 (Tray-down sensor)

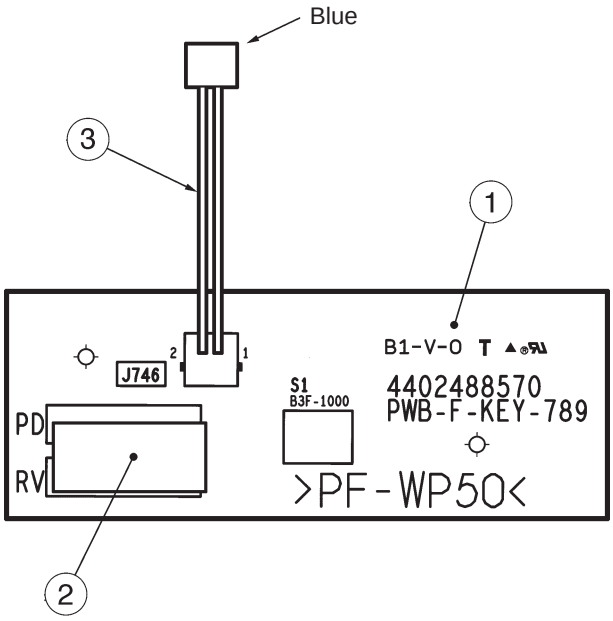

9.3 CKT-F-KEY-789

