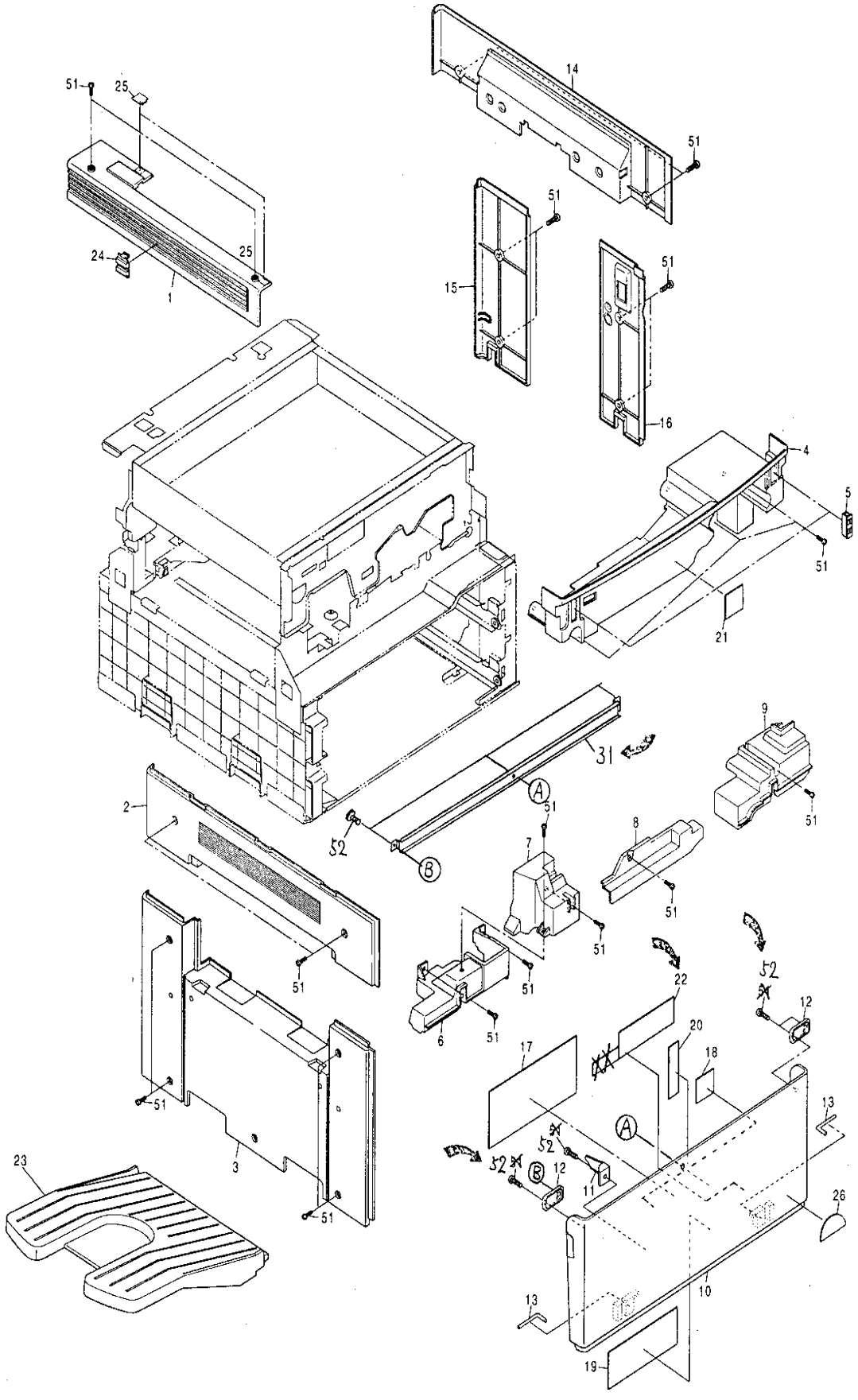
51
25
24
25
1
14
51
51
15
51
16
4
5
51
21
9
31
A
51
2
52
B
8
7
51
51
51
51
22
52
12
6
51
20
17
18
13
A
52
52
B
12
11
26
51
3
23
51
10
13
19

TOSHIBA

ITEM NO.	PARTS NO.	PARTS NAME	Q'TY / PAGE	Q'TY / PACK	SPE PRICE IN NONE	P	I	R	BSI NO.	TO	FROM	SERIAL NO.	REMARKS
1	4401 970220	COV-TOP-L	1	1/PP									
2	4401 970240	COV-LEFT-U	1	1/PP									
3	4401 970270	COV-LEFT-L	1	1/PP						003 1			
3 1	4401 987790	COV-LEFT-L	1	1/PP		C	B	F	F98C228		003	CSA850119	
												CRA848418	
4	4401 970160	K-COV-IN-F-U	1	1/PP									
5	4402 202680	MG-CATCH-22	2	1/P									
6	4401 943060	K-COV-IN-M-L	1	1/PP									
7	4401 941390	COV-IN-M-L-U	1	1/PP									
8	4401 941350	COV-IN-M-M	1	1/PP									
9	4401 941360	COV-IN-M-R	1	1/PP									
10A	4401 970090	F-COV-FRONT	1	1/PP						010A1			2060
10A1	4401 970070	F-COV-FRONT	1	1/PP		C	B	D	F98A143		010A	SA8	2060
10B	4401 971210	F-COV-F-2860	1	1/PP						010B1			2860
10B1	4401 971240	F-COV-F-2860	1	1/PP		C	B	D	F98A143		010B	RA8	2860
10C	4401 971220	F-COV-F-2870	1	1/PP						010C1			2870
10C1	4401 971250	F-COV-F-2870	1	1/PP		C	B	D	F98A143		010C	OA8	2870
11	4401 970120	PUSHER-SW-D-L	1	1/P									
12	4402 201360	PLATE-MG	2	1/P									
13	4401 970110	PIN-HINGE	2	1/P									
14	4401 970230	COV-RIGHT-U	1	1/PP									
15A	4402 372120	K-COV-RIGHT	1	1/PP									2870
15B	4401 970260	COV-RIGHT-L-R	1	1/PP									OTHERS
16A	4401 994640	COV-RIGHT-LCF-T	1	1/PP									2870
16B	4401 970250	COV-RIGHT-L-F	1	1/PP									OTHERS
17	4401 971490	LBL-INST-TNR	1	1/KP									
18	4400 660510	LBL-MEMORY-140	1	5/P									
19B	4401 971000	LBL-PM-210	1	1/KP									MJD,MFD
20B	4401 971010	LBL-INST-TNR-E	1	1/P									MJD,MFD
21	4400 660500	LABEL-DRUM-140	1	5/P									
22B	4402 841590	LBL-INST-TNR3-E	1	5/KP						022B1			MJD,MFD
22B1	4400 910690	LBL-INST-TNR3-E	1	5/KP		C	D	D	F98A143		022B	SA8/RA8	MJD,MFD
23	4401 942050	TRAY-EXIT-F210	1	1/PP									
24	4401 970350	LID-COV-TOP-L	1	1/P									
25	4400 912330	COVER-SCREW	2	1/P									
26A	4401 910990	LBL-ENERGY-T	1	5/P									NAD
31	4401 970450	STAY-COV-FRONT	1	1/P		A	D	D	F98A143			SA8/RA8	
51	4842 041794	TBIDS-40*08-CP	23	50/P									
52	4842 040846	PTBR30*08MSZN3A	6	50/P		C	B	D	F98A143			SA8/RA8	

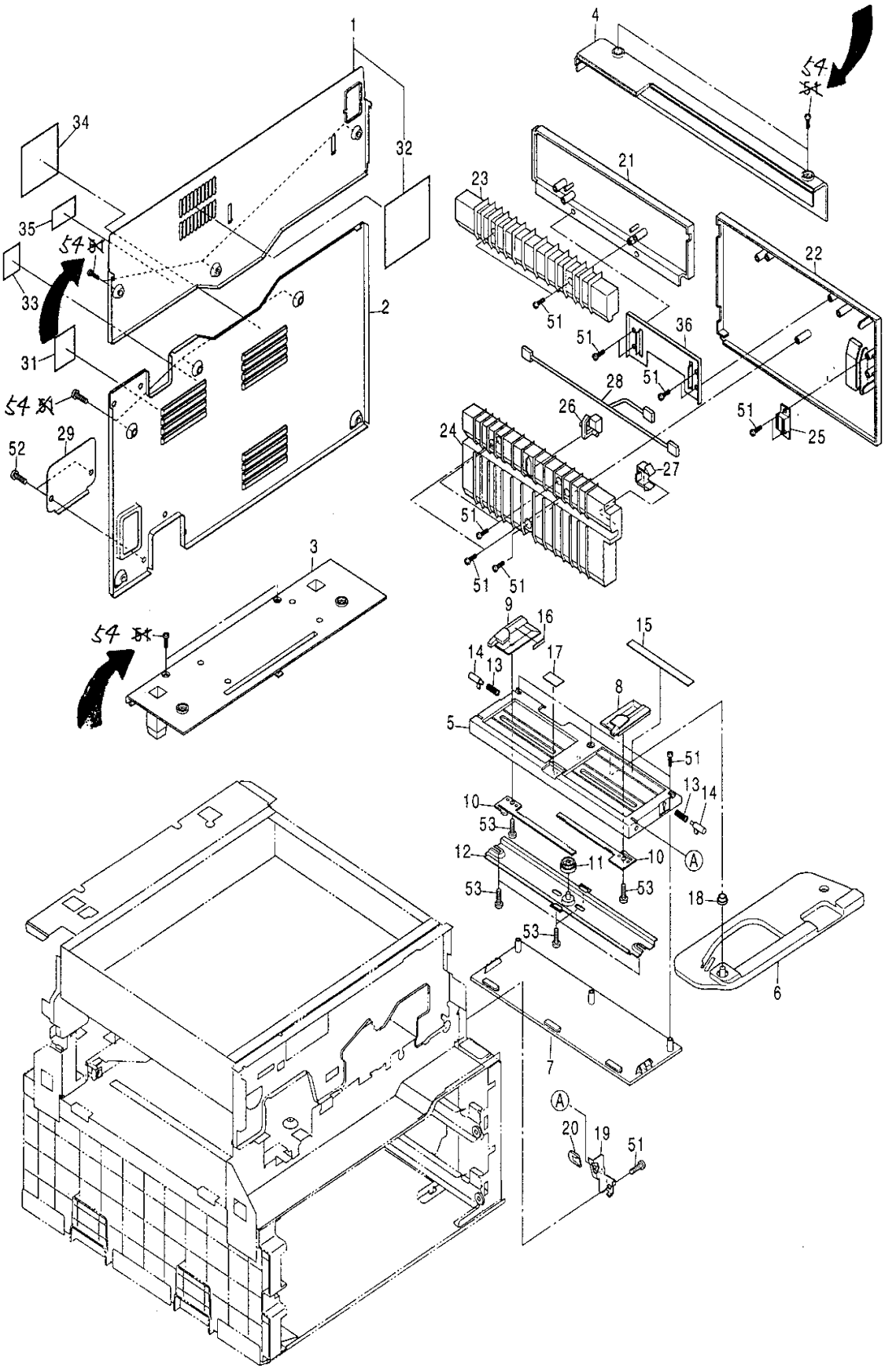
1
2
3
4
5
6
7
8
9
10
11
12
13
14
15
16
17
18
19
20
21
22
23
24
25
26
27
28
29
31
32
33
34
35
36
51
52
53
54
A

TOSHIBA

ITEM NO.	PARTS NO.	PARTS NAME	Q'TY / PAGE	Q'TY / PACK	SPE PRICE IN NONE	P	I	R	BSI NO.	TO	FROM	SERIAL NO.	REMARKS
1	4401 970370	K-COV-REAR-U	1	1/PP									
2	4401 970290	COV-REAR-L	1	1/PP									
3	4401 970210	COV-TOP-C	1	1/PP									
4	4401 970430	K-COV-TOP-R	1	1/PP									
5	4401 966260	TRAY-BYPASS-U	1	1/PP									
6	4401 966360	TRAY-BYPASS-M	1	1/PP									
7	4401 966270	TRAY-BYPASS-L	1	1/PP									
8	4401 966280	GUIDE-F	1	1/P									
9	4401 966290	GUIDE-R	1	1/P									
10	4401 966600	RACK-BYPASS	2	1/P									
11	4407 726480	PINION-18-395	1	1/P									
12	4401 966370	K-PLATE-PINION	1	1/P									
13	4402 818340	SPC-PIN-TRAY-N	2	5/P									
14	4402 814310	PIN-TRAY-M-FE	2	5/P									
15A	4401 966710	LBL-TRAY-U	1	1/KP									USA SIZE
15B	4401 966720	LBL-TRAY-E	1	1/KP									EUR SIZE
16	4401 966730	LBL-TRAY-SFB	1	5/P									
17	4400 901130	PAD-BRAKE	1	5/P									
18	4401 966610	BUSH-IDLER	1	5/P									
19	4401 966300	K-BRKT-TRAY-F	1	1/P		E	-	J	F97C862				
20	4407 958550	CAP-ARM-FUSER	1	1/P									
21	4401 965000	COVER-FEED-U	1	1/PP									
22	4401 965010	COVER-FEED-L	1	1/PP						022 1			
22 1	4401 967170	COVER-FEED-L	1	1/PP		C	B	E	F97D891		022	SB7/RB7	
23	4401 964990	GUIDE-COV-FED-U	1	1/PP									
24	4401 965020	GUIDE-COV-FED-L	1	1/PP									
25	4402 811970	MG-CATCH-2	1	1/P									
26	4401 983080	SZ-FED-210	1	1/C									
27	4402 859600	SP-CS3A-B2BA	1	1/D									
28	4401 979090	WH-PSTPCL-210	1	1/P									
29	4401 970910	COV-REAR-L-SUB	1	1/P									
31	4408 543130	LBL-SERVICE-T	1	5/P									
32	4401 970380	FILTER-COV-REAR	1	1/P									
33A	4400 945700	LABEL-CANADA	1	5/P									NAD
34A	4401 971560	LBL-WRNTY-TAIS	1	1/KP									NAD
35A	4400 740530	LABEL-FCC	1	10/P									NAD
36	4401 966990	BRKT-COV-FEED	1	1/P									
51	4842 040846	PTBR30*08MSZN3A	16	50/P									
52	4842 040684	TBID3006MSZN3L	2	50/P									
53	4842 040495	PTBR30*06MSZN3A	4	50/P									
54	4842 041794	TBIDS-40*08-CP	12	50/P		F	-	J	F97I043				

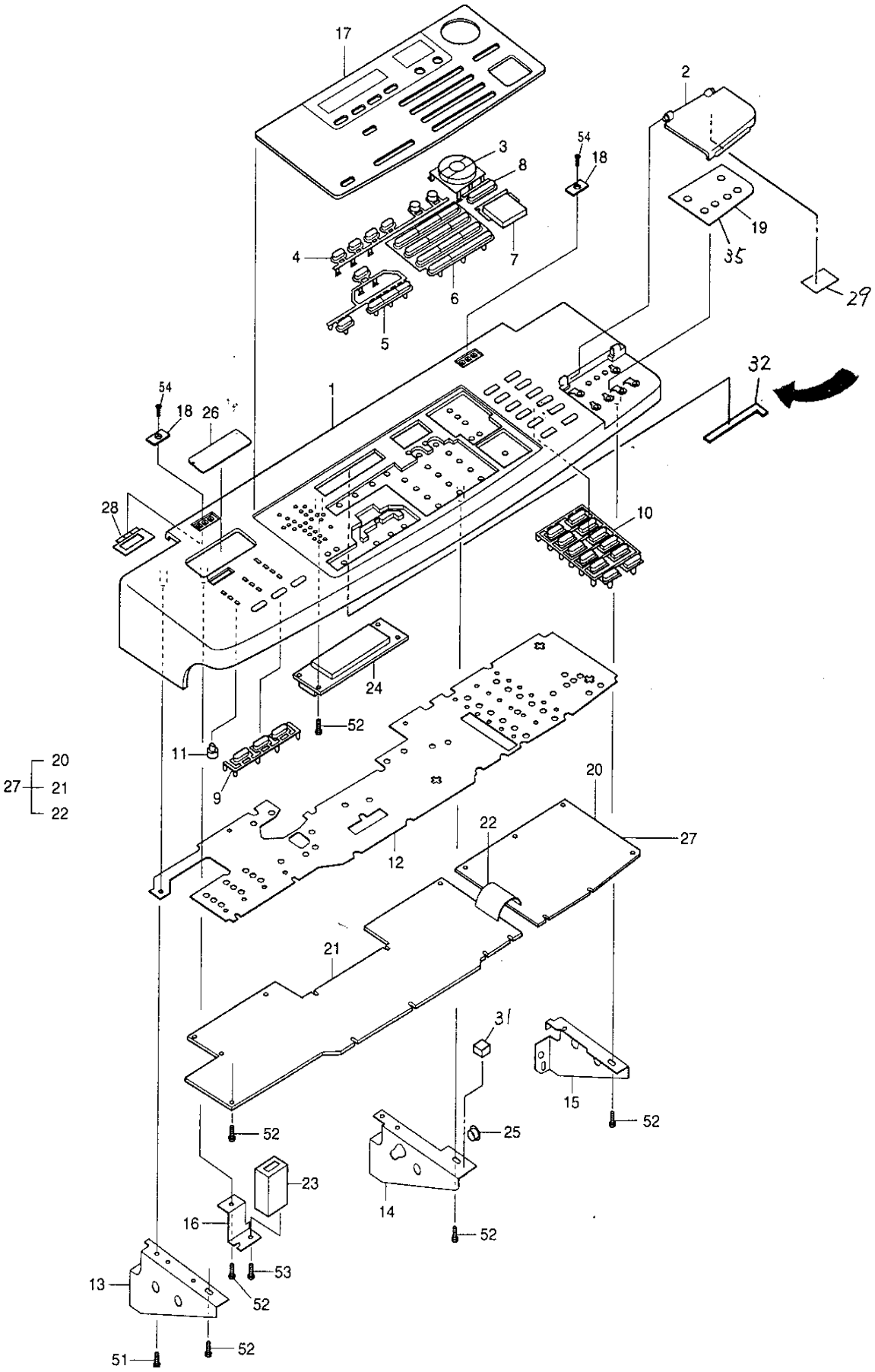
17
2
54
18
3
8
4
7
6
5
19
35
29
32
1
54
18
26
28
10
24
52
11
9
20
27
21
22
12
20
22
27
21
31
15
52
52
25
23
16
14
52
53
52
13
52
51

TOSHIBA

ITEM NO.	PARTS NO.	PARTS NAME	Q'TY / PAGE	Q'TY / PACK	SPE PRICE IN NONE	P	I	R	BSI NO.	TO	FROM	SERIAL NO.	REMARKS
1A	4401 943770	F-COV-CONP-U	1	1/PP						001A1			NAD
1A1	4401 943730	F-COV-CONP-U	1	1/PP		C	B	E	F97H976		001A	SG7/RG7	NAD
1B	4401 943790	F-COV-CONP-AU	1	1/PP						001B1			TWD
1B1	4401 943750	F-COV-CONP-AU	1	1/PP		C	B	E	F97H976		001B	SG7/RG7	TWD
1C	4401 943790	F-COV-CONP-AU	1	1/PP						001C1			SAD
1C1	4401 943750	F-COV-CONP-AU	1	1/PP		C	B	E	F97H976		001C	SG7/RG7	SAD
1D	4401 943790	F-COV-CONP-AU	1	1/PP						001D1			ASD
1D1	4401 943750	F-COV-CONP-AU	1	1/PP		C	B	E	F97H976		001D	SG7/RG7	ASD
1E	4401 943790	F-COV-CONP-AU	1	1/PP						001E1			AUD
1E1	4401 943750	F-COV-CONP-AU	1	1/PP		C	B	E	F97H976		001E	SG7/RG7	AUD
1F	4401 943780	F-COV-CONP-E	1	1/PP						001F1			MJD
1F1	4401 943740	F-COV-CONP-E	1	1/PP		C	B	E	F97H976		001F	SG7/RG7	MJD
1G	4401 943780	F-COV-CONP-E	1	1/PP						001G1			MFD
1G1	4401 943740	F-COV-CONP-E	1	1/PP		C	B	E	F97H976		001G	SG7/RG7	MFD
2	4401 943810	COV-SP/FU	1	1/P						002 1			
2 1	4401 944080	COV-SP/FU	1	1/P		C	E	E	F97H976		002	SE7/RE7	
3	4401 943820	KEY-ZOOM	1	1/D									
4A	4401 943830	KEY-PREV/INFO	1	1/D									MJD,MFD
4B	4401 943980	KEY-PREV/HELP	1	1/D									OTHERS
5	4401 943840	KEY-DARKNESS	1	1/D									
6	4401 943850	KEY-TEN	1	1/D									
7	4401 943860	KEY-PRINT	1	1/P									
8	4401 943880	KEY-FU/C	1	1/P									
9	4401 943890	KEY-OPTION	1	1/D									
10	4401 943900	KEY-COP/ORG	1	1/D									
11	4401 943910	COV-LED-OP	10	5/P						011 1			
11 1	4401 944050	COV-LED-OP	10	5/P		C	B	E	F97D891		011	SB7/RB7	
12	4401 943950	MYLAR-SHIELD	1	1/KP									
13	4401 943960	BRKT-CONP-L	1	1/P									
14	4401 943970	BRKT-CONP-C	1	1/P									
15	4401 943990	BRKT-CONP-R	1	1/P									
16	4401 944000	BRKT-CTR	1	1/P									
17A	4401 944110	PANEL-DSP-U	1	1/KP									NAD
17B	4401 944130	PANEL-DSP-AU	1	1/KP									TWD
17C	4401 944130	PANEL-DSP-AU	1	1/KP									SAD
17D	4401 944130	PANEL-DSP-AU	1	1/KP									ASD
17E	4401 944130	PANEL-DSP-AU	1	1/KP									AUD
17F	4401 944120	PANEL-DSP-E	1	1/KP									MJD
17G	4401 944120	PANEL-DSP-E	1	1/KP									MFD
18	4402 822490	PLATE-MG-DF	2	1/P									2870
19	4401 944210	OP-SHEET-U	1	1/KP									
20	4401 977650	PWA-F-DSP-210	1	N/A***									
21	4401 977680	PWA-F-KEY-210	1	N/A***									
22	4401 985640	CBL-P2/30-22	1	N/A***									
23	4401 983010	CTR-E660B-210	1	1/C									
24	4401 983050	K-LCD-210	1	1/C									
25	4842 414630	GMT-OCB-500	1	10/P									
26	4402 822490	PLATE-MG-DF	2	1/P						026 1			
26 1	4401 943940	RUBER-MGN	1	1/P		E	-	J	F97E910		026		
27	4401 977730	ASM-DSP-210	1	1/SB									
28	4401 944040	MYLAR-CONP	1	5/P									
29	4401 944020	LABEL-MEMORY	1	1/P		F	-	J	F97D891				
31	4401 944070	SEAL-BRKT-CONP	1	5/P		A	B	E	F97D891			SB7/RB7	
32	4401 944090	SEAL-LCD	2	5/P		A	B	E	F97H976			SE7/RE7	
35A	4401 944220	OP-SHEET-E	1	1/KP		A	-	J	F97E912				ENGLISH
35B	4401 944230	OP-SHEET-G	1	1/KP		A	-	J	F97E912				GERMAN
35C	4401 944240	OP-SHEET-F	1	1/KP		A	-	J	F97E912				FRENCH
35D	4401 944250	OP-SHEET-S	1	1/KP		A	-	J	F97E912				SPANISH
35E	4401 944260	OP-SHEET-I	1	1/KP		A	-	J	F97E912				ITALIAN
51	4842 040370	TBID3006MSZN3L	1	50/P									
52	4842 040495	PTBR30*06MSZN3A	31	50/P									
53	7040 300611	PAN30*06MSZN3AI	1	50/P									
54	7044 401064	FLT40*10MSCR3C	2	50/P									

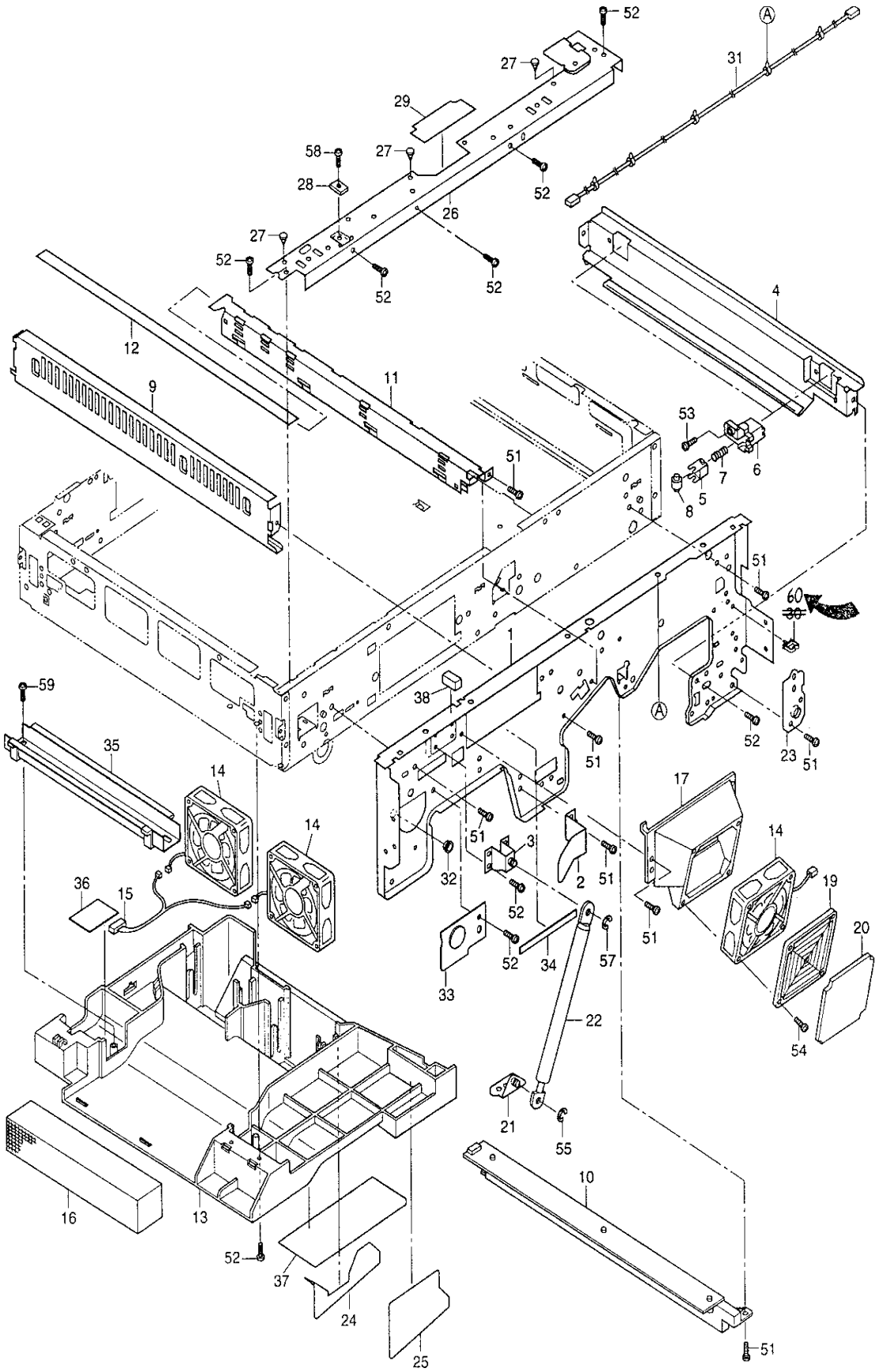
52
27
29
58
27
28
26
52
27
52
52
52
31
A
4
12
9
11
53
6
7
5
8
51
51
60
30
1
59
38
A
52
23
51
35
14
14
17
14
51
3
2
51
32
52
36
15
19
20
51
52
34
57
33
22
54
21
55
10
16
13
52
37
24
25
51

TOSHIBA

ITEM NO.	PARTS NO.	PARTS NAME	Q'TY / PAGE	Q'TY / PACK	SPE PRICE IN NONE	P	I	R	BSI NO.	TO	FROM	SERIAL NO.	REMARKS
1	4401 941420	FRAME-U-F	1	N/A***									
2	4401 941470	PUSHER-SW-D-U	1	1/P									
3	4401 942200	K-BRKT-BLC-U	1	1/P									
4	4401 942500	K-STAY-DEV	1	1/KP									
5	4401 942400	PUSHER-DEV-210	2	5/P									
6	4401 942410	HLD-PUSH-DEV	2	1/P									
7	4401 942420	SPC-PUSH-DEV	2	5/P									
8	4402 843920	ROLLER-PUSHER	2	5/P									
9	4401 941510	STAY-CLN	1	N/A***									
10	4401 984230	K-DCH-210	1	1/C									
11	4401 947550	K-LAMP-ERS	1	1/C									
12	4401 977260	PWA-F-ERS-210	1	1/SB									
13	4401 941720	DUCT-EXIT	1	N/A***									
14	4401 981630	FAN-DC-210N	3	1/C									
15	4401 979120	WH-FAN-UNIT-210	1	1/P									
16	4401 941710	FILTER-FAN-EXIT	1	1/C									
17	4401 962840	DUCT-FAN-OPT	1	1/P									
19	4401 962850	COV-FILTER-FAN	1	1/P									
20	4401 962860	FILTER-FAN-80	1	1/P									
21	4401 941750	K-BRKT-BLC-L	1	1/P									
22	4401 942620	BALANCER-210-F	1	1/P									
23	4401 941460	PLATE-LOCK-F	1	1/P									
24	4401 942650	MYLAR-DUCT	4	5/KP									
25	4401 942710	MYLAR-DUCT-F	2	1/KP									
26	4401 960500	STAY-GLASS-F	1	1/P									
27	4400 831600	CUSH-GLASS	3	5/P									
28	4401 963080	MAGNET-DF-SNSR	1	1/P									
29	4401 960460	MYLAR-GLASS-F	1	5/P									
30	4843 390854	CLP/W-LWS-1U	1	5/P						030 1			
30 1	4843 390854	CLP/W-LWS-1U	1	5/P		D	B	E	F98C244		030	EC8/NC8	
31	4401 980660	WH-SUB-DHT-210	1	1/P									
32	4842 414629	GMT-OCB-375	1	10/P									
33	4401 943220	PLT-FRM-U-F	1	1/P									
34	4401 943230	SEAL-FRM-U-F	1	1/P									
35	4401 942720	K-BKT-DUCT-EXIT	1	1/P									
36	4401 946440	MYLAR-DUCT-R	1	5/KP									
37	4401 946450	MYLAR-DUCT-F	1	5/KP									
38	4401 946420	SEAL-FRM-U-F2	1	5/P									
51	4842 041794	TBIDS-40*08-CP	18	50/P									
52	4842 040370	TBID3006MSZN3L	9	50/P						052 1			
52 1	4842 040370	TBID3006MSZN3L	10	50/P		D	-	E	F97D891		052		
53	4842 040686	TBID3008MSCR3C	2	50/P									
54	7120 404011	12PAN4040MSZN3A	2	50/P									
55	7405 007031	ERR070SKZN3A	1	50/P									
57	7405 005031	ERR050SKZN3A	1	50/P									
58	7044 250665	FLT25*06BSNI3EI	1	50/P									
59	4842 040495	PTBR30*06MSZN3A	2	50/P									
60	4843 390855	CLP/W-LWS-2U	1	5/P		C	B	E	F98C244			EC8/NC8	

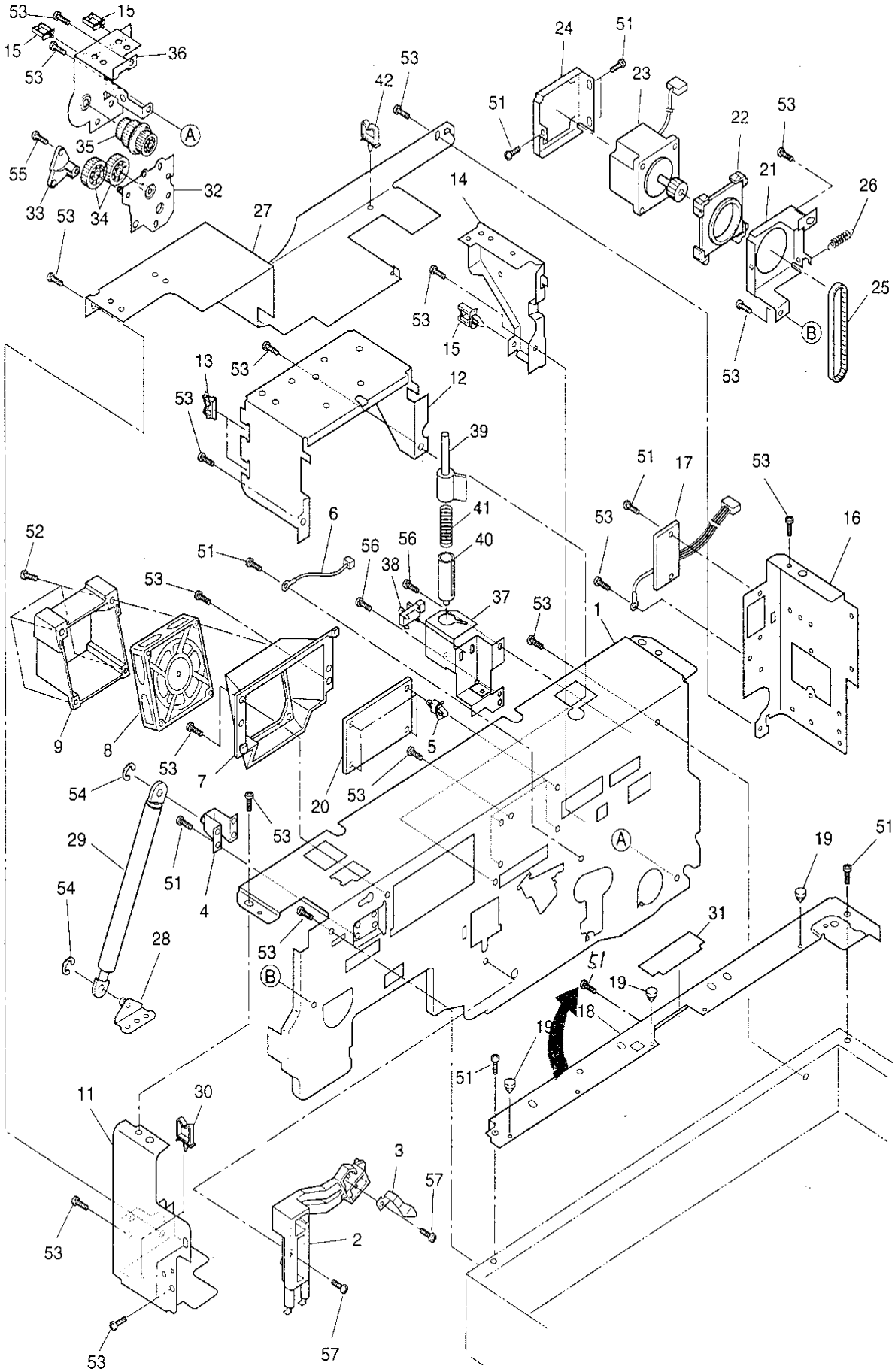
53
15
15
36
53
A
35
55
33
53
34
32
27
42
53
24
51
23
51
22
53
21
26
14
25
53
15
B
53
13
53
12
53
39
51
17
53
41
16
6
53
52
51
56
56
40
38
37
53
1
53
9
8
53
7
5
20
53
54
53
29
51
4
A
19
51
54
28
53
B
31
51
19
18
19
51
11
30
3
57
53
2
53
57

TOSHIBA

ITEM NO.	PARTS NO.	PARTS NAME	Q'TY / PAGE	Q'TY / PACK	SPE PRICE IN NONE	P	I	R	BSI NO.	TO	FROM	SERIAL NO.	REMARKS
1	4401 943120	FRAME-U-R	1	N/A***									
2	4401 947430	K-TERM-CH-M	1	1/P									
3	4401 947470	SPL-GRID-210	1	1/P									
4	4401 942200	K-BKT-BLC-U	1	1/P									
5	4843 390869	PWZ-SPLS-4U	4	5/P									
6	4400 678890	THMS-DRM-140	1	1/P									
7	4401 962840	DUCT-FAN-OPT	1	1/P									
8	4401 981630	FAN-DC-210N	1	1/C									
9	4401 963110	COV-FAN-OPT-R	1	1/P									
11	4401 941560	BRKT-COV-R-L	1	1/P									
12	4401 941540	BRKT-DF-L	1	1/P									
13	4843 390942	BD/W-EDS-2	2	10/P									
14	4401 941530	BRKT-DF-R	1	1/P									
15	4843 390856	CLP/W-LWS-3U	3	5/P									
16	4401 989000	BRKT-KEY-CTR-M	1	1/P						016 1			
16 1	4401 941550	BRKT-KEY-CTR	1	1/P		E	-	J	F97C862		016		
17	4401 979480	WH-IF-ADF-210	1	1/P									
18	4401 960510	STAY-GLASS-R	1	1/P						018 1			
18 1	4402 492220	STAY-GLASS-R	1	1/P		C	E	J	F97I043		018		
19	4400 831600	CUSH-GLASS	3	5/P									
20A	4400 678510	PS-LRG-JU0411Y	1	1/C									100V SERIES
20B	4400 678520	PS-LRG-JE0411Y	1	1/C									200V SERIES
21	4401 961020	BKT-MOT-SCAN	1	1/P									
22	4400 928650	DUMP-MOTOR-177	1	1/P									
23	4401 961060	K-MOT-SCAN-210	1	1/C									
24	4400 928640	BKT-MOT-SCAN177	1	1/P									
25	4401 961140	BLT/T-2GT174X40	1	1/P									
26	4363 271540	SPE-080-090-336	1	5/P									
27	4401 970500	COV-IN-R-U	1	1/P									
28	4401 941750	K-BRKT-BLC-L	1	1/P									
29	4401 942630	BALANCER-210-R	1	1/P									
30	4843 390855	CLP/W-LWS-2U	1	5/P									
31	4401 960470	MYLAR-GLASS-R	1	5/KP									
32	4401 941480	K-PLATE-FRM	1	1/P									
33	4401 969490	BUSH-BYPASS-CLT	1	1/P									
34	4401 969440	GEAR-10S028-06	2	1/P									
35	4401 969460	K-GP10S20/3G	1	1/P									
36	4401 969470	BRKT-F/C-PLY	1	1/P									
37A	4401 962890	BRKT-PLATEN-SW	1	1/P									2860,2870
38A	4401 983000	SZ-LG248L1	1	1/C						038A1			2860,2870
38A1	4401 983230	SZ-LG248L1	1	1/C		C	B	D	F97G964		038A	SF7/RF7	2860,2870
39A	4400 928890	ACTUATOR-P-SW-G	1	1/P									2860,2870
40A	4402 218250	CYLINDER-P-SW	1	1/P									2860,2870
41A	4402 218260	SPC060-040-0680	1	5/P									2860,2870
42	4843 390854	CLP/W-LWS-1U	1	5/P									
51	4842 040370	TBID3006MSZN3L	10	50/P						051 1			
51 1	4842 040370	TBID3006MSZN3L	11	50/P		D	-	E	F97D891		051		
52	7120 404011	12PAN4040MSZN3A	2	50/P									
53	4842 041794	TBIDS-40*08-CP	25	50/P									
54	7405 007031	ERR070SKZN3A	1	50/P									
55	4402 203820	SCREW-BKT-DEV	1	50/P									
56	7043 400613	BID40*06MSCR1AI	2	50/P									
57	4842 040665	TPAN3006MSZN3L	2	50/P									

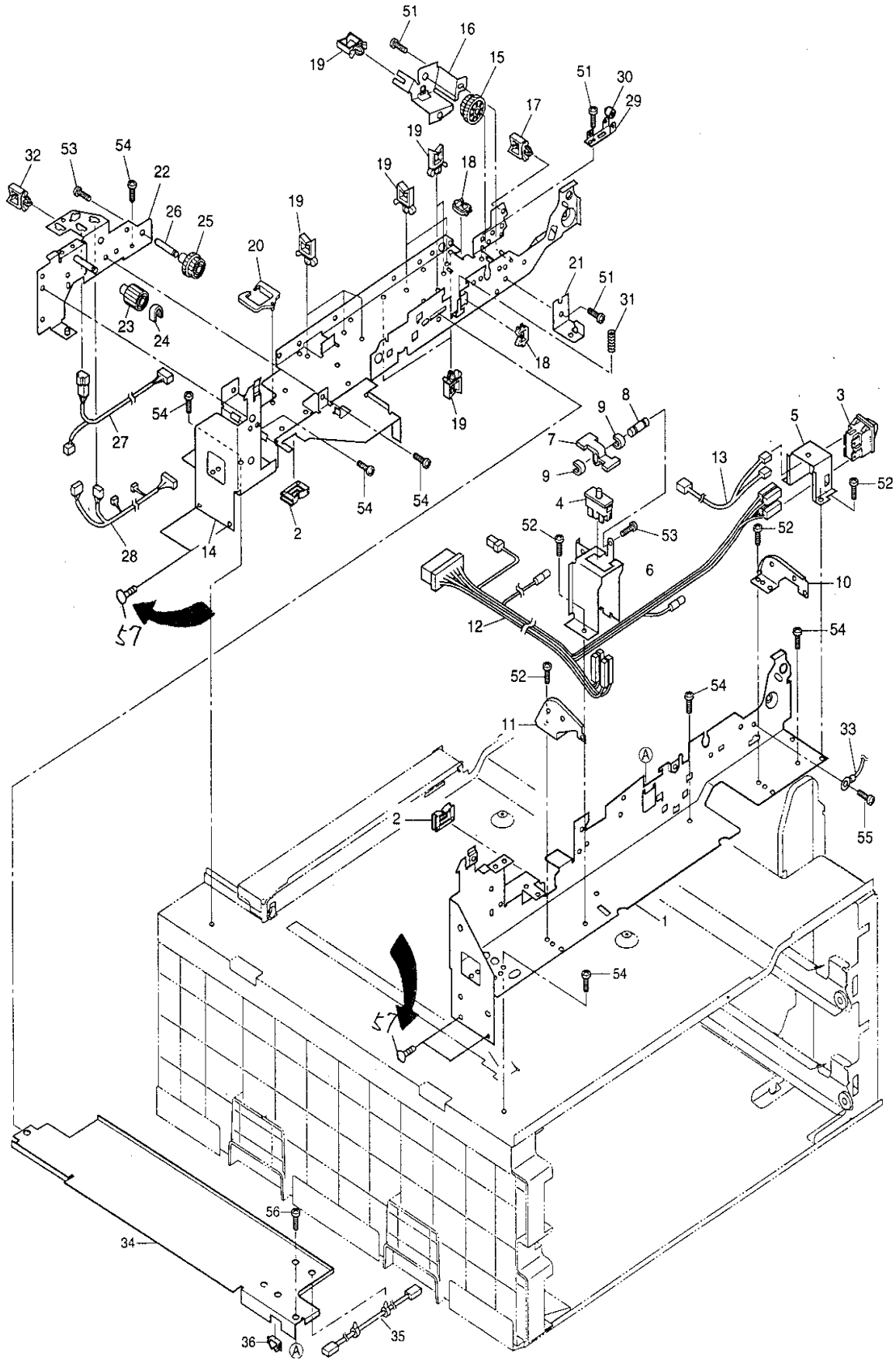
51
16
19
15
51
30
29
17
19
32
53
54
22
19
18
26
25
19
20
21
51
31
23
24
18
19
54
27
9
8
3
5
7
13
9
52
54
54
4
52
53
52
2
28
14
6
10
57
12
54
52
54
11
33
A
2
55
1
54
57
56
34
36
A
35

TOSHIBA

ITEM NO.	PARTS NO.	PARTS NAME	Q'TY / PAGE	Q'TY / PACK	SPE PRICE IN NONE	P	I	R	BSI NO.	TO	FROM	SERIAL NO.	REMARKS
1	4401 941200	FRAME-M-F	1	N/A***						001 1			
1 1	4402 491030	FRAME-M-F	1	N/A***		C	-	J	F97I043		001		
2	4843 391236	BD/W-EDH-18U	2	5/P									
3	4401 986800	SZ-AJ8R2094RB01	1	1/C						003 1			
3 1	4401 981100	SZ-AJ8R2094ZU01	1	1/D		E	-	J	F97C862		003		
4	4400 678360	SZ-DOOR-140	1	1/D									
5	4401 941240	BRKT-SW-MAIN	1	1/P									
6	4401 941250	BRKT-SW-DOOR	1	1/P									
7	4401 941260	GUIDE-SW-DOOR	1	1/P									
8	4401 941270	STUD-SW-DOOR	1	1/P									
9	4407 907410	STOP-RING-6	2	5/P									
10	4401 941280	HINGE-F-R	1	1/P									
11	4401 941290	HINGE-F-L	1	1/P									
12A	4401 980700	WH-ACMAIN-210U	1	N/A***									NAD
12B	4401 980690	WH-ACMAIN-210	1	N/A***									TWD
12C	4401 980690	WH-ACMAIN-210	1	N/A***									SAD
12D	4401 980690	WH-ACMAIN-210	1	N/A***									ASD
12E	4401 980690	WH-ACMAIN-210	1	N/A***									AUD
12F	4401 980700	WH-ACMAIN-210U	1	N/A***									NJD
12G	4401 980700	WH-ACMAIN-210U	1	N/A***									MFD
13	4401 979070	WH-RSTSW-F-210	1	1/P									
14	4401 941210	K-FRAME-M-R	1	N/A***						014 1			
14 1	4402 490980	K-FRAME-M-R	1	N/A***		C	-	J	F97I043		014		
15	4401 969700	K-GG10S019/08H	1	1/P									
16	4401 969740	BRKT-RGT/GEAR	1	1/P						016 1			
16 1	4402 491150	BRKT-RGT/GR-212	1	1/P		C	E	F	F98B188		016	SK7/RK7	
17	4843 390856	CLP/W-LWS-3U	1	5/P									
18	4843 390942	BD/W-EDS-2	2	10/P									
19	4843 390855	CLP/W-LWS-2U	10	5/P									
20	4843 391240	ED/W-EDS-2323U	1	5/P									
21	4401 964680	BRKT-RGST-UNIT	1	1/P									
22	4401 942000	K-BRKT-FRM-M-R	1	1/P									
23	4401 941850	GEAR-10S021-06	1	1/P									
24	4407 972860	STOP-RING-6-5	1	5/P									
25	4401 968500	GG10S019/10S027	1	1/P									
26	4401 968510	STUD-TRAN/BLT-G	1	1/P						026 1			
26 1	4401 968550	STUD-TRAN/BLT-G	1	1/P		C	B	D	F97D898		026	SB7/RB7	
27	4401 980620	WH-H/L-210	1	1/P									
28	4401 979470	WH-LOW-UNIT-210	1	1/P									
29	4401 969520	SPL020-S304-DRV	1	1/P									
30	4402 297020	ROL-IDL-ADU	1	5/P									
31	4402 205790	SPC-CH-TR	1	5/P									
32	4843 390854	CLP/W-LWS-1U	1	5/P									
33	4401 979170	WH-IF-GND-210	1	1/P									
34	4401 942250	COV-HVT	1	1/P									
35	4401 979160	WH-GB-BELT-210	1	1/P									
36	4843 390941	BD/W-EDS-1	1	10/P									
51	4842 040684	TBIDS3006MSCR3C	4	50/P									
52	4842 040370	TBID3006MSZN3L	8	50/P									
53	7043 300613	BID30*06MSCR1AI	2	50/P									
54	4842 041794	TBIDS-40*08-CP	14	50/P									
55	4842 040118	THPAN4008MSZN3L	1	50/P									
56	4842 040060	TPAN40*08MSZN3L	1	50/P									
57	4842 041824	TBIDP-40*10-3C	4	50/P		A	B	J	F97I043				

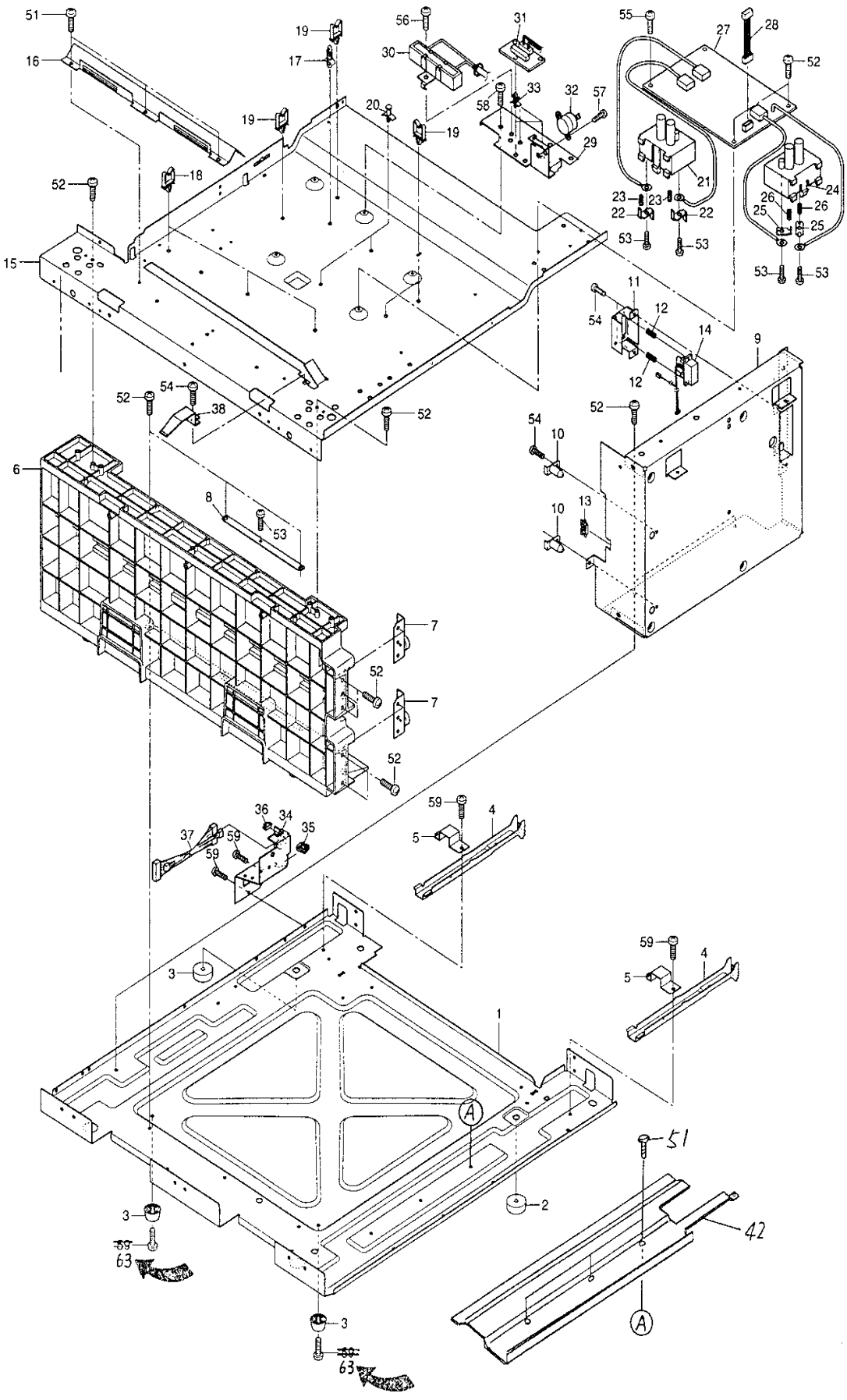
51
16
19
17
56
30
31
55
27
28
52
33
32
57
58
20
19
29
18
52
21
23
23
22
22
24
26
26
25
25
53
53
53
53
15
11
12
54
14
9
12
54
38
52
52
52
54
10
6
8
53
10
13
7
52
7
52
59
4
5
36
34
35
37
59
59
3
59
4
5
1
A
51
2
42
3
59
63
3
59
63
A

TOSHIBA

ITEM NO.	PARTS NO.	PARTS NAME	Q'TY / PAGE	Q'TY / PACK	SPE PRICE IN NONE	P	I	R	BSI NO.	TO	FROM	SERIAL NO.	REMARKS
1	4401 942890	K-BASE-LOW	1	N/A***						001 1			
1 1	4401 941000	BASE-LOW	1	N/A***		C	-	E	F97D891		001	SB7/RB7	
2	4407 720020	FOOT	2	1/P									
3	4402 811990	FOOT-8-20	2	1/P									
4	4401 941180	BRKT-HANDLE	2	1/P									
5	4401 941190	BRKT-COV-HANDLE	2	1/P									
6	4401 940860	FOOT-EXIT	1	1/PP									
7	4401 940870	K-BRKT-ROLL-L	2	1/P									
8	4401 941130	PLATE-FOOT	1	1/P									
9	4401 940890	FRAME-ACC	1	N/A***									
10	4401 941140	K-BRKT-ADU-IN	2	1/P									
11	4402 294250	K-BRKT-DRAWER	1	1/P									
12	4402 294280	SPC-135-090-465	2	5/P									
13	4843 390941	BD/W-EDS-1	1	10/P									
14	4401 979500	WH-IF-ADU-210	1	1/P									
15	4401 941230	BASE-MID	1	N/A***						015 1			
15 1	4402 490940	BASE-MID	1	N/A***		C	-	J	F97I043		015		
16	4401 941940	GUIDE-LOW-ADU	1	1/P									
17	4843 390869	PWZ-SPLS-4U	1	5/P									
18	4843 390856	CLP/W-LWS-3U	3	5/P									
19	4843 390855	CLP/W-LWS-2U	5	5/P									
20	4843 390860	PWZ-SPS-6U	3	5/P									
21	4401 947630	TERM-HVT-TR	1	1/P									
22	4402 809320	PLT-TERM-HVT-TR	2	1/P									
23	4402 205740	SPC-TERM-HVT-TR	2	1/P									
24	4401 947670	TERM-HVT-M	1	1/P									
25	4401 947680	PLT-TERM-HVT-M	2	1/P									
26	4401 947690	SPC036-040-130	2	5/P									
27	4401 981650	PS-HVT-210	1	1/S									
28	4401 979140	WH-HVT-210	1	1/P									
29	4401 941380	BRKT-D-HEATER	1	1/P									
30A	4401 981280	K-DHT-L-210U	1	1/D									100V SERIES
30B	4401 981290	K-DHT-L-210-E	1	1/D									200V SERIES
31A	4407 965320	PWA-F-FUS-351UC	1	1/C									100V SERIES
31B	4407 965330	PWA-F-FUS-351EU	1	1/C									200V SERIES
32	4400 741340	THRS-CS-7SA	1	1/D									
33	4843 390870	PWZ-SPLS-6U	3	5/P									
34	4401 942230	BRKT-CON-LCF	1	1/P									
35	4843 391236	BD/W-EDH-18U	1	5/P									
36	4843 390941	BD/W-EDS-1	1	10/P									
37	4401 979400	WH-IF-LCF-210	1	1/P									
38	4401 943170	BRKT-STOP-C-L	1	1/P									
42	4401 942570	STAY-BASE-F	1	N/A***		A	-	E	F97D891			SB7/RB7	
51	4842 041800	SCREW-M4-7-R	3	50/P									
52	4842 041794	TBIDS-40*08-CP	20	50/P									
53	4842 040495	PTBR30*06MSZN3A	5	50/P									
54	4842 040370	TBID3006MSZN3L	5	50/P									
55	4842 040118	THPAN4008MSZN3L	1	50/P									
56	4842 040698	TZPAN4006MSZN3L	1	50/P						056 1			
56 1	4842 040700	TZPAN4008MSZN3L	1	50/P		E	-	J	F97D891		056		
57	4842 030665	TPAN3006MSZN3L	1	50/P									
58	4842 040118	THPAN4008MSZN3L	1	50/P									
59	4842 040060	TPAN40*08MSZN3L	8	50/P						059 1			
59 1	4842 040060	TPAN40*08MSZN3L	6	50/P		D	B	E	F98C244		059	EC8/NC8	
63	4842 040061	TPAN40*10MSZN3L	2	50/P		C	B	E	F98C244			EC8/NC8	

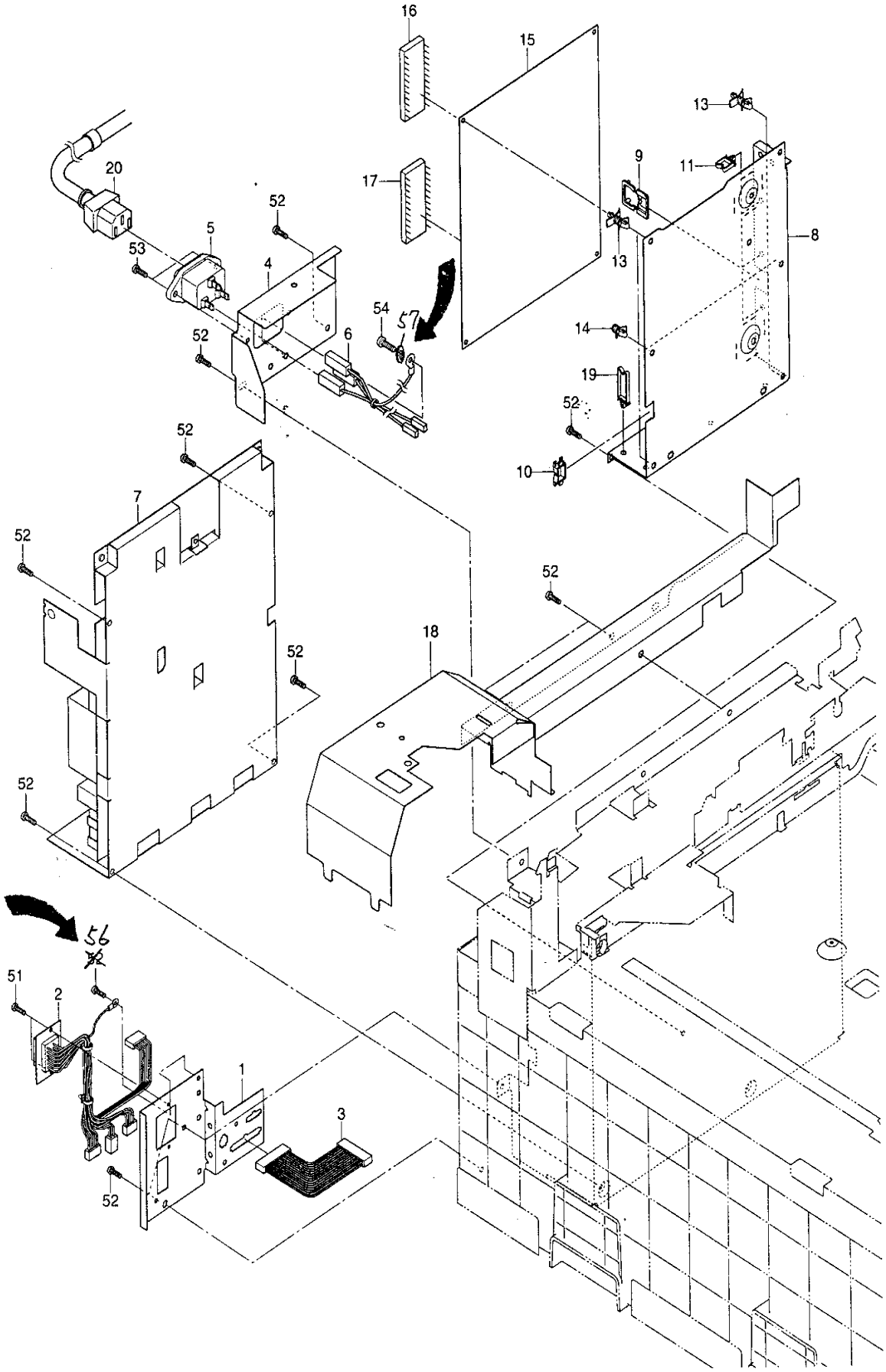
16
15
13
9
11
20
17
52
5
53
4
8
13
54
57
6
14
52
19
52
10
52
7
52
52
18
52
52
56
~~52~~
51
2
1
3
52

TOSHIBA

ITEM NO.	PARTS NO.	PARTS NAME	Q'TY / PAGE	Q'TY / PACK	SPE PRICE IN NONE	P	I	R	BSI NO.	TO	FROM	SERIAL NO.	REMARKS
1	4401 942220	BRKT-CONNECT-S	1	N/A***									
2	4401 979490	WH-IF-SORT-210	1	1/P									
3	4401 979430	WH-IF-PFP-210	1	1/P									
4	4401 941300	PLATE-CBL	1	1/P									
5	4401 981080	INLET-AP300-2A2	1	1/P									
6	4401 980650	WH-ACSUB-210	1	1/P									
7A	4401 981340	PS-ACC-210U	1	1/S									100V SERIES
7B	4401 981460	PS-ACC-210E	1	1/C									200V SERIES
8	4401 941170	BRKT-LGC	1	N/A***									
9	4843 391236	BD/W-EDH-18U	1	5/P									
10	4843 390941	BD/W-EDS-1	1	10/P									
11	4843 390855	CLP/W-LWS-2U	3	5/P									
13	4843 390870	PWZ-SPLS-6U	4	5/P									
14	4843 390860	PWZ-SPS-6U	2	5/P									
15A	4401 977610	PWA-F-LGC-210	1	1/SB									2060
15B	4401 977710	PWA-F-LGC-211	1	1/SB									2860,2870
16A	4401 978370	PRA-T210UC-050	1	1/S						016A1			NAD
16A1	4401 978430	PRA-T210UC-060	1	1/S		C	B	D	F97C867	016A2	016A	SA7/RA7	NAD
16A2	4401 978480	PRA-T210UC-070	1	1/S		C	B	D	F97D879	016A3	016A1	SB7/RB7	NAD
16A3	4401 978610	PRA-T210UC-080	1	1/S		C	B	D	F97D879	016A4	016A2		NAD
16A4	4401 978690	PRA-T210UC-100	1	1/S		C	B	D	F97L101	016A5	016A3	SL7/RL7	NAD
16A5	4401 978910	PRA-T210UC-110	1	1/S		C	E	E	F98B187		016A4	SB8/RB8	NAD
16B	4401 978390	PRA-T210GFS-050	1	1/S						016B1			AUD
16B1	4401 978450	PRA-T210GFS-060	1	1/S		C	B	D	F97C867	016B2	016B	SA7/RA7	AUD
16B2	4401 978500	PRA-T210GFS-070	1	1/S		C	B	D	F97D879	016B3	016B1	SB7/RB7	AUD
16B3	4401 978630	PRA-T210GFS-080	1	1/S		C	B	D	F97D879	016B4	016B2		AUD
16B4	4401 978710	PRA-T210GFS-100	1	1/S		C	B	D	F97L101	016B5	016B3	SL7/RL7	AUD
16B5	4401 978930	PRA-T210GFS-110	1	1/S		C	E	E	F98B187		016B4	SB8/RB8	AUD
16C	4401 978380	PRA-T210GDF-050	1	1/S						016C1			OTHERS
16C1	4401 978440	PRA-T210GDF-060	1	1/S		C	B	D	F97C867	016C2	016C	SA7/RA7	OTHERS
16C2	4401 978490	PRA-T210GDF-070	1	1/S		C	B	D	F97D879	016C3	016C1	SB7/RB7	OTHERS
16C3	4401 978620	PRA-T210GDF-080	1	1/S		C	B	D	F97D879	016C4	016C2		OTHERS
16C4	4401 978700	PRA-T210GDF-100	1	1/S		C	B	D	F97L101	016C5	016C3	SL7/RL7	OTHERS
16C5	4401 978920	PRA-T210GDF-110	1	1/S		C	E	E	F98B187		016C4	SB8/RB8	OTHERS
16D	4401 978540	PRA-T210IEP-080	1	1/C		A	-	J	F97D879	016D1			SERVICE ONLY
16D1	4401 978720	PRA-T210IEP-100	1	1/S		C	B	D	F97L101	016D2	016D		SERVICE ONLY
16D2	4401 978940	PRA-T210IEP-110	1	1/S		C	E	E	F98B187		016D1		SERVICE ONLY
16E	4401 978550	PRA-T210NDP-080	1	1/S		A	-	J	F97D879	016E1			SERVICE ONLY
16E1	4401 978730	PRA-T210NDP-100	1	1/S		C	B	D	F97L101	016E2	016E		SERVICE ONLY
16E2	4401 978950	PRA-T210NDP-110	1	1/S		C	E	E	F98B187		016E1		SERVICE ONLY
16F	4401 978560	PRA-T210SNF-080	1	1/S		A	-	J	F97D879	016F1			SERVICE ONLY
16F1	4401 978740	PRA-T210SNF-100	1	1/S		C	B	D	F97L101	016F2	016F		SERVICE ONLY
16F2	4401 978960	PRA-T210SNF-110	1	1/S		C	E	E	F98B187		016F1		SERVICE ONLY
17A	4401 978010	K-SRAM-T210U	1	1/S						017A1			USA
17A1	4401 978820	K-SRAM-T210U-S	1	1/S		C	B	J	F97L103		017A		NAD
17B	4401 978020	K-SRAM-T210E	1	1/S						017B1			EUR
17B1	4401 978830	K-SRAM-T210E-S	1	1/S		C	B	J	F97L103		017B		MJD,MFD,UKD
17C	4401 978840	K-SRAM-T210A-S	1	1/S		F	-	J	F97L103				TWD,SAD
17D	4401 978840	K-SRAM-T210A-S	1	1/S		F	-	J	F97L103				ASD,CND
17E	4401 978850	K-SRAM-T210AU-S	1	1/S		F	-	J	F97L103				AUD
18	4401 970510	COV-IN-R-L	1	1/P									
19	4843 390857	CLP/W-LWS-4U	1	5/P									
20A	4408 425350	CBL/P-INLET-UC	1	1/P									100V SERIES
20B	4400 395940	CBL/P-INLET-EUR	1	1/P									200V SERIES
51	4842 040370	TBID3006MSZN3L	2	50/P									
52	4842 041794	TBIDS-40*08-CP	13	50/P						052 1			
52 1	4842 041794	TBIDS-40*08-CP	12	50/P		D	-	E	F97H976	052 2	052	SG7/RG7	
52 2	4842 040060	TPAN40*08MSZN3L	8	50/P		D	B	E	F98D264		052 1	SE8/RE8	
53	4842 040686	TBID3008MSCR3C	2	50/P						053 1			
53 1	4842 041885	TBID3008MSZN3L	2	50/P		C	E	E	F97D891		053	SA7/RA7	
54	4842 040117	THPAN4006MSZN3L	1	50/P						054 1			
54 1	7040 400660	PAN40*06BSDG	1	50/P		C	B	E	F97H976		054	SH7/RH7	
56	4842 040748	TBID4008MSZN3L	1	50/P		C	E	E	F97H976			SG7/RG7	
57	4842 080091	TWAS040MSZN3A	1	50/P		A	B	E	F97H976			SH7/RH7	
60	4842 041800	SCREW-M4-7-R	4	50/P		C	B	E	F98D264			SE8/RE8	

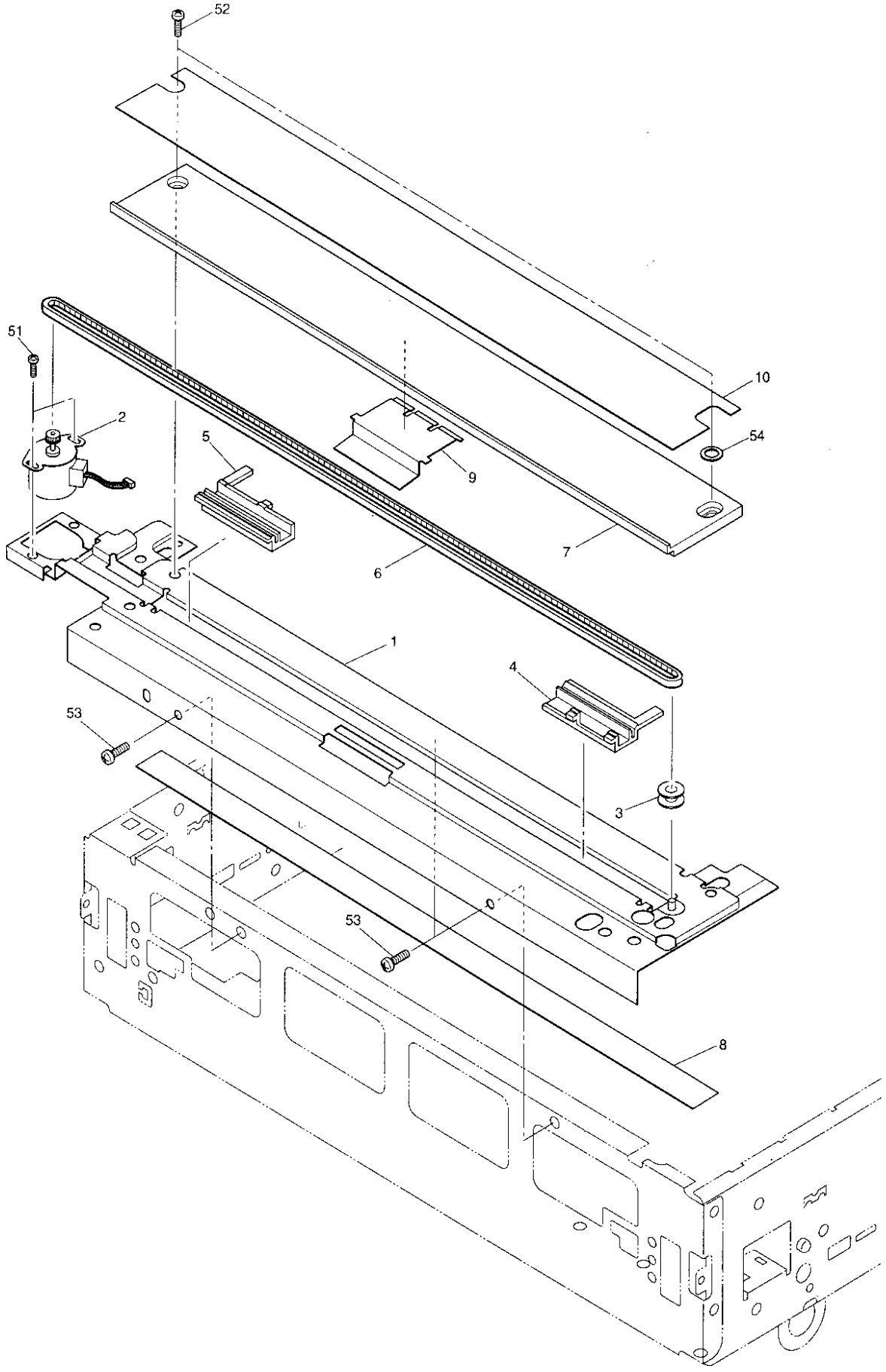

TOSHIBA

ITEM NO.	PARTS NO.	PARTS NAME	Q'TY / PAGE	Q'TY / PACK	SPE PRICE IN NONE	P	I	R	BSI NO.	TO	FROM	SERIAL NO.	REMARKS
1	4401 962960	K-STAY-OPT-L	1	1/P									
2	4401 962950	K-M/P-DCM-210	1	1/C									
3	4407 952410	COLLAR-IND	1	10/P									
4	4401 962930	INDICATOR-F	1	1/P									
5	4401 962940	INDICATOR-R	1	1/P									
6	4401 962920	BLT/T800-2GT2.5	1	1/P									
7	4401 960590	F-PLT-GLASS-ORG	1	1/PP									
8	4401 963050	TAPE-WHITE-IND	1	5/KP									
9	4401 963060	SPL-INDICATOR	1	1/P									
10A	4401 960410	LABEL-SCALE-U	1	1/KP									USA SIZE
10B	4401 960420	LABEL-SCALE-E	1	1/KP									EUR SIZE
51	7040 200411	PAN20*04MSZN3AI	2	50/P									
52	7043 400613	BID40*06MSCR1AI	2	50/P									
53	4842 040370	TBID3006MSZN3L	2	50/P									
54	4401 963070	WAS-INDICATOR	1	10/P									

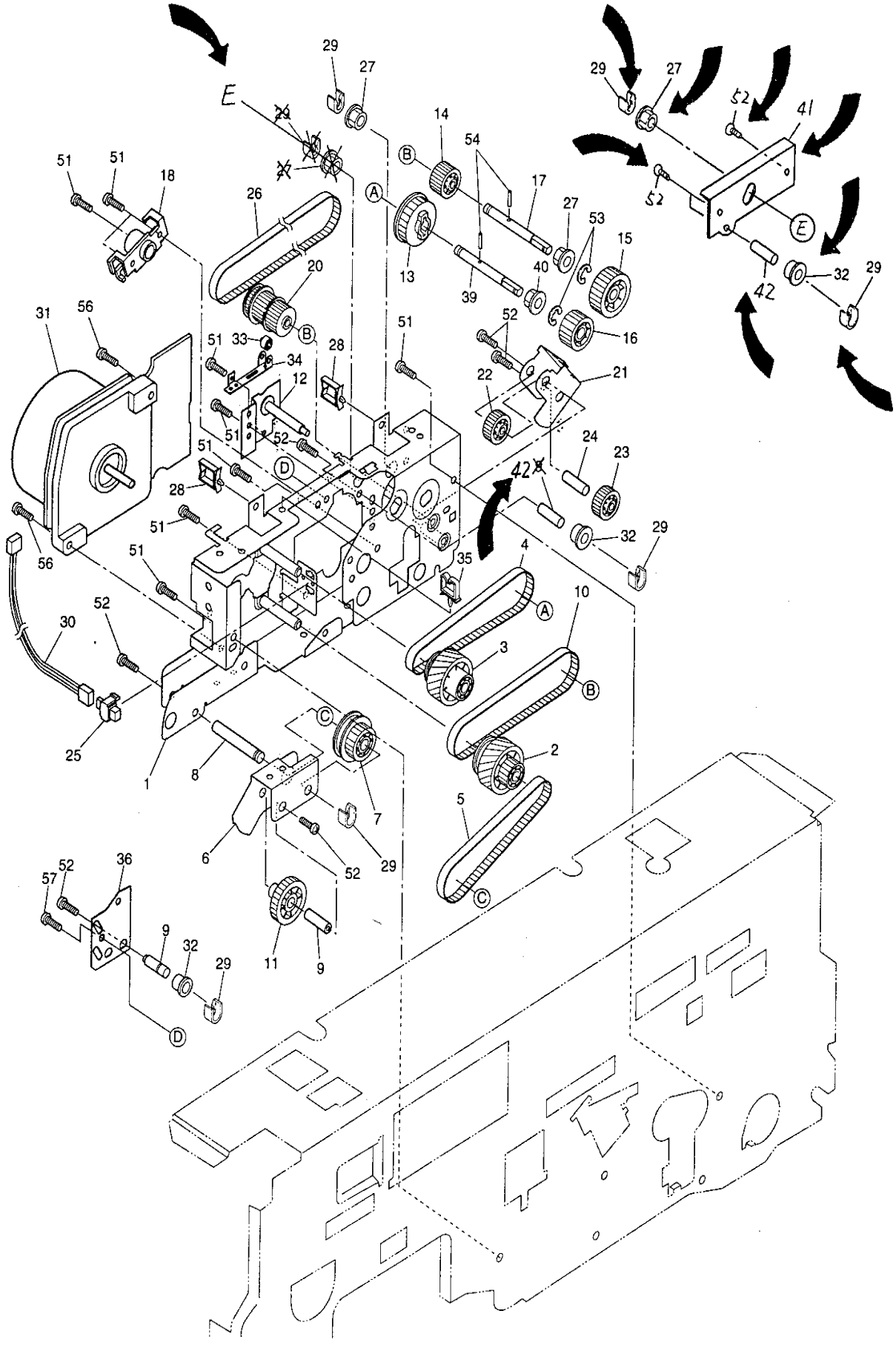
E
29
27
14
54
17
27
53
15
16
13
39
40
26
20
18
51
51
31
56
33
34
12
28
51
52
22
21
24
23
42
32
29
4
35
10
3
2
5
1
8
7
6
52
29
11
9
30
25
36
57
52
9
32
29
D
A
B
C
41
42

TOSHIBA

ITEM NO.	PARTS NO.	PARTS NAME	Q'TY / PAGE	Q'TY / PACK	SPE PRICE IN NONE	P	I	R	BSI NO.	TO	FROM	SERIAL NO.	REMARKS
1	4401 968200	K-BRKT-MAIN-MOT	1	1/P						001 1			
1 1	4401 968300	K-BRKT-MAIN-MOT	1	N/A***		C	-	E	F97H976		001	SG7/RG7	
2	4401 968260	K-GP05H57/3GT	1	1/P									
3	4401 968270	G-GP05H056/2GT	1	1/P									
4	4401 968360	BLT/T-248-2GT-3	1	1/P									
5	4401 968370	BLT/T-246-3GT-4	1	1/P									
6	4401 968410	ARM-FUSER	1	1/P									
7	4401 968460	K-GP10S021/3GT	1	1/P									
8	4401 968440	STUD-ARM-FUSER	1	1/P									
9	4401 968450	STUD-FUS-G25	3	1/P						009 1			
9 1	4401 968450	STUD-FUS-G25	2	1/P		D	-	E	F97H976		009	SG7/RG7	
10	4401 968540	BLT/T-324-3GT-4	1	1/P									
11	4401 968560	K-GEAR-10S025	1	1/P									
12	4401 969040	K-BRKT-HOLD-PLY	1	1/P									
13	4401 969100	PLY/T-2GT040-06	1	1/P									
14	4401 969080	GEAR-08H026-06B	1	1/P									
15	4401 969120	GEAR-10S023-06	1	1/P									
16	4401 969130	GEAR-08H020-06	1	1/P									
17	4401 969140	SFT-PRO/DRM	1	1/P									
18	4401 969150	BUSH-SHAFT-DRUM	1	1/P									
20	4401 968580	K-GP08H24/3G24	1	1/P									
21	4401 969640	ARM-RGT	1	1/P									
22	4401 969650	GEAR-08H026-06L	1	1/P									
23	4401 969660	GEAR-08H026-06R	1	1/P									
24	4401 969670	SFT-ARM-RGT	1	1/P									
25	4402 859600	SP-CS3A-B2BA	1	1/D									
26	4401 969090	BLT/T-324-3GT-6	1	1/P									
27	4400 802070	BUSH-6L	3	5/P									
28	4843 390856	CLP/W-LWS-3U	2	5/P									
29	4407 972860	STOP-RING-6-5	5	5/P						029 1			
29 1	4407 972860	STOP-RING-6-5	6	5/P		D	D	E	F97H976		029	SG7/RG7	
30	4401 979220	WH-TFULL-SW-210	1	1/P									
31	4401 981610	M/DC-MAIN-210	1	1/C									
32	4400 335180	PULLY-TENSION	2	1/P						032 1			
32 1	4400 335180	PULLY-TENSION	3	1/P		D	D	E	F97H976		032	SG7/RG7	
33	4402 297020	ROL-IDL-ADU	1	5/P									
34	4401 969520	SPL020-S304-DRV	1	1/P									
35	4843 390854	CLP/W-LWS-1U	1	5/P									
36	4401 968490	BRKT-DRUM-TENSN	1	1/P									
39	4401 969800	SFT-PRO/DRM-3	1	1/P						039 1			
39 1	4401 969840	SFT-PRO/DRM-N	1	1/P		C	B	E	F97H976		039	SH7/RH7	
40	4407 959970	BRG-696ZZNR	1	1/P									
41	4401 968290	BRKT-ADJ-DRIVE	1	N/A***		A	-	E	F97H976			SG7/RG7	
42	4401 968530	STUD-TNS-DRV	2	1/P		C	B	E	F97H976			SG7/RG7	
												SH7/RH7	
51	4842 040370	TBID3006MSZN3L	10	50/P									
52	7640 300651	ZPAN30*06MSZN3A	6	50/P						052 1			
52 1	7640 300651	ZPAN30*06MSZN3A	8	50/P		D	D	E	F97H976		052	SG7/RG7	
53	7405 005031	ERR050SKZN3A	1	50/P									
54	4408 256620	PIN-2-10	2	10/P									
56	4842 040706	TZPAN4014MSZN3L	2	50/P									
57	4842 040665	TPAN3006MSZN3L	1	50/P									

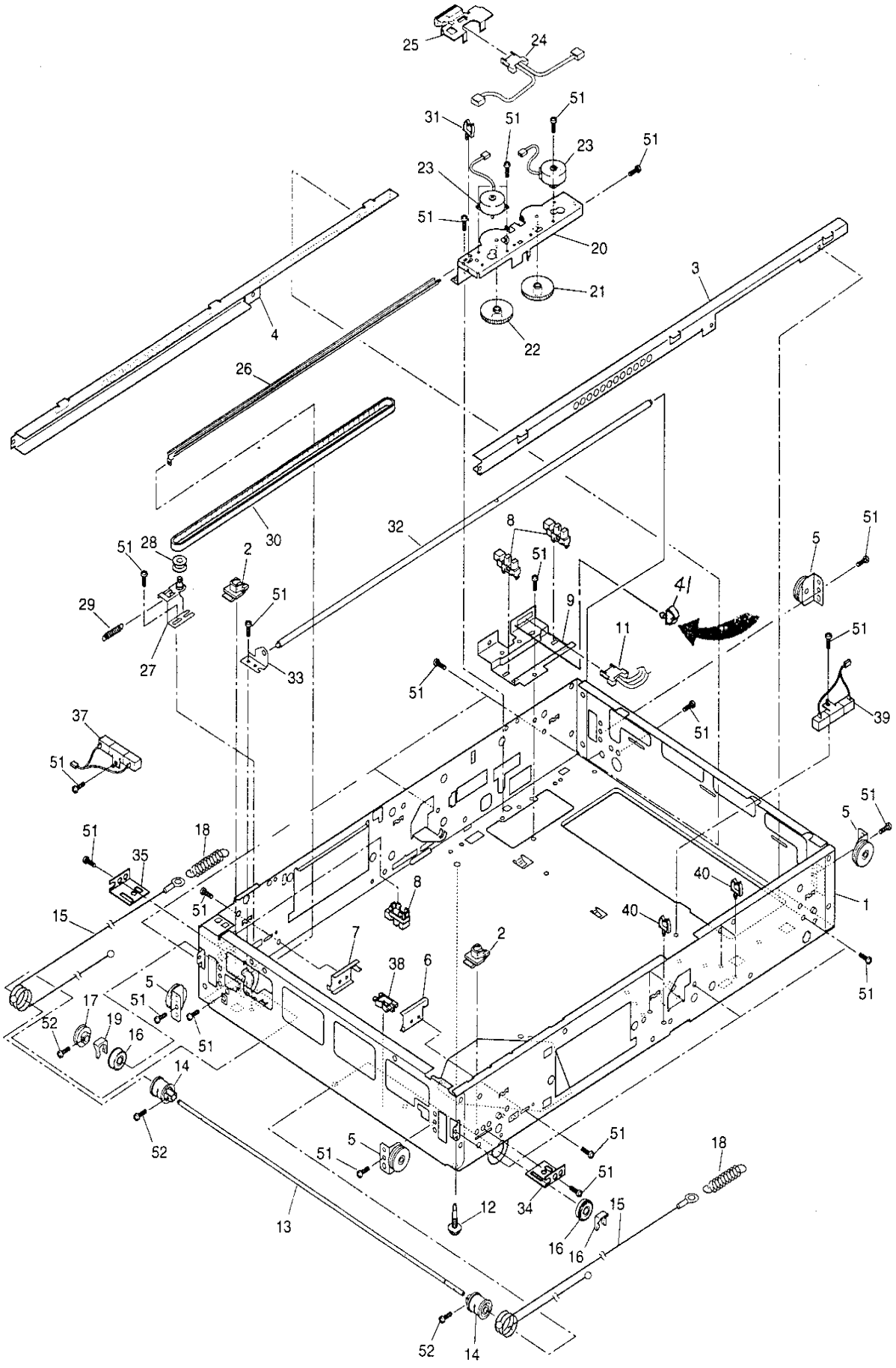
25
24
31
51
23
51
23
51
20
21
3
4
22
26
30
32
8
51
5
51
28
2
51
29
9
41
11
51
27
33
51
39
37
51
51
51
5
51
18
35
40
8
1
15
51
40
7
2
38
6
5
51
17
51
52
19
16
51
14
52
5
51
51
18
51
34
12
15
13
16
16
52
14

TOSHIBA

ITEM NO.	PARTS NO.	PARTS NAME	Q'TY / PAGE	Q'TY / PACK	SPE PRICE IN NONE	P	I	R	BSI NO.	TO	FROM	SERIAL NO.	REMARKS
1A	4401 960200	K-BASE-OPT	1	N/A***									2060
1B	4401 960190	K-BASE-OPT-J	1	N/A***									2860,2870
2	4401 960920	STOP-WIRE-EX	2	5/P									
3	4401 960830	K-RAIL-CRG-F	1	1/P									
4	4401 960840	K-RAIL-CRG-R	1	1/P									
5	4401 960900	K-BKT-PLY	4	1/P									
6	4401 961100	BKT-TENS-WIRE-F	1	1/P									
7	4401 961110	BKT-TENS-WIRE-R	1	1/P									
8	4401 983000	SZ-LG248L1	3	1/C						008 1			
8 1	4401 983230	SZ-LG248L1	3	1/C		C	B	D	F97G964		008	SF7/RF7	
9	4401 961780	BKT-HOME-SW-L/M	1	1/P									
11	4401 979060	WH-L/M-SW-210	1	1/P									
12	4401 961240	SCREW-M5-SFT	1	1/P						012 1			
12 1	4401 961350	SCREW-M5-SFT	1	1/P		C	B	E	F97H976		012	SH7/RH7	
13	4401 960990	SHAFT-DRIVE-SCN	1	1/P									
14	4400 665770	KIT-PLY-WIRE	1	1/P									2PC./1PACK
15	4401 960980	WIRE-SCAN	2	1/P									
16	4408 510800	BRG-688ZZNR	2	1/P									
17	4401 961010	PLY/T-2GT039F08	1	1/P									
18	4401 961120	SPE-100-120-440	2	1/P									
19	4400 336190	STOP-RING-8	2	5/P									
20	4401 961210	K-BKT-DRIVE-L/M	1	1/P									
21	4401 961790	G10S-10/G05S-88	1	1/P									
22	4401 961270	G05S-88/P2GT016	1	1/P									
23	4401 961750	K-M/P-L/M-210	2	1/C									
24	4401 979040	WH-L/M-MOT-210	1	1/P									
25	4401 961740	COVER-WH-L/M	1	1/P									
26	4401 961130	GUIDE-WH-CRG1	1	1/P						026 1			
26 1	4401 961190	GUIDE-WH-CRG1	1	1/P		C	B	E	F97H976		026	SE7/RE7	
27	4401 961310	K-BKT-TENS-LENS	1	1/P									
28	4400 665870	PLY/T-2GT016F06	1	1/P									
29	4401 961340	SPE-065-070-263	1	5/P									
30	4401 961290	BLT/T-2GT810X30	1	1/P									
31	4843 391562	CLP/W-LWS-05	1	10/P									
32	4401 961250	SHAFT-L/M	1	1/P									
33	4401 961260	BKT-STOP-SFT	1	1/P									
34	4401 961150	BRKT-WIRE-EX-F	1	1/P									
35	4401 961160	BRKT-WIRE-EX-R	1	1/P									
37A	4401 981410	ASM-DHT-U2-115	1	1/C									100V SERIES
37B	4401 981420	ASM-DHT-U2-240	1	1/C									200V SERIES
37C	4401 981410	ASM-DHT-U2-115	1	1/C									SAD
37D	4401 981420	ASM-DHT-U2-240	1	1/C									ASD
37E	4401 981420	ASM-DHT-U2-240	1	1/C									AUD
38	4843 390942	BD/W-EDS-2	1	10/P									
39A	4401 981150	ASM-D-HTR-U-115	1	1/C									100V SERIES
39B	4401 981170	ASM-D-HTR-U-240	1	1/C									200V SERIES
40	4843 391177	CLP/W-UAMS05S	4	5/P									
41	4843 391178	CLP/W-UAMS05W	1	5/P		A	D	E	F97D891				
51	4842 040370	TBID3006MSZN3L	27	50/P									
52	7640 300851	ZPAN30*08MSZN3A	3	50/P									
37C	4401 981410	ASM-DHT-U2-115	1	1/C									SAD

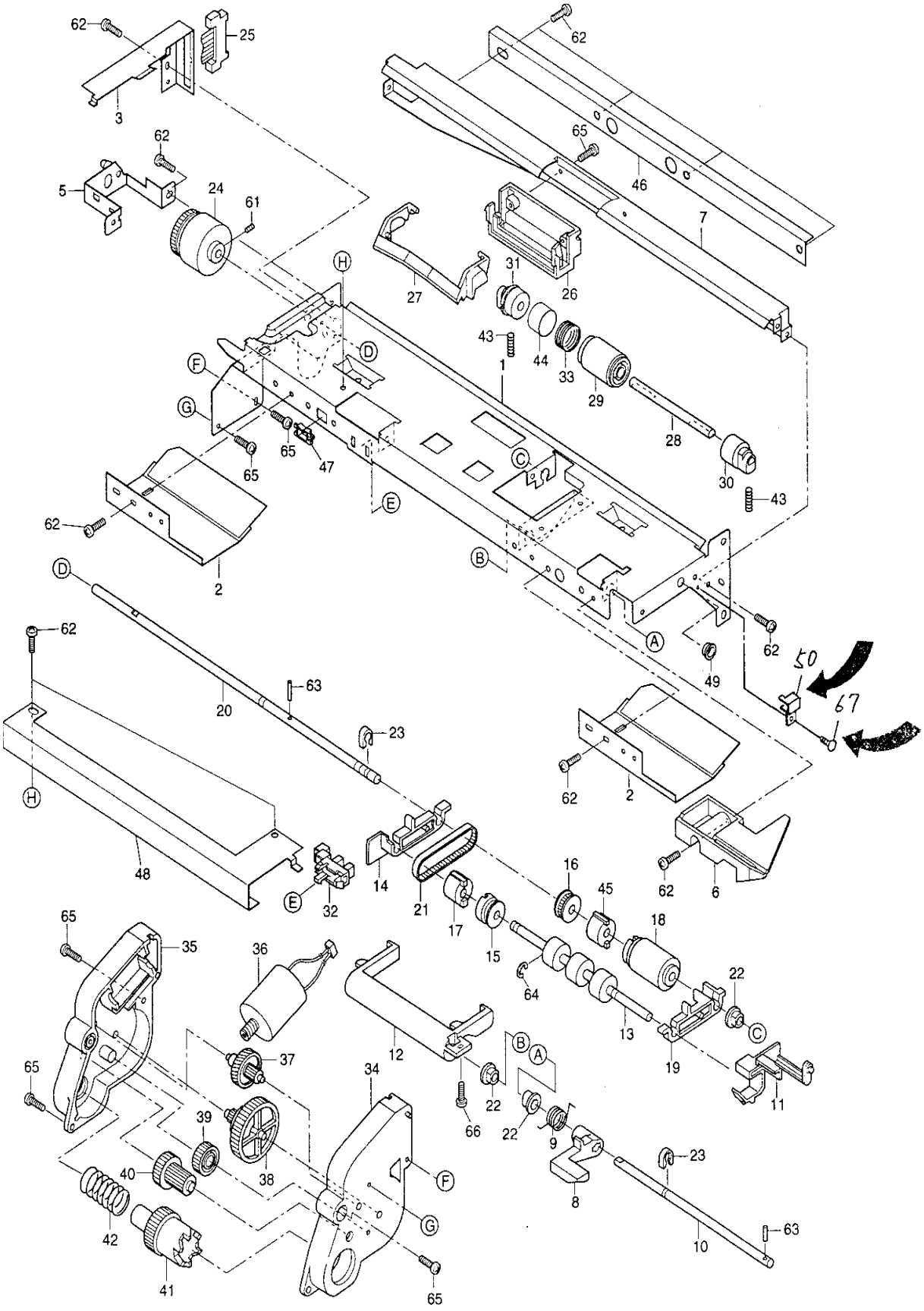
62
25
3
62
5
24
61
65
46
7
27
26
31
H
43
44
33
29
1
F
D
G
65
47
28
30
43
C
E
62
2
B
D
A
62
49
50
67
62
20
63
23
H
62
2
48
E
32
14
21
17
15
16
45
18
62
6
65
35
36
64
22
13
19
C
12
B
A
37
34
22
66
22
9
11
65
39
38
40
F
8
23
42
G
10
63
41
65

TOSHIBA

ITEM NO.	PARTS NO.	PARTS NAME	Q'TY / PAGE	Q'TY / PACK	SPE PRICE IN NONE	P	I	R	BSI NO.	TO	FROM	SERIAL NO.	REMARKS
1	4401 964790	K-FRM-FEED	1	N/A***									
2	4401 964490	K-GUIDE-SUB	2	1/C						002 1			
2 1	4401 964380	GUIDE-FEED-SUB	2	1/P		C	E	E	F97D891		002	SC7/RC7	
3	4401 964370	BRKT-CONNECT	1	1/P									
5	4401 964510	K-BRKT-CLT	1	1/P									
6	4401 966910	PUSHER-LVR	1	1/P									
7	4401 964310	BRKT-ROL-SEP	1	1/P									
8	4401 964320	ARM-PICK-UP	1	1/P									
9	4401 964580	SPA-ARM-PICK	1	1/P									
10	4401 964340	SHAFT-ARM-PICK	1	1/P									
11	4401 964480	ACT-P-EMP	1	1/P									
12	4401 964330	LEVER-PICK-UP	1	1/P									
13	4401 964450	K-ROL-PICK-UP	1	1/KP									
14	4401 964470	ARM-PICK-R	1	1/P									
15	4402 231780	PLY-20-2M	1	1/P									
16	4400 884670	PLY-20-ROL	1	1/P									
17	4402 833100	CLUTCH-6-R	1	1/D									
18	4401 964410	K-ROL-FEED	1	1/P									
19	4401 964460	ARM-PICK-F	1	1/P									
20	4401 964440	SHAFT-ROLL-FEED	1	1/P									
21	4401 964540	BLT/T-120-2GT-2	1	1/P									
22	4400 802070	BUSH-6L	4	5/P									
23	4407 972860	STOP-RING-6-5	2	5/P									
24	4401 969940	ASM-CLT-G28-CC6	1	1/C									
25	4401 979560	WH-CST-UNIT-210	1	1/P									
26	4401 964230	HOLDER-ROL-SEP	1	1/P						026 1			
26 1	4401 967200	K-HLDR-ROL-SEP	1	1/P		C	B	E	F97D891		026	SB7/RB7	
27	4401 964240	LEVER-ROL-SEP	1	1/P									
28	4401 964250	SHAFT-SEP	1	1/P									
29	4401 964290	K-ROLL-SPT	1	1/P									
30	4401 964360	ARBOR-SPT-F	1	1/P									
31	4401 964270	ARBOR-SPT-R	1	1/P									
32	4401 983000	SZ-LG248L1	2	1/C						032 1			
32 1	4401 983230	SZ-LG248L1	2	1/C		C	B	D	F97G964		032	SF7/RF7	
33	4401 784210	SPR-1.0-15.60RF	1	5/P									
34	4401 966010	CASE-DRV-TRY-1	1	1/P									
35	4401 966020	CASE-DRV-TRY-2	1	1/P									
36	4401 981710	K-M-DC-TRAY-210	1	1/C									
37	4401 966040	G05H-45/G05S-15	1	1/P									
38	4401 966070	G06S-13/G05S-80	1	1/P									
39	4401 966060	GR-06S030-70-08	1	1/P									
40	4401 966080	G06S-33/G08-14	1	1/P									
41	4401 966090	GR-08S35-100-12	1	1/P									
42	4401 966050	SPC172-100-3400	1	1/P									
43	4401 966920	SPC054-050-1500	2	5/P									
44	4401 966980	COV-SPE/ARBOR	1	1/P									
45	4402 833110	CLUTCH-6-L	1	1/P									
46	4401 966640	STAY-BRKT-SPT	1	1/P									
47	4843 390941	BD/W-EDS-1	1	10/P									
48	4401 966970	COV-WH-FED-UNIT	1	1/P									
49	4842 414629	GMT-OCB-375	1	10/P									
50	4401 967230	COV-FEED-WH-F	1	1/P		A	B	E	F97D891			SB7/RB7	
61	4842 011062	9HSS30/04MSFB	2	50/P									
62	4842 040370	TBID3006MSZN3L	16	50/P									
63	4842 904019	HPIN20/08SUSH7	2	50/P									
64	7405 005031	ERR050SKZN3A	1	50/P									
65	4842 040846	PTBR30*08MSZN3A	7	50/P									
66	7043 300613	TBID30*06MSCR1A	1	50/P									
67	7640 300411	ZPAN30*04MSZN3A	2	50/P		A	B	E	F97D891			SB7/RB7	

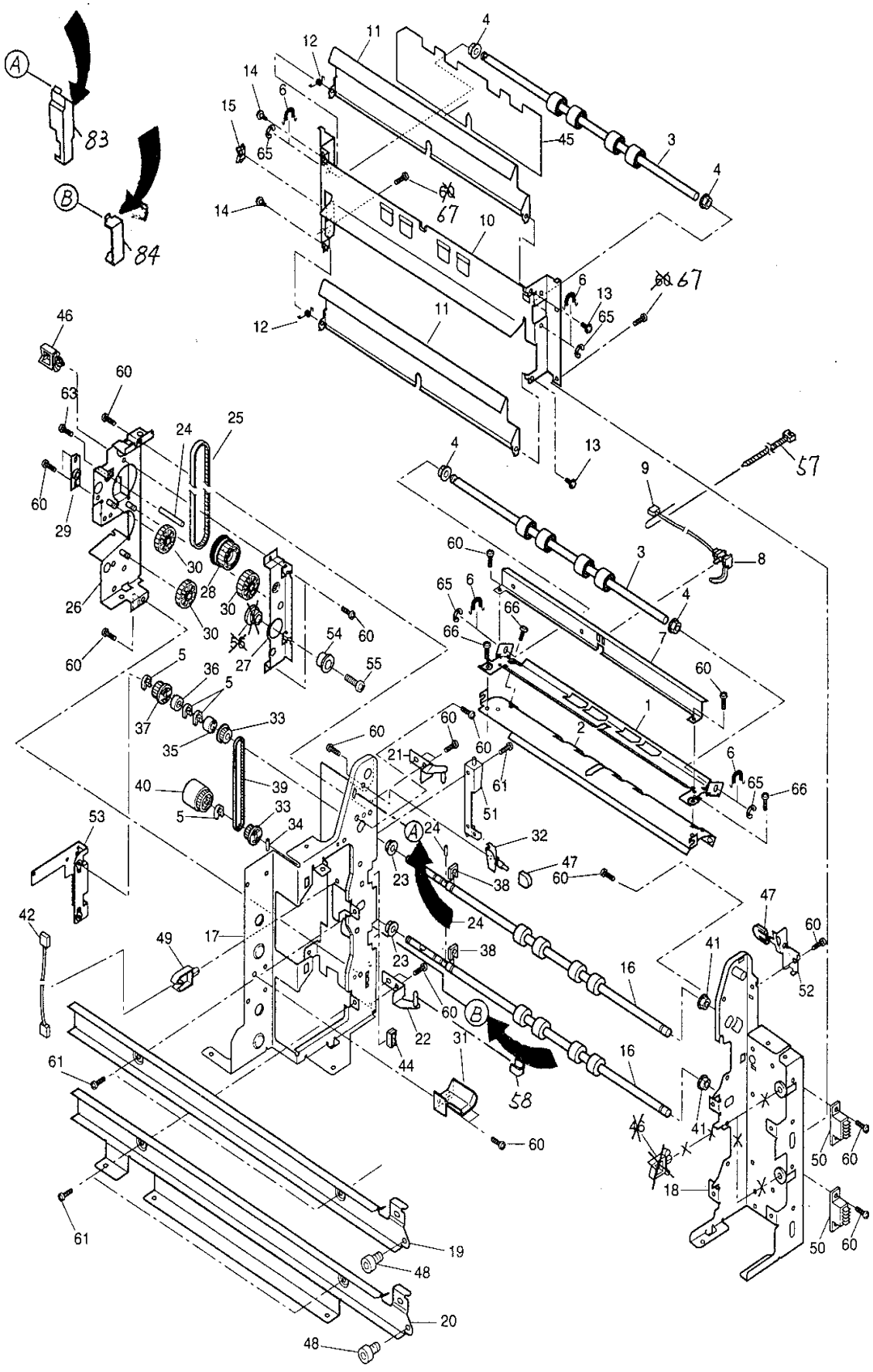

TOSHIBA

ITEM NO.	PARTS NO.	PARTS NAME	Q'TY / PAGE	Q'TY / PACK	SPE PRICE IN NONE	P	I	R	BSI NO.	TO	FROM	SERIAL NO.	REMARKS
1	4401 966810	GUIDE-U-TURN-U	1	1/P									
2	4401 964820	GUIDE-U-TURN-L	1	1/PP									
3	4401 966830	ROLL-FEEDER-IDL	2	1/KP									
4	4407 976990	BUSH-D6-GCB	4	1/P									
5	4407 972860	STOP-RING-6-5	5	5/P									
6	4408 302710	SPRING-770	4	5/P									
7	4401 964830	BRKT-UTURN-SW	2	1/P									
8	4401 983080	SZ-FED-210	1	1/C						008 1			
8 1	4401 983080	SZ-FED-210	2	1/C		E	-	J	F97C862		008		
9	4401 979100	WH-PSTPCU-210	2	1/P									
10	4401 966870	K-GUIDE-FEED	1	1/P						010 1			
10 1	4401 967270	K-GUIDE-FEED	1	1/P		C	E	E	F97D891		010		
11	4401 964890	GUIDE-OPEN	2	1/P									
12	4401 964950	SPA-GUIDE-OP	2	1/P									
13	4402 203820	SCREW-BKT-DEV	2	50/P									
14	4402 834670	SVREW-SW-M3	2	10/P									
15	4843 390941	BD/W-EDS-1	1	10/P									
16	4401 966860	K-ROL-FEEDER	2	1/KP									
17	4401 940950	K-FRAME-FED-R-L	1	N/A***						017 1			
17 1	4402 490840	K-FRAME-FED-R-L	1	N/A***		C	-	J	F97I043		017		
18	4401 940940	K-FRAME-FED-F-L	1	N/A***									
19	4401 940920	RAIL-FEED-U	1	1/P									
20	4401 940930	RAIL-FEED-L	1	1/P									
21	4401 964900	K-BKT-HINGE-U	1	1/P		F	-	J	F97E910				
22	4401 964910	K-BKT-HINGE-L	1	1/P						022 1			
22 1	4401 967160	K-BKT-HINGE-L	1	1/P		C	B	E	F97D891		022	SB7/RB7	
23	4400 802080	BUSH-8	2	5/P									
24	4401 968170	STUD-FEED-G/P	1	1/P									
25	4401 968540	BLT/T-324-3GT-4	1	1/P									
26	4401 968600	K-BRKT-FEED-UNT	1	1/P						026 1			
26 1	4402 491000	K-BRKT-FEED-UNT	1	1/P		C	E	J	F97I043		026		
27	4401 968620	BRKT-FEED-COV	1	1/P									
28	4401 968640	K-GP10S028/3GT	1	1/P									
29	4401 968780	BUSH-SHAFT-ADU	1	1/P									
30	4401 969440	GEAR-10S028-06	3	1/P									
31	4401 964970	GUIDE-TRY-MOT	1	1/P									
32	4401 966330	K-BRKT-TRAY-R	1	1/P									
33	4401 968660	PLY/T-3GT015-06	2	1/P									
34	4408 256620	PIN-2-10	1	10/P									
35	4408 636730	CLUTCH-6-08R	1	1/D									
36	4400 670130	BRG-ONEWAY-6-L	1	1/P									
37	4401 968670	PLY/T-3GT020-06	1	1/P									
38	4400 336190	STOP-RING-8	4	5/P									
39	4401 968680	BLT/T-258-3GT-4	1	1/P						039 1			
39 1	4401 968690	BLT/T-258-3GT-3	1	1/P		E	-	J	F97C862		039		
40	4401 969920	ASM-CLT-G28-CW6	1	1/C									
41	4407 855640	BUSH-8*5.5	2	5/P						041 1			
41 1	4402 461720	BUSH-8*5.5-GCB	2	5/P		C	E	F	F98B188		041	SK7/RK7	
42	4401 979350	WH-CST-210	1	1/P									
44	4843 390942	BD/W-EDS-2	2	10/P									
45	4401 966840	MYLAR-GUIDE-OPN	1	1/KP									
46	4843 390855	CLP/W-LWS-2U	3	5/P						046 1			
46 1	4843 390855	CLP/W-LWS-2U	1	5/P		D	-	E	F97D891		046		
47	4407 958550	CAP-ARM-FUSER	2	1/P									
48	4400 932560	ROLL-CST-19S	2	1/P									
49	4843 391499	CLP/W-UAMS05L46	1	10/P									
50	4402 816610	SP-ESE15404	2	1/C									
51B	4402 301040	K-BKT-HINGE	1	1/P									2870
52	4401 966300	K-BKT-TRAY-F	1	1/P									
53	4401 969600	K-BRKT-REAR-SFT	1	1/P									
54	4401 996640	PLY-IDLE-INT	1	1/P						054 1			
54 1	4401 968720	PLY-IDLE-INT	1	1/P		C	B	E	F97C870		054	SA7/RA7	
55	4400 344330	SCREW-CON-DEV-V	1	10/P									
56	4842 090261	FNUT030MSZN3A	1	10/P						056 1			
56 1	4842 090261	FNUT030MSZN3A	0	10/P		B	-	E	F97D891		056		
57	4400 902490	BAND-PS100	1	5/P		A	B	E	F97D891			SB7/RB7	
58	4401 967240	STOP-RING-6-7	1	5/P		A	D	E	F97D891			SB7/RB7	
60	4842 040370	TBID3006MSZN3L	14	50/P						060 1 067			

ITEM NO.	PARTS NO.	PARTS NAME	Q'TY / PAGE	Q'TY / PACK	SPE PRICE IN NONE	P	I	R	BSI NO.	TO	FROM	SERIAL NO.	REMARKS
60 1	4842 040370	TBID3006MSZN3L	13	50/P		D	-	E	F97D891		060	SB7/RB7	
61A	4842 041794	TBIDS-40*08-CP	13	50/P									OTHERS
61B	4842 041794	TBIDS-40*08-CP	16	50/P									2870
62	4842 011062	9HSS30/40MSFB	1	50/P									
63	7043 300613	BID30*06MSCR1A	1	50/P									
65	7405 005031	ERR050SKZN3A	4	50/P									
66	7040 300411	PAN30*04MSZN3A	4	50/P									
67	7640 400851	ZPAN40*08MSZN3A	2	50/P		C	B	E	F97D891		060	SB7/RB7	
83	4401 966930	COV-WH-FEED-U	1	1/P		F	-	J	F97I043				
84	4401 966940	COV-WH-FEED-L	1	1/P		F	-	J	F97I043				

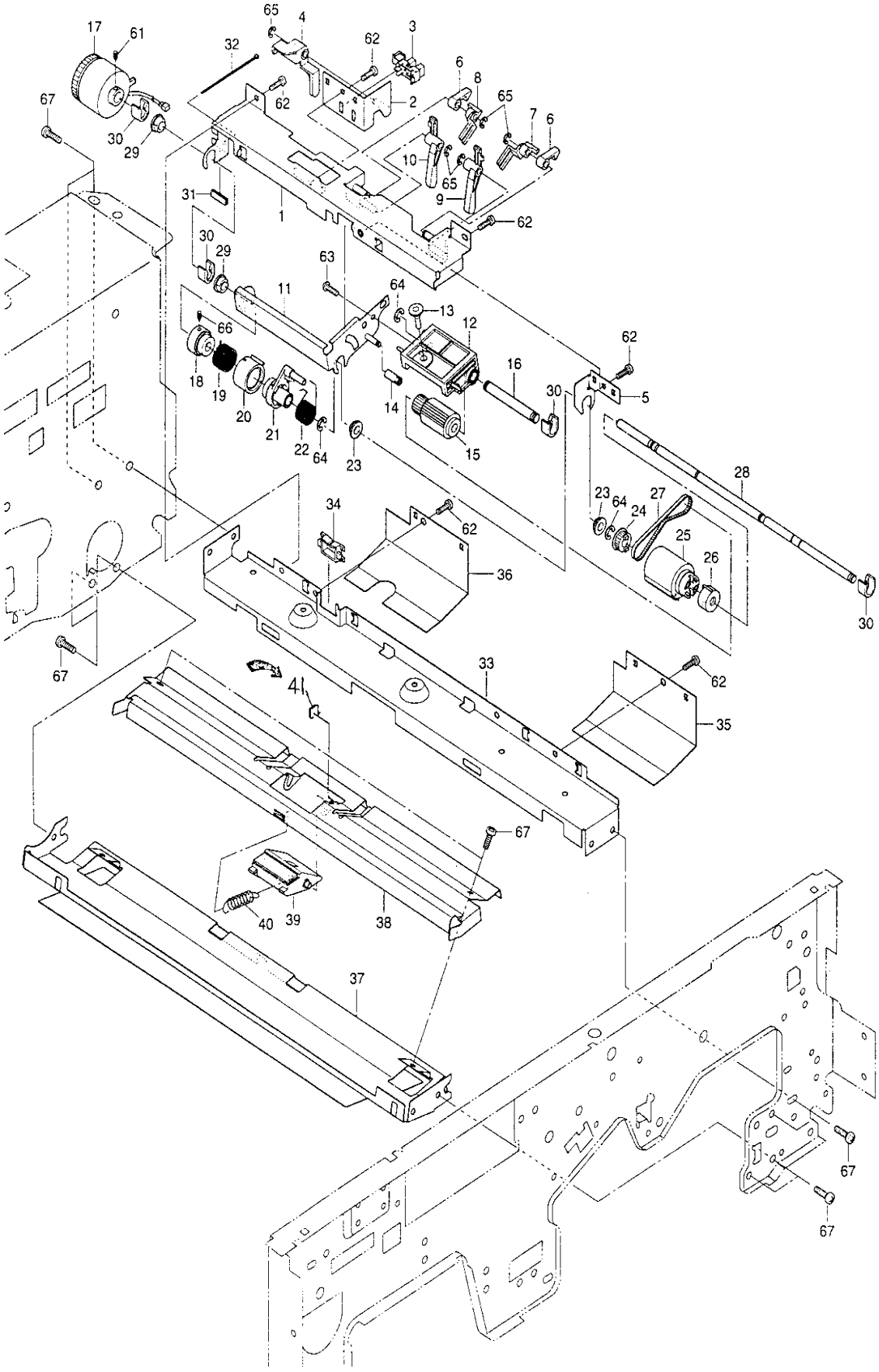
17
61
65
4
62
3
32
6
8
65
7
6
67
62
2
30
29
10
65
9
31
1
62
30
29
63
11
64
13
12
66
62
16
18
19
20
21
22
64
23
14
15
30
5
28
23
64
24
27
25
26
34
62
36
30
67
33
62
41
35
67
40
39
38
37
67
67

TOSHIBA

ITEM NO.	PARTS NO.	PARTS NAME	Q'TY / PAGE	Q'TY / PACK	SPE PRICE IN NONE	P	I	R	BSI NO.	TO	FROM	SERIAL NO.	REMARKS
1	4401 965160	K-BKT-BYPASS-L	1	1/P									
2	4401 966580	K-BKT-SZ-ACT	1	1/P									
3	4401 983000	SZ-LG248L1	1	1/C						003 1			
3 1	4401 983230	SZ-LG248L1	1	1/C		C	B	D	F97G964		003	SF7/RF7	
4	4401 965190	ACT-PAPER-SW	1	1/P									
5	4401 966570	HLDR-SHAFT-BYP	1	1/P									
6	4401 965270	ARM-STOPPER	2	5/P									
7	4401 965250	LEVER-STOPPER-F	1	1/P									
8	4401 965260	LEVER-STOPPER-R	1	1/P									
9	4401 965230	STOPPER-SHEET-F	1	1/P									
10	4401 965240	STOPPER-SHEET-R	1	1/P									
11	4401 966550	K-BKT-LIFT-PICK	1	1/P									
12	4401 965200	HOLDER-PICK-UP	1	1/P									
13	4402 242330	SPACER-DF	1	5/P									
14	4401 965280	COLLAR-BYPASS	1	5/P									
15	4401 966500	K-ROLL-PICK-BYP	1	1/P									
16	4401 965380	SHAFT-PICK-BYP	1	1/P									
17	4401 969920	ASM-CLT-G28-CW6	1	1/C									
18	4401 965300	ARBOR-PICK-UP	1	1/P									
19	4407 401720	SPRING-CLUTCH-R	1	5/P									
20	4401 965340	SLEEVE-BYPASS	1	1/P									
21	4401 965310	LEVER-PICK	1	1/P									
22	4401 965350	SPA130-100-R	1	1/P									
23	4401 966470	BUSH-6-3.7	2	5/P									
24	4401 966400	PLY/T-2GT020-06	1	1/P									
25	4402 038460	K-ROL-FEED-1	1	1/P									
26	4402 833110	CLUTCH-6-L	1	1/P									
27	4401 965220	BLT/T142-2GT2.8	1	1/P									
28	4401 965370	SHAFT-BYPASS	1	1/P									
29	4400 802070	BUSH-6L	2	5/P									
30	4407 972860	STOP-RING-6-5	4	5/P									
31	4401 966560	EDGING-17	1	5/P									
32	4346 754010	SKB-BAND-1	1	5/P									
33	4401 965150	BRKT-BYPASS-U	1	1/P									
34	4843 390941	BD/W-EDS-1	1	10/P									
35	4401 966530	GUIDE-ENT-BYP-F	1	1/P									
36	4401 966540	GUIDE-ENT-BYP-R	1	1/P									
37	4401 966490	K-STAY-BYPASS-L	1	1/P									
38	4401 966440	GUIDE-BYPASS-L	1	1/P									
39	4401 965130	K-PAD-SPT-BYP	1	1/P									
40	4401 965360	SPE057-070-0249	1	5/P									
41	4401 966660	PAD-LEVER-SPT	1	5/P		A	B	E	F97K089				
61	4842 011062	9HSS30/04MSFB	1	50/P									
62	4842 040370	TBID3006MSZN3L	6	50/P									
63	4842 040846	PTBR30*08MSFB	1	50/P									
64	7405 005031	ERR-050SKZN3A	3	50/P									
65	7405 003031	ERR-030SKZN3A	5	50/P									
66	4842 011083	9HSS40/06MSFB	1	50/P									
67	4842 041794	TBIDS-40*08-CP	6	50/P									

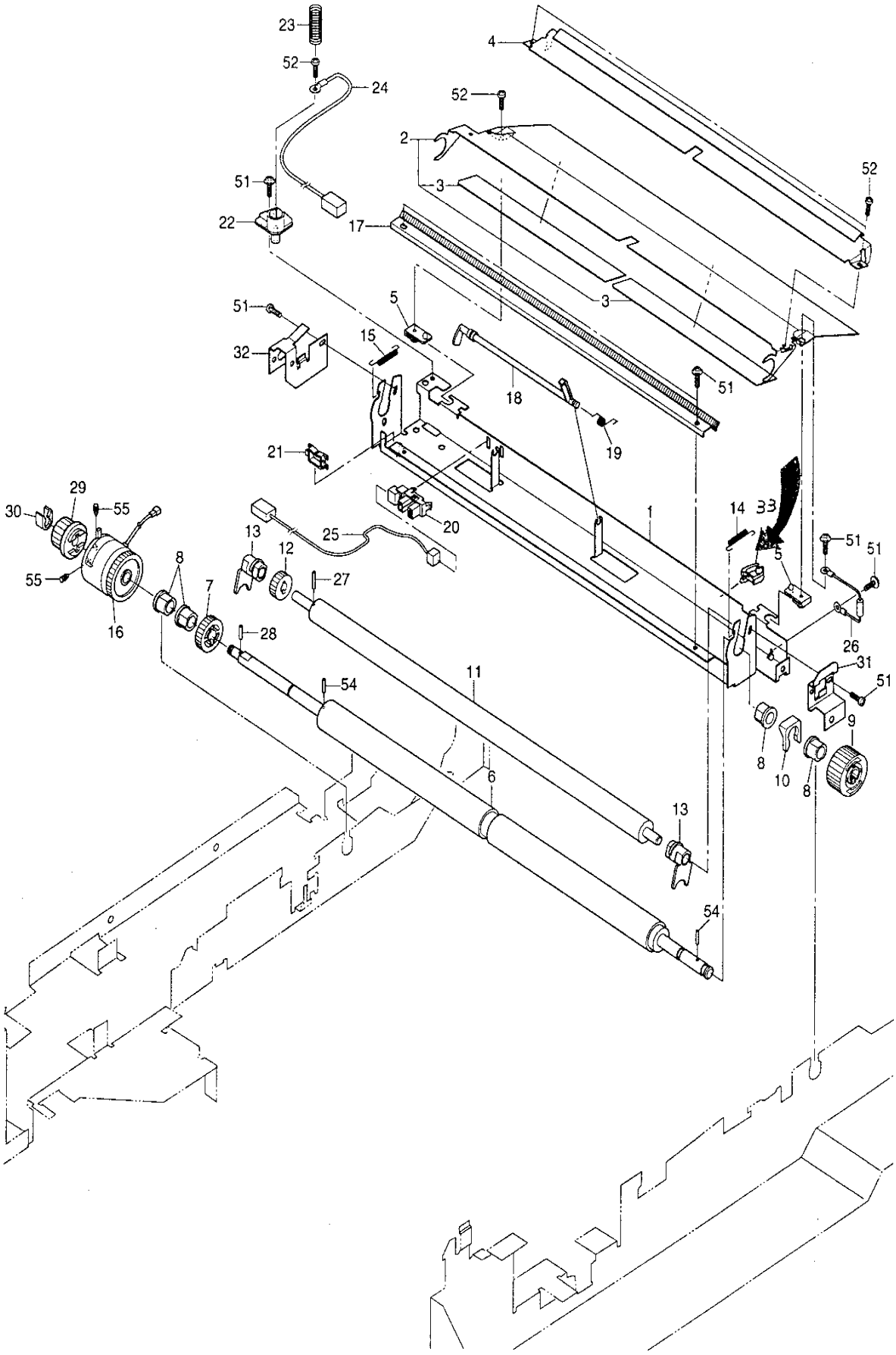
23
52
24
4
52
2
3
51
22
17
52
3
5
51
15
32
18
51
19
21
29
30
55
20
1
14
33
13
25
12
51
51
5
8
7
27
55
16
28
26
31
11
54
51
9
8
10
8
6
13
54

TOSHIBA

ITEM NO.	PARTS NO.	PARTS NAME	Q'TY / PAGE	Q'TY / PACK	SPE PRICE IN NONE	P	I	R	BSI NO.	TO	FROM	SERIAL NO.	REMARKS
1	4401 964690	FRAME-RGST	1	1/P									
2	4401 964780	K-GUIDE-RGST	1	1/S									
3	4401 964730	MYLAR-GUIDE-RGT	1	5/KP									
4	4401 964740	GUIDE-RGST-U	1	1/P									
5	4401 964670	BUSH-GUIDE-RGST	2	5/P									
6	4401 964630	ROLLER-RGT-L	1	1/KP									
7	4401 964660	GEAR-10S020-08	1	1/P									
8	4400 802080	BUSH-8	4	5/P									
9	4401 964720	KNOB-RGST	1	1/P									
10	4400 336190	STOP-RING-8	1	5/P									
11	4401 964610	ROLLER-RGT-U	1	1/KP									
12	4402 813190	GEAR-15-1.0	1	1/P									
13	4401 964650	BUSH0610*1360-P	1	5/P									
14	4407 547370	SPRING-25	1	5/P									
15	4407 957140	SPRING-850	1	5/P									
16	4401 969900	ASM-CLT-G28-CW8	1	1/C									
17	4401 964760	K-BKT-BRUSH	1	1/S									
18	4401 964700	ACT-SW-RGST	1	1/P									
19	4401 964710	SPA-RGST-SW	1	1/P									
20	4401 983000	SZ-LG248L1	1	1/C						020 1			
20 1	4401 983230	SZ-LG248L1	1	1/C		C	B	D	F97G964		020	SF7/RF7	
21	4843 390941	BD/W-EDS-1	1	10/P									
22	4401 947700	HLDR-BIAS-DEV	1	1/P									
23	4400 664270	SPC078-065-0230	1	5/P									
24	4401 979150	WH-HVT-BIAS-210	1	1/P									
25	4401 979080	WH-RSTSW-C-210	1	1/P									
26	4402 816870	K-RESISTOR-170F	1	1/P									
27	4407 403790	NPIN2-8	1	10/P									
28	4408 256620	PIN-2-10	1	10/P									
29	4401 968670	PLY/T-3GT020-06	1	1/P									
30	4407 972860	STOP-RING-6-5	1	5/P									
31	4401 966950	BRKT-RGST-F	1	1/P									
32	4401 966960	BRKT-RGST-R	1	1/P									
33	4843 391178	CLP/W-UAMS05W	1	5/P		A	B	E	F97D891			SB7/RB7	
51	4842 040370	TBID3006MSZN3L	10	50/P						051 1			
51 1	4842 040370	TBID3006MSZN3L	9	50/P		D	-	E	F97D891		051		
52	4842 040846	PTBR30*08MSZN3A	3	50/P									
54	4842 904035	HPIN20/10SUSH7	2	50/P									
55	7494 300619	9HSS30/06MSFB	1	50/P									

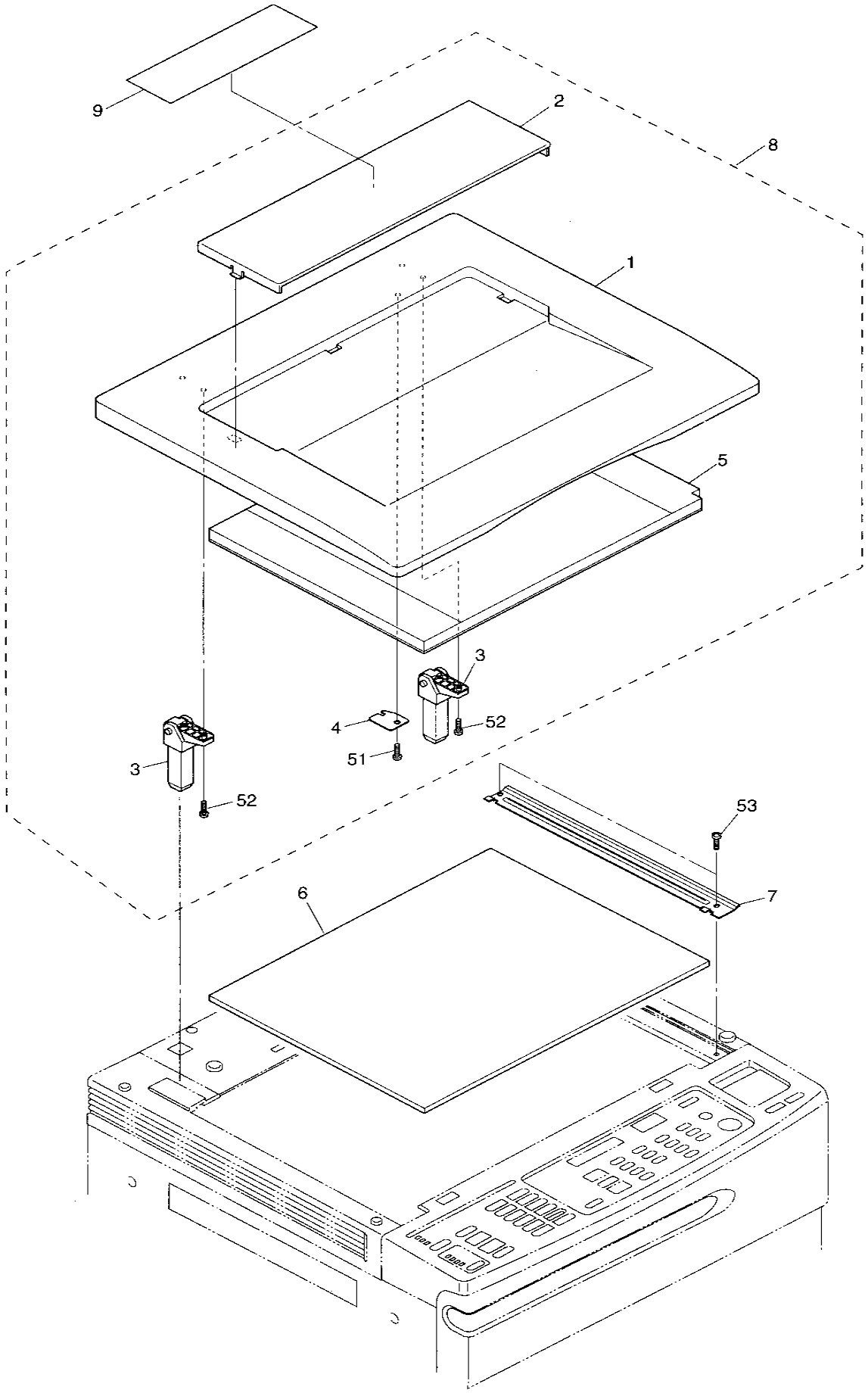

TOSHIBA

ITEM NO.	PARTS NO.	PARTS NAME	Q'TY / PAGE	Q'TY / PACK	SPE PRICE IN NONE	P	I	R	BSI NO.	TO	FROM	SERIAL NO.	REMARKS
1	4401 970300	COV-PLATEN	1	1/PP									
2	4400 683520	POCKET-PLATEN	1	1/PP									
3	4400 683500	HINGR-PLATEN-S	2	1/P									
4	4401 970320	PLT-PLATEN-SW	1	1/P									
5	4401 970310	SHEET-PLATEN	1	1/KP									
6	4401 960300	GLASS-462-338-4	1	1/S									
7	4401 960580	F-PLATE-GLASS	1	1/PP									
8	6608 9019	KA-2060PC	1	SUPPLY									
9A	4401 971460	LBL-INST-F210UC	1	1/KP									NAD
9B	4401 971470	LBL-INST-F210ER	1	1/KP									ENGLISH
9C	4401 987660	LBL-INST-F210-F	1	1/KP									FRENCH
9D	4401 987650	LBL-INST-F210-G	1	1/KP									GERMAN
9E	4401 987670	LBL-INST-F210-S	1	1/KP									SPANISH
9F	4401 987680	LBL-INST-F210-I	1	1/KP									ITALIAN
51	4842 040849	PTBR40*08MSZN3A	1	50/P									
52	4842 040867	PTBR40*14MSZN3A	4	50/P									
53	7043 400613	BID40*06MSCR1AI	2	50/P									

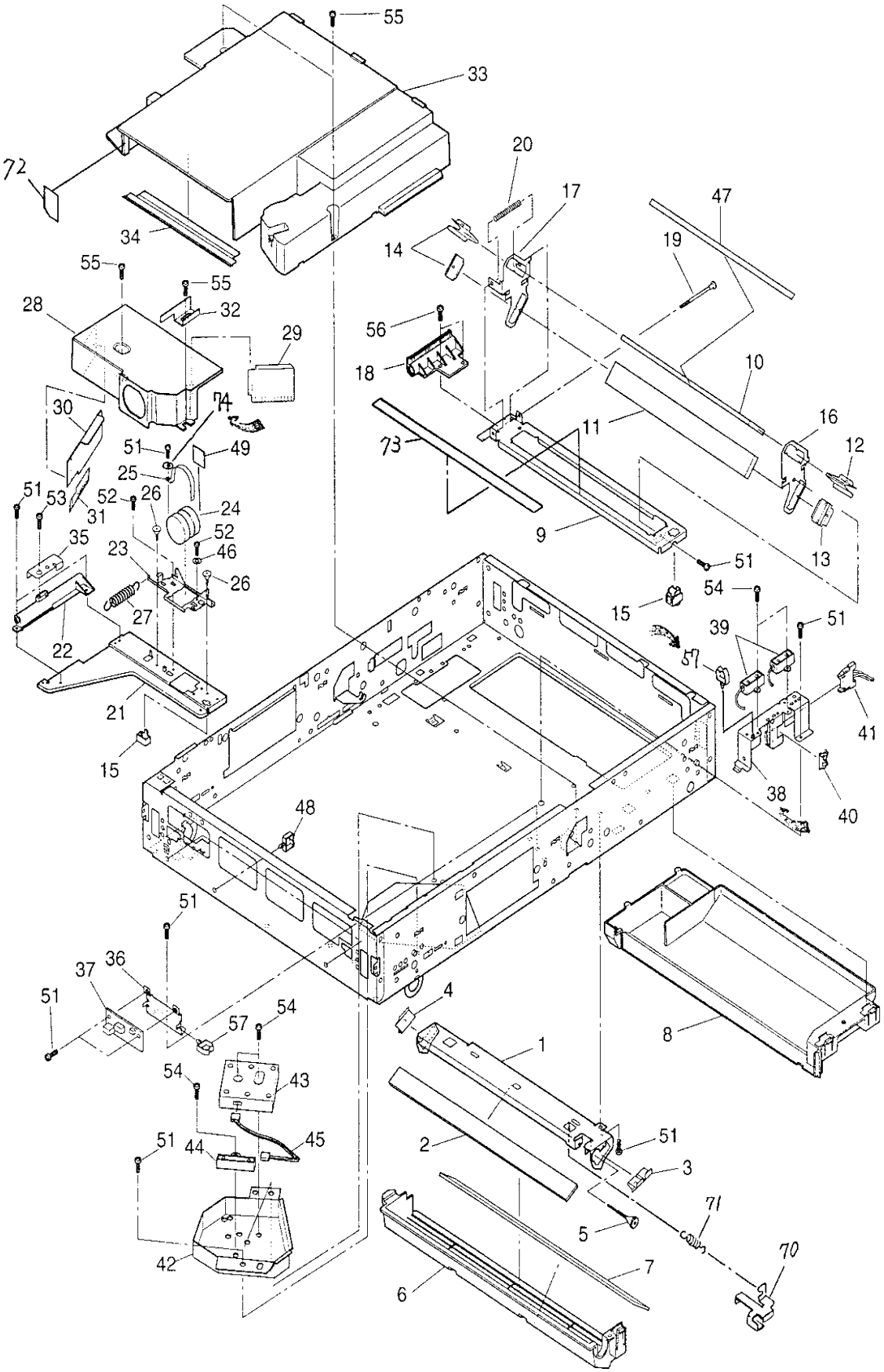
55
33
72
20
17
47
34
14
19
55
55
28
32
56
29
18
10
30
74
16
11
12
51
49
73
25
51
53
52
26
24
31
52
9
35
23
46
13
51
26
54
15
27
39
51
22
57
21
41
15
38
40
48
51
37
36
51
4
57
54
8
1
54
43
51
44
45
2
51
3
71
5
70
42
7
6

TOSHIBA

ITEM NO.	PARTS NO.	PARTS NAME	Q'TY / PAGE	Q'TY / PACK	SPE PRICE IN NONE	P	I	R	BSI NO.	TO	FROM	SERIAL NO.	REMARKS
1	4401 960730	BRKT-MIRROR-6	1	1/P						001 1			
1 1	4401 960680	BRKT-MIRROR-6	1	1/P		C	B	D	F97C869		001	SC7/RC7	
2	4401 960760	MIRROR-6-210	1	1/S									
3	4401 960740	SPL-MIRROR6-F	1	1/P									
4	4401 960750	SPL-MIRROR6-R	1	1/P									
5	4401 960720	SCREW-ADJ-MIR6	1	1/P									
6	4401 960780	COV-OPT-L-SLIT	1	1/PP									
7	4401 960790	GLASS-SLIT	1	1/S									
8	4401 960260	COVER-OPT-L	1	1/PP									
9	4401 961970	BASE-CRG3	1	1/P									
10	4401 962050	MIRROR-4-210	1	1/S									
11	4401 962060	MIRROR-5-210	1	1/S									
12	4401 962100	SPL-MIRROR4-F	1	1/P									
13	4401 962110	SPL-MIRROR5-F	1	1/P									
14	4401 962120	SPL-MIRROR4/5-R	2	1/P									
15	4401 961990	FOOT-CRG-L/M	2	5/P									
16	4401 962020	HLDR-MIR4/5-F	1	1/P									
17	4401 962030	HLDR-MIR4/5-R	1	1/P									
18	4401 961980	GUIDE-BASE-CRG3	1	1/P									
19	4401 962000	SCREW-ADJ-CRG3	1	1/P									
20	4401 962010	SPC-060-070-465	1	1/P									
21	4401 961500	K-BASE-LENS	1	1/P									
22	4401 961550	GUIDE-BASE-LENS	1	1/P									
23	4401 961540	PLATE-LENS	1	1/P									
24	4401 961570	LENS-185-7.0	1	1/C									
25	4401 961560	BAND-LENS	1	1/P									
26	4401 961600	SCREW-ADJ-LENS	2	1/P									
27	4363 270700	SPE-040-045-183	1	5/P									
28	4401 961510	COVER-LENS	1	1/PP									
29	4401 961580	MYLAR-LENS-S	1	5/C									
30	4401 961590	MYLAR-LENS-R	1	5/C									
31	4401 961610	MYLAR-LENS-R2	1	5/P									
32	4401 961620	PLT-COVER-LENS	1	1/P									
33	4401 960250	COVER-OPT--U	1	1/PP									
34	4401 960240	MYLAR-COV-OPT-U	1	1/KP									
35	4401 961280	STOP-BELT-LENS	1	1/P									
36	4401 962820	BRKT-AES	1	1/P									
37	4402 815110	PWA-F-AES-170	1	1/C									
38A	4401 962990	BKT-APS-2	1	1/P						038A1			2860,2870
38A1	4402 459540	BKT-APS-2	1	1/P		C	E	F	F98B188		038A	SL7/RL7	2860,2870
39A	4401 983030	SNSR-PS-TY1CHB	2	1/C									2860,2870
40A	4843 390941	BD/W-EDS-1	1	10/P									2860,2870
41A	4401 979240	WH-APS-210J	1	1/P									OTHERS
41B	4401 979260	WH-APS-210LT	1	1/P									NAD
42A	4401 962970	BKT-APS-4	1	1/P									2860,2870
43A	4401 983020	SNSR-PS-TY3CH	1	1/C									2860,2870
44A	4401 983040	SNSR-PS-TY1CH	1	1/C									EXCEPT NAD
45A	4401 979650	WH-APS-3B-210A4	1	1/P									OTHERS
45B	4401 979660	WH-APS-3B-210LT	1	1/P									NAD
46	4401 961630	WAS-PLATE-LENS	1	10/P									
47	4401 962130	MYLAR-MIRROR4	1	5/KP									
48	4843 391180	CLP/W-UAMS090	3	10/P									
49	4402 805950	FILTER-BLUE	1	1/C		F	-	J	F97C862				SERVICE ONLY
51A	4842 040370	TBID3006MSZN3L	8	50/P									2060
51B	4842 040370	TBID3006MSZN3L	11	50/P									2860,2870
52	7640 300851	ZPAN30*08MSZN3A	2	50/P									
53	4842 040846	PTBR30*08MSZN3A	1	50/P									
54A	7043 300613	BID30*06MSCR1AI	5	50/P									OTHERS
54B	7043 300613	BID30*06MSCR1AI	4	50/P									NAD
55	4842 040690	TZPAN3006MSZN3L	4	50/P									
56	4842 040481	THPAN3008MSZN3L	2	50/P									
57	4843 391177	CLP/W-UAMS05S	1	5/P						057 1			
57 1	4843 391177	CLP/W-UAMS05S	2	5/P		D	D	F	F98B188		057	SL7/RL7	
70	4401 960170	BRKT-MIR6-F	1	1/P		A	B	D	F97C869			SC7/RC7	
71	4401 960690	SPE-050-060-235	1	5/P		A	B	D	F97C869	071 1		SC7/RC7	
71 1	4401 960670	SPE-050-045-197	1	5/P		C	B	E	F97H976		071	SG7/RG7	
72	4401 960280	MYLAR-COV-OPT-R	1	5/P		A	B	E	F97D891			SB7/RB7	
73	4401 962140	MYLAR-CRG3	1	1/KP		A	B	E	F97D891			SB7/RB7	
74	4401 961650	WAS030SUS-T08	1	10/P		A	B	E	F98B188			SK7/RK7	

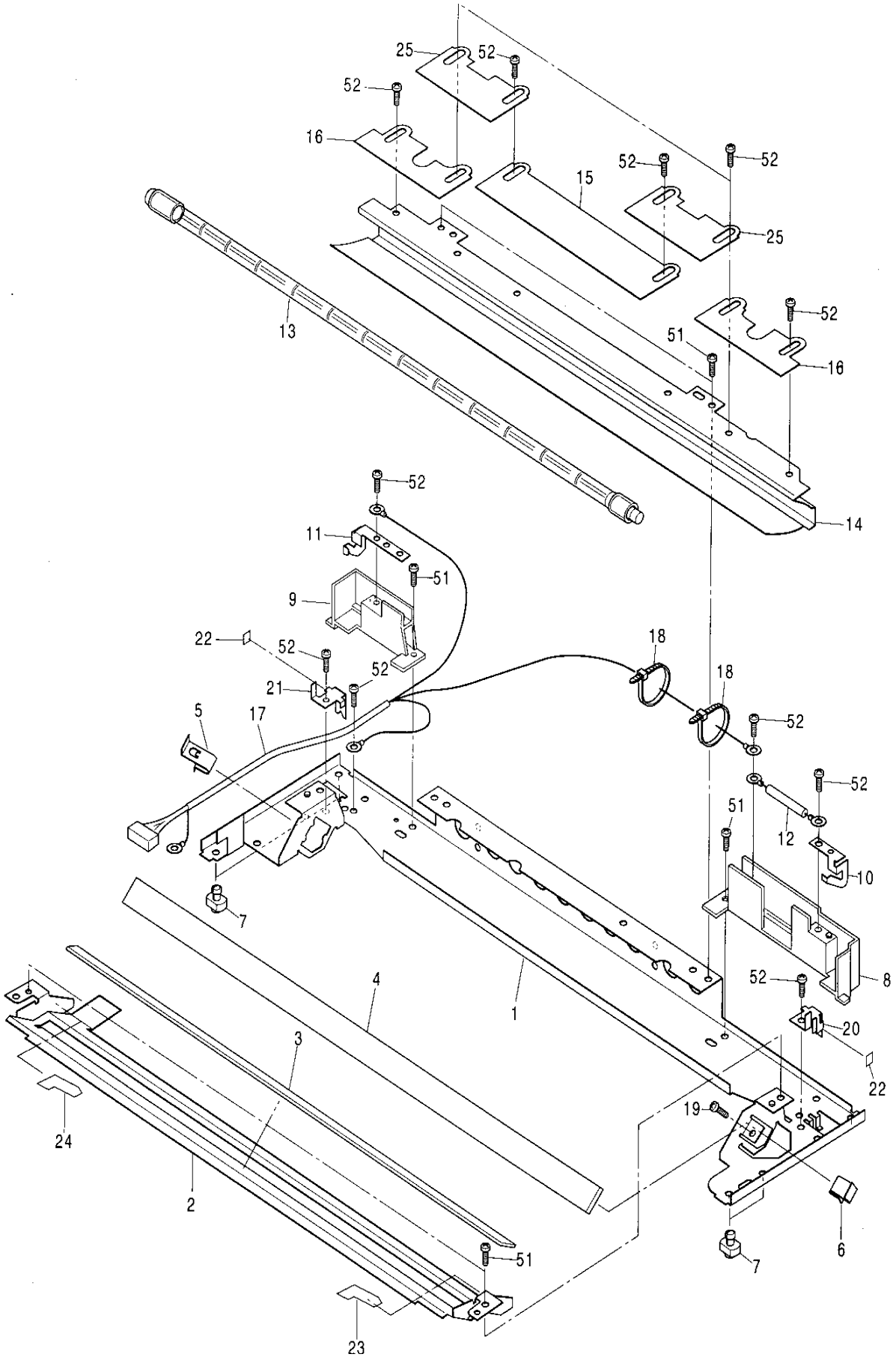
25
52
52
16
52
52
15
25
13
52
51
16
14
52
11
51
9
22
52
52
21
18
18
5
17
52
51
52
12
10
7
4
1
52
8
20
3
22
19
24
2
6
51
7
23

ITEM NO.	PARTS NO.	PARTS NAME	Q'TY / PAGE	Q'TY / PACK	SPE PRICE IN NONE	P	I	R	BSI NO.	TO	FROM	SERIAL NO.	REMARKS
1	4401 962610	BASE-CRG1	1	1/P									
2	4401 962630	F-STAY-CRG1	1	1/P						002 1			
2 1	4402 458860	F-STAY-CRG1	1	1/P		C	E	F	F98B188		002	SK7/RK7	
3	4401 962690	TAPE-REF-SUB	1	5/KP									
4	4401 962660	MIRROR-1-210	1	1/S									
5	4401 962750	SPL-MIRROR1-R	1	1/P									
6	4401 962740	SPL-MIRROR1-F	1	1/P									
7	4400 802090	FOOT-CRG	4	5/P									
8	4401 962770	K-HLDR-BLADE-F	1	1/P									
9	4401 962760	K-HLDR-BLADE-R	1	1/P									
10	4401 962710	BLADE-LAMP-EXPF	1	1/P									
11	4401 962700	BLADE-LAMP-EXPR	1	1/P									
12	4401 984200	K-FU/T-EXPO-210	1	1/D						012 1			
12 1	4401 984240	K-FU/T-EXPO-210	1	1/D		C	E	H	F97D891		012		
13A	4401 981120	LP-U300W210	1	1/S									100V SERIES
13B	4401 981130	LP-E300W210	1	1/S									200V SERIES
14	4401 962650	REFLECTOR	1	1/PP									
15	4401 962560	PLT-ADJ-EXPO-C1	1	1/P									
16	4401 962680	PLT-ADJ-EXPO-FR	2	1/P									
17	4401 980640	WH-EXPO-210	1	1/P									
18	4346 754010	SKB-BAND-1	2	5/P									
19	4401 962790	SCREW-MIR-M3-10	1	10/P						019 1			
19 1	4402 458930	SCREW-M3-10-213	1	10/P		C	E	J	F98B201		019	SK7/RK7	
20	4401 960960	BKT-STOP-WIRE-F	1	1/P									
21	4401 960970	BKT-STOP-WIRE-R	1	1/P									
22	4401 960950	SHEET-BKT-STOP	2	5/P						022 1			
22 1	4401 961170	SHEET-BKT-STOP	2	5/P		C	E	E	F97D891	022 2	022		
22 2	4401 960950	SHEET-BRKT-STOP	2	5/P		C	E	E	F97H976		022 1	SE7/RE7	
23	4401 962580	TAPE-REF-SIDE-F	1	1/P									
24	4401 962590	TAPE-REF-SIDE-R	1	1/P									
25	4401 962570	PLT-ADJ-EXPO-C2	2	1/P									
51	4842 040370	TBID3006MSZN3L	7	50/P									
52	7043 300613	BID30*06MSCR1AI	9	50/P									

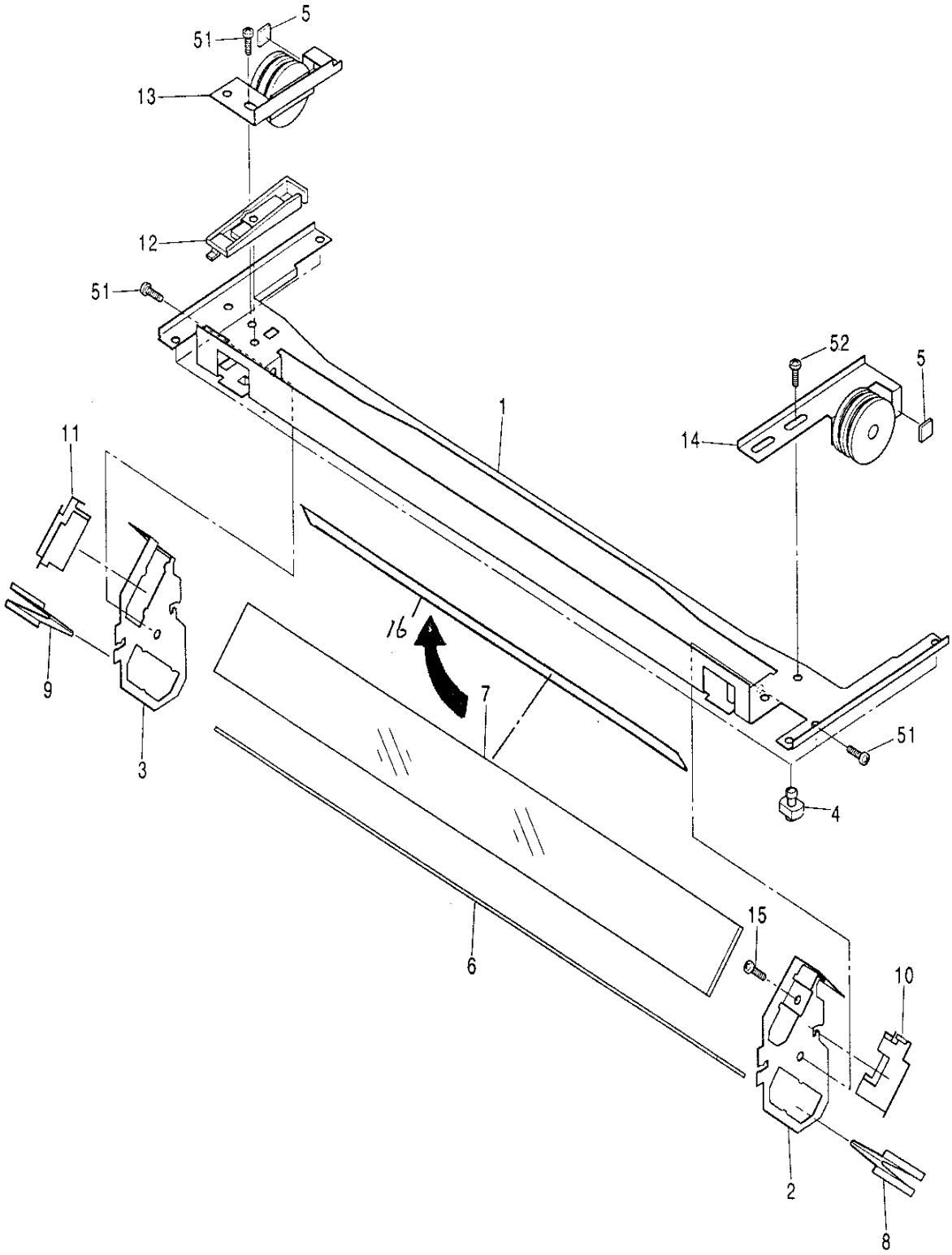

TOSHIBA

ITEM NO.	PARTS NO.	PARTS NAME	Q'TY / PAGE	Q'TY / PACK	SPE PRICE IN NONE	P	I	R	BSI NO.	TO	FROM	SERIAL NO.	REMARKS
1	4401 962300	BASE-CRG2	1	1/P									
2	4401 962320	HLDR-MIR2/3-F	1	1/P									
3	4401 962330	HLDR-MIR2/3-R	1	1/P									
4	4400 802090	FOOT-CRG	4	5/P									
5	4401 960950	SHEET-BKT-STOP	2	5/P						005 1			
5 1	4401 961170	SHEET-BKT-STOP	2	5/P		C	E	E	F97D891	005 2	005		
5 2	4401 960950	SHEET-BRKT-STOP	2	5/P		C	E	E	F97H976		005 1	SE7/RE7	
6	4401 962360	MIRROR-3-210	1	1/C									
7	4401 962350	MIRROR-2-210	1	1/S									
8	4401 962430	SPL-MIRROR3-F	1	1/P									
9	4401 962440	SPL-MIRROR3-R	1	1/P									
10	4401 962410	SPL-MIRROR2-F	1	1/P									
11	4401 962420	SPL-MIRROR2-R	1	1/P									
12	4401 962390	GUIDE-CABLE	1	1/P									
13	4401 962280	K-BKT-CRG2R	1	1/P									
14	4401 962260	K-BKT-CRG2F	1	1/P									
15	4401 962790	SCREW-MIR-M3-10	1	10/P						015 1			
15 1	4402 458930	SCREW-M3-10-213	1	10/P		C	E	J	F98B201		015	SK7/RK7	
16	4401 962380	MYLAR-MIRROR2	1	5/KP		A	B	E	F97D891				
51	4842 040370	TBID3006MSZN3L	3	50/P									
52	7043 300613	BID30*06MSCR1AI	1	50/P									

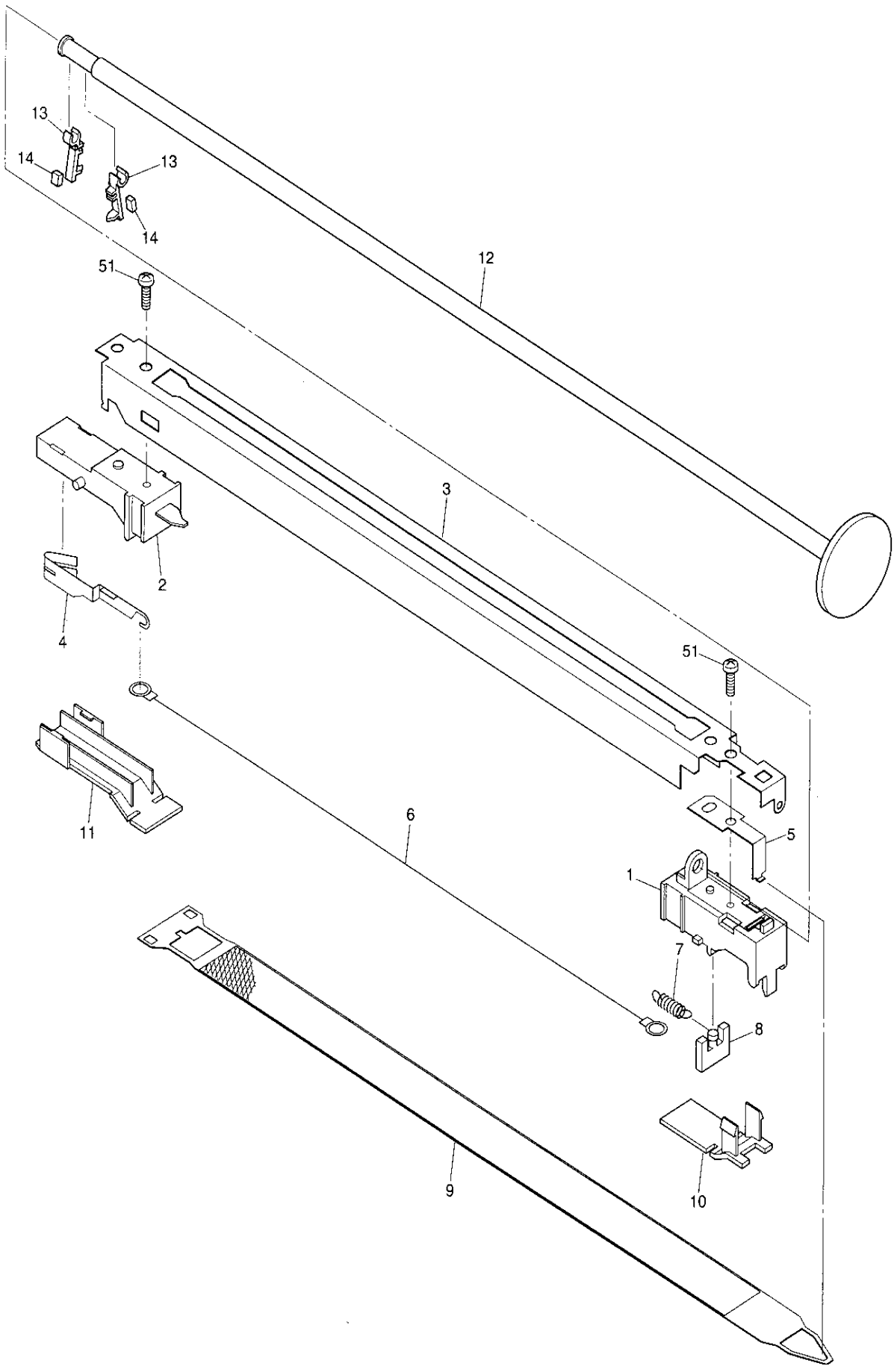

TOSHIBA

ITEM NO.	PARTS NO.	PARTS NAME	Q'TY / PAGE	Q'TY / PACK	SPE PRICE IN NONE	P	I	R	BSI NO.	TO	FROM	SERIAL NO.	REMARKS
0	4401 946600	ASM-CHARGER-M	1	1/S									
1	4401 946700	TERM-CH-M-F	1	1/P									
2	4401 946730	TERM-CH-M-R	1	1/P									
3	4401 946900	CASE-CH-M	1	1/P									
4	4401 946870	SP030-S304-15	1	1/P									
5	4401 946970	SPL-030-S631-F	1	1/P									
6	4400 674790	WIRE-CH-060*353	1	5/S									
7	4407 402190	SPRING-TENS-CH	1	5/P									
8	4407 682120	HANGER-WIRE	1	1/P									
9	4401 946950	GRID-210	1	1/KP									
10	4401 946800	LID-CH-M-F	1	1/P									
11	4401 946830	LID-CH-M-R	1	1/P									
12	4401 946890	SFT-WIRE-CH-M	1	1/P									
13	4400 674540	HLDR-PAD-WIRE-M	2	1/P									
14	4400 674850	PAD-CLN-WIRE	2	5/P									
15	4401 946910	BRKT-BIAS-GRID	1	1/P									
51	4842 040495	PTBR30*06MSZN3A	2	50/P									

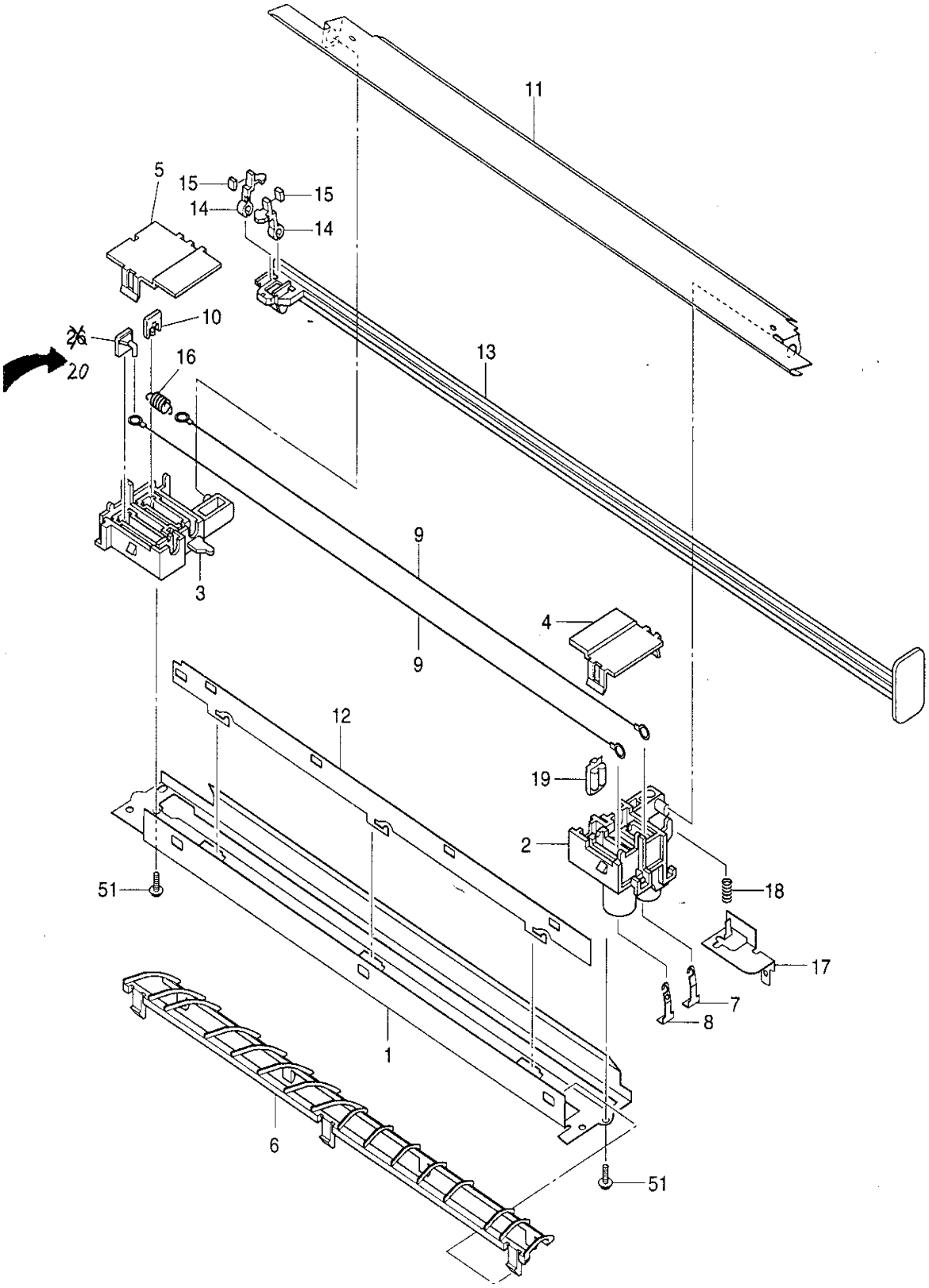

TOSHIBA

ITEM NO.	PARTS NO.	PARTS NAME	Q'TY / PAGE	Q'TY / PACK	SPE PRICE IN NONE	P	I	R	BSI NO.	TO	FROM	SERIAL NO.	REMARKS
0	4401 947000	ASM-CH-TR	1	1/S									
1	4401 947120	CASE-CH-TR	1	1/P									
2	4401 947100	TERMINAL-TR-F	1	1/P									
3	4401 947110	TERMINAL-TR-R	1	1/P									
4	4401 947150	LID-TR-F	1	1/P									
5	4401 947160	LIR-TR-R	1	1/P									
6	4400 915340	SUPPORTER-176	1	1/P									
7	4402 214540	HANGER-WIRE	1	1/P									
8	4402 809090	HANGER-WIRE-170	1	1/P									
9	4400 674790	WIRE-CH-060*353	2	5/S									
10	4401 764730	HANGER-WIRE-TR	1	1/P									
11	4401 947130	GUIDE-CH-TR	1	1/P									
12	4401 947140	PLT-CH-TR	1	1/P									
13	4401 947180	ROD-WIRE-CLN-TR	1	1/P									
14	4401 947200	HLDR-PAD-TR	2	5/P									
15	4401 947220	PAD-CLN-WIRE-C2	2	5/P									
16	4407 402190	SPRING-TENS-CH	1	5/P									
17	4401 947250	BRKT-GUIDE-BIAS	1	1/P									
18	4401 947280	SPC-048-050-011	1	5/P									
19	4400 768240	SPL-CH-F	1	5/P									
20	4400 768230	HANGER-WIRE-H	1	1/P									
51	4842 040846	PTBR30*08MSZN3A	3	50/P									

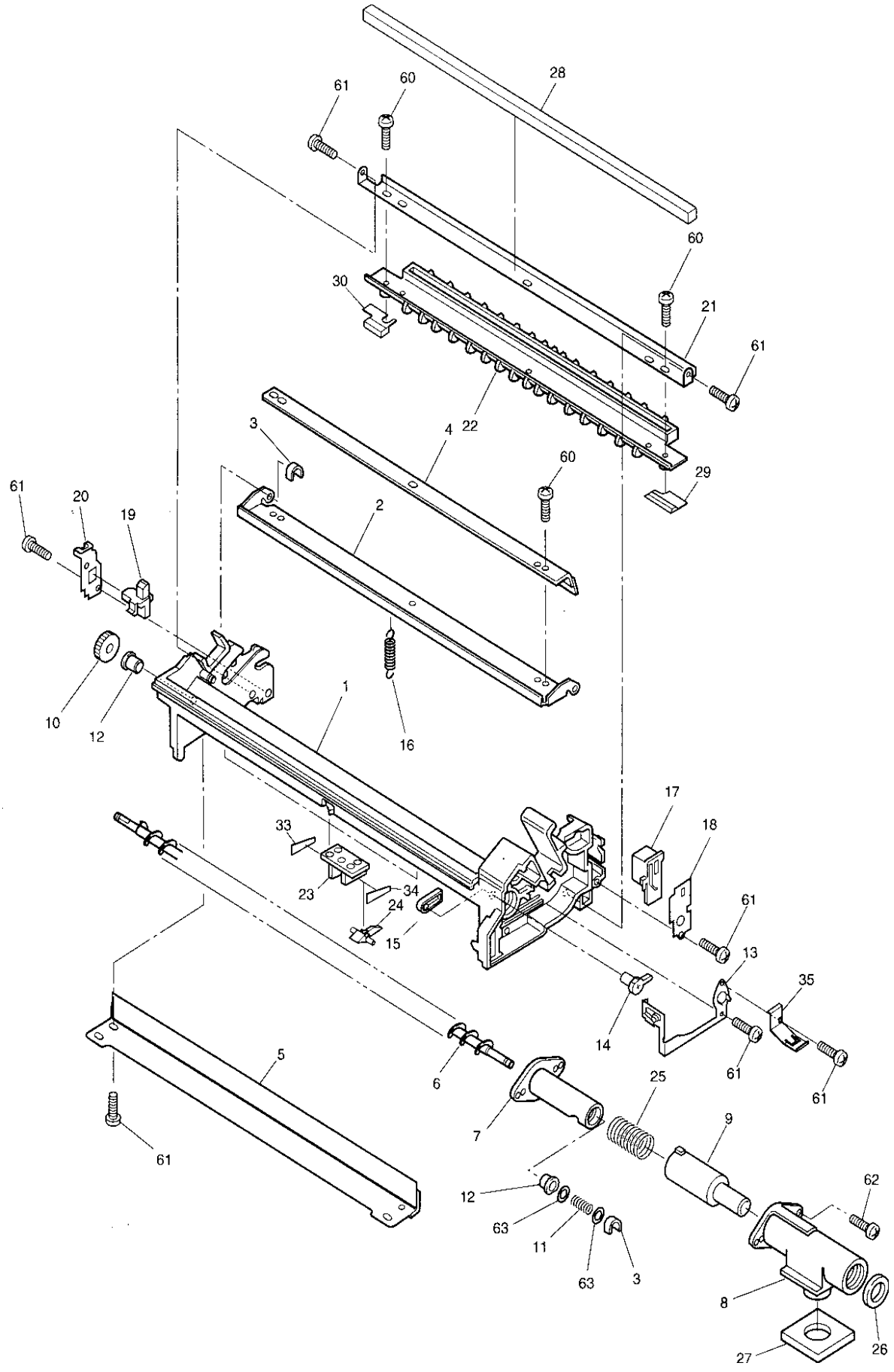
28
61
60
60
30
21
61
22
4
3
60
29
61
20
19
2
10
12
1
16
17
18
33
23
34
24
15
61
13
35
14
61
61
5
6
25
7
9
61
12
62
63
11
63
3
8
27
26

ITEM NO.	PARTS NO.	PARTS NAME	Q'TY / PAGE	Q'TY / PACK	SPE PRICE IN NONE	P	I	R	BSI NO.	TO	FROM	SERIAL NO.	REMARKS
1	4401 953050	K-CASING-CLN	1	1/C						001 1			
1 1	4401 953060	K-CASING-CLN	1	1/C		C	B	E	F97D891		001	SB7/RB7	
2	4401 953400	BKT-BLADE-CLN	1	1/P									
3	4401 953270	STOP-RING-4	2	5/P									
4	4409 890630	BL-2060D	1	10/S									
5	4401 953350	K-BLADE-REC-210	1	1/C									
6	4401 953280	K-AUGER-CLN-210	1	1/P									
7	4401 953230	NOZZLE-CLN-IN	1	1/P									
8	4401 953220	NOZZLE-CLN-OUT	1	1/P									
9	4402 215180	PUSHER-NOZZLE	1	1/P									
10	4401 953290	GEAR-08H023-04	1	1/P									
11	4407 682390	SPC-AUG	1	5/P									
12	4407 683340	BUSH-4	2	5/P									
13	4401 953150	EARTH-SFT-DRM	1	1/C									
14	4401 953460	SFT-CAM-BLADE	1	1/P									
15	4401 953470	CAM-BLADE	1	1/P									
16	4401 953420	SPE-060-045-191	1	5/P									
17	4401 953510	LEVER-COMP-MG-F	1	1/P									
18	4401 953540	PLT-CL-LEVER-F	1	1/P									
19	4401 953520	LEVER-COMP-MG-R	1	1/P									
20	4401 953550	PLT-CL-LEVER-R	1	1/P									
21	4401 953160	BRT-GUARD-DRUM	1	1/P									
22	4401 953170	GUIDE-PAPER-CLN	1	1/PP									
23	4401 953430	HLDR-SCRP-DRUM	3	1/P									
24	4402 085100	K-CLAW-DRUM-190	3	1/D									
25	4402 215200	SPC-1.0*24	1	5/P									
26	4402 215400	SEAL-CLN-NOZZLE	1	5/P									
27	4402 215220	SEAL-CL-NOZZLE	1	1/P									
28	4401 953600	SEAL-GUARD-DRUM	1	5/KP									
29	4401 953610	SEAL-CLN-F	1	5/P									
30	4401 953620	SEAL-CLN-R	1	5/P									
33	4401 953440	MYLAR-SCRAPER-F	3	5/P									
34	4401 953450	MYLAR-SCRAPER-R	3	5/P									
35	4401 954000	STP-SFT-DRUM	1	1/P									
60	7640 300651	ZPAN30*06MSZN3A	2	50/P									
61	4842 040495	PTBR30*06MSZN3A	14	50/P									
62	4842 040847	PTBR30*10MSZN3A	2	50/P									
63	7400 104011	1HWAS040MSZN3A	2	50/P									

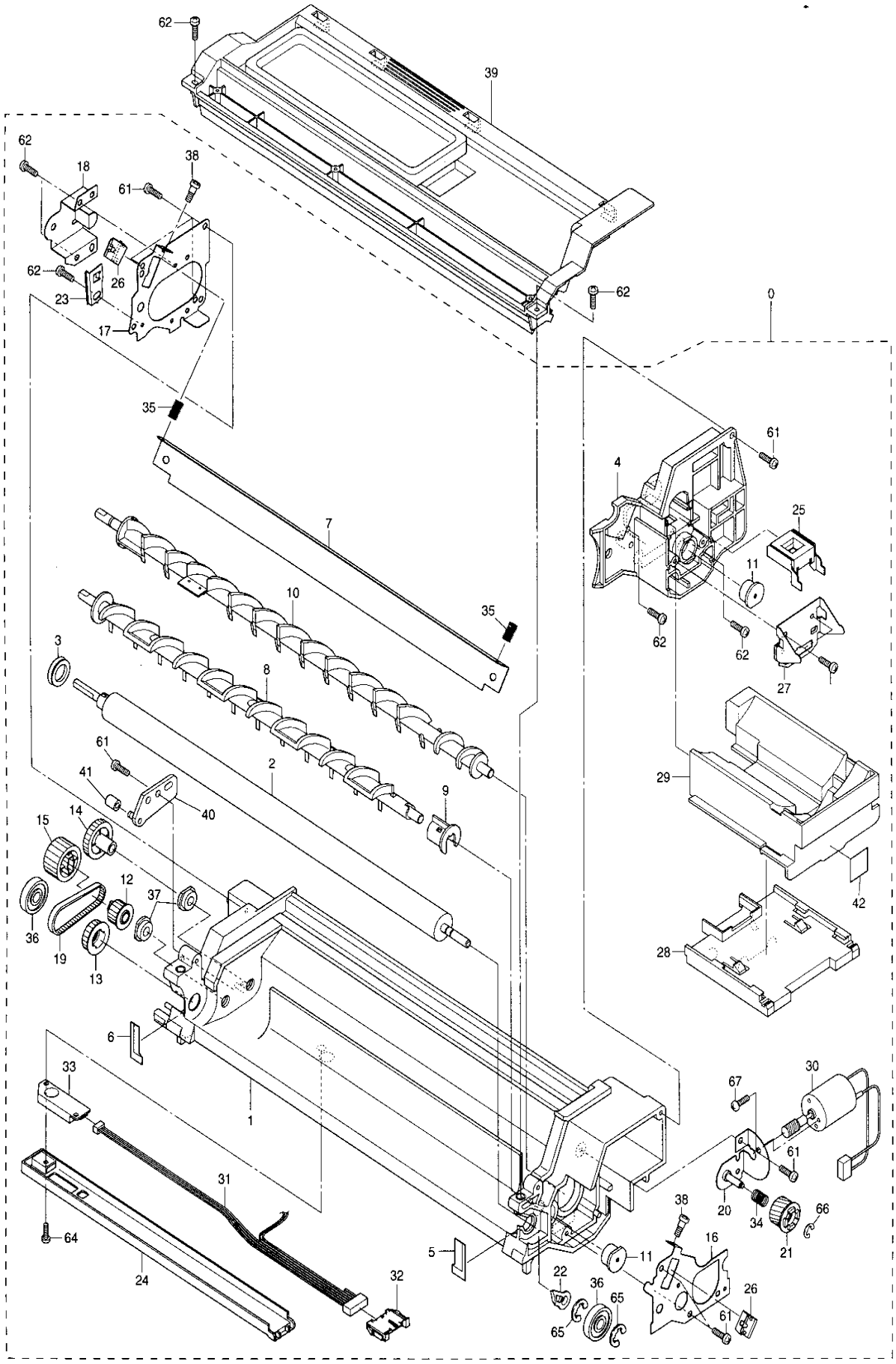
62
39
62
18
38
61
62
26
23
17
62
0
35
61
4
25
7
11
10
35
62
62
3
27
8
61
2
29
41
40
9
15
14
12
37
42
36
19
13
28
6
33
30
67
1
61
31
38
20
34
66
64
16
21
5
11
24
22
36
26
32
65
61
65

TOSHIBA

ITEM NO.	PARTS NO.	PARTS NAME	Q'TY / PAGE	Q'TY / PACK	SPE PRICE IN NONE	P	I	R	BSI NO.	TO	FROM	SERIAL NO.	REMARKS
0A	4401 949050	ASM-DEVELOPER-U	1	1/C									OTHERS
0B	4401 949060	ASM-DEVELOPER-E	1	1/C									MJD,MFD
1	4401 949090	K-CASE-DEV-210	1	N/A***									
2	4401 950200	ROLL-MG-210-R	1	1/KP						002 1			
2 1	4401 950350	ROLL-MG-210-R	1	1/KP		C	E	E	F97D891		002	SC7/RC7	
3	4401 950220	V-RING-MG-210	1	1/P									
4	4401 949190	K-NOZZLE-DEV	1	1/P									
5	4401 949110	SEAL-SIDE-DEV-F	1	5/P									
6	4401 949120	SEAL-SIDE-DEV-R	1	5/P									
7	4401 950100	K-DOCTOR-210	1	1/P									
8	4401 949220	MIXER-1-210	1	1/P									
9	4401 949230	SPACER-MIXER	1	1/P									
10	4401 949240	K-MIXER-2-210	1	1/C									
11	4401 949270	K-BUSH-0613*70	2	1/P									
12	4401 949760	PLY/T-2GT24F06	1	1/P									
13	4401 949770	PLY/T-2GT27F11	1	1/P									
14	4401 949430	GR-10H24-5-06	1	1/P									
15	4401 949440	GR-10H24-13-06	1	1/P									
16	4401 949450	BRKT-DEV-F	1	1/P									
17	4401 949460	BRKT-DEV-R	1	1/P									
18	4401 949470	K-BRKT-DEV-R-2	1	1/P									
19	4401 949510	BLT/T-2GT048-35	1	1/P									
20	4401 949540	K-BKT-TNR-MOT	1	1/P									
21A	4401 949730	WHEEL-Z32-C2-U	1	1/P									OTHERS
21B	4401 949580	WHEEL-Z32-C2-E	1	1/P									MJD,MFD
22	4401 949600	BUSH-DEV-210	1	1/P									
23	4401 949610	ADJUSTER-MG-210	1	1/P									
24	4401 949640	COV-DEV-ATC	1	1/P									
25	4401 949650	K-SEAL-TNR-EXIT	1	1/P									
26	4401 949700	SPL025-S631-DC2	2	1/P									
27	4401 949790	K-BRKT-HLD-TNR	1	1/P									
28	4401 949810	HOLDER-TNR-L	1	1/P									
29A	4401 949820	HOLDER-TNR-U-U	1	1/PP									OTHERS
29B	4401 949830	HOLDER-TNR-U-E	1	1/PP									MJD,MFD
30	4401 981700	K-M/DC-TNR-210	1	1/C									
31	4401 979130	WH-DEV-UNIT-210	1	1/P									
32	4843 308027	J53358-0810	1	10/P									
33	4401 983140	SNR-ATC-210	1	1/C									
34	4400 341490	SPG-045-9	1	5/P									
35	4400 672520	SPC060-065-0130	2	1/P									
36	4401 950240	ROLL-GUIDE-210	2	1/P									
37	4407 728150	BUSH-6-GCB	2	5/P									
38	4400 672800	SCREW-DOCTOR	2	10/P									
39	4401 949300	K-COV-DEV-210	1	1/S									
40	4401 950880	K-BKT-DEV-TENS	1	1/P									
41	4401 950980	COLLAR-DEV-TENS	1	5/P									
42	4401 950020	LBL-DEV-TNR	1	5/P									
61	4842 040846	PTBR30*08MSZN3A	9	50/P									
62	7043 300613	BID30*06MSCR1AI	5	50/P									
64	7043 300664	BID30*06BSCR3CI	1	50/P									
65	7405 005031	ERR050SKZN3A	2	50/P									
66	7405 002031	ERR020SKZN3A	1	50/P									
67	7040 300411	PAN30*04MSZN3AI	2	50/P						067 1			
67 1	7040 300311	PAN30*03MSZN3AI	2	50/P		C	B	E	F97H976		067	SE7/RE7	

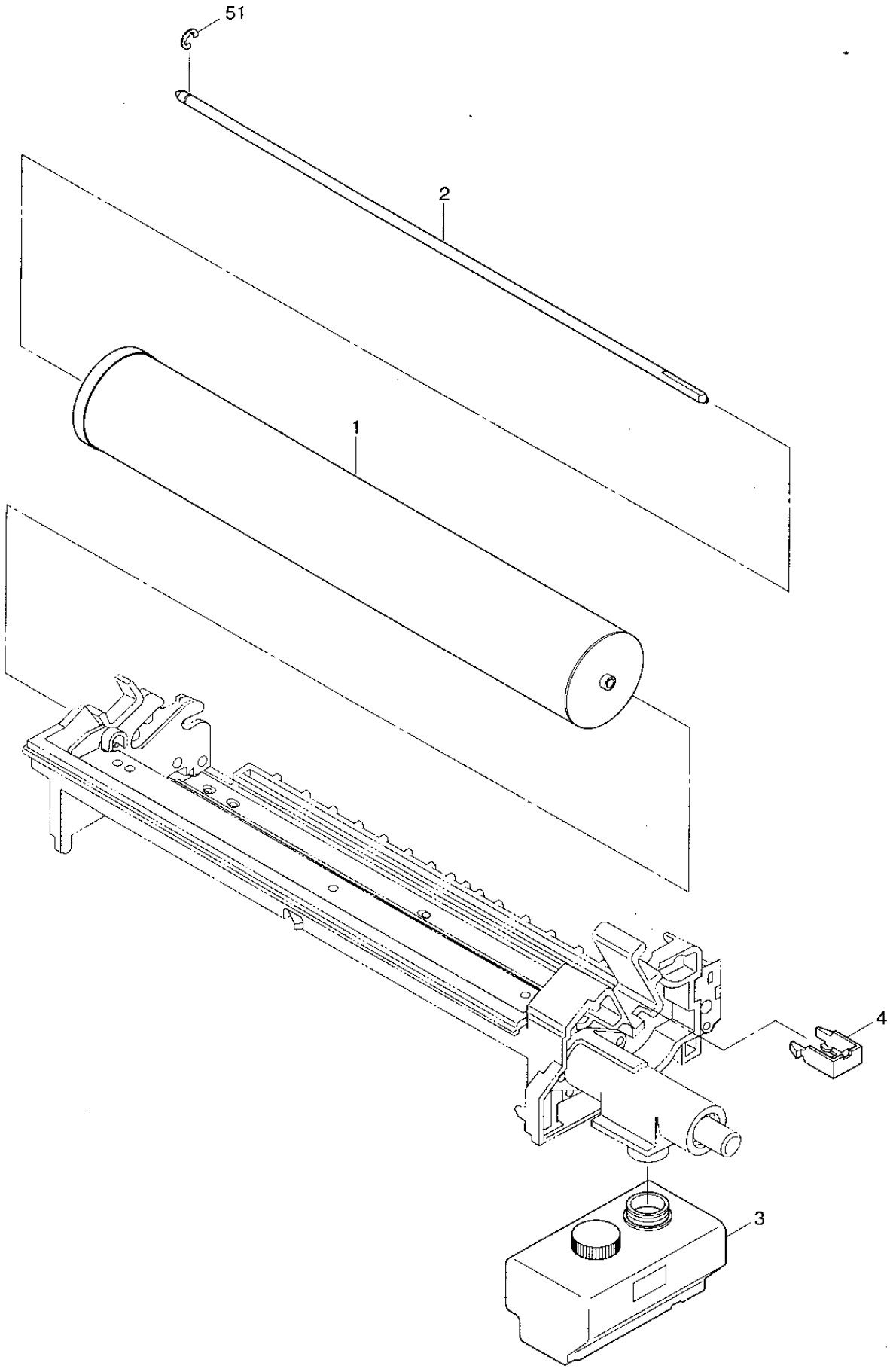
51
2
1
4
3

ITEM NO.	PARTS NO.	PARTS NAME	Q'TY / PAGE	Q'TY / PACK	SPE PRICE IN NONE	P	I	R	BSI NO.	TO	FROM	SERIAL NO.	REMARKS
1	6608 4979	PS-OD2060	1	SUPPLY									
2	4401 953180	SHAFT-DRUM	1	1/P									
3A	6608 9010	PS-TB2060E	1	SUPPLY									EUR
3B	6608 9009	PS-TB2060	1	SUPPLY									OTHERS
4	4401 946760	HLDR-TERM-CH-M	1	1/P									
51	7405 007031	ERR070SKZN3A	1	50/P									

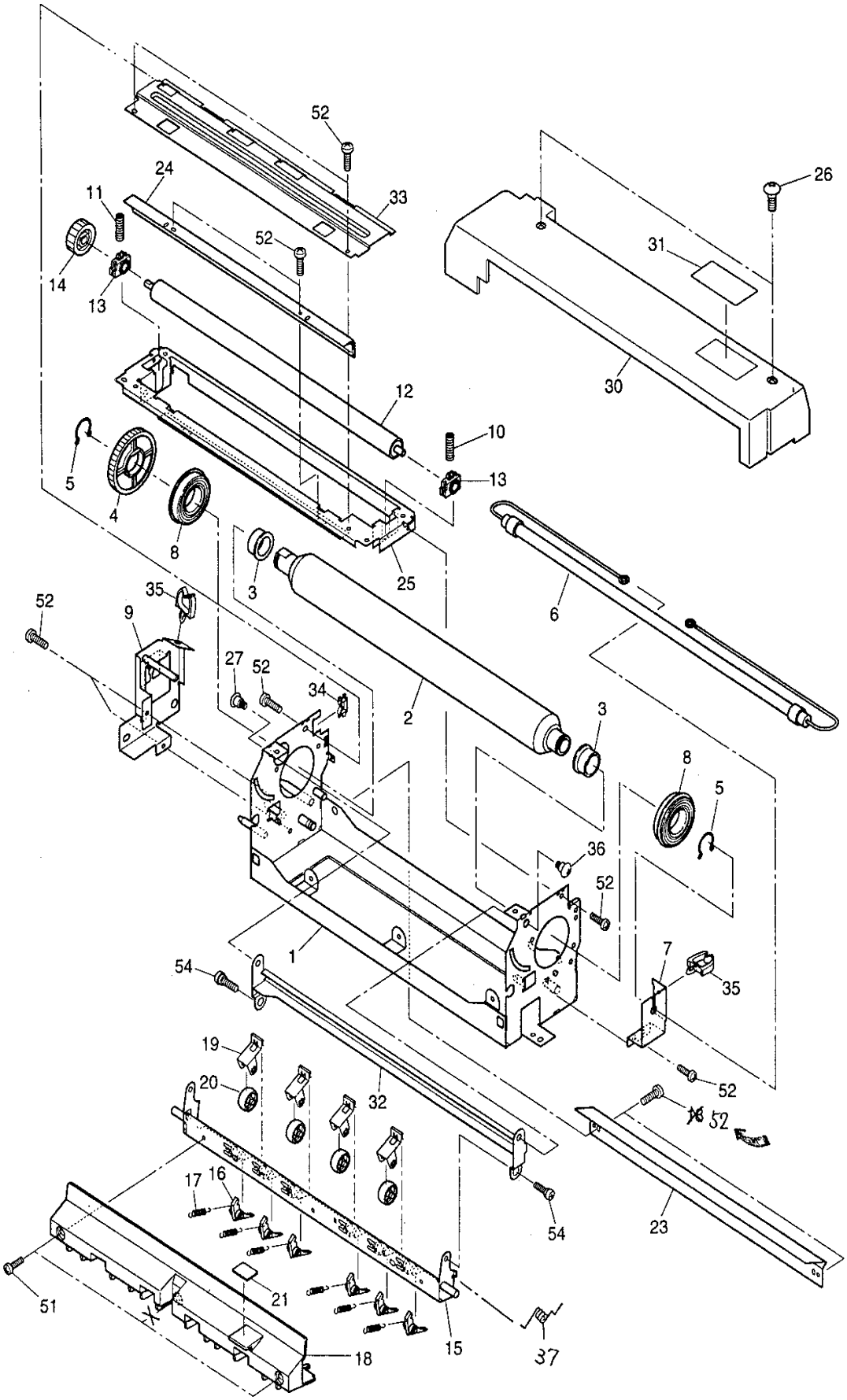
52
24
11
33
52
14
13
26
31
30
12
10
13
5
4
8
25
3
6
35
52
9
27
52
34
2
3
8
5
36
52
1
54
7
35
19
20
32
52
52
16
17
54
23
21
51
18
15
37

TOSHIBA

ITEM NO.	PARTS NO.	PARTS NAME	Q'TY / PAGE	Q'TY / PACK	SPE PRICE IN NONE	P	I	R	BSI NO.	TO	FROM	SERIAL NO.	REMARKS
1	4401 952300	K-FRAME-FUS-210	1	N/A***									
2	4409 890600	HR-2060-U	1	1/S									
3	4401 951870	BUSH-2025*125FM	2	1/P									
4	4401 951890	GR-10S56-75-20	1	1/P									
5	4401 951880	RING-STOP-HR	2	5/P						005 1			
5 1	4401 951850	RING-STOP-HR-S	2	5/P		C	E	E	F97D891		005	SC7/RC7	
6A	4401 981380	HTR-U900W-210	1	1/S									100V SERIES
6B	4401 981390	HTR-E1030W-210	1	1/S									200V SERIES
7	4401 951860	BRKT-HLDR-LP-F	1	1/P									
8	4407 548060	BRG-6005ZZ-HR	2	1/P									
9	4401 951910	K-BKT-HLDR-LP-R	1	1/P									
10	4401 951730	SPC065-065-0183	1	5/P									
11	4401 951720	SPC065-075-0183	1	5/P									
12	4409 890620	SR-2060H	1	1/S									
13	4401 951640	BUSH-061*100-M	2	5/P									
14	4401 951650	GR-10S22-70-06	1	1/P									
15	4401 952020	K-BRKT-SCRAP	1	1/P									
16	4401 952060	SCRAPER-210	6	6/P									
17	4401 952100	SPC040-002-0093	6	5/P									
18	4401 952040	COVER-SCRAPER	1	1/PP						018 1			
18 1	4401 952070	COVER-SCRAPER	1	1/PP		C	B	D	F97I032		018		
19	4401 952140	SPL-EXIT-ROL	4	1/P									
20	4400 832980	IDLE-EXIT-18R	4	5/P									
21	4401 952150	SHEET-FUS-210	1	5/P									
23	4401 952280	GUIDE-FU-ENT-L	1	1/P									
24	4402 039580	BLADE-HR-F	1	1/S									
25	4401 951950	FRAME-FUS-CLN	1	1/P									
26	4401 776960	SCREW-SEP-ADD	1	10/P						026 1			
26 1	7043 400813	BID40*08MSCR1AI	2	50/P		C	B	E	F98D264		026	SD8/RD8	
27	4400 805170	SCREW-LOOK-ARM	1	5/P									
30	4401 951680	COVER-FUSER	1	1/PP						030 1			
30 1	4401 951740	COVER-FUSER	1	1/PP		C	B	D	F97I032		030		
31	4400 668830	LBL-HOT-140	1	5/P									
32	4401 952170	BRKT-LINK-SCR	1	1/P									
33	4401 951690	STAY-CLN	1	1/P									
34	4843 390941	BD/W-EDS-1	1	10/P									
35	4843 391499	CLP/W-UAMS05L46	2	10/P									
36	4401 776960	SCREW-SEP-ADD	1	10/P									
37	4401 952560	SPA-FUS-SCR	1	1/P		C	B	D	F97I032				
51	4402 088600	SCREW-M3-TENS	3	50/P						051 1			
51 1	4402 088600	SCREW-M3-TENS	2	50/P		D	-	D	F97I032		051		
52	4842 040370	TBID3006MSZN3L	11	50/P									
53	7043 300613	BID30*06MACR1AI	2	50/P									
54	4400 325930	PIN-BKT-CON-H	2	10/P									

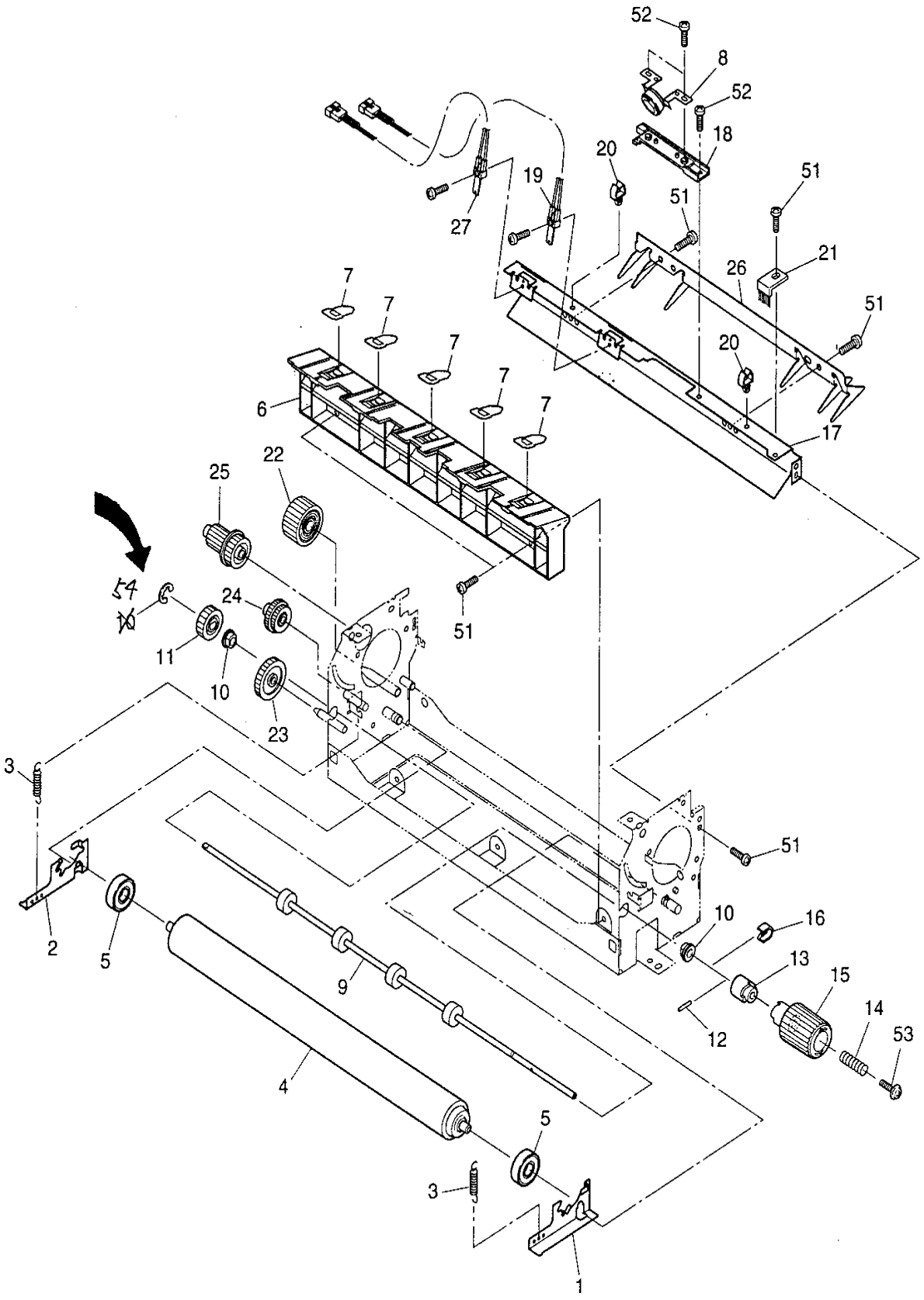
52
8
52
18
20
19
27
51
51
21
26
7
7
7
7
7
6
20
51
17
22
25
54
24
11
10
23
51
3
2
5
9
4
5
3
1
51
10
16
13
15
14
12
53

TOSHIBA

ITEM NO.	PARTS NO.	PARTS NAME	Q'TY / PAGE	Q'TY / PACK	SPE PRICE IN NONE	P	I	R	BSI NO.	TO	FROM	SERIAL NO.	REMARKS
1	4401 952260	BRKT-ARM-PRS-F	1	1/P									
2	4401 952270	BRKT-ARM-PRS-R	1	1/P									
3	4401 952230	SPE090-014-0295	2	5/P									
4	4409 890610	HR-2060-L	1	1/S									
5	4401 952220	BRG-608ZZ-LY13	2	1/P									
6	4401 952500	GUIDE-EXIT-L	1	1/PP									
7	4401 952540	SCRPR-ROL-PRESS	5	5/P									
8	4401 981110	K-THERMO-210	1	1/C									
9	4401 952410	K-ROLLER-EXIT	1	1/KP									
10	4400 802070	BUSH-6L	2	5/P									
11	4401 952450	GR-10S20-70-06	1	1/P									
12	7432 201011	HPIN20/10MSZN3A	1	50/P									
13	4401 952430	CLUTCH-HDL-FUS	1	1/P									
14	4401 952440	SPC-090-100-150	1	5/P									
15	4401 952420	HANDLE-FUS-210	1	1/P									
16	4407 972860	STOP-RING-6-5	1	5/P									
17	4401 951900	BRKT-THMS	1	1/P									
18	4401 951940	HOLDER-THERM	1	1/P									
19	4401 981660	THMS-HTR-210	1	1/C									
20	4843 391499	CLP/W-UAMS05L46	2	10/P									
21	4401 952720	BRUSH-FUSER	1	1/C						021 1			
21 1	4401 952790	BRUSH-FUSER	1	1/P		C	E	H	F97L126		021	SG7/RG7	
22	4401 952330	K-GR-10S35-06	1	1/P									
23	4401 952350	GR-10S30-50-06	1	1/P									
24	4401 952360	G10S-18/G10S-24	1	1/P									
25	4401 951660	G10S-23/G10S-15	1	1/P									
26	4401 952770	K-GUIDE-ENT-SUB	1	1/P									
27	4401 981740	THMS-HTRSUB-210	1	1/C									
51	4842 040370	TBID3006MSZN3L	8	50/P									
52	7043 300613	BID30*06MACR1AI	4	50/P									
53	7640 400851	ZPAN40*08MSZN3A	1	50/P									
54	7405 040031	ERR040SKZN3A	1	50/P		A	B	E	F97H976			SG7/RG7	

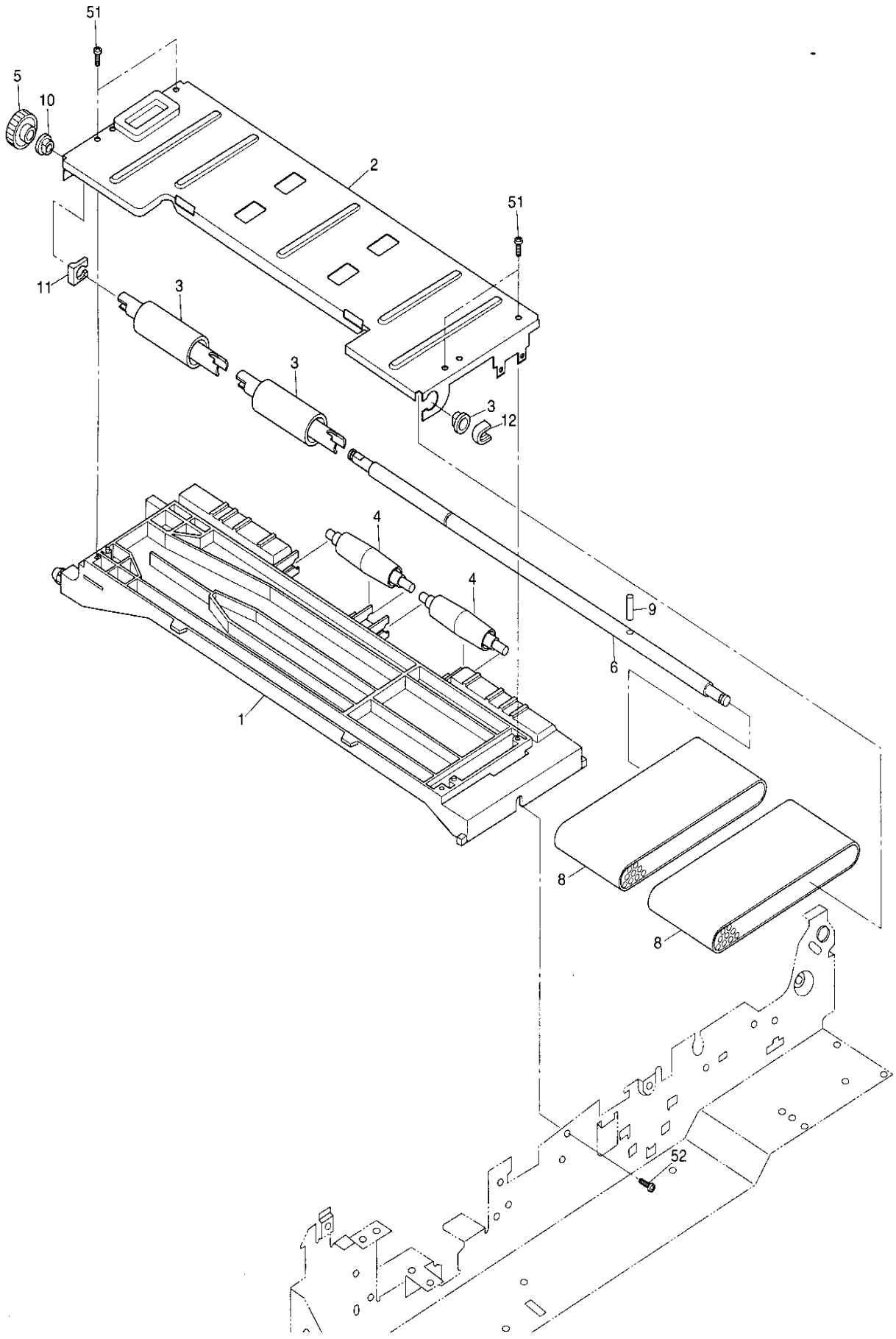

TOSHIBA

ITEM NO.	PARTS NO.	PARTS NAME	Q'TY / PAGE	Q'TY / PACK	SPE PRICE IN NONE	P	I	R	BSI NO.	TO	FROM	SERIAL NO.	REMARKS
1	4401 941630	CASE-BELT	1	1/PP									
2	4401 942750	K-BRKT-BELT	1	1/PP									
3	4401 941650	ROLLER-BELT	2	1/P									
4	4401 941660	ROLLER-BELT-IDL	2	1/P									
5	4401 941670	GEAR-10S020-06	1	1/P									
6	4401 941680	SHAFT-BELT	1	1/P									
8	4401 941620	BELT-TR	2	1/P									
9	4346 312020	PIN	1	10/P									
10	4407 734980	BUSH-6-GCB	2	5/P									
11	4400 336190	STOP-RING-8	1	5/P									
12	4407 972860	STOP-RING-6-5	1	5/P									
51	4842 040846	PTBR30*08MSZN3A	4	50/P									
52	4842 041794	TBIDS-40*08-CP	1	50/P									

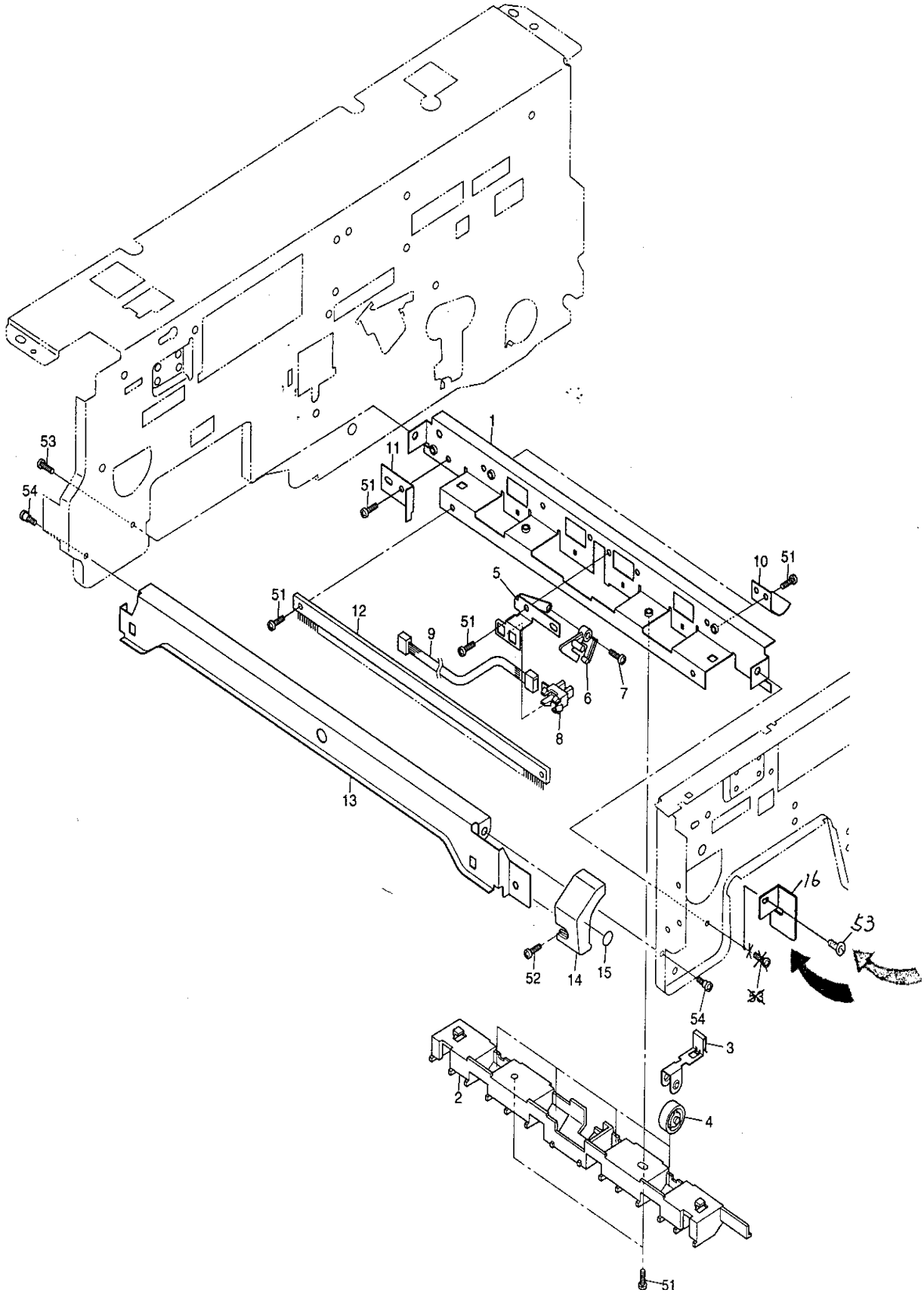

TOSHIBA

ITEM NO.	PARTS NO.	PARTS NAME	Q'TY / PAGE	Q'TY / PACK	SPE PRICE IN NONE	P	I	R	BSI NO.	TO	FROM	SERIAL NO.	REMARKS
1	4401 941880	STAY-EXIT	1	N/A***						001 1			
1 1	4401 941880	STAY-EXIT	1	1/P		C	-	J	F97H994		001		
2	4401 941920	GUIDE-EXIT-UP	1	1/PP									
3	4402 206560	SPL-EXIT-ROL	4	1/P									
4	4400 832980	IDLE-EXIT-18R	4	5/P									
5	4401 941900	BRKT-EXIT-S	1	1/P									
6	4401 942130	K-ACT-EXIT	1	1/P									
7	4402 814490	SCREW-BYPASS-2	1	10/P									
8	4401 983000	SZ-LG248L1	2	1/C						008 1			
8 1	4401 983230	SZ-LG248L1	2	1/C		C	B	D	F97G964		008	SF7/RF7	
9	4401 979110	WH-EXIT-SW-210	1	1/P									
10	4401 952750	SPL050-S304-EX	2	1/P									
11	4401 941930	PUSHER-EXIT	1	1/P									
12	4402 801770	BRUSH-EXIT-F170	1	1/KP						012 1			
12 1	4401 952730	BRUSH-EXIT-210	1	1/KP		C	E	H	F97H976		012	SG7/RG7	
13	4401 941520	BRKT-LOCK-U	1	1/P									
14	4402 074510	LEVER-LOCK-ARM	1	1/P									
15	4402 074520	LBL-A	1	5/P									
16	4401 942530	BRKT-GID-EXT-UP	1	1/P		A	B	E	F97H976			SH7/RH7	
51	4842 040370	TBID3006MSZN3L	8	50/P									
52	4842 040698	TZPAN4006MSZN3L	1	50/P									
53	4842 041794	TBIDS-40*08-CP	2	50/P									
54	4400 805170	SCREW-LOCK-ARM	2	5/P									

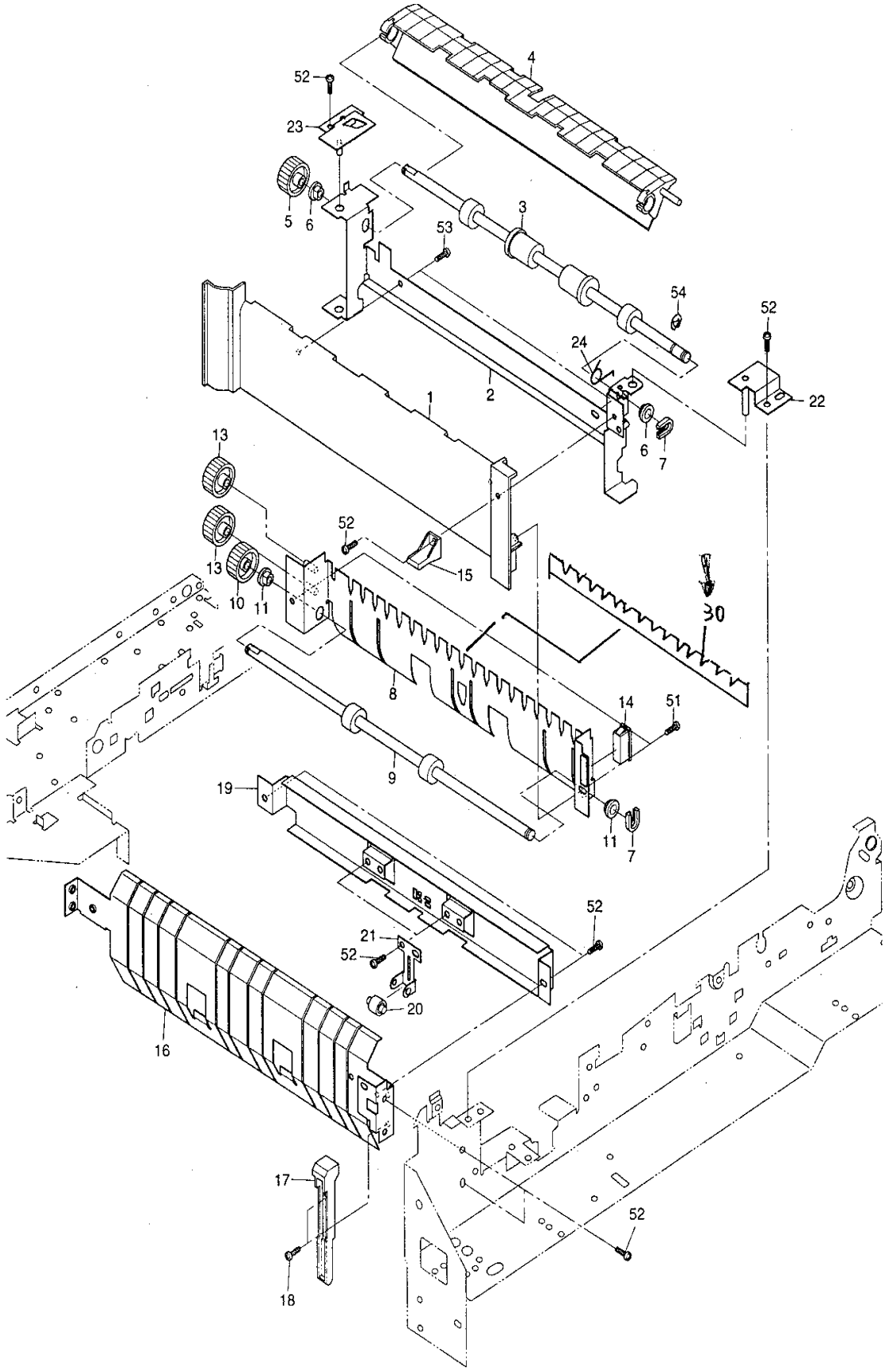
4
52
23
5
6
3
53
54
52
24
2
1
22
6
7
13
13
10
11
52
15
30
8
14
51
9
19
11
7
52
21
52
20
16
17
18
52

TOSHIBA

ITEM NO.	PARTS NO.	PARTS NAME	Q'TY / PAGE	Q'TY / PACK	SPE PRICE IN NONE	P	I	R	BSI NO.	TO	FROM	SERIAL NO.	REMARKS
1	4401 988870	K-COV-EX-OPEN-M	1	1/PP						001 1			
1 1	4401 942030	K-COV-EXIT-OPEN	1	1/PP		E	-	J	F97C862		001		
2	4401 941950	K-FRAME-EXIT	1	1/P									
3	4401 941820	K-ROL-EXIT-2	1	1/KP									
4	4401 942350	K-GUIDE-OPEN	1	1/C									
5	4401 941830	GEAR-10S020-06D	1	1/P									
6	4401 941910	BUSH-0610*95N-P	2	5/P									
7A	4407 972860	STOP-RING-6-5	2	5/P									2870
7B	4407 972860	STOP-RING-6-5	1	5/P									OTHERS
8A	4402 297140	K-GUIDE-MID-ADU	1	1/P									2870
9A	4402 297060	K-ROL-MDL-ADU	1	1/KP									2870
10A	4402 297010	GEAR-10S020-06	1	1/P									2870
11A	4400 802070	BUSH-6L	2	5/P									2870
13A	4402 297000	GEAR-10S022-06	2	1/P									2870
14A	4401 942190	MGN-CATCH-13S	1	1/P						014A1			2870
14A1	4401 942180	MGN-CATCH-13S	1	1/P		E	-	J	F97K074		014A		2870
15A	4402 297150	HANDLE-EX-OPEN	1	1/P									2870
16	4401 942390	GUIDE-STAY	1	1/PP									
17	4402 292950	LEVER-SLD-GATE	1	1/P									
18	4402 203820	SCREW-BKT-DEV	2	50/P									
19	4401 941990	BRKT-ADU-SEN	1	1/P									
20	4402 297020	ROL-IDL-ADU	2	5/P									
21	4402 297050	SPL020-S304-1	2	1/P									
22	4401 942060	K-BRKT-PIN	1	1/P									
23	4401 942020	K-HINGE-R	1	1/P									
24	4401 942370	SPA120-050-ADU	1	1/P									
30A	4402 292350	K-SHEET-GUIDE	1	1/P		A	-	D	F97L113			EL7	2870
51	7040 300611	PAN30*06MSZN3A	2	50/P									
52	4842 040370	TBID3006MSZN3L	10	50/P									
53	4842 040495	PTBR30*06MSZN3A	2	50/P									
54	7405 005031	ERR050SKZN3A	1	50/P									
55	4842 040370	TBID3006MSZN3L	5	50/P									
56	4842 040081	TBID4014MSCR3C	1	50/P									

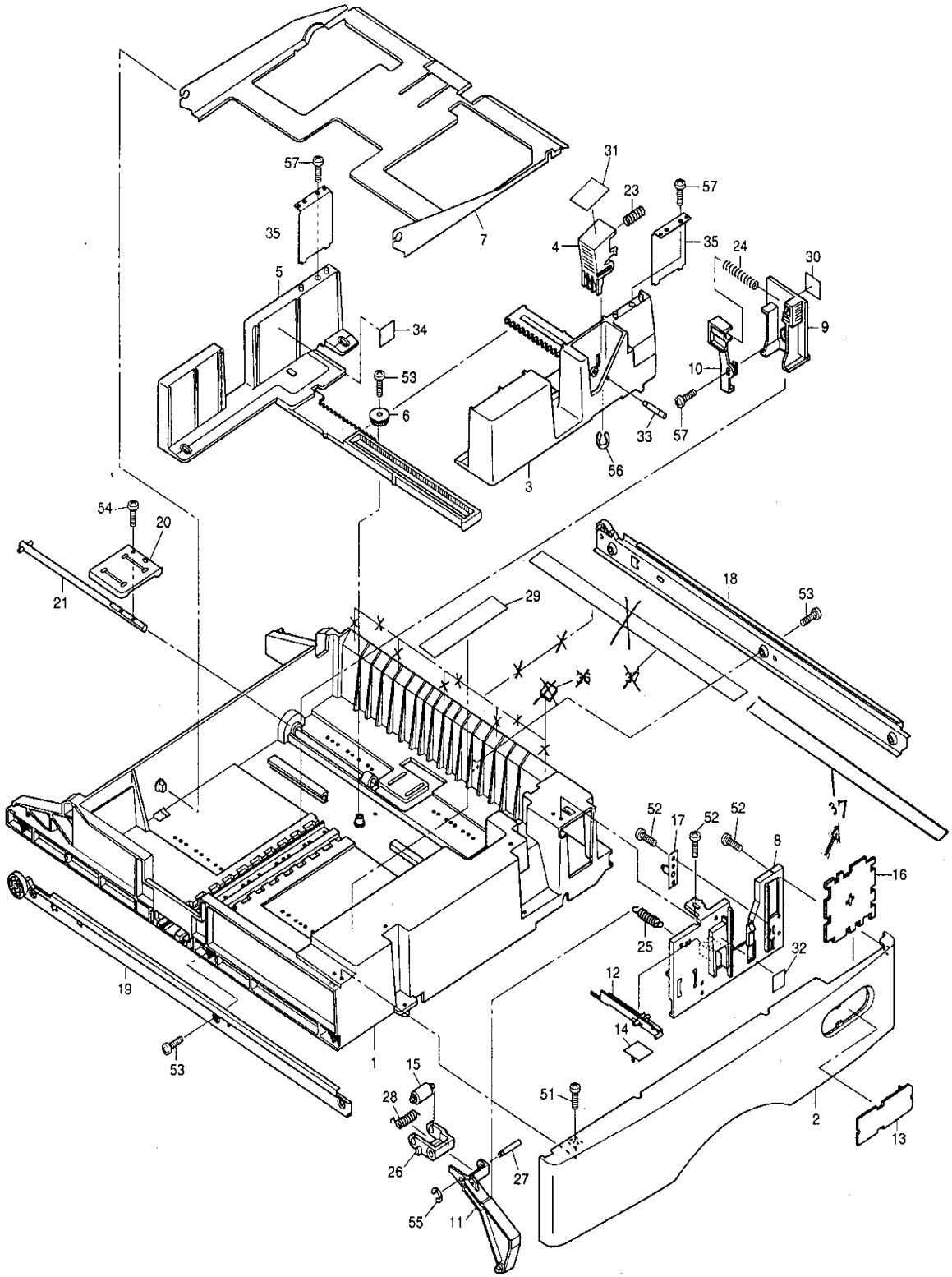
57
35
7
31
23
57
4
35
24
30
5
34
9
53
10
6
33
57
56
3
54
20
21
18
53
29
36
37
52
17
52
52
8
16
25
32
12
14
19
53
1
15
28
26
27
55
11
51
2
13

TOSHIBA

ITEM NO.	PARTS NO.	PARTS NAME	Q'TY / PAGE	Q'TY / PACK	SPE PRICE IN NONE	P	I	R	BSI NO.	TO	FROM	SERIAL NO.	REMARKS
1	4401 965540	K-CST-210	1	1/PP									
2	4401 965510	COV-CST-210	1	1/PP									
3	4401 965520	WALL-SIDE-F	1	1/PP									
4	4401 965650	LEVER-CST-SIDE	1	1/P									
5	4401 965530	WALL-SIDE-R	1	1/PP									
6	4401 965670	PINION-20-CST	1	5/P									
7	4401 967040	K-TRAY-CST-210	1	1/PP									
8	4401 965730	GUIDE-SIZE-PL	1	1/P									
9	4401 965700	WALL-END-CST	1	1/P									
10	4401 965710	LEVER-CST-END	1	1/P									
11	4401 965950	LEVER-PICK-UP	1	1/P									
12	4401 965750	ARM-EMPTY	1	1/P									
13	4401 965830	F-SHLD-P-SIZE	1	1/PP									
14	4401 965740	PLATE-EMPTY	1	1/P									
15	4401 965770	ROLLER-PICK-CST	1	5/P									
16A	4401 965910	F-PLATE-UC	1	1/P									USA SIZE
16B	4401 965920	F-PLATE-EU	1	1/P									EUR SIZE
17	4401 965850	K-BRKT-CST-IN	1	1/P									
18	4401 965620	K-STAY-CST-R	1	1/P									
19	4401 965630	K-STAY-CST-L	1	1/P									
20	4401 965600	LVR-ELV-CST	1	1/P									
21	4401 965680	K-SFT-ELV	1	1/P									
23	4401 965940	SPC104-120-0355	1	1/P									
24	4401 965720	SPC100-100-0540	1	1/P									
25	4401 965780	SPE102-120-0474	1	1/P									
26	4401 965960	JOINT-LVR-PICK	1	1/P									
27	4401 965970	STUD-JOINT	1	1/P									
28	4401 965930	SPA-JOINT-L	1	1/P									
29	4401 966160	LBL-INST-CST210	1	1/KP									
30	4400 918590	LBL-LIMIT-176	1	5/P						030 1			
30 1	4401 966690	LBL-LIMIT-210	1	5/P		C	-	D	F98A157		030	BB/JB8	
31	4401 966180	LBL-ARROW-210	1	5/P									
32	4401 966190	LBL-EMPTY-210	1	5/KP									
33	4401 965840	STUD-LEV-SIDE	1	1/P									
34	4400 662790	LBL-DIRECT-P	1	5/P									
35	4401 967070	PLT-WALL-CST	2	1/P									
36	4401 967130	SPACER-CASET	5	10/P						036 1			
36 1	4401 967130	SPACER-CASET	0	10/P		B	-	E	F97D891		036		
37	4401 967120	MYLAR-CASET-EXT	1	5/KP						037 1			
37 1	4401 967120	MYLAR-CASET-EXT	0	5/KP		B	-	E	F97D891	037 2	037		
37 2	4401 966790	MYLAR-CST-EXIT2	1	5/KP		A	-	D	F98A157		037 1	BB/JB8	
51	7043 401013	BID40*10MSCR1AI	4	50/P									
52	4842 040846	PTBR30*08MSZN3A	6	50/P									
53	4842 040849	PTBR40*08MSZN3A	7	50/P									
54	7040 400611	PAN40*06MSZN3AI	1	50/P									
55	7405 003031	ERR030SKZN3A	1	50/P									
56	7405 004031	ERR040SKZN3A	1	50/P									
57	4400 662390	SCREW-CASET	3	10/P									

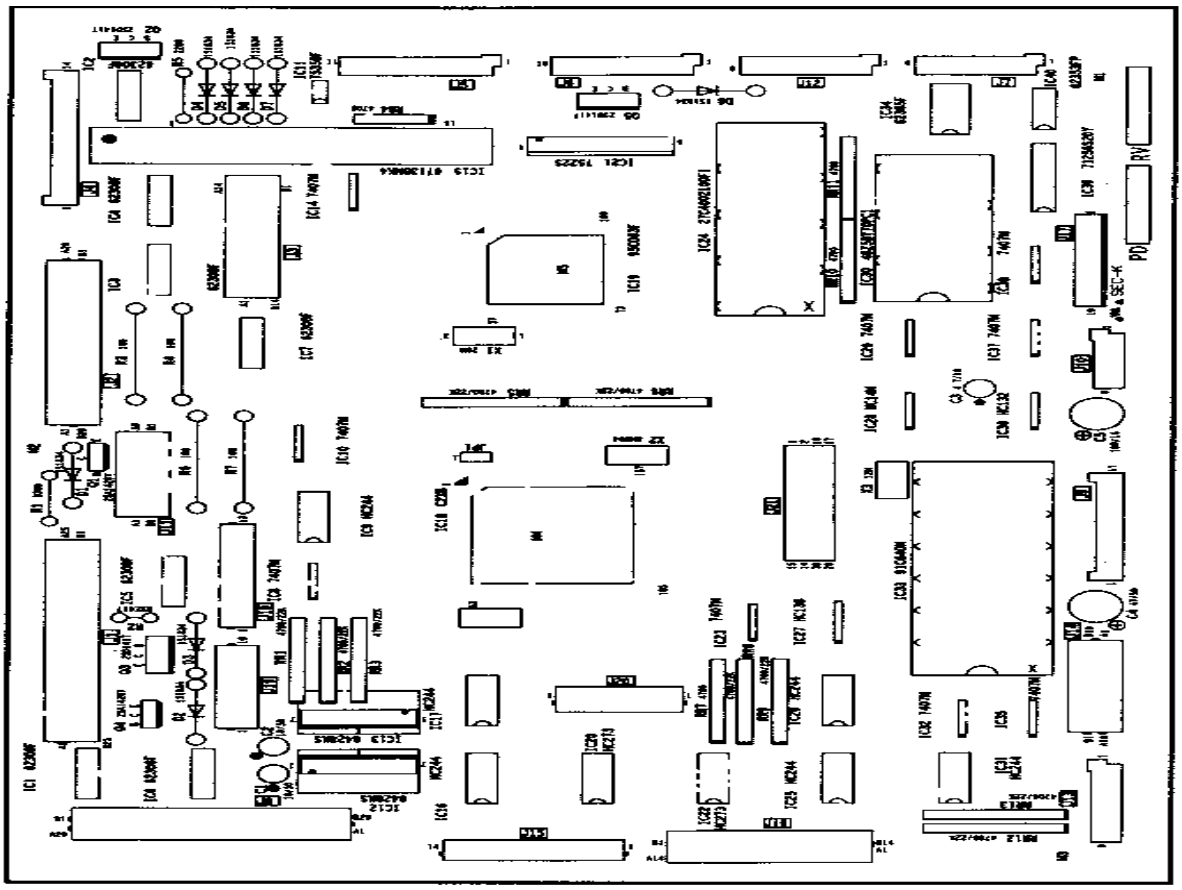

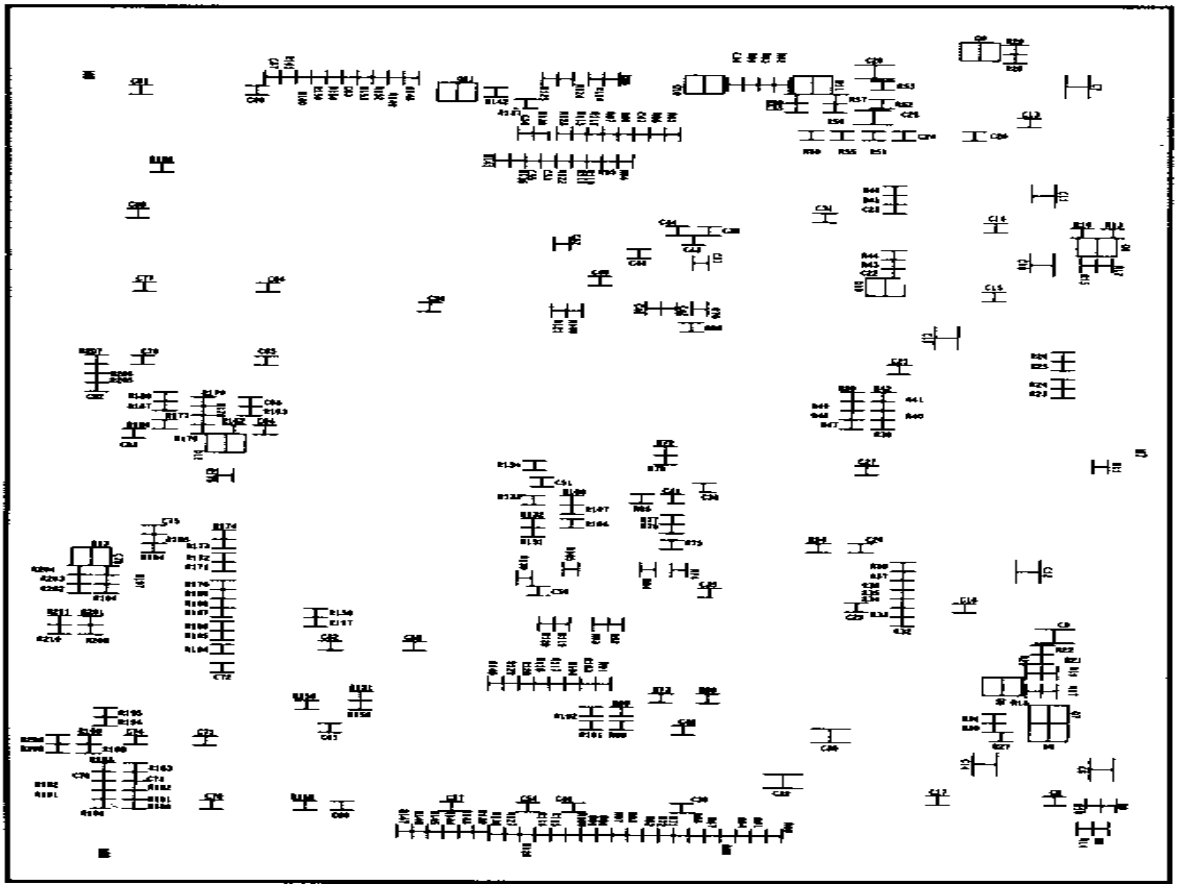

ITEM NO.	PARTS NO.	PARTS NAME	Q'TY / PAGE	Q'TY / PACK	SPE PRICE IN NONE	P	I	R	BSI NO.	TO	FROM	SERIAL NO.	REMARKS
0A	4401 977610	PWA-F-LGC-210	1	1/SB									2060
0B	4401 977710	PWA-F-LGC-211	1	1/SB									2860,2870
1	4401 977620	PWB-F-LGC-210	1	N/A***									
2	4843 321159	SKT-DICS-64A	1	1/S									IC33
3	4843 321564	SKT-CLC10280101	1	5/S									IC30
4	4843 321565	SKT-CLC10400101	1	5/S									IC24
11	3040 274687	IC-TD62308FTP2	1	1/S									
12	3040 274687	IC-TD62308FTP2	1	1/S									
13	3040 274687	IC-TD62308FTP2	1	1/S									
14	3040 274687	IC-TD62308FTP2	1	1/S									
15	3040 274687	IC-TD62308FTP2	1	1/S									
16	3040 274687	IC-TD62308FTP2	1	1/S									
17	3040 274687	IC-TD62308FTP2	1	1/S									
18	4843 112762	IC-DM7407M	1	5/S									
19	4843 116191	IC-MM74HC244WMX	1	5/S									
20	4843 112762	IC-DM7407M	1	5/S									
21	3040 347522	IC-TA75358FTP2	1	5/S									
22	3040 378538	IC-TA8428K(S)	1	1/S									
23	3040 378538	IC-TA8428K(S)	1	1/S									
24	4843 112762	IC-DM7407M	1	5/S									
25	4843 114577	IC-STK6713BMK4	1	1/S									
26	4843 116191	IC-MM74HC244WMX	1	5/S									
27	4843 116191	IC-MM74HC244WMX	1	5/S									
28	4843 116143	IC-D65653GDP02	1	1/S									
29	3040 522607	IC-TMP95C063F(Z	1	1/S									
30	4843 116192	IC-MM74HC273WMX	1	5/S									
31	3040 347120	IC-TA7522S	1	5/S									
32	4843 116192	IC-MM74HC273WMX	1	5/S									
33	4843 112762	IC-DM7407M	1	5/S									
35	4843 116191	IC-MM74HC244WMX	1	5/S									
36	4843 116191	IC-MM74HC244WMX	1	5/S									
37	4843 116190	IC-MM74HC138MX	1	5/S									
38	4843 116188	IC-MM74HC14MX	1	5/S									
39	4843 112762	IC-DM7407M	1	5/S									
41	4843 116191	IC-MM74HC244WMX	1	5/S									
42	4843 112762	IC-DM7407M	1	5/S									
43	3040 571323	TMP91C640N-2221	1	1/S									
44	3040 274758	IC-TD62385AF	1	5/S									
45	4843 112762	IC-DM7407M	1	5/S									
46	4843 116189	IC-MM74HC132MX	1	5/S									
47	4843 112762	IC-DM7407M	1	5/S									
48	4843 112762	IC-DM7407M	1	5/S									
49	4843 115515	IC-IDT71256S20Y	1	1/S									
50	4843 114715	IC-M62353FP	1	1/S									
51	4843 116188	IC-MM74HC14MX	1	5/S									
61	3036 548970	Q-2SA1428-Y	1	5/P									
62	3036 868550	Q-2SD1417	1	5/S									
63	3036 868550	Q-2SD1417	1	5/S									
64	3036 548970	Q-2SA1428-Y	1	5/P									
65	3036 868550	Q-2SD1417	1	5/S									
66	3036 014012	Q-RN2401(TE85R)	1	5/P									
67	3036 004012	Q-RN1401(TE85R)	1	5/P									
68	3036 014012	Q-RN2401(TE85R)	1	5/P									
69	3036 014012	Q-RN2401(TE85R)	1	5/P									
70	3036 014012	Q-RN2401(TE85R)	1	5/P									
71	3036 014012	Q-RN2401(TE85R)	1	5/P									
91	3037 568250	D-1S1834	1	5/P									
92	3037 568250	D-1S1834	1	5/P									
93	3037 568250	D-1S1834	1	5/P									
94	3037 568250	D-1S1834	1	5/P									
95	3037 568250	D-1S1834	1	5/P									
96	3037 568250	D-1S1834	1	5/P									
97	3037 568250	D-1S1834	1	5/P									
98	3037 568250	D-1S1834	1	5/P									
99	3037 238212	D-02CZ3.3X-85R	1	5/P									
100	3037 238422	D-02CZ5.1Y-85R	1	5/P									
101	3037 238422	D-02CZ5.1Y-85R	1	5/P									
102	3037 150651	D-1SS184(TE85R)	1	5/P									
103	3037 150651	D-1SS184(TE85R)	1	5/P									
104	3037 150651	D-1SS184(TE85R)	1	5/P									
121	4843 250702	X-CST20.0MXW0H1	1	5/S									

ITEM NO.	PARTS NO.	PARTS NAME	Q'TY / PAGE	Q'TY / PACK	SPE PRICE IN NONE	P	I	R	BSI NO.	TO	FROM	SERIAL NO.	REMARKS
122	4843 250402	X-CST8.00MTW040	1	5/S									
123	4843 250441	X-CST12.0MTW	1	5/S									
131	4843 406671	CE04W1H100M	1	10/P									
132	4843 406671	CE04W1H100M	1	10/P									
133	4843 410397	CE-04W1C4R7M	1	10/P									
134	4843 406673	CE04W1H470M	1	10/P									
135	4843 406649	CE04W1C101M	1	10/P									
136	4843 410535	CTP-M5F1H104ZT	1	10/P									
137	4843 410535	CTP-M5F1H104ZT	1	10/P									
138	4843 410862	CTP-K1F1E104ZT	1	10/P									
139	4843 410535	CTP-M5F1H104ZT	1	10/P									
140	4843 410535	CTP-M5F1H104ZT	1	10/P									
141	4843 410535	CTP-M5F1H104ZT	1	10/P									
142	4843 410535	CTP-M5F1H104ZT	1	10/P									
143	4843 410862	CTP-K1F1E104ZT	1	10/P									
144	4843 410535	CTP-M5F1H104ZT	1	10/P									
145	4843 410862	CTP-K1F1E104ZT	1	10/P									
146	4843 410862	CTP-K1F1E104ZT	1	10/P									
147	4843 410862	CTP-K1F1E104ZT	1	10/P									
148	4843 410862	CTP-K1F1E104ZT	1	10/P									
149	4843 410535	CTP-M5F1H104ZT	1	10/P									
150	4843 410862	CTP-K1F1E104ZT	1	10/P									
151	4843 410862	CTP-K1F1E104ZT	1	10/P									
152	4843 410862	CTP-K1F1E104ZT	1	10/P									
153	4843 410862	CTP-K1F1E104ZT	1	10/P									
154	4843 410862	CTP-K1F1E104ZT	1	10/P									
155	4843 410862	CTP-K1F1E104ZT	1	10/P									
156	4843 410862	CTP-K1F1E104ZT	1	10/P									
157	4843 410862	CTP-K1F1E104ZT	1	10/P									
158	4843 410535	CTP-M5F1H104ZT	1	10/P									
159	4843 410535	CTP-M5F1H104ZT	1	10/P									
160	4843 410535	CTP-M5F1H104ZT	1	10/P									
161	4843 410862	CTP-K1F1E104ZT	1	10/P									
162	4843 410535	CTP-M5F1H104ZT	1	10/P									
163	4843 410862	CTP-K1F1E104ZT	1	10/P									
164	4843 410862	CTP-K1F1E104ZT	1	10/P									
165	4843 410862	CTP-K1F1E104ZT	1	10/P									
166	4843 410862	CTP-K1F1E104ZT	1	10/P									
167	4843 410862	CTP-K1F1E104ZT	1	10/P									
168	4843 410862	CTP-K1F1E104ZT	1	10/P									
169	4843 410862	CTP-K1F1E104ZT	1	10/P									
170	4843 410862	CTP-K1F1E104ZT	1	10/P									
171	4843 410725	CTP-M1B1H222KT	1	10/P									
172	4843 410725	CTP-M1B1H222KT	1	10/P									
173	4843 410862	CTP-K1F1E104ZT	1	10/P									
174	4843 410862	CTP-K1F1E104ZT	1	10/P									
175	4843 410862	CTP-K1F1E104ZT	1	10/P									
176	4843 410862	CTP-K1F1E104ZT	1	10/P									
177	4843 410862	CTP-K1F1E104ZT	1	10/P									
178	4843 410862	CTP-K1F1E104ZT	1	10/P									
179	4843 410862	CTP-K1F1E104ZT	1	10/P									
180	4843 410862	CTP-K1F1E104ZT	1	10/P									
181	4843 410862	CTP-K1F1E104ZT	1	10/P									
182	4843 410862	CTP-K1F1E104ZT	1	10/P									
183	4843 410862	CTP-K1F1E104ZT	1	10/P									
185	4843 410862	CTP-K1F1E104ZT	1	10/P									
186	4843 410862	CTP-K1F1E104ZT	1	10/P									
187	4843 410862	CTP-K1F1E104ZT	1	10/P									
188	4843 410862	CTP-K1F1E104ZT	1	10/P									
189	4843 410862	CTP-K1F1E104ZT	1	10/P									
190	4843 410862	CTP-K1F1E104ZT	1	10/P									
191	4843 410862	CTP-K1F1E104ZT	1	10/P									
192	4843 410862	CTP-K1F1E104ZT	1	10/P									
193	4843 410721	CTP-M1B1H102KT	1	10/P									
194	4843 410862	CTP-K1F1E104ZT	1	10/P									
195	4843 410862	CTP-K1F1E104ZT	1	10/P									
196	4843 410862	CTP-K1F1E104ZT	1	10/P									
197	4843 410721	CTP-M1B1H102KT	1	10/P									
198	4843 410725	CTP-M1B1H222KT	1	10/P									
199	4843 410862	CTP-K1F1E104ZT	1	10/P									
200	4843 410862	CTP-K1F1E104ZT	1	10/P									

ITEM NO.	PARTS NO.	PARTS NAME	Q'TY / PAGE	Q'TY / PACK	SPE PRICE IN NONE	P	I	R	BSI NO.	TO	FROM	SERIAL NO.	REMARKS
201	4843 410862	CTP-K1F1E104ZT	1	10/P									
202	4843 410862	CTP-K1F1E104ZT	1	10/P									
203	4843 410721	CTP-M1B1H102KT	1	10/P									
204	4843 410862	CTP-K1F1E104ZT	1	10/P									
205	4843 410725	CTP-M1B1H222KT	1	10/P									
206	4843 410862	CTP-K1F1E104ZT	1	10/P									
207	4843 410862	CTP-K1F1E104ZT	1	10/P									
208	4843 410721	CTP-M1B1H102KT	1	10/P									
209	4843 410862	CTP-K1F1E104ZT	1	10/P									
210	4843 410862	CTP-K1F1E104ZT	1	10/P									
211	4843 410862	CTP-K1F1E104ZT	1	10/P									
212	4843 410727	CTP-M1B1H332KT	1	5/P									
213	4843 410862	CTP-K1F1E104ZT	1	10/P									
214	4843 410862	CTP-K1F1E104ZT	1	10/P									
215	4843 410862	CTP-K1F1E104ZT	1	10/P									
231	4841 010076	RD1/2P-3.3KJ	1	10/P									
232	4843 075357	RZ-RXE017	1	1/P									
233	4843 074540	RS-2/1PL101JF	1	10/P									
234	4843 074540	RS-2/1PL101JF	1	10/P									
235	4843 075264	RD-1/2P222JDT	1	10/P									
236	4843 074540	RS-2/1PL101JF	1	10/P									
237	4843 074540	RS-2/1PL101JF	1	10/P									
238	4843 072167	RTP-2B2A472JDT	1	10/P									
239	4843 072167	RTP-2B2A472JDT	1	10/P									
240	4843 072175	RTP-2B2A223JDT	1	10/P									
241	4843 072159	RTP-2B2A102JDT	1	10/P									
242	4843 072167	RTP-2B2A472JDT	1	10/P									
243	4843 072167	RTP-2B2A472JDT	1	10/P									
244	4843 072175	RTP-2B2A223JDT	1	10/P									
245	4843 072153	RTP-2B2A331JDT	1	10/P									
246	4843 072175	RTP-2B2A223JDT	1	10/P									
247	4843 072167	RTP-2B2A472JDT	1	10/P									
248	4843 072175	RTP-2B2A223JDT	1	10/P									
249	4843 072175	RTP-2B2A223JDT	1	10/P									
250	4843 072167	RTP-2B2A472JDT	1	10/P									
251	4843 072159	RTP-2B2A102JDT	1	10/P									
252	4843 072165	RTP-2B2A332JDT	1	10/P									
253	4843 072175	RTP-2B2A223JDT	1	10/P									
254	4843 072167	RTP-2B2A472JDT	1	10/P									
255	4843 072167	RTP-2B2A472JDT	1	10/P									
256	4843 072175	RTP-2B2A223JDT	1	10/P									
257	4843 072145	RTP-2B2A680JDT	1	10/P									
258	4843 072165	RTP-2B2A332JDT	1	10/P									
259	4843 072159	RTP-2B2A102JDT	1	10/P									
260	4843 072167	RTP-2B2A472JDT	1	10/P									
261	4843 072165	RTP-2B2A332JDT	1	10/P									
262	4843 072167	RTP-2B2A472JDT	1	10/P									
263	4843 072167	RTP-2B2A472JDT	1	10/P									
264	4843 072175	RTP-2B2A223JDT	1	10/P									
265	4843 072175	RTP-2B2A223JDT	1	10/P									
266	4843 072167	RTP-2B2A472JDT	1	10/P									
267	4843 072167	RTP-2B2A472JDT	1	10/P									
268	4843 072175	RTP-2B2A223JDT	1	10/P									
269	4843 072167	RTP-2B2A472JDT	1	10/P									
270	4843 072167	RTP-2B2A472JDT	1	10/P									
271	4843 072167	RTP-2B2A472JDT	1	10/P									
272	4843 072167	RTP-2B2A472JDT	1	10/P									
273	4843 072163	RTP-2B2A222JDT	1	10/P									
274	4843 072163	RTP-2B2A222JDT	1	10/P									
275	4843 072175	RTP-2B2A223JDT	1	10/P									
276	4843 072167	RTP-2B2A472JDT	1	10/P									
277	4843 072175	RTP-2B2A223JDT	1	10/P									
278	4843 072175	RTP-2B2A223JDT	1	10/P									
279	4843 072175	RTP-2B2A223JDT	1	10/P									
280	4843 072175	RTP-2B2A223JDT	1	10/P									
281	4843 072169	RTP-2B2A682JDT	1	10/P									
282	4843 072175	RTP-2B2A223JDT	1	10/P									
283	4843 072175	RTP-2B2A223JDT	1	10/P									
284	4843 072155	RTP-2B2A471JDT	1	10/P									
285	4843 072147	RTP-2B2A101JDT	1	10/P									
286	4843 072102	RTP-2B2A222FDT	1	10/P									

ITEM NO.	PARTS NO.	PARTS NAME	Q'TY / PAGE	Q'TY / PACK	SPE PRICE IN NONE	P	I	R	BSI NO.	TO	FROM	SERIAL NO.	REMARKS
287	4843 072171	RTP-2B2A103JDT	1	10/P									
288	4843 072157	RTP-2B2A681JDT	1	10/P									
289	4843 072104	RTP-2B2A332FDT	1	10/P									
290	4843 072175	RTP-2B2A223JDT	1	10/P									
291	4843 072167	RTP-2B2A472JDT	1	10/P									
292	4843 072175	RTP-2B2A223JDT	1	10/P									
293	4843 072106	RTP-2B2A472FDT	1	10/P									
294	4843 072167	RTP-2B2A472JDT	1	10/P									
297	4843 072167	RTP-2B2A472JDT	1	10/P									
299	4843 072155	RTP-2B2A471JDT	1	10/P									
300	4843 072167	RTP-2B2A472JDT	1	10/P									
301	4843 072175	RTP-2B2A223JDT	1	10/P									
302	4843 072167	RTP-2B2A472JDT	1	10/P									
303	4843 072155	RTP-2B2A471JDT	1	10/P									
304	4843 072155	RTP-2B2A471JDT	1	10/P									
305	4843 072167	RTP-2B2A472JDT	1	10/P									
306	4843 072155	RTP-2B2A471JDT	1	10/P									
307	4843 072167	RTP-2B2A472JDT	1	10/P									
308	4843 072167	RTP-2B2A472JDT	1	10/P									
309	4843 072155	RTP-2B2A471JDT	1	10/P									
310	4843 072069	RTP-2B2A105JDT	1	10/P									
311	4843 072105	RTP-2B2A392FDT	1	10/P									
312	4843 072167	RTP-2B2A472JDT	1	10/P									
313	4843 072175	RTP-2B2A223JDT	1	10/P									
314	4843 072155	RTP-2B2A471JDT	1	10/P									
315	4843 072167	RTP-2B2A472JDT	1	10/P									
316	4843 072106	RTP-2B2A472FDT	1	10/P									
317	4843 072175	RTP-2B2A223JDT	1	10/P									
318	4843 072167	RTP-2B2A472JDT	1	10/P									
319	4843 072175	RTP-2B2A223JDT	1	10/P									
320	4843 072175	RTP-2B2A223JDT	1	10/P									
321	4843 072175	RTP-2B2A223JDT	1	10/P									
322	4843 072167	RTP-2B2A472JDT	1	10/P									
323	4843 072167	RTP-2B2A472JDT	1	10/P									
324	4843 072159	RTP-2B2A102JDT	1	10/P									
325	4843 072134	RTP-2B2A105FDT	1	10/P									
326	4843 072098	RTP-2B2A102FDT	1	10/P									
327	4843 072134	RTP-2B2A105FDT	1	10/P									
328	4843 072175	RTP-2B2A223JDT	1	10/P									
329	4843 072167	RTP-2B2A472JDT	1	10/P									
330	4843 072175	RTP-2B2A223JDT	1	10/P									
331	4843 072167	RTP-2B2A472JDT	1	10/P									
332	4843 072167	RTP-2B2A472JDT	1	10/P									
333	4843 072167	RTP-2B2A472JDT	1	10/P									
334	4843 072167	RTP-2B2A472JDT	1	10/P									
335	4843 072155	RTP-2B2A471JDT	1	10/P									
336	4843 072167	RTP-2B2A472JDT	1	10/P									
337A	4843 072155	RTP-2B2A471JDT	1	10/P									2060
337B	4843 072069	RTP-2B2A105JDT	1	10/P									2860,2870
338A	4843 072069	RTP-2B2A105JDT	1	10/P									2060
338B	4843 072155	RTP-2B2A471JDT	1	10/P									2860,2870
339	4843 072167	RTP-2B2A472JDT	1	10/P									
340	4843 072104	RTP-2B2A332FDT	1	10/P									
341	4843 072104	RTP-2B2A332FDT	1	10/P									
342	4843 072104	RTP-2B2A332FDT	1	10/P									
343	4843 072105	RTP-2B2A392FDT	1	10/P									
344	4843 072167	RTP-2B2A472JDT	1	10/P									
345	4843 072175	RTP-2B2A223JDT	1	10/P									
346	4843 072167	RTP-2B2A472JDT	1	10/P									
347	4843 072175	RTP-2B2A223JDT	1	10/P									
348	4843 072175	RTP-2B2A223JDT	1	10/P									
349	4843 072167	RTP-2B2A472JDT	1	10/P									
350	4843 072167	RTP-2B2A472JDT	1	10/P									
351	4843 072167	RTP-2B2A472JDT	1	10/P									
352	4843 072104	RTP-2B2A332FDT	1	10/P									
353	4843 072110	RTP-2B2A103FDT	1	10/P									
354	4843 072167	RTP-2B2A472JDT	1	10/P									
355	4843 072175	RTP-2B2A223JDT	1	10/P									
356	4843 072167	RTP-2B2A472JDT	1	10/P									
357	4843 072175	RTP-2B2A223JDT	1	10/P									
358	4843 072167	RTP-2B2A472JDT	1	10/P									

ITEM NO.	PARTS NO.	PARTS NAME	Q'TY / PAGE	Q'TY / PACK	SPE PRICE IN NONE	P	I	R	BSI NO.	TO	FROM	SERIAL NO.	REMARKS
359	4843 072167	RTP-2B2A472JDT	1	10/P									
360	4843 072167	RTP-2B2A472JDT	1	10/P									
361	4843 072167	RTP-2B2A472JDT	1	10/P									
362	4843 072167	RTP-2B2A472JDT	1	10/P									
363	4843 072175	RTP-2B2A223JDT	1	10/P									
364	4843 072069	RTP-2B2A105JDT	1	10/P									
365	4843 072106	RTP-2B2A472FDT	1	10/P									
366	4843 072106	RTP-2B2A472FDT	1	10/P									
367	4843 072165	RTP-2B2A332JDT	1	10/P									
368	4843 072167	RTP-2B2A472JDT	1	10/P									
369	4843 072167	RTP-2B2A472JDT	1	10/P									
370	4843 072175	RTP-2B2A223JDT	1	10/P									
371	4843 072100	RTP-2B2A152FDT	1	10/P									
372	4843 072159	RTP-2B2A102JDT	1	10/P									
373	4843 072175	RTP-2B2A223JDT	1	10/P									
374	4843 072175	RTP-2B2A223JDT	1	10/P									
375	4843 072167	RTP-2B2A472JDT	1	10/P									
376	4843 072167	RTP-2B2A472JDT	1	10/P									
377	4843 072175	RTP-2B2A223JDT	1	10/P									
378	4843 072175	RTP-2B2A223JDT	1	10/P									
379	4843 072167	RTP-2B2A472JDT	1	10/P									
380	4843 072155	RTP-2B2A471JDT	1	10/P									
381	4843 072155	RTP-2B2A471JDT	1	10/P									
382	4843 072167	RTP-2B2A472JDT	1	10/P									
383	4843 072175	RTP-2B2A223JDT	1	10/P									
384	4843 072175	RTP-2B2A223JDT	1	10/P									
385	4843 072155	RTP-2B2A471JDT	1	10/P									
386	4843 072155	RTP-2B2A471JDT	1	10/P									
387	4843 072155	RTP-2B2A471JDT	1	10/P									
388	4843 072155	RTP-2B2A471JDT	1	10/P									
389	4843 072167	RTP-2B2A472JDT	1	10/P									
390	4843 072167	RTP-2B2A472JDT	1	10/P									
391	4843 072175	RTP-2B2A223JDT	1	10/P									
392	4843 072167	RTP-2B2A472JDT	1	10/P									
393	4843 072167	RTP-2B2A472JDT	1	10/P									
394	4843 072167	RTP-2B2A472JDT	1	10/P									
395	4843 072167	RTP-2B2A472JDT	1	10/P									
396	4843 072167	RTP-2B2A472JDT	1	10/P									
397	4843 072167	RTP-2B2A472JDT	1	10/P									
398	4843 072167	RTP-2B2A472JDT	1	10/P									
399	4843 072167	RTP-2B2A472JDT	1	10/P									
400	4843 072167	RTP-2B2A472JDT	1	10/P									
401	4843 072167	RTP-2B2A472JDT	1	10/P									
402	4843 072167	RTP-2B2A472JDT	1	10/P									
403	4843 072167	RTP-2B2A472JDT	1	10/P									
404	4843 072167	RTP-2B2A472JDT	1	10/P									
405	4843 072069	RTP-2B2A105JDT	1	10/P									
406	4843 072153	RTP-2B2A331JDT	1	10/P									
407	4843 072153	RTP-2B2A331JDT	1	10/P									
409	4843 072175	RTP-2B2A223JDT	1	10/P									
410	4843 072175	RTP-2B2A223JDT	1	10/P									
411	4843 072175	RTP-2B2A223JDT	1	10/P									
412	4843 072175	RTP-2B2A223JDT	1	10/P									
413	4843 072175	RTP-2B2A223JDT	1	10/P									
414	4843 072167	RTP-2B2A472JDT	1	10/P									
415	4843 072167	RTP-2B2A472JDT	1	10/P									
416	4843 072159	RTP-2B2A102JDT	1	10/P									
417	4843 072167	RTP-2B2A472JDT	1	10/P									
418	4843 072167	RTP-2B2A472JDT	1	10/P									
419	4843 072147	RTP-2B2A101JDT	1	10/P									
420	4843 072167	RTP-2B2A472JDT	1	10/P									
421	4843 072167	RTP-2B2A472JDT	1	10/P									
422	4843 072167	RTP-2B2A472JDT	1	10/P									
423	4843 072167	RTP-2B2A472JDT	1	10/P									
424	4843 072167	RTP-2B2A472JDT	1	10/P									
425	4843 072175	RTP-2B2A223JDT	1	10/P									
426	4843 072175	RTP-2B2A223JDT	1	10/P									
427	4843 072175	RTP-2B2A223JDT	1	10/P									
428	4843 072175	RTP-2B2A223JDT	1	10/P									
429	4843 072175	RTP-2B2A223JDT	1	10/P									
430	4843 072175	RTP-2B2A223JDT	1	10/P									

ITEM NO.	PARTS NO.	PARTS NAME	Q'TY / PAGE	Q'TY / PACK	SPE PRICE IN NONE	P	I	R	BSI NO.	TO	FROM	SERIAL NO.	REMARKS
431	4843 072175	RTP-2B2A223JDT	1	10/P									
432	4843 072167	RTP-2B2A472JDT	1	10/P									
433	4843 072175	RTP-2B2A223JDT	1	10/P									
434	4843 072167	RTP-2B2A472JDT	1	10/P									
435	4843 072158	RTP-2B2A821JDT	1	10/P									
436	4843 072167	RTP-2B2A472JDT	1	10/P									
437	4843 072167	RTP-2B2A472JDT	1	10/P									
438	4843 072167	RTP-2B2A472JDT	1	10/P									
439	4843 072167	RTP-2B2A472JDT	1	10/P									
440	4843 072167	RTP-2B2A472JDT	1	10/P									
441	4843 072167	RTP-2B2A472JDT	1	10/P									
442	4843 072167	RTP-2B2A472JDT	1	10/P									
443	4843 072065	RTP-2B2A474JDT	1	10/P									
451	4843 076427	RR-1/8S08472223	1	10/P									
452	4843 076427	RR-1/8S08472223	1	10/P									
453	4843 076427	RR-1/8S08472223	1	10/P									
454	4407 917830	RR-S05LA472J	1	10/P									
455	4843 076427	RR-1/8S08472223	1	10/P									
456	4843 076427	RR-1/8S08472223	1	10/P									
457	4407 917830	RR-S05LA472J	1	10/P									
458	4843 076427	RR-1/8S08472223	1	10/P									
459	4843 076427	RR-1/8S08472223	1	10/P									
460	4407 917830	RR-S05LA472J	1	10/P									
461	4407 917830	RR-S05LA472J	1	10/P									
462	4843 076427	RR-1/8S08472223	1	10/P									
463	4843 076427	RR-1/8S08472223	1	10/P									
471	4843 307790	J-53313-5015	1	5/P									
472	4843 307789	J-53313-4015	1	5/P									
473	4843 307786	J-53313-2815	1	5/P									
474	4843 304934	J-53052-1410	1	5/P									
476	4843 307999	J-53324-1010	1	5/P									
477	4843 307997	J-53324-0810	1	5/P									
478	4843 307789	J-53313-4015	1	5/P									
479	4843 304937	J-53052-1110	1	5/P									
480	4843 309060	J-53324-0612	1	5/P									
481	4843 307781	J-53313-1815	1	5/P									
482	4843 307998	J-53324-0910	1	5/P									
483	4843 307998	J-53324-0910	1	5/P									
484	4843 307782	J-53313-2015	1	5/P									
485	4843 306202	J-1-175487-4	1	5/P									
486	4843 307786	J-53313-2815	1	5/P									
487	4843 300514	J-1-171825-0	1	5/P									
489	4843 306198	J-1-175487-0	1	5/P									
490	4843 306197	J-0-175487-9	1	5/P									
501	4400 848870	LINE-JUMPER-5	1	10/P									
481	4843 307781	J-53313-1815	1	5/P									

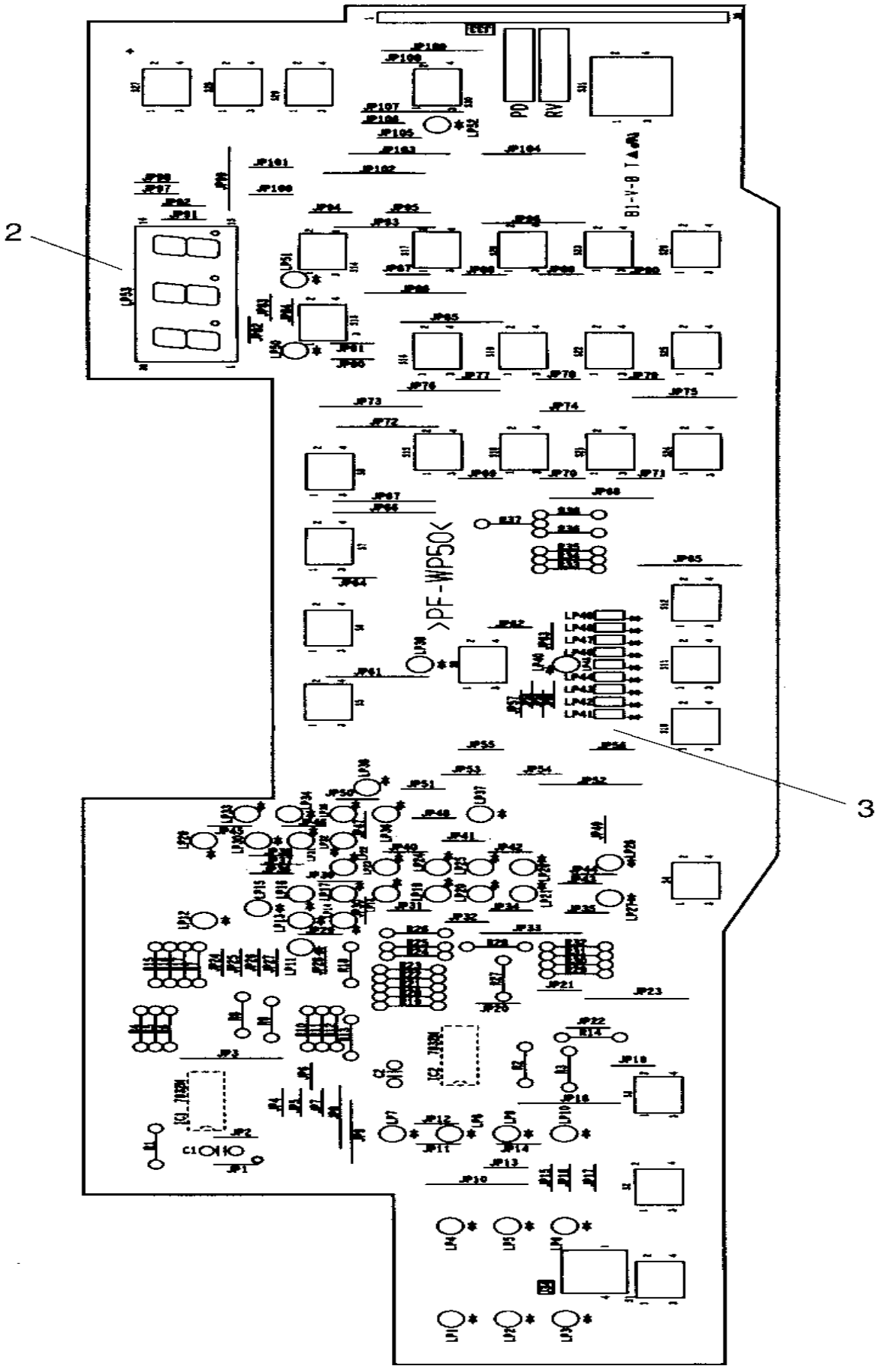
2
3
PF-WP50

ITEM NO.	PARTS NO.	PARTS NAME	Q'TY / PAGE	Q'TY / PACK	SPE PRICE IN NONE	P	I	R	BSI NO.	TO	FROM	SERIAL NO.	REMARKS
0	4401 977680	PWA-F-KEY-210	1	N/A***									
1	4401 977690	PWB-F-KEY-210	1	N/A***									
2	4401 943930	SPACER-DSP-LTC	1	1/P									
3	4401 943920	CASE-LED-EXP	1	1/P									
11	4843 114181	IC-LC7932M	1	1/S									
12	4843 114181	IC-LC7932M	1	1/S									
21	4843 231490	SP-B3F-1000	1	5/S									
22	4843 231490	SP-B3F-1000	1	5/S									
23	4843 231490	SP-B3F-1000	1	5/S									
24	4843 231490	SP-B3F-1000	1	5/S									
25	4843 231490	SP-B3F-1000	1	5/S									
26	4843 231490	SP-B3F-1000	1	5/S									
27	4843 231490	SP-B3F-1000	1	5/S									
28	4843 231490	SP-B3F-1000	1	5/S									
29	4843 231490	SP-B3F-1000	1	5/S									
30	4843 231490	SP-B3F-1000	1	5/S									
31	4843 231490	SP-B3F-1000	1	5/S									
32	4843 231490	SP-B3F-1000	1	5/S									
33	4843 231490	SP-B3F-1000	1	5/S									
34	4843 231490	SP-B3F-1000	1	5/S									
35	4843 231490	SP-B3F-1000	1	5/S									
36	4843 231490	SP-B3F-1000	1	5/S									
37	4843 231490	SP-B3F-1000	1	5/S									
38	4843 231490	SP-B3F-1000	1	5/S									
39	4843 231490	SP-B3F-1000	1	5/S									
40	4843 231490	SP-B3F-1000	1	5/S									
41	4843 231490	SP-B3F-1000	1	5/S									
42	4843 231490	SP-B3F-1000	1	5/S									
43	4843 231490	SP-B3F-1000	1	5/S									
44	4843 231490	SP-B3F-1000	1	5/S									
45	4843 231490	SP-B3F-1000	1	5/S									
46	4843 231490	SP-B3F-1000	1	5/S									
47	4843 231490	SP-B3F-1000	1	5/S									
48	4843 231490	SP-B3F-1000	1	5/S									
49	4843 231490	SP-B3F-1000	1	5/S									
50	4843 231490	SP-B3F-1000	1	5/S									
51	4843 231491	SP-B3F-4000	1	5/S									
61	4843 194633	LED-LTL-16KG	1	10/P									
62	4843 194633	LED-LTL-16KG	1	10/P									
63	4843 194633	LED-LTL-16KG	1	10/P									
64	4843 194633	LED-LTL-16KG	1	10/P									
65	4843 194633	LED-LTL-16KG	1	10/P									
66	4843 194633	LED-LTL-16KG	1	10/P									
67	4843 194633	LED-LTL-16KG	1	10/P									
68	4843 194633	LED-LTL-16KG	1	10/P									
69	4843 194633	LED-LTL-16KG	1	10/P									
70	4843 194633	LED-LTL-16KG	1	10/P									
71	4843 194633	LED-LTL-16KG	1	10/P									
72	4843 194633	LED-LTL-16KG	1	10/P									
73	4843 194633	LED-LTL-16KG	1	10/P									
74	4843 194633	LED-LTL-16KG	1	10/P									
75	4843 194633	LED-LTL-16KG	1	10/P									
76	4843 194633	LED-LTL-16KG	1	10/P									
77	4843 194634	LED-LTL-16KY	1	10/P									
78	4843 194634	LED-LTL-16KY	1	10/P									
79	4843 194634	LED-LTL-16KY	1	10/P									
80	4843 194634	LED-LTL-16KY	1	10/P									
81	4843 194634	LED-LTL-16KY	1	10/P									
82	4843 194633	LED-LTL-16KG	1	10/P									
83	4843 194633	LED-LTL-16KG	1	10/P									
84	4843 194633	LED-LTL-16KG	1	10/P									
85	4843 194633	LED-LTL-16KG	1	10/P									
86	4843 194633	LED-LTL-16KG	1	10/P									
87	4843 194633	LED-LTL-16KG	1	10/P									
88	4843 194633	LED-LTL-16KG	1	10/P									
89	4843 194633	LED-LTL-16KG	1	10/P									
90	4843 194634	LED-LTL-16KY	1	10/P									
91	4843 194633	LED-LTL-16KG	1	10/P									
92	4843 194633	LED-LTL-16KG	1	10/P									
93	4843 194634	LED-LTL-16KY	1	10/P									
94	4843 194634	LED-LTL-16KY	1	10/P									

ITEM NO.	PARTS NO.	PARTS NAME	Q'TY / PAGE	Q'TY / PACK	SPE PRICE IN NONE	P	I	R	BSI NO.	TO	FROM	SERIAL NO.	REMARKS
95	4843 194634	LED-LTL-16KY	1	10/P									
96	4843 194633	LED-LTL-16KG	1	10/P									
97	4843 194633	LED-LTL-16KG	1	10/P									
98	4843 194633	LED-LTL-16KG	1	10/P									
99	4843 194633	LED-LTL-16KG	1	10/P									
100	4843 194633	LED-LTL-16KG	1	10/P									
101	4843 194630	LED-LTL-433G	1	10/P									
102	4843 194630	LED-LTL-433G	1	10/P									
103	4843 194630	LED-LTL-433G	1	10/P									
104	4843 194630	LED-LTL-433G	1	10/P									
105	4843 194630	LED-LTL-433G	1	10/P									
106	4843 194630	LED-LTL-433G	1	10/P									
107	4843 194630	LED-LTL-433G	1	10/P									
108	4843 194630	LED-LTL-433G	1	10/P									
109	4843 194630	LED-LTL-433G	1	10/P									
110	4843 194633	LED-LTL-16KG	1	10/P									
111	4843 194633	LED-LTL-16KG	1	10/P									
112	4843 194633	LED-LTL-16KG	1	10/P									
113	4401 983100	DSP-LTC-5836G-8	1	1/S									
121	4843 412279	CKM-ECFZ104ZF	1	10/P									
122	4843 412279	CKM-ECFZ104ZF	1	10/P									
131	4843 028563	RD1/4LA100HJ	1	10/P									
132	4843 028563	RD1/4LA100HJ	1	10/P									
133	4843 028563	RD1/4LA100HJ	1	10/P									
134	4843 028563	RD1/4LA100HJ	1	10/P									
135	4843 028563	RD1/4LA100HJ	1	10/P									
136	4843 028563	RD1/4LA100HJ	1	10/P									
137	4843 028563	RD1/4LA100HJ	1	10/P									
138	4843 028563	RD1/4LA100HJ	1	10/P									
139	4843 028563	RD1/4LA100HJ	1	10/P									
140	4843 028563	RD1/4LA100HJ	1	10/P									
141	4843 028563	RD1/4LA100HJ	1	10/P									
142	4843 028563	RD1/4LA100HJ	1	10/P									
143	4843 028563	RD1/4LA100HJ	1	10/P									
144	4843 028563	RD1/4LA100HJ	1	10/P									
145	4843 028563	RD1/4LA100HJ	1	10/P									
146	4843 028563	RD1/4LA100HJ	1	10/P									
147	4843 028563	RD1/4LA100HJ	1	10/P									
148	4843 028563	RD1/4LA100HJ	1	10/P									
149	4843 028563	RD1/4LA100HJ	1	10/P									
150	4843 028563	RD1/4LA100HJ	1	10/P									
151	4843 028563	RD1/4LA100HJ	1	10/P									
152	4843 028563	RD1/4LA100HJ	1	10/P									
153	4843 028563	RD1/4LA100HJ	1	10/P									
154	4843 028563	RD1/4LA100HJ	1	10/P									
155	4843 028563	RD1/4LA100HJ	1	10/P									
156	4843 028563	RD1/4LA100HJ	1	10/P									
157	4843 028563	RD1/4LA100HJ	1	10/P									
158	4843 028563	RD1/4LA100HJ	1	10/P									
159	4843 028563	RD1/4LA100HJ	1	10/P									
160	4843 028563	RD1/4LA100HJ	1	10/P									
161	4843 028563	RD1/4LA100HJ	1	10/P									
162	4843 028563	RD1/4LA100HJ	1	10/P									
163	4843 028563	RD1/4LA100HJ	1	10/P									
164	4843 028563	RD1/4LA100HJ	1	10/P									
165	4843 028563	RD1/4LA100HJ	1	10/P									
166	4843 028563	RD1/4LA100HJ	1	10/P									
167	4843 028563	RD1/4LA100HJ	1	10/P									
168	4843 028563	RD1/4LA100HJ	1	10/P									
181	4407 782660	JUMPER-WIRE-10	1	10/P									
182	4407 782660	JUMPER-WIRE-10	1	10/P									
183	4407 614470	JUMPER-WIRE-20	1	10/P									
184	4407 782660	JUMPER-WIRE-10	1	10/P									
185	4407 782660	JUMPER-WIRE-10	1	10/P									
186	4407 782660	JUMPER-WIRE-10	1	10/P									
187	4407 782660	JUMPER-WIRE-10	1	10/P									
188	4407 614470	JUMPER-WIRE-20	1	10/P									
189	4407 614470	JUMPER-WIRE-20	1	10/P									
190	4407 614470	JUMPER-WIRE-20	1	10/P									
191	4407 782660	JUMPER-WIRE-10	1	10/P									
192	4407 782660	JUMPER-WIRE-10	1	10/P									

ITEM NO.	PARTS NO.	PARTS NAME	Q'TY / PAGE	Q'TY / PACK	SPE PRICE IN NONE	P	I	R	BSI NO.	TO	FROM	SERIAL NO.	REMARKS
193	4407 782660	JUMPER-WIRE-10	1	10/P									
194	4407 782660	JUMPER-WIRE-10	1	10/P									
195	4407 782660	JUMPER-WIRE-10	1	10/P									
196	4407 782660	JUMPER-WIRE-10	1	10/P									
197	4407 782660	JUMPER-WIRE-10	1	10/P									
198	4407 614470	JUMPER-WIRE-20	1	10/P									
199	4407 782660	JUMPER-WIRE-10	1	10/P									
200	4407 782660	JUMPER-WIRE-10	1	10/P									
201	4407 782660	JUMPER-WIRE-10	1	10/P									
202	4407 782660	JUMPER-WIRE-10	1	10/P									
203	4407 614470	JUMPER-WIRE-20	1	10/P									
204	4407 782660	JUMPER-WIRE-10	1	10/P									
205	4407 782660	JUMPER-WIRE-10	1	10/P									
206	4407 782660	JUMPER-WIRE-10	1	10/P									
207	4407 782660	JUMPER-WIRE-10	1	10/P									
208	4407 782660	JUMPER-WIRE-10	1	10/P									
209	4407 782660	JUMPER-WIRE-10	1	10/P									
210	4407 782660	JUMPER-WIRE-10	1	10/P									
211	4407 782660	JUMPER-WIRE-10	1	10/P									
212	4407 782660	JUMPER-WIRE-10	1	10/P									
213	4407 614470	JUMPER-WIRE-20	1	10/P									
214	4407 782660	JUMPER-WIRE-10	1	10/P									
215	4407 782660	JUMPER-WIRE-10	1	10/P									
216	4407 782660	JUMPER-WIRE-10	1	10/P									
217	4407 782660	JUMPER-WIRE-10	1	10/P									
218	4407 782660	JUMPER-WIRE-10	1	10/P									
219	4407 782660	JUMPER-WIRE-10	1	10/P									
220	4407 782660	JUMPER-WIRE-10	1	10/P									
221	4407 782660	JUMPER-WIRE-10	1	10/P									
222	4407 782660	JUMPER-WIRE-10	1	10/P									
223	4407 782660	JUMPER-WIRE-10	1	10/P									
224	4407 782660	JUMPER-WIRE-10	1	10/P									
225	4407 782660	JUMPER-WIRE-10	1	10/P									
226	4407 782660	JUMPER-WIRE-10	1	10/P									
227	4407 782660	JUMPER-WIRE-10	1	10/P									
228	4407 782660	JUMPER-WIRE-10	1	10/P									
229	4407 782660	JUMPER-WIRE-10	1	10/P									
230	4407 782660	JUMPER-WIRE-10	1	10/P									
231	4407 782660	JUMPER-WIRE-10	1	10/P									
232	4407 614470	JUMPER-WIRE-20	1	10/P									
233	4407 782660	JUMPER-WIRE-10	1	10/P									
234	4407 782660	JUMPER-WIRE-10	1	10/P									
235	4407 782660	JUMPER-WIRE-10	1	10/P									
236	4407 782660	JUMPER-WIRE-10	1	10/P									
237	4407 782660	JUMPER-WIRE-10	1	10/P									
238	4407 782660	JUMPER-WIRE-10	1	10/P									
239	4407 782660	JUMPER-WIRE-10	1	10/P									
240	4407 782660	JUMPER-WIRE-10	1	10/P									
241	4407 614470	JUMPER-WIRE-20	1	10/P									
242	4407 782660	JUMPER-WIRE-10	1	10/P									
243	4407 782660	JUMPER-WIRE-10	1	10/P									
244	4407 782660	JUMPER-WIRE-10	1	10/P									
245	4407 614470	JUMPER-WIRE-20	1	10/P									
246	4407 614470	JUMPER-WIRE-20	1	10/P									
247	4407 614470	JUMPER-WIRE-20	1	10/P									
248	4407 614470	JUMPER-WIRE-20	1	10/P									
249	4407 782660	JUMPER-WIRE-10	1	10/P									
250	4407 782660	JUMPER-WIRE-10	1	10/P									
251	4407 782660	JUMPER-WIRE-10	1	10/P									
252	4407 614470	JUMPER-WIRE-20	1	10/P									
253	4407 614470	JUMPER-WIRE-20	1	10/P									
254	4407 782660	JUMPER-WIRE-10	1	10/P									
255	4407 614470	JUMPER-WIRE-20	1	10/P									
256	4407 614470	JUMPER-WIRE-20	1	10/P									
257	4407 782660	JUMPER-WIRE-10	1	10/P									
258	4407 782660	JUMPER-WIRE-10	1	10/P									
259	4407 782660	JUMPER-WIRE-10	1	10/P									
260	4407 782660	JUMPER-WIRE-10	1	10/P									
261	4407 782660	JUMPER-WIRE-10	1	10/P									
262	4407 782660	JUMPER-WIRE-10	1	10/P									
263	4407 782660	JUMPER-WIRE-10	1	10/P									

ITEM NO.	PARTS NO.	PARTS NAME	Q'TY / PAGE	Q'TY / PACK	SPE PRICE IN NONE	P	I	R	BSI NO.	TO	FROM	SERIAL NO.	REMARKS
264	4407 782660	JUMPER-WIRE-10	1	10/P									
265	4407 614470	JUMPER-WIRE-20	1	10/P									
266	4407 614470	JUMPER-WIRE-20	1	10/P									
267	4407 782660	JUMPER-WIRE-10	1	10/P									
268	4407 782660	JUMPER-WIRE-10	1	10/P									
269	4407 782660	JUMPER-WIRE-10	1	10/P									
270	4407 782660	JUMPER-WIRE-10	1	10/P									
271	4407 782660	JUMPER-WIRE-10	1	10/P									
272	4407 782660	JUMPER-WIRE-10	1	10/P									
273	4407 614470	JUMPER-WIRE-20	1	10/P									
274	4407 782660	JUMPER-WIRE-10	1	10/P									
275	4407 782660	JUMPER-WIRE-10	1	10/P									
276	4407 614470	JUMPER-WIRE-20	1	10/P									
277	4407 782660	JUMPER-WIRE-10	1	10/P									
278	4407 782660	JUMPER-WIRE-10	1	10/P									
279	4407 614470	JUMPER-WIRE-20	1	10/P									
280	4407 782660	JUMPER-WIRE-10	1	10/P									
281	4407 782660	JUMPER-WIRE-10	1	10/P									
282	4407 614470	JUMPER-WIRE-20	1	10/P									
283	4407 614470	JUMPER-WIRE-20	1	10/P									
284	4407 614470	JUMPER-WIRE-20	1	10/P									
285	4407 782660	JUMPER-WIRE-10	1	10/P									
286	4407 782660	JUMPER-WIRE-10	1	10/P									
287	4407 614470	JUMPER-WIRE-20	1	10/P									
288	4407 782660	JUMPER-WIRE-10	1	10/P									
289	4407 614470	JUMPER-WIRE-20	1	10/P									

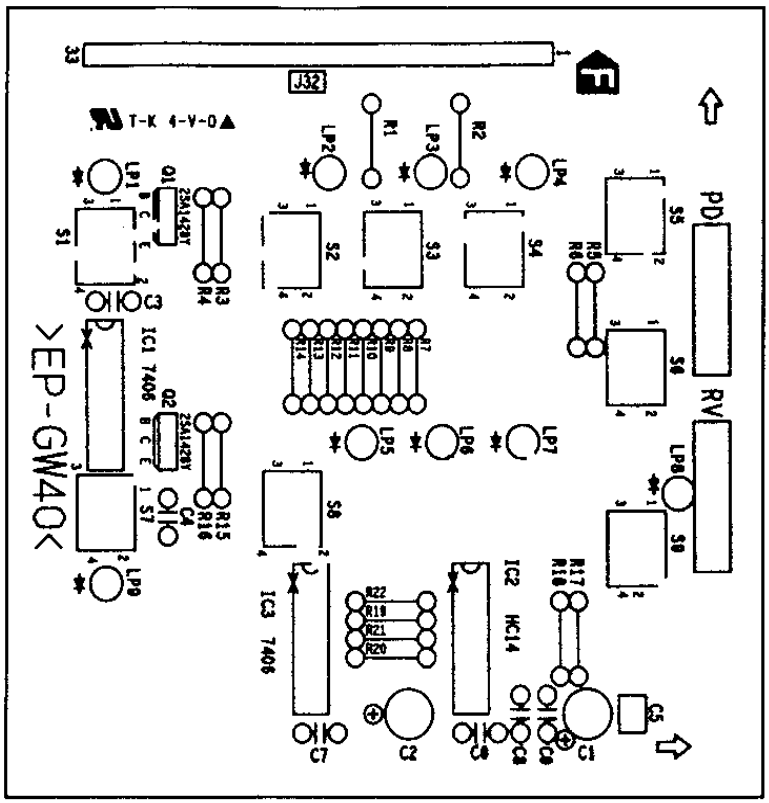
J33
J32
T-K 4-V-0
LP1
LP2
LP3
LP4
R1
R2
Q1
2SA1428Y
S1
S2
S3
S4
S5
R3
R4
R5
R6
PD
C3
IC1 7406
R7
R8
R9
R10
R11
R12
R13
R14
S6
RV
LP5
LP6
LP7
LP8
Q2
2SA1428Y
R15
R16
C4
S7
S8
S9
LP9
>EP-GW40<
IC3 7406
R22
R19
R21
R20
IC2 HC14
R17
R18
C7
C2
C8
C3
C9
C1
C5

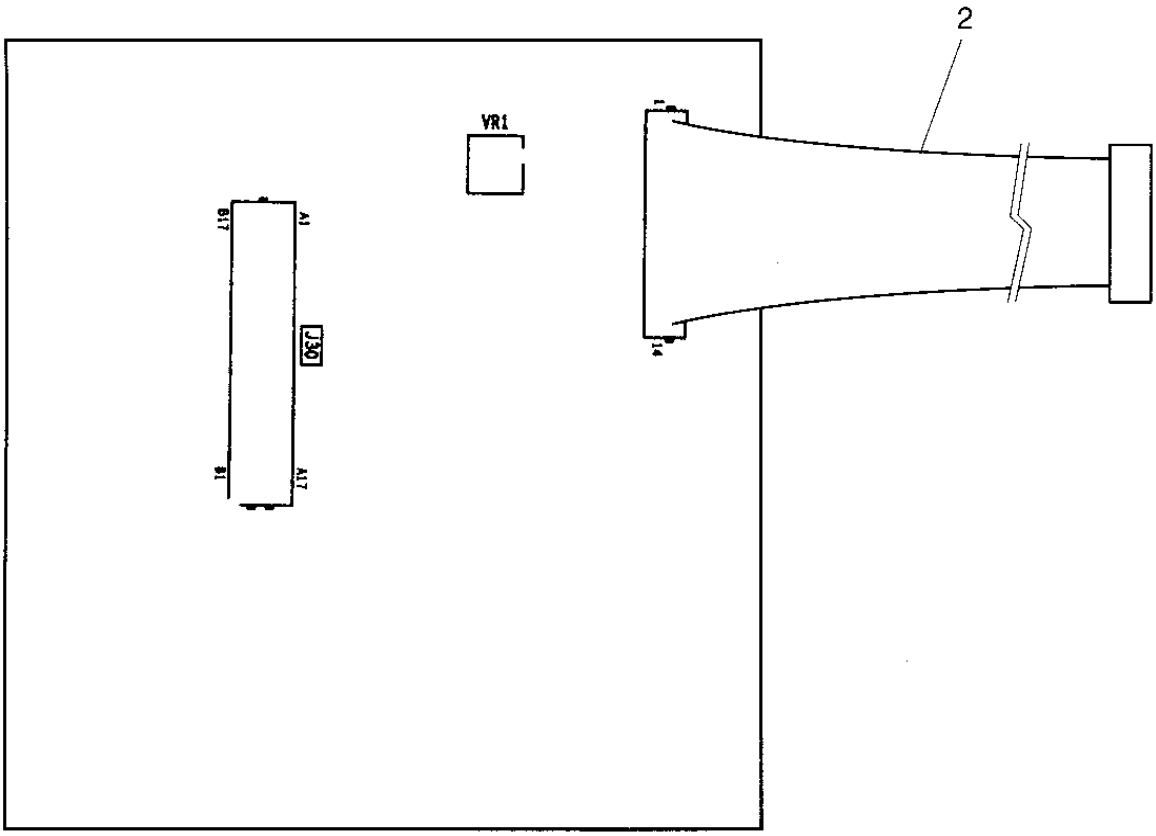
2
VR1
J30
A1
B17
B1
A17
1
14

TOSHIBA

ITEM NO.	PARTS NO.	PARTS NAME	Q'TY / PAGE	Q'TY / PACK	SPE PRICE IN NONE	P	I	R	BSI NO.	TO	FROM	SERIAL NO.	REMARKS
0	4401 977650	PWA-F-DSP-210	1	N/A***									
1	4401 977660	PWB-F-DSP-210	1	N/A***									
2	4401 979680	WH-LCD/T-210	1	1/P									
11	4843 114520	IC-DM7406N	1	5/S									
12	4843 114520	IC-DM7406N	1	5/S									
13	4843 112137	IC-MC74HC14AN	1	5/S									
14	4843 114181	IC-LC7932M	1	1/S									
21	4843 231490	SP-B3F-1000	1	5/S									
22	4843 231490	SP-B3F-1000	1	5/S									
23	4843 231490	SP-B3F-1000	1	5/S									
24	4843 231490	SP-B3F-1000	1	5/S									
25	4843 231490	SP-B3F-1000	1	5/S									
26	4843 231490	SP-B3F-1000	1	5/S									
27	4843 231490	SP-B3F-1000	1	5/S									
28	4843 231490	SP-B3F-1000	1	5/S									
29	4843 231490	SP-B3F-1000	1	5/S									
30	4843 231490	SP-B3F-1000	1	5/S									
31	4843 231490	SP-B3F-1000	1	5/S									
32	4843 231490	SP-B3F-1000	1	5/S									
33	4843 231490	SP-B3F-1000	1	5/S									
34	4843 231490	SP-B3F-1000	1	5/S									
35	4843 231490	SP-B3F-1000	1	5/S									
36	4843 231490	SP-B3F-1000	1	5/S									
37	4843 231490	SP-B3F-1000	1	5/S									
38	4843 231490	SP-B3F-1000	1	5/S									
51	4843 194633	LED-LTL-16KG	1	10/P									
52	4843 194633	LED-LTL-16KG	1	10/P									
53	4843 194633	LED-LTL-16KG	1	10/P									
54	4843 194633	LED-LTL-16KG	1	10/P									
55	4843 194633	LED-LTL-16KG	1	10/P									
56	4843 194633	LED-LTL-16KG	1	10/P									
57	4843 194633	LED-LTL-16KG	1	10/P									
58	4843 194633	LED-LTL-16KG	1	10/P									
59	4843 194633	LED-LTL-16KG	1	10/P									
60	4843 194633	LED-LTL-16KG	1	10/P									
61	4843 194633	LED-LTL-16KG	1	10/P									
62	4843 194633	LED-LTL-16KG	1	10/P									
63	4843 194633	LED-LTL-16KG	1	10/P									
64	4843 194633	LED-LTL-16KG	1	10/P									
65	4843 194633	LED-LTL-16KG	1	10/P									
66	4843 194633	LED-LTL-16KG	1	10/P									
67	4843 194633	LED-LTL-16KG	1	10/P									
68	4843 194633	LED-LTL-16KG	1	10/P									
81	4843 410404	CE-04W1C470M	1	10/P									
82	4843 410404	CE-04W1C470M	1	10/P									
83	4843 412279	CKM-ECFZ104ZF	1	10/P									
84	4843 412279	CKM-ECFZ104ZF	1	10/P									
85	4843 412279	CKM-ECFZ104ZF	1	10/P									
86	4843 412280	CKM-ECCZ1H330JG	1	10/P									
87	4843 412280	CKM-ECCZ1H330JG	1	10/P									
88	4843 412279	CKM-ECFZ104ZF	1	10/P									
89	4843 412279	CKM-ECFZ104ZF	1	10/P									
90	4843 412279	CKM-ECFZ104ZF	1	10/P									
91	4843 410262	CQ921M1H102K	1	10/P									
92	4843 410262	CQ921M1H102K	1	10/P									
101	4843 028611	RD1/4LA010KJ	1	10/P									
102	4843 028563	RD1/4LA100HJ	1	10/P									
103	4843 028563	RD1/4LA100HJ	1	10/P									
104	4843 028563	RD1/4LA100HJ	1	10/P									
105	4843 028563	RD1/4LA100HJ	1	10/P									
106	4843 028563	RD1/4LA100HJ	1	10/P									
107	4843 028563	RD1/4LA100HJ	1	10/P									
108	4843 028595	RD1/4LA2.2KJ	1	10/P									
109	4843 028595	RD1/4LA2.2KJ	1	10/P									
110	4843 028567	RD1/4LA150HJ	1	10/P									
111	4843 028567	RD1/4LA150HJ	1	10/P									
112	4843 028563	RD1/4LA100HJ	1	10/P									
113	4843 028563	RD1/4LA100HJ	1	10/P									
114	4843 028563	RD1/4LA100HJ	1	10/P									
115	4843 028587	RD1/4LA001KJ	1	10/P									
116	4843 028587	RD1/4LA001KJ	1	10/P									

ITEM NO.	PARTS NO.	PARTS NAME	Q'TY / PAGE	Q'TY / PACK	SPE PRICE IN NONE	P	I	R	BSI NO.	TO	FROM	SERIAL NO.	REMARKS
117	4843 028587	RD1/4LA001KJ	1	10/P									
118	4843 028587	RD1/4LA001KJ	1	10/P									
119	4843 028587	RD1/4LA001KJ	1	10/P									
120	4843 028587	RD1/4LA001KJ	1	10/P									
121	4843 028603	RD1/4LA4.7KJ	1	10/P									
122	4843 028587	RD1/4LA001KJ	1	10/P									
123	4843 028587	RD1/4LA001KJ	1	10/P									
124	4843 028587	RD1/4LA001KJ	1	10/P									
125	4843 028603	RD1/4LA4.7KJ	1	10/P									
126	4843 028603	RD1/4LA4.7KJ	1	10/P									
127	4843 028603	RD1/4LA4.7KJ	1	10/P									
128	4843 028603	RD1/4LA4.7KJ	1	10/P									
129	4843 028603	RD1/4LA4.7KJ	1	10/P									
130	4843 028603	RD1/4LA4.7KJ	1	10/P									
131	4843 028603	RD1/4LA4.7KJ	1	10/P									
132	4407 782660	JUMPER-WIRE-10	1	10/P									
133	4843 028587	RD1/4LA001KJ	1	10/P									
141	3036 548970	Q-2SA1428-Y	1	5/P									
142	3036 548970	Q-2SA1428-Y	1	5/P									
160	4843 307788	J-53313-3415	1	5/P									

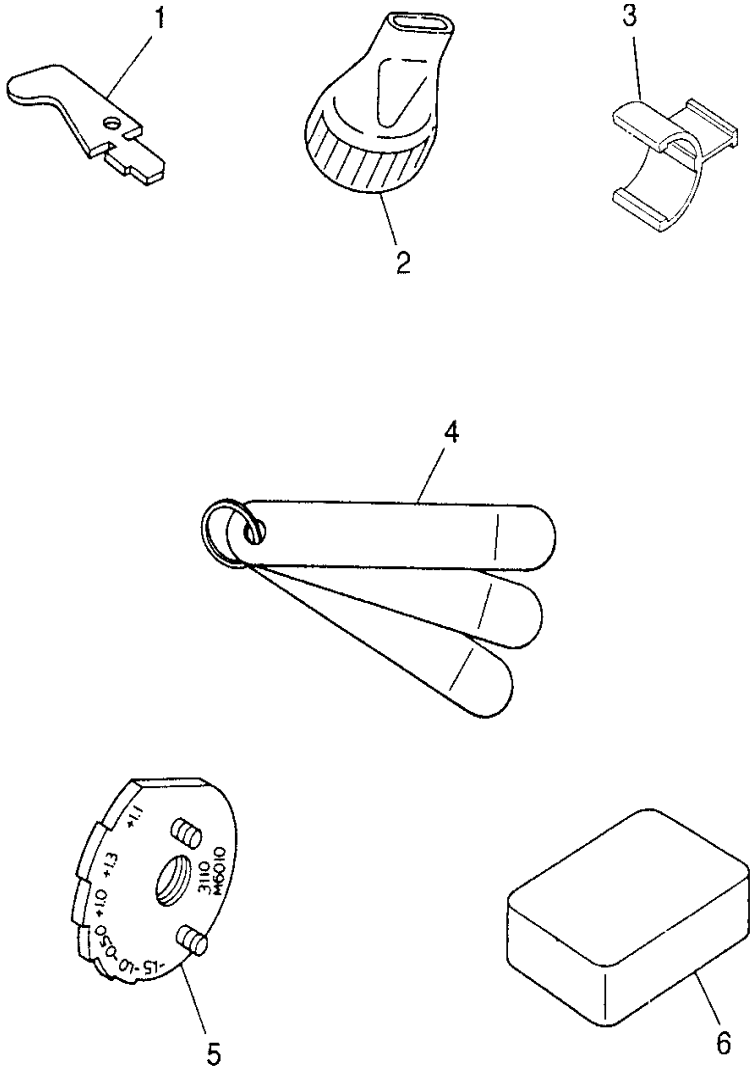

TOSHIBA

ITEM NO.	PARTS NO.	PARTS NAME	Q'TY / PAGE	Q'TY / PACK	SPE PRICE IN NONE	P	I	R	BSI NO.	TO	FROM	SERIAL NO.	REMARKS
1	4407 915730	JIG-SW-F-COV	1	1/P									
2	4407 914000	NOZZLE-BOTTLE	1	1/P									
3	4400 665570	HOLDER-PLY-SCAN	1	1/P									
4	4402 048100	ASM-JIG-DOC-180	1	1/P									
5	4407 673540	ASM-GAP-JIG-60	1	1/P									
6	4408 062070	CLEANER-TPH-B	1	1/P									
7	4402 819300	JIG-DEV-LID-170	1	1/P									
8	4401 950260	ASM-PACK-ADJ-CH	1	1/C		A	-	J	F97C855				
9	4408 687380	BOND-1324	1	1/P		A	-	J	F98B201				

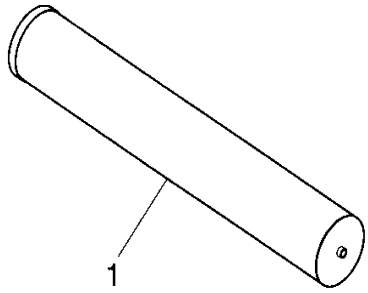

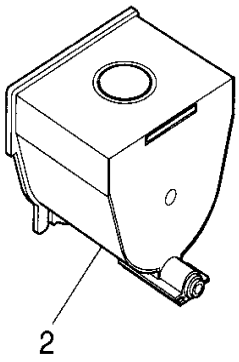

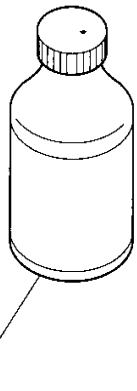

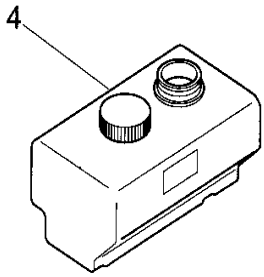

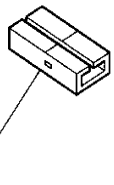

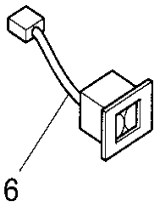

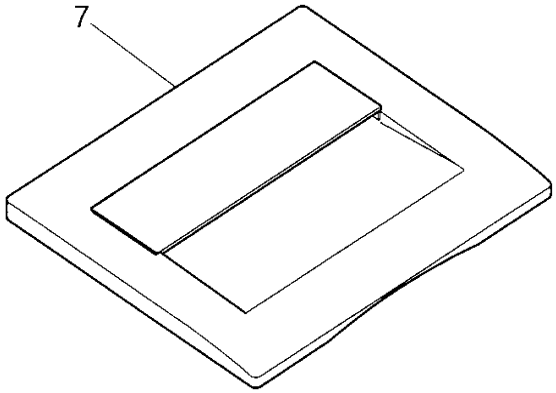

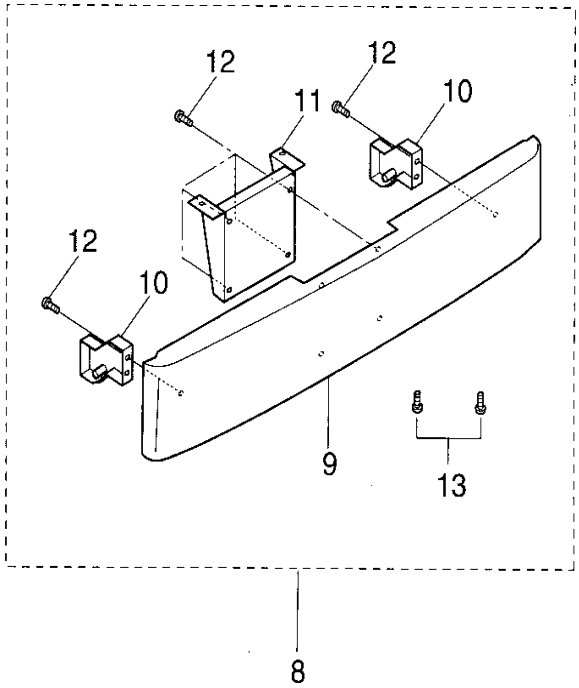

TOSHIBA

ITEM NO.	PARTS NO.	PARTS NAME	Q'TY / PAGE	Q'TY / PACK	SPE PRICE IN NONE	P	I	R	BSI NO.	TO	FROM	SERIAL NO.	REMARKS
1	6608 4979	PS-OD2060	1	SUPPLY									
2A	6608 9008	PS-ZT2060E	1	SUPPLY									EUR
2B	6608 4980	PS-ZT2060	1	SUPPLY									OTHERS
3	6608 4981	PS-ZD2060	1	SUPPLY									
4A	6608 9010	PS-TB2060E	1	SUPPLY									EUR
4B	6608 9009	PS-TB2060	1	SUPPLY									OTHERS
5	6600 2050	MU-8	1	SUPPLY									
6	6600 2051	MU-10	1	SUPPLY									
7	6608 9019	KA-2060PC	1	SUPPLY									
8	6608 9021	KE-2060	1	SUPPLY									
9	4401 997950	COVER-SLOT	1	1/PP									
10	4401 997970	ARM-COV-SLOT	2	1/P									
11	4401 997960	BRKT-COV-SLOT	1	1/P									
12	4842 040846	PTBR3008MSZN3A	6	50/P									
13	4842 040060	TPAN40*08MSZN3L	2	50/P									

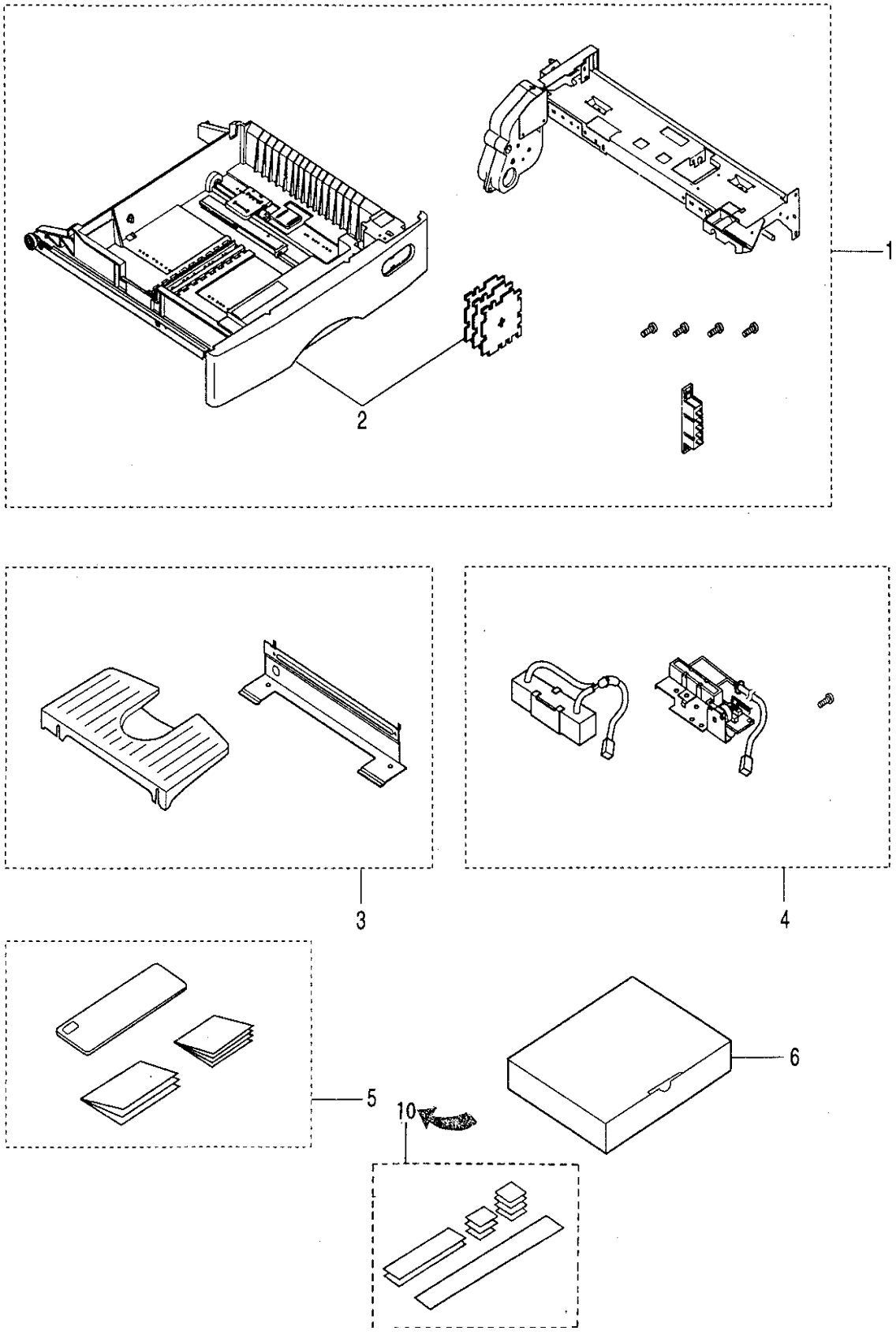

TOSHIBA

ITEM NO.	PARTS NO.	PARTS NAME	Q'TY / PAGE	Q'TY / PACK	SPE PRICE IN NONE	P	I	R	BSI NO.	TO	FROM	SERIAL NO.	REMARKS
1	6608 4977	MY-1006	1	SUPPLY									
2	4401 965480	SCT-SERVICE-210	1	1/C									SERVICE ONLY
3	6608 9022	KK-2060	1	SUPPLY									
4A	6608 9000	MF-2060U	1	SUPPLY									115V
4B	6608 9001	MF-2060E	1	SUPPLY									240V
5A	6608 9003	KM-2060EN	1	SUPPLY									ENGLISH
5B	6608 9004	KM-2060GR	1	SUPPLY									GERMAN
5C	6608 9005	KM-2060FR	1	SUPPLY									FRENCH
5D	6608 9006	KM-2060SP	1	SUPPLY									SPANISH
5E	6608 9007	KM-2060IT	1	SUPPLY									ITALIAN
6	4409 890730	PM-KIT-2060	1	1/S									
10	6608 9259	KK-2060KIT	1	SUPPLY		A	-	J	F98C254				

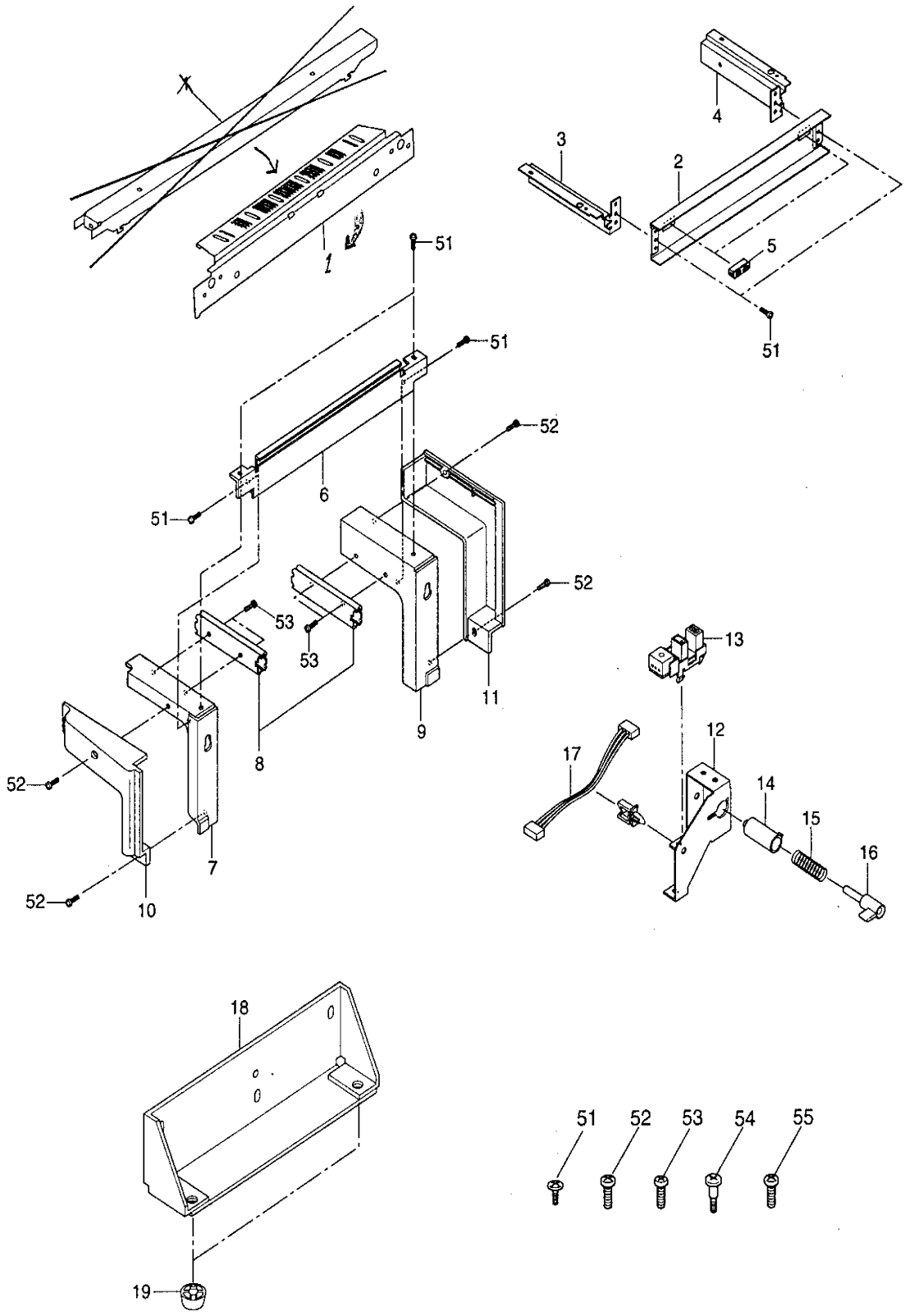

TOSHIBA

ITEM NO.	PARTS NO.	PARTS NAME	Q'TY / PAGE	Q'TY / PACK	SPE PRICE IN NONE	P	I	R	BSI NO.	TO	FROM	SERIAL NO.	REMARKS
0	6608 9017	KN-2060S01	1	SUPPLY									
1	4400 696970	K-GUIDE-ENT-739	1	1/P									
2	4400 697420	STAY-MG-CATCH	1	1/P									
3	4400 697260	BKT-FIX-BTM-F	1	1/P									
4	4400 697340	BKT-FIX-BTM-R	1	1/P									
5	4400 682300	MGN-CATCH-22S	2	1/P									
6	4400 697450	STAY-P-MG-CATCH	1	1/P									
7	4400 697230	FRM-RAIL-739-F	1	1/P									
8	4400 697480	RAIL-C2731-3203	2	1/P									
9	4400 697320	FRM-RAIL-739-R	1	1/P									
10	4400 697600	COV-RAIL-KIT-F	1	1/PP									
11	4400 697610	COV-RAIL-KIT-R	1	1/PP									
12	4400 697670	BKT-SW-RAIL-739	1	1/P									
13	4400 699210	SZ-LG284D1	1	1/C									
14	4402 218250	CYLINDER-P-SW	1	1/P									
15	4402 218260	SPC060-040-0680	1	5/P									
16	4400 928890	ACTUATOR-P-SW-G	1	1/P									
17	4400 699200	WH-SRTSW-210	1	1/P									
18	4400 792010	F-STAY-PFP-M-T	1	1/PP									
19	4407 720020	FOOT	2	1/P									
51	4400 841470	SCREW40*08-T	10	50/P									
52	4401 787160	SCREWM4-7-R	4	10/P									
53	4842 040060	TPAN40*08MSZN3L	6	50/P									
54	4400 697490	SCREW-7-88-M4	2	50/P									
55	7043 400813	BID40*08MSCR1AI	6	50/P									
56	7043 402013	BID40*20MSCR1AI	2	50/P									

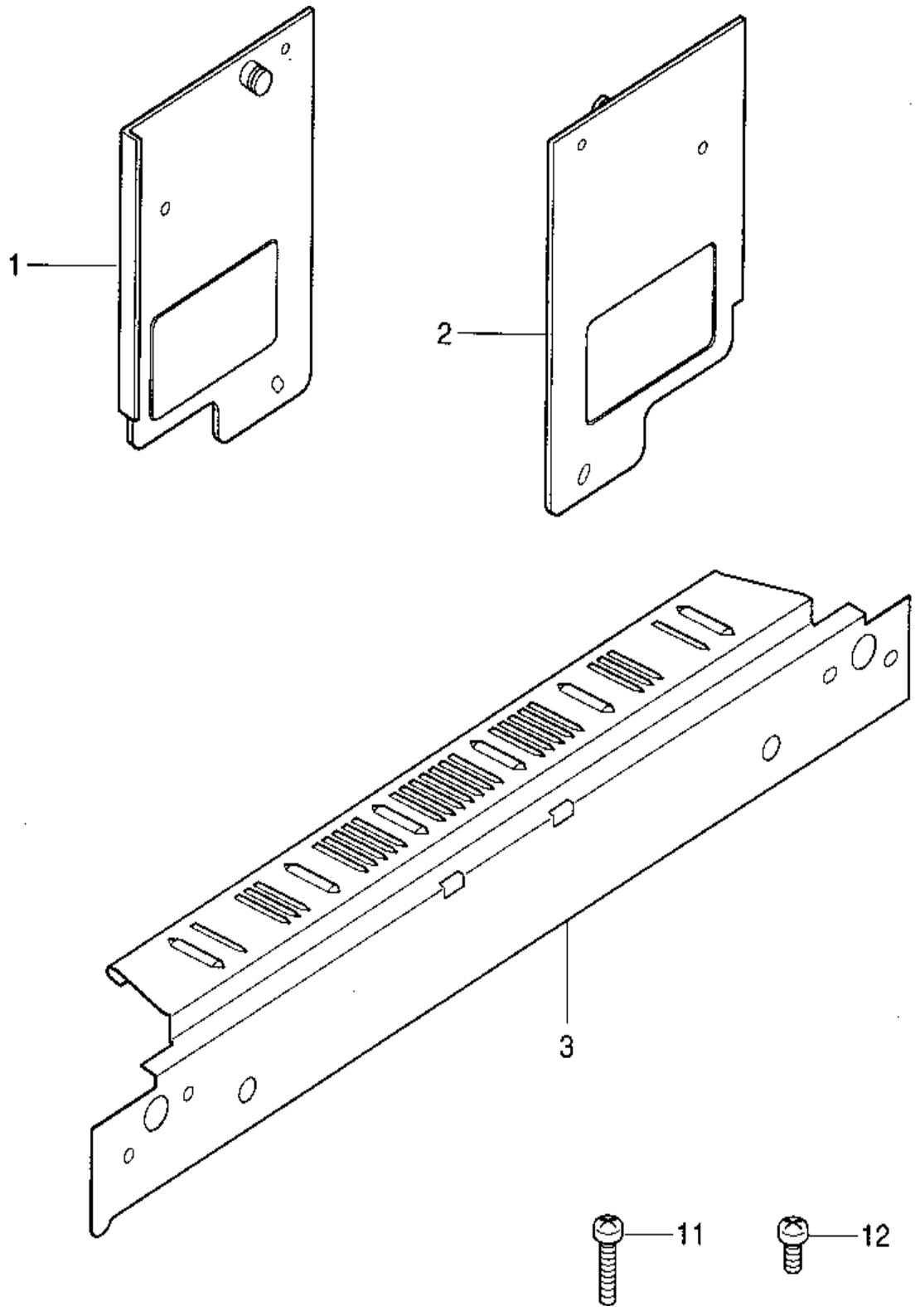

TOSHIBA

ITEM NO.	PARTS NO.	PARTS NAME	Q'TY / PAGE	Q'TY / PACK	SPE PRICE IN NONE	P	I	R	BSI NO.	TO	FROM	SERIAL NO.	REMARKS
0	6608 9024	KN-2060S03	1	SUPPLY									
1	4400 696940	K-BKT-FIX-739-R	1	1/P									
2	4400 696910	K-BKT-FIX-739-F	1	1/P									
3	4400 696970	K-GUIDE-ENT-739	1	1/P									
11	4842 040082	TBID4016MSCR3C	4	50/P									
12	7043 400813	BID40*08MSCR1AI	2	50/P									