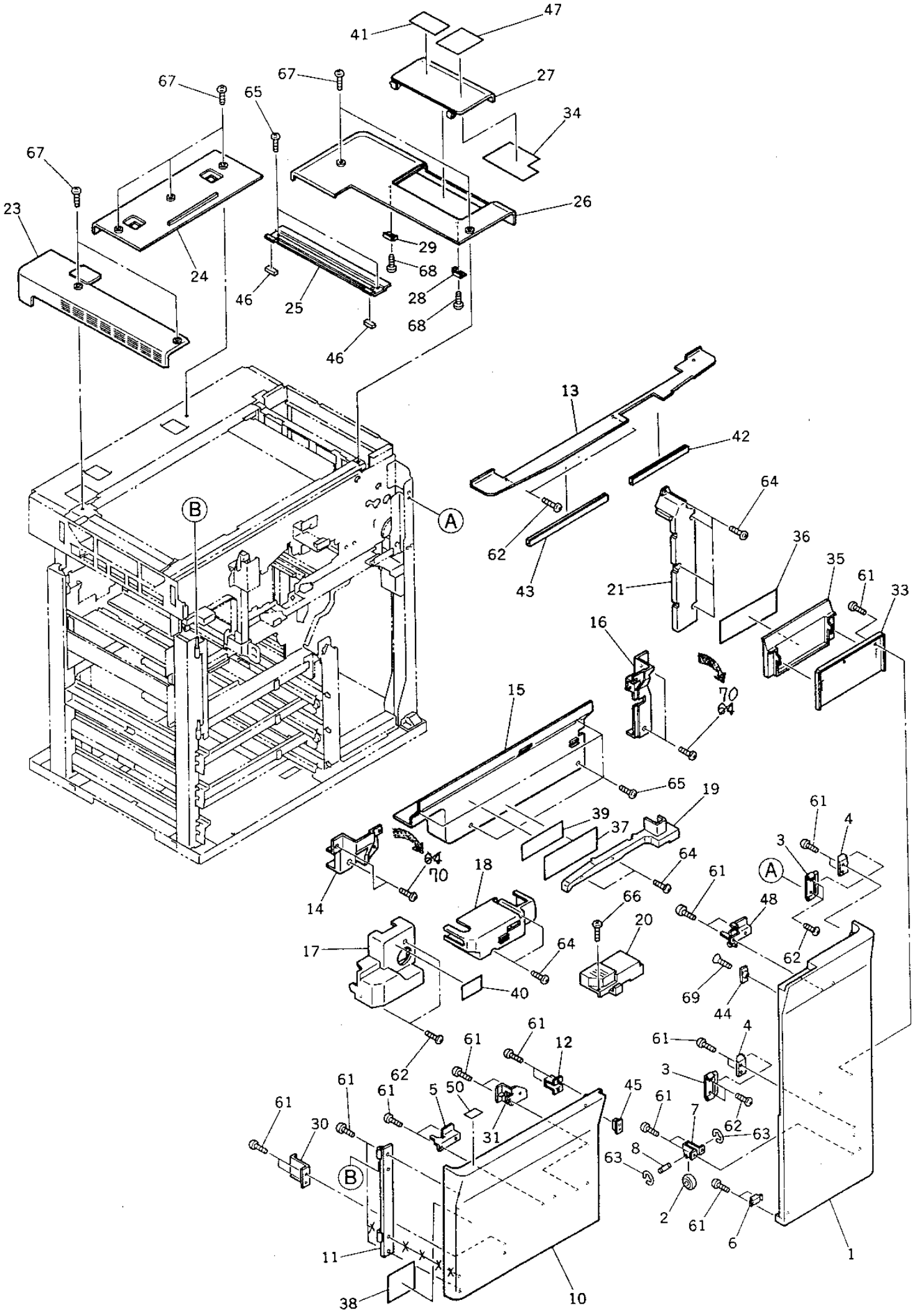
47
41
27
67
67
65
34
67
26
23
29
24
68
46
25
28
68
46
13
42
64
B
A
62
36
35
61
33
43
21
16
70
64
15
65
19
61
39
37
4
3
64
A
70
18
61
14
66
48
20
17
64
62
40
69
44
61
4
61
12
61
3
62
61
5
50
45
61
61
7
62
30
31
63
8
63
B
2
61
6
1
11
38
10

ITEM NO.	PARTS NO.	PARTS NAME	Q'TY / PAGE	Q'TY / PACK	SPE PRICE IN NONE	P	I	R	BSI NO.	TO	FROM	SERIAL NO.	REMARKS
1	4400 746130	F-COV-FRONT-R	1	1/PP									
2	4408 501770	BRG-DR-19-H5R	1	1/P						002 1			
2 1	4401 753100	ROLLER-19-H5R	1	1/P		C	B	E	F4G247		002		
3	4401 752400	K-HINGE-F-R	2	1/P									
4	4401 753830	HOLDER-HINGE-FR	2	1/P									
5	4401 754450	PUSHER-SW-DOOR	1	1/P									
6	4407 764680	MG-CATCH	1	1/P									
7	4401 752320	GUIDE-COV-F-R	1	1/P									
8	4408 501780	PIN-DOOR-BRG	1	1/P						008 1			
8 1	4401 753110	PIN-DOOR-GUIDE	1	1/P		C	B	E	F4G247		008		
10	4401 752870	F-COV-FRONT-L	1	1/PP									
11	4401 754970	HINGE-COV-L	1	1/P									
12	4401 752440	BRKT-MG-F-L	1	1/P									
13	4401 752650	COV-IN-F-U-U	1	1/PP						013 1			
13 1	4402 303290	COV-IN-F-U-U	1	1/PP		C	E	F	F98B191		013	VE7	
14	4401 752740	K-COV-IN-F-U-L	1	1/PP									
15	4401 752600	COV-IN-F-U-C	1	1/PP						015 1			
15 1	4402 302890	COV-IN-F-U-C	1	1/PP		C	E	F	F97A813		015	VJ6	
16	4401 752730	K-COV-IN-F-U-R	1	1/PP						016 1			
16 1	4401 900660	K-COV-IN-F-U-R	1	1/PP		C	E	F	F95J504		016		
17	4401 752690	COV-IN-F-L-L	1	1/PP						017 1			
17 1	4401 903400	COVER-IN-F-L-L	1	1/PP		C	E	F	F95J504		017		
18	4401 752680	COV-IN-F-L-C	1	1/PP						018 1			
18 1	4401 900760	COV-IN-F-L-C	1	1/PP		C	E	F	F96D653		018	VL5	
19	4401 752670	COV-IN-F-L-R	1	1/PP									
20	4401 776800	COVER-GUIDE-STK	1	1/PP						020 1			
20 1	4401 910190	COVER-GUIDE-STK	1	1/PP		C	E	F	F95J504		020	VI5	
21	4401 787640	COV-MTR-TRAY	1	1/PP						021 1			
21 1	4401 909380	COV-MTR-TRAY	1	1/PP		C	E	F	F95J504		021	VE5	
23	4401 752000	COVER-TOP-L	1	1/PP									
24	4401 752010	COVER-TOP-C	1	1/PP									
25	4401 752820	F-FIX-GLASS-R-T	1	1/PP									
26	4401 752030	COVER-TOP-R	1	1/PP									
27	4401 752280	K-COV-TNR-OPN-T	1	1/PP									
28	4401 752050	HINGE-COV-HOP-F	1	1/P									
29	4401 752060	HINGE-COV-HOP-R	1	1/P									
30	4401 754480	PUSHER-OP-GUIDE	1	1/P									
31	4401 754490	PUSHER-OP-RGST	1	1/P									
33	4401 752480	PLT-BOOK-HLD	1	1/P									
34	4401 768170	LBL-TNR-INST-T	1	5/P									
35	4408 541410	BOOK-HOLDER-T	1	1/PP									
36	4401 768080	LBL-PFP-JAM	1	1/KP									
37	4401 768060	LBL-ADD-JAM	1	1/KP									
38	4401 768190	LBL-MEMORY-150	1	5/P									
39	4400 841490	LABEL-DRUM-F	1	5/P									
40	4400 831630	LBL-HOT	1	5/P									
41	4401 768180	LBL-TNR-CAU-1	1	5/P									
42	4401 770580	EDGING-EO10-210	1	1/P									
43	4401 770590	EDGING-EO10-300	1	1/P									
44	4401 751990	PLATE-MG-DF	1	1/P									
45	4402 202690	MG-CATCH-15	1	1/P									
46	4401 754880	CUSHION-GLASS	2	5/P									
47	4401 768300	LBL-TNR-CAU-2	1	5/P									
48	4401 754930	ASM-PUSHER-SW-D	1	1/D									
50	4401 768620	LBL-SHELL-CAU	1	5/P									
61	7040 400811	PAN40*08MSZN3AI	22	50/P									
62	4842 040060	TPAN40*08MSZN3L	9	50/P									
63	7405 004031	ERR040SKZN3A	2	50/P									
64	4842 040700	TZPAN4008MSZN3L	12	50/P						064 1			
64 1	4842 040700	TZPAN4008MSZN3L	8	50/P		D	E	E	F98D262		064		
65	7043 400813	BID40*08MSCR1AI	6	50/P									
66	4842 040692	TZPAN3008MSZN3L	1	50/P									
67	4842 040635	TBID40*08MSCR3C	8	50/P									
68	4842 040846	PTBR30*08MSZN3A	2	50/P									
69	7124 400811	12FLT4008MSZN3A	1	50/P						069 1			
69 1	7124 401011	12FLT4010MSZN3A	1	50/P		C	E	E	F96D653		069	VL5	
70	4842 040702	TZPAN4010MSZN3L	4	50/P		A	E	E	F98D262				

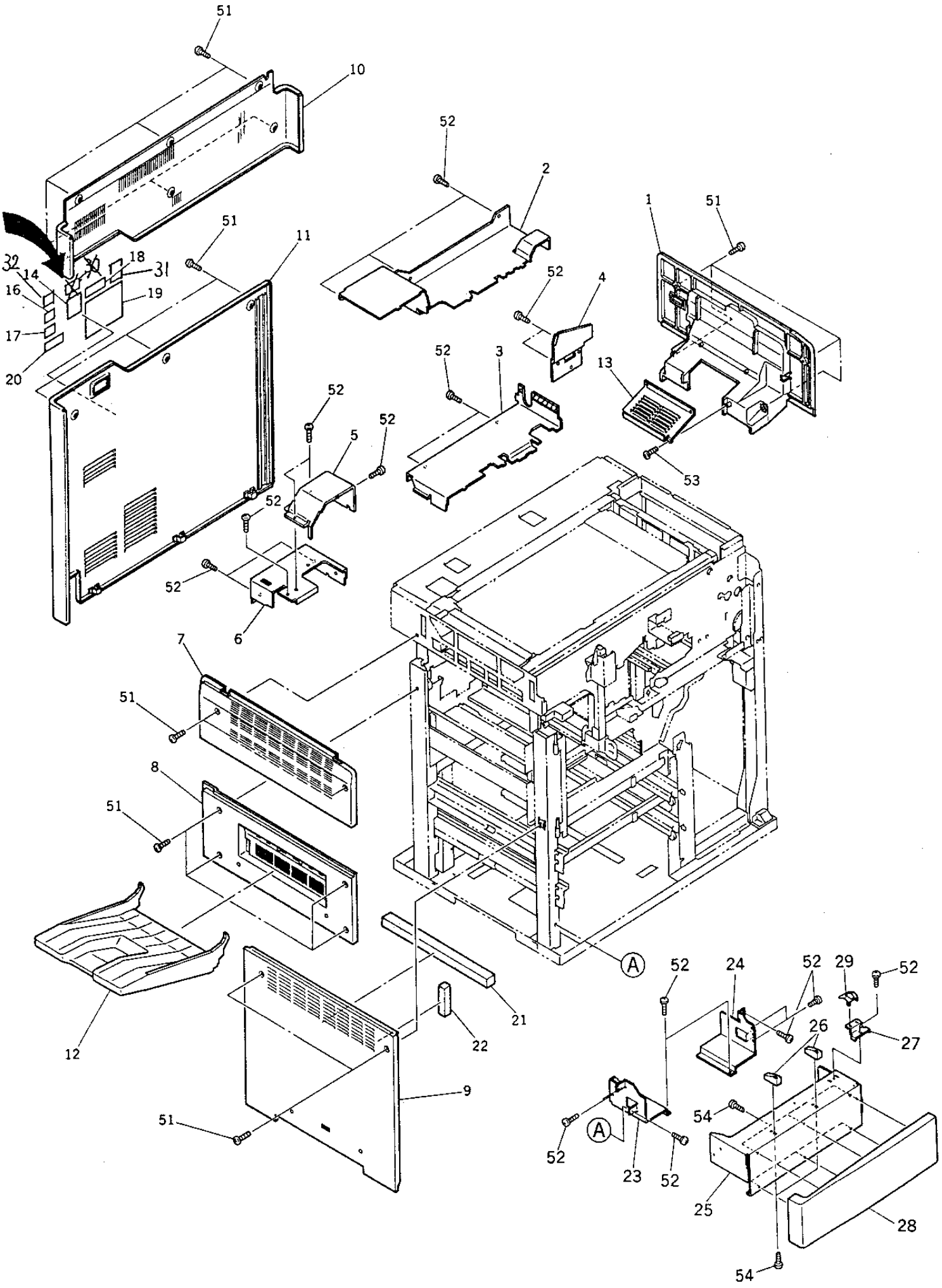
51
10
52
2
1
51
11
51
32
14
18
31
16
19
17
20
52
4
52
3
13
52
5
52
53
52
52
6
7
51
8
51
12
21
22
9
51
A
52
24
52
29
52
26
27
54
52
A
23
52
25
28
54

TOSHIBA

ITEM NO.	PARTS NO.	PARTS NAME	Q'TY / PAGE	Q'TY / PACK	SPE PRICE IN NONE	P	I	R	BSI NO.	TO	FROM	SERIAL NO.	REMARKS
1	4401 752080	COVER-RIGHT-U	1	1/PP						001 1			
1 1	4402 868610	COVER-RIGHT-U	1	1/PP		C	E	F	F98B191		001	VE7	
2	4401 752700	K-COV-IN-R-U	1	1/PP									
3	4401 752750	COV-IN-R-L-1	1	1/PP						003 1			
3 1	4401 900750	COV-IN-R-L-1	1	1/PP		C	E	F	F95J504		003	VE5	
4	4401 752760	COV-IN-R-L-2	1	1/P									
5	4401 752770	COVER-IN-R-HR-U	1	1/P									
6	4401 752780	COVER-IN-R-HR-L	1	1/P									
7	4401 752070	COVER-LEFT-U	1	1/PP									
8	4401 751180	COVER-EXIT	1	1/PP									
9	4401 751810	F-COV-LEFT-L-T	1	1/PP						009 1			
9 1	4401 901070	K-COV-LEFT-L-T	1	1/P		C	E	F	F95J504		009	VJ5	
10	4401 752230	F-COV-REAR-U-T	1	1/PP						010 1			
10 1	4401 901000	COVER-REAR-U-T	1	1/PP		C	E	F	F95J504		010	VJ5	
11	4401 752220	F-COV-REAR-L-T	1	1/PP						011 1			
11 1	4401 901010	K-COV-REAR-L-T	1	1/P		C	E	F	F95J504		011	VJ5	
12	4408 541390	TRAY-T	1	1/PP									
13	4401 752970	COVER-R-U-SUB	1	1/P									
14	4408 543130	LBL-SERVICE-T	1	5/P									
16C	4407 773470	LABEL-GS	1	5/P									EUD
16D	4407 773470	LABEL-GS	1	5/P									GSD
16E	4407 773470	LABEL-GS	1	5/P									FRD
16F	4407 773470	LABEL-GS	1	5/P									SED
17F	4408 515500	LBL-SETI	1	5/P									SED
18A	4400 740530	LABEL-FCC	1	10/P									TAD
19A	4400 361560	STICKER-W-TAIS	1	N/A***									TAD
20D	4402 200640	LBL-RECYCLE	1	5/P									GSD
21	4401 755000	SEAL-COV-1	1	1/P									
22	4401 755010	SEAL-COV-2	1	1/P									
23	4400 745880	BKT-BLIND-L	1	1/P									
24	4400 745890	BKT-BLIND-R	1	1/P									
25	4400 746190	BKT-COV-BLIND	1	1/P									
26	4402 234530	HOLDER-CST-P	2	1/P									
27	4400 746180	BKT-PUSH-LEV	1	1/P									
28	4400 746200	COVER-BL-CST	1	1/PP									
29	4402 233080	PUSHER-LEV-ELV	1	1/P									
30A	4401 768740	LBL-PATENT	1	5/P		A	D	J	F4J310	030A1		VG4	TAD
30A1	4401 768740	LBL-PATENT	0	5/P		B	-	J	F97A793		030A		TAD
31B	4400 945700	LABEL-CANADA	1	5/P		A	-	C	F5B397			VA5	CSD
32B	4402 090460	LABEL-CE	1	5/P		A	-	C	F95H495			VH5	FOR EUROPE
51	4842 040635	TBID40*08MSCR3C	21	50/P									
52	4842 040060	TPAN40*08MSZN3L	24	50/P									
53	4842 040495	PTBR30*06MSZN3A	2	50/P									
54	4842 040849	PTBR40*08MSZN3A	8	50/P									

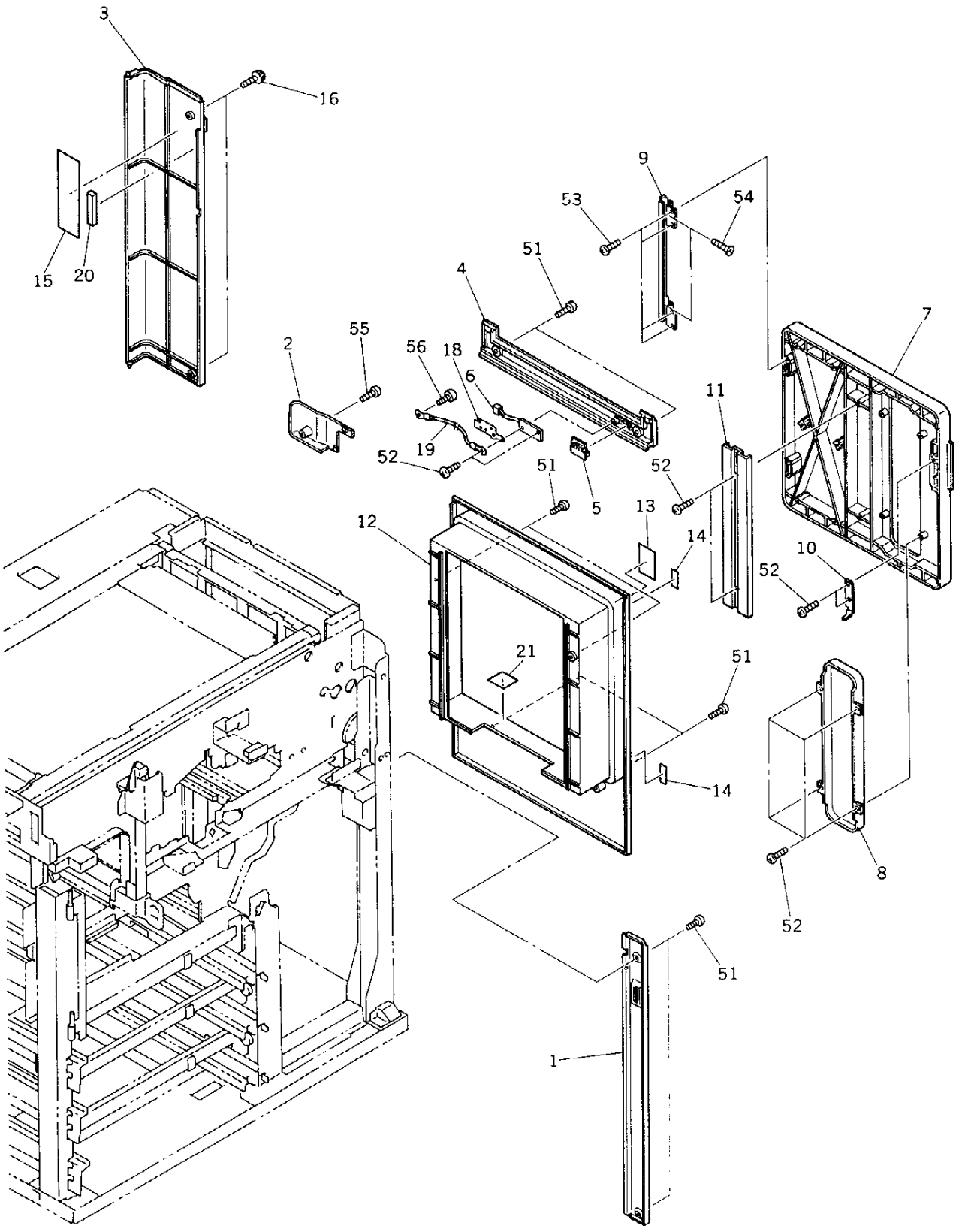

TOSHIBA

ITEM NO.	PARTS NO.	PARTS NAME	Q'TY / PAGE	Q'TY / PACK	SPE PRICE IN NONE	P	I	R	BSI NO.	TO	FROM	SERIAL NO.	REMARKS
1	4401 752850	F-COV-R-L-F-T	1	1/PP						001 1			
1 1	4401 901150	F-COV-R-L-F-T	1	1/PP		C	E	G	F96D653	001 2	001		
1 2	4401 901170	K-COVER-R-L-F-T	1	1/PP		C	E	E	F97A813		001 1		
2	4401 752800	COVER-GAP-REAR	1	1/P									
3	4401 752100	COVER-U-TNR	1	1/PP									
4	4401 752180	F-COVER-BEAM-EN	1	1/PP									
5	4401 779820	K-KEY-LCF	1	1/P									
6	4401 795400	PWA-F-LCF-150	1	1/SB									
7	4401 779380	F-DOOR-LCF	1	1/PP									
8	4401 779780	WINDOW-DOOR-LCF	1	1/PP									
9	4401 779740	K-HINGE-LCF-DOR	1	1/P									
10	4401 780310	BKT-DOOR-CTH-R	1	1/P									
11	4401 779990	BACK-PLATE	1	1/P									FOR A4
12	4401 779800	COVER-LCF	1	1/PP									
13	4402 240580	LBL-LMT-545-LCC	1	5/P									
14	4401 779690	CUSHION-5-7-18	2	5/P									
15	4401 768610	LBL-U-TNR	1	1/KP									
16	4401 752980	SCREW-COV-U-TNR	2	10/P									
18	4401 751800	MYLAR-SHIELD-LC	1	1/P									
19	4401 798130	WH-LCFKEY-EARTH	1	5/P									
20	4401 753800	K-MG-U-TNR	1	5/P									
21	4401 779870	LBL-LCF-CAUTION	1	5/P									
51	4842 040635	TBID40*08MSCR3C	8	50/P									
52	4842 040846	PTBR30*08MSZN3A	10	50/P									
53	7040 300611	PAN30*06MSZN3A	4	50/P									
54	7044 300611	FLT30*06MSZN3AI	2	50/P									
55	4842 040700	TZPAN4008MSZN3L	1	50/P									
56	4842 040700	TZPAN4008MSZN3L	1	50/P									

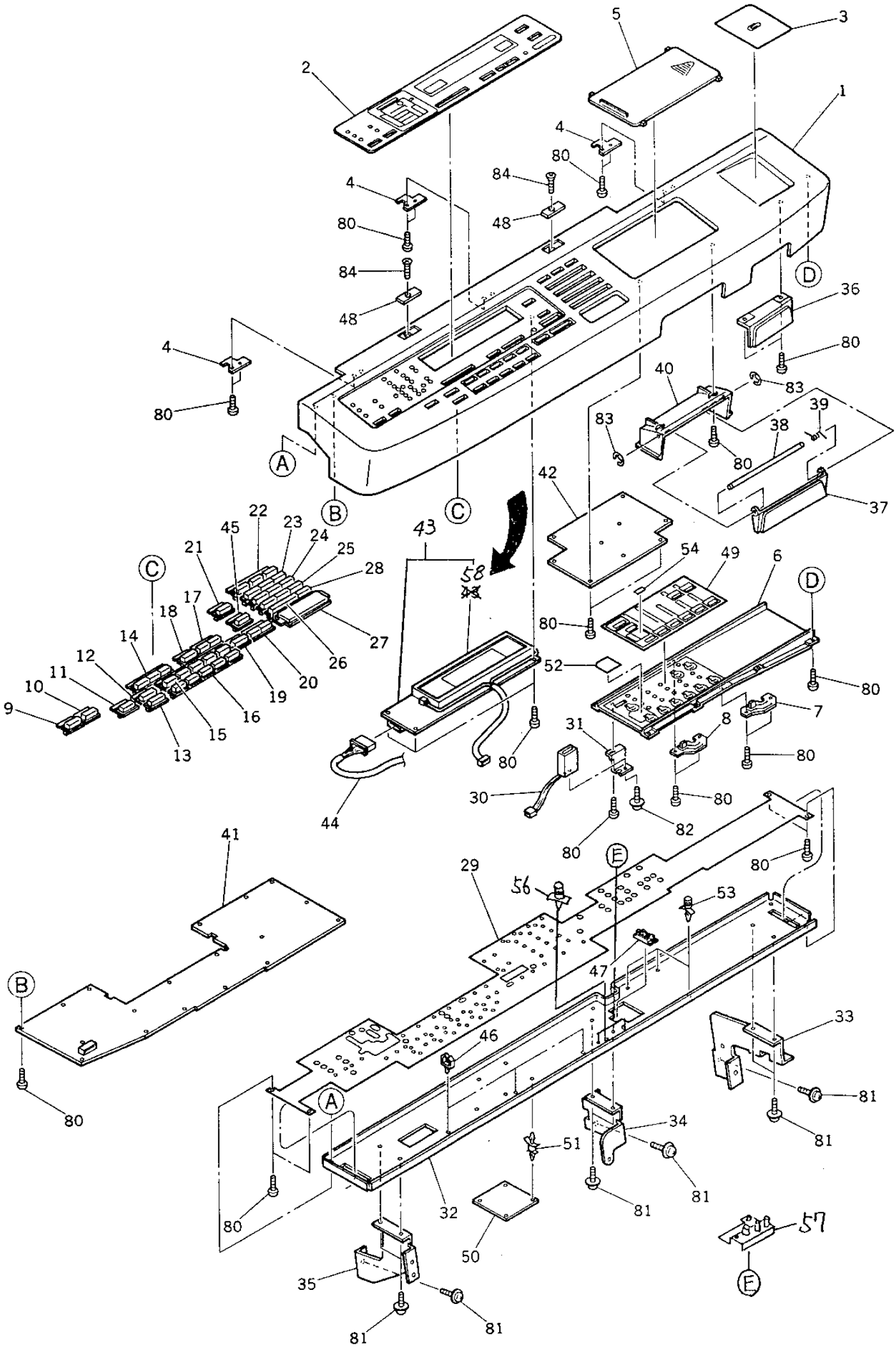
1
2
3
4
5
6
7
8
9
10
11
12
13
14
15
16
17
18
19
20
21
22
23
24
25
26
27
28
29
30
31
32
33
34
35
36
37
38
39
40
41
42
43
44
45
46
47
48
49
50
51
52
53
54
56
57
58
80
81
82
83
84
A
B
C
D
E

ITEM NO.	PARTS NO.	PARTS NAME	Q'TY / PAGE	Q'TY / PACK	SPE PRICE IN NONE	P	I	R	BSI NO.	TO	FROM	SERIAL NO.	REMARKS
1A	4401 751250	F-COV-CNP-UC	1	1/PP									TAD
1B	4401 751250	F-COV-CNP-UC	1	1/PP									CSD
1C	4401 751260	F-COV-CNP-EU	1	1/PP									EUD
1D	4401 751260	F-COV-CNP-EU	1	1/PP									GSD
1E	4401 751260	F-COV-CNP-EU	1	1/PP									FRD
1F	4401 751260	F-COV-CNP-EU	1	1/PP									SED
1G	4401 751260	F-COV-CNP-EU	1	1/PP									UKD
1H	4401 751270	F-COV-CNP-AU	1	1/PP									AUD
1I	4401 751270	F-COV-CNP-AU	1	1/PP									TWD
1J	4401 751270	F-COV-CNP-AU	1	1/PP									SAN
1K	4401 751270	F-COV-CNP-AU	1	1/PP									EUN
1L	4401 751270	F-COV-CNP-AU	1	1/PP									AUN
2A	4400 746060	PANEL-DSP-UC	1	1/KP									TAD
2B	4400 746060	PANEL-DSP-UC	1	1/KP									CSD
2C	4400 746070	PANEL-DSP-EU	1	1/KP									EUD
2D	4400 746070	PANEL-DSP-EU	1	1/KP									GSD
2E	4400 746070	PANEL-DSP-EU	1	1/KP									FRD
2F	4400 746070	PANEL-DSP-EU	1	1/KP									SED
2G	4400 746070	PANEL-DSP-EU	1	1/KP									UKD
2H	4400 746080	PANEL-DSP-AU	1	1/KP									AUD
2I	4400 746080	PANEL-DSP-AU	1	1/KP									TWD
2J	4400 746080	PANEL-DSP-AU	1	1/KP									SAN
2K	4400 746080	PANEL-DSP-AU	1	1/KP									EUN
2L	4400 746080	PANEL-DSP-AU	1	1/KP									AUN
3	4401 751100	MAGNET-CLIP	1	1/P									
4	4401 751560	HOOK-CONPANE	3	1/P									
5	4401 751690	COVER-EDIT	1	1/PP									
6	4401 751950	HOLDER-EDIT	1	1/P						006 1			
6 1	4401 751280	HOLDER-EDIT	1	1/P		C	B	D	F4G247		006	VD4	
		COUNTERMEASURE TO SCRATCHES ON THE CONTROL-PANEL SHEET KEYS											
7	4401 751820	SPL-EDIT-F	1	5/P									
8	4401 751830	SPL-EDIT-R	1	5/P									
9	4401 751290	BUTTON-SORT	1	1/P									
10	4401 751300	BUTTON-ADF	1	1/P									
11	4401 751310	BUTTON-CST	1	1/P									
12	4401 752540	K-BUTTON-AMS	1	1/P									
13	4401 752550	K-BUTTON-APS	1	1/P									
14	4401 751340	BUTTON-ZOOM	1	1/P									
15	4401 752560	K-BUTTON-SZ-1	1	1/P									
16	4401 752570	K-BUTTON-SZ-2	1	1/P									
17	4401 751390	BUTTON-YES/NO	1	1/P									
18A	4401 751370	BUTTON-HELP	1	1/P									TAD
18B	4401 751370	BUTTON-HELP	1	1/P									CSD
18C	4401 751380	BUTTON-INFO	1	1/P									EUD
18D	4401 751380	BUTTON-INFO	1	1/P									GSD
18E	4401 751380	BUTTON-INFO	1	1/P									FRD
18F	4401 751380	BUTTON-INFO	1	1/P									SED
18G	4401 751380	BUTTON-INFO	1	1/P									UKD
18H	4401 751370	BUTTON-HELP	1	1/P									AUD
18I	4401 751370	BUTTON-HELP	1	1/P									TWD
18J	4401 751370	BUTTON-HELP	1	1/P									SAN
18K	4401 751370	BUTTON-HELP	1	1/P									EUN
18L	4401 751370	BUTTON-HELP	1	1/P									AUN
19	4401 751430	BUTTON-AUTO	1	1/P									
20	4401 751440	BUTTON-EXP-N	1	1/P									
21	4401 751410	BUTTON-FUNC-FC	1	1/P									
22	4401 752590	K-BUTTON-TIMER	1	1/P									
23	4401 751480	BUTTON-1-2-3	1	1/P									
24	4401 751490	BUTTON-4-5-6	1	1/P									
25	4401 751500	BUTTON-7-8-9	1	1/P									
26	4401 751510	BUTTON-CLEAR	1	1/P									
27	4401 751520	BUTTON-PRINT	1	1/P									
28	4401 751530	BUTTON-0	1	1/P									
29	4401 751740	SHIELD-MYLAR	1	1/KP									
30	4401 797650	CTR-E750B-150	1	1/P									
31	4401 751550	BRKT-COUNTER	1	1/P									
32	4401 751750	STAY-CONPANE	1	1/P						032 1			
32 1	4401 900530	STAY-CONPANE	1	1/P		C	B	D	F96H753		032	VI6	
33	4401 770470	BRKT-PNL-R	1	1/P						033 1			

ITEM NO.	PARTS NO.	PARTS NAME	Q'TY / PAGE	Q'TY / PACK	SPE PRICE IN NONE	P	I	R	BSI NO.	TO	FROM	SERIAL NO.	REMARKS
33 1	4402 303260	BRKT-PNL-R	1	1/P		C	E	F	F98B191		033	VE7	
34	4401 770480	BRKT-PNL-C	1	1/P									
35	4401 770490	BRKT-PNL-L	1	1/P									
36	4401 751930	COVER-BLIND	1	1/P									
37	4401 751860	COV-HANDLE-CNP	1	1/P									
38	4401 751870	PIN-HANDLE-CNP	1	1/P									
39	4401 751880	SPR-061-080	1	5/P									
40	4401 751890	HLDR-HANDLE-CNP	1	1/P									
41	4401 795510	PWA-F-DSP-150	1	1/SB									
42	4401 795520	PWA-F-EDT-150	1	1/SB									
43	4401 797640	DSP-LCD-CFL-150	1	1/D						043 1			
43 1	4401 799700	DSP-LCD-CFL-150	1	1/D		C	E	G	F4B103		043	VC4	
44	4401 796400	WH-LGC-DSP-150	1	1/P									
45	4401 752580	K-BUTTON-PHOTO	1	1/P									
46	4843 391180	CLP/W-UAMS090	3	10/P									
47	4843 391164	BD/W-EDS-1717U	1	10/P									
48	4401 751990	PLATE-MG-DF	2	1/P									
49A	4401 751680	SHEET-EDIT-UC	1	1/KP									TAD
49B	4401 751680	SHEET-EDIT-UC	1	1/KP									CSD
49C	4401 751670	SHEET-EDIT-EU	1	1/KP									EUD
49D	4401 751670	SHEET-EDIT-EU	1	1/KP									GSD
49E	4401 751670	SHEET-EDIT-EU	1	1/KP									FRD
49F	4401 751670	SHEET-EDIT-EU	1	1/KP									SED
49G	4401 751670	SHEET-EDIT-EU	1	1/KP									UKD
49H	4401 751680	SHEET-EDIT-UC	1	1/KP									AUD
49I	4401 751680	SHEET-EDIT-UC	1	1/KP									TWD
49J	4401 751680	SHEET-EDIT-UC	1	1/KP									SAN
49K	4401 751680	SHEET-EDIT-UC	1	1/KP									EUN
49L	4401 751680	SHEET-EDIT-UC	1	1/KP									AUN
50	4401 795560	PWA-F-CFL-150	1	1/SB									
51	4843 390870	PWZ-SPLS-6U	4	5/P									
52	4401 751850	SHEET-MYLAR	1	5/P									
53	4843 390862	PWZ-SPS-8U	3	5/P									
54	4401 768600	LABEL-JOB-MEMO	1	1/KP									IN M/C BOX
56	4401 900540	SUPPORTER-PWA	3	5/P		A	B	D	F96H753			VI6	
57	4401 900570	ASM-BKT-CNP-PWA	1	1/P		A	B	D	F96H753			VI6	S/P ONLY
58	4401 788590	CFL-LCD-150	1	1/C		A	-	J	F97E904				
80	4842 040846	PTBR30*08MSZN3A	61	50/P									
81	4842 040060	TPAN40*08MSZN3L	9	50/P									
82	7040 300611	PAN30*06MSZN3A	1	50/P									
83	7405 003031	ERR030SKZN3A	2	50/P									
84	7044 400664	FLT40*06MSCR3C	2	50/P									
53	4843 390862	PWZ-SPS-8U	3	5/P									

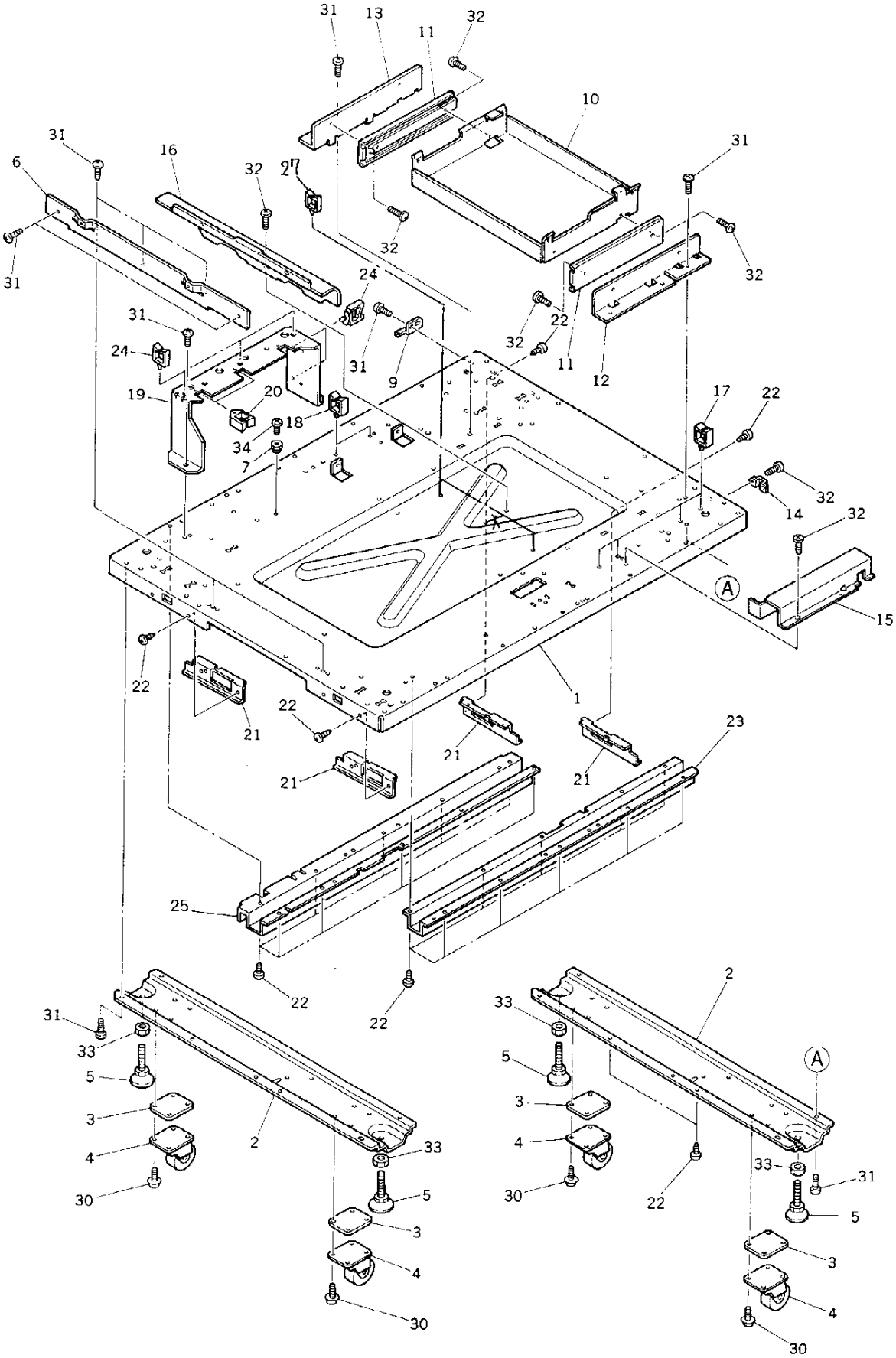
31
13
11
32
10
31
6
16
32
27
32
31
32
24
31
22
32
24
31
9
11
12
19
20
18
34
7
17
22
32
14
32
A
15
22
1
22
21
21
21
21
23
25
22
22
2
31
33
5
3
4
30
2
33
5
3
4
30
33
5
3
4
30
A
33
31
5
3
4
30
22

TOSHIBA

ITEM NO.	PARTS NO.	PARTS NAME	Q'TY / PAGE	Q'TY / PACK	SPE PRICE IN NONE	P	I	R	BSI NO.	TO	FROM	SERIAL NO.	REMARKS
1	4401 787110	FRAME-BASE	1	N/A***									
2	4401 787820	K-STAY-BASE	2	1/P									
3	4401 787810	SPACER-STY-BASE	4	1/P									
4	4401 787800	CASTER-PFP-SG	4	1/P									
5	4402 230760	FOOT-PD	4	1/P									
6	4401 787420	STAY-BASE-EXIT	1	1/P									
7	4401 787180	COLLAR-4*6*1.8	1	5/P									
9	4401 754470	HINGE-UTNR-L	1	1/P									
10	4401 779480	BASE-LCF	1	1/P									
11	4401 779400	RAIL-LCF	2	1/P									
12	4401 779410	BKT-RAIL-LCF-F	1	1/P									
13	4401 779420	BKT-RAIL-LCF-R	1	1/P									
14	4401 754550	BRKT-COV-R-L-F	1	1/P									
15	4401 787620	COV-WH-BASE-F	1	1/P									
16	4401 787630	COV-WH-BASE-C	1	1/P									
17	4843 390889	CLP/W-WS-3U	4	5/P									
18	4843 390890	CLP/W-WS-4U	2	5/P									
19	4401 787440	GUIDE-HARNESS	1	1/P									
20	4843 391164	BD/W-EDS-1717U	2	10/P									
21	4401 787190	EDGING-FRM-BASE	4	1/P									
22	4401 787160	SCREW-M4-7-R	30	10/P									
23	4401 787430	STAY-BASE-F-R	1	1/P									
24	4843 390857	CLP/W-LWS-4U	5	5/P									
25	4401 787580	STAY-BASE-R	1	1/P									
27	4843 390856	CLP/W-LWS-3U	3	5/P		F	-	J	F4G247	027 1			
27 1	4843 390856	CLP/W-LWS-3U	2	5/P		D	-	E	F4L368		027		
30	7640 501251	ZPAN50*12MSZN3A	16	50/P									
31	4842 040060	TPAN40*08MSZN3L	29	50/P									
32	4842 040650	TPAN40*06MSZN3L	8	50/P									
33	7360 100011	6/ONUT10MSZN3A	4	50/P									
34	4842 040671	TPAN4012MSZN3L	1	50/P									
35	4842 040700	TZPAN4008MSZN3L	1	50/P									

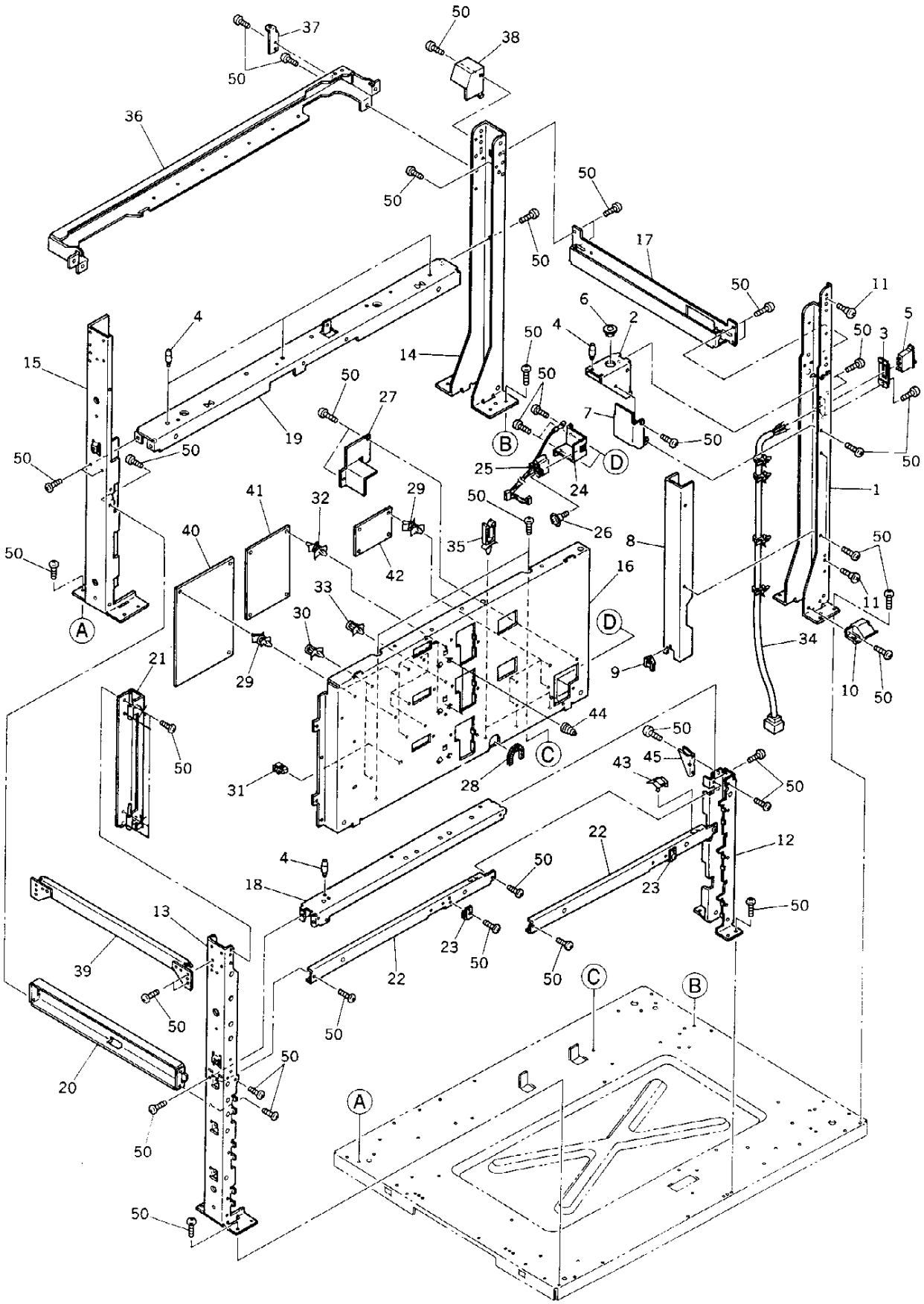
50
37
38
50
36
50
50
50
17
50
11
6
2
4
5
50
3
4
14
50
15
50
50
27
7
50
19
50
B
D
50
25
24
50
1
41
32
29
50
26
8
50
40
35
42
16
50
33
11
30
D
A
34
21
29
9
10
50
44
50
50
45
43
50
C
31
28
22
12
4
50
18
23
50
13
23
50
39
22
50
C
B
50
50
20
50
A
50
50

TOSHIBA

ITEM NO.	PARTS NO.	PARTS NAME	Q'TY / PAGE	Q'TY / PACK	SPE PRICE IN NONE	P	I	R	BSI NO.	TO	FROM	SERIAL NO.	REMARKS
1	4401 787200	FRAME-AGL-F-EN	1	N/A***									
2	4401 787290	BKT-ANGLE-F-EN	1	1/P									
3	4401 787330	BKT-SW-MAIN	1	1/P									
4	4402 830920	SCREW-FRAME	5	1/P									
5	4843 231592	SW-AJ921100Z301	1	1/D									
6	4842 414633	GMT-OCB-875	1	10/P									
7	4401 787600	COV-SW-MAIN	1	1/P									
8	4401 787610	COV-WH-AGL-F-EN	1	1/P									
9	4400 808280	EDS-1717U	1	5/P									
10	4401 752330	GUIDE-COV-R-L	1	1/P									
11	4400 805170	SCREW-LOCK-ARM	2	5/P									
12	4401 787240	FRAME-AGL-F-C	1	N/A***									
13	4401 787210	FRAME-AGL-F-EX	1	N/A***									
14	4401 787220	FRAME-AGL-R-EN	1	N/A***									
15	4401 787230	FRAME-AGL-R-EX	1	N/A***									
16	4401 787320	FRAME-LO-R	1	N/A***									
17	4401 787270	FRAME-BEAM-EN	1	N/A***									
18	4401 787250	FRAME-BEAM-F	1	N/A***									
19	4401 787260	FRAME-BEAM-R	1	N/A***									
20	4401 787280	FRAME-BEAM-EX	1	N/A***									
21	4401 752520	K-HINGE-COV-F-L	1	1/P									
22	4401 787340	BEAM-F-CST	2	1/P									
23	4401 787790	HOLDER-CST-F150	2	1/P									
24	4401 779910	BKT-CONECT-LR	1	1/P									
25	4401 796180	WH-LCF1-150	1	1/P									
26	4402 807030	SCREW-SOCKET	2	10/P									
27	4401 779950	COV-CONECT-LR	1	1/P									
28	4401 782410	GROMET-KG016-75	1	10/P									
29	4843 390869	PWZ-SPLS-4U	6	5/P									
30	4843 390859	PWZ-SPS-4U	3	5/P									
31	4407 552160	PCSPT-1457	1	10/P									
32	4843 390872	PWZ-SPLS-8U	4	5/P									
33	4843 390862	PWZ-SPS-8U	4	5/P									
34	4401 795700	WH-MAIN-SW-150	1	1/P									
35	4843 390890	CLP/W-WS-4U	3	5/P									
36	4401 754500	BRKT-COV-R-L	1	1/P									
37	4401 754590	HINGE-UTNR-U	1	1/P									
38	4401 754580	BRKT-STOP-CTR	1	1/P									
39	4401 787500	K-STAY-EXIT	1	1/P									
40	4401 795440	PWA-F-PWR-150	1	1/SB									
41	4400 748100	PWA-F-PFD-151	1	1/SB									
42	4401 795480	PWA-F-PFP-150	1	1/SB									
43	4402 233080	PUSHER-LEV-ELV	1	1/P									
44	4402 231020	SPC-CONE-1.6	2	1/P									
45	4400 745910	BKT-M-FRAME-R	1	1/P									
50	4842 040060	TPAN40*08MSZN3L	78	50/P									

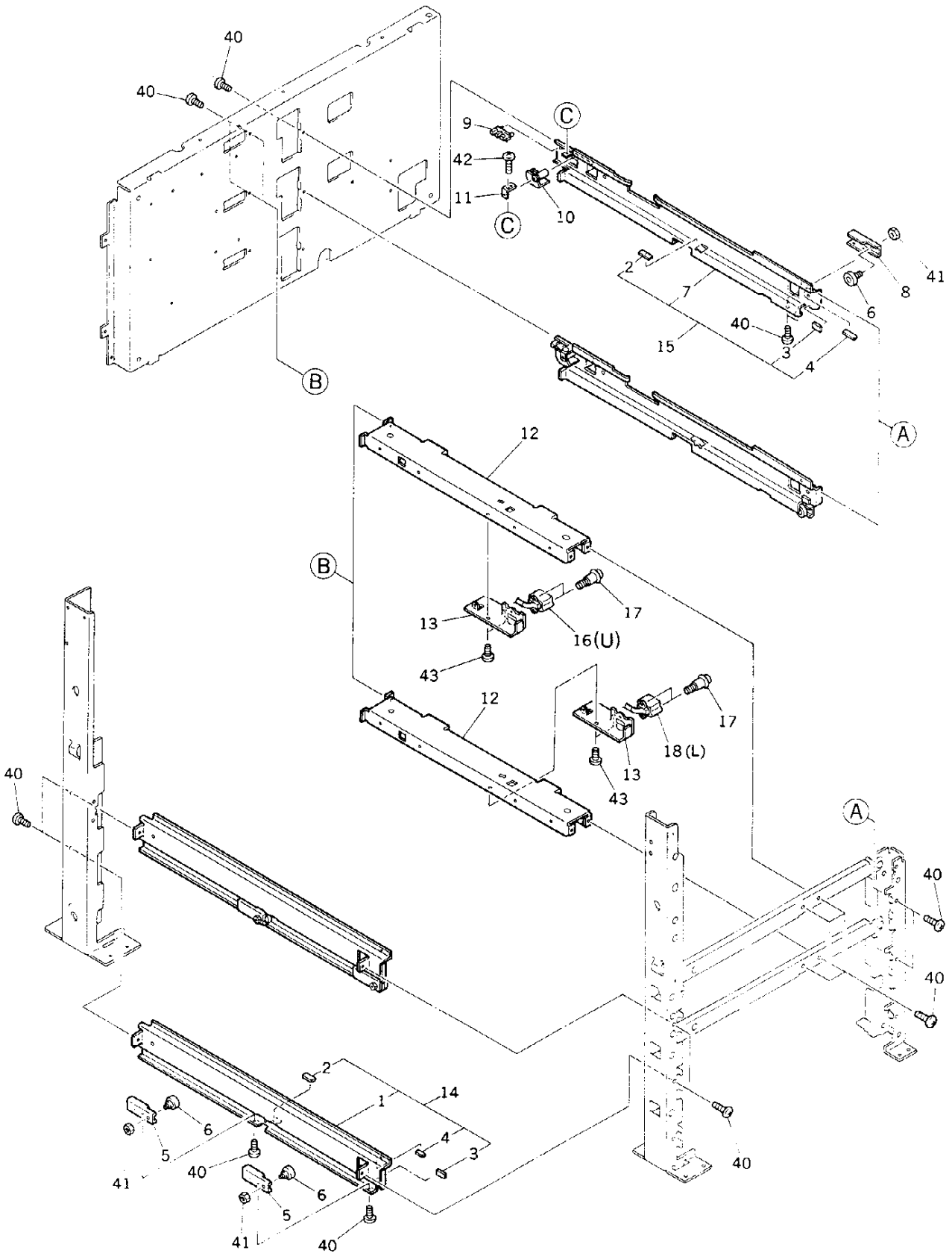
40
40
9
42
11
C
C
10
2
7
15
40
3
4
6
8
41
B
A
12
B
13
17
16(U)
43
12
17
18(L)
13
43
40
A
40
40
40
2
1
14
6
5
40
41
4
3
6
5
41
40

ITEM NO.	PARTS NO.	PARTS NAME	Q'TY / PAGE	Q'TY / PACK	SPE PRICE IN NONE	P	I	R	BSI NO.	TO	FROM	SERIAL NO.	REMARKS
1	4401 783400	RAIL-CST-L	2	1/P									
2	4402 234940	SHEET-CST-L	4	5/P									
3	4402 234930	SHEET-CST-S	4	5/P									
4	4402 230990	MYLAR-RAIL-U	4	5/P									
5	4402 234890	BKT-ROL-L	4	1/P									
6	4407 545070	BRG-DR22-B55R-S	6	1/P									
7	4401 783410	RAIL-CST-R	2	1/P									
8	4402 234900	BKT-ROL-R	2	1/P									
9	4400 902350	SCO-SX460-P2	1	1/C									
10	4400 908580	ACTR-SW-CST	2	1/P									
11	4402 230970	HLDR-ACTR-CST	2	1/P									
12	4401 787350	STAY-CNCT-CST	2	1/P									
13	4401 787360	BKT-CNCT-CST	2	1/P									
14	4401 783470	K-RAIL-CST-L	2	1/P									
15	4401 783490	K-RAIL-CST-R	2	1/P									
16	4401 795970	WH-PFP-DRW-150	1	1/P									UPPER
17	4402 807030	SCREW-SOCKET	4	10/P									
18	4401 795960	WH-PFP-DRWL-150	1	1/P									LOWER
40	4842 040060	TPAN40*08MSZN3L	26	50/P									
41	7360 600011	6/0NUT60MSZN3A	6	50/P									
42	4842 040650	TPAN40*06MSZN3L	2	50/P									
43	4842 040690	TZPAN3006MSZN3L	4	50/P									

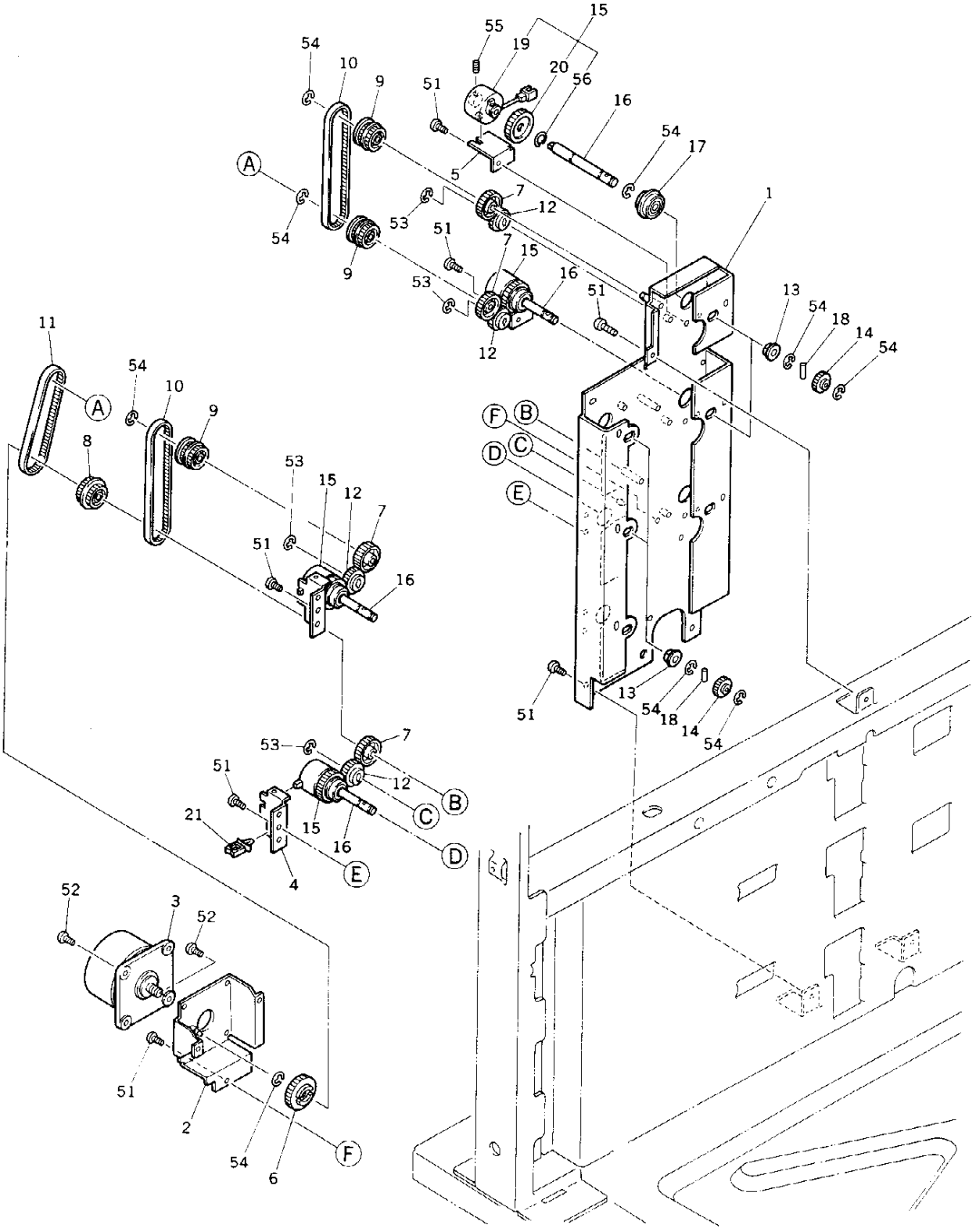
15
55
19
54
10
20
56
9
51
16
54
17
A
5
7
12
1
53
54
51
7
15
9
16
53
51
13
54
18
14
54
12
11
54
10
A
9
8
53
15
12
7
51
16
F
B
D
C
E
51
13
54
18
14
54
53
7
51
12
B
C
21
15
16
D
E
4
52
3
52
51
2
54
6
F

ITEM NO.	PARTS NO.	PARTS NAME	Q'TY / PAGE	Q'TY / PACK	SPE PRICE IN NONE	P	I	R	BSI NO.	TO	FROM	SERIAL NO.	REMARKS
1	4400 746460	K-FRM-DRV-PFP-2	1	N/A***									
2	4401 783040	K-BKT-MOT-PFP	1	1/P									
3	4400 748710	M/DC-PFP-151	1	1/C									
4	4401 783500	BKT-CLT-FEED	2	1/P									
5	4401 783570	BKT-SPG-CLT-RGT	2	1/P									
6	4401 783320	GEAR-05-64H-CRO	1	1/P									
7	4401 783330	GEAR-1.0-Z28	4	1/P									
8	4401 783350	PLY-Z29-Z25-3M	1	1/P									
9	4401 783340	PLY-Z25-3M-DBL	3	1/P									
10	4401 783700	BELT-3M-Z103	2	1/P									
11	4401 783710	BELT-3M-Z82	1	1/P									
12	4407 514650	GEAR-25	4	1/P									
13	4346 312030	BUSHING	4	5/P									
14	4407 547320	GEAR-0.8-25	4	1/P									
15	4402 235600	ASM-CLUTCH-10K	4	1/D									
16	4401 783600	SFT-CLT-FEED	4	1/P									
17	4407 545610	BRG-608ZZNR	4	1/P									
18	4346 312020	PIN	4	10/P									
19	4402 235610	CLUTCH-10K	4	N/A***									
20	4402 231590	GEAR-30-CLUTCH	4	N/A***									
21	4843 390887	CLP/W-WS-1U	1	5/P									
51	4842 040060	TPAN40*08MSZN3L	12	50/P									
52	4842 040694	TZPAN3010MSZN3L	2	50/P									
53	7405 005031	ERR050SKZN3A	4	50/P									
54	7405 007031	ERR070SKZN3A	16	50/P									
55	4842 011061	9HSS30/03MSFB	4	50/P									
56	4842 040864	SRG-S-10	4	50/P									

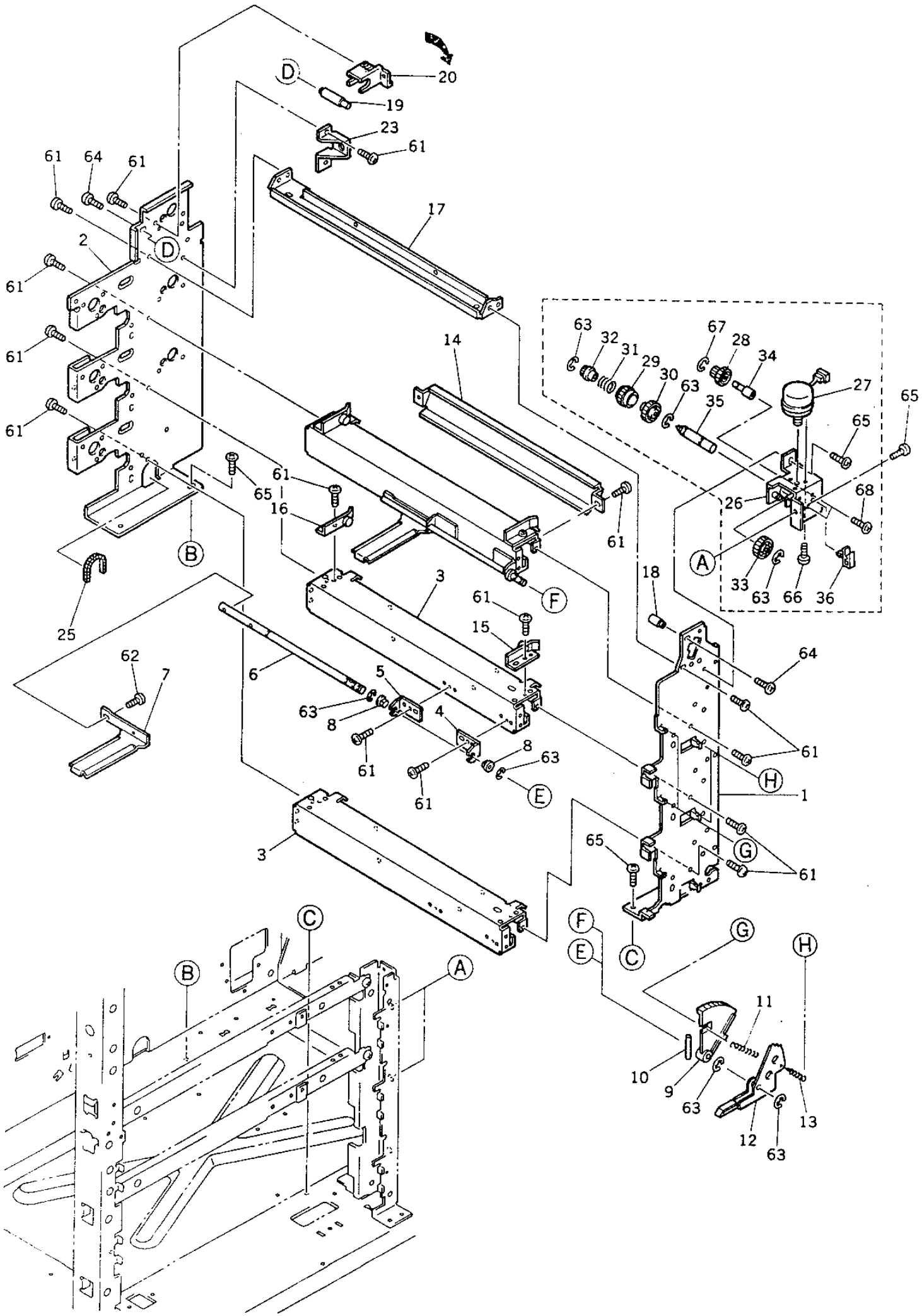
20
19
23
61
17
61
64
61
2
61
61
61
14
63
32
31
29
30
63
35
67
28
34
27
65
65
26
68
A
33
63
66
36
61
65
16
61
B
25
3
61
15
F
18
64
62
7
6
5
63
8
4
8
63
61
61
61
E
H
1
3
65
G
61
C
F
E
G
H
C
B
A
11
10
9
63
13
12
63

TOSHIBA

ITEM NO.	PARTS NO.	PARTS NAME	Q'TY / PAGE	Q'TY / PACK	SPE PRICE IN NONE	P	I	R	BSI NO.	TO	FROM	SERIAL NO.	REMARKS
1	4401 782300	FRAME-STY-UNT-F	1	N/A***									
2	4401 782400	FRAME-STY-UNT-R	1	N/A***									
3	4401 782200	STAY-ELV-CST	3	1/P						003 1			
3 1	4401 909180	STAY-ELV-CST	3	1/P		C	E	F	F95J504		003	VE5	
4	4401 782220	ARM-STY-ELV-F	2	1/P									
5	4401 782230	ARM-STY-ELV-R	2	1/P									
6	4402 233230	SHAFT-ELV-PD	2	1/P									
7	4401 782360	LEVER-ELV-CST	2	1/P									
8	4346 312030	BUSHING	4	5/P									
9	4402 232940	GEAR-1.0-144	2	1/P									
10	4402 232930	PIN-4-43	2	5/P									
11	4346 323020	SPRING-MG	2	5/P									
12	4401 782380	LVR-ELV-124S	2	1/P									
13	4402 232670	SPE-6.3-0.4	2	1/P									
14	4401 782210	GUIDE-PAPER-C4	1	1/P						014 1			UPPER
14 1	4401 909400	GUIDE-PAPER-C4	1	1/PP		C	E	F	F96D653		014	VA6	UPPER
15	4401 782240	K-GUIDE-F/S-F	2	1/P									
16	4401 782270	K-GUIDE-F/S-R	2	1/P									
17	4401 782310	STAY-UNIT-F/S	1	1/P									
18	4401 782340	STUD-U-AL-UNT-F	1	1/P									
19	4401 782350	STUD-U-AL-UNT-R	1	1/P									
20	4401 782370	BKT-FIX-AL-U-R	1	1/P						020 1			
20 1	4401 909360	BRKT-FIX-AL-U-R	1	1/P		C	E	F	F95J504		020	VE5	
23	4401 779940	BKT-POST-LCF	1	1/P									
25	4401 782410	GROMET-KG016-75	1	10/P									
26	4401 783720	K-BKT-MOT-TRAY	2	1/P									
27	4401 783680	K-MOT-ELV-150	2	1/C									
28	4401 783740	WHEEL-28/G-14	2	1/P									
29	4402 233050	SL-GEAR-20	2	1/P									
30	4401 783750	GEAR-35-ARBOR	2	1/P									
31	4401 782420	SPR-13.6R-13.5A	2	1/P									
32	4402 233040	GEAR-15-ARBOR	2	1/P									
33	4402 233130	GEAR-1.0-25-PD	2	1/P									
34	4401 783440	STUD-WORM-TRAY	2	1/P									
35	4401 783240	STD-BKT-MOT-TRY	2	1/P									
36	4407 744370	Z-MA-LS-10	2	5/P									
61	4842 040690	TZPAN3006MSZN3L	35	50/P									
62	7040 400611	PAN40*06MSZN3AI	4	50/P									
63	7405 007031	ERR070SKZN3A	14	50/P									
64	4842 040724	TPPAN4006MSZN3L	2	50/P									
65	4842 040060	TPAN40*08MSZN3L	13	50/P									
66	7040 260411	PAN26*04MSZN3AI	6	50/P									
67	7405 005031	ERR050SKZN3A	2	50/P									
68	4842 040725	TPPAN4008MSZN3A	4	50/P									

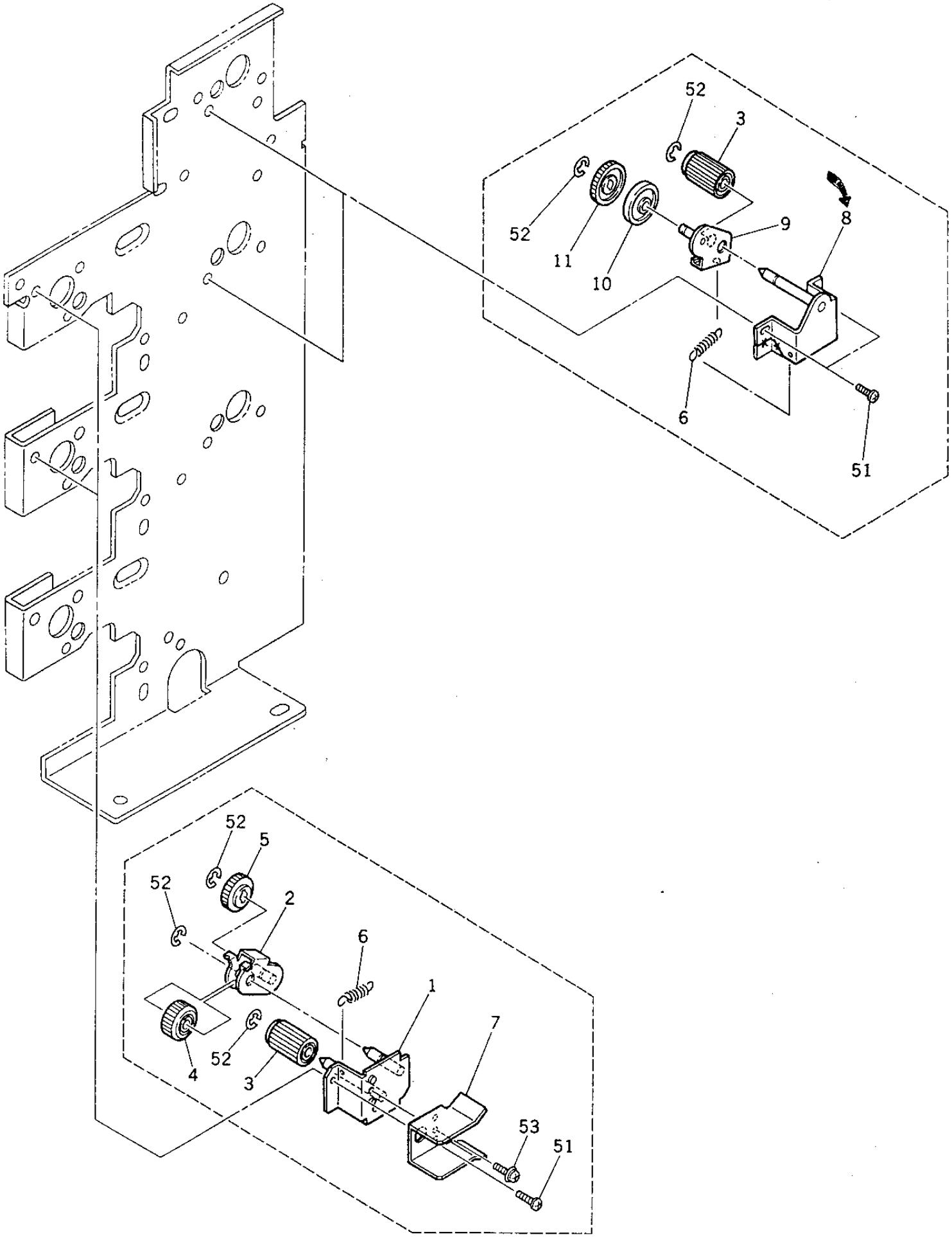
52
3
52
11
10
9
8
6
51
52
5
52
2
6
1
7
4
52
3
53
51

ITEM NO.	PARTS NO.	PARTS NAME	Q'TY / PAGE	Q'TY / PACK	SPE PRICE IN NONE	P	I	R	BSI NO.	TO	FROM	SERIAL NO.	REMARKS
1	4401 783030	K-BKT-JOINT-FED	2	1/P									
2	4401 783010	K-ARM-JOINT-FED	2	1/P									
3	4401 783310	GEAR-08-20-L27	4	1/P									
4	4407 682520	GEAR-0.8-25	2	1/P									
5	4408 535760	GEAR-08-25-070	2	1/P									
6	4401 783390	SPE-JOINT	4	5/P									
7	4401 783360	GUIDE-FS-UNIT	2	1/P									
8	4401 783020	K-BRKT-JNT-RGT	2	1/P						008 1			
8 1	4401 909290	K-BRKT-JNT-RGT	2	1/P		C	E	F	F95J504		008	VE5	
9	4401 783000	K-ARM-JOINT-RGT	2	1/P						009 1			
9 1	4401 909260	K-ARM-JNT-RGT	2	1/P		C	E	F	F95J504		009	VE5	
10	4401 783380	ROL-GUIDE-RGT	2	1/P									
11	4407 906230	GEAR-08-30	2	1/P									
51	4842 040060	TPAN40*08MSZN3L	9	50/P									
52	7405 005031	ERR050SKZN3A	10	50/P									
53	4842 040690	TZPAN3006MSZN3L	2	50/P									

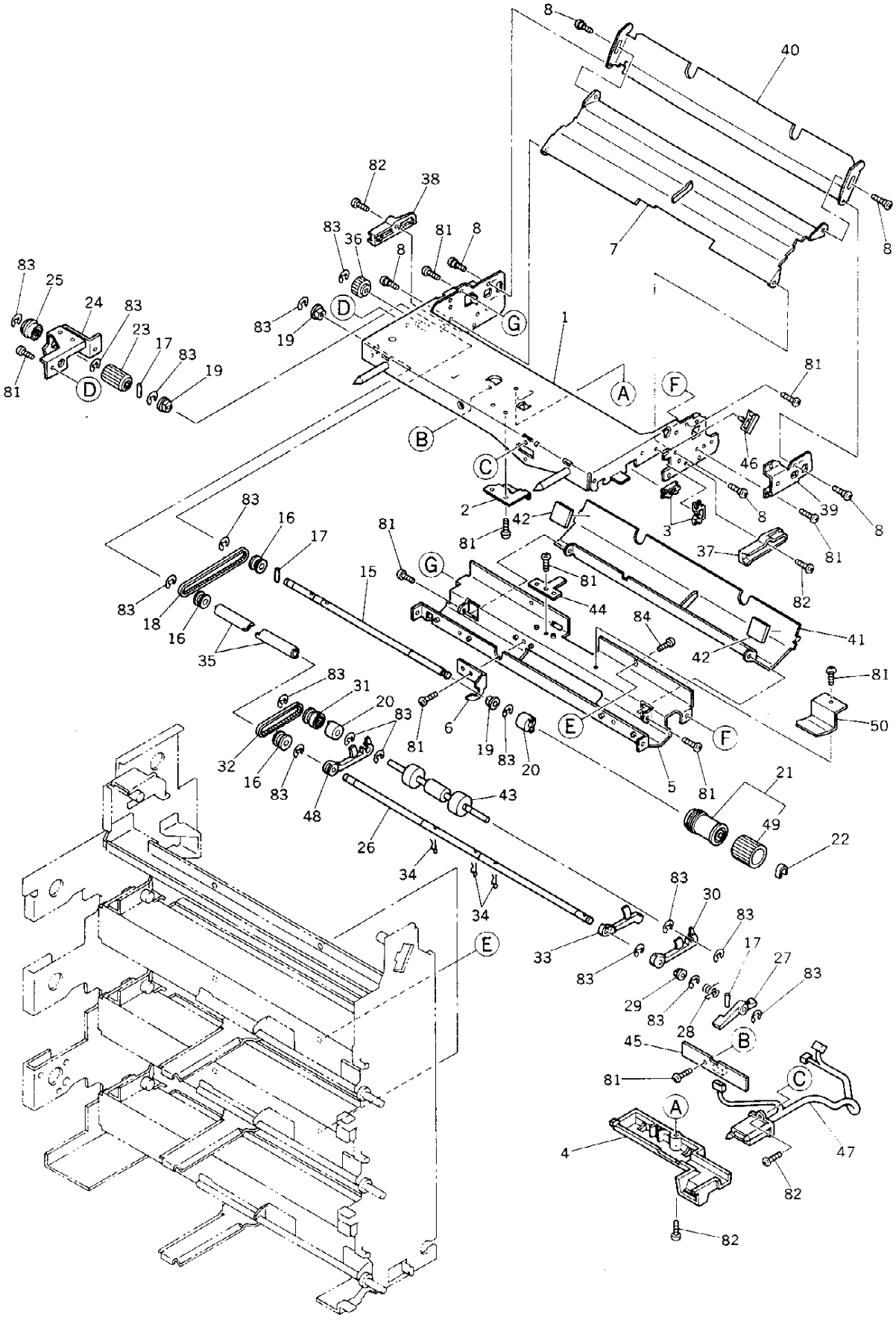
8
40
82
38
83
36
81
8
7
8
83
25
24
83
23
17
83
19
81
D
D
83
19
G
1
A
F
81
B
C
46
2
42
3
8
39
8
81
37
81
82
83
16
17
81
G
81
15
44
84
41
83
18
16
35
42
81
83
31
20
83
6
19
83
20
E
F
50
32
16
83
48
81
5
81
21
43
49
22
26
34
34
83
30
83
E
33
83
17
27
83
29
83
28
45
B
81
C
A
4
47
82
82

TOSHIBA

ITEM NO.	PARTS NO.	PARTS NAME	Q'TY / PAGE	Q'TY / PACK	SPE PRICE IN NONE	P	I	R	BSI NO.	TO	FROM	SERIAL NO.	REMARKS
1	4401 782800	K-FRAME-F/S-UNT	1	1/P									
2	4401 782650	BKT-WH-F/S	1	1/P									
3	4843 390941	BD/W-EDS-1	2	10/P									
4	4401 782660	COV-SW-F/S	1	1/P									
5	4401 782880	STAY-FEED-F/S	1	1/P									
6	4401 782980	BKT-FEED-ROL	1	1/P									
7	4401 782930	GUIDE-PA-2-F/S	1	1/P						007 1			
7 1	4401 909420	GUIDE-PA-2-F/S	1	1/PP		C	E	F	F96D653		007	VA6	
8	4400 325930	PIN-BKT-CON-H	6	10/P									
15	4401 782730	SHAFT-FEED-F/S	1	1/P									
16	4408 338630	K-PLY/T-2M-Z20	3	1/P									
17	4407 403790	NPIN2-8	3	10/P									
18	4401 782960	BELT-214-2M	1	1/P									
19	4407 734980	BUSH-6-GCB	3	5/P									
20	4402 833110	CLUTCH-6-L	2	1/D									
21	4402 038460	K-ROL-FEED-1	1	1/P									
22	4407 907410	STOP-RING-6	1	5/P									
23	4401 783310	GEAR-08-20-L27	1	1/P									
24	4401 782790	BKT-SPT-SFT-FED	1	1/P									
25	4407 959970	BRG-696ZZNR	1	1/P									
26	4401 782750	SFT-PICK-UP-F/S	1	1/P						026 1			
26 1	4401 909320	SFT-PICK-F/S	1	1/P		C	E	F	F96D653		026		
27	4402 231810	LVR-ARM-PICK-UP	1	1/P									
28	4402 231990	SPR-PICK-UP	1	1/P									
29	4407 734240	BUSH-6	1	5/P									
30	4402 231750	ARM-PICK-550	1	1/P									
31	4402 231780	PLY-20-2M	1	1/P									
32	4407 908720	BLT/T-Z71	1	1/P									
33	4401 782680	ACTR-PICK-150	1	1/P									
34	4842 904052	SNAP-PIN	3	10/P									
35	4401 782720	JOINT-PULLY-F/S	2	1/P									
36	4401 782560	K-GEAR-22-08-OW	1	1/P									
37	4401 782700	HLDR-F/S-UNT-F	1	1/P									
38	4401 782710	HLDR-F/S-UNT-R	1	1/P									
39	4401 782780	BKT-FRM-F/S	1	1/P									
40	4401 782940	GUIDE-PA-3-F/S	1	1/P						040 1			
40 1	4401 909430	GUIDE-PA-3-F/S	1	1/PP		C	E	F	F96D653		040	VA6	
41	4401 782920	GUIDE-PA-1-F/S	1	1/P						041 1			
41 1	4401 909410	GUIDE-PA-1-F/S	1	1/PP		C	E	F	F96D653		041	VA6	
42	4401 782630	CUSH-GUIDE-PA-1	2	5/P									
43	4401 773080	K-ROL-P/U-CCW-H	1	1/KP									
44	4401 782970	SPL-PUSH-GUIDE	1	5/P									
45	4400 909480	PWA-F-PEM-700	1	1/C									
46	4407 744370	Z-MA-LS-10	1	5/P									
47A	4401 795990	WH-FS-UNIT-150	1	1/P									UPPER
47B	4401 795980	WH-FS-UNITL-150	1	1/P									LOWER
48	4401 782540	ARM-PICK-150	1	1/P									
49	4402 038470	ROL-FEED-1	1	1/C									
50	4401 784250	GUIDE-PA-STY-FS	1	1/P									
81	4842 040665	TPAN3006MSZN3L	15	50/P									
82	4842 040692	TZPAN3008MSZN3L	5	50/P									
83	7405 005031	ERR050SKZN3A	17	50/P									
84	4842 040060	TPAN40*08MSZN3L	2	50/P									

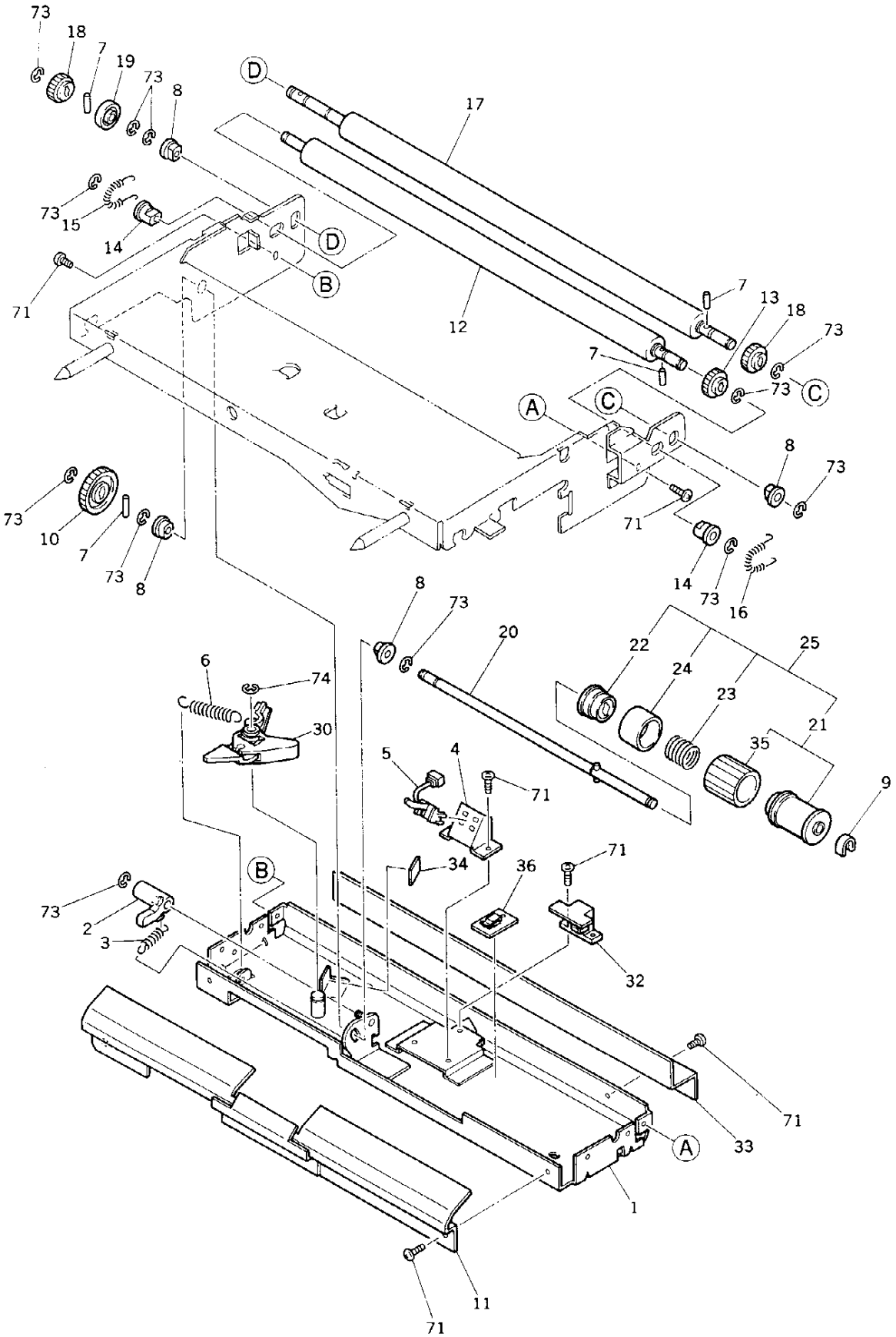
73
18
7
19
73
8
D
17
73
15
14
D
B
71
12
7
13
18
73
73
C
C
A
8
73
71
73
10
7
73
8
14
73
16
8
73
20
22
24
25
23
21
35
9
6
74
30
5
4
71
B
34
36
71
73
2
3
32
71
33
A
1
11
71

ITEM NO.	PARTS NO.	PARTS NAME	Q'TY / PAGE	Q'TY / PACK	SPE PRICE IN NONE	P	I	R	BSI NO.	TO	FROM	SERIAL NO.	REMARKS
1	4401 782830	K-STAY-SEP-F/S	1	1/P									
2	4401 784150	LEV-ROL-SEP-U/D	1	1/P									
3	4401 784200	SPE-SEP-1142	1	5/P									
4	4401 782760	BKT-FEED-SW-F/S	1	1/P									
5	4402 221190	SZ-P-FEED-545	1	1/C									
6	4363 271350	SPE063-080-0427	1	5/P									
7	4407 403790	NPIN2-8	4	10/P									
8	4407 734980	BUSH-6-GCB	4	5/P									
9	4407 972860	STOP-RING-6-5	1	5/P									
10	4407 906230	GEAR-08-30	1	1/P									
11	4401 784230	K-GUIDE-PA-ENT	1	1/P						011 1			
11 1	4401 909440	K-GUIDE-PA-ENT	1	1/PP		C	E	F	F96D653		011	VA6	
12	4401 782890	ROLLER-ALIN-F/S	1	1/KP									UPPER
13	4407 640340	GEAR-20-0.8-D6	1	1/P									UPPER
14	4407 976990	BUSH-D6-GCB	2	1/P									UPPER
15	4402 232180	SPRING-550	1	5/P									UPPER
16	4402 232170	SPRING-815	1	5/P									UPPER
17	4401 784260	ROLLER-RGT-F/S	1	1/KP									UPPER
18	4400 823760	GEAR-08-20-LA5	2	1/P									UPPER
19	4402 233530	COLLER-GAP-GEAR	1	5/P									UPPER
20	4401 782590	K-SFT-SPT-F/S	1	1/P									
21	4401 773030	K-ROL-SPT-CCW-H	1	1/P									
22	4408 307270	ARBOR-16-POM-S	1	1/P									
23	4401 784210	SPR-1.0-15.60RF	1	5/P									
24	4408 535810	COVER-SP-CL-BL	1	1/P									
25	4401 773020	ASM-ROL-SPT-CCW	1	1/C									
30	4401 784040	ASM-ARM-SET-ROL	1	1/P									
32	4402 222280	PWA-F-PEM-366-0	1	1/C									UPPER
33	4401 782670	BKT-BLIND-F/S-L	1	1/P									LOWER
34	4401 784180	RUBBER-ARM-SET2	1	1/P									
35	4401 773040	ROL-SPT-RUB-H	1	1/C									
36	4400 827900	CLIP-WH-STACK	1	5/P									
71	4842 040665	TPAN3006MSZN3L	13	50/P									
73	7405 005031	ERR050SKZN3A	12	50/P									
74	7405 007031	ERR070SKZN3A	1	50/P									

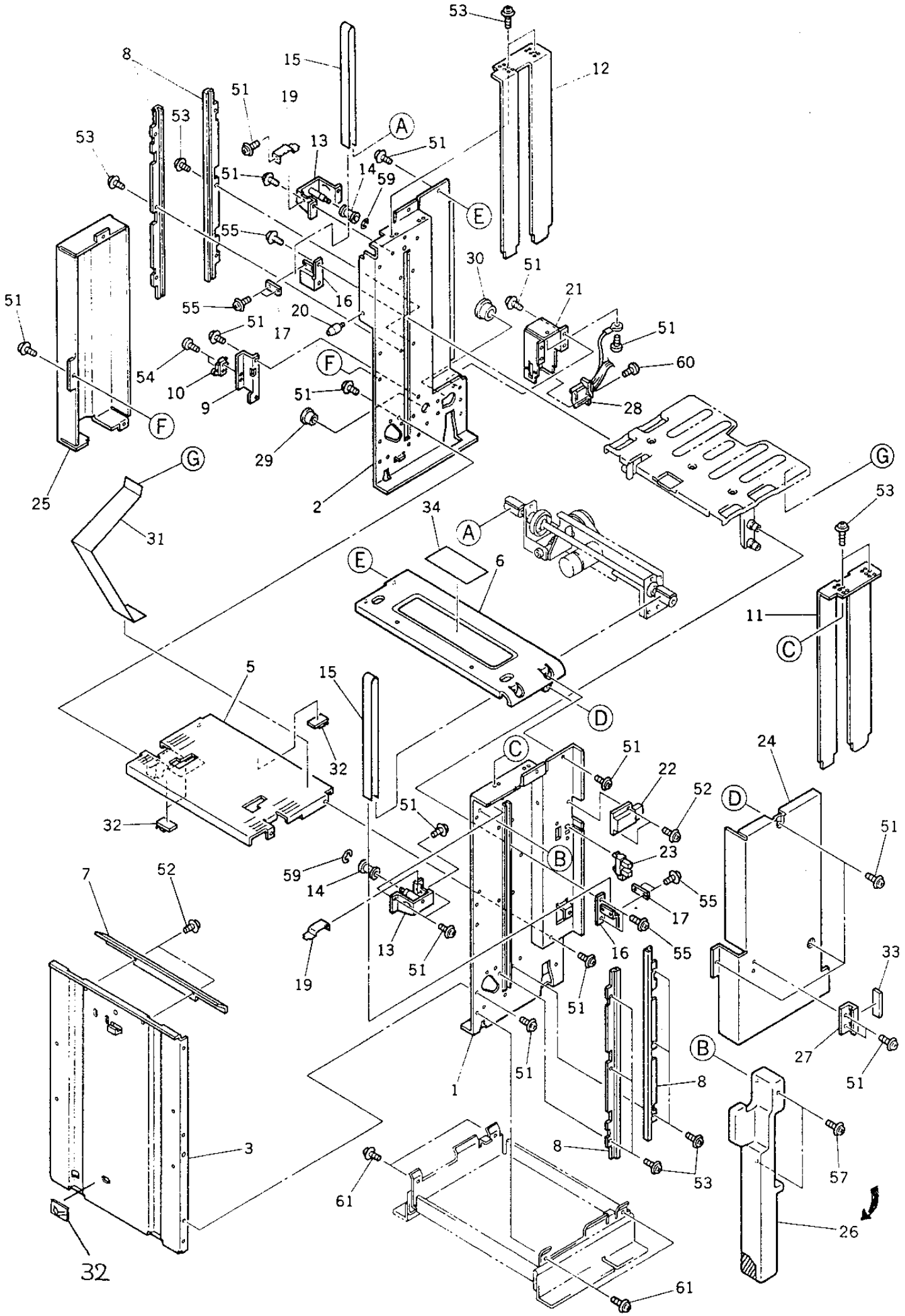
53
12
15
8
51
19
53
53
13
A
51
51
14
59
E
55
30
51
21
51
55
16
20
51
17
51
60
54
10
9
F
51
28
F
29
G
G
25
2
34
53
31
A
E
6
11
C
5
15
D
32
C
51
24
22
52
D
32
51
51
B
23
59
14
55
7
52
17
13
16
55
33
19
51
51
27
51
B
1
51
8
3
8
53
57
61
26
32
61

TOSHIBA

ITEM NO.	PARTS NO.	PARTS NAME	Q'TY / PAGE	Q'TY / PACK	SPE PRICE IN NONE	P	I	R	BSI NO.	TO	FROM	SERIAL NO.	REMARKS
1	4401 779530	K-FRAME-F-LCF	1	N/A***									
2	4401 779540	K-FRAME-R-LCF	1	N/A***									
3	4401 779500	FRAME-M-LCF	1	N/A***									
5	4401 779320	K-STAY-LOW-LCF	1	1/P									
6	4401 779570	STAY-TOP-LCF	1	1/P									
7	4401 779600	GUIDE-PAPER-LCF	1	1/P						007 1			
7 1	4401 907600	GUIDE-PAPER-LCF	1	1/P		C	E	F	F96D653		007	VA6	
8	4408 530240	GUIDE-TRAY	4	1/P									
9	4408 530230	BKT-BTM-SW	1	1/P									
10	4407 966810	SM-SS01GL2T	1	1/D									
11	4401 779610	SIDE-GUIDE-F	1	1/P									
12	4401 779620	SIDE-GUIDE-R	1	1/P									
13	4401 779450	K-BKT-PLY	2	1/P									
14	4408 334350	PLY-BELT	2	1/P									
15	4401 779430	BELT-LCF	2	1/P									
16	4408 334240	BKT-BELT	2	1/P						016 1			
16 1	4401 780430	BRKT-BELT	2	1/P		C	B	E	F4C109		016	VD4	
17	4408 334250	PLATE-BELT-T	2	1/P									
19	4408 334560	GUARD-BELT	2	1/P									
20	4402 830920	SCREW-FRAME	1	1/P									
21	4401 780180	BKT-CONECT-LCF	1	1/P									
22	4401 779720	MG-CATCH	1	1/P									
23	4402 816780	SZ-GP1A71M1	1	1/C									
24	4401 779630	COV-IN-LCF-F	1	1/PP									
25	4401 779640	COV-IN-LCF-R	1	1/PP									
26	4401 783940	KNOB-LCF	1	1/P						026 1			
26 1	4401 908370	KNOB-LCF	1	1/P		C	E	F	F95J504		026	VE5	
27	4401 779680	BKT-STOP-LCF	1	1/P									
28	4401 796320	WH-LCFIN-150	1	1/P									
29	4842 414631	GMT-OCB-625	1	10/P									
30	4842 414633	GMT-OCB-875	1	10/P									
31	4401 780300	MYLAR-STOP-LCF	1	1/C									
32	4400 827900	CLIP-WH-STACK	3	5/P						032 1			
32 1	4400 827900	CLIP-WH-STACK	4	5/P		D	-	J	F4K343		032	VK413968	
33	4401 779370	CUSHION-STOP	1	5/P									
34	4401 768390	LBL-PSH-CAUTION	1	5/P									
51	4842 040650	TPAN40*06MSZN3L	35	50/P									
52	4842 040665	TPAN3006MSZN3L	4	50/P									
53	4842 040690	TZPAN3006MSZN3L	16	50/P									
54	7040 201011	PAN20*10MSZN3AI	2	50/P									
55	7640 300851	ZPAN30*08MSZN3A	8	50/P									
57	4842 040700	TZPAN4008MSZN3L	2	50/P									
59	7405 007031	ERR070SKZN3A	2	50/P									
60	4842 040666	TPAN3008MSZN3L	2	50/P									
61	4842 040060	TPAN40*08MSZN3L	4	50/P									

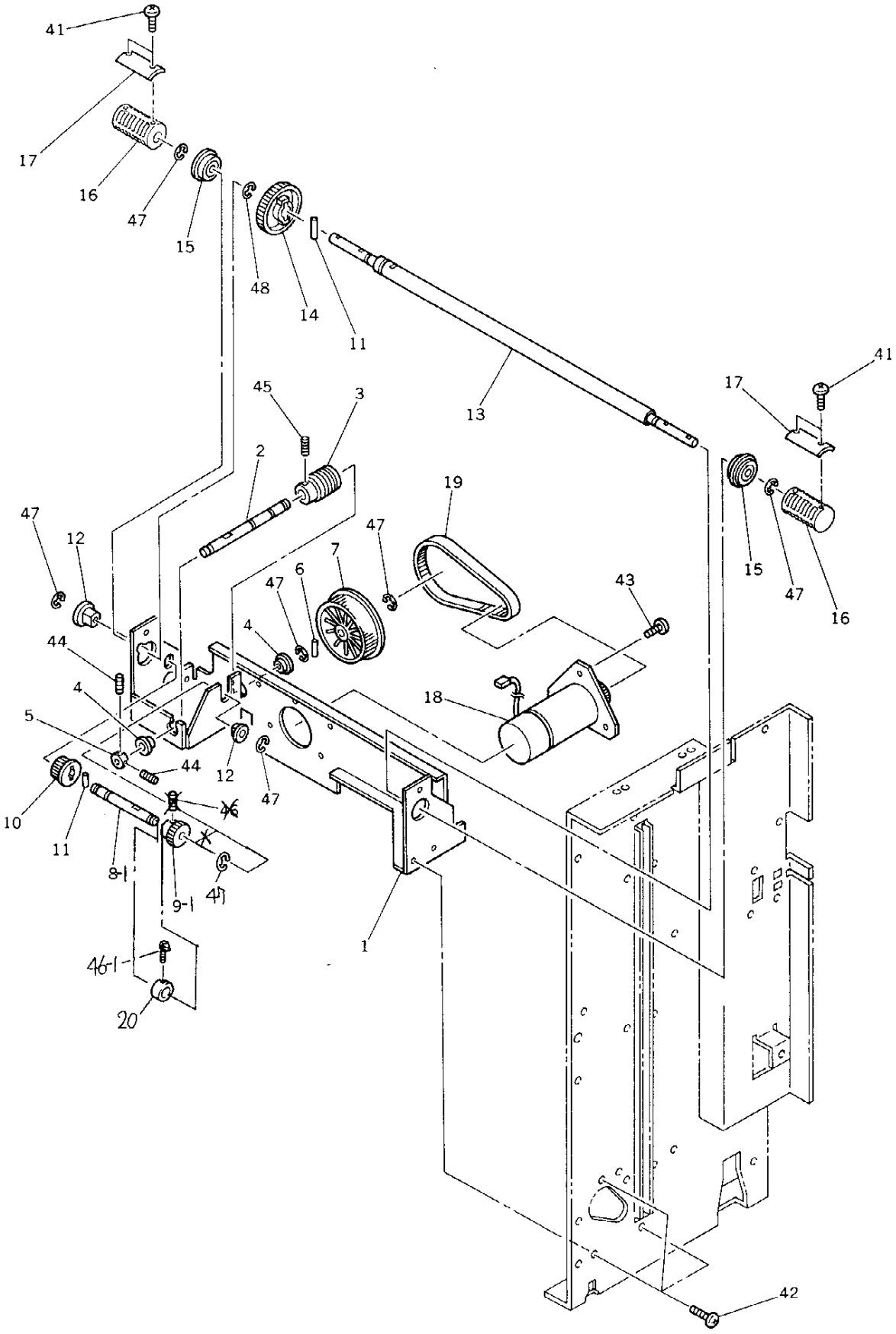
41
17
16
47
15
48
14
11
13
41
17
45
3
2
19
47
12
47
7
6
47
43
15
47
16
44
4
4
18
5
44
12
47
10
11
8-1
9-1
47
1
46-1
20
42

TOSHIBA

ITEM NO.	PARTS NO.	PARTS NAME	Q'TY / PAGE	Q'TY / PACK	SPE PRICE IN NONE	P	I	R	BSI NO.	TO	FROM	SERIAL NO.	REMARKS
1	4408 530100	BKT-DRIVE	1	1/P									
2	4408 530110	SFT-WORM	1	1/P									
3	4408 530120	WORM-1.0-16	1	1/P						003 1			
3 1	4401 908270	WORM-1.0-16	1	1/P		C	E	H	F96D653		003	VF6	
4	4408 510800	BRG-688ZZNR	2	1/P									
5	4408 530130	STOPPER-WORM	1	1/P									
6	4346 312020	PIN	1	10/P									
7	4408 334640	PLY/T-3M-Z56	1	1/P									
8	4408 530140	SFT-WORM-WHEEL	1	1/P						008 1			
8 1	4401 780450	SFT-WORM-WHEEL	1	1/P		C	D	J	F4J298		008	VK4	
9	4401 779860	WORM-WHEEL-1-30	1	1/P						009 1			
9 1	4401 780460	WORM-WHEEL-1-30	1	1/P		C	D	J	F4J298		009	VK4	
10	4408 334530	GEAR-1.0-16	1	1/P									
11	4407 734540	PIN-2-18	2	5/P									
12	4346 312030	BUSHING	2	5/P									
13	4408 530160	SHAFT-DRIVE-L	1	1/P									
14	4408 339760	GEAR-1.0-40	1	1/P									
15	4407 545610	BRG-608ZZNR	2	1/P									
16	4401 779390	ROL-BELT-P	2	1/P									
17	4408 334510	PLATE-BELT-P	2	1/P									
18	4401 779350	K-MOTOR-TRAY	1	1/C									
19	4408 530430	BELT/T-3M-252-6	1	1/P									
20	4401 780470	FLANGE-20-14	1	1/P		A	-	J	F4J298			VK4	
41	7040 301811	PAN30*18MSZN3AI	4	50/P									
42	4842 040650	TPAN40*06MSZN3L	3	50/P									
43	4842 040060	TPAN40*08MSZN3L	3	50/P									
44	4842 011062	9HSS30/04MSFB	2	50/P									
45	4842 011081	9HSS40/04MSFB	1	50/P									
46	4842 011101	9HSS50/05MSFB	1	50/P						046 1			
46 1	7040 401011	PAN40*10MSZN3AI	1	50/P		C	D	J	F4J298		046	VK4	
47	7405 007031	ERR070SKZN3A	7	50/P						047 1			
47 1	7405 007031	ERR070SKZN3A	8	50/P		D	-	J	F4J298		047	VK4	
48	7405 009031	ERR090SKZN3A	1	50/P									

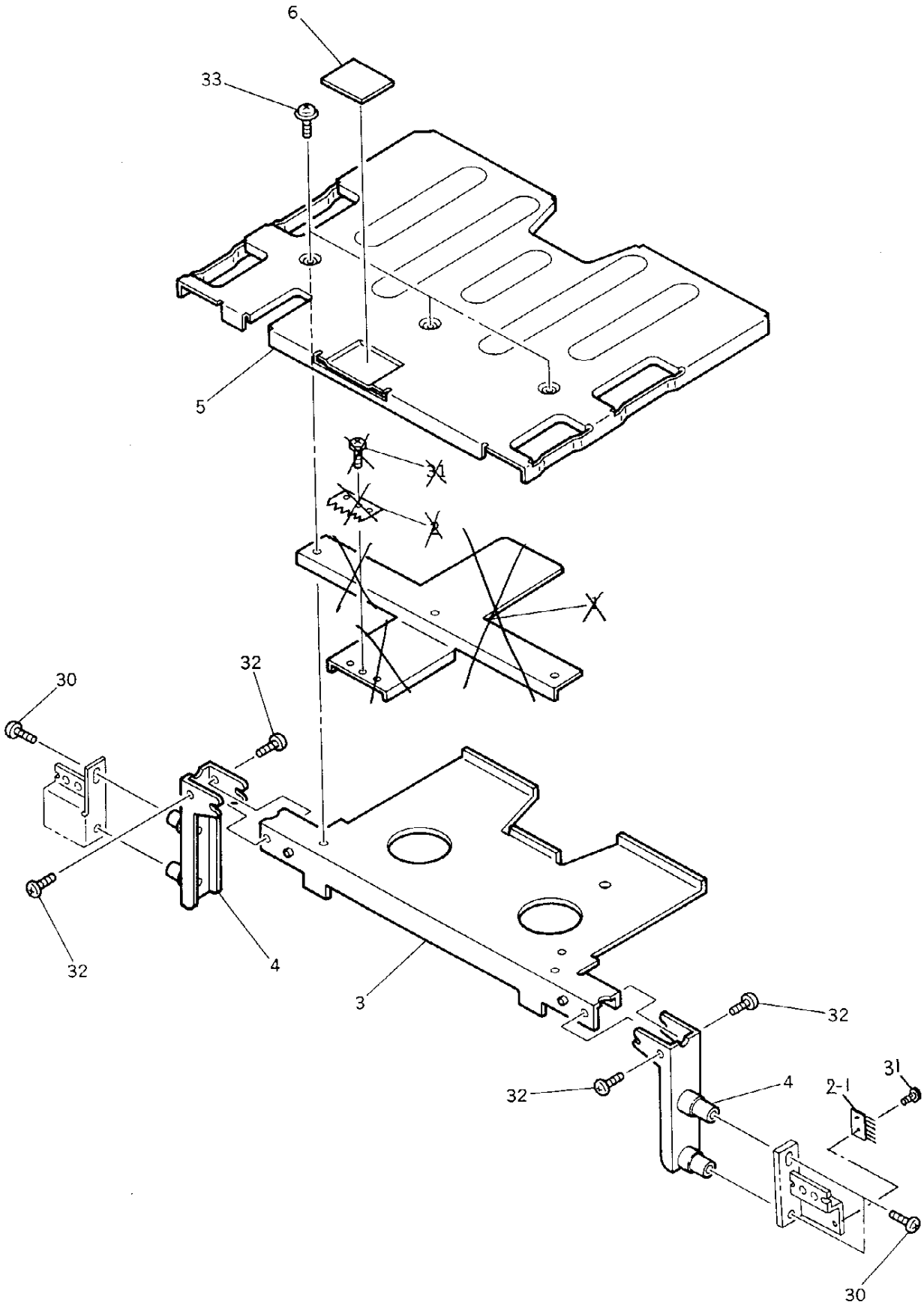
6
33
5
31
2
30
32
32
4
3
32
32
4
2-1
31
30

ITEM NO.	PARTS NO.	PARTS NAME	Q'TY / PAGE	Q'TY / PACK	SPE PRICE IN NONE	P	I	R	BSI NO.	TO	FROM	SERIAL NO.	REMARKS
1	4408 530470	PLT-BRUSH-TRAY	1	1/P						001 1			
1 1	4408 530470	PLT-BRUSH-TRAY	0	1/P		B	-	E	F4C109		001	VD4	
2	4408 530480	BRUSH-SHEET	1	1/KP						002 1			
2 1	4401 780420	BRUSH-LCF	1	1/P		C	D	E	F4C109		002	VD4	
3	4408 334700	K-STAY-TRAY	1	1/P									
4	4408 334480	K-BKT-TRAY	2	1/P									
5	4401 779440	TRAY-LCF	1	1/PP						005 1			
5 1	4401 779280	TRAY-LCF	1	1/PP		C	B	E	F4C109		005	VD4	
6	4407 907140	BRAKE-PAD	1	5/P						006 1			
6 1	4402 881120	BRAKE-PAD	1	5/P		C	E	H	F98B203		006		
30	7640 400651	ZPAN40*06MSZN3A	4	50/P									
31	4842 040665	TPAN3006MSZN3L	1	50/P									
32	4842 040650	TPAN40*06MSZN3L	4	50/P									
33	4842 040690	TZPAN3006MSZN3L	3	50/P									

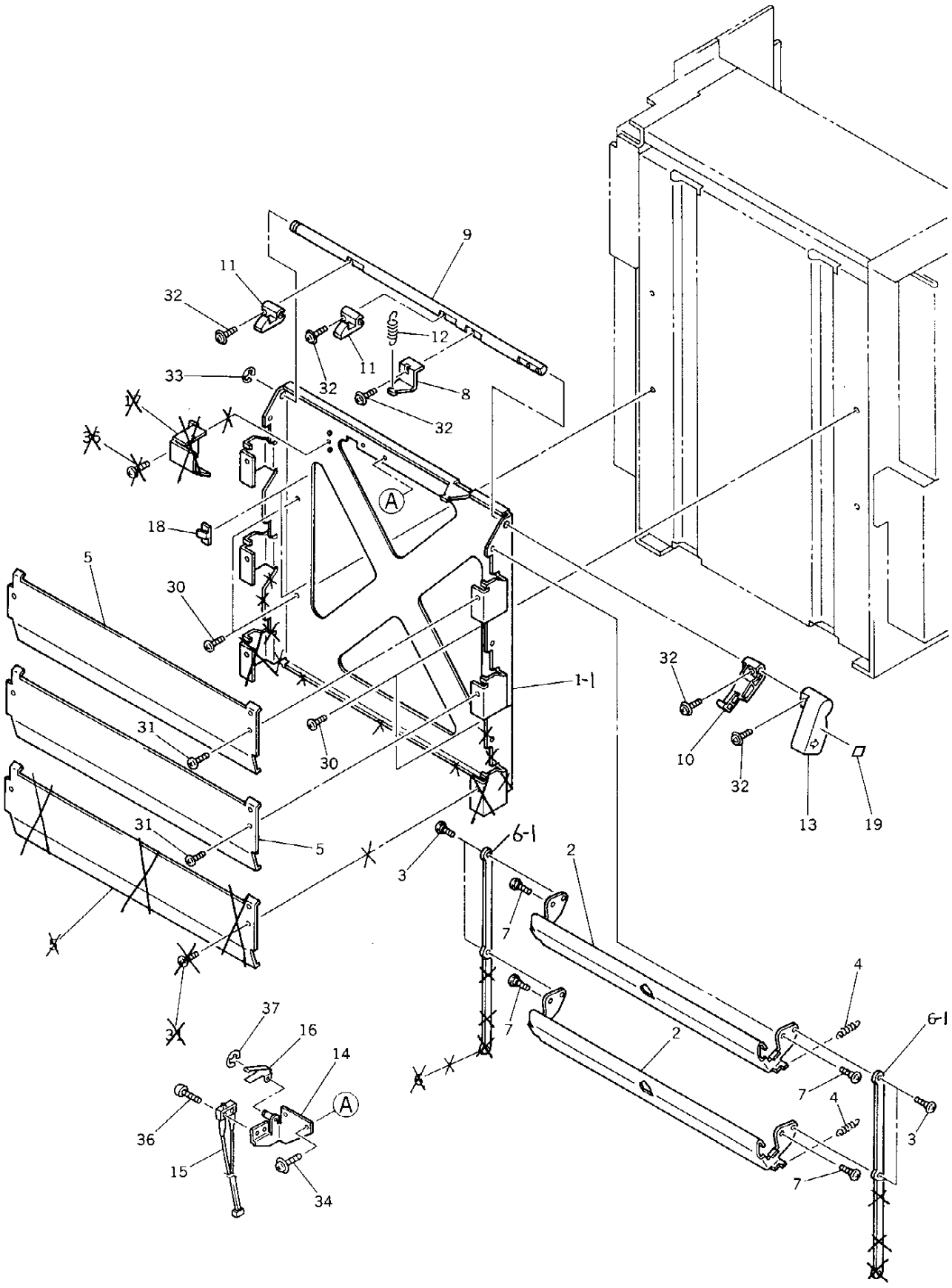
9
11
32
12
11
32
8
32
33
17
35
A
18
5
30
1-1
32
31
30
10
32
13
19
31
5
6-1
3
2
7
4
37
16
14
A
36
15
34
7
2
6-1
7
4
3
7

TOSHIBA

ITEM NO.	PARTS NO.	PARTS NAME	Q'TY / PAGE	Q'TY / PACK	SPE PRICE IN NONE	P	I	R	BSI NO.	TO	FROM	SERIAL NO.	REMARKS
1	4401 783810	BASE-GUIDE-OP	1	1/P						001 1			
1 1	4400 746580	BASE-GUIDE-OP-2	1	1/P		C	E	J	F4K343		001	VK413968	
2	4401 783820	GUIDE-PA-OPEN-1	2	1/P						002 1			
2 1	4401 907610	GUIDE-PA-OPEN-1	2	1/P		C	E	F	F96D653		002	VA6	
3	4401 783960	SCREW-LINK-M3	4	10/P									
4	4401 783840	SPE-GUIDE-OPEN	2	5/P									
5	4401 783830	GUIDE-PA-OPEN-2	3	1/P						005 1			
5 1	4401 783830	GUIDE-PA-OPEN-2	2	1/P		D	-	J	F4K343	005 2	005	VK413968	
5 2	4401 907620	GUIDE-PA-OPEN-2	2	1/P		C	E	F	F96D653		005 1	VA6	
6	4401 783850	LINK-GUIDE-OP	2	1/P						006 1			
6 1	4400 746560	LINK-GUIDE-OP-2	2	1/P		C	E	J	F4K343		006	VK413968	
7	4400 325930	PIN-BKT-CON-H	4	10/P									
8	4401 783870	BKT-SPE-LOCK	1	1/P									
9	4401 783860	SHAFT-LOCK-LCF	1	1/P									
10	4401 783880	LEV-GUIDE-OP-F	1	1/P									
11	4401 783900	HOOK-LOCK-LCF	2	1/P									
12	4401 783910	SPE-LOCK-LCF	1	5/P									
13	4401 783930	LEVER-LOCK-LCF	1	1/P									
14	4401 784310	K-BRKT-SW-LCF	1	1/P									
15	4401 797750	ASM-LCFLOCK-150	1	1/D									
16	4401 784340	SPL-SW-LCF	1	1/P									
17	4401 784350	COVER-SW-LCF	1	1/P						017 1			
17 1	4401 784350	COVER-SW-LCF	0	1/P		B	-	E	F4G247		017	VB4	
18	4407 685930	HOLDER-WH	2	5/P									
19	4401 768350	LABEL-H	1	10/P									
30	4842 040650	TPAN40*06MSZN3L	4	50/P									
31	4842 040665	TPAN3006MSZN3L	6	50/P						031 1			
31 1	4842 040665	TPAN3006MSZN3L	4	50/P		D	-	J	F4K343		031	VK413968	
32	7640 401011	ZPAN40*10MSZN3A	5	50/P									
33	7405 007031	ERR070SKZN3A	1	50/P									
34	4842 040689	TZPAN3006MSZN3A	2	50/P									
35	4842 040920	TPAN30*04MSZN3A	1	50/P						035 1			
35 1	4842 040920	TPAN30*04MSZN3A	0	50/P		B	-	E	F4G247		035	VB4	
36	7040 201011	PAN20*10MSZN3AI	2	50/P									
37	7405 003031	ERR030SKZN3A	1	50/P									

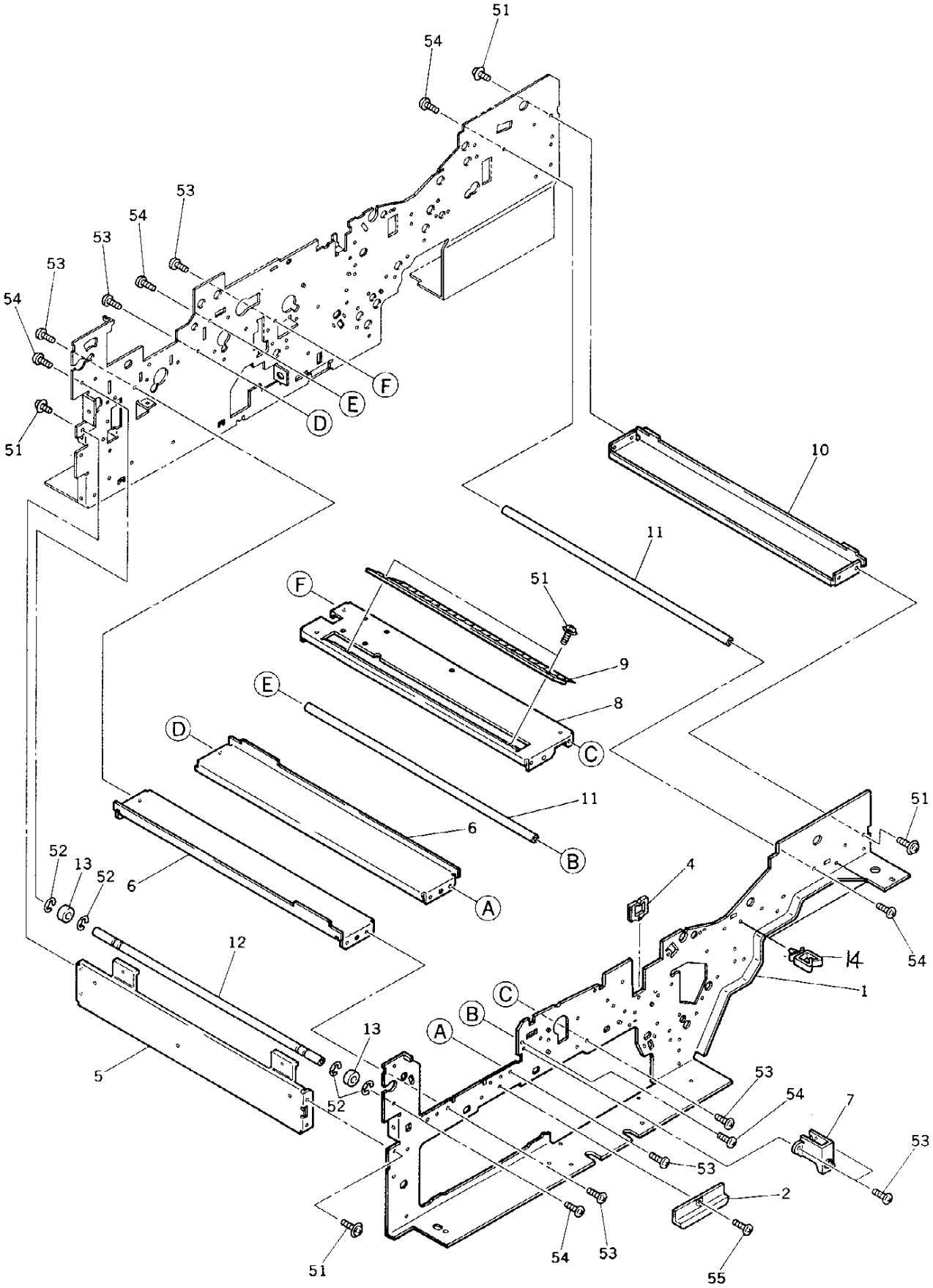
51
54
53
54
53
53
54
51
F
E
D
10
11
F
51
9
E
8
D
C
11
6
B
6
A
52
13
52
12
5
13
52
A
B
C
4
51
54
14
1
53
54
7
53
53
2
51
54
53
55

TOSHIBA

ITEM NO.	PARTS NO.	PARTS NAME	Q'TY / PAGE	Q'TY / PACK	SPE PRICE IN NONE	P	I	R	BSI NO.	TO	FROM	SERIAL NO.	REMARKS
1	4401 787300	FRAME-MD-F	1	N/A***									
2	4401 776290	LOCK-GUIDE-OP	1	1/P									
4	4843 391164	BD/W-EDS-1717U	1	10/P									
5	4400 745930	STAY-L-EXIT	1	1/P									
6	4401 759500	STAY-FUSER	2	1/P									
7	4401 754050	K-BKT-BLC-L	1	1/P									
8	4401 776570	STAY-TR-BOX	1	1/P						008 1			
8 1	4402 310950	STAY-TR-BOX	1	1/P		C	E	F	F98B191		008	VE7	
9	4401 776580	BRUSH-SUS-E	1	1/KP									
10	4401 775510	STAY-SFB	1	1/P									
11	4401 772960	SHAFT-STAY	2	1/P									
12	4401 777710	SHAFT-TRAY-A	1	1/P									
13	4401 777720	COLLER-SFT-TRAY	2	5/P									
14	4843 390855	CLP/W-LWS-2U	2	5/P		F	-	J	F4G247	014 1			
14 1	4843 390888	CLP/W-WS-2U	2	5/P		C	E	E	F4L368		014	VI4	
51	4842 040690	TZPAN3006MSZN3L	10	50/P									
52	7405 006031	ERR060SKZN3A	4	50/P									
53	4842 040060	TPAN40*08MSZN3L	14	50/P									
54	7040 400811	PAN40*08MSZN3AI	6	50/P									
55	4842 040665	TPAN3006MSZN3L	1	50/P									
11	4401 772960	SHAFT-STAY	2	1/P									

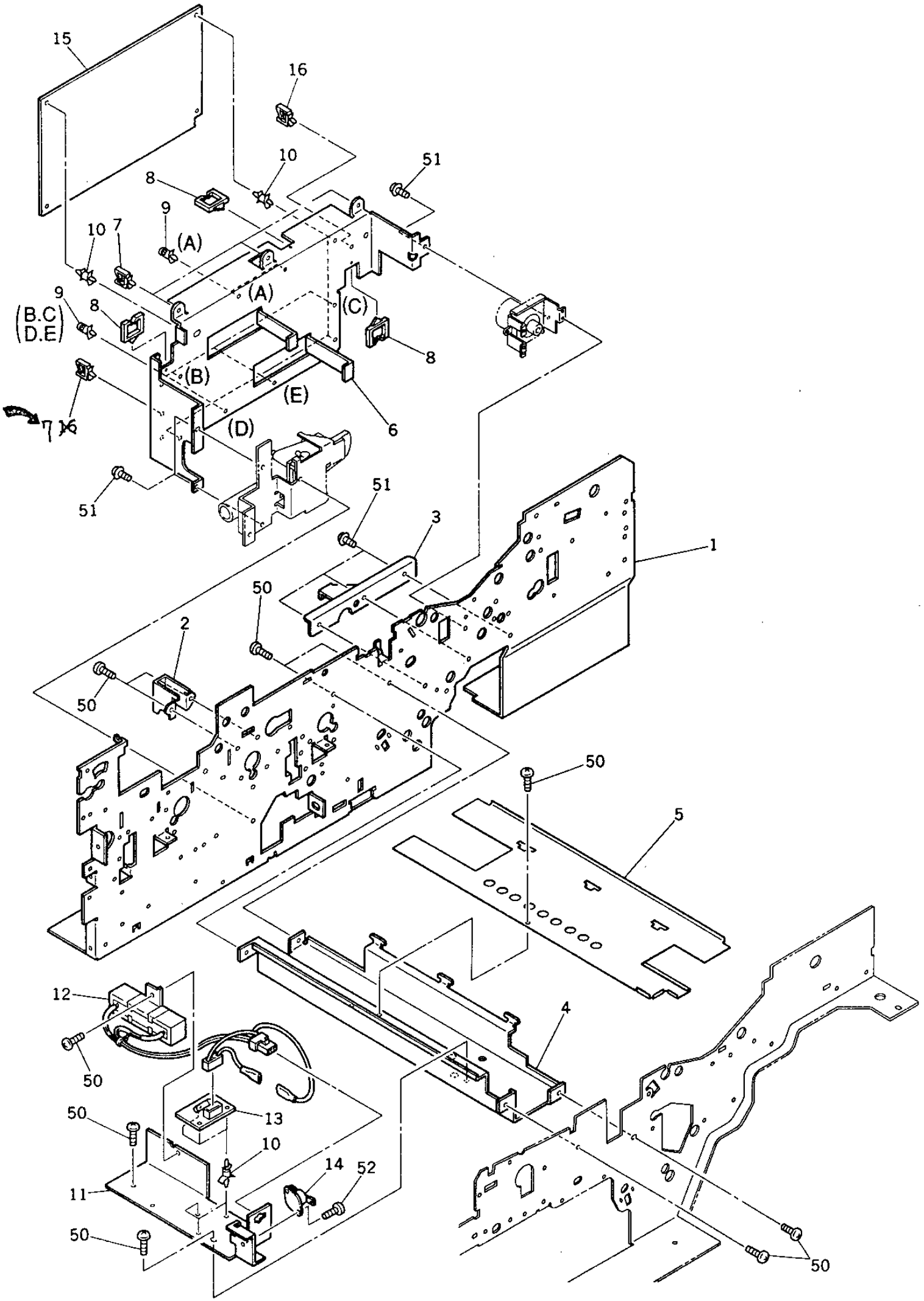
15
16
10
51
8
9
(A)
10
7
(A)
(C)
9
8
(B.C
D.E)
8
(B)
(E)
6
7
6
(D)
51
51
3
1
50
2
50
50
5
12
50
4
50
13
10
14
52
11
50
50

ITEM NO.	PARTS NO.	PARTS NAME	Q'TY / PAGE	Q'TY / PACK	SPE PRICE IN NONE	P	I	R	BSI NO.	TO	FROM	SERIAL NO.	REMARKS
1	4401 787310	FRAME-MD-R	1	N/A***									
2	4401 754050	K-BKT-BLC-L	1	1/P									
3	4401 787380	BKT-FRM-MD-R	1	1/P									
4	4401 764680	STAY-D-HEATER	1	1/P									
5	4401 764690	COV-STAY-D-HEAT	1	1/P									
6	4401 772940	BKT-PFC-150	1	1/P									
7	4843 390857	CLP/W-LWS-4U	3	5/P						007 1			
7 1	4843 390857	CLP/W-LWS-4U	4	5/P		D	-	E	F96D653		007		
8	4843 391164	BD/W-EDS-1717U	3	10/P									
9	4843 390860	PWZ-SPS-6U	5	5/P						009 1			
9 1	4843 390860	PWZ-SPS-6U	6	5/P		D	D	E	F4B103		009	VC4	
10	4843 390870	PWZ-SPLS-6U	7	5/P									
11A	4401 764840	BRKT-D-HEATER	1	1/P									MF-6550U,E,A
11H	4401 764840	BRKT-D-HEATER	1	1/P									AUD
12A	4401 797600	ASM-DHT-115-150	1	1/D									MF-6550U
12B	4401 797610	ASM-DHT-220-150	1	1/D									MF-6550E
12C	4401 797620	ASM-DHT-240-150	1	1/D									MF-6550A
12H	4401 797620	ASM-DHT-240-150	1	1/D									AUD
13A	4407 965320	PWA-F-FUS-351UC	1	1/C									MF-6550U
13B	4407 965330	PWA-F-FUS-351EU	1	1/C									MF-6550E,A
13H	4407 965330	PWA-F-FUS-351EU	1	1/C									AUD
14A	4407 551150	THERMOSTAT-30	1	1/D									MF-6550U,E,A
14H	4407 551150	THERMOSTAT-30	1	1/D									AUD
15	4401 795650	PWA-F-PFC-150	1	1/SB									
16	4843 390856	CLP/W-LWS-3U	2	5/P						016 1			
16 1	4843 390856	CLP/W-LWS-3U	1	5/P		D	-	E	F96D653		016		
50	4842 040060	TPAN40*08MSZN3L	10	50/P									
51	4842 040690	TZPAN3006MSZN3L	6	50/P									
52	4842 040665	TPAN3006MSZN3L	1	50/P									

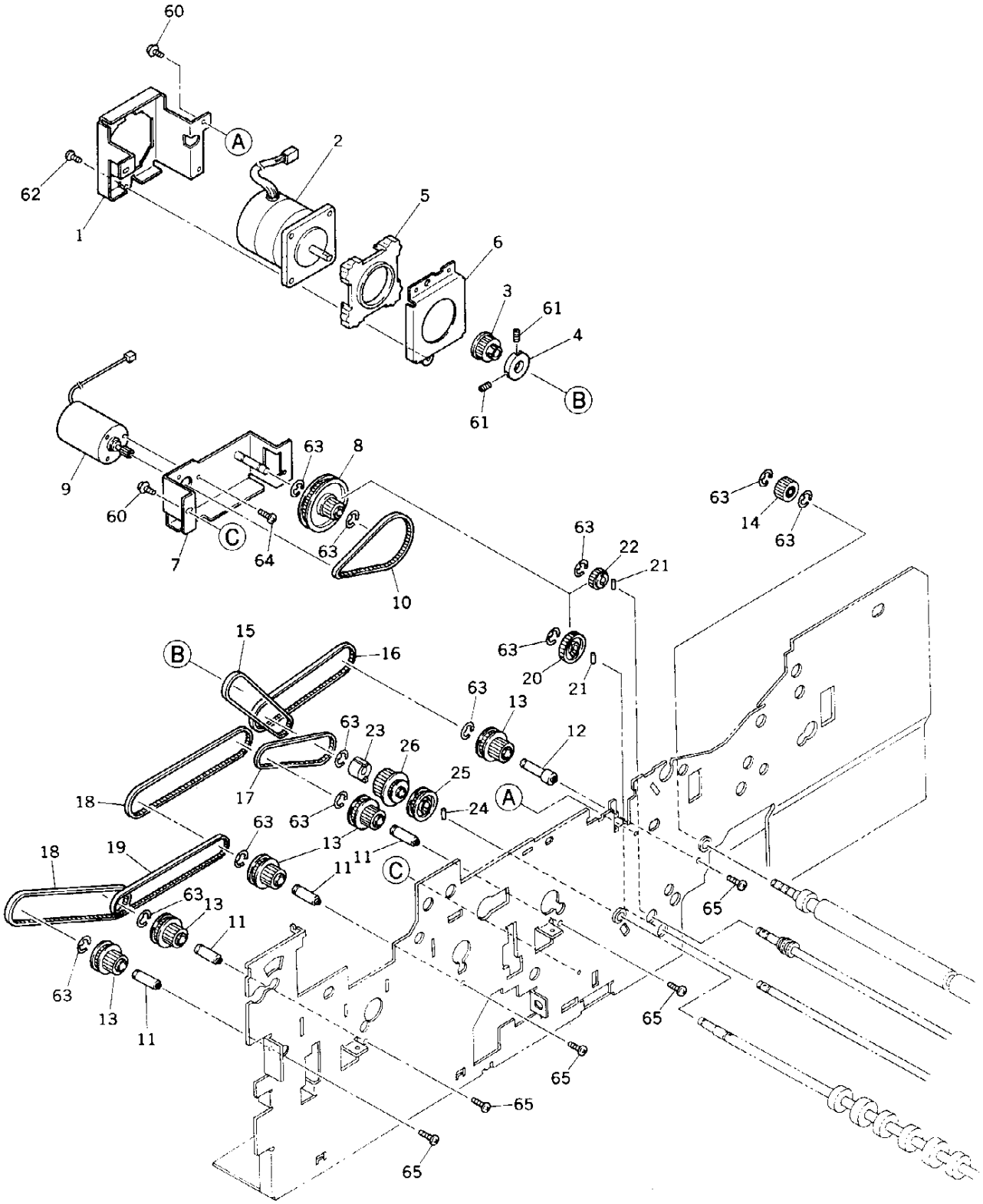
60
A
2
62
1
5
6
3
61
4
B
61
63
8
9
60
C
7
64
63
10
63
14
63
63
22
21
63
20
21
15
B
16
63
13
12
63
23
26
25
18
17
63
63
24
A
18
19
63
13
11
11
C
63
13
11
63
13
11
65
65
65
65

ITEM NO.	PARTS NO.	PARTS NAME	Q'TY / PAGE	Q'TY / PACK	SPE PRICE IN NONE	P	I	R	BSI NO.	TO	FROM	SERIAL NO.	REMARKS
1	4401 777330	BKT-MOT-RGT-ADD	1	1/P									
2	4401 796760	M/P-ADD-150	1	1/C									
3	4401 772670	PULLEY22-3M	1	1/P									
4	4401 772680	FLANGE-23	1	1/P									
5	4407 902170	DUMPER-MOTOR	1	1/P									
6	4408 604650	BRKT-MOTOR-547	1	1/P									
7	4401 777300	K-BKT-MOT-FED-A	1	1/P									
8	4401 772820	K-G18-P78	1	1/P									
9	4401 772900	K-MOT-FEED	1	1/C									
10	4401 772870	BELT-106110-3	1	1/P									
11	4401 777350	STUD-PLY40-G20H	4	1/P									
12	4401 777480	STUD-RGST-PLY	1	1/P									
13	4401 777550	K-G20-08-P40-2M	5	1/P									
14	4401 777990	K-GEAR-20-08-OW	1	1/P									
15	4401 776420	BELT-73060-4	1	1/P									
16	4401 776400	BELT-106139-4SZ	1	1/P									
17	4401 776390	BELT-106115-3Z	1	1/P									
18	4402 205100	BELT-106162-3S	2	1/P									
19	4401 776380	BELT-106159-3Z	1	1/P									
20	4407 906230	GEAR-08-30	1	1/P									
21	4407 403790	NPIN2-8	2	10/P									
22	4407 640340	GEAR-20-0.8-D6	1	1/P									
23	4402 833110	CLUTCH-6-L	1	1/D									
24	4346 312020	PIN	1	10/P									
25	4402 205010	PLY-40-2M-S	1	1/P									
26	4408 603650	PLY-2MZ40-3MZ18	1	1/P									
60	4842 040690	TZPAN3006MSZN3L	5	50/P									
61	4842 011065	9HSS30/08MSFB	2	50/P									
62	4842 040060	TPAN40*08MSZN3L	3	50/P									
63	7405 005031	ERR050SKZN3A	12	50/P									
64	7040 300411	PAN30*04MSZN3A	3	50/P									
65	7640 300651	ZPAN30*06MSZN3A	5	50/P									

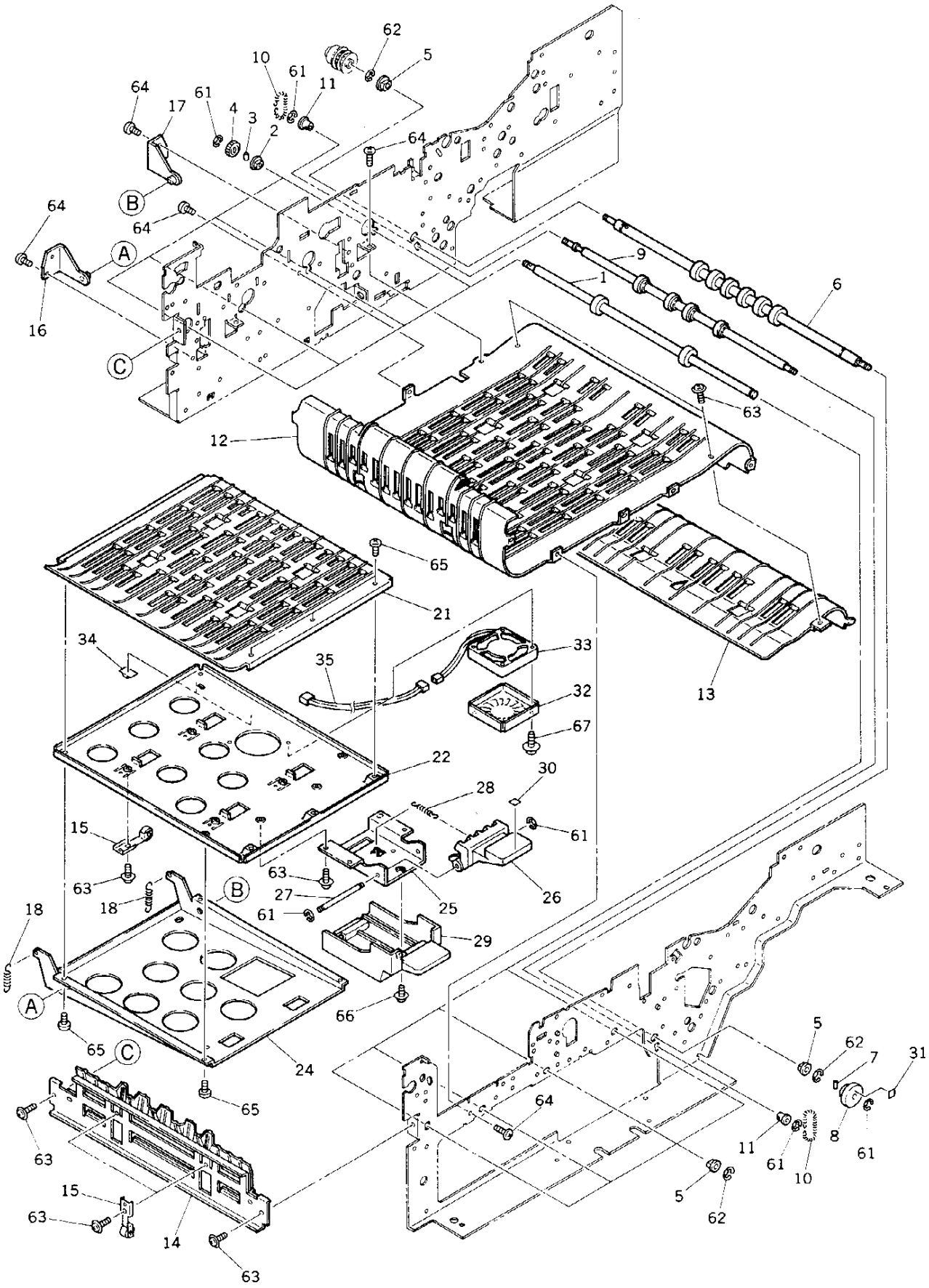
62
5
10
61
11
64
17
61
4
3
2
64
B
64
64
A
16
C
9
1
6
63
12
65
21
34
33
35
32
13
67
22
30
28
15
61
63
63
B
27
25
26
18
18
61
29
A
66
65
C
24
5
62
7
31
65
64
8
63
11
61
61
10
15
5
63
62
14
63

TOSHIBA

ITEM NO.	PARTS NO.	PARTS NAME	Q'TY / PAGE	Q'TY / PACK	SPE PRICE IN NONE	P	I	R	BSI NO.	TO	FROM	SERIAL NO.	REMARKS
1	4401 776210	ROLLER-PASS-TR	4	1/KP									
2	4407 734980	BUSH-6-GCB	4	5/P									
3	4407 403790	NPIN2-8	4	10/P									
4	4400 825510	GEAR-08-20-4.5	4	1/P									
5	4346 312030	BUSHING	6	5/P									
6	4401 777340	ROL-PASS-STK	1	1/KP						006 1			
6 1	4401 777380	ROL-PASS-STK	1	1/KP		C	E	G	F96D653		006	VE6	
7	4346 312020	PIN	1	10/P									
8	4401 777260	KNOB-ROL-AL-A	1	1/P									
9	4401 776230	ROLL-IDLE-STK-H	1	1/KP									
10	4407 957140	SPRING-850	2	5/P									
11	4407 976990	BUSH-D6-GCB	2	1/P									
12	4401 776620	GUIDE-S-U	1	N/A***						012 1			
12 1	4401 776850	GUIDE-S-U	1	N/A***		C	E	F	F96D653		012	VA6	
13	4401 776610	GUIDE-S-EXT	1	1/P						013 1			
13 1	4401 776860	GUIDE-S-EXT	1	1/P		C	E	F	F96D653		013	VA6	
14	4401 776540	K-GUIDE-S-ENT	1	1/P						014 1			
14 1	4401 776870	K-GUIDE-S-ENT	1	1/P		C	E	F	F96D653		014	VA6	
15	4401 777880	ASM-SPL-ROL-16	6	1/D						015 1			
15 1	4401 909980	ASM-SPL-ROL-ADD	6	1/D		C	E	F	F96D653		015	VL5	
16	4401 777400	K-HINGE-OPG-E	1	1/P									
17	4401 777410	K-HINGE-OPG-F	1	1/P									
18	4401 777500	SPE097-120-0326	2	5/P									
21	4401 776600	GUIDE-S-OP	1	1/P						021 1			
21 1	4401 776880	GUIDE-S-OP	1	1/P		C	E	F	F96D653		021	VA6	
22	4401 777610	PLATE-SUB-OPG	1	1/P									
24	4401 777600	BKT-SUB-OPG	1	1/P									
25	4401 777450	BKT-HANDLE-OPG	1	1/P									
26	4401 776660	HOOK-GUIDE-OP	1	1/P									
27	4401 777460	SHAFT-OPG-ADD	1	1/P									
28	4402 232680	SPE-6.3-0.6	1	1/P									
29	4401 776670	HANDLE-GUIDE-OP	1	1/P									
30	4401 768370	LABEL-K	1	10/P									
31	4401 768380	LABEL-L	1	10/P									
32	4401 777620	COVER-FAN-ADD	1	1/P									
33	4401 796950	FAN-ADD-150	1	1/D									
34	4407 685930	HOLDER-WH	2	5/P									
35	4401 798150	WH-ADD-FAN-150	1	1/P									
61	7405 005031	ERR050SKZN3A	9	50/P									
62	7405 007031	ERR070SKZN3A	6	50/P									
63	4842 040690	TZPAN3006MSZN3L	14	50/P									
64	4842 040060	TPAN40*08MSZN3L	14	50/P									
65	4842 040665	TPAN3006MSZN3L	7	50/P									
66	4842 040692	TZPAN3008MSZN3L	1	50/P									
67	4842 040019	TZPAN4020MSZN3L	2	50/P									

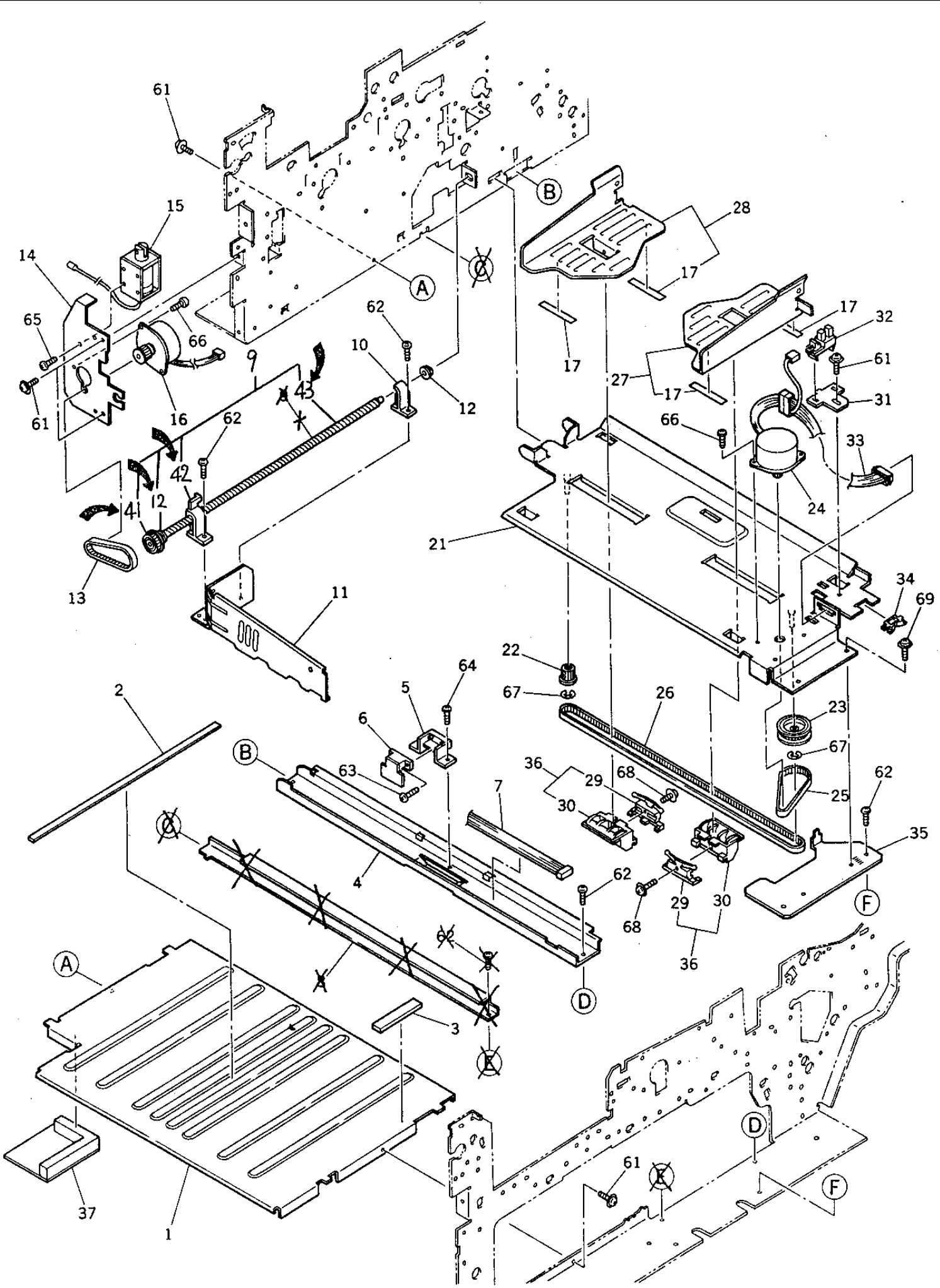
61
15
14
65
66
61
16
62
10
12
9
43
42
41
12
13
11
A
B
C
28
17
17
17
32
61
31
27
17
66
33
24
21
34
69
22
67
26
23
67
25
62
35
F
2
5
64
6
63
B
36
29
68
30
7
C
4
62
29
30
68
36
D
A
62
3
E
37
1
D
61
E
F

TOSHIBA

ITEM NO.	PARTS NO.	PARTS NAME	Q'TY / PAGE	Q'TY / PACK	SPE PRICE IN NONE	P	I	R	BSI NO.	TO	FROM	SERIAL NO.	REMARKS
1	4402 205370	BASE-STACK	1	N/A***									
2	4400 822980	SHEET-WALL-S	1	1/KP									
3	4402 206160	DAMPER-HAND-10	1	1/P									
4	4401 776750	STAY-GUIDE-STK1	1	1/P						004 1			
4 1	4401 910010	STAY-GUIDE-STK1	1	1/P		C	E	F	F95J504		004	VF5	
5	4400 824210	HOLDER-SW-P-366	1	1/P									
6	4402 222370	PWA-F-PEM-MD4-0	1	1/C									
7	4401 795820	WH-PFC-ADD-150	1	1/P									
8	4401 776760	STAY-GUIDE-STK2	1	1/P						008 1			
8 1	4401 776760	STAY-GUIDE-STK2	0	1/P		B	-	D	F4G247		008	VI4	
9	4401 777840	K-SHAFT-SCREW	1	1/P									
10	4400 822960	BUSH-PAPER-END	1	1/P									
11	4400 823020	BOARD-PAPER-END	1	1/P									
12	4407 734980	BUSH-6-GCB	1	5/P						012 1			
12 1	4407 734980	BUSH-6-GCB	2	5/P		D	-	J	F96D678		012		
13	4400 826400	BELT-106071-4.0	1	1/P									
14	4401 776260	BKT-MOTOR-PE-H	1	1/P									
15	4402 222990	SND-GATE-545-C	1	1/D									
16	4401 777860	K-MOTOR-SCREW	1	1/C									
17	4400 823010	SHEET-P-END-U	4	5/P									
21	4401 776710	K-GUIDE-STK-A6	1	1/P									
22	4400 801130	PULLEY-Z23	1	1/P									
23	4400 822650	PLY-23-48-2M	1	1/P									
24	4401 778100	K-MOTOR-SLIDE	1	1/C									
25	4400 826200	BELT-106084-2.5	1	1/P									
26	4401 776810	BELT-106348-3SZ	1	1/P									
27	4401 778110	K-WALL-STACK-F	1	1/P									
28	4400 822550	K-WALL-STACK-R	1	1/PP									
29	4400 824230	STOPPER-BELT	2	1/P									
30	4400 824240	SLIDER-WALL	2	1/P									
31	4401 776770	BKT-SIDE-SW-STK	1	1/P									
32	4400 902350	SCO-SX460-P2	1	1/C									
33	4401 795830	WH-ADD-150	1	1/P									
34	4843 390941	BD/W-EDS-1	1	10/P									
35	4401 776740	BKT-GUIDE-STK	1	1/P									
36	4400 828050	SLIDER-SET	2	1/P(2)									
37	4401 755020	K-SEAL-STACK	1	1/KP									
41	4400 823400	PLY-Z30-2M	1	1/P		A	-	J	F96D678				
42	4400 822950	BUSH-SCREW-PE	1	1/P		A	-	J	F96D678				
43	4401 777360	SHAFT-SCREW-PE	1	1/P		A	-	J	F96D678				
61	4842 040690	TZPAN3006MSZN3L	5	50/P									
62	4842 040060	TPAN40*08MSZN3L	6	50/P						062 1			
62 1	4842 040060	TPAN40*08MSZN3L	5	50/P		D	-	D	F4G247		062	VI4	
63	7120 300811	12PAN3008MSZN3A	1	50/P									
64	4842 040700	TZPAN4008MSZN3L	2	50/P									
65	7040 300611	PAN30*06MSZN3A	2	50/P									
66	4842 040665	TPAN3006MSZN3L	4	50/P									
67	7405 003031	ERR030SKZN3A	2	50/P									
68	4842 040124	TZPAN3014MSZN3L	2	50/P									
69	7640 400851	ZPAN40*08MSZN3A	2	50/P									
61	4842 040690	TZPAN3006MSZN3L	5	50/P									

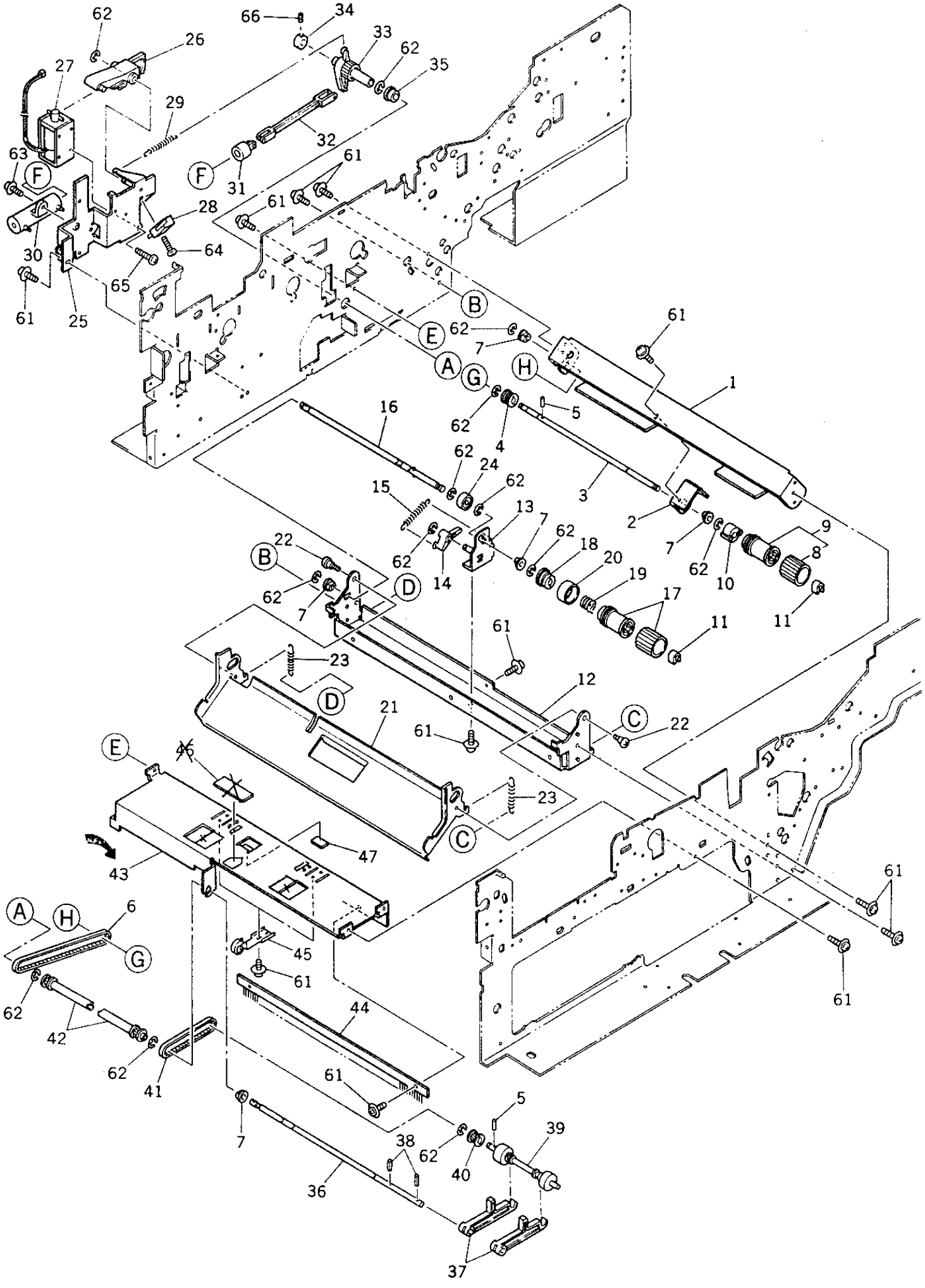
62
26
27
29
63
F
30
61
25
66
34
33
62
35
32
F
31
61
61
28
64
65
B
E
62
7
A
G
H
61
1
62
4
5
16
62
24
62
3
15
13
7
62
2
7
9
8
62
10
22
B
62
14
18
20
19
17
11
11
62
7
D
61
23
12
D
21
C
22
61
E
46
23
C
47
43
61
A
H
6
G
45
61
61
62
44
42
62
41
61
5
7
38
62
39
40
36
37

TOSHIBA

ITEM NO.	PARTS NO.	PARTS NAME	Q'TY / PAGE	Q'TY / PACK	SPE PRICE IN NONE	P	I	R	BSI NO.	TO	FROM	SERIAL NO.	REMARKS
1	4401 777000	STAY-FEED-ADD	1	1/P									
2	4401 777010	BKT-FED-ROL-ADD	1	1/P									
3	4401 777020	SHAFT-ROL-FED-A	1	1/P									
4	4400 884670	PLY-20-ROL	1	1/P									
5	4407 403790	NPIN2-8	2	10/P									
6	4401 776410	BELT-106162-2SZ	1	1/P									
7	4407 734980	BUSH-6-GCB	5	5/P									
8	4402 038470	ROL-FEED-1	1	1/C									
9	4402 038460	K-ROL-FEED-1	1	1/P									
10	4402 833110	CLUTCH-6-L	1	1/D									
11	4407 907410	STOP-RING-6	2	5/P									
12	4401 776900	STAY-SEP-ADD	1	1/P									
13	4401 776910	K-BKT-SEP-ROL-A	1	1/P									
14	4401 776930	LEV-ROL-SEP-ADD	1	1/P									
15	4401 771690	SPE-SEP-907	1	5/P									
16	4401 776970	K-SFT-ROL-SEP-A	1	1/P									
17	4401 773030	K-ROL-SPT-CCW-H	1	1/P									
18	4408 307270	ARBOR-16-POM-S	1	1/P									
19	4401 784210	SPR-1.0-15.60RF	1	5/P									
20	4408 535810	COVER-SP-CL-BL	1	1/P									
21	4401 776940	GUIDE-SEP-ADD	1	1/P						021 1			
21 1	4401 909600	GUIDE-SEP-ADD	1	1/PP		C	E	F	F96D653		021	VA6	
22	4401 776960	SCREW-SEP-ADD	2	10/P									
23	4401 776950	SPE063-060-0253	2	5/P									
24	4408 502410	COLLAR-6-15	1	1/P									
25	4401 777520	K-BRKT-SOL-PICK	1	1/P									
26	4402 206010	ARM-SEND-PICK	1	1/P									
27	4400 825810	SND-FEED-MD3	1	1/D									
28	4400 816400	SM-E21-51HX-001	1	1/C									
29	4401 777540	SPE-PICK-ADD	1	5/P									
30	4400 826150	CYLINDER-PICK	1	1/P									
31	4400 826140	PISTON-PICK-UP	1	1/P									
32	4402 205430	ARM-PISTON	1	1/P									
33	4401 777510	GEAR-18-1-SPE	1	1/P									
34	4400 801510	COLLER-MOT-P	1	5/P									
35	4400 538970	BRG-W686ZZNR	1	1/P									
36	4401 776470	SHAFT-PICK-ADD	1	1/P									
37	4400 825760	ARM-PICK-UP	2	1/P									
38	7434 201239	WPIN20/12SKFB	2	50/P									
39	4400 825750	ROL-PICK-ADD	1	1/KP									
40	4408 338630	K-PLY/T-2M-Z20	1	1/P									
41	4407 973140	BELT-HTD-93-2M	1	1/P									
42	4400 825960	K-PLY/2M-Z20	2	1/P									
43	4401 777490	STAY-PICK-ADD	1	1/P						043 1			
43 1	4401 777690	STAY-PICK-ADD	1	1/P		C	B	D	F4E164	043 2	043	VF4	
43 2	4401 909580	STAY-PICK-ADD	1	1/P		C	E	F	F95J504		043 1	VE5	
44	4401 776580	BRUSH-SUS-E	1	1/KP									
45	4401 777880	ASM-SPL-ROL-16	2	1/D						045 1			
45 1	4401 909980	ASM-SPL-ROL-ADD	2	1/D		C	E	F	F96D653		045	VL5	
46	4400 825250	MYLAR-BLACK-A-2	1	5/P						046 1			
46 1	4400 825250	MYLAR-BLACK-A-2	0	5/P		B	-	D	F4E164		046	VF4	
47	4401 777580	CUSH-PICK-ADD	1	5/P									
61	4842 040690	TZPAN3006MSZN3L	18	50/P									
62	7405 005031	ERR050SKZN3A	13	50/P									
63	4842 040700	TZPAN4008MSZN3L	1	50/P									
64	4842 040124	TZPAN3014MSZN3L	1	50/P									
65	7040 300611	PAN30*06MSZN3A	2	50/P									
66	4842 011081	9HSS40/04MSFB	1	50/P									

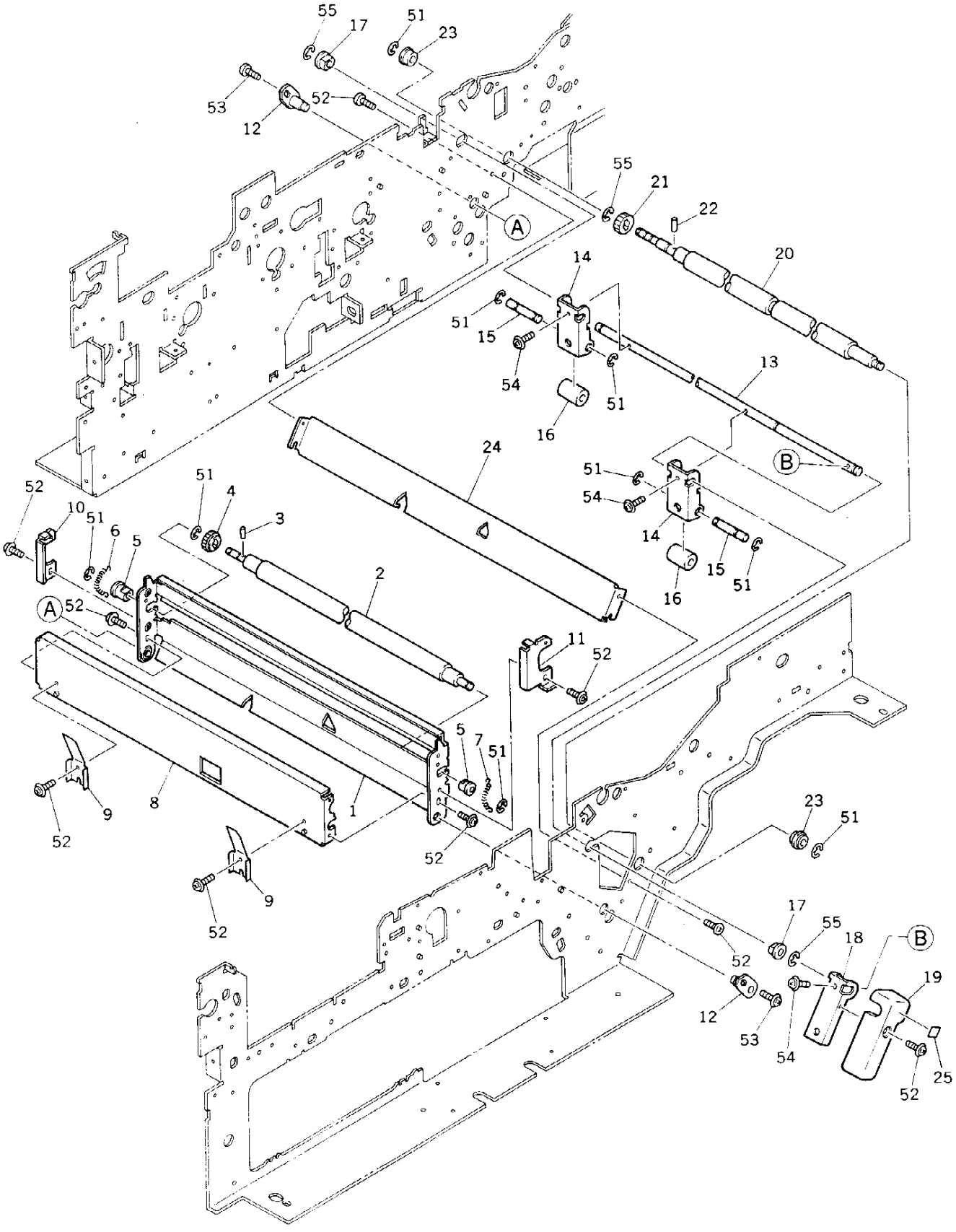
55
17
51
23
53
52
12
55
21
22
20
A
14
51
15
54
51
13
16
24
B
51
54
14
15
51
16
52
10
51
6
5
51
4
3
2
A
52
11
52
5
7
51
9
8
1
52
52
23
51
9
52
17
55
18
B
52
19
12
53
54
25
52

TOSHIBA

ITEM NO.	PARTS NO.	PARTS NAME	Q'TY / PAGE	Q'TY / PACK	SPE PRICE IN NONE	P	I	R	BSI NO.	TO	FROM	SERIAL NO.	REMARKS
1	4401 777100	GUIDE-RGST-OP	1	1/P						001 1			
1 1	4401 909070	GUIDE-RGST-OP	1	1/PP		C	E	F	F96D653		001	VA6	
2	4401 776240	ROLLER-ALIN-ADD	1	1/KP									
3	4407 403790	NPIN2-8	1	10/P									
4	4400 823760	GEAR-08-20-LA5	1	1/P									
5	4407 976990	BUSH-D6-GCB	2	1/P									
6	4402 232170	SPRING-815	1	5/P									
7	4402 232180	SPRING-550	1	5/P									
8	4401 777110	STAY-RGST-OP	1	1/P									
9	4401 777470	SPL-RGOP-ADD	2	1/P									
10	4401 777130	RAIL-RGST-OP-R	1	1/P									
11	4401 777120	RAIL-RGST-OP-F	1	1/P									
12	4401 777140	K-BKT-JOINT-RGO	2	1/P									
13	4401 777280	SHAFT-STOP-RGOP	1	1/P									
14	4401 777210	BKT-STOP-RGST	2	1/P									
15	4401 777220	SHAFT-ROL-STOP	2	1/P									
16	4401 777230	ROLL-STOP-RGST	2	1/P									
17	4400 802080	BUSH-8	2	5/P									
18	4401 777240	BKT-HANDLE-RGOP	1	1/P									
19	4401 777250	HANDLE-RGST-OP	1	1/P									
20	4401 776250	ROLLER-RGST-ADD	1	1/KP									
21	4407 752280	GEAR-0.8-20	1	1/P									
22	4346 312020	PIN	1	10/P									
23	4400 538970	BRG-W686ZZNR	2	1/P									
24	4401 777050	GUIDE-RGST-OUT	1	1/P						024 1			
24 1	4401 909620	GUIDE-RGST-OUT	1	1/PP		C	E	F	F96D653		024	VA6	
25	4401 768360	LABEL-I	1	10/P									
51	7405 005031	ERR050SKZN3A	9	50/P									
52	4842 040690	TZPAN3006MSZN3L	13	50/P									
53	4842 040060	TPAN40*08MSZN3L	2	50/P									
54	4842 040727	TPPAN4010MSZN3A	3	50/P									
55	7405 007031	ERR070SKZN3A	3	50/P									

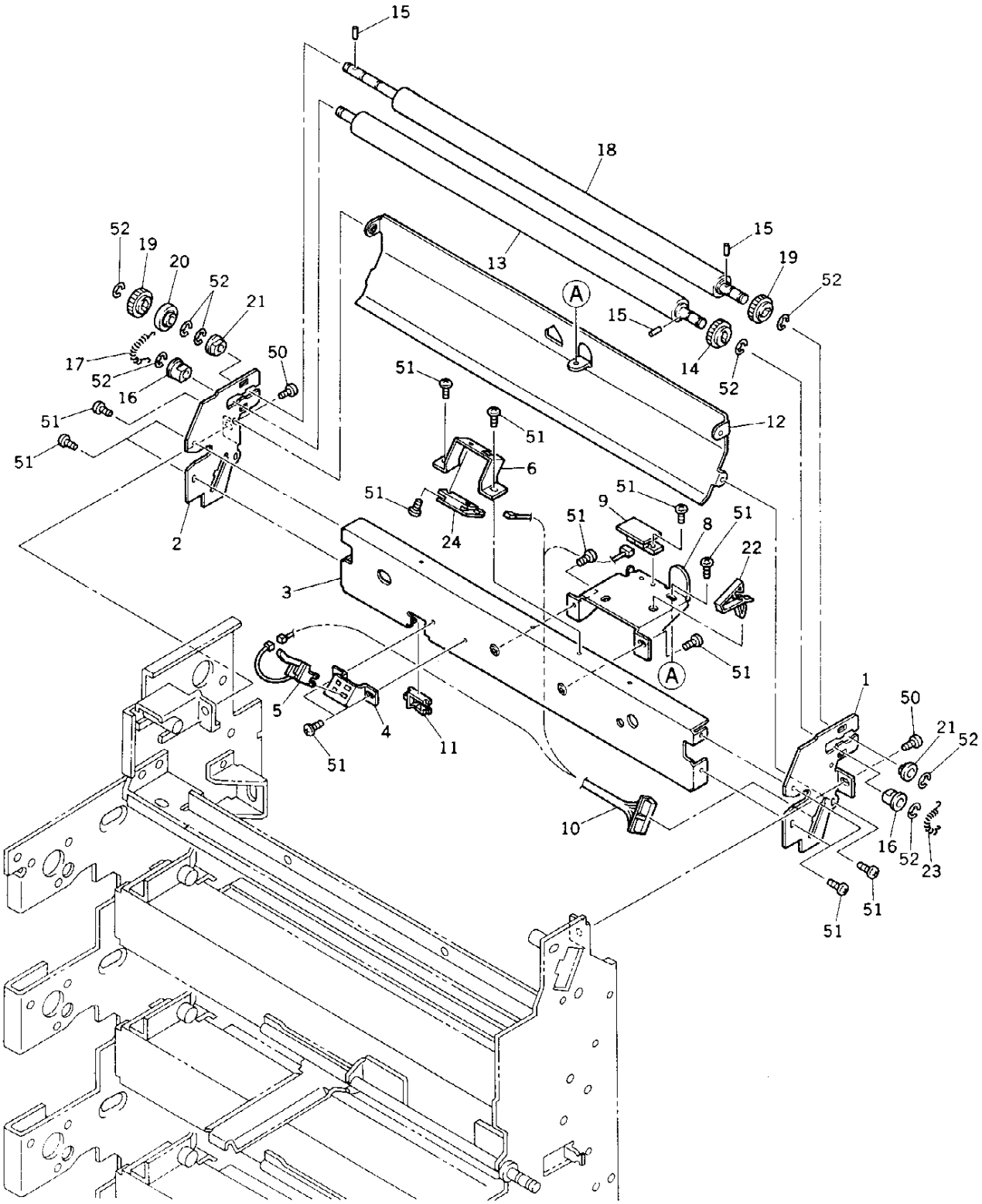
15
18
13
15
19
52
52
19
20
52
21
17
52
16
50
51
51
51
51
51
6
12
14
52
A
51
9
8
51
22
24
2
3
A
51
5
4
11
51
1
50
21
52
10
16
52
23
51
51

TOSHIBA

ITEM NO.	PARTS NO.	PARTS NAME	Q'TY / PAGE	Q'TY / PACK	SPE PRICE IN NONE	P	I	R	BSI NO.	TO	FROM	SERIAL NO.	REMARKS
1	4401 784660	FRAME-U-AL-F	1	1/P									
2	4401 784670	FRAME-U-AL-R	1	1/P									
3	4401 784600	STAY-U-ALIN-UNT	1	1/P									
4	4401 784630	BKT-SW-FED-U-AL	1	1/P									
5	4402 221190	SZ-P-FEED-545	1	1/C									
6	4401 784640	BKT-SW-RGT-U-AL	1	1/P									
8	4401 784650	BKT-SW-RGT-PFP	1	1/P									
9	4402 222280	PWA-F-PEM-366-0	1	1/C									
10	4401 796280	WH-ADD-SENS-150	1	1/P									
11	4843 390941	BD/W-EDS-1	1	10/P									
12	4401 784610	GUIDE-U-AL-UNIT	1	1/P						012 1			
12 1	4401 909700	GUIDE-U-AL-UNIT	1	1/PP		C	E	F	F96D653		012	VA6	
13	4401 782890	ROLLER-ALIN-F/S	1	1/KP									
14	4407 640340	GEAR-20-0.8-D6	1	1/P									
15	4407 403790	NPIN2-8	3	10/P									
16	4407 976990	BUSH-D6-GCB	2	1/P									
17	4402 232180	SPRING-550	1	5/P									
18	4401 784260	ROLLER-RGT-F/S	1	1/KP									
19	4400 823760	GEAR-08-20-LA5	2	1/P									
20	4402 233530	COLLER-GAP-GEAR	1	5/P									
21	4407 734980	BUSH-6-GCB	2	5/P									
22	4407 744370	Z-MA-LS-10	1	5/P									
23	4402 232170	SPRING-815	1	5/P									
24	4401 795630	PWA-F-PEM-150-O	1	1/C									
50	4842 040060	TPAN40*08MSZN3L	2	50/P									
51	4842 040665	TPAN3006MSZN3L	17	50/P									
52	7405 005031	ERR050SKZN3A	8	50/P									

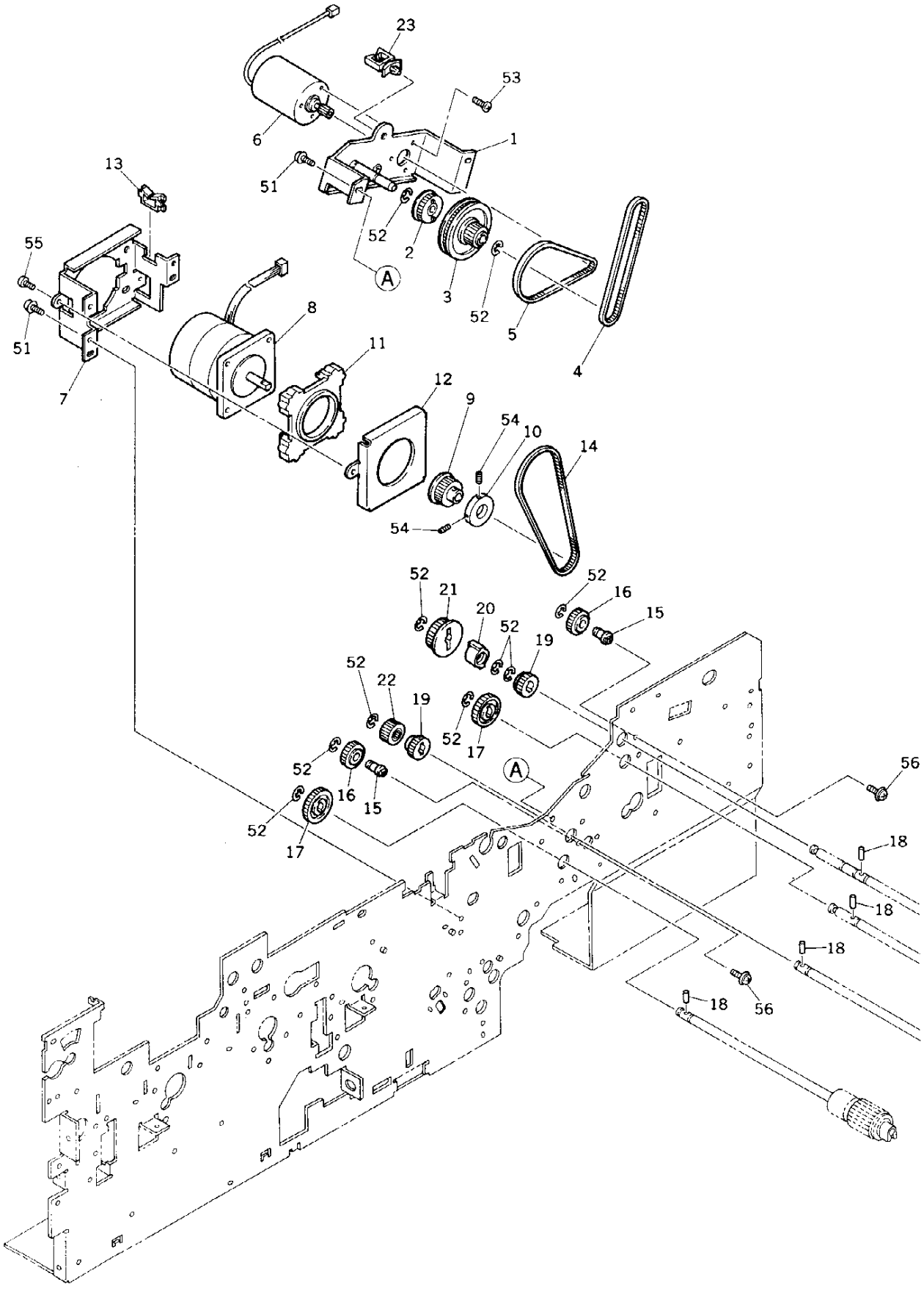
23
53
6
1
13
51
52
2
55
A
3
52
5
8
51
4
11
7
12
9
54
10
14
54
52
21
52
16
20
15
52
19
52
22
19
52
17
A
52
16
15
56
52
17
18
18
18
18
56

TOSHIBA

ITEM NO.	PARTS NO.	PARTS NAME	Q'TY / PAGE	Q'TY / PACK	SPE PRICE IN NONE	P	I	R	BSI NO.	TO	FROM	SERIAL NO.	REMARKS
1	4401 772830	K-BKT-MOT-FED	1	1/P									
2	4401 772880	PLY27-3M-D6	1	1/P									
3	4401 772820	K-G18-P78	1	1/P									
4	4401 772780	BELT-73078-3.5	1	1/P									
5	4401 772870	BELT-106110-3	1	1/P									
6	4401 772900	K-MOT-FEED	1	1/C									
7	4401 772660	BKT-MOT-RGST	1	1/P									
8	4401 796900	M/P-RGT-150	1	1/C									
9	4401 772670	PULLEY22-3M	1	1/P									
10	4401 772680	FLANGE-23	1	1/P									
11	4407 902170	DUMPER-MOTOR	1	1/P									
12	4408 604650	BRKT-MOTOR-547	1	1/P									
13	4843 390942	BD/W-EDS-2	1	10/P									
14	4401 772700	BELT-73053-4	1	1/P									
15	4401 772740	STUD-G22	2	1/P									
16	4401 772750	GEAR-22-08-D6	2	1/P									
17	4407 906230	GEAR-08-30	2	1/P									
18	4407 403790	NPIN2-8	4	10/P									
19	4407 640340	GEAR-20-0.8-D6	2	1/P									
20	4402 833100	CLUTCH-6-R	1	1/D									
21	4401 772760	PLY-Z30-3M-D6	1	1/P									
22	4401 777990	K-GEAR-20-08-OW	1	1/P									
23	4843 390857	CLP/W-LWS-4U	1	5/P									
51	4842 040690	TZPAN3006MSZN3L	5	50/P									
52	7405 005031	ERR050SKZN3A	10	50/P									
53	7040 300411	PAN30*04MSZN3A	3	50/P									
54	4842 011065	9HSS30/08MSFB	2	50/P									
55	4842 040060	TPAN40*08MSZN3L	3	50/P									
56	7640 300651	ZPAN30*06MSZN3A	2	50/P									

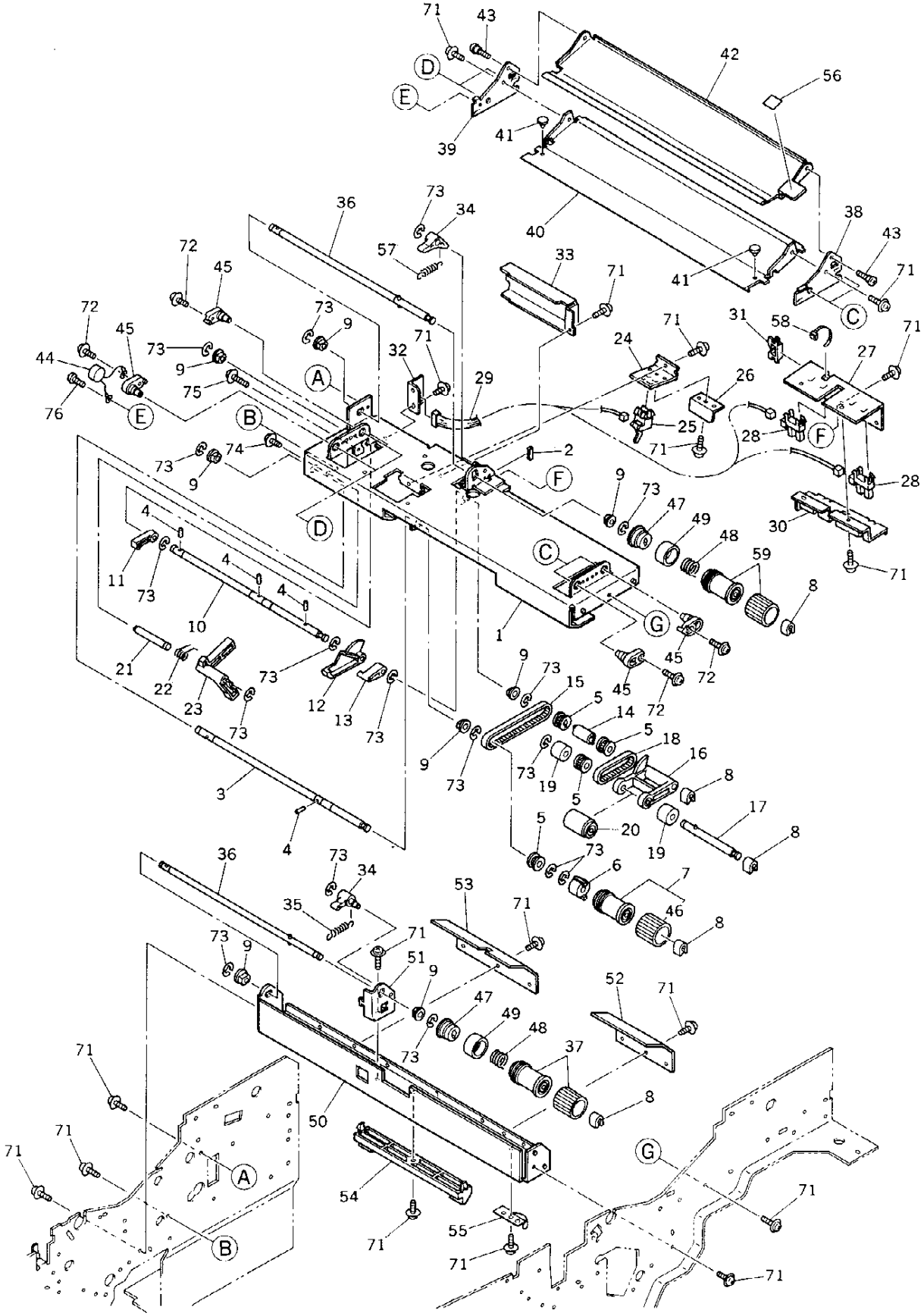

ITEM NO.	PARTS NO.	PARTS NAME	Q'TY / PAGE	Q'TY / PACK	SPE PRICE IN NONE	P	I	R	BSI NO.	TO	FROM	SERIAL NO.	REMARKS
1	4401 771830	K-STY-FED-U	1	1/P									
2	4401 771890	EDGING-BKT-ROL	1	1/P									
3	4401 771910	SFT-ROL-FEED	1	1/P									
4	4407 403790	NPIN2-8	4	10/P									
5	4400 884670	PLY-20-ROL	4	1/P									
6	4402 833100	CLUTCH-6-R	1	1/D									
7	4402 038540	K-ROL-FEED-2	1	1/P									
8	4407 907410	STOP-RING-6	5	5/P									
9	4407 734980	BUSH-6-GCB	8	5/P									
10	4401 772030	SFT-PICK-UP	1	1/P									
11	4401 771970	LEV-PICK-ROL	1	1/P									
12	4402 209660	ACT-EMP-L	1	1/P									
13	4402 209650	LEV-ACT-EMP-L	1	1/P									
14	4401 771990	JOINT-D6-L20	1	1/P									
15	4401 771980	BELT-106096-2.5	1	1/P									
16	4402 209640	ARM-PICK-L	1	1/P									
17	4401 772000	K-SFT-ROL-PICK	1	1/P									
18	4402 209840	BELT-106057-2.5	1	1/P									
19	4401 772020	WEIGHT-PICK-UP	2	1/P									
20	4402 038420	K-ROL-PICK-2	1	1/P									
21	4401 772060	STD-LEV-PICK-UP	1	1/P									
22	4401 779850	SP-PICK-LCC	1	1/P									
23	4401 772070	LEV-PICK-LCC	1	1/P									
24	4401 772120	BKT-SW-PRE-FED	1	1/P									
25	4401 797110	SZ-P-FEED-150	1	1/P									
26	4401 772130	COV-SW-PRE-FED	1	1/P									
27	4401 772210	BKT-SW-EMP	1	1/P									
28	4402 816780	SZ-GP1A71M1	2	1/C									
29	4401 798170	WH-LCF-SW-150	1	1/P									
30	4401 772200	COVER-SW-EMP	1	1/P									
31	4400 324160	EDGE-SADDLE-1	1	5/P									
32	4401 772230	BKT-CONECT-SW-E	1	1/P									
33	4401 772240	COV-HRNS-SW-EMP	1	1/P									
34	4401 771680	LEV-ROL-SEP	2	1/P									
35	4401 771690	SPE-SEP-907	1	5/P									
36	4401 771710	K-SFT-ROL-SEP	2	1/P									
37	4401 773010	K-ROL-SPT-CW-H	1	1/P									
38	4401 772330	BKT-GUIDE-M-F	1	1/P									
39	4401 772340	BKT-GUIDE-M-R	1	1/P									
40	4401 772350	GUIDE-P-MNAL-L	1	1/P						040 1			
40 1	4401 772370	GUIDE-P-MNAL-L	1	1/P		C	E	E	F4G247		040	VG4	
41	4408 337960	PAD-8*2	2	5/P									
42	4401 772360	GUIDE-P-MNAL-U	1	1/P						042 1			
42 1	4401 772380	GUIDE-P-MNAL-U	1	1/P		C	E	E	F4G247		042	VG4	
43	4400 325930	PIN-BKT-CON-H	2	10/P									
44	4401 797150	K-VARIST-U-150	1	1/P									
45	4401 772280	SUPPORT-GUIDE-P	4	1/P									
46	4402 038470	ROL-FEED-1	1	1/C									
47	4408 307270	ARBOR-16-POM-S	2	1/P									
48	4408 307260	SPR-1.0-15.55-S	2	5/P									
49	4408 307890	COVER-SP-CL	2	1/P									
50	4401 771630	STY-FEED-L	1	1/P									
51	4401 771650	K-BKT-SEP-ROL-L	1	1/P									
52	4401 771740	GUIDE-P-STY-LF	1	1/P						052 1			
52 1	4401 909710	GUIDE-P-STY-LF	1	1/P		C	E	F	F96D653		052	VA6	
53	4401 771750	GUIDE-P-STY-LR	1	1/P						053 1			
53 1	4401 909720	GUIDE-P-STY-LR	1	1/PP		C	E	F	F96D653		053	VA6	
54	4401 783920	HOLDER-LOCK-LCF	1	1/P									
55	4401 783970	SPL-STY-FED-L	1	1/P									
56	4401 768340	LABEL-D	1	10/P									
57	4401 771880	SPE-SEP-784	1	5/P									
58	4346 754010	SKB-BAND-1	1	5/P									
59	4400 746270	K-ROL-SPT-URT	1	1/P									
71	4842 040690	TZPAN3006MSZN3L	19	50/P									
72	4842 040692	TZPAN3008MSZN3L	4	50/P									
73	7405 005031	ERR050SKZN3A	17	50/P									
74	7640 300651	ZPAN30*06MSZN3A	1	50/P									
75	4842 040124	TZPAN3014MSZN3L	1	50/P									
76	4842 040665	TPAN3006MSZN3L	1	50/P									

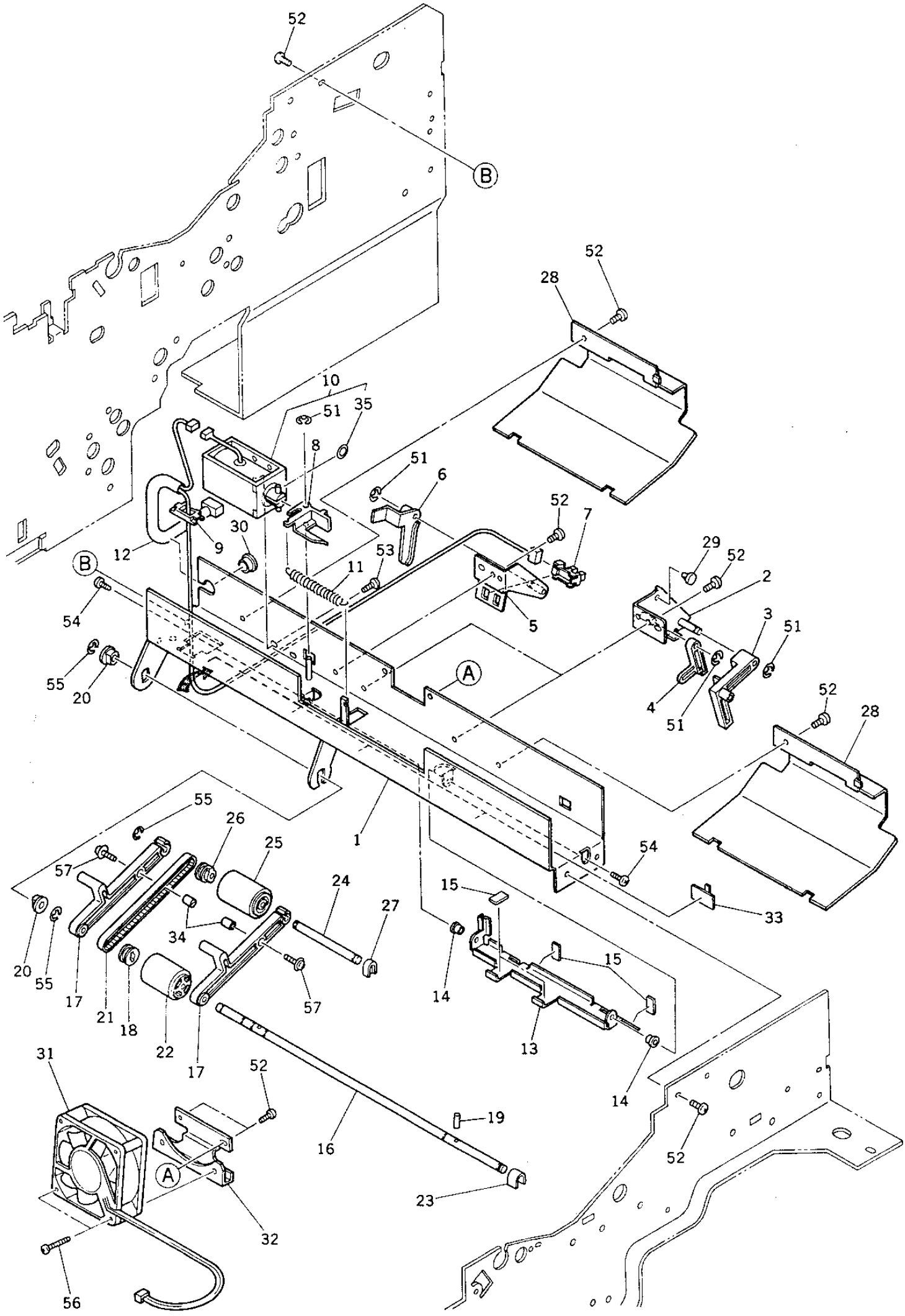
52
B
52
28
10
51
35
8
51
6
52
7
30
9
12
53
11
B
54
5
29
52
2
3
51
55
20
A
4
51
52
28
55
26
25
1
57
54
24
15
27
33
34
20
55
17
21
18
22
17
57
14
15
13
14
31
52
19
16
52
A
23
32
56

TOSHIBA

ITEM NO.	PARTS NO.	PARTS NAME	Q'TY / PAGE	Q'TY / PACK	SPE PRICE IN NONE	P	I	R	BSI NO.	TO	FROM	SERIAL NO.	REMARKS
1	4401 775620	K-BKT-BYPASS-UL	1	1/P									
2	4401 775210	K-BKT-STOPPER	2	1/P									
3	4401 775240	ARM-STOPPER	2	1/P									
4	4401 775520	ARM-STOPPER-SUB	2	1/P						004 1			
4 1	4401 910170	ARM-STOPPER-SUB	2	1/P		C	E	F	F95J504		004	VE5	
5	4401 775250	K-BKT-PAPER-SW	1	1/P									
6	4401 775280	LEVER-PAPER-SW	1	1/P									
7	4402 816780	SZ-GP1A71M1	1	1/C									
8	4400 756410	ACT-BYPASS	1	1/P									
9	4843 390942	BD/W-EDS-2	1	10/P									
10	4401 775670	ASM-SND-FED-150	1	1/D									
11	4401 775540	SPE-SND-BYPASS	1	5/P									
12	4401 798160	WH-MFD-UNIT-150	1	1/P									
13	4401 775340	BKT-BYPASS-US	1	1/P									
14	4402 814690	SPACER-BYPASS	2	5/P									
15	4401 775790	CUSH-BYPASS-US	4	5/P									
16	4401 775370	SFT-ROL-FEED-U	1	1/P									
17	4401 775350	ARM-PICK-UP	2	1/P						017 1			
17 1	4401 775290	ARM-PICK-UP	2	1/P		C	B	D	F4I285		017	VK413948	
18	4400 884670	PLY-20-ROL	1	1/P									
19	4407 403790	NPIN2-8	1	10/P									
20	4407 734980	BUSH-6-GCB	2	5/P									
21	4401 775600	BELT-106105-3SZ	1	1/P									
22	4401 773050	K-ROL-FED-CW-H	1	1/P									
23	4407 907410	STOP-RING-6	1	5/P									
24	4401 775360	SFT-ROLL-PICK-U	1	1/P									
25	4401 773060	K-ROL-P/U-CW-H	1	1/P									
26	4402 813680	PLY-20	1	1/P									
27	4407 972860	STOP-RING-6-5	1	5/P									
28	4401 775580	GUIDE-BYPASS-U	2	1/P									
29	4408 337960	PAD-8*2	2	5/P									
30	4842 414629	GMT-OCB-375	1	10/P									
31	4408 610830	FAN-DEV-547	1	1/D									
32	4401 775390	BRKT-FAN-FED	1	1/PP									
33	4407 685930	HOLDER-WH	3	5/P						033 1			
33 1	4407 685930	HOLDER-WH	4	5/P		D	E	E	F97A813		033	VG6	
34	4401 775530	WEIGHT-M-PICK	2	5/P									
35	4401 775660	MYLAR-SND-MNAL	1	5/P									
51	7405 003031	ERR030SKZN3A	6	50/P									
52	4842 040690	TZPAN3006MSZN3L	11	50/P									
53	7040 300611	PAN30*06MSZN3A	2	50/P									
54	4842 040666	TPAN3008MSZN3L	2	50/P									
55	7405 005031	ERR050SKZN3A	3	50/P									
56	4842 040367	TZPAN4032MSZN3L	2	50/P									
57	7040 300811	PAN30*08MSZN3AI	2	50/P									

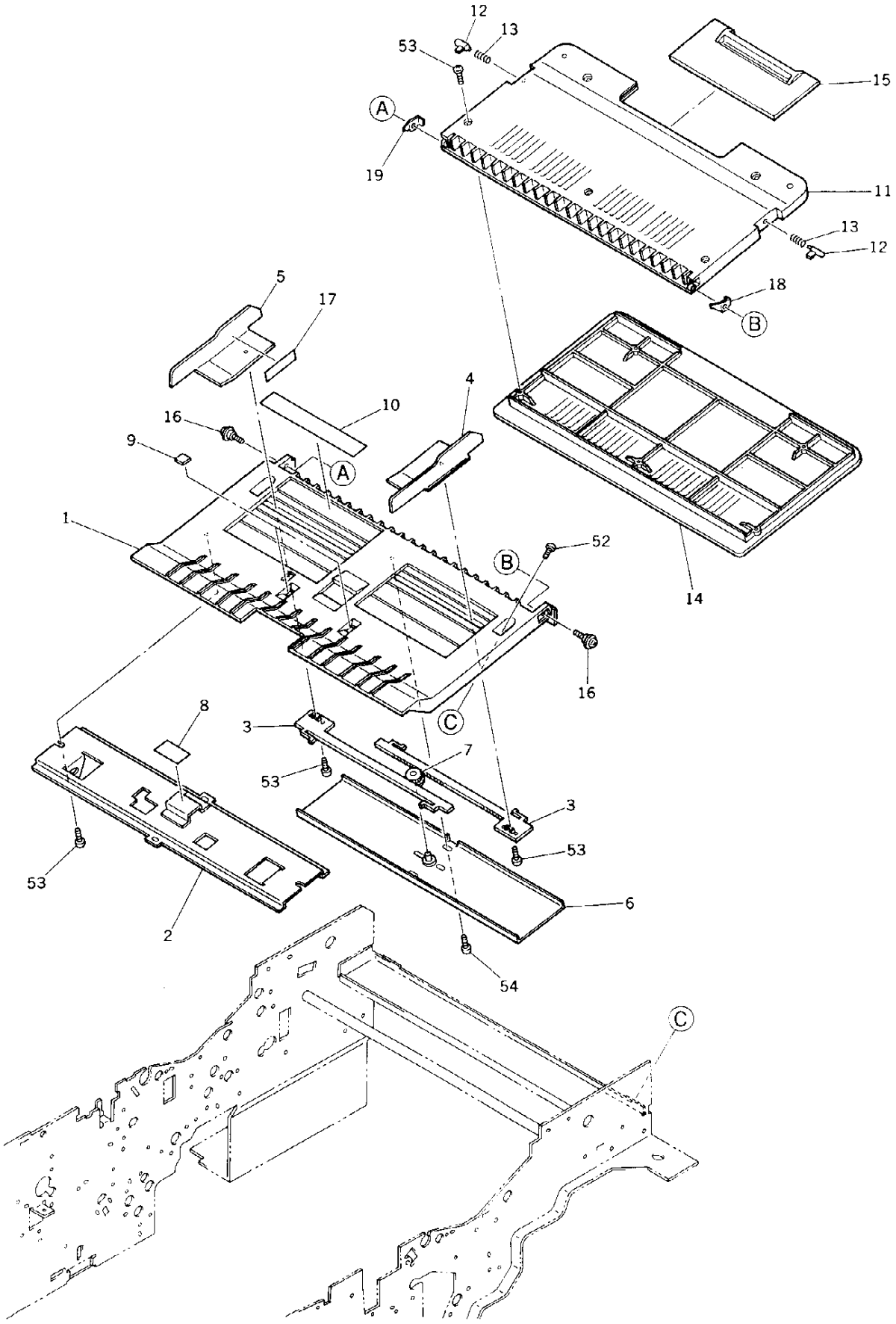
12
13
53
15
A
19
11
13
12
18
B
5
17
4
10
16
9
A
1
52
B
14
16
C
8
3
7
53
3
53
53
6
2
54
C

ITEM NO.	PARTS NO.	PARTS NAME	Q'TY / PAGE	Q'TY / PACK	SPE PRICE IN NONE	P	I	R	BSI NO.	TO	FROM	SERIAL NO.	REMARKS
1	4401 775400	TRAY-SFB	1	1/PP									
2	4401 775410	K-BKT-HOLD-TRAY	1	1/P									
3	4401 775440	RACK-BYPASS	2	1/P									
4	4401 775450	GUIDE-F	1	1/P									
5	4401 775460	GUIDE-R	1	1/P									
6	4401 775480	K-PLATE-PINION	1	1/P									
7	4407 726480	PINION-18-395	1	1/P									
8	4400 901130	PAD-BRAKE	1	5/P									
9	4401 775780	CUSH-TRAY-SFB	2	5/P									
10A	4401 775810	LBL-SIZE-SFB-U	1	5/P									LD,LT,LG,ST
10B	4401 775820	LBL-SIZE-SFB-E	1	5/P									A3,A4,B4,B5
11	4401 775750	TRAY-OPEN-SFB	1	1/PP									
12	4402 814310	PIN-TRAY-M-FE	2	5/P									
13	4402 818340	SPC-PIN-TRAY-N	2	5/P									
14	4401 775760	COV-OPEN-SFB	1	1/PP									
15	4401 775770	TRAY-OPEN-SFB	1	1/PP									
16	4402 240470	SCREW-HINGE	2	10/P									
17	4401 775830	LBL-STACK-SFB	1	5/P									
18	4401 775840	PLATE-TRAY-OP-F	1	1/P									
19	4401 775850	PLATE-TRAY-OP-R	1	1/P									
52	4842 040635	TBID40*08MSCR3C	2	50/P									
53	4842 040495	PTBR30*06MSZN3A	10	50/P									
54	7040 300611	PAN30*06MSZN3A	2	50/P									

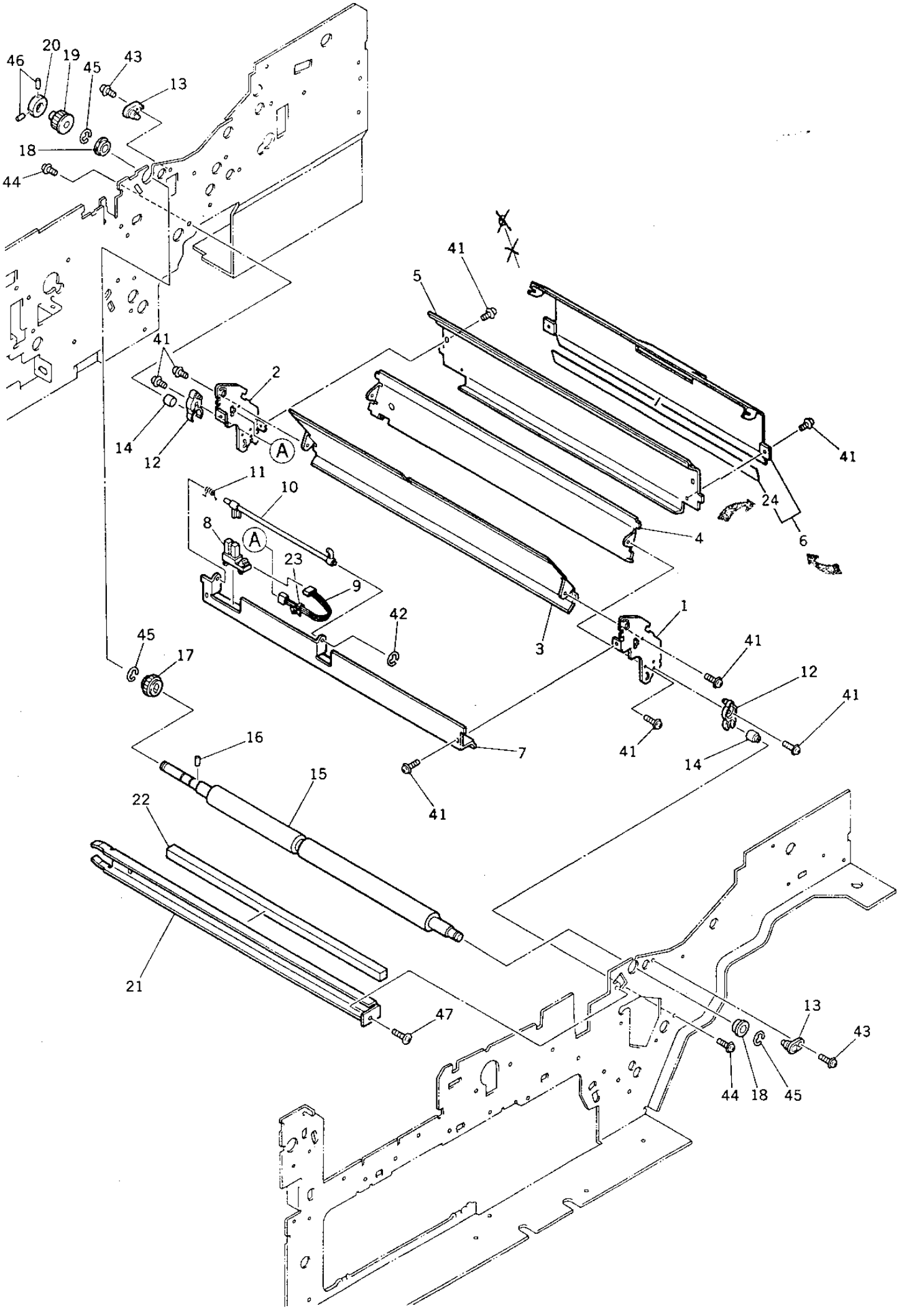
46
20
19
45
43
13
18
44
41
5
41
2
14
12
A
11
10
8
A
23
9
42
45
17
16
15
22
21
47
41
24
6
4
3
1
41
12
41
41
14
7
41
13
43
44
18
45

TOSHIBA

ITEM NO.	PARTS NO.	PARTS NAME	Q'TY / PAGE	Q'TY / PACK	SPE PRICE IN NONE	P	I	R	BSI NO.	TO	FROM	SERIAL NO.	REMARKS
1	4401 772430	BKT-GUIDE-P-F	1	1/P									
2	4401 772440	BKT-GUIDE-P-R	1	1/P									
3	4401 772420	K-GUIDE-P-1	1	1/P						003 1			
3 1	4401 909870	K-GUIDE-P-1	1	1/PP		C	E	F	F96D653		003	VA6	
4	4401 772460	GUIDE-P-2	1	1/P						004 1			
4 1	4401 909820	GUIDE-P-2	1	1/PP		C	E	F	F96D653		004	VA6	
5	4401 772470	GUIDE-P-3	1	1/P						005 1			
5 1	4401 909830	GUIDE-P-3	1	1/PP		C	E	F	F96D653		005	VA6	
6	4401 772480	GUIDE-P-4	1	1/P						006 1			
6 1	4401 909840	GUIDE-P-4	1	1/PP		C	E	F	F96D653	006 2	006	VA6	
6 2	4402 310810	K-GUIDE-P-4	1	1/C		C	E	F	F97A813		006 1	VL6	
7	4401 772490	BKT-SNSR-RGST	1	1/P									
8	4400 902350	SCO-SX460-P2	1	1/C									
9	4401 795890	WH-RGTSW-150	1	1/P									
10	4401 772500	ACTUATOR-RGST	1	1/P									
11	4401 772510	SPL-ACT-RGST	1	1/P									
12	4401 772520	HLDR-GUIDE-UNIT	2	1/P									
13	4401 772280	SUPPORT-GUIDE-P	2	1/P									
14	4401 772590	STUD-GUIDE-UNIT	2	1/P									
15	4401 772610	ROL-RGST-D	1	1/KP									
16	4346 312020	PIN	1	10/P									
17	4407 547320	GEAR-0.8-25	1	1/P									
18	4408 510800	BRG-688ZZNR	2	1/P									
19	4408 603640	PLY-Z20-3M-HTD	1	1/P									
20	4408 307680	FLANGE-21	1	1/P									
21	4402 208570	BKT-BRUSH-RGT-L	1	1/P									
22	4408 617650	BRUSH-RE-7.5H	1	1/S									
23	4400 902490	BAND-PS100	1	5/P									
24	4402 310830	MYLAR-GUIDE-P4	1	1/KP		A	-	F	F97A813			VL6	
41	4842 040690	TZPAN3006MSZN3L	12	50/P									
42	7405 002031	ERR020SKZN3A	1	50/P									
43	4842 040692	TZPAN3008MSZN3L	2	50/P									
44	7640 300651	ZPAN30*06MSZN3A	2	50/P									
45	7405 007031	ERR070SKZN3A	3	50/P									
46	4842 011064	9HSS30/06MSFB	2	50/P									
47	4842 040060	TPAN40*08MSZN3L	1	50/P									

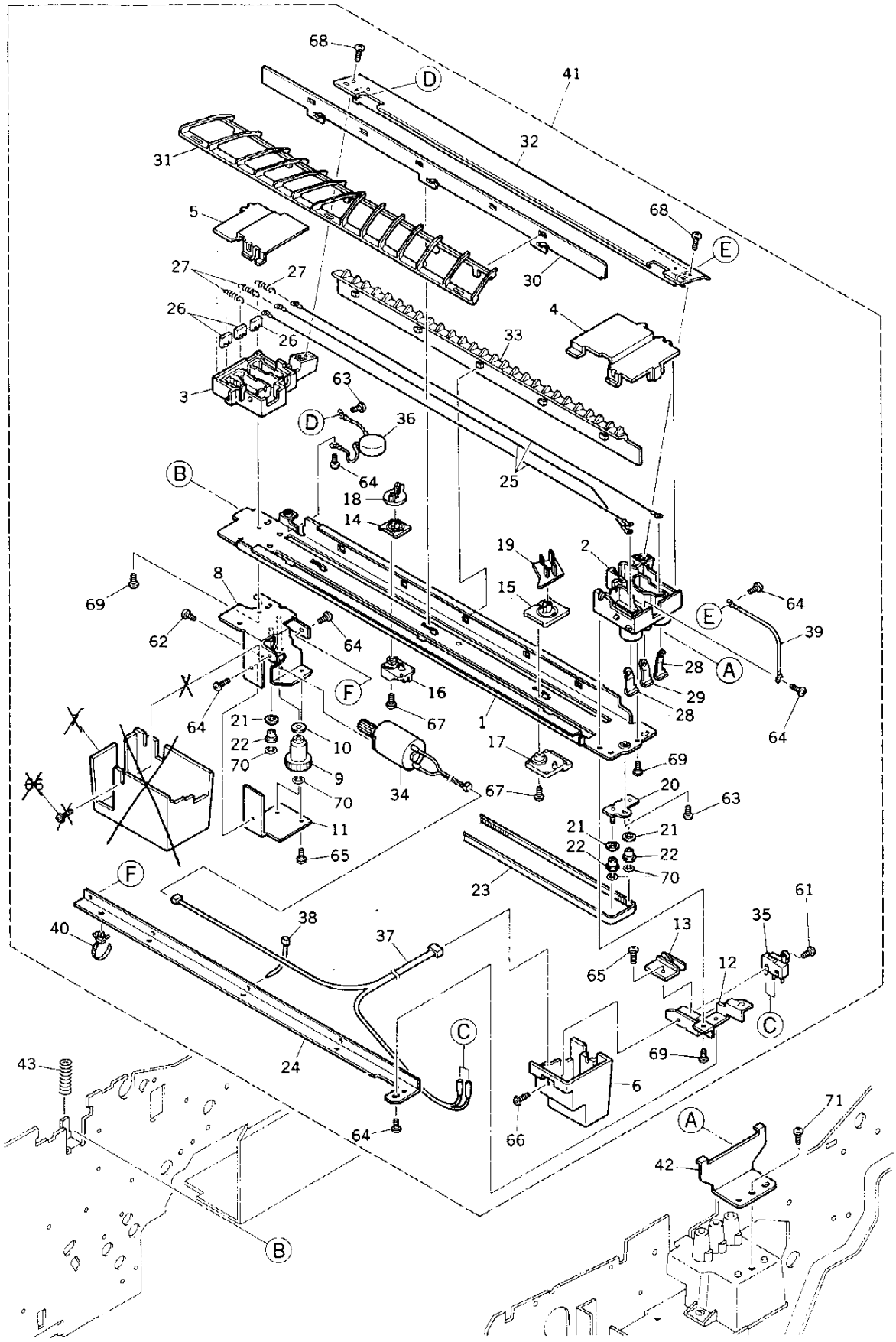
68
D
41
32
31
5
68
E
30
27
27
26
26
4
33
3
63
D
36
64
25
B
18
14
19
2
15
8
69
62
64
E
64
39
28
A
29
28
F
16
64
21
22
70
10
67
1
17
69
64
9
70
34
67
20
63
11
21
21
22
22
65
70
F
23
61
40
38
37
13
35
65
12
C
C
69
43
24
6
64
66
71
A
42
B

TOSHIBA

ITEM NO.	PARTS NO.	PARTS NAME	Q'TY / PAGE	Q'TY / PACK	SPE PRICE IN NONE	P	I	R	BSI NO.	TO	FROM	SERIAL NO.	REMARKS
1	4401 764300	CASE-CH-TR	1	1/P									
2	4401 764320	TERMINAL-TR-F	1	1/P									
3	4401 764330	TERMINAL-TR-R	1	1/P									
4	4401 764740	LID-CH-TR-F	1	1/P									
5	4401 764750	LID-CH-TR-R	1	1/P									
6	4401 764360	COVER-SW-CH-TR	1	1/P									
7	4401 764370	COVER-MOT-CH-TR	1	1/P						007 1			
7 1	4401 764370	COVER-MOT-CH-TR	0	1/P		B	-	E	F4J331		007	VI413424	
8	4401 764380	K-BRKT-MOT-CH	1	1/P									
9	4401 764420	GEAR-22-PLY-12	1	1/P									
10	4408 303080	FLANGE-10-3-1.5	1	1/P									
11	4401 764440	STAY-BRKT-MOT	1	1/P									
12	4401 764450	BRKT-SW-CH-TR	1	1/P									
13	4401 764460	GUIDE-SW-CH-TR	1	1/P									
14	4401 764470	BASE-CLN-TR	1	1/P									
15	4401 764480	BASE-CLN-SEP	1	1/P									
16	4401 764490	PUSHER-SW-TR	1	1/P									
17	4401 764500	PUSHER-SW-SEP	1	1/P									
18	4401 764510	K-BASE-PAD-TR	1	1/P									
19	4401 764530	K-BASE-PAD-SEP	1	1/P									
20	4401 764550	K-BRKT-PLY-I-TR	1	1/P									
21	4408 303460	FALNGE-PLY-R	3	1/P									
22	4401 764570	PLY-I-6	3	5/P									
23	4401 763820	BELT-2M-800-2	1	1/P									
24	4401 764580	BRKT-WH-CH-TR	1	1/P									
25	4401 764590	WIRE-CH-PT-409	3	5/S									
26	4401 764730	HANGER-WIRE-TR	3	1/P									
27	4407 402190	SPRING-TENS-CH	3	5/P									
28	4402 214540	HANGER-WIRE	2	1/P									
29	4401 764600	PLATE-BIAS	1	1/P									
30	4401 764770	PLATE-CH-TR	1	1/P									
31	4401 764660	SUPPORTER-CH-TR	1	1/P									
32	4401 764630	K-GUIDE-CH-TR	1	1/P									
33	4401 764760	GUIDE-TR-SUB	1	1/P									
34	4401 764710	K-MOT-CH-CLN-TR	1	1/C									
35	4407 966810	SM-SS01GL2T	1	1/D									
36	4401 797140	K-VARIST-CH-150	1	1/P									
37	4401 795770	WH-TRCH-150	1	1/P									
38	4346 754010	SKB-BAND-1	3	5/P									
39	4401 795850	WH-GBIAS-150	1	1/P									
40	4400 902490	BAND-PS100	1	5/P									
41	4401 764230	ASM-CHARGER-TR	1	1/C									
42	4401 764670	STOPPER-CH-TR	1	1/P									
43	4402 205790	SPC-CH-TR	1	5/P									
61	7040 201011	PAN20*10MSZN3AI	1	50/P									
62	7040 260411	PAN26*04MSZN3AI	2	50/P									
63	7040 300411	PAN30*04MSZN3A	2	50/P									
64	7040 300611	PAN30*06MSZN3A	6	50/P									
65	4842 040665	TPAN3006MSZN3L	2	50/P									
66	4842 040690	TZPAN3006MSZN3L	4	50/P						066 1			
66 1	4842 040690	TZPAN3006MSZN3L	2	50/P		D	-	E	F4J331		066	VI413424	
67	4842 040840	PAN30*06PL-T-PA	2	50/P									
68	4842 040495	PTBR30*06MSZN3A	2	50/P									
69	4842 040846	PTBR30*08MSZN3A	4	50/P									
70	7405 002031	ERR020SKZN3A	4	50/P									
71	7640 400811	ZPAN40*08MSZN3A	1	50/P									

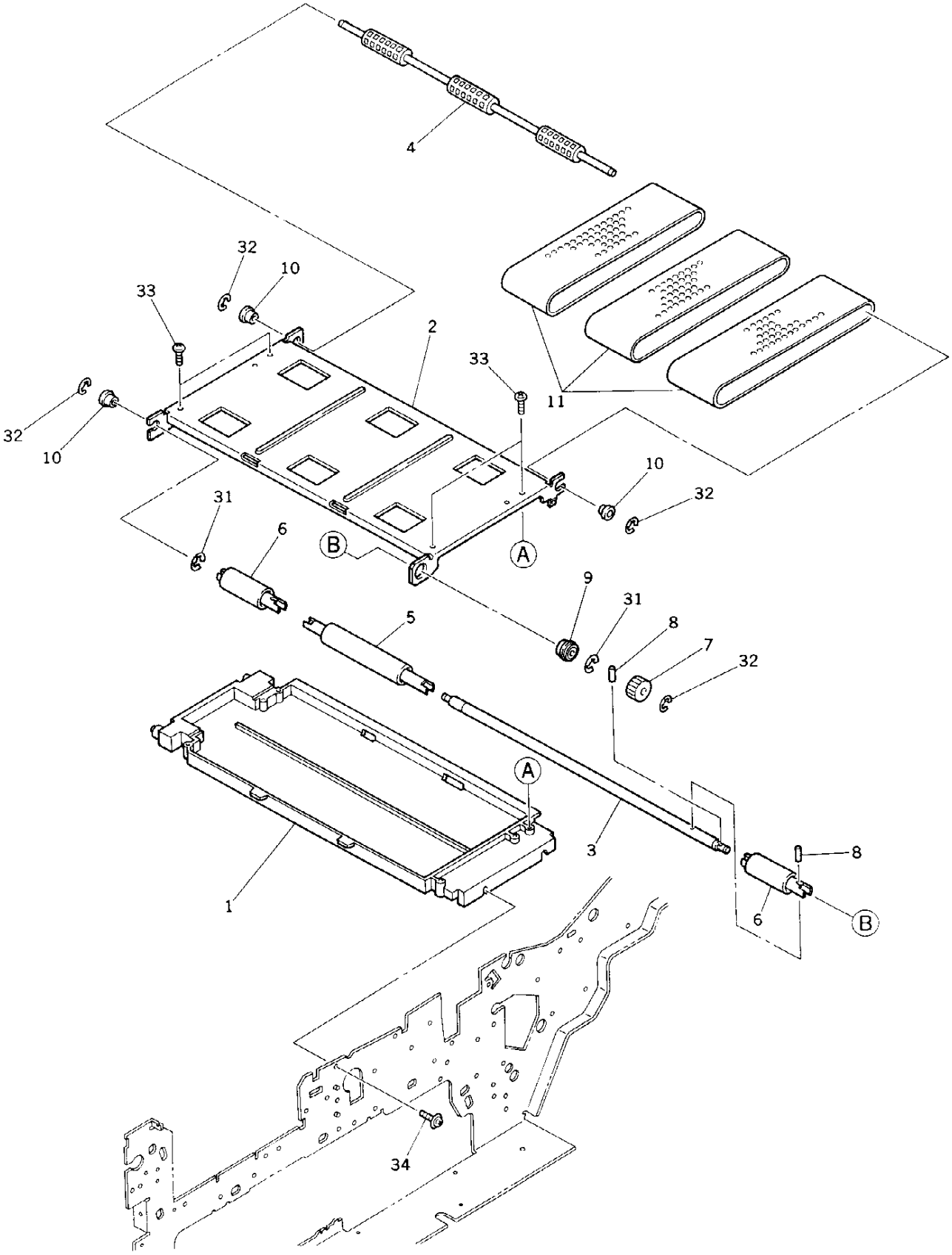

TOSHIBA

ITEM NO.	PARTS NO.	PARTS NAME	Q'TY / PAGE	Q'TY / PACK	SPE PRICE IN NONE	P	I	R	BSI NO.	TO	FROM	SERIAL NO.	REMARKS
1	4401 760010	CASE-BELT	1	1/PP									
2	4401 760060	K-BRKT-CASE-BLT	1	1/P						002 1			
2 1	4401 902940	K-BKT-BELT-152	1	1/P		C	E	F	F95J504		002	VF5	
3	4401 760030	SHAFT-BELT-L	1	1/P						003 1			
3 1	4401 902910	SHAFT-BELT-L	1	1/P		C	E	F	F95J504		003	VE5	
4	4401 760040	SHAFT-BELT-R	1	1/P									
5	4402 801560	ROL-BELT-20-100	1	1/P									
6	4402 801650	ROL-BELT-20-50	2	1/P									
7	4408 606810	GEAR-1.0-Z19	1	1/P									
8	4346 312020	PIN	2	10/P									
9	4408 510800	BRG-688ZZNR	1	1/P									
10	4407 734980	BUSH-6-GCB	3	5/P									
11	4401 760050	BELT-TRANSPORT	3	1/P									
31	7405 007031	ERR070SKZN3A	2	50/P									
32	7405 005031	ERR050SKZN3A	4	50/P									
33	4842 040846	PTBR30*08MSZN3A	4	50/P									
34	4842 040700	TZPAN4008MSZN3L	2	50/P									

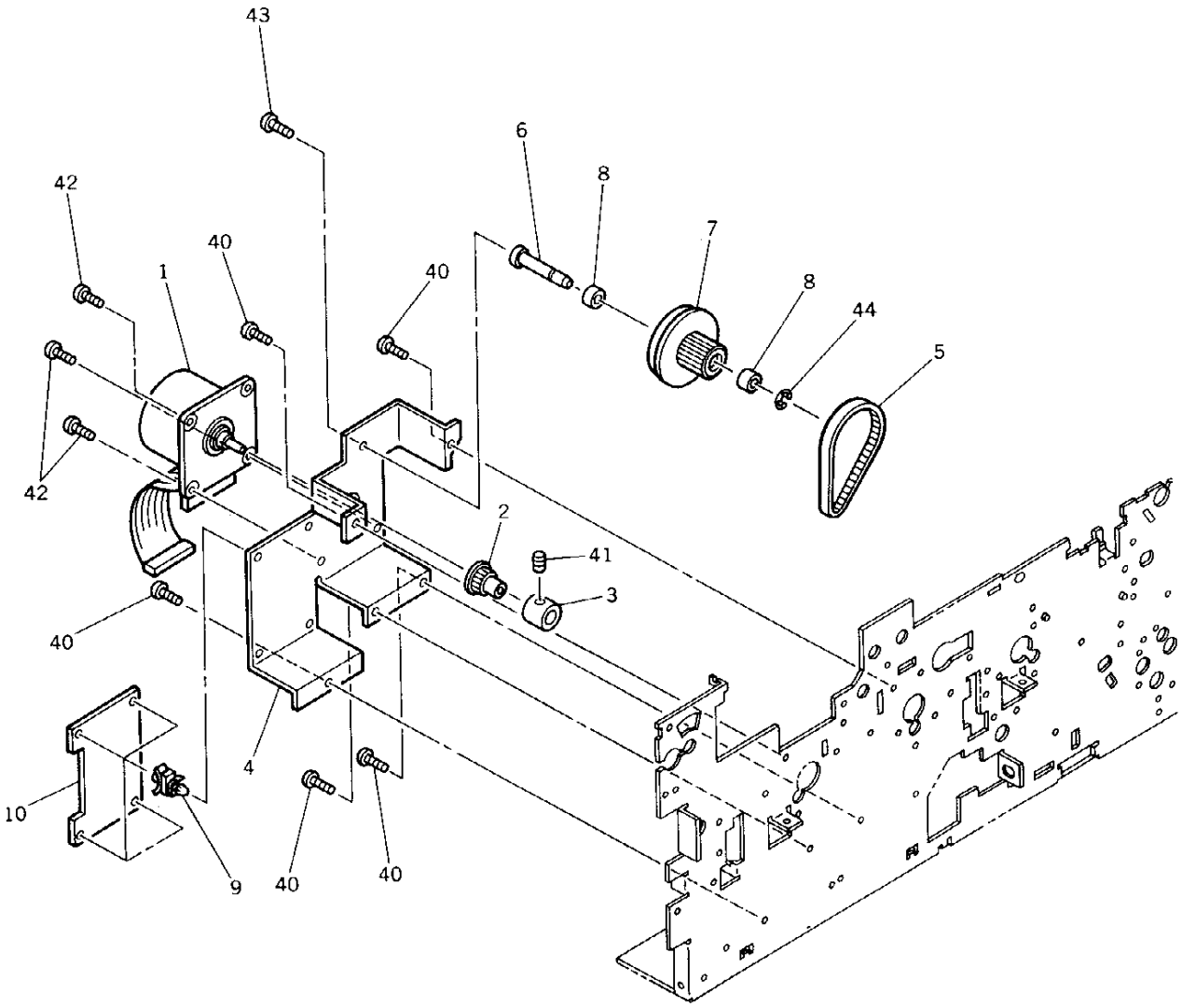
43
6
8
42
7
40
8
1
40
44
5
42
2
41
3
40
4
10
9
40
40

ITEM NO.	PARTS NO.	PARTS NAME	Q'TY / PAGE	Q'TY / PACK	SPE PRICE IN NONE	P	I	R	BSI NO.	TO	FROM	SERIAL NO.	REMARKS
1	4401 796830	M/DC-HTR-150	1	1/C									
2	4408 507370	PULLEY-14	1	1/P									
3	4401 759390	COLLAR-MOT-1610	1	1/P									
4	4401 759310	BRKT-MOT-FUS	1	1/P									
5	4401 759320	BELT-78-3M-6.4	1	1/P									
6	4401 759330	STUD-MOT-FUS	1	1/P									
7	4401 759340	PULLEY66-GEAR23	1	1/P									
8	4842 110087	BRG-R-1560ZZ	2	1/P									
9	4843 390869	PWZ-SPLS-4U	4	5/P									
10	4401 795490	PWA-F-MOT-150	1	1/SB									
40	4842 040060	TPAN40*08MSZN3L	5	50/P									
41	4842 011083	9HSS40/06MSFB	1	50/P									
42	4842 040694	TZPAN3010MSZN3L	3	50/P									
43	4842 040723	TPPAN4006MSZN3A	1	50/P									
44	7405 005031	ERR050SKZN3A	1	50/P									

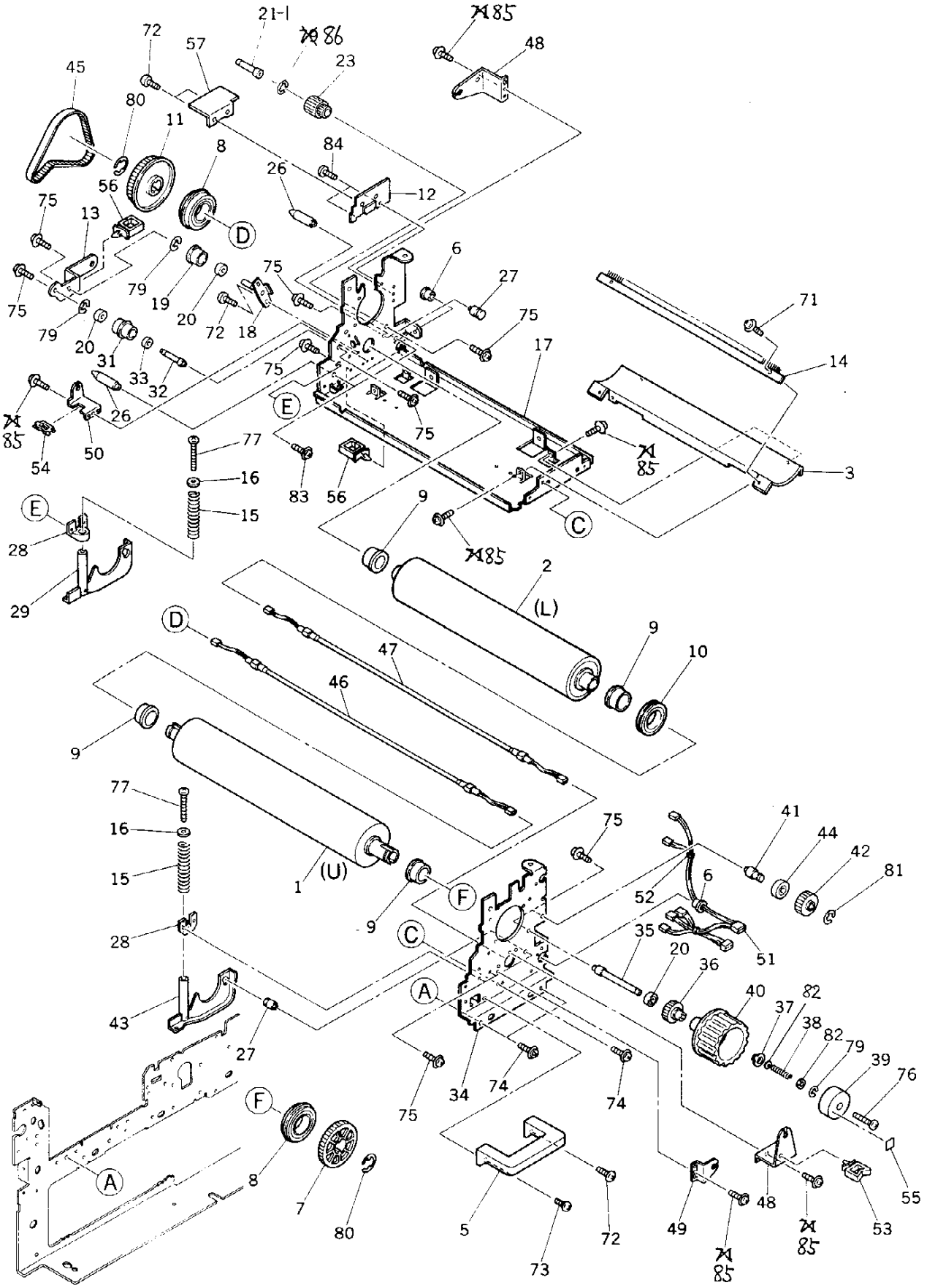
21-1
86
85
48
72
57
23
45
80
11
8
84
26
12
56
75
13
D
6
27
75
79
19
20
72
18
75
71
75
17
14
79
20
31
33
32
75
E
26
85
50
54
77
16
15
83
56
85
3
9
C
E
28
29
85
2
(L)
D
9
10
47
46
9
77
16
15
1
(U)
9
F
75
41
44
42
81
52
6
28
C
35
20
36
51
A
40
82
37
38
82
79
39
76
43
27
34
74
74
75
F
A
8
7
80
5
73
72
49
85
48
85
53
55

TOSHIBA

ITEM NO.	PARTS NO.	PARTS NAME	Q'TY / PAGE	Q'TY / PACK	SPE PRICE IN NONE	P	I	R	BSI NO.	TO	FROM	SERIAL NO.	REMARKS
1	6608 4521	PS-HR6550U	1	SUPPLY						001 1			
1 1	4409 830460	HR-6550-U	1	1/S		C	E	J	F5B401		001		
2	6608 4522	PS-HR6550L	1	SUPPLY						002 1			
2 1	4409 830510	HR-6550-L	1	1/S		C	E	J	F5B401		002		
3	4400 746740	BKT-SHLD-S	1	1/P									
5	4401 759270	HANDLE-FUS-F	1	1/P									
6	4842 414630	GMT-OCB-500	2	10/P									
7	4401 758210	GEAR-60-FUS-F	1	1/P						007 1			
7 1	4401 759430	GEAR-60-FUS-F	1	1/P		C	B	D	F4C122		007	VE411770	
8	4407 548060	BRG-6005ZZ-HR	2	1/P									
9	4407 783080	COLLER-BRG-HR	4	1/P						009 1			
9 1	4401 902550	COLLER-BRG-HR	4	1/P		C	E	F	F95J504		009	VK5	
10	4408 308080	BRG-6905ZZ-PR	2	1/P									
11	4401 758300	PULLEY-72-HR	1	1/P									
12	4401 758420	BRKT-FRM-FUS-R	1	1/P									
13	4401 759240	PLATE-FUS	1	1/P									
14	4401 776580	BRUSH-SUS-E	1	1/KP									
15	4401 759250	SPC-PRESS	2	1/P									
16	4401 759260	WAS-15-45-FUS	2	10/P									
17	4401 758160	FRAME-FUS-R	1	1/P									
18	4401 758380	K-TENSION-FUS	1	1/P									
19	4401 758410	TENSIONER-FUS	1	1/P									
20	4842 110087	BRG-R-1560ZZ	3	1/P									
21	4401 758320	STUD-26-29	1	1/P						021 1			
21 1	4401 759590	STUD-26-29	1	1/P		C	E	E	F4L368		021	VJ413511	
23	4401 759380	K-PLY/GEAR-29	1	1/P									
26	4401 758170	STUD-FUS-R	2	1/P									
27	4401 758430	STUD-PRESS	2	1/P									
28	4401 758440	HLDR-PRESS	2	1/P									
29	4401 758480	K-ARM-PRESS-R	1	1/P									
31	4408 508450	PLY-19-G20	1	1/P									
32	4408 507250	STUD-FUS-4	1	1/P						032 1			
32 1	4401 759280	STUD-FUS-4	1	1/P		C	E	H	F4B103		032	VE4	
33	4842 110024	BRG-L-1260ZZ	1	1/P									
34	4401 758270	FRAME-FUS-F	1	1/P						034 1			
34 1	4401 758730	FRAME-FUS-F	1	1/P		C	B	D	F4E171		034	VD4	
35	4401 758230	STUD-FUS-HNDL	1	1/P									
36	4401 758240	GEAR-25-HNDL	1	1/P									
37	4401 758250	CAP-FUSER-HNDL	1	1/P									
38	4401 758260	SPC-FUS-HNDL	1	5/P						038 1			
38 1	4401 758710	SPC-FUS-HNDL-LE	1	5/P		E	-	J	F4B103		038	VA410001	
39	4401 758280	COV-FUSER-HNDL	1	1/P									
40	4401 758290	HANDLE-FUS	1	1/P									
41	4401 758200	STUD-IDLE-F	1	1/P									
42	4408 312370	GEAR-28B	1	1/P									
43	4401 758450	K-ARM-PRESS-F	1	1/P									
44	4407 589200	BRG-608DD-AV2	1	1/P						044 1			
44 1	4407 546490	BRG-608ZZ	1	1/P		C	E	H	F4B103		044	VA4	
45	4401 758310	BELT-324-3M-9	1	1/P									
46A	4401 797310	HTR-115-900W-13	1	1/C									TAD
46B	4401 797310	HTR-115-900W-13	1	1/C									CSD
46C	4401 797320	HTR-220-1100W13	1	1/C									EUD
46D	4401 797320	HTR-220-1100W13	1	1/C									GSD
46E	4401 797320	HTR-220-1100W13	1	1/C									FRD
46F	4401 797320	HTR-220-1100W13	1	1/C									SED
46G	4401 797330	HTR-240-1100W13	1	1/C									UKD
46H	4401 797330	HTR-240-1100W13	1	1/C									AUD
46I	4401 797310	HTR-115-900W-13	1	1/C									TWD
46J	4401 797340	HTR-127-900W-13	1	1/S									SAN
46K	4401 797320	HTR-220-1100W13	1	1/C									EUN
46L	4401 797330	HTR-240-1100W13	1	1/C									AUN
47A	4401 797260	HTR-115-250W13A	1	1/C									TAD
47B	4401 797260	HTR-115-250W13A	1	1/C									CSD
47C	4401 797270	HTR-220-250W13A	1	1/C									EUD
47D	4401 797270	HTR-220-250W13A	1	1/C									GSD
47E	4401 797270	HTR-220-250W13A	1	1/C									FRD
47F	4401 797270	HTR-220-250W13A	1	1/C									SED
47G	4401 797280	HTR-240-250W13A	1	1/C									UKD
47H	4401 797280	HTR-240-250W13A	1	1/C									AUD
47I	4401 797260	HTR-115-250W13A	1	1/C									TWD
47J	4401 797290	HTR-127-250W13A	1	1/C									SAN

ITEM NO.	PARTS NO.	PARTS NAME	Q'TY / PAGE	Q'TY / PACK	SPE PRICE IN NONE	P	I	R	BSI NO.	TO	FROM	SERIAL NO.	REMARKS
47K	4401 797270	HTR-220-250W13A	1	1/C									EUN
47L	4401 797280	HTR-240-250W13A	1	1/C									AUN
48	4401 759200	BRKT-LAMP-U	2	1/P						048 1			
48 1	4401 902210	BRKT-LAMP-U	2	1/P		C	E	F	F95J504		048	VE5	
49	4401 759210	BRKT-LAMP-L-F	1	1/P									
50	4401 759220	BRKT-LAMP-L-R	1	1/P									
51	4401 796650	ASM-WH-FUSER	1	1/P									
52	4843 390841	BD/W-SKB-145P	6	5/P									
53	4843 390854	CLP/W-LWS-1U	1	5/P									
54	4843 390941	BD/W-EDS-1	1	10/P									
55	4401 768330	LABEL-C	1	10/P									
56	4843 391447	CLP/W-LWS-1SF	2	5/P						056 1			
56 1	4843 391535	CLP/W-PLWS1-46B	2	5/P		C	E	E	F96D653		056	VL5	
57	4401 759560	K-BRKT-HDL-FUS	1	1/P									
71	4842 040690	TZPAN3006MSZN3L	10	50/P						071 1			
71 1	4842 040690	TZPAN3006MSZN3L	2	50/P		D	-	E	F4B103		071	VA4	
72	4842 040060	TPAN40*08MSZN3L	5	50/P									
73	4842 040061	TPAN40*10MSZN3L	1	50/P									
74	4842 040700	TZPAN4008MSZN3L	7	50/P									
75	4842 040723	TPPAN4006MSZN3A	12	50/P									
76	7040 400811	PAN40*08MSZN3AI	2	50/P									
77	7040 402511	PAN40*25MSZN3AI	2	50/P									
79	7405 005031	ERR050SKZN3A	4	50/P						079 1			
79 1	7405 005031	ERR050SKZN3A	3	50/P		D	-	E	F4L368		079	VI4	
80	7403 020039	CRR/S200SKFB	2	50/P									
81	7405 006031	ERR060SKZN3A	1	50/P									
82	7400 006011	0NWAS060MSZN3A	1	50/P						082 1			
82 1	4407 861390	WASHER-6	2	10/P		E	-	J	F4B103		082	VA410001	
83	7043 400613	BID40*06MSCR1AI	2	50/P									
84	4842 040366	TBID4006MSCR3C	2	50/P									
85	4842 040665	TPAN3006MSZN3L	8	50/P		A	-	E	F4B103			VA4	
86	7405 007031	ERR070SKZN3A	1	50/P		A	D	E	F4L368			VJ413511	

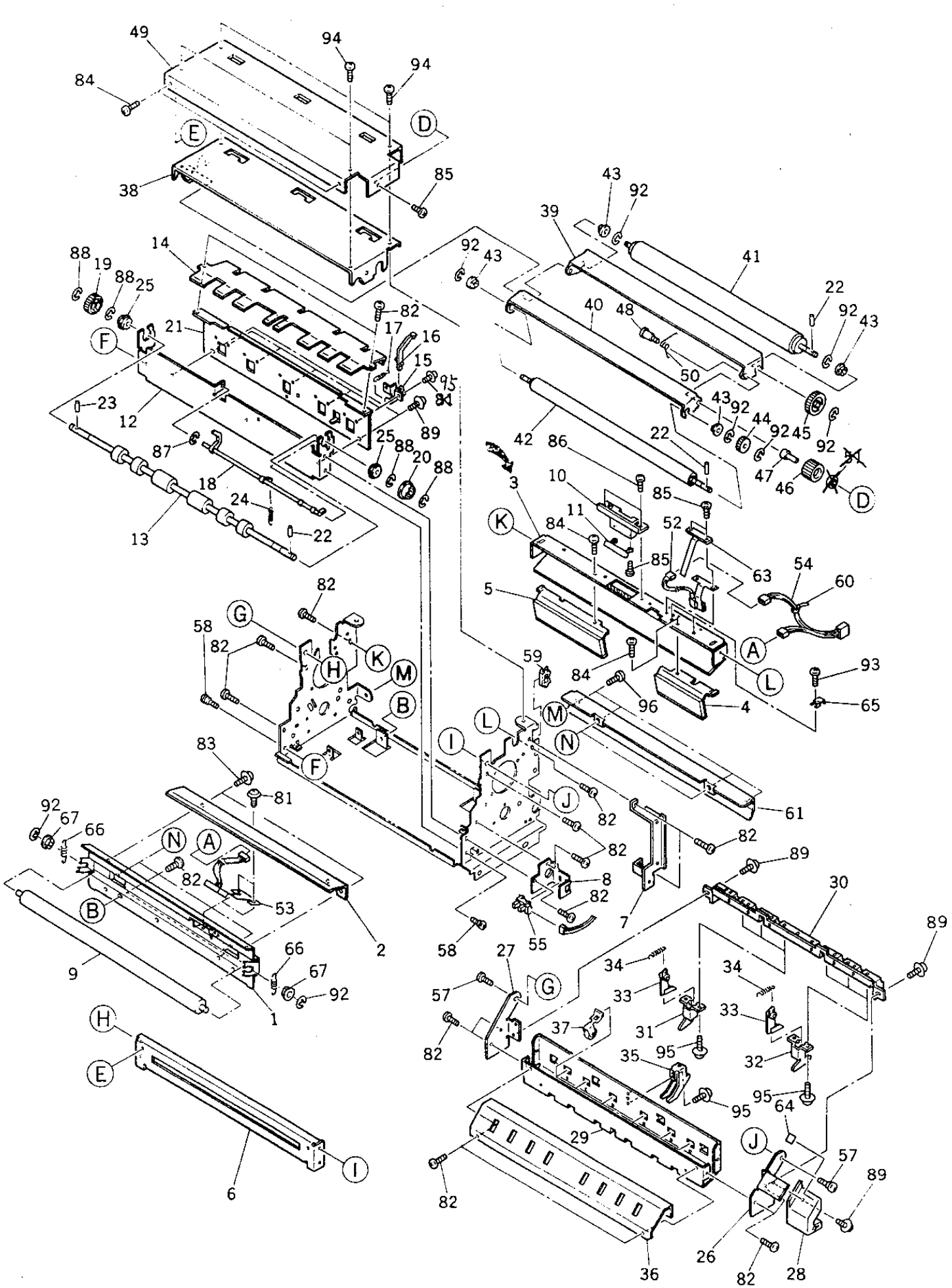

ITEM NO.	PARTS NO.	PARTS NAME	Q'TY / PAGE	Q'TY / PACK	SPE PRICE IN NONE	P	I	R	BSI NO.	TO	FROM	SERIAL NO.	REMARKS
1	4400 746770	BKT-THRM-L-ROL	1	1/P									
2	4401 760090	GUIDE-PAPER-HR	1	1/P									
3	4401 758590	BRKT-THRM-U	1	1/P						003 1			
3 1	4401 902560	STAY-IN-FUS	1	1/P		C	E	F	F95J504		003	VE5	
4	4401 758600	K-BRKT-SHLD-F	1	1/P									
5	4401 758630	K-BRKT-SHLD-R	1	1/P									
6	4401 759900	STAY-OUT-FUS	1	1/P						006 1			
6 1	4401 903060	STAY-OUT-FUS	1	1/P		C	E	F	F95J504		006		
7	4401 758670	BRKT-WH-FUS-F	1	1/P									
8	4401 758680	BRKT-ACT-EXIT	1	1/P									
9	6608 4646	PS-SR5540L	1	SUPPLY						009 1			10PCS/PACK
9 1	4409 835090	SR-5540L	1	1/S		C	E	J	F5B401		009		
10	4408 605450	BLOCK-FUSE	1	1/P									
11	4401 798780	K-FUSE-169-10	1	1/P						011 1			
11 1	4401 799980	K-FU/T-167G4	1	1/P		C	E	J	F4E155		011	VD4	
12	4401 759520	BRKT-EXIT-OUT	1	1/P									
13	4401 758740	ROLLER-EXIT	1	1/KP									
14	4401 759540	GUIDE-PAPER-FU	1	1/P									
15	4401 758760	BRKT-SCRAPER-L	5	1/P									
16	4401 758770	SCRAPER-P/R	5	5/P									
17	4401 758780	SPE-SCRAPER-L	5	5/P									
18	4401 758790	ACT-EXIT	1	1/P									
19	4407 548800	GEAR-1-24	1	1/P									
20	4402 210280	PLY/T-32-FU	1	1/P									
21	4401 758800	BRKT-EXIT-SCR	1	1/P									
22	4346 312020	PIN	3	10/P									
23	4408 256620	PIN-2-10	1	10/P									
24	4401 758810	SPE-SW-EXIT	1	5/P									
25	4408 510800	BRG-688ZZNR	2	1/P									
26	4401 758850	BRKT-SCR-U-F	1	1/P						026 1			
26 1	4401 903070	BRKT-SCR-U-F	1	1/P		C	E	F	F95J504		026		
27	4401 758860	BRKT-SCR-U-R	1	1/P									
28	4401 758870	HANDLE-SCR-U	1	1/P									
29	4401 759920	BRKT-EX-ROL-UP	1	1/P									
30	4401 760120	BRKT-SCRAPER-UE	1	1/P									
31	4401 760130	GUIDE-SCR-U-F-E	3	1/P									
32	4401 760140	GUIDE-SCR-U-R-E	3	1/P									
33	4401 759400	K-SCRAPER-HR	6	6/P									
34	4401 758930	SPE-SCRAPER-U	6	5/P									
35	4401 759740	GUIDE-SCR-U-C	1	1/P									
36	4401 758950	GUARD-FUS-OUT	1	1/P						036 1			
36 1	4401 759290	GUARD-FUS-OUT	1	1/P		E	-	J	F4B103		036	VA410322	
37	4401 758980	ASM-ROL-FUS-UP	6	1/P						037 1			
37 1	4401 902850	ASM-ROL-FUS-UP	6	1/P		C	E	F	F95J504		037	VJ5	
38	4401 759010	K-BRKT-CLN-FUS	1	1/P						038 1			
38 1	4401 902530	K-BRKT-CLN-FUS	1	1/P		C	E	F	F95J504		038	VJ5	
39	4401 759040	BRKT-ROL-CL-HR	1	1/P									
40	4401 759050	BRKT-ROL-PAPER	1	1/P									
41	6608 4523	PS-SR6550H	1	SUPPLY						041 1			10PCS/PAC
41 1	4409 830570	SR-6550H	1	1/S		C	E	J	F5B401		041		
42	6608 4562	PS-ZB6550H	1	SUPPLY						042 1			
42 1	4409 832310	B-6550H	1	1/S		C	E	J	F5B401		042		
43	4401 759090	BUSH-6	4	5/P									
44	4401 759100	GEAR-18-CL-FUS	1	1/P						044 1			
44 1	4401 759480	GEAR-18-CL-FUS	1	1/P		C	B	J	F4J309		044	VH4	
45	4401 759110	GEAR-27-CL-FUS	1	1/P						045 1			
45 1	4401 759490	GEAR-27-CL-FUS	1	1/P		C	B	J	F4J309		045	VH4	
46	4401 759120	GEAR-22-IDLE-FU	1	1/P						046 1			
46 1	4401 759440	GEAR-22-IDLE-FU	1	1/P		C	B	J	F4J309		046	VH4	
47	4401 759130	STUD-CENTER-ROL	1	1/P									
48	4401 759140	SCREW-CLN-U	1	10/P									
49	4401 759150	GUARD-FUS-U	1	1/P						049 1			
49 1	4401 758990	GUARD-FUS-U	1	1/P		E	-	J	F4B103		049	VA410322	
50	4401 759160	SP-ROL-FUS	1	1/P									
51	4842 110087	BRG-R-1560ZZ	1	1/P						051 1			
51 1	4842 110087	BRG-R-1560ZZ	0	1/P		B	-	J	F4J309		051	VH4	
52	4401 797230	THMS-HTR-U-150	1	1/C									
53	4400 748840	THMS-HTR-L-151	1	1/C									
54	4401 796380	WH-THMS-150	1	1/P									
55	3038 646331	SC0-TLP1217(C2)	1	1/D									
57	4400 805170	SCREW-LOCK-ARM	2	5/P									

ITEM NO.	PARTS NO.	PARTS NAME	Q'TY / PAGE	Q'TY / PACK	SPE PRICE IN NONE	P	I	R	BSI NO.	TO	FROM	SERIAL NO.	REMARKS
58	4400 325930	PIN-BKT-CON-H	2	10/P									
59	4843 390943	BD/W-EDS-3	1	10/P									
60	4346 754010	SKB-BAND-1	3	5/P									
61	4400 746780	COV-THRM-L-ROL	1	1/P									
63	4408 605400	K-KAPTON-THERM	1	1/KP									
64	4401 768320	LABEL-B	1	10/P									
65	4400 345540	CLAMP-HARNESS	2	5/P									
66	4407 957140	SPRING-850	2	5/P									
67	4400 746750	BUSH-6-L	2	5/P									
81	4842 040690	TZPAN3006MSZN3L	12	50/P						081 1			
81 1	4842 040690	TZPAN3006MSZN3L	2	50/P		D	-	E	F4B103		081	VA4	
82	4842 040060	TPAN40*08MSZN3L	19	50/P									
83	4842 040723	TPPAN4006MSZN3A	2	50/P									
84	7040 400811	PAN40*08MSZN3AI	4	50/P									
85	7040 300611	PAN30*06MSZN3A	7	50/P									
86	7040 401011	PAN40*10MSZN3AI	2	50/P									
87	7405 002031	ERR020SKZN3A	1	50/P									
88	7405 007031	ERR070SKZN3A	4	50/P									
89	4842 040700	TZPAN4008MSZN3L	6	50/P									
92	7405 005031	ERR050SKZN3A	8	50/P									
93	7043 300611	BID30*06MSZN3AI	2	50/P									
94	4401 759180	SCREW-FUSER-M4	4	50/P									
95	4842 040665	TPAN3006MSZN3L	13	50/P						095 1			
95 1	4842 040665	TPAN3006MSZN3L	23	50/P		D	-	E	F4B103		095	VA4	
96	4842 040650	TPAN40*06MSZN3L	4	50/P									

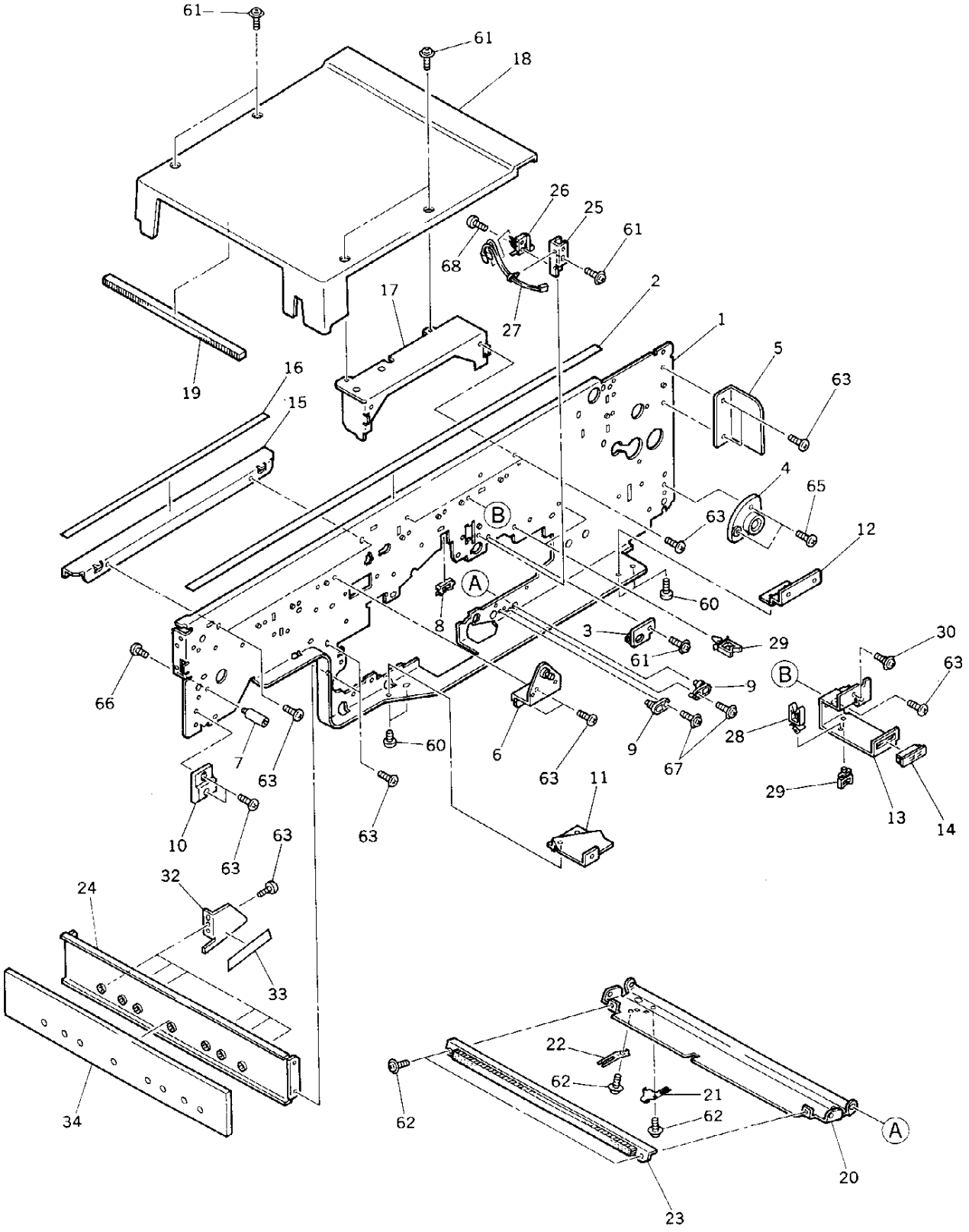
61
61
18
26
25
61
68
27
17
2
1
5
63
19
16
15
4
65
63
12
B
A
60
8
3
29
61
30
63
B
9
66
28
7
63
60
6
63
9
67
29
13
14
10
63
63
11
63
32
24
33
34
22
62
21
62
62
A
20
23

TOSHIBA

ITEM NO.	PARTS NO.	PARTS NAME	Q'TY / PAGE	Q'TY / PACK	SPE PRICE IN NONE	P	I	R	BSI NO.	TO	FROM	SERIAL NO.	REMARKS
1	4401 753050	FRAME-FRONT-U	1	N/A***									
2	4401 757800	SHEET-CRG1	1	1/KP									
3	4401 767700	BUSH-DEV-F	1	1/P									
4	4401 754250	HOLDER-F-UF	1	1/P									
5	4401 754160	BRKT-COV-R-F	1	1/P									
6	4401 754000	K-BKT-BLC-U	1	1/P									
7	4401 754220	STUD-LOCK-L	1	1/P									
8	4843 390943	BD/W-EDS-3	1	10/P									
9	4401 772280	SUPPORT-GUIDE-P	2	1/P									
10	4401 754230	GUIDE-FRAME-U-F	1	1/P									
11	4401 753350	BRKT-COV-IN-F-L	1	1/P									
12	4401 752640	BRKT-COV-IN-F-R	1	1/P									
13	4401 754300	BRKT-MG-CNP-C-L	1	1/P									
14	4402 202680	MG-CATCH-22	1	1/P									
15	4401 757830	RAIL-CRG2	1	1/P									
16	4401 757810	SHEET-CRG2	1	1/KP									
17	4401 756760	BKT-COVER-O-F	1	1/P									
18	4401 756370	COVER-LENS-O	1	1/PP									
19	4401 755950	SEAL-COVER-O	1	1/KP									
20	4401 774630	GUIDE-PAPER-U	1	1/P						020 1			
20 1	4401 909800	GUIDE-PAPER-U	1	1/PP		C	E	F	F96D653		020	VA6	
21	4401 774700	SPL-GUIDE-P-1	1	1/P						021 1			
21 1	4402 310890	SPL-GUIDE-P-1	1	1/P		C	E	F	F97A813		021	VL6	
22	4401 774650	SPL-GUIDE-P-2	1	1/P									
23	4401 774660	K-CLN-ROL-RGST	1	1/P									
24	4401 753710	STAY-H/R-FR	1	1/P									
25	4401 767790	BRKT-SW-DEV	1	1/P									
26	4407 966810	SM-SS01GL2T	1	1/D									
27	4401 796550	WH-DEVSW-150	1	1/P									
28	4843 390889	CLP/W-WS-3U	1	5/P									
29	4843 390854	CLP/W-LWS-1U	3	5/P									
30	4402 203820	SCREW-BKT-DEV	1	50/P									
32	4401 753780	GUIDE-H/R-IN	6	1/P									
33	4401 753790	GUIDE-MYLAR-H/R	6	1/P									
34	4401 753720	SHLD-STAY-H/R	1	1/KP									
60	7040 400811	PAN40*08MSZN3AI	4	50/P									
61	4842 040700	TZPAN4008MSZN3L	6	50/P									
62	4842 040690	TZPAN3006MSZN3L	4	50/P									
63	4842 040060	TPAN40*08MSZN3L	19	50/P									
65	4842 040671	TPAN4012MSZN3L	2	50/P									
66	4842 040725	TPPAN4008MSZN3A	1	50/P									
67	4842 040692	TZPAN3008MSZN3L	2	50/P									
68	7040 201011	PAN20*10MSZN3AI	1	50/P									

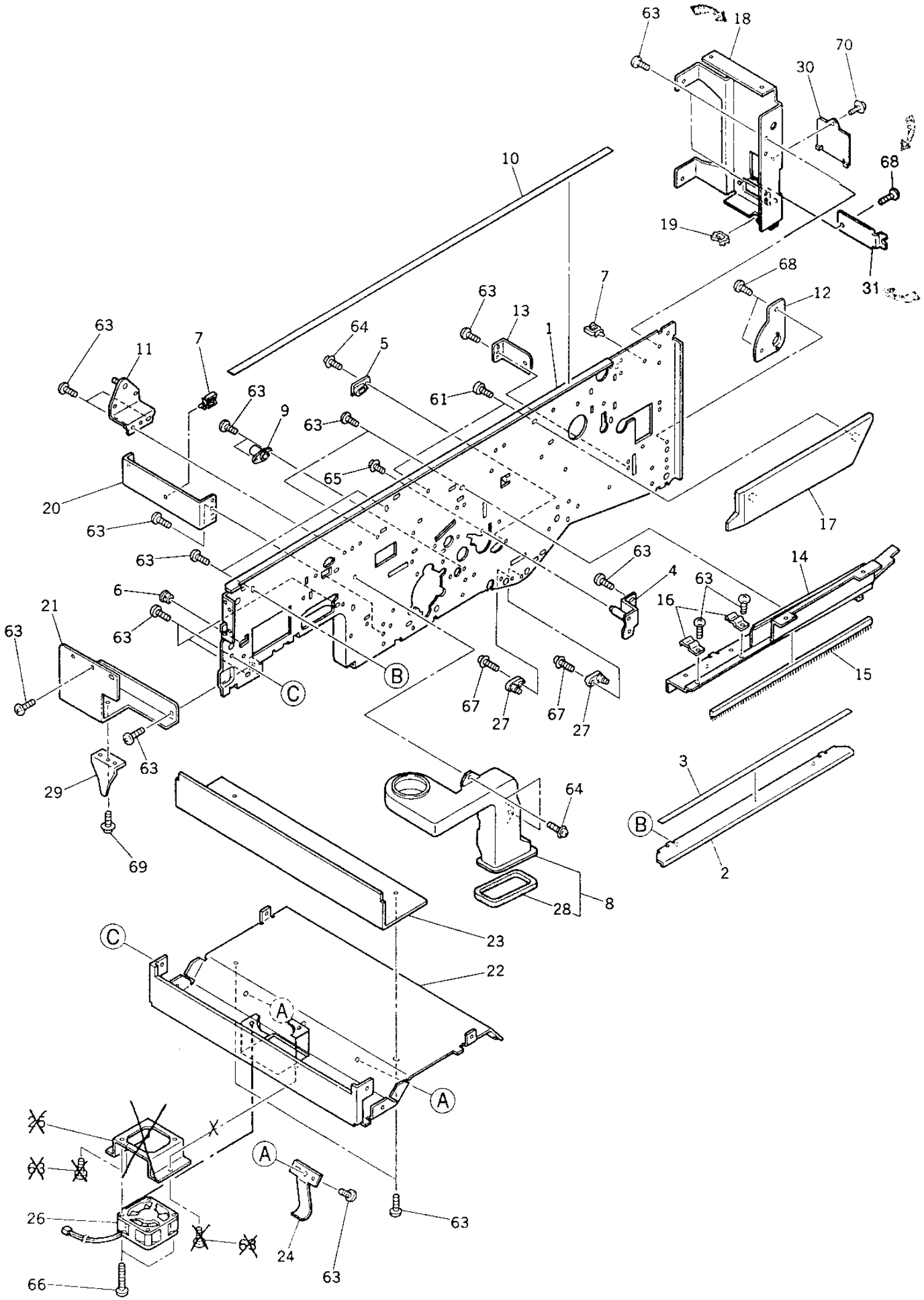
63
18
70
30
10
68
19
31
68
7
12
63
13
1
63
11
7
64
5
61
63
9
63
65
20
17
63
63
63
4
14
63
16
6
21
63
63
B
C
15
67
27
67
27
63
3
29
64
B
69
2
28
8
23
C
22
A
A
26
A
63
26
24
63
66

TOSHIBA

ITEM NO.	PARTS NO.	PARTS NAME	Q'TY / PAGE	Q'TY / PACK	SPE PRICE IN NONE	P	I	R	BSI NO.	TO	FROM	SERIAL NO.	REMARKS
1	4401 753060	FRAME-REAR-U	1	N/A***									
2	4401 757830	RAIL-CRG2	1	1/P									
3	4401 757810	SHEET-CRG2	1	1/KP									
4	4401 767730	K-BRKT-PIN	1	1/P									
5	4401 767710	BUSH-DEV-R	1	1/P									
6	4842 414629	GMT-OCB-375	1	10/P									
7	4843 390855	CLP/W-LWS-2U	2	5/P									
8	4401 765150	K-DUCT-FAN-BELT	1	1/P									
9	4401 760850	BUSH-SHAFT-DRUM	1	1/P									
10	4401 757800	SHEET-CRG1	1	1/KP									
11	4401 754000	K-BKT-BLC-U	1	1/P									
12	4401 754240	HOLDER-F-UR	1	1/P									
13	4401 754170	BRKT-COV-R-U-LR	1	1/P									
14	4401 756770	K-BKT-COV-O-R	1	1/P									
15	4401 755900	SEAL-BKT-O-R	1	1/KP									
16	4407 859810	CLAMP-CABLE-LOW	2	1/P									
17	4401 757910	GUIDE-CABLE-CRG	1	1/PP									
18	4401 754360	BRKT-KEY-CTR	1	1/P						018 1			
18 1	4402 868530	BRKT-KEY-CTR	1	1/P		C	E	F	F98B191		018	VE7	
19	4843 390942	BD/W-EDS-2	1	10/P									
20	4401 754510	BRKT-COV-IN-R	1	1/P									
21	4401 754390	BRKT-COV-R-EXIT	1	1/P									
22	4401 754990	STAY-FR-U-H/R	1	N/A***						022 1			
22 1	4401 755050	STAY-FR-U-H/R	1	N/A***		C	-	E	F4G247		022	VD4	
23	4401 754410	GUIDE-DUCT-EX	1	1/P									
24	4401 754420	SP-H/R-FR	2	1/P									
25	4401 754430	BRKT-FAN-FUSER	1	1/P						025 1			
25 1	4401 754430	BRKT-FAN-FUSER	0	1/P		B	-	E	F4G247		025	VD4	
26	4408 610850	FAN-EXIT-547	1	1/D									
27	4401 772280	SUPPORT-GUIDE-P	2	1/P									
28	4401 765130	SEAL-DUCT-BELT	1	N/A***									
29	4401 754770	PUSHER-SW-REAR	1	1/P									
30	4402 204800	BLIND-KEY-CTR	1	1/P									200V SERIES
31	4402 868510	BRKT-BLIND-MMF	1	1/P		A	D	F	F98B191			VE7	
61	4842 040849	PTBR40*08MSZN3A	2	50/P									
63	4842 040060	TPAN40*08MSZN3L	26	50/P						063 1			
63 1	4842 040060	TPAN40*08MSZN3L	24	50/P		D	-	E	F4G247		063	VD4	
64	4842 040700	TZPAN4008MSZN3L	3	50/P									
65	7640 400811	ZPAN40*08MSZN3A	1	50/P									
66	4842 040041	TPAN4030MSZN-3L	2	50/P									
67	4842 040692	TZPAN3008MSZN3L	2	50/P									
68	4842 040650	TPAN40*06MSZN3L	2	50/P						068 1			
68 1	4842 040650	TPAN40*06MSZN3L	3	50/P		D	D	F	F98B191		068	VE7	
69	4842 040690	TZPAN3006MSZN3L	1	50/P									
70	4842 040709	TPPAN3006MSZN3A	1	50/P									200V SERIES

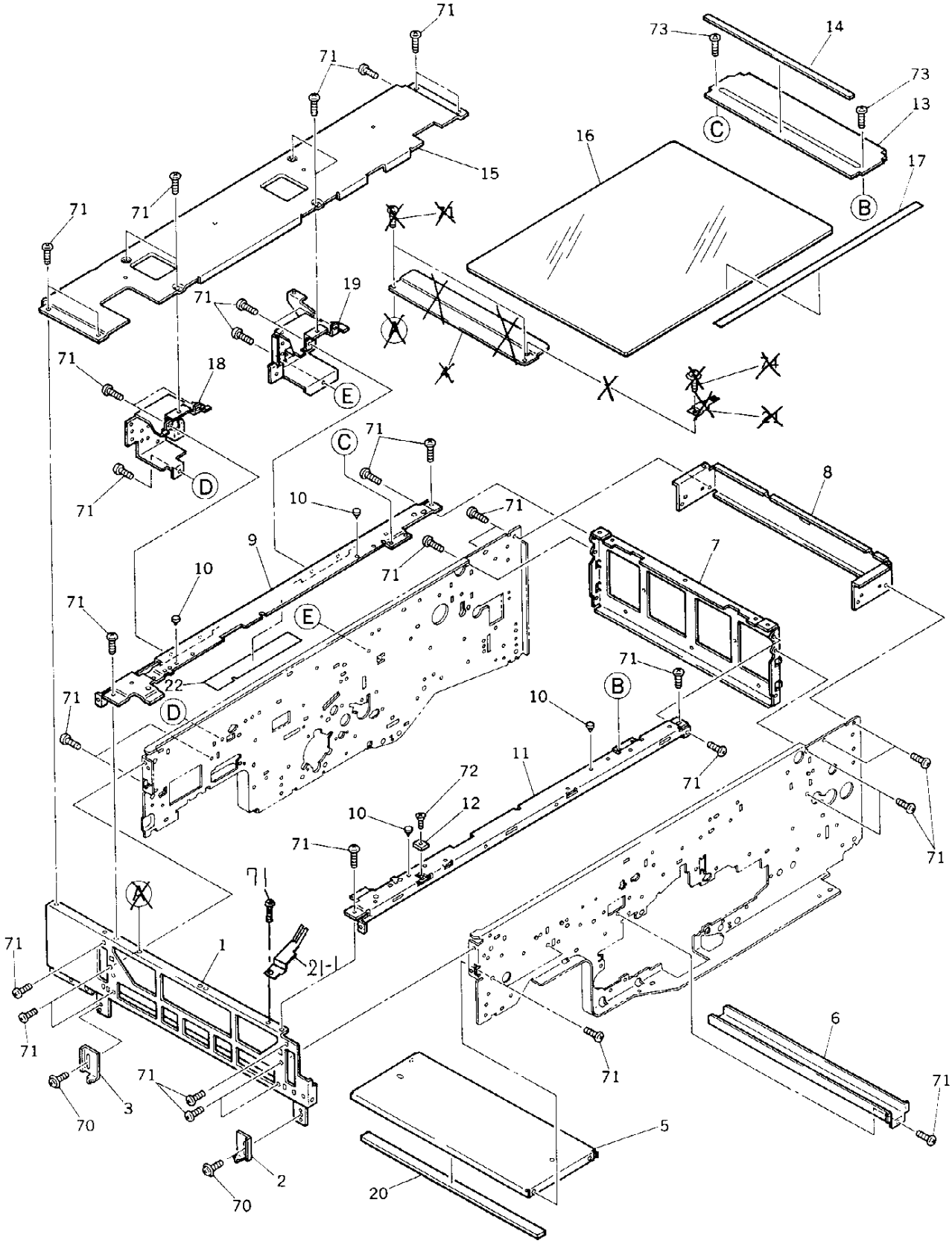
71
71
73
14
73
13
C
16
15
17
B
71
71
19
71
18
E
D
71
C
71
8
10
71
9
7
10
71
E
71
22
71
D
10
B
11
72
71
12
10
71
71
71
1
21-1
71
71
6
71
71
3
70
5
2
20
70

TOSHIBA

ITEM NO.	PARTS NO.	PARTS NAME	Q'TY / PAGE	Q'TY / PACK	SPE PRICE IN NONE	P	I	R	BSI NO.	TO	FROM	SERIAL NO.	REMARKS
1	4401 753310	STAY-L	1	N/A***						001 1			
1 1	4401 901820	STAY-L	1	N/A***		C	-	F	F95J504		001		
2	4401 753320	BKT-SPE-1109-F	1	1/P									
3	4401 753330	BKT-SPE-1109-R	1	1/P									
4	4401 753270	BKT-REINFORCE-L	1	1/P						004 1			
4 1	4401 753270	BKT-REINFORCE-L	0	1/P		B	-	J	F4J318		004	VI4	
5	4401 753630	STAY-BOTTOM	1	N/A***									
6	4401 753600	GUIDE-WH-EXPO	1	1/P									
7	4401 753280	STAY-C	1	N/A***									
8	4401 767260	STAY-HOPPER	1	N/A***									
9	4401 753460	STAY-GLASS-R	1	N/A***									
10	4400 831600	CUSH-GLASS	4	5/P									
11	4401 753410	STAY-GLASS-F	1	N/A***									
12	4402 218280	MAGNET-DF-SNSR	1	1/P									
13	4401 753240	BKT-REINFORCE-R	1	1/P									
14	4401 753260	SEAL-GLASS	1	5/P									
15	4401 753660	STAY-TOP-R	1	N/A***									
16	4402 216110	GLASS-477-360-4	1	1/S									
17	4402 218060	LBL-SCALE-X	1	1/KP									
18	4401 753520	BKT-DF-L	1	1/P						018 1			
18 1	4401 753860	K-BRKT-DF-L	1	1/P		C	E	J	F4L368		018		
19	4401 753570	BKT-DF-R	1	1/P						019 1			
19 1	4401 753850	K-BRKT-DF-R	1	1/P		C	E	J	F4L368		019		
20	4401 753650	SEAL-STAY-BTM	1	1/P									
21	4401 753220	SPL-EARTH-IND	1	1/P						021 1			
21 1	4401 753360	SPL-EARTH-IND	1	1/P		C	B	J	F4J318		021	VI4	
22	4401 753480	SHEET-STAY-G-R	1	5/P									
70	4842 040725	TPPAN4008MSZN3A	2	50/P									
71	4842 040060	TPAN40*08MSZN3L	43	50/P						071 1			
71 1	4842 040060	TPAN40*08MSZN3L	42	50/P		D	-	J	F4J318		071	VI4	
72	7044 250665	FLT25*06BSNI3EI	1	50/P									
73	7040 400611	PAN40*06MSZN3AI	2	50/P									
74	4842 040690	TZPAN3006MSZN3L	1	50/P						074 1			
74 1	4842 040690	TZPAN3006MSZN3L	0	50/P		B	-	J	F4J318		074	VI4	

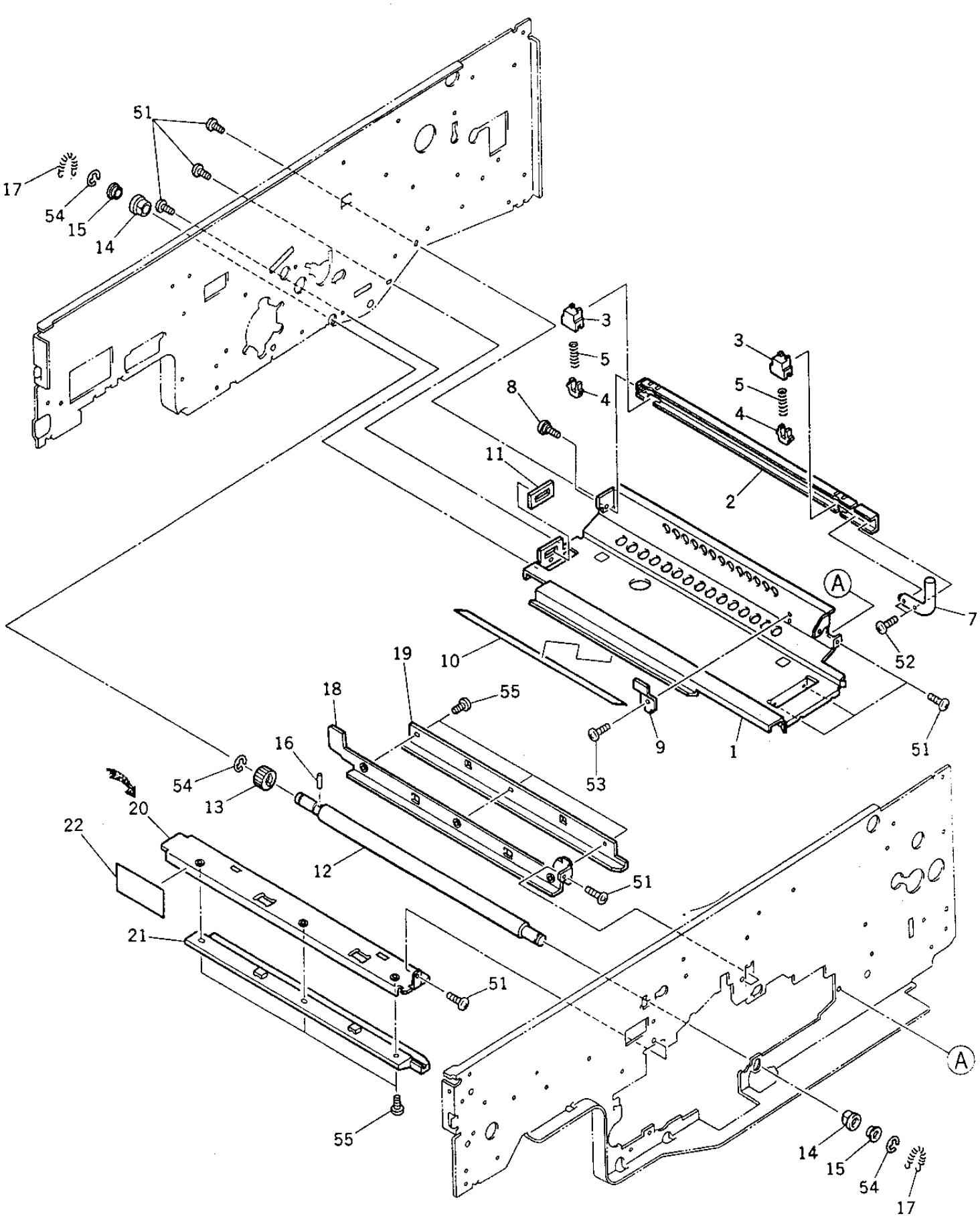
51
17
54
15
14
3
5
4
8
11
2
A
7
52
10
19
18
55
16
54
13
20
22
12
53
9
1
51
21
55
14
15
54
17

ITEM NO.	PARTS NO.	PARTS NAME	Q'TY / PAGE	Q'TY / PACK	SPE PRICE IN NONE	P	I	R	BSI NO.	TO	FROM	SERIAL NO.	REMARKS
1	4401 767520	STAY-DEV	1	1/P									
2	4401 767540	BKT-SET-DEV	1	1/P									
3	4402 203810	HOLDER-PUSHER	2	1/P									
4	4402 203800	PUSHER-DEV	2	1/P									
5	4402 807530	SPRING-SET-DEVF	2	5/P									
7	4401 767550	HANDLE-SET-DEV	1	1/P									
8	4400 325930	PIN-BKT-CON-H	1	10/P									
9	4401 767560	SPL-SET-DEV	1	1/P									
10	4401 767570	INS-ENT-DRUM	1	1/P									
11	4401 767580	SEAL-DUCT-IN	1	1/P									
12	4401 774770	ROL-RGST-U	1	1/KP									
13	4407 547350	GEAR-0.8-20	1	1/P									
14	4407 983940	BUSH-8S-BEARING	2	5/P									
15	4407 924200	BRG-LF106030	2	1/P									
16	4346 312020	PIN	1	10/P									
17	4407 957140	SPRING-850	2	5/P									
18	4401 760910	BRKT-RAIL-CLN1	1	1/P									
19	4401 760920	RAIL-CLN1	1	1/P									
20	4401 760960	BRKT-RAIL-CLN2	1	1/P						020 1			
20 1	4401 905330	BRKT-RAIL-CLN2	1	1/P		C	E	F	F95J504		020		
21	4401 760970	RAIL-CLN2	1	1/P									
22	4401 760980	MYLAR-RAIL-CLN2	1	5/P									
51	4842 040060	TPAN40*08MSZN3L	8	50/P									
52	4842 040062	TPAN3014MSZN3L	2	50/P									
53	4842 040665	TPAN3006MSZN3L	1	50/P									
54	7405 005031	ERR050SKZN3A	3	50/P									
55	4842 040700	TZPAN4008MSZN3L	6	50/P									

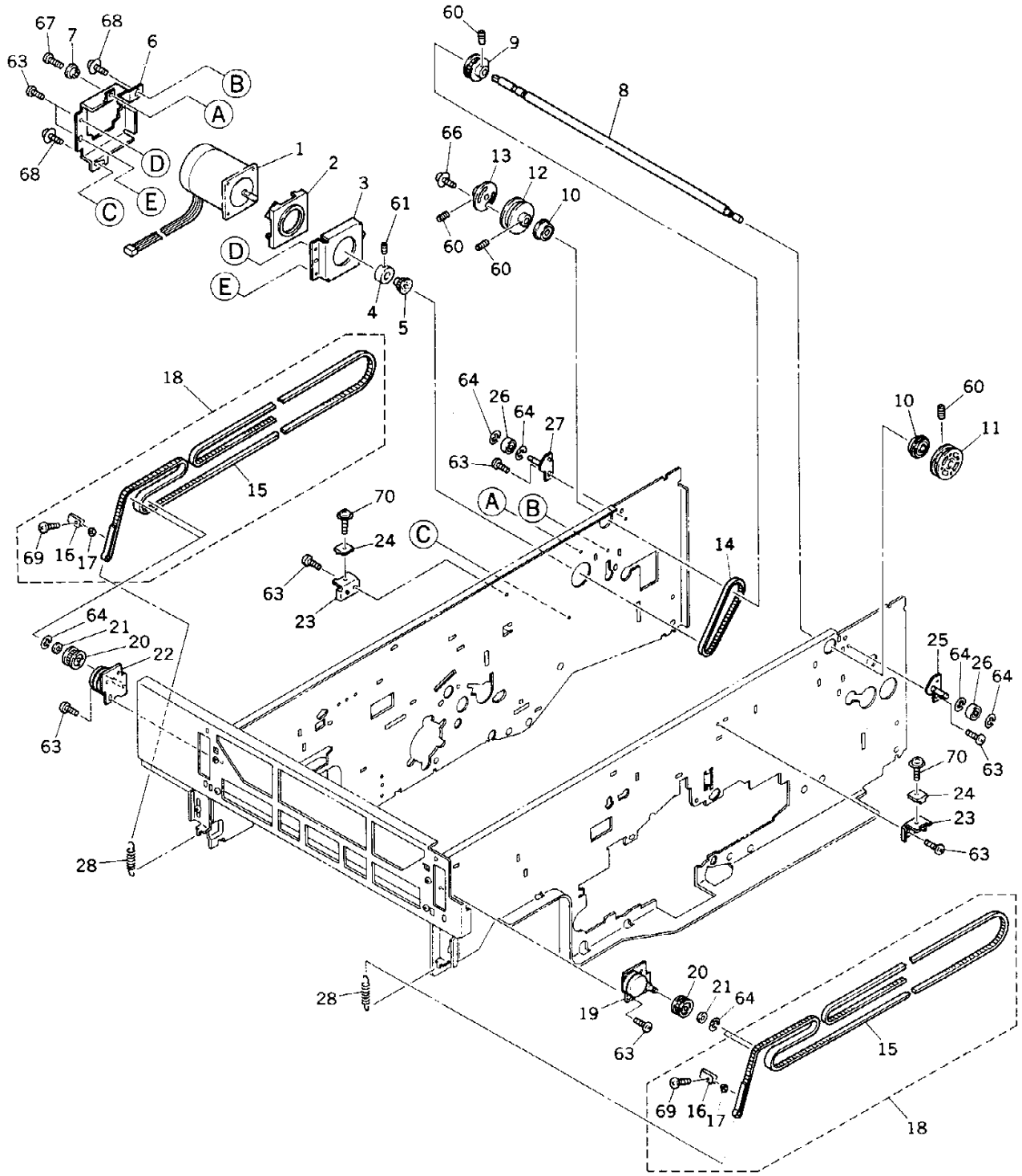
67
7
68
6
63
B
A
68
D
1
2
C
E
3
61
D
E
4
5
60
9
8
66
13
12
10
60
60
18
15
64
26
64
27
63
A
B
C
70
24
63
23
14
69
16
17
64
21
20
22
63
28
28
10
60
11
25
64
26
64
63
70
24
23
63
20
21
64
19
63
15
69
16
17
18

TOSHIBA

ITEM NO.	PARTS NO.	PARTS NAME	Q'TY / PAGE	Q'TY / PACK	SPE PRICE IN NONE	P	I	R	BSI NO.	TO	FROM	SERIAL NO.	REMARKS
1	4400 748700	M/P-SCAN-151	1	1/C									
2	4407 902170	DUMPER-MOTOR	1	1/P									
3	4408 502080	BRKT-MOTOR	1	1/P									
4	4408 309260	FLANGE-22	1	1/P									
5	4400 746920	PULLEY-16	1	1/P									
6	4400 746910	BKT-MOT-SCAN	1	1/P									
7	4408 302680	BUSH-BRKT-SCAN	1	5/P									
8	4401 757610	SHAFT-CRG	1	1/P									
9	4408 309390	K-PLY-28-3M	1	1/P									
10	4407 545610	BRG-608ZZNR	2	1/P									
11	4408 309300	K-PLY-64-2M-F	1	1/P									
12	4408 309320	K-PLY-64-2M-R	1	1/P									
13	4408 309430	FLANGE-CRG	1	1/P									
14	4408 309290	BLT-75-3M-6.4	1	1/P									
15	4401 757650	BELT-2M-L2218	2	N/A***									
16	4401 757660	CLIP-BELT-SCAN	2	N/A***									
17	4401 757690	COLLAR-BELT-SCN	2	N/A***									
18	4401 757630	ASM-BELT-L2218	2	1/P									
19	4401 757710	K-BRKT-BELT-F	1	1/P									
20	4408 309130	PLY-22-BRG	2	1/P									
21	4346 211090	WASHER	2	10/P									
22	4401 757730	K-BRKT-BELT-R	1	1/P									
23	4407 909910	BKT-BELT	2	1/P									
24	4408 502390	HOLDER-BELT-2M	2	1/P									
25	4408 502310	K-BKT-BLT-CRG-F	1	1/P									
26	4408 502410	COLLAR-6-15	2	1/P									
27	4408 502350	K-BKT-BLT-CRG-R	1	1/P									
28	4402 217360	SPE100-120-0365	2	5/P									
60	4842 011082	9HSS40/05MSFB	8	50/P									
61	4842 011065	9HSS30/08MSFB	2	50/P									
63	4842 040060	TPAN40*08MSZN3L	11	50/P									
64	7405 005031	ERR050SKZN3A	6	50/P									
66	7640 401051	ZPAN40*10MSZN3A	2	50/P									
67	4842 040061	TPAN40*10MSZN3L	1	50/P									
68	4842 040700	TZPAN4008MSZN3L	2	50/P									
69	7040 300611	PAN30*06MSZN3A	2	50/P						069 1			
69 1	7040 300811	PAN30*08MSZN3AI	2	50/P		C	E	E	F96D653		069	VA6	
70	4842 040704	TZPAN4012MSZN3L	2	50/P									

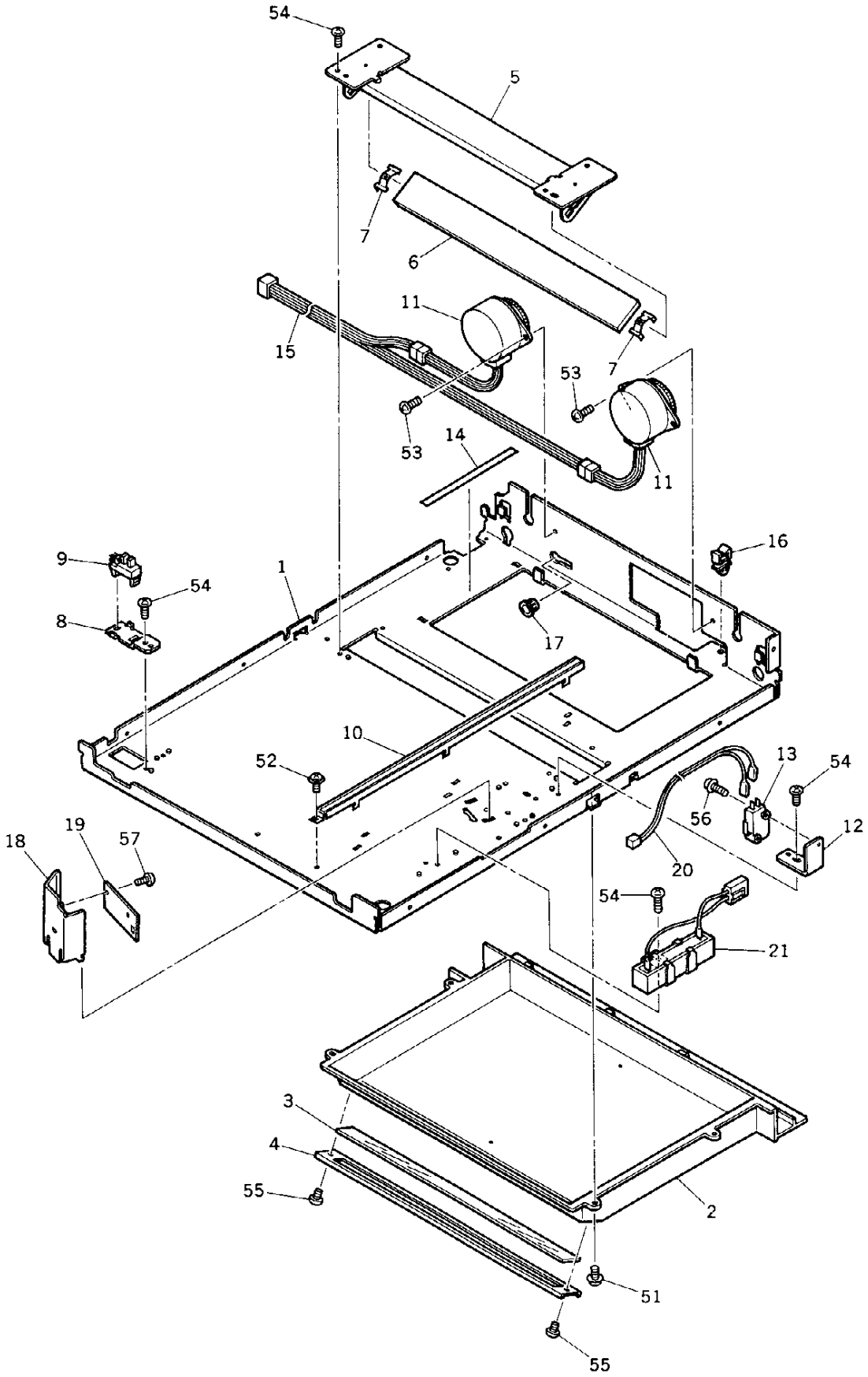
54
5
7
6
11
15
53
7
53
14
11
16
9
54
1
8
17
10
52
13
54
56
12
19
18
57
20
54
21
3
4
55
2
51
55

ITEM NO.	PARTS NO.	PARTS NAME	Q'TY / PAGE	Q'TY / PACK	SPE PRICE IN NONE	P	I	R	BSI NO.	TO	FROM	SERIAL NO.	REMARKS
1	4401 756810	BASE-OPT	1	N/A***									
2	4401 756880	K-COVER-MRR-6	1	1/P						002 1			
2 1	4401 756830	COVER-MRR-6	1	1/PP		C	B	E	F4G247	002 2	002	VC4	
2 2	4401 901720	COVER-MRR-6	1	1/PP		C	E	F	F95J504		002 1	VE5	
3	4407 910290	GLASS-SLIT	1	1/C									
4	4408 309030	HOLDER-GLASS	1	1/P									
5	4401 755870	K-BKT-MRR-6	1	1/P									
6	4401 757340	MIRROR-6	1	1/C									
7	4401 756860	SPL-MIRROR-6	2	5/P									
8	4401 757480	BKT-SZ-HOME-L	1	1/P									
9	4400 902350	SCO-SX460-P2	1	1/C									
10	4401 757270	K-RAIL-LENS	1	1/P									
11	4401 757510	K-MOT-LENS-MRR	2	1/C									
12	4401 757430	BKT-SW-HOME-M	1	1/P									
13	4407 552270	SM-D2MV-01-1C3	1	1/P									
14	4401 757310	SHEET-RAIL-CRG3	1	1/P									
15	4401 796270	WH-SUB-LNSMRR	1	1/P									
16	4843 390887	CLP/W-WS-1U	1	5/P						016 1			
16 1	4843 390854	CLP/W-LWS-1U	1	5/P		C	E	E	F4B103		016		
17	4842 414630	GMT-OCB-500	1	10/P									
18	4401 757450	COVER-AES	1	1/P									
19	4401 795410	PWA-F-AES-150	1	1/SB									
20	4401 796210	WH-MRR-AES-150	1	1/P									
21A	4407 917980	ASM-D-HTR-S-115	1	1/P									MF-6550U
21B	4407 918000	ASM-D-HTR-S-220	1	1/P									MF-6550E
21C	4407 918010	ASM-D-HTR-S-240	1	1/P									MF-6550A
21H	4407 918010	ASM-D-HTR-S-240	1	1/P									AUD
51	4842 040700	TZPAN4008MSZN3L	4	50/P									
52	4842 040690	TZPAN3006MSZN3L	1	50/P									
53	7040 400811	PAN40*08MSZN3AI	2	50/P									
54	4842 040060	TPAN40*08MSZN3L	7	50/P									
55	7040 400611	PAN40*06MSZN3AI	2	50/P						055 1			
55 1	4842 040849	PTBR40*08MSZN3A	2	50/P		C	B	E	F4G247		055	VC4	
56	7040 301411	PAN30*14MSZN3AI	1	50/P									
57	4842 040895	PTBR30*06MSZN3A	2	50/P									

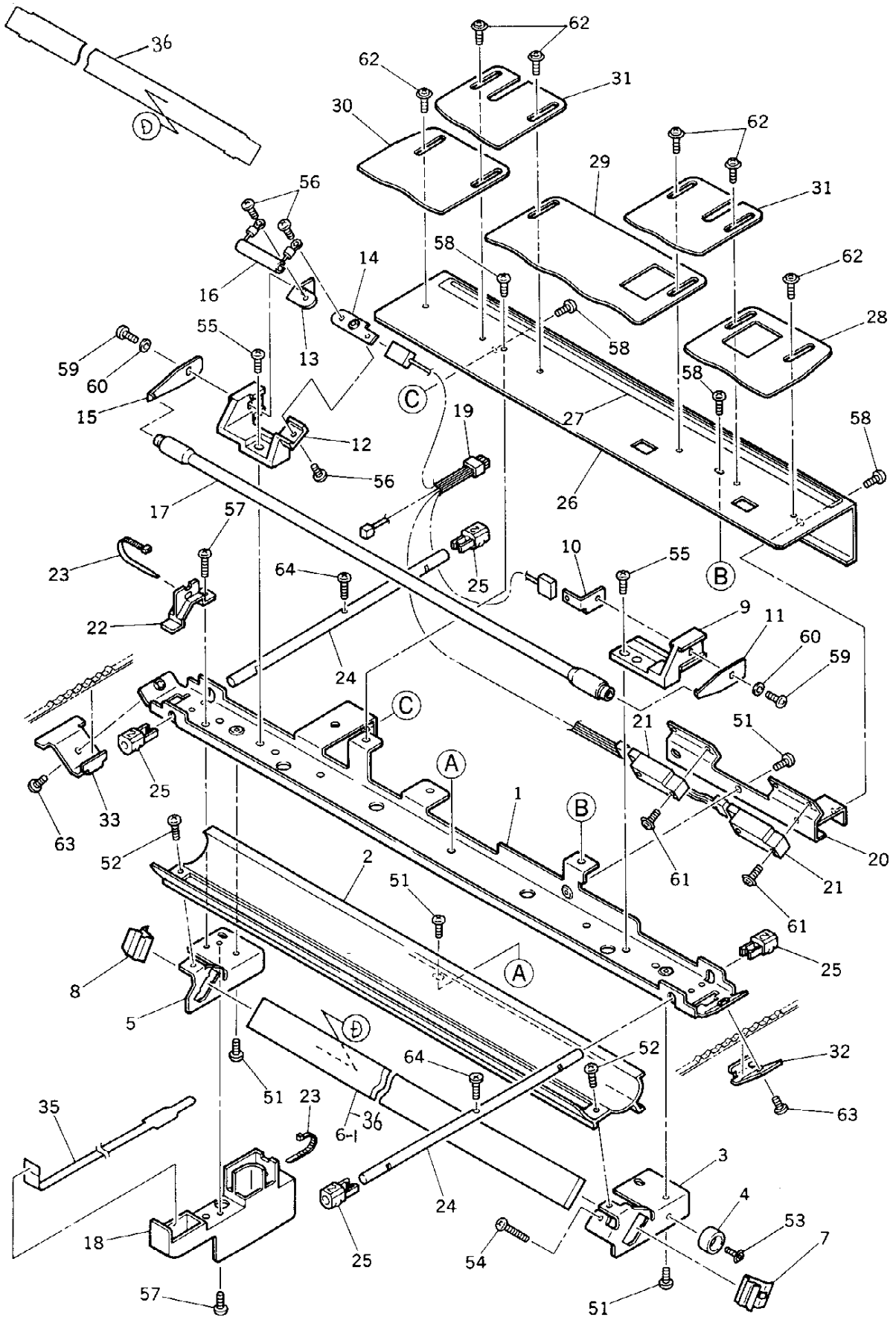
36
D
62
62
31
30
62
29
31
56
58
14
62
16
28
55
13
58
59
60
C
58
15
19
27
58
12
56
26
17
57
10
55
23
64
25
B
22
9
11
60
24
59
C
21
51
A
25
1
B
33
63
52
2
20
61
21
51
61
25
8
A
5
D
64
52
32
51
23
63
35
36
6-1
3
24
4
53
18
25
54
7
57
51

TOSHIBA

ITEM NO.	PARTS NO.	PARTS NAME	Q'TY / PAGE	Q'TY / PACK	SPE PRICE IN NONE	P	I	R	BSI NO.	TO	FROM	SERIAL NO.	REMARKS
1	4401 756250	STAY-CRG-1	1	1/P									
2	4401 756330	REFL-F150	1	1/PP									
3	4401 756260	HOLDER-MRR-1F	1	1/P						003 1			
3 1	4401 757950	HOLDER-MRR-1F	1	1/P		C	B	D	F4C120		003	VB410346	
4	4401 756320	STOPPER-CRG-1F	1	5/P						004 1			
4 1	4402 305250	STOPPER-CRG-1F	1	5/P		C	E	F	F97A813		004	VL6	
5	4401 756270	HOLDER-MRR-1R	1	1/P						005 1			
5 1	4401 757960	HOLDER-MRR-1R	1	1/P		C	B	D	F4C120		005	VB410346	
6	4401 756280	MIRROR-1-F150	1	1/C						006 1			
6 1	4401 757980	K-MIRROR-1	1	1/C		C	D	D	F4C120		006	VB410346	
7	4401 756290	SPL-MRR-1-F	1	1/P									
8	4401 756350	SPL-MRR-1-R	1	1/P									
9	4407 545210	HOLDER-LAMP-F	1	1/P									
10	4407 545220	BLADE-LAMP-F	1	1/P									
11	4407 755100	BLADE-LAMP-TH	1	1/P									
12	4401 756060	HOLDER-LAMP-R	1	1/P									
13	4407 545240	BLADE-LAMP-R-1	1	1/P						013 1			
13 1	4401 901790	BLADE-LAMP-R-1	1	1/P		C	E	F	F95J504		013		
14	4407 545250	BLADE-LAMP-R-2	1	1/P									
15	4401 756070	BLADE-LAMP-TH	1	1/P									
16	4407 554750	ASM-TH-FUSE-082	1	1/P						016 1			
16 1	4401 799990	K-FU/T-084G4	1	1/P		C	E	J	F4E155		016	VF4	
17A	4401 797360	LAMP-92-260W	1	1/C									100V SERIES
17B	4401 797370	LAMP-184-300W	1	1/C						017B1			200V SERIES
17B1	4401 788320	LP-184-300W-13C	1	1/C		C	B	D	F4H254		017B	VI4	200V SERIES
18	4401 756240	COVER-WH-EXPO	1	1/P									
19	4401 796330	WH-EXPO/APS-150	1	1/P									
20	4401 756340	BKT-APS	1	1/P									
21	4402 220780	SCO-GP2A22	2	1/C									
22	4401 756390	PUSHER-WH-EXPO	1	1/P									
23	4346 754010	SKB-BAND-1	2	5/P									
24	4401 756300	SHAFT-CRG-1	2	1/P									
25	4401 756310	FOOT-CRG-1	4	1/P									
26	4401 756010	BKT-REFL	1	1/P									
27	4407 584580	LBL-INDEX-ORG	1	1/KP									
28	4401 756020	PLT-REFL-1-F150	1	1/P									
29	4401 756030	PLT-REFL-2-F150	1	1/P									
30	4407 909350	PLT-REFL-1	1	1/P									
31	4407 909450	PLT-REFL-3	2	1/P									
32	4401 757670	BKT-BELT-CRG1-F	1	1/P									
33	4401 757680	HOLDER-BELT-R	1	1/P									
35	4401 756230	SHEET-WH-CRG-1	1	1/P									
36	4401 757990	STAY-MRR-1	1	1/P		A	D	D	F4C120			VB410346	
51	7040 400611	PAN40*06MSZN3AI	6	50/P									
52	7040 300611	PAN30*06MSZN3A	2	50/P									
53	4842 040690	TZPAN3006MSZN3L	1	50/P									
54	7040 301611	PAN30*16MSZN3AI	1	50/P									
55	7040 400811	PAN40*08MSZN3AI	2	50/P									
56	7040 300660	PAN30*06BSDG	3	50/P									
57	4842 040709	TPPAN3006MSZN3A	2	50/P									
58	7040 300411	PAN30*04MSZN3A	4	50/P									
59	7040 300860	PAN30*08BSDG	2	50/P									
60	7401 003011	0SWAS030MSZN3A	2	50/P									
61	4842 040694	TZPAN3010MSZN3L	2	50/P									
62	4842 040710	TPPAN3006MSZN3L	6	50/P						062 1			
62 1	4842 040853	TPPAN3004MSZN3L	6	50/P		C	E	E	F4B103		062	VB4	
63	7040 401011	PAN40*10MSZN3AI	2	50/P									
64	7040 300811	PAN30*08MSZN3AI	2	50/P									

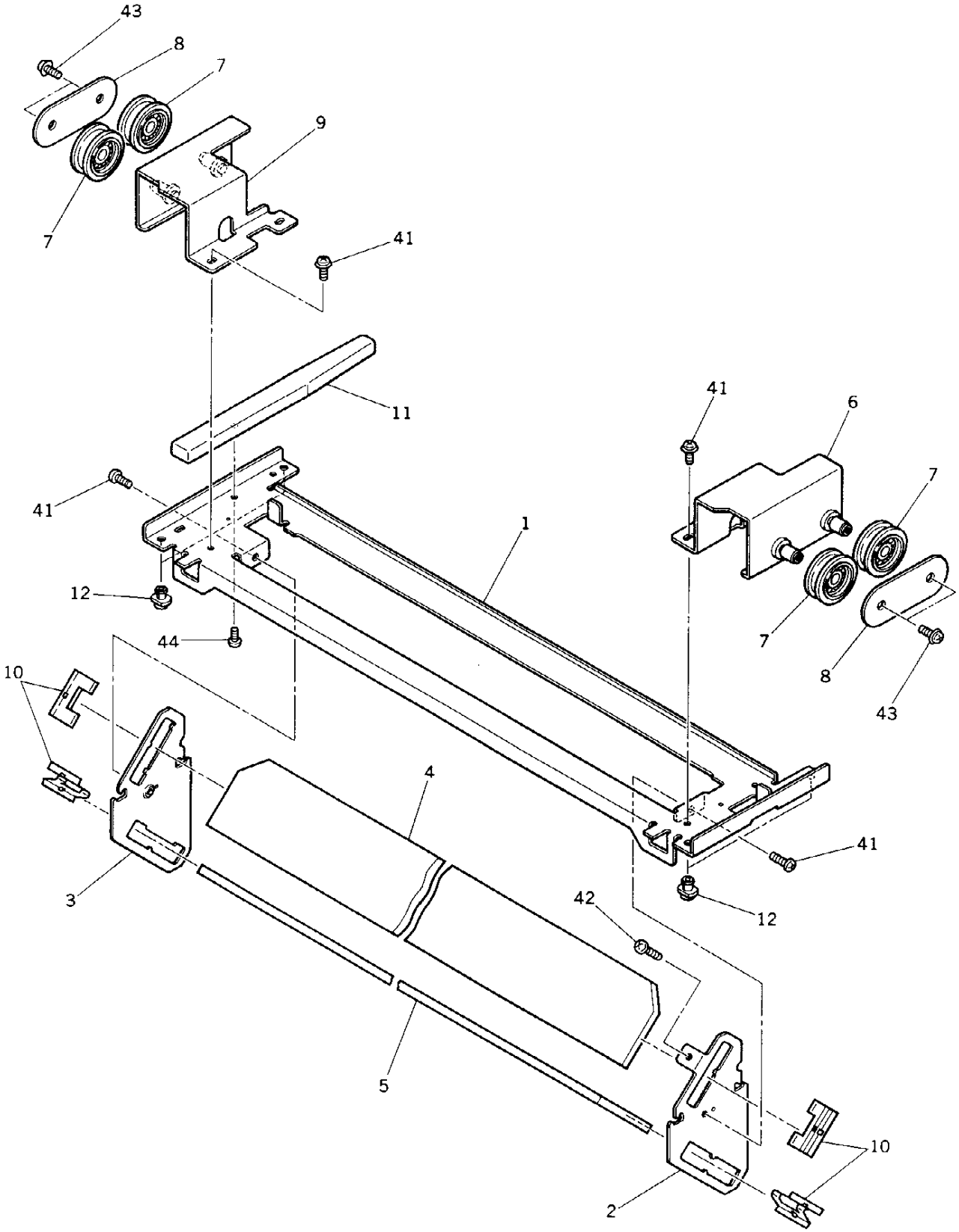
43
8
7
9
7
41
11
41
6
41
7
1
12
44
7
8
43
10
4
41
3
42
12
5
10
2

ITEM NO.	PARTS NO.	PARTS NAME	Q'TY / PAGE	Q'TY / PACK	SPE PRICE IN NONE	P	I	R	BSI NO.	TO	FROM	SERIAL NO.	REMARKS
1	4401 756630	BASE-CRG-2	1	1/P									
2	4401 756610	HOLDER-MRR-2F	1	1/P									
3	4401 756620	HOLDER-MRR-2R	1	1/P									
4	4401 756640	MIRROR-2	1	1/C									
5	4401 756650	MIRROR-3	1	1/C									
6	4401 756680	K-BKT-CRG2-F	1	1/P									
7	4408 309130	PLY-22-BRG	4	1/P									
8	4408 309120	PLATE-CRG	2	1/P									
9	4401 756690	K-BKT-CRG2-R	1	1/P									
10	4401 756840	SPL-MRR-L-150	4	1/P									
11	4401 756730	GUIDE-WH-CRG2	1	1/P									
12	4408 604590	FOOT-CRG-3.64	4	5/P									
41	7640 300851	ZPAN30*08MSZN3A	6	50/P									
42	7040 301211	PAN30*12MSZN3AI	1	50/P									
43	4842 040709	TPPAN3006MSZN3A	4	50/P									
44	4842 040895	PTBR30*06MSZN3A	1	50/P									

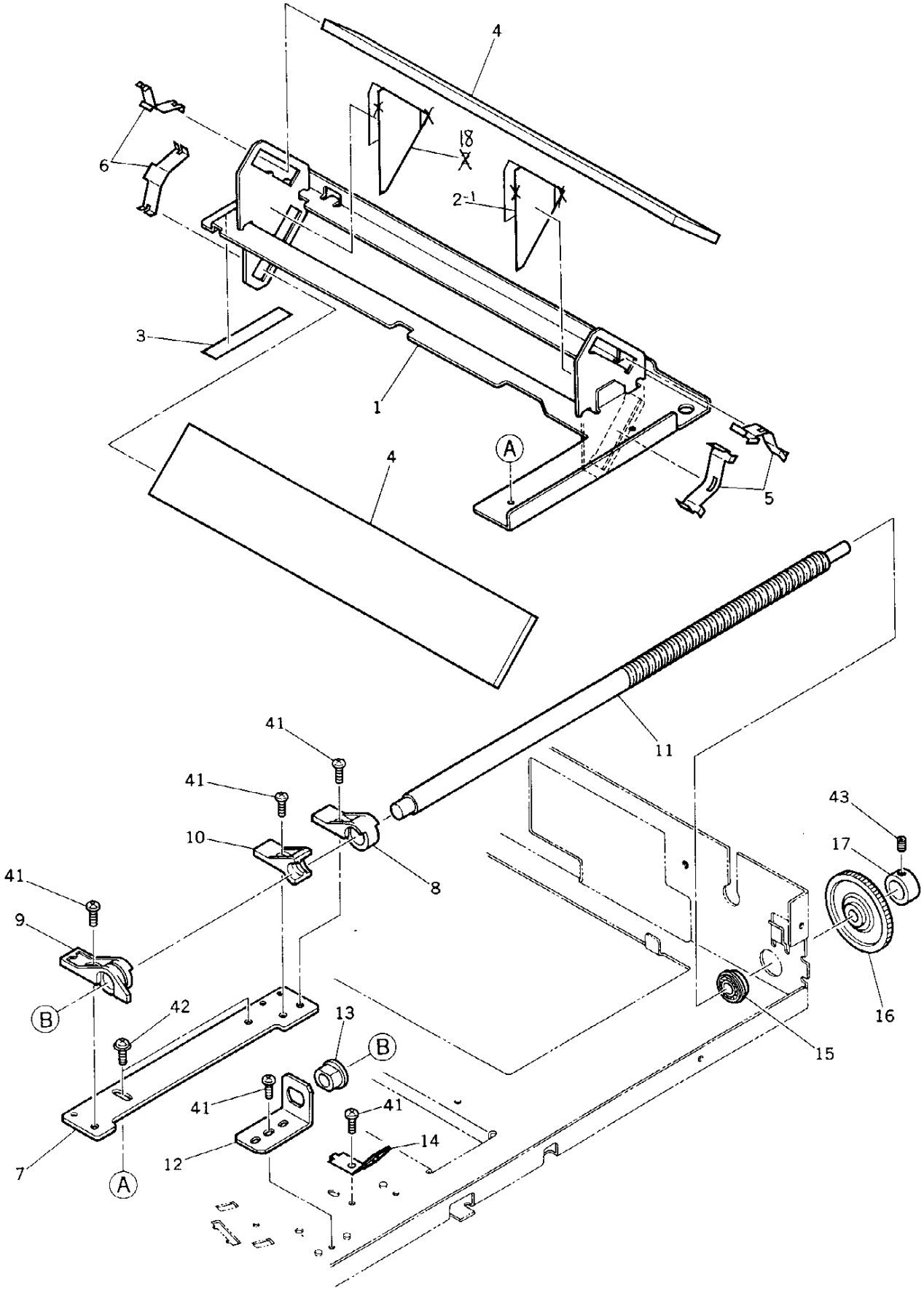
4
6
18
2-1
3
1
4
A
5
11
41
41
10
8
41
9
B
42
13
B
41
41
14
12
7
A
43
17
16
15

ITEM NO.	PARTS NO.	PARTS NAME	Q'TY / PAGE	Q'TY / PACK	SPE PRICE IN NONE	P	I	R	BSI NO.	TO	FROM	SERIAL NO.	REMARKS
1	4401 757160	K-BKT-MIRROR-4	1	1/P						001 1			
1 1	4401 757390	K-BKT-MIRROR-4	1	1/P		C	E	E	F4G247		001	VE4	
2	4401 757260	SEAL-H-CRG-3	2	1/P						002 1 018			
2 1	4401 757320	SEAL-H-CRG3-F	1	1/P		C	E	E	F4G247		002	VE4	
3	4401 757250	SHEET-CRG-3	1	1/P									
4	4401 757200	MIRROR-4-5	2	1/C									
5	4407 910220	SPRING-MRR-4F	2	1/P									
6	4407 910210	SPRING-MRR-4R	2	1/P									
7	4401 757210	PLATE-MIRROR-4	1	1/P									
8	4407 910240	BUSH-M	1	1/P									
9	4401 757230	BUSH-M-SW	1	1/P									
10	4407 910230	BUSH-SCREW-M	1	1/P									
11	4401 757240	SHAFT-SCREW-M	1	1/P									
12	4401 757500	BKT-SHAFT-M	1	1/P									
13	4346 312030	BUSHING	1	5/P									
14	4401 757550	K-SPL-LNS-MRR	1	1/P									
15	4407 959970	BRG-696ZZNR	1	1/P									
16	4401 757410	GEAR-39H-R	1	1/P									
17	4407 547470	COLLAR-MOT-P	1	5/P									
18	4401 757330	SEAL-H-CRG3-R	1	1/P		C	E	E	F4G247		002	VE4	
41	4842 040060	TPAN40*08MSZN3L	5	50/P									
42	7640 400851	ZPAN40*08MSZN3A	2	50/P									
43	4842 011083	9HSS40/06MSFB	1	50/P									

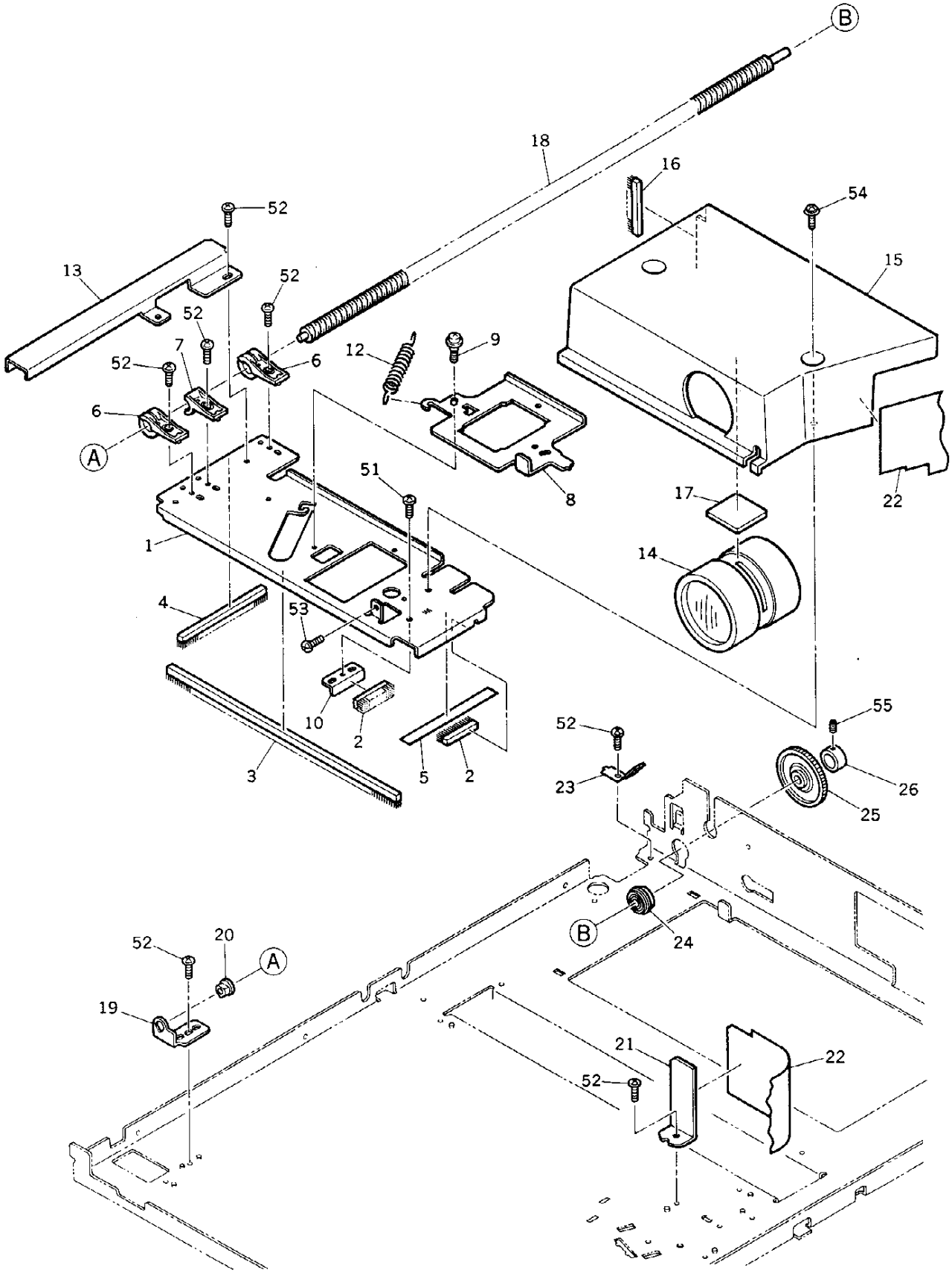
B
18
16
54
52
15
13
52
52
7
52
6
12
9
6
A
51
8
17
22
1
14
4
53
10
2
3
5
2
52
55
23
26
25
B
24
52
20
A
19
21
22
52

ITEM NO.	PARTS NO.	PARTS NAME	Q'TY / PAGE	Q'TY / PACK	SPE PRICE IN NONE	P	I	R	BSI NO.	TO	FROM	SERIAL NO.	REMARKS
1	4401 755970	PLATE-LENS-61	1	1/P									
2	4401 755910	SEAL-OPT-30	2	1/P									
3	4401 755920	SEAL-B-LENS-C	1	1/KP									
4	4401 755930	SEAL-B-LENS-R	1	1/KP									
5	4401 756970	SHEET-CRG-LENS	1	1/P									
6	4401 756990	BUSH-L	2	1/P									
7	4401 757570	BUSH-SCREW-L	1	1/P									
8	4401 757070	HOLDER-LENS-61	1	1/P									
9	4402 203820	SCREW-BKT-DEV	3	50/P									
10	4401 757020	BKT-BRUSH-LNS	1	1/P									
12	4363 271580	SPE080-100-0387	1	5/P						012 1			
12 1	4401 757350	SPE080-100-0387	1	5/P		C	E	H	F4B103		012	VC4	
13	4401 757100	ACT-SW-HOME-L	1	1/P									
14	4401 757090	LENS-F217.33-61	1	1/C						014 1			
14 1	4401 757590	LENS-217.38-61	1	1/C		C	E	J	F4I290		014	VK4	
15	4401 757290	COVER-LENS	1	1/PP									
16	4401 755940	SEAL-COV-LENS-R	1	1/KP									
17	4401 757300	CUSHION-LENS	1	1/P									
18	4401 757460	SHAFT-SCREW-L	1	1/P									
19	4401 757490	BKT-SHAFT-L	1	1/P									
20	4408 508790	BUSH-4-8-10-5.5	1	5/P									
21	4401 757370	BKT-MYLAR-OPT	1	1/P									
22	4401 757380	MYLAR-OPT	1	1/KP									
23	4401 757550	K-SPL-LNS-MRR	1	1/P									
24	4407 959970	BRG-696ZZNR	1	1/P									
25	4401 757410	GEAR-39H-R	1	1/P									
26	4407 547470	COLLAR-MOT-P	1	5/P									
51	4842 040666	TPAN3008MSZN3L	1	50/P									
52	4842 040060	TPAN40*08MSZN3L	8	50/P									
53	7040 300611	PAN30*06MSZN3A	1	50/P									
54	4842 040700	TZPAN4008MSZN3L	2	50/P									
55	4842 011083	9HSS40/06MSFB	1	50/P									

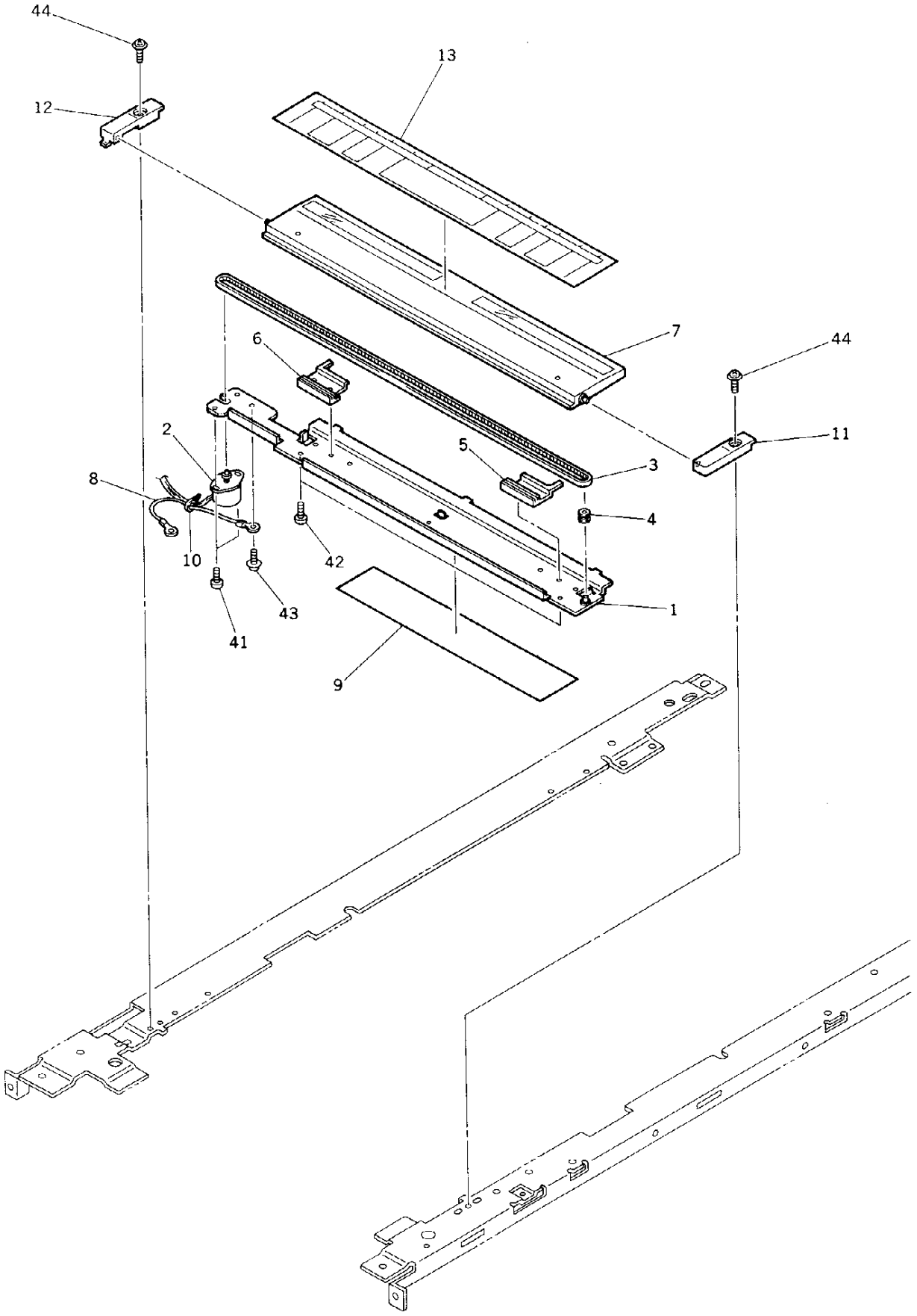
44
13
12
7
44
6
11
2
5
3
8
4
10
42
43
1
41
9

ITEM NO.	PARTS NO.	PARTS NAME	Q'TY / PAGE	Q'TY / PACK	SPE PRICE IN NONE	P	I	R	BSI NO.	TO	FROM	SERIAL NO.	REMARKS
1	4401 756470	K-BASE-IND	1	1/P									
2	4400 370350	K-M/P-DCM-527	1	1/C						002 1			
2 1	4401 905430	K-M/P-DCM-152	1	1/C		C	E	F	F96D653		002	VD6	
3	4402 218100	BELT-106400-2K	1	1/P									
4	4407 952410	COLLAR-IND	1	10/P									
5	4401 756500	INDICATOR-F-150	1	1/P									
6	4401 756510	INDICATOR-R-150	1	1/P									
7	4401 756530	K-COVER-IND	1	1/P									
8	4402 220610	WH-IND-545	1	1/P									
9	4408 619730	TAPE-WHITE-40	1	1/KP									
10	4346 754010	SKB-BAND-1	1	5/P									
11	4402 218080	HINGE-STOPPER-F	1	1/P									
12	4401 756550	HINGE-STOPPER-R	1	1/P									
13A	4401 756570	LBL-SCALE-U	1	1/KP									USA SIZE
13B	4401 756580	LBL-SCALE-E	1	1/KP									EUR SIZE
41	7040 200411	PAN20*04MSZN3AI	2	50/P									
42	7044 300611	FLT30*06MSZN3AI	2	50/P									
43	4842 040690	TZPAN3006MSZN3L	1	50/P									
44	7043 401013	BID40*10MSCR1AI	2	50/P									

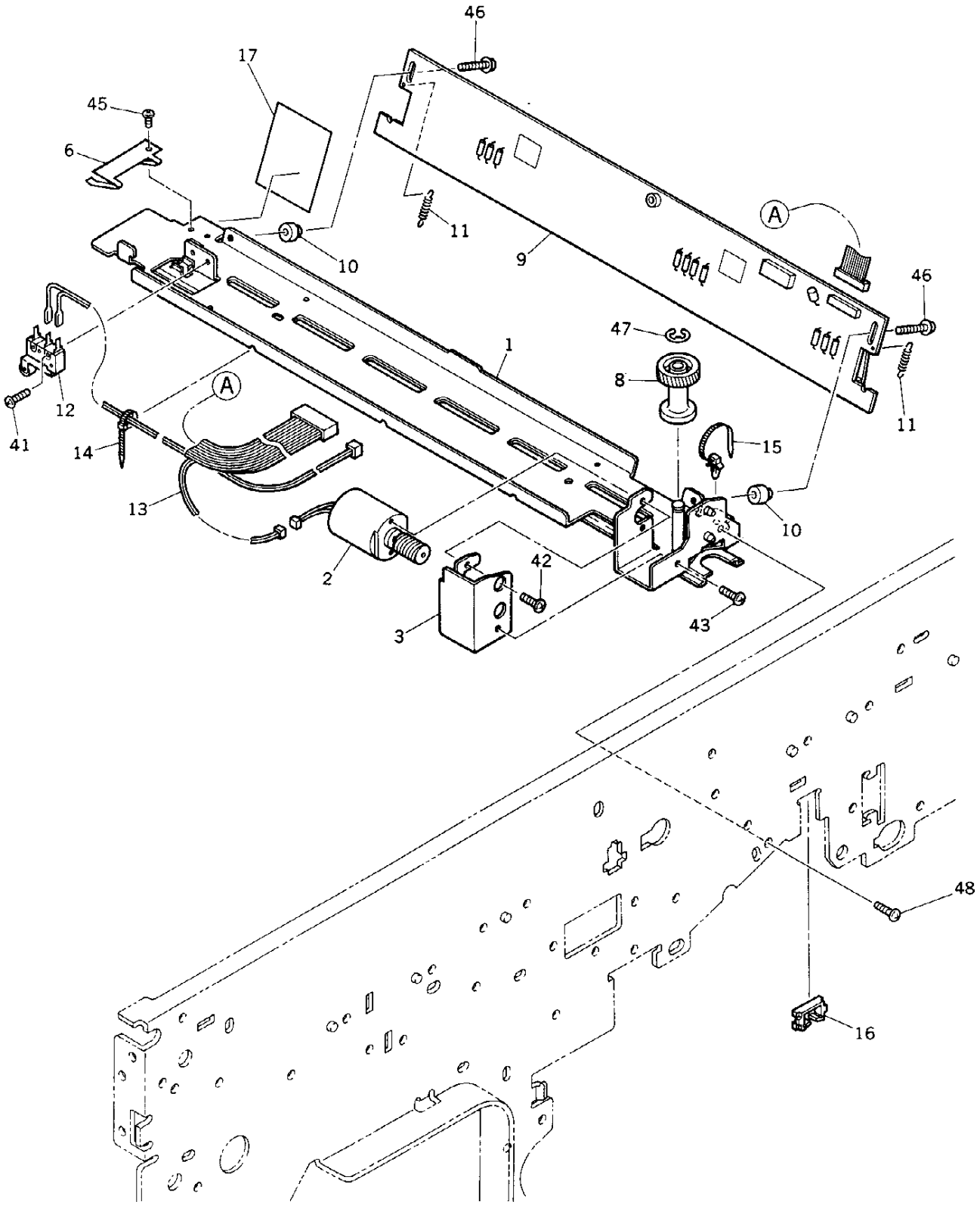
46
17
45
6
11
10
9
A
46
47
1
8
11
12
A
41
14
15
13
10
2
42
3
43
48
16

ITEM NO.	PARTS NO.	PARTS NAME	Q'TY / PAGE	Q'TY / PACK	SPE PRICE IN NONE	P	I	R	BSI NO.	TO	FROM	SERIAL NO.	REMARKS
1	4401 764050	K-BRKT-CH-M-2	1	1/P									
2	4401 764140	K-MOT-CH-CLN-M	1	1/C									
3	4401 764090	STAY-MOT-CH-M	1	1/P						003 1			
3 1	4402 882080	STAY-MOT-CH-M	1	1/P		C	E	F	F98B191		003	VD7	
6	4401 764120	SPL-CH-M-R	1	1/P									
8	4408 512060	WORM-WH-22-16	1	1/P									
9	4408 610290	PWA-F-DCH-547	1	1/SB									
10	4408 302850	BOSS-DCH	2	5/P									
11	4408 302860	SPRING-DCH	2	5/P									
12	4407 966810	SM-SS01GL2T	1	1/D									
13	4401 796420	WH-DCH-CLN-150	1	1/P									
14	4346 754010	SKB-BAND-1	3	5/P									
15	4400 902490	BAND-PS100	1	5/P									
16	4843 390943	BD/W-EDS-3	1	10/P									
17	4401 764160	SEAL-GUIDE-CH-M	1	5/P									
41	7040 201011	PAN20*10MSZN3AI	1	50/P									
42	7040 260611	PAN26*06MSZN3AI	2	50/P									
43	7040 300611	PAN30*06MSZN3A	1	50/P									
45	4842 040665	TPAN3006MSZN3L	1	50/P									
46	7640 301251	ZPAN30*12MSZN3A	2	50/P									
47	7405 005031	ERR050SKZN3A	1	50/P									
48	4842 040118	THPAN4008MSZN3L	1	50/P									

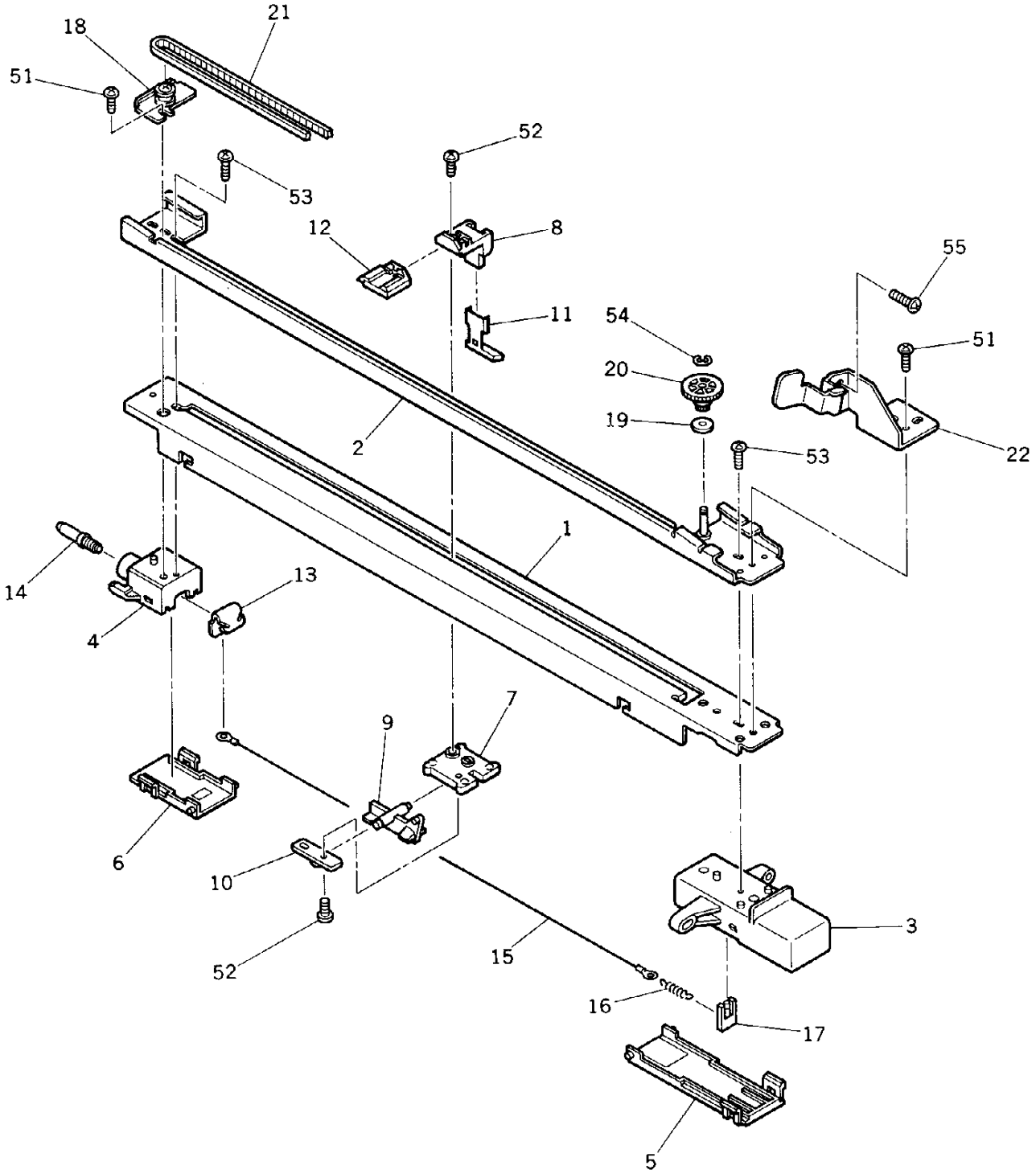
21
18
51
52
53
12
8
55
11
54
51
20
19
22
53
2
1
14
13
4
7
9
6
10
3
52
15
16
17
5

ITEM NO.	PARTS NO.	PARTS NAME	Q'TY / PAGE	Q'TY / PACK	SPE PRICE IN NONE	P	I	R	BSI NO.	TO	FROM	SERIAL NO.	REMARKS
0	4401 763520	ASM-CHARGER-M	1	1/C									
1	4401 763610	CASE-CH-M	1	1/P									
2	4401 763620	K-GUIDE-CH-L	1	1/P									
3	4401 763640	TERMINAL-M-F	1	1/P									
4	4401 763650	TERMINAL-M-R	1	1/P									
5	4401 763660	LID-CH-M-F	1	1/P									
6	4401 763670	LID-CH-M-R	1	1/P									
7	4401 763680	BASE-CLN-CH-M	1	1/P									
8	4401 763690	BASE-CLN-DCH	1	1/P									
9	4401 763890	K-BASE-PAD-CH-M	1	1/P									
10	4401 763730	HOLDER-BASE-PAD	1	1/P									
11	4408 303380	K-CLEANER-DCH-L	1	1/P									
12	4401 763760	PUSHER-SW-M	1	1/P									
13	4401 763770	BRKT-PLUG	1	1/P									
14	4407 541640	PLUG-CH	1	1/P									
15	4401 763780	WIRE-CH-PT-398	1	5/S									
16	4407 402190	SPRING-TENS-CH	1	5/P									
17	4401 763790	HANGER-WIRE-CH	1	5/P									
18	4401 763580	K-BRKT-PLY-I-M	1	1/P									
19	4408 303080	FLANGE-10-3-1.5	1	1/P									
20	4408 303070	GEAR-PLY-18-12	1	1/P									
21	4401 763820	BELT-2M-800-2	1	1/P									
22	4401 763840	STOPPER-CH-M	1	1/P						022 1			
22 1	4401 905010	STOPPER-CH-M	1	1/P		C	E	F	F95J504		022	VJ5	
51	7040 300611	PAN30*06MSZN3A	2	50/P									
52	4842 040840	PAN30*06PL-T-PA	2	50/P									
53	4842 040846	PTBR30*08MSZN3A	2	50/P									
54	7405 002031	ERR020SKZN3A	1	50/P									
55	7640 401051	ZPAN40*10MSZN3A	1	50/P									

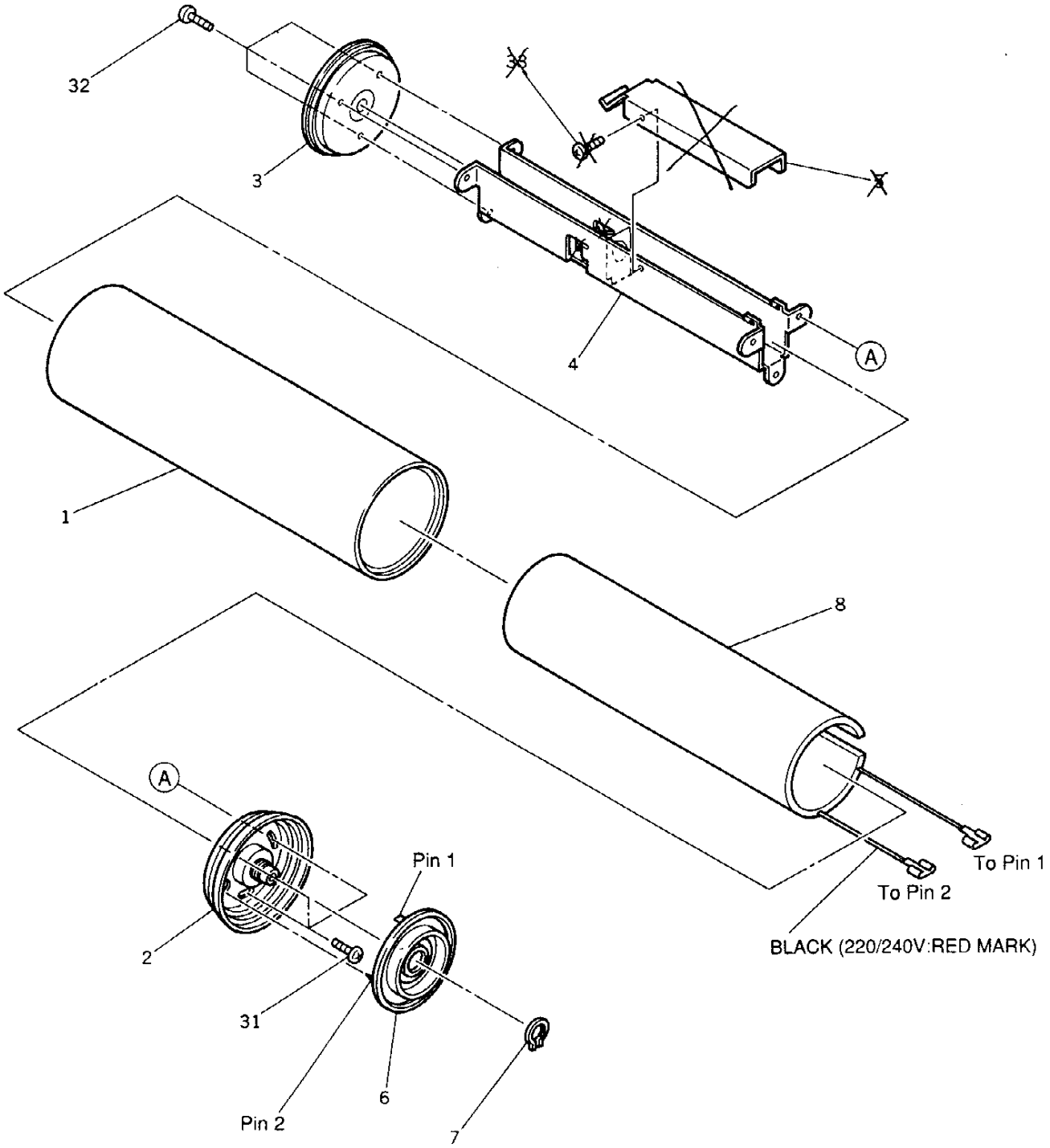
32
3
38
4
A
1
8
A
Pin 1
To Pin 1
To Pin 2
BLACK (220/240V:RED MARK)
2
31
6
Pin 2
7

ITEM NO.	PARTS NO.	PARTS NAME	Q'TY / PAGE	Q'TY / PACK	SPE PRICE IN NONE	P	I	R	BSI NO.	TO	FROM	SERIAL NO.	REMARKS
1	6608 4645	PS-SD5540	1	SUPPLY									
2	4401 763040	K-FLANGE-DRUM-F	1	1/D									
3	4401 763070	K-FLANGE-DRUM-R	1	1/D									
4	4401 763100	BKT-JOINT-FLNG	1	1/P						004 1			
4 1	4401 766100	BKT-JOINT-FLANG	1	1/P		C	E	E	F4G247		004	VE4	
5	4401 763110	COV-SHFT-DRUM	1	1/P						005 1			
5 1	4401 763110	COV-SHFT-DRUM	0	1/P		B	-	E	F4G247		005	VE4	
6	4401 761700	BASE-HEART-DRUM	1	1/D						006 1			
6 1	4401 789350	BASE-HEAT-DRUM	1	1/PS		C	B	D	F5A390	006 2	006	VB5	
6 2	4401 789290	BASE-HEAT-DRUM	1	1/P		C	E	J	F5C403		006 1	VD5	
7	4401 761710	RING-STOPPER	1	1/P									
8A	4401 797030	HTR-DRM-150-115	1	1/C									TAD
8B	4401 797030	HTR-DRM-150-115	1	1/C									CSD
8C	4401 797040	HTR-DRM-150-220	1	1/C									EUD
8D	4401 797040	HTR-DRM-150-220	1	1/C									GSD
8E	4401 797040	HTR-DRM-150-220	1	1/C									FRD
8F	4401 797040	HTR-DRM-150-220	1	1/C									SED
8G	4401 797050	HTR-DRM-150-240	1	1/C									UKD
8H	4401 797050	HTR-DRM-150-240	1	1/C									AUD
8I	4401 797030	HTR-DRM-150-115	1	1/C									TWD
8J	4401 797030	HTR-DRM-150-115	1	1/C									SAN
8K	4401 797040	HTR-DRM-150-220	1	1/C									EUN
8L	4401 797050	HTR-DRM-150-240	1	1/C									AUN
31	7640 400811	ZPAN40*08MSZN3A	3	50/P									
32	7040 400811	PAN40*08MSZN3AI	3	50/P						033 1			
33	4842 040665	TPAN3006MSZN3L	1	50/P									
33 1	4842 040665	TPAN3006MSZN3L	0	50/P		B	-	E	F4G247		033	VE4	

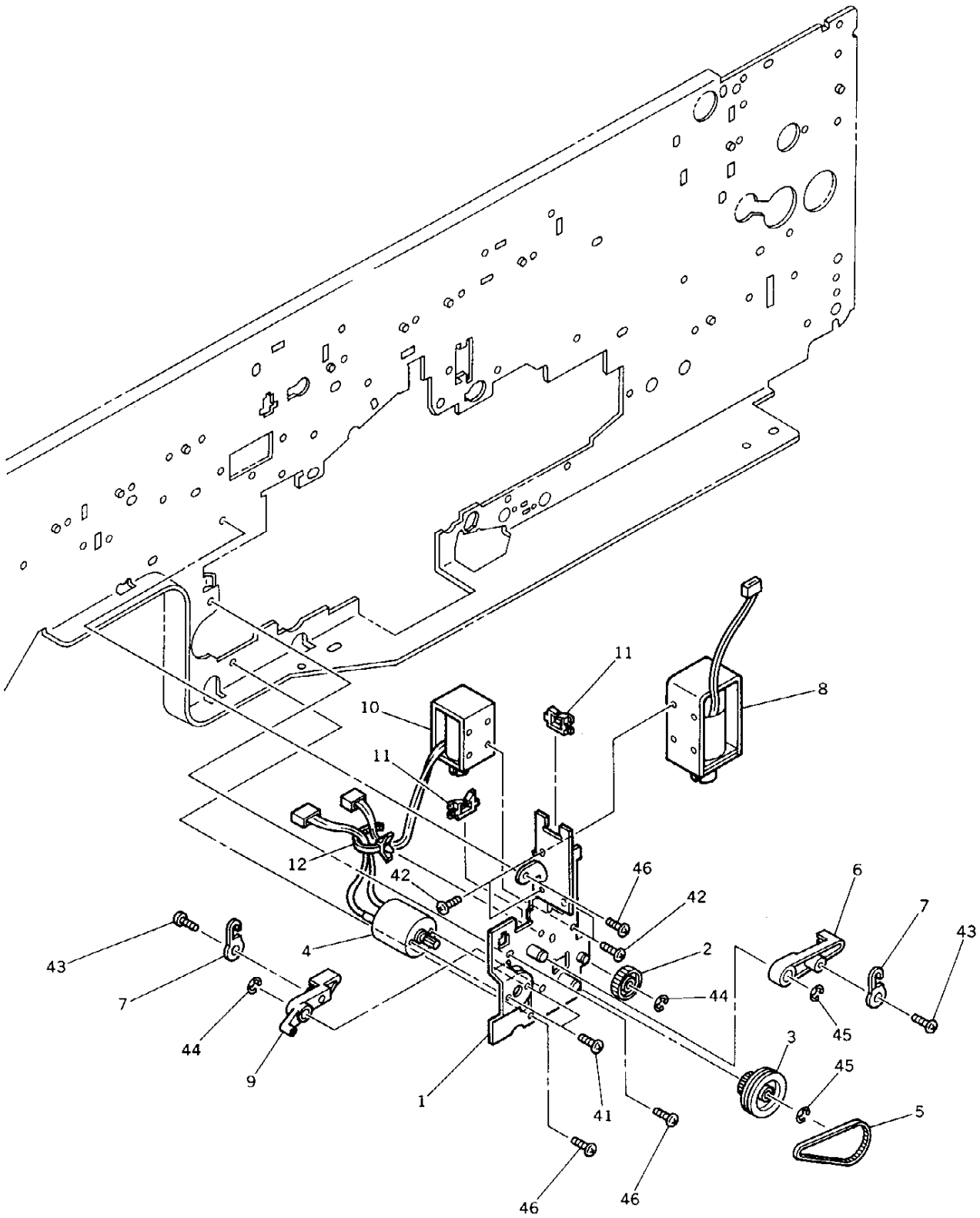
11
8
10
11
12
42
46
42
6
7
43
43
4
2
7
44
44
45
9
3
45
1
41
5
46
46

ITEM NO.	PARTS NO.	PARTS NAME	Q'TY / PAGE	Q'TY / PACK	SPE PRICE IN NONE	P	I	R	BSI NO.	TO	FROM	SERIAL NO.	REMARKS
1	4401 760560	K-PLATE-SND-MOT	1	1/P									
2	4401 760590	GEAR-25-F	1	1/P									
3	4401 760540	K-GEAR15-PLY72	1	1/P									
4	4401 760770	K-MOT-CLN-F	1	1/C									
5	4401 760530	BELT-2M-186-3	1	1/P									
6	4401 760730	LVR-BLADE-MAIN	1	1/P									
7	4408 311350	LINK-SND-CLN	2	1/P									
8	4401 797160	SND-BLD-150	1	1/D									
9	4401 760740	LEVER-CLAW-1	1	1/P									
10	4401 796960	SND-SCRP-150	1	1/D									
11	4843 390942	BD/W-EDS-2	2	10/P									
12	4400 902490	BAND-PS100	1	5/P									
41	7040 260411	PAN26*04MSZN3AI	2	50/P									
42	7040 300611	PAN30*06MSZN3A	4	50/P									
43	4842 040849	PTBR40*08MSZN3A	2	50/P									
44	7405 005031	ERR050SKZN3A	2	50/P									
45	7405 007031	ERR070SKZN3A	2	50/P									
46	4842 040060	TPAN40*08MSZN3L	3	50/P									

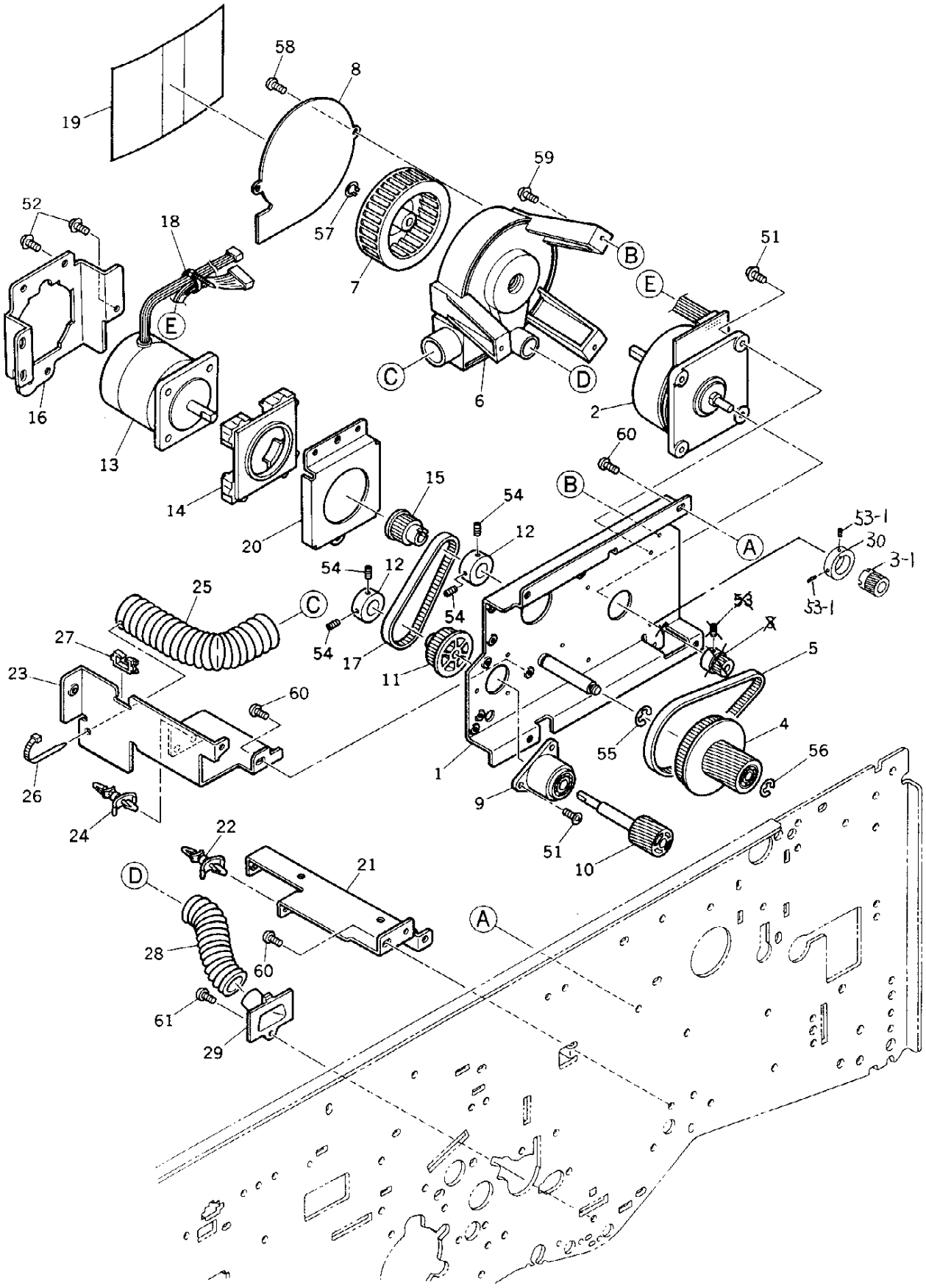
58
8
19
59
52
18
57
7
B
51
E
E
C
D
6
2
16
13
60
14
15
B
54
12
20
A
53-1
30
3-1
54
12
25
C
53-1
54
54
17
11
5
27
23
60
4
55
56
1
26
9
24
51
10
22
21
D
A
28
60
61
29

TOSHIBA

ITEM NO.	PARTS NO.	PARTS NAME	Q'TY / PAGE	Q'TY / PACK	SPE PRICE IN NONE	P	I	R	BSI NO.	TO	FROM	SERIAL NO.	REMARKS
1	4401 767320	K-BRKT-DRV-D/D	1	1/P									
2	4401 796820	M/DC-DEV-150	1	1/C									
3	4408 602870	PULLY-12-DEV	1	1/P						003 1			
3 1	4401 767450	PULLEY-12-P	1	1/P		C	E	E	F4B106		003	VC4	
4	4401 767370	K-GEAR20-PLY56	1	1/P									
5	4401 767390	BELT-3M-Z86	1	1/P									
6	4401 767400	K-HOUSING-FAN-D	1	1/P									
7	4408 312790	FAN-DEV-371	1	1/P									
8	4401 767430	LID-FAN-DEV	1	1/P									
9	4401 760890	K-HOUSING-DRUM	1	1/P									
10	4401 760830	GEAR-20H-DRUM	1	1/P									
11	4401 760840	PULLEY-30	1	1/P									
12	4401 760880	FLANGE-20-DRUM	2	1/P									
13	4401 796910	M/P-DRM-150	1	1/C									
14	4407 902170	DUMPER-MOTOR	1	1/P									
15	4401 760870	PULLEY-19-POM	1	1/P									
16	4401 760810	BRKT-MOT-DRUM	1	1/P						016 1			
16 1	4401 906700	BRKT-MOT-DRUM	1	1/P		C	E	F	F95J504		016	VI5	
17	4401 760860	BELT-3M-192-6	1	1/P									
18	4346 754010	SKB-BAND-1	1	5/P									
19	4401 767440	INS-LID-FAN	1	1/P									
20	4408 502080	BRKT-MOTOR	1	1/P									
21	4401 767660	BRKT-LGC-R-R	1	1/P									
22	4843 390872	PWZ-SPLS-8U	1	5/P									
23	4401 767690	BRKT-LGC-R-L	1	1/P									
24	4843 390869	PWZ-SPLS-4U	1	5/P									
25	4401 767770	HOSE-AIR-2	1	1/P						025 1			
25 1	4401 767810	HOSE-AIR-2	1	1/P		C	E	E	F4L368		025	VI4	
26	4346 754020	SKB-BAND-2	1	5/P									
27	4843 390943	BD/W-EDS-3	1	10/P									
28	4401 767760	HOSE-AIR-1	1	1/P						028 1			
28 1	4401 767800	HOSE-AIR-1	1	1/P		C	E	E	F4L368		028	VI4	
29	4401 767720	JOINT-DUCT	1	1/P									
30	4401 767460	FLANGE-11-18	1	1/P		A	-	E	F4B106			VC4	
51	4842 040668	TPAN3010MSZN3L	5	50/P									
52	4842 040698	TZPAN4006MSZN3L	6	50/P									
53	4842 011062	9HSS30/04MSFB	1	50/P						053 1			
53 1	4842 011064	9HSS30/06MSFB	2	50/P		C	D	E	F4B106		053	VC4	
54	4842 011065	9HSS30/08MSFB	4	50/P									
55	7405 007031	ERR070SKZN3A	1	50/P									
56	7405 005031	ERR050SKZN3A	1	50/P									
57	4842 090537	SRG-GS-7.0	1	50/P									
58	4842 040849	PTBR40*08MSZN3A	2	50/P									
59	4842 040692	TZPAN3008MSZN3L	3	50/P									
60	4842 040060	TPAN40*08MSZN3L	8	50/P									
61	4842 040700	TZPAN4008MSZN3L	1	50/P									

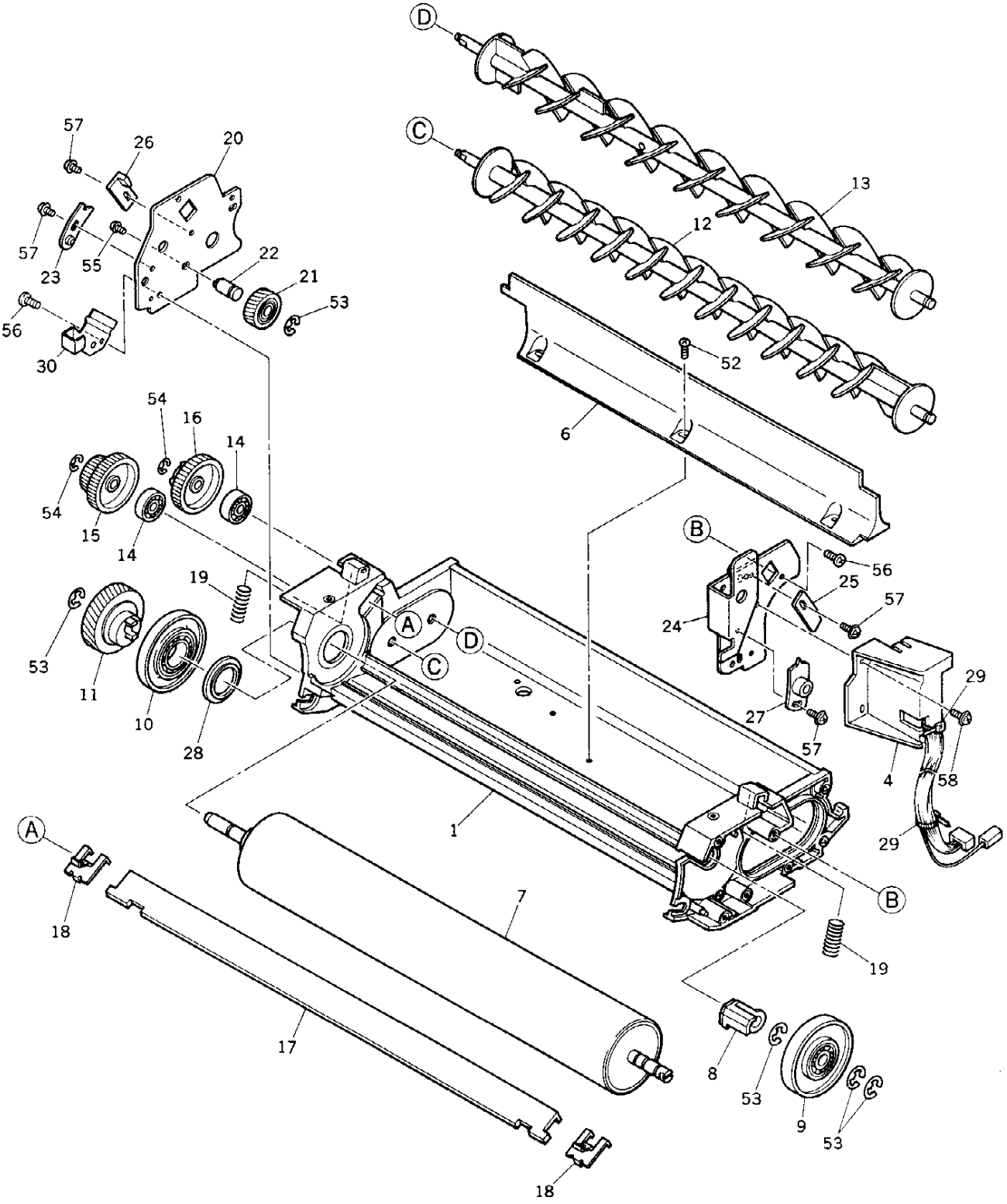
D
C
13
12
57
26
20
57
23
55
22
21
53
56
30
52
6
54
16
14
54
15
14
19
B
56
25
57
24
53
11
10
28
A
D
C
27
57
29
4
58
29
1
A
18
7
B
19
17
8
53
9
53
18

ITEM NO.	PARTS NO.	PARTS NAME	Q'TY / PAGE	Q'TY / PACK	SPE PRICE IN NONE	P	I	R	BSI NO.	TO	FROM	SERIAL NO.	REMARKS
0	4400 746800	ASM-FRM-DEV-B5E	1	1/C									WITH P52
1	4401 765380	K-CASING-DEV-15	1	1/C									
4	4401 765850	HANDLE-DEV-F	1	1/P									
6	4401 765730	WALL-MIXER	1	1/P									
7	4401 765460	MG-ROLL-50-A6	1	1/KP									
8	4401 765510	BUSH-MG-F	1	1/P									
9	4401 765520	ROLL-GUIDE-F	1	1/P									
10	4401 765530	ROLL-GUIDE-R	1	1/P									
11	4401 765540	K-GEAR-36-MG	1	1/P									
12	4401 765480	MIXER-1-A6	1	1/P									
13	4401 765490	K-MIXER-2-A6	1	1/P									
14	4408 710080	BRG-626DDLY-83	2	1/P									
15	4401 765560	GEAR-23-45-MIX1	1	1/P									
16	4401 765570	GEAR-45-MIX2	1	1/P									
17	4401 765620	DOCTOR-A6	1	1/P									
18	4401 765660	PUSHER-DOC	2	1/P									
19	4408 608890	SPC-8-0.8-22	2	5/P									
20	4401 765670	PLATE-DEV-R-E	1	1/P									
21	4401 765580	K-GEAR-20-IDL	1	1/P									
22	4401 765680	STUD-IDLE	1	1/P									
23	4401 766570	PUSHER-SFT-MG	1	1/P									
24	4401 765700	K-PLATE-DEV-F	1	1/P									
25	4401 765640	STOPPER-DOC-F	1	1/P									
26	4401 765650	STOPPER-DOC-R	1	1/P									
27	4408 608270	ADJ-MG-HIGHT	1	1/P									
28	4401 766050	SPACER-ROL-MG	1	5/P									
29	4843 391092	BD/W-T18S	2	10/P									
30	4400 746830	SPL-B-DEV	1	1/P									
52	7043 300664	BID30*06BSCR3CI	3	50/P									
53	7405 007031	ERR070SKZN3A	5	50/P									
54	7405 003031	ERR030SKZN3A	2	50/P									
55	7640 400851	ZPAN40*08MSZN3A	1	50/P									
56	7040 300611	PAN30*06MSZN3A	6	50/P									
57	7640 300851	ZPAN30*08MSZN3A	4	50/P									
58	4842 040690	TZPAN3006MSZN3L	2	50/P									

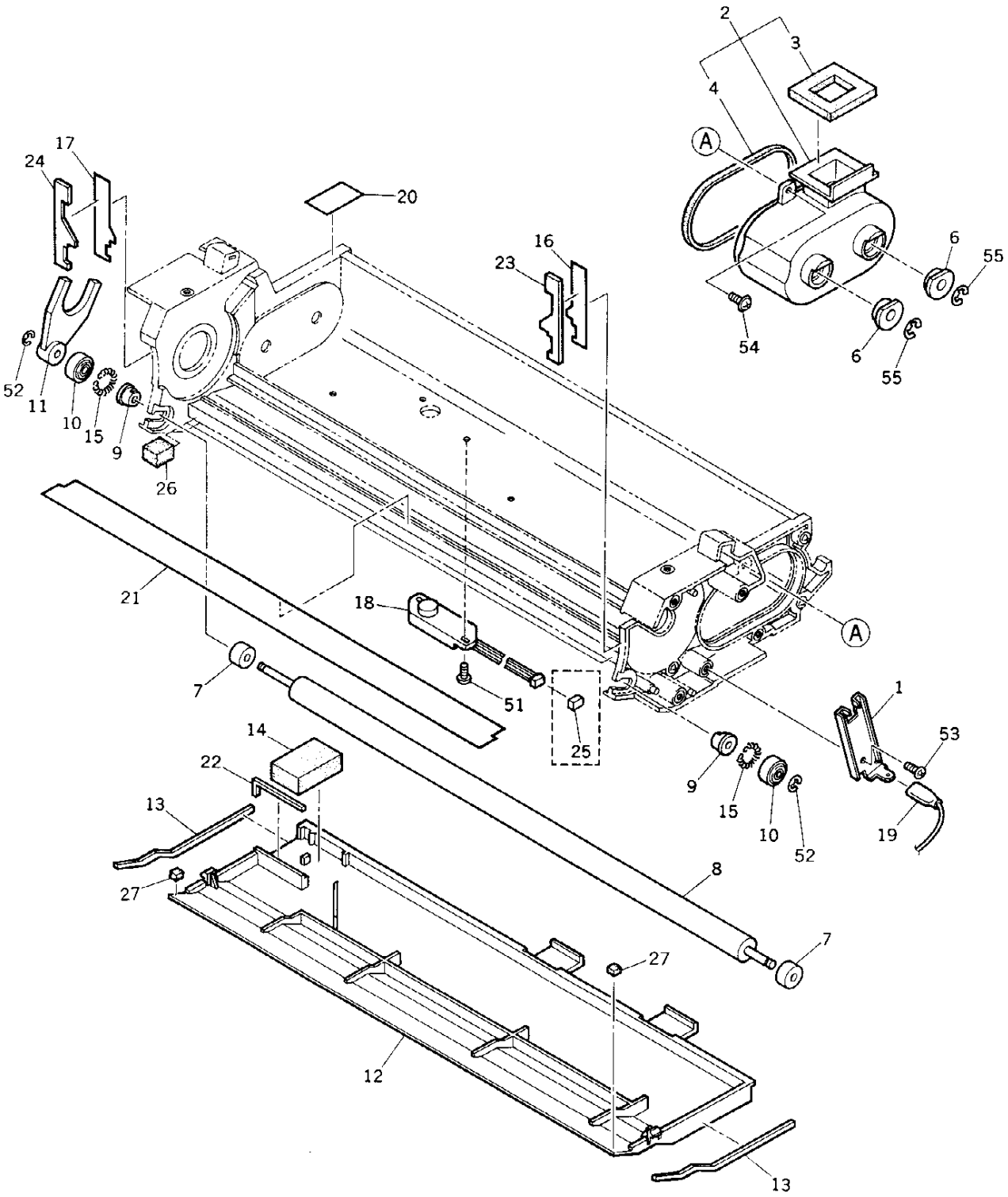
2
3
4
A
17
24
20
16
23
6
55
54
6
55
52
11
10
15
9
26
21
18
A
7
51
25
1
53
9
15
10
52
19
14
22
13
27
8
7
27
12
13

ITEM NO.	PARTS NO.	PARTS NAME	Q'TY / PAGE	Q'TY / PACK	SPE PRICE IN NONE	P	I	R	BSI NO.	TO	FROM	SERIAL NO.	REMARKS
0	4400 746800	ASM-FRM-DEV-B5E	1	1/C									WITH P51
1	4401 765600	PLATE-BIAS	1	1/P									
2	4401 765740	K-NOZZLE-MIXER	1	1/C						002 1			
2 1	4402 309270	K-NOZZLE-MIXER	1	1/P		C	E	F	F97A813		002		
3	4401 765960	SEAL-NOZZLE-TNR	1	5/P									
4	4401 765970	SEAL-NOZZLE	1	5/P									
6	4407 728150	BUSH-6	2	5/P									
7	4401 766590	SEAL-SIDE-RE	2	1/P									
8	4400 746840	ROLLER-RE-B	1	1/KP									
9	4401 765790	BUSH-4-8-6.5	2	1/P									
10	4401 765800	K-ROLL-G-SUB	2	1/P									
11	4401 765830	ONEWAY-DRV-MG	1	1/P									
12	4401 765870	DUCT-BTM-DEV	1	1/P									
13	4401 765910	SEAL-BTM	2	5/P									
14	4401 765900	FILTER-DEV-A6	1	1/P									
15	4401 765780	SPRING-RE	2	5/P									
16	4400 746890	SEAL-F	1	5/P									
17	4400 746950	SEAL-R	1	5/P									
18	4401 797210	SNR-ATS-150	1	1/D						018 1			
18 1	4401 799710	SNR-ATS-150	1	1/D		C	B	D	F4G247		018	VB4	
		COUNTERMEASURE TO IMPERFECT CONTACT OF THE CONNECTOR											
19	4401 795760	WH-DEV-BIAS-150	1	1/P									
20	4401 766580	SEAL-CORNER	1	5/P									
21	4401 765920	SHEET-SCRAPER	1	1/KP									
22	4401 766020	SEAL-BTM-2	1	5/P									
23	4400 746960	SEAL-SIDE-FRM-F	1	5/P									
24	4400 746970	SEAL-SIDE-FRM-R	1	5/P									
25	4843 306488	J-0-175694-5	1	5/P									
26	4400 746870	SEAL-A	2	5/P									
27	4400 746880	SEAL-B	2	5/P									
51	7043 300664	BID30*06BSCR3CI	2	50/P									
52	7405 003031	ERR030SKZN3A	2	50/P									
53	7040 300611	PAN30*06MSZN3A	1	50/P									
54	7640 300851	ZPAN30*08MSZN3A	2	50/P									
55	7405 004031	ERR040SKZN3A	2	50/P									

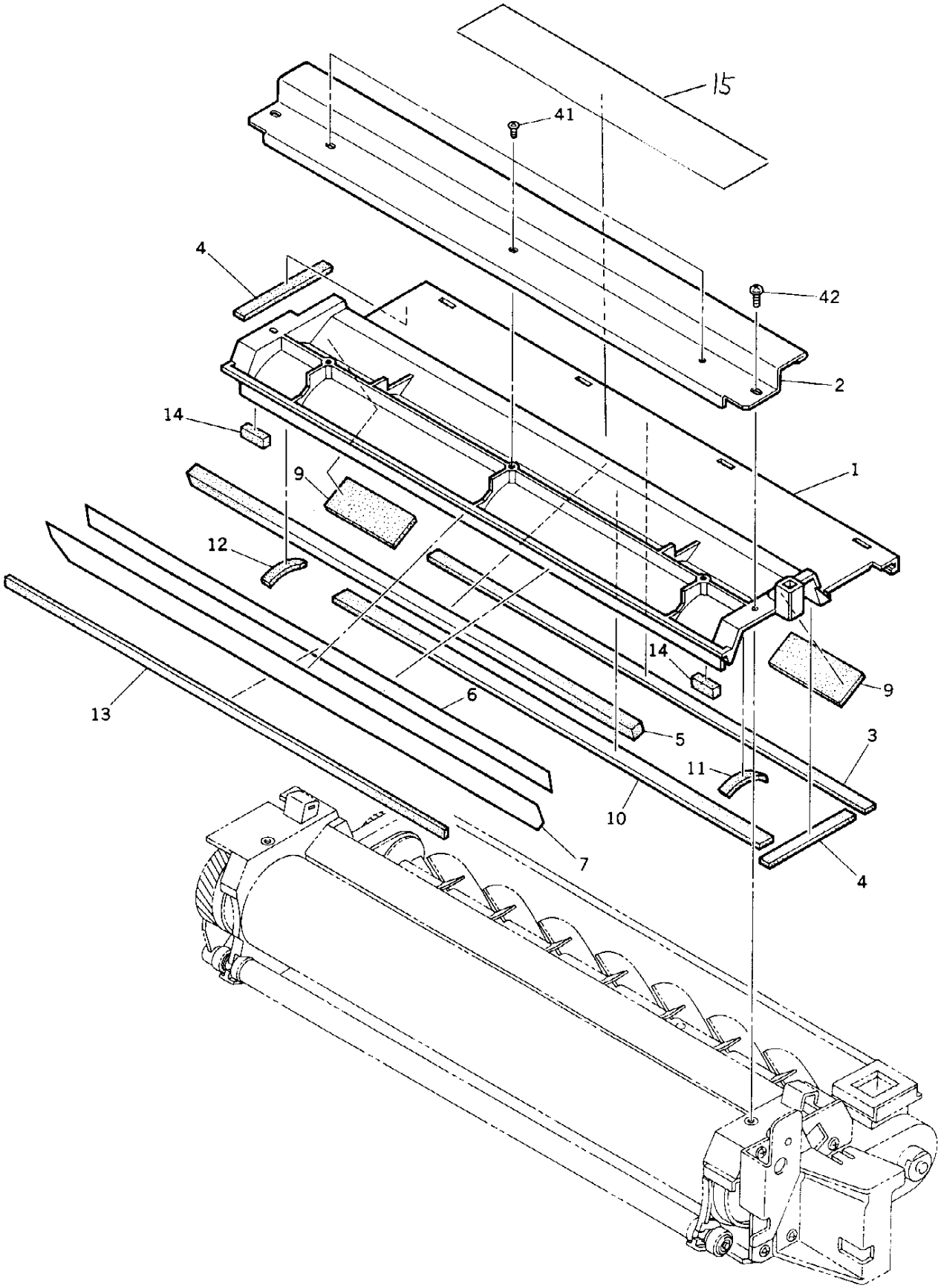
15
41
4
42
2
14
1
9
12
14
9
13
6
5
3
11
10
7
4

ITEM NO.	PARTS NO.	PARTS NAME	Q'TY / PAGE	Q'TY / PACK	SPE PRICE IN NONE	P	I	R	BSI NO.	TO	FROM	SERIAL NO.	REMARKS
0	4401 766410	ASM-COV-DEV-150	1	1/C						000 1			
0 1	4401 766360	ASM-COV-DEV-UE	1	1/C		C	B	J	F4D137		000	VE4	
1	4401 766470	COVER-DEV-150	1	1/P									
2	4401 766460	HANDLE-DEV-U	1	1/P									
3	4401 766520	SEAL-COV-1	1	1/KP									
4	4401 766530	SEAL-COV-2	2	5/P									
5	4401 766540	SEAL-DOCTOR-1	1	1/KP									
6	4401 766500	SEAL-SLEEVE	1	1/KP									
7	4401 766370	SEAL-DRUM-CER	1	1/KP									
9	4401 766030	SEAL-SIDE-DOC	2	5/P									
10	4401 766040	SEAL-WALL	1	5/P									
11	4401 766070	SEAL-COV-MG-2-F	1	5/P									
12	4401 766080	SEAL-COV-MG-2-R	1	5/P									
13	4401 766490	SEAL-SPACE	1	5/KP									
14	4401 766390	SEAL-SIDE-SPACE	2	5/P									
15	4401 768730	LBL-COV-DEV-CAU	1	1/KP		A	B	J	F4D137			VE4	
41	4842 040495	PTBR30*06MSZN3A	3	50/P									
42	7043 300813	BID30*08MSCR1AI	2	50/P									

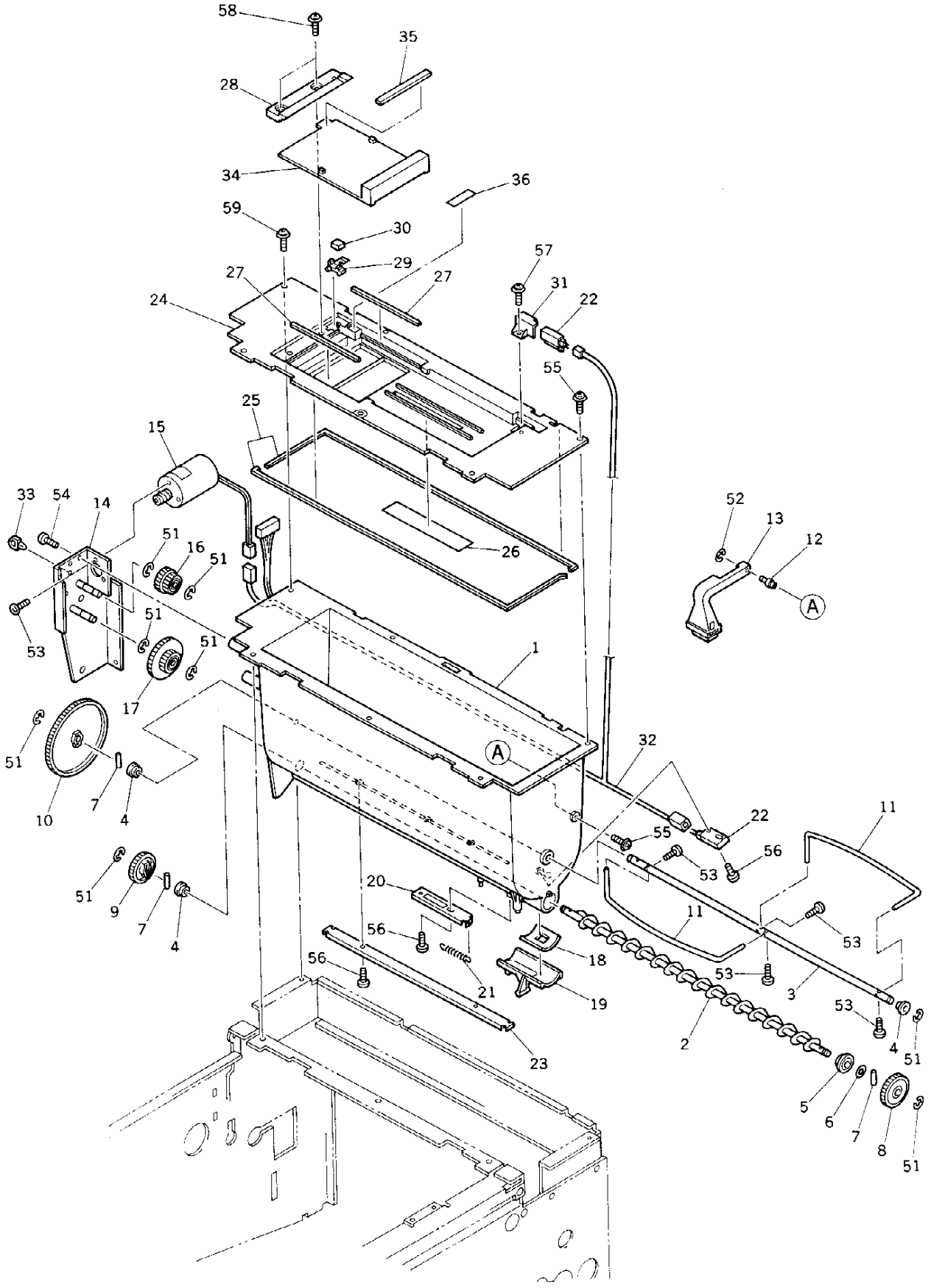
58
35
28
34
36
59
30
29
27
27
57
31
22
24
55
25
15
33
54
14
51
16
51
26
52
13
12
A
53
51
51
1
17
51
A
32
10
7
4
22
11
55
56
53
51
9
7
4
20
11
53
56
18
56
21
19
53
3
53
2
4
51
23
5
6
7
8
51

TOSHIBA

ITEM NO.	PARTS NO.	PARTS NAME	Q'TY / PAGE	Q'TY / PACK	SPE PRICE IN NONE	P	I	R	BSI NO.	TO	FROM	SERIAL NO.	REMARKS
1	4401 766630	K-HOPPER	1	1/C									
2	4401 766650	AUGER-HOP-1	1	1/P									
3	4401 766660	SHAFT-PDL	1	1/P									
4	4407 543330	BUSHING-6	3	5/P									
5	4407 543300	BUSH-HOPPER	1	5/P									
6	4346 314050	WASHER	1	10/P									
7	4346 312020	PIN	3	10/P									
8	4407 597990	GEAR-33-M	1	1/P									
9	4400 344380	GEAR-28-V	1	1/P									
10	4401 766710	GEAR-82	1	1/P									
11	4401 766670	PADDLE-HOP	2	1/P									
12	4401 766700	PIN-ARM-T-EMP	1	5/P									
13	4401 766680	K-ARM-T-EMP	1	1/P									
14	4401 766720	K-BRKT-HOP-DRV	1	1/P									
15	4401 766620	K-M/DC-TNR-150	1	1/C									
16	4401 766780	GEAR-25-20	1	1/P									
17	4401 766790	GEAR-55-20	1	1/P									
18	4401 766850	SEAL-HLDR-AUG-1	1	5/P									
19	4401 766820	COV-HOP-SLIDE	1	1/P									
20	4401 766830	PLATE-COV-HOP	1	1/P									
21	4400 340940	SPG-BKT-CON	1	5/P									
22	4407 551020	SE-RS801C-NO	2	1/P									
23	4401 766840	COV-HARNESS-HOP	1	1/P									
24	4401 766890	COVER-HOP	1	1/P									
25	4401 766940	SEAL-COV-HOP	2	1/KP									
26	4401 766950	SEAL-SLIT	1	5/P									
27	4401 766970	SEAL-CART-SIDE	2	5/P									
28	4401 766900	STOPPER-CART	1	1/P									
29	4401 766990	STOPPER-LID	1	1/P									
30	4401 766920	CUSHION-STP	1	5/P									
31	4401 766930	COVER-SW-T-OPN	1	1/P									
32	4401 798040	WH-HOPPER-150	1	1/P									
33	4843 391176	CLP/W-UAMS05L	1	5/P									
34A	4401 767170	LID-HOP-J/A	1	1/P									TAD
34B	4401 767170	LID-HOP-J/A	1	1/P									CSD
34C	4401 767180	LID-HOP-E	1	1/P									EUD
34D	4401 767180	LID-HOP-E	1	1/P									GSD
34E	4401 767180	LID-HOP-E	1	1/P									FRD
34F	4401 767180	LID-HOP-E	1	1/P									SED
34G	4401 767180	LID-HOP-E	1	1/P									UKD
34H	4401 767170	LID-HOP-J/A	1	1/P									AUD
34I	4401 767170	LID-HOP-J/A	1	1/P									TWD
34J	4401 767170	LID-HOP-J/A	1	1/P									SAN
34K	4401 767170	LID-HOP-J/A	1	1/P									EUN
34L	4401 767170	LID-HOP-J/A	1	1/P									AUN
35	4401 766960	SEAL-LID	1	5/P									
36	4401 766860	COVER-STOPPER	1	5/P									
51	7405 005031	ERR050SKZN3A	8	50/P									
52	7405 003031	ERR030SKZN3A	1	50/P									
53	7040 300411	PAN30*04MSZN3A	6	50/P									
54	7040 300611	PAN30*06MSZN3A	3	50/P									
55	7043 300613	BID30*06MSCR1AI	3	50/P									
56	4842 040495	PTBR30*06MSZN3A	4	50/P									
57	4842 040846	PTBR30*08MSZN3A	1	50/P									
58	4842 040850	PTBR40*10MSZN3A	2	50/P									
59	4842 040702	TZPAN4010MSZN3L	4	50/P									

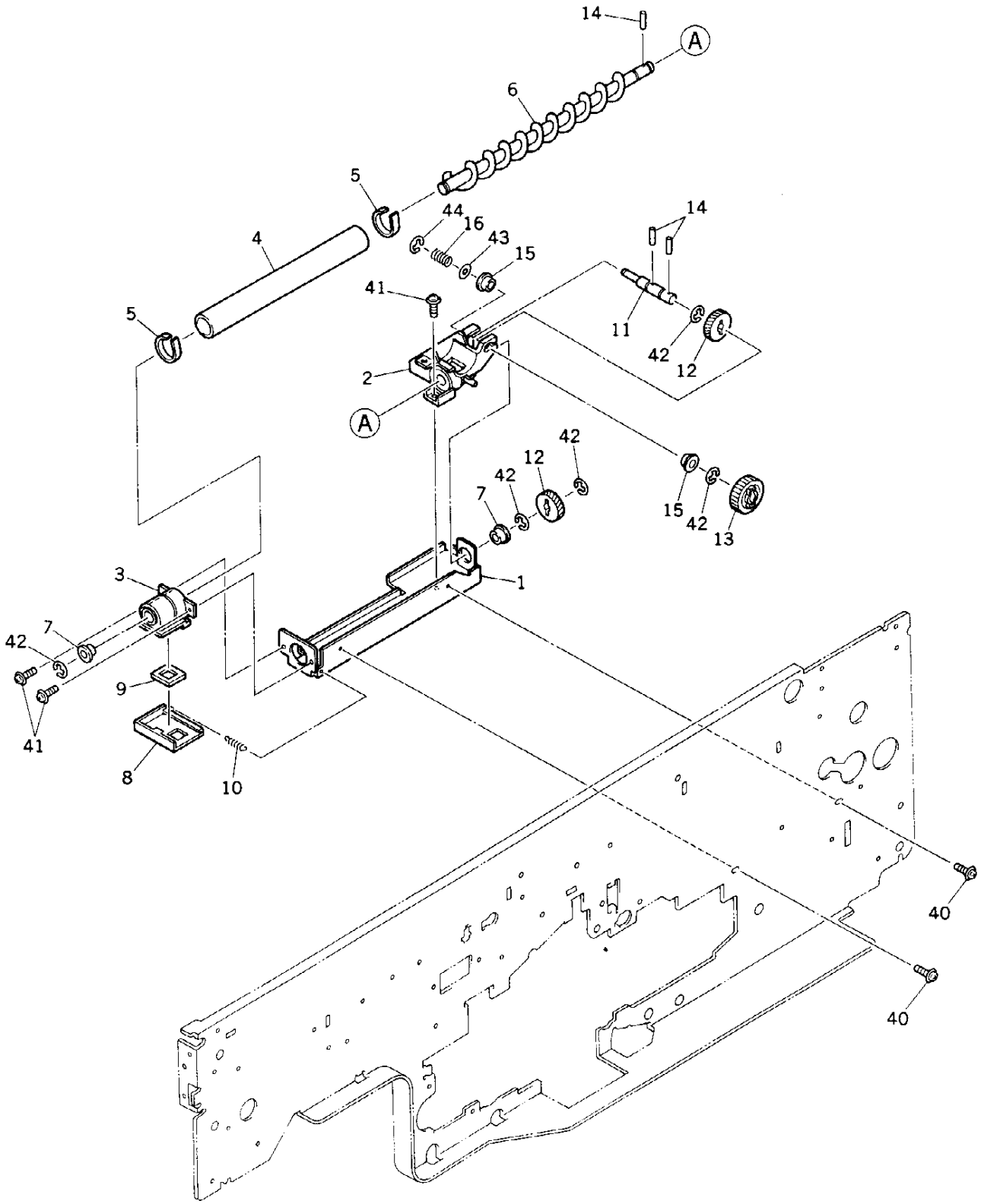
14
A
6
5
44
16
43
15
4
14
41
5
11
42
12
2
A
42
12
42
7
15
42
13
3
1
42
7
9
41
8
10
40
40

ITEM NO.	PARTS NO.	PARTS NAME	Q'TY / PAGE	Q'TY / PACK	SPE PRICE IN NONE	P	I	R	BSI NO.	TO	FROM	SERIAL NO.	REMARKS
1	4401 767030	STAY-AUGER	1	1/P									
2	4401 767010	HOLDER-AUG-R	1	1/P									
3	4401 767020	HOLDER-AUG-L	1	1/P									
4	4401 767130	PIPE-16-18-186	1	1/P									
5	4401 766530	SEAL-COV-2	2	5/P									
6	4401 767060	AUGER-HOP-2	1	1/P									
7	4407 543330	BUSHING-6	2	5/P									
8	4401 767080	LID-AUGER	1	1/P									
9	4401 767110	SEAL-HLDR-AUG-2	1	5/P									
10	4401 767090	SPE-45-04-19	1	5/P									
11	4401 767040	SHAFT-HOLDER	1	1/P									
12	4408 503150	GEAR-13-HL	2	1/P									
13	4400 406960	GEAR-23-B	1	1/P									
14	4346 312020	PIN	3	10/P									
15	4407 734240	BUSH-6	2	5/P									
16	4402 203940	SPC-DEV-PUSH-05	1	5/P									
40	7040 400811	PAN40*08MSZN3AI	2	50/P									
41	4842 040690	TZPAN3006MSZN3L	3	50/P									
42	7405 005031	ERR050SKZN3A	5	50/P									
43	7400 104011	1HWAS040MSZN3A	1	50/P									
44	7405 005031	ERR050SKZN3A	1	50/P									

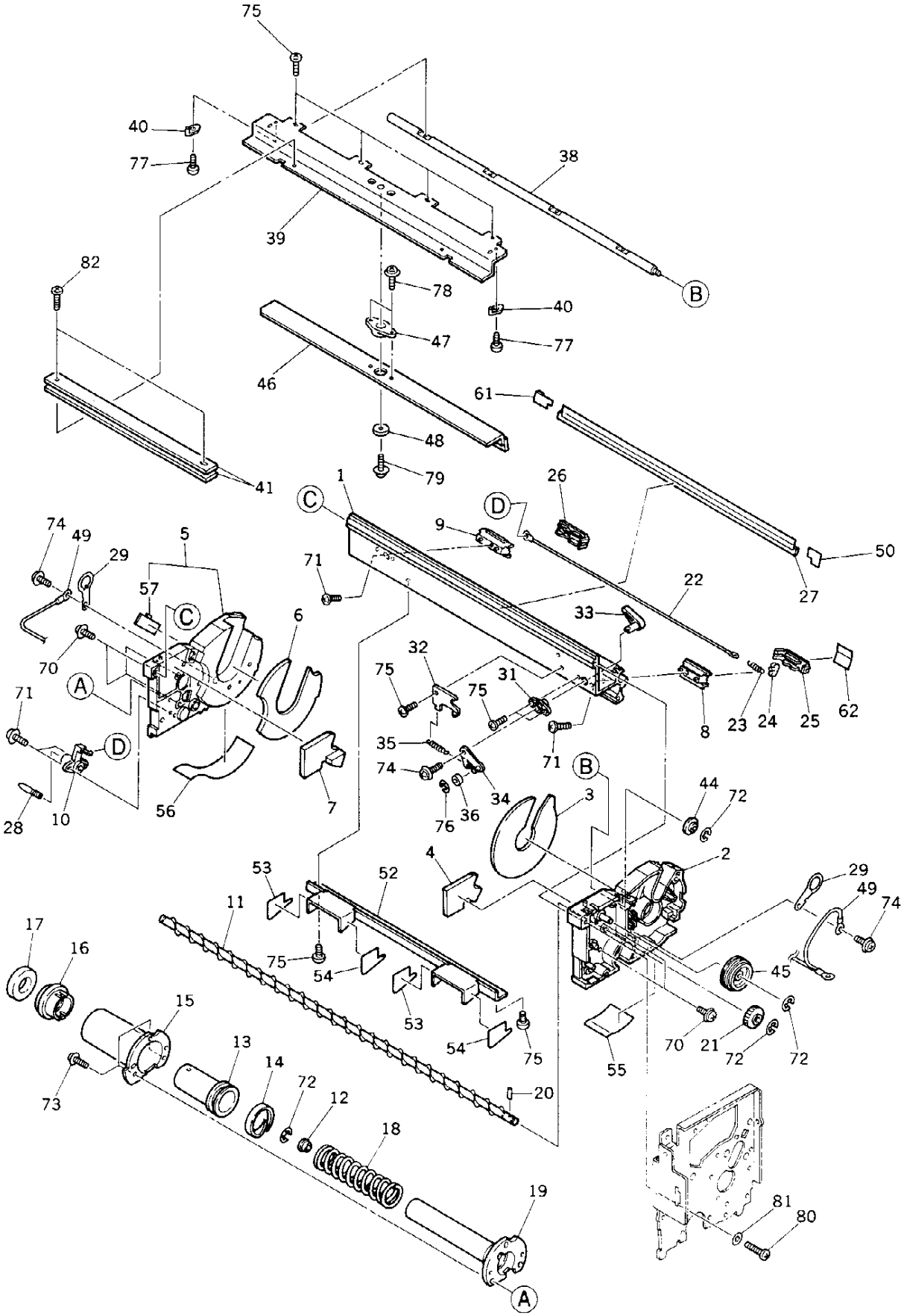
75
40
77
38
39
82
78
40
B
47
77
46
61
48
41
79
1
26
C
D
9
50
74
49
5
29
71
22
27
57
C
33
6
32
70
75
31
A
75
71
8
23
24
25
62
35
71
D
74
B
34
44
72
28
10
56
7
76
36
3
4
2
53
52
29
49
74
11
17
16
75
54
45
15
53
54
75
70
21
72
72
13
55
14
72
12
20
73
18
19
81
80
A

TOSHIBA

ITEM NO.	PARTS NO.	PARTS NAME	Q'TY / PAGE	Q'TY / PACK	SPE PRICE IN NONE	P	I	R	BSI NO.	TO	FROM	SERIAL NO.	REMARKS
0	4400 746940	ASM-CLEANER-151	1	1/C									WITH P57
1	4401 761270	CASHING-CLN	1	1/PP									
2	4401 761100	K-FRAME-CLN-F	1	1/D									
3	4401 761800	SEAL-SIDE-CLN-F	1	1/P									
4	4401 762090	SEAL-SIDE-BLD-F	1	1/P									
5	4401 761200	K-FRAME-CLN-R	1	1/D									
6	4401 761810	SEAL-SIDE-CLN-R	1	1/P									
7	4401 761830	SEAL-SIDE-BLD-R	1	1/P									
8	4401 762200	TERMINAL-PC-F	1	1/P									
9	4401 762300	TERMINAL-PC-R	1	1/P									
10	4401 762320	HOLDER-PC-R	1	1/P									
11	4401 761900	K-AUGER-CLN	1	1/P									
12	4407 543330	BUSHING-6	1	5/P									
13	4401 762620	SHUTTER-NOZZLE	1	1/P									
14	4401 762650	SEAL-BASE-NOZ	1	1/P									
15	4401 762680	COV-BASE-NOZZLE	1	1/P						015 1			
15 1	4401 904590	COV-BASE-NOZZLE	1	1/P		C	E	F	F95J504		015	VE5	
16	4401 762630	HOLDER-SEAL-NOZ	1	1/P									
17	4401 762640	SEAL-SHTR-NOZ	1	1/P									
18	4401 762660	SPC-NOZZLE	1	1/P									
19	4401 762670	BASE-NOZZLE-CLN	1	1/P						019 1			
19 1	4401 904580	BASE-NOZZLE-CLN	1	1/P		C	E	F	F95J504		019	VE5	
20	4407 403790	NPIN2-8	1	10/P									
21	4401 762390	GEAR-18	1	1/P									
22	4408 607930	WIRE-CH-PT-354	1	5/S									
23	4401 762350	SPE-WIRE-PC	1	5/P									
24	4401 762220	HANGER-WIRE-PC	1	5/P									
25	4401 762210	LID-PC-F	1	1/P									
26	4401 762310	LID-PC-R	1	1/P									
27	4401 760300	K-BLADE-REC-150	1	1/KP									
28	4407 541640	PLUG-CH	1	1/P									
29	4401 761380	PLATE-EARTH-DRM	2	1/P									
31	4401 762840	BUSH-LEVER-BLD	1	1/P									
32	4401 762860	STOPPER-LEV-CLN	1	1/P									
33	4401 762850	LEVER-BLADE	1	1/P									
34	4401 762800	K-LEVER-CLN	1	1/P									
35	4401 762870	SPE-BLADE-CLN	1	5/P									
36	4408 311310	COLLAR-LVR-CLN	1	10/P									
38	4401 761610	SFT-HLDR-BLADE	1	1/P									
39	4401 760990	K-HOLDER-BLADE	1	1/P									
40	4401 761720	SPACER-BLADE	2	5/P									
41	4408 310630	WEIGHT-BLADE-2	2	1/P									
44	4401 762240	COLLAR-SFT-BLD	1	5/P									
45	4401 762270	GEAR-29-CAM-2.5	1	1/P									
46	6608 4518	PS-BL6550D	1	SUPPLY						046 1			
46 1	4409 830660	BL-6550D	1	10/S		C	E	J	F5B401		046		
47	4401 761490	BUSH-BLADE-OUT	1	1/P									
48	4401 761480	CAP-BUSH-BLADE	1	5/P									
49	4400 748340	WH-DRM-ERH-151	1	1/P									
50	4401 761850	SEAL-SIDE-REC-F	1	5/P									
52	4401 761920	BRKT-CLN-EX	1	1/P									
53	4401 761930	GUIDE-MYLAR-C1	2	5/P									
54	4401 761940	GUIDE-MYLAR-C2	2	5/P									
55	4401 761280	SEAL-FRM-CLN-F	1	5/P									
56	4401 761290	SEAL-FRM-CLN-R	1	5/P									
57	4407 685930	HOLDER-WH	1	5/P									
61	4401 761880	K-SEAL-SIDE-REC	1	5/P									
62	4401 760410	MYLAR-LID-PCL-F	1	5/P									
70	7040 400811	PAN40*08MSZN3AI	5	50/P									
71	4842 040495	PTBR30*06MSZN3A	4	50/P									
72	7405 005031	ERR050SKZN3A	4	50/P									
73	4842 040850	PTBR40*10MSZN3A	3	50/P									
74	7640 300651	ZPAN30*06MSZN3A	3	50/P									
75	7040 300611	PAN30*06MSZN3A	9	50/P									
76	7405 002531	ERR025SKZN3A	1	50/P									
77	7040 300411	PAN30*04MSZN3A	2	50/P									
78	7040 301011	PAN30*10MSZN3A	2	50/P									
79	7640 300851	ZPAN30*08MSZN3A	1	50/P									
80	7040 402511	PAN40*25MSZN3AI	1	50/P									
81	7402 004031	0TWAS040SKZN3A	1	50/P									
82	7040 300811	PAN30*08MSZN3AI	2	50/P									

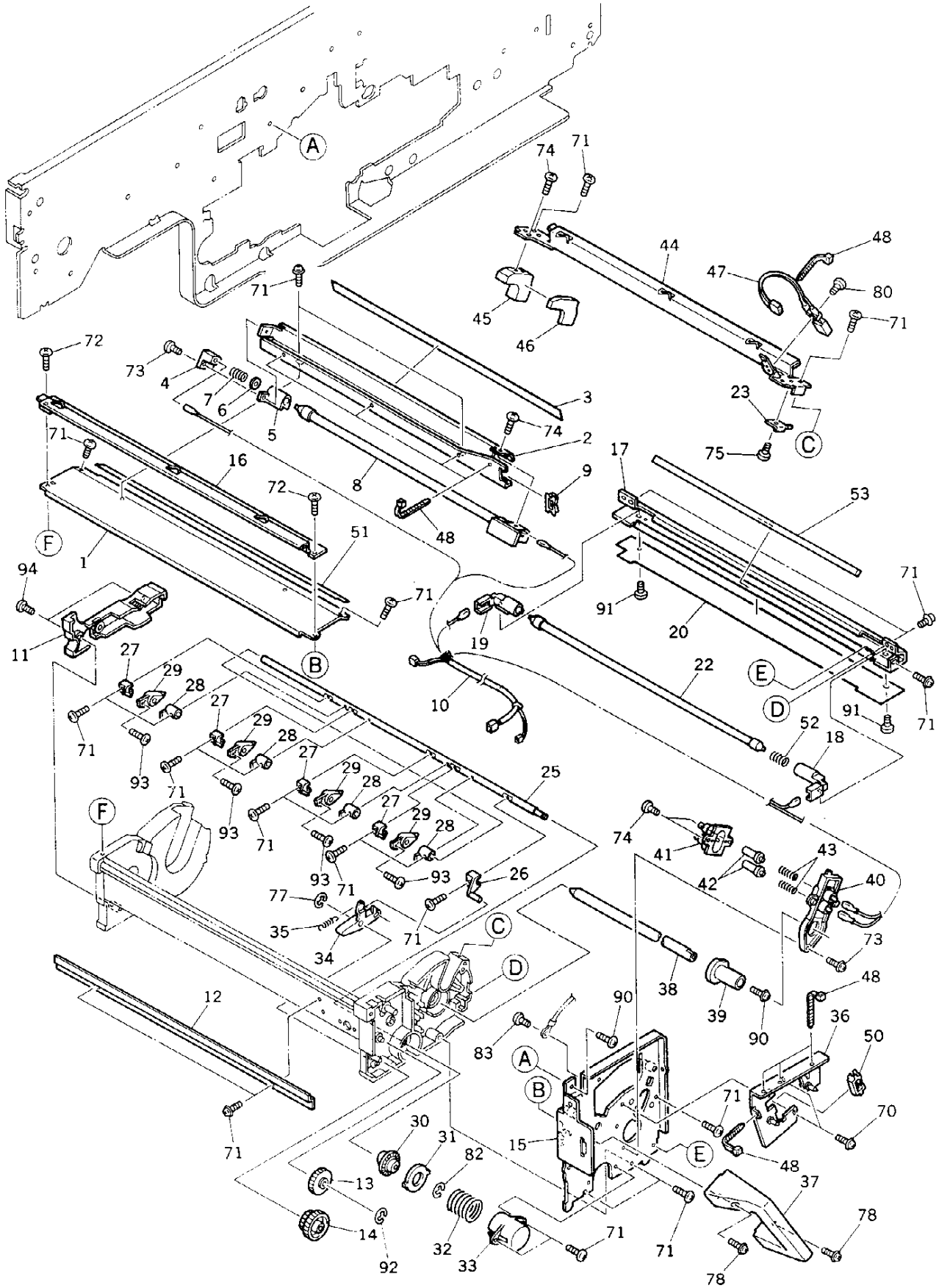
A
B
C
D
E
F
1
2
3
4
5
6
7
8
9
10
11
12
13
14
15
16
17
18
19
20
22
23
25
26
27
28
29
30
31
32
33
34
35
36
37
38
39
40
41
42
43
44
45
46
47
48
50
51
52
53
70
71
72
73
74
75
77
78
80
82
83
90
91
92
93
94

TOSHIBA

ITEM NO.	PARTS NO.	PARTS NAME	Q'TY / PAGE	Q'TY / PACK	SPE PRICE IN NONE	P	I	R	BSI NO.	TO	FROM	SERIAL NO.	REMARKS
0	4400 746940	ASM-CLEANER-151	1	1/C									WITH P56
1	4401 762160	ROOF-CLN	1	1/P									
2	4401 762130	BRKT-LAMP-PCL	1	1/P									
3	4401 762140	SEAL-BRKT-PCL	1	1/KP									
4	4408 311150	HOLDER-LAMP-UR	1	1/P									
5	4408 311160	HOLDER-L-UR-SUB	1	1/P									
6	4408 310900	WASHER-9*5*0.5	1	10/P									
7	4408 311190	SPC-0.5*6.0-8	1	5/P									
8	4408 611110	LAMP/F-DRM-G-W7	1	1/S									
9	4843 390941	BD/W-EDS-1	1	10/P									
10	4401 796430	WH-CLN-150	1	1/P									
11	4401 762380	COV-WH-CLN-R	1	1/P									
12	4401 761770	COV-WH-CLN-BACK	1	1/P									
13	4401 762250	GEAR-25	1	1/P									
14	4401 762260	GEAR-17-30	1	1/P									
15	4401 761350	K-PLATE-CLN-F	1	1/D									
16	4401 761690	BRKT-HDL-CLN2	1	1/P									
17	4401 762010	BRKT-LAMP-PTL	1	1/P						017 1			
17 1	4401 762110	BRKT-LAMP-PTL	1	1/P		C	B	D	F96A579		017	VK519494	
18	4401 762040	HOLDER-PTL-F	1	1/P									
19	4401 762050	HOLDER-PTL-R	1	1/P									
20	4401 762070	MYLAR-BRKT-PTL	1	5/KP									
22	4408 318580	LAMP/F-DRM	1	1/S									
23	4401 761640	PLATE-EARTH-HDL	1	5/P									
25	4401 762430	SHAFT-CLAW	1	1/P									
26	4401 762470	LEVER-SFT-CLAW	1	5/P									
27	4401 762460	HANGER-CLAW	4	5/P						027 1			
27 1	4401 905980	HANGER-CLAW	4	5/P		C	E	F	F96D653		027	VA6	
28	4401 762410	GUIDE-PAPER-CLN	4	1/P									
29	4401 762580	K-CLAW-DRUM	4	1/D									
30	4401 762520	CLT-CAM-CLAW	1	1/P									
31	4401 762510	COLLAR-CLT-CLAW	1	1/P									
32	4401 762490	SPC-CLAW-SLIDE	1	1/P									
33	4401 762480	COVER-CLT-CLAW	1	1/P									
34	4401 762280	LEVER-CLAW-2	1	1/P									
35	4401 762360	SPE-CLAW-ON-OFF	1	5/P									
36	4401 763850	K-PLATE-CH-M	1	1/P									
37	4401 761730	HANDLE-CLN-F	1	1/P									
38	4401 761620	SHAFT-DRUM	1	1/P									
39	4401 761630	KNOB-SHAFT-DRUM	1	1/P									
40	4401 762720	HLDR-TERMINAL-F	1	1/P						040 1			
40 1	4401 904870	HLDR-TERMINAL-F	1	1/P		C	E	F	F95J504		040		
41	4401 762730	HLDR-PIN-HEAT	1	1/P									
42	4401 762760	PIN-HEAT-DRUM	2	5/P									
43	4401 762750	SPC-TERMINAL-F	2	5/P						043 1			
43 1	4401 904890	SPC065-050-0146	2	5/P		C	E	F	F98C217		043		
44	4401 761660	BRKT-HDL-CLN1	1	1/P									
45	4401 761670	SPACER-DRUM-R	1	1/P									
46	4401 761680	SEAL-SIDE-GEAR	1	1/P									
47	4401 797220	THMS-DRM-150	1	1/C						047 1			
47 1	4401 799720	THMS-DRM-150	1	1/C		C	B	D	F4G247		047	VB4	
		COUNTERMEASURE TO IMPERFECT CONTACT OF THE CONNECTOR											
48	4843 391092	BD/W-T18S	8	10/P									
50	4843 390942	BD/W-EDS-2	1	10/P									
51	4401 762150	SEAL-ROOF-CLN	1	5/KP									
52	4401 762060	SPC-LAMP-PTL	1	5/P									
53	4401 762080	SEAL-BRKT-PTL	1	5/KP						053 1			
53 1	4401 905070	SEAL-BRKT-PTL	1	5/KP		C	B	D	F96A579		053	VK519494	
70	7640 300651	ZPAN30*06MSZN3A	4	50/P									
71	7040 300611	PAN30*06MSZN3A	25	50/P									
72	7640 300851	ZPAN30*08MSZN3A	2	50/P									
73	7040 301011	PAN30*10MSZN3A	2	50/P									
74	4842 040495	PTBR30*06MSZN3A	4	50/P									
75	4842 040665	TPAN3006MSZN3L	1	50/P									
77	7405 005031	ERR050SKZN3A	1	50/P									
78	4842 040124	TZPAN3014MSZN3L	2	50/P									
80	7040 300811	PAN30*08MSZN3AI	1	50/P									
82	7405 003031	ERR030SKZN3A	1	50/P									
83	7040 300411	PAN30*04MSZN3A	1	50/P									
90	7640 400851	ZPAN40*08MSZN3A	2	50/P									
91	4365 259620	44582010-SCREW	2	50/P									

ITEM NO.	PARTS NO.	PARTS NAME	Q'TY / PAGE	Q'TY / PACK	SPE PRICE IN NONE	P	I	R	BSI NO.	TO	FROM	SERIAL NO.	REMARKS
92	7405 004031	ERR040SKZN3A	1	50/P									
93	4842 040514	PTPAN3008MSZN3A	4	50/P									
94	4842 040846	PTBR30*08MSZN3A	2	50/P									

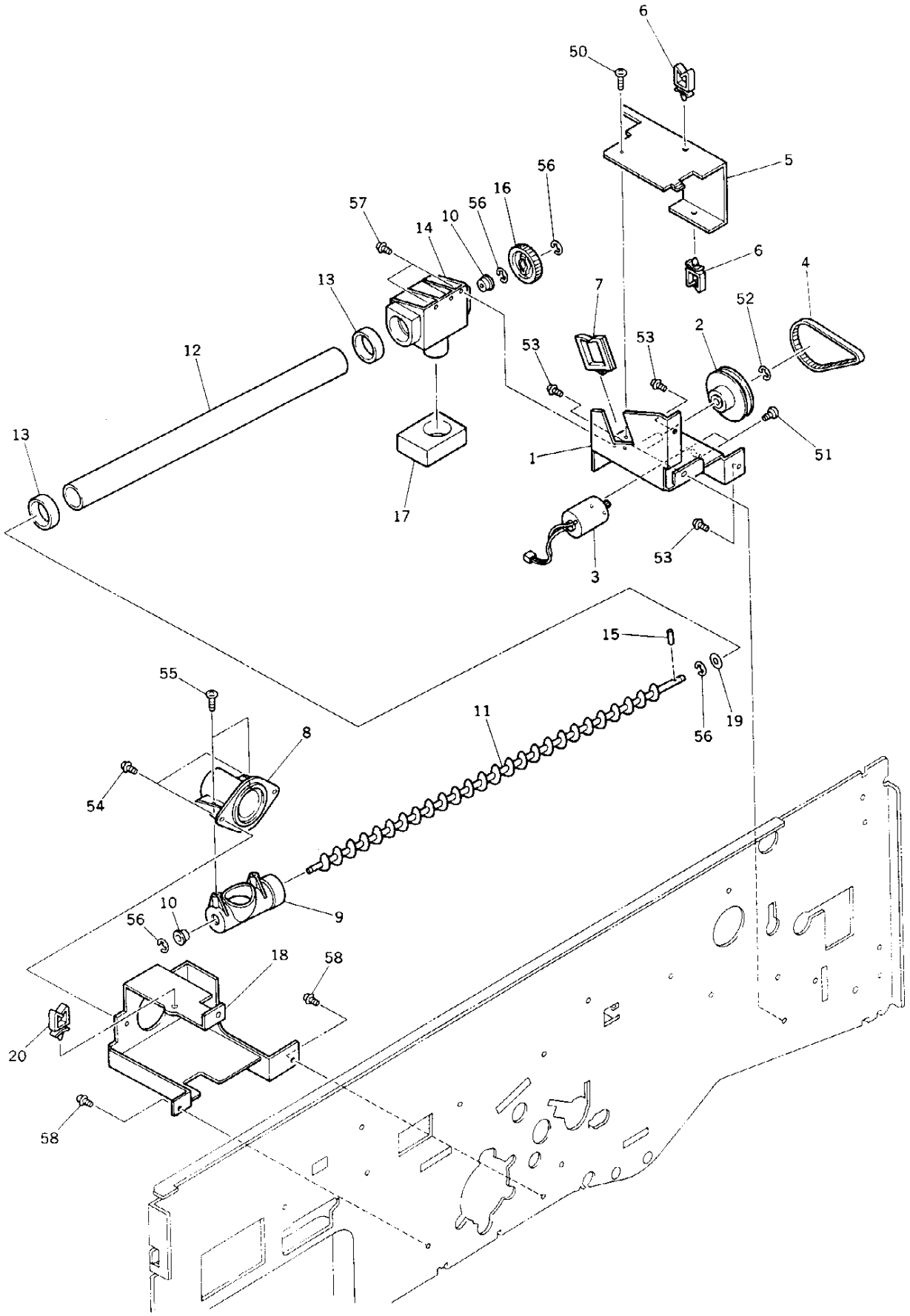
6
50
5
56
16
57
56
10
14
13
6
4
7
52
2
53
53
12
13
1
51
17
3
53
15
55
11
19
56
8
54
10
56
9
18
58
20
58

ITEM NO.	PARTS NO.	PARTS NAME	Q'TY / PAGE	Q'TY / PACK	SPE PRICE IN NONE	P	I	R	BSI NO.	TO	FROM	SERIAL NO.	REMARKS
1	4401 763450	K-STAY-U-TNR	1	1/P									
2	4401 760460	K-GEAR17-PLY72	1	1/P									
3	4401 760770	K-MOT-CLN-F	1	1/C									
4	4408 503160	BLT-190-2M-3	1	1/P									
5	4401 760480	BRKT-COV-U-TNR	1	1/P									
6	4843 390856	CLP/W-LWS-3U	2	5/P									
7	4843 391240	BD/W-EDS-2323U	1	5/P									
8	4401 763250	TERMINAL-AUG-RU	1	1/P									
9	4401 763260	TERMINAL-AUG-RL	1	1/P									
10	4407 543330	BUSHING-6	2	5/P									
11	4401 760780	K-AUGER-U-TNR	1	1/P									
12	4401 767120	PIPE-20-22-298	1	1/P						012 1			
12 1	4401 905870	PIPE-20-22-296	1	1/P		C	E	F	F95J504		012	VE5	
13	4401 763290	SEAL-PIPE	2	5/P									
14	4401 760750	TERMINAL-AUG-L	1	1/P									
15	4407 403790	NPIN2-8	1	10/P									
16	4401 763230	GEAR-30	1	1/P									
17	4401 763220	SEAL-TERM-AUG-L	1	1/P									
18	4401 760790	BRKT-AUGER-U	1	1/P									
19	4346 314050	WASHER	1	10/P									
20	4843 390855	CLP/W-LWS-2U	1	5/P									
50	4842 040636	TPAN30*06MSZN3A	1	50/P									
51	7040 260411	PAN26*04MSZN3AI	2	50/P									
52	7405 007031	ERR070SKZN3A	1	50/P									
53	4842 040650	TPAN40*06MSZN3L	3	50/P									
54	4842 040690	TZPAN3006MSZN3L	2	50/P									
55	4842 040849	PTBR40*08MSZN3A	2	50/P									
56	7405 005031	ERR050SKZN3A	4	50/P									
57	4842 040635	TBID40*08MSCR3C	2	50/P									
58	4842 040060	TPAN40*08MSZN3L	3	50/P									
20	4843 390855	CLP/W-LWS-2U	1	5/P									

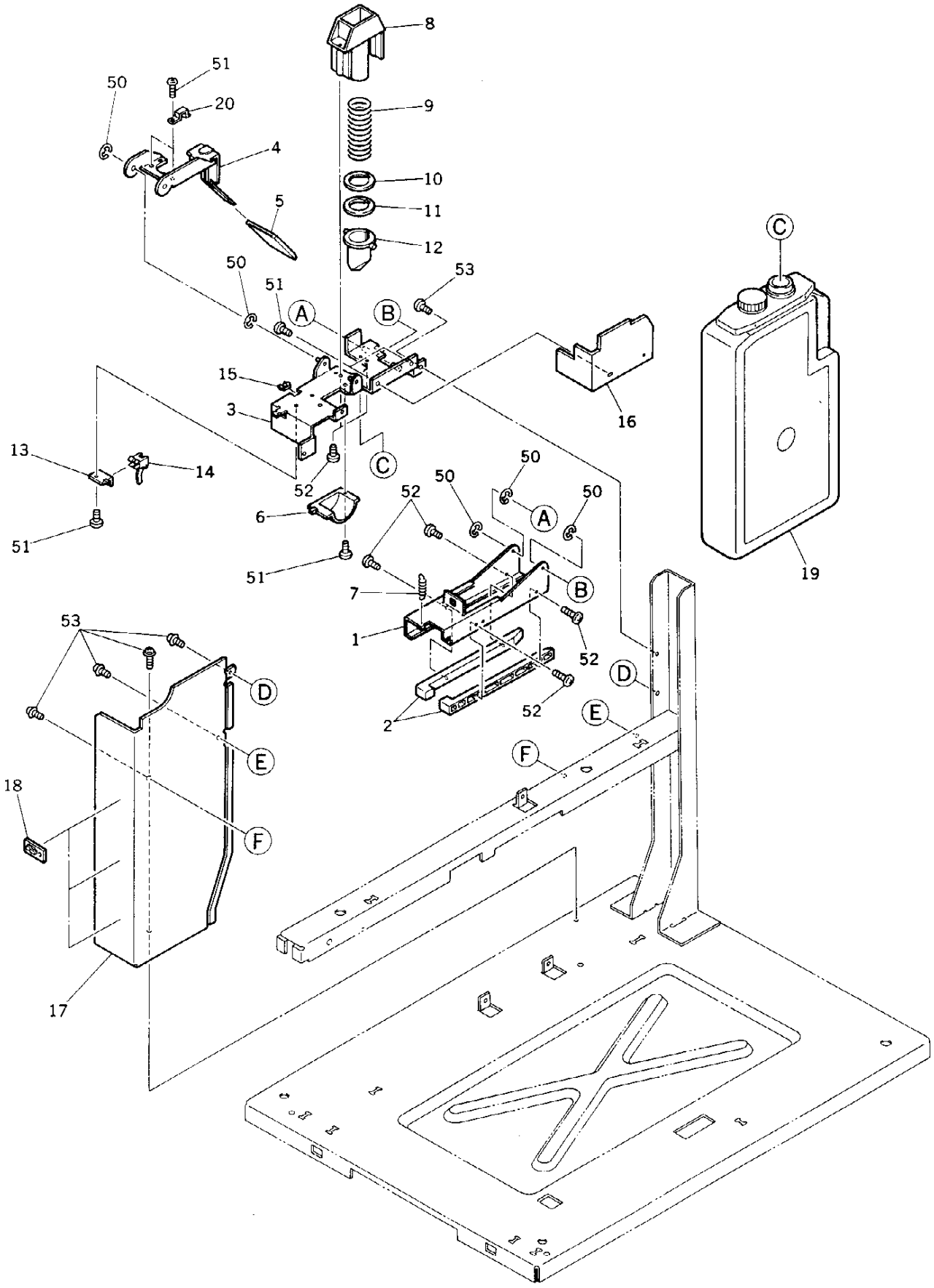
8
9
10
11
12
51
50
20
4
5
50
51
53
A
B
C
15
3
16
13
14
52
6
51
51
50
50
52
50
A
7
B
1
52
2
52
D
E
F
53
D
E
F
18
17
19

ITEM NO.	PARTS NO.	PARTS NAME	Q'TY / PAGE	Q'TY / PACK	SPE PRICE IN NONE	P	I	R	BSI NO.	TO	FROM	SERIAL NO.	REMARKS
1	4401 763350	HANGER-BAG-UTNR	1	1/P									
2	4401 763360	RAIL-BAG-U-TNR	2	1/P									
3	4401 763310	K-BASE-U-TNR-L	1	1/P									
4	4401 763370	LEVER-BAG-U-TNR	1	1/P									
5	4408 536130	CAP-GUIDE-TRS-2	1	1/P									
6	4401 763490	COV-MOT-FEED	1	1/P									
7	4401 760420	SPE-U-TNR	1	5/P									
8	4401 763400	TERM-U-TNR-L	1	1/P									
9	4401 762970	SPC-NOZ-U-TNR	1	1/P									
10	4401 762980	HLDR-SEAL-U-TNR	1	1/P									
11	4401 762990	SEAL-NOZ-U-TNR	1	1/P									
12	4401 763410	NOZZLE-U-TNR	1	1/P									
13	4401 762910	BRKT-SW-U-TNR	1	1/P									
14	4401 797520	SZ-U-TNR-150	1	1/P									
15	4843 390942	BD/W-EDS-2	1	10/P									
16	4401 760470	BRKT-COV-WH-TNR	1	1/P						016 1			
16 1	4401 760580	BRKT-COV-WH-TNR	1	1/P		C	E	D	F4I286		016	VJ4	
17	4401 762920	BRKT-WALL-U-TNR	1	1/P									
18	4400 827900	CLIP-WH-STACK	3	5/P									
19A	6608 4519	PS-TB6550	1	SUPPLY									4PCS/PACK
19B	6608 4520	PS-TB6550E	1	SUPPLY									FOR EUR
20	4401 762370	GUIDE-NOZ-U-TNR	2	5/P									
50	7405 005031	ERR050SKZN3A	5	50/P									
51	4842 040665	TPAN3006MSZN3L	6	50/P									
52	4842 040849	PTBR40*08MSZN3A	6	50/P									
53	4842 040060	TPAN40*08MSZN3L	8	50/P									

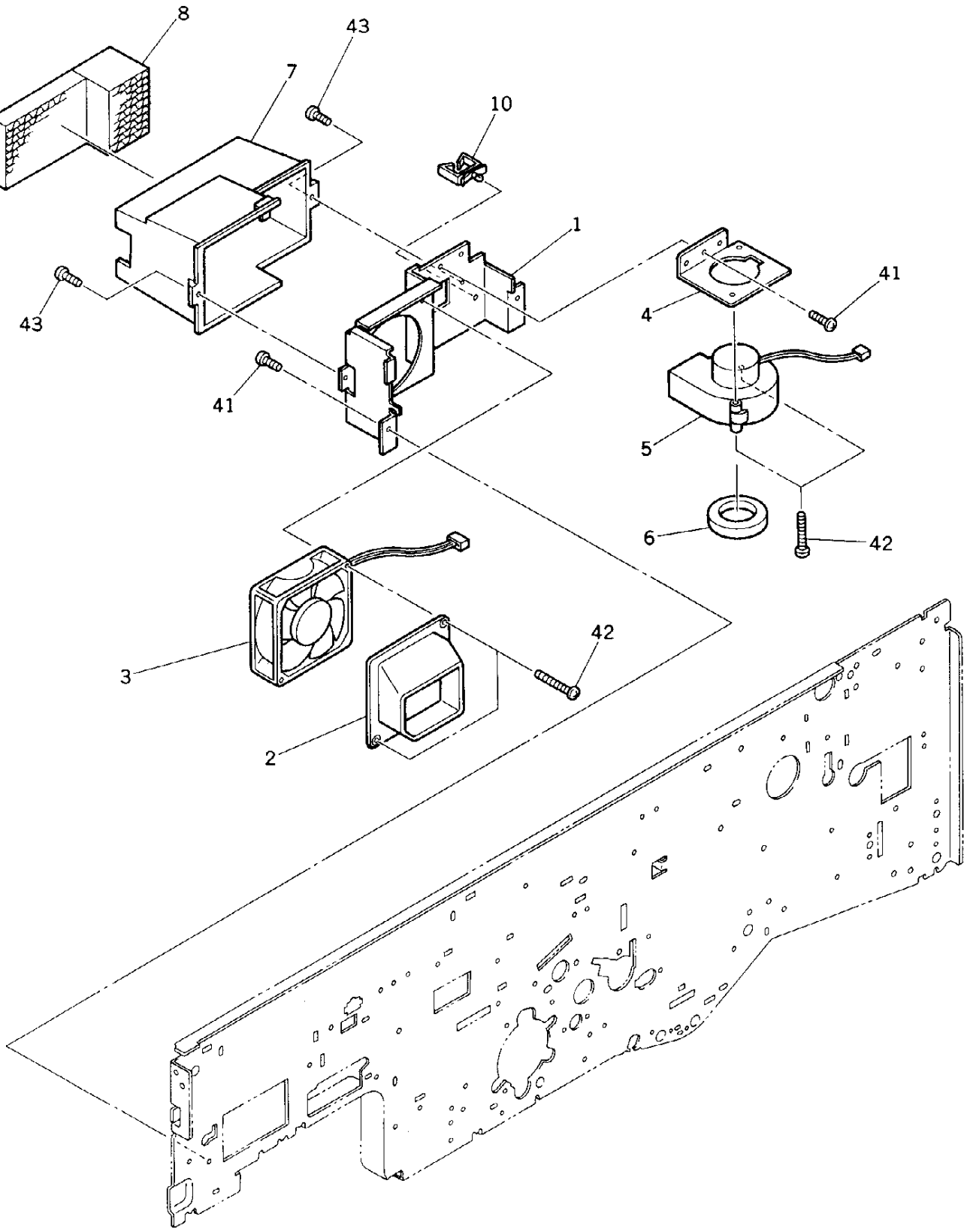
8
43
7
10
1
43
41
4
41
5
6
42
3
42
2

ITEM NO.	PARTS NO.	PARTS NAME	Q'TY / PAGE	Q'TY / PACK	SPE PRICE IN NONE	P	I	R	BSI NO.	TO	FROM	SERIAL NO.	REMARKS
1	4401 765070	BRKT-FAN-EXIT	1	1/P									
2	4401 765090	DUCT-FAN-EXIT-1	1	1/P									
3	4401 796940	FAN-EXIT-150	1	1/D						003 1			
3 1	4401 788460	FAN-EXIT-150	1	1/D		C	E	H	F4L368		003	VK4	
4	4401 765110	BRKT-FAN-BELT	1	1/P									
5	4401 796700	FAN-BTM-150	1	1/D									
6	4401 765140	SEAL-DUCT-BELT2	1	1/P									
7	4401 765100	DUCT-FAN-EXIT-2	1	1/P									
8	4401 765160	FILTER-FAN-EXIT	1	1/P									
10	4843 390888	CLP/W-WS-2U	1	5/P									
41	4842 040060	TPAN40*08MSZN3L	3	50/P									
42	4842 040386	TPAN-4035MSZN3L	4	50/P									
43	4842 040700	TZPAN4008MSZN3L	2	50/P									

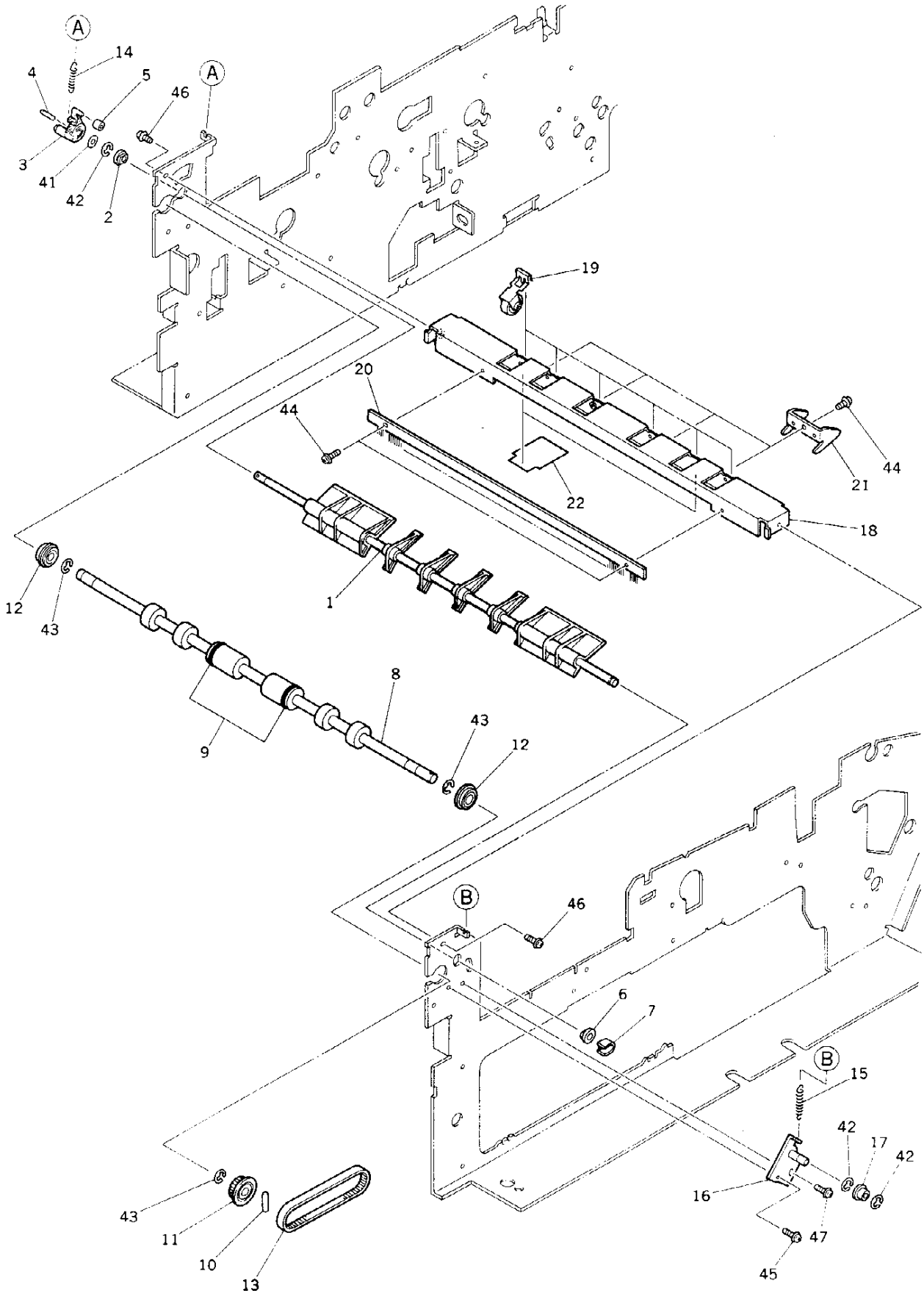
A
A
B
B
14
4
5
46
3
41
42
2
19
20
44
22
21
44
18
12
43
1
8
9
43
12
46
6
7
15
42
17
42
16
47
45
43
11
10
13

ITEM NO.	PARTS NO.	PARTS NAME	Q'TY / PAGE	Q'TY / PACK	SPE PRICE IN NONE	P	I	R	BSI NO.	TO	FROM	SERIAL NO.	REMARKS
1	4401 776650	GATE-A6F	1	1/P									
2	4407 734980	BUSH-6-GCB	1	5/P									
3	4402 205340	ARM-GATE	1	1/P									
4	4408 256620	PIN-2-10	1	10/P									
5	4402 206120	CUSH-ARM-GATE	1	5/P									
6	4407 734240	BUSH-6	1	5/P									
7	4407 972860	STOP-RING-6-5	1	5/P									
8	4401 776340	ROLL-EXIT-L	1	1/KP									
9	4402 206980	RING-EXIT-24-UR	2	5/P									
10	4346 312020	PIN	1	10/P									
11	4402 210280	PLY/T-32-FU	1	1/P									
12	4408 510800	BRG-688ZZNR	2	1/P									
13	4401 776360	BELT-106101-3SZ	1	1/P									
14	4363 270470	SPE-040-023-171	1	1/P									
15	4402 232680	SPE-6.3-0.6	1	1/P									
16	4401 776500	K-BKT-TENSION	1	1/P									
17	4400 335180	PULLEY-TENSION	1	1/P									
18	4401 776450	STAY-ROL-EX-UP	1	1/P									
19	4400 822830	ASM-EXIT-I-366	6	1/P						019 1			
19 1	4401 902860	ASM-EXIT-I	6	1/P		C	E	F	F96D653		019	VL5	
20	4401 776580	BRUSH-SUS-E	1	1/KP									
21	4401 776480	GUIDE-EXIT-UP	4	1/P									
22	4401 777590	MYLAR-GUIDE-EXT	2	5/P									
41	7400 106011	1HWAS060MSZN3A	1	50/P									
42	7405 005031	ERR050SKZN3A	3	50/P									
43	7405 007031	ERR070SKZN3A	3	50/P									
44	4842 040690	TZPAN3006MSZN3L	6	50/P									
45	4402 203820	SCREW-BKT-DEV	1	50/P									
46	4842 040060	TPAN40*08MSZN3L	2	50/P									
47	4842 040692	TZPAN3008MSZN3L	1	50/P									
20	4401 776580	BRUSH-SUS-E	1	1/KP									

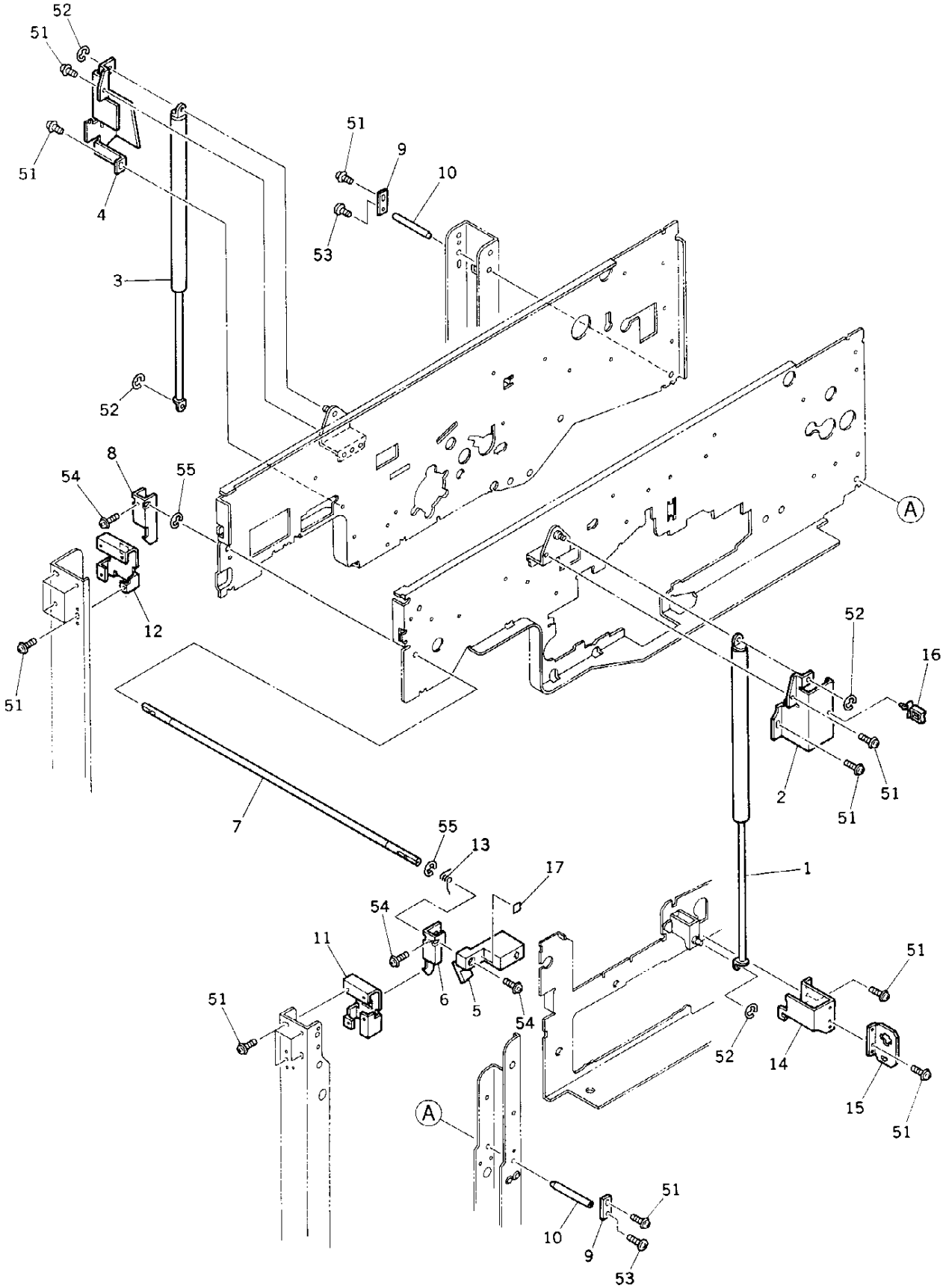
52
51
51
4
3
52
51
9
10
53
8
54
55
12
51
A
52
16
2
51
51
7
55
13
17
1
54
11
6
5
54
51
51
52
14
15
51
A
10
9
51
53

ITEM NO.	PARTS NO.	PARTS NAME	Q'TY / PAGE	Q'TY / PACK	SPE PRICE IN NONE	P	I	R	BSI NO.	TO	FROM	SERIAL NO.	REMARKS
1	4401 753980	BALANCER-150-F	1	1/P									
2	4401 754030	BKT-COV-BLC-UF	1	1/P						002 1			
2 1	4401 900690	BRKT-COV-BLC-UF	1	1/P		C	E	F	F95J504		002	VI5	
3	4401 753990	BALANCER-150-R	1	1/P									
4	4401 754040	BKT-COV-BLC-UR	1	1/P									
5	4401 754180	HANDLE-LOCK-L	1	1/P									
6	4401 754210	BRKT-LOCK-F	1	1/P									
7	4401 754190	SHAFT-LOCK-L	1	1/P									
8	4401 754200	BRKT-LOCK-R	1	1/P									
9	4401 754260	PLATE-LOCK-F	2	1/P									
10	4401 754270	SHAFT-FRM	2	1/P									
11	4401 754330	BRKT-STAY-F	1	1/P									
12	4401 754340	BRKT-STAY-R	1	1/P									
13	4401 754750	SP-LOCK-LVR	1	5/P									
14	4401 754080	BKT-COV-BLC-LF	1	1/P									
15	4401 753970	BKT-CONECTOR	1	1/P									
16	4843 390888	CLP/W-WS-2U	1	5/P									
17	4401 768310	LABEL-A	1	10/P									
51	4842 040060	TPAN40*08MSZN3L	16	50/P									
52	7405 005031	ERR050SKZN3A	4	50/P									
53	4842 040725	TPPAN4008MSZN3A	2	50/P									
54	7640 401051	ZPAN40*10MSZN3A	3	50/P									
55	7405 007031	ERR070SKZN3A	2	50/P									

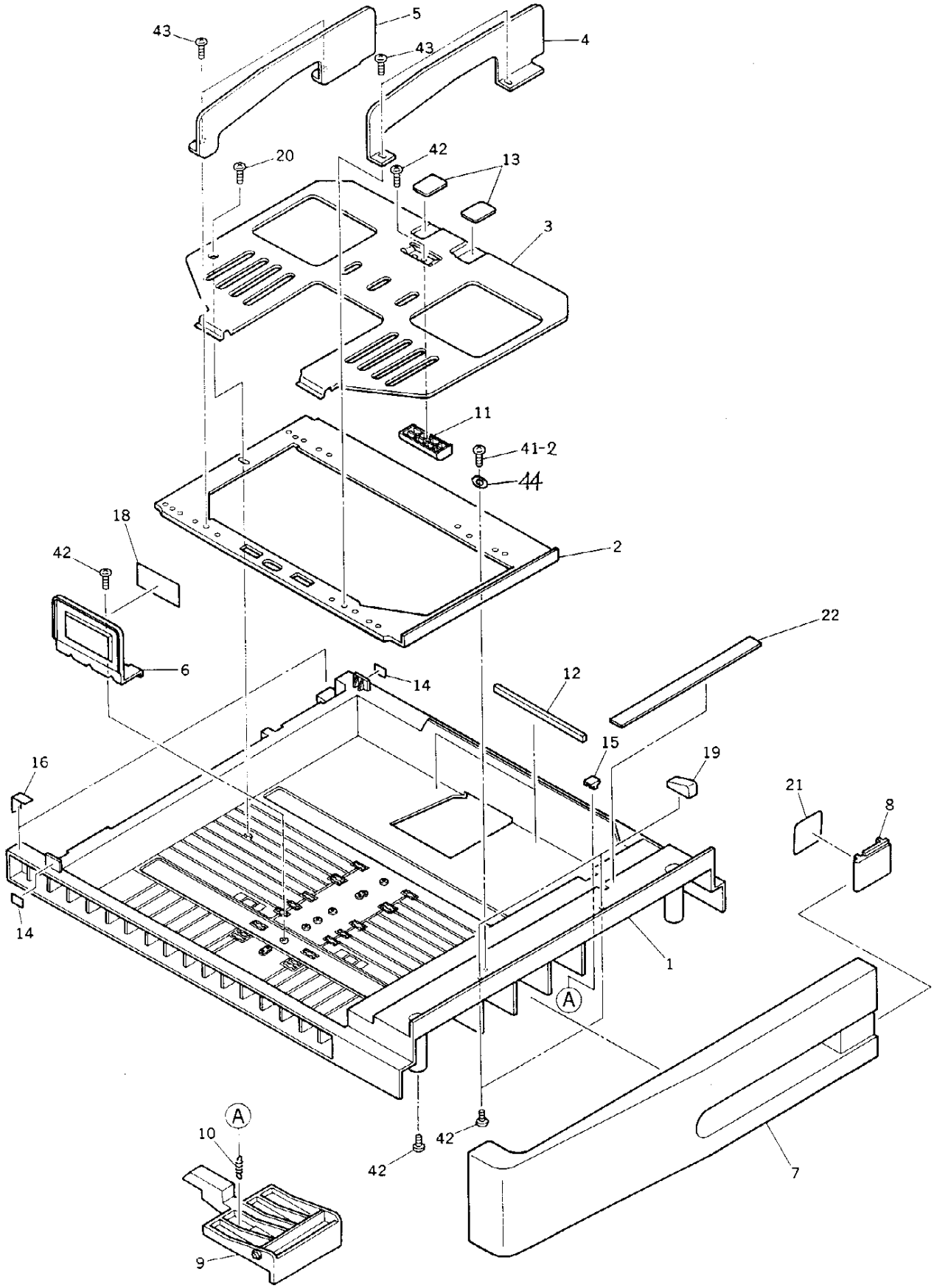
43
5
43
4
20
42
13
3
11
41-2
44
18
42
2
22
6
14
12
16
15
19
21
8
14
1
A
A
10
42
42
7
9

ITEM NO.	PARTS NO.	PARTS NAME	Q'TY / PAGE	Q'TY / PACK	SPE PRICE IN NONE	P	I	R	BSI NO.	TO	FROM	SERIAL NO.	REMARKS
1	4401 785060	CASSETTE	1	1/PP									
2	4400 907150	BASE-CST-ADJUST	1	N/A***						002 1			
2 1	4401 909900	BASE-CST-ADJUST	1	N/A***		C	E	F	F96D653	002 2	002	VA6	
2 2	4402 310490	BASE-CST-ADJUST	1	N/A***		C	-	F	F97G953		002 1	VB7	
3	4400 907170	TRAY-CST	1	1/PP						003 1			
3 1	4401 909910	TRAY-CST	1	1/PP		C	E	F	F96D653		003	VA6	
4	4400 909310	SIDE-WALL-F-1.6	1	1/P									
5	4400 909320	SIDE-WALL-R-1.6	1	1/P									
6	4402 235690	GUIDE-SIDE-BACK	1	1/P									
7	4401 785010	COVER-CST-F150	1	1/PP									
8	4400 908640	LID-SIZE-CST	1	1/PP									
9	4401 785020	LATCH-CST-F150	1	1/P									
10	4401 785040	SPE-LATCH-CST	1	5/P						010 1			
10 1	4402 310480	SPE075-080-0264	1	5/P		C	E	E	F97A813		010	VA7	
11	4400 907140	SPACER-CST	1	1/P									
12	4400 908680	CUSHION-CST	2	1/KP									
13	4400 901130	PAD-BRAKE	2	5/P									
14	4402 234930	SHEET-CST-S	2	5/P									
15	4400 908770	HOOK-CST-550	1	1/P									
16	4400 908450	MYLAR-CST	2	5/C									
18	4400 909220	LABEL-LIMIT	1	5/P									
19	4402 234530	HOLDER-CST-P	2	1/P									W/O A4R,LTR
20	4400 907160	SCREW-ADJ	1	50/P									
21A	4402 234580	SIZE-CST-A4R	1	1/P									A4R
21B	4400 907020	SIZE-CST-A4	1	5/P									A4
21C	4400 907010	SIZE-CST-A3	1	5/P									A3
21D	4401 785200	SIZE-CST-LTR	1	5/P									LT
21E	4402 234570	SIZE-CST-LG	1	1/P									LG
21F	4402 234560	SIZE-CST-LD	1	1/P									LD
22	4402 233680	LBL-PRESS-A	1	1/KP									LT,LG,LD
41	7640 300651	ZPAN30*06MSZN3A	1	50/P						041 1			
41 1	4842 040709	TPPAN3006MSZN3A	1	50/P		C	B	D	F4G228	041 2	041	VG4	
41 2	7640 300851	ZPAN30*08MSZN3A	1	50/P		C	B	D	F4J308		041 1	VJ413511	
42	4842 040849	PTBR40*08MSZN3A	9	50/P									
43	4842 040095	TWPAN4010MSZN3L	4	50/P									
44	7400 104011	1HWAS040MSZN3A	1	50/P		A	B	D	F4J308			VJ413511	

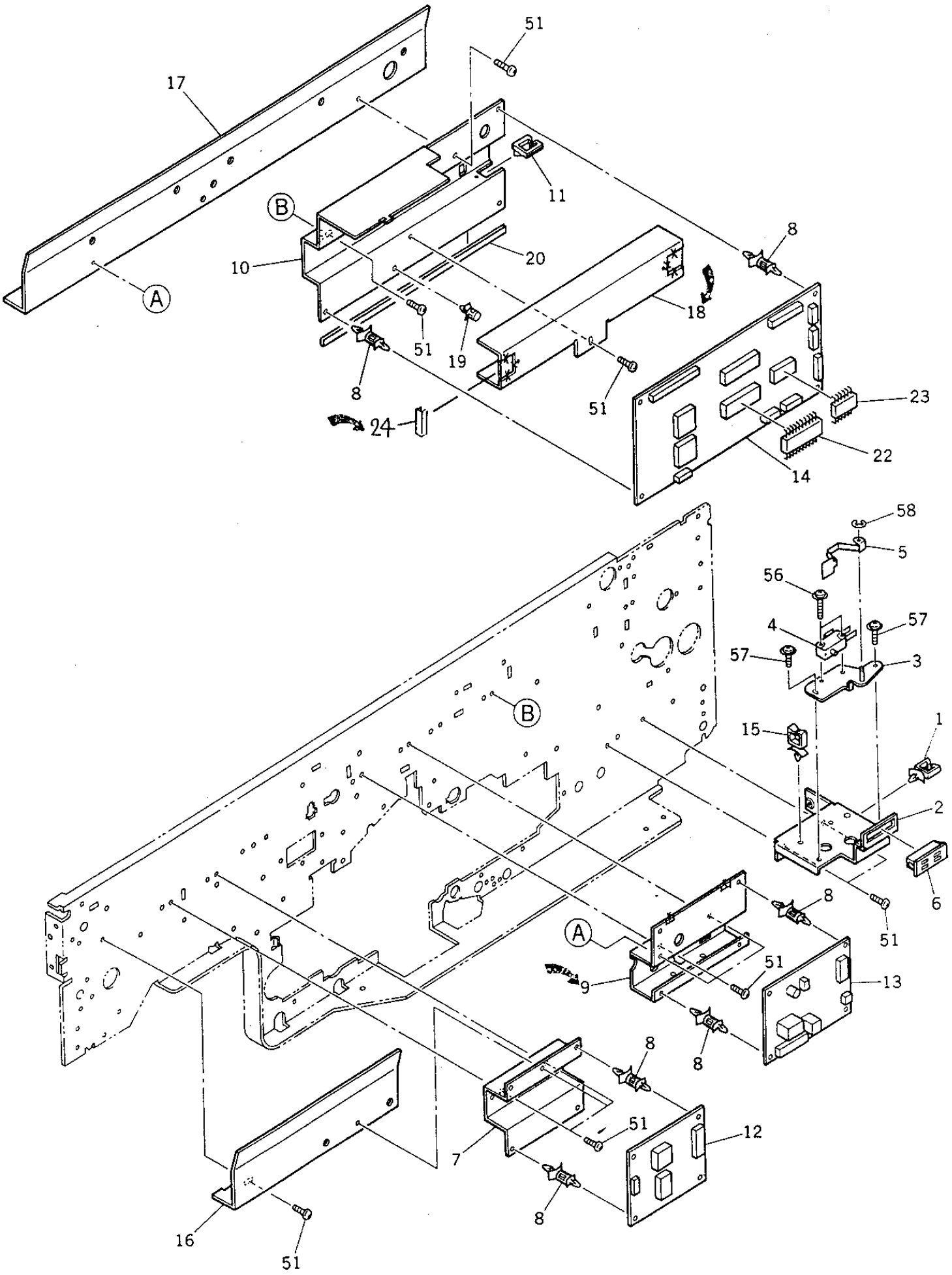
17
51
11
B
10
20
8
A
18
51
19
8
51
24
23
22
14
58
5
56
4
57
57
3
B
15
1
2
6
8
51
A
51
9
13
8
8
51
12
7
8
16
51

ITEM NO.	PARTS NO.	PARTS NAME	Q'TY / PAGE	Q'TY / PACK	SPE PRICE IN NONE	P	I	R	BSI NO.	TO	FROM	SERIAL NO.	REMARKS
1	4843 390888	CLP/W-WS-2U	1	5/P									
2	4401 754350	BRKT-SW-DOOR-R	1	1/P									
3	4401 754110	K-PLT-SW-DOOR	1	1/P									
4	4843 231858	SM-VX-01-1C23	1	1/P									
5	4401 754140	SPL-SW-DOOR	1	1/P									
6	4402 202680	MG-CATCH-22	1	1/P									
7	4401 754320	BRKT-PWA-LAMP	1	1/P									
8	4843 390869	PWZ-SPLS-4U	12	5/P									
9	4401 754290	BRKT-PWA-DRUM	1	1/P						009 1			
9 1	4401 900630	BRKT-PWA-DRUM	1	1/P		C	E	F	F95J504	009 2	009		
9 2	4402 302660	BRKT-PWA-DRUM	1	1/P		C	E	F	F97A813		009 1	VI6	
10	4401 754280	BRKT-PWA-LOGIC	1	1/P									
11	4400 808280	EDS-1717U	1	5/P									
12A	4407 987470	PWA-F-LRG-315UC	1	1/SB									100V SERIES
12B	4401 795620	PWA-F-LRG-150E	1	1/SB									200V SERIES
13	4401 795550	PWA-F-DRM-150E	1	1/SB									
14	4400 748130	PWA-F-LGC-151	1	1/SB									
15	4843 390854	CLP/W-LWS-1U	1	5/P									
16	4401 754740	BRKT-OPT-U-L	1	1/P									
17	4401 754730	BRKT-OPT-U-R	1	1/P									
18	4401 754570	BRKT-PWA-LGC-L	1	1/P						018 1			
18 1	4401 900860	BRKT-PWA-LGC-L	1	1/P		C	E	F	F95J504		018		
19	4843 390859	PWZ-SPS-4U	2	5/P									
20	4401 753900	EDGING-BRKT-LGC	1	5/P									
22A	4400 749020	PRA-T151UC-010	1	1/S						022A1			TAD
22A1	4400 749290	PRA-T151UC-020	1	1/S		C	B	D	F4D134	022A2	022A	VD410846	TAD
22A2	4400 749540	PRA-T151UC-031	1	1/S		C	B	D	F5B393	022A3	022A1	VB515585	TAD
22A3	4400 749750	PRA-T151UC-041	1	1/S		C	B	D	F95J527	022A4	022A2	VJ519142	TAD
22A4	4400 748670	PRA-T151UC-041	1	1/S		C	E	H	F96J776		022A3	VL6	TAD
22B	4400 749020	PRA-T151UC-010	1	1/S						022B1			CSD
22B1	4400 749290	PRA-T151UC-020	1	1/S		C	B	D	F4D134	022B2	022B	VD410846	CSD
22B2	4400 749540	PRA-T151UC-031	1	1/S		C	B	D	F5B393	022B3	022B1	VB515585	CSD
22B3	4400 749750	PRA-T151UC-041	1	1/S		C	B	D	F95J527	022B4	022B2	VJ519142	CSD
22B4	4400 748670	PRA-T151UC-041	1	1/S		C	E	H	F96J776		022B3	VL6	CSD
22C	4400 749010	PRA-T151GB-010	1	1/S						022C1			EUD
22C1	4400 749280	PRA-T151GB-020	1	1/S		C	B	D	F4D134	022C2	022C	VD410846	EUD
22C2	4400 749530	PRA-T151GB-031	1	1/S		C	B	D	F5B393	022C3	022C1	VB515585	EUD
22C3	4400 749740	PRA-T151GB-041	1	1/S		C	B	D	F95J527	022C4	022C2	VJ519142	EUD
22C4	4400 748660	PRA-T151GB-041	1	1/S		C	E	H	F96J776		022C3	VL6	EUD
22D	4400 749040	PRA-T151D-010	1	1/S						022D1			GSD
22D1	4400 749310	PRA-T151D-020	1	1/S		C	B	D	F4D134	022D2	022D	VD410846	GSD
22D2	4400 749550	PRA-T151D-030	1	1/S		C	B	D	F5B393	022D3	022D1	VB515585	GSD
22D3	4400 749760	PRA-T151D-040	1	1/S		C	B	D	F95J527	022D4	022D2	VJ519142	GSD
22D4	4400 748680	PRA-T151D-040	1	1/S		C	E	H	F96J776		022D3	VL6	GSD
22E	4400 749050	PRA-T151F-010	1	1/S						022E1			FRD
22E1	4400 749320	PRA-T151F-020	1	1/S		C	B	D	F4D134	022E2	022E	VD410846	FRD
22E2	4400 749560	PRA-T151F-030	1	1/S		C	B	D	F5B393	022E3	022E1	VB515585	FRD
22E3	4400 749770	PRA-T151F-040	1	1/S		C	B	D	F95J527	022E4	022E2	VJ519142	FRD
22E4	4400 748690	PRA-T151F-040	1	1/S		C	E	H	F96J776		022E3	VL6	FRD
22F	4400 749010	PRA-T151GB-010	1	1/S						022F1			SED
22F1	4400 749280	PRA-T151GB-020	1	1/S		C	B	D	F4D134	022F2	022F	VD410846	SED
22F2	4400 749530	PRA-T151GB-031	1	1/S		C	B	D	F5B393	022F3	022F1	VB515585	SED
22F3	4400 749740	PRA-T151GB-041	1	1/S		C	B	D	F95J527	022F4	022F2	VJ519142	SED
22F4	4400 748660	PRA-T151GB-041	1	1/S		C	E	H	F96J776		022F3	VL6	SED
22G	4400 749010	PRA-T151GB-010	1	1/S						022G1			UKD
22G1	4400 749280	PRA-T151GB-020	1	1/S		C	B	D	F4D134	022G2	022G	VD410846	UKD
22G2	4400 749530	PRA-T151GB-031	1	1/S		C	B	D	F5B393	022G3	022G1	VB515585	UKD
22G3	4400 749740	PRA-T151GB-041	1	1/S		C	B	D	F95J527	022G4	022G2	VJ519142	UKD
22G4	4400 748660	PRA-T151GB-041	1	1/S		C	E	H	F96J776		022G3	VL6	UKD
22H	4400 749020	PRA-T151UC-010	1	1/S						022H1			AUD
22H1	4400 749290	PRA-T151UC-020	1	1/S		C	B	D	F4D134	022H2	022H	VD410846	AUD
22H2	4400 749540	PRA-T151UC-031	1	1/S		C	B	D	F5B393	022H3	022H1	VB515585	AUD
22H3	4400 749750	PRA-T151UC-041	1	1/S		C	B	D	F95J527	022H4	022H2	VJ519142	AUD
22H4	4400 748670	PRA-T151UC-041	1	1/S		C	E	H	F96J776		022H3	VL6	AUD
22I	4400 749020	PRA-T151UC-010	1	1/S						022I1			TWD
22I1	4400 749290	PRA-T151UC-020	1	1/S		C	B	D	F4D134	022I2	022I	VD410846	TWD
22I2	4400 749540	PRA-T151UC-031	1	1/S		C	B	D	F5B393	022I3	022I1	VB515585	TWD
22I3	4400 749750	PRA-T151UC-041	1	1/S		C	B	D	F95J527	022I4	022I2	VJ519142	TWD
22I4	4400 748670	PRA-T151UC-041	1	1/S		C	E	H	F96J776		022I3	VL6	TWD
22J	4400 749020	PRA-T151UC-010	1	1/S						022J1			SAN

ITEM NO.	PARTS NO.	PARTS NAME	Q'TY / PAGE	Q'TY / PACK	SPE PRICE IN NONE	P	I	R	BSI NO.	TO	FROM	SERIAL NO.	REMARKS
22J1	4400 749290	PRA-T151UC-020	1	1/S		C	B	D	F4D134	022J2	022J	VD410846	SAN
22J2	4400 749540	PRA-T151UC-031	1	1/S		C	B	D	F5B393	022J3	022J1	VB515585	SAN
22J3	4400 749750	PRA-T151UC-041	1	1/S		C	B	D	F95J527	022J4	022J2	VJ519142	SAN
22J4	4400 748670	PRA-T151UC-041	1	1/S		C	E	H	F96J776		022J3	VL6	SAN
22K	4400 749020	PRA-T151UC-010	1	1/S						022K1			EUN
22K1	4400 749290	PRA-T151UC-020	1	1/S		C	B	D	F4D134	022K2	022K	VD410846	EUN
22K2	4400 749540	PRA-T151UC-031	1	1/S		C	B	D	F5B393	022K3	022K1	VB515585	EUN
22K3	4400 749750	PRA-T151UC-041	1	1/S		C	B	D	F95J527	022K4	022K2	VJ519142	EUN
22K4	4400 748670	PRA-T151UC-041	1	1/S		C	E	H	F96J776		022K3	VL6	EUN
22L	4400 749020	PRA-T151UC-010	1	1/S						022L1			AUN
22L1	4400 749290	PRA-T151UC-020	1	1/S		C	B	D	F4D134	022L2	022L	VD410846	AUN
22L2	4400 749540	PRA-T151UC-031	1	1/S		C	B	D	F5B393	022L3	022L1	VB515585	AUN
22L3	4400 749750	PRA-T151UC-041	1	1/S		C	B	D	F95J527	022L4	022L2	VJ519142	AUN
22L4	4400 748670	PRA-T151UC-041	1	1/S		C	E	H	F96J776		022L3	VL6	AUN
22M	4400 749080	PRA-T151I-010	1	1/S						022M1			ITALIAN
22M1	4400 749350	PRA-T151I-020	1	1/S		C	B	D	F4D134	022M2	022M		ITALIAN
22M2	4400 749570	PRA-T151I-030	1	1/S		C	B	D	F5B393	022M3	022M1		ITALIAN
22M3	4400 749780	PRA-T151I-040	1	1/S		C	B	D	F95J527	022M4	022M2		ITALIAN
22M4	4400 748720	PRA-T151I-040	1	1/S		C	E	H	F96J776		022M3		ITALIAN
22N	4400 749090	PRA-T151E-010	1	1/S						022N1			SPANISH
22N1	4400 749360	PRA-T151E-020	1	1/S		C	B	D	F4D134	022N2	022N		SPANISH
22N2	4400 749580	PRA-T151E-030	1	1/S		C	B	D	F5B393	022N3	022N1		SPANISH
22N3	4400 749790	PRA-T151E-040	1	1/S		C	B	D	F95J527	022N4	022N2		SPANISH
22N4	4400 748730	PRA-T151E-040	1	1/S		C	E	H	F96J776		022N3		SPANISH
22O	4400 749100	PRA-T151SF-010	1	1/S						022O1			FINNISH
22O1	4400 749370	PRA-T151SF-020	1	1/S		C	B	D	F4D134	022O2	022O		FINNISH
22O2	4400 749590	PRA-T151SF-030	1	1/S		C	B	D	F5B393	022O3	022O1		FINNISH
22O3	4400 749800	PRA-T151SF-040	1	1/S		C	B	D	F95J527	022O4	022O2		FINNISH
22O4	4400 748740	PRA-T151SF-040	1	1/S		C	E	H	F96J776		022O3		FINNISH
22P	4400 749110	PRA-T151S-010	1	1/S						022P1			SWEDISH
22P1	4400 749380	PRA-T151S-020	1	1/S		C	B	D	F4D134	022P2	022P		SWEDISH
22P2	4400 749600	PRA-T151S-030	1	1/S		C	B	D	F5B393	022P3	022P1		SWEDISH
22P3	4400 749810	PRA-T151S-040	1	1/S		C	B	D	F95J527	022P4	022P2		SWEDISH
22P4	4400 748750	PRA-T151S-040	1	1/S		C	E	H	F96J776		022P3		SWEDISH
22Q	4400 749120	PRA-T151N-010	1	1/S						022Q1			NORWEGIAN
22Q1	4400 749390	PRA-T151N-020	1	1/S		C	B	D	F4D134	022Q2	022Q		NORWEGIAN
22Q2	4400 749610	PRA-T151N-030	1	1/S		C	B	D	F5B393	022Q3	022Q1		NORWEGIAN
22Q3	4400 749820	PRA-T151N-040	1	1/S		C	B	D	F95J527	022Q4	022Q2		NORWEGIAN
22Q4	4400 748760	PRA-T151N-040	1	1/S		C	E	H	F96J776		022Q3		NORWEGIAN
22R	4400 749130	PRA-T151DK-010	1	1/S						022R1			DANISH
22R1	4400 749400	PRA-T151DK-020	1	1/S		C	B	D	F4D134	022R2	022R		DANISH
22R2	4400 749620	PRA-T151DK-030	1	1/S		C	B	D	F5B393	022R3	022R1		DANISH
22R3	4400 749830	PRA-T151DK-040	1	1/S		C	B	D	F95J527	022R4	022R2		DANISH
22R4	4400 748770	PRA-T151DK-040	1	1/S		C	E	H	F96J776		022R3		DANISH
22S	4400 749140	PRA-T151NL-010	1	1/S						022S1			DUTCH
22S1	4400 749410	PRA-T151NL-020	1	1/S		C	B	D	F4D134	022S2	022S		DUTCH
22S2	4400 749630	PRA-T151NL-030	1	1/S		C	B	D	F5B393	022S3	022S1		DUTCH
22S3	4400 749840	PRA-T151NL-040	1	1/S		C	B	D	F95J527	022S4	022S2		DUTCH
22S4	4400 748780	PRA-T151NL-040	1	1/S		C	E	H	F96J776		022S3		DUTCH
22T	4400 749150	PRA-T151P-010	1	1/S						022T1			PORTUGUESE
22T1	4400 749420	PRA-T151P-020	1	1/S		C	B	D	F4D134	022T2	022T		PORTUGUESE
22T2	4400 749640	PRA-T151P-030	1	1/S		C	B	D	F5B393	022T3	022T1		PORTUGUESE
22T3	4400 749850	PRA-T151P-040	1	1/S		C	B	D	F95J527	022T4	022T2		PORTUGUESE
22T4	4400 748790	PRA-T151P-040	1	1/S		C	E	H	F96J776		022T3		PORTUGUESE
23	4843 114328	IC-MK48T08B-15	1	1/S						023 1			
23 1	4843 115662	IC-M48T08100PC1	1	1/S		C	E	J	F95F456		023	VF5	
24	4401 900870	EDGE-BRKT-LGC-L	1	5/P		A	-	F	F95J504				
51	4842 040060	TPAN40*08MSZN3L	13	50/P									
56	4842 040133	TZPAN3016MSZN3L	2	50/P									
57	4842 040690	TZPAN3006MSZN3L	2	50/P									
58	7405 003031	ERR030SKZN3A	1	50/P									

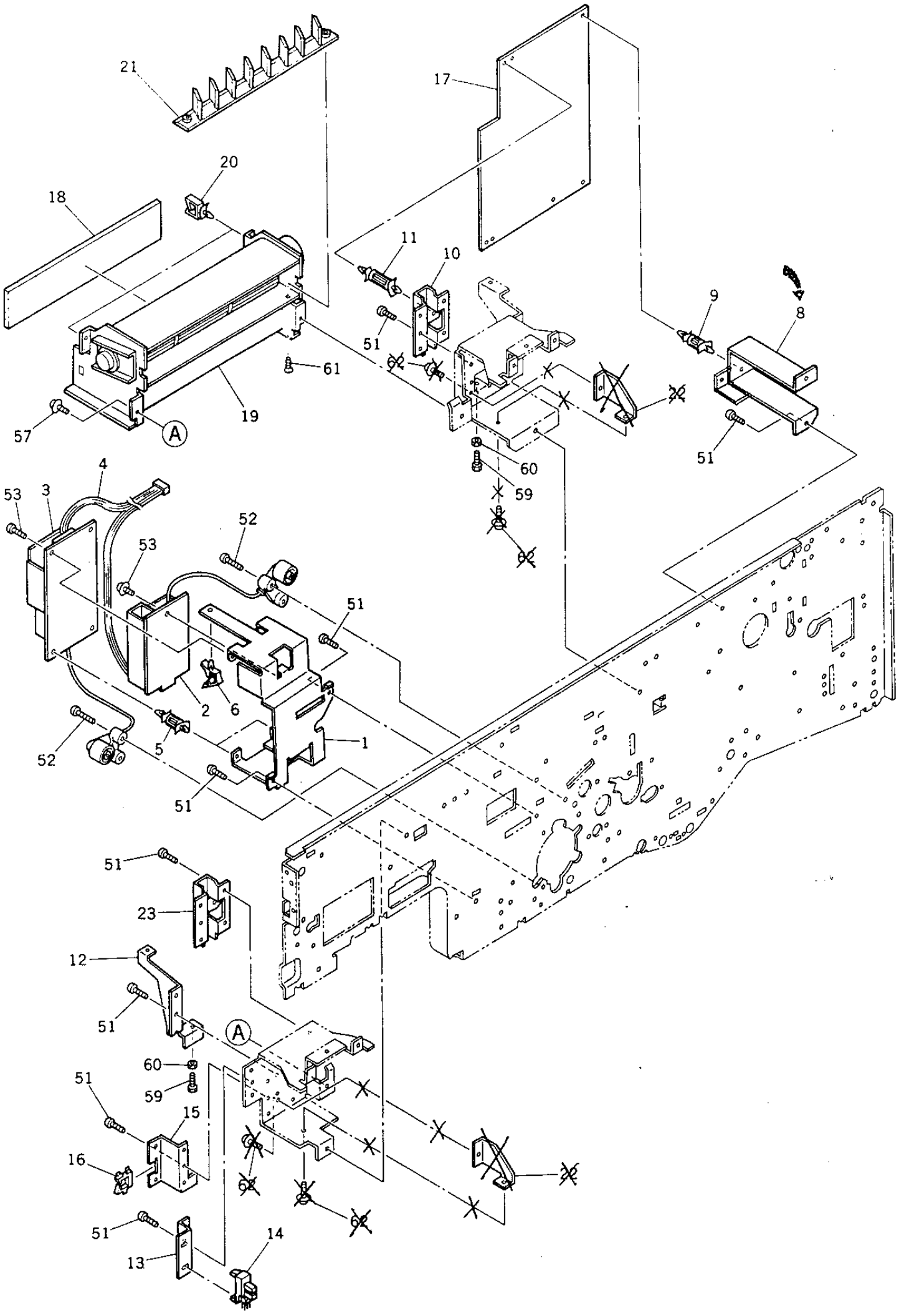
21
17
20
18
11
10
9
8
51
61
19
57
A
60
59
51
4
53
3
52
53
51
2
6
5
1
52
51
51
23
12
51
A
60
59
51
15
16
51
14
13

ITEM NO.	PARTS NO.	PARTS NAME	Q'TY / PAGE	Q'TY / PACK	SPE PRICE IN NONE	P	I	R	BSI NO.	TO	FROM	SERIAL NO.	REMARKS
1	4401 754310	BRKT-HVT-M-PRE	1	1/P									
2	4401 797000	PS-HVT-M-150	1	1/C									
3	4401 797010	PS-PRE-CL-150	1	1/C									
4	4401 796200	WH-SUB-HVTM-150	1	1/P									
5	4843 390870	PWZ-SPLS-6U	3	5/P									
6	4843 391052	CLP/W-LS-10	1	5/P									
8	4401 753620	BKT-PWA-DR-U	1	1/P						008 1			
8 1	4401 900610	BKT-PWA-DR-U	1	1/P		C	E	F	F95J504		008	VE5	
9	4843 390871	PWZ-SPLS-7U	1	5/P									
10	4401 753530	HOLDER-DF	1	1/P									
11	4843 390875	PWZ-SPLS-14U	1	5/P									
12	4401 753550	STOPPER-DF	1	1/P									
13	4401 753540	BKT-SZ-HOME-CRG	1	1/P									
14	4400 902350	SCO-SX460-P2	1	1/C									
15	4401 753510	BKT-DF-CLAMP	1	1/P									
16	4843 390942	BD/W-EDS-2	1	10/P									
17	4400 748110	PWA-F-SUB-151	1	1/SB						017 1			
17 1	4400 748150	PWA-F-SUB-151	1	1/SB		E	-	J	F4B103		017		
18	4402 046400	FILTER-FAN	1	1/KP									
19	4402 046420	FAN-DC-545	1	1/C									
20	4843 390855	CLP/W-LWS-2U	2	5/P									
21	4402 217440	LOUVER-FAN-OPT	1	1/P									
22	4401 753580	REINFORCE-BKT-D	2	1/P						022 1			
22 1	4401 753580	REINFORCE-BKT-D	0	1/P		B	-	J	F4L368		022		
23	4401 753590	HOLDER-DF-L	1	1/P									
51	4842 040060	TPAN40*08MSZN3L	14	50/P									
52	4842 040037	TPAN4018MSZN-3L	4	50/P									
53	4842 040118	THPAN4008MSZN3L	2	50/P									
57	4842 040690	TZPAN3006MSZN3L	2	50/P									
59	7341 401411	5HEX40*14MSZN3A	2	50/P									
60	7370 400011	7/0NUT40MSZN3A	2	50/P									
61	4842 040495	PTBR30*06MSZN3A	2	50/P									
62	4842 040725	TPPAN4008MSZN3A	4	50/P						062 1			
62 1	4842 040725	TPPAN4008MSZN3A	0	50/P		B	-	J	F4L368		062		

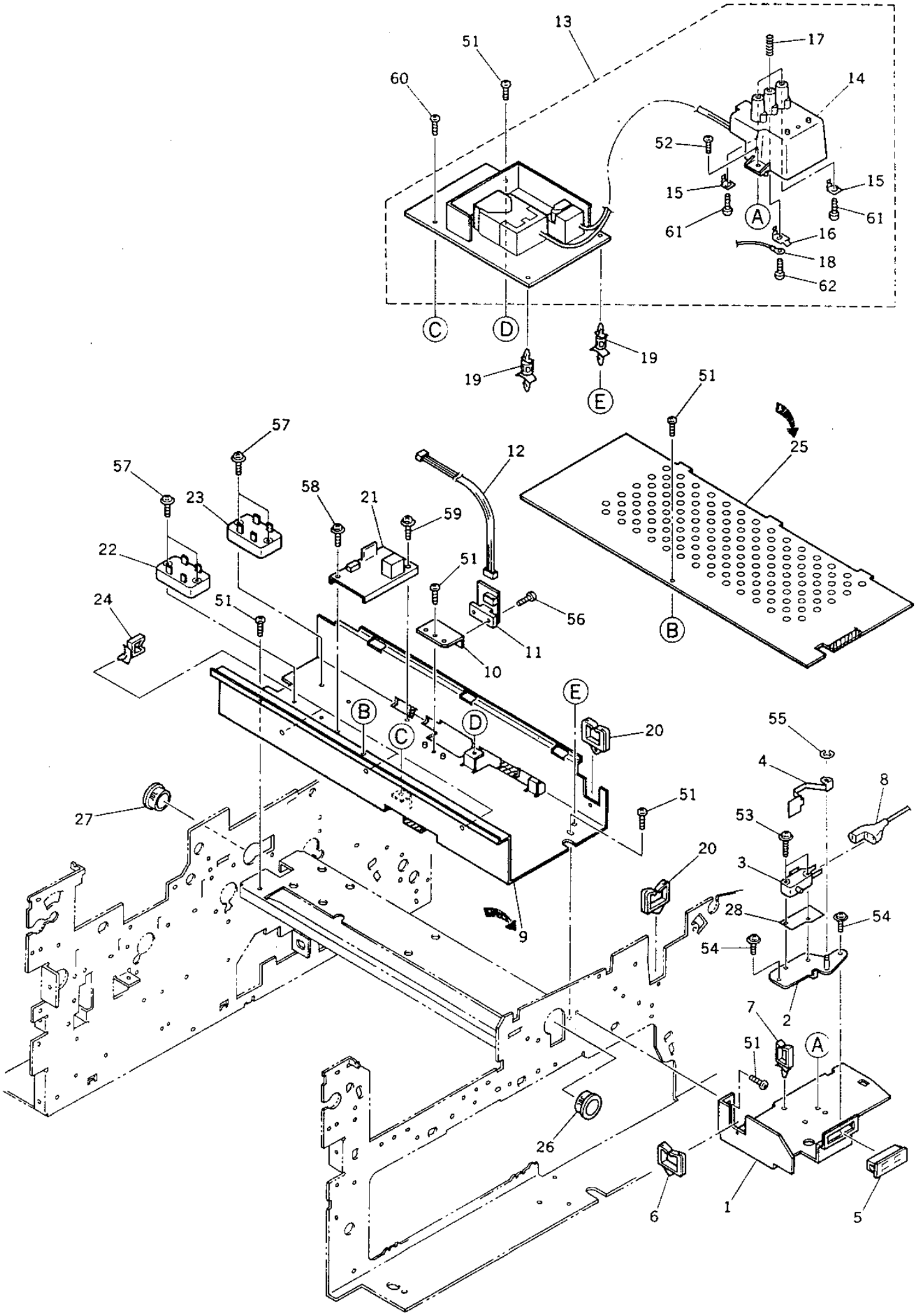
13
51
60
17
14
52
15
15
61
61
A
16
18
62
C
D
19
19
E
51
25
57
57
12
23
58
21
59
22
51
24
51
56
11
10
B
E
B
C
D
20
55
4
8
27
51
53
20
3
28
54
9
54
2
7
51
A
26
6
1
5

TOSHIBA

ITEM NO.	PARTS NO.	PARTS NAME	Q'TY / PAGE	Q'TY / PACK	SPE PRICE IN NONE	P	I	R	BSI NO.	TO	FROM	SERIAL NO.	REMARKS
1	4401 754380	BRKT-SW-DOOR-L	1	1/P									
2	4401 754110	K-PLT-SW-DOOR	1	1/P									
3A	4843 231803	SM-V-15-1C26	1	1/P									100V SERIES
3B	4843 231850	SM-DD2L-A1AA	1	1/P									200V SERIES
4A	4401 754140	SPL-SW-DOOR	1	1/P									100V SERIES
4B	4401 754150	SPL-SW-DOOR-2	1	1/P									200V SERIES
5	4402 202680	MG-CATCH-22	1	1/P									
6	4400 808280	EDS-1717U	1	5/P									
7	4843 390889	CLP/W-WS-3U	1	5/P									
8A	4401 796060	WH-DOOR-JU-150	1	1/P									100V SERIES
8B	4401 796070	WH-DOOR-200-150	1	1/P									200V SERIES
9	4401 764940	STAY-HVT-TR	1	1/P						009 1			
9 1	4401 911280	STAY-HVT-TR	1	1/P		C	E	F	F95J504	009 2	009	VF5	
9 2	4402 310990	STAY-HVT-TR	1	1/P		C	E	F	F98B191		009 1	VE7	
10	4401 777370	BKT-SNSR-STACK	1	1/P									
11	4402 222280	PWA-F-PEM-366-0	1	1/C						011 1			
11 1	4401 795630	PWA-F-PEM-150-0	1	1/C		C	D	D	F4E164		011	VF4	
12	4401 796220	WH-PFC-AJSW-150	1	1/P									
13	4401 765000	ASM-HVT-TR-150	1	1/C									
14	4401 764990	K-TERMINAL-HVT	1	1/P									
15	4402 205730	PLT-TERM-HVT-TR	2	1/P									
16	4401 764980	PLATE-TERM-BIAS	1	1/P									
17	4402 205740	SPC-TERM-HVT-TR	3	1/P									
18	4401 795840	WH-BELTGB-150	1	1/P									
19	4843 390871	PWZ-SPLS-7U	2	5/P									
20	4843 391164	BD/W-EDS-1717U	2	10/P									
21	4401 797120	PS-PRE-TR-150	1	1/C									
22A	3037 886215	TSS16G48S	1	1/D									100V SERIES
22B	3037 886230	TSS16J48SR	1	1/D									200V SERIES
23A	3037 885405	TY-TSS8G48S	1	1/P									100V SERIES
23B	3037 885416	TY-TSS8J48SR	1	1/P									200V SERIES
24	4408 721660	CLP/W-LWS-2Y	3	5/P									
25	4401 764950	COV-STAY-HVT-TR	1	1/P						025 1			
25 1	4401 905360	COV-STAY-HVT-TR	1	1/P		C	E	F	F95J504		025	VK5	
26	4843 390809	CLP/W-OCB-1000	1	5/P									
27	4843 390808	CLP/W-OCB-875	1	5/P									
28B	4401 754920	MYLAR-SW-DOOR	1	5/P									200V SERIES
51	4842 040060	TPAN40*08MSZN3L	7	50/P									
52	4842 040700	TZPAN4008MSZN3L	1	50/P									
53	4842 040133	TZPAN3016MSZN3L	2	50/P									
54	4842 040690	TZPAN3006MSZN3L	2	50/P									
55	7405 003031	ERR030SKZN3A	1	50/P									
56	4842 040665	TPAN3006MSZN3L	1	50/P									
57	4842 040692	TZPAN3008MSZN3L	4	50/P									
58	4842 040673	TPAN4014MSZN3L	1	50/P									
59	4842 040121	THPAN4014MSZN3L	1	50/P									
60	4842 040118	THPAN4008MSZN3L	1	50/P									
61	4842 040495	PTBR30*06MSZN3A	2	50/P									
62	4842 040846	PTBR30*08MSZN3A	1	50/P									

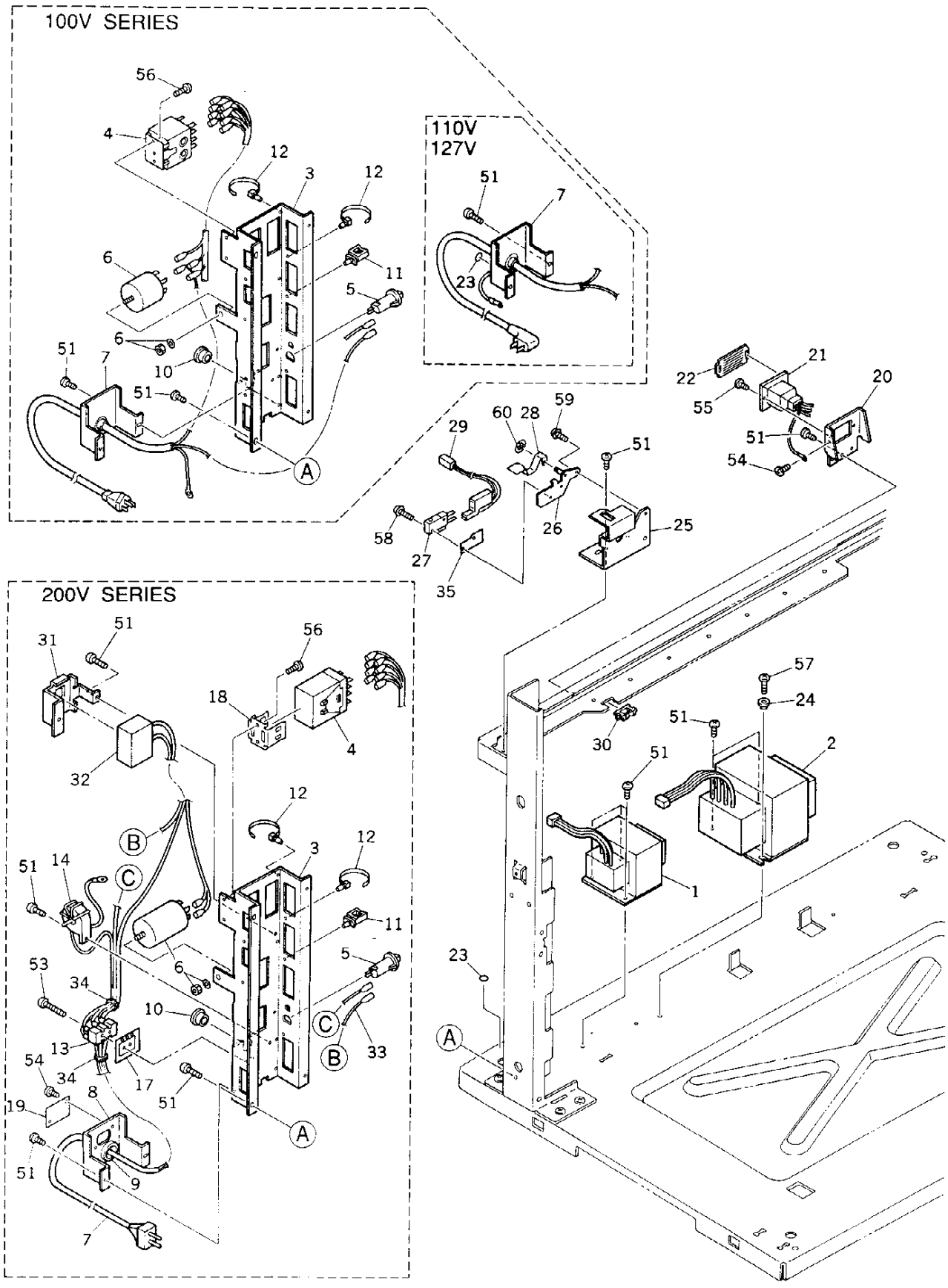
100V SERIES
110V
127V
200V SERIES

ITEM NO.	PARTS NO.	PARTS NAME	Q'TY / PAGE	Q'TY / PACK	SPE PRICE IN NONE	P	I	R	BSI NO.	TO	FROM	SERIAL NO.	REMARKS
1	4400 847760	TR-100-366	1	1/C									
2A	4401 797070	TR-115-150	1	1/C									TAD
2B	4401 797070	TR-115-150	1	1/C									CSD
2C	4401 797080	TR-200-150	1	1/C									EUD
2D	4401 797080	TR-200-150	1	1/C									GSD
2E	4401 797080	TR-200-150	1	1/C									FRD
2F	4401 797080	TR-200-150	1	1/C									SED
2G	4401 797080	TR-200-150	1	1/C									UKD
2H	4401 797080	TR-200-150	1	1/C									AUD
2I	4401 797070	TR-115-150	1	1/C									TWD
2J	4401 797400	TR-127-150	1	1/C									SAN
2K	4401 797080	TR-200-150	1	1/C									EUN
2L	4401 797080	TR-200-150	1	1/C									AUN
3	4408 516040	BKT-ELEC	1	1/P						003 1			
3 1	4401 911200	BKT-ELEC	1	1/P		C	E	F	F95J504		003	VE5	
4A	4407 306050	VC20A-3A-AC100V	1	1/C						004A1			100V SERIES
4A1	4843 200803	KP-BW575019K	1	1/C		C	B	D	F4L376		004A	VB5	100V SERIES
4B	4408 519040	KP-G4J3342TUS10	1	1/D									200V SERIES
5A	4402 255020	B-NRW10-15A-Y	1	1/D									100V SERIES
5B	4402 255050	B-NRW10-10A-Y	1	1/D									200V SERIES
6A	4400 878600	FILTER-VU-215F3	1	1/D									100V SERIES
6B	4400 878610	FILTER-ZSB2210	1	1/D									200V SERIES
7A	4408 546620	ASM-PWCBL-115	1	1/P									TAD
7B	4408 546620	ASM-PWCBL-115	1	1/P									CSD
7C	4407 024130	PW-CABLE-E-287	1	1/P						007C1			EUD
7C1	4400 961350	K-PW-CBL-E-287	1	1/P		C	E	J	F4G247		007C	VF4	EUD
		ADDITION OF A MATERIAL DENTIFICATION LABEL											
7D	4407 024130	PW-CABLE-E-287	1	1/P						007D1			GSD
7D1	4400 961350	K-PW-CBL-E-287	1	1/P		C	E	J	F4G247		007D	VF4	GSD
		ADDITION OF A MATERIAL DENTIFICATION LABEL											
7E	4407 024130	PW-CABLE-E-287	1	1/P						007E1			FRD
7E1	4400 961350	K-PW-CBL-E-287	1	1/P		C	E	J	F4G247		007E	VF4	FRD
		ADDITION OF A MATERIAL DENTIFICATION LABEL											
7F	4407 024130	PW-CABLE-E-287	1	1/P						007F1			SED
7F1	4400 961350	K-PW-CBL-E-287	1	1/P		C	E	J	F4G247		007F	VF4	SED
		ADDITION OF A MATERIAL DENTIFICATION LABEL											
7G	4402 255840	CBL/P-UK	1	1/P									UKD
7H	4407 322330	POWER-CABLE-AU	1	1/P									AUD
7I	4408 546610	ASM-PWCBL-100	1	1/P									TWD
7J	4408 546610	ASM-PWCBL-100	1	1/P									SAN
7K	4407 024130	PW-CABLE-E-287	1	1/P						007K1			EUN
7K1	4400 961350	K-PW-CBL-E-287	1	1/P		C	E	J	F4G247		007K	VF4	EUN
		ADDITION OF A MATERIAL DENTIFICATION LABEL											
7L	4407 322330	POWER-CABLE-AU	1	1/P									AUN
8B	4408 546550	BKT-P-CABLE-EUR	1	1/P									200V SERIES
9B	4407 987410	BUSH-CBL-200	1	5/P									200V SERIES
10	4842 414631	GMT-OCB-625	1	10/P									
11	4843 390856	CLP/W-LWS-3U	1	5/P									
12	4407 406860	BAND-PLP1.5I	2	5/P									
13B	4404 432210	TERMINAL-500K13	1	1/P									200V SERIES
14B	4407 918670	COIL-EARTH-343	1	1/P									200V SERIES
17B	4407 751090	STICKER-TERM	1	5/P									200V SERIES
18B	4408 519130	BRKT-R99-04G2J	1	1/P									200V SERIES
19B	4408 542740	PLATE-BLIND-STR	1	1/P									200V SERIES
20	4401 754520	BRKT-SORT-CON	1	1/P									
21A	4400 748270	WH-SRT-CNT-151	1	1/P									100V SERIES
21B	4400 748300	WH-SRT-CNT-151E	1	1/P									200V SERIES
22	4401 754540	COVER-SORT-CNTR	1	1/P									
23A	4404 610110	MARK-EARTH-VDE	1	10/P									EXCEPT SAN
23J	4404 610110	MARK-EARTH-VDE	2	10/P									SAN
24	4401 787180	COLLAR-4*6*1.8	1	5/P									
25	4401 754760	BRKT-SW-D-REAR	1	1/P									
26	4401 754110	K-PLT-SW-DOOR	1	1/P									
27A	4843 231803	SM-V-15-1C26	1	1/P									100V SERIES
27B	4843 231850	SM-DD2L-A1AA	1	1/P									200V SERIES
28A	4401 754140	SPL-SW-DOOR	1	1/P									100V SERIES
28B	4401 754150	SPL-SW-DOOR-2	1	1/P									200V SERIES
29A	4401 798000	WH-SHEL-JP-150	1	1/P									100V SERIES
29B	4401 798010	WH-SHEL-EN-150	1	1/P									200V SERIES
30	4843 390943	BD/W-EDS-3	1	10/P									
31B	4401 787480	HLDR-CONDENSER	1	1/P									200V SERIES

ITEM NO.	PARTS NO.	PARTS NAME	Q'TY / PAGE	Q'TY / PACK	SPE PRICE IN NONE	P	I	R	BSI NO.	TO	FROM	SERIAL NO.	REMARKS
32B	4401 797740	K-CONDENSER-150	1	1/D									200V SERIES
33B	4401 798110	WH-BRAKER-150	1	1/P									200V SERIES
34B	4346 754010	SKB-BAND-1	2	5/P									200V SERIES
35B	4401 754920	MYLAR-SW-DOOR	1	5/P									200V SERIES
51A	4842 040060	TPAN40*08MSZN3L	14	50/P									100V SERIES
51B	4842 040060	TPAN40*08MSZN3L	16	50/P									200V SERIES
53B	7040 301611	PAN30*16MSZN3AI	2	50/P									200V SERIES
54A	4842 040118	THPAN4008MSZN3L	1	50/P									100V SERIES
54B	4842 040118	THPAN4008MSZN3L	3	50/P									200V SERIES
55	4842 040683	TBID3006MSZN3A	2	50/P									
56	4842 040700	TZPAN4008MSZN3L	2	50/P									
57	4842 040671	TPAN4012MSZN3L	1	50/P									
58	4842 040133	TZPAN3016MSZN3L	2	50/P									
59	4842 040690	TZPAN3006MSZN3L	2	50/P									
60	7405 003031	ERR030SKZN3A	1	50/P									

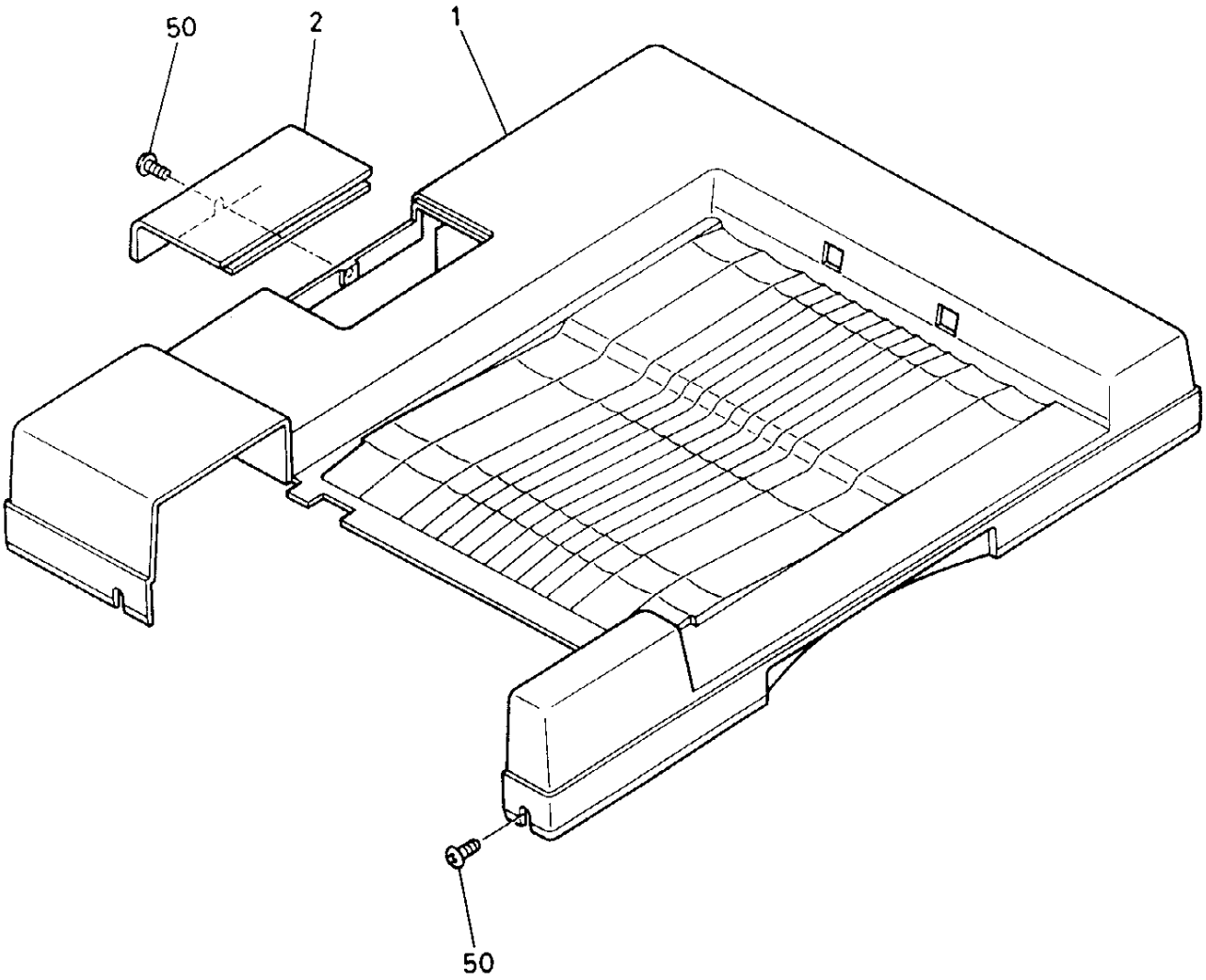
50
2
1
50

ITEM NO.	PARTS NO.	PARTS NAME	Q'TY / PAGE	Q'TY / PACK	SPE PRICE IN NONE	P	I	R	BSI NO.	TO	FROM	SERIAL NO.	REMARKS
1	4402 241600	COVER-DF-T	1	1/PP									
2	4402 241610	COV-SERVICE-T	1	1/PP									
50	7043 400613	BID40*06MSCR1AI	10	50/P						050 1			
50 1	4401 790530	BID40*06MSCR1AI	10	50/P		E	-	J	F98D263		050		

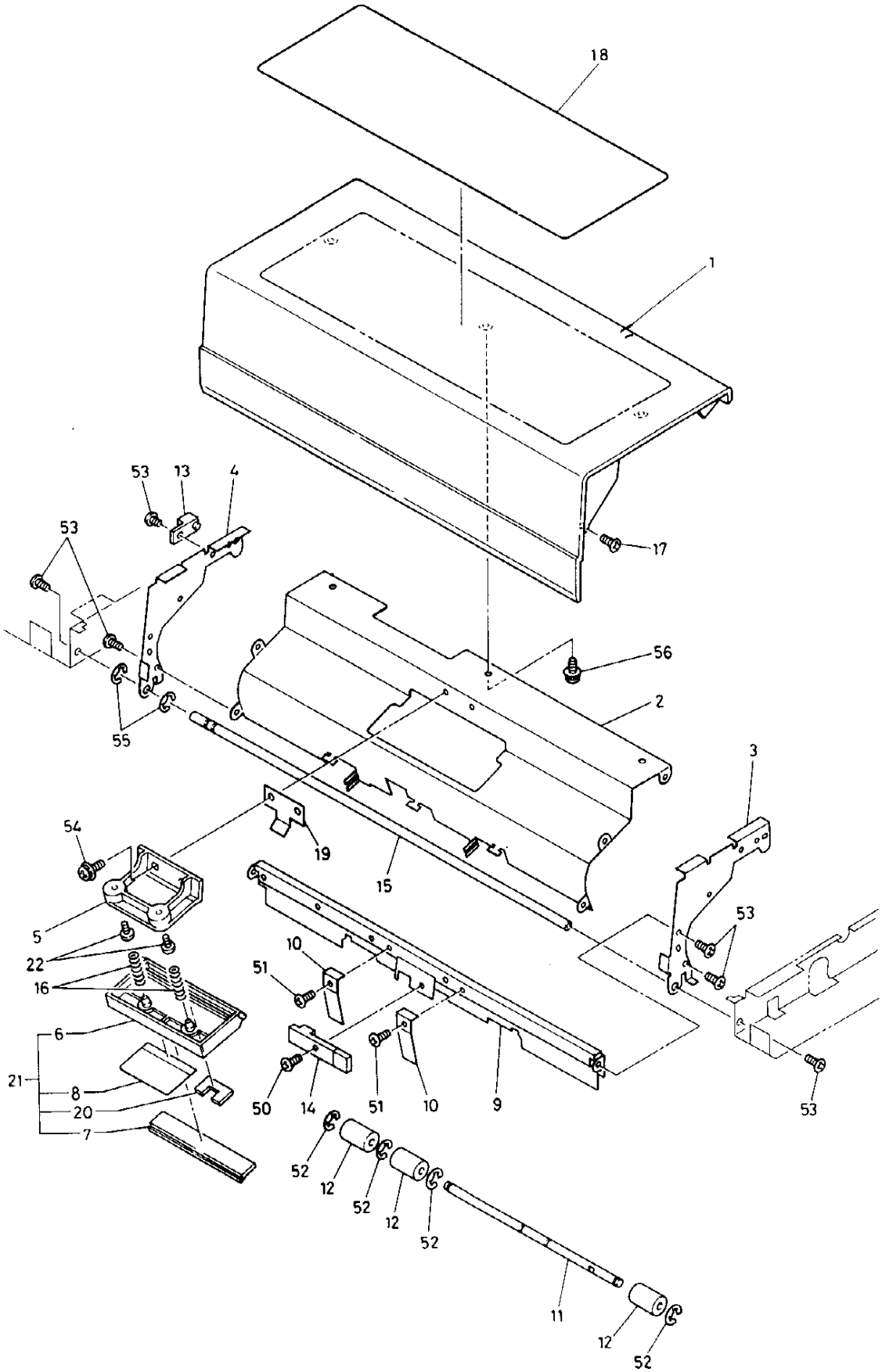
18
1
53
13
4
53
17
56
2
55
3
54
19
15
53
5
22
10
51
16
6
21
8
20
7
50
14
51
10
9
53
52
12
52
12
52
11
12
52

ITEM NO.	PARTS NO.	PARTS NAME	Q'TY / PAGE	Q'TY / PACK	SPE PRICE IN NONE	P	I	R	BSI NO.	TO	FROM	SERIAL NO.	REMARKS
1	4402 241620	COV-OR-JAM-T	1	1/P									
2	4402 241630	GUIDE-FEED-B	1	1/P									
3	4402 241640	FRAME-FEED-F	1	1/P									
4	4402 241650	FRAME-FEED-R	1	1/P									
5	4402 244110	HLD-PAD-SPE-724	1	1/P									
6	4402 244030	HOLDER-PAD	1	1/P									
7	4402 241680	PAD-SEPARATE	1	1/KP									
8	4402 241690	GUIDE-MYLAR-ALN	1	1/KP									
9	4402 241700	STAY-CENSOR-ALN	1	1/P									
10	4402 241710	SPL-ALIGN	2	1/P									
11	4402 241720	SFT-ROL-AL-U	1	1/P									
12	4402 241730	ROL-D14*L22	3	1/P									
13	4402 241740	K-HLD-MG	1	1/P									
14	4402 246140	SZ-GP4A22	1	1/C									
15	4402 241750	SFT-COV-JAM	1	1/P									
16	4402 244150	SPRING-PAD	2	5/P									
17	4402 241770	PAN-D4*3-M3*3	1	50/P									
18A	4401 768210	LBL-INST-6550UC	1	1/KP									TAD
18B	4401 768210	LBL-INST-6550UC	1	1/KP									CSD
18C	4401 768220	LBL-INST-6550ER	1	1/KP									EUD
18D	4401 768230	LBL-INST-6550GR	1	1/KP									GSD
18E	4401 768240	LBL-INST-6550FR	1	1/KP									FRD
18F	4401 768220	LBL-INST-6550ER	1	1/KP									SED
18G	4401 768220	LBL-INST-6550ER	1	1/KP									UKD
18M	4401 768250	LBL-INST-6550SP	1	1/KP									SPANISH
18N	4401 768260	LBL-INST-6550IT	1	1/KP									ITALIAN
19	4402 244040	SPL-HLD-PAD-SPE	1	1/P									
20	4402 243650	BRAKE-SEPARATE	1	N/A***									
21	4402 244060	K-SPRT-PAD	1	1/P									
22	4402 244120	SCREW-M3*6-724	2	10/P									
50	7040 300817	PAN30*08MSZN3L	1	50/P									
51	4842 040692	TZPAN3008MSZN3L	2	50/P									
52	7405 004031	ERR040SKZN3A	4	50/P									
53	4842 040709	TPPAN3006MSZN3A	7	50/P									
54	4842 040700	TZPAN4008MSZN3L	2	50/P									
55	7405 005031	ERR050SKZN3A	2	50/P									
56	7640 300441	ZPAN30*04MSZN3A	3	50/P									

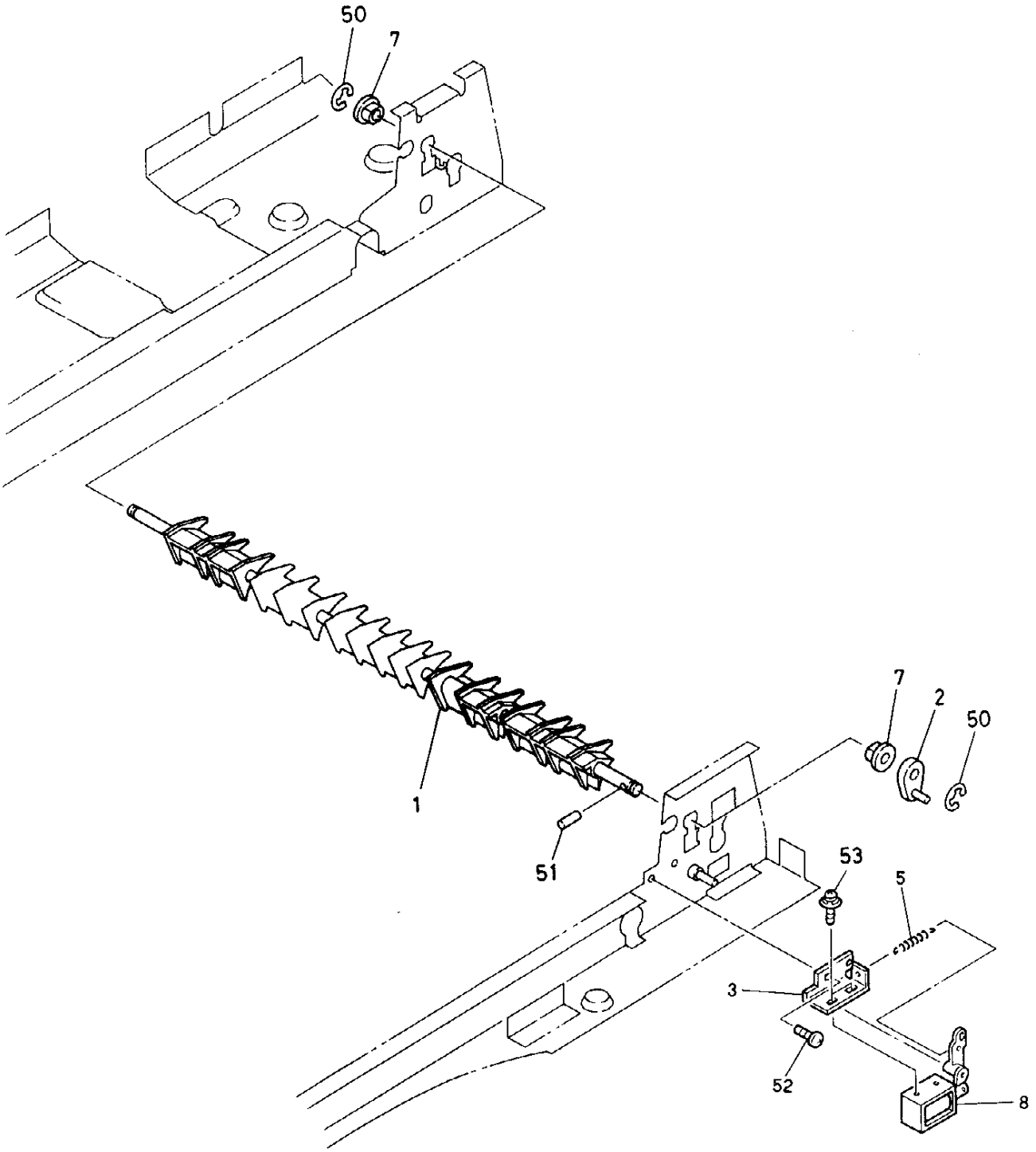
50
7
1
51
7
2
50
53
5
3
52
8

ITEM NO.	PARTS NO.	PARTS NAME	Q'TY / PAGE	Q'TY / PACK	SPE PRICE IN NONE	P	I	R	BSI NO.	TO	FROM	SERIAL NO.	REMARKS
1	4402 241780	K-FLAP-REVERSE	1	1/KP									
2	4402 241790	LINK-1-FLAP-RVS	1	1/P									
3	4401 791050	BRKT-SOL	1	1/P									
5	4402 241820	SPE-026-040-095	1	5/P									
7	4407 610870	BUSH-SFT-ALIGN	2	5/P						007 1			
7 1	4402 244440	BUSH-SFT-ALIGN	2	5/P		C	E	E	F5C414	007 2	007	VC5	
7 2	4401 914760	BUSH-D6-4	2	5/P		C	E	F	F95L543		007 1		
8	4401 792250	K-SND-GATE-714	1	1/C									
50	7405 005031	ERR050SKZN3A	2	50/P									
51	7432 201011	HPIN20/10MSZN3A	2	50/P									
52	4842 040689	TZPAN3006MSZN3A	1	50/P									
53	7640 300531	ZPAN30*05MSZN3A	2	50/P									

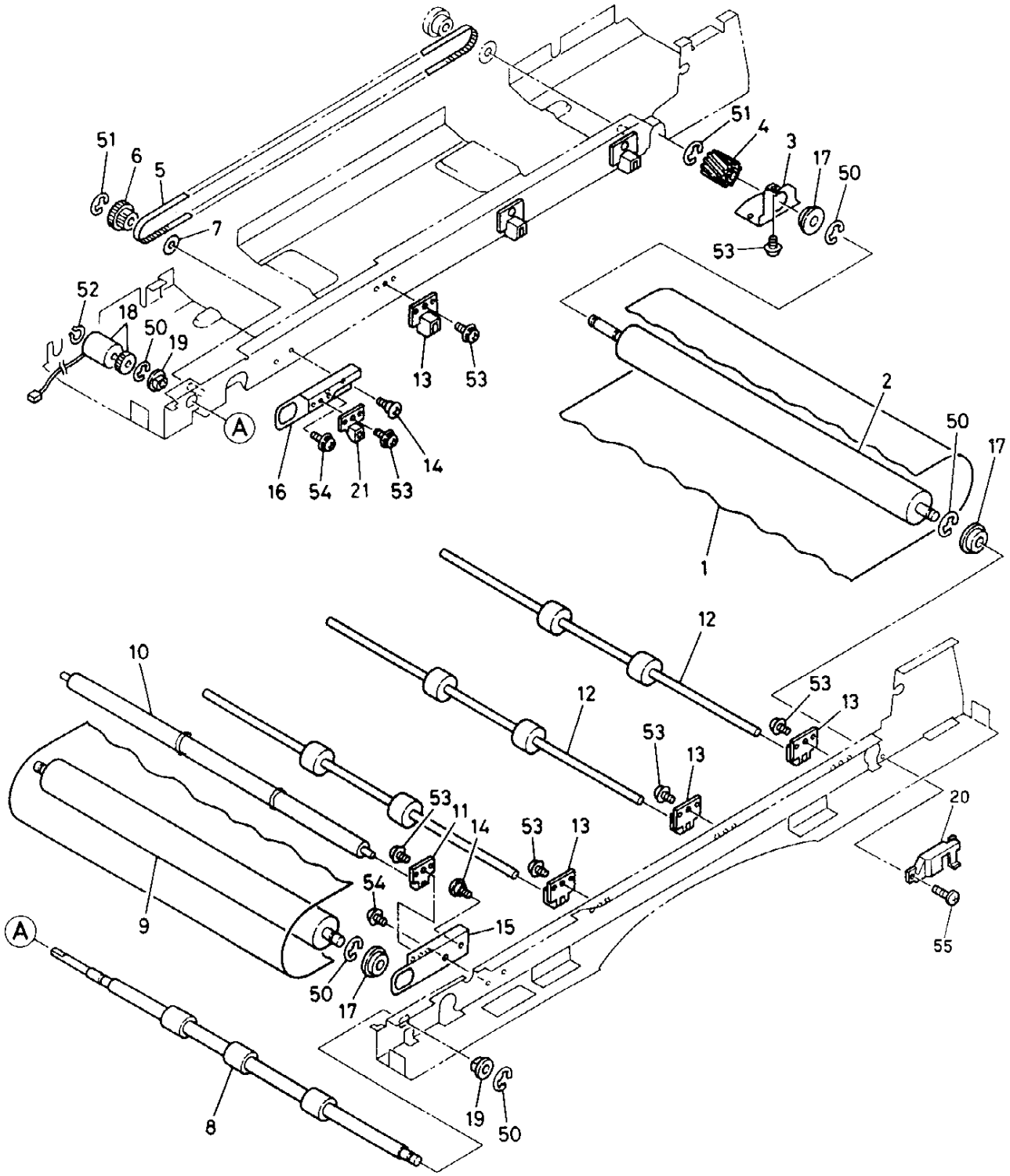
51
6
5
7
51
4
3
17
50
53
52
18
50
19
13
53
A
16
54
21
53
14
2
50
17
1
12
10
12
53
13
53
13
53
11
14
53
13
20
54
9
15
A
50
17
55
8
19
50

ITEM NO.	PARTS NO.	PARTS NAME	Q'TY / PAGE	Q'TY / PACK	SPE PRICE IN NONE	P	I	R	BSI NO.	TO	FROM	SERIAL NO.	REMARKS
1	4402 241830	BLT-328*1007	1	1/C						001 1			
1 1	4401 794580	BELT-DF-714	1	1/C		C	B	D	F4H255		001	VH412852	
2	4402 241840	K-ROL-BLT-R	1	1/KP									
3	4402 241850	BKT-ROL-BLT-R	1	1/P									
4	4402 241860	GEAR-Z24	1	1/P									
5	4402 241870	BLT/T-S3M-333-6	1	1/P									
6	4402 241880	PLY/GEAR-16*26	1	1/P									
7	4402 241890	FLANGE-D17	1	1/P									
8	4402 241900	K-ROL-ALIGN	1	1/KP									
9	4402 241910	K-ROL-BLT-L	1	1/KP									
10	4402 241920	ROL-PRESS-D12	1	1/KP						010 1			
10 1	4401 794590	ROL-PRS-D14-16	1	1/KP		C	B	D	F4H255		010	VH412852	
11	4402 241930	HOLD-ROL-PRS-IN	1	1/P									
12	4402 241940	K-ROL-PRESS-BLT	3	1/KP									
13	4402 241950	HOLD-ROL-PRESS	6	1/P									
14	4402 241960	PAN-STUD-M3*2.2	2	50/P									
15	4402 241970	PLT-ROL-BLT-F	1	1/P									
16	4402 241980	PLT-ROL-BLT-R	1	1/P									
17	4408 322790	BRG-LNR-1680HHR	4	1/P									
18	4402 246060	CLH-GMC2-552	1	1/C									
19	4407 624510	BUSHING	2	5/P									
20	4401 792330	COV-HANDLE-OPEN	1	1/P									
21	4401 791000	HOLD-PRES-ROL	1	1/P									
50	7405 007031	ERR070SKZN3A	5	50/P									
51	7405 005031	ERR050SKZN3A	2	50/P									
52	4842 090536	SRG-GS-6.0	1	50/P									
53	4842 040689	TZPAN3006MSZN3A	11	50/P									
54	4842 040697	TZPAN4006MSZN3A	2	50/P									
55	4401 791080	SCREW-MR-M3-6	1	50/P									

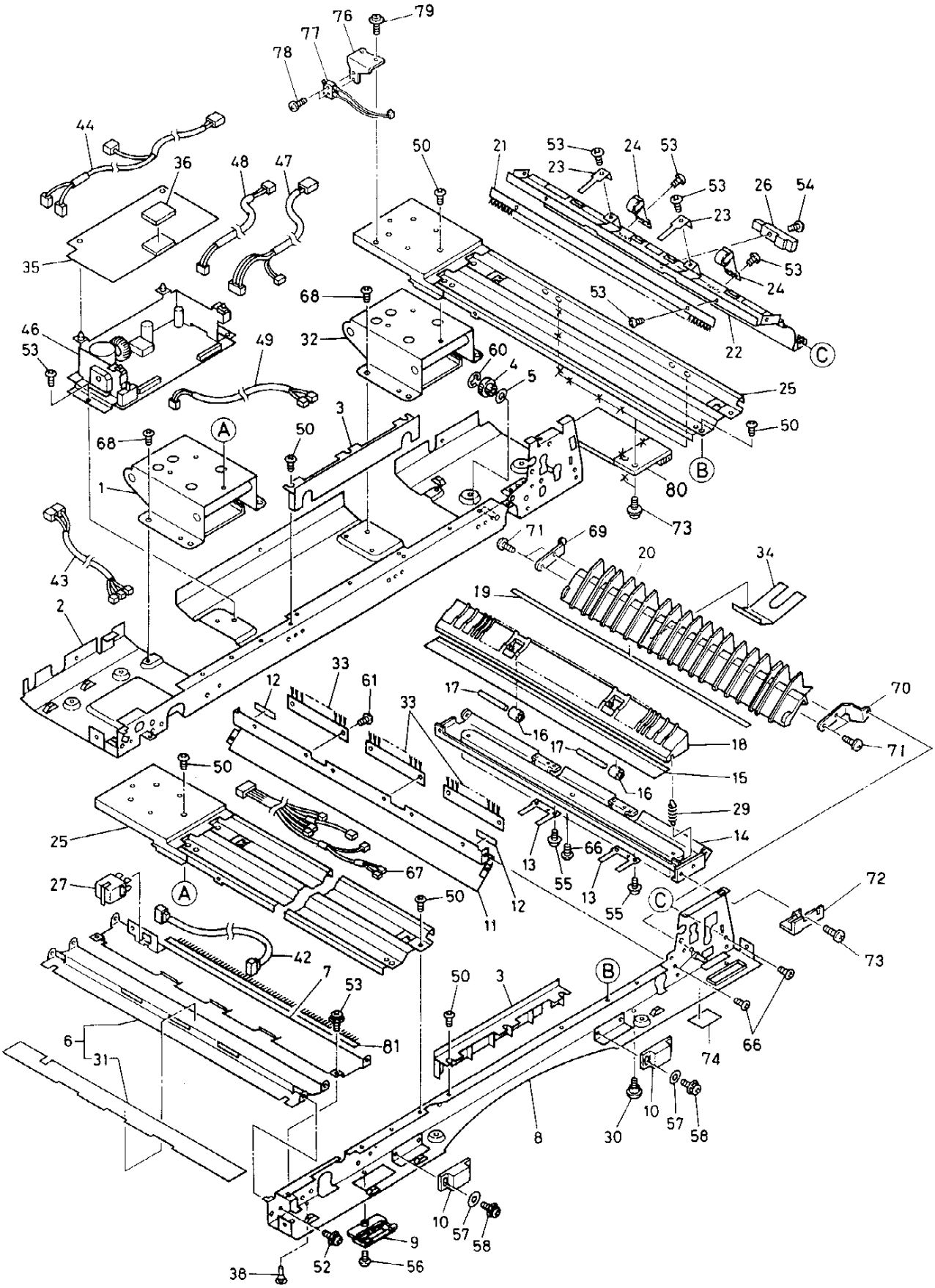
79
76
77
78
44
36
48
47
50
21
53
23
24
53
53
26
54
23
35
53
24
68
53
46
53
49
32
60
4
5
22
C
25
3
50
68
A
50
1
B
80
73
71
69
20
34
43
19
2
33
12
61
33
17
70
16
17
18
71
50
15
16
29
25
13
66
14
67
55
13
55
C
72
27
A
50
12
11
73
42
7
53
50
3
B
6
81
66
31
74
10
57
58
8
30
10
57
58
9
52
56
38

TOSHIBA

ITEM NO.	PARTS NO.	PARTS NAME	Q'TY / PAGE	Q'TY / PACK	SPE PRICE IN NONE	P	I	R	BSI NO.	TO	FROM	SERIAL NO.	REMARKS
1	4402 245040	K-HINGE-L	1	1/P									
2	4402 245020	K-FRAME-MAIN-R	1	N/A***									
3	4401 794200	GUIDE-BELT	2	1/P									
4	4402 241880	PLY/GEAR-16*26	1	1/P									
5	4402 241890	FLANGE-D17	1	1/P									
6	4402 243490	K-GIDE-FED-IN	1	1/KP									
7	4402 242060	GUIDE-FEED-D	1	1/P									
8	4402 245000	K-FRAME-MAIN-F	1	N/A***									
9	4402 242100	COV-DF-OPEN-SW	1	1/P									
10	4402 242110	MG-CATCH-DF	2	1/P									
11	4402 242120	GUIDE-RVS-3	1	1/P									
12	4402 242130	SHEET-NOISE	2	5/P									
13	4402 242140	SPL-RVS-1	2	1/P									
14	4401 791420	STAY-GUIDE-REV	1	1/P									
15	4402 242160	GUIDE-MYLAR-IN	1	1/KP									
16	4402 242170	ROL-D10*L10	2	1/P									
17	4402 242180	SFT-ROL-3*33.8	2	1/P									
18	4402 242190	GUIDE-RVS-1	1	1/P									
19	4402 244090	MYLAR-GUIDE-OUT	1	1/KP									
20	4401 791240	GUIDE-REV-714-4	1	1/P									
21	4402 244190	BRUSH-EXIT	1	1/KP									
22	4402 242230	GUIDE-RVS-2	1	1/P									
23	4402 242240	K-SPL-EXIT-ORG	2	1/P									
24	4402 242270	K-ROL-RVS-2	2	1/P									
25	4402 245060	K-STAY-HINGE	2	1/P									
26	4402 246100	SZ-GP2A10M	1	1/C									
27	4402 246120	SZ-SIZE-552	1	1/C									
28	4402 242310	PAN-STUD-M3*3	2	50/P									
29	4401 791250	SPE081-070-0273	2	5/P									
30	4402 242330	SPACER-DF	2	5/P									
31	4402 243460	GUIDE-FED-MYLAR	1	N/A***									
32	4402 245050	K-HINGE-R	1	1/P									
33	4408 323180	BRS-EXIT	3	1/KP						033 1			
33 1	4401 914900	BRS-EXIT	3	1/KP		C	B	E	F97K082		033	VI7	
34	4402 243440	SHEET-BLACK	1	1/C									
35	4402 245630	PWA-F-LGC-552	1	1/SB									
36	4402 245900	PRA-732-00	1	1/S						036 1			
36 1	4402 247090	PRA-732-00	1	1/S		C	E	H	F96J776		036		
38	4402 244070	SPACER-DF-1.0	1	5/P									
40	4402 246870	PWZ-8RT-V0	1	5/P									
42	4402 245800	WH-SIZE-552	1	1/P									
43	4402 247100	WH-I/F-732	1	1/P									
44	4402 245860	WH-ASEN-552	1	1/P									
46	4402 245610	PWA-F-DRV-552	1	1/SB									
47	4402 245820	WH-RSEN-552	1	1/P									
48	4402 245880	WH-FMOT-552	1	1/P									
49	4402 245890	WH-SOL-552	1	1/P									
50	7040 400611	PAN40*06MSZN3AI	17	50/P									
51	7040 300411	PAN30*04MSZN3A	27	50/P									
52	4842 040689	TZPAN3006MSZN3A	7	50/P									
53	4842 040709	TPPAN3006MSZN3A	13	50/P									
54	7040 300811	PAN30*08MSZN3AI	1	50/P									
55	4842 040707	TZPAN4016MSZN3A	4	50/P									
56	4842 040602	TPAN40*08MSZN3A	1	50/P									
57	7400 004011	0NWAS040MSZN3A	4	50/P									
58	7640 301031	ZPAN30*10MSZN3A	4	50/P									
60	7405 002031	ERR020SKZN3A	1	50/P									
61	7044 300611	FLT30*06MSZN3AI	6	50/P						061 1			
61 1	4842 040852	TPPAN3004MSZN3A	6	50/P		C	B	E	F97K082		061	VI7	
66	7120 300811	12PAN3008MSZN3A	7	50/P									
67	4402 245850	WH-ADRV-552	1	1/P									
68	4402 244100	SCREW-MR-M4-7	13	50/P									
69	4401 791390	BKT-GUIDE-R	1	1/P									
70	4401 791400	BKT-GUIDE-F	1	1/P									
71	7043 300813	BID30*08MSCR1AI	4	50/P									
72	4401 792390	HANDLE-STAY-REV	1	1/P									
73	4401 791080	SCREW-MR-M3-6	6	50/P						073 1			
73 1	4401 791080	SCREW-MR-M3-6	4	50/P		D	-	D	F4B098		073	VB4	
74	4401 790680	LBL-KNOB-J-MB	1	5/P									
76	4401 794480	BRKT-MSW	1	1/P									
77	4401 793480	K-OPNSW-714	1	1/D									

ITEM NO.	PARTS NO.	PARTS NAME	Q'TY / PAGE	Q'TY / PACK	SPE PRICE IN NONE	P	I	R	BSI NO.	TO	FROM	SERIAL NO.	REMARKS
78	7043 230611	BID23*06MSZN3A	1	50/P						078 1			
78 1	7043 230811	BID23*08MSZN3A	1	50/P		E	-	J	F95J504		078		
79	4842 040723	TPPAN4006MSZN3A	1	50/P									
80	4402 244200	K-BKT-BRUSH	2	1/P						080 1			
80 1	4402 244300	K-BKT-BRUSH-N	1	1/P		C	B	D	F4B098		080	VB4	
81	4402 244220	BRUSH-BELT	1	1/KP									

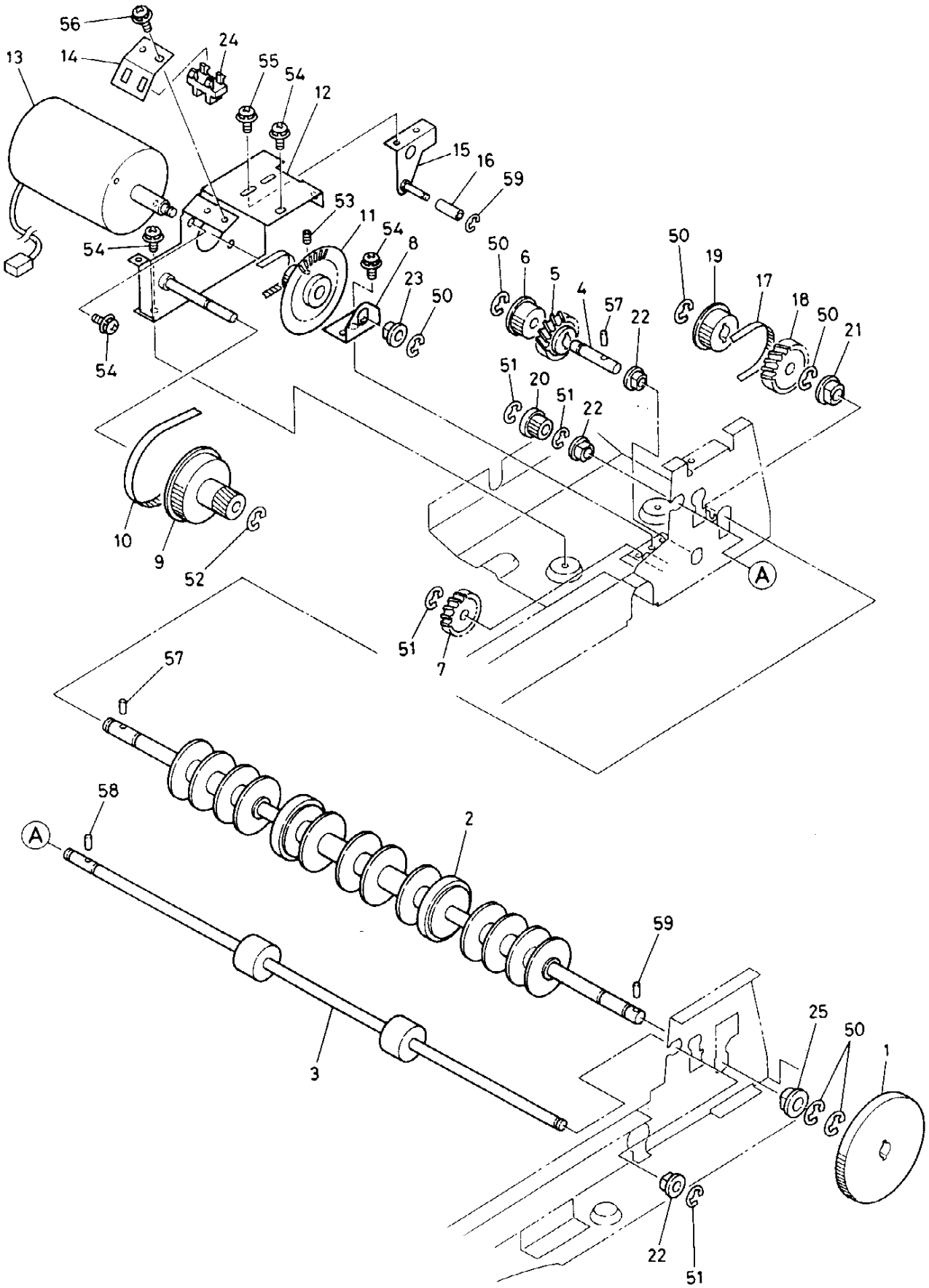
56
24
13
14
55
54
12
15
16
59
53
11
54
54
8
50
6
5
4
57
22
50
19
17
18
50
21
23
50
54
51
20
51
22
10
9
52
A
51
7
57
58
A
2
59
3
25
50
1
22
51

ITEM NO.	PARTS NO.	PARTS NAME	Q'TY / PAGE	Q'TY / PACK	SPE PRICE IN NONE	P	I	R	BSI NO.	TO	FROM	SERIAL NO.	REMARKS
1	4401 792370	HANDLE-OR-JAM-B	1	1/P									
2	4402 242360	K-ROL-RVS-MAIN	1	1/KP									
3	4402 242370	K-ROL-EXIT	1	1/KP									
4	4402 242380	SHAFT-D6*L32.3	1	1/P									
5	4402 242390	GEAR-Z30	1	1/P									
6	4402 242400	PLY-S2M-30-O/W	1	1/P									
7	4402 242410	GEAR-Z28	1	1/P									
8	4402 242420	BKT-RK-3	1	1/P									
9	4402 242430	PLY/GEAR-60*16	1	1/P									
10	4402 242440	BLT/T-S2M-80	1	1/P									
11	4402 242450	PLY*DISK-S2M-20	1	1/P									
12	4402 242460	K-BKT-M/DC-RVS	1	1/P									
13	4402 246050	M/DC-BLT-552	1	1/C									
14	4402 242490	BKT-CENS-M/DC	1	1/P									
15	4402 242500	K-BKT-IDLE	1	1/P									
16	4402 242170	ROL-D10*L10	1	1/P									
17	4402 242530	BLT/T-S2M-86-6	1	1/P									
18	4402 242540	GEAR-Z33-O/W	1	1/P									
19	4402 242550	PLY/T-S2M-Z33	1	1/P									
20	4402 242560	PLY/T-S2M-Z18	1	1/P									
21	4407 624500	BUSHING	1	5/P									
22	4407 610870	BUSH-SFT-ALIGN	3	5/P						022 1			
22 1	4402 244440	BUSH-SFT-ALIGN	3	5/P		C	E	E	F5C414	022 2	022	VC5	
22 2	4401 914760	BUSH-D6-4	3	5/P		C	E	F	F95L543		022 1		
23	4402 243100	BUSH-D6*L6	1	5/P									
24	3038 646301	TLP1215	1	1/D									
25	4407 624510	BUSHING	1	5/P									
50	7405 007031	ERR070SKZN3A	4	50/P									
51	7405 005031	ERR050SKZN3A	4	50/P									
52	7405 004031	ERR040SKZN3A	1	50/P									
53	4842 011066	9HSS30/10MSFB	2	50/P									
54	4842 040697	TZPAN4006MSZN3A	6	50/P									
55	4842 040709	TPPAN3006MSZN3A	1	50/P									
56	4842 040689	TZPAN3006MSZN3A	1	50/P									
57	7432 201211	HPIN20/12MSZN3A	1	50/P									
58	7432 201011	HPIN20/10MSZN3A	1	50/P									
59	7405 002031	ERR020SKZN3A	1	50/P									

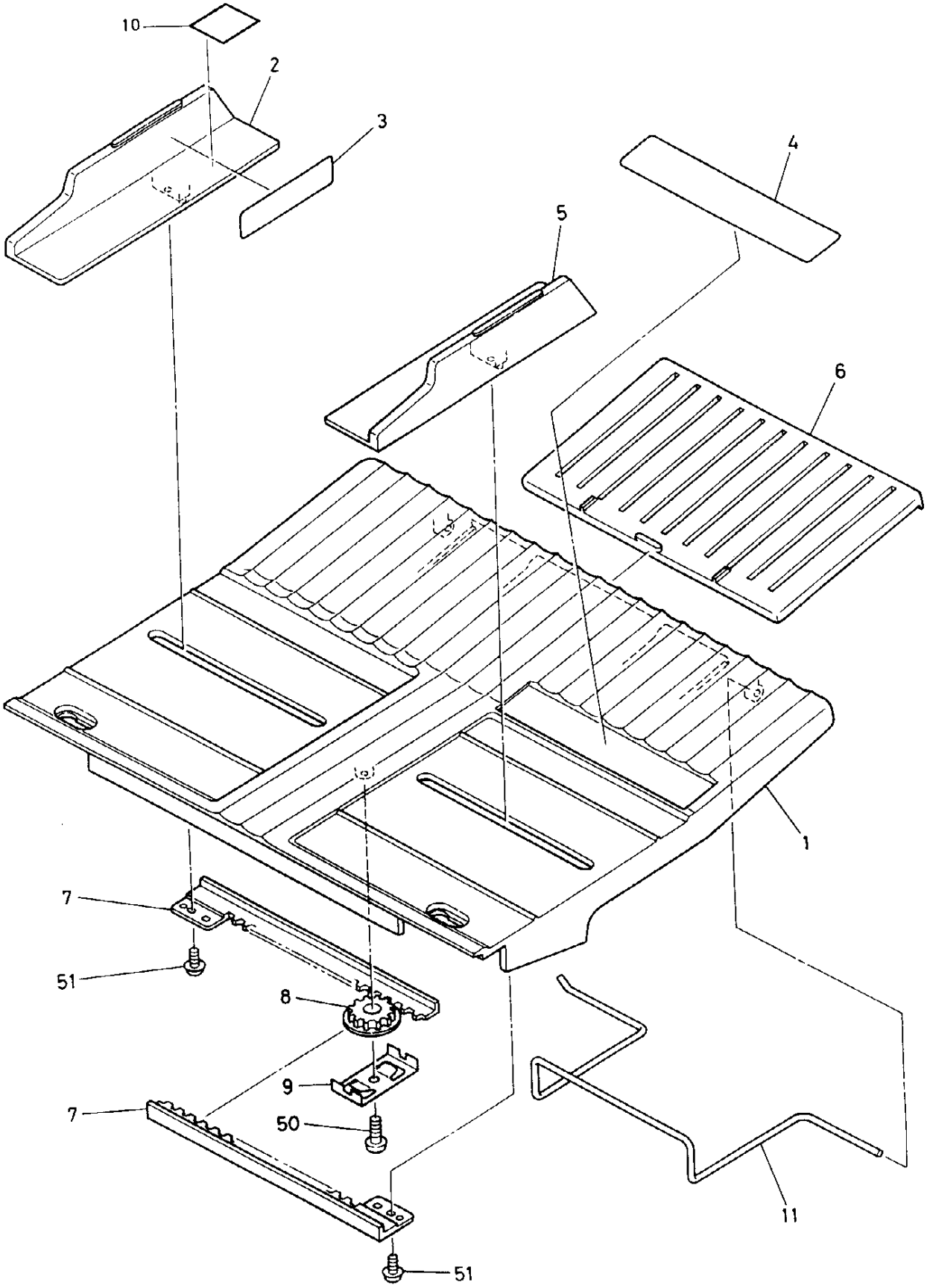
10
2
3
4
5
6
1
7
51
8
9
7
50
11
51

ITEM NO.	PARTS NO.	PARTS NAME	Q'TY / PAGE	Q'TY / PACK	SPE PRICE IN NONE	P	I	R	BSI NO.	TO	FROM	SERIAL NO.	REMARKS
1	4402 243590	K-TRAY-ORG-T	1	1/PP									
2	4401 790760	WALL-SIDE-R-T	1	1/P									
3	4402 243270	LBL-STACK-ORG-T	1	5/P						003A 003B			
3A	4402 243390	LBL-STACK-OR-LT	1	5/P		E	-	J	F4G247		003		USA SIZE
3B	4402 243380	LBL-STACK-OR-AB	1	5/P		E	-	J	F4G247		003		EUR SIZE
4A	4402 243280	LBL-SIZE-ORG-LT	1	1/KP									USA SIZE
4B	4402 243200	LBL-SIZE-ORG-AB	1	1/KP									EUR SIZE
5	4401 790780	WALL-SIDE-F-T	1	1/P									
6	4402 242630	SUB-TRAY-ORG-T	1	1/PP									
7	4402 242640	RACK-BYPASS-169	2	1/P									
8	4402 242650	PINION-Z22	1	1/P									
9	4402 242660	SPL-COV-TRAY	1	1/P									
10A	4400 785680	LBL-FACE-UP-U/C	1	5/P									USA SIZE
10B	4400 785690	LBL-FACE-UP-EUR	1	5/P									EUR SIZE
11	4402 243580	STP-ORG-EXIT	1	1/P									
50	7120 300611	12PAN3006MSZN3A	1	50/P									
51	4842 040709	TPPAN3006MSZN3A	2	50/P									

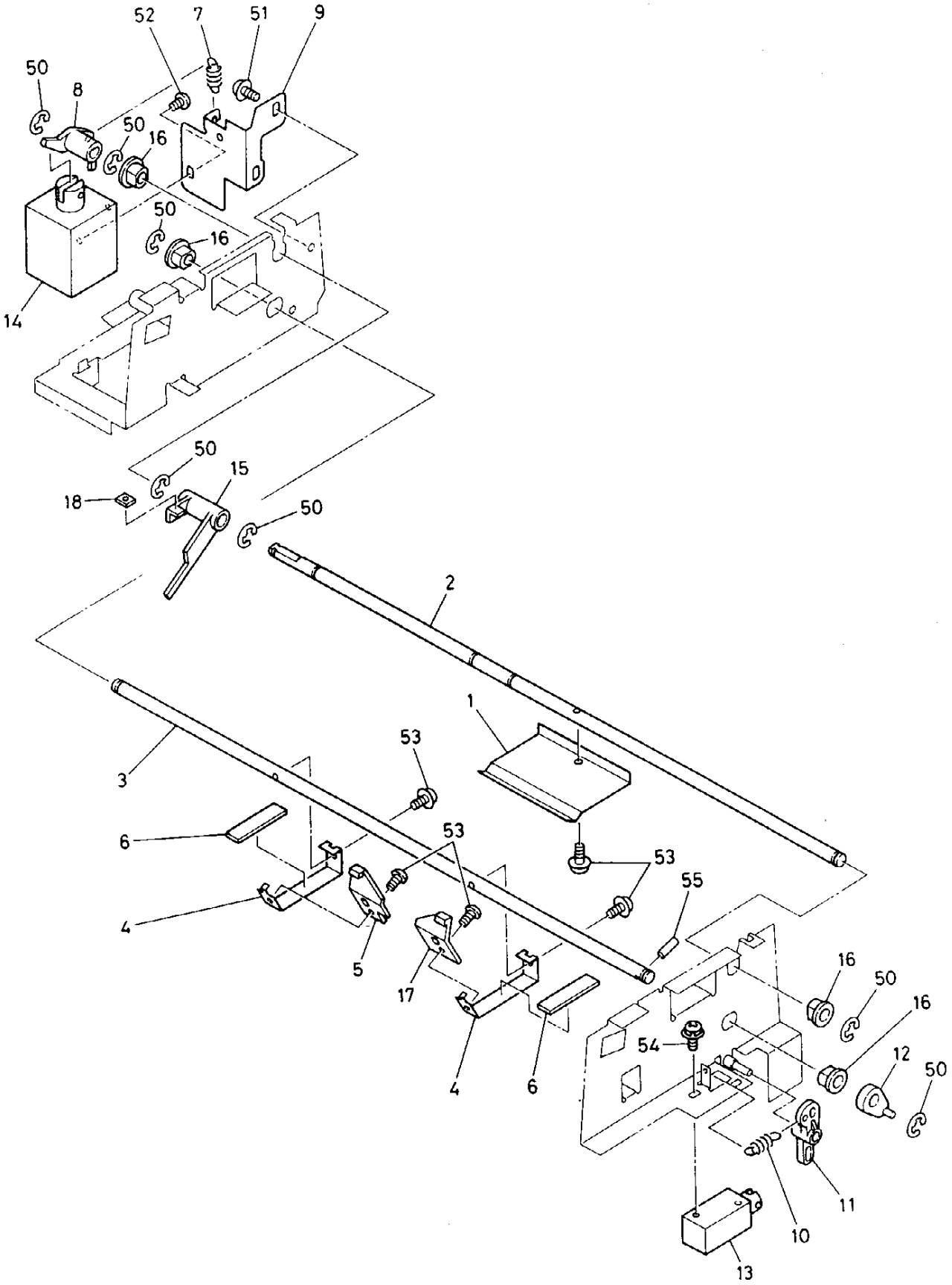
52
7
51
9
50
8
50
16
50
16
14
50
15
18
50
2
1
3
53
6
53
53
55
4
5
17
16
50
16
54
12
50
4
6
11
10
13

ITEM NO.	PARTS NO.	PARTS NAME	Q'TY / PAGE	Q'TY / PACK	SPE PRICE IN NONE	P	I	R	BSI NO.	TO	FROM	SERIAL NO.	REMARKS
1	4402 243670	SPL-WEIGHT-A-S	1	1/P									
2	4402 242680	SHAFT-WEIGHT	1	1/P									
3	4402 242690	SHAFT-SHTR-ORG	1	1/P									
4	4402 242700	SHTR-ORG-IN	2	1/P									
5	4402 242710	STP-SHTR-R	5	1/P									
6	4402 242130	SHEET-NOISE	2	5/P									
7	4402 242720	SPE-045-630-160	1	5/P									
8	4402 242730	LVR-SOL-WEIGHTA	1	1/P									
9	4402 242740	BKT-SOL-WEIGHTA	1	1/P									
10	4402 242750	SPE-050-050-156	1	5/P									
11	4402 242760	LVR-SHTR	1	1/P									
12	4402 241790	LINK-1-FLAP-RVS	1	1/P									
13	4402 246000	K-SOLSHT-552	1	1/D									
14	4402 246020	K-FEED-552	1	1/D									
15	4402 242770	LVR-EMPTY-ORG	1	1/P									
16	4407 610870	BUSH-SFT-ALIGN	4	5/P						016 1			
16 1	4402 244440	BUSH-SFT-ALIGN	4	5/P		C	E	E	F5C414	016 2	016	VC5	
16 2	4401 914760	BUSH-D6-4	4	5/P		C	E	F	F95L543		016 1		
17	4402 242780	STP-SHTR-F	1	1/P									
18	4402 243640	WEIGHT-ACT-DF	1	5/P									
50	7405 004031	ERR040SKZN3A	6	50/P									
51	7640 400641	ZPAN40*06MSZN3A	2	50/P									
52	4842 040709	TPPAN3006MSZN3A	2	50/P									
53	7640 300641	ZPAN30*06MSZN3A	3	50/P									
54	7640 300441	ZPAN30*04MSZN3A	2	50/P									
55	7432 201011	HPIN20/10MSZN3A	1	50/P									
57	7040 300411	PAN30*04MSZN3A	2	50/P									

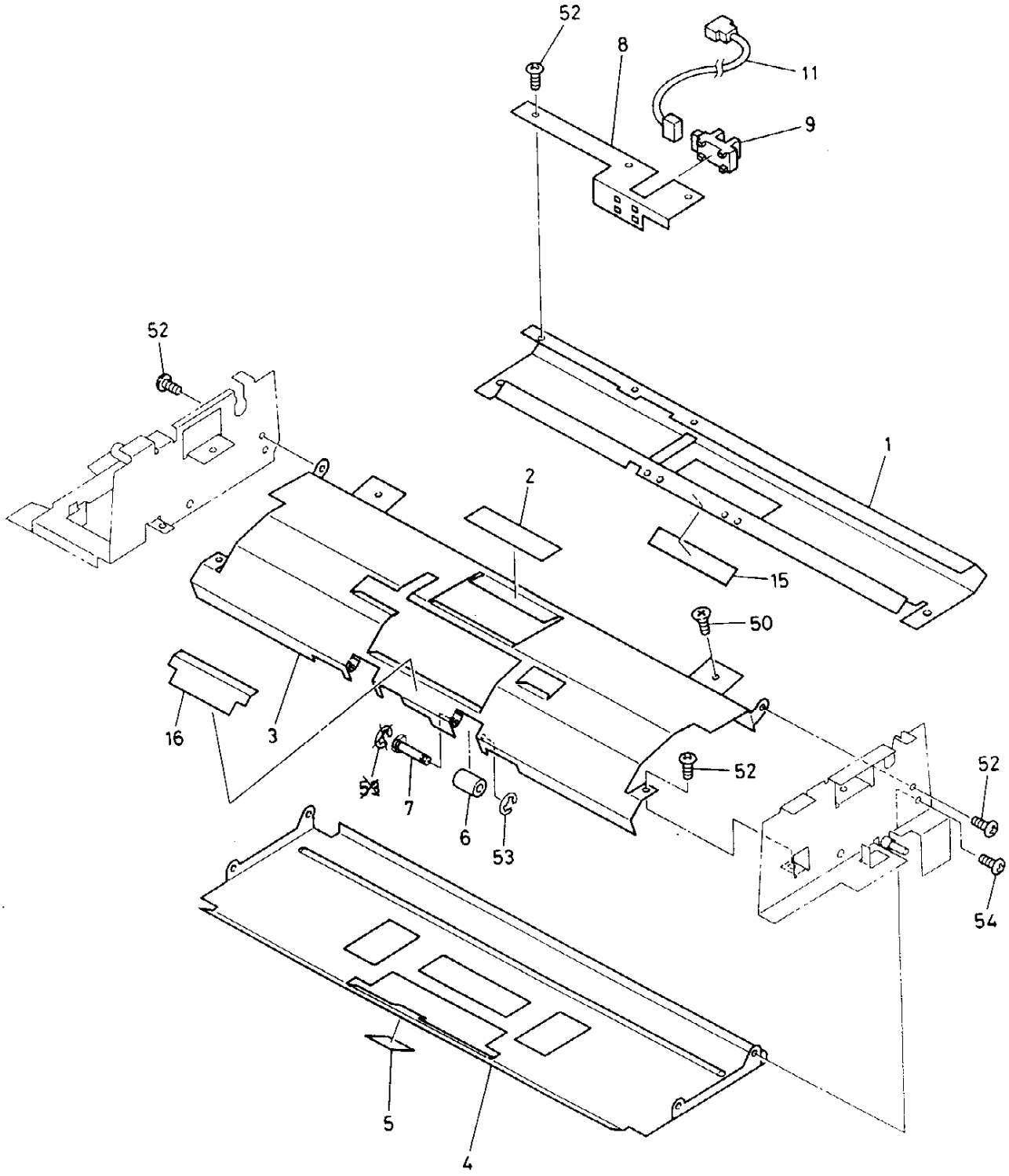
52
8
11
9
52
1
2
15
50
16
3
52
52
7
6
53
54
5
4

ITEM NO.	PARTS NO.	PARTS NAME	Q'TY / PAGE	Q'TY / PACK	SPE PRICE IN NONE	P	I	R	BSI NO.	TO	FROM	SERIAL NO.	REMARKS
1	4402 242790	GUIDE-FEED-A	1	1/P									
2	4402 242800	GUIDE-MYLAR-PUP	1	1/KP									
3	4402 242810	GUIDE-FEED-C	1	1/P									
4	4402 242820	STAY-SPRT-GUIDE	1	1/P									
5	4402 242830	SHEET-BLACK	1	5/P									
6	4402 242840	ROL-D10*L13.8	2	1/P									
7	4402 242850	SFT-ROL-10*13.8	2	1/P						007 1			
7 1	4402 244310	SFT-ROL-10*13.8	2	1/P		C	E	E	F4H264		007	VE4	
8	4402 242860	BKT-EMPTY-CENS	1	1/P									
9	3038 646301	TLP1215	1	1/D									
11	4402 245840	WH-EMP-552	1	1/P									
15	4402 243680	GUIDE-MYLAR-SPE	1	5/P									
16	4402 244130	MYLAR-GIDE-FEED	1	5/P									
50	7044 400611	FLT40*06MSZN3AI	2	50/P									
51	4842 040697	TZPAN4006MSZN3A	2	50/P									
52	4842 040636	TPAN30*06MSZN3A	6	50/P									
53	7405 002031	ERR020SKZN3A	4	50/P						053 1			
53 1	7405 002031	ERR020SKZN3A	2	50/P		D	E	E	F4H264		053	VE4	
54	7040 400611	PAN40*06MSZN3AI	4	50/P									

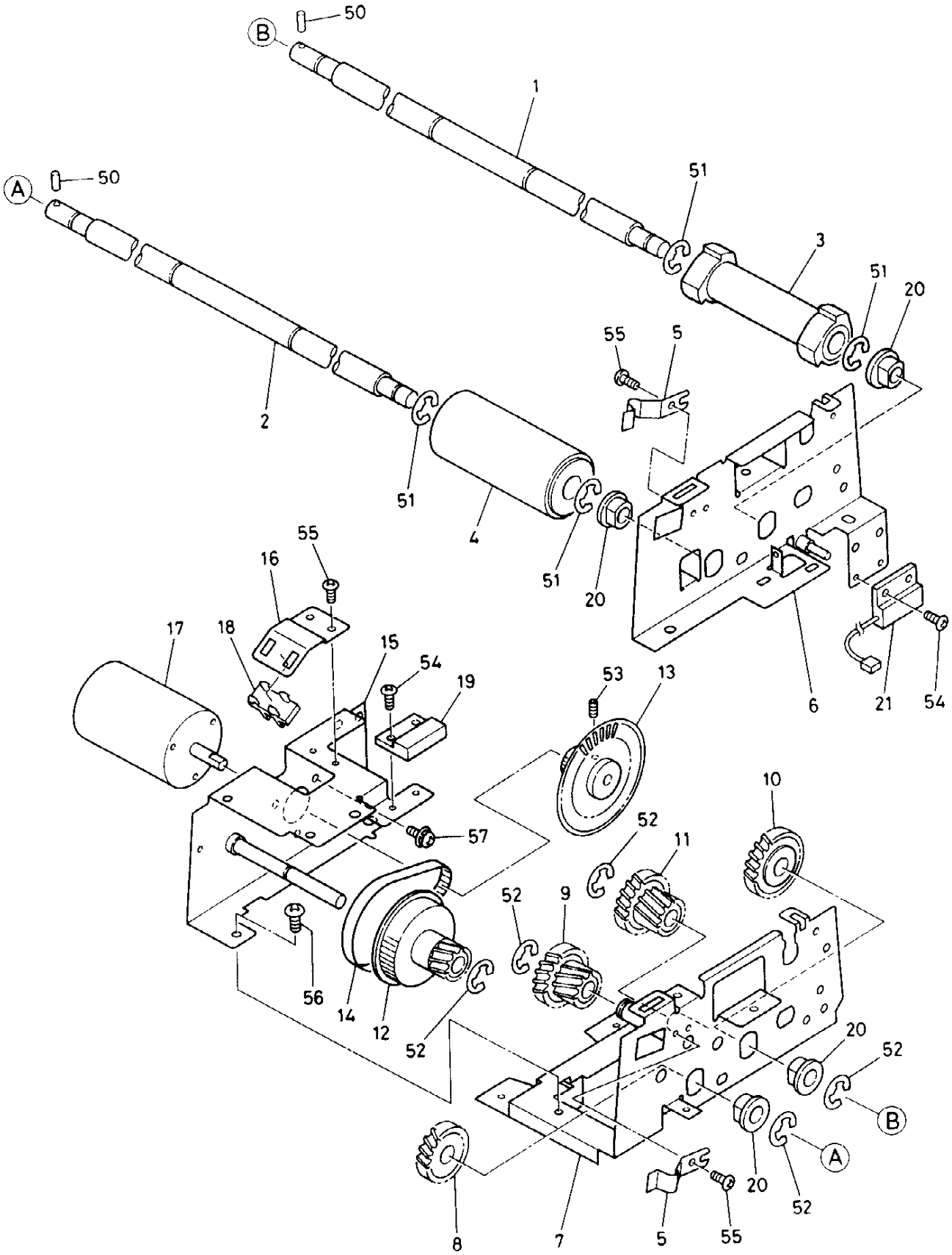
B
50
1
A
50
51
3
51
20
55
5
2
51
4
51
20
55
16
17
18
15
54
19
53
13
6
21
54
57
10
52
11
52
9
56
14
12
52
20
52
B
A
20
52
8
7
5
55

ITEM NO.	PARTS NO.	PARTS NAME	Q'TY / PAGE	Q'TY / PACK	SPE PRICE IN NONE	P	I	R	BSI NO.	TO	FROM	SERIAL NO.	REMARKS
1	4402 242880	SFT-P/UP-ROL	1	1/P									
2	4402 242890	SFT-SEPRATE-ROL	1	1/P									
3	4402 243690	ROL-PICK/UP-SMR	1	1/P									
4	4402 242910	ROL-SEPARATE	1	1/P									
5	4402 243350	SPL-LOCK-JAM	2	1/P									
6	4402 242930	K-FRAME-FEED-F	1	1/P									
7	4402 242950	K-FRAME-FEED-R	1	1/P									
8	4402 242990	GEAR-Z29	1	1/P									
9	4402 243000	GEAR-L-18*30	1	1/P									
10	4402 243010	GEAR-Z34	1	1/P									
11	4402 243020	GEAR-R-18*30	1	1/P									
12	4402 242430	PLY/GEAR-60*16	1	1/P									
13	4402 243030	PLY*DISK-S2M-20	1	1/P									
14	4402 243040	BLT/T-S2M-160-4	1	1/P									
15	4402 243050	K-BKT-FEED-M/DC	1	1/P									
16	4402 242490	BKT-CENS-M/DC	1	1/P									
17	4402 246040	M/DC-FEED-552	1	1/C									
18	3038 646301	TLP1215	1	1/D									
19	4402 246130	SE-COVER-552	1	1/C									
20	4407 610870	BUSH-SFT-ALIGN	4	5/P						020 1			
20 1	4407 624510	BUSHING	4	5/P		E	-	J	F95J504		020		
21	4402 246150	SE-RS8101X2	1	1/C									
50	7432 201211	HPIN20/12MSZN3A	2	50/P									
51	7405 007031	ERR070SKZN3A	8	50/P									
52	7405 005031	ERR050SKZN3A	5	50/P									
53	4842 011066	9HSS30/10MSFB	2	50/P									
54	7040 300611	PAN30*06MSZN3A	2	50/P									
55	4842 040636	TPAN30*06MSZN3A	3	50/P									
56	4842 040670	TPAN4006MSZN3A	3	50/P									
57	7640 300641	ZPAN30*06MSZN3A	2	50/P									
20 1	4407 624510	BUSHING	4	5/P		E	-	J	F95J504		020		

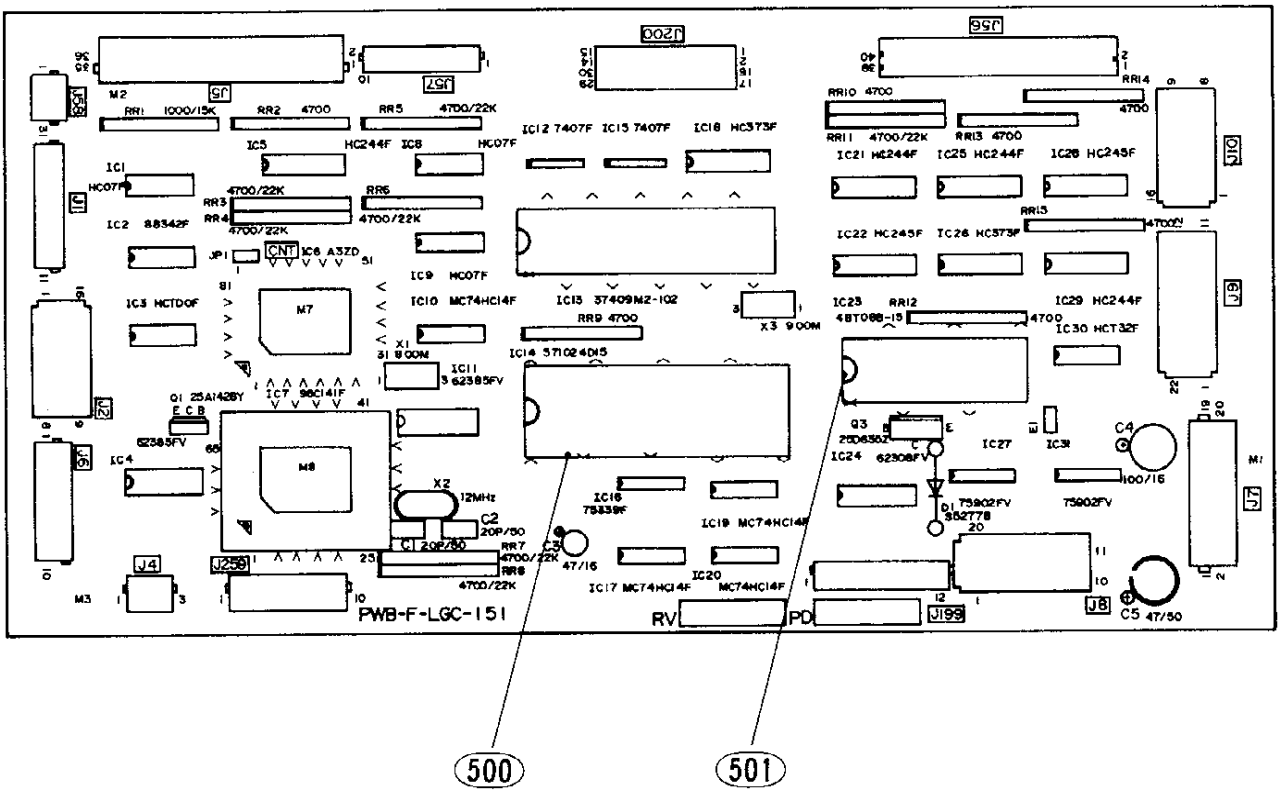
PWB-F-LGC-151
500
501

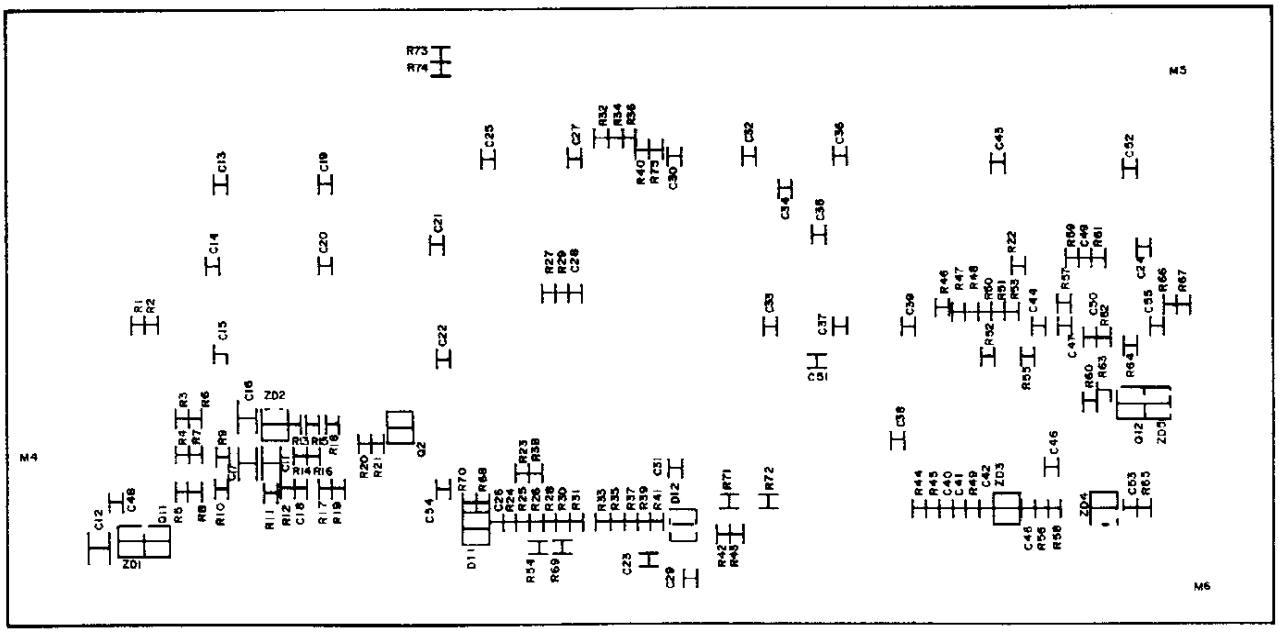

ITEM NO.	PARTS NO.	PARTS NAME	Q'TY / PAGE	Q'TY / PACK	SPE PRICE IN NONE	P	I	R	BSI NO.	TO	FROM	SERIAL NO.	REMARKS
0	4400 748130	PWA-F-LGC-151	1	1/SB									
1	4400 748120	PWB-F-LGC-151	1	N/A***									
2	4843 250402	X-CST8.00MTW040	1	5/S									
3	4843 250531	X-HC-49/U-12.00	1	5/S						003 1			
3 1	4843 250668	X-HC49/U12.000M	1	5/S		C	E	H	F95J504		003	VF5	
4	4843 250401	X-CST9.00MTW040	1	5/S									
11	3040 488464	IC-TC74HC07AF	1	5/S						011 1			
11 1	3040 487262	IC-TC74HC07AFT2	1	5/S		C	E	E	F4B103		011		
12	4843 112761	IC-MB88342PF	1	5/S									
13	3040 487813	IC-TC74HCT00AF	1	5/S						013 1			
13 1	3040 487817	TC74HCT00AF(TP2	1	5/S		C	E	E	F4B103		013		
14	3040 274758	IC-TD62385AF	1	5/S									
15	4843 113419	IC-MC74HC244F	1	5/S									
16	3040 887048	TC110G11AF-1050	1	1/S						016 1			
16 1	3040 195618	TC160G16AF-1114	1	1/S		C	E	F	F4G247		016	VJ4	
17	3040 522256	IC-TMP96C141F(Z	1	1/S									
18	3040 488464	IC-TC74HC07AF	1	5/S						018 1			
18 1	3040 487262	IC-TC74HC07AFT2	1	5/S		C	E	E	F4B103		018		
19	3040 488464	IC-TC74HC07AF	1	5/S						019 1			
19 1	3040 487262	IC-TC74HC07AFT2	1	5/S		C	E	E	F4B103		019		
20	4843 113612	IC-MC74HC14FL	1	5/P									
21	3040 274758	IC-TD62385AF	1	5/S									
22	4843 112762	IC-DM7407M	1	5/S									
23	4402 221500	IC-M37409M2-102	1	1/S									
25	4843 112762	IC-DM7407M	1	5/S									
26	4843 114340	IC-LM339M	1	5/S									
27	4843 113612	IC-MC74HC14FL	1	5/P									
28	3040 485480	IC-TC74HCT373AF	1	5/S						028 1			
28 1	3040 485481	TC74HCT373AFTP2	1	5/S		C	E	E	F4B103		028		
29	4843 113612	IC-MC74HC14FL	1	5/P									
30	4843 113612	IC-MC74HC14FL	1	5/P									
31	4843 113419	IC-MC74HC244F	1	5/S									
32	4843 112765	IC-MC74HC245FL	1	5/S									
34	3040 274685	IC-TD62308F	1	1/S						034 1			
34 1	3040 274687	IC-TD62308FTP2	1	1/S		C	E	E	F4B103		034		
35	4843 113419	IC-MC74HC244F	1	5/S									
36	3040 485480	IC-TC74HCT373AF	1	5/S						036 1			
36 1	3040 485481	TC74HCT373AFTP2	1	5/S		C	E	E	F4B103		036		
37	4843 113807	IC-LM324M	1	5/S									
38	4843 112765	IC-MC74HC245FL	1	5/S									
39	4843 113419	IC-MC74HC244F	1	5/S									
40	3040 487819	IC-TC74HCT32AF	1	5/S						040 1			
40 1	3040 487822	TC74HCT32AF(TP2	1	5/S		C	E	E	F4B103		040		
41	4843 113807	IC-LM324M	1	5/S									
61	3036 548970	Q-2SA1428-Y	1	5/P									
62	3036 014012	Q-RN2401(TE85R)	1	5/P									
63	3036 842405	Q-2SD635,Z	1	5/S									
71	3036 004012	Q-RN1401(TE85R)	1	5/P									
72	3036 004012	Q-RN1401(TE85R)	1	5/P									
91	3037 978380	D-S5277B	1	5/P									
101	3037 150651	D-1SS184(TE85R)	1	5/P									
102	3037 150651	D-1SS184(TE85R)	1	5/P									
121	3037 238432	D-02CZ5.1Z-85R	1	5/P									
122	3037 238422	D-02CZ5.1Y-85R	1	5/P									
123	3037 238422	D-02CZ5.1Y-85R	1	5/P									
124	3037 238422	D-02CZ5.1Y-85R	1	5/P									
125	3037 238212	D-02CZ3.3X-85R	1	5/P									
151	4843 075142	RR1/8S8B102153J	1	10/P									
152	4843 005108	RR125S08A-4.7KJ	1	10/P									
153	4407 634340	RR-S09LM472J223	1	10/P						153 1			
153 1	4843 076427	RR-1/8S084R7220	1	10/P		C	E	J	F4L368		153		
154	4407 634340	RR-S09LM472J223	1	10/P						154 1			
154 1	4843 076427	RR-1/8S084R7220	1	10/P		C	E	J	F4L368		154		
155	4407 634340	RR-S09LM472J223	1	10/P						155 1			
155 1	4843 076427	RR-1/8S084R7220	1	10/P		C	E	J	F4L368		155		
156	4407 634340	RR-S09LM472J223	1	10/P						156 1			
156 1	4843 076427	RR-1/8S084R7220	1	10/P		C	E	J	F4L368		156		
157	4407 634340	RR-S09LM472J223	1	10/P						157 1			
157 1	4843 076427	RR-1/8S084R7220	1	10/P		C	E	J	F4L368		157		
158	4407 634340	RR-S09LM472J223	1	10/P						158 1			

ITEM NO.	PARTS NO.	PARTS NAME	Q'TY / PAGE	Q'TY / PACK	SPE PRICE IN NONE	P	I	R	BSI NO.	TO	FROM	SERIAL NO.	REMARKS
158 1	4843 076427	RR-1/8S084R7220	1	10/P		C	E	J	F4L368		158		
159	4843 005108	RR125S08A-4.7KJ	1	10/P									
160	4843 005108	RR125S08A-4.7KJ	1	10/P									
161	4407 634340	RR-S09LM472J223	1	10/P						161 1			
161 1	4843 076427	RR-1/8S084R7220	1	10/P		C	E	J	F4L368		161		
162	4843 005108	RR125S08A-4.7KJ	1	10/P									
163	4843 005108	RR125S08A-4.7KJ	1	10/P									
164	4843 005108	RR125S08A-4.7KJ	1	10/P									
165	4843 005108	RR125S08A-4.7KJ	1	10/P									
201	4843 072167	RTP-2B2A472JDT	1	10/P									
202	4843 072175	RTP-2B2A223JDT	1	10/P									
203	4843 072173	RTP-2B2A153JDT	1	10/P									
204	4843 072171	RTP-2B2A103JDT	1	10/P									
205	4843 072167	RTP-2B2A472JDT	1	10/P									
206	4843 072175	RTP-2B2A223JDT	1	10/P									
207	4843 072171	RTP-2B2A103JDT	1	10/P									
208	4843 072173	RTP-2B2A153JDT	1	10/P									
209	4843 072104	RTP-2B2A332FDT	1	10/P									
210	4843 072110	RTP-2B2A103FDT	1	10/P									
211	4843 072175	RTP-2B2A223JDT	1	10/P									
212	4843 072175	RTP-2B2A223JDT	1	10/P									
213	4843 072171	RTP-2B2A103JDT	1	10/P									
214	4843 072165	RTP-2B2A332JDT	1	10/P									
215	4843 072171	RTP-2B2A103JDT	1	10/P									
216	4843 072168	RTP-2B2A562JDT	1	10/P									
217	4843 072169	RTP-2B2A682JDT	1	10/P									
218	4843 072171	RTP-2B2A103JDT	1	10/P									
219	4843 072175	RTP-2B2A223JDT	1	10/P									
220	4843 072159	RTP-2B2A102JDT	1	10/P									
221	4843 072155	RTP-2B2A471JDT	1	10/P									
222	4843 072155	RTP-2B2A471JDT	1	10/P									
223	4843 072175	RTP-2B2A223JDT	1	10/P									
224	4843 072167	RTP-2B2A472JDT	1	10/P									
225	4843 072169	RTP-2B2A682JDT	1	10/P									
226	4843 072175	RTP-2B2A223JDT	1	10/P									
227	4843 072069	RTP-2B2A105JDT	1	10/P									
228	4843 072175	RTP-2B2A223JDT	1	10/P									
229	4843 072167	RTP-2B2A472JDT	1	10/P									
230	4843 072066	RTP-2B2A564JDT	1	10/P									
231	4843 072167	RTP-2B2A472JDT	1	10/P									
232	4843 072167	RTP-2B2A472JDT	1	10/P									
233	4843 072155	RTP-2B2A471JDT	1	10/P									
234	4843 072167	RTP-2B2A472JDT	1	10/P									
235	4843 072175	RTP-2B2A223JDT	1	10/P									
236	4843 072167	RTP-2B2A472JDT	1	10/P									
237	4843 072167	RTP-2B2A472JDT	1	10/P									
238	4843 072155	RTP-2B2A471JDT	1	10/P									
239	4843 072153	RTP-2B2A331JDT	1	10/P									
240	4843 072167	RTP-2B2A472JDT	1	10/P									
241	4843 072153	RTP-2B2A331JDT	1	10/P									
242	4843 072175	RTP-2B2A223JDT	1	10/P									
243	4843 072153	RTP-2B2A331JDT	1	10/P									
244	4843 072167	RTP-2B2A472JDT	1	10/P									
245	4843 072167	RTP-2B2A472JDT	1	10/P									
246	4843 072155	RTP-2B2A471JDT	1	10/P									
247	4843 072167	RTP-2B2A472JDT	1	10/P									
248	4843 072167	RTP-2B2A472JDT	1	10/P									
249	4843 072158	RTP-2B2A821JDT	1	10/P									
250	4843 072167	RTP-2B2A472JDT	1	10/P									
251	4843 072167	RTP-2B2A472JDT	1	10/P									
252	4843 072069	RTP-2B2A105JDT	1	10/P									
253	4843 072167	RTP-2B2A472JDT	1	10/P									
254	4843 072175	RTP-2B2A223JDT	1	10/P									
255	4843 072167	RTP-2B2A472JDT	1	10/P									
256	4843 072159	RTP-2B2A102JDT	1	10/P									
257	4843 072167	RTP-2B2A472JDT	1	10/P									
258	4843 072163	RTP-2B2A222JDT	1	10/P									
259	4843 072155	RTP-2B2A471JDT	1	10/P									
260	4843 072145	RTP-2B2A680JDT	1	10/P									
261	4843 072167	RTP-2B2A472JDT	1	10/P									
262	4843 072165	RTP-2B2A332JDT	1	10/P									

ITEM NO.	PARTS NO.	PARTS NAME	Q'TY / PAGE	Q'TY / PACK	SPE PRICE IN NONE	P	I	R	BSI NO.	TO	FROM	SERIAL NO.	REMARKS
263	4843 072167	RTP-2B2A472JDT	1	10/P									
264	4843 072167	RTP-2B2A472JDT	1	10/P									
265	4843 072175	RTP-2B2A223JDT	1	10/P									
266	4843 072167	RTP-2B2A472JDT	1	10/P									
267	4843 072167	RTP-2B2A472JDT	1	10/P									
268	4843 072175	RTP-2B2A223JDT	1	10/P									
269	4843 072167	RTP-2B2A472JDT	1	10/P									
270	4843 072167	RTP-2B2A472JDT	1	10/P									
271	4843 072167	RTP-2B2A472JDT	1	10/P									
272	4843 072175	RTP-2B2A223JDT	1	10/P									
273	4843 072167	RTP-2B2A472JDT	1	10/P									
274	4843 072167	RTP-2B2A472JDT	1	10/P									
275	4843 072167	RTP-2B2A472JDT	1	10/P									
301	4843 407326	CM92C1H200KZ	1	10/P						301 1			
301 1	4843 412926	CC-45CH1H220JYS	1	10/P		C	E	H	F4G247		301	VF4	
302	4843 407326	CM92C1H200KZ	1	10/P						302 1			
302 1	4843 412926	CC-45CH1H220JYS	1	10/P		C	E	H	F4G247		302	VF4	
303	4843 410397	CE-04W1C4R7M	1	10/P									
304	4843 406649	CE04W1C101M	1	10/P									
305	4843 406673	CE04W1H470M	1	10/P									
311	4843 410535	CTP-M5F1H104ZT	1	10/P									
312	4843 410535	CTP-M5F1H104ZT	1	10/P									
313	4843 410862	CTP-K1F1E104ZT	1	10/P									
314	4843 410862	CTP-K1F1E104ZT	1	10/P									
315	4843 410862	CTP-K1F1E104ZT	1	10/P									
316	4843 410535	CTP-M5F1H104ZT	1	10/P									
317	4843 410535	CTP-M5F1H104ZT	1	10/P									
318	4843 410862	CTP-K1F1E104ZT	1	10/P									
319	4843 410862	CTP-K1F1E104ZT	1	10/P									
320	4843 410862	CTP-K1F1E104ZT	1	10/P									
321	4843 410862	CTP-K1F1E104ZT	1	10/P									
322	4843 410862	CTP-K1F1E104ZT	1	10/P									
323	4843 410862	CTP-K1F1E104ZT	1	10/P									
324	4843 410862	CTP-K1F1E104ZT	1	10/P									
325	4843 410862	CTP-K1F1E104ZT	1	10/P									
326	4843 410862	CTP-K1F1E104ZT	1	10/P									
327	4843 410862	CTP-K1F1E104ZT	1	10/P									
328	4843 410725	CTP-M1B1H222KT	1	10/P									
329	4843 410862	CTP-K1F1E104ZT	1	10/P									
330	4843 410862	CTP-K1F1E104ZT	1	10/P									
331	4843 410862	CTP-K1F1E104ZT	1	10/P									
332	4843 410862	CTP-K1F1E104ZT	1	10/P									
333	4843 410862	CTP-K1F1E104ZT	1	10/P									
334	4843 410862	CTP-K1F1E104ZT	1	10/P									
335	4843 410862	CTP-K1F1E104ZT	1	10/P									
336	4843 410862	CTP-K1F1E104ZT	1	10/P									
337	4843 410862	CTP-K1F1E104ZT	1	10/P									
338	4843 410862	CTP-K1F1E104ZT	1	10/P									
339	4843 410862	CTP-K1F1E104ZT	1	10/P									
340	4843 410725	CTP-M1B1H222KT	1	10/P									
341	4843 410727	CTP-M1B1H332KT	1	5/P									
342	4843 410725	CTP-M1B1H222KT	1	10/P									
343	4843 410862	CTP-K1F1E104ZT	1	10/P									
344	4843 410862	CTP-K1F1E104ZT	1	10/P									
345	4843 410862	CTP-K1F1E104ZT	1	10/P									
346	4843 410862	CTP-K1F1E104ZT	1	10/P									
347	4843 410862	CTP-K1F1E104ZT	1	10/P									
348	4843 410862	CTP-K1F1E104ZT	1	10/P									
349	4843 410725	CTP-M1B1H222KT	1	10/P									
350	4843 410862	CTP-K1F1E104ZT	1	10/P									
351	4843 410862	CTP-K1F1E104ZT	1	10/P									
352	4843 410862	CTP-K1F1E104ZT	1	10/P									
353	4843 410862	CTP-K1F1E104ZT	1	10/P									
354	4843 410862	CTP-K1F1E104ZT	1	10/P									
355	4843 410862	CTP-K1F1E104ZT	1	10/P									
401	4843 306199	J-1-175487-1	1	5/P									
402	4843 306168	J-1-175132-6	1	5/P									
404	4843 306191	J-0-175487-3	1	5/P									
405	4843 307523	J-DF1B36DP-2.5D	1	5/P									
406	4843 306198	J-1-175487-0	1	5/P									
407	4843 303786	J-DF1B20DP-2.5D	1	5/P									

ITEM NO.	PARTS NO.	PARTS NAME	Q'TY / PAGE	Q'TY / PACK	SPE PRICE IN NONE	P	I	R	BSI NO.	TO	FROM	SERIAL NO.	REMARKS
408	4843 306166	J-2-175132-0	1	5/P									
409	4843 306165	J-2-175132-2	1	5/P									
410	4843 306168	J-1-175132-6	1	5/P									
420	4843 307789	J-53313-4015	1	5/P									
421	4843 302626	J-DF3A-10P-2DSA	1	5/P									
422	4843 306191	J-0-175487-3	1	5/P									
423	4843 306200	J-1-175487-2	1	5/P									
424	4843 307793	J-174215-1	1	1/P									
425	4843 308372	J-3-175487-0	1	10/P									
500	4843 321243	SKT-IC87-4006S4	1	5/S						500 1			IC-SOCKET
500 1	4843 321565	SKT-CLC10400101	1	5/S		C	E	H	F4B103		500		IC-SOCKET
501	4843 321242	SKT-IC87-2806S4	1	5/S						501 1			IC-SOCKET
501 1	4843 321564	SKT-CLC10280101	1	5/S		C	E	H	F4B103		501		IC-SOCKET
502	4400 848870	LINE-JUMPER-5	1	10/P									

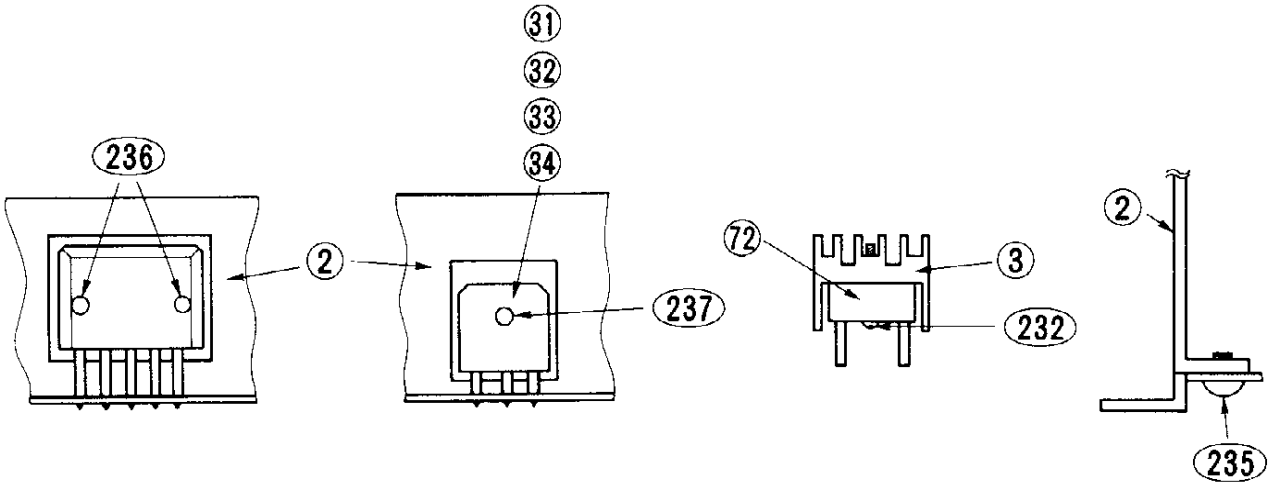
31
32
33
34
236
2
237
72
3
232
2
235

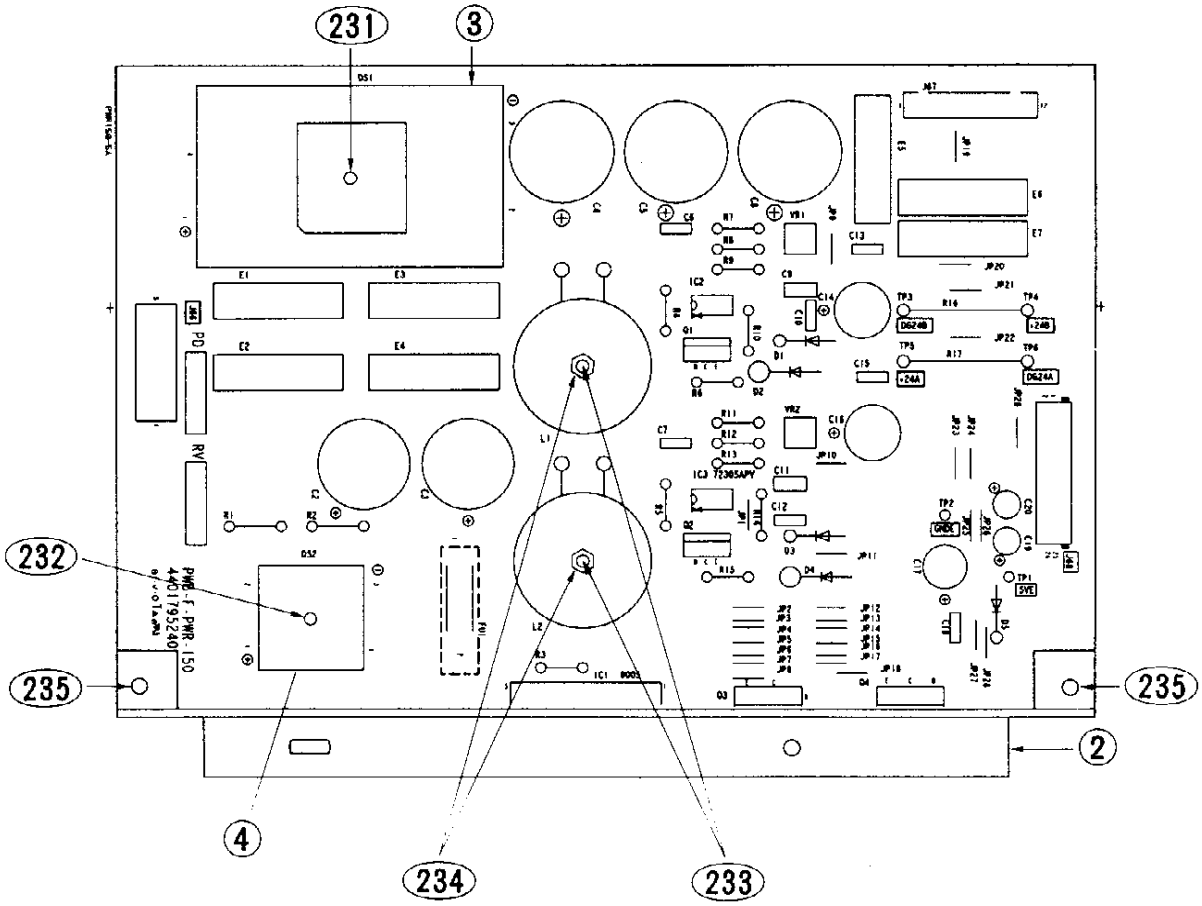
231
3
232
235
235
2
4
234
233

ITEM NO.	PARTS NO.	PARTS NAME	Q'TY / PAGE	Q'TY / PACK	SPE PRICE IN NONE	P	I	R	BSI NO.	TO	FROM	SERIAL NO.	REMARKS
0	4401 795440	PWA-F-PWR-150	1	1/SB									
1	4401 795240	PWB-F-PWR-150	1	N/A***									
2	4401 797130	HS-PWR-150	1	1/P									HS1
3	4401 797380	HS-20FB-40H-75	1	1/P									HS2
4	4407 768700	HT-SINK-3030ST	1	1/P									HS3
5	4407 966760	FUSE/CLIP-MINI	2	5/P									FU1
11	4843 114297	IC-STR9005	1	1/S									
12	4407 305760	IC-SN72305AP	1	5/S									
13	4407 305760	IC-SN72305AP	1	5/S									
31	3036 546550	Q-2SA1304	1	5/S									
32	3036 546550	Q-2SA1304	1	5/S									
33	3036 331905	Q-2SC2555,BS	1	5/S									
34	3036 331905	Q-2SC2555,BS	1	5/S									
51	3037 978380	D-S5277B	1	5/P									
52	3037 580600	D-3BH61	1	5/P						052 1			
52 1	3037 580604	D-3BH61(Z)	1	5/P		C	E	F	F4L368		052	VA5	
53	3037 978380	D-S5277B	1	5/P									
54	3037 580600	D-3BH61	1	5/P						054 1			
54 1	3037 580604	D-3BH61(Z)	1	5/P		C	E	F	F4L368		054	VA5	
55	3037 978380	D-S5277B	1	5/P									
71	3037 671120	D-15B4B41	1	5/P									
72	3037 671082	D-10B4B41	1	5/P									
92	4843 412375	CE-04C1E103M	1	1/P									
93	4843 412375	CE-04C1E103M	1	1/P									
94	4843 411031	CE-04C1H682M5	1	1/D									
95	4843 411031	CE-04C1H682M5	1	1/D									
96	4407 942000	CZ-308F104Z50	1	10/P						096 1			
96 1	4843 413242	CK-45F1H104ZY	1	10/P		C	E	F	F97A813		096		
97	4407 942000	CZ-308F104Z50	1	10/P						097 1			
97 1	4843 413242	CK-45F1H104ZY	1	10/P		C	E	F	F97A813		097		
98	4843 411031	CE-04C1H682M5	1	1/D									
99	4843 412737	CC-45CH1H101JYS	1	10/P									
100	4407 942000	CZ-308F104Z50	1	10/P						100 1			
100 1	4843 413242	CK-45F1H104ZY	1	10/P		C	E	F	F97A813		100		
101	4843 412737	CC-45CH1H101JYS	1	10/P									
102	4407 942000	CZ-308F104Z50	1	10/P						102 1			
102 1	4843 413242	CK-45F1H104ZY	1	10/P		C	E	F	F97A813		102		
103	4407 942000	CZ-308F104Z50	1	10/P						103 1			
103 1	4843 413242	CK-45F1H104ZY	1	10/P		C	E	F	F97A813		103		
104	4400 815840	CE-ECRHT1V331M	1	5/D									
105	4407 942000	CZ-308F104Z50	1	10/P						105 1			
105 1	4843 413242	CK-45F1H104ZY	1	10/P		C	E	F	F97A813		105		
106	4400 815840	CE-ECRHT1V331M	1	5/D									
107	4400 815830	CE-ECRHT1C331M	1	5/D									
108	4843 413242	CK-45F1H104ZY	1	10/P		F	-	F	F97A813				
109	4843 406648	CE04W1C470M	1	10/P									
110	4843 406648	CE04W1C470M	1	10/P									
131	4841 010060	RD1/2P-001KJ	1	10/P									
132	4841 010060	RD1/2P-001KJ	1	10/P									
133	4843 028643	RD1/4LA220KJ	1	10/P									
134	4407 965980	RS1/2LT022HJ	1	10/P									
135	4407 965980	RS1/2LT022HJ	1	10/P									
136	4843 028557	RD1/4LA056HJ	1	10/P									
138	4843 028613	RD1/4LA012KJ	1	10/P									
139	4843 028589	RD1/4LA1.2KJ	1	10/P									
140	4843 028659	RD1/4LA001MJ	1	10/P									
142	4843 028613	RD1/4LA012KJ	1	10/P									
143	4843 028589	RD1/4LA1.2KJ	1	10/P									
144	4843 028659	RD1/4LA001MJ	1	10/P									
145	4843 028557	RD1/4LA056HJ	1	10/P									
146	4843 075267	RN-5/1PL331JF	1	10/P									
147	4843 075267	RN-5/1PL331JF	1	10/P									
161	4843 240095	B-TBC5421011300	1	1/P									
162	4843 240096	B-TBC5421011500	1	1/D									
163	4407 769560	NFB-3.15-TBC5	1	1/D									
164	4407 769560	NFB-3.15-TBC5	1	1/D									
165	4407 769560	NFB-3.15-TBC5	1	1/D									
166	4407 769560	NFB-3.15-TBC5	1	1/D									
167	4407 769560	NFB-3.15-TBC5	1	1/D									
181	4407 305840	COIL-800MH	1	1/D									
182	4407 305840	COIL-800MH	1	1/D									

ITEM NO.	PARTS NO.	PARTS NAME	Q'TY / PAGE	Q'TY / PACK	SPE PRICE IN NONE	P	I	R	BSI NO.	TO	FROM	SERIAL NO.	REMARKS
191	4407 691890	RA-V6EK-PV-5K	1	5/P									
192	4407 691890	RA-V6EK-PV-5K	1	5/P									
201	4842 901504	Z-TEST-PIN	1	10/P									
202	4842 901504	Z-TEST-PIN	1	10/P									
211	4843 500687	FU-SB-5.0A	1	5/P									
215	4407 782660	JUMPER-WIRE-10	29	10/P									
226	4843 307773	J-1-178315-5	1	1/P									
227	4843 306387	J-DF1B-12P-DSA	1	5/P									
228	4843 303787	J-DF1B26DP-2.5D	1	5/P									
231	7040 301811	PAN30*18MSZN3AI	1	50/P									
232	7040 301411	PAN30*14MSZN3AI	1	50/P									
233	7040 302611	PAN30*26MSZN3A	2	50/P									
234	7360 300011	6/0NUT30MSZN3A	2	50/P									
235	7040 400611	PAN40*06MSZN3AI	2	50/P									
236	7040 301011	PAN30*10MSZN3A	2	50/P									
237	7040 300811	PAN30*08MSZN3AI	2	50/P									

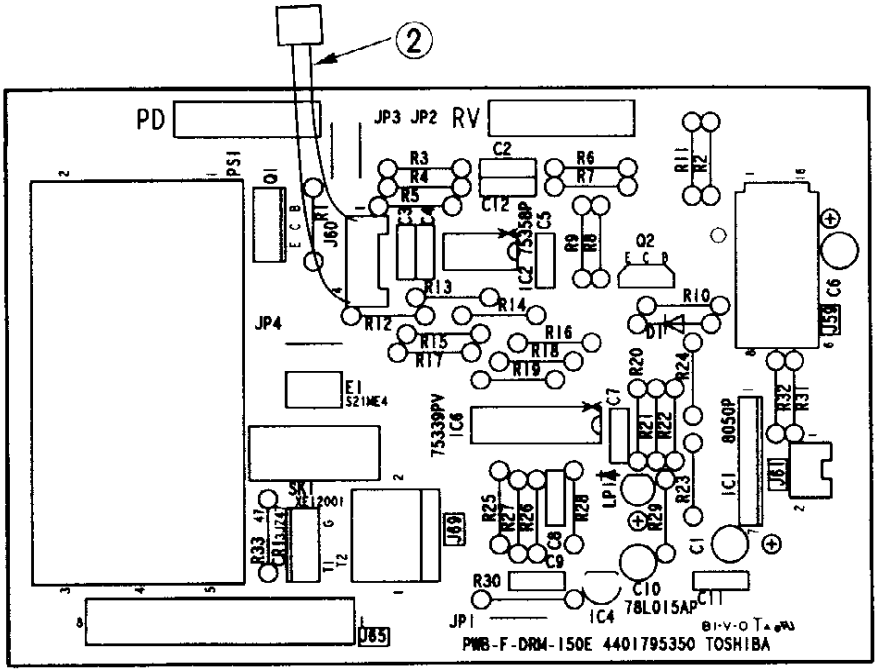
2
PD
JP3 JP2 RV
PS1
Q1
R1
J60
R3
R4
R5
C2
C12
R6
R7
R11
R2
C3
C4
75358P
C5
IC2
R9
R8
Q2
R13
R14
R10
C6
J59
JP4
R12
R15
R17
R16
R18
R19
D1
R20
R24
E1
S21ME4
75339PV
IC6
C7
R21
R22
8050P
R32
R31
J61
IC1
SK1
XE12001
R33
R25
R27
R26
R28
C8
C9
LP1
R29
R23
C1
J69
R30
C10
78L015AP
C11
IC4
JP1
J65
PWB-F-DRM-150E 4401795350 TOSHIBA

TOSHIBA

ITEM NO.	PARTS NO.	PARTS NAME	Q'TY / PAGE	Q'TY / PACK	SPE PRICE IN NONE	P	I	R	BSI NO.	TO	FROM	SERIAL NO.	REMARKS
0	4401 795550	PWA-F-DRM-150E	1	1/SB									
1	4401 795350	PWB-F-DRM-150E	1	N/A***									
2	4401 798030	WH-DRM-PCB-150	1	1/P									
11	3040 378570	IC-TA8428K	1	5/S									
12	4843 113199	IC-LM-358N	1	5/S									
14	3040 373520	IC-TA78L015AP	1	5/S									
16	4843 111283	IC-LM339N	1	5/S									
31	3036 624405	Q-2SB675,Z	1	5/S									
32	3036 002010	Q-RN1201	1	5/P									
41	3037 249601	D-1S1588	1	5/P									
51	4843 171244	SCO-S21ME4	1	5/P									
56	3037 860770	TY-SM3JZ47	1	10/P									
61	3038 601100	LP-TLR123	1	5/P									
71	4408 319250	PS-ERASE-371	1	1/C						071 1			
71 1	4401 788990	PS-ERASE-150	1	1/C		C	E	H	F95J504		071	VC5	
81	4843 406671	CE04W1H100M	1	10/P									
82	4407 942000	CZ-308F104Z50	1	10/P						082 1			
82 1	4843 413242	CK-45F1H104ZY	1	10/P		C	E	F	F97A813		082		
83	4407 942000	CZ-308F104Z50	1	10/P						083 1			
83 1	4843 413242	CK-45F1H104ZY	1	10/P		C	E	F	F97A813		083		
84	4407 942000	CZ-308F104Z50	1	10/P						084 1			
84 1	4843 413242	CK-45F1H104ZY	1	10/P		C	E	F	F97A813		084		
85	4407 942000	CZ-308F104Z50	1	10/P						085 1			
85 1	4843 413242	CK-45F1H104ZY	1	10/P		C	E	F	F97A813		085		
86	4843 406671	CE04W1H100M	1	10/P									
87	4407 942000	CZ-308F104Z50	1	10/P						087 1			
87 1	4843 413242	CK-45F1H104ZY	1	10/P		C	E	F	F97A813		087		
88	4407 942000	CZ-308F104Z50	1	10/P						088 1			
88 1	4843 413242	CK-45F1H104ZY	1	10/P		C	E	F	F97A813		088		
89	4407 942000	CZ-308F104Z50	1	10/P						089 1			
89 1	4843 413242	CK-45F1H104ZY	1	10/P		C	E	F	F97A813		089		
90	4843 406671	CE04W1H100M	1	10/P									
91	4407 942000	CZ-308F104Z50	1	10/P						091 1			
91 1	4843 413242	CK-45F1H104ZY	1	10/P		C	E	F	F97A813		091		
92	4407 942000	CZ-308F104Z50	1	10/P						092 1			
92 1	4843 413242	CK-45F1H104ZY	1	10/P		C	E	F	F97A813		092		
111	4843 028587	RD1/4LA001KJ	1	10/P									
112	4843 028599	RD1/4LA3.3KJ	1	10/P									
113	4843 018059	RN1/4PR010KF	1	10/P									
114	4843 061436	RN1/4PR27.4KF	1	10/P									
115	4843 061434	RN1/4PR18.2KF	1	10/P									
116	4843 028635	RD1/4LA100KJ	1	10/P									
117	4843 028635	RD1/4LA100KJ	1	10/P									
118	4843 061440	RN1/4PR56.2KF	1	10/P									
119	4843 028623	RD1/4LA033KJ	1	10/P									
120	4843 028603	RD1/4LA4.7KJ	1	10/P									
121	4843 028603	RD1/4LA4.7KJ	1	10/P						121 1			
121 1	4843 028579	RD1/4LA470HJ	1	10/P		C	E	D	F96I756		121	VI6	
122	4843 061439	RN1/4PR47.5KF	1	10/P									
123	4843 028621	RD1/4LA027KJ	1	10/P									
124	4843 061440	RN1/4PR56.2KF	1	10/P									
125	4843 028613	RD1/4LA012KJ	1	10/P									
126	4843 028613	RD1/4LA012KJ	1	10/P									
127	4843 028607	RD1/4LA6.8KJ	1	10/P									
128	4843 028587	RD1/4LA001KJ	1	10/P									
129	4843 028615	RD1/4LA015KJ	1	10/P									
130	4843 028611	RD1/4LA010KJ	1	10/P									
131	4843 028611	RD1/4LA010KJ	1	10/P									
132	4843 061441	RN1/4PR68.1KF	1	10/P									
133	4843 061429	RN1/4PR4.75KF	1	10/P									
134	4843 074311	RN1/4PR4.42KF	1	10/P									
135	4843 028659	RD1/4LA001MJ	1	10/P									
136	4843 018059	RN1/4PR010KF	1	10/P									
137	4843 028659	RD1/4LA001MJ	1	10/P									
138	4843 028589	RD1/4LA1.2KJ	1	10/P									
139	4843 061434	RN1/4PR18.2KF	1	10/P									
140	4841 010041	RD1/2P-220HJ	1	10/P									
141	4843 028603	RD1/4LA4.7KJ	1	10/P									
142	4843 028603	RD1/4LA4.7KJ	1	10/P									
143	4843 028555	RD1/4LA047HJ	1	10/P									
169	4843 306168	J-1-175132-6	1	5/P									

ITEM NO.	PARTS NO.	PARTS NAME	Q'TY / PAGE	Q'TY / PACK	SPE PRICE IN NONE	P	I	R	BSI NO.	TO	FROM	SERIAL NO.	REMARKS
171	4843 304946	J-53052-0210	1	5/P									
175	4843 301323	J-5275-08A	1	5/P									
179	4411 122740	J-5277-02A	1	10/P									
190	4407 782660	JUMPER-WIRE-10	4	10/P									

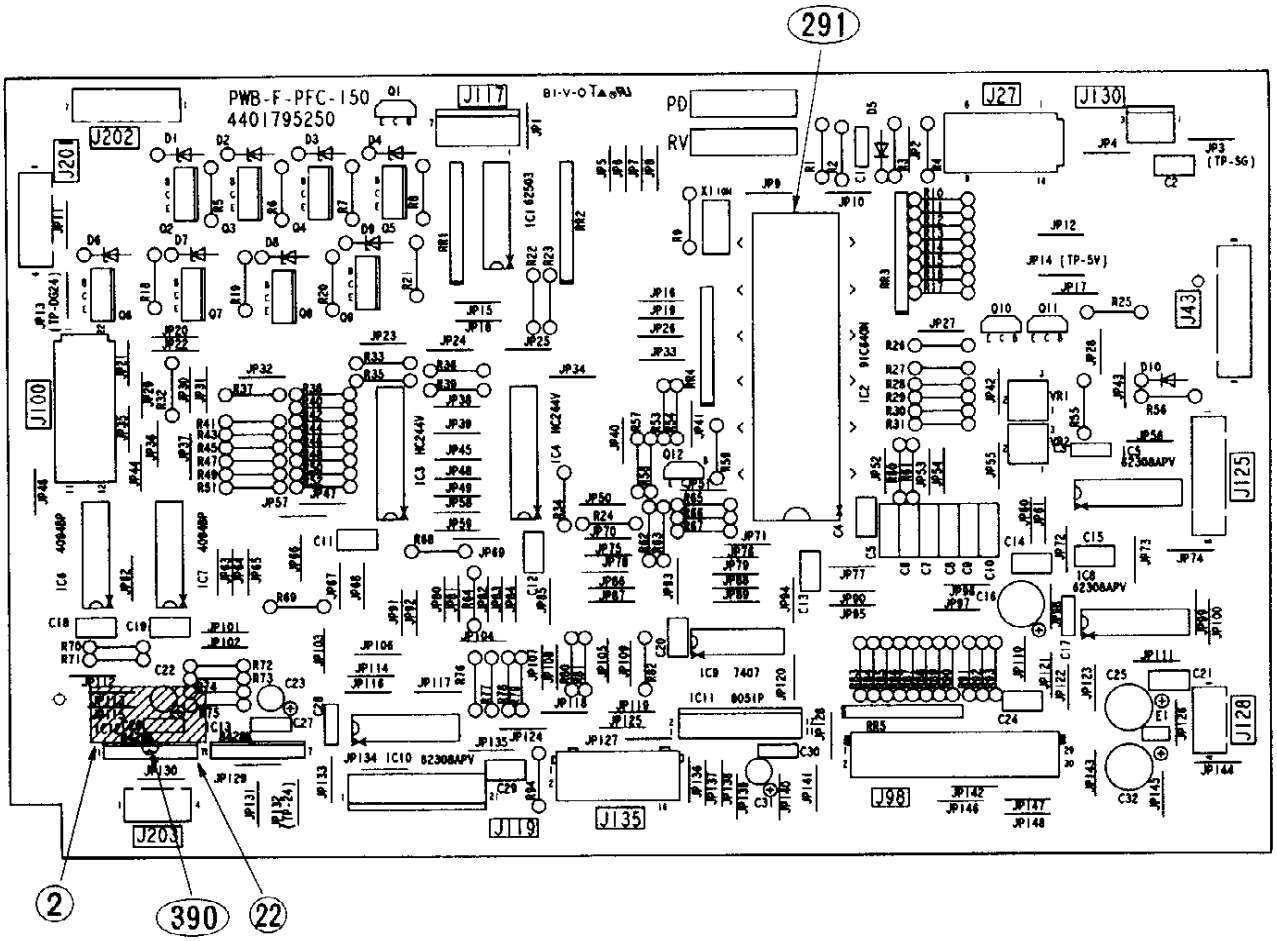
291
PWB-F-PFC-150
4401795250
J202
J201
J117
J27
J130
J100
J125
J43
J128
J203
J119
J135
J98
PD
RV
2
390
22

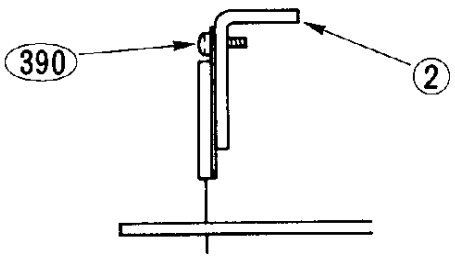
390
2

ITEM NO.	PARTS NO.	PARTS NAME	Q'TY / PAGE	Q'TY / PACK	SPE PRICE IN NONE	P	I	R	BSI NO.	TO	FROM	SERIAL NO.	REMARKS
0	4401 795650	PWA-F-PFC-150	1	1/SB									
1	4401 795250	PWB-F-PFC-150	1	N/A***									
2	4400 848380	HS-8050	1	1/P									
11	3040 275015	IC-TD62503P	1	5/S									
12	3040 566016	TMP91C640N-2182	1	1/S									
13	4843 112190	IC-MC74HC244AN	1	5/S									
14	4843 112190	IC-MC74HC244AN	1	5/S									
15	3040 274680	IC-TD62308AP	1	5/S									
16	3040 470942	IC-TC4094BP	1	5/S									
17	3040 470942	IC-TC4094BP	1	5/S									
18	3040 274680	IC-TD62308AP	1	5/S									
19	4843 112339	IC-DM7407N	1	5/S									
20	3040 274680	IC-TD62308AP	1	5/S									
21	3040 377330	IC-TA8051P	1	1/S									
22	3040 378570	IC-TA8428K	1	5/S									
23	3040 378570	IC-TA8428K	1	5/S									
41	3036 002010	Q-RN1201	1	5/P									
42	3036 868450	Q-2SD1415	1	5/S									
43	3036 868450	Q-2SD1415	1	5/S									
44	3036 868450	Q-2SD1415	1	5/S									
45	3036 868450	Q-2SD1415	1	5/S									
46	3036 868450	Q-2SD1415	1	5/S									
47	3036 868450	Q-2SD1415	1	5/S									
48	3036 868450	Q-2SD1415	1	5/S									
49	3036 868450	Q-2SD1415	1	5/S									
50	3036 012010	Q-RN2201	1	5/P									
51	3036 002010	Q-RN1201	1	5/P									
52	3036 012010	Q-RN2201	1	5/P									
71	4843 101246	D-RD82E	1	5/P									
72	4843 101246	D-RD82E	1	5/P									
73	4843 101246	D-RD82E	1	5/P									
74	4843 101246	D-RD82E	1	5/P									
75	3037 249601	D-1S1588	1	5/P									
76	4843 101246	D-RD82E	1	5/P									
77	4843 101246	D-RD82E	1	5/P									
78	4843 101246	D-RD82E	1	5/P									
79	4843 101246	D-RD82E	1	5/P									
80	3037 249601	D-1S1588	1	5/P									
92	4408 216680	RA-V6EK-PV20K	1	5/P									
101	4843 250421	X-CST10.0MTW	1	5/S									
111	4843 410842	CKM-92E1E105ZY	1	10/P									
112	4843 412334	CKM-45F1B104ZY	1	10/P									
113	4407 942000	CZ-308F104Z50	1	10/P									
114	4843 412334	CKM-45F1B104ZY	1	10/P									
115	4407 986230	CKM-109SL471J50	1	5/P									
116	4407 986230	CKM-109SL471J50	1	5/P									
117	4407 986230	CKM-109SL471J50	1	5/P									
118	4407 986230	CKM-109SL471J50	1	5/P									
119	4407 986230	CKM-109SL471J50	1	5/P									
120	4407 986230	CKM-109SL471J50	1	5/P									
121	4843 412334	CKM-45F1B104ZY	1	10/P									
122	4843 412334	CKM-45F1B104ZY	1	10/P									
123	4843 412334	CKM-45F1B104ZY	1	10/P									
124	4843 412334	CKM-45F1B104ZY	1	10/P									
125	4843 412334	CKM-45F1B104ZY	1	10/P									
126	4843 406648	CE04W1C470M	1	10/P									
127	4407 942000	CZ-308F104Z50	1	10/P									
128	4843 412334	CKM-45F1B104ZY	1	10/P									
129	4843 412334	CKM-45F1B104ZY	1	10/P									
130	4843 412334	CKM-45F1B104ZY	1	10/P									
131	4843 412334	CKM-45F1B104ZY	1	10/P									
132	4843 406663	CE04W1V100M	1	10/P									
133	4843 406663	CE04W1V100M	1	10/P									
134	4843 412334	CKM-45F1B104ZY	1	10/P									
135	4843 406648	CE04W1C470M	1	10/P									
136	4407 942000	CZ-308F104Z50	1	10/P									
137	4407 942000	CZ-308F104Z50	1	10/P									
138	4407 942000	CZ-308F104Z50	1	10/P									
139	4843 412334	CKM-45F1B104ZY	1	10/P									
140	4407 942000	CZ-308F104Z50	1	10/P									
141	4843 406663	CE04W1V100M	1	10/P									

ITEM NO.	PARTS NO.	PARTS NAME	Q'TY / PAGE	Q'TY / PACK	SPE PRICE IN NONE	P	I	R	BSI NO.	TO	FROM	SERIAL NO.	REMARKS
142	4843 406673	CE04W1H470M	1	10/P									
161	4407 917860	RR-S09LA561J	1	10/P									
162	4843 005108	RR125S08A-4.7KJ	1	10/P									
163	4843 005108	RR125S08A-4.7KJ	1	10/P									
164	4843 005108	RR125S08A-4.7KJ	1	10/P									
165	4843 005108	RR125S08A-4.7KJ	1	10/P									
181	4843 028603	RD1/4LA4.7KJ	1	10/P									
182	4843 028603	RD1/4LA4.7KJ	1	10/P									
183	4843 028635	RD1/4LA100KJ	1	10/P									
184	4843 028603	RD1/4LA4.7KJ	1	10/P									
185	4843 028575	RD1/4LA330HJ	1	10/P									
186	4843 028575	RD1/4LA330HJ	1	10/P									
187	4843 028575	RD1/4LA330HJ	1	10/P									
188	4843 028575	RD1/4LA330HJ	1	10/P									
189	4843 028659	RD1/4LA001MJ	1	10/P									
190	4843 028563	RD1/4LA100HJ	1	10/P									
191	4843 028563	RD1/4LA100HJ	1	10/P									
192	4843 028563	RD1/4LA100HJ	1	10/P									
193	4843 028563	RD1/4LA100HJ	1	10/P									
194	4843 028563	RD1/4LA100HJ	1	10/P									
195	4843 028563	RD1/4LA100HJ	1	10/P									
196	4843 028563	RD1/4LA100HJ	1	10/P									
197	4843 028563	RD1/4LA100HJ	1	10/P									
198	4843 028575	RD1/4LA330HJ	1	10/P									
199	4843 028575	RD1/4LA330HJ	1	10/P									
200	4843 028575	RD1/4LA330HJ	1	10/P									
201	4843 028575	RD1/4LA330HJ	1	10/P									
202	4843 028603	RD1/4LA4.7KJ	1	10/P									
203	4843 028603	RD1/4LA4.7KJ	1	10/P									
204	4843 028603	RD1/4LA4.7KJ	1	10/P									
205	4843 028603	RD1/4LA4.7KJ	1	10/P									
206	4843 028603	RD1/4LA4.7KJ	1	10/P									
207	4843 028619	RD1/4LA022KJ	1	10/P									
208	4843 028619	RD1/4LA022KJ	1	10/P									
209	4843 028603	RD1/4LA4.7KJ	1	10/P									
210	4843 028619	RD1/4LA022KJ	1	10/P									
211	4843 028603	RD1/4LA4.7KJ	1	10/P									
212	4843 028577	RD1/4LA390HJ	1	10/P									
213	4843 028635	RD1/4LA100KJ	1	10/P									
214	4843 028619	RD1/4LA022KJ	1	10/P									
215	4843 028635	RD1/4LA100KJ	1	10/P									
216	4843 028619	RD1/4LA022KJ	1	10/P									
217	4843 028603	RD1/4LA4.7KJ	1	10/P									
218	4843 028619	RD1/4LA022KJ	1	10/P									
219	4843 028619	RD1/4LA022KJ	1	10/P									
220	4843 028619	RD1/4LA022KJ	1	10/P									
221	4843 028603	RD1/4LA4.7KJ	1	10/P									
222	4843 028619	RD1/4LA022KJ	1	10/P									
223	4843 028603	RD1/4LA4.7KJ	1	10/P									
224	4843 028619	RD1/4LA022KJ	1	10/P									
225	4843 028603	RD1/4LA4.7KJ	1	10/P									
226	4843 028619	RD1/4LA022KJ	1	10/P									
227	4843 028603	RD1/4LA4.7KJ	1	10/P									
228	4843 028619	RD1/4LA022KJ	1	10/P									
229	4843 028603	RD1/4LA4.7KJ	1	10/P									
230	4843 028619	RD1/4LA022KJ	1	10/P									
231	4843 028603	RD1/4LA4.7KJ	1	10/P									
232	4843 028619	RD1/4LA022KJ	1	10/P									
233	4843 028603	RD1/4LA4.7KJ	1	10/P									
234	4843 028603	RD1/4LA4.7KJ	1	10/P									
235	4843 028619	RD1/4LA022KJ	1	10/P									
236	4843 028603	RD1/4LA4.7KJ	1	10/P									
237	4843 028619	RD1/4LA022KJ	1	10/P									
238	4843 028619	RD1/4LA022KJ	1	10/P									
239	4843 028563	RD1/4LA100HJ	1	10/P									
240	4843 028603	RD1/4LA4.7KJ	1	10/P									
241	4843 028603	RD1/4LA4.7KJ	1	10/P									
242	4843 028603	RD1/4LA4.7KJ	1	10/P									
243	4843 028603	RD1/4LA4.7KJ	1	10/P									
244	4843 028619	RD1/4LA022KJ	1	10/P									
245	4843 028603	RD1/4LA4.7KJ	1	10/P									

ITEM NO.	PARTS NO.	PARTS NAME	Q'TY / PAGE	Q'TY / PACK	SPE PRICE IN NONE	P	I	R	BSI NO.	TO	FROM	SERIAL NO.	REMARKS
246	4843 028619	RD1/4LA022KJ	1	10/P									
247	4843 028603	RD1/4LA4.7KJ	1	10/P									
248	4843 028619	RD1/4LA022KJ	1	10/P									
249	4843 028595	RD1/4LA2.2KJ	1	10/P									
250	4843 028603	RD1/4LA4.7KJ	1	10/P									
251	4843 028603	RD1/4LA4.7KJ	1	10/P									
252	4843 028603	RD1/4LA4.7KJ	1	10/P									
253	4843 028603	RD1/4LA4.7KJ	1	10/P									
254	4843 028603	RD1/4LA4.7KJ	1	10/P									
255	4843 028603	RD1/4LA4.7KJ	1	10/P									
256	4843 028619	RD1/4LA022KJ	1	10/P									
257	4843 028603	RD1/4LA4.7KJ	1	10/P									
258	4843 028619	RD1/4LA022KJ	1	10/P									
259	4843 028635	RD1/4LA100KJ	1	10/P									
260	4843 028635	RD1/4LA100KJ	1	10/P									
261	4843 028619	RD1/4LA022KJ	1	10/P									
262	4843 028603	RD1/4LA4.7KJ	1	10/P									
263	4843 028619	RD1/4LA022KJ	1	10/P									
264	4843 028619	RD1/4LA022KJ	1	10/P									
265	4843 028619	RD1/4LA022KJ	1	10/P									
266	4843 028619	RD1/4LA022KJ	1	10/P									
267	4843 028619	RD1/4LA022KJ	1	10/P									
268	4843 028619	RD1/4LA022KJ	1	10/P									
269	4843 028619	RD1/4LA022KJ	1	10/P									
270	4843 028619	RD1/4LA022KJ	1	10/P									
271	4843 028619	RD1/4LA022KJ	1	10/P									
272	4843 028619	RD1/4LA022KJ	1	10/P									
273	4843 028619	RD1/4LA022KJ	1	10/P									
274	4843 028577	RD1/4LA390HJ	1	10/P									
291	4843 321159	SKT-DICS-64A	1	1/S						291 1			IC2
291 1	4843 321159	SKT-DISC-64A	0	1/S		B	-	E	F4B103		291	VB4	IC2
301	4843 306168	J-1-175132-6	1	5/P									
311	4843 304149	J-DF1B-9P2.5DSA	1	5/P									
321	4843 303788	J-DF1B30DP-2.5D	1	5/P									
330	4843 306165	J-2-175132-2	1	5/P									
347	4843 304922	J-173981-7	1	5/P									
349	4843 304927	J-1-173981-2	1	5/P									
355	4843 306385	J-DF1B-08P-DSA	1	5/P									
358	4843 306381	J-DF1B-04P-DSA	1	5/P									
360	4843 304918	J-173981-3	1	5/P									
371	4843 306383	J-DF1B-06P-DSA	1	5/P									
372	4843 306384	J-DF1B-07P-DSA	1	5/P									
373	4843 306381	J-DF1B-04P-DSA	1	5/P									
381	4407 782660	JUMPER-WIRE-10	90	10/P									
382	4407 782660	JUMPER-WIRE-10	58	10/P									
390	7040 300611	PAN30*06MSZN3A	1	50/P									

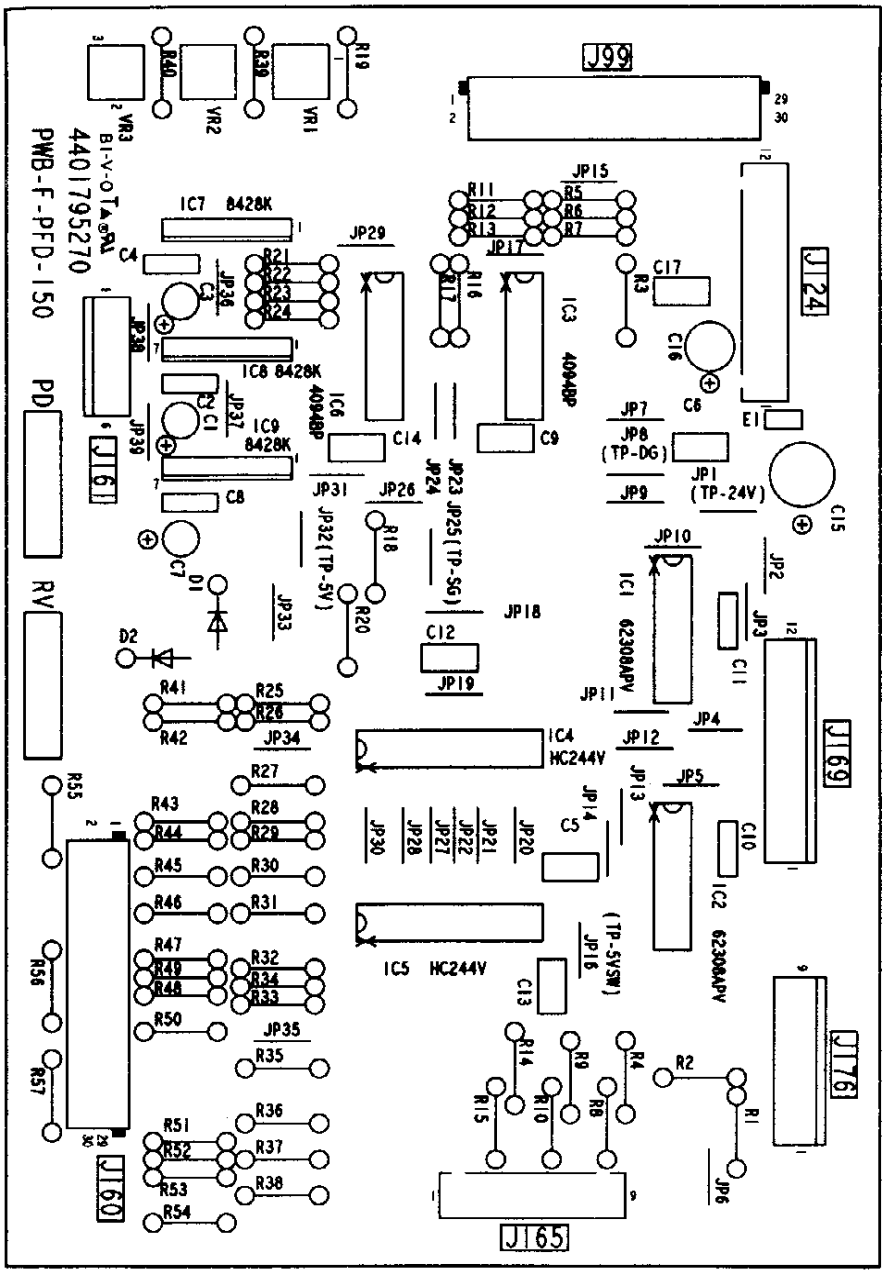
J99
J124
J169
J176
J165
J160
J161
PD
RV
IC7 8428K
IC8 8428K
IC9 8428K
IC6 4094BP
IC3 4094BP
IC1 62308APV
IC2 62308APV
IC4 HC244V
IC5 HC244V
JP1 (TP-24V)
JP8 (TP-DG)
JP23 JP25 (TP-SG)
JP32 (TP-5V)
JP16 (TP-5VSW)
VR1
VR2
VR3
R19
R40
R39
R55
R56
R57
D1
D2
E1
JP6
JP7
JP9
JP10
JP11
JP12
JP13
JP14
JP15
JP17
JP18
JP19
JP20
JP21
JP22
JP24
JP26
JP27
JP28
JP29
JP30
JP31
JP33
JP34
JP35
JP36
JP37
JP38
JP39
JP2
JP3
JP4
JP5
C1
C2
C3
C4
C5
C6
C7
C8
C9
C10
C11
C12
C13
C14
C15
C16
C17
R1
R2
R3
R4
R5
R6
R7
R8
R9
R10
R11
R12
R13
R14
R15
R16
R17
R18
R20
R21
R22
R23
R24
R25
R26
R27
R28
R29
R30
R31
R32
R33
R34
R35
R36
R37
R38
R41
R42
R43
R44
R45
R46
R47
R48
R49
R50
R51
R52
R53
R54
R55
R56
R57
4401795270
PWB-F-PFD-150

TOSHIBA

ITEM NO.	PARTS NO.	PARTS NAME	Q'TY / PAGE	Q'TY / PACK	SPE PRICE IN NONE	P	I	R	BSI NO.	TO	FROM	SERIAL NO.	REMARKS
0	4400 748100	PWA-F-PFD-151	1	1/SB									
1	4401 795270	PWB-F-PFD-150	1	N/A***									
12	3040 274680	IC-TD62308AP	1	5/S									
13	3040 470942	IC-TC4094BP	1	5/S									
14	4843 112190	IC-MC74HC244AN	1	5/S									
15	4843 112190	IC-MC74HC244AN	1	5/S									
16	3040 470942	IC-TC4094BP	1	5/S									
17	3040 378570	IC-TA8428K	1	5/S									
18	3040 378570	IC-TA8428K	1	5/S									
31	3037 249601	D-1S1588	1	5/P									
42	4408 216680	RA-V6EK-PV20K	1	5/P									
43	4408 216680	RA-V6EK-PV20K	1	5/P									
51	4843 406663	CE04W1V100M	1	10/P									
52	4407 942000	CZ-308F104Z50	1	10/P									
53	4843 406663	CE04W1V100M	1	10/P									
54	4407 942000	CZ-308F104Z50	1	10/P									
55	4843 412334	CKM-45F1B104ZY	1	10/P									
59	4843 412334	CKM-45F1B104ZY	1	10/P									
60	4407 942000	CZ-308F104Z50	1	10/P									
62	4843 412334	CKM-45F1B104ZY	1	10/P									
63	4843 412334	CKM-45F1B104ZY	1	10/P									
64	4843 412334	CKM-45F1B104ZY	1	10/P									
65	4843 406673	CE04W1H470M	1	10/P									
66	4843 406648	CE04W1C470M	1	10/P									
67	4843 412334	CKM-45F1B104ZY	1	10/P									
81	4843 028603	RD1/4LA4.7KJ	1	10/P									
82	4843 028619	RD1/4LA022KJ	1	10/P									
83	4843 028603	RD1/4LA4.7KJ	1	10/P									
84	4843 028619	RD1/4LA022KJ	1	10/P									
85	4843 028569	RD1/4LA180HJ	1	10/P									
86	4843 028569	RD1/4LA180HJ	1	10/P									
87	4843 028569	RD1/4LA180HJ	1	10/P									
88	4843 028603	RD1/4LA4.7KJ	1	10/P									
89	4843 028619	RD1/4LA022KJ	1	10/P									
90	4843 028603	RD1/4LA4.7KJ	1	10/P									
91	4843 028595	RD1/4LA2.2KJ	1	10/P									
92	4843 028595	RD1/4LA2.2KJ	1	10/P									
93	4843 028595	RD1/4LA2.2KJ	1	10/P									
94	4843 028619	RD1/4LA022KJ	1	10/P									
95	4843 028603	RD1/4LA4.7KJ	1	10/P									
98	4843 028603	RD1/4LA4.7KJ	1	10/P									
99	4843 028603	RD1/4LA4.7KJ	1	10/P									
100	4843 028619	RD1/4LA022KJ	1	10/P									
101	4843 028603	RD1/4LA4.7KJ	1	10/P									
102	4843 028603	RD1/4LA4.7KJ	1	10/P									
103	4843 028603	RD1/4LA4.7KJ	1	10/P									
104	4843 028603	RD1/4LA4.7KJ	1	10/P									
105	4843 028619	RD1/4LA022KJ	1	10/P									
106	4843 028619	RD1/4LA022KJ	1	10/P									
107	4843 028619	RD1/4LA022KJ	1	10/P									
108	4843 028619	RD1/4LA022KJ	1	10/P									
109	4843 028619	RD1/4LA022KJ	1	10/P									
110	4843 028619	RD1/4LA022KJ	1	10/P									
111	4843 028619	RD1/4LA022KJ	1	10/P									
112	4843 028619	RD1/4LA022KJ	1	10/P									
113	4843 028619	RD1/4LA022KJ	1	10/P									
114	4843 028619	RD1/4LA022KJ	1	10/P									
115	4843 028619	RD1/4LA022KJ	1	10/P									
116	4843 028619	RD1/4LA022KJ	1	10/P									
117	4843 028619	RD1/4LA022KJ	1	10/P									
118	4843 028619	RD1/4LA022KJ	1	10/P									
119	4843 028603	RD1/4LA4.7KJ	1	10/P									
120	4843 028603	RD1/4LA4.7KJ	1	10/P									
121	4843 028603	RD1/4LA4.7KJ	1	10/P									
122	4843 028603	RD1/4LA4.7KJ	1	10/P									
123	4843 028603	RD1/4LA4.7KJ	1	10/P									
124	4843 028603	RD1/4LA4.7KJ	1	10/P									
125	4843 028603	RD1/4LA4.7KJ	1	10/P									
126	4843 028577	RD1/4LA390HJ	1	10/P									
127	4843 028603	RD1/4LA4.7KJ	1	10/P									
128	4843 028603	RD1/4LA4.7KJ	1	10/P									

ITEM NO.	PARTS NO.	PARTS NAME	Q'TY / PAGE	Q'TY / PACK	SPE PRICE IN NONE	P	I	R	BSI NO.	TO	FROM	SERIAL NO.	REMARKS
129	4843 028603	RD1/4LA4.7KJ	1	10/P									
130	4843 028577	RD1/4LA390HJ	1	10/P									
131	4843 028603	RD1/4LA4.7KJ	1	10/P									
132	4843 028603	RD1/4LA4.7KJ	1	10/P									
133	4843 028603	RD1/4LA4.7KJ	1	10/P									
135	4843 028635	RD1/4LA100KJ	1	10/P									
136	4843 028635	RD1/4LA100KJ	1	10/P									
137	4843 028635	RD1/4LA100KJ	1	10/P									
150	4843 303788	J-DF1B30DP-2.5D	1	5/P									
155	4843 306387	J-DF1B-12P-DSA	1	5/P									
160	4843 303788	J-DF1B30DP-2.5D	1	5/P									
161	4843 301051	J-5045-06A	1	5/P									
165	4843 304149	J-DF1B-9P2.5DSA	1	5/P									
169	4843 301276	J-5045-12A	1	5/P									
176	4843 301273	J-5045-09A	1	5/P									
181	4407 782660	JUMPER-WIRE-10	36	10/P									

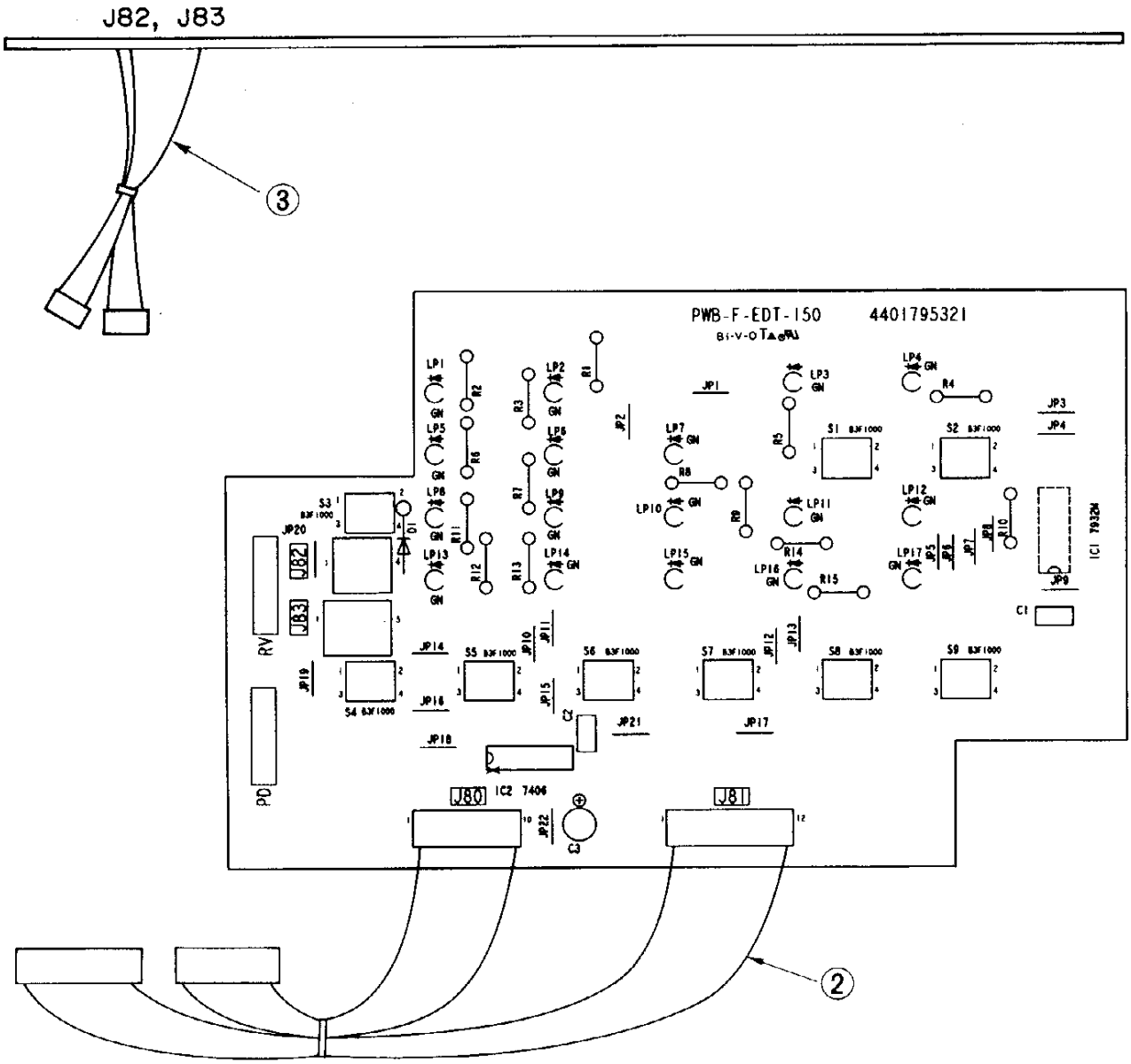
J82, J83
3
PWB-F-EDT-150 4401795321
J82
J83
RV
PD
J80
IC2 7406
J81
IC1 7932M
2

ITEM NO.	PARTS NO.	PARTS NAME	Q'TY / PAGE	Q'TY / PACK	SPE PRICE IN NONE	P	I	R	BSI NO.	TO	FROM	SERIAL NO.	REMARKS
0	4401 795520	PWA-F-EDT-150	1	1/SB									
1	4401 795320	PWB-F-EDT-150	1	N/A***									
2	4401 796410	WH-DSP-EDT-150	1	1/P									
3	4401 796620	WH-COUNTR-CNT	1	1/P									
5	4843 114181	IC-LC7932M	1	1/S									
6	4843 176523	IC-SN7406N	1	5/S									
11	3037 978380	D-S5277B	1	5/P									
21	4843 412334	CKM-45F1B104ZY	1	10/P						021 1			
21 1	4843 413234	CK-45F1B104ZY-F	1	10/P		C	E	F	F97A813		021		
22	4843 412334	CKM-45F1B104ZY	1	10/P						022 1			
22 1	4843 413234	CK-45F1B104ZY-F	1	10/P		C	E	F	F97A813		022		
23	4843 410404	CE-04W1C470M	1	10/P									
31	4843 028563	RD1/4LA100HJ	1	10/P									
32	4843 028563	RD1/4LA100HJ	1	10/P									
33	4843 028563	RD1/4LA100HJ	1	10/P									
34	4843 028563	RD1/4LA100HJ	1	10/P									
35	4843 028563	RD1/4LA100HJ	1	10/P									
36	4843 028563	RD1/4LA100HJ	1	10/P									
37	4843 028563	RD1/4LA100HJ	1	10/P									
38	4843 028563	RD1/4LA100HJ	1	10/P									
39	4843 028563	RD1/4LA100HJ	1	10/P									
40	4843 028563	RD1/4LA100HJ	1	10/P									
41	4843 028563	RD1/4LA100HJ	1	10/P									
42	4843 028563	RD1/4LA100HJ	1	10/P									
43	4843 028563	RD1/4LA100HJ	1	10/P									
44	4843 028563	RD1/4LA100HJ	1	10/P									
45	4843 028563	RD1/4LA100HJ	1	10/P									
101	4843 194312	LED-SLR34MC3F-G	1	5/P						101 1			
101 1	4843 194552	LED-SLR-342MC3F	1	5/P		C	E	F	F97A813		101		
102	4843 194312	LED-SLR34MC3F-G	1	5/P						102 1			
102 1	4843 194552	LED-SLR-342MC3F	1	5/P		C	E	F	F97A813		102		
103	4843 194312	LED-SLR34MC3F-G	1	5/P						103 1			
103 1	4843 194552	LED-SLR-342MC3F	1	5/P		C	E	F	F97A813		103		
104	4843 194312	LED-SLR34MC3F-G	1	5/P						104 1			
104 1	4843 194552	LED-SLR-342MC3F	1	5/P		C	E	F	F97A813		104		
105	4843 194312	LED-SLR34MC3F-G	1	5/P						105 1			
105 1	4843 194552	LED-SLR-342MC3F	1	5/P		C	E	F	F97A813		105		
106	4843 194312	LED-SLR34MC3F-G	1	5/P						106 1			
106 1	4843 194552	LED-SLR-342MC3F	1	5/P		C	E	F	F97A813		106		
107	4843 194312	LED-SLR34MC3F-G	1	5/P						107 1			
107 1	4843 194552	LED-SLR-342MC3F	1	5/P		C	E	F	F97A813		107		
108	4843 194312	LED-SLR34MC3F-G	1	5/P						108 1			
108 1	4843 194552	LED-SLR-342MC3F	1	5/P		C	E	F	F97A813		108		
109	4843 194312	LED-SLR34MC3F-G	1	5/P						109 1			
109 1	4843 194552	LED-SLR-342MC3F	1	5/P		C	E	F	F97A813		109		
110	4843 194312	LED-SLR34MC3F-G	1	5/P						110 1			
110 1	4843 194552	LED-SLR-342MC3F	1	5/P		C	E	F	F97A813		110		
111	4843 194312	LED-SLR34MC3F-G	1	5/P						111 1			
111 1	4843 194552	LED-SLR-342MC3F	1	5/P		C	E	F	F97A813		111		
112	4843 194312	LED-SLR34MC3F-G	1	5/P						112 1			
112 1	4843 194552	LED-SLR-342MC3F	1	5/P		C	E	F	F97A813		112		
113	4843 194312	LED-SLR34MC3F-G	1	5/P						113 1			
113 1	4843 194552	LED-SLR-342MC3F	1	5/P		C	E	F	F97A813		113		
114	4843 194312	LED-SLR34MC3F-G	1	5/P						114 1			
114 1	4843 194552	LED-SLR-342MC3F	1	5/P		C	E	F	F97A813		114		
115	4843 194312	LED-SLR34MC3F-G	1	5/P						115 1			
115 1	4843 194552	LED-SLR-342MC3F	1	5/P		C	E	F	F97A813		115		
116	4843 194312	LED-SLR34MC3F-G	1	5/P						116 1			
116 1	4843 194552	LED-SLR-342MC3F	1	5/P		C	E	F	F97A813		116		
117	4843 194312	LED-SLR34MC3F-G	1	5/P						117 1			
117 1	4843 194552	LED-SLR-342MC3F	1	5/P		C	E	F	F97A813		117		
151	4843 231490	SP-B3F-1000	1	5/S									
152	4843 231490	SP-B3F-1000	1	5/S									
153	4843 231490	SP-B3F-1000	1	5/S									
154	4843 231490	SP-B3F-1000	1	5/S									
155	4843 231490	SP-B3F-1000	1	5/S									
156	4843 231490	SP-B3F-1000	1	5/S									
157	4843 231490	SP-B3F-1000	1	5/S									
158	4843 231490	SP-B3F-1000	1	5/S									
159	4843 231490	SP-B3F-1000	1	5/S									
201	4843 304962	J-53025-0410	1	5/P									

ITEM NO.	PARTS NO.	PARTS NAME	Q'TY / PAGE	Q'TY / PACK	SPE PRICE IN NONE	P	I	R	BSI NO.	TO	FROM	SERIAL NO.	REMARKS
202	4843 304963	J-53025-0510	1	5/P									
211	4407 782660	JUMPER-WIRE-10	22	10/P									

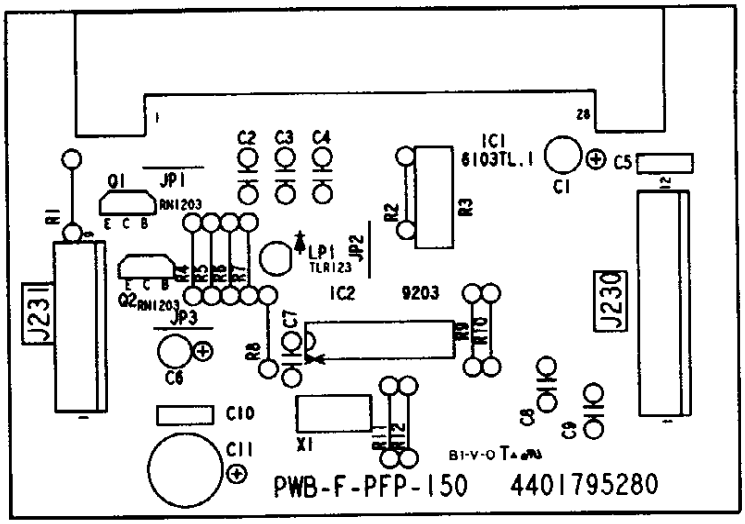
PWB-F-PFP-150 4401795280
J23
J230
IC1
6103TL.1
IC2
9203
Q1
Q2
JP1
JP2
JP3
LP1
TLR123
RN1203
C1
C2
C3
C4
C5
C6
C7
C8
C9
C10
C11
R1
R2
R3
R4
R5
R6
R7
R8
R9
R10
R11
R12
X1

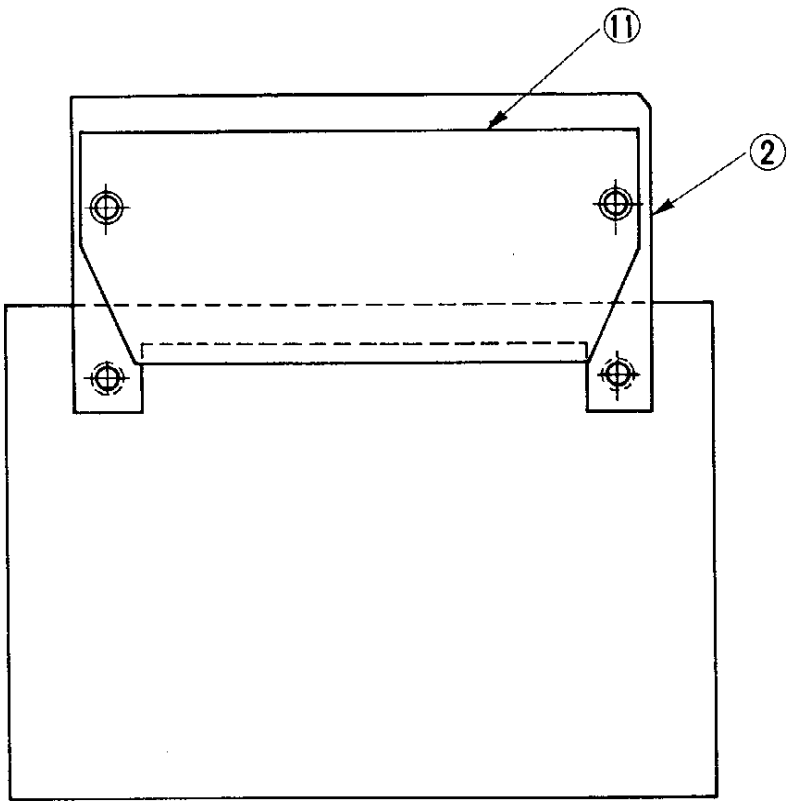
11
2

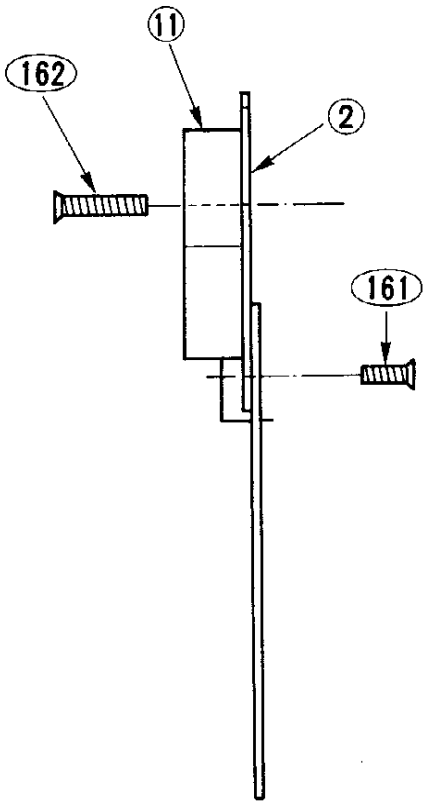
11
162
2
161

ITEM NO.	PARTS NO.	PARTS NAME	Q'TY / PAGE	Q'TY / PACK	SPE PRICE IN NONE	P	I	R	BSI NO.	TO	FROM	SERIAL NO.	REMARKS
0	4401 795480	PWA-F-PFP-150	1	1/SB									
1	4401 795280	PWB-F-PFP-150	1	N/A***									
2	4401 797630	HS-6105-L	1	1/P									
11	4843 114578	IC-STK6105-TL	1	1/S									
12	3040 412045	IC-TC9203AP	1	5/S									
31	3036 002030	Q-RN1203	1	5/P									
32	3036 002030	Q-RN1203	1	5/P									
51	3038 601100	LP-TLR123	1	5/P									
71	4843 250558	X-CST7.23MTW	1	5/S									
81	4843 406671	CE04W1H100M	1	10/P									
82	4843 412334	CKM-45F1B104ZY	1	10/P									
83	4843 412334	CKM-45F1B104ZY	1	10/P									
84	4843 412334	CKM-45F1B104ZY	1	10/P									
85	4407 942000	CZ-308F104Z50	1	10/P									
86	4843 406646	CE04W1C100M	1	10/P									
87	4843 412334	CKM-45F1B104ZY	1	10/P									
88	4843 410262	CQ921M1H102K	1	10/P									
89	4843 412334	CKM-45F1B104ZY	1	10/P									
90	4407 942000	CZ-308F104Z50	1	10/P									
91	4843 406674	CE04W1H101M	1	10/P									
111	4843 028603	RD1/4LA4.7KJ	1	10/P									
112	4843 028599	RD1/4LA3.3KJ	1	10/P									
113	4843 073118	RW-M003MR10JP	1	10/P									
114	4843 028603	RD1/4LA4.7KJ	1	10/P									
115	4843 028603	RD1/4LA4.7KJ	1	10/P									
117	4843 028645	RD1/4LA270KJ	1	10/P									
118	4843 028585	RD1/4LA820HJ	1	10/P									
119	4843 028631	RD1/4LA068KJ	1	10/P									
120	4843 028639	RD1/4LA150KJ	1	10/P									
121	4843 028603	RD1/4LA4.7KJ	1	10/P									
122	4843 028603	RD1/4LA4.7KJ	1	10/P									
141	4843 301276	J-5045-12A	1	5/P									
142	4843 301273	J-5045-09A	1	5/P									
151	4407 782660	JUMPER-WIRE-10	3	10/P									
161	7040 300611	PAN30*06MSZN3A	2	50/P									
162	7040 301211	PAN30*12MSZN3AI	2	50/P									

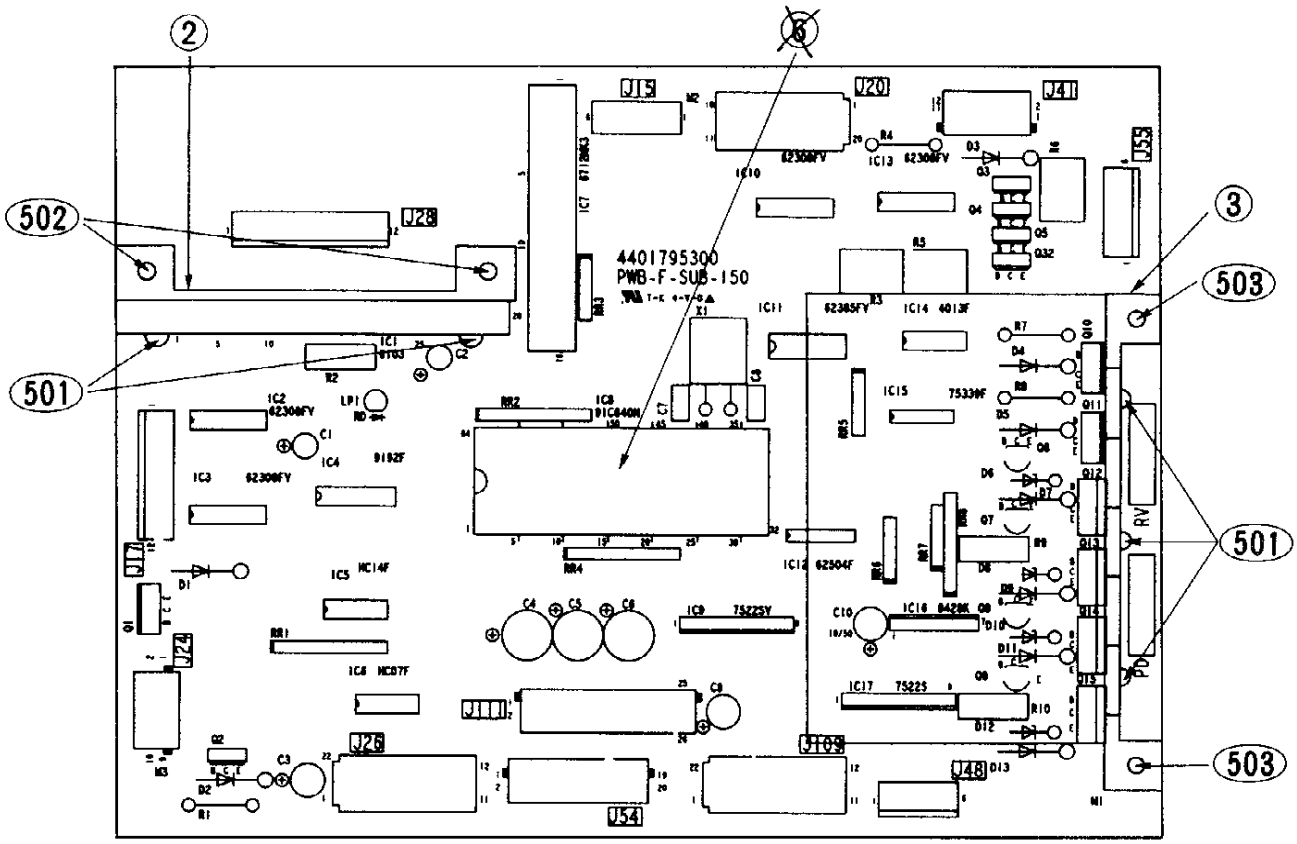
2
6
502
501
3
503
501
503
4401795300
PWB-F-SUB-150

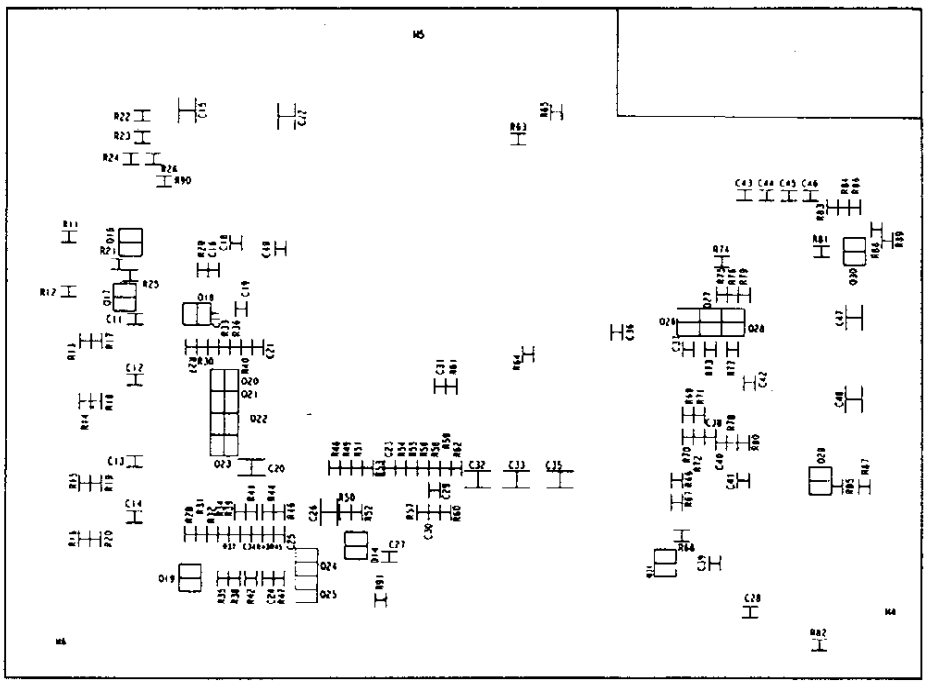

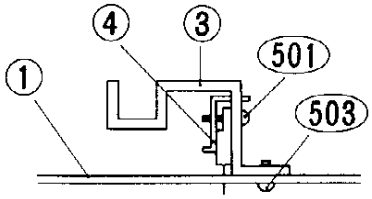
4
3
501
1
503

ITEM NO.	PARTS NO.	PARTS NAME	Q'TY / PAGE	Q'TY / PACK	SPE PRICE IN NONE	P	I	R	BSI NO.	TO	FROM	SERIAL NO.	REMARKS
0	4400 748110	PWA-F-SUB-151	1	1/SB						000 1			
0 1	4400 748150	PWA-F-SUB-151	1	1/SB		E	-	J	F4B103		000		
1	4401 795300	PWB-F-SUB-150	1	N/A***									
2	4402 816630	HS-6103	1	1/P									
3	4401 797170	HS-SCAN-150	1	1/P									
4	4401 797180	BKT-HS-SCAN	1	1/P									
6	4843 321159	SKT-DICS-64A	1	1/S						006 1			IC-SOCKET
6 1	4843 321159	SKT-DICS-64A	0	1/S		B	-	E	F4G247		006	VE4	IC-SOCKET
7	3038 601100	LP-TLR123	1	5/P									
8	4843 250531	X-HC-49/U-12.00	1	5/S						008 1			
8 1	4843 250668	X-HC49/U12.000M	1	5/S		C	E	H	F95J504		008	VF5	
11	4843 113777	IC-STK6103-T	1	1/S									
12	3040 274685	IC-TD62308F	1	1/S						012 1			
12 1	3040 274687	IC-TD62308FTP2	1	1/S		C	E	E	F4B103		012		
13	3040 274685	IC-TD62308F	1	1/S						013 1			
13 1	3040 274687	IC-TD62308FTP2	1	1/S		C	E	E	F4B103		013		
14	3040 411945	IC-TC9192AF	1	1/S									
15	4843 113612	IC-MC74HC14FL	1	5/P									
16	3040 488464	IC-TC74HC07AF	1	5/S						016 1			
16 1	3040 487262	IC-TC74HC07AFT2	1	5/S		C	E	E	F4B103		016		
17	4843 113784	IC-STK6712BMK3	1	1/S									
18	4400 748820	IC-151SUB-V02	1	1/S						018 1			
18 1	4400 749260	IC-151SUB-V04	1	1/S		E	-	J	F4B103	018 2	018		
18 2	3040 566162	TMP91C640N-2188	1	1/S		C	E	G	F4B105		018 1	VB4	
19	3040 347120	IC-TA7522S	1	5/S									
20	3040 274685	IC-TD62308F	1	1/S						020 1			
20 1	3040 274687	IC-TD62308FTP2	1	1/S		C	E	E	F4B103		020		
21	3040 274758	IC-TD62385AF	1	5/S									
22	3040 275024	IC-TD62504F	1	5/S						022 1			
22 1	3040 274966	IC-TD62504F-TP2	1	5/S		C	E	E	F4B103		022		
23	3040 274685	IC-TD62308F	1	1/S						023 1			
23 1	3040 274687	IC-TD62308FTP2	1	1/S		C	E	E	F4B103		023		
24	3040 470050	IC-TC4013BF(NEW	1	5/S						024 1			
24 1	3040 470052	TC4013BFNEW,TP2	1	5/S		C	E	E	F4B103		024		
25	4843 114340	IC-LM339M	1	5/S									
26	3040 378570	IC-TA8428K	1	5/S									
27	3040 347120	IC-TA7522S	1	5/S									
41	3036 868550	Q-2SD1417	1	5/S									
42	3036 548970	Q-2SA1428-Y	1	5/P									
43	3036 548970	Q-2SA1428-Y	1	5/P									
44	3036 548970	Q-2SA1428-Y	1	5/P									
45	3036 363770	Q-2SC3668-Y	1	10/P									
46	3036 325457	Q-2SC2235-Y(C)	1	5/S									
47	3036 325457	Q-2SC2235-Y(C)	1	5/S									
48	3036 325457	Q-2SC2235-Y(C)	1	5/S									
49	3036 325457	Q-2SC2235-Y(C)	1	5/S									
50	3036 639650	Q-2SB1022	1	5/S									
51	3036 639650	Q-2SB1022	1	5/S									
52	3036 359650	Q-2SC3310	1	5/S									
53	3036 359650	Q-2SC3310	1	5/S									
54	3036 359650	Q-2SC3310	1	5/S									
55	3036 359650	Q-2SC3310	1	5/S									
56	3036 335473	Q-2SC2712-Y85RT	1	10/P									
57	3036 335473	Q-2SC2712-Y85RT	1	10/P									
58	3036 014012	Q-RN2401(TE85R)	1	5/P									
59	3036 004032	Q-RN1403(TE85R)	1	5/P									
60	3036 004012	Q-RN1401(TE85R)	1	5/P									
61	3036 004012	Q-RN1401(TE85R)	1	5/P									
62	3036 004012	Q-RN1401(TE85R)	1	5/P									
63	3036 004012	Q-RN1401(TE85R)	1	5/P									
64	3036 014012	Q-RN2401(TE85R)	1	5/P									
65	3036 014012	Q-RN2401(TE85R)	1	5/P									
66	3036 004032	Q-RN1403(TE85R)	1	5/P									
67	3036 335473	Q-2SC2712-Y85RT	1	10/P									
68	3036 335473	Q-2SC2712-Y85RT	1	10/P									
69	3036 014012	Q-RN2401(TE85R)	1	5/P									
70	3036 004032	Q-RN1403(TE85R)	1	5/P									
71	3036 004032	Q-RN1403(TE85R)	1	5/P									
72	3036 871400	Q-2SD1631	1	10/P									
101	3037 978380	D-S5277B	1	5/P									
102	3037 978380	D-S5277B	1	5/P									

ITEM NO.	PARTS NO.	PARTS NAME	Q'TY / PAGE	Q'TY / PACK	SPE PRICE IN NONE	P	I	R	BSI NO.	TO	FROM	SERIAL NO.	REMARKS
103	3037 568250	D-1S1834	1	5/P									
104	3037 568250	D-1S1834	1	5/P									
105	3037 568250	D-1S1834	1	5/P									
106	4843 101248	D-RD100E	1	10/P									
107	3037 568250	D-1S1834	1	5/P									
108	4843 101248	D-RD100E	1	10/P									
109	3037 568250	D-1S1834	1	5/P									
110	4843 101248	D-RD100E	1	10/P									
111	3037 568250	D-1S1834	1	5/P									
112	4843 101248	D-RD100E	1	10/P									
113	3037 568250	D-1S1834	1	5/P									
114	3037 150651	D-1SS184(TE85R)	1	5/P									
131	4841 010076	RD1/2P-3.3KJ	1	10/P									
132	4843 073118	RW-M003MR10JP	1	10/P									
133	4843 071536	RW-M02S101KL	1	10/P									
134	4841 010071	RD1/2P-2.2KJ	1	10/P									
135	4843 071536	RW-M02S101KL	1	10/P									
136	4843 071536	RW-M02S101KL	1	10/P									
137	4841 010080	RD1/2P-4.7KJ	1	10/P									
138	4841 010080	RD1/2P-4.7KJ	1	10/P									
139	4843 073118	RW-M003MR10JP	1	10/P									
140	4843 073118	RW-M003MR10JP	1	10/P									
141	4843 072159	RTP-2B2A102JDT	1	10/P									
142	4843 072159	RTP-2B2A102JDT	1	10/P									
143	4843 072151	RTP-2B2A221JDT	1	10/P									
144	4843 072151	RTP-2B2A221JDT	1	10/P									
145	4843 072151	RTP-2B2A221JDT	1	10/P									
146	4843 072151	RTP-2B2A221JDT	1	10/P									
147	4843 072171	RTP-2B2A103JDT	1	10/P									
148	4843 072171	RTP-2B2A103JDT	1	10/P									
149	4843 072171	RTP-2B2A103JDT	1	10/P									
150	4843 072171	RTP-2B2A103JDT	1	10/P									
151	4843 072171	RTP-2B2A103JDT	1	10/P									
152	4843 072154	RTP-2B2A391JDT	1	10/P									
153	4843 072154	RTP-2B2A391JDT	1	10/P									
154	4843 072155	RTP-2B2A471JDT	1	10/P									
155	4843 072171	RTP-2B2A103JDT	1	10/P									
156	4843 072167	RTP-2B2A472JDT	1	10/P									
157	4843 072056	RTP-2B2A823JDT	1	10/P									
158	4843 072163	RTP-2B2A222JDT	1	10/P									
159	4843 072144	RTP-2B2A560JDT	1	10/P									
160	4843 072177	RTP-2B2A333JDT	1	10/P									
161	4843 072159	RTP-2B2A102JDT	1	10/P									
162	4843 072166	RTP-2B2A392JDT	1	10/P									
163	4843 072159	RTP-2B2A102JDT	1	10/P									
164	4843 072159	RTP-2B2A102JDT	1	10/P									
165	4843 072103	RTP-2B2A272FDT	1	10/P									
166	4843 072159	RTP-2B2A102JDT	1	10/P									
167	4843 072163	RTP-2B2A222JDT	1	10/P									
168	4843 072164	RTP-2B2A272JDT	1	10/P									
169	4843 072167	RTP-2B2A472JDT	1	10/P									
170	4843 072144	RTP-2B2A560JDT	1	10/P									
171	4843 072167	RTP-2B2A472JDT	1	10/P									
172	4843 072159	RTP-2B2A102JDT	1	10/P									
173	4843 072174	RTP-2B2A183JDT	1	10/P									
174	4843 072163	RTP-2B2A222JDT	1	10/P									
175	4843 072159	RTP-2B2A102JDT	1	10/P									
176	4843 072163	RTP-2B2A222JDT	1	10/P									
177	4843 072168	RTP-2B2A562JDT	1	10/P									
178	4843 072162	RTP-2B2A182JDT	1	10/P									
179	4843 072171	RTP-2B2A103JDT	1	10/P									
180	4843 072165	RTP-2B2A332JDT	1	10/P									
181	4843 072054	RTP-2B2A563JDT	1	10/P									
182	4843 072171	RTP-2B2A103JDT	1	10/P									
183	4843 072159	RTP-2B2A102JDT	1	10/P									
184	4843 072159	RTP-2B2A102JDT	1	10/P									
185	4843 072068	RTP-2B2A824JDT	1	10/P									
186	4843 072098	RTP-2B2A102FDT	1	10/P									
187	4843 072104	RTP-2B2A332FDT	1	10/P									
188	4843 072110	RTP-2B2A103FDT	1	10/P									
189	4843 072116	RTP-2B2A333FDT	1	10/P									

ITEM NO.	PARTS NO.	PARTS NAME	Q'TY / PAGE	Q'TY / PACK	SPE PRICE IN NONE	P	I	R	BSI NO.	TO	FROM	SERIAL NO.	REMARKS
190	4843 072090	RTP-2B2A221FDT	1	10/P									
191	4843 072167	RTP-2B2A472JDT	1	10/P									
192	4843 072104	RTP-2B2A332FDT	1	10/P									
193	4843 072169	RTP-2B2A682JDT	1	10/P									
194	4843 072167	RTP-2B2A472JDT	1	10/P									
195	4843 072156	RTP-2B2A561JDT	1	10/P									
196	4843 072159	RTP-2B2A102JDT	1	10/P									
197	4843 072159	RTP-2B2A102JDT	1	10/P									
198	4843 072167	RTP-2B2A472JDT	1	10/P									
199	4843 072177	RTP-2B2A333JDT	1	10/P									
200	4843 072167	RTP-2B2A472JDT	1	10/P									
201	4843 072059	RTP-2B2A154JDT	1	10/P									
202	4843 072159	RTP-2B2A102JDT	1	10/P									
203	4843 072159	RTP-2B2A102JDT	1	10/P									
204	4843 072165	RTP-2B2A332JDT	1	10/P									
205	4843 072158	RTP-2B2A821JDT	1	10/P									
206	4843 072159	RTP-2B2A102JDT	1	10/P									
207	4843 072175	RTP-2B2A223JDT	1	10/P									
208	4843 072159	RTP-2B2A102JDT	1	10/P									
209	4843 072165	RTP-2B2A332JDT	1	10/P									
210	4843 072167	RTP-2B2A472JDT	1	10/P									
211	4843 072167	RTP-2B2A472JDT	1	10/P									
212	4843 072159	RTP-2B2A102JDT	1	10/P									
213	4843 072167	RTP-2B2A472JDT	1	10/P									
214	4843 072167	RTP-2B2A472JDT	1	10/P									
215	4843 072159	RTP-2B2A102JDT	1	10/P									
216	4843 072167	RTP-2B2A472JDT	1	10/P									
217	4843 072165	RTP-2B2A332JDT	1	10/P									
218	4843 072064	RTP-2B2A394JDT	1	10/P									
219	4843 072062	RTP-2B2A274JDT	1	10/P									
220	4843 072167	RTP-2B2A472JDT	1	10/P									
222	4843 070468	RS2/1PT5.6HJ	1	10/P									
301	4843 410007	CE04W1H1R0M	1	10/P									
302	4843 406671	CE04W1H100M	1	10/P									
303	4843 406648	CE04W1C470M	1	10/P									
304	4843 406674	CE04W1H101M	1	10/P									
305	4843 406674	CE04W1H101M	1	10/P									
306	4843 406674	CE04W1H101M	1	10/P									
307	4843 410127	CC92CH1H150K	1	10/P									
308	4843 410126	CC92CH1H120K	1	10/P									
309	4843 406648	CE04W1C470M	1	10/P									
310	4843 406671	CE04W1H100M	1	10/P									
311	4843 410862	CTP-K1F1E104ZT	1	10/P									
312	4843 410862	CTP-K1F1E104ZT	1	10/P									
313	4843 410862	CTP-K1F1E104ZT	1	10/P									
314	4843 410862	CTP-K1F1E104ZT	1	10/P									
315	4843 410535	CTP-M5F1H104ZT	1	10/P									
316	4843 410862	CTP-K1F1E104ZT	1	10/P									
317	4843 410862	CTP-K1F1E104ZT	1	10/P									
318	4843 410862	CTP-K1F1E104ZT	1	10/P									
319	4843 410862	CTP-K1F1E104ZT	1	10/P									
320	4843 410535	CTP-M5F1H104ZT	1	10/P									
321	4843 410862	CTP-K1F1E104ZT	1	10/P									
322	4843 410535	CTP-M5F1H104ZT	1	10/P									
323	4843 410862	CTP-K1F1E104ZT	1	10/P									
324	4843 410862	CTP-K1F1E104ZT	1	10/P									
325	4843 410862	CTP-K1F1E104ZT	1	10/P									
326	4843 410535	CTP-M5F1H104ZT	1	10/P									
327	4843 410862	CTP-K1F1E104ZT	1	10/P									
328	4843 410862	CTP-K1F1E104ZT	1	10/P									
329	4843 410862	CTP-K1F1E104ZT	1	10/P									
330	4843 410862	CTP-K1F1E104ZT	1	10/P									
331	4843 410725	CTP-M1B1H222KT	1	10/P									
332	4843 410535	CTP-M5F1H104ZT	1	10/P									
333	4843 410535	CTP-M5F1H104ZT	1	10/P									
334	4843 410862	CTP-K1F1E104ZT	1	10/P									
335	4843 410535	CTP-M5F1H104ZT	1	10/P									
336	4843 410862	CTP-K1F1E104ZT	1	10/P									
337	4843 410713	CTP-M1CH1H221KT	1	10/P									
338	4843 410725	CTP-M1B1H222KT	1	10/P									
339	4843 410862	CTP-K1F1E104ZT	1	10/P									

ITEM NO.	PARTS NO.	PARTS NAME	Q'TY / PAGE	Q'TY / PACK	SPE PRICE IN NONE	P	I	R	BSI NO.	TO	FROM	SERIAL NO.	REMARKS
340	4843 410725	CTP-M1B1H222KT	1	10/P									
341	4843 410862	CTP-K1F1E104ZT	1	10/P									
342	4843 410862	CTP-K1F1E104ZT	1	10/P									
343	4843 410862	CTP-K1F1E104ZT	1	10/P									
344	4843 410862	CTP-K1F1E104ZT	1	10/P									
345	4843 410862	CTP-K1F1E104ZT	1	10/P									
346	4843 410862	CTP-K1F1E104ZT	1	10/P									
347	4843 410535	CTP-M5F1H104ZT	1	10/P									
348	4843 410535	CTP-M5F1H104ZT	1	10/P									
349	4843 410862	CTP-K1F1E104ZT	1	10/P									
401	4407 917870	RR-S09LA472J	1	10/P									
402	4407 634340	RR-S09LM472J223	1	10/P						402 1			
402 1	4843 076427	RR-1/8S084R7220	1	10/P		C	E	J	F4L368		402		
403	4407 917830	RR-S05LA472J	1	10/P									
404	4407 634340	RR-S09LM472J223	1	10/P						404 1			
404 1	4843 076427	RR-1/8S084R7220	1	10/P		C	E	J	F4L368		404		
405	4407 917830	RR-S05LA472J	1	10/P									
406	4407 917830	RR-S05LA472J	1	10/P									
407	4407 917820	RR-S05LA561J	1	10/P									
408	4407 917850	RR-S08LB331J	1	10/P									
450	4843 301051	J-5045-06A	1	5/P									
451	4843 301276	J-5045-12A	1	5/P									
452	4843 303782	J-DF1B10DP-2.5D	1	5/P									
453	4843 303783	J-DF1B12DP-2.5D	1	5/P									
454	4843 303786	J-DF1B20DP-2.5D	1	5/P									
455	4843 303787	J-DF1B26DP-2.5D	1	5/P									
456	4843 304923	J-173981-8	1	5/P									
457	4843 304927	J-1-173981-2	1	5/P									
458	4843 307890	J-2-176235-2	1	5/P									
459	4843 306165	J-2-175132-2	1	5/P									
460	4843 306383	J-DF1B-06P-DSA	1	5/P									
461	4843 306166	J-2-175132-0	1	5/P									
481	4408 365120	JUMPER-WIRE-15	1	10/P									
501	7040 301211	PAN30*12MSZN3AI	5	50/P									
502	7040 400611	PAN40*06MSZN3AI	2	50/P									
503	7040 300611	PAN30*06MSZN3A	2	50/P									

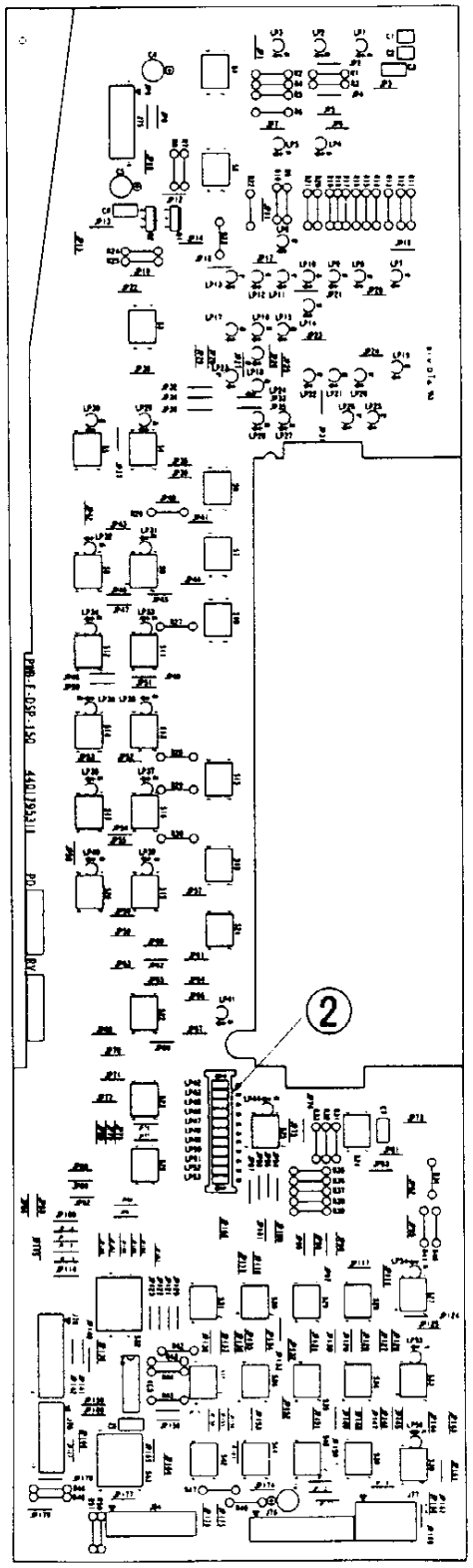
2

ITEM NO.	PARTS NO.	PARTS NAME	Q'TY / PAGE	Q'TY / PACK	SPE PRICE IN NONE	P	I	R	BSI NO.	TO	FROM	SERIAL NO.	REMARKS
0	4401 795510	PWA-F-DSP-150	1	1/SB									
1	4401 795310	PWB-F-DSP-150	1	N/A***									
2	4401 751110	CASE-LED	1	1/P									
11	4843 114181	IC-LC7932M	1	1/S									
12	4843 114181	IC-LC7932M	1	1/S									
13	4843 176523	IC-SN7406N	1	5/S									
21	3036 548970	Q-2SA1428-Y	1	5/P									
22	3036 548970	Q-2SA1428-Y	1	5/P									
31	4407 731470	CK45CH1H300JY	1	10/P						031 1			
31 1	4843 412280	CKM-ECCZ1H330JG	1	10/P		C	E	F	F97A813		031		
32	4407 731470	CK45CH1H300JY	1	10/P						032 1			
32 1	4843 412280	CKM-ECCZ1H330JG	1	10/P		C	E	F	F97A813		032		
33	4843 412334	CKM-45F1B104ZY	1	10/P						033 1			
33 1	4843 412279	CKM-ECFZ1E104ZF	1	10/P		C	E	F	F97A813		033		
34	4843 410404	CE-04W1C470M	1	10/P									
35	4843 410404	CE-04W1C470M	1	10/P									
36	4843 412334	CKM-45F1B104ZY	1	10/P						036 1			
36 1	4843 412279	CKM-ECFZ1E104ZF	1	10/P		C	E	F	F97A813		036		
37	4843 412334	CKM-45F1B104ZY	1	10/P						037 1			
37 1	4843 412279	CKM-ECFZ1E104ZF	1	10/P		C	E	F	F97A813		037		
38	4843 412334	CKM-45F1B104ZY	1	10/P						038 1			
38 1	4843 412279	CKM-ECFZ1E104ZF	1	10/P		C	E	F	F97A813		038		
101	4843 028587	RD1/4LA001KJ	1	10/P									
102	4843 028587	RD1/4LA001KJ	1	10/P									
103	4843 028587	RD1/4LA001KJ	1	10/P									
104	4843 028587	RD1/4LA001KJ	1	10/P									
105	4843 028587	RD1/4LA001KJ	1	10/P									
106	4843 028587	RD1/4LA001KJ	1	10/P									
107	4843 028567	RD1/4LA150HJ	1	10/P									
108	4843 028567	RD1/4LA150HJ	1	10/P									
109	4843 028563	RD1/4LA100HJ	1	10/P									
110	4843 028563	RD1/4LA100HJ	1	10/P									
111	4843 028563	RD1/4LA100HJ	1	10/P									
112	4843 028563	RD1/4LA100HJ	1	10/P									
113	4843 028563	RD1/4LA100HJ	1	10/P									
114	4843 028563	RD1/4LA100HJ	1	10/P									
115	4843 028563	RD1/4LA100HJ	1	10/P									
116	4843 028563	RD1/4LA100HJ	1	10/P									
117	4843 028563	RD1/4LA100HJ	1	10/P									
118	4843 028563	RD1/4LA100HJ	1	10/P									
119	4843 028563	RD1/4LA100HJ	1	10/P									
120	4843 028563	RD1/4LA100HJ	1	10/P									
121	4843 028563	RD1/4LA100HJ	1	10/P									
122	4843 028563	RD1/4LA100HJ	1	10/P									
123	4843 028563	RD1/4LA100HJ	1	10/P									
124	4843 028595	RD1/4LA2.2KJ	1	10/P									
125	4843 028595	RD1/4LA2.2KJ	1	10/P									
126	4843 028563	RD1/4LA100HJ	1	10/P									
127	4843 028563	RD1/4LA100HJ	1	10/P									
128	4843 028563	RD1/4LA100HJ	1	10/P									
129	4843 028563	RD1/4LA100HJ	1	10/P									
130	4843 028563	RD1/4LA100HJ	1	10/P									
131	4843 028563	RD1/4LA100HJ	1	10/P									
132	4843 028563	RD1/4LA100HJ	1	10/P									
133	4843 028563	RD1/4LA100HJ	1	10/P									
134	4843 028563	RD1/4LA100HJ	1	10/P									
135	4843 028563	RD1/4LA100HJ	1	10/P									
136	4843 028563	RD1/4LA100HJ	1	10/P									
137	4843 028563	RD1/4LA100HJ	1	10/P									
138	4843 028563	RD1/4LA100HJ	1	10/P									
139	4843 028563	RD1/4LA100HJ	1	10/P									
140	4843 028563	RD1/4LA100HJ	1	10/P									
141	4843 028563	RD1/4LA100HJ	1	10/P									
142	4843 028603	RD1/4LA4.7KJ	1	10/P									
143	4843 028603	RD1/4LA4.7KJ	1	10/P									
144	4843 028603	RD1/4LA4.7KJ	1	10/P									
145	4843 028603	RD1/4LA4.7KJ	1	10/P									
146	4843 028603	RD1/4LA4.7KJ	1	10/P									
147	4843 028575	RD1/4LA330HJ	1	10/P									
148	4843 028603	RD1/4LA4.7KJ	1	10/P									
149	4843 028575	RD1/4LA330HJ	1	10/P									

ITEM NO.	PARTS NO.	PARTS NAME	Q'TY / PAGE	Q'TY / PACK	SPE PRICE IN NONE	P	I	R	BSI NO.	TO	FROM	SERIAL NO.	REMARKS
150	4843 028603	RD1/4LA4.7KJ	1	10/P									
151	4843 028603	RD1/4LA4.7KJ	1	10/P									
201	4843 194312	LED-SLR34MC3F-G	1	5/P						201 1			
201 1	4843 194552	LED-SLR-342MC3F	1	5/P		C	E	F	F97A813		201		
202	4843 194312	LED-SLR34MC3F-G	1	5/P						202 1			
202 1	4843 194552	LED-SLR-342MC3F	1	5/P		C	E	F	F97A813		202		
203	4843 194312	LED-SLR34MC3F-G	1	5/P						203 1			
203 1	4843 194552	LED-SLR-342MC3F	1	5/P		C	E	F	F97A813		203		
204	4843 194312	LED-SLR34MC3F-G	1	5/P						204 1			
204 1	4843 194552	LED-SLR-342MC3F	1	5/P		C	E	F	F97A813		204		
205	4843 194312	LED-SLR34MC3F-G	1	5/P						205 1			
205 1	4843 194552	LED-SLR-342MC3F	1	5/P		C	E	F	F97A813		205		
206	4843 194313	LED-SLR34VC3F-R	1	5/P						206 1			
206 1	4843 194554	LED-SLR-342VC3F	1	5/P		C	E	F	F97A813		206		
207	4843 194313	LED-SLR34VC3F-R	1	5/P						207 1			
207 1	4843 194554	LED-SLR-342VC3F	1	5/P		C	E	F	F97A813		207		
208	4843 194313	LED-SLR34VC3F-R	1	5/P						208 1			
208 1	4843 194554	LED-SLR-342VC3F	1	5/P		C	E	F	F97A813		208		
209	4843 194313	LED-SLR34VC3F-R	1	5/P						209 1			
209 1	4843 194554	LED-SLR-342VC3F	1	5/P		C	E	F	F97A813		209		
210	4843 194312	LED-SLR34MC3F-G	1	5/P						210 1			
210 1	4843 194552	LED-SLR-342MC3F	1	5/P		C	E	F	F97A813		210		
211	4843 194314	LED-SLR34YC3F-Y	1	5/P						211 1			
211 1	4843 194553	LED-SLR-342YC3F	1	5/P		C	E	F	F97A813		211		
212	4843 194314	LED-SLR34YC3F-Y	1	5/P						212 1			
212 1	4843 194553	LED-SLR-342YC3F	1	5/P		C	E	F	F97A813		212		
213	4843 194314	LED-SLR34YC3F-Y	1	5/P						213 1			
213 1	4843 194553	LED-SLR-342YC3F	1	5/P		C	E	F	F97A813		213		
214	4843 194313	LED-SLR34VC3F-R	1	5/P						214 1			
214 1	4843 194554	LED-SLR-342VC3F	1	5/P		C	E	F	F97A813		214		
215	4843 194312	LED-SLR34MC3F-G	1	5/P						215 1			
215 1	4843 194552	LED-SLR-342MC3F	1	5/P		C	E	F	F97A813		215		
216	4843 194312	LED-SLR34MC3F-G	1	5/P						216 1			
216 1	4843 194552	LED-SLR-342MC3F	1	5/P		C	E	F	F97A813		216		
217	4843 194312	LED-SLR34MC3F-G	1	5/P						217 1			
217 1	4843 194552	LED-SLR-342MC3F	1	5/P		C	E	F	F97A813		217		
218	4843 194313	LED-SLR34VC3F-R	1	5/P						218 1			
218 1	4843 194554	LED-SLR-342VC3F	1	5/P		C	E	F	F97A813		218		
219	4843 194313	LED-SLR34VC3F-R	1	5/P						219 1			
219 1	4843 194554	LED-SLR-342VC3F	1	5/P		C	E	F	F97A813		219		
220	4843 194314	LED-SLR34YC3F-Y	1	5/P						220 1			
220 1	4843 194553	LED-SLR-342YC3F	1	5/P		C	E	F	F97A813		220		
221	4843 194313	LED-SLR34VC3F-R	1	5/P						221 1			
221 1	4843 194554	LED-SLR-342VC3F	1	5/P		C	E	F	F97A813		221		
222	4843 194313	LED-SLR34VC3F-R	1	5/P						222 1			
222 1	4843 194554	LED-SLR-342VC3F	1	5/P		C	E	F	F97A813		222		
223	4843 194314	LED-SLR34YC3F-Y	1	5/P						223 1			
223 1	4843 194553	LED-SLR-342YC3F	1	5/P		C	E	F	F97A813		223		
224	4843 194312	LED-SLR34MC3F-G	1	5/P						224 1			
224 1	4843 194552	LED-SLR-342MC3F	1	5/P		C	E	F	F97A813		224		
225	4843 194314	LED-SLR34YC3F-Y	1	5/P						225 1			
225 1	4843 194553	LED-SLR-342YC3F	1	5/P		C	E	F	F97A813		225		
226	4843 194314	LED-SLR34YC3F-Y	1	5/P						226 1			
226 1	4843 194553	LED-SLR-342YC3F	1	5/P		C	E	F	F97A813		226		
227	4843 194312	LED-SLR34MC3F-G	1	5/P						227 1			
227 1	4843 194552	LED-SLR-342MC3F	1	5/P		C	E	F	F97A813		227		
228	4843 194312	LED-SLR34MC3F-G	1	5/P						228 1			
228 1	4843 194552	LED-SLR-342MC3F	1	5/P		C	E	F	F97A813		228		
229	4843 194312	LED-SLR34MC3F-G	1	5/P						229 1			
229 1	4843 194552	LED-SLR-342MC3F	1	5/P		C	E	F	F97A813		229		
230	4843 194312	LED-SLR34MC3F-G	1	5/P						230 1			
230 1	4843 194552	LED-SLR-342MC3F	1	5/P		C	E	F	F97A813		230		
231	4843 194312	LED-SLR34MC3F-G	1	5/P						231 1			
231 1	4843 194552	LED-SLR-342MC3F	1	5/P		C	E	F	F97A813		231		
232	4843 194312	LED-SLR34MC3F-G	1	5/P						232 1			
232 1	4843 194552	LED-SLR-342MC3F	1	5/P		C	E	F	F97A813		232		
233	4843 194312	LED-SLR34MC3F-G	1	5/P						233 1			
233 1	4843 194552	LED-SLR-342MC3F	1	5/P		C	E	F	F97A813		233		
234	4843 194312	LED-SLR34MC3F-G	1	5/P						234 1			
234 1	4843 194552	LED-SLR-342MC3F	1	5/P		C	E	F	F97A813		234		

ITEM NO.	PARTS NO.	PARTS NAME	Q'TY / PAGE	Q'TY / PACK	SPE PRICE IN NONE	P	I	R	BSI NO.	TO	FROM	SERIAL NO.	REMARKS
235	4843 194312	LED-SLR34MC3F-G	1	5/P						235 1			
235 1	4843 194552	LED-SLR-342MC3F	1	5/P		C	E	F	F97A813		235		
236	4843 194312	LED-SLR34MC3F-G	1	5/P						236 1			
236 1	4843 194552	LED-SLR-342MC3F	1	5/P		C	E	F	F97A813		236		
237	4843 194312	LED-SLR34MC3F-G	1	5/P						237 1			
237 1	4843 194552	LED-SLR-342MC3F	1	5/P		C	E	F	F97A813		237		
238	4843 194312	LED-SLR34MC3F-G	1	5/P						238 1			
238 1	4843 194552	LED-SLR-342MC3F	1	5/P		C	E	F	F97A813		238		
239	4843 194312	LED-SLR34MC3F-G	1	5/P						239 1			
239 1	4843 194552	LED-SLR-342MC3F	1	5/P		C	E	F	F97A813		239		
240	4843 194312	LED-SLR34MC3F-G	1	5/P						240 1			
240 1	4843 194552	LED-SLR-342MC3F	1	5/P		C	E	F	F97A813		240		
241	4843 194312	LED-SLR34MC3F-G	1	5/P						241 1			
241 1	4843 194552	LED-SLR-342MC3F	1	5/P		C	E	F	F97A813		241		
242	4843 194394	LED-SEL4426G	1	5/P									
243	4843 194394	LED-SEL4426G	1	5/P									
244	4843 194312	LED-SLR34MC3F-G	1	5/P						244 1			
244 1	4843 194552	LED-SLR-342MC3F	1	5/P		C	E	F	F97A813		244		
245	4843 194394	LED-SEL4426G	1	5/P									
246	4843 194394	LED-SEL4426G	1	5/P									
247	4843 194394	LED-SEL4426G	1	5/P									
248	4843 194394	LED-SEL4426G	1	5/P									
249	4843 194394	LED-SEL4426G	1	5/P									
250	4843 194394	LED-SEL4426G	1	5/P									
251	4843 194394	LED-SEL4426G	1	5/P									
252	4843 194394	LED-SEL4426G	1	5/P									
253	4843 194394	LED-SEL4426G	1	5/P									
254	4843 194312	LED-SLR34MC3F-G	1	5/P						254 1			
254 1	4843 194552	LED-SLR-342MC3F	1	5/P		C	E	F	F97A813		254		
255	4843 194312	LED-SLR34MC3F-G	1	5/P						255 1			
255 1	4843 194552	LED-SLR-342MC3F	1	5/P		C	E	F	F97A813		255		
256	4843 194312	LED-SLR34MC3F-G	1	5/P						256 1			
256 1	4843 194552	LED-SLR-342MC3F	1	5/P		C	E	F	F97A813		256		
301	4843 231490	SP-B3F-1000	1	5/S									
302	4843 231490	SP-B3F-1000	1	5/S									
303	4843 231490	SP-B3F-1000	1	5/S									
304	4843 231490	SP-B3F-1000	1	5/S									
305	4843 231490	SP-B3F-1000	1	5/S									
306	4843 231490	SP-B3F-1000	1	5/S									
307	4843 231490	SP-B3F-1000	1	5/S									
308	4843 231490	SP-B3F-1000	1	5/S									
309	4843 231490	SP-B3F-1000	1	5/S									
310	4843 231490	SP-B3F-1000	1	5/S									
311	4843 231490	SP-B3F-1000	1	5/S									
312	4843 231490	SP-B3F-1000	1	5/S									
313	4843 231490	SP-B3F-1000	1	5/S									
314	4843 231490	SP-B3F-1000	1	5/S									
315	4843 231490	SP-B3F-1000	1	5/S									
316	4843 231490	SP-B3F-1000	1	5/S									
317	4843 231490	SP-B3F-1000	1	5/S									
318	4843 231490	SP-B3F-1000	1	5/S									
319	4843 231490	SP-B3F-1000	1	5/S									
320	4843 231490	SP-B3F-1000	1	5/S									
321	4843 231490	SP-B3F-1000	1	5/S									
322	4843 231490	SP-B3F-1000	1	5/S									
323	4843 231490	SP-B3F-1000	1	5/S									
324	4843 231490	SP-B3F-1000	1	5/S									
325	4843 231490	SP-B3F-1000	1	5/S									
326	4843 231490	SP-B3F-1000	1	5/S									
327	4843 231490	SP-B3F-1000	1	5/S									
328	4843 231490	SP-B3F-1000	1	5/S									
329	4843 231490	SP-B3F-1000	1	5/S									
330	4843 231490	SP-B3F-1000	1	5/S									
331	4843 231490	SP-B3F-1000	1	5/S									
332	4843 231491	SP-B3F-4000	1	5/S									
333	4843 231490	SP-B3F-1000	1	5/S									
334	4843 231490	SP-B3F-1000	1	5/S									
335	4843 231490	SP-B3F-1000	1	5/S									
336	4843 231490	SP-B3F-1000	1	5/S									
337	4843 231490	SP-B3F-1000	1	5/S									
338	4843 231490	SP-B3F-1000	1	5/S									

ITEM NO.	PARTS NO.	PARTS NAME	Q'TY / PAGE	Q'TY / PACK	SPE PRICE IN NONE	P	I	R	BSI NO.	TO	FROM	SERIAL NO.	REMARKS
339	4843 231490	SP-B3F-1000	1	5/S									
340	4843 231490	SP-B3F-1000	1	5/S									
341	4843 231490	SP-B3F-1000	1	5/S									
342	4843 231490	SP-B3F-1000	1	5/S									
343	4843 231491	SP-B3F-4000	1	5/S									
401	4843 304375	J-173979-10	1	5/P									
402	4843 304378	J-173979-15	1	5/P									
403	4843 305191	J-DF11-16DP-2DS	1	5/P									
404	4843 304375	J-173979-10	1	5/P									
405	4843 304377	J-173979-12	1	5/P									
406	4843 307363	J-173979-13	1	5/P									
500	4407 782660	JUMPER-WIRE-10	90	10/P									
501	4407 782660	JUMPER-WIRE-10	89	10/P									

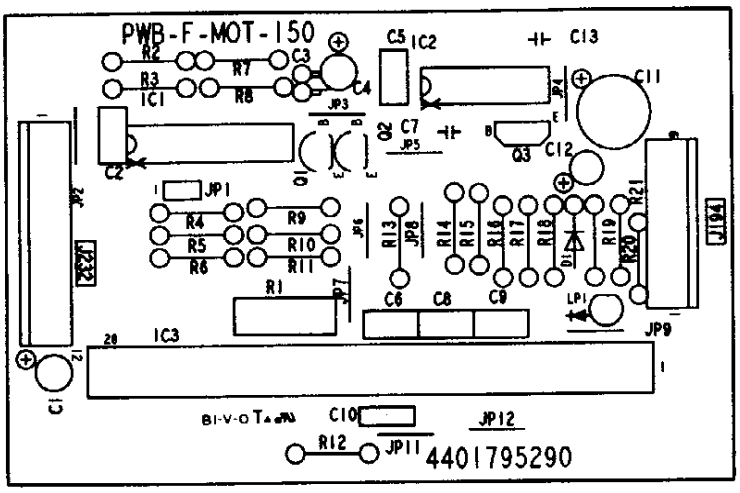
PWB-F-MOT-150
4401795290

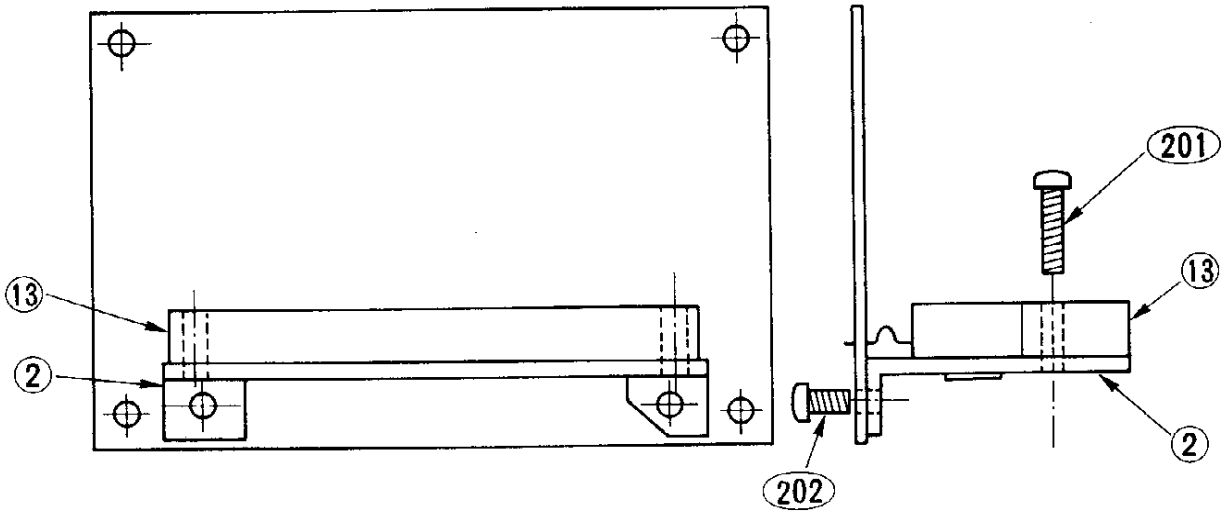
201
13
2
202

ITEM NO.	PARTS NO.	PARTS NAME	Q'TY / PAGE	Q'TY / PACK	SPE PRICE IN NONE	P	I	R	BSI NO.	TO	FROM	SERIAL NO.	REMARKS
0	4401 795490	PWA-F-MOT-150	1	1/SB									
1	4401 795290	PWB-F-MOT-150	1	N/A***									
2	4402 816630	HS-6103	1	1/P									
11	3040 411951	IC-TC9192AP	1	5/S									
12	4843 112137	IC-MC74HC14AN	1	5/S									
13	4843 113901	IC-STK6105-T	1	1/S									
31	3036 317440	Q-2SC1815-Y	1	5/P									
32	3036 317440	Q-2SC1815-Y	1	5/P									
33	3036 002030	Q-RN1203	1	5/P									
51	3037 249601	D-1S1588	1	5/P									
71	4843 406671	CE04W1H100M	1	10/P									
72	4843 412334	CKM-45F1B104ZY	1	10/P									
73	4843 410141	CC92CH1H221K	1	5/P									
74	4843 410007	CE04W1H1R0M	1	10/P									
75	4843 412334	CKM-45F1B104ZY	1	10/P									
76	4843 412334	CKM-45F1B104ZY	1	10/P									
77	4843 411743	CKM-92F1H222Z	1	5/P									
78	4843 412334	CKM-45F1B104ZY	1	10/P									
79	4843 412334	CKM-45F1B104ZY	1	10/P									
80	4843 410177	CKM92F1H104ZYF	1	5/P									
81	4843 406674	CE04W1H101M	1	10/P									
82	4843 406646	CE04W1C100M	1	10/P									
83	4843 411743	CKM-92F1H222Z	1	5/P									
101	3038 601100	LP-TLR123	1	5/P									
111	4843 073118	RW-M003MR10JP	1	10/P									
112	4843 028587	RD1/4LA001KJ	1	10/P									
113	4843 028619	RD1/4LA022KJ	1	10/P									
114	4843 028647	RD1/4LA330KJ	1	10/P									
115	4843 028631	RD1/4LA068KJ	1	10/P									
116	4843 028631	RD1/4LA068KJ	1	10/P									
117	4843 028599	RD1/4LA3.3KJ	1	10/P									
118	4843 028587	RD1/4LA001KJ	1	10/P									
119	4843 028587	RD1/4LA001KJ	1	10/P									
120	4843 028603	RD1/4LA4.7KJ	1	10/P									
122	4843 028599	RD1/4LA3.3KJ	1	10/P									
123	4843 028603	RD1/4LA4.7KJ	1	10/P									
124	4843 028587	RD1/4LA001KJ	1	10/P									
125	4843 028603	RD1/4LA4.7KJ	1	10/P									
126	4843 028603	RD1/4LA4.7KJ	1	10/P									
127	4843 028585	RD1/4LA820HJ	1	10/P									
128	4843 028603	RD1/4LA4.7KJ	1	10/P									
129	4843 028603	RD1/4LA4.7KJ	1	10/P									
130	4843 028587	RD1/4LA001KJ	1	10/P									
131	4843 028587	RD1/4LA001KJ	1	10/P									
151	4843 301276	J-5045-12A	1	5/P									
152	4843 301273	J-5045-09A	1	5/P									
162	4407 782660	JUMPER-WIRE-10	10	10/P									
201	7040 301211	PAN30*12MSZN3AI	2	50/P									
202	7040 400611	PAN40*06MSZN3AI	2	50/P									

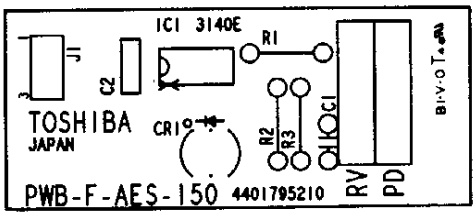
IC1 3140E
R1
J1
C2
C1
TOSHIBA
JAPAN
CR1
R2
R3
RV
PD
PWB-F-AES-150 4401795210

ITEM NO.	PARTS NO.	PARTS NAME	Q'TY / PAGE	Q'TY / PACK	SPE PRICE IN NONE	P	I	R	BSI NO.	TO	FROM	SERIAL NO.	REMARKS
0	4401 795410	PWA-F-AES-150	1	1/SB									
1	4401 795210	PWB-F-AES-150	1	N/A***									
11	4407 418360	CA3140E	1	5/S									
21	4843 171300	PHD-S4797-01	1	1/C									
31	4843 410262	CQ921M1H102K	1	10/P									
32	4407 942000	CZ-308F104Z50	1	10/P						032 1			
32 1	4843 413242	CK-45F1H104ZY	1	10/P		C	E	F	F97A813		032		
41	4843 028637	RD1/4LA120KJ	1	10/P									
42	4843 028615	RD1/4LA015KJ	1	10/P									
43	4843 028643	RD1/4LA220KJ	1	10/P									
51	4843 304918	J-173981-3	1	5/P									

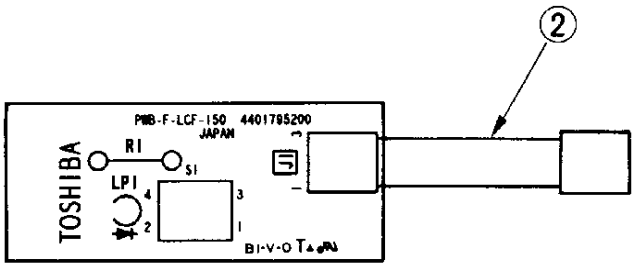
②
PWB-F-LCF-150 4401785200
JAPAN
TOSHIBA
RI
SI
LPI
4
3
2
1

ITEM NO.	PARTS NO.	PARTS NAME	Q'TY / PAGE	Q'TY / PACK	SPE PRICE IN NONE	P	I	R	BSI NO.	TO	FROM	SERIAL NO.	REMARKS
0	4401 795400	PWA-F-LCF-150	1	1/SB									
1	4401 795200	PWB-F-LCF-150	1	N/A***									
2	4401 796520	WH-LCFKEY-150	1	1/P									
11	4843 028569	RD1/4LA180HJ	1	10/P									
21	4843 194312	LED-SLR34MC3F-G	1	5/P						021 1			
21 1	4843 194552	LED-SLR-342MC3F	1	5/P		C	E	F	F97A813		021		
31	4843 231490	SP-B3F-1000	1	5/S									

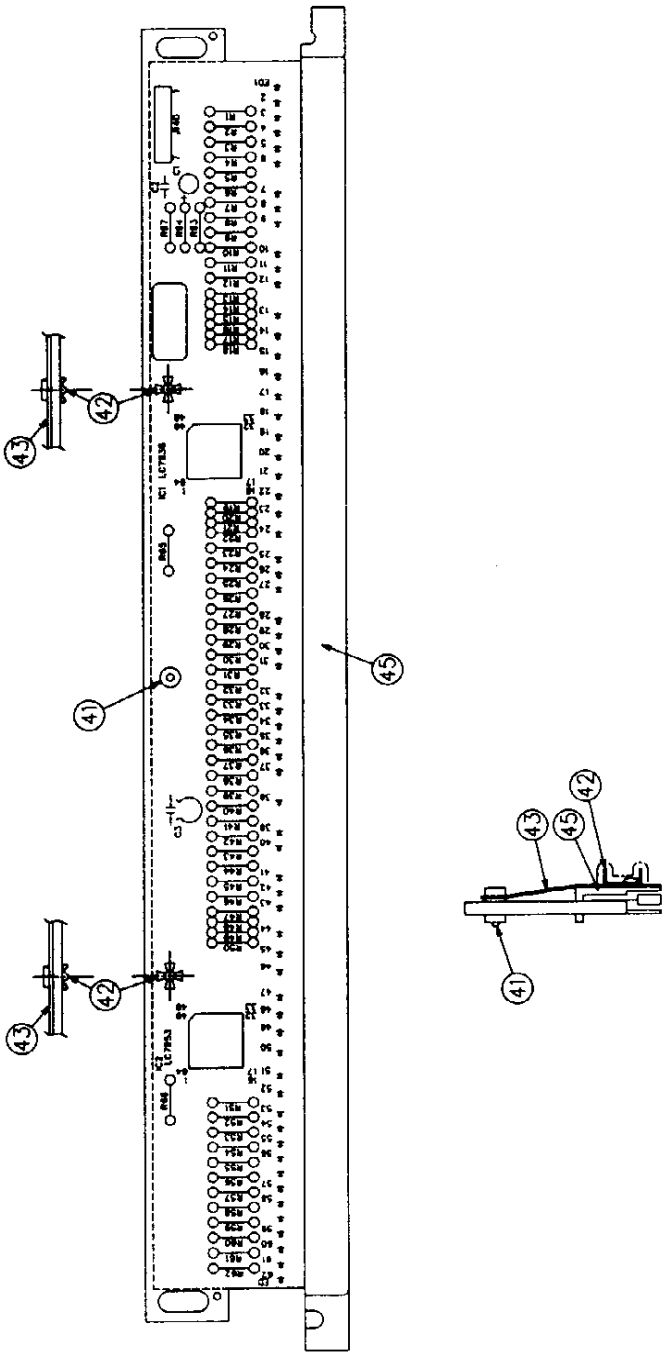
42
43
41
45
42
43

42
43
45
41

ITEM NO.	PARTS NO.	PARTS NAME	Q'TY / PAGE	Q'TY / PACK	SPE PRICE IN NONE	P	I	R	BSI NO.	TO	FROM	SERIAL NO.	REMARKS
0	4408 610290	PWA-F-DCH-547	1	1/SB									
1	4408 517180	PWB-F-DCH-572	1	N/A***									
11	4843 112931	IC-LC7935	1	1/S									
12	4843 112931	IC-LC7935	1	1/S									
15	4400 419550	LP-PY4553K	62	5/P									
20	4843 028565	RD1/4LA120HJ	62	10/P									
21	4843 028587	RD1/4LA001KJ	1	10/P									
22	4843 028603	RD1/4LA4.7KJ	4	10/P									
31	4843 406648	CE04W1C470M	1	10/P									
32	4409 771130	CKM-306F104Z12	1	10/P						032 1			
32 1	4843 413234	CK-45F1B104ZY-F	1	10/P		C	E	F	F97A813		032		
33	4409 771130	CKM-306F104Z12	1	10/P						033 1			
33 1	4843 413234	CK-45F1B104ZY-F	1	10/P		C	E	F	F97A813		033		
40	4843 304624	J-IL-G-7PS3T2E	1	5/P									
41	4408 302950	SLIDER-PWA-DCH	1	5/P									
42	4408 302880	PLATE-DCH	1	1/P									
43	4408 303480	SHIELD-PWA-DCH	1	N/A***									
44	4408 303370	PLA-RIVET-030	2	10/P									
45	4408 601940	CASE-LED	1	N/A***									

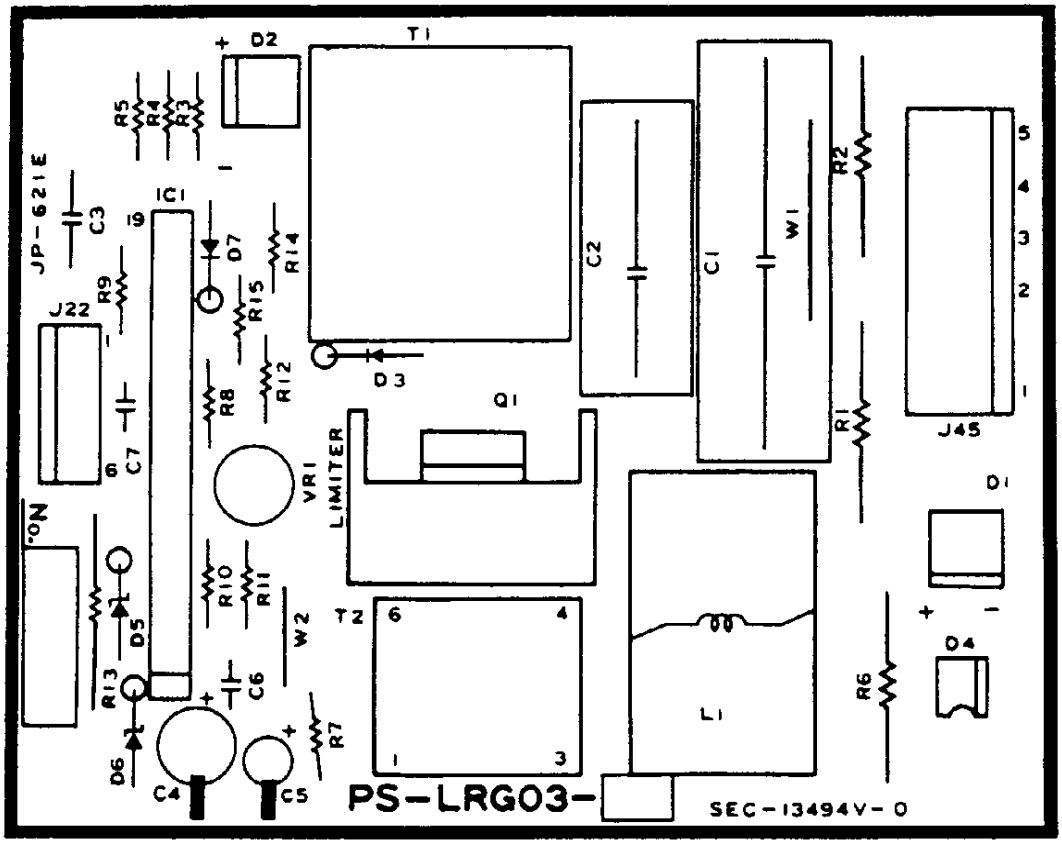
T1
D2
R5
R4
R3
JP-621E
C3
IC1
19
D7
R14
R9
R15
J22
R12
R8
C7
D3
Q1
VR1
LIMITER
C2
C1
W1
R2
R1
J45
5
4
3
2
1
D1
D4
R6
L1
T2
6
4
1
3
R10
R11
W2
D5
R13
C6
R7
D6
C4
C5
PS-LRG03-
SEC-13494V-0

TOSHIBA

ITEM NO.	PARTS NO.	PARTS NAME	Q'TY / PAGE	Q'TY / PACK	SPE PRICE IN NONE	P	I	R	BSI NO.	TO	FROM	SERIAL NO.	REMARKS
0A	4407 987470	PWA-F-LRG-315UC	1	1/SB									100V SERIES
0B	4401 795620	PWA-F-LRG-150E	1	1/SB									200V SERIES
1	4407 967810	IC-JH1622	1	1/S									
2	4407 967820	TY-AC08DGM	1	1/D									
3	3037 670825	D-1G4B42	1	5/P									
4	3037 670805	D-1B4B42	1	5/S									
5	3037 249601	D-1S1588	1	5/P									
6	3037 249601	D-1S1588	1	5/P									
7A	3038 641110	IC-TLP521-1(BL)	1	5/P									100V SERIES
7B	4407 967830	SCO-PC817	1	5/S									200V SERIES
8	3037 112570	D-05AZ6.8-Z	1	5/P									
9	3037 113050	D-05AZ12-Z	1	5/P									
10	4407 692530	RA-V6EK-PV-50K	1	5/P									
11A	4407 967840	TR-SP403T128	1	1/C									100V SERIES
11B	4407 967850	TR-SP403T129	1	1/C									200V SERIES
12	4407 967860	TRP-3T083B	1	1/C									
13A	4407 731840	L-SK-8M-5D-125	1	1/P									100V SERIES
13B	4407 731830	L-SK-16M-195-3	1	1/P									200V SERIES

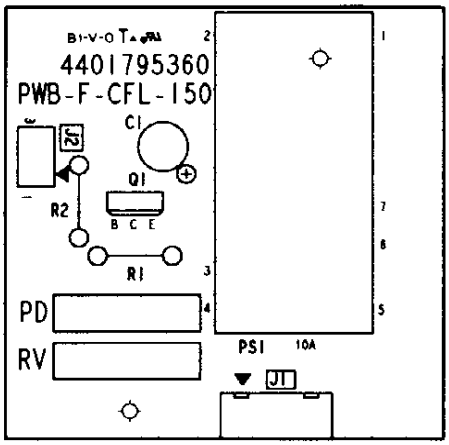
4401795360
PWB-F-CFL-150
C1
Q1
B C E
R2
R1
PD
RV
PS1 10A
J1
J2
1
2
3
4
5
7
8

ITEM NO.	PARTS NO.	PARTS NAME	Q'TY / PAGE	Q'TY / PACK	SPE PRICE IN NONE	P	I	R	BSI NO.	TO	FROM	SERIAL NO.	REMARKS
0	4401 795560	PWA-F-CFL-150	1	1/SB									
1	4401 795360	PWB-F-CFL-150	1	N/A***									
11	3036 548970	Q-2SA1428-Y	1	5/P									
21	4843 406648	CE04W1C470M	1	10/P									
31	4843 524178	INV-CXA-L10A	1	1/D									
41	4843 028628	RD1/4LA051KJ	1	10/P									
42	4843 028580	RD1/4LA510HJ	1	10/P									
71	4843 302297	J-B5B-XH-A	1	5/P									
72	4843 302619	J-DF3A-3P-2DSA	1	5/P									

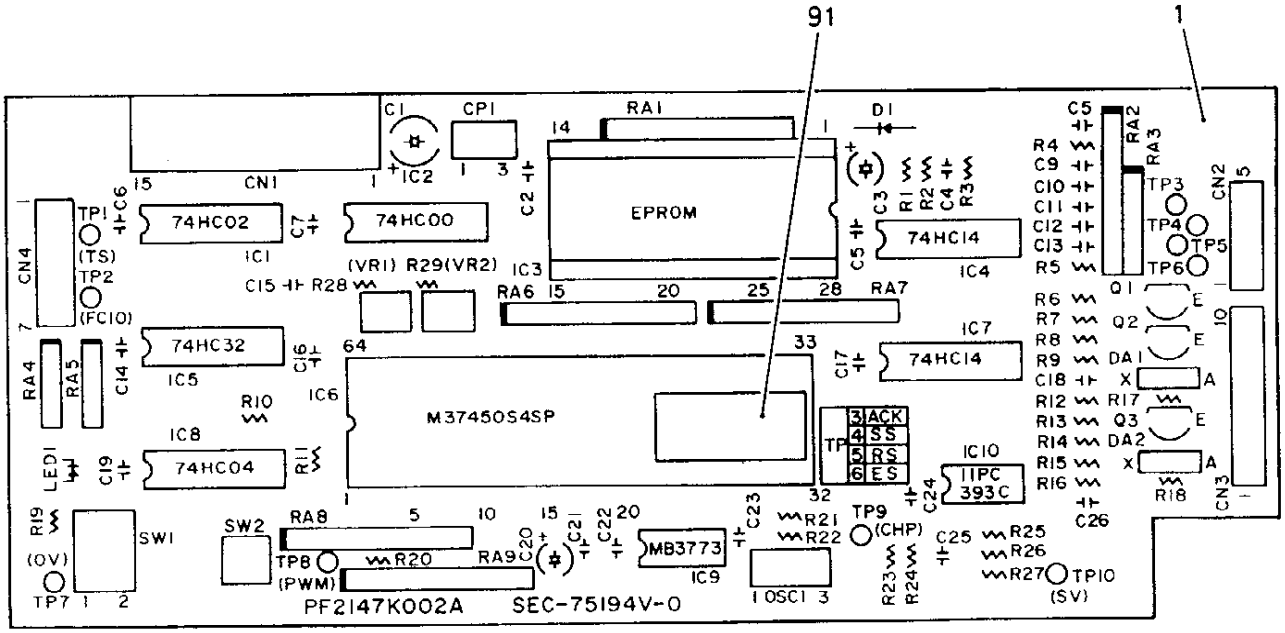
91
1
CN1
C1
CP1
IC2
RA1
EPROM
IC3
D1
C5
RA2
RA3
R4
C9
C10
C11
C12
C13
R5
TP3
TP4
TP5
TP6
CN2
TP1
(TS)
TP2
(FC10)
CN4
74HC02
IC1
C7
74HC00
C2
C3
R1
R2
C4
R3
74HC14
IC4
(VR1) R29(VR2)
C15
R28
RA6
RA7
Q1
R6
R7
Q2
R8
R9
DA1
C18
R12
R17
R13
Q3
R14
DA2
R15
R16
C26
R18
CN3
74HC32
IC5
C16
C14
RA4
RA5
IC7
74HC14
C17
M37450S4SP
IC6
R10
IC8
74HC04
R11
LED1
C19
TP
3 ACK
4 SS
5 RS
6 ES
IC10
IIPC
393C
C24
R19
(OV)
TP7
SW1
SW2
RA8
TP8
(PWM)
R20
RA9
C20
C21
C22
MB3773
IC9
C23
R21
R22
TP9
(CHP)
C25
R25
R26
R27
TP10
(SV)
R23
R24
OSC1
PF2147K002A SEC-75194V-0

ITEM NO.	PARTS NO.	PARTS NAME	Q'TY / PAGE	Q'TY / PACK	SPE PRICE IN NONE	P	I	R	BSI NO.	TO	FROM	SERIAL NO.	REMARKS
0	4402 245630	PWA-F-LGC-552	1	1/SB									
1	4402 245700	PWB-F-LGC-552	1	N/A***									
2	4843 112131	IC-MC74HC02AN	1	5/S									
3	4843 112130	IC-MC74HC00AN	1	5/S									
4	4843 321428	SKT-2-641605-3	1	1/S									ICSOCKET
5	4843 112137	IC-MC74HC14AN	1	5/S									
6	4843 112141	IC-MC74HC32AN	1	5/S									
7	4402 246200	IC-M37450S4SP	1	1/S						007 1			
7 1	4402 246290	IC-M37451SSP	1	1/S		C	E	J	F96J777		007		
8	4843 112137	IC-MC74HC14AN	1	5/S									
9	4843 112133	IC-MC74HC04AN	1	5/S									
10	4843 113431	IC-MB3773P	1	1/S									
11	3040 349265	IC-TA75393AP	1	5/S									
12	3036 000060	Q-RN1006	1	5/P									
13	3036 317460	Q-2SC1815-GR	1	5/P									
14	3036 317460	Q-2SC1815-GR	1	5/P									
15	3037 249601	D-1S1588	1	5/P									
16	4402 246440	D-MC932	1	5/P									
17	4402 246440	D-MC932	1	5/P									
18	4402 246560	CE-ECEA1CU101	1	10/P									
19	4402 246540	CQ-DD306F104Z25	1	10/P									
20	4402 246600	CE-ECEA1HU010	1	10/P									
21	4402 246510	CQ-226B102K50	1	10/P									
22	4402 246520	CQ-226B472H25	1	10/P									
23	4402 246540	CQ-DD306F104Z25	1	10/P									
24	4402 246540	CQ-DD306F104Z25	1	10/P									
25	4402 246540	CQ-DD306F104Z25	1	10/P									
26	4402 246520	CQ-226B472H25	1	10/P									
27	4843 411396	CQ-92G1H683J	1	10/P									
28	4843 411396	CQ-92G1H683J	1	10/P									
29	4402 246520	CQ-226B472H25	1	10/P									
30	4402 246520	CQ-226B472H25	1	10/P									
31	4402 246540	CQ-DD306F104Z25	1	10/P									
32	4402 246510	CQ-226B102K50	1	10/P									
33	4402 246540	CQ-DD306F104Z25	1	10/P									
34	4402 246540	CQ-DD306F104Z25	1	10/P									
35	4402 246500	CQ-226B101K50	1	10/P									
36	4402 246540	CQ-DD306F104Z25	1	10/P									
37	4402 246570	CE-ECEA1HUR33	1	10/P									
38	4402 246530	CQ-226B471K50	1	10/P									
39	4402 246540	CQ-DD306F104Z25	1	10/P									
40	4402 246510	CQ-226B102K50	1	10/P									
41	4402 246540	CQ-DD306F104Z25	1	10/P									
42	4402 246550	CQ-ECQ1H102JZ	1	10/P									
43	4402 246500	CQ-226B101K50	1	10/P									
44	4843 073676	RD-1/4L102JF	1	10/P									
45	4843 073700	RD-1/4L104JF	1	10/P									
46	4843 073696	RD-1/4L473JF	1	10/P									
47	4843 073688	RD-1/4L103JF	1	10/P									
48	4843 073688	RD-1/4L103JF	1	10/P									
49	4843 073700	RD-1/4L104JF	1	10/P									
50	4843 073680	RD-1/4L222JF	1	10/P									
51	4843 073684	RD-1/4L472JF	1	10/P									
52	4843 073684	RD-1/4L472JF	1	10/P									
53	4843 073688	RD-1/4L103JF	1	10/P									
54	4843 073688	RD-1/4L103JF	1	10/P									
55	4843 073676	RD-1/4L102JF	1	10/P									
56	4843 073680	RD-1/4L222JF	1	10/P									
57	4843 073684	RD-1/4L472JF	1	10/P									
58	4843 073684	RD-1/4L472JF	1	10/P									
59	4843 073676	RD-1/4L102JF	1	10/P									
60	4843 073672	RD-1/4L471JF	1	10/P									
61	4843 073672	RD-1/4L471JF	1	10/P									
62	4843 073684	RD-1/4L472JF	1	10/P									
63	4843 073712	RD-1/4L105JF	1	10/P									
64	4843 073668	RD-1/4L221JF	1	10/P									
65	4843 073680	RD-1/4L222JF	1	10/P									
66	4843 073694	RD-1/4L333JF	1	10/P									
67	4843 073700	RD-1/4L104JF	1	10/P									
68	4843 073700	RD-1/4L104JF	1	10/P									
69	4843 073699	RD-1/4L823JF	1	10/P									

ITEM NO.	PARTS NO.	PARTS NAME	Q'TY / PAGE	Q'TY / PACK	SPE PRICE IN NONE	P	I	R	BSI NO.	TO	FROM	SERIAL NO.	REMARKS
70	4843 073688	RD-1/4L103JF	1	10/P									
71	4843 073688	RD-1/4L103JF	1	10/P									
72	4407 691870	RR-S09LA103J	1	5/P									
73	4843 072250	RR-1/8S04ST103J	1	10/P									
74	4407 917830	RR-S05LA472J	1	10/P									
75	4843 072954	RR-1/8S03A472J	1	10/P									
76	4843 073475	RR-1/4S04S103J	1	10/P									
77	4407 691870	RR-S09LA103J	1	5/P									
78	4407 691870	RR-S09LA103J	1	5/P									
79	4407 691870	RR-S09LA103J	1	5/P									
80	4407 691870	RR-S09LA103J	1	5/P									
81	4843 250385	X-CST10.0MT	1	5/P									
82	4843 391152	JZ-LC-3-S-W	1	10/P									
83	4843 391152	JZ-LC-3-S-W	1	10/P									
84	4843 230423	SZ-DSS702	1	5/S									
85	4407 986660	SZ-SKHHAL	1	1/S									
86	4843 304378	J-173979-15	1	5/P									
87	4843 304840	J-53014-0610	1	5/P									
88	4843 304844	J-53014-1010	1	5/P									
89	4843 304841	J-53014-0710	1	5/P									

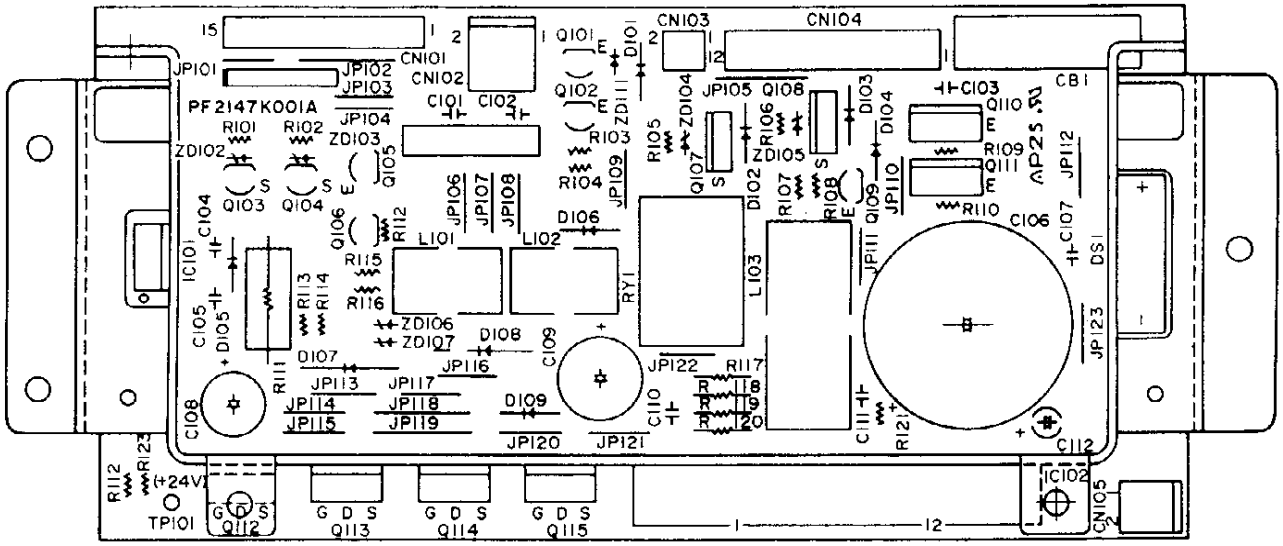
PF2147K001A
CN101
CN102
CN103
CN104
CB1
JP101
JP102
JP103
JP104
JP105
JP106
JP107
JP108
JP109
JP110
JP111
JP112
JP113
JP114
JP115
JP116
JP117
JP118
JP119
JP120
JP121
JP122
JP123
Q101
Q102
Q103
Q104
Q105
Q106
Q107
Q108
Q109
Q110
Q111
Q112
Q113
Q114
Q115
L101
L102
L103
RY1
IC101
IC102
DS1
TP101
(+24V)
G D S
1
12

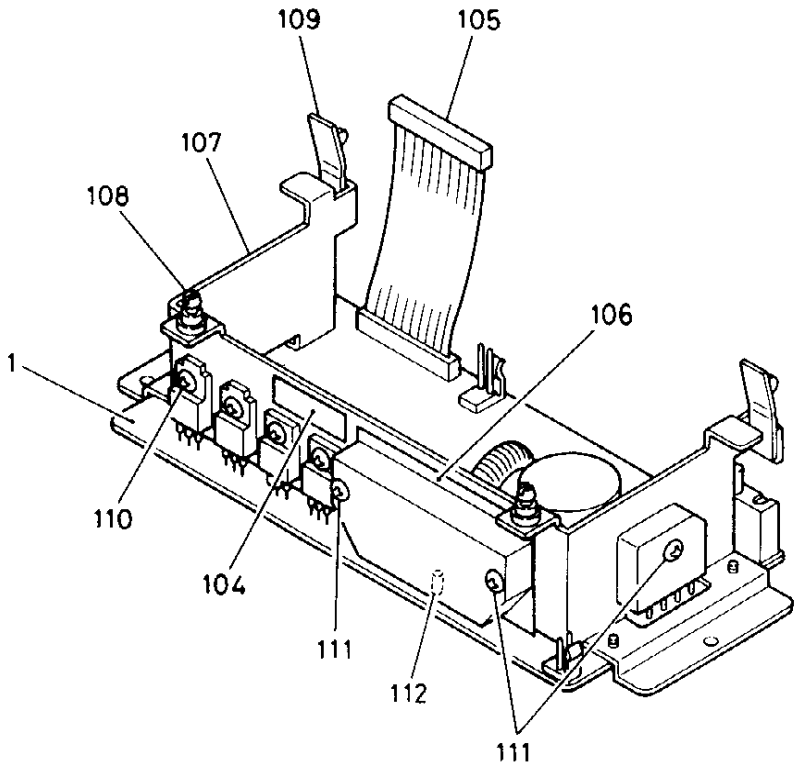
109
105
107
108
106
1
110
104
111
112
111

TOSHIBA

ITEM NO.	PARTS NO.	PARTS NAME	Q'TY / PAGE	Q'TY / PACK	SPE PRICE IN NONE	P	I	R	BSI NO.	TO	FROM	SERIAL NO.	REMARKS
0	4402 245610	PWA-F-DRV-552	1	1/SB									
1	4402 245710	PWB-F-DRV-552	1	N/A***									
2	3040 374955	IC-TA79005S	1	5/S									
3	4402 246210	IC-STK733C	1	1/S									
4	3036 000060	Q-RN1006	1	5/P									
5	4402 246350	Q-2SD1616	1	5/P									
6	4400 788910	Q-BA1L3N	1	5/P									
7	4400 788910	Q-BA1L3N	1	5/P									
8	3036 000060	Q-RN1006	1	5/P									
9	3036 000060	Q-RN1006	1	5/P									
10	4402 246330	Q-2SK1283	1	5/P									
11	4402 246330	Q-2SK1283	1	5/P									
12	4402 246350	Q-2SD1616	1	5/P									
13	4402 246310	2SB1826	1	1/D									
14	4402 246360	2SB1244	1	1/D									
15	4402 246300	Q-2SJ137	1	1/D									
16	4402 246300	Q-2SJ137	1	1/D									
17	4402 246340	Q-2SK1094	1	1/D									
18	4402 246340	Q-2SK1094	1	1/D									
19	4402 246400	D-KBU8D	1	1/D									
20	4402 246430	D-IN4002	1	5/P									
21	4408 329030	D-HRP22	1	5/P									
22	4408 329030	D-HRP22	1	5/P									
23	4402 246430	D-IN4002	1	5/P									
24	3037 249601	D-1S1588	1	5/P									
25	3037 249601	D-1S1588	1	5/P									
26	4402 246420	D-RK14	1	5/P									
27	4402 246420	D-RK14	1	5/P									
28	4402 246430	D-IN4002	1	5/P									
29	4402 246410	D-RD9.1ESB	1	5/P									
32	4402 246410	D-RD9.1ESB	1	5/P									
33	4402 246410	D-RD9.1ESB	1	5/P									
34	4402 246410	D-RD9.1ESB	1	5/P									
35	4402 246410	D-RD9.1ESB	1	5/P									
36	4402 246510	CQ-226B102K50	1	10/P									
37	4402 246510	CQ-226B102K50	1	10/P									
38	4402 246510	CQ-226B102K50	1	10/P									
39	4843 410763	CKM-92F1H104ZY	1	10/P									
40	4402 246540	CQ-DD306F104Z25	1	10/P									
41	4408 329110	CE-ECES1HU472R	1	1/D						041 1			
41 1	4402 246940	CE-EC0S1HP472CB	1	1/D		C	E	H	F98C242		041		
42	4843 410763	CKM-92F1H104ZY	1	10/P									
43	4402 246590	CE-ECEA1VU471	1	10/P									
44	4402 246580	CE-ECEA1VU102	1	10/P									
45	4843 410763	CKM-92F1H104ZY	1	10/P									
46	4402 246510	CQ-226B102K50	1	10/P									
47	4408 252880	CE-ECEA1HU010	1	10/P									
48	4402 246860	KM-MR301-24S	1	1/D									
49	4402 246820	COIL-SK-8MS-5	1	1/D									
50	4402 246820	COIL-SK-8MS-5	1	1/D									
51	4402 246840	COIL-HK-14S080	1	1/D									
52	4402 246700	RR-1/8S06A103J	1	10/P									
53	4843 073672	RD-1/4L471JF	1	10/P									
54	4843 073672	RD-1/4L471JF	1	10/P									
55	4843 073684	RD-1/4L472JF	1	10/P									
56	4843 073676	RD-1/4L102JF	1	10/P									
57	4843 073676	RD-1/4L102JF	1	10/P									
58	4843 073676	RD-1/4L102JF	1	10/P									
59	4843 073676	RD-1/4L102JF	1	10/P									
60	4843 073684	RD-1/4L472JF	1	10/P									
61	4843 073684	RD-1/4L472JF	1	10/P									
62	4843 073684	RD-1/4L472JF	1	10/P									
63	4843 074140	RF-2/1P150JF	1	10/P									
64	4843 073682	RD-1/4L332JF	1	10/P									
65	4843 073684	RD-1/4L472JF	1	10/P									
66	4843 073684	RD-1/4L472JF	1	10/P									
67	4843 073676	RD-1/4L102JF	1	10/P									
68	4843 073676	RD-1/4L102JF	1	10/P									
69	4402 246750	RD-RSSX1/2W0.2H	1	10/P									
70	4402 246750	RD-RSSX1/2W0.2H	1	10/P									
71	4402 246750	RD-RSSX1/2W0.2H	1	10/P									

ITEM NO.	PARTS NO.	PARTS NAME	Q'TY / PAGE	Q'TY / PACK	SPE PRICE IN NONE	P	I	R	BSI NO.	TO	FROM	SERIAL NO.	REMARKS
72	4402 246750	RD-RSSX1/2W0.2H	1	10/P									
73	4843 073652	RD-1/4L100JF	1	10/P									
74	4843 073678	RD-1/4L152JF	1	10/P									
75	4843 073678	RD-1/4L152JF	1	10/P									
76	4407 782660	JUMPER-WIRE-10	1	10/P									
77	4407 429560	JUMPER-WIRE-15	1	10/P									
78	4407 782660	JUMPER-WIRE-10	1	10/P									
79	4407 782660	JUMPER-WIRE-10	1	10/P									
80	4407 429560	JUMPER-WIRE-15	1	10/P									
81	4407 782660	JUMPER-WIRE-10	1	10/P									
82	4407 782660	JUMPER-WIRE-10	1	10/P									
83	4407 782660	JUMPER-WIRE-10	1	10/P									
84	4407 782660	JUMPER-WIRE-10	1	10/P									
85	4407 782660	JUMPER-WIRE-10	1	10/P									
86	4407 782660	JUMPER-WIRE-10	1	10/P									
87	4407 782660	JUMPER-WIRE-10	1	10/P									
88	4407 782660	JUMPER-WIRE-10	1	10/P									
89	4407 782660	JUMPER-WIRE-10	1	10/P									
90	4407 782660	JUMPER-WIRE-10	1	10/P									
91	4407 782660	JUMPER-WIRE-10	1	10/P									
92	4407 782660	JUMPER-WIRE-10	1	10/P									
93	4407 429560	JUMPER-WIRE-15	1	10/P									
94	4407 429560	JUMPER-WIRE-15	1	10/P									
95	4407 782660	JUMPER-WIRE-10	1	10/P									
96	4407 782660	JUMPER-WIRE-10	1	10/P									
97	4407 782660	JUMPER-WIRE-10	1	10/P									
98	4407 782660	JUMPER-WIRE-10	1	10/P									
99	4843 300784	J-5273-02A	1	5/P									
100	4843 304858	J-5483-02AX	1	5/P									
101	4843 304868	J-5483-12AX	1	10/P									
102	4843 303914	J-B2P-VH	1	10/P									
103	4402 246850	B-TBS6011-0941	1	1/D									
105	4402 246740	WH-DRV-LGC	1	1/P									
106	4402 246800	AC-STK780	1	1/S									
107	4402 246730	HS-DRV-552	1	1/P									
108	4402 246810	PWZ-SP1-3-01	2	5/P						108 1			
108 1	4843 391025	PWZ-WLS-060	2	5/P		C	E	J	F4I291		108	VK4	
109	4402 246830	PWZ-H-0417	2	5/P									
110	7043 300613	BID30*06MSCR1AI	9	50/P									
111	7043 301213	BID30*12MSCR1AI	3	50/P									
112	4402 246880	CORE-B-20L-25	1	1/D									

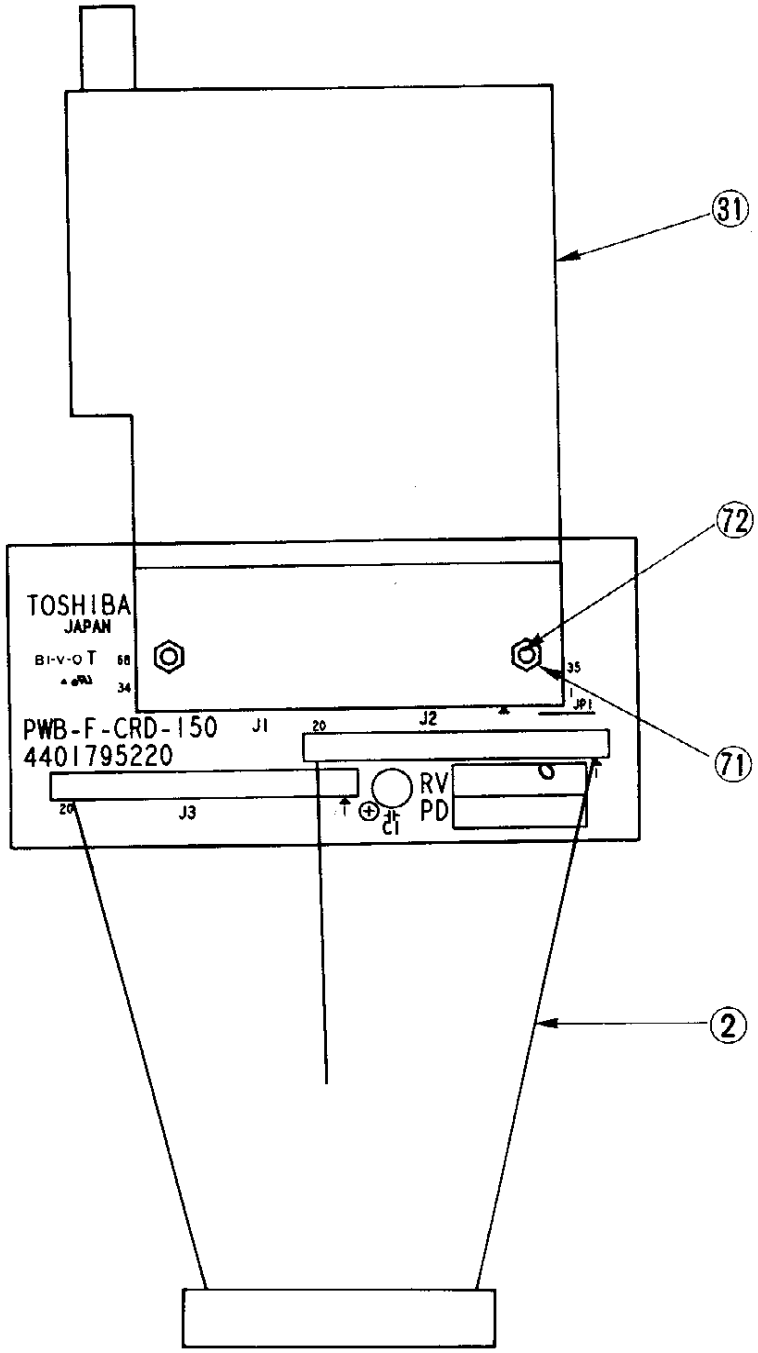
31
72
71
2
TOSHIBA
JAPAN
PWB-F-CRD-150
4401795220
J1
J2
J3
JP1
RV
PD
C1

ITEM NO.	PARTS NO.	PARTS NAME	Q'TY / PAGE	Q'TY / PACK	SPE PRICE IN NONE	P	I	R	BSI NO.	TO	FROM	SERIAL NO.	REMARKS
0	4401 795420	PWA-F-CRD-150	1	1/SB									
1	4401 795220	PWB-F-CRD-150	1	N/A***									
2	4401 796450	WH-LGC-MEM-150	1	1/P									
11	4843 406646	CE04W1C100M	1	10/P									
31	4843 307975	J-IC1G68PDDSEJ	1	1/D									
51	4407 782660	JUMPER-WIRE-10	1	10/P									
71	7360 200011	6/0NUT20MSZN3A	2	50/P									
72	7040 200611	PAN20*06MSZN3AI	2	50/P									

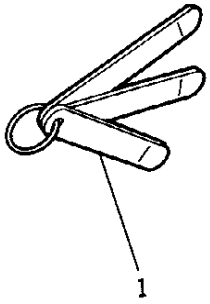
1

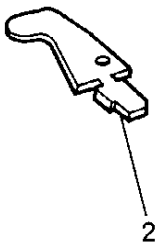
2

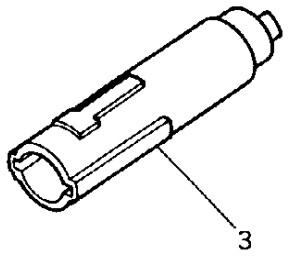
3

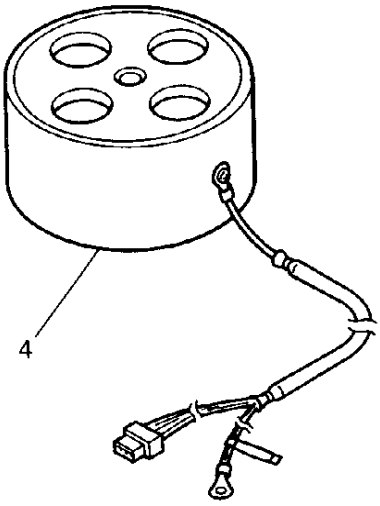
4

ITEM NO.	PARTS NO.	PARTS NAME	Q'TY / PAGE	Q'TY / PACK	SPE PRICE IN NONE	P	I	R	BSI NO.	TO	FROM	SERIAL NO.	REMARKS
1	4402 048100	ASM-JIG-DOC-180	1	1/P									
2	4407 915730	JIG-SW-F-COV	1	1/P									
3	4402 200960	ASM-JIG-DEV-545	1	1/P									
4	4401 763150	ASM-JIG-DRUM	1	1/C									

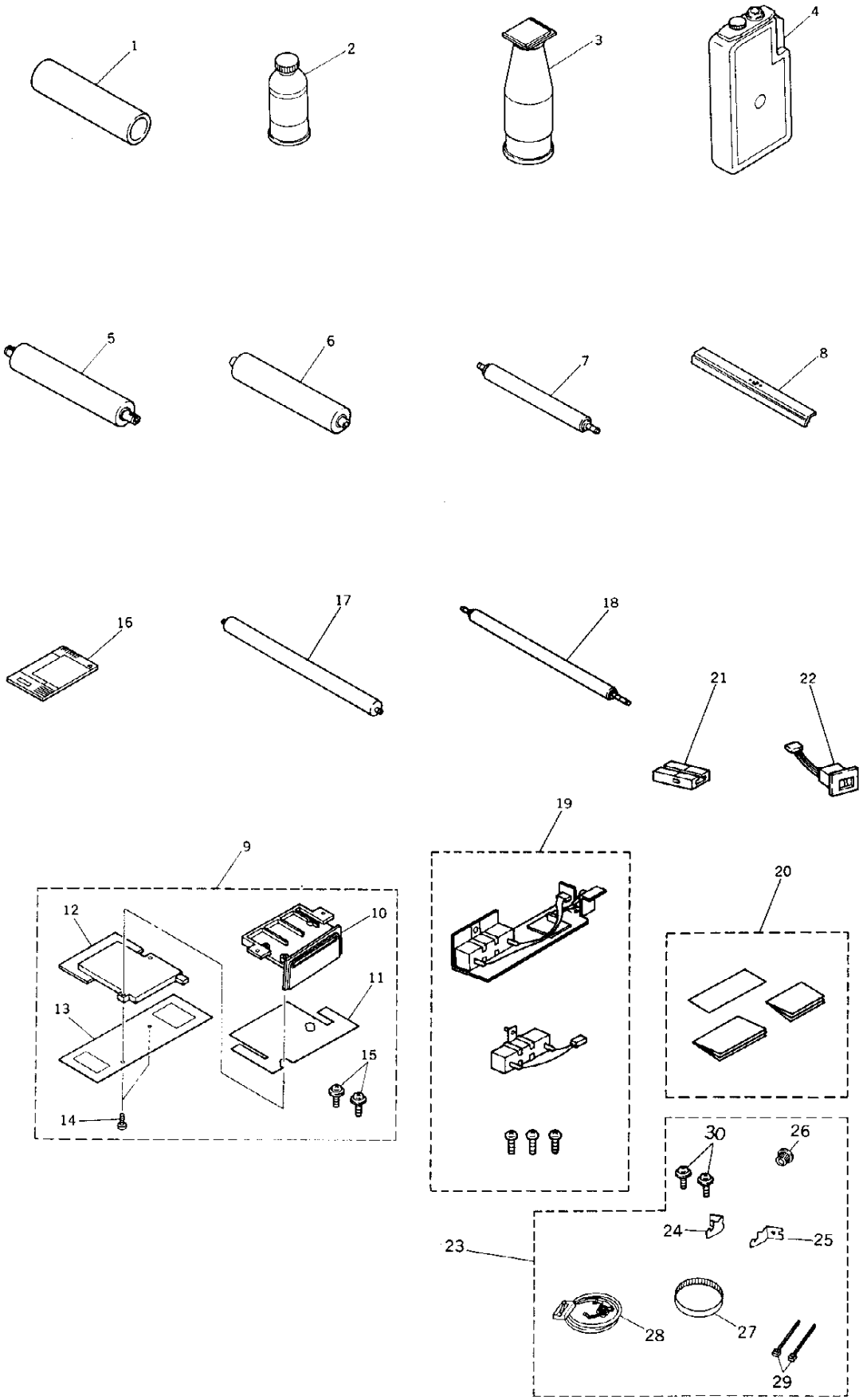
1
2
3
4
5
6
7
8
16
17
18
21
22
19
9
20
12
10
11
13
15
14
30
26
24
25
23
28
27
29

ITEM NO.	PARTS NO.	PARTS NAME	Q'TY / PAGE	Q'TY / PACK	SPE PRICE IN NONE	P	I	R	BSI NO.	TO	FROM	SERIAL NO.	REMARKS
1	6608 4645	PS-SD5540	1	SUPPLY									
2	6608 4517	PS-ZD6550	1	SUPPLY									10QTY/SET
3A	6608 4515	PS-ZT6550	1	SUPPLY									4QTY/SET
3B	6608 4516	PS-ZT6550E	1	SUPPLY									FOR EUR.
4A	6608 4519	PS-TB6550	1	SUPPLY									4QTY/SET
4B	6608 4520	PS-TB6550E	1	SUPPLY									FOR EUR.
5	6608 4521	PS-HR6550U	1	SUPPLY						005 1			
5 1	4409 830460	HR-6550-U	1	1/S		C	E	J	F5B401		005		
6	6608 4522	PS-HR6550L	1	SUPPLY						006 1			
6 1	4409 830510	HR-6550-L	1	1/S		C	E	J	F5B401		006		
7	6608 4523	PS-SR6550H	1	SUPPLY						007 1			
7 1	4409 830570	SR-6550H	1	1/S		C	E	J	F5B401		007		
8	6608 4518	PS-BL6550D	1	SUPPLY						008 1			
8 1	4409 830660	BL-6550D	1	10/S		C	E	J	F5B401		008		
9	6608 4507	KP-2001	1	SUPPLY									
10	4401 751920	HOLDER-IC-CARD	1	1/P									
11	4401 751970	SHEILD-CARD-1	1	1/KP									
12	4401 795420	PWA-F-CRD-150	1	1/SB									
13	4401 751980	SHEILD-CARD-2	1	1/KP									
14	4842 040848	PTBR30*12MSZN3A	2	50/P									
15	4842 040702	TZPAN4010MSZN3L	2	50/P									
16A	6608 4508	KQ-1010	1	SUPPLY									
16B	6608 4509	KQ-1020	1	SUPPLY									
16C	6608 4510	KQ-1030	1	SUPPLY									
16D	6608 4511	KQ-1040	1	SUPPLY									
16E	6608 4512	KQ-1050	1	SUPPLY									
16F	6608 4513	KQ-1051	1	SUPPLY									
16G	6608 4556	KQ-1052	1	SUPPLY									
16H	6608 4557	KQ-1053	1	SUPPLY									
16I	6608 4558	KQ-1060	1	SUPPLY									
16J	6608 4559	KQ-1061	1	SUPPLY									
16K	6608 4560	KQ-1062	1	SUPPLY									
17	6608 4646	PS-SR5540L	1	SUPPLY						017 1			10PCS/PACK
17 1	4409 835090	SR-5540L	1	1/S		C	E	J	F5B401		017		
18	6608 4562	PS-ZB6550H	1	SUPPLY						018 1			
18 1	4409 832310	B-6550H	1	1/S		C	E	J	F5B401		018		
19A	6608 4492	MF-6550U	1	SUPPLY									115V
19B	6608 4493	MF-6550E	1	SUPPLY									220V
19C	6608 4494	MF-6550A	1	SUPPLY									240V
20A	6608 4640	KM-5540EN	1	SUPPLY									ENGLISH
20B	6608 4641	KM-5540GE	1	SUPPLY									GERMAN
20C	6608 4642	KM-5540FR	1	SUPPLY									FRENCH
20D	6608 4643	KM-5540SP	1	SUPPLY									SPANISH
20E	6608 4644	KM-5540IT	1	SUPPLY									ITALIAN
21	6600 2050	MU-8	1	SUPPLY									
22	6600 2051	MU-10	1	SUPPLY									
23	6608 4639	KN-5540S	1	SUPPLY									
24	4400 747820	BKT-SRT-F151-F	1	1/P									
25	4400 747830	BKT-SRT-F151-R	1	1/P									
26	4400 747840	PULLEY-16-S3M	1	1/P									
27	4400 747850	BELT-B60S3M276	1	1/P									
28	4400 748310	WH-B5I/F-2002	1	1/P									
29	4843 391092	BD/W-T18S	2	10/P									
30	4842 040701	TZPAN4010MSZN3A	2	50/P		F	-	J	F4B103				