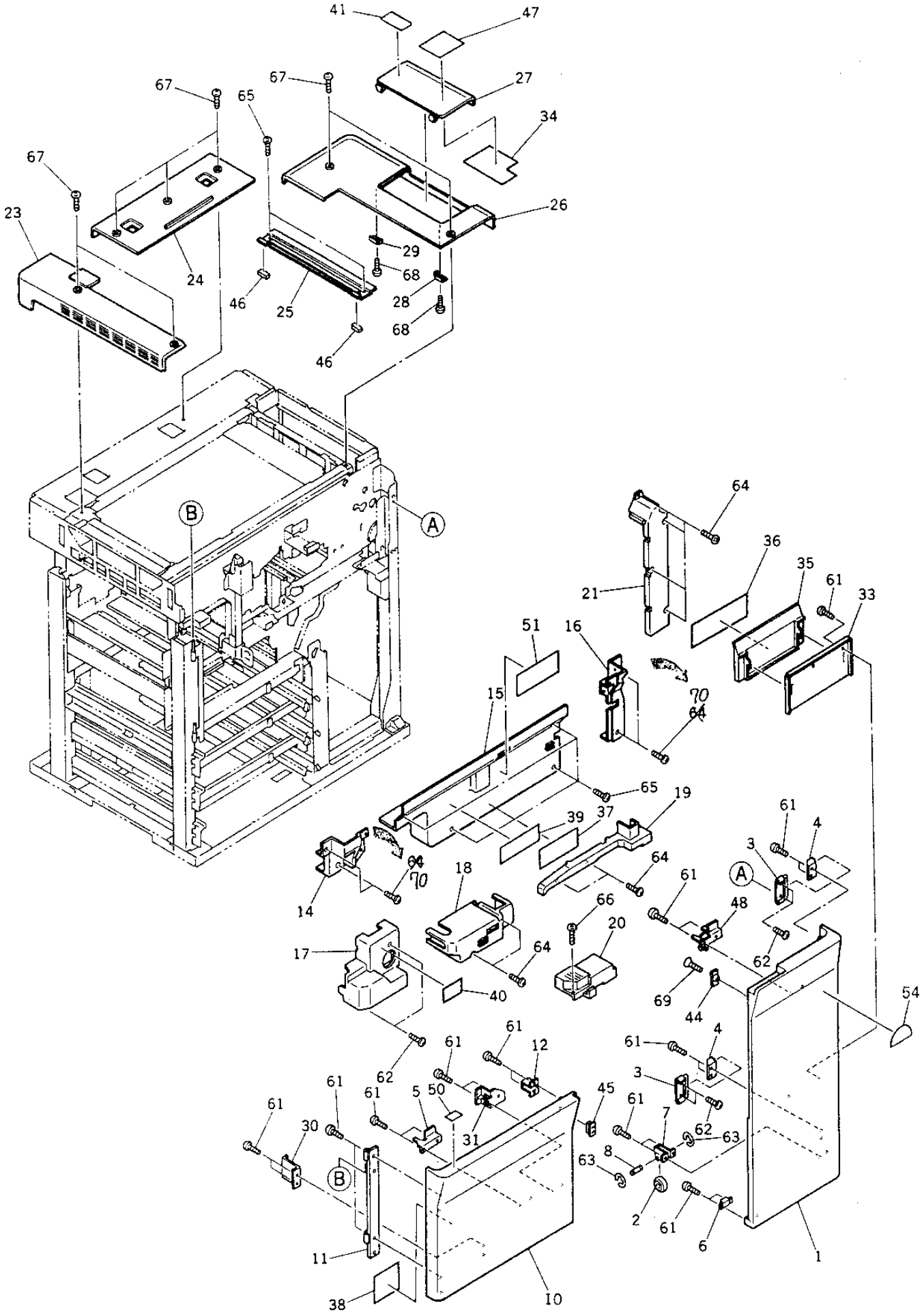
41
47
67
67
65
27
34
67
23
26
29
24
68
46
25
28
68
46
B
A
64
36
35
61
33
21
51
16
15
70
64
65
19
39
37
61
4
3
A
64
70
18
64
61
14
66
48
20
17
64
62
40
69
44
54
61
61
12
61
4
62
3
61
5
50
45
61
61
7
30
31
62
63
63
8
B
2
61
6
1
11
38
10

TOSHIBA

ITEM NO.	PARTS NO.	PARTS NAME	Q'TY / PAGE	Q'TY / PACK	SPE PRICE IN NONE	P	I	R	BSI NO.	TO	FROM	SERIAL NO.	REMARKS
1	4402 866640	F-COV-FRONT-R	1	1/PP									
2	4401 753100	ROLLER-19-H5R	1	1/P									
3	4401 752400	K-HINGE-F-R	2	1/P									
4	4401 753830	HOLDER-HINGE-FR	2	1/P									
5	4401 754450	PUSHER-SW-DOOR	1	1/P									
6	4407 764680	MG-CATCH	1	1/P									
7	4401 752320	GUIDE-COV-F-R	1	1/P									
8	4401 753110	PIN-DOOR-GUIDE	1	1/P									
10	4401 752870	F-COV-FRONT-L	1	1/PP									
11	4401 754970	HINGE-COV-L	1	1/P									
12	4401 752440	BRKT-MG-F-L	1	1/P									
14	4401 752740	K-COV-IN-F-U-L	1	1/PP									
15	4402 302890	COV-IN-F-U-C	1	1/PP									
16	4401 900660	K-COV-IN-F-U-R	1	1/PP									
17	4401 903400	COVER-IN-F-L-L	1	1/PP									
18	4401 900760	COV-IN-F-L-C	1	1/PP									
19	4401 752670	COV-IN-F-L-R	1	1/PP									
20	4401 910190	COVER-GUIDE-STK	1	1/PP									
21	4401 909380	COV-MTR-TRAY	1	1/PP									
23	4401 752000	COVER-TOP-L	1	1/PP									
24	4401 752010	COVER-TOP-C	1	1/PP									
25	4401 752820	F-FIX-GLASS-R-T	1	1/PP									
26	4401 752030	COVER-TOP-R	1	1/PP									
27	4401 752280	K-COV-TNR-OPN-T	1	1/PP									
28	4401 752050	HINGE-COV-HOP-F	1	1/P									
29	4401 752060	HINGE-COV-HOP-R	1	1/P									
30	4401 754480	PUSHER-OP-GUIDE	1	1/P									
31	4401 754490	PUSHER-OP-RGST	1	1/P									
33	4401 752480	PLT-BOOK-HLD	1	1/P									
34	4401 910980	LBL-TNR-INST-T	1	1/KP									
35	4408 541410	BOOK-HOLDER-T	1	1/PP									
36	4401 768080	LBL-PFP-JAM	1	1/KP									
37	4401 768060	LBL-ADD-JAM	1	1/KP									
38	4401 768190	LBL-MEMORY-150	1	5/P									
39	4400 841490	LABEL-DRUM-F	1	5/P									
40	4400 831630	LBL-HOT	1	5/P									
41	4401 768180	LBL-TNR-CAU-1	1	5/P									
44	4401 751990	PLATE-MG-DF	1	1/P									
45	4402 202690	MG-CATCH-15	1	1/P									
46	4401 754880	CUSHION-GLASS	2	5/P									
47	4401 768300	LBL-TNR-CAU-2	1	5/P									
48	4401 754930	ASM-PUSHER-SW-D	1	1/D									
50	4401 768620	LBL-SHELL-CAU	1	5/P									
51C	4402 311200	LBL-SHEET-PM-C6	1	1/KP									EUD
51D	4402 311200	LBL-SHEET-PM-C6	1	1/KP									GSD
51E	4402 311200	LBL-SHEET-PM-C6	1	1/KP									FRD
51F	4402 311200	LBL-SHEET-PM-C6	1	1/KP									SED
51G	4402 311200	LBL-SHEET-PM-C6	1	1/KP									UKD
54A	4401 910990	LBL-ENERGY-T	1	5/P									TAD
61	7040 400811	PAN40*08MSZN3AI	22	50/P									
62	4842 040060	TPAN40*08MSZN3L	7	50/P									
63	7405 004031	ERR040SKZN3A	2	50/P									
64	4842 040700	TZPAN4008MSZN3L	12	50/P						064 1			
64 1	4842 040700	TZPAN4008MSZN3L	8	50/P		D	E	E	F98D262		064		
65	7043 400813	BID40*08MSCR1AI	6	50/P									
66	4842 040692	TZPAN3008MSZN3L	1	50/P									
67	4842 040635	TBID40*08MSCR3C	8	50/P									
68	4842 040846	PTBR30*08MSZN3A	2	50/P									
69	7124 401011	12FLT4010MSZN3A	1	50/P									
70	4842 040702	TZPAN4010MSZN3L	4	50/P		A	E	E	F98D262				
62	4842 040060	TPAN40*08MSZN3L	7	50/P									

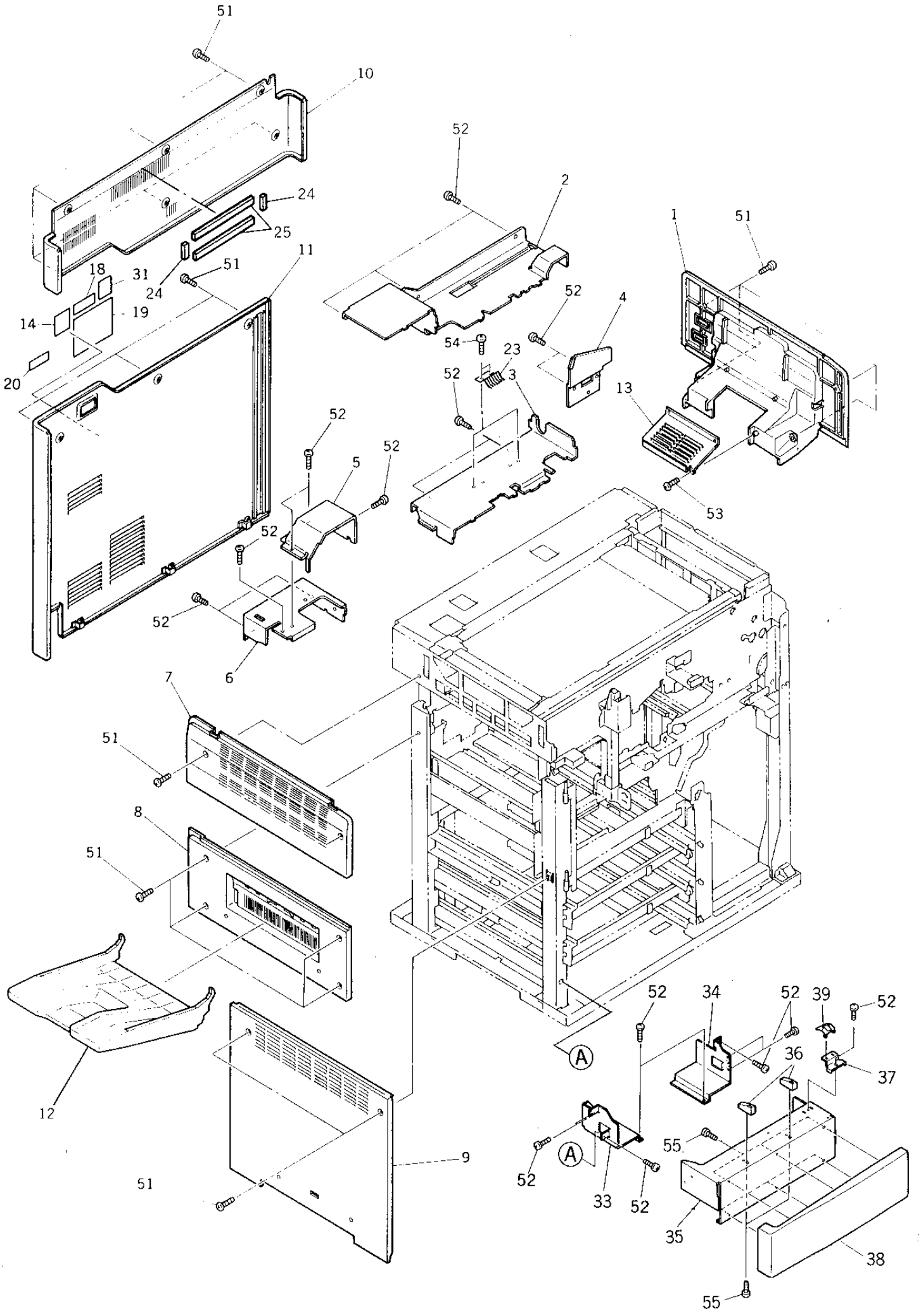
51
10
52
2
24
25
1
51
11
18
31
51
24
52
4
14
19
54
23
20
52
3
13
52
52
5
53
52
52
6
7
51
8
51
52
34
52
39
52
A
36
37
12
55
9
A
51
52
33
52
35
38
55

TOSHIBA

ITEM NO.	PARTS NO.	PARTS NAME	Q'TY / PAGE	Q'TY / PACK	SPE PRICE IN NONE	P	I	R	BSI NO.	TO	FROM	SERIAL NO.	REMARKS
1	4402 868610	COVER-RIGHT-U	1	1/PP									
2	4401 900720	K-COV-IN-R-U	1	1/P									
3	4401 900750	COV-IN-R-L-1	1	1/PP									
4	4401 752760	COV-IN-R-L-2	1	1/P									
5	4401 752770	COVER-IN-R-HR-U	1	1/P									
6	4401 752780	COVER-IN-R-HR-L	1	1/P									
7	4401 752070	COVER-LEFT-U	1	1/PP									
8	4401 751180	COVER-EXIT	1	1/PP									
9	4401 901070	K-COV-LEFT-L-T	1	1/PP									
10	4401 901000	COVER-REAR-U-T	1	1/PP									
11	4401 901010	K-COV-REAR-L-T	1	1/PP									
12	4408 541390	TRAY-T	1	1/PP									OPTION
13	4401 752970	COVER-R-U-SUB	1	1/P									
14	4408 543130	LBL-SERVICE-T	1	5/P									
18A	4400 740530	LABEL-FCC	1	10/P									TAD
19A	4400 361560	STICKER-W-TAIS	1	N/A***									TAD
20D	4402 200640	LBL-RECYCLE	1	5/P									GSD
23	4402 261410	SPL-GROUND	2	5/P									
24	4402 302960	SEAL-COV-R-U-1	2	5/KP									
25	4402 302970	SEAL-COV-R-U-2	2	5/KP									
31B	4400 945700	LABEL-CANADA	1	5/P									CSD
33	4400 745880	BKT-BLIND-L	1	1/P									
34	4400 745890	BKT-BLIND-R	1	1/P									
35	4400 746190	BKT-COV-BLIND	1	1/P									
36	4402 234530	HOLDER-CST-P	2	1/P									
37	4400 746180	BKT-PUSH-LEV	1	1/P									
38	4400 746200	COVER-BL-CST	1	1/PP									
39	4402 233080	PUSHER-LEV-ELV	1	1/P									
51	4842 040635	TBID40*08MSCR3C	21	50/P									
52	4842 040060	TPAN40*08MSZN3L	24	50/P									
53	4842 040495	PTBR30*06MSZN3A	2	50/P									
54	4842 040480	THPAN3006MSZN3L	4	50/P									
55	4842 040849	PTBR40*08MSZN3A	8	50/P									

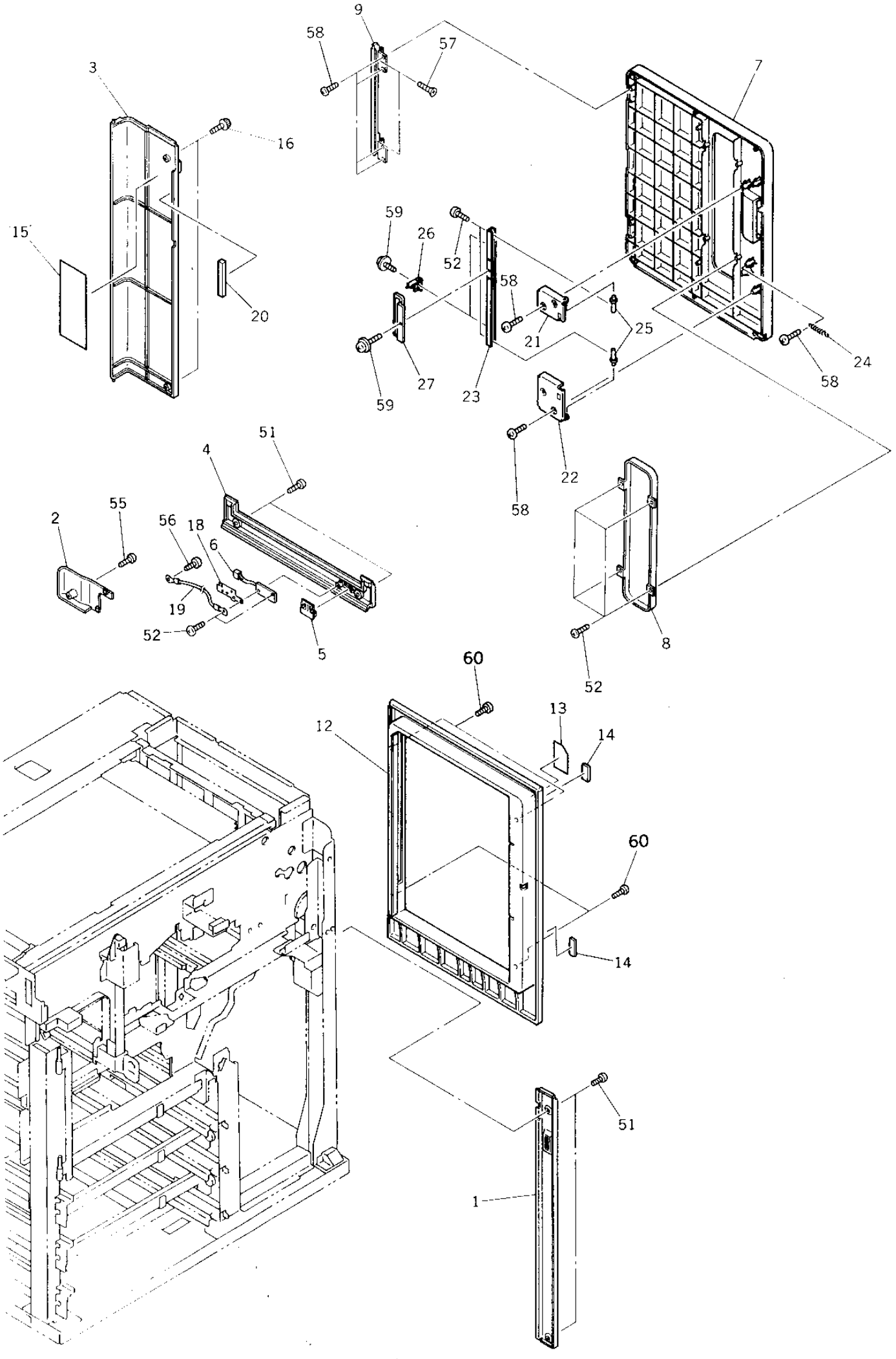
9
58
57
3
16
7
15
59
26
52
58
20
21
25
24
58
27
23
59
51
4
22
58
55
2
56
18
6
19
52
5
8
52
60
13
12
14
60
14
51
1

TOSHIBA

ITEM NO.	PARTS NO.	PARTS NAME	Q'TY / PAGE	Q'TY / PACK	SPE PRICE IN NONE	P	I	R	BSI NO.	TO	FROM	SERIAL NO.	REMARKS
1	4401 901170	K-COVER-R-L-F-T	1	1/PP									
2	4401 752800	COVER-GAP-REAR	1	1/P									
3	4401 752100	COVER-U-TNR	1	1/PP									
4	4401 752180	F-COVER-BEAM-EN	1	1/PP									
5	4401 779820	K-KEY-LCF	1	1/P									
6	4401 795400	PWA-F-LCF-150	1	1/SB									
7	4401 908620	DOOR-LCF	1	1/PP									
8	4401 779780	WINDOW-DOOR-LCF	1	1/PP									
9	4401 908850	K-HINGE-LCF	1	1/P									
12	4401 908650	COVER-LCF	1	1/PP									
13	4401 908880	LBL-LMT-LCF-C7	1	5/P									
14	4401 908670	CUSH-COVER-LCF	2	5/P									
15	4401 768610	LBL-U-TNR	1	1/KP									
16	4401 752980	SCREW-COV-U-TNR	2	10/P									
18	4401 751800	MYLAR-SHIELD-LC	1	1/P									
19	4401 798130	WH-LCFKEY-EARTH	1	5/P									
20	4401 753800	K-MG-U-TNR	1	5/P									
21	4401 908700	BASE-KNOB-LCF-1	1	1/P									
22	4401 908710	BASE-KNOB-LCF-2	1	1/P									
23	4401 908740	BRKT-HINGE-LCF	1	1/P									
24	4401 908760	SPE-DOOR-LCF	1	5/P									
25	4401 908730	PIN-DOOR-LCF	2	10/P									
26	4401 908750	BRKT-STOPPER	2	1/P									
27	4401 908720	KNOB-DOOR-LCF	1	1/P									
51	4842 040635	TBID40*08MSCR3C	4	50/P									
52	4842 040846	PTBR30*08MSZN3A	10	50/P									
55	4842 040700	TZPAN4008MSZN3L	1	50/P									
56	4842 040700	TZPAN4008MSZN3L	1	50/P									
57	4842 040060	TPAN40*08MSZN3L	3	50/P									
58	4842 040849	PTBR40*08MSZN3A	9	50/P									
59	4842 040692	TZPAN3008MSZN3L	3	50/P									
60	4842 040605	TBID40*10MSCR3C	4	50/P									

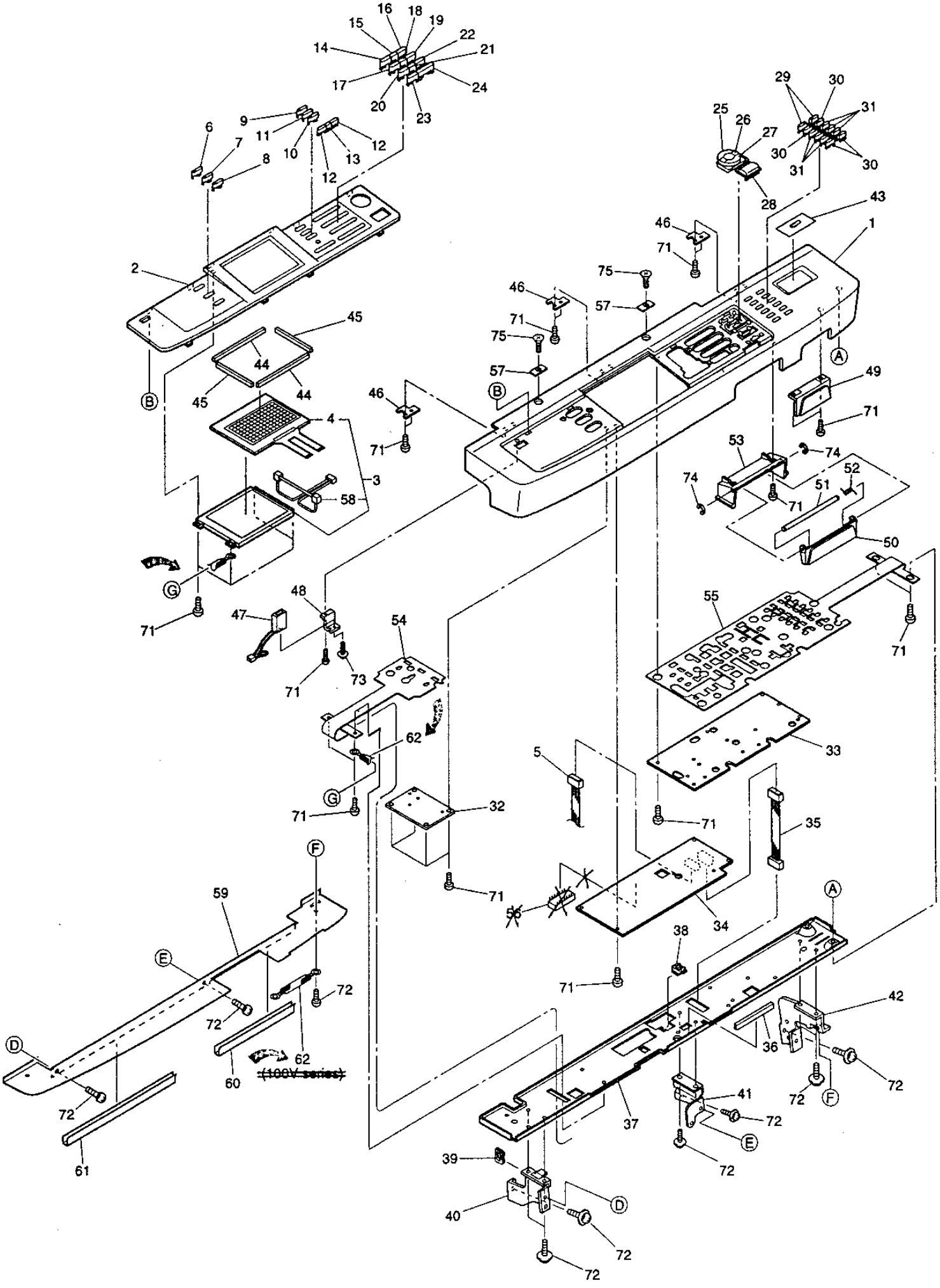
1
2
3
4
5
6
7
8
9
10
11
12
13
14
15
16
17
18
19
20
21
22
23
24
25
26
27
28
29
30
31
32
33
34
35
36
37
38
39
40
41
42
43
44
45
46
47
48
49
50
51
52
53
54
55
56
57
58
59
60
61
62
71
72
73
74
75
A
B
D
E
F
G
(100V series)

ITEM NO.	PARTS NO.	PARTS NAME	Q'TY / PAGE	Q'TY / PACK	SPE PRICE IN NONE	P	I	R	BSI NO.	TO	FROM	SERIAL NO.	REMARKS
1A	4402 303410	F-COV-CNP-UC	1	1/PP									TAD
1B	4402 303410	F-COV-CNP-UC	1	1/PP									CSD
1C	4402 303420	F-COV-CNP-EU	1	1/PP									EUD
1D	4402 303420	F-COV-CNP-EU	1	1/PP									GSD
1E	4402 303420	F-COV-CNP-EU	1	1/PP									FRD
1F	4402 303420	F-COV-CNP-EU	1	1/PP									SED
1G	4402 303420	F-COV-CNP-EU	1	1/PP									UKD
1H	4402 303430	F-COV-CNP-AU	1	1/PP									AUD
1I	4402 303430	F-COV-CNP-AU	1	1/PP									TWD
1J	4402 303430	F-COV-CNP-AU	1	1/PP									SAD
1K	4402 303430	F-COV-CNP-AU	1	1/PP									ASD
2A	4402 304110	PNL-DSP-UC	1	1/PP									TAD
2B	4402 304110	PNL-DSP-UC	1	1/PP									CSD
2C	4402 304120	PNL-DSP-EU	1	1/PP									EUD
2D	4402 304120	PNL-DSP-EU	1	1/PP									GSD
2E	4402 304120	PNL-DSP-EU	1	1/PP									FRD
2F	4402 304120	PNL-DSP-EU	1	1/PP									SED
2G	4402 304120	PNL-DSP-EU	1	1/PP									UKD
2H	4402 304130	PNL-DSP-AU	1	1/PP									AUD
2I	4402 304130	PNL-DSP-AU	1	1/PP									TWD
2J	4402 304130	PNL-DSP-AU	1	1/PP									SAD
2K	4402 304130	PNL-DSP-AU	1	1/PP									ASD
3	4402 322500	K-LCD-TOUCH-154	1	1/C									
4	4402 322450	LCD-TOUCH-154	1	1/KP									
5	4402 321960	WH-DSP-LCD-154	1	1/P									
6	4402 304000	K-KEY-TIMER	1	1/D									
7	4402 304010	K-KEY-E/S	1	1/P									
8	4402 304020	K-KEY-ITRPT	1	1/P									
9	4402 304030	K-KEY-FC	1	1/D									
10	4402 304040	K-KEY-PHOTO	1	1/D									
11A	4402 303650	KEY-HELP	1	1/P									TAD
11B	4402 303650	KEY-HELP	1	1/P									CSD
11C	4402 303990	KEY-INFO	1	1/P									EUD
11D	4402 303990	KEY-INFO	1	1/P									GSD
11E	4402 303990	KEY-INFO	1	1/P									FRD
11F	4402 303990	KEY-INFO	1	1/P									SED
11G	4402 303990	KEY-INFO	1	1/P									UKD
11H	4402 303650	KEY-HELP	1	1/P									AUD
11I	4402 303650	KEY-HELP	1	1/P									TWD
11J	4402 303650	KEY-HELP	1	1/P									SAD
11K	4402 303650	KEY-HELP	1	1/P									ASD
12	4402 303660	KEY-LIGHT	2	1/P									
13	4402 303670	KEY-AUTO	1	1/P									
14	4402 303690	KEY-1	1	1/P									
15	4402 303700	KEY-2	1	1/P									
16	4402 303710	KEY-3	1	1/P									
17	4402 303720	KEY-4	1	1/P									
18	4402 303730	KEY-5	1	1/P									
19	4402 303740	KEY-6	1	1/P									
20	4402 303750	KEY-7	1	1/P									
21	4402 303760	KEY-8	1	1/P									
22	4402 303770	KEY-9	1	1/P									
23	4402 303780	KEY-0	1	1/P									
24	4402 303790	KEY-C/S	1	1/P									
25	4402 303800	KEY-ZOOM-200	1	1/P									
26	4402 303810	KEY-ZOOM-100	1	1/P									
27	4402 303820	KEY-ZOOM-50	1	1/P									
28	4402 303830	KEY-PRINT	1	1/P									
29	4402 303840	KEY-SIZE-A	2	1/P									
30	4402 303850	KEY-SIZE-B	4	1/P									
31	4402 303860	KEY-SIZE-C	6	1/P									
32	4402 321230	PWA-F-PNL-154	1	1/SB									
33	4402 321240	PWA-F-KEY-154	1	1/SB									
34	4402 321250	PWA-F-DSP-154	1	1/SB									
35	4402 321950	WH-LGC-DSP-154	1	1/P									
36	4402 303940	EDGING-100-T1.2	1	1/P									
37	4402 303950	STAY-CNP-154	1	1/P									
38	4843 391367	BD/W-EDS-0607M	1	5/P									
39	4842 416026	GROMET-EHP-6U	1	5/P									
40	4402 303880	BRKT-PNL-L	1	1/P									
41	4401 770480	BRKT-PNL-C	1	1/P									

ITEM NO.	PARTS NO.	PARTS NAME	Q'TY / PAGE	Q'TY / PACK	SPE PRICE IN NONE	P	I	R	BSI NO.	TO	FROM	SERIAL NO.	REMARKS
42	4402 303260	BRKT-PNL-R	1	1/P									
43	4402 303900	MAGNET	1	1/P									
44	4402 303920	SEAL-PNL-L	2	5/KP									
45	4402 303930	SEAL-PNL-S	2	5/KP									
46	4401 751560	HOOK-CONPANE	3	1/P									
47	4401 797650	CTR-E750B-150	1	1/D									
48	4401 751550	BRKT-COUNTER	1	1/P									
49	4401 751930	COVER-BLIND	1	1/P									
50	4401 751860	COV-HANDLE-CNP	1	1/P									
51	4401 751870	PIN-HANDLE-CNP	1	1/P									
52	4401 751880	SPR-061-080	1	5/P									
53	4401 751890	HLDR-HANDLE-CNP	1	1/P									
54	4402 303960	SHIELD-MLR-PNL	1	1/KP									
55	4402 303970	SHIELD-MLR-KEY	1	1/KP									
56	4402 325390	IC-154KEY-00	1	1/S						056 1			
56 1	4402 325390	IC-154KEY-00	0	1/S		B	-	E	F97H991		056	DG7	
57	4401 751990	PLATE-MG-DF	2	1/P									
58	4402 322670	CFL-LCD-154	1	1/C									
59	4402 303290	COV-IN-F-U-U	1	1/PP									
60	4401 770580	EDGING-EO10-210	1	1/P									
61	4401 770590	EDGING-EO10-300	1	1/P									
62A	4843 583401	WIRE-FGM-100-M4	1	1/P									TAD
62B	4843 583401	WIRE-FGM-100-M4	1	1/P					F97J054				CSD
62H	4843 583401	WIRE-FGM-100-M4	2	1/P		F	-	-	F97J054				AUD
62I	4843 583401	WIRE-FGM-100-M4	2	1/P		F	-	-	F97J054				TWD
62J	4843 583401	WIRE-FGM-100-M4	2	1/P		F	-	-	F97J054				SAD
62K	4843 583401	WIRE-FGM-100-M4	2	1/P		F	-	-	F97J054				ASD
71	4842 040846	PTBR30*08MSZN3A	51	50/P									
72	4842 040060	TPAN40*08MSZN3L	11	50/P									
73	7040 300611	PAN30*06MSZN3A	1	50/P									
74	7405 003031	ERR030SKZN3A	2	50/P									
75	7044 400664	FLT40*06MSCR3C	2	50/P									

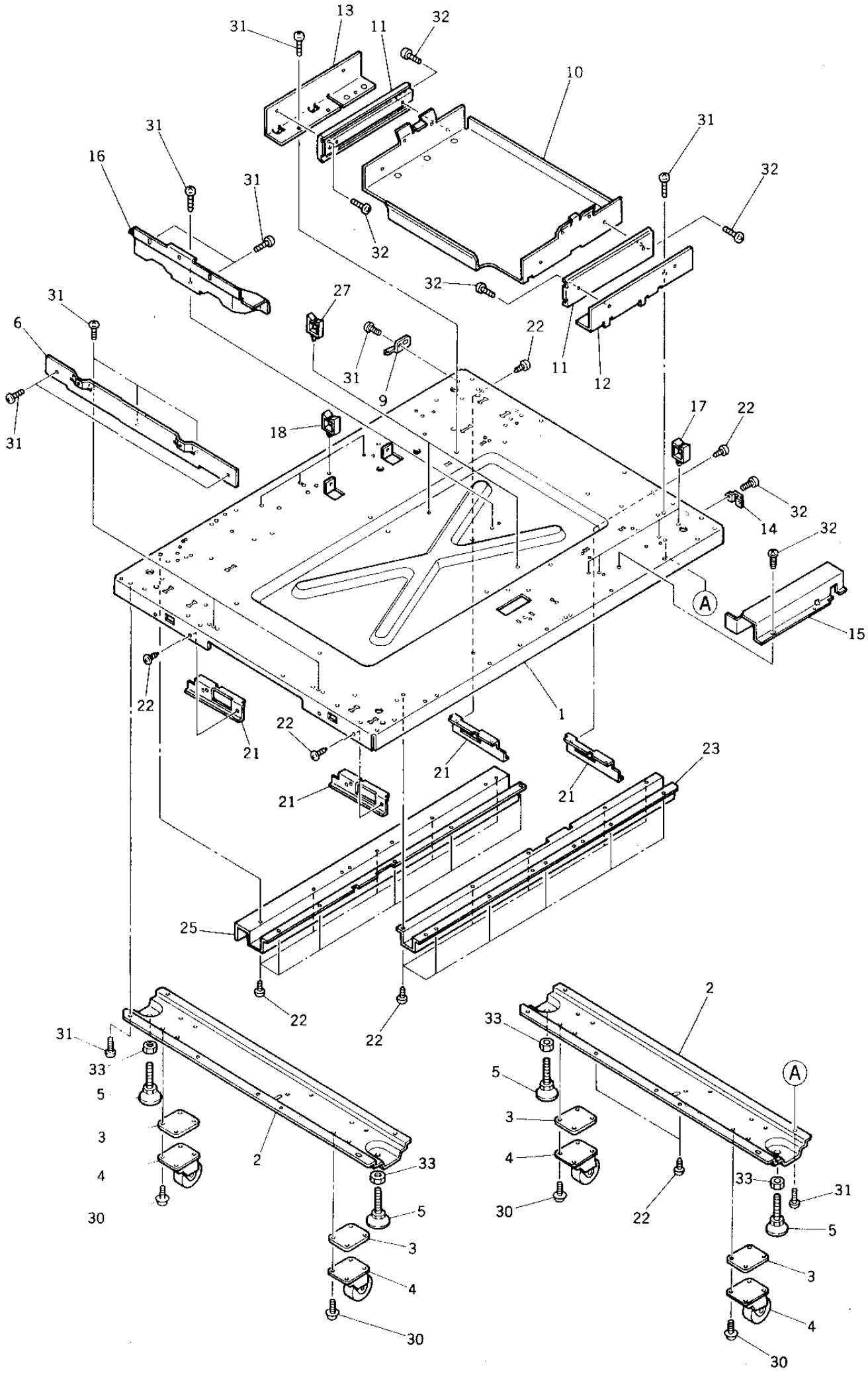
31
13
11
32
10
31
16
31
32
32
32
31
27
6
22
31
9
11
12
31
18
17
22
32
14
32
A
15
22
1
22
21
21
21
21
23
25
22
22
2
31
33
33
5
5
A
3
3
4
2
33
4
33
31
30
5
30
22
5
3
3
4
4
30
30

TOSHIBA

ITEM NO.	PARTS NO.	PARTS NAME	Q'TY / PAGE	Q'TY / PACK	SPE PRICE IN NONE	P	I	R	BSI NO.	TO	FROM	SERIAL NO.	REMARKS
1	4401 787110	FRAME-BASE	1	N/A***									
2	4401 787820	K-STAY-BASE	2	1/P									
3	4401 787810	SPACER-STY-BASE	4	1/P									
4	4401 787800	CASTER-PFP-SG	4	1/P									
5	4402 230760	FOOT-PD	4	1/P									
6	4401 787420	STAY-BASE-EXIT	1	1/P									
9	4401 754470	HINGE-UTNR-L	1	1/P									
10	4401 907410	BASE-LCF	1	1/P									
11	4401 779400	RAIL-LCF	2	1/P									
12	4401 907370	BRKT-RAIL-LCF-F	1	1/P									
13	4401 907380	BRKT-RAIL-LCF-R	1	1/P									
14	4401 754550	BRKT-COV-R-L-F	1	1/P									
15	4401 787620	COV-WH-BASE-F	1	1/P									
16	4401 909370	COV-WH-BASE-C	1	1/P									
17	4843 390889	CLP/W-WS-3U	4	5/P									
18	4843 390890	CLP/W-WS-4U	4	5/P									
21	4401 787190	EDGING-FRM-BASE	4	1/P									
22	4401 787160	SCREW-M4-7-R	30	10/P									
23	4401 787430	STAY-BASE-F-R	1	1/P									
25	4401 787580	STAY-BASE-R	1	1/P									
27	4843 390856	CLP/W-LWS-3U	2	5/P									
30	7640 501251	ZPAN50*12MSZN3A	16	50/P									
31	4842 040060	TPAN40*08MSZN3L	30	50/P									
32	4842 040650	TPAN40*06MSZN3L	8	50/P									
33	7360 100011	6/ONUT10MSZN3A	4	50/P									

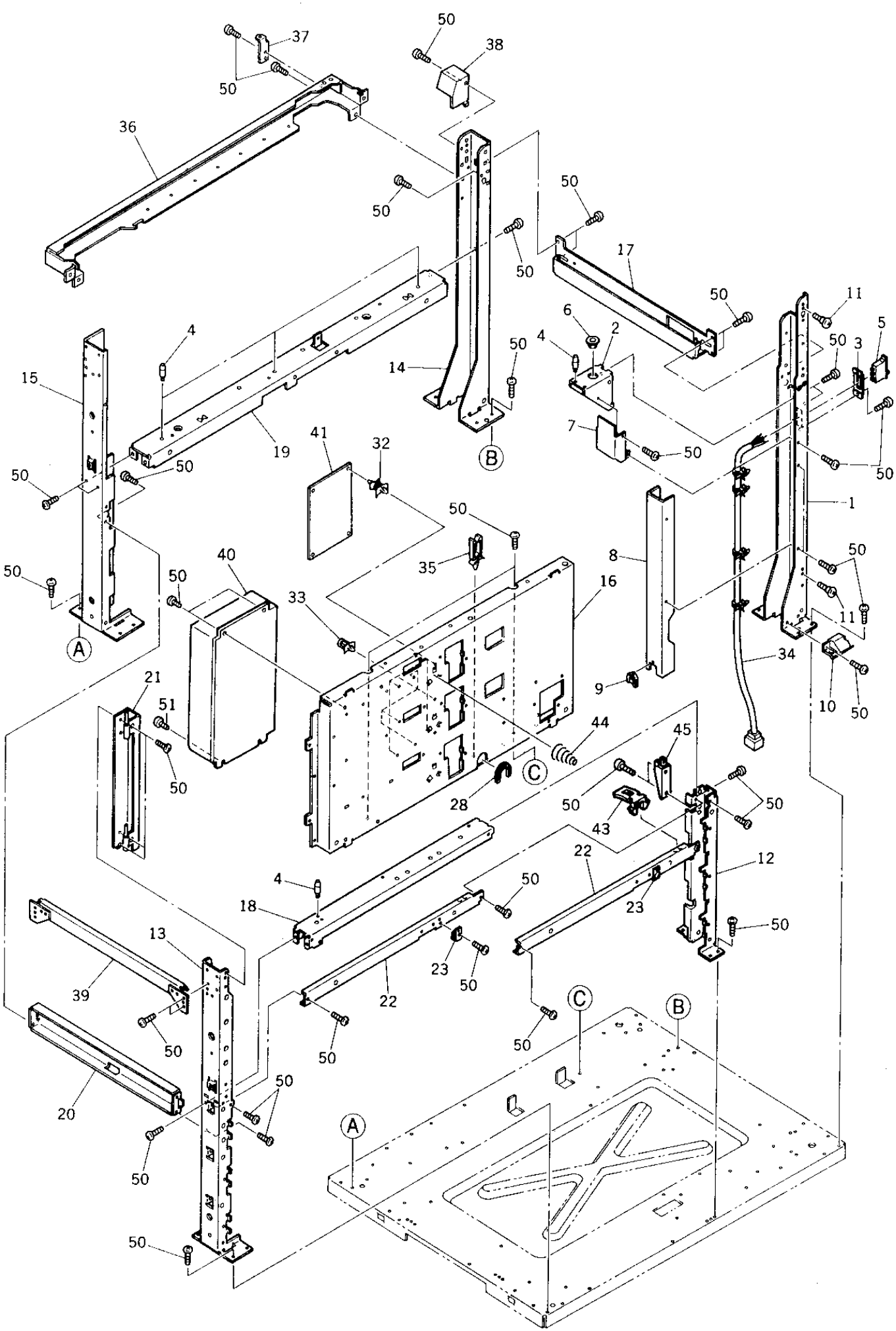
50
37
38
50
36
50
50
50
17
50
11
6
2
4
5
50
3
4
50
14
15
7
50
19
41
32
B
50
50
50
1
50
8
50
35
40
50
16
33
11
A
34
21
9
10
50
51
44
45
50
C
28
50
50
43
22
12
4
50
18
23
50
13
23
50
39
22
C
B
50
50
50
50
20
A
50
50

TOSHIBA

ITEM NO.	PARTS NO.	PARTS NAME	Q'TY / PAGE	Q'TY / PACK	SPE PRICE IN NONE	P	I	R	BSI NO.	TO	FROM	SERIAL NO.	REMARKS
1	4401 787200	FRAME-AGL-F-EN	1	N/A***									
2	4401 787290	BKT-ANGLE-F-EN	1	1/P									
3	4401 787330	BKT-SW-MAIN	1	1/P									
4	4402 830920	SCREW-FRAME	5	1/P									
5	4843 231592	SW-AJ921100Z301	1	1/D									
6	4842 414633	GMT-OCB-875	1	10/P									
7	4401 787600	COV-SW-MAIN	1	1/P									
8	4401 787610	COV-WH-AGL-F-EN	1	1/P									
9	4400 808280	EDS-1717U	1	5/P									
10	4401 752330	GUIDE-COV-R-L	1	1/P									
11	4400 805170	SCREW-LOCK-ARM	2	5/P									
12	4401 787240	FRAME-AGL-F-C	1	N/A***									
13	4401 787210	FRAME-AGL-F-EX	1	N/A***									
14	4401 787220	FRAME-AGL-R-EN	1	N/A***									
15	4401 787230	FRAME-AGL-R-EX	1	N/A***									
16	4401 787320	FRAME-LO-R	1	N/A***									
17	4401 787270	FRAME-BEAM-EN	1	N/A***									
18	4401 787250	FRAME-BEAM-F	1	N/A***									
19	4401 787260	FRAME-BEAM-R	1	N/A***									
20	4401 787280	FRAME-BEAM-EX	1	N/A***									
21	4401 752520	K-HINGE-COV-F-L	1	1/P									
22	4401 787340	BEAM-F-CST	2	1/P									
23	4401 787790	HOLDER-CST-F150	2	1/P									
28	4401 782410	GROMET-KG016-75	1	10/P									
32	4843 390875	PWZ-SPLS-14U	4	5/P									
33	4843 390865	PWZ-SPS-14U	4	5/P									
34	4401 795700	WH-MAIN-SW-150	1	1/P									
35	4843 390890	CLP/W-WS-4U	1	5/P									
36	4401 754500	BRKT-COV-R-L	1	1/P									
37	4401 754590	HINGE-UTNR-U	1	1/P									
38	4401 754580	BRKT-STOP-CTR	1	1/P									
39A	4401 787650	K-STAY-EXIT-TA	1	1/P									TAD
39B	4401 787500	K-STAY-EXIT	1	1/P									W/O TAD
40A	4402 322650	PS-100V-152	1	1/C									100V SERIES
40B	4402 322660	PS-200V-152	1	1/C									200V SERIES
41	4402 874110	PWA-F-PFD-155	1	1/SB									
43	4402 233080	PUSHER-LEV-ELV	1	1/P									
44	4402 231020	SPC-CONE-1.6	2	1/P									
45	4400 745910	BKT-M-FRAME-R	1	1/P									
50	4842 040060	TPAN40*08MSZN3L	84	50/P									
51	4842 040118	THPAN4008MSZN3L	1	50/P									

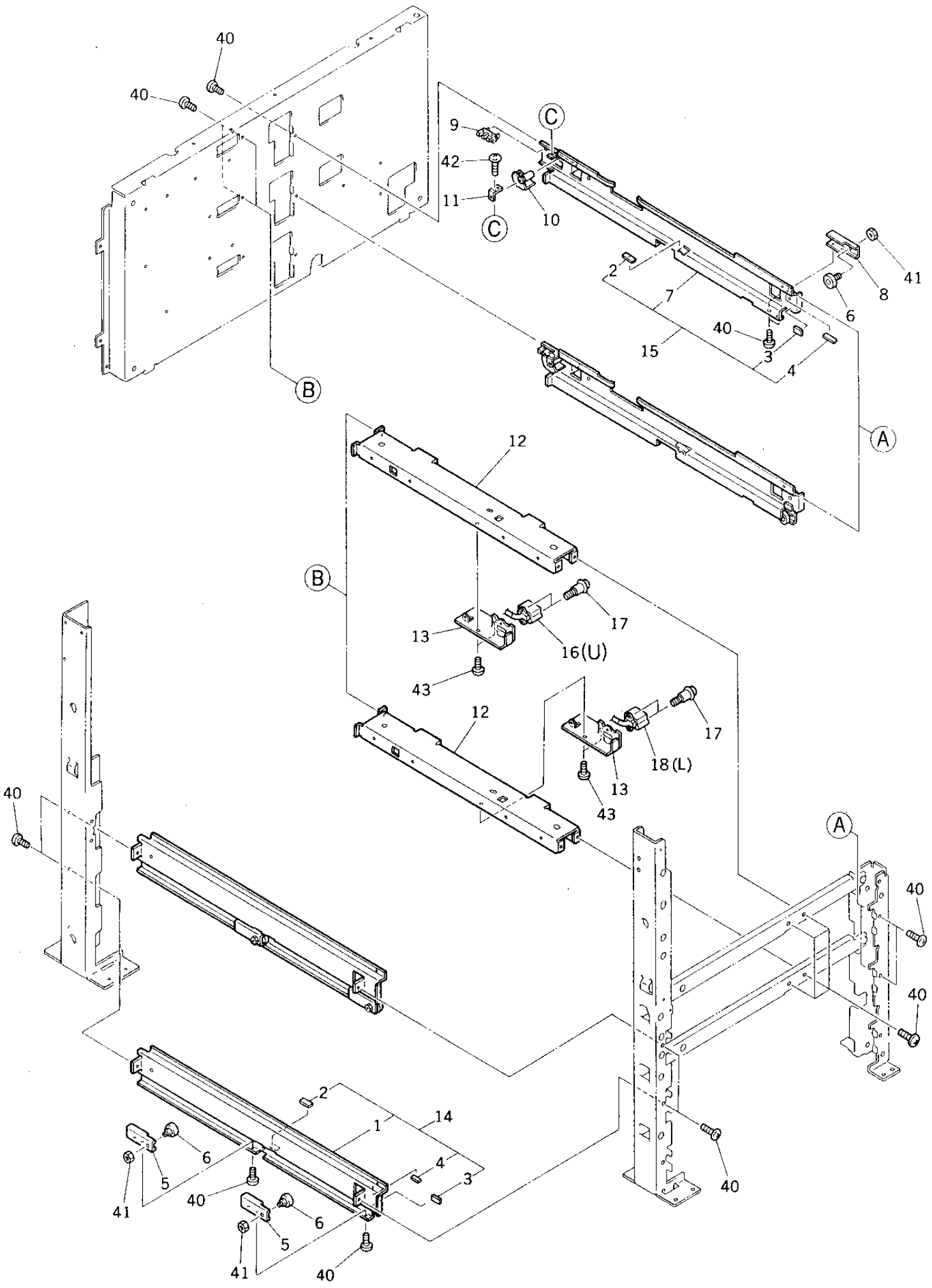
40
40
9
42
11
C
C
10
2
7
15
40
3
4
6
8
41
B
A
12
B
13
16(U)
17
43
12
18(L)
17
13
43
40
A
40
40
40
2
1
14
6
5
41
40
4
3
6
5
41
40

ITEM NO.	PARTS NO.	PARTS NAME	Q'TY / PAGE	Q'TY / PACK	SPE PRICE IN NONE	P	I	R	BSI NO.	TO	FROM	SERIAL NO.	REMARKS
1	4401 783400	RAIL-CST-L	2	1/P									
2	4402 234940	SHEET-CST-L	4	5/P									
3	4402 234930	SHEET-CST-S	4	5/P									
4	4402 230990	MYLAR-RAIL-U	4	5/P									
5	4402 234890	BKT-ROL-L	4	1/P									
6	4407 545070	BRG-DR22-B55R-S	6	1/P									
7	4401 783410	RAIL-CST-R	2	1/P									
8	4402 234900	BKT-ROL-R	2	1/P									
9	4400 902350	SCO-SX460-P2	2	1/C									
10	4400 908580	ACTR-SW-CST	2	1/P									
11	4402 230970	HLDR-ACTR-CST	2	1/P									
12	4401 787350	STAY-CNCT-CST	2	1/P									
13	4401 787360	BKT-CNCT-CST	2	1/P									
14	4401 783470	K-RAIL-CST-L	2	1/P									
15	4401 783490	K-RAIL-CST-R	2	1/P									
16	4401 795970	WH-PFP-DRW-150	1	1/P									UPPER
17	4402 807030	SCREW-SOCKET	4	10/P									
18	4401 795960	WH-PFP-DRWL-150	1	1/P									LOWER
40	4842 040060	TPAN40*08MSZN3L	26	50/P									
41	7360 600011	6/0NUT60MSZN3A	6	50/P									
42	4842 040650	TPAN40*06MSZN3L	2	50/P									
43	4842 040690	TZPAN3006MSZN3L	4	50/P									

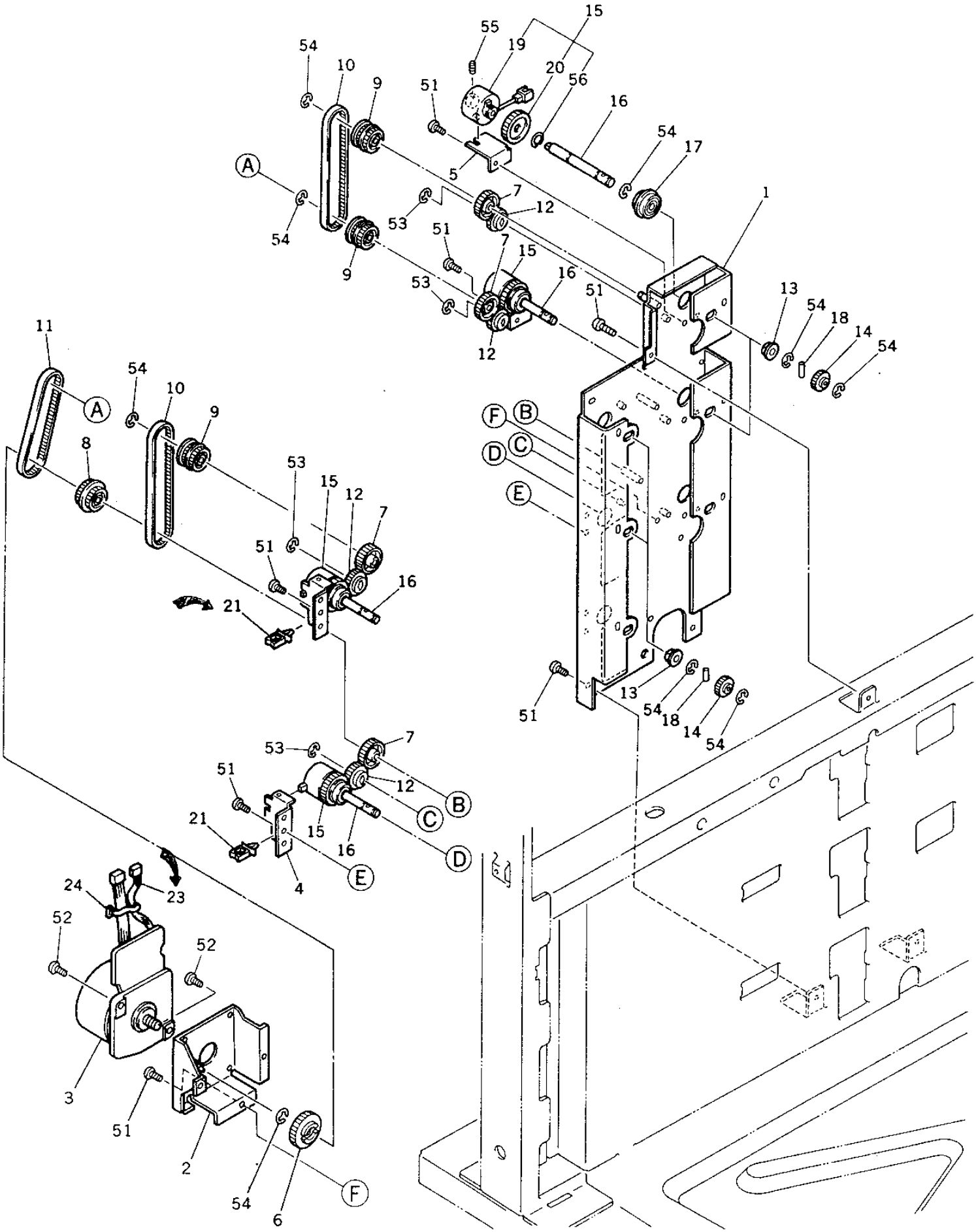
15
55
19
54
10
9
20
56
51
16
54
17
A
5
7
12
1
53
54
51
7
15
9
16
53
51
13
54
18
14
54
12
11
54
10
A
9
F
B
8
C
D
53
15
12
E
7
51
16
21
13
51
54
18
14
54
53
7
51
12
B
C
21
15
16
D
E
4
24
23
52
52
3
51
2
54
6
F

TOSHIBA

ITEM NO.	PARTS NO.	PARTS NAME	Q'TY / PAGE	Q'TY / PACK	SPE PRICE IN NONE	P	I	R	BSI NO.	TO	FROM	SERIAL NO.	REMARKS
1	4402 866810	K-FRM-DRV-PFP-2	1	N/A***									
2	4402 866820	BRKT-MOT-PFP	1	1/P									
3	4401 981610	M/DC-MAIN-210	1	1/C									
4	4401 783500	BKT-CLT-FEED	2	1/P									
5	4401 783570	BKT-SPG-CLT-RGT	2	1/P									
6	4401 783320	GEAR-05-64H-CRO	1	1/P									
7	4401 783330	GEAR-1.0-Z28	4	1/P									
8	4401 783350	PLY-Z29-Z25-3M	1	1/P									
9	4401 783340	PLY-Z25-3M-DBL	3	1/P									
10	4401 783700	BELT-3M-Z103	2	1/P									
11	4401 783710	BELT-3M-Z82	1	1/P									
12	4407 514650	GEAR-25	4	1/P									
13	4346 312030	BUSHING	4	5/P									
14	4407 547320	GEAR-0.8-25	4	1/P									
15	4402 235600	ASM-CLUTCH-10K	4	1/D									
16	4401 783600	SFT-CLT-FEED	4	1/P									
17	4407 545610	BRG-608ZZNR	4	1/P									
18	4346 312020	PIN	4	10/P									
19	4402 235610	CLUTCH-10K	4	N/A***									
20	4402 231590	GEAR-30-CLUTCH	4	N/A***									
21	4843 390889	CLP/W-WS-3U	1	5/P						021 1			
21 1	4843 390889	CLP/W-WS-3U	2	5/P		D	B	D	F97J055		021	1st Lot	
23	4402 874400	WH-PFD-PFP-155	1	1/P						023 1			
23 1	4402 874500	WH-PFD-PFP-155	1	1/P		C	B	D	F97J055		023	1st Lot	
24	4843 391092	BD/W-T18S	1	10/P									
51	4842 040060	TPAN40*08MSZN3L	12	50/P									
52	4842 040673	TPAN4014MSZN3L	2	50/P									
53	7405 005031	ERR050SKZN3A	4	50/P									
54	7405 007031	ERR070SKZN3A	16	50/P									
55	4842 011061	9HSS30/03MSFB	4	50/P									
56	4842 040864	SRG-S-10	4	50/P									

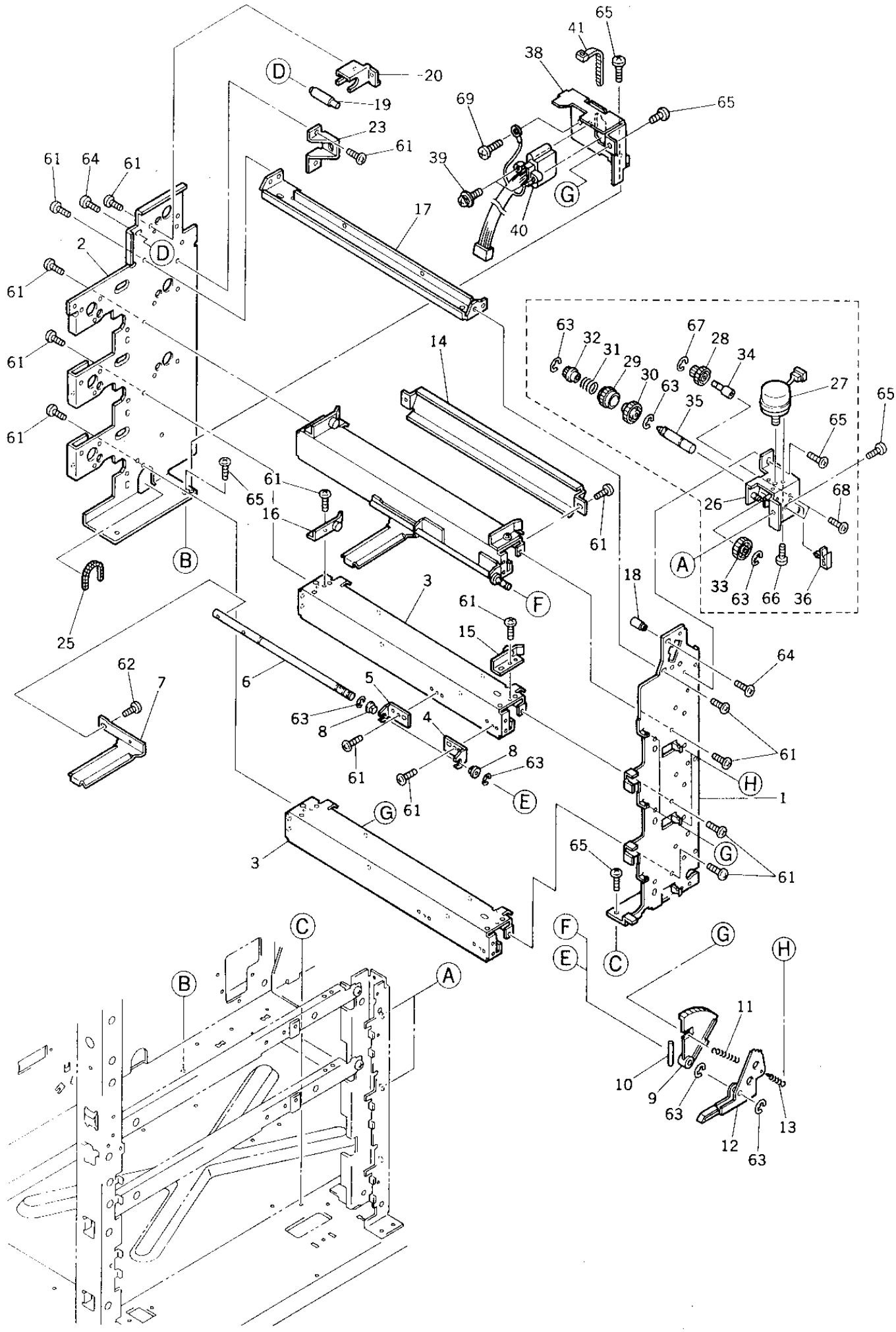
65
41
38
20
D
19
69
65
23
61
39
G
61
64
61
17
40
2
D
61
63
32
31
29
30
63
67
28
34
27
14
35
65
61
65
61
16
26
68
61
A
B
33
63
66
36
18
3
61
F
25
15
64
62
7
6
5
63
8
4
8
63
61
61
61
H
1
E
G
61
3
65
G
61
C
F
G
E
C
H
B
A
11
10
9
63
13
12
63

TOSHIBA

ITEM NO.	PARTS NO.	PARTS NAME	Q'TY / PAGE	Q'TY / PACK	SPE PRICE IN NONE	P	I	R	BSI NO.	TO	FROM	SERIAL NO.	REMARKS
1	4401 782300	FRAME-STY-UNT-F	1	N/A***									
2	4401 782400	FRAME-STY-UNT-R	1	N/A***									
3	4401 909180	STAY-EVT-CST	3	1/P									
4	4401 782220	ARM-STY-ELV-F	2	1/P									
5	4401 782230	ARM-STY-ELV-R	2	1/P									
6	4402 233230	SHAFT-ELV-PD	2	1/P									
7	4401 782360	LEVER-ELV-CST	2	1/P									
8	4346 312030	BUSHING	4	5/P									
9	4402 232940	GEAR-1.0-144	2	1/P									
10	4402 232930	PIN-4-43	2	5/P									
11	4346 323020	SPRING-MG	2	5/P									
12	4401 782380	LVR-ELV-124S	2	1/P									
13	4402 232670	SPE-6.3-0.4	2	1/P									
14	4401 909400	GUIDE-PAPER-C4	1	1/PP									UPPER
15	4401 782240	K-GUIDE-F/S-F	2	1/P									
16	4401 782270	K-GUIDE-F/S-R	2	1/P									
17	4401 782310	STAY-UNIT-F/S	1	1/P									
18	4401 782340	STUD-U-AL-UNT-F	1	1/P									
19	4401 782350	STUD-U-AL-UNT-R	1	1/P									
20	4401 909360	BRKT-FIX-AL-U-R	1	1/P									
23	4401 779940	BKT-POST-LCF	1	1/P									
25	4401 782410	GROMET-KG016-75	1	10/P									
26	4401 783720	K-BKT-MOT-TRAY	2	1/P									
27	4401 783680	K-MOT-ELV-150	2	1/C									
28	4401 783740	WHEEL-28/G-14	2	1/P									
29	4402 233050	SL-GEAR-20	2	1/P									
30	4401 783750	GEAR-35-ARBOR	2	1/P									
31	4401 782420	SPR-13.6R-13.5A	2	1/P									
32	4402 233040	GEAR-15-ARBOR	2	1/P									
33	4402 233130	GEAR-1.0-25-PD	2	1/P									
34	4401 783440	STUD-WORM-TRAY	2	1/P									
35	4401 783240	STD-BKT-MOT-TRY	2	1/P									
36	4407 744370	Z-MA-LS-10	2	5/P									
38	4401 907170	BRKT-CONECT-LR	1	1/P									
39	4402 807030	SCREW-SOCKET	2	10/P									
40	4401 915530	WH-PFC-LCF-152	1	1/P									
41	4843 391092	BD/W-T18S	1	10/P									
61	4842 040690	TZPAN3006MSZN3L	35	50/P									
62	7040 400611	PAN40*06MSZN3AI	4	50/P									
63	7405 007031	ERR070SKZN3A	14	50/P									
64	4842 040724	TPPAN4006MSZN3L	2	50/P									
65	4842 040060	TPAN40*08MSZN3L	15	50/P									
66	7040 260411	PAN26*04MSZN3AI	6	50/P									
67	7405 005031	ERR050SKZN3A	2	50/P									
68	4842 040725	TPPAN4008MSZN3A	4	50/P									
69	4842 040117	THPAN4006MSZN3L	1	50/P									

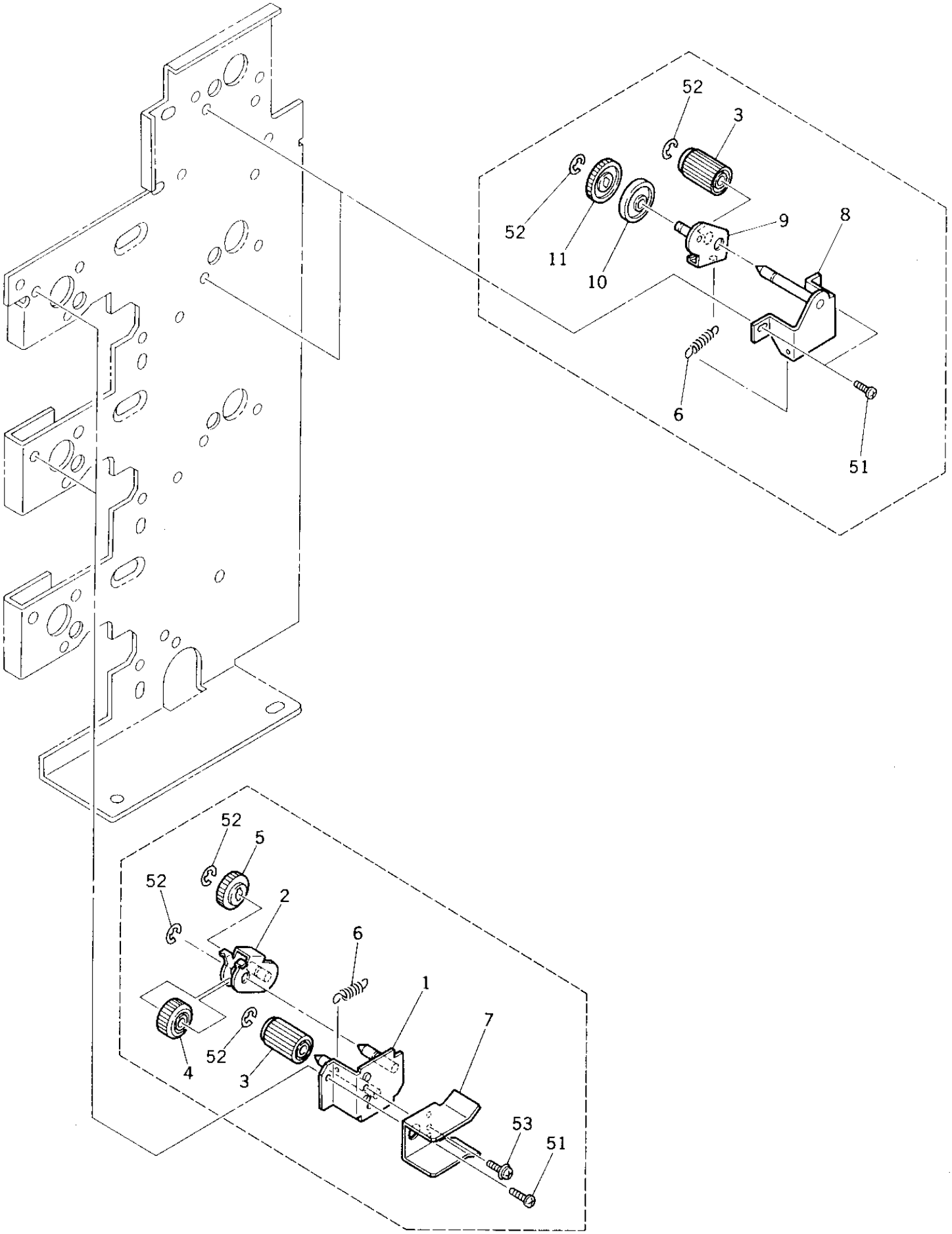
52
3
52
11
10
9
8
6
51
52
5
52
2
6
1
7
4
52
3
53
51

ITEM NO.	PARTS NO.	PARTS NAME	Q'TY / PAGE	Q'TY / PACK	SPE PRICE IN NONE	P	I	R	BSI NO.	TO	FROM	SERIAL NO.	REMARKS
1	4401 783030	K-BKT-JOINT-FED	2	1/P									
2	4401 783010	K-ARM-JOINT-FED	2	1/P									
3	4401 783310	GEAR-08-20-L27	4	1/P									
4	4407 682520	GEAR-0.8-25	2	1/P									
5	4408 535760	GEAR-08-25-070	2	1/P									
6	4401 783390	SPE-JOINT	4	5/P									
7	4401 783360	GUIDE-FS-UNIT	2	1/P									
8	4401 909290	K-BRKT-JNT-RGT	2	1/P									
9	4401 909260	K-ARM-JOINT-RGT	2	1/P									
10	4401 783380	ROL-GUIDE-RGT	2	1/P									
11	4407 906230	GEAR-08-30	2	1/P									
51	4842 040060	TPAN40*08MSZN3L	9	50/P									
52	7405 005031	ERR050SKZN3A	10	50/P									
53	4842 040690	TZPAN3006MSZN3L	2	50/P									

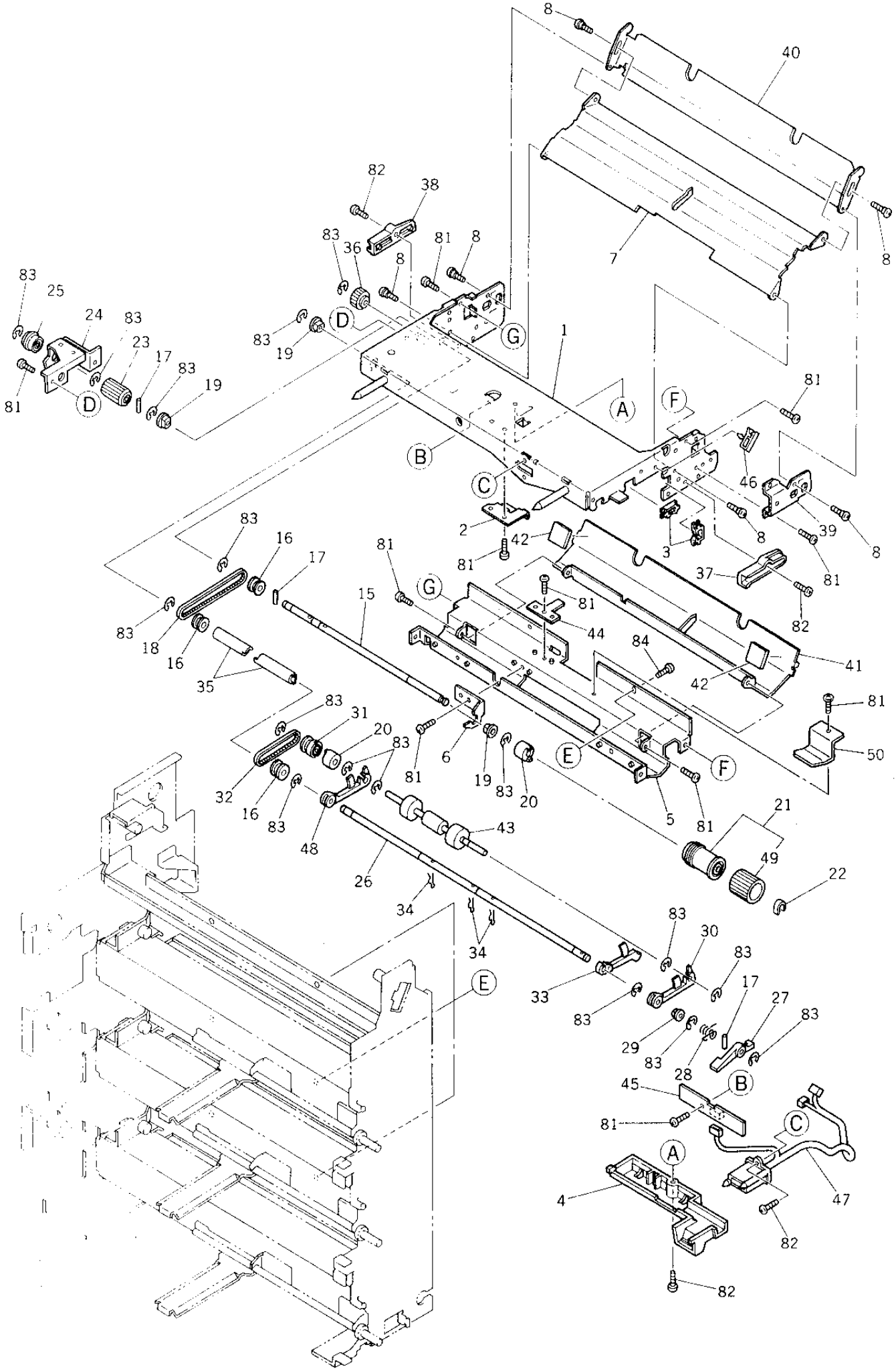
8
40
82
38
83
36
81
8
8
7
8
83
25
24
83
23
17
83
19
81
D
D
83
19
G
1
A
F
81
B
C
46
2
42
81
3
8
39
8
81
37
81
82
83
16
17
81
G
81
15
44
83
18
16
35
84
41
42
81
83
31
20
83
6
81
19
83
20
E
F
50
32
16
83
48
5
81
21
43
49
26
22
34
34
83
30
83
33
83
17
27
83
29
83
28
45
B
81
C
A
4
47
82
82

TOSHIBA

ITEM NO.	PARTS NO.	PARTS NAME	Q'TY / PAGE	Q'TY / PACK	SPE PRICE IN NONE	P	I	R	BSI NO.	TO	FROM	SERIAL NO.	REMARKS
1	4401 782800	K-FRAME-F/S-UNT	1	1/P									
2	4401 782650	BKT-WH-F/S	1	1/P									
3	4843 390941	BD/W-EDS-1	2	10/P									
4	4401 782660	COV-SW-F/S	1	1/P									
5	4401 782880	STAY-FEED-F/S	1	1/P									
6	4401 782980	BKT-FEED-ROL	1	1/P									
7	4401 909420	GUIDE-PA-2-F/S	1	1/PP									
8	4400 325930	PIN-BKT-CON-H	6	10/P									
15	4401 782730	SHAFT-FEED-F/S	1	1/P									
16	4408 338630	K-PLY/T-2M-Z20	3	1/P									
17	4407 403790	NPIN2-8	3	10/P									
18	4401 782960	BELT-214-2M	1	1/P									
19	4407 734980	BUSH-6-GCB	3	5/P									
20	4402 833110	CLUTCH-6-L	2	1/P									
21	4402 038460	K-ROL-FEED-1	1	1/P									
22	4407 907410	STOP-RING-6	1	5/P									
23	4401 783310	GEAR-08-20-L27	1	1/P									
24	4401 782790	BKT-SPT-SFT-FED	1	1/P									
25	4407 959970	BRG-696ZZNR	1	1/P									
26	4401 909320	SFT-PICK-F/S	1	1/P									
27	4402 231810	LVR-ARM-PICK-UP	1	1/P									
28	4402 231990	SPR-PICK-UP	1	1/P									
29	4407 734240	BUSH-6	1	5/P									
30	4402 231750	ARM-PICK-550	1	1/P									
31	4402 231780	PLY-20-2M	1	1/P									
32	4407 908720	BLT/T-Z71	1	1/P									
33	4401 782680	ACTR-PICK-150	1	1/P									
34	4842 904052	SNAP-PIN	3	10/P									
35	4401 782720	JOINT-PULLY-F/S	2	1/P									
36	4401 782560	K-GEAR-22-08-OW	1	1/P									
37	4401 782700	HLDR-F/S-UNT-F	1	1/P									
38	4401 782710	HLDR-F/S-UNT-R	1	1/P									
39	4401 782780	BKT-FRM-F/S	1	1/P									
40	4401 909430	GUIDE-PA-3-F/S	1	1/PP									
41	4401 909410	GUIDE-PA-1-F/S	1	1/PP									
42	4401 782630	CUSH-GUIDE-PA-1	2	5/P									
43	4401 773080	K-ROL-P/U-CCW-H	1	1/KP									
44	4401 782970	SPL-PUSH-GUIDE	1	5/P									
45	4400 909480	PWA-F-PEM-700	1	1/C									
46	4407 744370	Z-MA-LS-10	1	5/P									
47A	4401 795990	WH-FS-UNIT-150	1	1/P									UPPER
47B	4401 795980	WH-FS-UNITL-150	1	1/P									LOWER
48	4401 782540	ARM-PICK-150	1	1/P									
49	4402 038470	ROL-FEED-1	1	1/C									
50	4401 784250	GUIDE-PA-STY-FS	1	1/P									
81	4842 040665	TPAN3006MSZN3L	15	50/P									
82	4842 040692	TZPAN3008MSZN3L	5	50/P									
83	7405 005031	ERR050SKZN3A	17	50/P									
84	4842 040060	TPAN40*08MSZN3L	2	50/P									

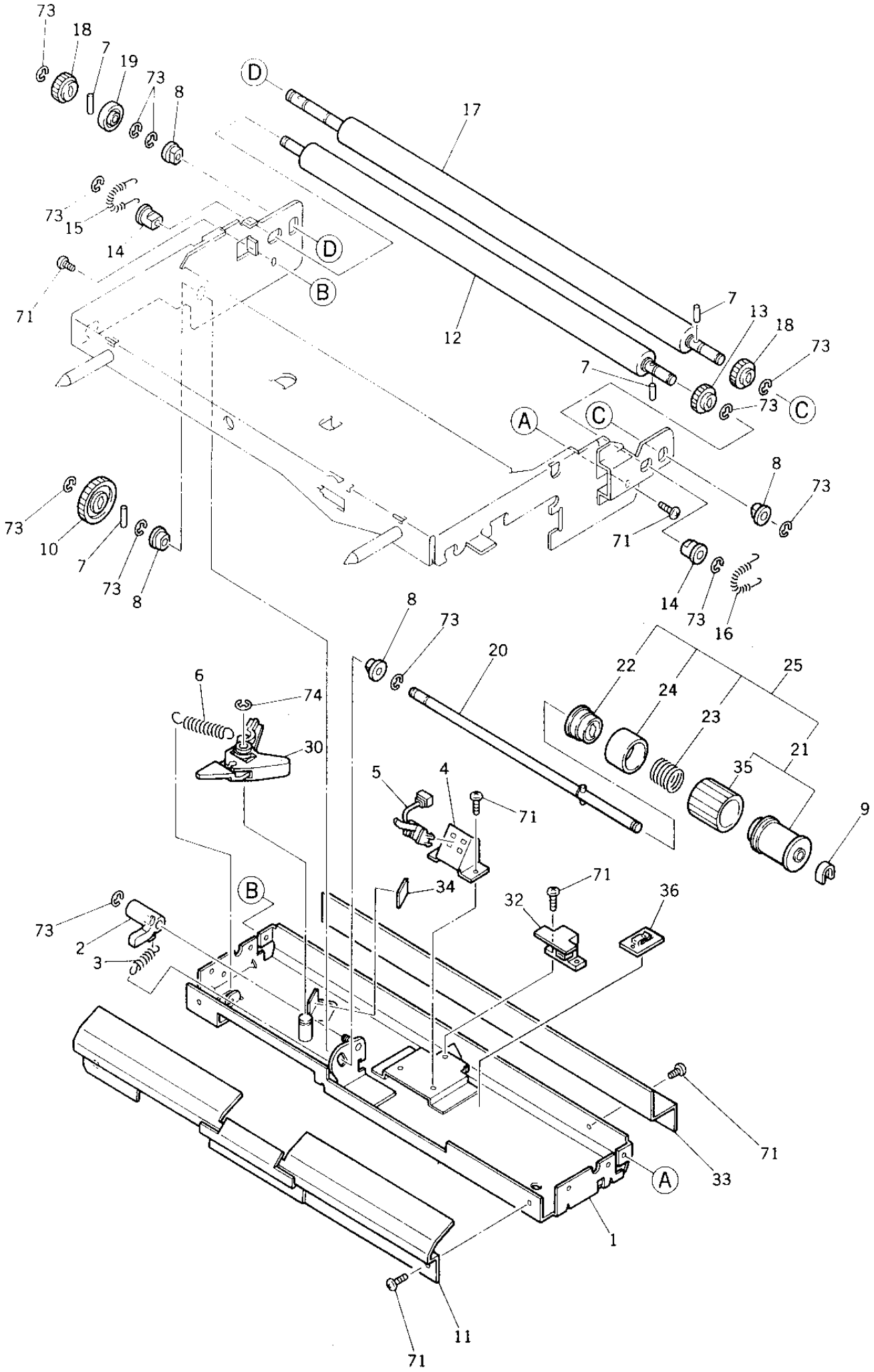
73
18
7
19
73
8
D
17
73
15
14
D
B
71
12
7
13
18
73
7
73
C
A
C
8
73
73
10
7
73
8
71
14
73
16
8
73
20
22
24
25
23
21
35
9
6
74
30
5
4
71
B
34
71
32
36
73
2
3
71
33
A
1
11
71

ITEM NO.	PARTS NO.	PARTS NAME	Q'TY / PAGE	Q'TY / PACK	SPE PRICE IN NONE	P	I	R	BSI NO.	TO	FROM	SERIAL NO.	REMARKS
1	4401 782830	K-STAY-SEP-F/S	1	1/P									
2	4401 784150	LEV-ROL-SEP-U/D	1	1/P									
3	4401 784200	SPE-SEP-1142	1	5/P									
4	4401 782760	BKT-FEED-SW-F/S	1	1/P									
5	4402 221190	SZ-P-FEED-545	1	1/C									
6	4363 271350	SPE063-080-0427	1	5/P									
7	4407 403790	NPIN2-8	4	10/P									
8	4407 734980	BUSH-6-GCB	4	5/P									
9	4407 972860	STOP-RING-6-5	1	5/P									
10	4407 906230	GEAR-08-30	1	1/P									
11	4401 909440	K-GUIDE-PA-ENT	1	1/PP									
12	4401 782890	ROLLER-ALIN-F/S	1	1/KP									UPPER
13	4407 640340	GEAR-20-0.8-D6	1	1/P									UPPER
14	4407 976990	BUSH-D6-GCB	2	1/P									UPPER
15	4402 232180	SPRING-550	1	5/P									UPPER
16	4402 232170	SPRING-815	1	5/P									UPPER
17	4401 784260	ROLLER-RGT-F/S	1	1/KP									UPPER
18	4400 823760	GEAR-08-20-LA5	2	1/P									UPPER
19	4402 233530	COLLER-GAP-GEAR	1	5/P									UPPER
20	4401 782590	K-SFT-SPT-F/S	1	1/P									
21	4401 773030	K-ROL-SPT-CCW-H	1	1/P									
22	4408 307270	ARBOR-16-POM-S	1	1/P									
23	4401 784210	SPR-1.0-15.60RF	1	5/P									
24	4408 535810	COVER-SP-CL-BL	1	1/P									
25	4401 773020	ASM-ROL-SPT-CCW	1	1/C									
30	4401 784040	ASM-ARM-SET-ROL	1	1/P									
32	4402 222280	PWA-F-PEM-366-0	1	1/C									UPPER
33	4401 782670	BKT-BLIND-F/S-L	1	1/P									LOWER
34	4401 784180	RUBBER-ARM-SET2	1	1/P									
35	4401 773040	ROL-SPT-RUB-H	1	1/C									
36	4400 827900	CLIP-WH-STACK	1	5/P									
71	4842 040665	TPAN3006MSZN3L	13	50/P									
73	7405 005031	ERR050SKZN3A	12	50/P									
74	7405 007031	ERR070SKZN3A	1	50/P									

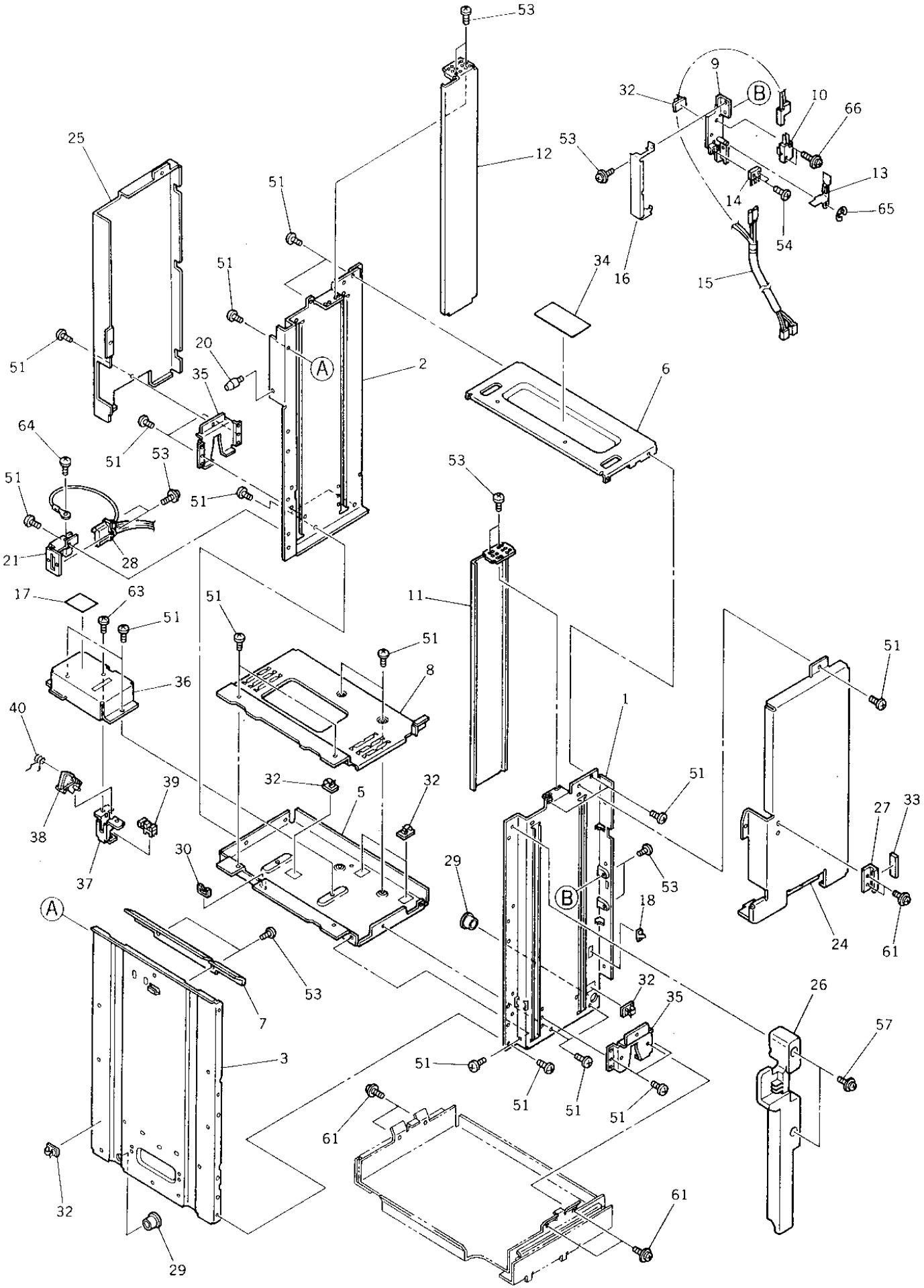
53
9
32
B
10
66
25
12
53
13
51
14
65
54
51
34
16
15
20
A
2
51
35
6
64
51
53
53
51
51
21
28
17
63
51
11
51
51
8
36
40
1
51
32
32
5
39
27
33
38
30
29
53
37
B
18
A
24
61
53
32
26
7
35
57
3
51
51
51
51
61
61
32
29

TOSHIBA

ITEM NO.	PARTS NO.	PARTS NAME	Q'TY / PAGE	Q'TY / PACK	SPE PRICE IN NONE	P	I	R	BSI NO.	TO	FROM	SERIAL NO.	REMARKS
1	4401 907420	FRAME-F-LCF	1	N/A***									
2	4401 907430	FRAME-R-LCF	1	N/A***									
3	4401 907440	FRAME-M-LCF	1	N/A***									
5	4401 907460	STAY-LOW-LCF	1	1/P									
6	4401 907450	STAY-TOP-LCF	1	1/P									
7	4401 907600	GUIDE-PAPER-LCF	1	1/P									
8	4401 908380	COVER-BASE-LCF	1	1/P									
9	4401 908520	K-BRKT-SW-LCF	1	1/P									
10	4843 231858	SM-VX-01-1C23	1	1/D									
11	4401 907470	GUIDE-SIDE-F	1	1/P									
12	4401 907480	GUIDE-SIDE-R	1	1/P									
13	4401 908570	SPL-SW-LCF	1	1/P									
14	4843 232065	SM-DE2L-BAAA	1	1/P									
15	4401 915870	WH-LCF-DOOR-152	1	N/A***									
16	4401 908560	COV-SW-DOOR	1	1/P									
17	4401 779870	LBL-LCF-CAUTION	1	5/P									
18	4407 685930	HOLDER-WH	1	5/P									
20	4402 830920	SCREW-FRAME	1	1/P									
21	4401 907150	BRKT-CONECT-LCF	1	1/P									
24	4401 908350	COVER-IN-F	1	1/P									
25	4401 908360	COVER-IN-R	1	1/P									
26	4401 908370	KNOB-LCF	1	1/P									
27	4401 779680	BKT-STOP-LCF	1	1/P									
28	4401 915360	WH-LCF-152	1	1/P									
29	4842 414631	GMT-OCB-625	2	10/P									
30	4843 390942	BD/W-EDS-2	1	10/P									
32	4400 827900	CLIP-WH-STACK	6	5/P									
33	4401 779370	CUSHION-STOP	1	5/P									
34	4401 768390	LBL-PSH-CAUTION	1	5/P									
35	4401 907580	BRKT-POSITION	2	1/P									
36	4401 908190	BRKT-SW-BTM	1	1/P									
37	4401 908180	BRKT-HOLD-BTM	1	1/P									
38	4401 908200	ACT-BTM-SW	1	1/P									
39	4400 678850	SZ-HOME-140	1	1/C									
40	4401 908290	SPRING-040-40	1	1/P									
51	4842 040650	TPAN40*06MSZN3L	40	50/P									
53	4842 040690	TZPAN3006MSZN3L	16	50/P									
54	7040 201011	PAN20*10MSZN3AI	2	50/P									
57	4842 040700	TZPAN4008MSZN3L	2	50/P									
61	4842 040060	TPAN40*08MSZN3L	6	50/P									
63	7040 300611	PAN30*06MSZN3A	1	50/P									
64	4842 040117	THPAN4006MSZN3L	1	50/P									
65	7405 003031	ERR030SKZN3A	1	50/P									
66	4842 040062	TPAN3014MSZN3L	2	50/P									

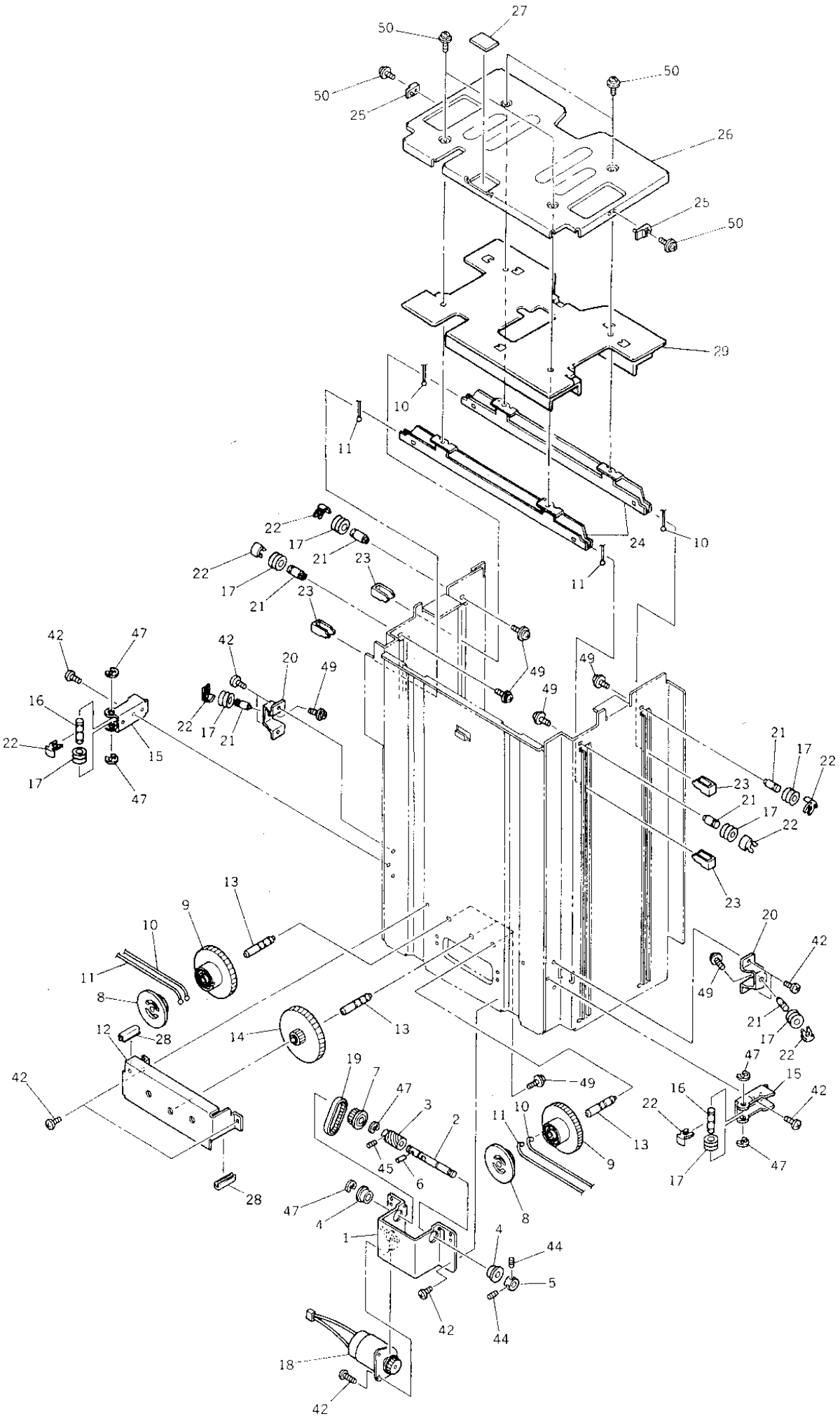
27
50
50
50
25
26
25
50
29
10
11
22
17
21
23
24
10
11
22
17
21
23
42
47
42
20
49
49
49
16
22
17
21
15
47
21
17
22
23
21
17
22
23
13
9
10
11
8
12
28
14
13
20
42
49
21
17
22
42
19
7
47
3
2
45
6
28
47
4
1
4
44
5
42
44
18
42
49
11
10
9
13
8
47
15
16
22
42
17
47

TOSHIBA

ITEM NO.	PARTS NO.	PARTS NAME	Q'TY / PAGE	Q'TY / PACK	SPE PRICE IN NONE	P	I	R	BSI NO.	TO	FROM	SERIAL NO.	REMARKS
1	4401 908110	BRKT-DRIVE-1	1	1/P									
2	4401 908220	SHAFT-WORM	1	1/P									
3	4401 908270	WORM-1.0-16	1	1/P									
4	4408 510800	BRG-688ZZNR	2	1/P									
5	4408 530130	STOPPER-WORM	1	1/P									
6	4346 312020	PIN	1	10/P									
7	4401 908170	PLY/T-3GT-22	1	1/P									
8	4401 908080	FLANGE-ROL-GEAR	2	1/P									
9	4401 908070	GEAR-1.0-70-ROL	2	1/P									
10	4401 908310	WIRE-ROPE-LCF-L	2	1/P									
11	4401 908320	WIRE-ROPE-LCF-S	2	1/P									
12	4401 908240	BRKT-DRIVE-2	1	1/P									
13	4401 908260	STUD-DRIVE-1	3	1/P									
14	4401 908250	WORM-WHEEL-74	1	1/P									
15	4401 908010	BRKT-PLY-3	2	1/P									
16	4401 908030	STUD-PLY-2	2	1/P									
17	4401 907960	PULLEY-LCF	8	1/P									
18	4401 908060	K-MOTOR-LCF	1	1/C									
19	4401 908140	BLT/T-3GT123-60	1	1/P									
20	4401 908000	BRKT-PULLEY-2	2	1/P									
21	4401 907970	STUD-PLY-1	6	1/P									
22	4401 908040	GUIDE-ROPE-ELV	8	1/P									
23	4401 907940	GUIDE-TARY-LCF	4	1/P									
24	4401 907540	STAY-TRAY-LCF	2	1/P									
25	4401 907530	GUIDE-TRAY	2	1/P									
26	4401 907510	TRAY-LCF	1	1/PP									
27	4407 907140	BRAKE-PAD	1	5/P						027 1			
27 1	4402 881120	BRAKE-PAD	1	5/P		C	E	H	F98B203		027		
28	4401 908390	EDGING-EO12-044	2	5/P									
29	4402 867000	K-BASE-TRAY-LCF	1	1/P									
42	4842 040650	TPAN40*06MSZN3L	14	50/P									
44	4842 011062	9HSS30/04MSFB	2	50/P									
45	4842 011081	9HSS40/04MSFB	1	50/P									
47	7405 007031	ERR070SKZN3A	8	50/P									
49	4842 040723	TPPAN4006MSZN3A	9	50/P									
50	4842 040690	TZPAN3006MSZN3L	6	50/P									

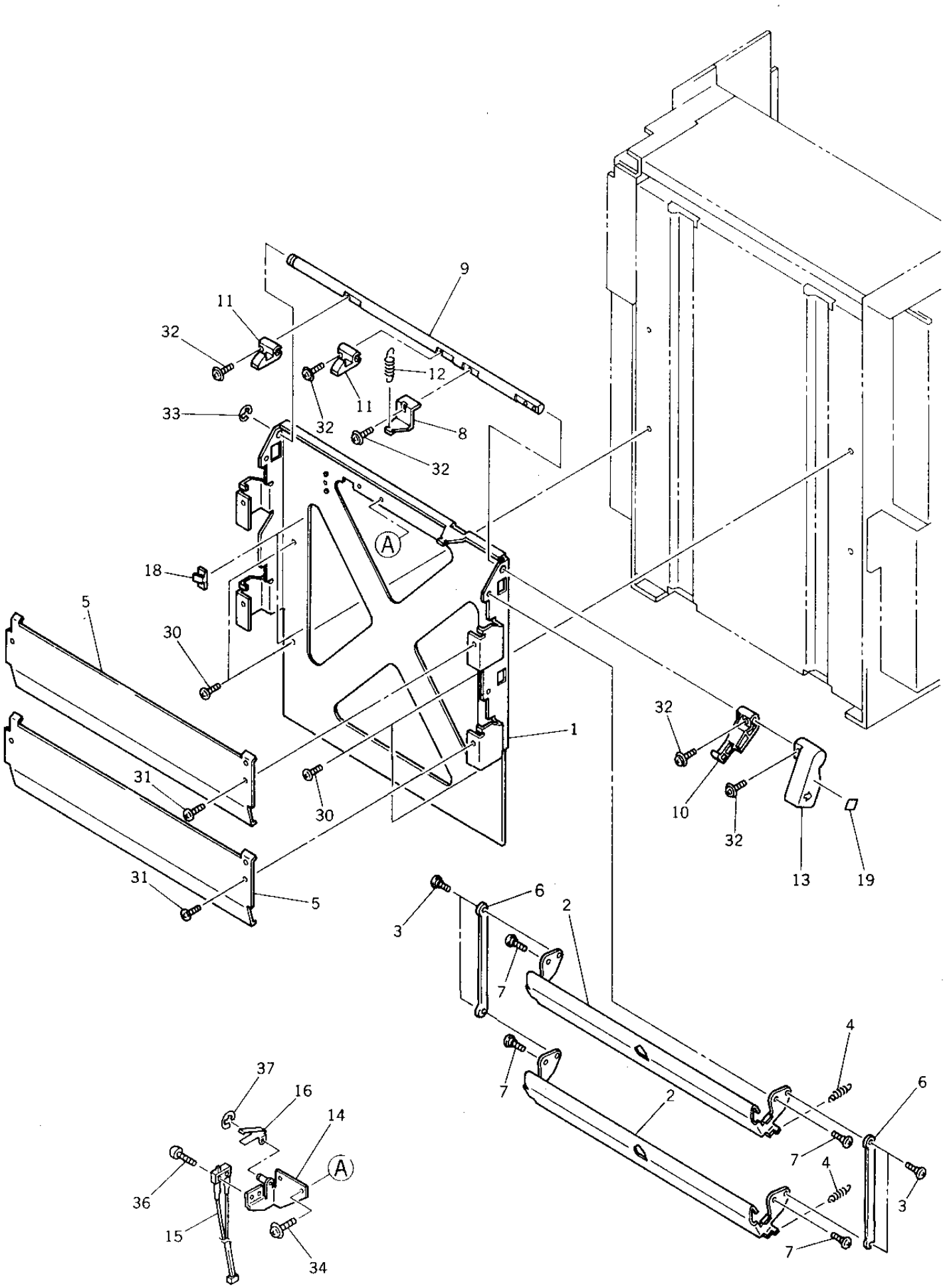
9
11
32
12
11
32
8
33
32
A
18
5
30
1
32
31
30
10
32
13
19
31
5
6
3
2
7
4
7
2
6
7
4
3
7
37
16
14
A
36
15
34

TOSHIBA

ITEM NO.	PARTS NO.	PARTS NAME	Q'TY / PAGE	Q'TY / PACK	SPE PRICE IN NONE	P	I	R	BSI NO.	TO	FROM	SERIAL NO.	REMARKS
1	4400 746580	BASE-GUIDE-OP-2	1	1/P									
2	4401 907610	GUIDE-PA-OPEN-1	2	1/P									
3	4401 783960	SCREW-LINK-M3	4	10/P									
4	4401 783840	SPE-GUIDE-OPEN	2	5/P									
5	4401 907620	GUIDE-PA-OPEN-2	2	1/P									
6	4400 746560	LINK-GUIDE-OP-2	2	1/P									
7	4400 325930	PIN-BKT-CON-H	4	10/P									
8	4401 783870	BKT-SPE-LOCK	1	1/P									
9	4401 783860	SHAFT-LOCK-LCF	1	1/P									
10	4401 783880	LEV-GUIDE-OP-F	1	1/P									
11	4401 783900	HOOK-LOCK-LCF	2	1/P									
12	4401 783910	SPE-LOCK-LCF	1	5/P									
13	4401 783930	LEVER-LOCK-LCF	1	1/P									
14	4401 784310	K-BRKT-SW-LCF	1	1/P									
15	4401 797750	ASM-LCFLOCK-150	1	1/D									
16	4401 784340	SPL-SW-LCF	1	1/P									
18	4407 685930	HOLDER-WH	2	5/P									
19	4401 768350	LABEL-H	1	10/P									
30	4842 040650	TPAN40*06MSZN3L	4	50/P									
31	4842 040665	TPAN3006MSZN3L	4	50/P									
32	7640 401011	ZPAN40*10MSZN3A	5	50/P									
33	7405 007031	ERR070SKZN3A	1	50/P									
34	4842 040689	TZPAN3006MSZN3A	2	50/P									
36	7040 201011	PAN20*10MSZN3AI	2	50/P									
37	7405 003031	ERR030SKZN3A	1	50/P									

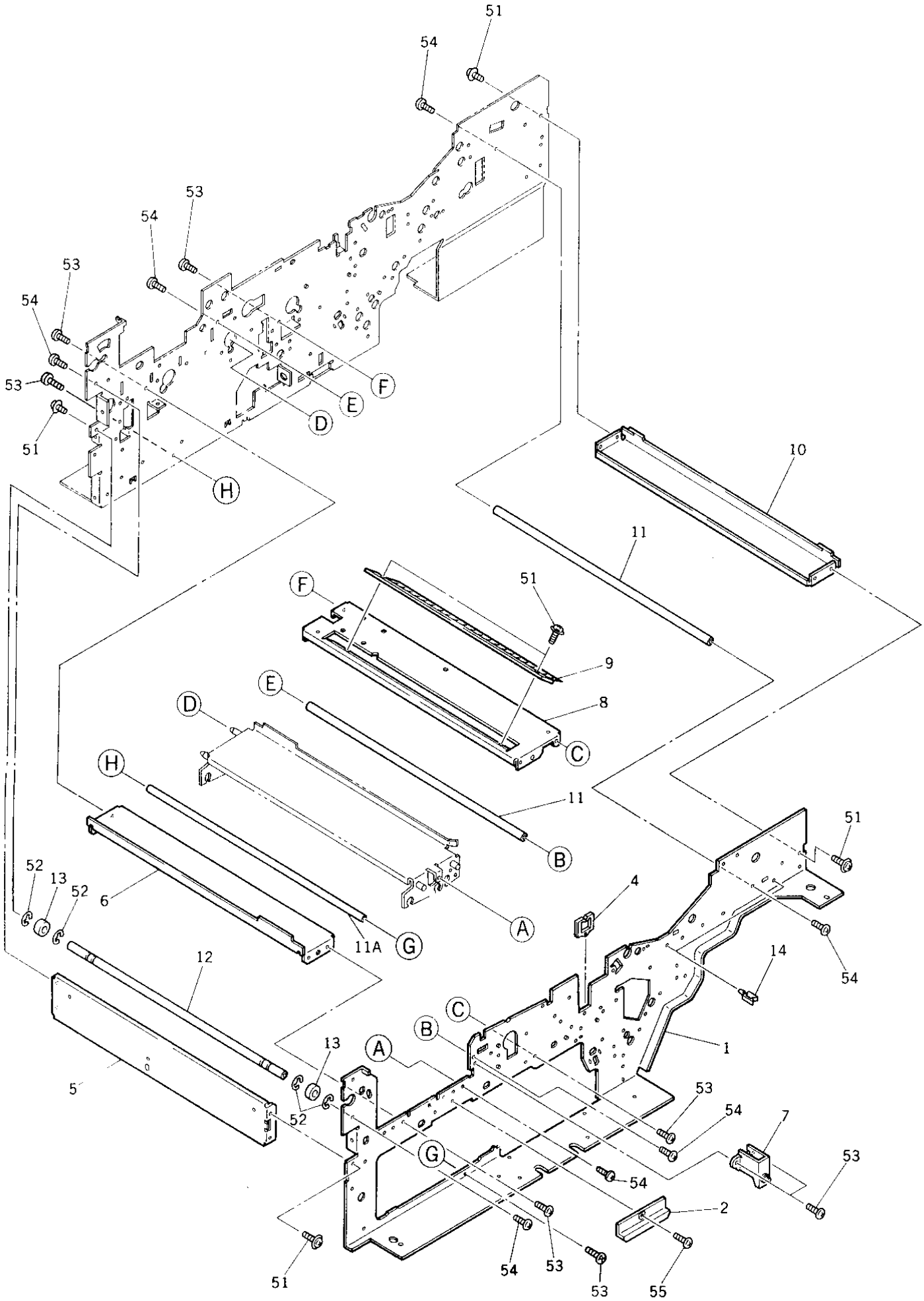
51
54
53
54
53
54
53
51
F
E
D
H
10
11
F
51
9
E
8
D
C
H
11
B
52
13
52
6
A
11A
G
4
51
12
14
54
C
B
1
13
A
5
52
53
54
7
G
53
54
2
51
54
53
53
55

TOSHIBA

ITEM NO.	PARTS NO.	PARTS NAME	Q'TY / PAGE	Q'TY / PACK	SPE PRICE IN NONE	P	I	R	BSI NO.	TO	FROM	SERIAL NO.	REMARKS
1	4401 900810	FRAME-MD-F	1	N/A***									
2	4401 776290	LOCK-GUIDE-OP	1	1/P									
4	4843 391164	BD/W-EDS-1717U	1	10/P									
5	4401 776530	STAY-L-EXIT	1	1/P									
6	4401 759500	STAY-FUSER	1	1/P									
7	4401 754050	K-BKT-BLC-L	1	1/P									
8	4402 310950	STAY-TR-BOX	1	1/P									
9	4401 776580	BRUSH-SUS-E	1	1/KP									
10	4401 775510	STAY-SFB	1	1/P									
11	4401 772960	SHAFT-STAY	2	1/P									EXCEPT TAD
11A	4401 772960	SHAFT-STAY	3	1/P									TAD
12	4401 777710	SHAFT-TRAY-A	1	1/P									
13	4401 777720	COLLER-SFT-TRAY	2	5/P									
14	4843 390888	CLP/W-WS-2U	2	5/P									
51	4842 040690	TZPAN3006MSZN3L	10	50/P									
52	7405 006031	ERR060SKZN3A	4	50/P									
53	4842 040060	TPAN40*08MSZN3L	12	50/P									
54	7040 400811	PAN40*08MSZN3AI	7	50/P									
55	4842 040665	TPAN3006MSZN3L	1	50/P									

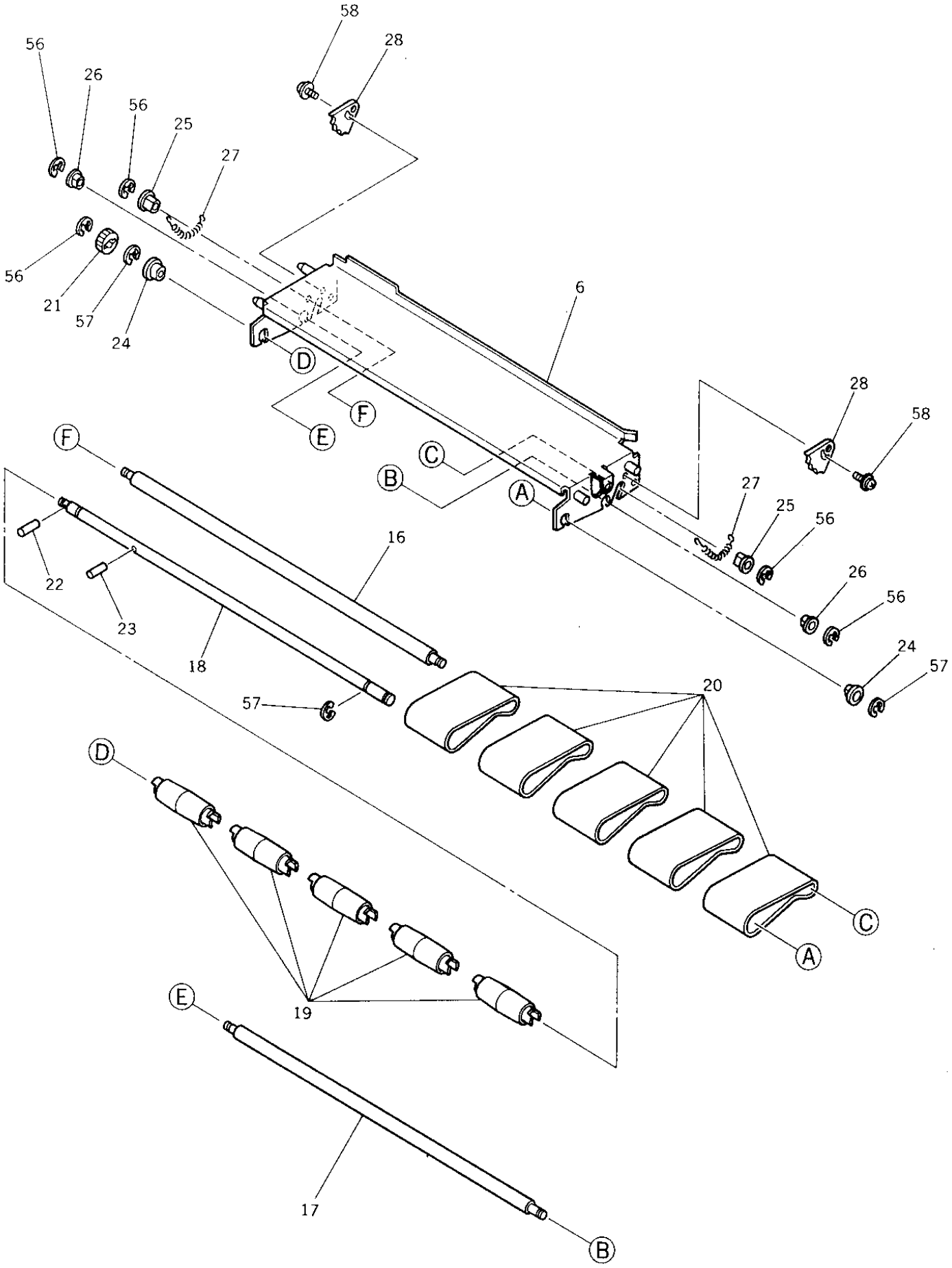
58
28
56
26
56
25
27
56
21
57
24
6
D
F
E
F
C
B
A
28
58
27
25
56
26
56
24
57
16
22
23
18
57
20
D
C
A
19
E
17
B

ITEM NO.	PARTS NO.	PARTS NAME	Q'TY / PAGE	Q'TY / PACK	SPE PRICE IN NONE	P	I	R	BSI NO.	TO	FROM	SERIAL NO.	REMARKS
6	4401 910220	K-STAY-DEC	1	1/P									
16	4401 910270	SFT-DEC-ADJ	1	1/P									
17	4401 910280	SFT-DEC-1	1	1/P									
18	4401 910290	SFT-DEC-2	1	1/P									
19	4401 910310	ROLLER-DEC	5	1/P									
20	4401 910370	BELT-DEC	5	1/P									
21	4400 825510	GEAR-08-20-4.5	1	1/P									
22	4407 403790	NPIN2-8	1	10/P									
23	4346 312020	PIN	1	10/P									
24	4346 312030	BUSHING	2	5/P									
25	4407 976990	BUSH-D6-GCB	2	1/P									
26	4407 734980	BUSH-6-GCB	2	5/P									
27	4401 909970	SPRING-900	2	5/P									
28	4401 910320	ADJUSTER-DEC	2	1/P									
56	7405 005031	ERR050SKZN3A	5	50/P									
57	7405 007031	ERR070SKZN3A	3	50/P									
58	4842 040700	TZPAN4008MSZN3L	2	50/P									

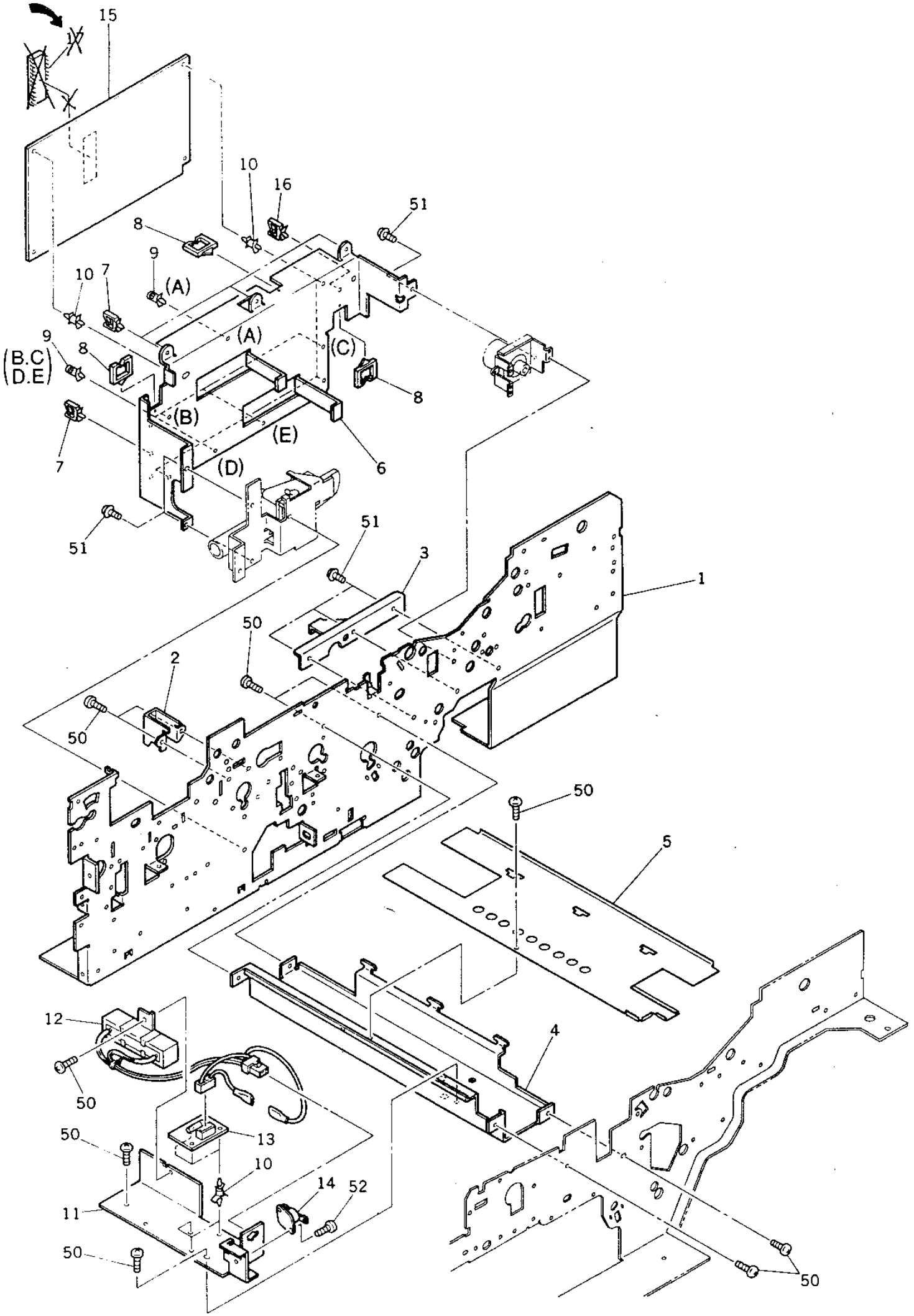
15
10
16
51
8
9
(A)
10
7
(A)
(C)
9
8
(B.C
D.E)
8
(B)
(E)
7
6
(D)
51
51
3
1
50
2
50
50
5
12
50
4
50
13
10
14
52
11
50
50

ITEM NO.	PARTS NO.	PARTS NAME	Q'TY / PAGE	Q'TY / PACK	SPE PRICE IN NONE	P	I	R	BSI NO.	TO	FROM	SERIAL NO.	REMARKS
1	4401 900910	FRAME-MD-R	1	N/A***									
2	4401 754050	K-BKT-BLC-L	1	1/P									
3	4401 787380	BKT-FRM-MD-R	1	1/P									
4	4401 764680	STAY-D-HEATER	1	1/P									
5	4401 764690	COV-STAY-D-HEAT	1	1/P									
6	4401 772940	BKT-PFC-150	1	1/P									
7	4843 390857	CLP/W-LWS-4U	4	5/P									
8	4843 391164	BD/W-EDS-1717U	3	10/P									
9	4843 390860	PWZ-SPS-6U	6	5/P									
10	4843 390870	PWZ-SPLS-6U	7	5/P									
11A	4401 764840	BRKT-D-HEATER	1	1/P									MF-6550U,E,A
11H	4401 764840	BRKT-D-HEATER	1	1/P									AUD
12A	4401 797600	ASM-DHT-115-150	1	1/D									MF-6550U
12B	4401 797610	ASM-DHT-220-150	1	1/D									MF-6550E
12C	4401 797620	ASM-DHT-240-150	1	1/D									MF-6550A
12H	4401 797620	ASM-DHT-240-150	1	1/D									AUD
13A	4407 965320	PWA-F-FUS-351UC	1	1/C									MF-6550U
13B	4407 965330	PWA-F-FUS-351EU	1	1/C									MF-6550E,A
13H	4407 965330	PWA-F-FUS-351EU	1	1/C									AUD
14A	4407 551150	THERMOSTAT-30	1	1/D									MF-6550U,E,A
14H	4407 551150	THERMOSTAT-30	1	1/D									AUD
15	4402 321310	PWA-F-PFC-154	1	1/SB									
16	4843 390856	CLP/W-LWS-3U	1	5/P									
17	4402 325520	IC-154PFC-01	1	1/S						017 1			IC2
17 1	4402 325520	IC-154PFC-01	0	1/S		B	-	E	F97H992		017	DG7	IC2
50	4842 040060	TPAN40*08MSZN3L	10	50/P									
51	4842 040690	TZPAN3006MSZN3L	6	50/P									
52	4842 040665	TPAN3006MSZN3L	1	50/P									

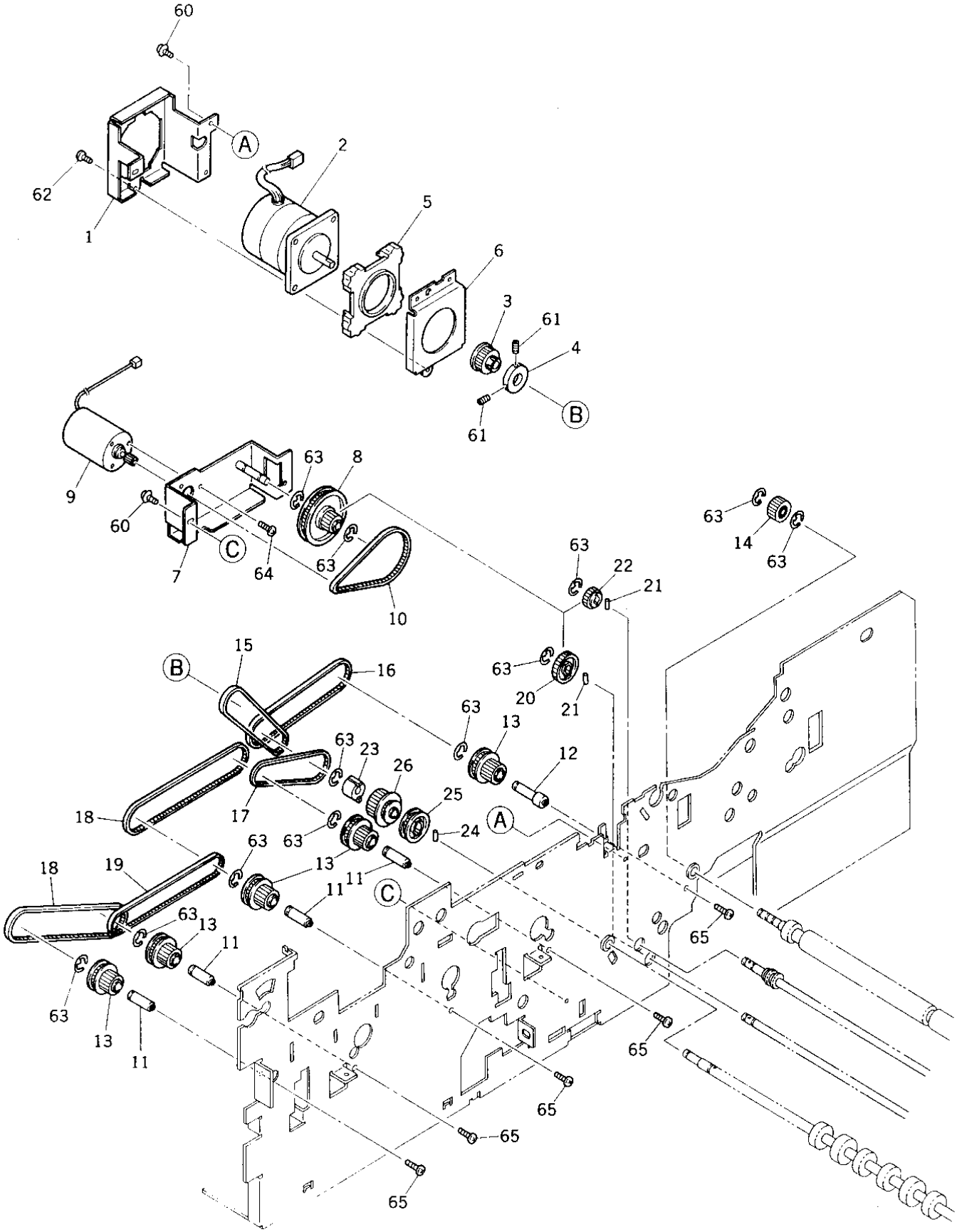
60
A
2
62
1
5
6
3
61
4
B
61
63
8
9
60
C
64
7
63
10
63
22
21
63
14
63
63
20
21
15
B
16
63
13
63
23
26
12
18
17
25
A
24
63
63
13
11
18
19
11
C
63
13
11
63
13
11
65
65
65
65

ITEM NO.	PARTS NO.	PARTS NAME	Q'TY / PAGE	Q'TY / PACK	SPE PRICE IN NONE	P	I	R	BSI NO.	TO	FROM	SERIAL NO.	REMARKS
1	4401 777330	BKT-MOT-RGT-ADD	1	1/P									
2	4401 916060	M/P-ADD-152	1	1/C									
3	4401 772670	PULLEY22-3M	1	1/P									
4	4401 772680	FLANGE-23	1	1/P									
5	4407 902170	DUMPER-MOTOR	1	1/P									
6	4408 604650	BRKT-MOTOR-547	1	1/P									
7	4401 777300	K-BKT-MOT-FED-A	1	1/P									
8	4401 772820	K-G18-P78	1	1/P									
9	4401 772900	K-MOT-FEED	1	1/C									
10	4401 772870	BELT-106110-3	1	1/P									
11	4401 777350	STUD-PLY40-G20H	4	1/P									
12	4401 777480	STUD-RGST-PLY	1	1/P									
13	4401 777550	K-G20-08-P40-2M	5	1/P									
14	4401 777990	K-GEAR-20-08-OW	1	1/P									
15	4401 776420	BELT-73060-4	1	1/P									
16	4401 776400	BELT-106139-4SZ	1	1/P									
17	4401 776390	BELT-106115-3Z	1	1/P									
18	4402 205100	BELT-106162-3S	2	1/P									
19	4401 776380	BELT-106159-3Z	1	1/P									
20	4407 906230	GEAR-08-30	1	1/P									
21	4407 403790	NPIN2-8	2	10/P									
22	4407 640340	GEAR-20-0.8-D6	1	1/P									
23	4402 833110	CLUTCH-6-L	1	1/P									
24	4346 312020	PIN	1	10/P									
25	4402 205010	PLY-40-2M-S	1	1/P									
26	4408 603650	PLY-2MZ40-3MZ18	1	1/P									
60	4842 040690	TZPAN3006MSZN3L	5	50/P									
61	4842 011065	9HSS30/08MSFB	2	50/P									
62	4842 040060	TPAN40*08MSZN3L	3	50/P									
63	7405 005031	ERR050SKZN3A	12	50/P									
64	7040 300411	PAN30*04MSZN3A	3	50/P									
65	7640 300651	ZPAN30*06MSZN3A	5	50/P									

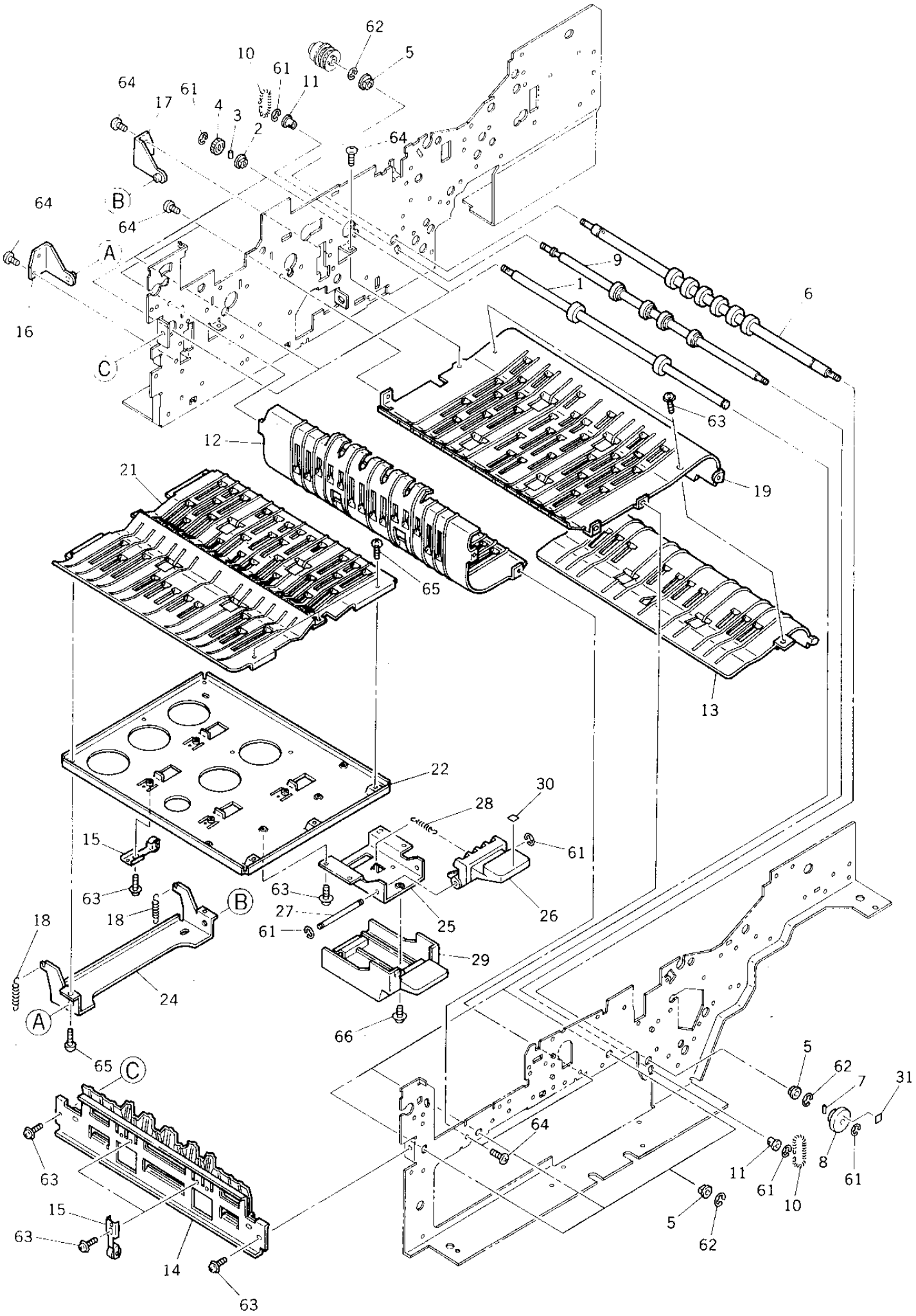
62
5
10
61
11
64
61
17
4
3
2
64
B
64
64
A
9
1
6
16
C
63
12
19
21
65
13
22
30
28
15
61
63
63
B
27
26
18
18
61
25
29
24
A
66
65
C
5
62
7
31
64
63
11
8
61
61
10
15
5
63
62
14
63

TOSHIBA

ITEM NO.	PARTS NO.	PARTS NAME	Q'TY / PAGE	Q'TY / PACK	SPE PRICE IN NONE	P	I	R	BSI NO.	TO	FROM	SERIAL NO.	REMARKS
1	4401 909690	ROLLER-PASS-TR	3	1/KP									
2	4407 734980	BUSH-6-GCB	3	5/P									
3	4407 403790	NPIN2-8	3	10/P									
4	4400 825510	GEAR-08-20-4.5	3	1/P									
5	4346 312030	BUSHING	5	5/P									
6	4401 777380	ROL-PASS-STK	1	1/KP									
7	4346 312020	PIN	1	10/P									
8	4401 777260	KNOB-ROL-AL-A	1	1/P									
9	4401 776230	ROLL-IDLE-STK-H	1	1/KP									
10	4407 957140	SPRING-850	2	5/P									
11	4407 976990	BUSH-D6-GCB	2	1/P									
12	4401 910340	GUIDE-DEC-U1	1	1/PP									
13	4401 909670	GUIDE-S-EXT-C7	1	1/P									
14	4401 909510	K-GUIDE-S-ENT	1	1/PP									
15	4401 909980	ASM-SPL-ROL-ADD	6	1/D									
16	4401 777400	K-HINGE-OPG-E	1	1/P									
17	4401 777410	K-HINGE-OPG-F	1	1/P									
18	4401 909790	SPE-GUIDE-DEC-L	2	1/P									
19	4401 910350	GUIDE-DEC-U2	1	1/PP									
21	4401 910360	GUIDE-DEC-L	1	1/PP									
22	4401 909770	PLATE-SUB-OP-C7	1	1/P									
24	4401 909780	BKT-SUB-OP-C7	1	1/P									
25	4401 777450	BKT-HANDLE-OPG	1	1/P									
26	4401 776660	HOOK-GUIDE-OP	1	1/P									
27	4401 777460	SHAFT-OPG-ADD	1	1/P									
28	4402 232680	SPE-6.3-0.6	1	1/P									
29	4401 776670	HANDLE-GUIDE-OP	1	1/P									
30	4401 768370	LABEL-K	1	10/P									
31	4401 768380	LABEL-L	1	10/P									
61	7405 005031	ERR050SKZN3A	9	50/P									
62	7405 007031	ERR070SKZN3A	6	50/P									
63	4842 040690	TZPAN3006MSZN3L	14	50/P									
64	4842 040060	TPAN40*08MSZN3L	14	50/P									
65	4842 040665	TPAN3006MSZN3L	7	50/P									
66	4842 040692	TZPAN3008MSZN3L	1	50/P									

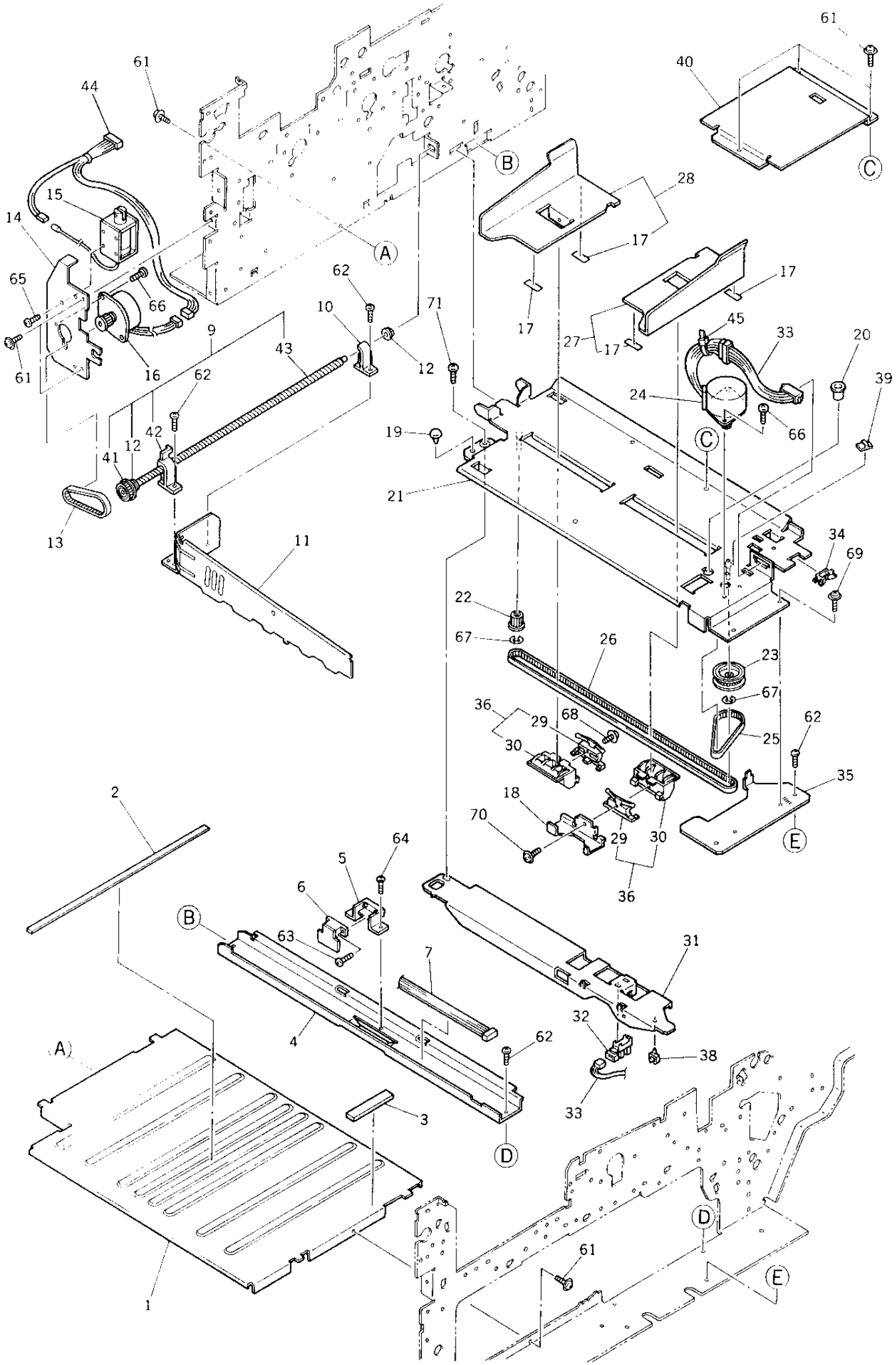
61
40
C
44
61
B
28
15
14
A
17
17
65
66
62
10
71
17
27
17
45
33
20
9
43
12
61
16
62
24
39
66
19
C
42
12
41
21
13
11
34
69
22
67
26
23
67
36
29
68
25
62
30
35
18
70
29
30
E
36
2
64
5
6
B
63
7
31
4
32
62
38
A
33
3
D
D
61
E
1

TOSHIBA

ITEM NO.	PARTS NO.	PARTS NAME	Q'TY / PAGE	Q'TY / PACK	SPE PRICE IN NONE	P	I	R	BSI NO.	TO	FROM	SERIAL NO.	REMARKS
1	4402 205370	BASE-STACK	1	N/A***									
2	4400 822980	SHEET-WALL-S	1	1/KP									
3	4401 909480	DAMPER-HAND-T8	1	1/P									
4	4401 910010	STAY-GUIDE-STK1	1	1/P									
5	4400 824210	HOLDER-SW-P-366	1	1/P									
6	4402 222370	PWA-F-PEM-MD4-0	1	1/C									
7	4401 795820	WH-PFC-ADD-150	1	1/P									
9	4401 777840	K-SHAFT-SCREW	1	1/C									
10	4400 822960	BUSH-PAPER-END	1	1/P									
11	4401 909960	STAY-P-END-152	1	1/P									
12	4407 734980	BUSH-6-GCB	2	5/P									
13	4400 826400	BELT-106071-4.0	1	1/P									
14	4401 776260	BKT-MOTOR-PE-H	1	1/P									
15	4402 222990	SND-GATE-545-C	1	1/D									
16	4402 310530	K-MOTOR-SCREW	1	1/C									
17	4401 908840	SPACER-STK-WALL	4	5/P									
18	4401 910110	PLATE-SW-STACK	1	1/P									
19	4400 327830	CAM-ADJ-LENS	1	1/P									
20	4842 414629	GMT-OCB-375	1	10/P									
21	4401 910040	K-GUIDE-STK-C7	1	1/PP									
22	4400 801130	PULLEY-Z23	1	1/P									
23	4400 822650	PLY-23-48-2M	1	1/P									
24	4402 310510	K-MOTOR-SLIDE	1	1/C									
25	4407 963860	BELT-HTD-76-2M	1	1/P									
26	4401 776810	BELT-106348-3SZ	1	1/P									
27	4401 910060	K-WALL-STACK-F	1	1/P									
28	4401 910080	K-WALL-STACK-R	1	1/P									
29	4400 824230	STOPPER-BELT	2	1/P									
30	4400 824240	SLIDER-WALL	2	1/P									
31	4401 910100	STAY-SW-STACK	1	1/P									
32	4400 678850	SZ-HOME-140	1	1/C									
33	4402 321840	WH-ADD-154	1	1/P									
34	4843 390941	BD/W-EDS-1	1	10/P									
35	4401 776740	BKT-GUIDE-STK	1	1/P									
36	4400 828050	SLIDER-SET	2	1/P(2)									
38	4843 391391	CLP/WUAMS-05-2	1	5/P									
39	4407 685930	HOLDER-WH	1	5/P									
40	4401 910020	PLATE-STACK	1	1/P									
41	4400 823400	PLY-Z30-2M	1	1/P									
42	4400 822950	BUSH-SCREW-PE	1	1/P									
43	4401 777360	SHAFT-SCREW-PE	1	1/P									
44	4402 321850	WH-PFC-GATE-154	1	1/P									
45	4843 391092	BD/W-T18S	1	10/P									
61	4842 040690	TZPAN3006MSZN3L	7	50/P									
62	4842 040060	TPAN40*08MSZN3L	5	50/P									
63	7120 300811	12PAN3008MSZN3A	1	50/P									
64	4842 040700	TZPAN4008MSZN3L	2	50/P									
65	7040 300611	PAN30*06MSZN3A	2	50/P									
66	4842 040665	TPAN3006MSZN3L	4	50/P									
67	7405 003031	ERR030SKZN3A	2	50/P									
68	4842 040124	TZPAN3014MSZN3L	1	50/P									
69	7640 400851	ZPAN40*08MSZN3A	2	50/P									
70	7640 301451	ZPAN30*14MSZN3A	1	50/P									
71	7640 300651	ZPAN30*06MSZN3A	1	50/P									

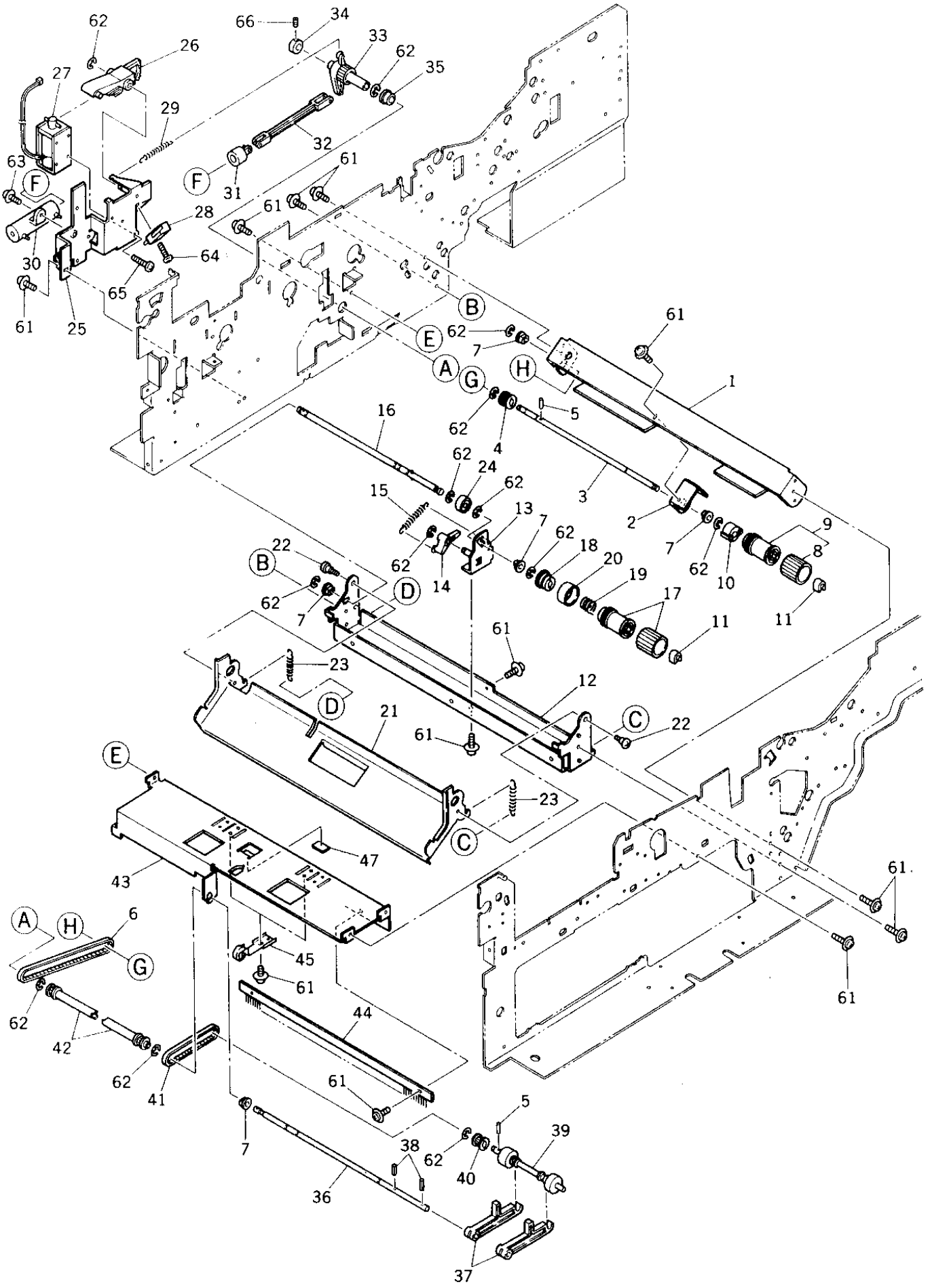
62
66
34
33
62
35
26
27
29
32
63
F
31
61
61
28
64
30
65
61
25
B
E
A
G
H
62
7
61
1
16
62
4
5
62
24
62
3
15
13
7
62
18
20
19
17
2
7
62
10
9
8
11
11
22
B
62
7
D
14
61
23
12
D
21
61
C
22
E
23
C
47
43
A
H
6
G
45
61
62
42
44
62
41
61
7
5
38
62
40
39
36
37
61
61

ITEM NO.	PARTS NO.	PARTS NAME	Q'TY / PAGE	Q'TY / PACK	SPE PRICE IN NONE	P	I	R	BSI NO.	TO	FROM	SERIAL NO.	REMARKS
1	4401 777000	STAY-FEED-ADD	1	1/P									
2	4401 777010	BKT-FED-ROL-ADD	1	1/P									
3	4401 777020	SHAFT-ROL-FED-A	1	1/P									
4	4400 884670	PLY-20-ROL	1	1/P									
5	4407 403790	NPIN2-8	2	10/P									
6	4401 776410	BELT-106162-2SZ	1	1/P									
7	4407 734980	BUSH-6-GCB	5	5/P									
8	4402 038470	ROL-FEED-1	1	1/C									
9	4402 038460	K-ROL-FEED-1	1	1/P									
10	4402 833110	CLUTCH-6-L	1	1/P									
11	4407 907410	STOP-RING-6	2	5/P									
12	4401 776900	STAY-SEP-ADD	1	1/P									
13	4401 776910	K-BKT-SEP-ROL-A	1	1/P									
14	4401 776930	LEV-ROL-SEP-ADD	1	1/P									
15	4401 771690	SPE-SEP-907	1	5/P									
16	4401 776970	K-SFT-ROL-SEP-A	1	1/P									
17	4401 773030	K-ROL-SPT-CCW-H	1	1/P									
18	4408 307270	ARBOR-16-POM-S	1	1/P									
19	4401 784210	SPR-1.0-15.60RF	1	5/P									
20	4408 535810	COVER-SP-CL-BL	1	1/P									
21	4401 909600	GUIDE-SEP-ADD	1	1/PP									
22	4401 776960	SCREW-SEP-ADD	2	10/P									
23	4401 776950	SPE063-060-0253	2	5/P									
24	4408 502410	COLLAR-6-15	1	1/P									
25	4401 777520	K-BRKT-SOL-PICK	1	1/P									
26	4402 206010	ARM-SEND-PICK	1	1/P									
27	4400 825810	SND-FEED-MD3	1	1/D									
28	4400 816400	SM-E21-51HX-001	1	1/C									
29	4401 777540	SPE-PICK-ADD	1	5/P									
30	4400 826150	CYLINDER-PICK	1	1/P									
31	4400 826140	PISTON-PICK-UP	1	1/P									
32	4402 205430	ARM-PISTON	1	1/P									
33	4401 777510	GEAR-18-1-SPE	1	1/P									
34	4400 801510	COLLER-MOT-P	1	5/P									
35	4400 538970	BRG-W686ZZNR	1	1/P									
36	4401 776470	SHAFT-PICK-ADD	1	1/P									
37	4401 909940	ARM-PICK-UP	2	1/P									
38	7434 201239	WPIN20/12SKFB	2	50/P									
39	4400 825750	ROL-PICK-ADD	1	1/KP									
40	4408 338630	K-PLY/T-2M-Z20	1	1/P									
41	4407 973140	BELT-HTD-93-2M	1	1/P									
42	4400 825960	K-PLY/2M-Z20	2	1/P									
43	4401 909580	STAY-PICK-ADD	1	1/P									
44	4401 776580	BRUSH-SUS-E	1	1/KP									
45	4401 909980	ASM-SPL-ROL-ADD	2	1/D									
47	4401 777580	CUSH-PICK-ADD	1	5/P									
61	4842 040690	TZPAN3006MSZN3L	18	50/P									
62	7405 005031	ERR050SKZN3A	13	50/P									
63	4842 040700	TZPAN4008MSZN3L	1	50/P									
64	4842 040124	TZPAN3014MSZN3L	1	50/P									
65	7040 300611	PAN30*06MSZN3A	2	50/P									
66	4842 011081	9HSS40/04MSFB	1	50/P									

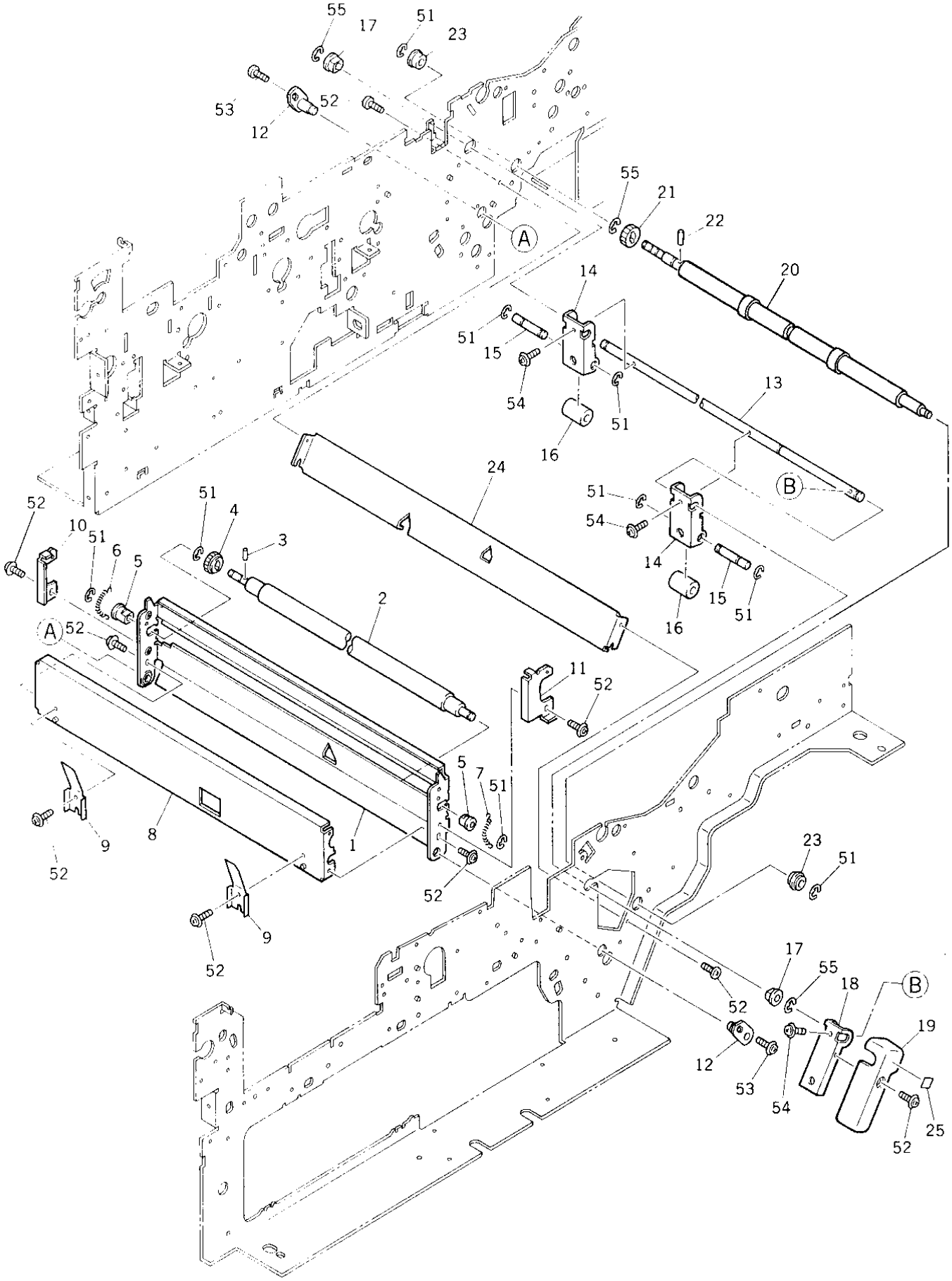
55
17
51
23
53
52
12
55
21
22
20
14
51
15
54
51
13
16
24
51
54
14
15
51
16
52
51
4
3
10
51
6
5
2
A
52
11
52
5
7
51
9
8
1
52
52
9
52
23
51
17
55
18
B
19
52
12
53
54
25
52

ITEM NO.	PARTS NO.	PARTS NAME	Q'TY / PAGE	Q'TY / PACK	SPE PRICE IN NONE	P	I	R	BSI NO.	TO	FROM	SERIAL NO.	REMARKS
1	4401 909070	GUIDE-RGST-OP	1	1/PP									
2	4401 776240	ROLLER-ALIN-ADD	1	1/KP									
3	4407 403790	NPIN2-8	1	10/P									
4	4400 823760	GEAR-08-20-LA5	1	1/P									
5	4407 976990	BUSH-D6-GCB	2	1/P									
6	4402 232170	SPRING-815	1	5/P									
7	4402 232180	SPRING-550	1	5/P									
8	4401 777110	STAY-RGST-OP	1	1/P									
9	4401 777470	SPL-RGOP-ADD	2	1/P									
10	4401 777130	RAIL-RGST-OP-R	1	1/P									
11	4401 777120	RAIL-RGST-OP-F	1	1/P									
12	4401 777140	K-BKT-JOINT-RGO	2	1/P									
13	4401 777280	SHAFT-STOP-RGOP	1	1/P									
14	4401 777210	BKT-STOP-RGST	2	1/P									
15	4401 777220	SHAFT-ROL-STOP	2	1/P									
16	4401 777230	ROLL-STOP-RGST	2	1/P									
17	4400 802080	BUSH-8	2	5/P									
18	4401 777240	BKT-HANDLE-RGOP	1	1/P									
19	4401 777250	HANDLE-RGST-OP	1	1/P									
20	4402 310920	ROLL-RGT-ADD-C6	1	1/KP									
21	4407 752280	GEAR-0.8-20	1	1/P									
22	4346 312020	PIN	1	10/P									
23	4400 538970	BRG-W686ZZNR	2	1/P									
24	4401 909620	GUIDE-RGST-OUT	1	1/PP									
25	4401 768360	LABEL-I	1	10/P									
51	7405 005031	ERR050SKZN3A	9	50/P									
52	4842 040690	TZPAN3006MSZN3L	13	50/P									
53	4842 040060	TPAN40*08MSZN3L	2	50/P									
54	4842 040727	TPPAN4010MSZN3A	3	50/P									
55	7405 007031	ERR070SKZN3A	3	50/P									
21	4407 752280	GEAR-0.8-20	1	1/P									

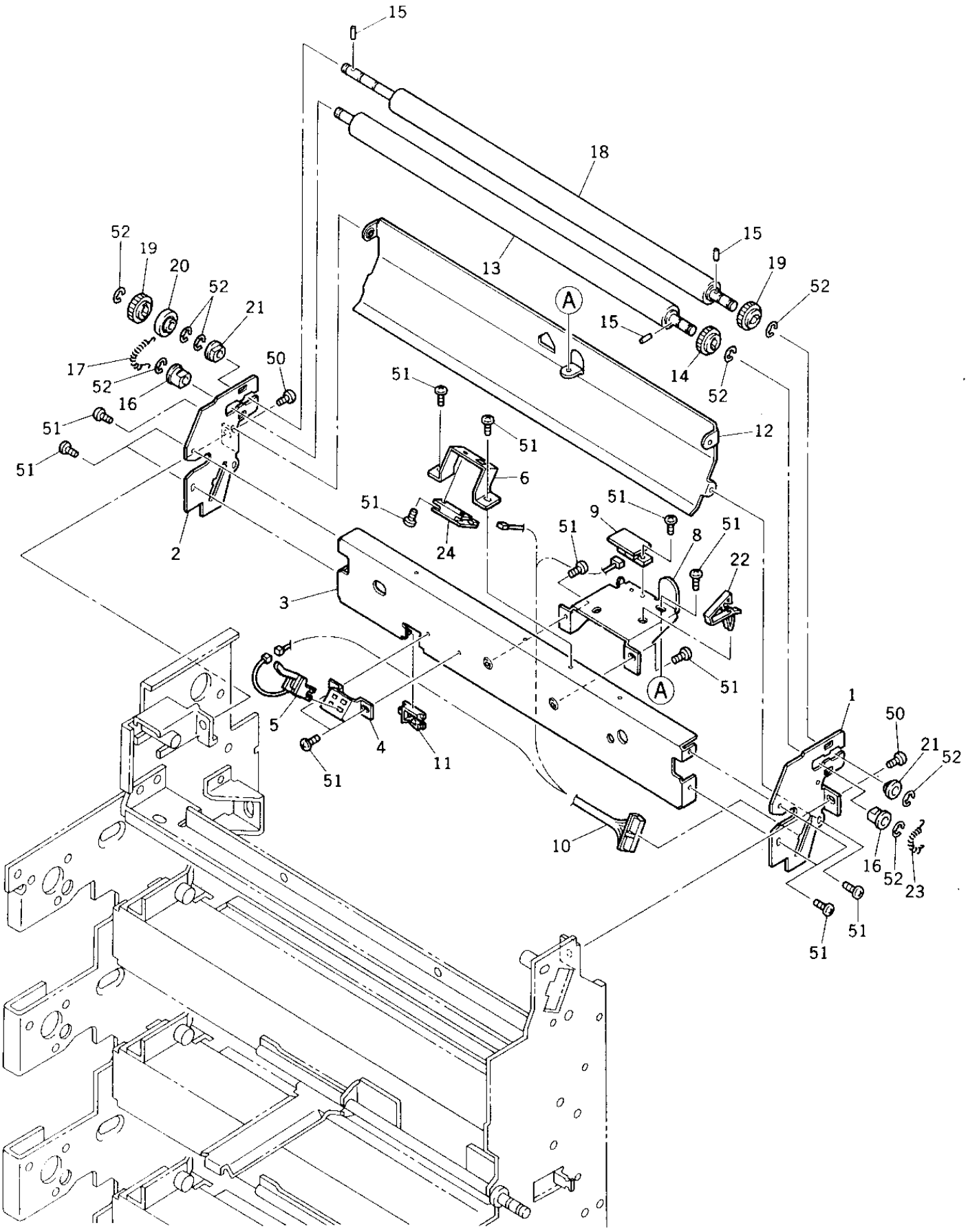
15
18
13
15
19
52
52
19
20
52
21
17
52
16
50
51
51
51

ITEM NO.	PARTS NO.	PARTS NAME	Q'TY / PAGE	Q'TY / PACK	SPE PRICE IN NONE	P	I	R	BSI NO.	TO	FROM	SERIAL NO.	REMARKS
1	4401 784660	FRAME-U-AL-F	1	1/P									
2	4401 784670	FRAME-U-AL-R	1	1/P									
3	4401 784600	STAY-U-ALIN-UNT	1	1/P									
4	4401 784630	BKT-SW-FED-U-AL	1	1/P									
5	4402 221190	SZ-P-FEED-545	1	1/C									
6	4401 784640	BKT-SW-RGT-U-AL	1	1/P									
8	4401 784650	BKT-SW-RGT-PFP	1	1/P									
9	4402 222280	PWA-F-PEM-366-0	1	1/C									
10	4401 796280	WH-ADD-SENS-150	1	1/P									
11	4843 390941	BD/W-EDS-1	1	10/P									
12	4401 909700	GUIDE-U-AL-UNIT	1	1/PP									
13	4401 782890	ROLLER-ALIN-F/S	1	1/KP									
14	4407 640340	GEAR-20-0.8-D6	1	1/P									
15	4407 403790	NPIN2-8	3	10/P									
16	4407 976990	BUSH-D6-GCB	2	1/P									
17	4402 232180	SPRING-550	1	5/P									
18	4401 784260	ROLLER-RGT-F/S	1	1/KP									
19	4400 823760	GEAR-08-20-LA5	2	1/P									
20	4402 233530	COLLER-GAP-GEAR	1	5/P									
21	4407 734980	BUSH-6-GCB	2	5/P									
22	4407 744370	Z-MA-LS-10	1	5/P									
23	4402 232170	SPRING-815	1	5/P									
24	4401 795630	PWA-F-PEM-150-O	1	1/C									
50	4842 040060	TPAN40*08MSZN3L	2	50/P									
51	4842 040665	TPAN3006MSZN3L	17	50/P									
52	7405 005031	ERR050SKZN3A	8	50/P									

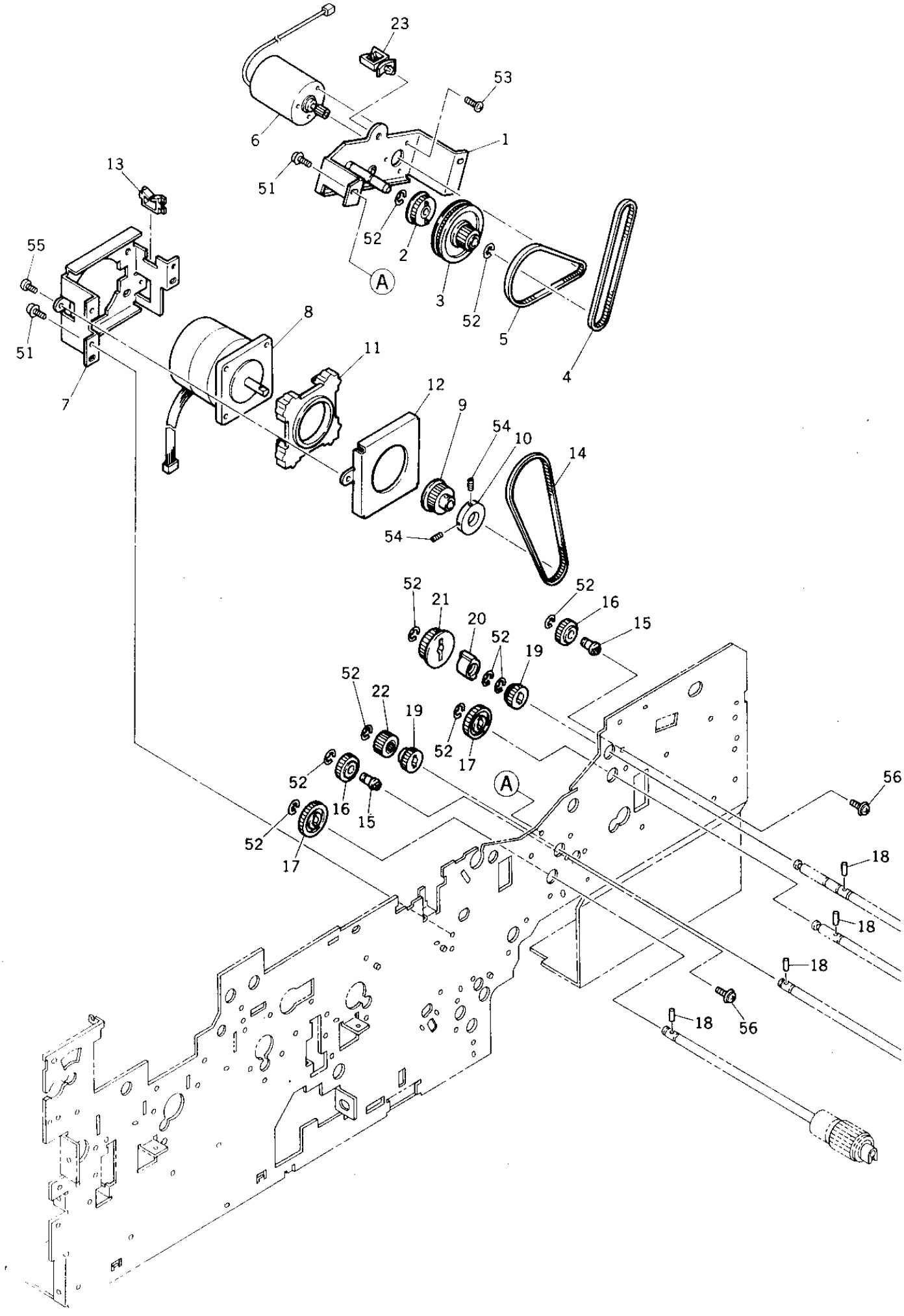
23
53
6
1
13
51
52
2
55
A
3
52
5
51
8
4
11
7
12
9
54
10
14
54
52
21
52
16
20
15
52
19
52
22
19
52
17
52
A
56
16
15
52
17
18
18
18
18
56

TOSHIBA

ITEM NO.	PARTS NO.	PARTS NAME	Q'TY / PAGE	Q'TY / PACK	SPE PRICE IN NONE	P	I	R	BSI NO.	TO	FROM	SERIAL NO.	REMARKS
1	4401 772830	K-BKT-MOT-FED	1	1/P									
2	4401 772880	PLY27-3M-D6	1	1/P									
3	4401 772820	K-G18-P78	1	1/P									
4	4401 772780	BELT-73078-3.5	1	1/P									
5	4401 772870	BELT-106110-3	1	1/P									
6	4401 772900	K-MOT-FEED	1	1/C									
7	4401 772660	BKT-MOT-RGST	1	1/P									
8	4401 916050	M/P-RGT-152	1	1/C									
9	4401 772670	PULLEY22-3M	1	1/P									
10	4401 772680	FLANGE-23	1	1/P									
11	4407 902170	DUMPER-MOTOR	1	1/P									
12	4408 604650	BRKT-MOTOR-547	1	1/P									
13	4843 390942	BD/W-EDS-2	1	10/P									
14	4401 772700	BELT-73053-4	1	1/P									
15	4401 772740	STUD-G22	2	1/P									
16	4401 772750	GEAR-22-08-D6	2	1/P									
17	4407 906230	GEAR-08-30	2	1/P									
18	4407 403790	NPIN2-8	4	10/P									
19	4407 640340	GEAR-20-0.8-D6	2	1/P									
20	4402 833100	CLUTCH-6-R	1	1/D									
21	4401 772760	PLY-Z30-3M-D6	1	1/P									
22	4401 777990	K-GEAR-20-08-OW	1	1/P									
23	4843 390857	CLP/W-LWS-4U	1	5/P									
51	4842 040690	TZPAN3006MSZN3L	5	50/P									
52	7405 005031	ERR050SKZN3A	10	50/P									
53	7040 300411	PAN30*04MSZN3A	3	50/P									
54	4842 011065	9HSS30/08MSFB	2	50/P									
55	4842 040060	TPAN40*08MSZN3L	3	50/P									
56	7640 300651	ZPAN30*06MSZN3A	2	50/P									

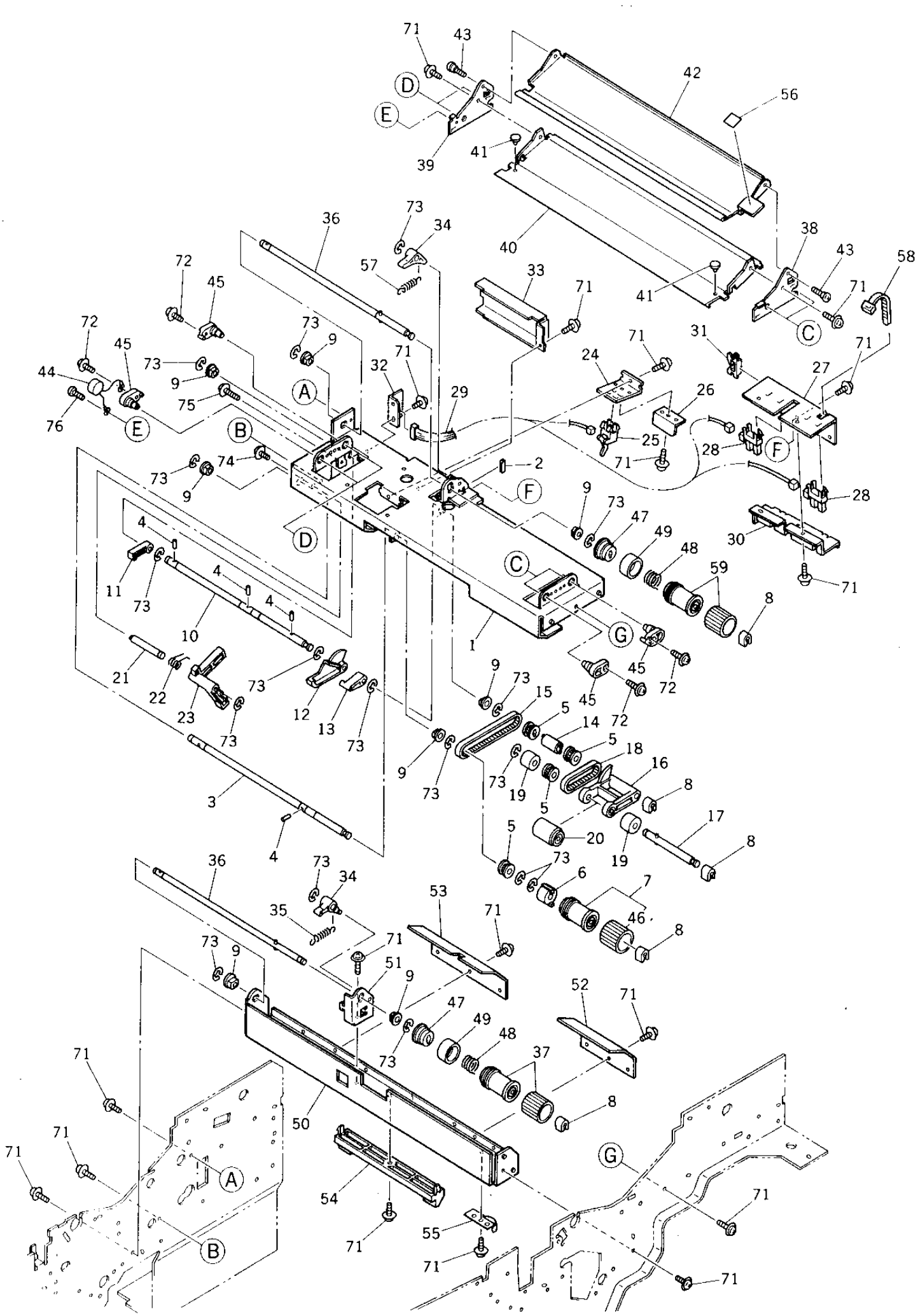
71
43
42
56
D
E
39
41
40
73
34
36
57
38
43
58
72
45
33
71
41
71
C
72
45
73
9
71
31
71
44
73
9
32
71
24
27
A
29
26
76
E
75
B
25
28
F
74
2
71
73
9
F
28
9
73
47
49
30
4
D
48
C
59
11
73
4
4
71
8
10
G
1
21
45
72
9
73
45
22
73
15
72
23
12
13
5
14
73
73
5
18
9
73
16
73
19
8
3
5
17
20
19
8
4
5
73
36
73
34
6
7
53
35
71
46
8
73
9
71
51
9
52
71
47
49
48
73
37
71
8
50
71
71
A
G
54
71
55
B
71
71
71

TOSHIBA

ITEM NO.	PARTS NO.	PARTS NAME	Q'TY / PAGE	Q'TY / PACK	SPE PRICE IN NONE	P	I	R	BSI NO.	TO	FROM	SERIAL NO.	REMARKS
1	4401 771830	K-STY-FED-U	1	1/P									
2	4401 771890	EDGING-BKT-ROL	1	1/P									
3	4401 771910	SFT-ROL-FEED	1	1/P									
4	4407 403790	NPIN2-8	4	10/P									
5	4400 884670	PLY-20-ROL	4	1/P									
6	4402 833100	CLUTCH-6-R	1	1/D									
7	4402 038540	K-ROL-FEED-2	1	1/P									
8	4407 907410	STOP-RING-6	5	5/P									
9	4407 734980	BUSH-6-GCB	8	5/P									
10	4401 772030	SFT-PICK-UP	1	1/P									
11	4401 771970	LEV-PICK-ROL	1	1/P									
12	4402 209660	ACT-EMP-L	1	1/P									
13	4402 209650	LEV-ACT-EMP-L	1	1/P									
14	4401 771990	JOINT-D6-L20	1	1/P									
15	4401 771980	BELT-106096-2.5	1	1/P									
16	4402 209640	ARM-PICK-L	1	1/P									
17	4401 772000	K-SFT-ROL-PICK	1	1/P									
18	4402 209840	BELT-106057-2.5	1	1/P									
19	4401 772020	WEIGHT-PICK-UP	2	1/P									
20	4402 038420	K-ROL-PICK-2	1	1/P									
21	4401 772060	STD-LEV-PICK-UP	1	1/P									
22	4401 779850	SP-PICK-LCC	1	1/P									
23	4401 772070	LEV-PICK-LCC	1	1/P									
24	4401 772120	BKT-SW-PRE-FED	1	1/P									
25	4401 797110	SZ-P-FEED-150	1	1/C									
26	4401 772130	COV-SW-PRE-FED	1	1/P									
27	4401 772210	BKT-SW-EMP	1	1/P									
28	4402 816780	SZ-GP1A71M1	2	1/C									
29	4401 798170	WH-LCF-SW-150	1	1/P									
30	4401 772200	COVER-SW-EMP	1	1/P									
31	4400 324160	EDGE-SADDLE-1	1	5/P									
32	4401 772230	BKT-CONECT-SW-E	1	1/P									
33	4401 772240	COV-HRNS-SW-EMP	1	1/P									
34	4401 771680	LEV-ROL-SEP	2	1/P									
35	4401 771690	SPE-SEP-907	1	5/P									
36	4401 771710	K-SFT-ROL-SEP	2	1/P									
37	4401 773010	K-ROL-SPT-CW-H	1	1/P									
38	4401 772330	BKT-GUIDE-M-F	1	1/P									
39	4401 772340	BKT-GUIDE-M-R	1	1/P									
40	4401 772370	GUIDE-P-MNAL-L	1	1/P									
41	4408 337960	PAD-8*2	2	5/P									
42	4401 772380	GUIDE-P-MNAL-U	1	1/P									
43	4400 325930	PIN-BKT-CON-H	2	10/P									
44	4401 797150	K-VARIST-U-150	1	1/P									
45	4401 772280	SUPPORT-GUIDE-P	4	1/P									
46	4402 038470	ROL-FEED-1	1	1/C									
47	4408 307270	ARBOR-16-POM-S	2	1/P									
48	4408 307260	SPR-1.0-15.55-S	2	5/P									
49	4408 307890	COVER-SP-CL	2	1/P									
50	4401 771630	STY-FEED-L	1	1/P									
51	4401 771650	K-BKT-SEP-ROL-L	1	1/P									
52	4401 909710	GUIDE-P-STY-LF	1	1/P									
53	4401 909720	GUIDE-P-STY-LR	1	1/PP									
54	4401 783920	HOLDER-LOCK-LCF	1	1/P									
55	4401 783970	SPL-STY-FED-L	1	1/P									
56	4401 768340	LABEL-D	1	10/P									
57	4401 771880	SPE-SEP-784	1	5/P									
58	4346 754010	SKB-BAND-1	1	5/P									
59	4400 746270	K-ROL-SPT-URT	1	1/P									
71	4842 040690	TZPAN3006MSZN3L	19	50/P									
72	4842 040692	TZPAN3008MSZN3L	4	50/P									
73	7405 005031	ERR050SKZN3A	17	50/P									
74	7640 300651	ZPAN30*06MSZN3A	1	50/P									
75	4842 040124	TZPAN3014MSZN3L	1	50/P									
76	4842 040665	TPAN3006MSZN3L	1	50/P									

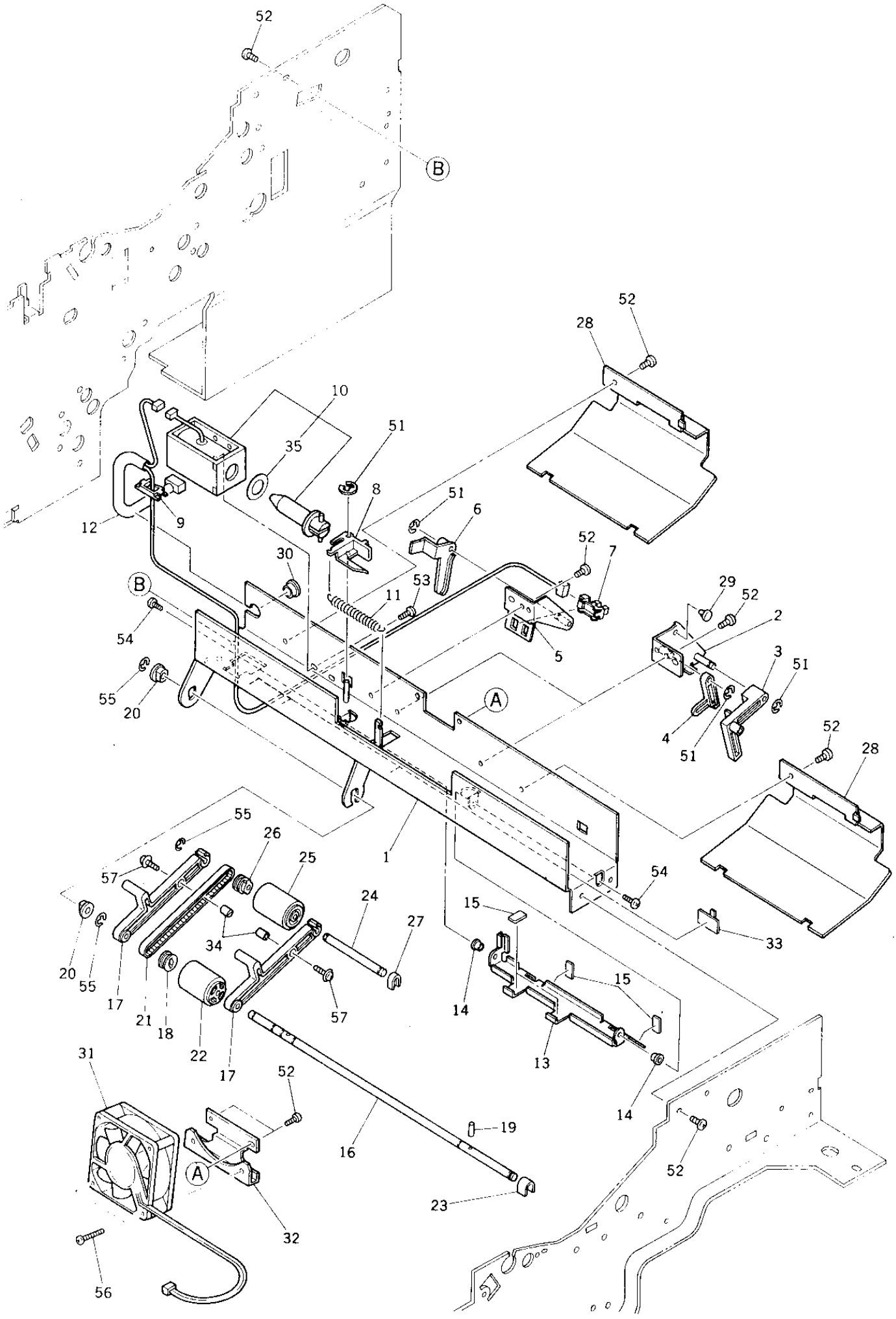
52
B
52
28
10
51
35
8
51
6
12
9
52
7
30
53
11
29
52
2
B
54
5
3
51
55
20
A
4
51
52
28
55
26
1
25
57
54
24
15
27
33
34
20
55
17
21
18
22
17
57
14
15
13
14
31
52
19
16
52
A
23
32
56

TOSHIBA

ITEM NO.	PARTS NO.	PARTS NAME	Q'TY / PAGE	Q'TY / PACK	SPE PRICE IN NONE	P	I	R	BSI NO.	TO	FROM	SERIAL NO.	REMARKS
1	4401 775620	K-BKT-BYPASS-UL	1	1/P									
2	4401 775210	K-BKT-STOPPER	2	1/P									
3	4401 775240	ARM-STOPPER	2	1/P									
4	4401 910170	ARM-STOPPER-SUB	2	1/P									
5	4401 775250	K-BKT-PAPER-SW	1	1/P									
6	4401 775280	LEVER-PAPER-SW	1	1/P									
7	4402 816780	SZ-GP1A71M1	1	1/C									
8	4400 756410	ACT-BYPASS	1	1/P									
9	4843 390942	BD/W-EDS-2	1	10/P									
10	4401 910160	ASM-SND-FED-152	1	1/P									
11	4401 775540	SPE-SND-BYPASS	1	5/P									
12	4401 915710	WH-MFD-UNIT-152	1	1/P									
13	4401 775340	BKT-BYPASS-US	1	1/P									
14	4402 814690	SPACER-BYPASS	2	5/P									
15	4401 775790	CUSH-BYPASS-US	4	5/P									
16	4401 775370	SFT-ROL-FEED-U	1	1/P									
17	4401 775350	ARM-PICK-UP	2	1/P									
18	4400 884670	PLY-20-ROL	1	1/P									
19	4407 403790	NPIN2-8	1	10/P									
20	4407 734980	BUSH-6-GCB	2	5/P									
21	4401 775600	BELT-106105-3SZ	1	1/P									
22	4401 773050	K-ROL-FED-CW-H	1	1/P									
23	4407 907410	STOP-RING-6	1	5/P									
24	4401 775360	SFT-ROLL-PICK-U	1	1/P									
25	4401 773060	K-ROL-P/U-CW-H	1	1/P									
26	4402 813680	PLY-20	1	1/P									
27	4407 972860	STOP-RING-6-5	1	5/P									
28	4401 775580	GUIDE-BYPASS-U	2	1/P									
29	4408 337960	PAD-8*2	2	5/P									
30	4842 414629	GMT-OCB-375	1	10/P									
31	4408 641720	FAN-DC-60-3600	1	1/C									
32	4401 775390	BRKT-FAN-FED	1	1/PP									
33	4407 685930	HOLDER-WH	3	5/P									
34	4401 775530	WEIGHT-M-PICK	2	5/P									
35	4401 775660	MYLAR-SND-MNAL	1	5/P									
51	7405 003031	ERR030SKZN3A	6	50/P									
52	4842 040690	TZPAN3006MSZN3L	11	50/P									
53	7040 300611	PAN30*06MSZN3A	2	50/P									
54	4842 040666	TPAN3008MSZN3L	2	50/P									
55	7405 005031	ERR050SKZN3A	3	50/P									
56	4842 040367	TZPAN4032MSZN3L	2	50/P									
57	7040 300811	PAN30*08MSZN3AI	2	50/P									

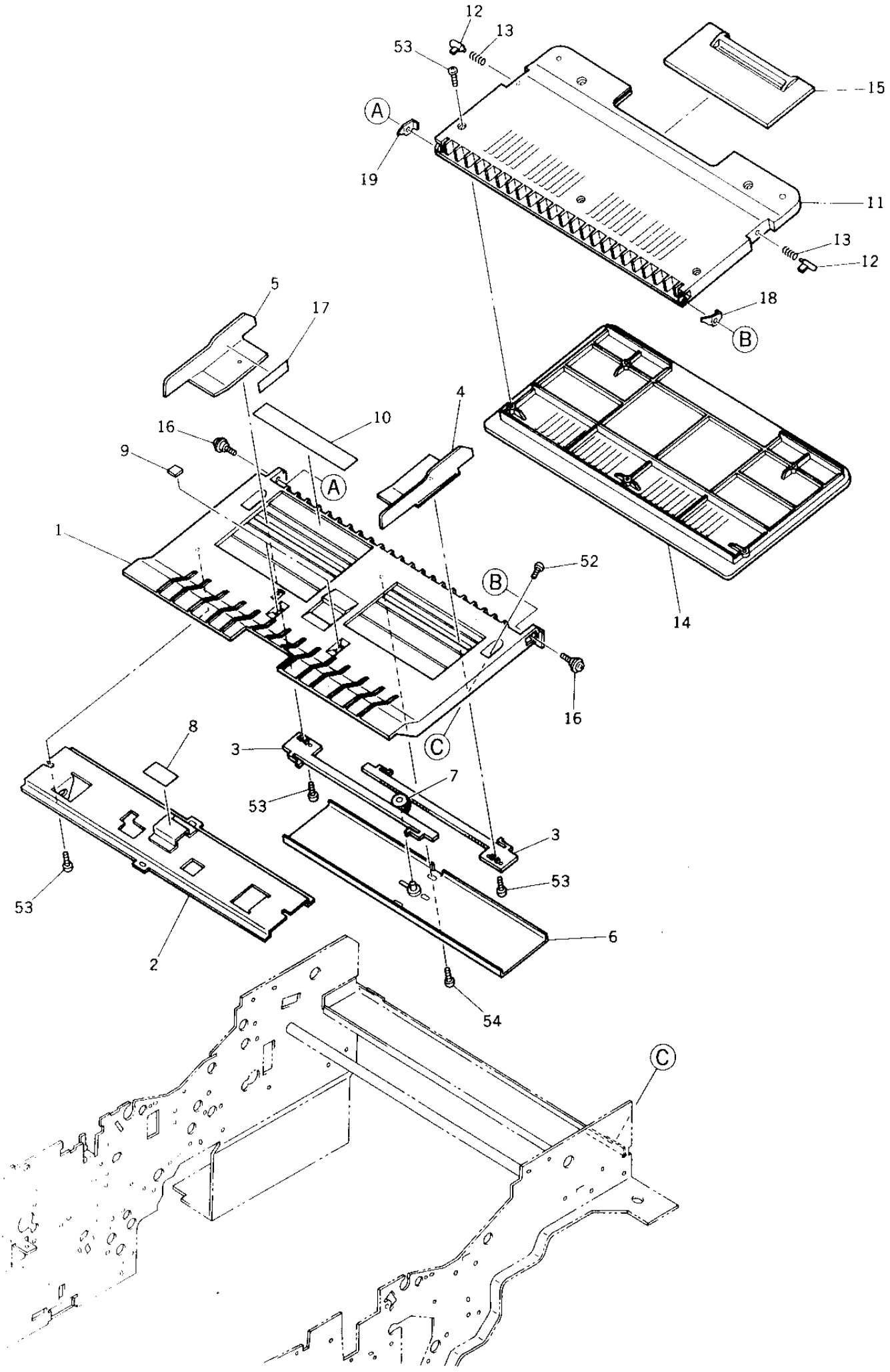
12
13
53
15
A
19
11
13
12
5
17
18
B
4
10
16
9
A
1
52
B
14
16
8
3
C
7
53
3
53
53
6
2
54
C

ITEM NO.	PARTS NO.	PARTS NAME	Q'TY / PAGE	Q'TY / PACK	SPE PRICE IN NONE	P	I	R	BSI NO.	TO	FROM	SERIAL NO.	REMARKS
1	4401 775400	TRAY-SFB	1	1/PP									
2	4401 775410	K-BKT-HOLD-TRAY	1	1/P									
3	4401 775440	RACK-BYPASS	2	1/P									
4	4401 775450	GUIDE-F	1	1/P									
5	4401 775460	GUIDE-R	1	1/P									
6	4401 775480	K-PLATE-PINION	1	1/P									
7	4407 726480	PINION-18-395	1	1/P									
8	4400 901130	PAD-BRAKE	1	5/P									
9	4401 775780	CUSH-TRAY-SFB	2	5/P									
10A	4401 775810	LBL-SIZE-SFB-U	1	5/P									LD,LT,LG,ST
10B	4401 775820	LBL-SIZE-SFB-E	1	5/P									A3,A4,B4,B5
11	4401 775750	TRAY-OPEN-SFB	1	1/PP									
12	4402 814310	PIN-TRAY-M-FE	2	5/P									
13	4402 818340	SPC-PIN-TRAY-N	2	5/P									
14	4401 775760	COV-OPEN-SFB	1	1/PP									
15	4401 775770	TRAY-OPEN-SFB	1	1/PP									
16	4402 240470	SCREW-HINGE	2	10/P									
17	4401 910180	LBL-STK-SFB-C7	1	5/P									
18	4401 775840	PLATE-TRAY-OP-F	1	1/P									
19	4401 775850	PLATE-TRAY-OP-R	1	1/P									
52	4842 040635	TBID40*08MSCR3C	2	50/P									
53	4842 040495	PTBR30*06MSZN3A	10	50/P									
54	7040 300611	PAN30*06MSZN3A	2	50/P									

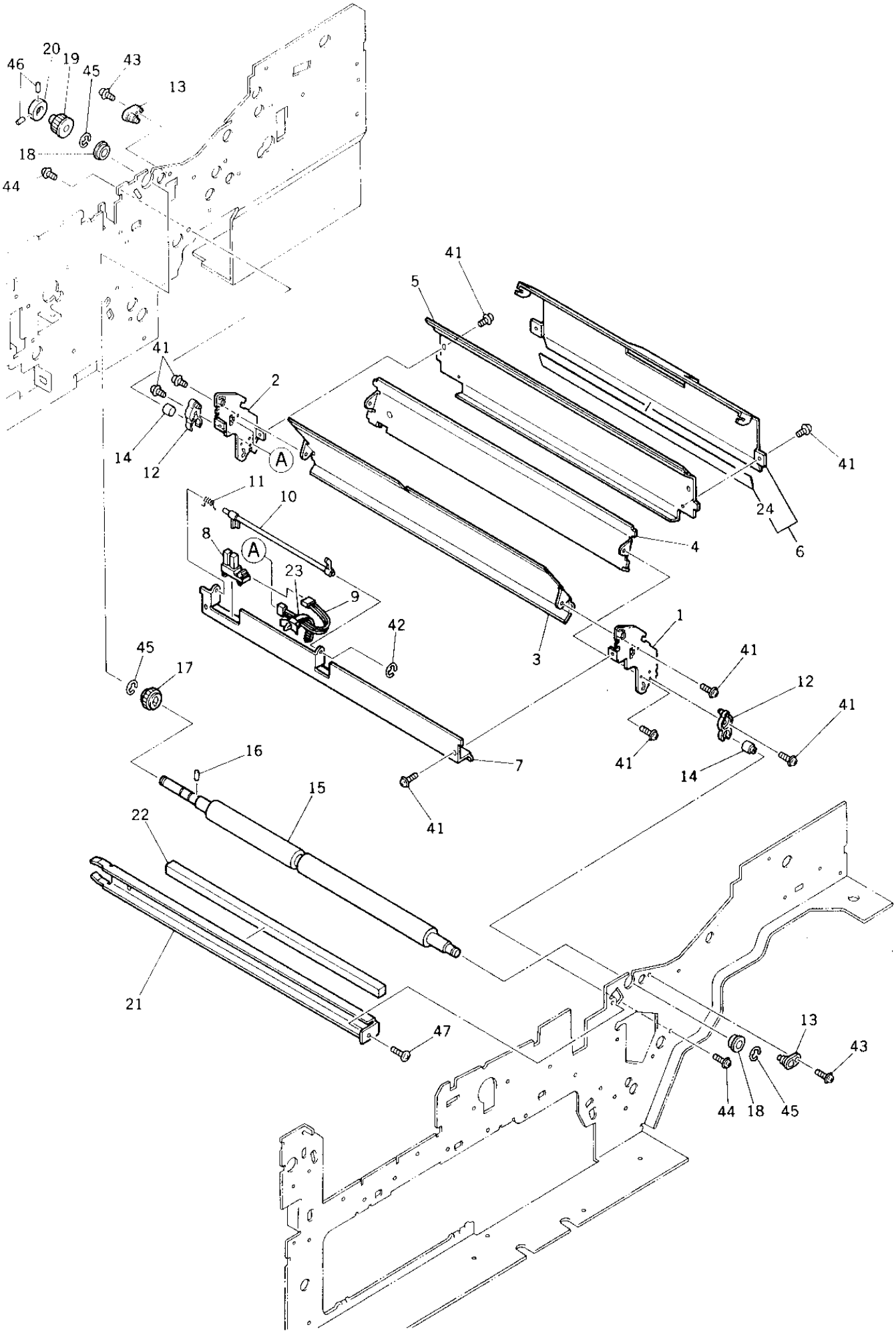
46
20
19
45
43
13
18
44
41
5
41
2
14
12
A
11
10
8
A
23
9
42
45
17
16
15
22
21
47
41
24
6
4
3
1
41
12
41
41
14
7
41
13
43
44
18
45

TOSHIBA

ITEM NO.	PARTS NO.	PARTS NAME	Q'TY / PAGE	Q'TY / PACK	SPE PRICE IN NONE	P	I	R	BSI NO.	TO	FROM	SERIAL NO.	REMARKS
1	4401 772430	BKT-GUIDE-P-F	1	1/P									
2	4401 772440	BKT-GUIDE-P-R	1	1/P									
3	4401 909870	K-GUIDE-P-1	1	1/KP									
4	4401 909820	GUIDE-P-2	1	1/PP									
5	4401 909830	GUIDE-P3	1	1/PP									
6	4402 310810	K-GUIDE-P-4	1	1/C									
7	4401 772490	BKT-SNSR-RGST	1	1/P									
8	4400 902350	SCO-SX460-P2	1	1/C									
9	4401 795890	WH-RGTSW-150	1	1/P									
10	4401 772500	ACTUATOR-RGST	1	1/P									
11	4401 772510	SPL-ACT-RGST	1	1/P									
12	4401 772520	HLDR-GUIDE-UNIT	2	1/P									
13	4401 772280	SUPPORT-GUIDE-P	2	1/P									
14	4401 772590	STUD-GUIDE-UNIT	2	1/P									
15	4401 772610	ROL-RGST-D	1	1/C									
16	4346 312020	PIN	1	10/P									
17	4407 547320	GEAR-0.8-25	1	1/P									
18	4408 510800	BRG-688ZZNR	2	1/P									
19	4408 603640	PLY-Z20-3M-HTD	1	1/P									
20	4408 307680	FLANGE-21	1	1/P									
21	4402 208570	BKT-BRUSH-RGT-L	1	1/P									
22	4408 617650	BRUSH-RE-7.5H	1	1/S									
23	4400 902490	BAND-PS100	1	5/P									
24	4402 310830	MYLAR-GUIDE-P4	1	1/KP									
41	4842 040690	TZPAN3006MSZN3L	12	50/P									
42	7405 002031	ERR020SKZN3A	1	50/P									
43	4842 040692	TZPAN3008MSZN3L	2	50/P									
44	7640 300651	ZPAN30*06MSZN3A	2	50/P									
45	7405 007031	ERR070SKZN3A	3	50/P									
46	4842 011064	9HSS30/06MSFB	2	50/P									
47	4842 040060	TPAN40*08MSZN3L	1	50/P									

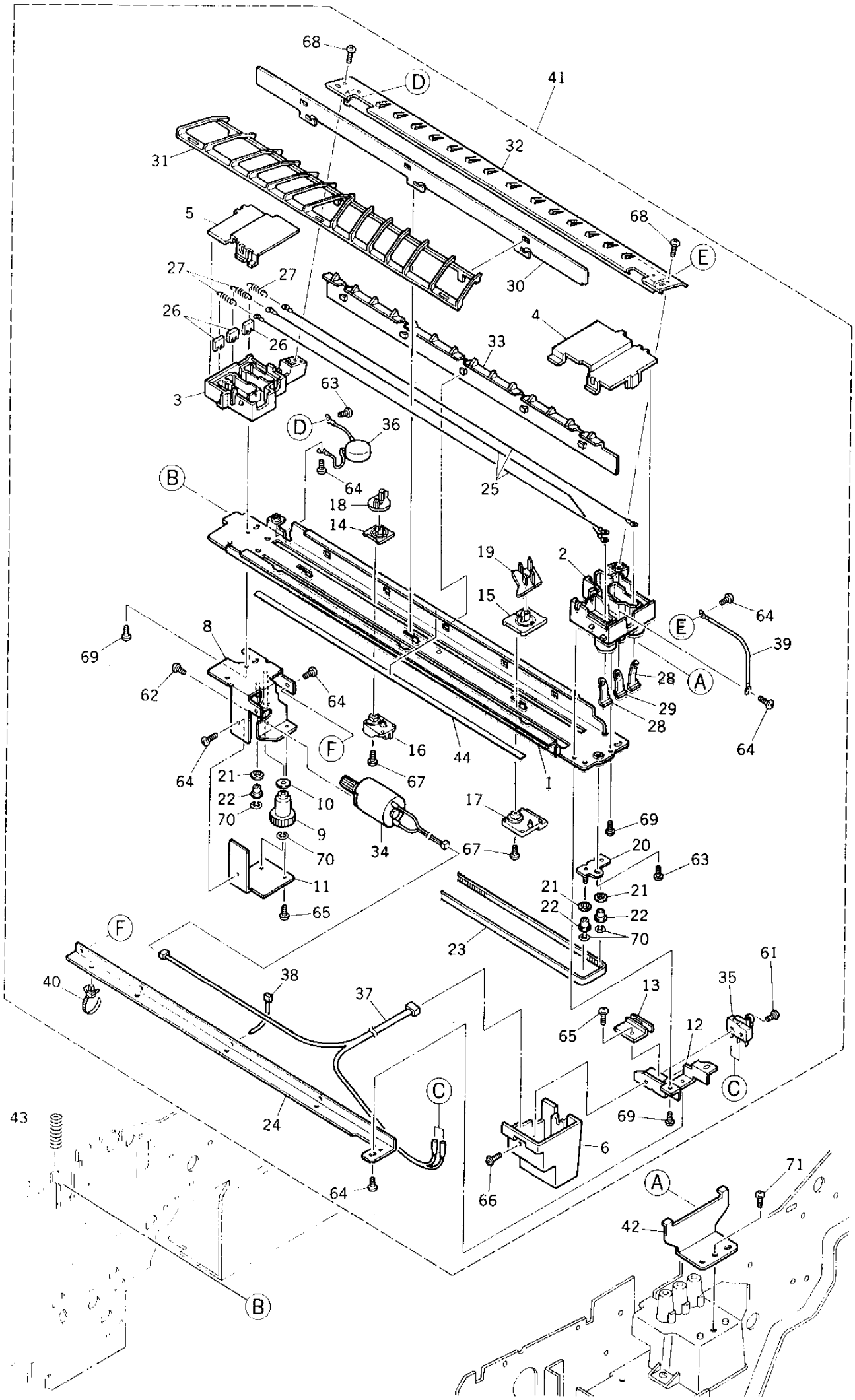
68
D
41
31
32
5
68
E
27
27
30
26
26
4
33
3
63
D
36
64
25
B
18
14
19
2
15
64
E
39
8
69
28
A
62
64
29
28
64
F
16
44
64
21
67
1
22
10
17
70
9
69
70
34
67
20
63
11
21
21
65
22
22
70
F
23
61
40
38
37
13
35
65
12
C
C
43
24
69
6
64
66
71
A
42
B

TOSHIBA

ITEM NO.	PARTS NO.	PARTS NAME	Q'TY / PAGE	Q'TY / PACK	SPE PRICE IN NONE	P	I	R	BSI NO.	TO	FROM	SERIAL NO.	REMARKS
1	4401 764300	CASE-CH-TR	1	1/P									
2	4401 764320	TERMINAL-TR-F	1	1/P									
3	4401 764330	TERMINAL-TR-R	1	1/P									
4	4401 764740	LID-CH-TR-F	1	1/P									
5	4401 764750	LID-CH-TR-R	1	1/P									
6	4401 764360	COVER-SW-CH-TR	1	1/P									
8	4402 308730	K-BRKT-MOT-CH	1	1/P									
9	4401 764420	GEAR-22-PLY-12	1	1/P									
10	4408 303080	FLANGE-10-3-1.5	1	1/P									
11	4401 764440	STAY-BRKT-MOT	1	1/P									
12	4401 764450	BRKT-SW-CH-TR	1	1/P									
13	4401 764460	GUIDE-SW-CH-TR	1	1/P									
14	4401 764470	BASE-CLN-TR	1	1/P									
15	4401 764480	BASE-CLN-SEP	1	1/P									
16	4401 764490	PUSHER-SW-TR	1	1/P									
17	4401 764500	PUSHER-SW-SEP	1	1/P									
18	4401 905180	K-BASE-PAD-TR	1	1/P									
19	4401 905160	K-BASE-PAD-SEP	1	1/P									
20	4401 764550	K-BRKT-PLY-I-TR	1	1/P									
21	4408 303460	FALNGE-PLY-R	3	1/P									
22	4401 764570	PLY-I-6	3	5/P									
23	4401 763820	BELT-2M-800-2	1	1/P									
24	4401 764580	BRKT-WH-CH-TR	1	1/P									
25	4402 308690	WIRE-CH-060*409	3	5/S									
26	4401 764730	HANGER-WIRE-TR	3	1/P									
27	4407 402190	SPRING-TENS-CH	3	5/P									
28	4402 214540	HANGER-WIRE	2	1/P									
29	4401 764600	PLATE-BIAS	1	1/P									
30	4401 764770	PLATE-CH-TR	1	1/P									
31	4401 764660	SUPPORTER-CH-TR	1	1/P									
32	4402 308640	K-GUIDE-CH-ENT	1	1/P									
33	4401 764760	GUIDE-TR-SUB	1	1/P									
34	4402 308710	K-MOT-CH-CLN-TR	1	1/C									
35	4407 966810	SM-SS01GL2T	1	1/D									
36	4401 797140	K-VARIST-CH-150	1	1/P									
37	4401 795770	WH-TRCH-150	1	1/P									
38	4346 754010	SKB-BAND-1	3	5/P									
39	4401 795850	WH-GBIAS-150	1	1/P									
40	4400 902490	BAND-PS100	1	5/P									
41	4402 308600	ASM-CHARGER-TR	1	1/S									
42	4401 764670	STOPPER-CH-TR	1	1/P									
43	4402 205790	SPC-CH-TR	1	5/P									
44	4402 308670	MYLAR-CH-ENT	1	5/KP									
61	7040 201011	PAN20*10MSZN3AI	1	50/P									
62	7040 260411	PAN26*04MSZN3AI	2	50/P									
63	7040 300411	PAN30*04MSZN3A	2	50/P									
64	7040 300611	PAN30*06MSZN3A	6	50/P									
65	4842 040665	TPAN3006MSZN3L	2	50/P									
66	4842 040690	TZPAN3006MSZN3L	3	50/P									
67	4842 040840	PAN30*06PL-T-PA	2	50/P									
68	4842 040495	PTBR30*06MSZN3A	2	50/P									
69	4842 040846	PTBR30*08MSZN3A	4	50/P									
70	7405 002031	ERR020SKZN3A	4	50/P									
71	7640 400811	ZPAN40*08MSZN3A	1	50/P									

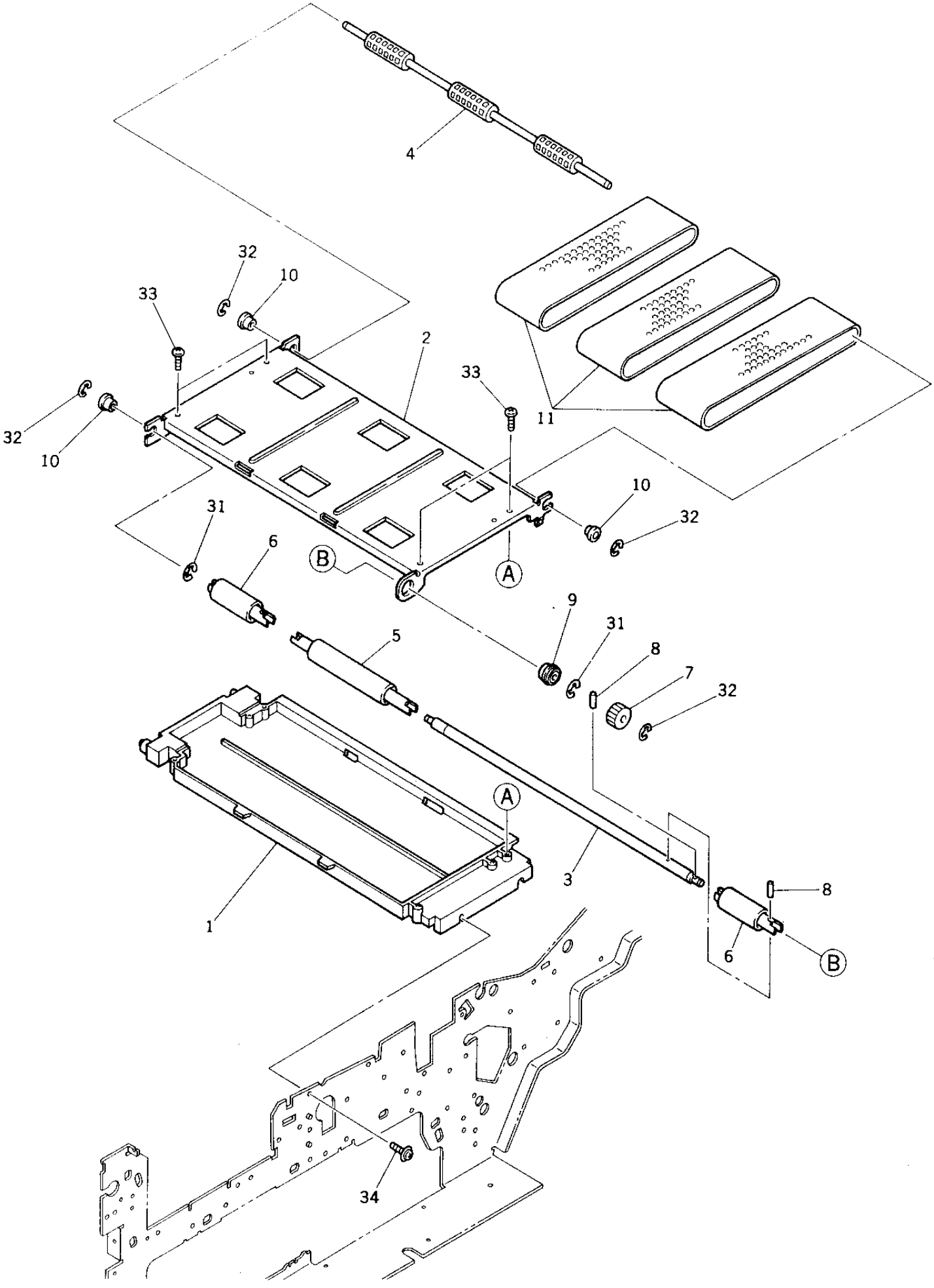
4
32
10
33
2
33
11
32
10
10
31
32
6
B
A
9
31
5
8
7
32
A
1
3
8
6
B
34

ITEM NO.	PARTS NO.	PARTS NAME	Q'TY / PAGE	Q'TY / PACK	SPE PRICE IN NONE	P	I	R	BSI NO.	TO	FROM	SERIAL NO.	REMARKS
1	4401 760010	CASE-BELT	1	1/PP									
2	4401 902940	K-BKT-BELT-152	1	1/D									
3	4401 902910	SHAFT-BELT-L	1	1/P									
4	4401 760040	SHAFT-BELT-R	1	1/KP									
5	4402 801560	ROL-BELT-20-100	1	1/P									
6	4402 801650	ROL-BELT-20-50	2	1/P									
7	4401 902920	GEAR-10-20	1	1/P									
8	4346 312020	PIN	2	10/P									
9	4408 510800	BRG-688ZZNR	1	1/P									
10	4401 902960	BUSH-6-GCB-S	3	5/P									
11	4401 760050	BELT-TRANSPORT	3	1/P									
31	7405 007031	ERR070SKZN3A	2	50/P									
32	7405 005031	ERR050SKZN3A	4	50/P									
33	4842 040846	PTBR30*08MSZN3A	4	50/P									
34	4842 040700	TZPAN4008MSZN3L	2	50/P									

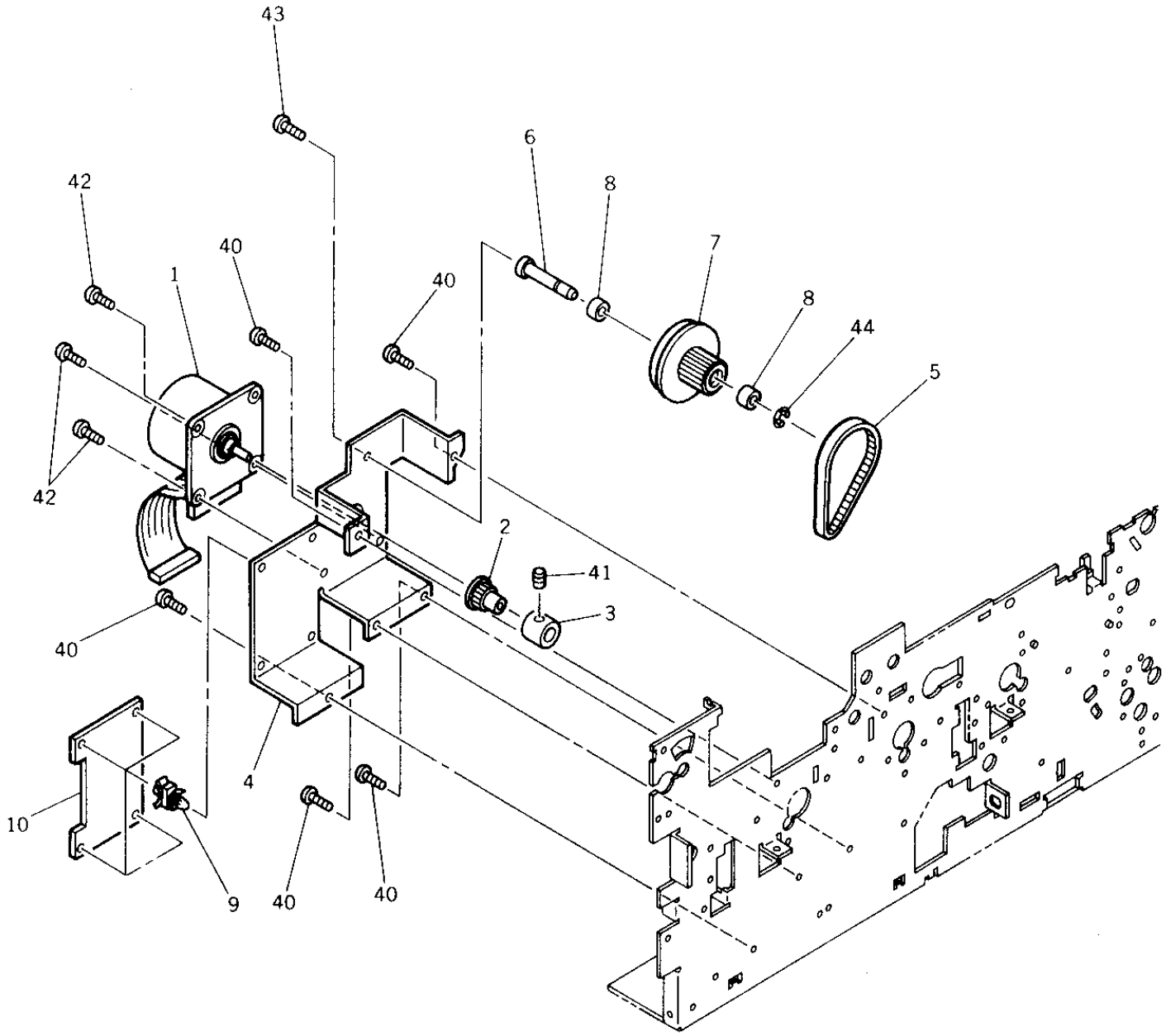
43
6
42
8
40
7
1
40
8
44
5
42
2
41
40
3
4
10
9
40
40

ITEM NO.	PARTS NO.	PARTS NAME	Q'TY / PAGE	Q'TY / PACK	SPE PRICE IN NONE	P	I	R	BSI NO.	TO	FROM	SERIAL NO.	REMARKS
1	4401 796830	M/DC-HTR-150	1	1/C									
2	4408 507370	PULLEY-14	1	1/P									
3	4401 759390	COLLAR-MOT-1610	1	1/P									
4	4401 759310	BRKT-MOT-FUS	1	1/P									
5	4401 759320	BELT-78-3M-6.4	1	1/P									
6	4401 759330	STUD-MOT-FUS	1	1/P									
7	4401 759340	PULLEY66-GEAR23	1	1/P									
8	4842 110087	BRG-R-1560ZZ	2	1/P									
9	4843 390869	PWZ-SPLS-4U	4	5/P									
10	4401 795490	PWA-F-MOT-150	1	1/SB									
40	4842 040060	TPAN40*08MSZN3L	5	50/P									
41	4842 011083	9HSS40/06MSFB	1	50/P									
42	4842 040694	TZPAN3010MSZN3L	3	50/P									
43	4842 040723	TPPAN4006MSZN3A	1	50/P									
44	7405 005031	ERR050SKZN3A	1	50/P									

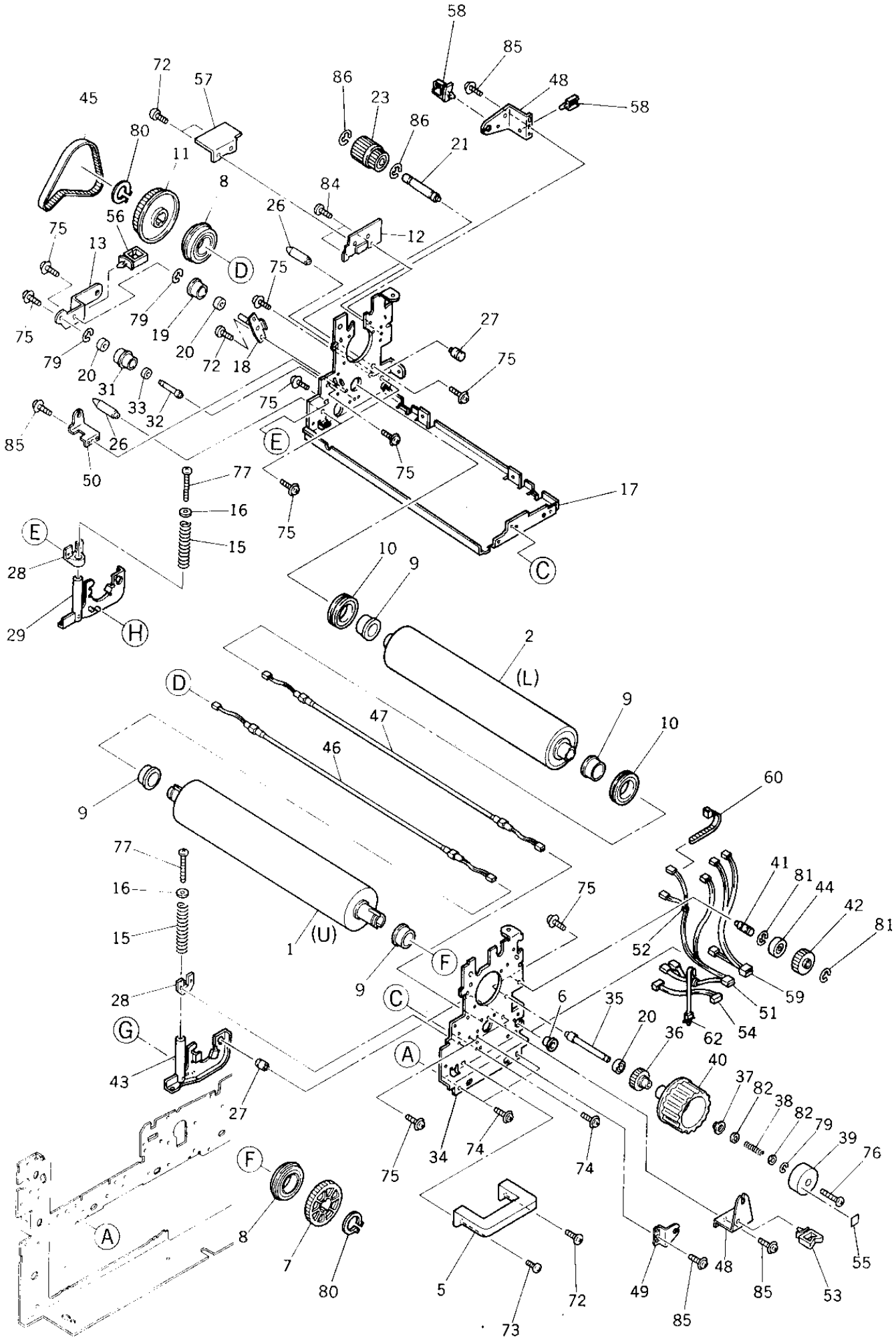
58
85
48
58
72
57
86
23
86
21
45
80
11
8
84
26
12
56
75
13
D
75
79
19
20
72
18
27
75
79
20
31
33
32
75
85
26
E
50
75
77
16
17
75
E
15
28
10
9
C
29
H
2
(L)
D
9
10
47
46
9
60
77
16
41
81
44
42
81
75
15
1
(U)
52
F
9
28
C
6
35
59
51
20
54
G
36
62
A
40
43
37
82
38
82
79
39
76
27
34
74
74
75
F
A
8
7
80
5
72
49
48
85
53
55
73
85

TOSHIBA

ITEM NO.	PARTS NO.	PARTS NAME	Q'TY / PAGE	Q'TY / PACK	SPE PRICE IN NONE	P	I	R	BSI NO.	TO	FROM	SERIAL NO.	REMARKS
1	4409 847270	HR-7550U	1	1/S									
2	4409 830510	HR-6550-L	1	1/S									
5	4401 759270	HANDLE-FUS-F	1	1/P									
6	4842 414630	GMT-OCB-500	1	10/P									
7	4401 759430	GEAR-60-FUS-F	1	1/P									
8	4407 548060	BRG-6005ZZ-HR	2	1/P									
9	4401 902550	COLLER-BRG-HR	4	1/P									
10	4401 902680	BRG-6905ZZ-PR	2	1/P									
11	4401 758300	PULLEY-72-HR	1	1/P									
12	4401 758420	BRKT-FRM-FUS-R	1	1/P									
13	4401 759240	PLATE-FUS	1	1/P									
15	4401 902690	SPC-PRESS-100	2	1/P									
16	4401 759260	WAS-15-45-FUS	2	10/P									
17	4401 902160	FAME-FUS-R	1	1/P									
18	4401 902170	K-TENSION-FUS	1	1/P									
19	4401 758410	TENSIONER-FUS	1	1/P									
20	4842 110087	BRG-R-1560ZZ	3	1/P									
21	4401 902220	STUD-26-29	1	1/P									
23	4401 759380	K-PLY/GEAR-29	1	1/P									
26	4401 758170	STUD-FUS-R	2	1/P									
27	4401 758430	STUD-PRESS	2	1/P									
28	4401 758440	HLDR-PRESS	2	1/P									
29	4401 902260	K-ARM-PRESS-R	1	1/P									
31	4408 508450	PLY-19-G20	1	1/P									
32	4401 902200	STUD-FUS-4	1	1/P									
33	4842 110024	BRG-L-1260ZZ	1	1/P									
34	4401 902130	FRAME-FUS-F	1	1/P									
35	4401 758230	STUD-FUS-HNDL	1	1/P									
36	4401 758240	GEAR-25-HNDL	1	1/P									
37	4401 758250	CAP-FUSER-HNDL	1	1/P									
38	4401 758710	SPC-FUS-HNDL-LE	1	5/P									
39	4401 758280	COV-FUSER-HNDL	1	1/P									
40	4401 758290	HANDLE-FUS	1	1/P									
41	4401 902140	STUD-IDLE-F	1	1/P									
42	4408 312370	GEAR-28B	1	1/P									
43	4401 902250	K-ARM-PRESS-F	1	1/P									
44	4407 546490	BRG-608ZZ	1	1/P									
45	4401 758310	BELT-324-3M-9	1	1/P									
46A	4401 797310	HTR-115-900W-13	1	1/C									TAD
46B	4401 797310	HTR-115-900W-13	1	1/C									CSD
46C	4402 322430	HTR-240-1180W1A	1	1/S									EUD
46D	4402 322430	HTR-240-1180W1A	1	1/S									GSD
46E	4402 322430	HTR-240-1180W1A	1	1/S									FRD
46F	4402 322430	HTR-240-1180W1A	1	1/S									SED
46G	4402 322430	HTR-240-1180W1A	1	1/S									UKD
46H	4402 322430	HTR-240-1180W1A	1	1/S									AUD
46I	4401 797310	HTR-115-900W-13	1	1/C									TWD
46J	4401 797340	HTR-127-900W-13	1	1/S									SAD
46K	4401 797320	HTR-220-1100W13	1	1/S									ASD
47A	4401 916680	HTR-115-250W	1	1/C									TAD
47B	4401 916680	HTR-115-250W	1	1/C									CSD
47C	4401 916700	HTR-240-250W	1	1/C									EUD
47D	4401 916700	HTR-240-250W	1	1/C									GSD
47E	4401 916700	HTR-240-250W	1	1/C									FRD
47F	4401 916700	HTR-240-250W	1	1/C									SED
47G	4401 916700	HTR-240-250W	1	1/C									UKD
47H	4401 916700	HTR-240-250W	1	1/C									AUD
47I	4401 916680	HTR-115-250W	1	1/C									TWD
47J	4401 916710	HTR-127-250W	1	1/C									SAD
47K	4401 916690	HTR-220-250W	1	1/C									ASD
48	4401 902210	BRKT-LAMP-U	2	1/P									
49	4401 759210	BRKT-LAMP-L-F	1	1/P									
50	4401 759220	BRKT-LAMP-L-R	1	1/P									
51	4401 915330	WH-FUSER-152	1	1/P									
52	4843 390841	BD/W-SKB-145P	6	5/P									
53	4843 390854	CLP/W-LWS-1U	1	5/P									
54	4401 796240	WH-EXIT-SW-150	1	1/P									
55	4401 768330	LABEL-C	1	10/P									
56	4843 391535	CLP/W-PLWS1-46B	1	5/P									
57	4401 759560	K-BRKT-HDL-FUS	1	1/P									
58	4843 391499	CLP/W-UAMS05L46	2	10/P									

ITEM NO.	PARTS NO.	PARTS NAME	Q'TY / PAGE	Q'TY / PACK	SPE PRICE IN NONE	P	I	R	BSI NO.	TO	FROM	SERIAL NO.	REMARKS
59	4401 915390	WH-THMS-152	1	1/P									
60	4346 754010	SKB-BAND-1	5	5/P									
62	4407 406860	BAND-PLP1.5I	1	5/P									
72	4842 040060	TPAN40*08MSZN3L	7	50/P									
73	4842 040061	TPAN40*10MSZN3L	1	50/P									
74	4842 040700	TZPAN4008MSZN3L	7	50/P									
75	4842 040723	TPPAN4006MSZN3A	14	50/P									
76	7040 400811	PAN40*08MSZN3AI	2	50/P									
77	7040 402511	PAN40*25MSZN3AI	2	50/P									
79	7405 005031	ERR050SKZN3A	3	50/P									
80	7403 020039	CRR/S200SKFB	2	50/P									
81	7405 006031	ERR060SKZN3A	1	50/P									
82	4407 861390	WASHER-6	2	10/P									
84	4842 040366	TBID4006MSCR3C	2	50/P									
85	4842 040665	TPAN3006MSZN3L	4	50/P									
86	7405 007031	ERR070SKZN3A	1	50/P									

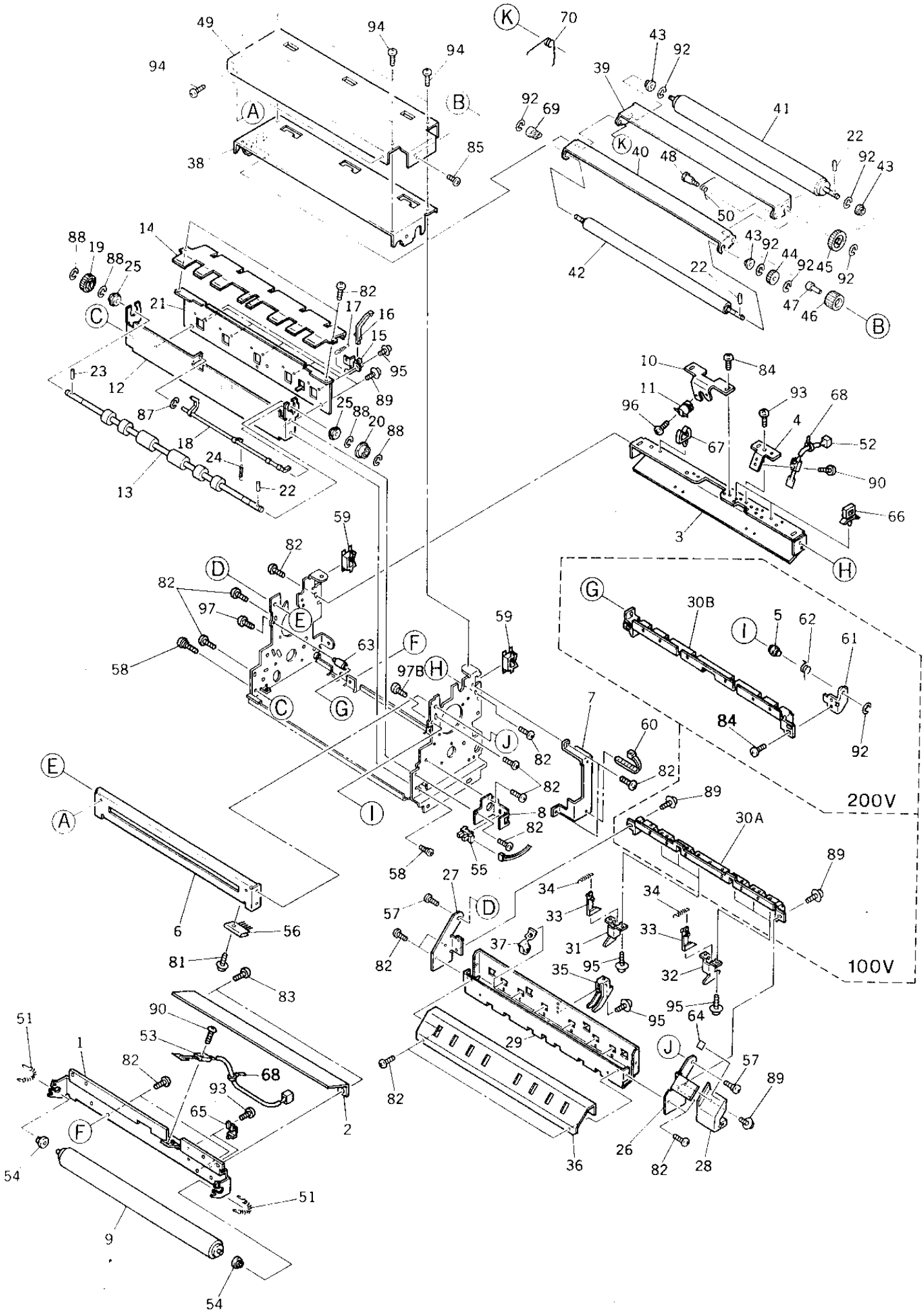
200V
100V

ITEM NO.	PARTS NO.	PARTS NAME	Q'TY / PAGE	Q'TY / PACK	SPE PRICE IN NONE	P	I	R	BSI NO.	TO	FROM	SERIAL NO.	REMARKS
1	4401 903160	BKT-THRM-L-ROL	1	1/P									
2	4402 306200	GUIDE-FUS-ENT	1	1/P									
3	4401 902560	STAY-IN-FUS	1	1/P									
4	4401 902580	BKT-THMS-U	1	1/P									
5B	4401 903110	STUD-SCRPR-F	1	5/P									200V SERIES
6	4401 903060	STAY-OUT-FUS	1	1/P									
7	4401 902480	BRKT-WH-FUS-F	1	1/P									
8	4401 758680	BRKT-ACT-EXIT	1	1/P									
9	4409 847280	SR-7550L	1	1/S									
10	4401 902570	BKT-THERMO-H/R	1	1/P									
11	4401 916840	THERMO-152-FUS	1	1/D									
12	4401 759520	BRKT-EXIT-OUT	1	1/P									
13	4401 758740	ROLLER-EXIT	1	1/KP									
14	4401 759540	GUIDE-PAPER-FU	1	1/P									
15	4401 758760	BRKT-SCRAPER-L	5	1/P									
16	4401 758770	SCRAPER-P/R	5	5/P									
17	4401 758780	SPE-SCRAPER-L	5	5/P									
18	4401 758790	ACT-EXIT	1	1/S									
19	4407 548800	GEAR-1-24	1	1/P									
20	4402 210280	PLY/T-32-FU	1	1/P									
21	4401 758800	BRKT-EXIT-SCR	1	1/P									
22	4346 312020	PIN	3	10/P									
23	4408 256620	PIN-2-10	1	10/P									
24	4401 758810	SPE-SW-EXIT	1	5/P									
25	4408 510800	BRG-688ZZNR	2	1/P									
26	4401 903070	BRKT-SCR-U-F	1	1/P									
27	4401 758860	BRKT-SCR-U-R	1	1/P									
28	4401 758870	HANDLE-SCR-U	1	1/P									
29	4401 759920	BRKT-EX-ROL-UP	1	1/P									
30A	4401 760120	BRKT-SCRAPER-UE	1	1/P									100V SERIES
30B	4401 903020	BKT-SCRAPER-G	1	1/P									200V SERIES
31	4401 760130	GUIDE-SCR-U-F-E	3	1/P									
32	4401 760140	GUIDE-SCR-U-R-E	3	1/P									
33	4401 759400	K-SCRAPER-HR	6	6/P									
34	4401 902650	SPE-14.5	6	5/P									
35	4401 759740	GUIDE-SCR-U-C	1	1/P									
36	4401 759290	GUARD-FUS-OUT	1	1/PP									
37	4401 902850	ASM-ROL-FUS-UP	6	1/C									
38	4401 902530	K-BKT-CLN-FUS	1	1/P									
39	4401 759040	BRKT-ROL-CL-HR	1	1/P									
40	4401 759050	BRKT-ROL-PAPER	1	1/P									
41	4409 830570	SR-6550H	1	1/S									
42	4409 832310	B-6550H	1	1/S									
43	4401 759090	BUSH-6	3	5/P									
44	4401 759480	GEAR-18-CL-FUS	1	1/P									
45	4401 759490	GEAR-27-CL-FUS	1	1/P									
46	4401 759440	GEAR-22-IDLE-FU	1	1/P									
47	4401 759130	STUD-CENTER-ROL	1	1/P									
48	4401 759140	SCREW-CLN-U	1	10/P									
49	4401 758990	GUARD-FUS-U	1	1/PP									
50	4401 759160	SP-ROL-FUS	1	1/P									
51	4401 902630	SPE-P/R-CLN-600	2	5/P									
52	4401 916720	THMS-HTR-U-152	1	1/C									
53	4401 916730	THMS-HTR-L-152	1	1/C									
54	4401 902390	BUSH-6-11	2	5/P									
55	3038 646331	SC0-TLP1217(C2)	1	1/D									
56	4401 903080	BRUSH-SUS-HR	1	1/P									
57	4400 805170	SCREW-LOCK-ARM	2	5/P									
58	4400 325930	PIN-BKT-CON-H	2	10/P									
59	4843 390943	BD/W-EDS-3	2	10/P									
60	4346 754010	SKB-BAND-1	3	5/P									
61B	4401 903140	BKT-SCRAPER-F	1	1/P									200V SERIES
62B	4401 903120	SPR-SCRPR-F-075	1	1/P									200V SERIES
63B	4401 903130	STUD-SCRAPER	1	1/P									200V SERIES
64	4401 768320	LABEL-B	1	10/P									
65	4400 345540	CLAMP-HARNESS	2	5/P									
66	4843 391535	CLP/W-PLWS1-46B	2	5/P									
67	4843 391499	CLP/W-UAMS05L46	1	10/P									
68	4843 391496	BD/W-SKB-80MZ	2	10/P									
69	4401 902510	BUSH-6-FELT-FUS	1	5/P									
70	4401 902520	SP-ROL-FELT-FUS	1	1/P									

ITEM NO.	PARTS NO.	PARTS NAME	Q'TY / PAGE	Q'TY / PACK	SPE PRICE IN NONE	P	I	R	BSI NO.	TO	FROM	SERIAL NO.	REMARKS
81	4842 040690	TZPAN3006MSZN3L	2	50/P									
82	4842 040060	TPAN40*08MSZN3L	20	50/P									
83	4842 040723	TPPAN4006MSZN3A	2	50/P									
84	7040 400811	PAN40*08MSZN3AI	5	50/P									
85	7040 300611	PAN30*06MSZN3A	7	50/P									
87	7405 002031	ERR020SKZN3A	1	50/P									
88	7405 007031	ERR070SKZN3A	4	50/P									
89	4842 040700	TZPAN4008MSZN3L	6	50/P									
90	7640 301051	ZPAN30*10MSZN3A	2	50/P									
92	7405 005031	ERR050SKZN3A	6	50/P									
93	7043 300611	BID30*06MSZN3AI	2	50/P									
94	4401 759180	SCREW-FUSER-M4	4	50/P									
95	4842 040665	TPAN3006MSZN3L	23	50/P									
96	7040 400411	PAN40*04MSZN3AI	2	50/P									
97B	7640 300611	ZPAN30*06MSZN3A	1	50/P									200V SERIES

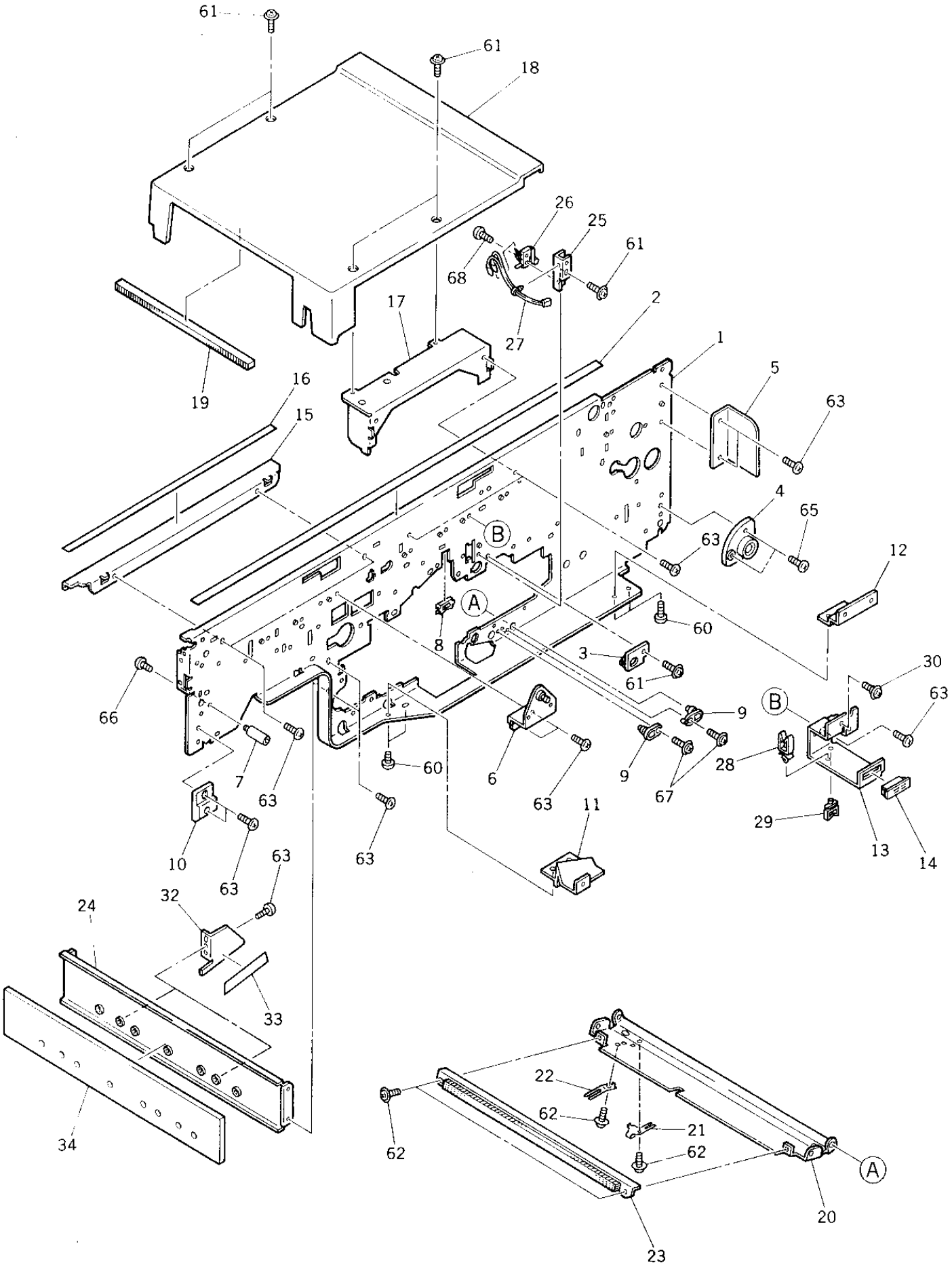
61
61
18
26
25
61
68
27
17
2
1
5
63
19
16
15
4
65
63
12
B
A
8
60
3
61
30
63
66
9
B
7
63
60
6
63
9
67
28
29
13
14
10
63
63
63
11
24
32
33
34
22
62
21
62
62
20
23
A

ITEM NO.	PARTS NO.	PARTS NAME	Q'TY / PAGE	Q'TY / PACK	SPE PRICE IN NONE	P	I	R	BSI NO.	TO	FROM	SERIAL NO.	REMARKS
1	4402 302710	FRAME-FRONT-U	1	N/A***									
2	4401 757800	SHEET-CRG1	1	1/KP									
3	4401 767700	BUSH-DEV-F	1	1/P									
4	4401 754250	HOLDER-F-UF	1	1/P									
5	4401 754160	BRKT-COV-R-F	1	1/P									
6	4401 754000	K-BKT-BLC-U	1	1/P									
7	4401 754220	STUD-LOCK-L	1	1/P									
8	4843 390943	BD/W-EDS-3	1	10/P									
9	4401 772280	SUPPORT-GUIDE-P	2	1/P									
10	4401 754230	GUIDE-FRAME-U-F	1	1/P									
11	4401 753350	BRKT-COV-IN-F-L	1	1/P									
12	4401 752640	BRKT-COV-IN-F-R	1	1/P									
13	4401 754300	BRKT-MG-CNP-C-L	1	1/P									
14	4402 202680	MG-CATCH-22	1	1/P									
15	4401 901870	RAIL-CRG2-F	1	1/P									
16	4401 901840	SHEET-CRG2	1	1/KP									
17	4401 756760	BKT-COVER-O-F	1	1/P									
18	4401 756370	COVER-LENS-O	1	1/PP									
19	4401 755950	SEAL-COVER-O	1	1/KP									
20	4401 909800	GUIDE-PAPER-U	1	1/PP									
21	4402 310890	SPL-GUIDE-P-1	1	1/P									
22	4401 774650	SPL-GUIDE-P-2	1	1/P									
23	4401 774660	K-CLN-ROL-RGST	1	1/P									
24	4401 753710	STAY-H/R-FR	1	1/P									
25	4401 767790	BRKT-SW-DEV	1	1/P									
26	4407 966810	SM-SS01GL2T	1	1/D									
27	4401 796550	WH-DEVSW-150	1	1/P									
28	4843 390889	CLP/W-WS-3U	1	5/P									
29	4843 390854	CLP/W-LWS-1U	1	5/P									
30	4402 203820	SCREW-BKT-DEV	1	50/P									
32	4401 753780	GUIDE-H/R-IN	2	1/P									
33	4401 753790	GUIDE-MYLAR-H/R	2	1/P									
34	4401 753720	SHLD-STAY-H/R	1	1/KP									
60	7040 400811	PAN40*08MSZN3AI	4	50/P									
61	4842 040700	TZPAN4008MSZN3L	6	50/P									
62	4842 040690	TZPAN3006MSZN3L	4	50/P									
63	4842 040060	TPAN40*08MSZN3L	15	50/P									
65	4842 040671	TPAN4012MSZN3L	2	50/P									
66	4842 040725	TPPAN4008MSZN3A	1	50/P									
67	4842 040692	TZPAN3008MSZN3L	2	50/P									
68	7040 201011	PAN20*10MSZN3AI	1	50/P									

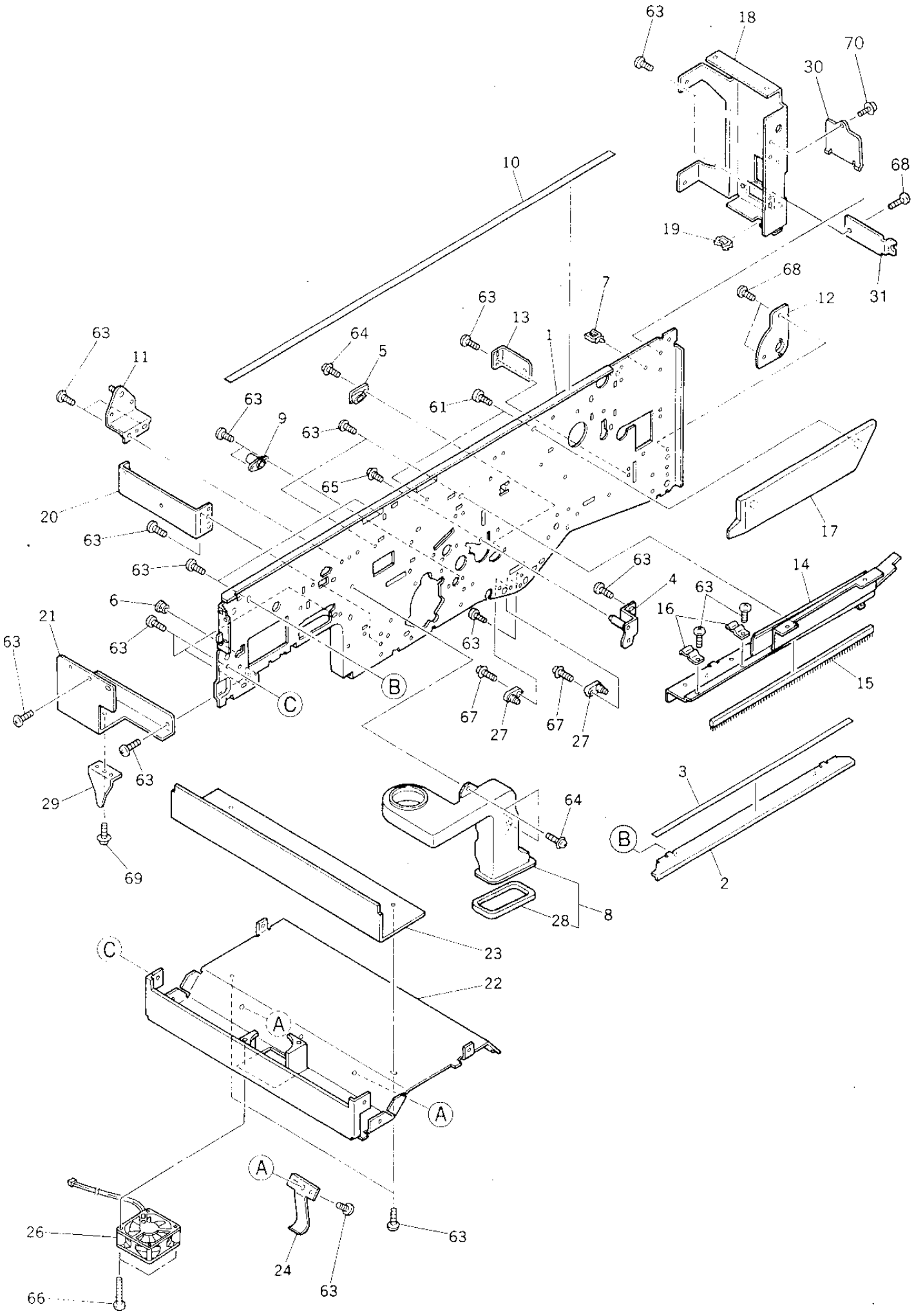
63
18
70
30
10
68
19
31
68
7
12
63
13
1
63
11
64
5
61
63
9
63
65
20
17
63
63
63
14
4
63
6
16
21
63
63
63
15
B
C
67
27
67
27
63
3
29
64
B
69
2
28
8
23
C
22
A
A
A
26
63
24
63
66

TOSHIBA

ITEM NO.	PARTS NO.	PARTS NAME	Q'TY / PAGE	Q'TY / PACK	SPE PRICE IN NONE	P	I	R	BSI NO.	TO	FROM	SERIAL NO.	REMARKS
1	4402 302760	FRAME-REAR-U	1	N/A***									
2	4401 901880	RAIL-CRG2-R	1	1/P									
3	4401 901840	SHEET-CRG2	1	1/KP									
4	4401 767730	K-BRKT-PIN	1	1/P									
5	4401 767710	BUSH-DEV-R	1	1/P									
6	4842 414629	GMT-OCB-375	1	10/P									
7	4843 390855	CLP/W-LWS-2U	1	5/P									
8	4401 900500	K-DUCT-FAN-BELT	1	1/P									
9	4401 760850	BUSH-SHAFT-DRUM	1	1/P									
10	4401 757800	SHEET-CRG1	1	1/KP									
11	4401 754000	K-BKT-BLC-U	1	1/P									
12	4401 754240	HOLDER-F-UR	1	1/P									
13	4401 754170	BRKT-COV-R-U-LR	1	1/P									
14	4401 756770	K-BKT-COV-O-R	1	1/P									
15	4401 755900	SEAL-BKT-O-R	1	1/KP									
16	4407 859810	CLAMP-CABLE-LOW	2	1/P									
17	4401 757910	GUIDE-CABLE-CRG	1	1/PP									
18	4402 868530	BRKT-KEY-CTR	1	1/P									
19	4843 390942	BD/W-EDS-2	1	10/P									
20	4401 754510	BRKT-COV-IN-R	1	1/P									
21	4401 754390	BRKT-COV-R-EXIT	1	1/P									
22	4401 755050	STAY-FR-U-H/R	1	N/A***									
23	4401 754410	GUIDE-DUCT-EX	1	1/P									
24	4401 754420	SP-H/R-FR	2	1/P									
26	4402 321630	FAN-HTR-154	1	1/D									
27	4401 772280	SUPPORT-GUIDE-P	2	1/P									
28	4401 900510	SEAL-DUCT-BELT	1	N/A***									
29	4401 754770	PUSHER-SW-REAR	1	1/P									
30	4402 204800	BLIND-KEY-CTR	1	1/P									200V SERIES
31	4402 868510	BRKT-BLIND-MMF	1	1/P									
61	4842 040849	PTBR40*08MSZN3A	2	50/P									
63	4842 040060	TPAN40*08MSZN3L	25	50/P									
64	4842 040700	TZPAN4008MSZN3L	3	50/P									
65	7640 400811	ZPAN40*08MSZN3A	1	50/P									
66	4842 040041	TPAN4030MSZN-3L	2	50/P									
67	4842 040692	TZPAN3008MSZN3L	2	50/P									
68	4842 040650	TPAN40*06MSZN3L	3	50/P									
69	4842 040690	TZPAN3006MSZN3L	1	50/P									
70	4842 040709	TPPAN3006MSZN3A	1	50/P									200V SERIES

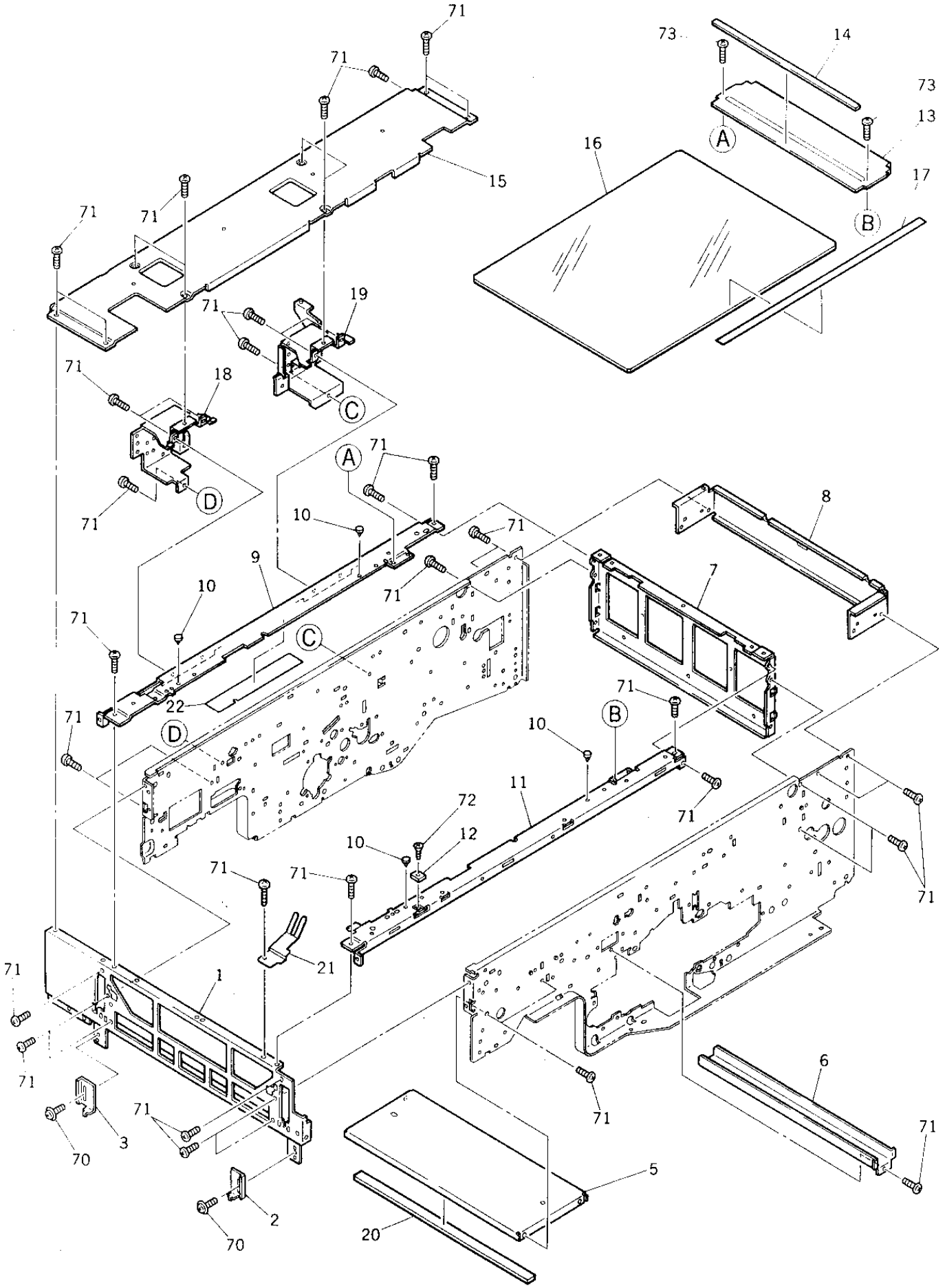
71
73
14
13
16
17
15
19
18
A
B
C
D
10
9
22
8
7
72
12
11
21
1
6
5
20
2
3
70

ITEM NO.	PARTS NO.	PARTS NAME	Q'TY / PAGE	Q'TY / PACK	SPE PRICE IN NONE	P	I	R	BSI NO.	TO	FROM	SERIAL NO.	REMARKS
1	4401 901820	STAY-L	1	N/A***									
2	4401 753320	BKT-SPE-1109-F	1	1/P									
3	4401 753330	BKT-SPE-1109-R	1	1/P									
5	4401 753630	STAY-BOTTOM	1	N/A***									
6	4401 753600	GUIDE-WH-EXPO	1	1/P									
7	4401 753280	STAY-C	1	N/A***									
8	4401 767260	STAY-HOPPER	1	N/A***									
9	4401 753460	STAY-GLASS-R	1	N/A***									
10	4400 831600	CUSH-GLASS	4	5/P									
11	4401 753410	STAY-GLASS-F	1	N/A***									
12	4402 218280	MAGNET-DF-SNSR	1	1/P									
13	4401 753240	BKT-REINFORCE-R	1	1/P									
14	4401 753260	SEAL-GLASS	1	5/KP									
15	4401 753660	STAY-TOP-R	1	N/A***									
16	4402 216110	GLASS-477-360-4	1	1/S									
17	4402 218060	LBL-SCALE-X	1	1/KP									
18	4401 753860	K-BRKT-DF-L	1	1/P									
19	4401 753850	K-BRKT-DF-R	1	1/P									
20	4401 753650	SEAL-STAY-BTM	1	1/P									
21	4401 753360	SPL-EARTH-IND	1	1/P									
22	4401 753480	SHEET-STAY-G-R	1	5/KP									
70	4842 040725	TPPAN4008MSZN3A	2	50/P									
71	4842 040060	TPAN40*08MSZN3L	42	50/P									
72	7044 250665	FLT25*06BSNI3EI	1	50/P									
73	7040 400611	PAN40*06MSZN3AI	2	50/P									

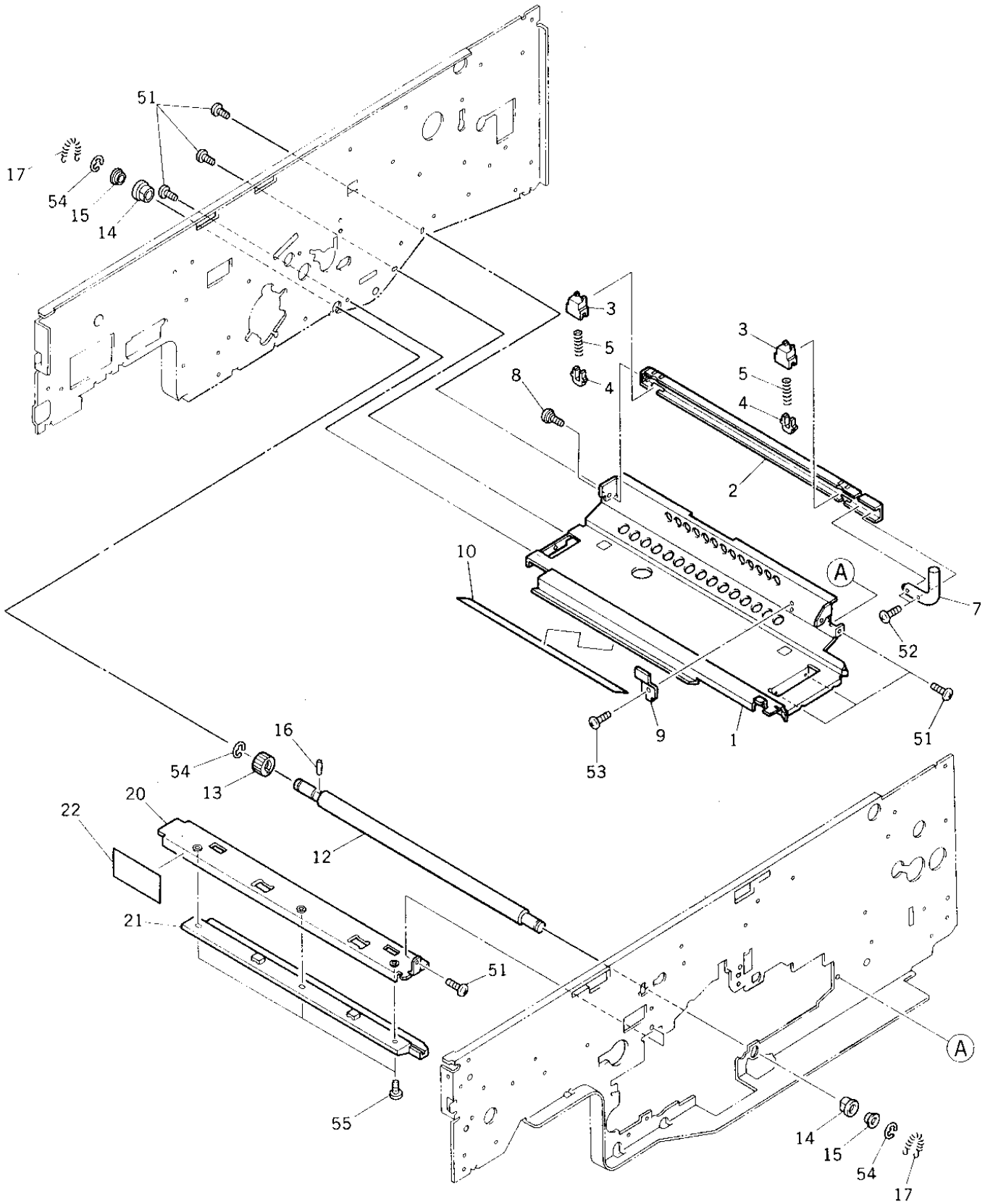
51
17
54
15
14
3
5
4
8
2
10
A
7
52
9
1
53
16
13
12
20
22
21
55

ITEM NO.	PARTS NO.	PARTS NAME	Q'TY / PAGE	Q'TY / PACK	SPE PRICE IN NONE	P	I	R	BSI NO.	TO	FROM	SERIAL NO.	REMARKS
1	4401 906610	STAY-DEV-C7	1	N/A***									
2	4401 767540	BKT-SET-DEV	1	1/P									
3	4402 203810	HOLDER-PUSHER	2	1/P									
4	4402 203800	PUSHER-DEV	2	1/P									
5	4402 807530	SPRING-SET-DEVF	2	5/P									
7	4402 309350	HANDLE-SET-DEV	1	1/P									
8	4400 325930	PIN-BKT-CON-H	1	10/P									
9	4401 767560	SPL-SET-DEV	1	1/P									
10	4401 767570	INS-ENT-DRUM	1	1/P									
12	4401 774770	ROL-RGST-U	1	1/KP									
13	4407 547350	GEAR-0.8-20	1	1/P									
14	4407 983940	BUSH-8S-BEARING	2	5/P									
15	4407 924200	BRG-LF106030	2	1/P									
16	4346 312020	PIN	1	10/P									
17	4407 957140	SPRING-850	2	5/P									
20	4401 905330	BRKT-RAIL-CLN2	1	1/P									
21	4401 760970	RAIL-CLN2	1	1/P									
22	4401 760980	MYLAR-RAIL-CLN2	1	5/P									
51	4842 040060	TPAN40*08MSZN3L	8	50/P									
52	4842 040062	TPAN3014MSZN3L	2	50/P									
53	4842 040665	TPAN3006MSZN3L	1	50/P									
54	7405 005031	ERR050SKZN3A	3	50/P									
55	4842 040700	TZPAN4008MSZN3L	6	50/P									

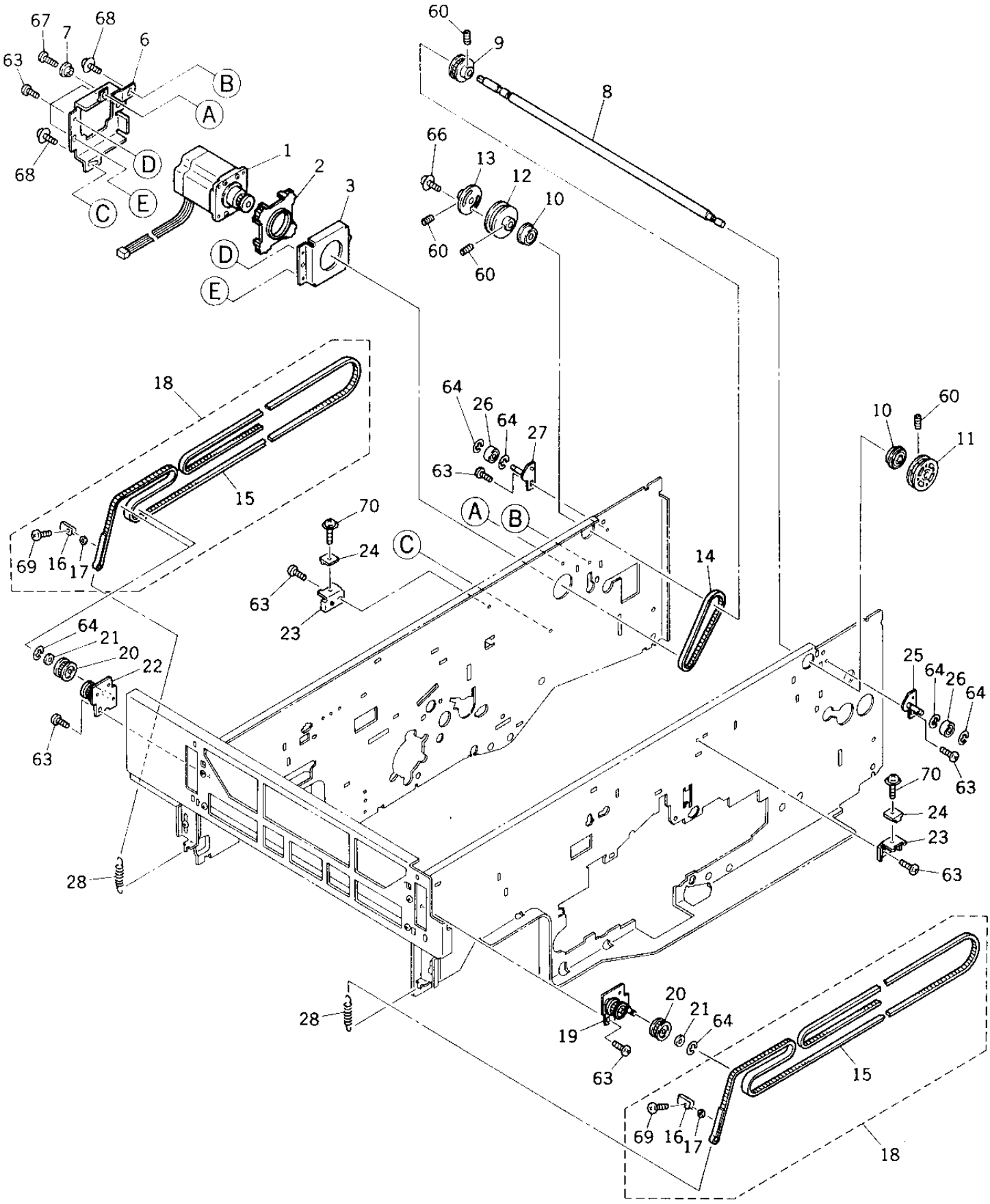
67
7
68
6
63
B
A
68
D
C
E
1
2
3
D
E
60
9
8
66
13
12
10
60
60
18
15
69
16
17
64
26
64
27
63
A
B
70
24
C
63
23
14
10
60
11
64
21
20
22
63
25
64
26
64
63
70
24
23
63
28
28
20
21
64
19
63
15
69
16
17
18

TOSHIBA

ITEM NO.	PARTS NO.	PARTS NAME	Q'TY / PAGE	Q'TY / PACK	SPE PRICE IN NONE	P	I	R	BSI NO.	TO	FROM	SERIAL NO.	REMARKS
1	4401 901320	K-MOT-SCAN	1	1/C									
2	4401 901390	DUMPER-MOTOR-S	1	1/P									
3	4408 502080	BRKT-MOTOR	1	1/P									
6	4402 868570	BRKT-MOT-SCAN	1	1/P									
7	4408 302680	BUSH-BRKT-SCAN	1	5/P									
8	4401 757610	SHAFT-CRG	1	1/P									
9	4408 309390	K-PLY-28-3M	1	1/P									
10	4407 545610	BRG-608ZZNR	2	1/P									
11	4408 309300	K-PLY-64-2M-F	1	1/P									
12	4408 309320	K-PLY-64-2M-R	1	1/P									
13	4408 309430	FLANGE-CRG	1	1/P									
14	4408 309290	BLT-75-3M-6.4	1	1/P									
15	4401 757650	BELT-2M-L2218	2	N/A***									
16	4401 757660	CLIP-BELT-SCAN	2	N/A***									
17	4401 757690	COLLAR-BELT-SCN	2	N/A***									
18	4401 757630	ASM-BELT-L2218	2	1/P									
19	4401 757710	K-BRKT-BELT-F	1	1/P									
20	4408 309130	PLY-22-BRG	2	1/P									
21	4346 211090	WASHER	2	10/P									
22	4401 757730	K-BRKT-BELT-R	1	1/P									
23	4407 909910	BKT-BELT	2	1/P									
24	4408 502390	HOLDER-BELT-2M	2	1/P									
25	4408 502310	K-BKT-BLT-CRG-F	1	1/P									
26	4408 502410	COLLAR-6-15	2	1/P									
27	4408 502350	K-BKT-BLT-CRG-R	1	1/P									
28	4402 217360	SPE100-120-0365	2	5/P									
60	4842 011082	9HSS40/05MSFB	8	50/P									
63	4842 040060	TPAN40*08MSZN3L	11	50/P									
64	7405 005031	ERR050SKZN3A	6	50/P									
66	7640 401051	ZPAN40*10MSZN3A	2	50/P									
67	4842 040061	TPAN40*10MSZN3L	1	50/P									
68	4842 040700	TZPAN4008MSZN3L	2	50/P									
69	7040 300811	PAN30*08MSZN3AI	2	50/P									
70	4842 040704	TZPAN4012MSZN3L	2	50/P									

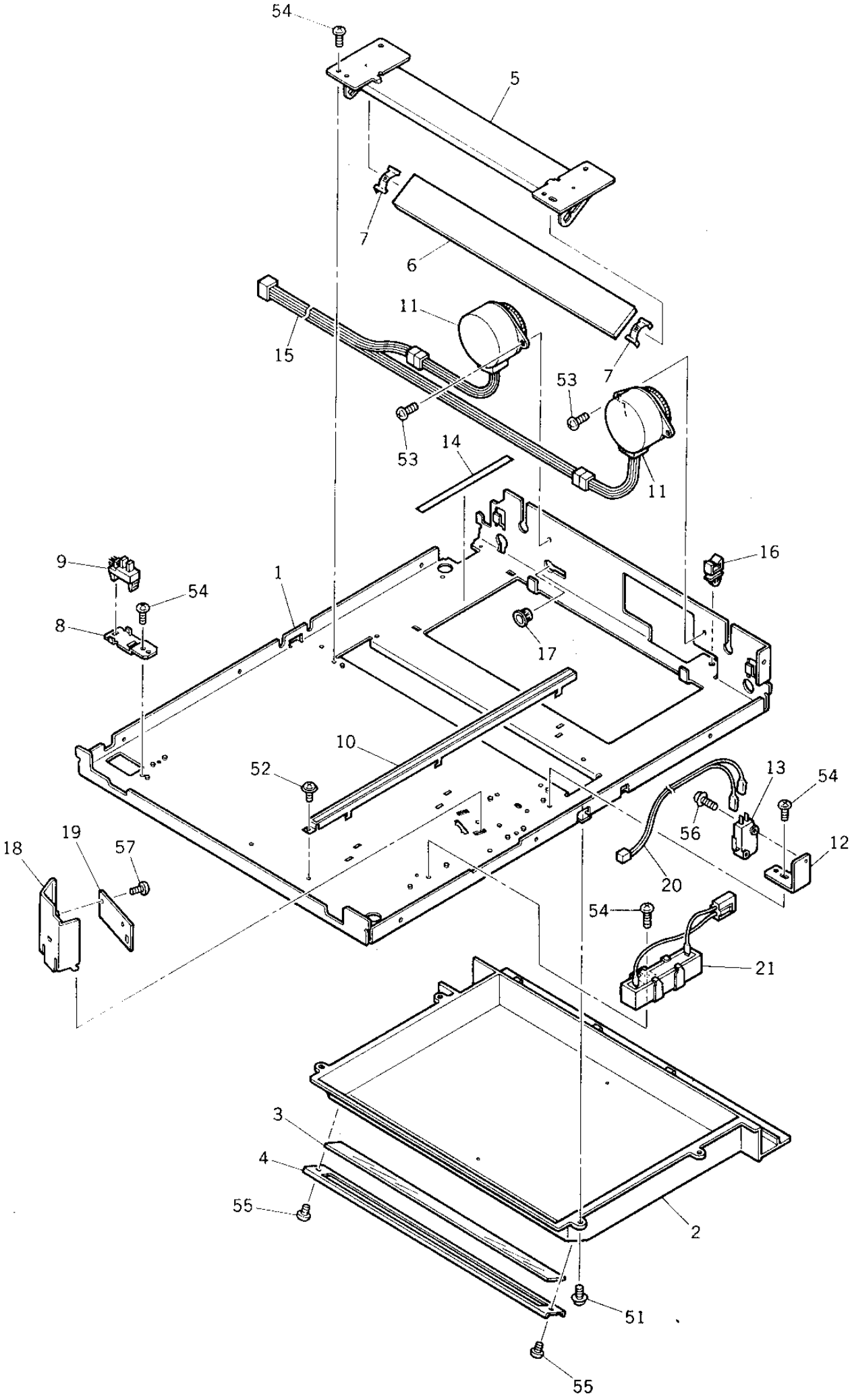
54
5
7
6
11
15
53
7
53
14
11
9
54
8
1
16
17
10
52
13
54
56
12
20
19
18
57
54
21
3
4
55
2
51
55

ITEM NO.	PARTS NO.	PARTS NAME	Q'TY / PAGE	Q'TY / PACK	SPE PRICE IN NONE	P	I	R	BSI NO.	TO	FROM	SERIAL NO.	REMARKS
1	4402 305060	BASE-OPT	1	N/A***									
2	4401 901720	COVER-MRR-6	1	1/PP									
3	4407 910290	GLASS-SLIT	1	1/C									
4	4402 305080	HOLDER-GLASS	1	1/P									
5	4401 755870	K-BKT-MRR-6	1	1/P									
6	4401 757340	MIRROR-6	1	1/C									
7	4401 756860	SPL-MIRROR-6	2	5/P									
8	4401 757480	BKT-SZ-HOME-L	1	1/P									
9	4400 902350	SCO-SX460-P2	1	1/C									
10	4401 757270	K-RAIL-LENS	1	1/P									
11	4402 305100	K-MOT-LENS-MRR	2	1/C									
12	4401 757430	BKT-SW-HOME-M	1	1/P									
13	4407 552270	SM-D2MV-01-1C3	1	1/P									
14	4401 757310	SHEET-RAIL-CRG3	1	1/P									
15	4401 796270	WH-SUB-LNSMRR	1	1/P									
16	4843 390854	CLP/W-LWS-1U	1	5/P									
17	4842 414630	GMT-OCB-500	1	10/P									
18	4401 757450	COVER-AES	1	1/P									
19	4401 795410	PWA-F-AES-150	1	1/SB									
20	4401 796210	WH-MRR-AES-150	1	1/P									
21A	4407 917980	ASM-D-HTR-S-115	1	1/P									MF-6550U
21B	4407 918000	ASM-D-HTR-S-220	1	1/P									MF-6550E
21C	4407 918010	ASM-D-HTR-S-240	1	1/P									MF-6550A
21H	4407 918010	ASM-D-HTR-S-240	1	1/P									AUD
51	4842 040700	TZPAN4008MSZN3L	4	50/P									
52	4842 040690	TZPAN3006MSZN3L	1	50/P									
53	7040 400811	PAN40*08MSZN3AI	2	50/P									
54	4842 040060	TPAN40*08MSZN3L	7	50/P									
55	4842 040849	PTBR40*08MSZN3A	2	50/P									
56	7040 301411	PAN30*14MSZN3AI	1	50/P									
57	4842 040895	PTBR30*06MSZN3A	2	50/P									

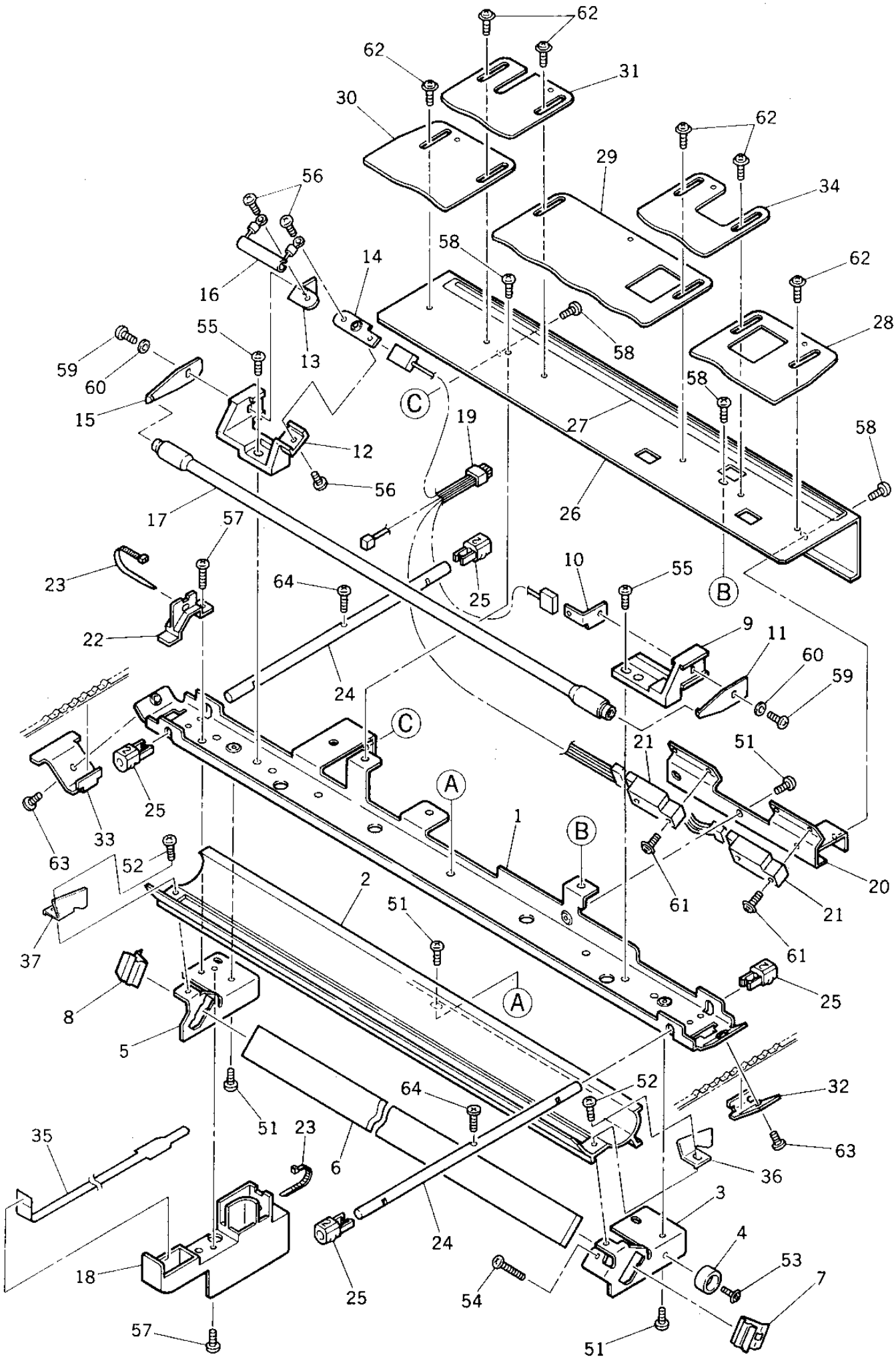
62
62
31
30
62
29
34
56
58
14
62
16
28
55
58
59
13
60
58
15
C
19
27
58
12
56
26
17
57
10
55
23
64
25
B
22
9
11
60
24
59
C
21
51
A
25
1
B
33
63
52
2
20
61
21
51
61
37
25
8
A
5
64
52
32
51
23
63
35
6
36
3
24
4
53
18
25
54
7
57
51

TOSHIBA

ITEM NO.	PARTS NO.	PARTS NAME	Q'TY / PAGE	Q'TY / PACK	SPE PRICE IN NONE	P	I	R	BSI NO.	TO	FROM	SERIAL NO.	REMARKS
1	4401 756250	STAY-CRG-1	1	1/P									
2	4401 756330	REFL-F150	1	1/PP									
3	4401 757950	HOLDER-MRR-1F	1	1/P									
4	4402 305250	STOPPER-CRG-1F	1	5/P									
5	4401 757960	HOLDER-MRR-1R	1	1/P									
6	4401 757980	K-MIRROR-1	1	1/C									
7	4401 756290	SPL-MRR-1-F	1	1/P									
8	4401 756350	SPL-MRR-1-R	1	1/P									
9	4407 545210	HOLDER-LAMP-F	1	1/P									
10	4407 545220	BLADE-LAMP-F	1	1/P									
11	4407 755100	BLADE-LAMP-TH	1	1/P									
12	4401 756060	HOLDER-LAMP-R	1	1/P									
13	4401 901790	BLADE-LAMP-R-1	1	1/P									
14	4407 545250	BLADE-LAMP-R-2	1	1/P									
15	4401 756070	BLADE-LAMP-TH	1	1/P									
16	4401 799990	K-FU/T-084G4	1	1/P									
17A	4402 322460	LP-U300W17A-154	1	1/S									100V SERIES
17B	4402 322470	LP-E300W17A-154	1	1/S									200V SERIES
18	4401 756240	COVER-WH-EXPO	1	1/P									
19	4401 796330	WH-EXPO/APS-150	1	1/P									
20	4401 756340	BKT-APS	1	1/P									
21	4402 220780	SCO-GP2A22	2	1/C									
22	4401 756390	PUSHER-WH-EXPO	1	1/P									
23	4346 754010	SKB-BAND-1	2	5/P									
24	4401 756300	SHAFT-CRG-1	2	1/P									
25	4401 756310	FOOT-CRG-1	4	1/P									
26	4401 901740	COVER-CRG-1	1	1/PP									
27	4407 584580	LBL-INDEX-ORG	1	1/KP									
28	4402 305310	PLT-REFL-1	1	1/P									
29	4402 305330	PLT-REFL-3	1	1/P									
30	4402 305350	PLT-REFL-5	1	1/P									
31	4402 305340	PLT-REFL-4	1	1/P									
32	4401 757670	BKT-BELT-CRG1-F	1	1/P									
33	4401 757680	HOLDER-BELT-R	1	1/P									
34	4402 305320	PLT-REFL-2	1	1/P									
35	4401 756230	SHEET-WH-CRG-1	1	1/P									
36	4402 305260	REFL-SIDE-F	1	1/P									
37	4402 305270	REFL-SIDE-R	1	1/P									
51	7040 400611	PAN40*06MSZN3AI	6	50/P									
52	7040 300611	PAN30*06MSZN3A	2	50/P									
53	4842 040690	TZPAN3006MSZN3L	1	50/P									
54	7040 301611	PAN30*16MSZN3AI	1	50/P									
55	7040 400811	PAN40*08MSZN3AI	2	50/P									
56	7040 300660	PAN30*06BSDG	3	50/P									
57	4842 040709	TPPAN3006MSZN3A	2	50/P									
58	7040 300411	PAN30*04MSZN3A	4	50/P									
59	7040 300860	PAN30*08BSDG	2	50/P									
60	7401 003011	0SWAS030MSZN3A	2	50/P									
61	4842 040694	TZPAN3010MSZN3L	2	50/P									
62	4842 040853	TPPAN3004MSZN3L	6	50/P									
63	7040 401011	PAN40*10MSZN3AI	2	50/P									
64	7040 300811	PAN30*08MSZN3AI	2	50/P									

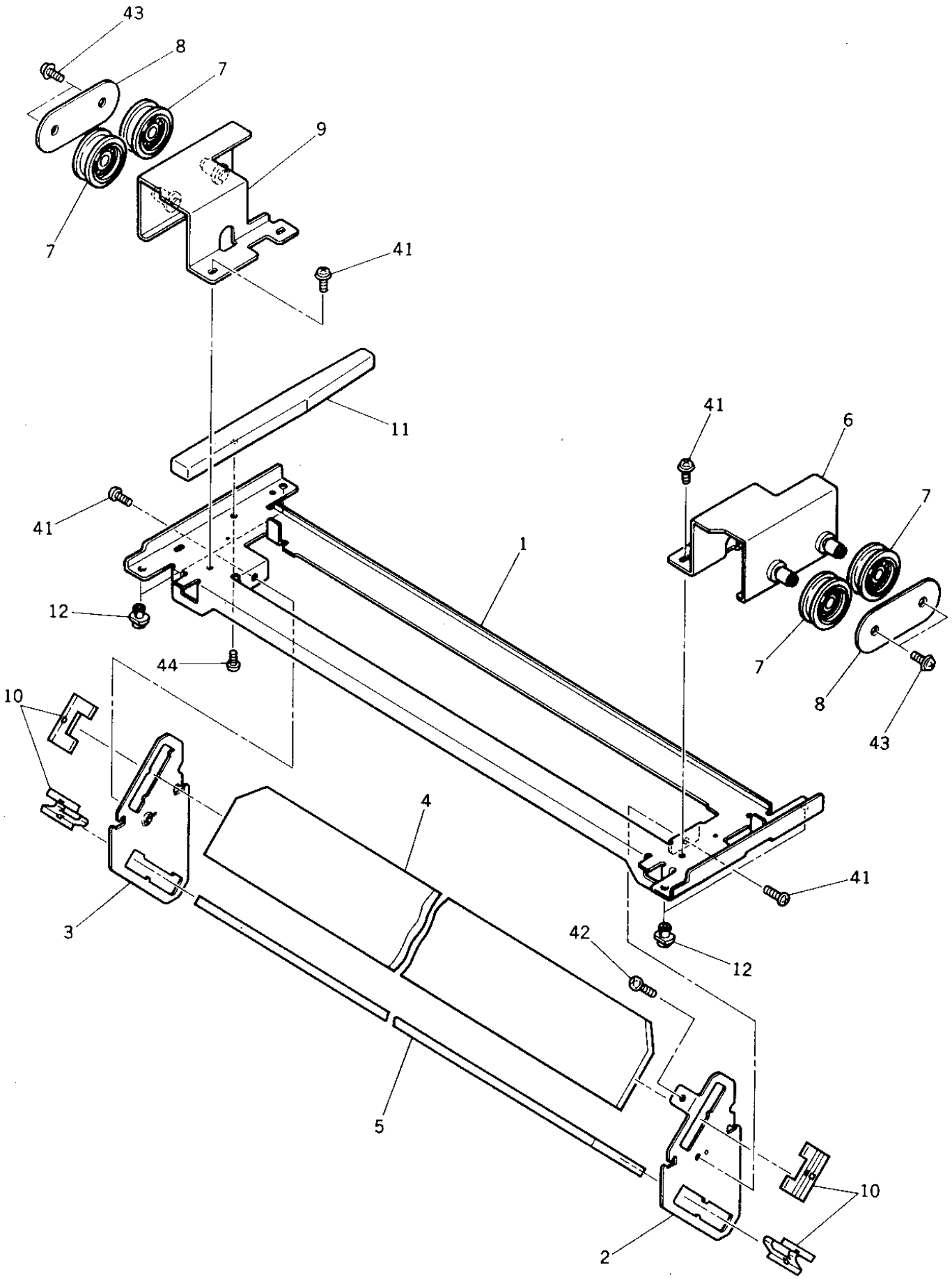
43
8
7
9
7
41
11
41
6
41
7
1
12
44
7
8
43
10
4
41
3
42
12
5
10
2

ITEM NO.	PARTS NO.	PARTS NAME	Q'TY / PAGE	Q'TY / PACK	SPE PRICE IN NONE	P	I	R	BSI NO.	TO	FROM	SERIAL NO.	REMARKS
1	4401 901890	BASE-CRG-2	1	1/P									
2	4401 756610	HOLDER-MRR-2F	1	1/P									
3	4401 756620	HOLDER-MRR-2R	1	1/P									
4	4401 756640	MIRROR-2	1	1/C									
5	4401 756650	MIRROR-3	1	1/C									
6	4401 756680	K-BKT-CRG2-F	1	1/P									
7	4408 309130	PLY-22-BRG	4	1/P									
8	4408 309120	PLATE-CRG	2	1/P									
9	4401 756690	K-BKT-CRG2-R	1	1/P									
10	4401 756840	SPL-MRR-L-150	4	1/P									
11	4401 756730	GUIDE-WH-CRG2	1	1/P									
12	4408 604590	FOOT-CRG-3.64	4	5/P									
41	7640 300851	ZPAN30*08MSZN3A	6	50/P									
42	7040 301211	PAN30*12MSZN3AI	1	50/P									
43	4842 040709	TPPAN3006MSZN3A	4	50/P									
44	4842 040895	PTBR30*06MSZN3A	1	50/P									

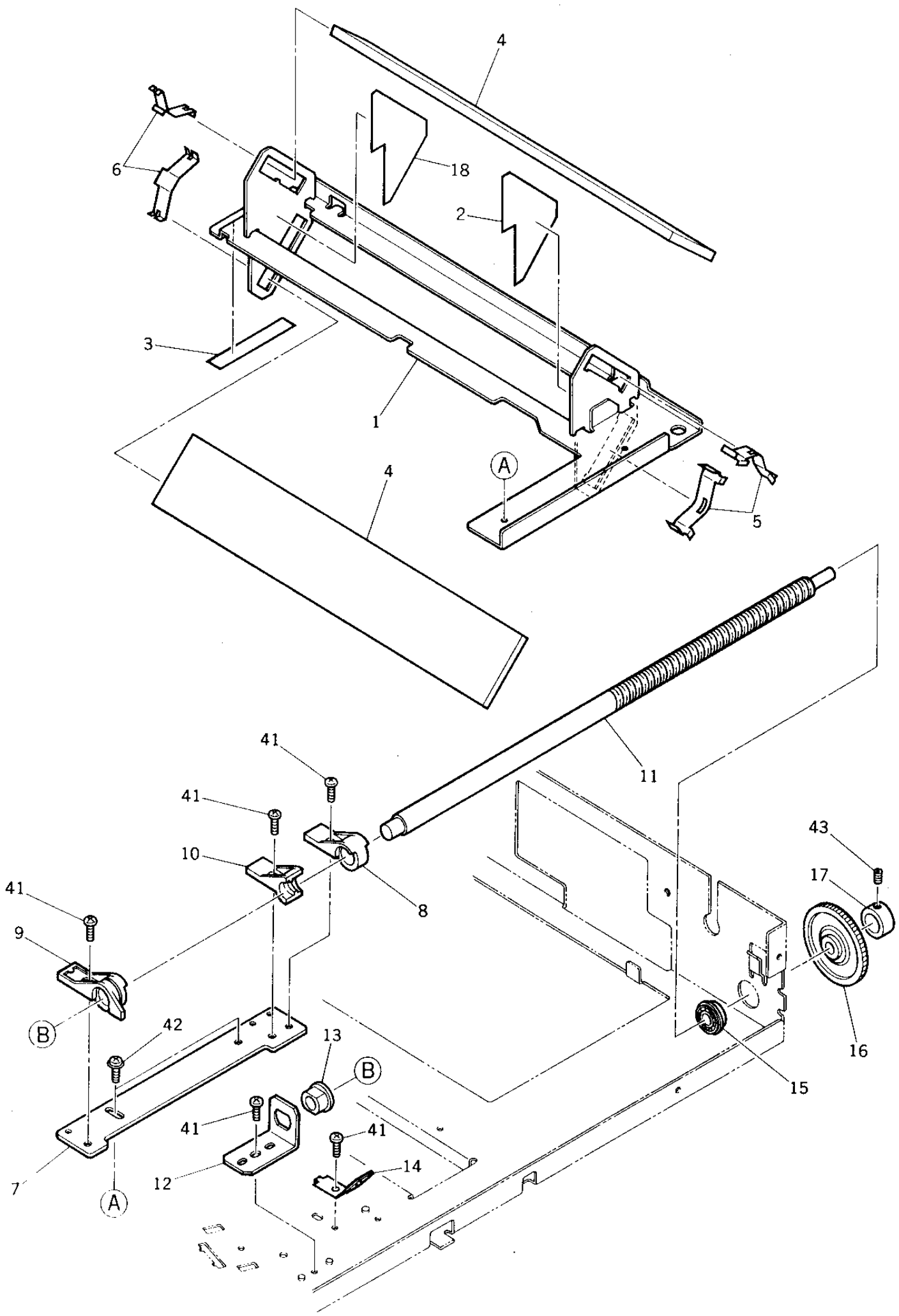
4
6
18
2
3
1
4
A
5
11
41
41
10
41
9
8
43
17
B
42
13
B
16
15
41
41
12
14
7
A

ITEM NO.	PARTS NO.	PARTS NAME	Q'TY / PAGE	Q'TY / PACK	SPE PRICE IN NONE	P	I	R	BSI NO.	TO	FROM	SERIAL NO.	REMARKS
1	4401 757390	K-BKT-MIRROR-4	1	1/P									
2	4401 757320	SEAL-H-CRG3-F	1	1/P									
3	4401 757250	SHEET-CRG-3	1	1/P									
4	4401 757200	MIRROR-4-5	2	1/C									
5	4407 910220	SPRING-MRR-4F	2	1/P									
6	4407 910210	SPRING-MRR-4R	2	1/P									
7	4401 757210	PLATE-MIRROR-4	1	1/P									
8	4407 910240	BUSH-M	1	1/P									
9	4401 757230	BUSH-M-SW	1	1/P									
10	4407 910230	BUSH-SCREW-M	1	1/P									
11	4401 757240	SHAFT-SCREW-M	1	1/P									
12	4401 757500	BKT-SHAFT-M	1	1/P									
13	4346 312030	BUSHING	1	5/P									
14	4401 757550	K-SPL-LNS-MRR	1	1/P									
15	4407 959970	BRG-696ZZNR	1	1/P									
16	4401 757410	GEAR-39H-R	1	1/P									
17	4407 547470	COLLAR-MOT-P	1	5/P									
18	4401 757330	SEAL-H-CRG3-R	1	1/P									
41	4842 040060	TPAN40*08MSZN3L	5	50/P									
42	7640 400851	ZPAN40*08MSZN3A	2	50/P									
43	4842 011083	9HSS40/06MSFB	1	50/P									

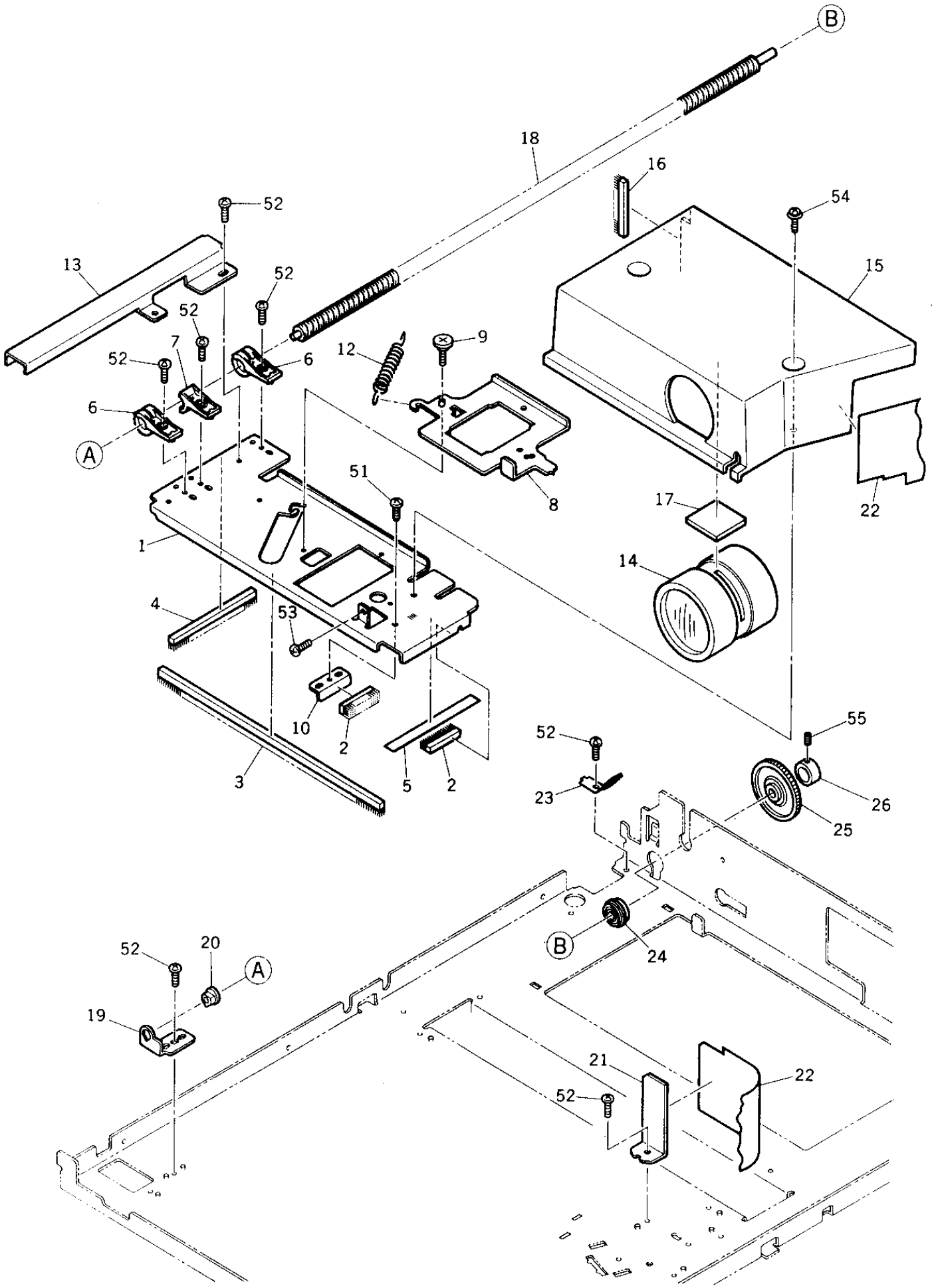
B
18
16
54
52
13
52
15
52
7
9
12
52
6
6
A
51
8
17
22
1
14
4
53
10
2
55
52
3
5
2
23
26
25
B
24
52
20
A
19
21
22
52

ITEM NO.	PARTS NO.	PARTS NAME	Q'TY / PAGE	Q'TY / PACK	SPE PRICE IN NONE	P	I	R	BSI NO.	TO	FROM	SERIAL NO.	REMARKS
1	4401 755970	PLATE-LENS-61	1	1/P									
2	4401 755910	SEAL-OPT-30	2	1/P									
3	4401 755920	SEAL-B-LENS-C	1	1/KP									
4	4401 755930	SEAL-B-LENS-R	1	1/KP									
5	4401 756970	SHEET-CRG-LENS	1	1/P									
6	4401 756990	BUSH-L	2	1/P									
7	4401 757570	BUSH-SCREW-L	1	1/P									
8	4401 757070	HOLDER-LENS-61	1	1/P									
9	4402 203820	SCREW-BKT-DEV	3	50/P									
10	4401 757020	BKT-BRUSH-LNS	1	1/P									
12	4401 757350	SPE080-100-0387	1	5/P									
13	4401 757100	ACT-SW-HOME-L	1	1/P									
14	4401 757590	LENS-217.38-61	1	1/C									
15	4401 757290	COVER-LENS	1	1/PP									
16	4401 755940	SEAL-COV-LENS-R	1	1/KP									
17	4401 757300	CUSHION-LENS	1	1/P									
18	4401 757460	SHAFT-SCREW-L	1	1/P									
19	4401 757490	BKT-SHAFT-L	1	1/P									
20	4408 508790	BUSH-4-8-10-5.5	1	5/P									
21	4401 757370	BKT-MYLAR-OPT	1	1/P									
22	4401 757380	MYLAR-OPT	1	1/KP									
23	4401 757550	K-SPL-LNS-MRR	1	1/P									
24	4407 959970	BRG-696ZZNR	1	1/P									
25	4401 757410	GEAR-39H-R	1	1/P									
26	4407 547470	COLLAR-MOT-P	1	5/P									
51	4842 040666	TPAN3008MSZN3L	1	50/P									
52	4842 040060	TPAN40*08MSZN3L	8	50/P									
53	7040 300611	PAN30*06MSZN3A	1	50/P									
54	4842 040700	TZPAN4008MSZN3L	2	50/P									
55	4842 011083	9HSS40/06MSFB	1	50/P									
22	4401 757380	MYLAR-OPT	1	1/KP									

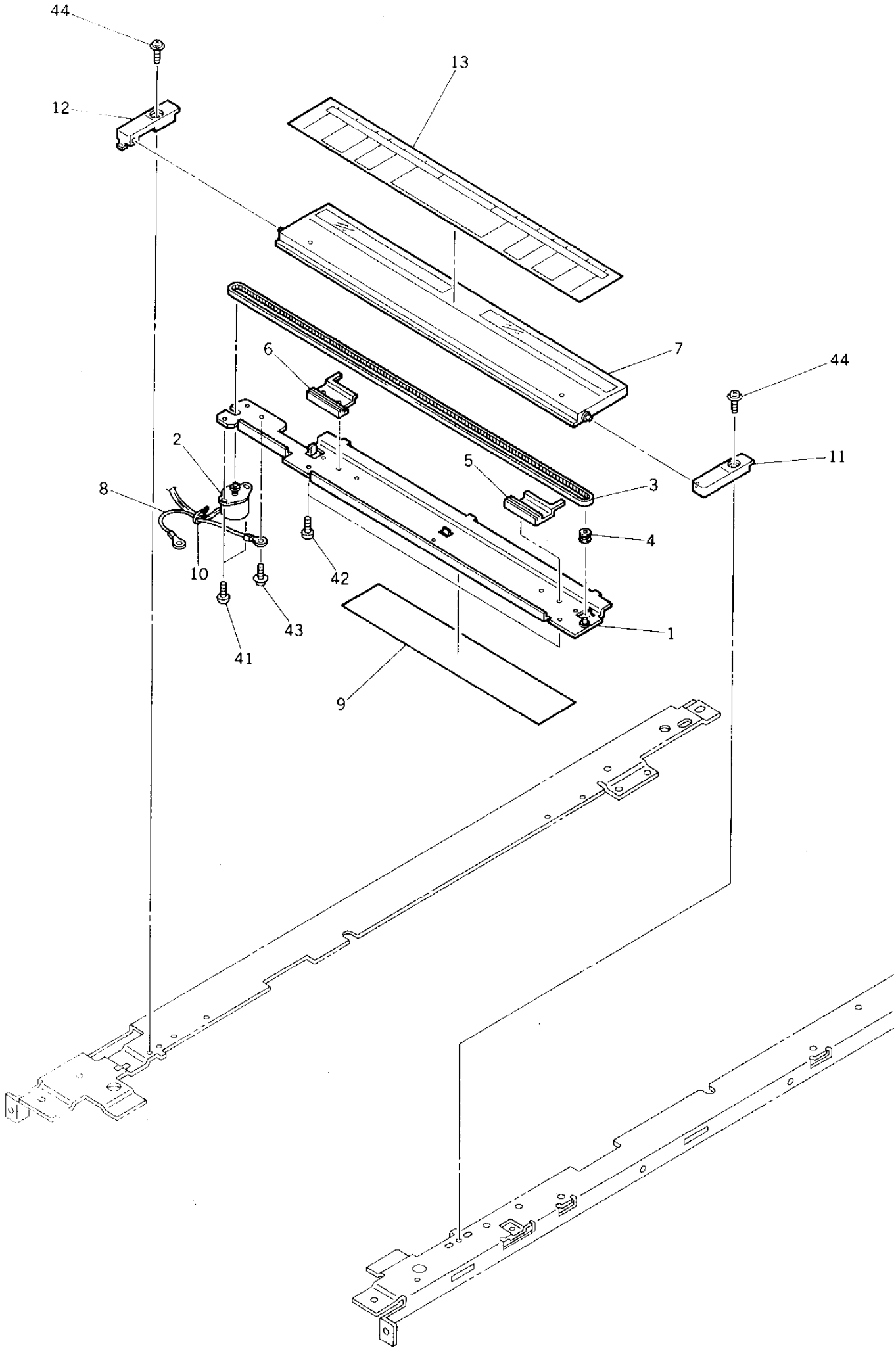
44
13
12
7
6
44
11
2
5
3
8
4
10
42
43
41
1
9

ITEM NO.	PARTS NO.	PARTS NAME	Q'TY / PAGE	Q'TY / PACK	SPE PRICE IN NONE	P	I	R	BSI NO.	TO	FROM	SERIAL NO.	REMARKS
1	4401 756470	K-BASE-IND	1	1/P									
2	4401 905430	K-M/P-DCM-152	1	1/C									
3	4402 218100	BELT-106400-2K	1	1/P									
4	4407 952410	COLLAR-IND	1	10/P									
5	4401 756500	INDICATOR-F-150	1	1/P									
6	4401 756510	INDICATOR-R-150	1	1/P									
7	4401 756530	K-COVER-IND	1	1/P									
8	4402 220610	WH-IND-545	1	1/P									
9	4401 905420	SEAL-IND	1	1/KP									
10	4346 754010	SKB-BAND-1	1	5/P									
11	4402 218080	HINGE-STOPPER-F	1	1/P									
12	4401 756550	HINGE-STOPPER-R	1	1/P									
13A	4401 756570	LBL-SCALE-U	1	1/KP									USA SIZE
13B	4401 756580	LBL-SCALE-E	1	1/KP									EUR SIZE
41	7040 200411	PAN20*04MSZN3AI	2	50/P									
42	7044 300611	FLT30*06MSZN3AI	2	50/P									
43	4842 040690	TZPAN3006MSZN3L	1	50/P									
44	7043 401013	BID40*10MSCR1AI	2	50/P									

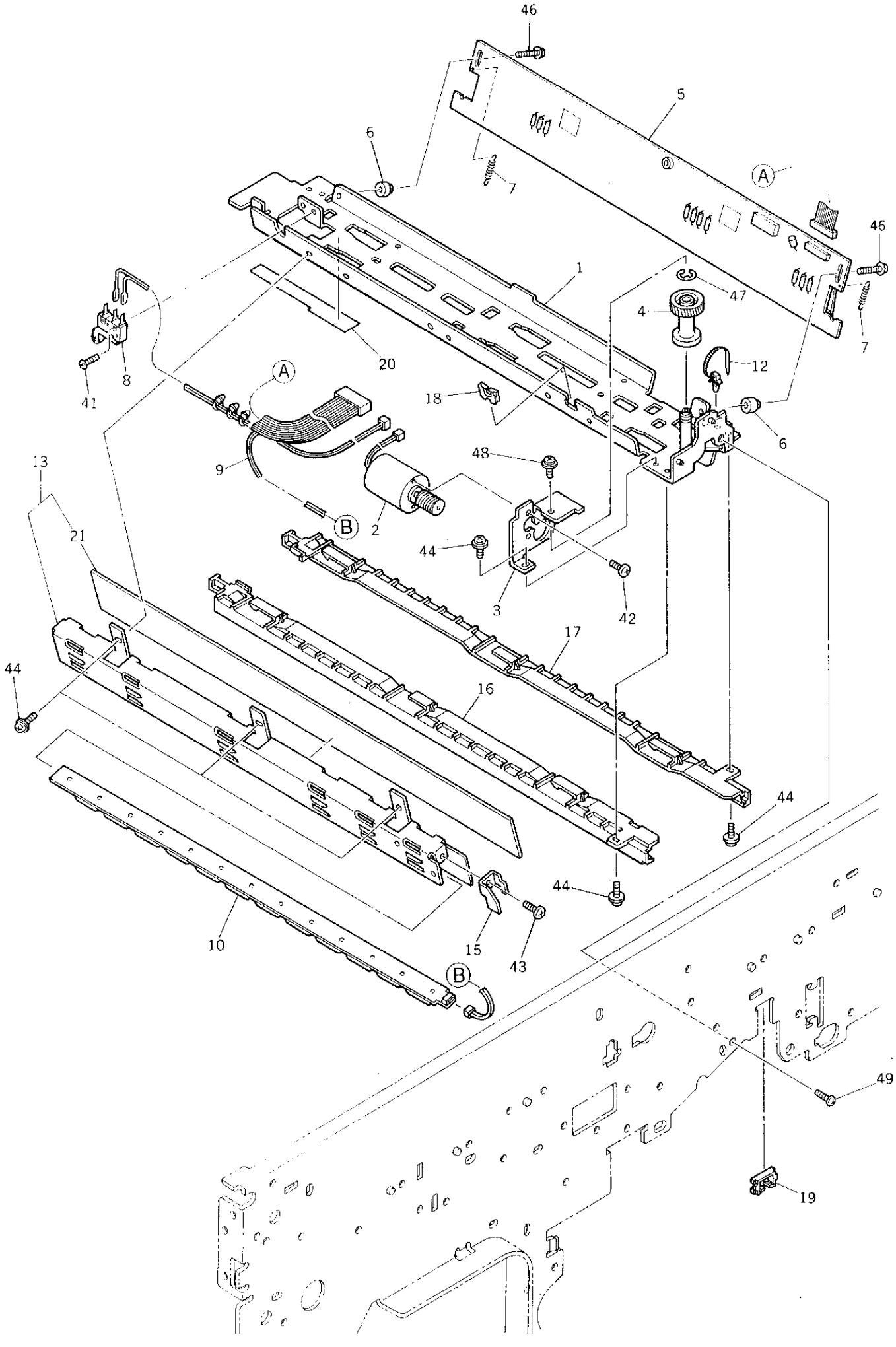
46
5
6
7
A
46
1
47
4
7
20
12
8
41
A
18
6
48
13
9
B
2
21
44
3
42
17
44
16
44
44
10
15
43
B
49
19

ITEM NO.	PARTS NO.	PARTS NAME	Q'TY / PAGE	Q'TY / PACK	SPE PRICE IN NONE	P	I	R	BSI NO.	TO	FROM	SERIAL NO.	REMARKS
1	4402 308350	K-BRKT-CH-M	1	1/P									
2	4402 308700	K-MOT-CH-CLN-M	1	1/C									
3	4402 308380	STAY-MOT-CLN	1	1/P									
4	4408 512060	WORM-WH-22-16	1	1/P									
5	4402 321290	PWA-F-DCH-154	1	1/SB									
6	4408 302850	BOSS-DCH	2	5/P									
7	4408 302860	SPRING-DCH	2	5/P									
8	4407 966810	SM-SS01GL2T	1	1/D									
9	4402 321910	WH-DCH-CLN-154	1	1/P									
10	4402 322440	LP-ERS-154	1	1/C									
12	4400 902490	BAND-PS100	1	5/P									
13	4402 308440	K-HLDR-LAMP-ERS	1	1/KP									
15	4402 308430	STOPPER-PWA-PCL	1	1/P									
16	4402 308400	RAIL-CH-M-L	1	1/P									
17	4402 308410	RAIL-CH-M-R	1	1/P									
18	4842 416026	GROMET-EHP-6U	1	5/P									
19	4843 390943	BD/W-EDS-3	1	10/P									
20	4402 308460	MYLAR-SW-CH-M	1	5/KP									
21	4402 308470	SEAL-ERS-LAMP	1	1/KP									
41	7040 201011	PAN20*10MSZN3AI	1	50/P									
42	7040 260611	PAN26*06MSZN3AI	2	50/P									
43	7040 300611	PAN30*06MSZN3A	1	50/P									
44	4842 040690	TZPAN3006MSZN3L	6	50/P									
46	7640 301251	ZPAN30*12MSZN3A	2	50/P									
47	7405 005031	ERR050SKZN3A	1	50/P									
48	7640 300611	ZPAN30*06MSZN3A	1	50/P									
49	4842 040118	THPAN4008MSZN3L	1	50/P									

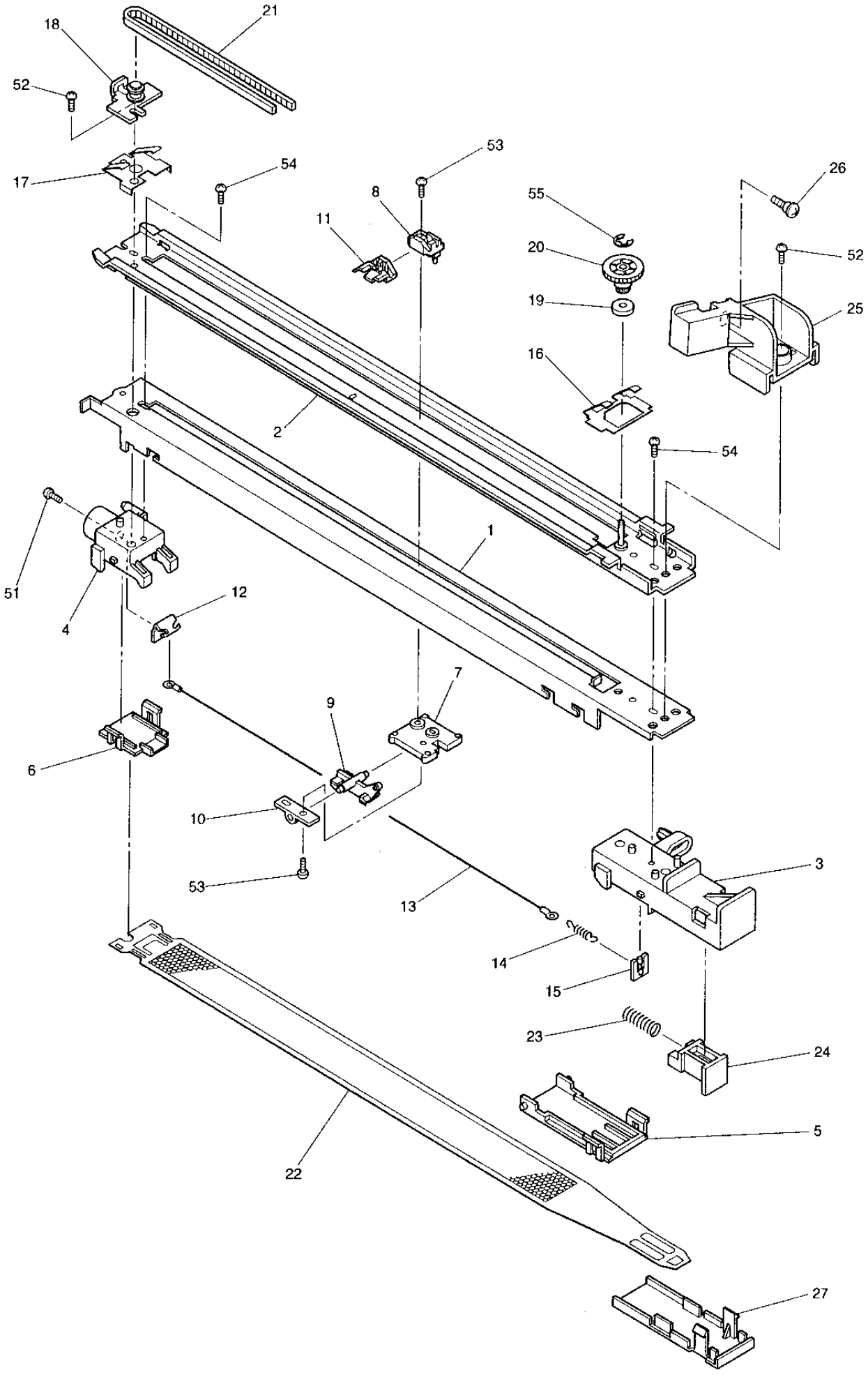
21
18
52
17
54
53
8
11
55
20
19
16
26
52
25
2
54
1
51
4
12
7
9
6
10
53
13
3
14
15
23
24
5
22
27

ITEM NO.	PARTS NO.	PARTS NAME	Q'TY / PAGE	Q'TY / PACK	SPE PRICE IN NONE	P	I	R	BSI NO.	TO	FROM	SERIAL NO.	REMARKS
0	4402 868400	ASM-CHARGER-M	1	1/S									
1	4402 868460	CASE-CH-M	1	1/P									
2	4402 308010	K-GUIDE-CH-L	1	1/P									
3	4402 308110	TERMINAL-M-F	1	1/P									
4	4402 308120	TERMINAL-M-R	1	1/P									
5	4402 868410	LID-CH-M-F	1	1/P									
6	4402 868420	LID-CH-M-R	1	1/P									
7	4401 763680	BASE-CLN-CH-M	1	1/P									
8	4402 308150	BASE-CLN-DCH	1	1/P									
9	4401 905050	K-BASE-PAD-CH-M	1	1/P									
10	4401 763730	HOLDER-BASE-PAD	1	1/P									
11	4401 763760	PUSHER-SW-M	1	1/P									
12	4402 308180	BRKT-PLUG	1	1/P									
13	4402 308040	WIRE-CH-060*398	1	5/S									
14	4407 402190	SPRING-TENS-CH	1	5/P									
15	4402 308190	HANGER-WIRE-CH	1	1/P									
16	4402 308280	SPL-PRESS-CH-F	1	1/P									
17	4402 308290	SPL-PRESS-CH-R	1	1/P									
18	4402 308200	K-BRKT-PLY-I-M	1	1/P									
19	4408 303080	FLANGE-10-3-1.5	1	1/P									
20	4408 303070	GEAR-PLY-18-12	1	1/P									
21	4401 763820	BELT-2M-800-2	1	1/P									
22	4402 868430	GRID-155	1	1/KP									
23	4407 725360	SPC-7.8-0.8-22	1	5/P									
24	4402 214250	TENSIONER-GRID	1	1/P									
25	4402 308090	STOPPER-CH-M	1	1/P									
26	4401 905040	SCREW-CH-M	1	10/P									
27	4402 308160	COVER-GRID-F	1	1/P									
51	7040 400808	PAN40*08SSDG	1	50/P									
52	7040 300611	PAN30*06MSZN3A	2	50/P									
53	4842 040840	PAN30*06PL-T-PA	2	50/P									
54	4842 040846	PTBR30*08MSZN3A	2	50/P									
55	7405 002031	ERR020SKZN3A	1	50/P									

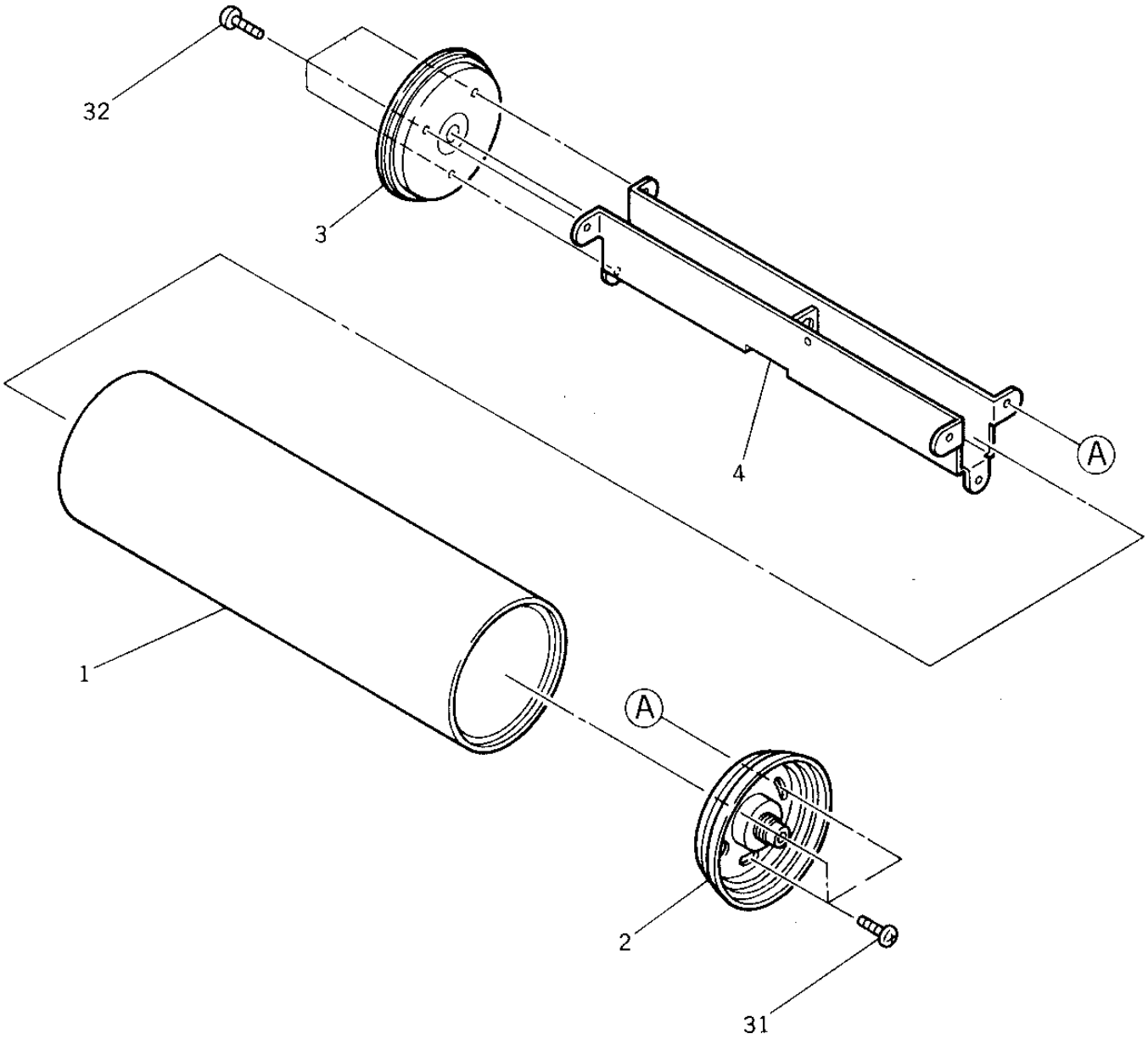
32
3
4
A
1
A
2
31

ITEM NO.	PARTS NO.	PARTS NAME	Q'TY / PAGE	Q'TY / PACK	SPE PRICE IN NONE	P	I	R	BSI NO.	TO	FROM	SERIAL NO.	REMARKS
1	6608 4995	PS-OD6560	1	SUPPLY									
2	4402 307800	K-FLANGE-DRUM-F	1	1/P									
3	4402 307900	K-FLANGE-DRUM-R	1	1/P									
4	4401 766100	BKT-JOINT-FLANG	1	1/P									
31	7640 400811	ZPAN40*08MSZN3A	3	50/P									
32	7040 400811	PAN40*08MSZN3AI	3	50/P									

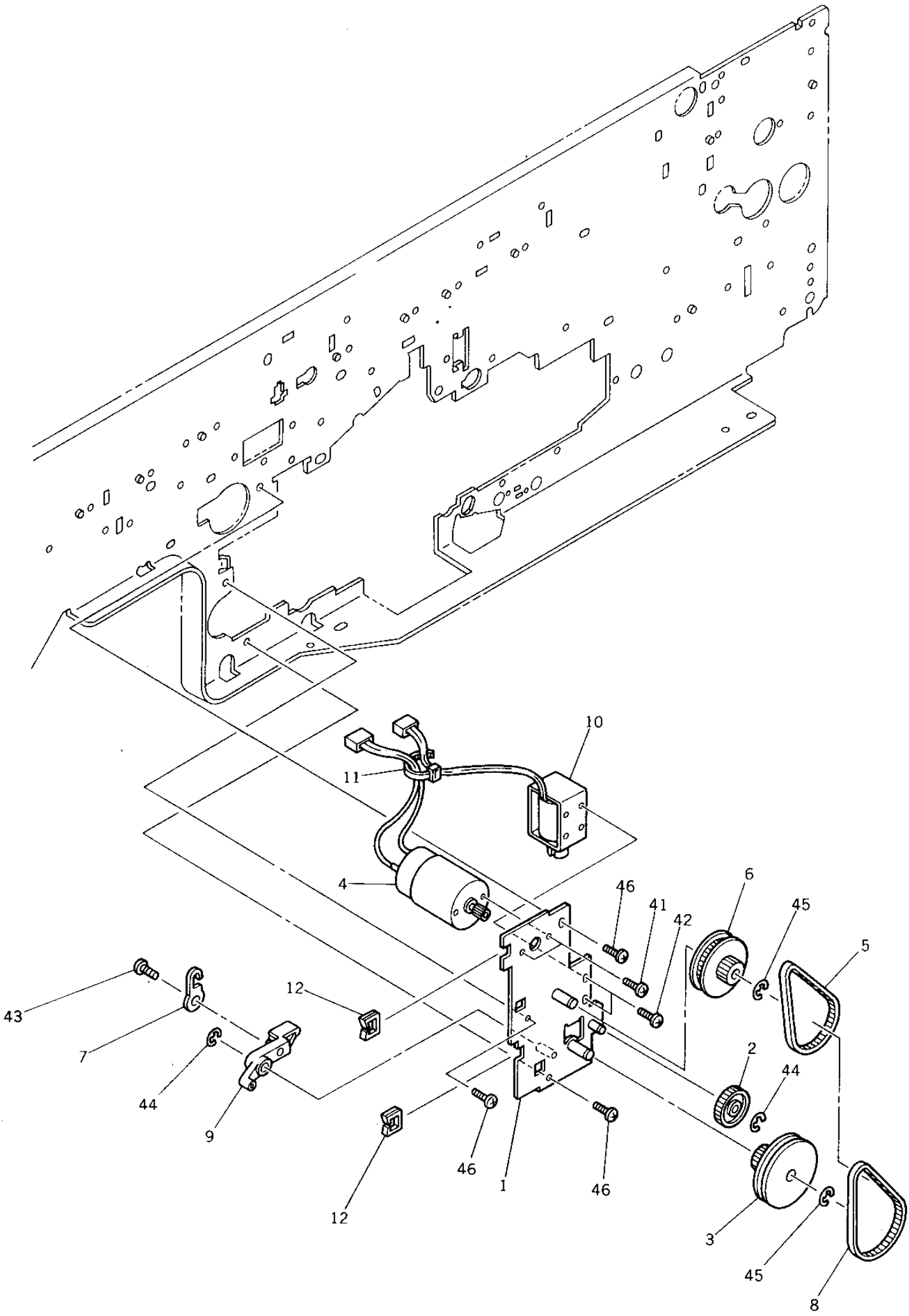
10
11
4
46
41
42
6
45
5
43
12
7
44
9
2
44
46
1
46
12
3
45
8

ITEM NO.	PARTS NO.	PARTS NAME	Q'TY / PAGE	Q'TY / PACK	SPE PRICE IN NONE	P	I	R	BSI NO.	TO	FROM	SERIAL NO.	REMARKS
1	4401 905710	K-PLATE-SND-MOT	1	1/P									
2	4401 760590	GEAR-25-F	1	1/P									
3	4401 760540	K-GEAR15-PLY72	1	1/P									
4	4401 905760	K-MOTOR-BRUSH	1	1/C									
5	4401 905730	BLT/T-2GT178-60	1	1/P									
6	4401 905750	PLY/T-22-60-2GT	1	1/P									
7	4408 311350	LINK-SND-CLN	1	1/P									
8	4401 905740	BLT/T-2GT214-40	1	1/P									
9	4401 760740	LEVER-CLAW-1	1	1/P									
10	4401 796960	SND-SCRP-150	1	1/D									
11	4843 391092	BD/W-T18S	1	10/P									
12	4842 416026	GROMET-EHP-6U	2	5/P									
41	7040 300411	PAN30*04MSZN3A	2	50/P									
42	7040 300611	PAN30*06MSZN3A	2	50/P									
43	4842 040849	PTBR40*08MSZN3A	1	50/P									
44	7405 005031	ERR050SKZN3A	2	50/P									
45	7405 007031	ERR070SKZN3A	2	50/P									
46	4842 040060	TPAN40*08MSZN3L	3	50/P									

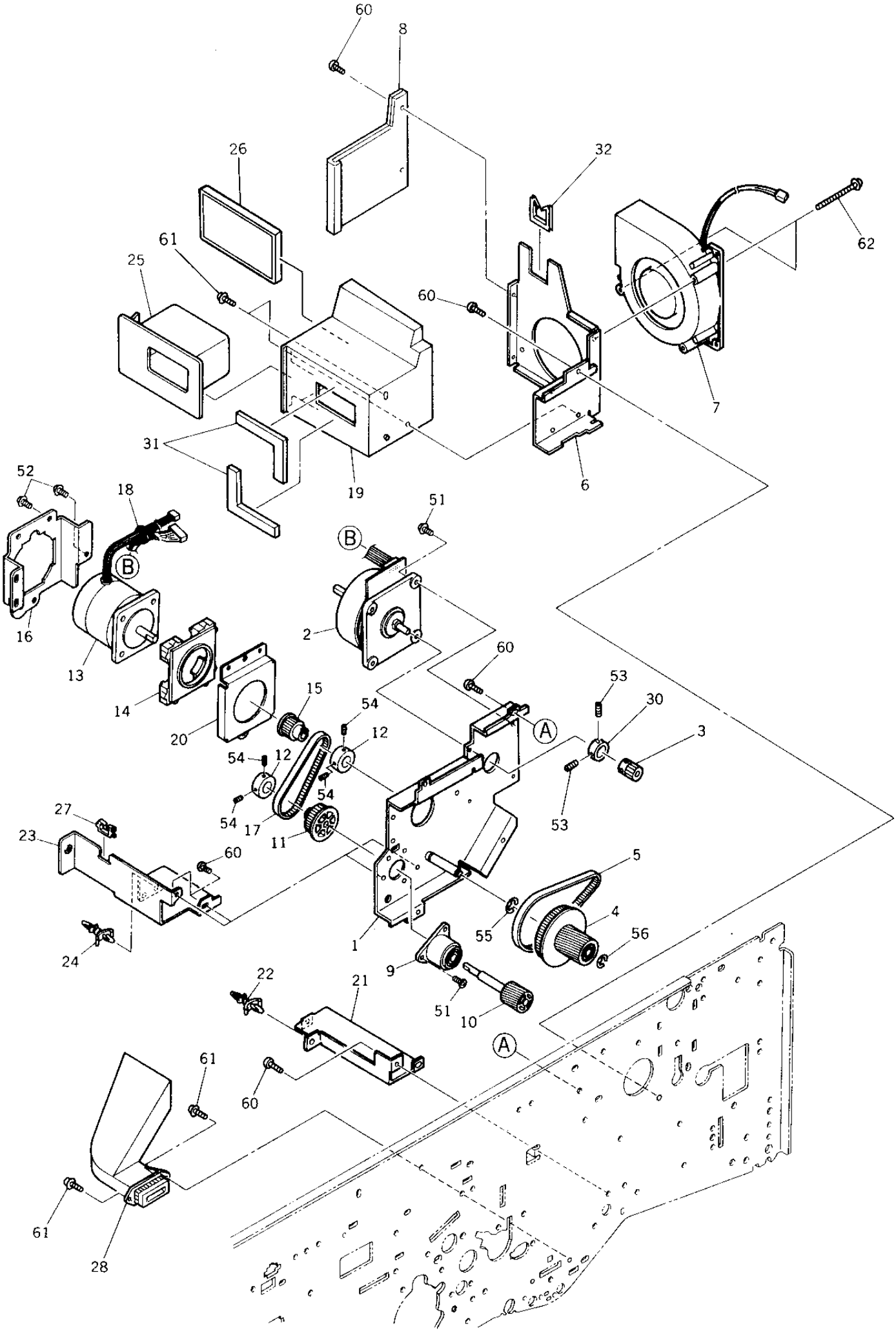
60
8
26
32
62
61
25
60
7
31
19
6
52
18
51
B
B
16
2
13
60
53
14
15
54
30
A
3
20
12
54
12
54
54
17
11
53
27
23
60
5
4
55
56
1
24
9
22
21
51
10
A
61
60
61
28

TOSHIBA

ITEM NO.	PARTS NO.	PARTS NAME	Q'TY / PAGE	Q'TY / PACK	SPE PRICE IN NONE	P	I	R	BSI NO.	TO	FROM	SERIAL NO.	REMARKS
1	4401 906510	K-BRKT-DRV-D/D	1	1/P									
2	4401 796820	M/DC-DEV-150	1	1/C									
3	4401 767450	PULLEY-12-P	1	1/P									
4	4401 906580	K-GEAR20-PLY49	1	1/P									
5	4401 906530	BLT/T-3GT315-60	1	1/P									
6	4401 906220	BRKT-FAN-DEV	1	1/P									
7	4401 916000	FAN-DEV-152	1	1/C									
8	4401 906300	K-COVER-CASE	1	1/P									
9	4401 760890	K-HOUSING-DRUM	1	1/P									
10	4401 760830	GEAR-20H-DRUM	1	1/P									
11	4401 906560	PULLEY-25	1	1/P									
12	4401 906660	FRANGE-22-DRUM	2	1/P									
13	4401 916040	M/P-DRM-152	1	1/C									
14	4407 902170	DUMPER-MOTOR	1	1/P									
15	4401 906670	PULLEY-18-POM	1	1/P									
16	4401 906700	BRKT-MOT-DRUM	1	1/P									
17	4401 906540	BLT/T-3GT180-60	1	1/P									
18	4346 754010	SKB-BAND-1	1	5/P									
19	4401 906210	CASE-FILTER-C7	1	1/P									
20	4408 502080	BRKT-MOTOR	1	1/P									
21	4401 906600	BRKT-LGC-R-R-C7	1	1/P									
22	4843 390868	PWZ-SPLS-3U	1	5/P									
23	4401 906570	BRKT-LGC-R-L-C7	1	1/P									
24	4843 390869	PWZ-SPLS-4U	1	5/P									
25	4401 906250	FILTER-DEV	1	1/C									
26	4402 309510	K-FILTER-DEV-2	1	1/C									
27	4843 390943	BD/W-EDS-3	1	10/P									
28	4401 906400	K-DUCT-DEV	1	1/P									
30	4401 767460	FLANGE-11-18	1	1/P									
31	4401 906230	SEAL-FILTER-DEV	2	5/P									
32	4843 391240	BD/W-EDS-2323U	1	5/P									
51	4842 040668	TPAN3010MSZN3L	5	50/P									
52	4842 040698	TZPAN4006MSZN3L	6	50/P									
53	4842 011064	9HSS30/06MSFB	2	50/P									
54	4842 011084	9HSS40/08MSFB	4	50/P									
55	7405 007031	ERR070SKZN3A	1	50/P									
56	7405 005031	ERR050SKZN3A	1	50/P									
60	4842 040060	TPAN40*08MSZN3L	3	50/P									
61	4842 040700	TZPAN4008MSZN3L	4	50/P									
62	4842 040043	TPAN4040MSZN-3L	2	50/P									
32	4843 391240	BD/W-EDS-2323U	1	5/P									

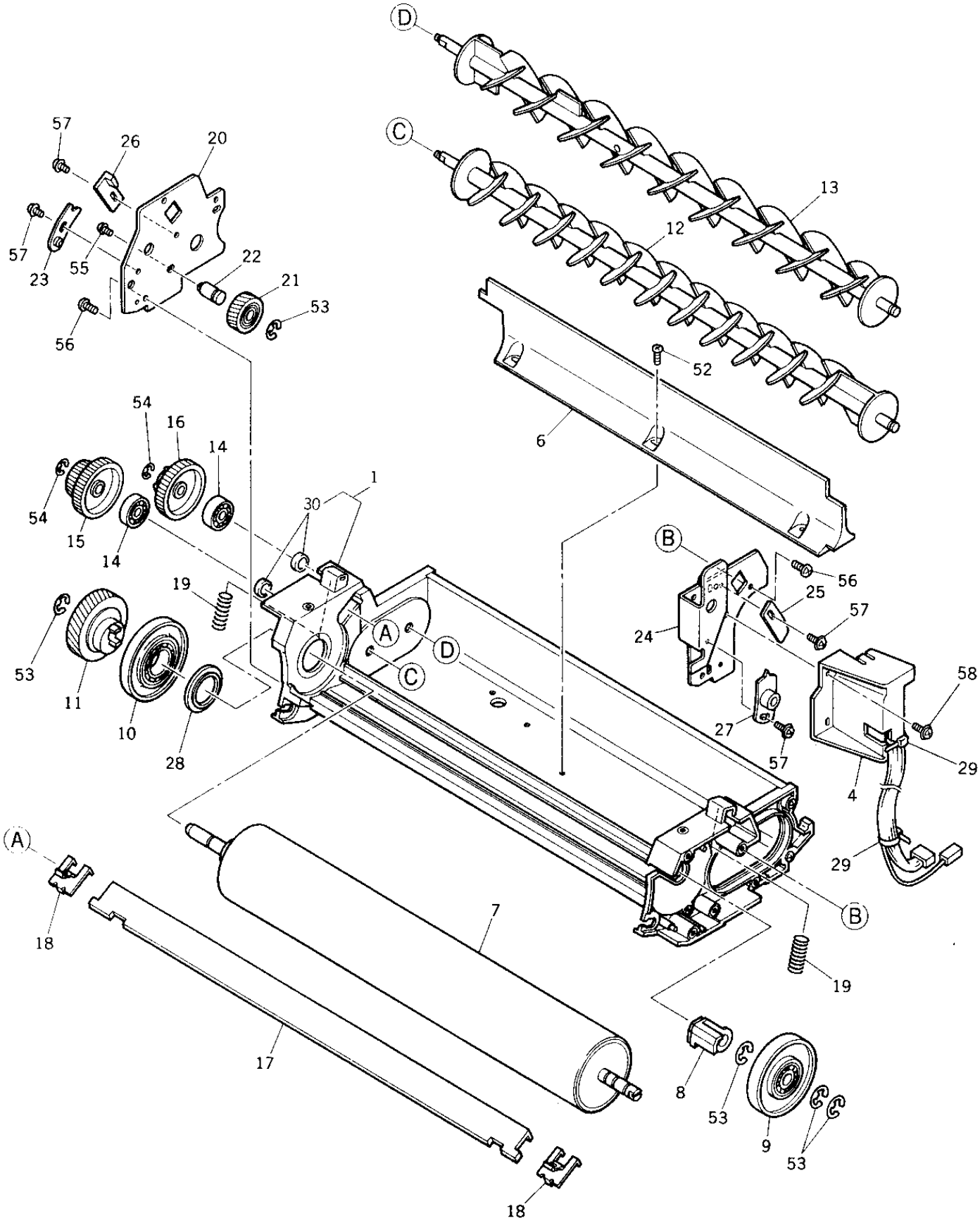
D
C
13
12
52
6
57
26
20
57
23
55
22
21
53
56
54
16
14
54
15
14
30
1
19
53
11
10
28
A
D
C
B
56
25
57
24
27
57
58
29
4
29
A
18
7
17
18
19
8
53
9
53
B

ITEM NO.	PARTS NO.	PARTS NAME	Q'TY / PAGE	Q'TY / PACK	SPE PRICE IN NONE	P	I	R	BSI NO.	TO	FROM	SERIAL NO.	REMARKS
0	4402 309110	ASM-FRM-DEV-C6E	1	1/C									1/2
1	4402 309290	K-CASING-DEV-C6	1	1/C									
4	4401 765850	HANDLE-DEV-F	1	1/P									
6	4401 765730	WALL-MIXER	1	1/P									
7	4401 765460	MG-ROLL-50-A6	1	1/KP									
8	4401 765510	BUSH-MG-F	1	1/P									
9	4401 765520	ROLL-GUIDE-F	1	1/P									
10	4401 765530	ROLL-GUIDE-R	1	1/P									
11	4401 765540	K-GEAR-36-MG	1	1/P									
12	4401 765480	MIXER-1-A6	1	1/KP									
13	4401 765490	K-MIXER-2-A6	1	1/C									
14	4408 710080	BRG-626DDLY-83	2	1/P									
15	4402 309180	GEAR-22-45-MIX1	1	1/P									
16	4401 765570	GEAR-45-MIX2	1	1/P									
17	4401 765620	DOCTOR-A6	1	1/P									
18	4401 765660	PUSHER-DOC	2	1/P									
19	4408 608890	SPC-8-0.8-22	2	5/P									
20	4402 309150	PLATE-DEV-R-C6E	1	1/P									
21	4401 765580	K-GEAR-20-IDL	1	1/P									
22	4401 765680	STUD-IDLE	1	1/P									
23	4401 766570	PUSHER-SFT-MG	1	1/P									
24	4401 765700	K-PLATE-DEV-F	1	1/P									
25	4401 765640	STOPPER-DOC-F	1	1/P									
26	4401 765650	STOPPER-DOC-R	1	1/P									
27	4408 608270	ADJ-MG-HIGHT	1	1/P									
28	4401 766050	SPACER-ROL-MG	1	5/P									
29	4843 391092	BD/W-T18S	2	10/P									
30	4402 309380	SEAL-VC6-10-2.5	2	5/P									
52	7043 300664	BID30*06BSCR3CI	3	50/P									
53	7405 007031	ERR070SKZN3A	5	50/P									
54	7405 003031	ERR030SKZN3A	2	50/P									
55	7640 400851	ZPAN40*08MSZN3A	1	50/P									
56	7040 300611	PAN30*06MSZN3A	6	50/P									
57	7640 300851	ZPAN30*08MSZN3A	4	50/P									
58	4842 040690	TZPAN3006MSZN3L	2	50/P									

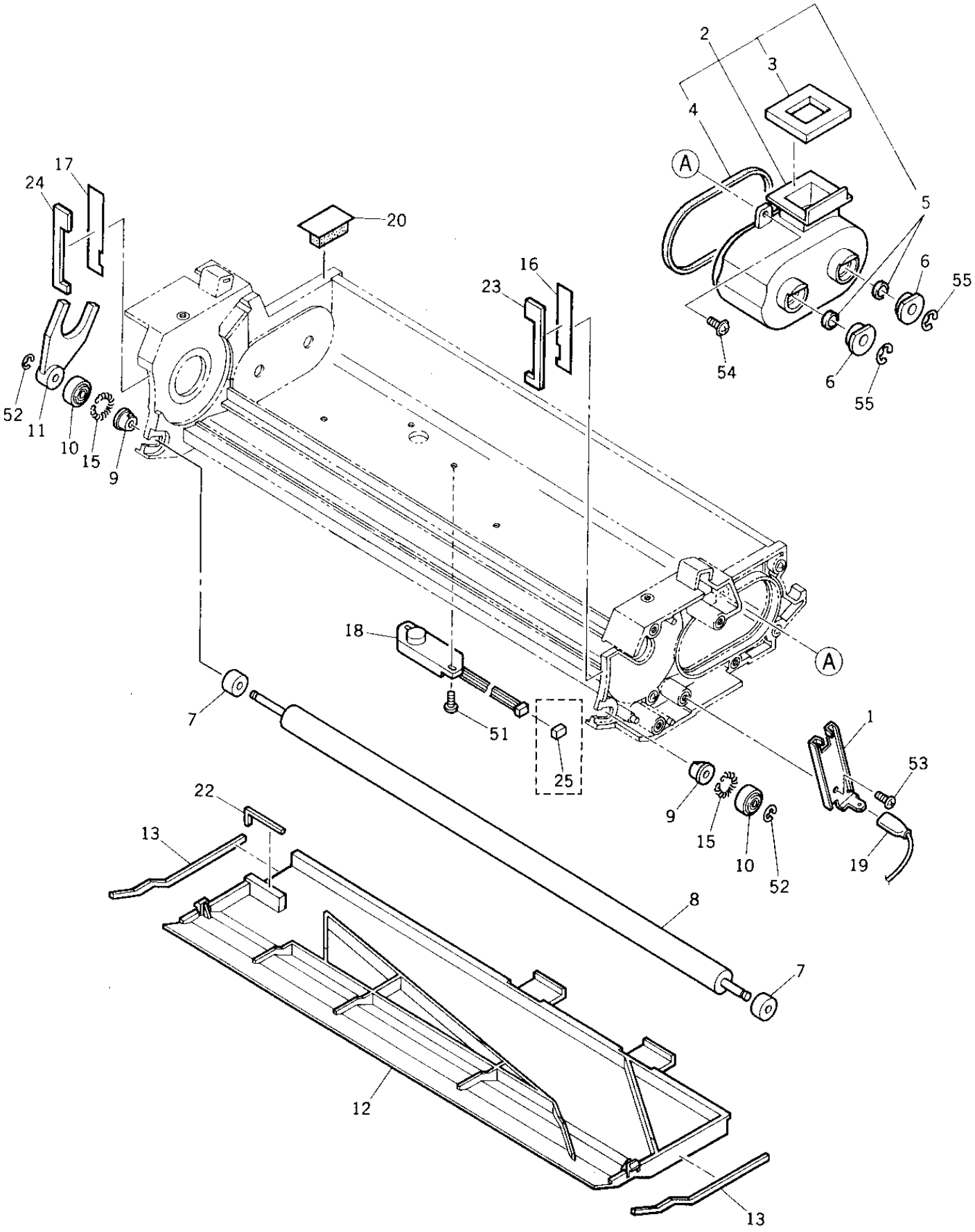
2
3
4
A
5
6
55
54
6
55
17
24
20
16
23
52
11
10
15
9
18
A
7
51
25
1
53
9
15
10
52
19
22
13
8
7
12
13

ITEM NO.	PARTS NO.	PARTS NAME	Q'TY / PAGE	Q'TY / PACK	SPE PRICE IN NONE	P	I	R	BSI NO.	TO	FROM	SERIAL NO.	REMARKS
0	4402 309110	ASM-FRM-DEV-C6E	1	1/C									2/2
1	4401 765600	PLATE-BIAS	1	1/P									
2	4402 309370	K-NOZZLE-MIX-C6	1	1/P									
3	4401 765960	SEAL-NOZZLE-TNR	1	5/P									
4	4401 765970	SEAL-NOZZLE	1	5/P									
5	4402 309380	SEAL-VC6-10-2.5	2	5/P									
6	4407 728150	BUSH-6	2	5/P									
7	4401 766590	SEAL-SIDE-RE	2	1/P									
8	4401 765770	ROLLER-RE	1	1/KP									
9	4401 765790	BUSH-4-8-6.5	2	1/P									
10	4401 765800	K-ROLL-G-SUB	2	1/P									
11	4401 765830	ONEWAY-DRV-MG	1	1/P									
12	4401 906110	DUCT-BTM-DEV-C7	1	1/P									
13	4401 765910	SEAL-BTM	2	5/P									
15	4401 765780	SPRING-RE	2	5/P									
16	4401 906060	SEAL-DEV-F-C7	1	5/P									
17	4401 906070	SEAL-DEV-R-C7	1	5/P									
18	4401 799710	SNSR-ATS-150	1	1/C									
19	4401 795760	WH-DEV-BIAS-150	1	1/P									
20	4402 309220	K-SEAL-CORNER	1	1/P									
22	4401 906120	SEAL-BTM-152	1	5/P									
23	4401 906080	SEAL-SIDE-F-C7	1	5/P									
24	4401 906090	SEAL-SIDE-R-C7	1	5/P									
25	4843 306488	J-0-175694-5	1	5/P									
51	7043 300664	BID30*06BSCR3CI	2	50/P									
52	7405 003031	ERR030SKZN3A	2	50/P									
53	7040 300611	PAN30*06MSZN3A	1	50/P									
54	7640 300851	ZPAN30*08MSZN3A	2	50/P									
55	7405 004031	ERR040SKZN3A	2	50/P									

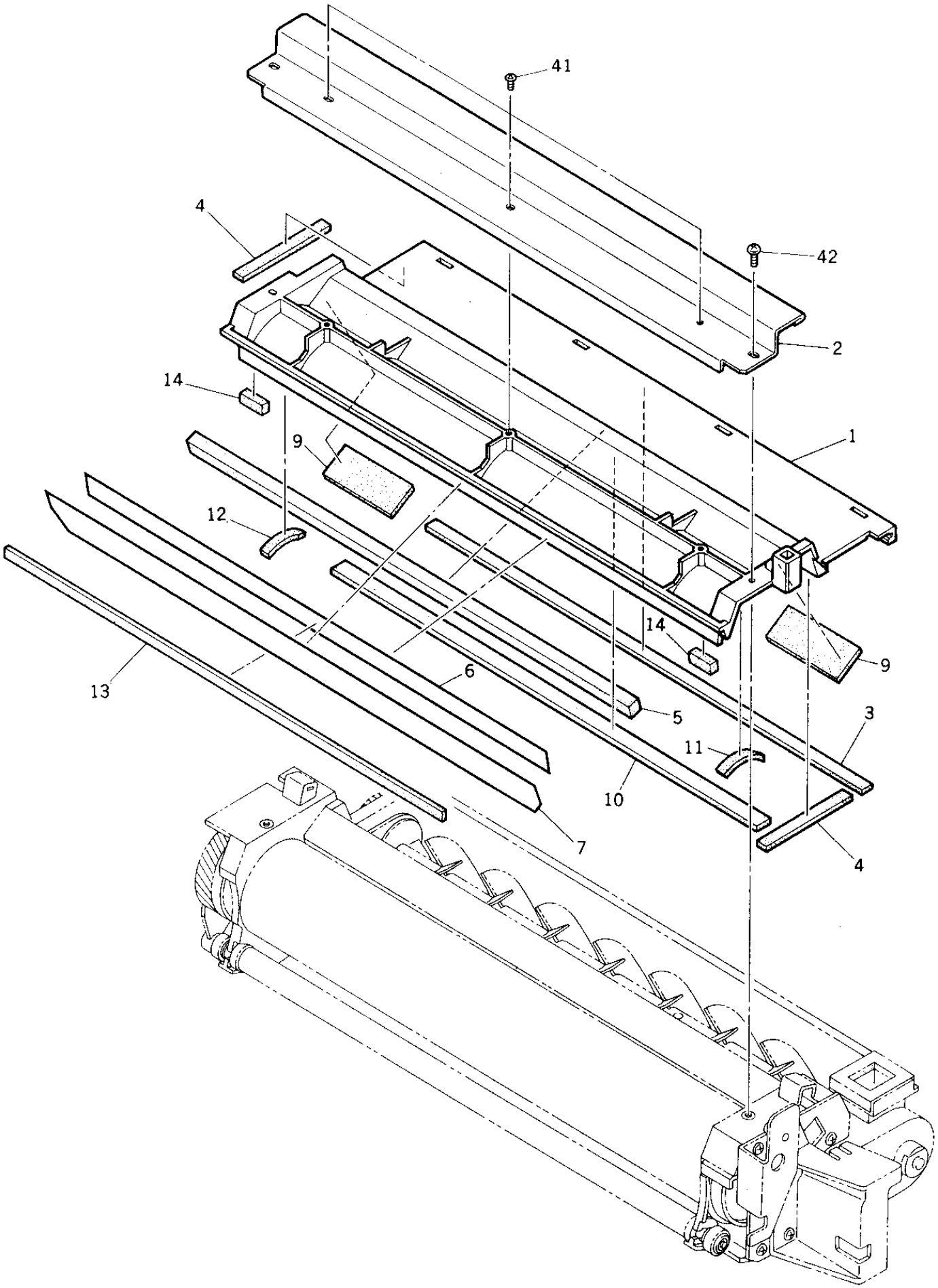
41
4
42
2
14
1
9
12
14
9
13
6
5
3
11
10
7
4

ITEM NO.	PARTS NO.	PARTS NAME	Q'TY / PAGE	Q'TY / PACK	SPE PRICE IN NONE	P	I	R	BSI NO.	TO	FROM	SERIAL NO.	REMARKS
0	4402 868700	ASM-COV-DEV-155	1	1/C									
1	4401 766470	COVER-DEV-150	1	1/P									
2	4401 766460	HANDLE-DEV-U	1	1/P									
3	4401 766520	SEAL-COV-1	1	1/KP									
4	4401 766530	SEAL-COV-2	2	5/P									
5	4401 766540	SEAL-DOCTOR-1	1	1/KP									
6	4401 766500	SEAL-SLEEVE	1	1/KP									
7	4402 868710	SEAL-DRUM-CD155	1	1/P									
9	4401 766030	SEAL-SIDE-DOC	2	5/P									
10	4401 766040	SEAL-WALL	1	5/P									
11	4401 766070	SEAL-COV-MG-2-F	1	5/P									
12	4401 766080	SEAL-COV-MG-2-R	1	5/KP									
13	4401 766490	SEAL-SPACE	1	5/KP									
14	4401 766390	SEAL-SIDE-SPACE	2	5/P									
41	4842 040495	PTBR30*06MSZN3A	3	50/P									
42	7043 300813	BID30*08MSCR1AI	2	50/P									

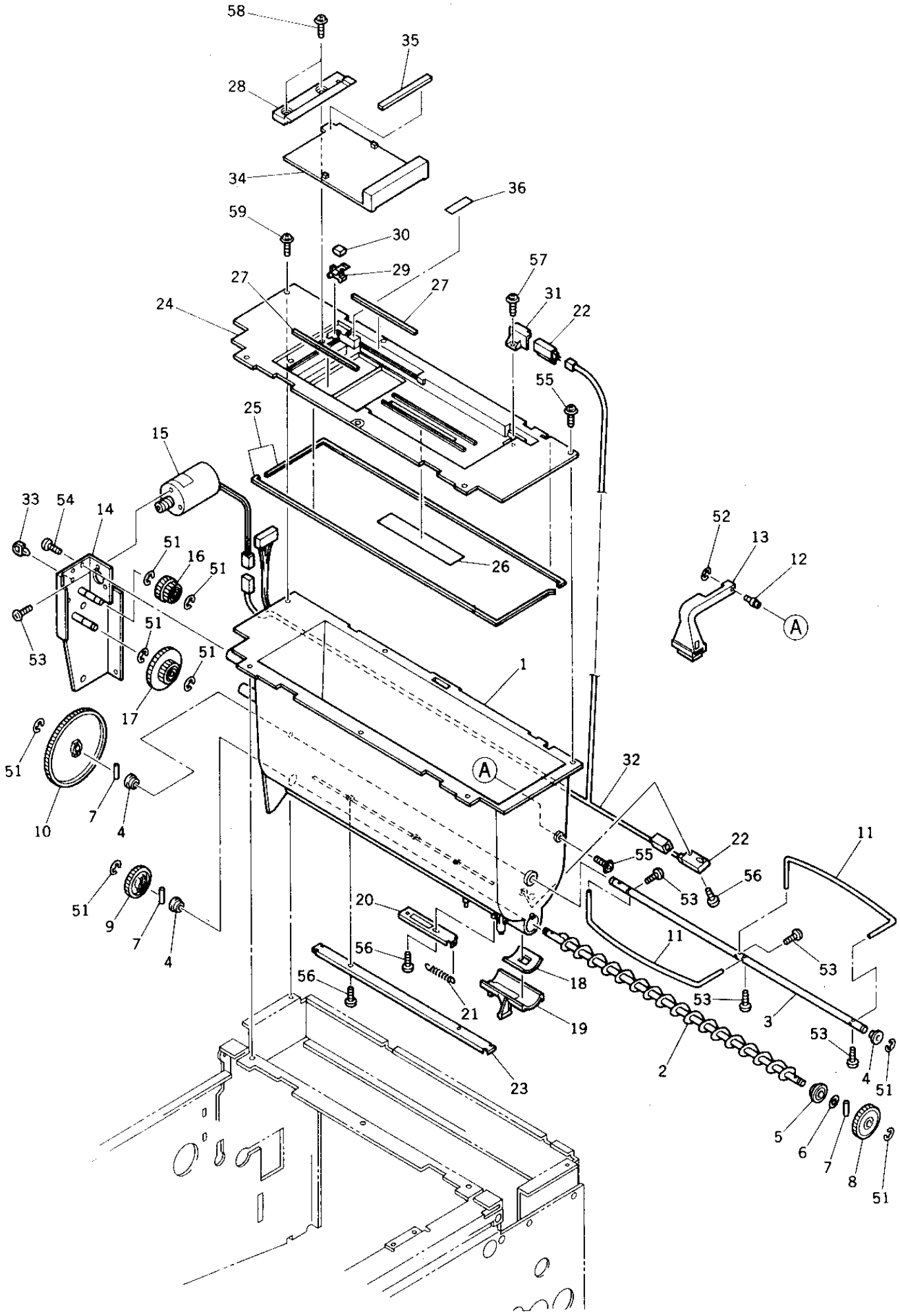
58
35
28
34
36
59
30
29
27
27
57
31
22
24
55
25
15
33
54
14
51
16
51
26
52
13
12
A
53
51
51
17
1
51
10
7
4
A
32
22
11
55
56
53
51
9
7
4
20
11
56
18
53
56
21
19
53
3
53
2
4
51
23
5
6
7
8
51

TOSHIBA

ITEM NO.	PARTS NO.	PARTS NAME	Q'TY / PAGE	Q'TY / PACK	SPE PRICE IN NONE	P	I	R	BSI NO.	TO	FROM	SERIAL NO.	REMARKS
1	4401 766630	K-HOPPER	1	1/C									
2	4401 766650	AUGER-HOP-1	1	1/P									
3	4401 766660	SHAFT-PDL	1	1/P									
4	4407 543330	BUSHING-6	3	5/P									
5	4407 543300	BUSH-HOPPER	1	5/P									
6	4346 314050	WASHER	1	10/P									
7	4346 312020	PIN	3	10/P									
8	4407 597990	GEAR-33-M	1	1/P									
9	4400 344380	GEAR-28-V	1	1/P									
10	4401 766710	GEAR-82	1	1/P									
11	4401 766670	PADDLE-HOP	2	1/P									
12	4401 766700	PIN-ARM-T-EMP	1	5/P									
13	4401 766680	K-ARM-T-EMP	1	1/P									
14	4401 766720	K-BRKT-HOP-DRV	1	1/P									
15	4401 766620	K-M/DC-TNR-150	1	1/C									
16	4401 766780	GEAR-25-20	1	1/P									
17	4401 766790	GEAR-55-20	1	1/P									
18	4401 766850	SEAL-HLDR-AUG-1	1	5/P									
19	4401 766820	COV-HOP-SLIDE	1	1/P									
20	4401 766830	PLATE-COV-HOP	1	1/P									
21	4400 340940	SPG-BKT-CON	1	5/P									
22	4407 551020	SE-RS801C-NO	2	1/P									
23	4401 766840	COV-HARNESS-HOP	1	1/P									
24	4401 766890	COVER-HOP	1	1/P									
25	4401 766940	SEAL-COV-HOP	2	1/KP									
26	4401 766950	SEAL-SLIT	1	5/P									
27	4401 766970	SEAL-CART-SIDE	2	5/P									
28	4401 766900	STOPPER-CART	1	1/P									
29	4401 766990	STOPPER-LID	1	1/P									
30	4401 766920	CUSHION-STP	1	5/P									
31	4401 766930	COVER-SW-T-OPN	1	1/P									
32	4401 798040	WH-HOPPER-150	1	1/P									
33	4843 391176	CLP/W-UAMS05L	1	5/P									
34A	4402 309850	LID-HOP-A-6	1	1/PP									TAD
34B	4402 309850	LID-HOP-A-6	1	1/PP									CSD
34C	4402 309860	LID-HOP-E/J-6	1	1/PP									EUD
34D	4402 309860	LID-HOP-E/J-6	1	1/PP									GSD
34E	4402 309860	LID-HOP-E/J-6	1	1/PP									FRD
34F	4402 309860	LID-HOP-E/J-6	1	1/PP									SED
34G	4402 309860	LID-HOP-E/J-6	1	1/PP									UKD
34H	4402 309850	LID-HOP-A-6	1	1/PP									AUD
34I	4402 309850	LID-HOP-A-6	1	1/PP									TWD
34J	4402 309850	LID-HOP-A-6	1	1/PP									SAD
34K	4402 309850	LID-HOP-A-6	1	1/PP									ASD
35	4401 766960	SEAL-LID	1	5/KP									
36	4401 766860	COVER-STOPPER	1	5/P									
51	7405 005031	ERR050SKZN3A	8	50/P									
52	7405 003031	ERR030SKZN3A	1	50/P									
53	7040 300411	PAN30*04MSZN3A	6	50/P									
54	7040 300611	PAN30*06MSZN3A	3	50/P									
55	7043 300613	BID30*06MSCR1AI	3	50/P									
56	4842 040495	PTBR30*06MSZN3A	4	50/P									
57	4842 040846	PTBR30*08MSZN3A	1	50/P									
58	4842 040850	PTBR40*10MSZN3A	2	50/P									
59	4842 040702	TZPAN4010MSZN3L	4	50/P									

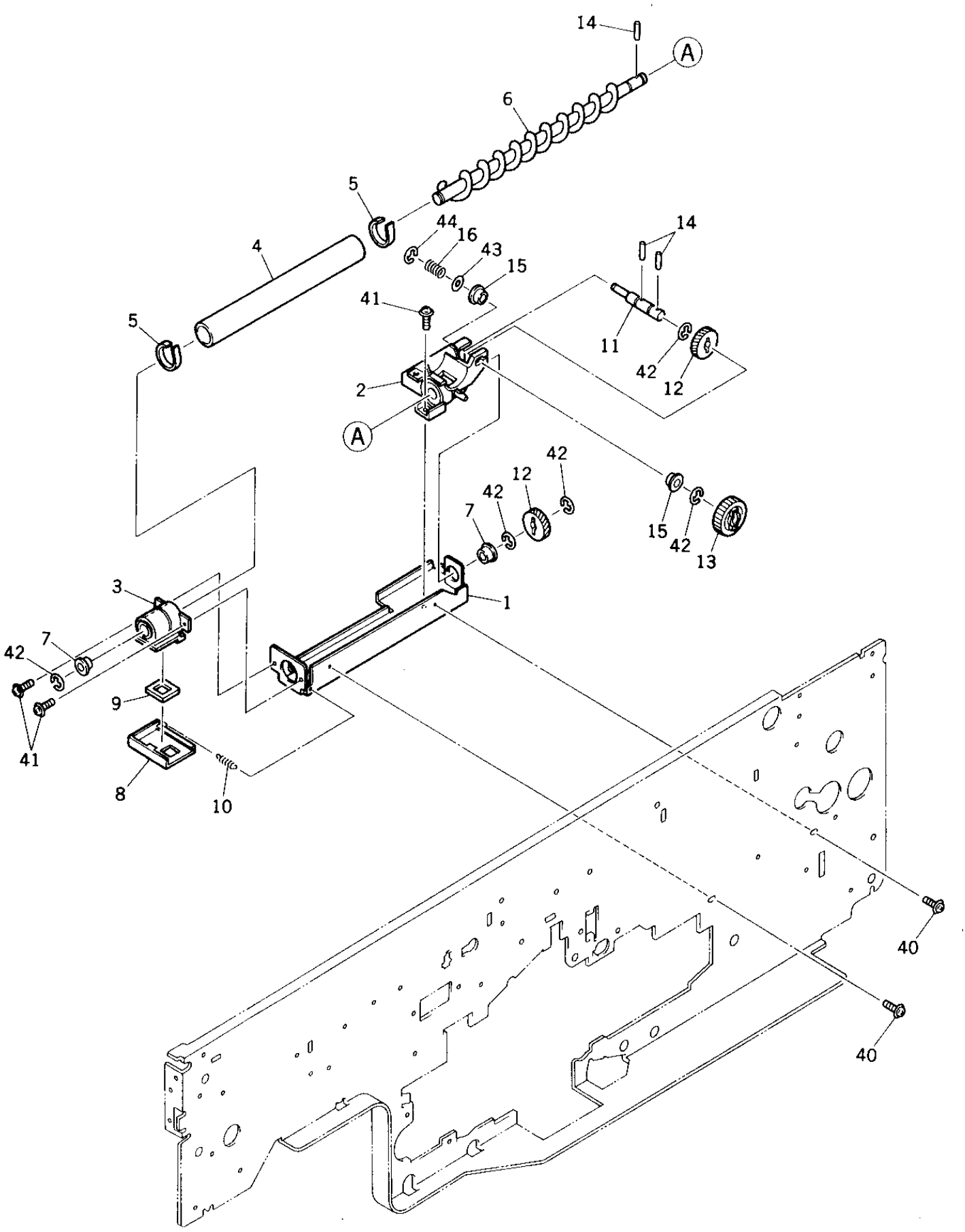
14
A
6
5
44
16
43
15
4
14
41
5
11
42
12
2
A
42
12
42
7
15
42
13
3
1
42
7
9
41
8
10
40
40

ITEM NO.	PARTS NO.	PARTS NAME	Q'TY / PAGE	Q'TY / PACK	SPE PRICE IN NONE	P	I	R	BSI NO.	TO	FROM	SERIAL NO.	REMARKS
1	4401 767030	STAY-AUGER	1	1/P									
2	4401 767010	HOLDER-AUG-R	1	1/P									
3	4401 767020	HOLDER-AUG-L	1	1/P									
4	4401 767130	PIPE-16-18-186	1	1/P									
5	4401 766530	SEAL-COV-2	2	5/P									
6	4401 767060	AUGER-HOP-2	1	1/P									
7	4407 543330	BUSHING-6	2	5/P									
8	4401 767080	LID-AUGER	1	1/P									
9	4401 767110	SEAL-HLDR-AUG-2	1	5/P									
10	4401 767090	SPE-45-04-19	1	5/P									
11	4401 767040	SHAFT-HOLDER	1	1/P									
12	4408 503150	GEAR-13-HL	2	1/P									
13	4400 406960	GEAR-23-B	1	1/P									
14	4346 312020	PIN	3	10/P									
15	4407 734240	BUSH-6	2	5/P									
16	4402 203940	SPC-DEV-PUSH-05	1	5/P									
40	7040 400811	PAN40*08MSZN3AI	2	50/P									
41	4842 040690	TZPAN3006MSZN3L	3	50/P									
42	7405 005031	ERR050SKZN3A	5	50/P									
43	7400 104011	1HWAS040MSZN3A	1	50/P									
44	7405 005031	ERR050SKZN3A	1	50/P									

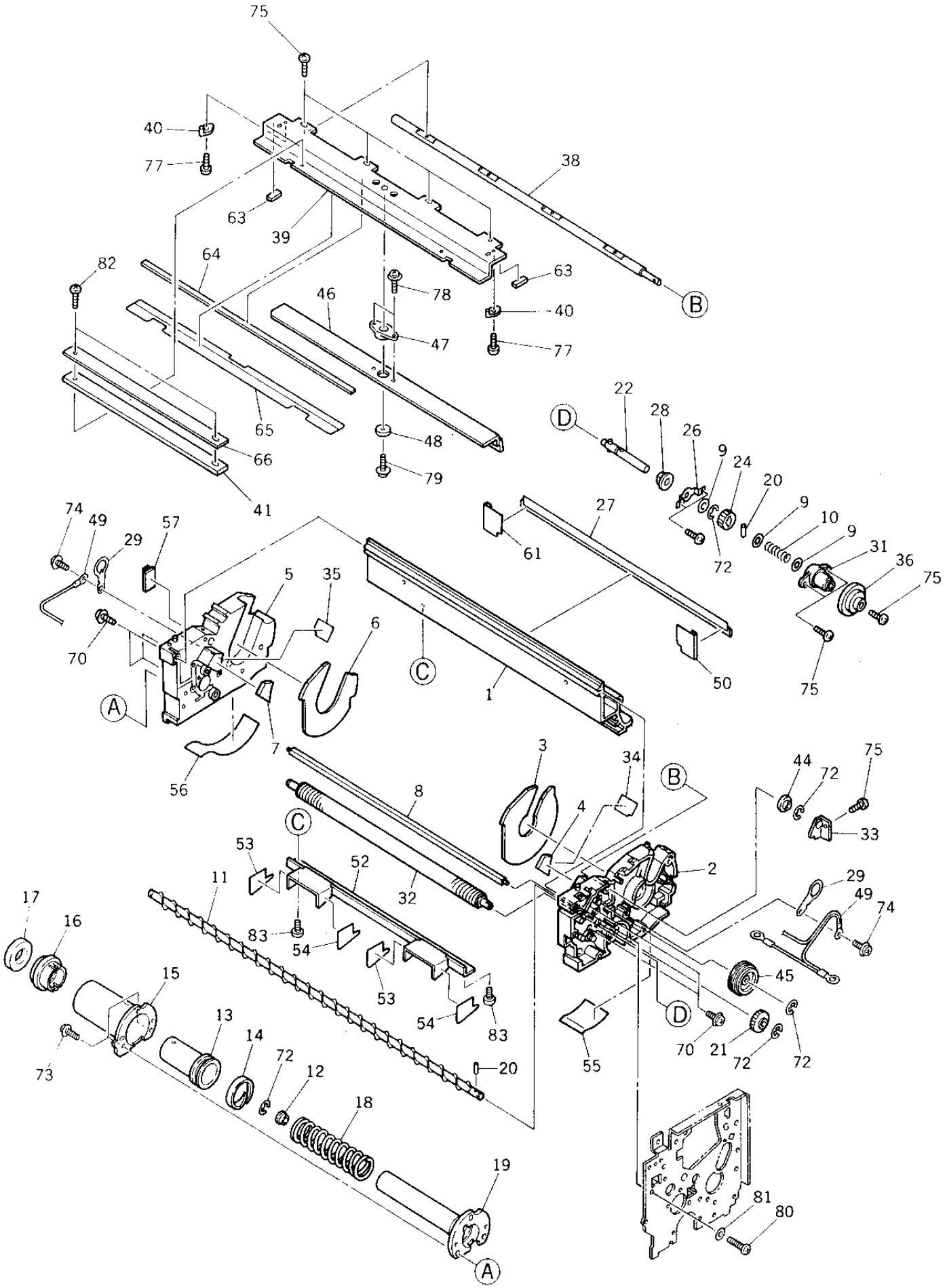
75
40
77
38
63
39
64
82
63
78
46
40
B
47
77
22
28
D
26
65
48
9
24
66
79
20
41
9
10
74
49
57
27
9
29
61
31
36
5
35
72
75
6
70
C
50
75
A
1
7
3
34
44
75
56
B
72
8
4
33
C
53
52
2
11
32
29
49
17
16
83
74
54
45
15
53
54
83
D
13
14
70
21
72
72
73
72
12
55
20
18
19
81
80
A

TOSHIBA

ITEM NO.	PARTS NO.	PARTS NAME	Q'TY / PAGE	Q'TY / PACK	SPE PRICE IN NONE	P	I	R	BSI NO.	TO	FROM	SERIAL NO.	REMARKS
0	4402 307000	ASM-CLEANER-154	1	1/C									1/2
1	4401 904300	CASING-CLN-152	1	1/P									
2	4402 307100	K-FRAME-CLN-F	1	1/P									
3	4402 307150	SEAL-SIDE-CLN-F	1	1/P									
4	4401 904180	SEAL-SIDE-BLD-F	1	5/P									
5	4402 307110	K-FRAME-CLN-R	1	1/P									
6	4402 307160	SEAL-SIDE-CLN-R	1	1/P									
7	4401 904190	SEAL-SIDE-BLD-R	1	5/P									
8	4401 904390	SFT-SCRPR-BRSH	1	1/P									
9	4407 010320	WASHER.8*14*03	3	10/P									
10	4401 905220	SPC-BRSH-CLN	1	5/P									
11	4401 904500	K-AUGER-CLN-152	1	1/KP									
12	4407 543330	BUSHING-6	1	5/P									
13	4401 762620	SHUTTER-NOZZLE	1	1/P									
14	4401 762650	SEAL-BASE-NOZ	1	1/P									
15	4401 904590	COV-BASE-NOZZLE	1	1/P									
16	4401 762630	HOLDER-SEAL-NOZ	1	1/P									
17	4401 762640	SEAL-SHTR-NOZ	1	1/P									
18	4401 762660	SPC-NOZZLE	1	1/P									
19	4401 904580	BASE-NOZZLE-CLN	1	1/P									
20	4408 256620	PIN-2-10	2	10/P									
21	4401 904450	GEAR-15	1	1/P									
22	4401 904410	K-SHAFT-BRUSH	1	1/P									
24	4401 904430	GEAR-16	1	1/P									
26	4401 904440	PLATE-BIAS-BRSH	1	1/P									
27	4401 904150	K-BLADE-REC-152	1	1/KP									
28	4407 543870	BUSH	1	5/P									
29	4401 761380	PLATE-EARTH-DRM	2	1/P									
31	4401 904480	HOLDER-BRUSH	1	1/P									
32	4409 890710	B-6560	1	1/S									
33	4401 904780	LEVER-BLADE	1	1/P									
34	4401 904160	SEAL-SIDE-DRM-F	1	1/P									
35	4401 904170	SEAL-SIDE-DRM-R	1	1/P									
36	4401 904670	KNOB-SFT-BRUSH	1	1/P									
38	4401 904760	SFT-HLDR-BLADE	1	1/P									
39	4401 904710	K-BRKT-BLADE	1	1/P									
40	4401 761720	SPACER-BLADE	2	5/P									
41	4408 310630	WEIGHT-BLADE-2	1	1/P									
44	4401 762240	COLLAR-SFT-BLD	1	5/P									
45	4401 762270	GEAR-29-CAM-2.5	1	1/P									
46	4409 847260	BL-7550D	1	10/S									
47	4401 761490	BUSH-BLADE-OUT	1	1/P									
48	4401 761480	CAP-BUSH-BLADE	1	5/P									
49	4402 321920	WH-DRM-EARTH-C6	1	1/P									
50	4401 904060	K-SEAL-REC-F	1	1/P									
52	4401 761920	BRKT-CLN-EX	1	1/P									
53	4401 761930	GUIDE-MYLAR-C1	2	5/P									
54	4401 761940	GUIDE-MYLAR-C2	2	5/P									
55	4401 904340	SEAL-FRM-CLN-F	1	5/P									
56	4401 904350	SEAL-FRM-CLN-R	1	5/P									
57	4400 827900	CLIP-WH-STACK	1	5/P									
61	4401 904250	K-SEAL-SIDE-REC	1	1/P									
63	4401 904080	SEAL-BLD-U1	2	5/P									
64	4401 904090	SEAL-BLD-U2	1	5/P									
65	4401 904790	SEAL-BRKT-BLADE	1	5/KP									
66	4408 310150	WEIGHT-BLADE-1	1	1/P									
70	4842 040060	TPAN40*08MSZN3L	5	50/P									
72	7405 005031	ERR050SKZN3A	5	50/P									
73	4842 040850	PTBR40*10MSZN3A	3	50/P									
74	7640 300651	ZPAN30*06MSZN3A	4	50/P									
75	7040 300611	PAN30*06MSZN3A	8	50/P									
77	7040 300411	PAN30*04MSZN3A	2	50/P									
78	7040 301011	PAN30*10MSZN3A	2	50/P									
79	7640 300851	ZPAN30*08MSZN3A	1	50/P									
80	4842 040039	TPAN4025MSZN3L	1	50/P									
81	7402 004031	0TWAS040SKZN3A	1	50/P									
82	7040 300811	PAN30*08MSZN3AI	2	50/P									
83	4842 040690	TZPAN3006MSZN3L	2	50/P									

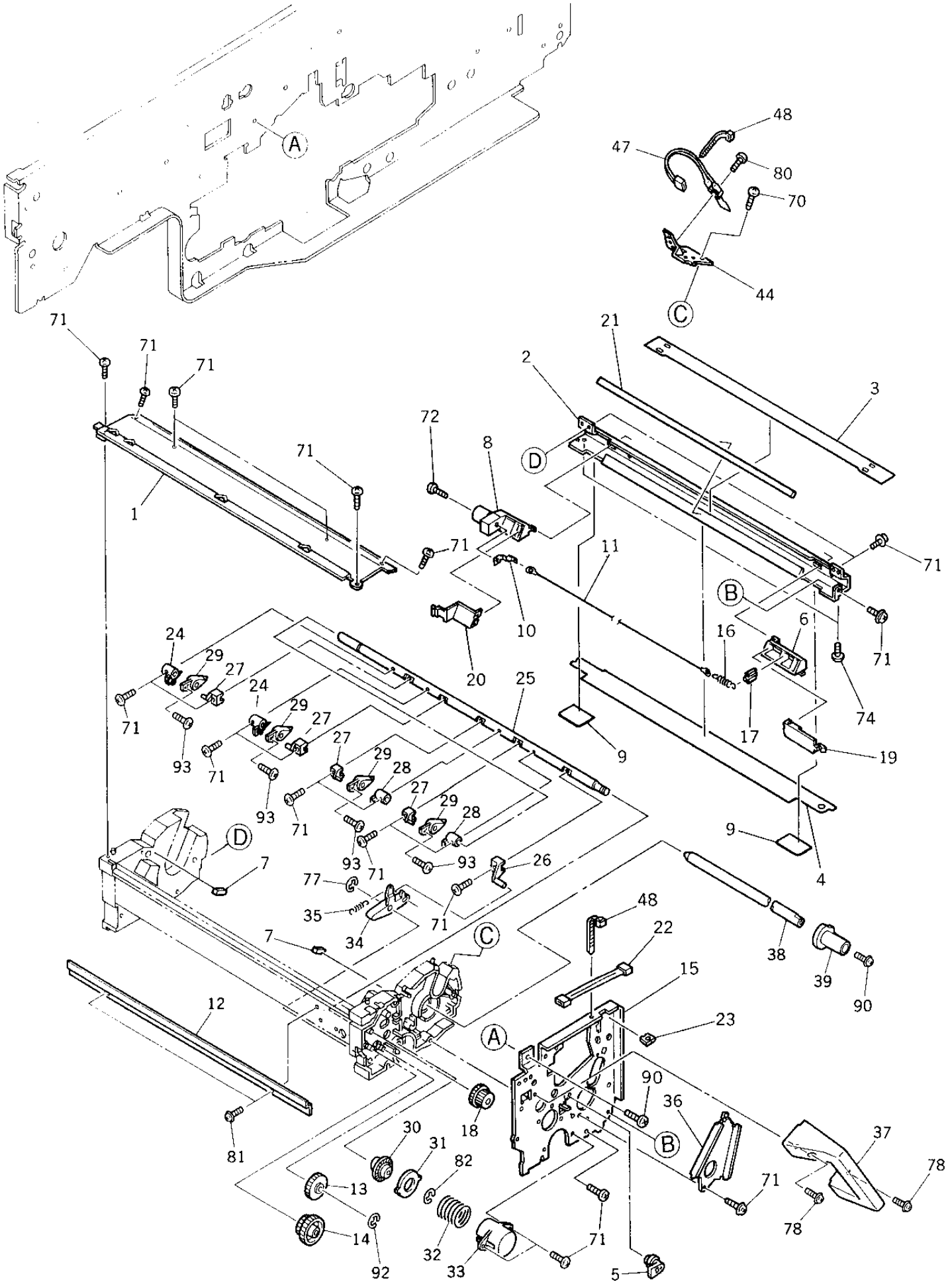
A
B
C
D
1
2
3
4
5
6
7
9
10
11
12
13
14
15
16
17
18
19
20
21
22
23
24
25
26
27
28
29
30
31
32
33
34
35
36
37
38
39
44
47
48
70
71
72
74
77
78
80
81
82
90
92
93

ITEM NO.	PARTS NO.	PARTS NAME	Q'TY / PAGE	Q'TY / PACK	SPE PRICE IN NONE	P	I	R	BSI NO.	TO	FROM	SERIAL NO.	REMARKS
0	4402 307000	ASM-CLEANER-154	1	1/C									2/2
1	4401 904830	K-ROOF-CLN-152	1	1/C									
2	4402 307500	K-CASE-PTC-154	1	1/P									
3	4402 307550	MYLAR-CASE-PTC	1	1/KP									
4	4402 307530	MYLAR-GUIDE-PTC	1	1/KP									
5	4401 904770	CAM-BLADE	1	1/P									
6	4402 307430	TERMINAL-PTC-F	1	1/P									
7	4401 904860	SEAL-ROOF-L	2	10/P									
8	4402 307440	TERMINAL-PTC-R	1	1/P									
9	4402 307490	SEAL-SIDE-PTC	2	5/P									
10	4402 307480	PLATE-HOOK-WIRE	1	1/P									
11	4408 607930	WIRE-CH-PT-354	1	5/S									
12	4401 904690	COV-WH-CLN-BACK	1	1/P									
13	4401 762250	GEAR-25	1	1/P									
14	4401 762260	GEAR-17-30	1	1/P									
15	4402 307650	K-PLATE-CLN-F	1	1/P									
16	4401 762350	SPE-WIRE-PC	1	5/P									
17	4402 307470	HANGER-WIRE-PTC	1	1/P									
18	4401 904460	GEAR-17-23	1	1/P									
19	4402 307450	LID-PTC-F	1	1/P									
20	4402 307460	LID-PTC-R	1	1/P									
21	4402 307540	SEAL-CASE-PTC	1	5/KP									
22	4402 321890	WH-DRM-THMS-154	1	1/P									
23	4842 416026	GROMET-EHP-6U	1	5/P									
24	4401 905960	GUIDE-PAPER-C-R	2	1/P									
25	4401 905950	SHAFT-CLAW-152R	1	1/P									
26	4401 762470	LEVER-SFT-CLAW	1	5/P									
27	4401 905980	HANGER-CLAW	4	5/P									
28	4401 905260	GUIDE-PAPER-CLN	2	1/P									
29	4401 762580	K-CLAW-DRUM	4	1/D									
30	4401 762520	CLT-CAM-CLAW	1	1/P									
31	4401 762510	COLLAR-CLT-CLAW	1	1/P									
32	4401 762490	SPC-CLAW-SLIDE	1	1/P									
33	4401 762480	COVER-CLT-CLAW	1	1/P									
34	4401 762280	LEVER-CLAW-2	1	1/P									
35	4401 762360	SPE-CLAW-ON-OFF	1	5/P									
36	4402 307250	STOPPER-SFT-DRM	1	1/P									
37	4401 761730	HANDLE-CLN-F	1	1/P									
38	4401 761620	SHAFT-DRUM	1	1/P									
39	4401 761630	KNOB-SHAFT-DRUM	1	1/P									
40	4401 904870	HLDR-TERMINAL-F	1	1/P									
44	4401 904370	BRKT-THMS-DRM	1	1/P									
47	4401 799720	THMS-DRM-150	1	1/C									
48	4843 391092	BD/W-T18S	2	10/P									
70	7640 300651	ZPAN30*06MSZN3A	1	50/P									
71	7040 300611	PAN30*06MSZN3A	26	50/P									
72	7040 400808	PAN40*08SSDG	1	50/P									
74	4842 040495	PTBR30*06MSZN3A	4	50/P									
77	7405 005031	ERR050SKZN3A	1	50/P									
78	4842 040124	TZPAN3014MSZN3L	2	50/P									
80	7040 300811	PAN30*08MSZN3AI	1	50/P									
81	4842 040690	TZPAN3006MSZN3L	2	50/P									
82	7405 003031	ERR030SKZN3A	1	50/P									
90	7640 400851	ZPAN40*08MSZN3A	2	50/P									
92	7405 004031	ERR040SKZN3A	1	50/P									
93	4842 040513	PTPAN3006MSZN3A	4	50/P									

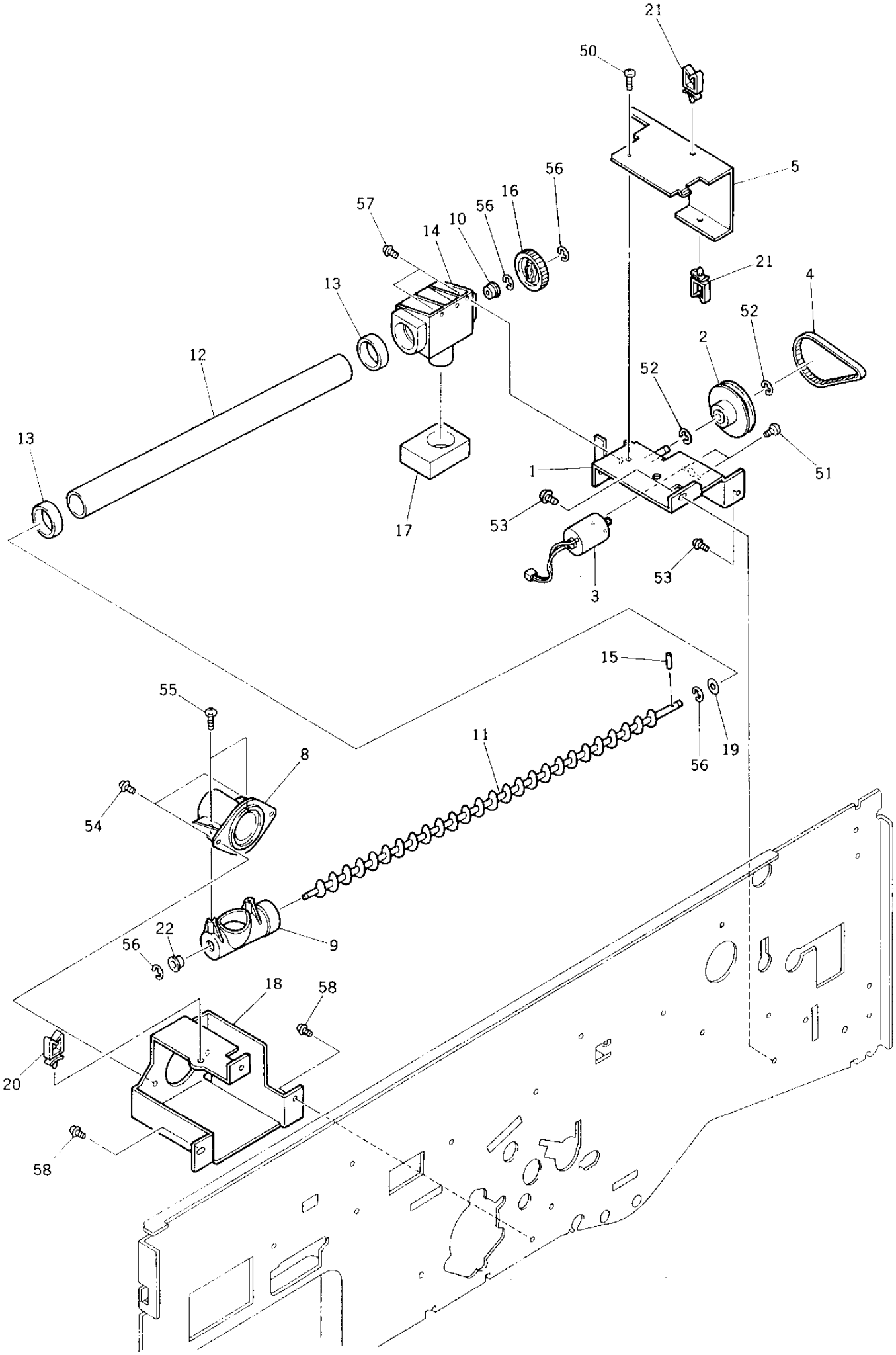
21
50
5
56
16
57
56
10
14
13
21
4
52
2
12
52
13
1
51
17
53
53
3
15
55
11
8
56
19
54
22
56
9
18
58
20
58

ITEM NO.	PARTS NO.	PARTS NAME	Q'TY / PAGE	Q'TY / PACK	SPE PRICE IN NONE	P	I	R	BSI NO.	TO	FROM	SERIAL NO.	REMARKS
1	4401 905810	K-STAY-U-TNR-C7	1	1/P									
2	4401 760460	K-GEAR17-PLY72	1	1/P									
3	4401 760770	K-MOT-CLN-F	1	1/C									
4	4408 503160	BLT-190-2M-3	1	1/P									
5	4401 760480	BRKT-COV-U-TNR	1	1/P									
8	4401 763250	TERMINAL-AUG-RU	1	1/P									
9	4401 763260	TERMINAL-AUG-RL	1	1/P									
10	4407 543330	BUSHING-6	1	5/P									
11	4401 760780	K-AUGER-U-TNR	1	1/P									
12	4401 905870	PIPE-20-22-296	1	1/P									
13	4401 763290	SEAL-PIPE	2	5/P									
14	4401 760750	TERMINAL-AUG-L	1	1/P									
15	4407 403790	NPIN2-8	1	10/P									
16	4401 763230	GEAR-30	1	1/P									
17	4401 763220	SEAL-TERM-AUG-L	1	1/P									
18	4401 905860	BRKT-AUGER-U-C7	1	1/P									
19	4346 314050	WASHER	1	10/P									
20	4843 390855	CLP/W-LWS-2U	1	5/P									
21	4843 390857	CLP/W-LWS-4U	2	5/P									
22	4407 732710	BUSHING-6*8	1	5/P									
50	4842 040636	TPAN30*06MSZN3A	1	50/P									
51	7040 260411	PAN26*04MSZN3AI	2	50/P									
52	7405 007031	ERR070SKZN3A	2	50/P									
53	4842 040650	TPAN40*06MSZN3L	2	50/P									
54	4842 040690	TZPAN3006MSZN3L	2	50/P									
55	4842 040849	PTBR40*08MSZN3A	2	50/P									
56	7405 005031	ERR050SKZN3A	4	50/P									
57	4842 040635	TBID40*08MSCR3C	2	50/P									
58	4842 040060	TPAN40*08MSZN3L	3	50/P									

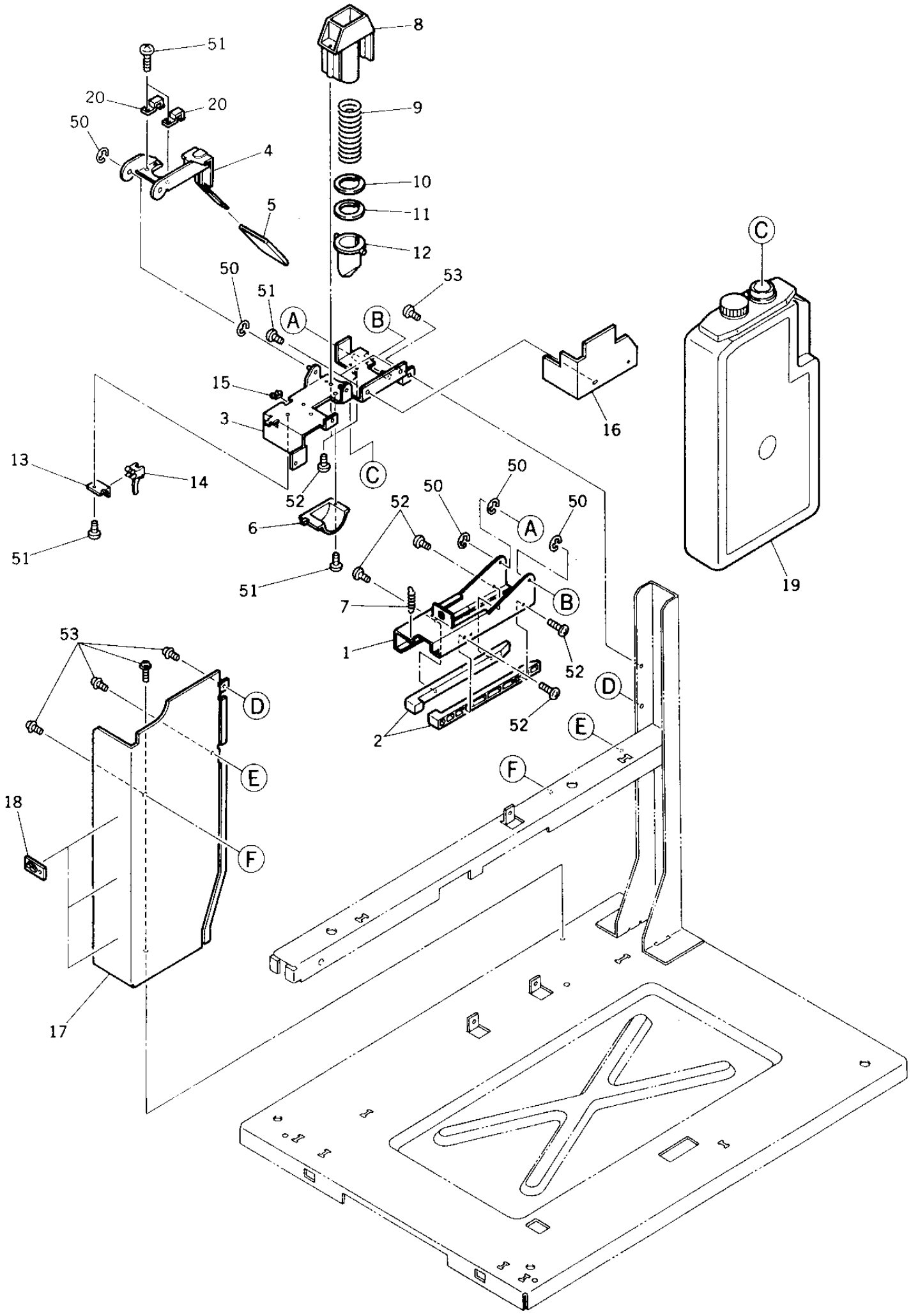
8
51
20
20
9
50
4
10
5
11
12
C
50
53
51
A
B
15
16
3
13
14
C
52
50
50
52
50
6
A
51
51
19
7
B
53
1
52
D
D
52
2
E
E
F
18
F
17

TOSHIBA

ITEM NO.	PARTS NO.	PARTS NAME	Q'TY / PAGE	Q'TY / PACK	SPE PRICE IN NONE	P	I	R	BSI NO.	TO	FROM	SERIAL NO.	REMARKS
1	4401 763350	HANGER-BAG-UTNR	1	1/P									
2	4401 763360	RAIL-BAG-U-TNR	2	1/P									
3	4401 763310	K-BASE-U-TNR-L	1	1/P									
4	4401 763370	LEVER-BAG-U-TNR	1	1/P									
5	4408 536130	CAP-GUIDE-TRS-2	1	1/P									
6	4401 763490	COV-MOT-FEED	1	1/P									
7	4401 905910	SPE-U-TNR-598	1	5/P									
8	4401 763400	TERM-U-TNR-L	1	1/P									
9	4401 762970	SPC-NOZ-U-TNR	1	1/P									
10	4401 762980	HLDR-SEAL-U-TNR	1	1/P									
11	4401 762990	SEAL-NOZ-U-TNR	1	1/P									
12	4401 763410	NOZZLE-U-TNR	1	1/P									
13	4401 762910	BRKT-SW-U-TNR	1	1/P									
14	4401 797520	SZ-U-TNR-150	1	1/C									
15	4843 390942	BD/W-EDS-2	1	10/P									
16	4401 760580	BRKT-COV-WH-TNR	1	1/P									
17	4401 762920	BRKT-WALL-U-TNR	1	1/P									
18	4400 827900	CLIP-WH-STACK	3	5/P									
19A	6608 4519	PS-TB6550	1	SUPPLY									4PCS/PACK
19B	6608 4520	PS-TB6550E	1	SUPPLY									FOR EUR
20	4401 762370	GUIDE-NOZ-U-TNR	2	5/P									
50	7405 005031	ERR050SKZN3A	5	50/P									
51	4842 040665	TPAN3006MSZN3L	6	50/P									
52	4842 040849	PTBR40*08MSZN3A	6	50/P									
53	4842 040060	TPAN40*08MSZN3L	8	50/P									

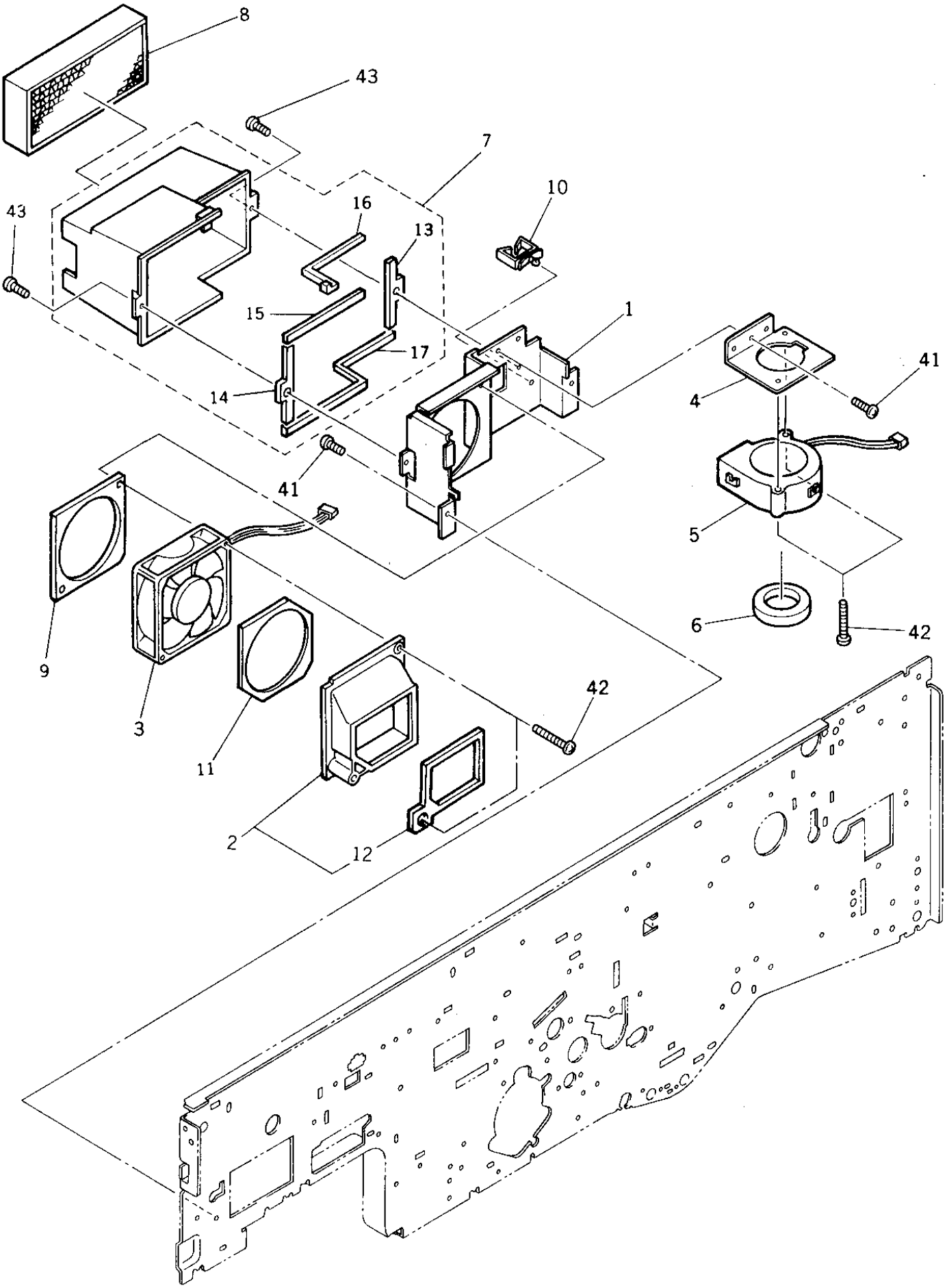
8
43
7
10
43
16
13
15
1
17
14
41
41
4
5
6
42
9
3
11
42
2
12

ITEM NO.	PARTS NO.	PARTS NAME	Q'TY / PAGE	Q'TY / PACK	SPE PRICE IN NONE	P	I	R	BSI NO.	TO	FROM	SERIAL NO.	REMARKS
1	4401 765070	BRKT-FAN-EXIT	1	1/P									
2	4402 306860	K-DUCT-FAN-EX-F	1	1/P									
3	4401 916020	FAN-EXIT-152	1	1/C									
4	4401 765110	BRKT-FAN-BELT	1	1/P									
5	4402 321640	FAN-BTM-154	1	1/C									
6	4401 765140	SEAL-DUCT-BELT2	1	1/P									
7	4402 306880	K-DUCT-FAN-EX-R	1	1/PP									
8	4402 306820	K-FILTER-TNR	1	1/C									
9	4402 306940	SEAL-BKT-FAN	1	1/KP									
10	4843 390888	CLP/W-WS-2U	1	5/P									
11	4402 306950	SEAL-FAN-DUCT	1	1/KP									
12	4402 306870	SEAL-FRAME-DUCT	1	1/P									
13	4402 306890	SEAL-DUCT-R-1	1	1/KP									
14	4402 306900	SEAL-DUCT-R-2	1	1/KP									
15	4402 306910	SEAL-DUCT-R-3	1	5/KP									
16	4402 306920	SEAL-DUCT-R-4	1	5/KP									
17	4402 306930	SEAL-DUCT-R-5	1	5/KP									
41	4842 040060	TPAN40*08MSZN3L	3	50/P									
42	4842 040386	TPAN-4035MSZN3L	4	50/P									
43	4842 040700	TZPAN4008MSZN3L	2	50/P									
11	4402 306950	SEAL-FAN-DUCT	1	1/KP									

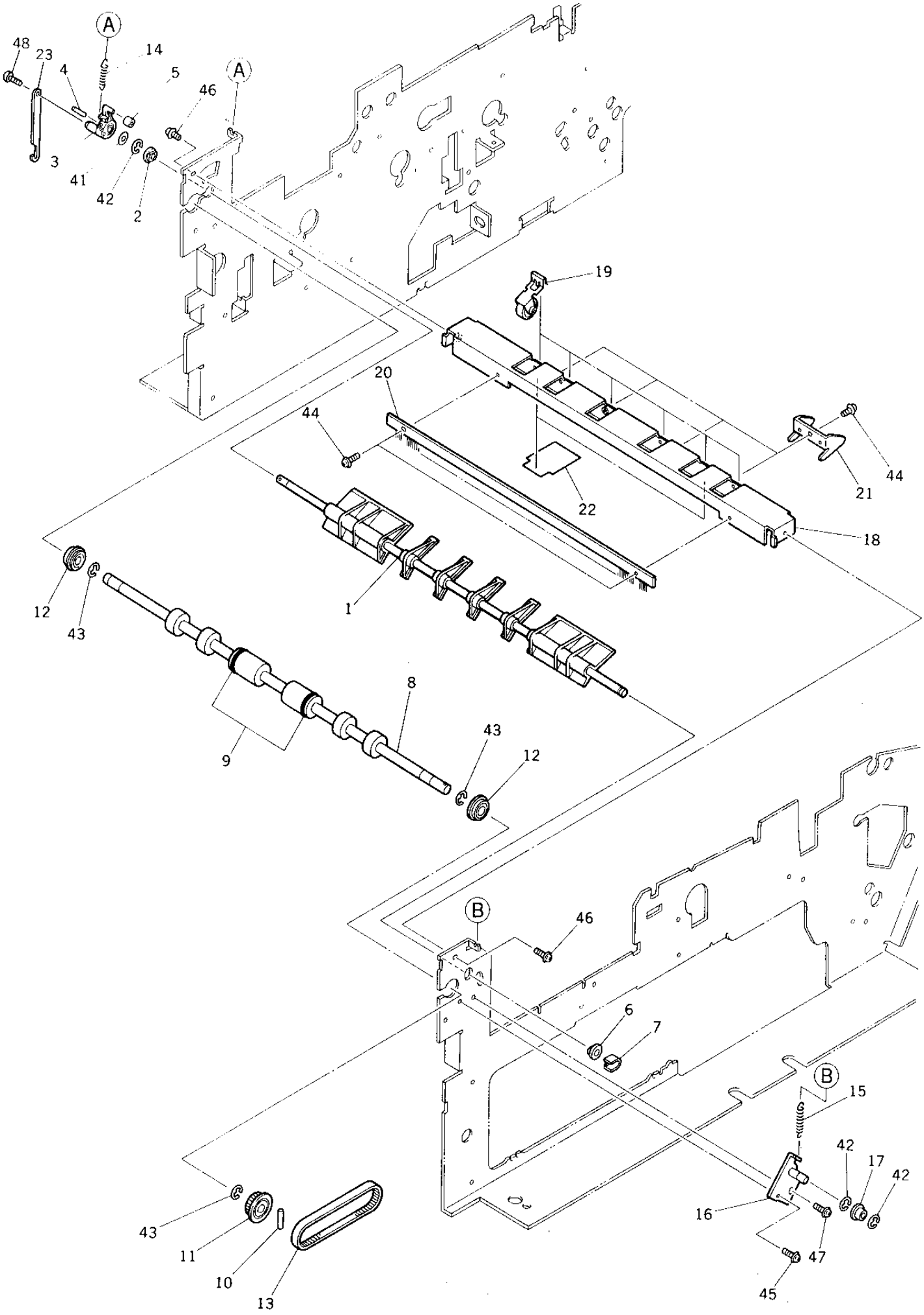
A
A
B
B
48
23
4
14
5
46
3
41
42
2
19
20
44
22
21
18
12
43
1
8
9
43
12
46
6
7
15
42
17
42
16
47
45
43
11
10
13

ITEM NO.	PARTS NO.	PARTS NAME	Q'TY / PAGE	Q'TY / PACK	SPE PRICE IN NONE	P	I	R	BSI NO.	TO	FROM	SERIAL NO.	REMARKS
1	4401 776650	GATE-A6F	1	1/P									
2	4407 734980	BUSH-6-GCB	1	5/P									
3	4402 205340	ARM-GATE	1	1/P									
4	4408 256620	PIN-2-10	1	10/P									
5	4402 206120	CUSH-ARM-GATE	1	5/P									
6	4407 734240	BUSH-6	1	5/P									
7	4407 972860	STOP-RING-6-5	1	5/P									
8	4401 776340	ROLL-EXIT-L	1	1/KP									
9	4402 206980	RING-EXIT-24-UR	2	5/P									
10	4346 312020	PIN	1	10/P									
11	4402 210280	PLY/T-32-FU	1	1/P									
12	4408 510800	BRG-688ZZNR	2	1/P									
13	4401 776360	BELT-106101-3SZ	1	1/P									
14	4363 270470	SPE-040-023-171	1	1/P									
15	4402 232680	SPE-6.3-0.6	1	1/P									
16	4401 776500	K-BKT-TENSION	1	1/P									
17	4400 335180	PULLEY-TENSION	1	1/P									
18	4401 776450	STAY-ROL-EX-UP	1	1/P									
19	4401 902860	ASM-EXIT-I	6	1/P									
20	4401 776580	BRUSH-SUS-E	1	1/KP									
21	4401 776480	GUIDE-EXIT-UP	4	1/P									
22	4401 777590	MYLAR-GUIDE-EXT	2	5/P									
23	4402 205350	LINK-SOL-ADD	1	1/P									
41	7400 106011	1HWAS060MSZN3A	1	50/P									
42	7405 005031	ERR050SKZN3A	3	50/P									
43	7405 007031	ERR070SKZN3A	3	50/P									
44	4842 040690	TZPAN3006MSZN3L	6	50/P									
45	4402 203820	SCREW-BKT-DEV	1	50/P									
46	4842 040060	TPAN40*08MSZN3L	2	50/P									
47	4842 040692	TZPAN3008MSZN3L	1	50/P									
48	4842 040236	12ZPAN3006MSZ3L	1	50/P									

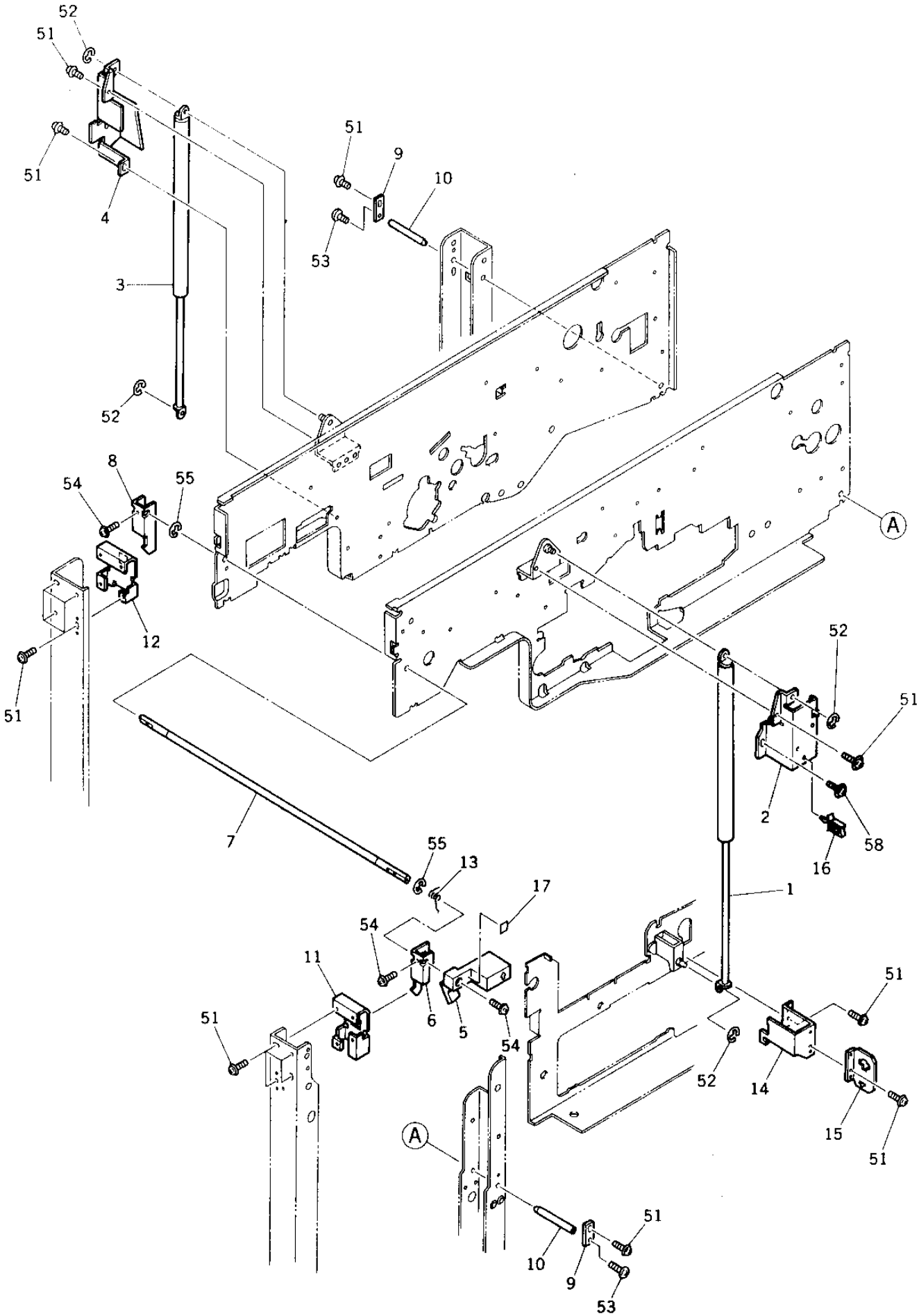
52
51
51
4
3
52
51
9
10
53
8
54
55
12
51
A
52
51
2
58
16
7
55
13
17
1
54
11
6
5
54
51
51
52
14
15
51
A
51
10
9
53

ITEM NO.	PARTS NO.	PARTS NAME	Q'TY / PAGE	Q'TY / PACK	SPE PRICE IN NONE	P	I	R	BSI NO.	TO	FROM	SERIAL NO.	REMARKS
1	4401 753980	BALANCER-150-F	1	1/P									
2	4401 900690	BRKT-COV-BLC-UF	1	1/P									
3	4401 753990	BALANCER-150-R	1	1/P									
4	4401 754040	BKT-COV-BLC-UR	1	1/P									
5	4401 754180	HANDLE-LOCK-L	1	1/P									
6	4401 754210	BRKT-LOCK-F	1	1/P									
7	4401 754190	SHAFT-LOCK-L	1	1/P									
8	4401 754200	BRKT-LOCK-R	1	1/P									
9	4401 754260	PLATE-LOCK-F	2	1/P									
10	4401 754270	SHAFT-FRM	2	1/P									
11	4401 754330	BRKT-STAY-F	1	1/P									
12	4401 754340	BRKT-STAY-R	1	1/P									
13	4401 754750	SP-LOCK-LVR	1	5/P									
14	4401 754080	BKT-COV-BLC-LF	1	1/P									
15	4401 753970	BKT-CONECTOR	1	1/P									
16	4843 390888	CLP/W-WS-2U	1	5/P									
17	4401 768310	LABEL-A	1	10/P									
51	4842 040060	TPAN40*08MSZN3L	16	50/P									
52	7405 005031	ERR050SKZN3A	4	50/P									
53	4842 040725	TPPAN4008MSZN3A	2	50/P									
54	7640 401051	ZPAN40*10MSZN3A	3	50/P									
55	7405 007031	ERR070SKZN3A	2	50/P									
58	4842 040118	THPAN4008MSZN3L	1	50/P									

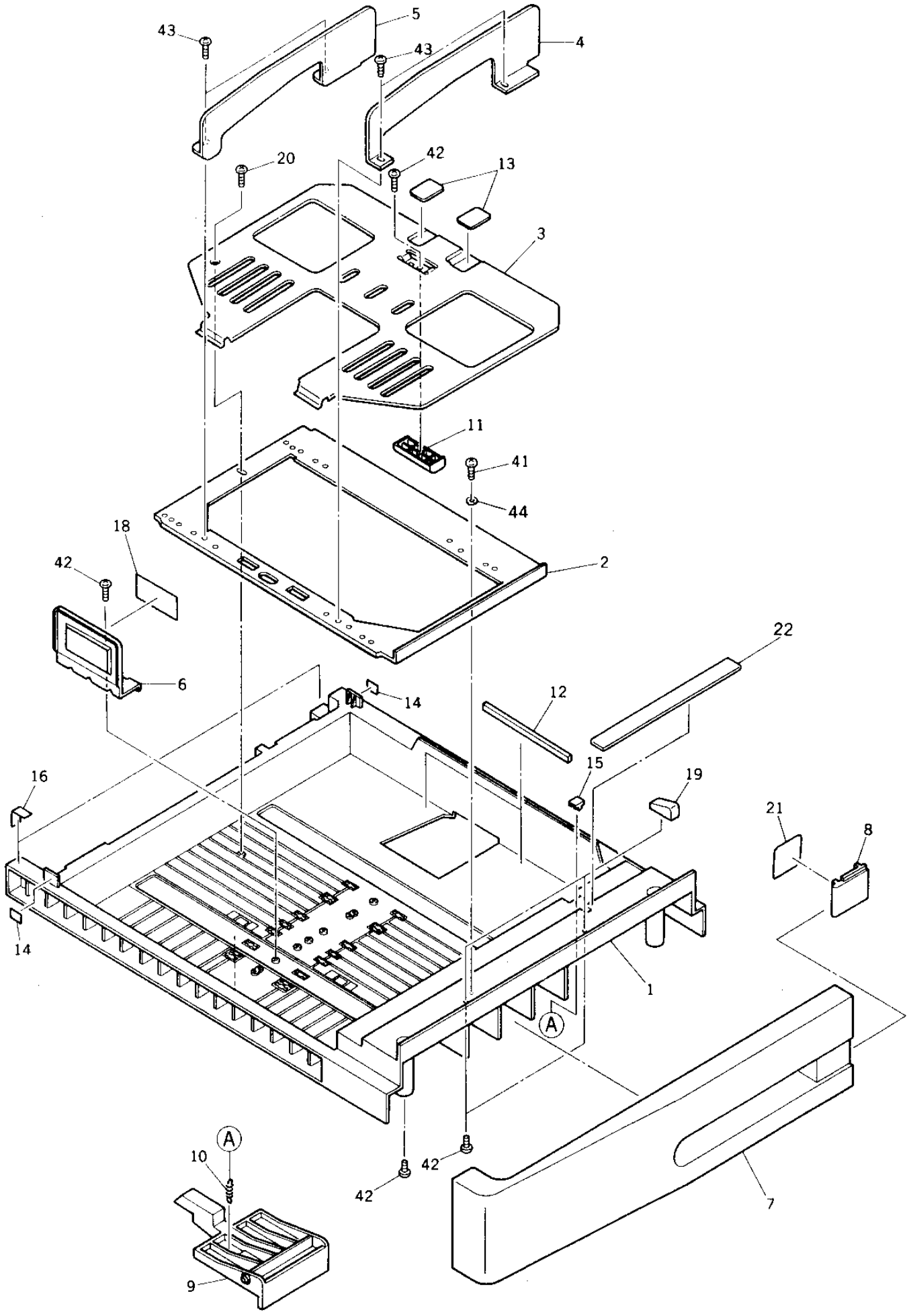
43
5
4
43
20
42
13
3
11
41
44
18
42
2
22
6
14
12
16
15
19
21
8
14
1
A
A
10
42
42
9
7

ITEM NO.	PARTS NO.	PARTS NAME	Q'TY / PAGE	Q'TY / PACK	SPE PRICE IN NONE	P	I	R	BSI NO.	TO	FROM	SERIAL NO.	REMARKS
1	4401 785060	CASSETTE	1	1/PP									
2	4402 310490	BASE-CST-ADJUST	1	N/A***									
3	4401 909910	TRAY-CST	1	1/PP									
4	4400 909310	SIDE-WALL-F-1.6	1	1/P									
5	4400 909320	SIDE-WALL-R-1.6	1	1/PP									
6	4402 235690	GUIDE-SIDE-BACK	1	1/P									
7	4401 785010	COVER-CST-F150	1	1/PP									
8	4400 908640	LID-SIZE-CST	1	1/PP									
9	4401 785020	LATCH-CST-F150	1	1/P									
10	4402 310480	SPE075-080-0264	1	5/P									
11	4400 907140	SPACER-CST	1	1/P									
12	4400 908680	CUSHION-CST	2	1/KP									
13	4400 901130	PAD-BRAKE	2	5/P									
14	4402 234930	SHEET-CST-S	2	5/P									
15	4400 908770	HOOK-CST-550	1	1/P									
16	4400 908450	MYLAR-CST	2	5/C									
18	4400 909220	LABEL-LIMIT	1	5/P									
19	4402 234530	HOLDER-CST-P	2	1/P									W/O A4R,LTR
20	4400 907160	SCREW-ADJ	1	50/P									
21A	4402 234580	SIZE-CST-A4R	1	1/P									A4R
21B	4400 907020	SIZE-CST-A4	1	5/P									A4
21C	4400 907010	SIZE-CST-A3	1	5/P									A3
21D	4401 785200	SIZE-CST-LTR	1	5/P									LT
21E	4402 234570	SIZE-CST-LG	1	1/P									LG
21F	4402 234560	SIZE-CST-LD	1	1/P									LD
22	4402 233680	LBL-PRESS-A	1	1/KP									LT,LG,LD
41	7640 300851	ZPAN30*08MSZN3A	1	50/P									
42	4842 040849	PTBR40*08MSZN3A	9	50/P									
43	4842 040095	TWPAN4010MSZN3L	4	50/P									
44	7400 104011	1HWAS040MSZN3A	1	50/P									
21B	4400 907020	SIZE-CST-A4	1	5/P									A4

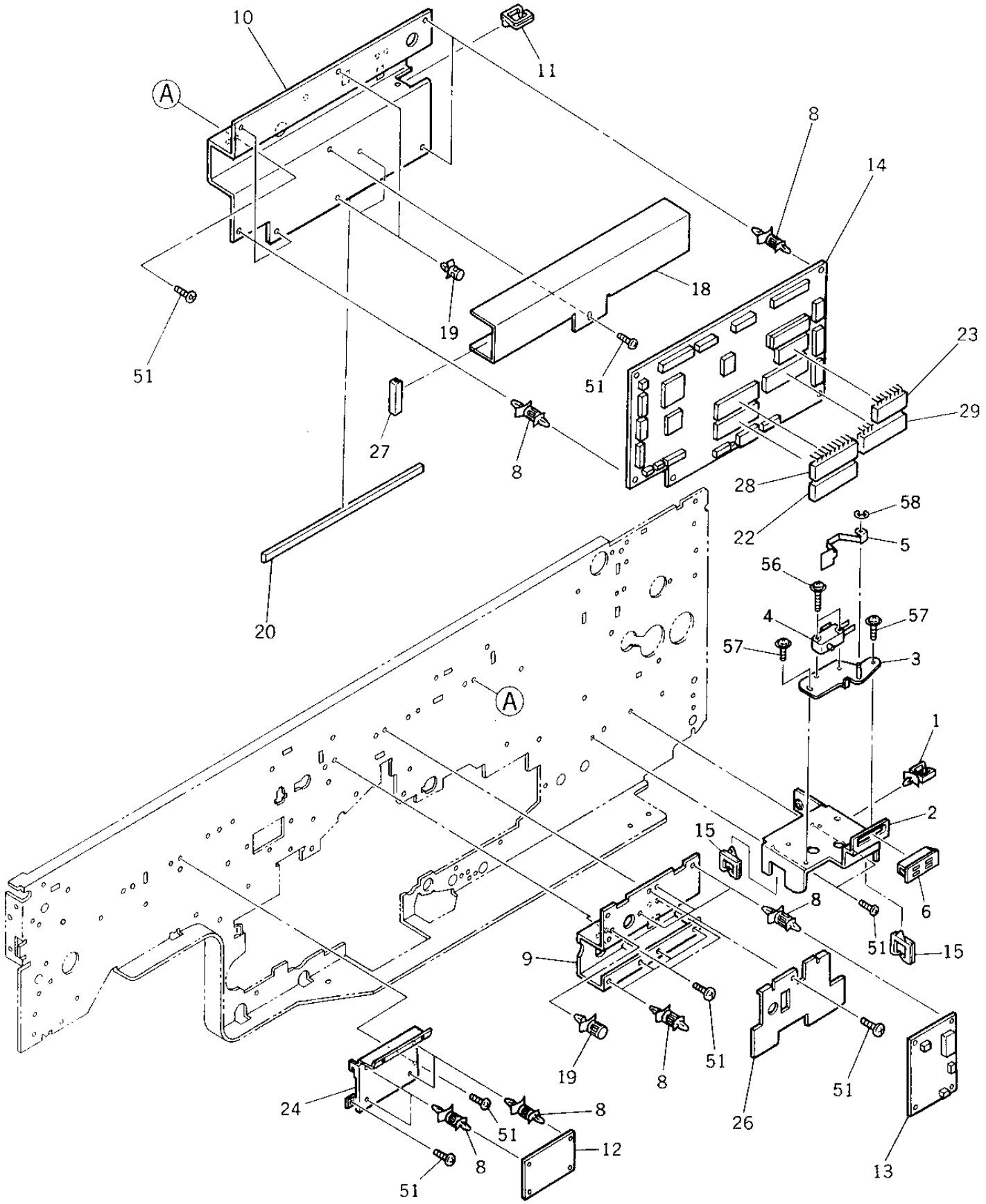
10
11
A
8
14
18
19
51
51
23
29
27
8
28
22
58
5
56
4
57
57
3
20
A
1
2
15
6
8
51
15
9
19
8
51
51
26
24
8
51
8
12
51
13

ITEM NO.	PARTS NO.	PARTS NAME	Q'TY / PAGE	Q'TY / PACK	SPE PRICE IN NONE	P	I	R	BSI NO.	TO	FROM	SERIAL NO.	REMARKS
1	4843 390888	CLP/W-WS-2U	1	5/P									
2	4402 303010	BRKT-SW-DOOR-R	1	1/P									
3	4401 754110	K-PLT-SW-DOOR	1	1/P									
4	4843 231858	SM-VX-01-1C23	1	1/D									
5	4401 754140	SPL-SW-DOOR	1	1/P									
6	4402 202680	MG-CATCH-22	1	1/P									
8	4843 390869	PWZ-SPLS-4U	16	5/P									
9	4402 302660	BRKT-PWA-DRUM	1	1/P									
10	4402 302930	BRKT-PWA-LGC	1	1/P									
11	4400 808280	EDS-1717U	1	5/P									
12A	4400 678510	PS-LRG-JU0411Y	1	1/C									100V SERIES
12B	4400 678520	PS-LRG-CE0411Y	1	1/C									200V SERIES
13	4402 321260	PWA-F-DRM-154	1	1/SB									
14	4402 874130	PWA-F-LGC-155	1	1/SB						014 1			
14 1	4402 874140	PWA-F-LGC-155	1	1/SB		C	B	B	F97F934		014	DE7	
15	4843 391164	BD/W-EDS-1717U	2	10/P									
18	4401 900860	BRKT-PWA-LGC-L	1	1/P									
19	4843 390859	PWZ-SPS-4U	4	5/P									
20	4402 302940	EDGING-12N-202	1	1/P									
22	4402 875140	PRA-155M-04	1	1/S						022 1			
22 1	4402 875230	PRA-155M-05	1	1/S		C	B	J	F97F938	022 2	022	1st Lot	
22 2	4402 875760	PRA-155M-07	1	1/S		C	B	J	F97I020	022 3	022 1	DH711273	
22 3	4402 875840	PRA-155M-08	1	1/S		C	B	D	F97L107	022 4	022 2	DL713426	
22 4	4402 876280	PRA-155M-09	1	1/S		C	B	D	F98A136	022 5	022 3	DA813693	
22 5	4402 876290	PRA-155M-10	1	1/S		C	B	D	F98C224		022 4	DC814950	
23	4843 115662	IC-M48T08100PC1	1	1/S									
24	4401 901970	BRKT-PWA-EXPO	1	1/P									
26	4402 302670	PLATE-BRKT-DRUM	1	1/P									
27	4401 900870	EDGE-BRKT-LGC-L	1	5/P									
28A	4402 874870	PRA-T155PUC-000	1	1/S						028A1			TAD
28A1	4402 875300	PRA-T155PUC-050	1	1/S		C	B	J	F97F938		028A	1st Lot	TAD
28B	4402 874870	PRA-T155PUC-000	1	1/S						028B1			CSD
28B1	4402 875300	PRA-T155PUC-050	1	1/S		C	B	J	F97F938		028B	1st Lot	CSD
28C	4402 874880	PRA-T155PGB-000	1	1/S						028C1			EUD
28C1	4402 875310	PRA-T155PGB-050	1	1/S		C	B	J	F97F938		028C	1st Lot	EUD
28D	4402 874890	PRA-T155PD-000	1	1/S						028D1			GSD
28D1	4402 875320	PRA-T155PD-050	1	1/S		C	B	J	F97F938		028D	1st Lot	GSD
28E	4402 874900	PRA-T155PF-000	1	1/S						028E1			FRD
28E1	4402 875330	PRA-T155PF-050	1	1/S		C	B	J	F97F938		028E	1st Lot	FRD
28F	4402 874880	PRA-T155PGB-000	1	1/S						028F1			SED
28F1	4402 875310	PRA-T155PGB-050	1	1/S		C	B	J	F97F938		028F	1st Lot	SED
28G	4402 874880	PRA-T155PGB-000	1	1/S						028G1			UKD
28G1	4402 875310	PRA-T155PGB-050	1	1/S		C	B	J	F97F938		028G	1st Lot	UKD
28H	4402 874870	PRA-T155PUC-000	1	1/S						028H1			AUD
28H1	4402 875300	PRA-T155PUC-050	1	1/S		C	B	J	F97F938		028H	1st Lot	AUD
28I	4402 874870	PRA-T155PUC-000	1	1/S						028I1			TWD
28I1	4402 875300	PRA-T155PUC-050	1	1/S		C	B	J	F97F938		028I	1st Lot	TWD
28J	4402 874870	PRA-T155PUC-000	1	1/S						028J1			SAD
28J1	4402 875300	PRA-T155PUC-050	1	1/S		C	B	J	F97F938		028J	1st Lot	SAD
28K	4402 874870	PRA-T155PUC-000	1	1/S						028K1			ASD
28K1	4402 875300	PRA-T155PUC-050	1	1/S		C	B	J	F97F938		028K	1st Lot	ASD
28L	4402 875460	PRA-T155PI-050	1	1/S		A	-	J	F97F938				ITALIAN
28M	4402 875470	PRA-T155PE-050	1	1/S		A	-	J	F97F938				SPANISH
28N	4402 875480	PRA-T155PSF-050	1	1/S		A	-	J	F97F938				FINNISH
28O	4402 875490	PRA-T155PS-050	1	1/S		A	-	J	F97F938				SWEDISH
28P	4402 875500	PRA-T155PN-050	1	1/S		A	-	J	F97F938				NORWEGIAN
28Q	4402 875510	PRA-T155PDK-050	1	1/S		A	-	J	F97F938				DANISH
28R	4402 875520	PRA-T155PNL-050	1	1/S		A	-	J	F97F938				DUTCH
28S	4402 875530	PRA-T155PP-050	1	1/S		A	-	J	F97F938				PORTUGUESE
29A	4402 875160	PRA-T155LUC-040	1	1/S						029A1			TAD
29A1	4402 875250	PRA-T155LUC-050	1	1/S		C	B	J	F97F938	029A2	029A	1st Lot	TAD
29A2	4402 875780	PRA-T155LUC-070	1	1/S		C	B	J	F97I020	029A3	029A1	DH711273	TAD
29A3	4402 875860	PRA-T155LUC-080	1	1/S		C	B	D	F97L107		029A2	DL713426	TAD
29B	4402 875160	PRA-T155LUC-040	1	1/S						029B1			CSD
29B1	4402 875250	PRA-T155LUC-050	1	1/S		C	B	J	F97F938	029B2	029B	1st Lot	CSD
29B2	4402 875780	PRA-T155LUC-070	1	1/S		C	B	J	F97I020	029B3	029B1	DH711273	CSD
29B3	4402 875860	PRA-T155LUC-080	1	1/S		C	B	D	F97L107		029B2	DL713426	CSD
29C	4402 875170	PRA-T155LGB-040	1	1/S						029C1			EUD

ITEM NO.	PARTS NO.	PARTS NAME	Q'TY / PAGE	Q'TY / PACK	SPE PRICE IN NONE	P	I	R	BSI NO.	TO	FROM	SERIAL NO.	REMARKS
29C1	4402 875260	PRA-T155LGB-050	1	1/S		C	B	J	F97F938	029C2	029C	1st Lot	EUD
29C2	4402 875790	PRA-T155LGB-070	1	1/S		C	B	J	F97I020	029C3	029C1	DH711273	EUD
29C3	4402 875870	PRA-T155LGB-080	1	1/S		C	B	D	F97L107		029C2	DL713426	EUD
29D	4402 875180	PRA-T155LD-040	1	1/S						029D1			GSD
29D1	4402 875270	PRA-T155LD-050	1	1/S		C	B	J	F97F938	029D2	029D	1st Lot	GSD
29D2	4402 875800	PRA-T155LD-070	1	1/S		C	B	J	F97I020	029D3	029D1	DH711273	GSD
29D3	4402 875880	PRA-T155LD-080	1	1/S		C	B	D	F97L107		029D2	DL713426	GSD
29E	4402 875190	PRA-T155LF-040	1	1/S						029E1			FRD
29E1	4402 875280	PRA-T155LF-050	1	1/S		C	B	J	F97F938	029E2	029E	1st Lot	FRD
29E2	4402 875810	PRA-T155LF-070	1	1/S		C	B	J	F97I020	029E3	029E1	DH711273	FRD
29E3	4402 875890	PRA-T155LF-080	1	1/S		C	B	D	F97L107		029E2	DL713426	FRD
29F	4402 875170	PRA-T155LGB-040	1	1/S						029F1			SED
29F1	4402 875260	PRA-T155LGB-050	1	1/S		C	B	J	F97F938	029F2	029F	1st Lot	SED
29F2	4402 875790	PRA-T155LGB-070	1	1/S		C	B	J	F97I020	029F3	029F1	DH711273	SED
29F3	4402 875870	PRA-T155LGB-080	1	1/S		C	B	D	F97L107		029F2	DL713426	SED
29G	4402 875170	PRA-T155LGB-040	1	1/S						029G1			UKD
29G1	4402 875260	PRA-T155LGB-050	1	1/S		C	B	J	F97F938	029G2	029G	1st Lot	UKD
29G2	4402 875790	PRA-T155LGB-070	1	1/S		C	B	J	F97I020	029G3	029G1	DH711273	UKD
29G3	4402 875870	PRA-T155LGB-080	1	1/S		C	B	D	F97L107		029G2	DL713426	UKD
29H	4402 875160	PRA-T155LUC-040	1	1/S						029H1			AUD
29H1	4402 875250	PRA-T155LUC-050	1	1/S		C	B	J	F97F938	029H2	029H	1st Lot	AUD
29H2	4402 875780	PRA-T155LUC-070	1	1/S		C	B	J	F97I020	029H3	029H1	DH711273	AUD
29H3	4402 875860	PRA-T155LUC-080	1	1/S		C	B	D	F97L107		029H2	DL713426	AUD
29I	4402 875160	PRA-T155LUC-040	1	1/S						029I1			TWD
29I1	4402 875250	PRA-T155LUC-050	1	1/S		C	B	J	F97F938	029I2	029I	1st Lot	TWD
29I2	4402 875780	PRA-T155LUC-070	1	1/S		C	B	J	F97I020	029I3	029I1	DH711273	TWD
29I3	4402 875860	PRA-T155LUC-080	1	1/S		C	B	D	F97L107		029I2	DL713426	TWD
29J	4402 875160	PRA-T155LUC-040	1	1/S						029J1			SAD
29J1	4402 875250	PRA-T155LUC-050	1	1/S		C	B	J	F97F938	029J2	029J	1st Lot	SAD
29J2	4402 875780	PRA-T155LUC-070	1	1/S		C	B	J	F97I020	029J3	029J1	DH711273	SAD
29J3	4402 875860	PRA-T155LUC-080	1	1/S		C	B	D	F97L107		029J2	DL713426	SAD
29K	4402 875160	PRA-T155LUC-040	1	1/S						029K1			ASD
29K1	4402 875250	PRA-T155LUC-050	1	1/S		C	B	J	F97F938	029K2	029K	1st Lot	ASD
29K2	4402 875780	PRA-T155LUC-070	1	1/S		C	B	J	F97I020	029K3	029K1	DH711273	ASD
29K3	4402 875860	PRA-T155LUC-080	1	1/S		C	B	D	F97L107		029K2	DL713426	ASD
29L	4402 875380	PRA-T155LI-050	1	1/S		A	-	J	F97F938	029L1			ITALIAN
29L1	4402 876100	PRA-T155LI-070	1	1/S		C	B	J	F97L104	029L2	029L		ITALIAN
29L2	4402 875920	PRA-T155LI-080	1	1/S		C	B	D	F97L107		029L1		ITALIAN
29M	4402 875390	PRA-T155LE-050	1	1/S		A	-	J	F97F938	029M1			SPANISH
29M1	4402 876110	PRA-T155LE-070	1	1/S		C	B	J	F97L104	029M2	029M		SPANISH
29M2	4402 875930	PRA-T155LE-080	1	1/S		C	B	D	F97L107		029M1		SPANISH
29N	4402 875400	PRA-T155LSF-050	1	1/S		A	-	J	F97F938	029N1			FINNISH
29N1	4402 876120	PRA-T155LSF-070	1	1/S		C	B	J	F97L104	029N2	029N		FINNISH
29N2	4402 875940	PRA-T155LSF-080	1	1/S		C	B	D	F97L107		029N1		FINNISH
29O	4402 875410	PRA-T155LS-050	1	1/S		A	-	J	F97F938	029O1			SWEDISH
29O1	4402 876130	PRA-T155LS-070	1	1/S		C	B	J	F97L104	029O2	029O		SWEDISH
29O2	4402 875950	PRA-T155LS-080	1	1/S		C	B	D	F97L107		029O1		SWEDISH
29P	4402 875420	PRA-T155LN-050	1	1/S		A	-	J	F97F938	029P1			NORWEGIAN
29P1	4402 876140	PRA-T155LN-070	1	1/S		C	B	J	F97L104	029P2	029P		NORWEGIAN
29P2	4402 875960	PRA-T155LN-080	1	1/S		C	B	D	F97L107		029P1		NORWEGIAN
29Q	4402 875430	PRA-T155LDK-050	1	1/S		A	-	J	F97F938	029Q1			DANISH
29Q1	4402 876150	PRA-T155LDK-070	1	1/S		C	B	J	F97L104	029Q2	029Q		DANISH
29Q2	4402 875970	PRA-T155LDK-080	1	1/S		C	B	D	F97L107		029Q1		DANISH
29R	4402 875440	PRA-T155LNL-050	1	1/S		A	-	J	F97F938	029R1			DUTCH
29R1	4402 876160	PRA-T155LNL-070	1	1/S		C	B	J	F97L104	029R2	029R		DUTCH
29R2	4402 875980	PRA-T155LNL-080	1	1/S		C	B	D	F97L107		029R1		DUTCH
29S	4402 875450	PRA-T155LP-050	1	1/S		A	-	J	F97F938	029S1			PORTUGUESE
29S1	4402 876170	PRA-T155LP-070	1	1/S		C	B	J	F97L104	029S2	029S		PORTUGUESE
29S2	4402 875990	PRA-T155LP-080	1	1/S		C	B	D	F97L107		029S1		PORTUGUESE
51	4842 040060	TPAN40*08MSZN3L	12	50/P									
56	4842 040133	TZPAN3016MSZN3L	2	50/P									
57	4842 040690	TZPAN3006MSZN3L	2	50/P									
58	7405 003031	ERR030SKZN3A	1	50/P									

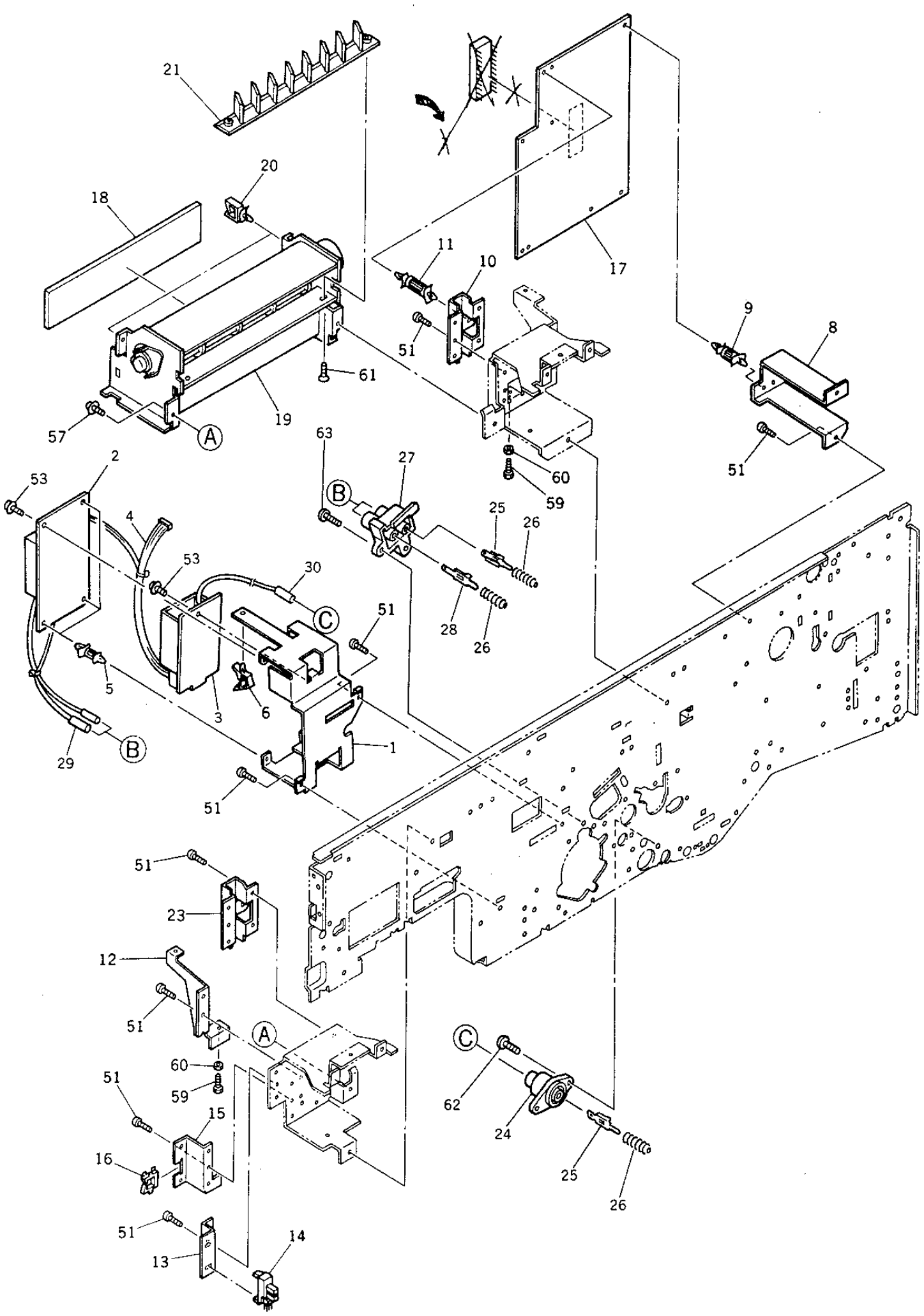
21
20
18
11
10
17
9
8
51
61
19
57
A
63
27
60
59
51
2
53
B
25
26
4
53
30
C
51
28
26
5
3
6
1
29
B
51
51
23
12
51
A
60
59
51
15
16
C
62
24
25
26
51
14
13

TOSHIBA

ITEM NO.	PARTS NO.	PARTS NAME	Q'TY / PAGE	Q'TY / PACK	SPE PRICE IN NONE	P	I	R	BSI NO.	TO	FROM	SERIAL NO.	REMARKS
1	4401 754310	BRKT-HVT-M-PRE	1	1/P									
2	4402 322420	PS-HVT-M-154	1	1/C									
3	4402 322410	PS-PTC-154	1	1/C									
4	4401 796200	WH-SUB-HVTM-150	1	1/P									
5	4843 390870	PWZ-SPLS-6U	3	5/P									
6	4843 391052	CLP/W-LS-10	1	5/P									
7	4402 325510	IC-154SUB-01	1	1/S						007 1			IC12
7 1	4402 325510	IC-154SUB-01	0	1/S		B	-	E	F97H992		007	DG7	IC12
8	4401 900610	BKT-PWA-DR-U	1	1/P									
9	4843 390871	PWZ-SPLS-7U	1	5/P									
10	4401 753530	HOLDER-DF	1	1/P									
11	4843 390875	PWZ-SPLS-14U	1	5/P									
12	4401 753550	STOPPER-DF	1	1/P									
13	4401 753540	BKT-SZ-HOME-CRG	1	1/P									
14	4400 902350	SCO-SX460-P2	1	1/C									
15	4401 753510	BKT-DF-CLAMP	1	1/P									
16	4843 390942	BD/W-EDS-2	1	10/P									
17	4402 874120	PWA-F-SUB-155	1	1/SB									
18	4401 901350	FILTER-FAN-152	1	1/KP									
19	4402 321650	FAN-OPT-154	1	1/C									
20	4843 390855	CLP/W-LWS-2U	2	5/P									
21	4402 217440	LOUVER-FAN-OPT	1	1/P									
23	4401 753590	HOLDER-DF-L	1	1/P									
24	4402 308810	TERMINAL-PTC	1	1/P									
25	4402 308980	PLT-TERMINAL-R1	2	1/P									
26	4402 308950	SPC055-050-0200	3	5/P									
27	4402 308910	TERMINAL-FRAME	1	1/P									
28	4402 308970	PLT-TERMINAL-R2	1	1/P									
29	4402 321930	WH-M-TR-154	1	1/P									
30	4402 321940	WH-PTC-TR-154	1	1/P									
51	4842 040060	TPAN40*08MSZN3L	14	50/P									
53	4842 040118	THPAN4008MSZN3L	2	50/P									
57	4842 040690	TZPAN3006MSZN3L	2	50/P									
59	7341 401411	5HEX40*14MSZN3A	2	50/P									
60	7370 400011	7/0NUT40MSZN3A	2	50/P									
61	4842 040495	PTBR30*06MSZN3A	2	50/P									
62	4842 040702	TZPAN4010MSZN3L	2	50/P									
63	4842 040700	TZPAN4008MSZN3L	2	50/P									

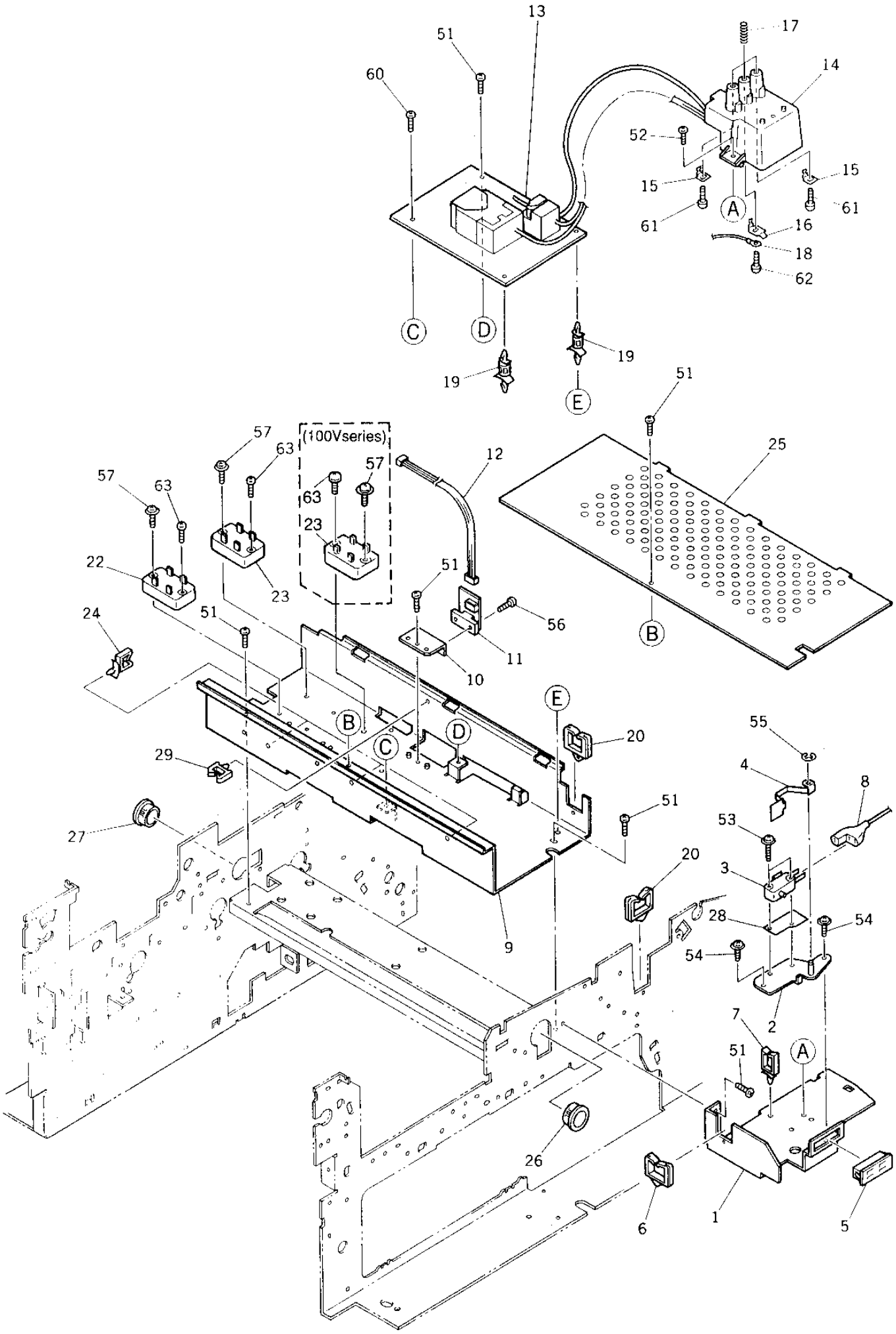
13
51
60
17
14
52
15
15
61
61
A
16
18
62
C
D
19
19
E
51
25
B
57
63
(100Vseries)
57
63
12
57
63
23
22
23
51
24
51
56
11
10
E
B
D
C
20
29
55
4
8
51
53
27
20
3
28
54
54
9
2
7
51
A
26
6
1
5

TOSHIBA

ITEM NO.	PARTS NO.	PARTS NAME	Q'TY / PAGE	Q'TY / PACK	SPE PRICE IN NONE	P	I	R	BSI NO.	TO	FROM	SERIAL NO.	REMARKS
1	4401 754380	BRKT-SW-DOOR-L	1	1/P									
2	4401 754110	K-PLT-SW-DOOR	1	1/P									
3	4843 231850	SM-DD2L-A1AA	1	1/P									
4	4401 754150	SPL-SW-DOOR-2	1	1/P									
5	4402 202680	MG-CATCH-22	1	1/P									
6	4400 808280	EDS-1717U	1	5/P									
7	4843 390888	CLP/W-WS-2U	1	5/P									
8	4401 796070	WH-DOOR-200-150	1	1/P									
9	4402 310990	STAY-HVT-TR	1	1/P									
10	4401 777370	BKT-SNSR-STACK	1	1/P									
11	4401 795630	PWA-F-PEM-150-0	1	1/C									
12A	4402 322060	WH-PFC-AJSW-154	1	1/P									100V SERIES
12B	4401 796220	WH-PFC-AJSW-150	1	1/P									200V SERIES
13	4402 322400	PS-HVT-T-154	1	1/C									
14	4401 764990	K-TERMINAL-HVT	1	1/P									
15	4402 205730	PLT-TERM-HVT-TR	2	1/P									
16	4401 764980	PLATE-TERM-BIAS	1	1/P									
17	4402 205740	SPC-TERM-HVT-TR	3	1/P									
18	4401 795840	WH-BELTGB-150	1	1/P									
19	4843 390871	PWZ-SPLS-7U	2	5/P									
20	4843 391164	BD/W-EDS-1717U	1	10/P									
22	3037 886230	TSS16J48SR	1	1/D									
23A	3037 885416	TY-TSS8J48SR	2	1/D									100V SERIES
23B	3037 885416	TY-TSS8J48SR	1	1/D									200V SERIES
24	4408 721660	CLP/W-LWS-2Y	3	5/P									
25	4401 905360	COV-STAY-HVT-TR	1	1/PP									
26	4843 390809	CLP/W-OCB-1000	1	5/P									
27	4843 390808	CLP/W-OCB-875	1	5/P									
28	4401 754920	MYLAR-SW-DOOR	1	5/P									
29	4843 391178	CLP/W-UAMS05W	1	5/P									
51	4842 040060	TPAN40*08MSZN3L	7	50/P									
52	4842 040700	TZPAN4008MSZN3L	1	50/P									
53	4842 040138	TPAN3016MSZN3L	1	50/P									
54	4842 040690	TZPAN3006MSZN3L	2	50/P									
55	7405 003031	ERR030SKZN3A	1	50/P									
56	4842 040665	TPAN3006MSZN3L	1	50/P									
57A	4842 040692	TZPAN3008MSZN3L	3	50/P									100V SERIES
57B	4842 040692	TZPAN3008MSZN3L	2	50/P									200V SERIES
60	4842 040118	THPAN4008MSZN3L	1	50/P									
61	4842 040495	PTBR30*06MSZN3A	2	50/P									
62	4842 040846	PTBR30*08MSZN3A	1	50/P									
63A	4842 040481	THPAN3008MSZN3L	3	50/P									100V SERIES
63B	4842 040481	THPAN3008MSZN3L	2	50/P									200V SERIES

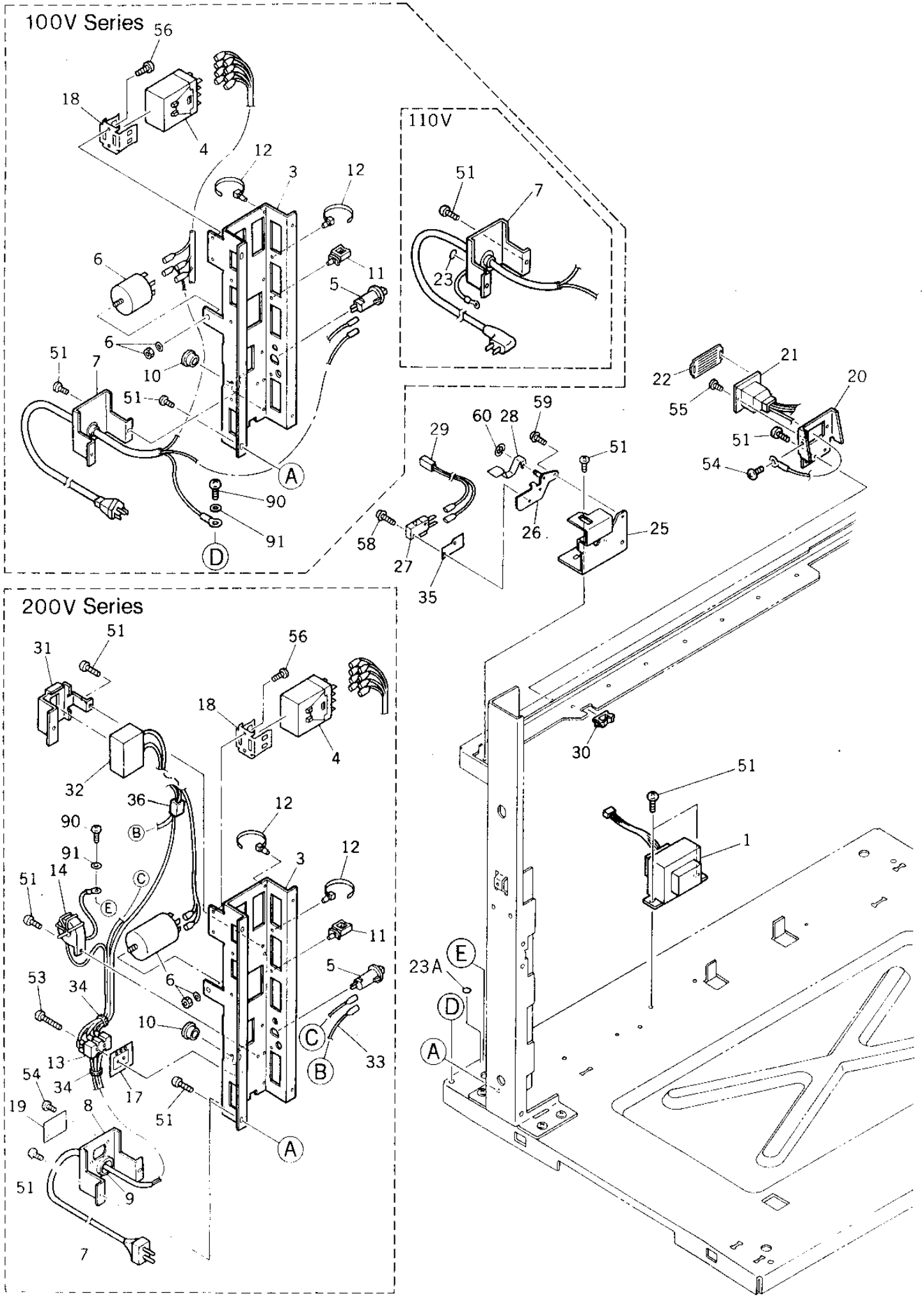
100V Series
110V
200V Series

ITEM NO.	PARTS NO.	PARTS NAME	Q'TY / PAGE	Q'TY / PACK	SPE PRICE IN NONE	P	I	R	BSI NO.	TO	FROM	SERIAL NO.	REMARKS
1A	4401 916780	TR-115V-152	1	1/C									TAD
1B	4401 916780	TR-115V-152	1	1/C									CSD
1C	4401 916790	TR-230V-152	1	1/C									EUD
1D	4401 916790	TR-230V-152	1	1/C									GSD
1E	4401 916790	TR-230V-152	1	1/C									FRD
1F	4401 916790	TR-230V-152	1	1/C									SED
1G	4401 916790	TR-230V-152	1	1/C									UKD
1H	4401 916790	TR-230V-152	1	1/C									AUD
1I	4401 916780	TR-115V-152	1	1/C									TWD
1J	4401 917400	TR-127V-152	1	1/C									SAD
1K	4401 916790	TR-230V-152	1	1/C									ASD
3	4401 911200	BKT-ELEC	1	1/P									
4	4408 519040	KP-G4J3342TUS10	1	1/D									
5A	4402 255020	B-NRW10-15A-Y	1	1/D									100V SERIES
5B	4402 255050	B-NRW10-10A-Y	1	1/D									200V SERIES
6A	4402 322610	FL-VU-215F3-M	1	1/D									100V SERIES
6B	4400 878610	FILTER-ZSB2210	1	1/D									200V SERIES
7A	4402 322640	ASM-PWCBL-UC-C6	1	1/P									TAD
7B	4402 322640	ASM-PWCBL-UC-C6	1	1/P									CSD
7C	4400 961350	K-PW-CBL-E-287	1	1/P									EUD
7D	4400 961350	K-PW-CBL-E-287	1	1/P									GSD
7E	4400 961350	K-PW-CBL-E-287	1	1/P									FRD
7F	4400 961350	K-PW-CBL-E-287	1	1/P									SED
7G	4402 255840	CBL/P-UK	1	1/P									UKD
7H	4407 322330	POWER-CABLE-AU	1	1/P									AUD
7I	4408 546610	ASM-PWCBL-100	1	1/P									TWD
7J	4402 322640	ASM-PWCBL-UC-C6	1	1/P									SAD
7K	4400 961350	K-PW-CBL-E-287	1	1/P									ASD
8B	4408 546550	BKT-P-CABLE-EUR	1	1/P									200V SERIES
9B	4407 987410	BUSH-CBL-200	1	5/P									200V SERIES
10	4842 414631	GMT-OCB-625	1	10/P									
11	4843 390856	CLP/W-LWS-3U	1	5/P									
12	4407 406860	BAND-PLP1.5I	2	5/P									
13B	4404 432210	TERMINAL-500K13	1	1/P									200V SERIES
14B	4401 917410	COIL-EARTH-152	1	1/P									200V SERIES
17B	4407 751090	STICKER-TERM	1	5/P									200V SERIES
18	4408 519130	BRKT-R99-04G2J	1	1/P									
19B	4408 542740	PLATE-BLIND-STR	1	1/P									200V SERIES
20	4401 754520	BRKT-SORT-CON	1	1/P									
21	4401 915460	WH-SORT-CNT-152	1	1/P									
22	4401 754540	COVER-SORT-CNTR	1	1/P									
23A	4404 610110	MARK-EARTH-VDE	1	10/P									EXCEPT TWD
23I	4404 610110	MARK-EARTH-VDE	1	10/P									TWD
25	4401 754760	BRKT-SW-D-REAR	1	1/P									
26	4401 754110	K-PLT-SW-DOOR	1	1/P									
27	4843 231850	SM-DD2L-A1AA	1	1/P									
28	4401 754150	SPL-SW-DOOR-2	1	1/P									
29	4401 798010	WH-SHEL-EN-150	1	1/P									
30	4843 390943	BD/W-EDS-3	1	10/P									
31B	4401 787480	HLDR-CONDENSER	1	1/P									200V SERIES
32B	4401 797740	K-CONDENSER-150	1	1/D									200V SERIES
33B	4401 798110	WH-BRAKER-150	1	1/P									200V SERIES
34B	4346 754010	SKB-BAND-1	2	5/P									200V SERIES
35	4401 754920	MYLAR-SW-DOOR	1	5/P									
36B	4843 524164	FLD-SFC-8	1	1/D									200V SERIES
51A	4842 040060	TPAN40*08MSZN3L	13	50/P									100V SERIES
51B	4842 040060	TPAN40*08MSZN3L	17	50/P									200V SERIES
53B	7040 301611	PAN30*16MSZN3AI	2	50/P									200V SERIES
54A	4842 040118	THPAN4008MSZN3L	1	50/P									100V SERIES
54B	4842 040118	THPAN4008MSZN3L	4	50/P									200V SERIES
55	4842 040684	TBID3006MSCR3C	2	50/P									
56	4842 040700	TZPAN4008MSZN3L	2	50/P									
58	4842 040138	TPAN3016MSZN3L	2	50/P									
59	4842 040690	TZPAN3006MSZN3L	2	50/P									
60	7405 003031	ERR030SKZN3A	1	50/P									
90	4842 040793	TPAN5008MSZN-3L	1	50/P									
91	7402 005031	0TWAS050SKZN3A	1	50/P									

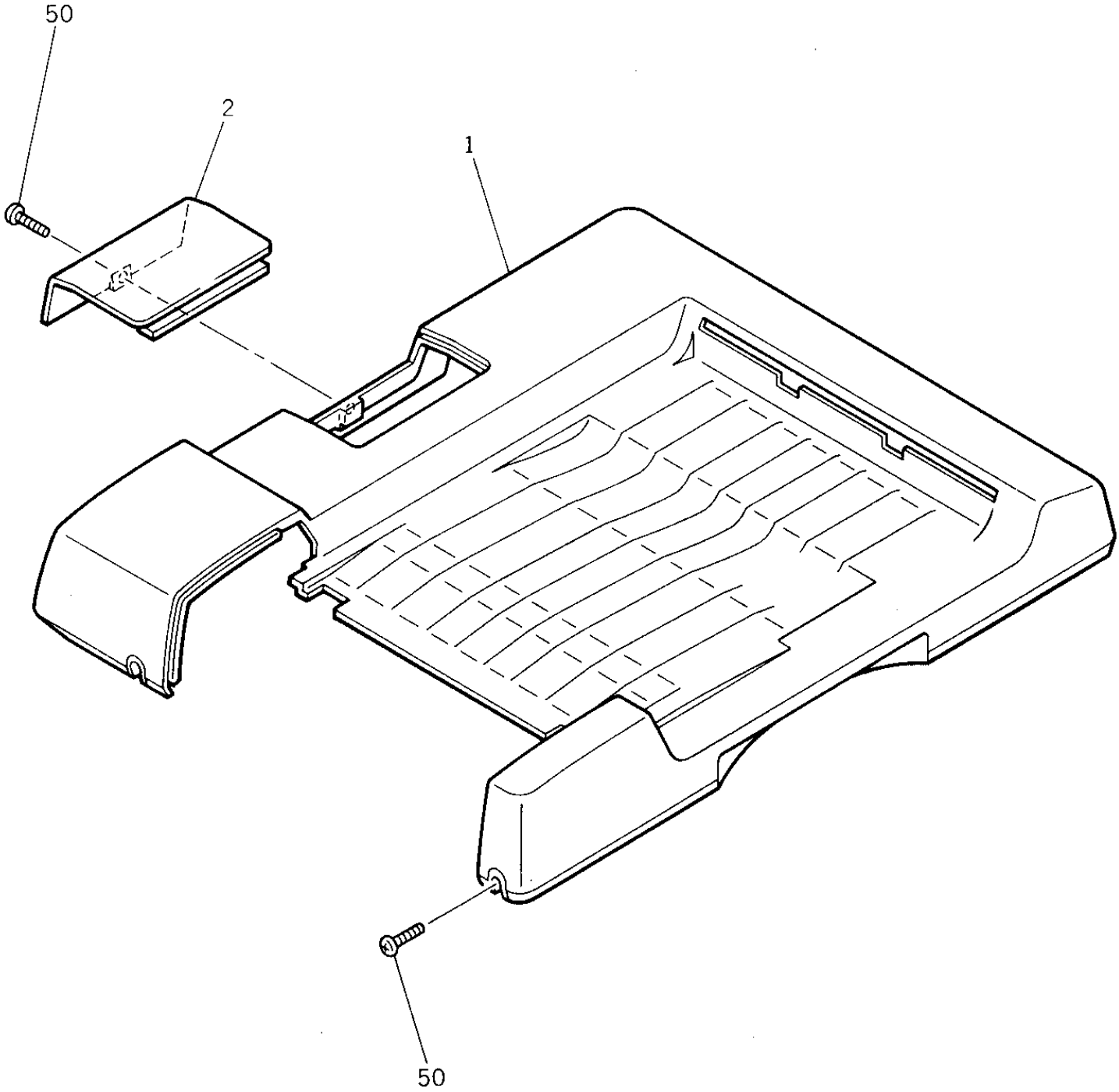
50
2
1
50

ITEM NO.	PARTS NO.	PARTS NAME	Q'TY / PAGE	Q'TY / PACK	SPE PRICE IN NONE	P	I	R	BSI NO.	TO	FROM	SERIAL NO.	REMARKS
1	4401 790700	COV-DF-714-T	1	1/PP									
2	4401 790720	COV-SERVICE-T	1	1/PP									
50	7043 400613	BID40*06MSCR1AI	12	50/P						050 1			
50 1	4401 790530	BID40*06MSCR1AI	12	50/P		E	-	J	F98D263		050		

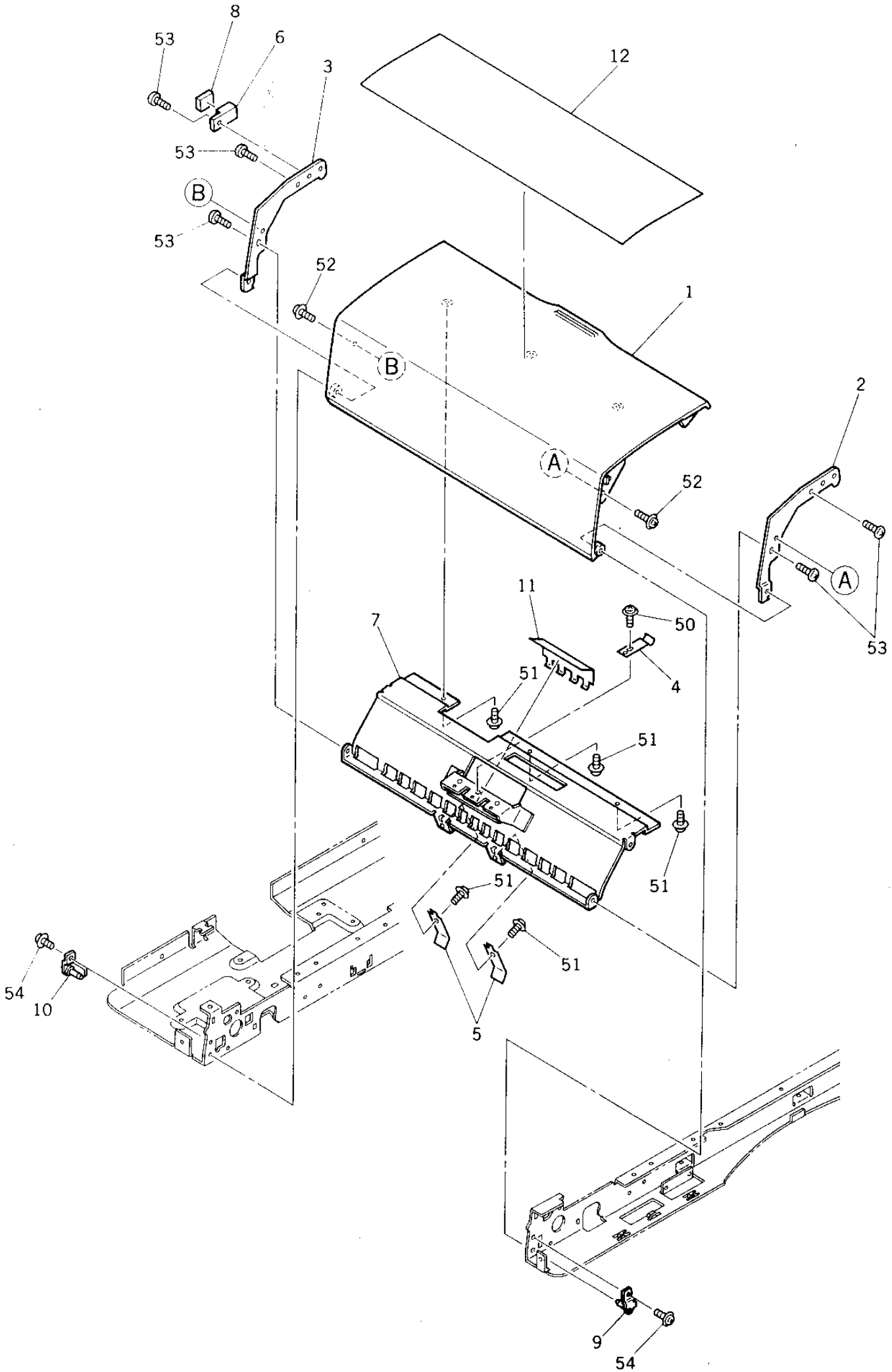
8
53
6
3
12
53
B
53
52
1
B
2
A
52
A
53
11
50
7
4
51
51
51
51
51
54
10
5
9
54

ITEM NO.	PARTS NO.	PARTS NAME	Q'TY / PAGE	Q'TY / PACK	SPE PRICE IN NONE	P	I	R	BSI NO.	TO	FROM	SERIAL NO.	REMARKS
1	4401 790740	COV-ORG-JAM-T	1	1/PP									
2	4401 790910	FRAME-FEED-714F	1	1/P									
3	4401 790920	FRAME-FEED-714R	1	1/P									
4	4400 786000	SPL-PRESS-SEPT	1	1/P									
5	4401 791100	SPL-ALIGN-714	2	5/P									
6	4402 243080	HLD-MG/CATCH	1	5/P									
7	4401 790900	GUIDE-FEED-714B	1	1/P									
8	4402 243090	MG-JAM-SW	1	1/P									
9	4401 794430	K-BKT-STOPPER-F	1	1/P									
10	4401 794440	K-BKT-STOPPER-R	1	1/P									
11	4401 791160	MYLAR-GUIDE-ALN	1	1/C									
12A	4402 311310	LBL-INST-6560UC	1	1/KP									TAD
12B	4402 311310	LBL-INST-6560UC	1	1/KP									CSD
12C	4402 311320	LBL-INST-6560ER	1	1/KP									EUD
12D	4402 311330	LBL-INST-6560GR	1	1/KP									GSD
12E	4402 311340	LBL-INST-6560FR	1	1/KP									FRD
12F	4402 311320	LBL-INST-6560ER	1	1/KP									SED
12G	4402 311320	LBL-INST-6560ER	1	1/KP									UKD
12M	4402 311350	LBL-INST-6560SP	1	1/KP									SPANISH
12N	4402 311360	LBL-INST-6560IT	1	1/KP									ITALIAN
50	4402 244100	SCREW-MR-M4-7	1	50/P									
51	4842 040709	TPPAN3006MSZN3A	5	50/P									
52	4402 241770	PAN-D4*3-M3*3	2	50/P									
53	4401 791080	SCREW-MR-M3-6	5	50/P									
54	4842 040689	TZPAN3006MSZN3A	2	50/P									

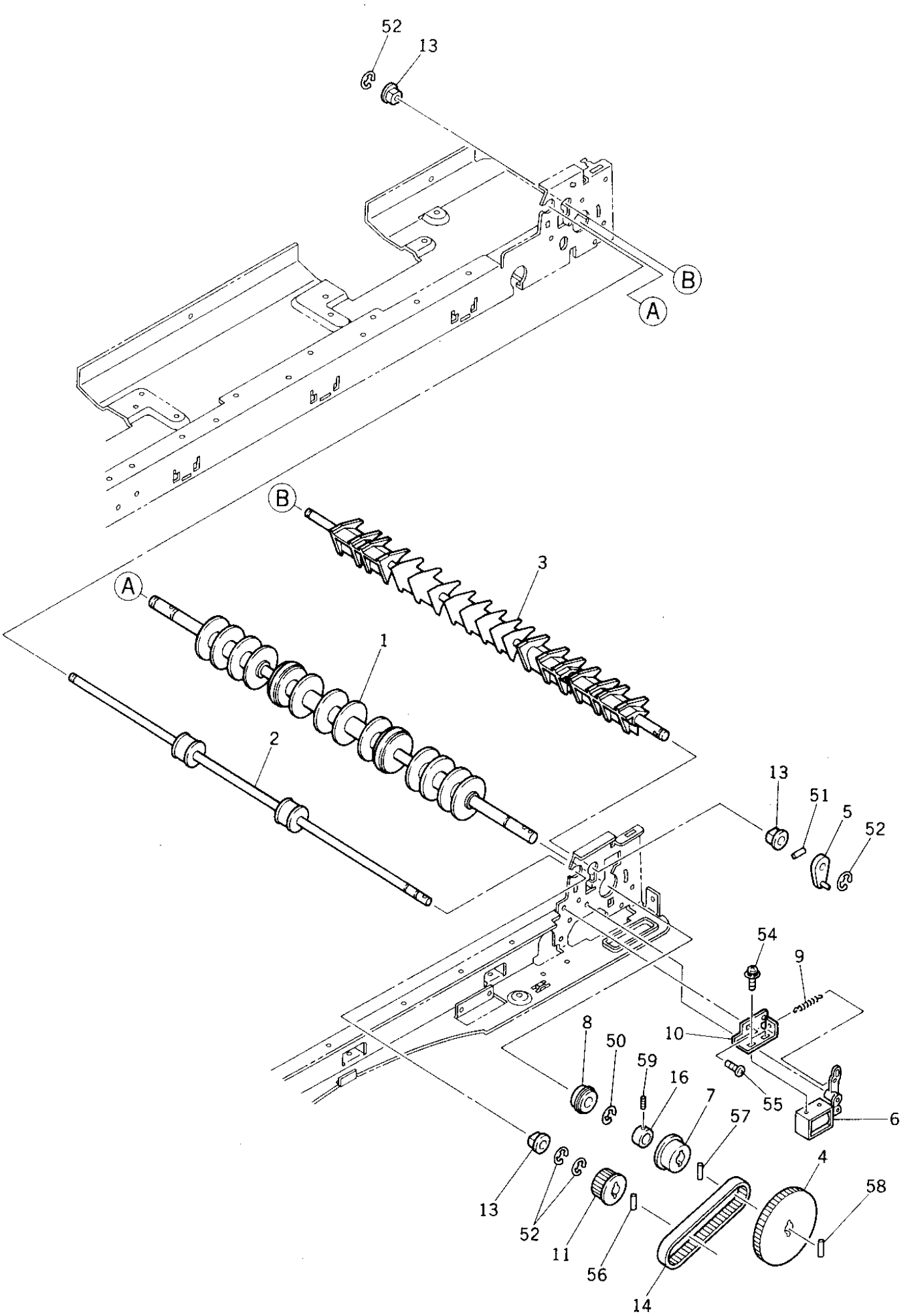
52
13
B
A
B
3
A
1
2
13
51
5
52
54
9
8
50
59
16
10
7
55
57
6
4
58
13
52
11
56
14

ITEM NO.	PARTS NO.	PARTS NAME	Q'TY / PAGE	Q'TY / PACK	SPE PRICE IN NONE	P	I	R	BSI NO.	TO	FROM	SERIAL NO.	REMARKS
1	4401 794350	K-ROL-RVS-714	1	1/KP									
2	4401 791020	K-ROL-EXIT-714	1	1/C									
3	4402 241780	K-FLAP-REVERSE	1	1/KP									
4	4401 792370	HANDLE-OR-JAM-B	1	1/P									
5	4402 241790	LINK-I-FLAP-RVS	1	1/P									
6	4401 792250	K-SND-GATE-714	1	1/C									
7	4401 791040	PLY-S2M-33	1	1/P									
8	4408 322790	BRG-LNR-1680HHR	1	1/P									
9	4402 241820	SPE-026-040-095	1	5/P									
10	4401 791050	BRKT-SOL	1	1/P									
11	4402 242560	PLY/T-S2M-Z18	1	1/P									
13	4401 914760	BUSH-D6-4	3	5/P									
14	4401 791060	BLT-S2M-70-6	1	1/P									
16	4401 794360	FRANGE-8-6	1	1/P									
50	7405 007031	ERR070SKZN3A	1	50/P									
51	7436 201008	NPIN20/10SS	1	50/P									
52	7405 005031	ERR050SKZN3A	4	50/P									
54	7640 300531	ZPAN30*05MSZN3A	2	50/P									
55	4842 040689	TZPAN3006MSZN3A	2	50/P									
56	7432 201008	HPIN20/10SSDG	1	50/P									
57	7432 201208	HPIN20/12SSDG	1	50/P									
58	7432 201408	HPIN20/14SSDG	1	50/P									
59	4842 011062	9HSS30/04MSFB	1	50/P									

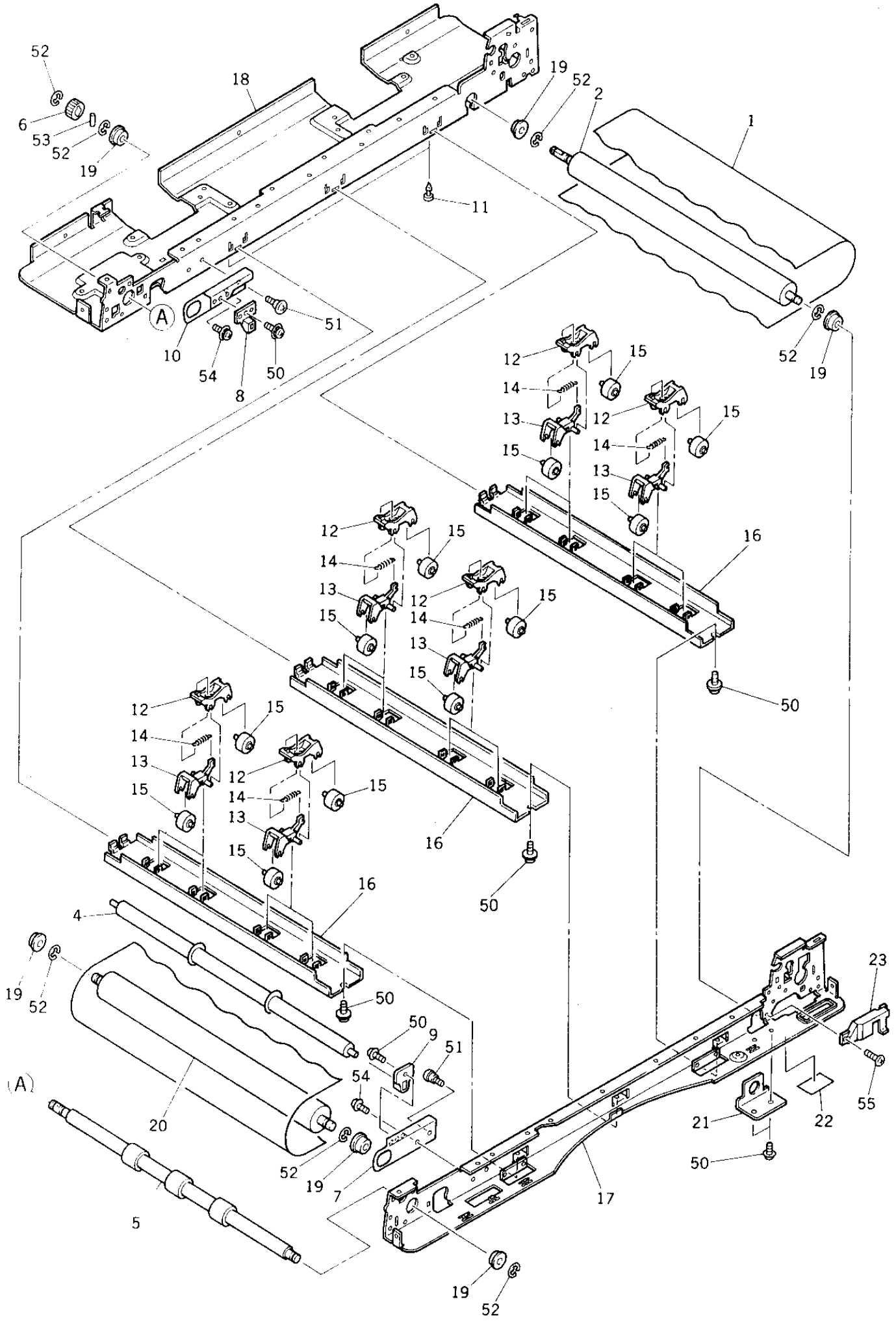
52
6
53
52
19
18
19
52
2
1
11
A
10
54
8
50
51
52
19
12
15
14
13
12
15
14
15
13
15
16
12
15
14
13
12
15
14
15
13
15
50
12
15
14
13
12
15
14
15
13
15
16
50
16
4
19
52
50
50
9
51
54
(A)
20
52
19
7
5
17
19
52
23
55
21
22
50

TOSHIBA

ITEM NO.	PARTS NO.	PARTS NAME	Q'TY / PAGE	Q'TY / PACK	SPE PRICE IN NONE	P	I	R	BSI NO.	TO	FROM	SERIAL NO.	REMARKS
1	4401 794580	BELT-DF-714	1	1/C									
2	4401 794300	K-ROL-BLT-714-R	1	1/C									
4	4401 794590	ROL-PRS-D14-16	1	1/KP									
5	4401 790940	K-ROL-ALIGN-714	1	1/KP									
6	4401 790950	GEAR-0.75-21H-L	1	1/P									
7	4401 914820	PLT-ROL-BELT-F	1	1/P									
8	4401 914850	HOLD-PRS-ROL-R	1	1/P									
9	4401 914840	HOLD-PRS-ROL-F	1	1/P									
10	4401 914830	PLT-ROL-BELT-R	1	1/P									
11	4401 792340	SPACER-DF-4.5	2	5/P									
12	4401 791180	HOLD-PRESS-1	12	1/P									
13	4401 791190	HOLD-PRESS-2	12	1/P									
14	4401 914860	SPE037-025-0135	12	5/P									
15	4401 914870	ROL-PRESS-CROWN	24	1/P									
16	4401 914800	K-STAY-PRS-ROL	3	1/P									
17	4401 790960	K-FRAME-MAIN-F	1	1/P									
18	4401 790980	FRAME-MAIN-714R	1	1/P									
19	4408 322790	BRG-LNR-1680HHR	6	1/P									
20	4402 241910	K-ROL-BKT-L	1	1/C									
21	4401 790990	BKT-ROL-BELT	1	1/P									
22	4401 790680	LBL-KNOB-J-MB	1	5/P									
23	4401 792330	COV-HANDLE-OPEN	1	1/P									
50	4842 040689	TZPAN3006MSZN3A	9	50/P									
51	4402 241960	PAN-STUD-M3*2.2	2	50/P									
52	7405 007031	ERR070SKZN3A	7	50/P									
53	4842 904008	PIN-N-20/12SUS	1	50/P									
54	4842 040697	TZPAN4006MSZN3A	2	50/P									
55	4401 791080	SCREW-MR-M3-6	1	50/P									

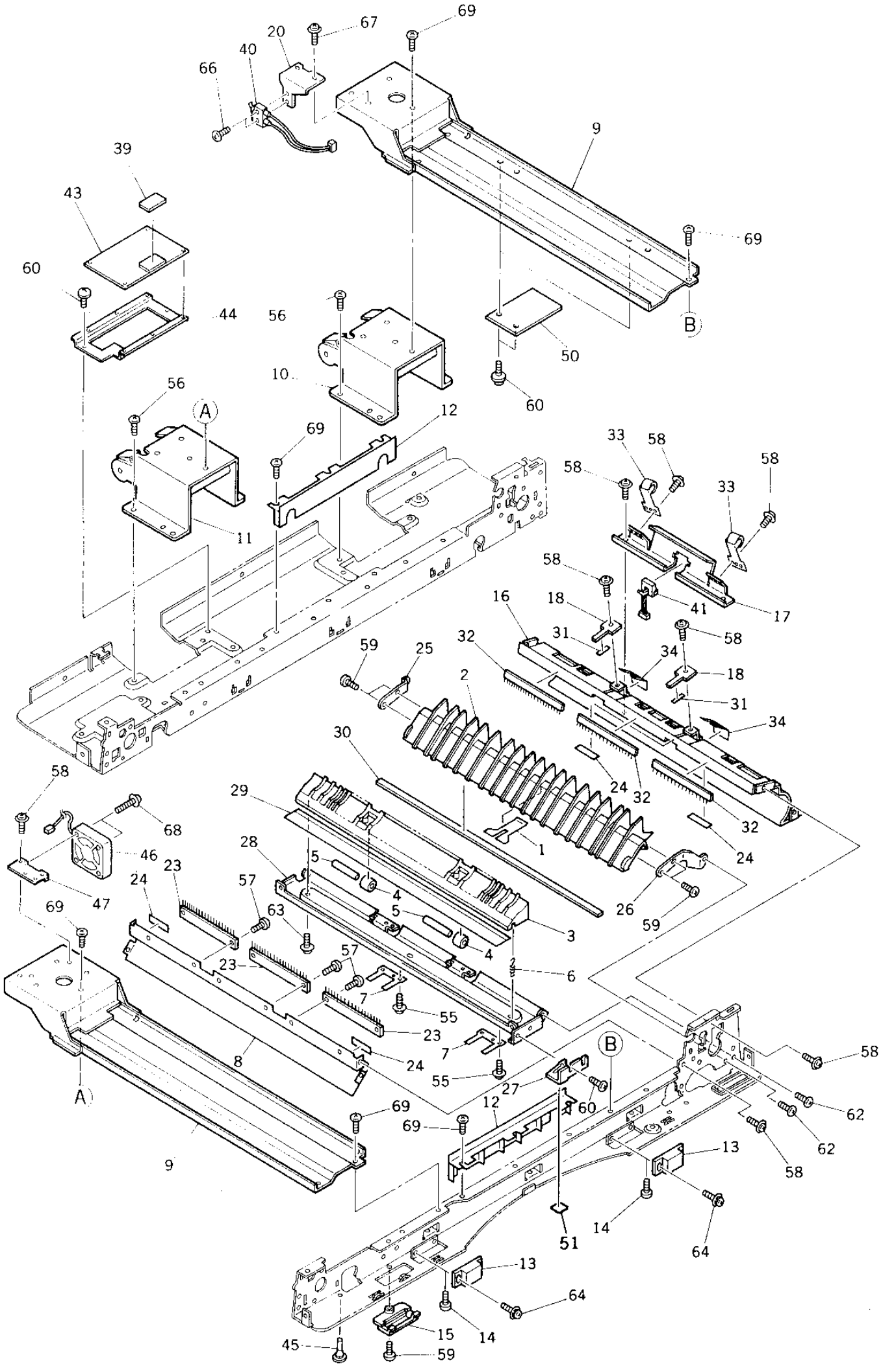
69
67
20
40
66
9
39
43
69
60
44
56
B
50
10
60
56
A
12
69
33
58
58
58
33
11
58
16
18
41
17
31
58
32
34
59
25
18
2
31
34
30
24
32
58
29
32
68
1
24
46
28
5
23
24
57
4
26
47
69
63
5
59
3
4
57
23
6
7
55
23
7
B
58
8
24
55
27
A
12
60
62
69
69
62
13
9
58
14
51
64
13
64
15
14
45
59

TOSHIBA

ITEM NO.	PARTS NO.	PARTS NAME	Q'TY / PAGE	Q'TY / PACK	SPE PRICE IN NONE	P	I	R	BSI NO.	TO	FROM	SERIAL NO.	REMARKS
1	4401 794370	MYLAR-GUIDE-REV	1	1/P									
2	4401 791240	GUIDE-REV-714-4	1	1/P									
3	4402 242190	GUIDE-RVS-1	1	1/P									
4	4402 242170	ROL-D10*L10	2	1/P									
5	4402 242180	SFT-ROL-3*33.8	2	1/P									
6	4401 791250	SPE081-070-0273	2	5/P									
7	4402 242140	SPL-NOISE	2	1/P									
8	4402 242120	GUIDE-RVS-3	1	1/P									
9	4401 794540	K-STAY-HINGE	2	1/P									
10	4401 914680	ASM-HINGE-758-R	1	1/C									
11	4401 914690	ASM-HINGE-758-L	1	1/C									
12	4401 794200	GUIDE-BELT	2	1/P									
13	4402 242110	MG/CATCH-DF	2	1/P									
14	4401 792340	SPACER-DF-4.5	2	5/P									
15	4402 242100	COV-DF-OPEN-SW	1	1/P									
16	4401 791330	GUIDE-REV-714-2	1	1/P									
17	4401 791340	BKT-CENS-REV	1	1/P									
18	4401 914790	SPL-EXIT-ORG758	2	1/P									
20	4401 794480	BRKT-MSW	1	1/P									
23	4408 323180	BRS-EXIT	3	1/KP						023 1			
23 1	4401 914900	BRS-EXIT	3	1/KP		C	B	E	F97K082		023	DI7	
24	4402 242130	SHEET-NOISE	4	5/P									
25	4401 791390	BKT-GUIDE-R	1	1/P									
26	4401 791400	BKT-GUIDE-F	1	1/P									
27	4401 792390	HANDLE-STAY-REV	1	1/P									
28	4401 791420	STAY-GUIDE-REV	1	1/P									
29	4402 242160	GUIDE-MYLAR-IN	1	1/KP									
30	4401 791430	MYLAR-GUIDE-OUT	1	1/KP									
31	4402 242260	SHEET-SPL-EXIT	2	5/P									
32	4400 786330	BRUSH-EXIT	3	1/KP									
33	4402 242270	K-ROL-RVS-2	2	1/P									
34	4401 791440	MYLAR-GUIDE-RVS	2	1/C									
39	4401 913960	PRA-758DF-03	1	1/S									
40	4401 793480	K-OPNSW-714	1	1/D									
41	4401 792910	SZ-TURN-714	1	1/C									
43	4401 913800	PWA-F-LGC-758	1	1/SB									
44	4401 914700	BRKT-PWA-758	1	1/P									
45	4401 792350	SPACER-DF-1.5	1	5/P									
46	4401 913810	FAN-DC-758	1	1/D									
47	4401 914710	BRKT-FAN-758	1	1/P									
50	4401 794510	K-BKT-BRUSH	2	1/P									
51	4402 311210	LBL-M-DF	1	5/P									
55	4401 792230	SCREW-M3-4-T	4	50/P									
56	4402 244100	SCREW-MR-M4-7	8	50/P									
57	7044 300411	FLT30*04MSZN3AI	6	50/P						057 1			
57 1	4842 040852	TPPAN3004MSZN3A	6	50/P		C	B	E	F97K082		057	DI7	
58	4842 040689	TZPAN3006MSZN3A	16	50/P									
59	7043 300813	BID30*08MSCR1AI	5	50/P									
60	4401 791080	SCREW-MR-M3-6	8	50/P									
62	4402 241960	PAN-STUD-M3*2.2	4	50/P									
63	4842 040709	TPPAN3006MSZN3A	3	50/P									
64	7640 300851	ZPAN30*08MSZN3A	4	50/P									
66	7043 230811	BID23*08MSZN3A	1	50/P									
67	4842 040723	TPPAN4006MSZN3A	1	50/P									
68	7640 403051	ZPAN40*30MSZN3A	2	50/P									
69	4842 040747	TBID4006MSZN3L	20	50/P									

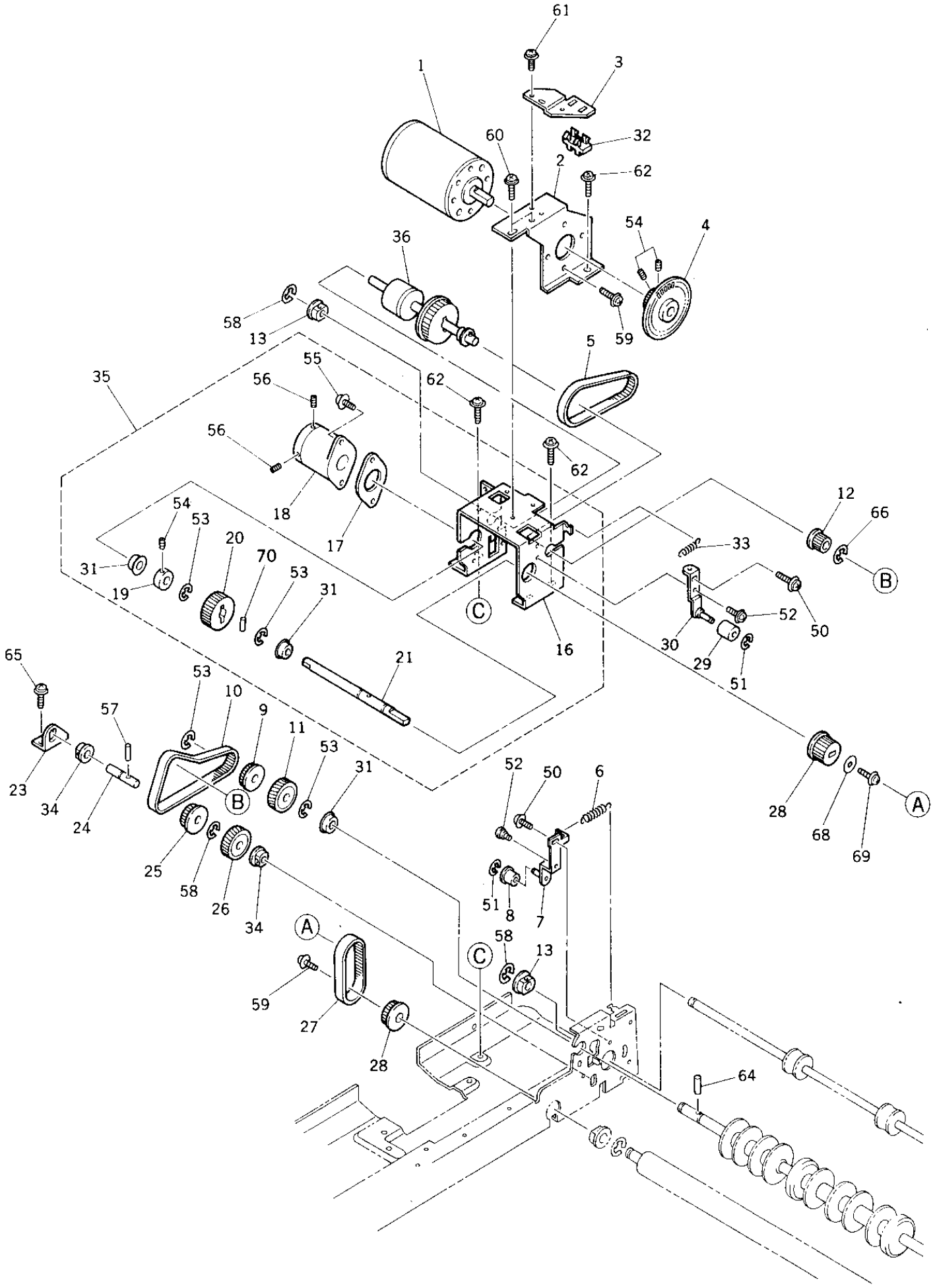
61
1
3
60
32
2
62
54
4
36
58
13
59
5
55
35
56
62
56
62
18
17
12
66
54
53
20
33
31
70
53
B
19
31
C
52
50
16
30
29
51
65
21
53
10
57
9
11
53
31
52
50
6
23
34
24
B
28
68
69
A
25
58
26
34
51
8
7
A
58
C
13
59
27
28
64

TOSHIBA

ITEM NO.	PARTS NO.	PARTS NAME	Q'TY / PAGE	Q'TY / PACK	SPE PRICE IN NONE	P	I	R	BSI NO.	TO	FROM	SERIAL NO.	REMARKS
1	4401 913820	M/DC-BLT-758	1	1/C									
2	4401 791500	K-BKT-M/DC-RVS	1	1/P									
3	4401 791510	BRKT-CENS-M/DC	1	1/P									
4	4402 242450	PLY*DISK-S2M-20	1	1/P									
5	4401 791520	BLT-S3M-60-6	1	1/P									
6	4401 791530	SPE054-035-0162	1	5/P						006 1			
6 1	4401 914880	SPE067-070-0181	1	5/P		C	B	E	F97F933		006	DG7	
7	4401 791540	K-ARM-TENSION	1	1/P									
8	4401 791570	ROL-TENSION	1	1/P									
9	4401 791580	PLY-S2M-29-OW	1	1/P									
10	4400 786500	BLT-S2M-80-6	1	1/P									
11	4401 791590	GEAR-0.75-29H-L	1	1/P									
12	4401 791600	PLY-S2M-21	1	1/P									
13	4401 914760	BUSH-D6-4	2	5/P									
16	4401 791630	BKT-DRIVE-BRAKE	1	N/A***									
17	4401 791640	SPACER-DRIVE	1	N/A***									
18	4401 792710	BRK-BELT-714	1	N/A***									
19	4401 791660	COLLAR-8-9	1	N/A***									
20	4401 790510	GEAR-0.75-33	1	N/A***						020 1			
20 1	4401 790510	GEAR-0.75-33	1	1/P		C	-	J	F97G963		020		
21	4401 794290	SFT-DRIVE-BRAKE	1	N/A***									
23	4401 791700	BRKT-IDLE	1	1/P									
24	4401 791710	SHAFT-IDLE	1	1/P									
25	4401 791720	PLY-S2M-29	1	1/P									
26	4401 791730	GER-0.75-29H-OW	1	1/P									
27	4401 791740	BELT-S2M-83-6	1	1/P									
28	4401 791750	PLY-S3M-22	2	1/P									
29	4401 791760	ROL-TENSION	1	1/P									
30	4401 791770	K-LVR-TENSION	1	1/P									
31	4408 322790	BRG-LNR-1680HHR	3	1/P									
32	3038 646300	PHD-TLP1215	1	1/P									
33	4401 791800	SPE055-045-0199	1	5/P									
34	4401 914760	BUSH-D6-4	2	5/P									
35	4401 790520	ASM-BKT-BRAKE	1	1/D									
36	4401 914780	ASM-CLU-758	1	1/D									
50	4842 040709	TPPAN3006MSZN3A	2	50/P									
51	7405 002031	ERR020SKZN3A	2	50/P									
52	4402 242310	PAN-STUD-M3*3	2	50/P									
53	7405 007031	ERR070SKZN3A	4	50/P									
54	4842 011062	9HSS30/04MSFB	3	50/P									
55	7640 300851	ZPAN30*08MSZN3A	2	50/P									
56	4842 011066	9HSS30/10MSFB	2	50/P									
57	4842 904009	NPIN20/14SUS	1	50/P									
58	7405 005031	ERR050SKZN3A	3	50/P									
59	7640 400631	ZPAN40*06MSZN3A	3	50/P									
60	4842 040697	TZPAN4006MSZN3A	2	50/P									
61	4842 040689	TZPAN3006MSZN3A	1	50/P									
62	4402 244100	SCREW-MR-M4-7	4	50/P									
64	4842 904008	PIN-N-20/12SUS	1	50/P									
65	4401 791080	SCREW-MR-M3-6	1	50/P									
66	7405 004031	ERR040SKZN3A	1	50/P									
68	4401 794330	WASHER-P	1	50/P									
69	7043 400811	BID40*08MSZN3AI	1	50/P									
70	7432 201408	HPIN20/14SSDG	1	50/P									

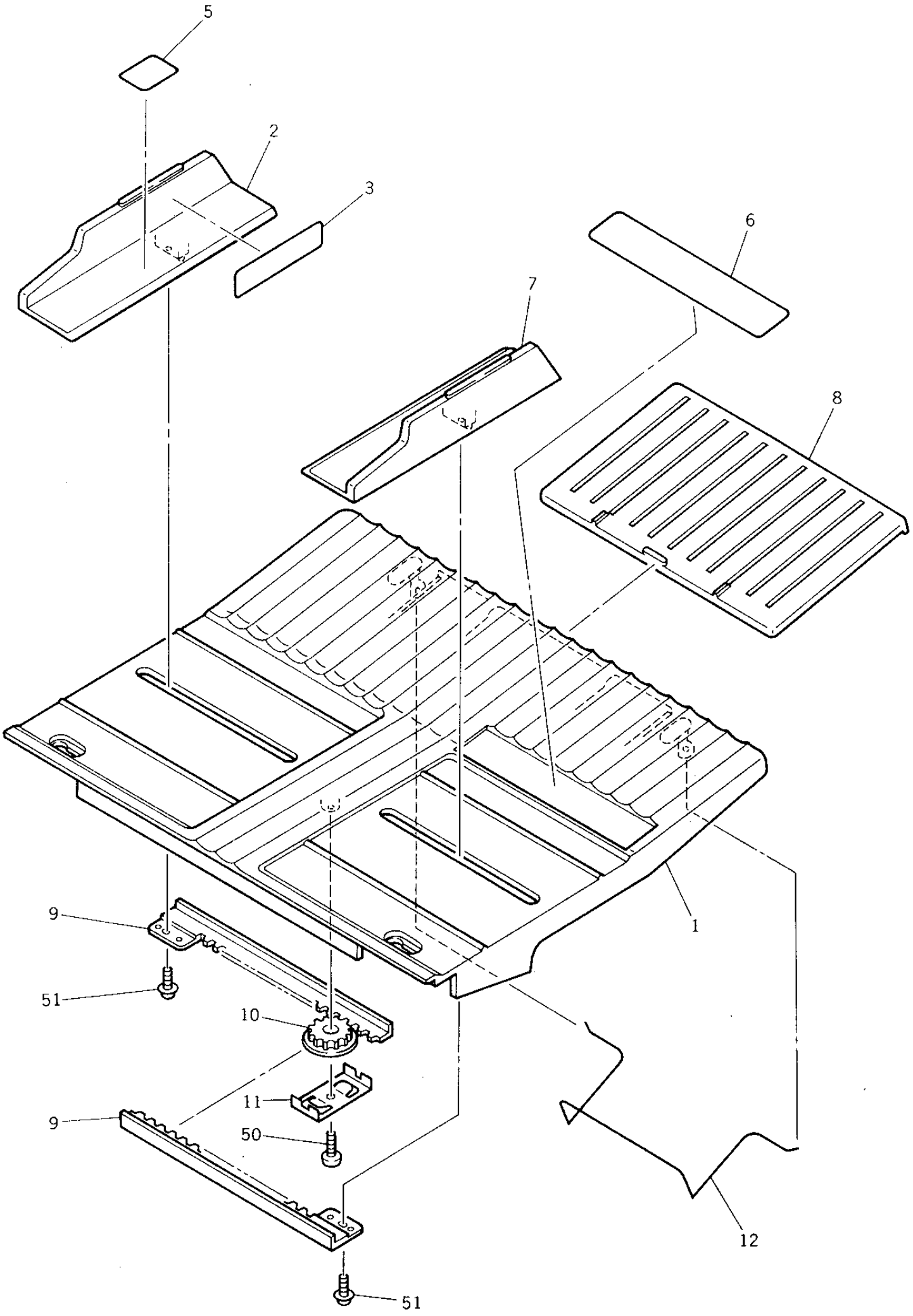
5
2
3
6
7
8
1
9
51
10
11
9
50
12
51

ITEM NO.	PARTS NO.	PARTS NAME	Q'TY / PAGE	Q'TY / PACK	SPE PRICE IN NONE	P	I	R	BSI NO.	TO	FROM	SERIAL NO.	REMARKS
1	4402 243590	K-TRAY-ORG-T	1	1/PP									
2	4401 790760	WALL-SIDE-R-T	1	1/P									
3	4401 914550	LBL-STACK-ORG-T	1	5/P									
5	4401 914560	LBL-FACE-UP-T	1	5/P									
6A	4402 242600	LBL-SIZE-ORG-LT	1	1/KP									USA SIZE
6B	4402 243200	LBL-SIZE-ORG-AB	1	1/KP									EUR SIZE
7	4401 790780	WALL-SIDE-F-T	1	1/P									
8	4402 242630	SUB-TRAY-ORG-T	1	1/PP									
9	4402 242640	RACK-BYPASS-169	2	1/KP									
10	4402 242650	PINION-Z22	1	1/P									
11	4402 242660	SPL-COV-TRAY	1	1/P									
12	4401 792300	STP-OR-EXIT-714	1	1/P									
50	7120 300611	12PAN3006MSZN3A	1	50/P									
51	4842 040709	TPPAN3006MSZN3A	2	50/P									

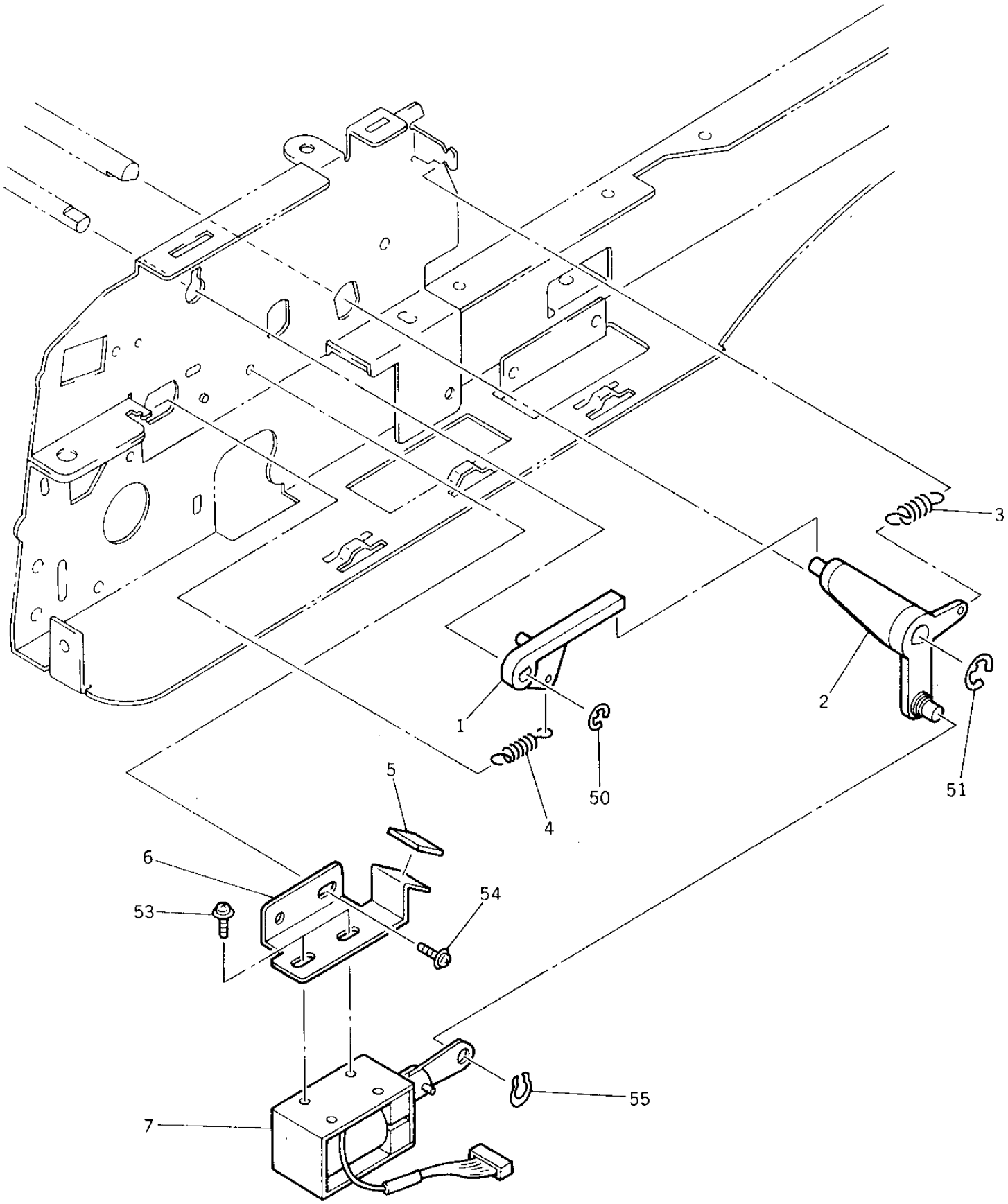
3
1
2
50
51
4
5
6
54
53
55
7

ITEM NO.	PARTS NO.	PARTS NAME	Q'TY / PAGE	Q'TY / PACK	SPE PRICE IN NONE	P	I	R	BSI NO.	TO	FROM	SERIAL NO.	REMARKS
1	4401 791810	LEVER-WEIGHT	1	1/P									
2	4401 791820	LEVER-SHTR-714	1	1/P									
3	4401 791830	SPE054-035-0189	1	5/P									
4	4401 791840	SPE043-032-0169	1	5/P									
5	4401 791850	CUSH-LVR-SHTR	1	10/P									
6	4401 791860	BRKT-SND-SHTR	1	1/P									
7	4401 792260	K-SND-STOP-714	1	1/D									
50	7405 002031	ERR020SKZN3A	1	50/P									
51	7405 004031	ERR040SKZN3A	1	50/P									
53	7640 300531	ZPAN30*05MSZN3A	2	50/P									
54	7640 300651	ZPAN30*06MSZN3A	1	50/P									
55	4842 090534	SRG-GS-4.0	1	50/P									

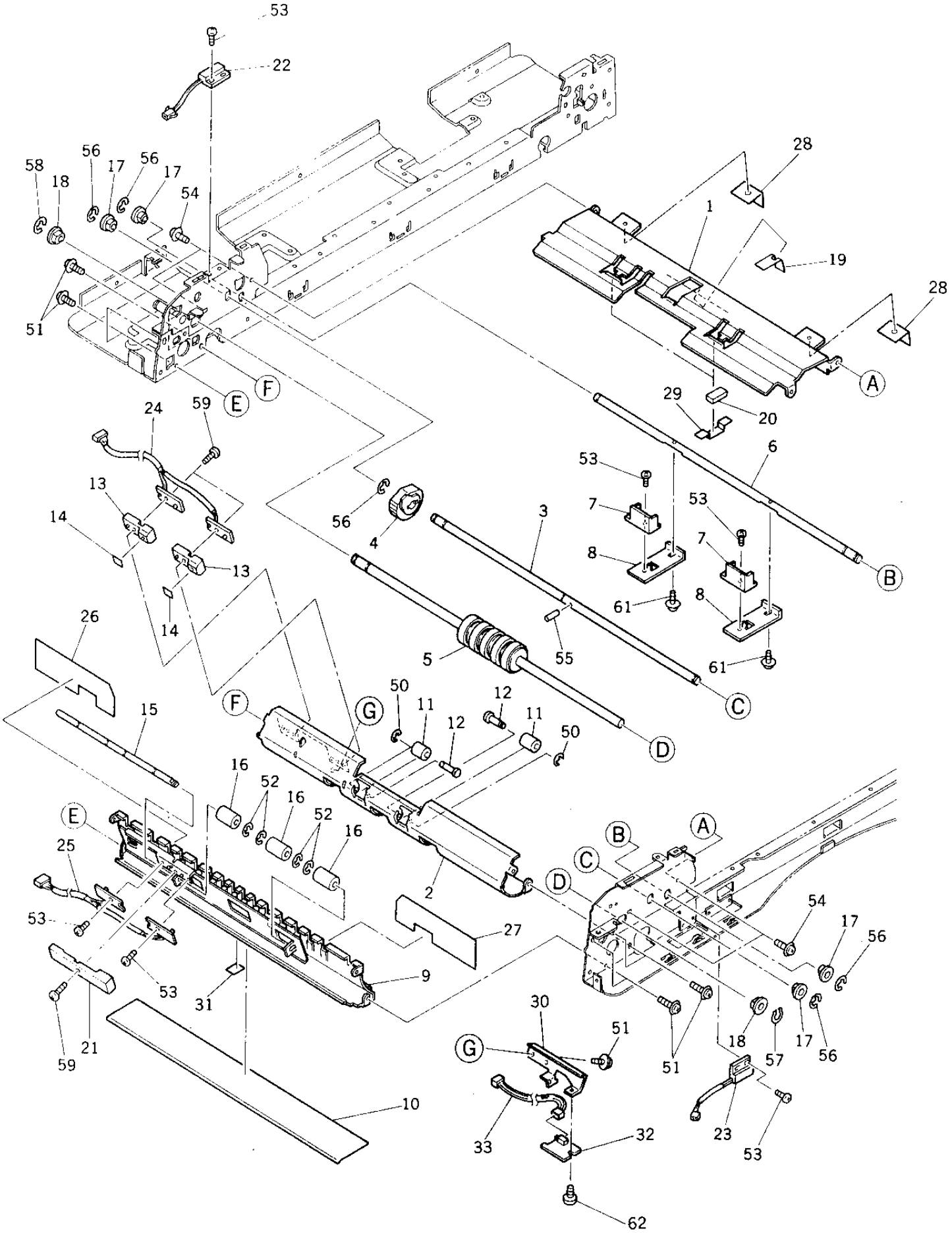
53
22
58
18
56
17
56
17
54
51
28
1
19
28
A
29
20
6
24
59
E
F
13
14
13
14
56
4
3
53
7
8
53
7
8
61
61
B
5
55
C
D
26
15
F
G
50
11
12
12
11
50
16
52
16
52
16
E
25
53
53
21
59
31
9
2
27
B
A
C
D
54
17
56
30
51
G
51
18
57
17
56
10
33
32
23
53
62

TOSHIBA

ITEM NO.	PARTS NO.	PARTS NAME	Q'TY / PAGE	Q'TY / PACK	SPE PRICE IN NONE	P	I	R	BSI NO.	TO	FROM	SERIAL NO.	REMARKS
1	4401 791880	GUIDE-L-714	1	1/P									
2	4401 914720	GUIDE-FEED-758A	1	1/P									
3	4401 791900	SFT-FEED-ROL	1	1/P									
4	4401 791910	ROL-ORG-IN-714	1	1/P									
5	4401 791920	K-ROL-FEED-714	1	1/KP									
6	4401 791930	SFT-SHTR-714	1	1/P									
7	4401 791940	SHTR-714	2	1/P									
8	4401 791950	ARM-SHTR-714	2	1/P									
9	4401 914730	GUIDE-FEED-758B	1	1/P									
10	4401 791970	MYLAR-ARGN-OUT	1	1/KP									
11	4402 242840	ROL-D10*L13.8	2	1/P									
12	4402 244310	SFT-ROL-10*13.8	2	1/P									
13	4401 791980	HLDR-CENS-RS	2	1/P									
14	4401 794320	MYLAR-CENS-RS	2	1/KP									
15	4401 792000	SFT-PRESS-ROL	1	1/P									
16	4402 241730	ROL-D14*L22	3	1/P									
17	4401 914760	BUSH-D6-4	4	5/P									
18	4400 787310	BUSH-D8-319300	2	5/P									
19	4401 792010	MYLAR-GUIDE-L	1	1/C									
20	4401 794340	CUSH-SHTR-714	2	10/P									
21	4401 792030	COVER-CENS-RS	1	1/P									
22	4401 792900	SE-AOPEN-714	1	1/P									
23	4402 246150	SE-RS8101X2	1	1/C									
24	4401 792810	ASM-PTRSEN-714	1	1/C									
25	4401 792800	ASM-LEDSEN-714	1	1/C									
26	4401 794250	MYLAR-ALGN-IN-R	1	1/KP									
27	4401 794240	MYLAR-ALGN-IN-F	1	1/KP									
28	4401 794490	MYLAR-EXIT-ORG	2	1/P									
29	4401 794500	MYLAR-SHUTTER	2	5/P									
30	4401 914740	BRKT-SENS-758	1	1/P									
31	4401 914750	SEAL-SENS-758	1	5/P									
32	4401 913900	PWA-TIME-758	1	1/C									
33	4401 913890	WH-TIMSEN-B-758	1	N/A***									
50	7405 002031	ERR020SKZN3A	2	50/P									
51	4842 040689	TZPAN3006MSZN3A	9	50/P									
52	7405 004031	ERR040SKZN3A	4	50/P									
53	7043 300611	BID30*06MSZN3AI	6	50/P									
54	4842 040709	TPPAN3006MSZN3A	4	50/P									
55	4842 904009	PIN-N-20/14SUS	1	50/P									
56	7405 005031	ERR050SKZN3A	5	50/P									
57	4842 090538	SRG-GS-8.0	1	50/P									
58	7405 007031	ERR070SKZN3A	1	50/P									
59	7043 300811	BID30*08MSZN3AI	3	50/P									
61	7640 300651	ZPAN30*06MSZN3A	2	50/P									
62	4401 914770	SCREW-M3*4	1	10/P									

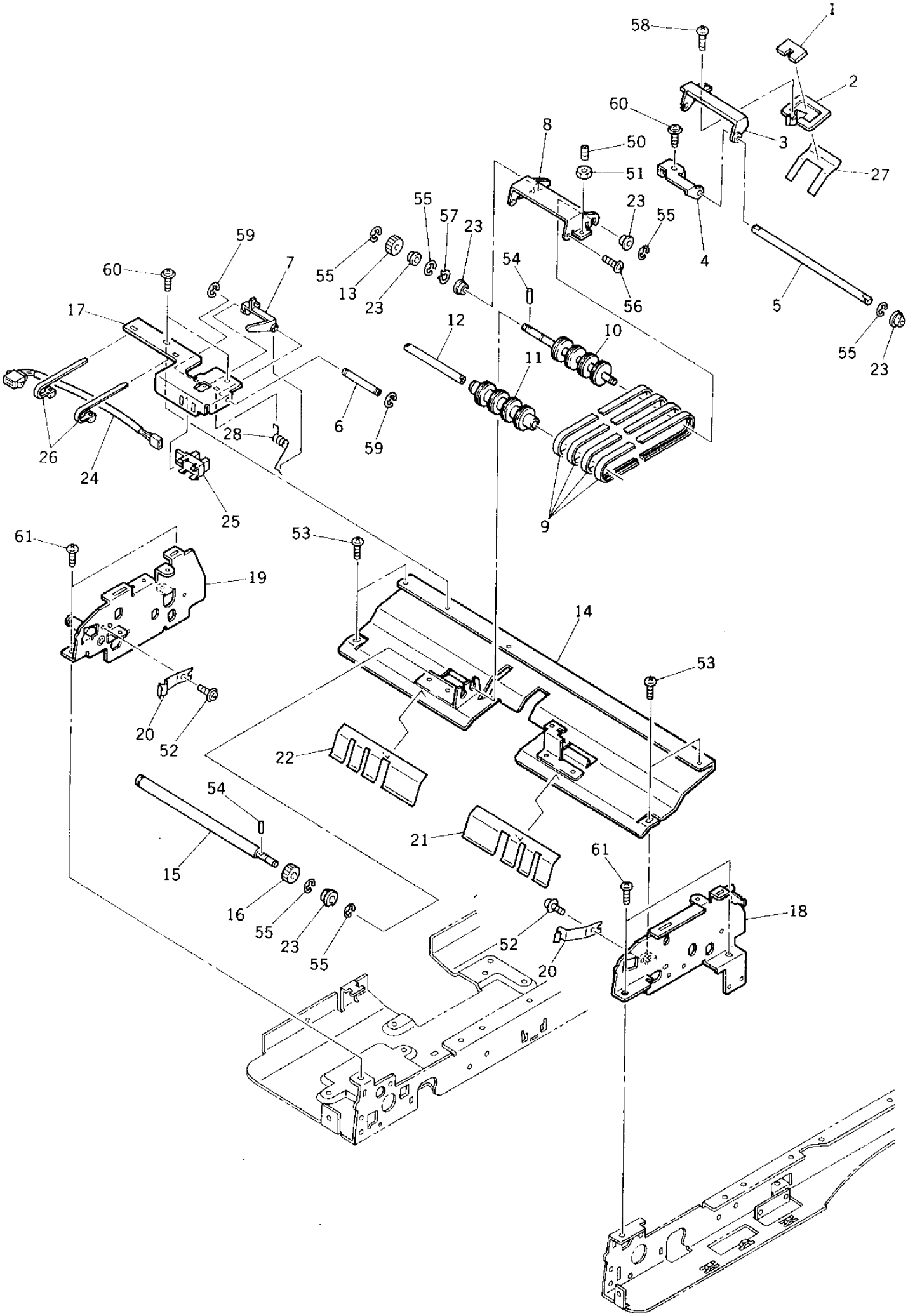
1
2
3
4
5
6
7
8
9
10
11
12
13
14
15
16
17
18
19
20
21
22
23
24
25
26
27
28
50
51
52
53
54
55
56
57
58
59
60
61

TOSHIBA

ITEM NO.	PARTS NO.	PARTS NAME	Q'TY / PAGE	Q'TY / PACK	SPE PRICE IN NONE	P	I	R	BSI NO.	TO	FROM	SERIAL NO.	REMARKS
1	4400 786870	SPCR-23*14*T1.5	1	5/P									
2	4401 792100	WEIGHT-714	1	1/P									
3	4400 786850	ARM-WAIGHT	1	1/P									
4	4400 786810	BKT-ADJ-SPRT	1	1/P									
5	4401 792110	SFT-WEIGHT-714	1	1/P									
6	4401 792120	SFT-EMPTY-714	1	1/P									
7	4401 792130	LVR-EMPTY-714	1	1/P						007 1			
7 1	4401 914890	LEVER-EMPTY	1	1/P		C	B	D	F97K083		007	DJ7	
8	4400 786760	BKT-SEPARAT-BLT	1	1/P									
9	4400 786790	BLT/R-SEPARATE	4	1/P									
10	4400 786770	K-PLY-SEPARATE	1	1/P									
11	4400 786780	PLY-SEPARATE	1	1/P									
12	4400 786800	SFT-SPRT-L61*D5	1	1/P									
13	4400 786840	GEAR-M06-Z16-L5	1	1/P									
14	4401 792140	GUIDE-FEED-714C	1	1/P									
15	4401 792150	SFT-DRIVE-SEPT	1	1/P									
16	4400 787020	GEAR-M06-Z16-L7	1	1/P									
17	4401 792160	BKT-SENS-714	1	1/P									
18	4401 794560	FRAME-SUBMAIN-F	1	1/P									
19	4401 792170	K-FRAME-SUB-M-R	1	1/P									
20	4402 243350	SPL-LOCK-JAM	2	1/P									
21	4401 792210	MYLAR-GUIDE-C-F	1	1/C									
22	4401 792220	MYLAR-GUIDE-C-R	1	1/C									
23	4400 786690	BUSH-D4*L6	5	5/P									
24	4401 792660	WH-EMP-714	1	1/P									
25	3038 646300	PHD-TLP1215	1	1/P									
26	4407 527950	SKB-1M	2	5/P									
27	4401 792270	MYLAR-WEIGHT	1	1/P									
28	4401 792380	SPR-SENS-714	1	5/P									
50	7494 301219	9HSS30/12MSFB	1	50/P									
51	7360 300011	6/0NUT30MSZN3A	1	50/P									
52	4842 040689	TZPAN3006MSZN3A	2	50/P									
53	4842 040697	TZPAN4006MSZN3A	4	50/P									
54	7432 200611	HPIN20/06MSZN3A	2	50/P									
55	7405 003031	ERR030SKZN3A	6	50/P									
56	7043 300611	BID30*06MSZN3AI	2	50/P									
57	4842 090534	SRG-GS-4.0	1	50/P									
58	7043 300615	BID30*06MSNI3CI	1	50/P									
59	7405 002031	ERR020SKZN3A	2	50/P									
60	4842 040709	TPPAN3006MSZN3A	3	50/P									
61	4402 244100	SCREW-MR-M4-7	4	50/P									

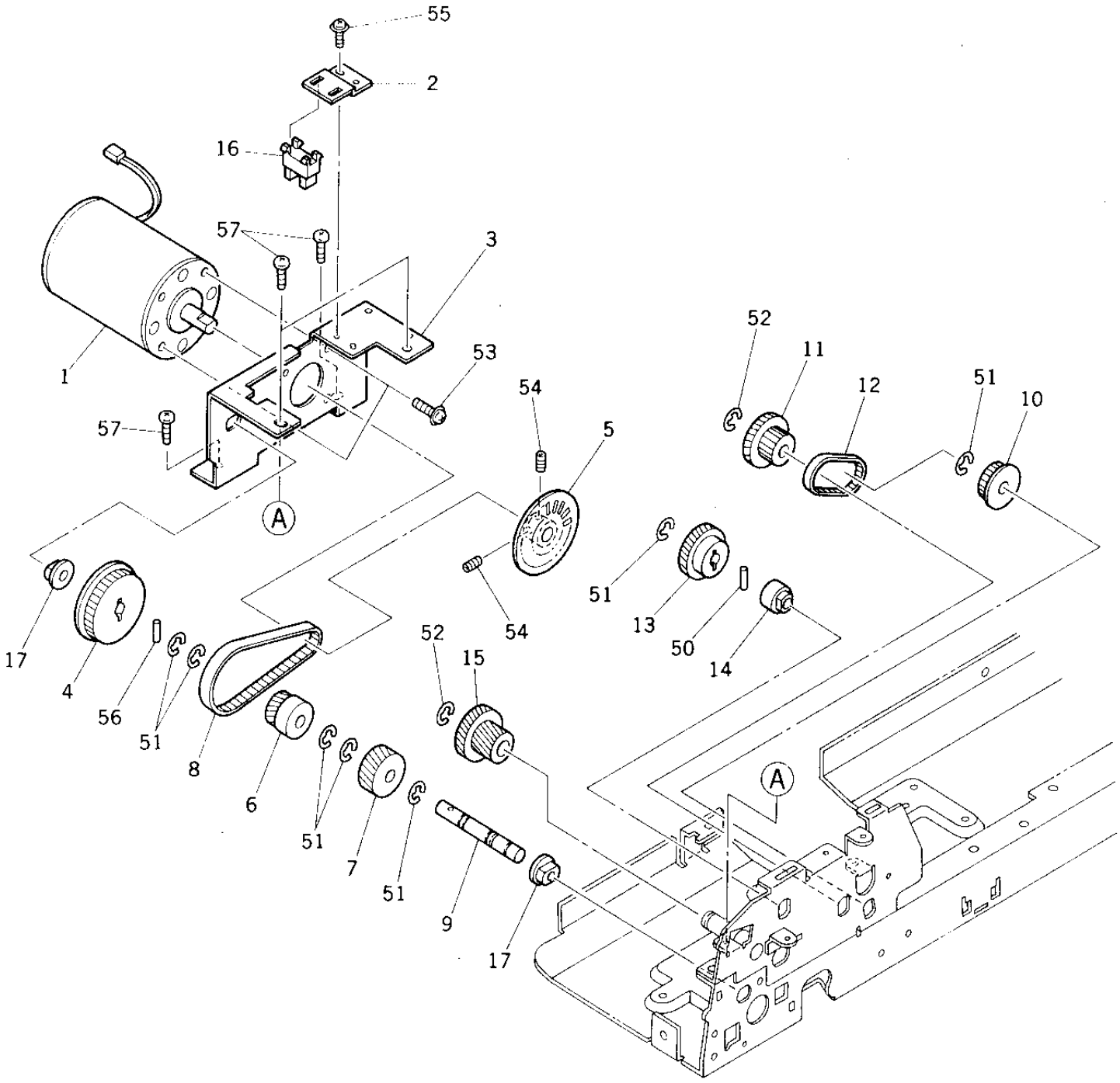
55
2
16
57
3
1
53
57
54
5
52
11
12
51
10
51
13
50
14
54
17
4
56
51
8
6
51
7
51
52
15
9
17
A
A

ITEM NO.	PARTS NO.	PARTS NAME	Q'TY / PAGE	Q'TY / PACK	SPE PRICE IN NONE	P	I	R	BSI NO.	TO	FROM	SERIAL NO.	REMARKS
1	4400 789210	M/DC-M1-708	1	1/C									
2	4401 791450	BRKT-SENS-MOT	1	1/P									
3	4401 791460	BRKT-M/DC-BELT	1	1/P									
4	4401 793610	PLY-S2M-50	1	1/P									
5	4402 242450	PLY*DISK-S2M-20	1	1/P									
6	4401 791480	GER-0.75-21H-OW	1	1/P									
7	4401 791490	GER-0.75-27H-OW	1	1/P									
8	4401 792040	BLT-S2M-90-6	1	1/P									
9	4401 792050	SFT-DRIVE-2	1	1/P									
10	4401 792060	PLY-S2M-30-OW	1	1/P									
11	4401 792070	GEAR-30-33-OW	1	1/P									
12	4400 786480	BLT/T-S2M-72-4	1	1/P									
13	4401 792080	GEAR-0.75-33H-R	1	1/P									
14	4400 786990	BUSH-D6*L11-O/W	1	1/P									
15	4401 792090	GEAR-33-18R	1	1/P									
16	3038 646300	PHD-TLP1215	1	1/P									
17	4401 914760	BUSH-D6-4	2	5/P									
50	7432 201411	HPIN20/14MSZN3A	1	50/P									
51	7405 005031	ERR050SKZN3A	7	50/P									
52	7405 007031	ERR070SKZN3A	2	50/P									
53	7640 400631	ZPAN40*06MSZN3A	2	50/P									
54	4842 011062	9HSS30/04MSFB	2	50/P									
55	4842 040689	TZPAN3006MSZN3A	1	50/P									
56	7432 201408	HPIN20/14SSDG	1	50/P									
57	4402 244100	SCREW-MR-M4-7	4	50/P									

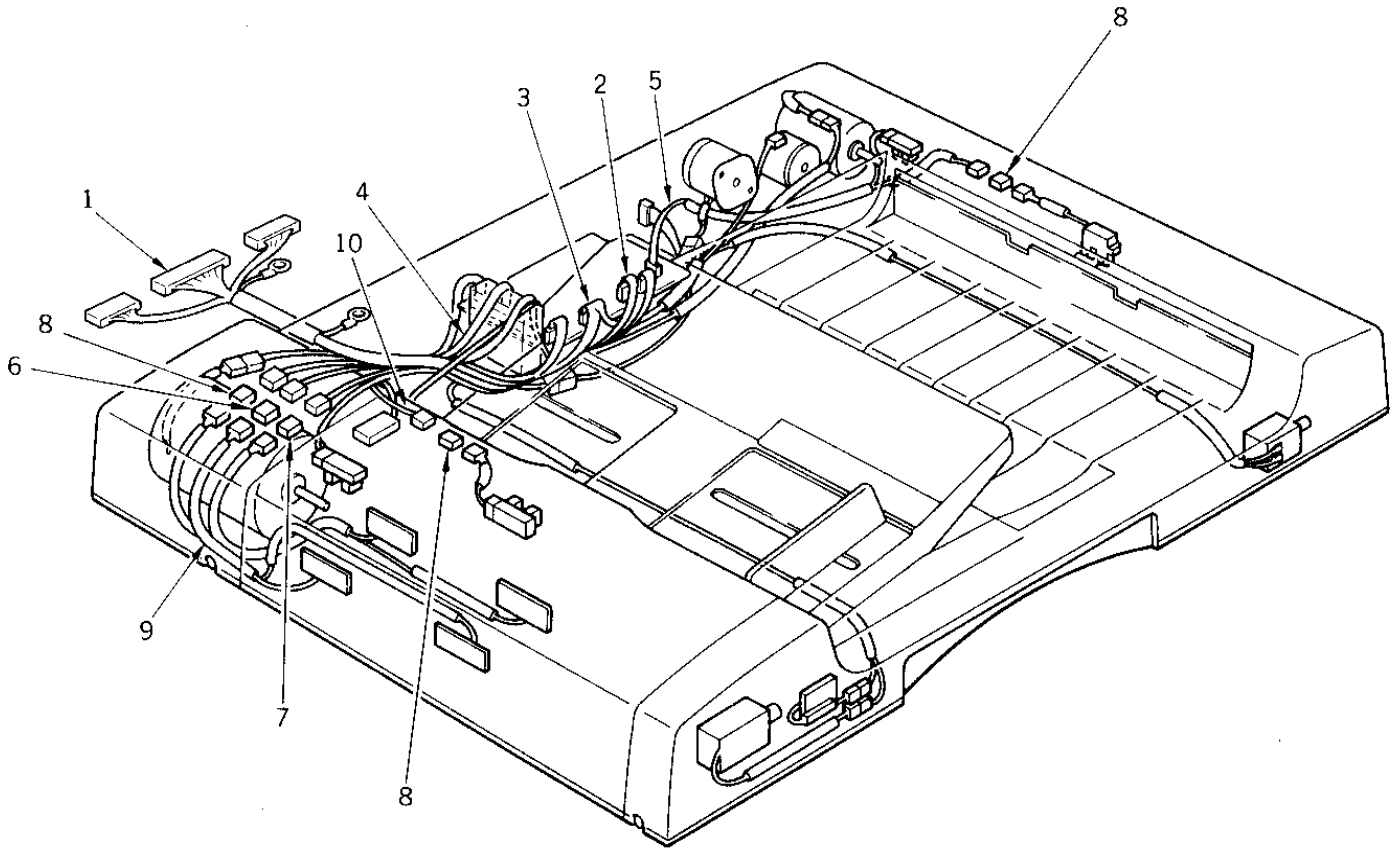
8
3
2
5
1
4
10
8
6
9
7
8

ITEM NO.	PARTS NO.	PARTS NAME	Q'TY / PAGE	Q'TY / PACK	SPE PRICE IN NONE	P	I	R	BSI NO.	TO	FROM	SERIAL NO.	REMARKS
1	4401 913950	WH-I/F-758	1	N/A***									
2	4401 913880	WH-MOTDRV-758	1	N/A***									
3	4401 913870	WH-DRV-758	1	N/A***									
4	4401 913840	WH-TIMSEN-A-758	1	N/A***									
5	4401 792600	WH-RSEN-714	1	1/P									
6	4843 306487	J-0-175694-4	1	5/P									
7	4843 306488	J-0-175694-5	1	5/P									
8	4843 306486	J-0-175694-3	3	5/P									
9	4401 913890	WH-TIMSEN-B-758	1	N/A***									
10	4401 913850	WH-TLPSEN-758	1	N/A***									
1	4401 913950	WH-I/F-758	1	N/A***									

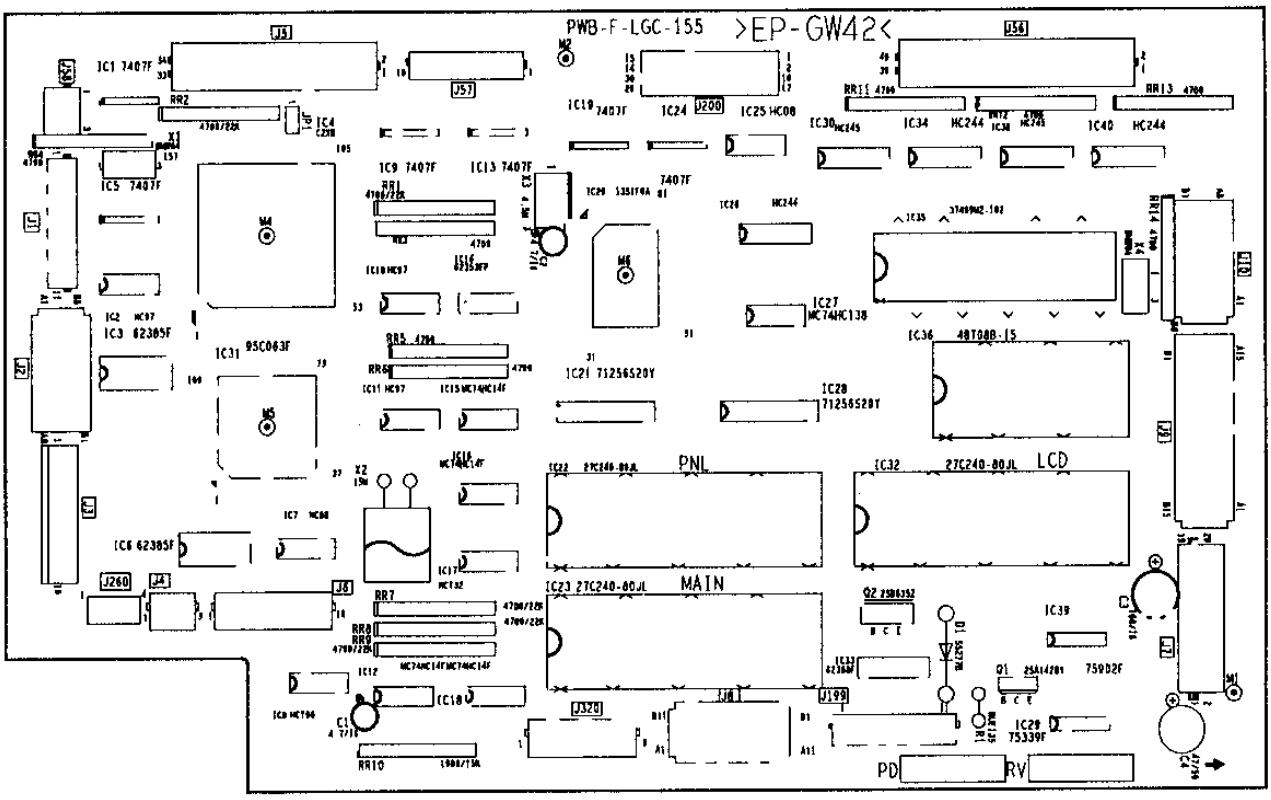
PWB-F-LGC-155 >EP-GW42<
PNL
LCD
MAIN
PD
RV

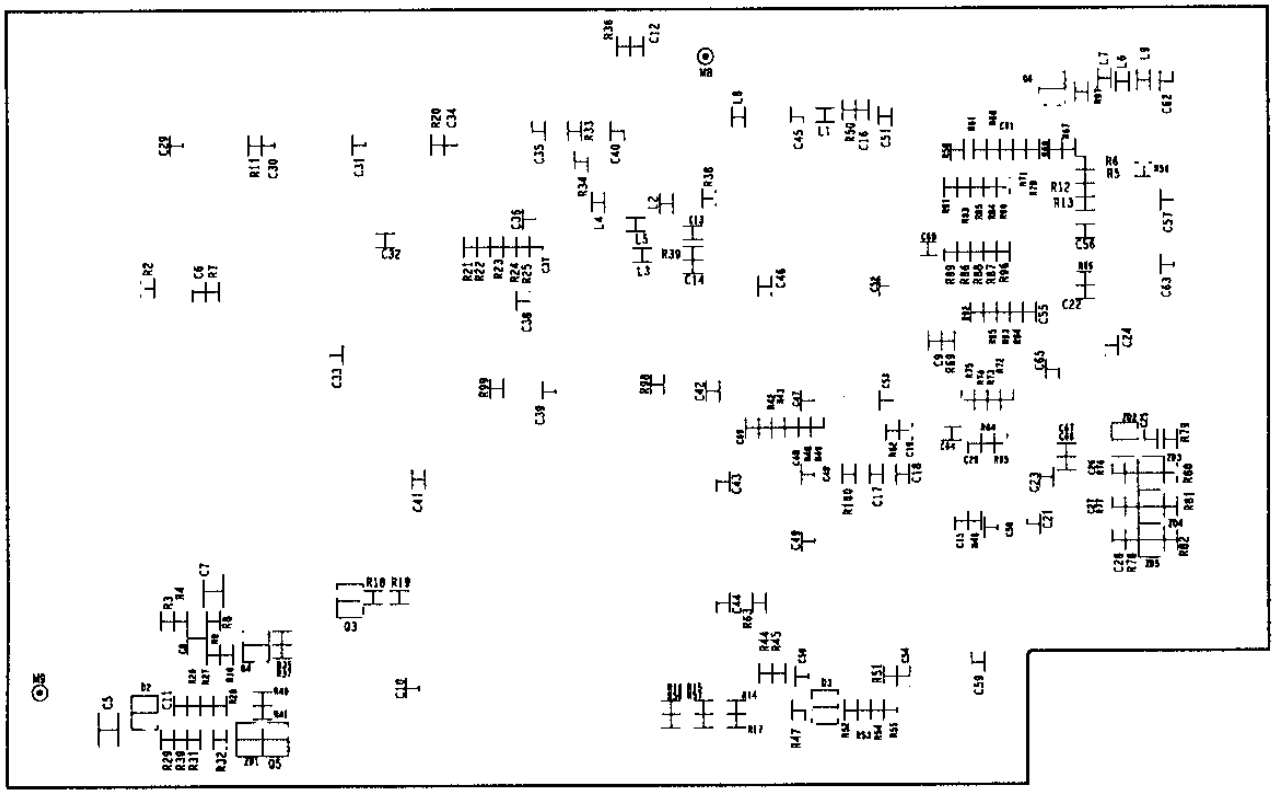

ITEM NO.	PARTS NO.	PARTS NAME	Q'TY / PAGE	Q'TY / PACK	SPE PRICE IN NONE	P	I	R	BSI NO.	TO	FROM	SERIAL NO.	REMARKS
0	4402 874130	PWA-F-LGC-155	1	1/SB						000 1			
0 1	4402 874140	PWA-F-LGC-155	1	1/SB		C	B	B	F97F934		000	DE7	
1	4402 874210	PWB-F-LGC-155	1	N/A***									
2	4843 250402	X-CST8.00MTW040	1	5/S									
3	4843 250741	X-HC-49/U-15MHZ	1	1/C									
4	4843 250715	X-CST4.50MGW	1	1/C									
5	4843 250401	X-CST9.00MTW040	1	5/S									
11	4843 112762	IC-DM7407	1	5/S									
12	3040 487262	IC-TC74HC07AFT2	1	5/S									
13	3040 274816	IC-TD62385AF(T2	1	1/C									
14	4843 116143	IC-D65653GDP02	1	1/S									
15	4843 112762	IC-DM7407	1	5/S									
16	3040 274816	IC-TD62385AF(T2	1	1/C									
17	3040 485563	IC-TC74HC08AFT2	1	1/C									
18	3040 487817	TC74HCT00AF(TP2	1	5/S									
19	4843 112762	IC-DM7407	1	5/S									
20	3040 487262	IC-TC74HC07AFT2	1	5/S									
21	3040 487262	IC-TC74HC07AFT2	1	5/S									
22	4843 113612	IC-MC74HC14FL	1	5/P									
23	4843 112762	IC-DM7407	1	5/S									
24	4843 116260	IC-M62353FPT1	1	1/C									
25	4843 113612	IC-MC74HC14FL	1	5/P									
26	4843 113612	IC-MC74HC14FL	1	5/P									
27	3040 487822	TC74HCT32AF(TP2	1	5/S									
28	4843 113612	IC-MC74HC14FL	1	5/P									
29	4843 112762	IC-DM7407	1	5/S									
30	4843 115590	IC-SED1351F0A	1	1/S									
31	4843 116444	IC-CY7C19920VCT	1	1/C									
34	4843 112762	IC-DM7407	1	5/S									
35	3040 485563	IC-TC74HC08AFT2	1	1/C									
36	4843 112454	IC-M74HC244FL	1	5/S									
37	4843 112460	IC-MC74HC138FL	1	5/S									
38	4843 116444	IC-CY7C19920VCT	1	1/C									
39	4843 114340	IC-LM339M	1	5/S						039 1			
39 1	4843 116490	IC-LM339MX	1	5/S		C	E	H	F98C240		039		
40	4843 112765	IC-M74HC245FL	1	5/S									
41	3040 522607	IC-TMP95C063F(Z	1	1/S									
43	3040 274687	IC-TD62308FTP2	1	1/S									
44	4843 112454	IC-M74HC244FL	1	5/S									
45	4402 221500	IC-M37409M2-102	1	1/S									
48	4843 112765	IC-M74HC245FL	1	5/S									
49	4843 113807	IC-LM324M	1	5/S									
50	4843 112454	IC-M74HC244FL	1	5/S									
71	3036 548970	Q-2SA1428-Y	1	5/P									
72	3036 842405	Q-2SD635.Z	1	5/S									
73	3036 014012	Q-RN2401(TE85R)	1	5/P									
74	3036 014012	Q-RN2401(TE85R)	1	5/P									
75	3036 004012	Q-RN1401(TE85R)	1	5/P									
76	3036 014012	Q-RN2401(TE85R)	1	5/P									
91	3037 978380	D-S5277B	1	5/P									
92	3037 151102	D-1SS193(TE85R)	1	5/P									
93	3037 151102	D-1SS193(TE85R)	1	5/P									
111	3037 238212	D-02CZ3.3X-85R	1	5/P									
112	3037 238422	D-02CZ5.1Y-85R	1	5/P									
113	3037 238422	D-02CZ5.1Y-85R	1	5/P									
114	3037 238422	D-02CZ5.1Y-85R	1	5/P									
115	3037 238422	D-02CZ5.1Y-85R	1	5/P									
131	4843 076427	RR-1/8S08472223	1	10/P									
132	4843 076427	RR-1/8S08472223	1	10/P									
133	4843 005108	RR125S08A-4.7KJ	1	10/P									
134	4843 005108	RR125S08A-4.7KJ	1	10/P									
135	4843 005108	RR125S08A-4.7KJ	1	10/P									
136	4843 005108	RR125S08A-4.7KJ	1	10/P									
137	4843 076427	RR-1/8S08472223	1	10/P									
138	4843 076427	RR-1/8S08472223	1	10/P									
139	4843 076427	RR-1/8S08472223	1	10/P									
140	4843 075142	RR1/8S8B102153J	1	10/P									
141	4843 005108	RR125S08A-4.7KJ	1	10/P									
142	4843 005108	RR125S08A-4.7KJ	1	10/P									
143	4843 005108	RR125S08A-4.7KJ	1	10/P									
144	4843 005108	RR125S08A-4.7KJ	1	10/P									

ITEM NO.	PARTS NO.	PARTS NAME	Q'TY / PAGE	Q'TY / PACK	SPE PRICE IN NONE	P	I	R	BSI NO.	TO	FROM	SERIAL NO.	REMARKS
171	4843 232045	SZ-RUE135	1	1/P									
172	4843 072069	RTP-2B2A105JDT	1	10/P									
173	4843 072173	RTP-2B2A153JDT	1	10/P									
174	4843 072171	RTP-2B2A103JDT	1	10/P									
175	4843 072175	RTP-2B2A223JDT	1	10/P									
176	4843 072167	RTP-2B2A472JDT	1	10/P									
177	4843 072167	RTP-2B2A472JDT	1	10/P									
178	4843 072175	RTP-2B2A223JDT	1	10/P									
179	4843 072104	RTP-2B2A332FDT	1	10/P									
180	4843 072110	RTP-2B2A103FDT	1	10/P									
181	4843 072167	RTP-2B2A472JDT	1	10/P									
182	4843 072175	RTP-2B2A223JDT	1	10/P									
183	4843 072167	RTP-2B2A472JDT	1	10/P									
184	4843 072175	RTP-2B2A223JDT	1	10/P									
185	4843 072175	RTP-2B2A223JDT	1	10/P									
186	4843 072175	RTP-2B2A223JDT	1	10/P									
187	4843 072167	RTP-2B2A472JDT	1	10/P									
188	4843 072155	RTP-2B2A471JDT	1	10/P									
189	4843 072159	RTP-2B2A102JDT	1	10/P									
190	4843 072155	RTP-2B2A471JDT	1	10/P									
191	4843 072167	RTP-2B2A472JDT	1	10/P									
192	4843 072167	RTP-2B2A472JDT	1	10/P									
193	4843 072167	RTP-2B2A472JDT	1	10/P									
194	4843 072167	RTP-2B2A472JDT	1	10/P									
195	4843 072167	RTP-2B2A472JDT	1	10/P									
196	4843 072169	RTP-2B2A682JDT	1	10/P									
197	4843 072167	RTP-2B2A472JDT	1	10/P									
198	4843 072175	RTP-2B2A223JDT	1	10/P									
199	4843 072175	RTP-2B2A223JDT	1	10/P									
200	4843 072175	RTP-2B2A223JDT	1	10/P									
201	4843 072066	RTP-2B2A564JDT	1	10/P									
202	4843 072167	RTP-2B2A472JDT	1	10/P									
203	4843 072167	RTP-2B2A472JDT	1	10/P									
204	4843 072167	RTP-2B2A472JDT	1	10/P									
205	4843 072153	RTP-2B2A331JDT	1	10/P									
206	4843 072167	RTP-2B2A472JDT	1	10/P									
207	4843 072165	RTP-2B2A332JDT	1	10/P									
208	4843 072069	RTP-2B2A105JDT	1	10/P									
209	4843 072167	RTP-2B2A472JDT	1	10/P									
210	4843 072167	RTP-2B2A472JDT	1	10/P									
211	4843 072145	RTP-2B2A680JDT	1	10/P									
212	4843 072153	RTP-2B2A331JDT	1	10/P									
213	4843 072175	RTP-2B2A223JDT	1	10/P									
214	4843 072155	RTP-2B2A471JDT	1	10/P									
215	4843 072175	RTP-2B2A223JDT	1	10/P									
216	4843 072167	RTP-2B2A472JDT	1	10/P									
217	4843 072167	RTP-2B2A472JDT	1	10/P									
218	4843 072175	RTP-2B2A223JDT	1	10/P									
219	4843 072153	RTP-2B2A331JDT	1	10/P									
220	4843 072145	RTP-2B2A680JDT	1	10/P									
221	4843 072167	RTP-2B2A472JDT	1	10/P									
222	4843 072153	RTP-2B2A331JDT	1	10/P									
223	4843 072153	RTP-2B2A331JDT	1	10/P									
224	4843 072153	RTP-2B2A331JDT	1	10/P									
225	4843 072175	RTP-2B2A223JDT	1	10/P									
226	4843 072069	RTP-2B2A105JDT	1	10/P									
227	4843 072167	RTP-2B2A472JDT	1	10/P									
228	4843 072167	RTP-2B2A472JDT	1	10/P									
229	4843 072167	RTP-2B2A472JDT	1	10/P									
230	4843 072155	RTP-2B2A471JDT	1	10/P									
231	4843 072167	RTP-2B2A472JDT	1	10/P									
232	4843 072167	RTP-2B2A472JDT	1	10/P									
233	4843 072167	RTP-2B2A472JDT	1	10/P									
234	4843 072158	RTP-2B2A821JDT	1	10/P									
235	4843 072167	RTP-2B2A472JDT	1	10/P									
236	4843 072167	RTP-2B2A472JDT	1	10/P									
237	4843 072175	RTP-2B2A223JDT	1	10/P									
238	4843 072167	RTP-2B2A472JDT	1	10/P									
239	4843 072167	RTP-2B2A472JDT	1	10/P									
240	4843 072167	RTP-2B2A472JDT	1	10/P									
241	4843 072167	RTP-2B2A472JDT	1	10/P									

ITEM NO.	PARTS NO.	PARTS NAME	Q'TY / PAGE	Q'TY / PACK	SPE PRICE IN NONE	P	I	R	BSI NO.	TO	FROM	SERIAL NO.	REMARKS
242	4843 072167	RTP-2B2A472JDT	1	10/P									
243	4843 072167	RTP-2B2A472JDT	1	10/P									
244	4843 072167	RTP-2B2A472JDT	1	10/P									
245	4843 072167	RTP-2B2A472JDT	1	10/P									
246	4843 072163	RTP-2B2A222JDT	1	10/P									
247	4843 072159	RTP-2B2A102JDT	1	10/P									
248	4843 072159	RTP-2B2A102JDT	1	10/P									
249	4843 072175	RTP-2B2A223JDT	1	10/P									
250	4843 072163	RTP-2B2A222JDT	1	10/P									
251	4843 072163	RTP-2B2A222JDT	1	10/P									
252	4843 072163	RTP-2B2A222JDT	1	10/P									
253	4843 072167	RTP-2B2A472JDT	1	10/P									
254	4843 072167	RTP-2B2A472JDT	1	10/P									
255	4843 072167	RTP-2B2A472JDT	1	10/P									
256	4843 072167	RTP-2B2A472JDT	1	10/P									
257	4843 072167	RTP-2B2A472JDT	1	10/P									
258	4843 072167	RTP-2B2A472JDT	1	10/P									
259	4843 072167	RTP-2B2A472JDT	1	10/P									
260	4843 072167	RTP-2B2A472JDT	1	10/P									
261	4843 072167	RTP-2B2A472JDT	1	10/P									
262	4843 072167	RTP-2B2A472JDT	1	10/P									
263	4843 072167	RTP-2B2A472JDT	1	10/P									
264	4843 072167	RTP-2B2A472JDT	1	10/P									
265	4843 072167	RTP-2B2A472JDT	1	10/P									
266	4843 072167	RTP-2B2A472JDT	1	10/P									
268	4843 072147	RTP-2B2A101JDT	1	10/P									
269	4843 072147	RTP-2B2A101JDT	1	10/P									
270	4843 072147	RTP-2B2A101JDT	1	10/P									
301	4843 410397	CE-04W1C4R7M	1	10/P									
302	4843 410397	CE-04W1C4R7M	1	10/P									
303	4843 406649	CE04W1C101M	1	10/P									
304	4843 406673	CE04W1H470M	1	10/P									
305	4843 410535	CTP-M5F1H104ZT	1	10/P									
306	4843 410725	CTP-M1B1H222KT	1	10/P									
307	4843 410535	CTP-M5F1H104ZT	1	10/P									
308	4843 410535	CTP-M5F1H104ZT	1	10/P									
309	4843 410725	CTP-M1B1H222KT	1	10/P						309 1			
309 1	4843 410725	CTP-M1B1H222KT	0	10/P		B	-	B	F97F934		309	DE7	
310	4843 410862	CTP-K1F1E104ZT	1	10/P									
311	4843 410862	CTP-K1F1E104ZT	1	10/P									
312	4843 410737	CTP-M1B1H223KT	1	10/P									
313	4843 410862	CTP-K1F1E104ZT	1	10/P									
314	4843 410725	CTP-M1B1H222KT	1	10/P									
315	4843 410725	CTP-M1B1H222KT	1	10/P									
316	4843 410699	CTP-M1CH1H200KT	1	10/P									
317	4843 410699	CTP-M1CH1H200KT	1	10/P									
318	4843 410699	CTP-M1CH1H200KT	1	10/P									
319	4843 410725	CTP-M1B1H222KT	1	10/P									
320	4843 410727	CTP-M1B1H332KT	1	5/P									
321	4843 410862	CTP-K1F1E104ZT	1	10/P									
322	4843 410725	CTP-M1B1H222KT	1	10/P									
323	4843 410862	CTP-K1F1E104ZT	1	10/P									
324	4843 410862	CTP-K1F1E104ZT	1	10/P									
325	4843 410862	CTP-K1F1E104ZT	1	10/P									
326	4843 410862	CTP-K1F1E104ZT	1	10/P									
327	4843 410862	CTP-K1F1E104ZT	1	10/P									
328	4843 410862	CTP-K1F1E104ZT	1	10/P									
329	4843 410862	CTP-K1F1E104ZT	1	10/P									
330	4843 410862	CTP-K1F1E104ZT	1	10/P									
331	4843 410862	CTP-K1F1E104ZT	1	10/P									
332	4843 410862	CTP-K1F1E104ZT	1	10/P									
333	4843 410862	CTP-K1F1E104ZT	1	10/P									
334	4843 410862	CTP-K1F1E104ZT	1	10/P									
335	4843 410862	CTP-K1F1E104ZT	1	10/P									
336	4843 410862	CTP-K1F1E104ZT	1	10/P									
337	4843 410862	CTP-K1F1E104ZT	1	10/P									
338	4843 410862	CTP-K1F1E104ZT	1	10/P									
339	4843 410862	CTP-K1F1E104ZT	1	10/P									
340	4843 410862	CTP-K1F1E104ZT	1	10/P									
341	4843 410862	CTP-K1F1E104ZT	1	10/P									
342	4843 410862	CTP-K1F1E104ZT	1	10/P									

ITEM NO.	PARTS NO.	PARTS NAME	Q'TY / PAGE	Q'TY / PACK	SPE PRICE IN NONE	P	I	R	BSI NO.	TO	FROM	SERIAL NO.	REMARKS
343	4843 410862	CTP-K1F1E104ZT	1	10/P									
344	4843 410862	CTP-K1F1E104ZT	1	10/P									
345	4843 410862	CTP-K1F1E104ZT	1	10/P									
346	4843 410862	CTP-K1F1E104ZT	1	10/P									
347	4843 410862	CTP-K1F1E104ZT	1	10/P									
348	4843 410862	CTP-K1F1E104ZT	1	10/P									
349	4843 410862	CTP-K1F1E104ZT	1	10/P									
350	4843 410862	CTP-K1F1E104ZT	1	10/P									
351	4843 410862	CTP-K1F1E104ZT	1	10/P									
352	4843 410862	CTP-K1F1E104ZT	1	10/P									
353	4843 410862	CTP-K1F1E104ZT	1	10/P									
354	4843 410862	CTP-K1F1E104ZT	1	10/P									
355	4843 410862	CTP-K1F1E104ZT	1	10/P									
356	4843 410862	CTP-K1F1E104ZT	1	10/P									
357	4843 410862	CTP-K1F1E104ZT	1	10/P									
358	4843 410862	CTP-K1F1E104ZT	1	10/P									
359	4843 410862	CTP-K1F1E104ZT	1	10/P									
360	4843 410862	CTP-K1F1E104ZT	1	10/P									
361	4843 410862	CTP-K1F1E104ZT	1	10/P									
362	4843 410862	CTP-K1F1E104ZT	1	10/P									
363	4843 410862	CTP-K1F1E104ZT	1	10/P									
364	4843 410862	CTP-K1F1E104ZT	1	10/P									
365	4843 410862	CTP-K1F1E104ZT	1	10/P									
366	4843 410862	CTP-K1F1E104ZT	1	10/P									
367	4843 410862	CTP-K1F1E104ZT	1	10/P									
368	4843 410725	CTP-M1B1H222KT	1	10/P									
369	4843 410725	CTP-M1B1H222KT	1	10/P									
381	4843 524496	FL-BLM21A102ST1	1	1/P									
382	4843 524496	FL-BLM21A102ST1	1	1/P									
383	4843 524496	FL-BLM21A102ST1	1	1/P									
384	4843 524496	FL-BLM21A102ST1	1	1/P									
385	4843 524496	FL-BLM21A102ST1	1	1/P									
386	4843 524496	FL-BLM21A102ST1	1	1/P									
387	4843 524496	FL-BLM21A102ST1	1	1/P									
388	4843 524496	FL-BLM21A102ST1	1	1/P									
389	4843 524496	FL-BLM21A102ST1	1	1/P									
401	4843 306199	J-1-175487-1	1	5/P									
402	4843 306168	J-1-175132-6	1	5/P									
403	4843 301274	J-5045-10A	1	5/P									
404	4843 306191	J-0-175487-3	1	5/P									
405	4843 307788	J-53313-3415	1	5/P									
406	4843 306198	J-1-175487-0	1	5/P									
407	4843 303786	J-DF1B20DP-2.5D	1	5/P									
408	4843 306164	J-2-175132-4	1	5/P									
409	4843 306161	J-3-175132-0	1	5/P									
410	4843 306168	J-1-175132-6	1	5/P									
421	4843 307789	J-53313-4015	1	5/P									
422	4843 302626	J-DF3A-10P-2DSA	1	5/P									
423	4843 306191	J-0-175487-3	1	5/P									
441	4843 306199	J-1-175487-1	1	5/P									
442	4843 307793	J-174215-1	1	1/P									
461	4843 306197	J-0-175487-9	1	5/P									
501	4843 321565	SKT-CLC10400101	3	5/S									IC22,23,32
502	4843 321564	SKT-CLC10280101	1	5/S									IC36
511	4400 848870	LINE-JUMPER-5	1	10/P									

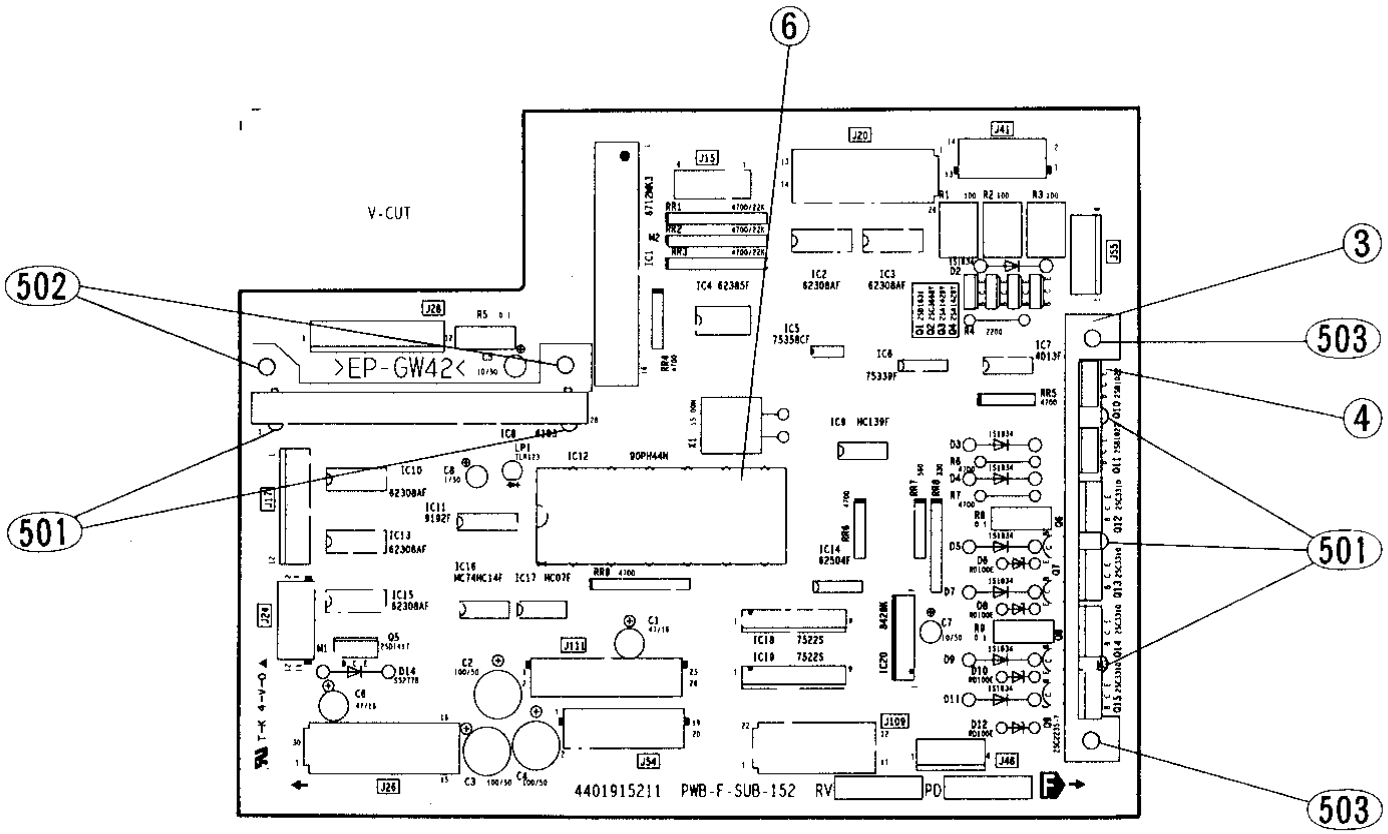
6
502
501
3
503
4
501
503
V-CUT
>EP-GW42<
4401915211 PWB-F-SUB-152 RV PD

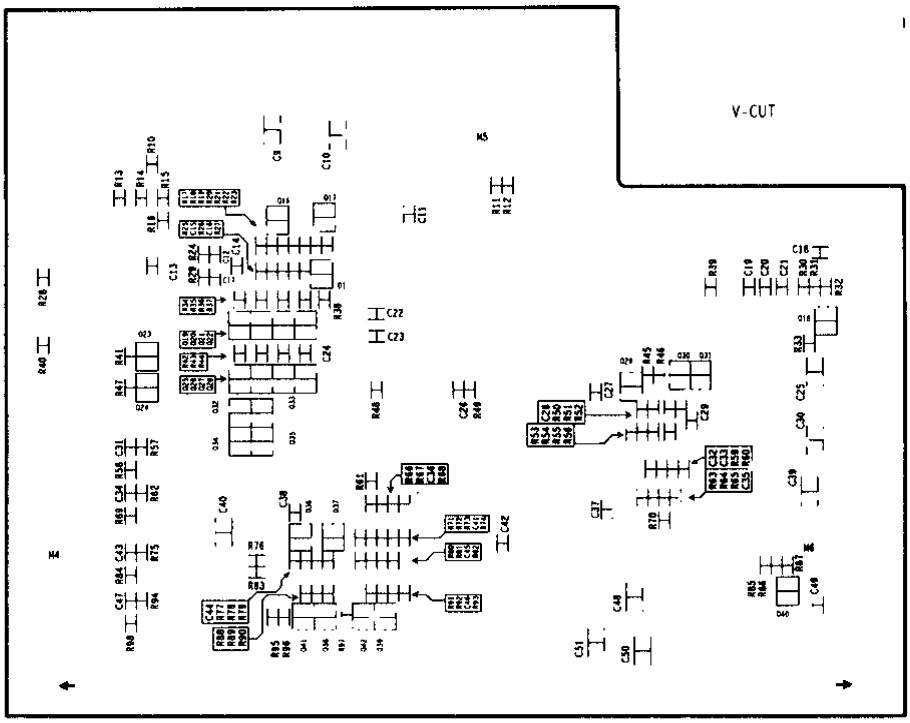
V-CUT

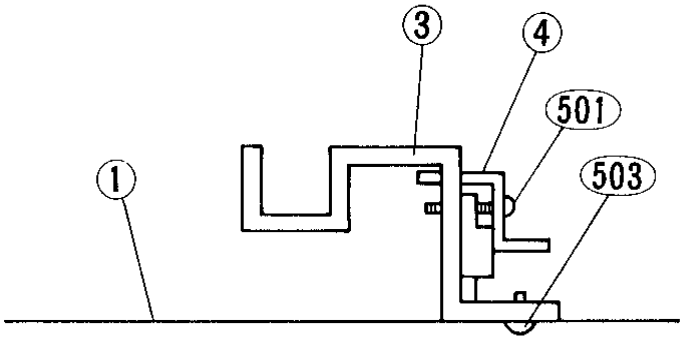
3
4
501
1
503

ITEM NO.	PARTS NO.	PARTS NAME	Q'TY / PAGE	Q'TY / PACK	SPE PRICE IN NONE	P	I	R	BSI NO.	TO	FROM	SERIAL NO.	REMARKS
0	4402 874120	PWA-F-SUB-155	1	1/SB									
1	4401 915210	PWB-F-SUB-152	1	N/A***									
2	4402 816630	HS-6103	1	1/P									
3	4401 916640	HS-SCAN-152	1	N/A***									
4	4401 916650	BRKT-HS-SCAN-C7	1	N/A***									
6	4843 321159	SKT-DICS-64A	1	1/S						006 1			IC-SOCKET
6 1	4843 321159	SKT-DICS-64A	0	1/S		B	-	E	F97H992		006	DG7	IC-SOCKET
7	3038 601100	LP-TLR123	1	5/P									
8	4843 250741	X-HC-49/U-15MHZ	1	1/C									
11	4843 113784	IC-STK6712BMK3	1	1/S									
12	3040 274862	IC-TD62308AFTP2	1	1/S									
13	3040 274862	IC-TD62308AFTP2	1	1/S									
14	3040 274758	IC-TD62385AF	1	5/S									
15	4843 113437	IC-LM358M(EL)	1	5/S									
16	4843 114340	IC-LM339M	1	5/S						016 1			
16 1	4843 116490	IC-LM339MX	1	5/S		C	E	H	F98C240		016		
17	3040 470052	TC4013BFNEW,TP2	1	5/S									
18	4843 113777	IC-STK6103-T	1	1/S									
19	3040 485699	IC-TC74HC139AF	1	5/S									
20	3040 274862	IC-TD62308AFTP2	1	1/S									
21	3040 411945	IC-TC9192AF	1	1/S									
22	3040 571398	TMP90CH44N-6311	1	1/S		A	E	E	F97H992			DG7	
23	3040 274862	IC-TD62308AFTP2	1	1/S									
24	3040 274966	IC-TD62504F-TP2	1	5/S									
25	3040 274862	IC-TD62308AFTP2	1	1/S									
26	4843 113612	IC-MC74HC14FL	1	5/P									
27	3040 487262	IC-TC74HC07AFT2	1	5/S									
28	3040 347120	IC-TA7522S	1	5/S									
29	3040 347120	IC-TA7522S	1	5/S									
30	3040 378538	IC-TA8428K(S)	1	1/S									
41	3036 871400	Q-2SD1631	1	10/P									
42	3036 363770	Q-2SC3668-Y	1	10/P									
43	3036 548970	Q-2SA1428-Y	1	5/P									
44	3036 548970	Q-2SA1428-Y	1	5/P									
45	3036 868550	Q-2SD1417	1	5/S									
46	3036 325457	Q-2SC2235-Y(C)	1	5/S									
47	3036 325457	Q-2SC2235-Y(C)	1	5/S									
48	3036 325457	Q-2SC2235-Y(C)	1	5/S									
49	3036 325457	Q-2SC2235-Y(C)	1	5/S									
50	3036 639650	Q-2SB1022	1	5/S									
51	3036 639650	Q-2SB1022	1	5/S									
52	3036 359650	Q-2SC3310	1	5/S									
53	3036 359650	Q-2SC3310	1	5/S									
54	3036 359650	Q-2SC3310	1	5/S									
55	3036 359650	Q-2SC3310	1	5/S									
56	3036 014012	Q-RN2401(TE85R)	1	5/P									
57	3036 014012	Q-RN2401(TE85R)	1	5/P									
58	3036 004032	Q-RN1403(TE85R)	1	5/P									
59	3036 014012	Q-RN2401(TE85R)	1	5/P									
60	3036 014012	Q-RN2401(TE85R)	1	5/P									
61	3036 014012	Q-RN2401(TE85R)	1	5/P									
62	3036 014012	Q-RN2401(TE85R)	1	5/P									
63	3036 335473	Q-2SC2712-Y85RT	1	10/P									
64	3036 335473	Q-2SC2712-Y85RT	1	10/P									
65	3036 014012	Q-RN2401(TE85R)	1	5/P									
66	3036 014012	Q-RN2401(TE85R)	1	5/P									
67	3036 014012	Q-RN2401(TE85R)	1	5/P									
68	3036 014012	Q-RN2401(TE85R)	1	5/P									
69	3036 004032	Q-RN1403(TE85R)	1	5/P									
70	3036 335473	Q-2SC2712-Y85RT	1	10/P									
71	3036 335473	Q-2SC2712-Y85RT	1	10/P									
72	3036 004012	Q-RN1401(TE85R)	1	5/P									
73	3036 014012	Q-RN2401(TE85R)	1	5/P									
74	3036 004012	Q-RN1401(TE85R)	1	5/P									
75	3036 004012	Q-RN1401(TE85R)	1	5/P									
76	3036 004032	Q-RN1403(TE85R)	1	5/P									
77	3036 004032	Q-RN1403(TE85R)	1	5/P									
78	3036 014012	Q-RN2401(TE85R)	1	5/P									
79	3036 014012	Q-RN2401(TE85R)	1	5/P									
80	3036 014012	Q-RN2401(TE85R)	1	5/P									
81	3036 014012	Q-RN2401(TE85R)	1	5/P									

ITEM NO.	PARTS NO.	PARTS NAME	Q'TY / PAGE	Q'TY / PACK	SPE PRICE IN NONE	P	I	R	BSI NO.	TO	FROM	SERIAL NO.	REMARKS
82	3036 014012	Q-RN2401(TE85R)	1	5/P									
101	3037 150651	D-1SS184(TE85R)	1	5/P									
102	3037 568250	D-1S1834	1	5/P									
103	3037 568250	D-1S1834	1	5/P									
104	3037 568250	D-1S1834	1	5/P									
105	3037 568250	D-1S1834	1	5/P									
106	4843 101248	D-RD100E	1	10/P									
107	3037 568250	D-1S1834	1	5/P									
108	4843 101248	D-RD100E	1	10/P									
109	3037 568250	D-1S1834	1	5/P									
110	4843 101248	D-RD100E	1	10/P									
111	3037 568250	D-1S1834	1	5/P									
112	4843 101248	D-RD100E	1	10/P									
114	3037 978380	D-S5277B	1	5/P									
131	4843 071536	RW-M02S101KL	1	10/P									
132	4843 071536	RW-M02S101KL	1	10/P									
133	4843 071536	RW-M02S101KL	1	10/P									
134	4841 010071	RD1/2P-2.2KJ	1	10/P									
135	4843 073118	RW-M003MR10JP	1	10/P									
136	4841 010080	RD1/2P-4.7KJ	1	10/P									
137	4841 010080	RD1/2P-4.7KJ	1	10/P									
138	4843 073118	RW-M003MR10JP	1	10/P									
139	4843 073118	RW-M003MR10JP	1	10/P									
140	4843 072155	RTP-2B2A471JDT	1	10/P									
141	4843 072169	RTP-2B2A682JDT	1	10/P									
142	4843 072156	RTP-2B2A561JDT	1	10/P									
143	4843 072154	RTP-2B2A391JDT	1	10/P									
144	4843 072154	RTP-2B2A391JDT	1	10/P									
145	4843 072167	RTP-2B2A472JDT	1	10/P									
146	4843 072167	RTP-2B2A472JDT	1	10/P									
147	4843 072159	RTP-2B2A102JDT	1	10/P									
148	4843 072056	RTP-2B2A823JDT	1	10/P									
149	4843 072176	RTP-2B2A273JDT	1	10/P									
150	4843 072159	RTP-2B2A102JDT	1	10/P									
151	4843 072056	RTP-2B2A823JDT	1	10/P									
152	4843 072176	RTP-2B2A273JDT	1	10/P									
153	4843 072167	RTP-2B2A472JDT	1	10/P									
154	4843 072144	RTP-2B2A560JDT	1	10/P									
155	4843 072159	RTP-2B2A102JDT	1	10/P									
156	4843 072159	RTP-2B2A102JDT	1	10/P									
157	4843 072167	RTP-2B2A472JDT	1	10/P									
158	4843 072159	RTP-2B2A102JDT	1	10/P									
159	4843 072144	RTP-2B2A560JDT	1	10/P									
160	4843 072167	RTP-2B2A472JDT	1	10/P									
161	4843 072167	RTP-2B2A472JDT	1	10/P									
162	4843 072167	RTP-2B2A472JDT	1	10/P									
163	4843 072167	RTP-2B2A472JDT	1	10/P									
164	4843 072160	RTP-2B2A122JDT	1	10/P									
165	4843 072153	RTP-2B2A331JDT	1	10/P									
166	4843 072147	RTP-2B2A101JDT	1	10/P									
167	4843 072159	RTP-2B2A102JDT	1	10/P									
168	4843 072159	RTP-2B2A102JDT	1	10/P									
169	4843 072165	RTP-2B2A332JDT	1	10/P									
170	4843 072159	RTP-2B2A102JDT	1	10/P									
171	4843 072171	RTP-2B2A103JDT	1	10/P									
172	4843 072160	RTP-2B2A122JDT	1	10/P									
173	4843 072153	RTP-2B2A331JDT	1	10/P									
174	4843 072147	RTP-2B2A101JDT	1	10/P									
175	4843 072158	RTP-2B2A821JDT	1	10/P									
176	4843 072165	RTP-2B2A332JDT	1	10/P									
177	4843 072171	RTP-2B2A103JDT	1	10/P									
178	4843 072167	RTP-2B2A472JDT	1	10/P									
179	4843 072167	RTP-2B2A472JDT	1	10/P									
180	4843 072159	RTP-2B2A102JDT	1	10/P									
181	4843 072159	RTP-2B2A102JDT	1	10/P									
182	4843 072175	RTP-2B2A223JDT	1	10/P									
183	4843 072177	RTP-2B2A333JDT	1	10/P									
184	4843 072177	RTP-2B2A333JDT	1	10/P									
185	4843 072062	RTP-2B2A274JDT	1	10/P									
187	4843 072151	RTP-2B2A221JDT	1	10/P									
188	4843 072171	RTP-2B2A103JDT	1	10/P									

ITEM NO.	PARTS NO.	PARTS NAME	Q'TY / PAGE	Q'TY / PACK	SPE PRICE IN NONE	P	I	R	BSI NO.	TO	FROM	SERIAL NO.	REMARKS
189	4843 072159	RTP-2B2A102JDT	1	10/P									
190	4843 072167	RTP-2B2A472JDT	1	10/P									
191	4843 072110	RTP-2B2A103FDT	1	10/P									
192	4843 072151	RTP-2B2A221JDT	1	10/P									
193	4843 072159	RTP-2B2A102JDT	1	10/P									
194	4843 072159	RTP-2B2A102JDT	1	10/P									
195	4843 072167	RTP-2B2A472JDT	1	10/P									
196	4843 072104	RTP-2B2A332FDT	1	10/P									
197	4843 072098	RTP-2B2A102FDT	1	10/P									
198	4843 072116	RTP-2B2A333FDT	1	10/P									
199	4843 072171	RTP-2B2A103JDT	1	10/P									
200	4843 072159	RTP-2B2A102JDT	1	10/P									
201	4843 072159	RTP-2B2A102JDT	1	10/P									
202	4843 072068	RTP-2B2A824JDT	1	10/P									
203	4843 072104	RTP-2B2A332FDT	1	10/P									
204	4843 072089	RTP-2B2A181FDT	1	10/P									
205	4843 072151	RTP-2B2A221JDT	1	10/P									
206	4843 072167	RTP-2B2A472JDT	1	10/P									
207	4843 072167	RTP-2B2A472JDT	1	10/P									
208	4843 072166	RTP-2B2A392JDT	1	10/P									
209	4843 072159	RTP-2B2A102JDT	1	10/P									
210	4843 072163	RTP-2B2A222JDT	1	10/P									
211	4843 072159	RTP-2B2A102JDT	1	10/P									
212	4843 072163	RTP-2B2A222JDT	1	10/P									
213	4843 072167	RTP-2B2A472JDT	1	10/P									
214	4843 072171	RTP-2B2A103JDT	1	10/P									
215	4843 072167	RTP-2B2A472JDT	1	10/P									
216	4843 072165	RTP-2B2A332JDT	1	10/P									
217	4843 072159	RTP-2B2A102JDT	1	10/P									
218	4843 072163	RTP-2B2A222JDT	1	10/P									
219	4843 072159	RTP-2B2A102JDT	1	10/P									
220	4843 072163	RTP-2B2A222JDT	1	10/P									
221	4843 072159	RTP-2B2A102JDT	1	10/P									
222	4843 072176	RTP-2B2A273JDT	1	10/P									
223	4843 072170	RTP-2B2A822JDT	1	10/P									
224	4843 072151	RTP-2B2A221JDT	1	10/P									
225	4843 072103	RTP-2B2A272FDT	1	10/P									
226	4843 072164	RTP-2B2A272JDT	1	10/P									
227	4843 072154	RTP-2B2A391JDT	1	10/P									
228	4843 072171	RTP-2B2A103JDT	1	10/P									
301	4843 406648	CE04W1C470M	1	10/P									
302	4843 406674	CE04W1H101M	1	10/P									
303	4843 406674	CE04W1H101M	1	10/P									
304	4843 406674	CE04W1H101M	1	10/P									
305	4843 406671	CE04W1H100M	1	10/P									
306	4843 406648	CE04W1C470M	1	10/P									
307	4843 406671	CE04W1H100M	1	10/P									
308	4843 410007	CE04W1H1R0M	1	10/P									
309	4843 410535	CTP-M5F1H104ZT	1	10/P									
310	4843 410535	CTP-M5F1H104ZT	1	10/P									
311	4843 410862	CTP-K1F1E104ZT	1	10/P									
312	4843 410862	CTP-K1F1E104ZT	1	10/P									
313	4843 410862	CTP-K1F1E104ZT	1	10/P									
314	4843 410862	CTP-K1F1E104ZT	1	10/P									
315	4843 410862	CTP-K1F1E104ZT	1	10/P									
316	4843 410862	CTP-K1F1E104ZT	1	10/P									
317	4843 410862	CTP-K1F1E104ZT	1	10/P									
318	4843 410862	CTP-K1F1E104ZT	1	10/P									
319	4843 410862	CTP-K1F1E104ZT	1	10/P									
320	4843 410862	CTP-K1F1E104ZT	1	10/P									
321	4843 410862	CTP-K1F1E104ZT	1	10/P									
322	4843 412699	CTP-M1CH1H300JT	1	10/P									
323	4843 412699	CTP-M1CH1H300JT	1	10/P									
324	4843 410862	CTP-K1F1E104ZT	1	10/P									
325	4843 410535	CTP-M5F1H104ZT	1	10/P									
326	4843 410725	CTP-M1B1H222KT	1	10/P									
327	4843 410862	CTP-K1F1E104ZT	1	10/P									
328	4843 410713	CTP-M1CH1H221KT	1	10/P									
329	4843 410862	CTP-K1F1E104ZT	1	10/P									
330	4843 410535	CTP-M5F1H104ZT	1	10/P									
331	4843 410862	CTP-K1F1E104ZT	1	10/P									

ITEM NO.	PARTS NO.	PARTS NAME	Q'TY / PAGE	Q'TY / PACK	SPE PRICE IN NONE	P	I	R	BSI NO.	TO	FROM	SERIAL NO.	REMARKS
332	4843 410725	CTP-M1B1H222KT	1	10/P									
333	4843 410725	CTP-M1B1H222KT	1	10/P									
334	4843 410862	CTP-K1F1E104ZT	1	10/P									
335	4843 410862	CTP-K1F1E104ZT	1	10/P									
336	4843 410862	CTP-K1F1E104ZT	1	10/P									
337	4843 410862	CTP-K1F1E104ZT	1	10/P									
338	4843 410862	CTP-K1F1E104ZT	1	10/P									
339	4843 410535	CTP-M5F1H104ZT	1	10/P									
340	4843 410535	CTP-M5F1H104ZT	1	10/P									
341	4843 410862	CTP-K1F1E104ZT	1	10/P									
342	4843 410862	CTP-K1F1E104ZT	1	10/P									
343	4843 410862	CTP-K1F1E104ZT	1	10/P									
344	4843 410862	CTP-K1F1E104ZT	1	10/P									
345	4843 410862	CTP-K1F1E104ZT	1	10/P									
346	4843 410862	CTP-K1F1E104ZT	1	10/P									
347	4843 410862	CTP-K1F1E104ZT	1	10/P									
348	4843 410535	CTP-M5F1H104ZT	1	10/P									
349	4843 410862	CTP-K1F1E104ZT	1	10/P									
350	4843 410535	CTP-M5F1H104ZT	1	10/P									
351	4843 410535	CTP-M5F1H104ZT	1	10/P									
401	4843 076427	RR-1/8S08472223	1	10/P									
402	4843 076427	RR-1/8S08472223	1	10/P									
403	4843 076427	RR-1/8S08472223	1	10/P									
404	4407 917830	RR-S05LA472J	1	10/P									
405	4407 917830	RR-S05LA472J	1	10/P									
406	4407 917830	RR-S05LA472J	1	10/P									
407	4407 917820	RR-S05LA561J	1	10/P									
408	4407 917850	RR-S08LB331J	1	10/P									
409	4407 917870	RR-S09LA472J	1	10/P									
450	4843 301051	J-5045-06A	1	5/P									
451	4843 301276	J-5045-12A	1	5/P									
452	4843 303783	J-DF1B12DP-2.5D	1	5/P									
453	4843 305421	J-DF1B14DP25DSA	1	5/P									
454	4843 303786	J-DF1B20DP-2.5D	1	5/P									
455	4843 303787	J-DF1B26DP-2.5D	1	5/P									
456	4843 304923	J-173981-8	1	5/P									
457	4843 304927	J-1-173981-2	1	5/P									
458	4843 306161	J-3-175132-0	1	5/P									
459	4843 306165	J-2-175132-2	1	5/P									
460	4843 306383	J-DF1B-06P-DSA	1	5/P									
461	4843 306163	J-2-175132-6	1	5/P									
491	4408 365120	JUMPER-WIRE-15	1	10/P									
501	7040 301211	PAN30*12MSZN3AI	5	50/P									
502	7040 400611	PAN40*06MSZN3AI	2	50/P									
503	7040 300611	PAN30*06MSZN3A	2	50/P									

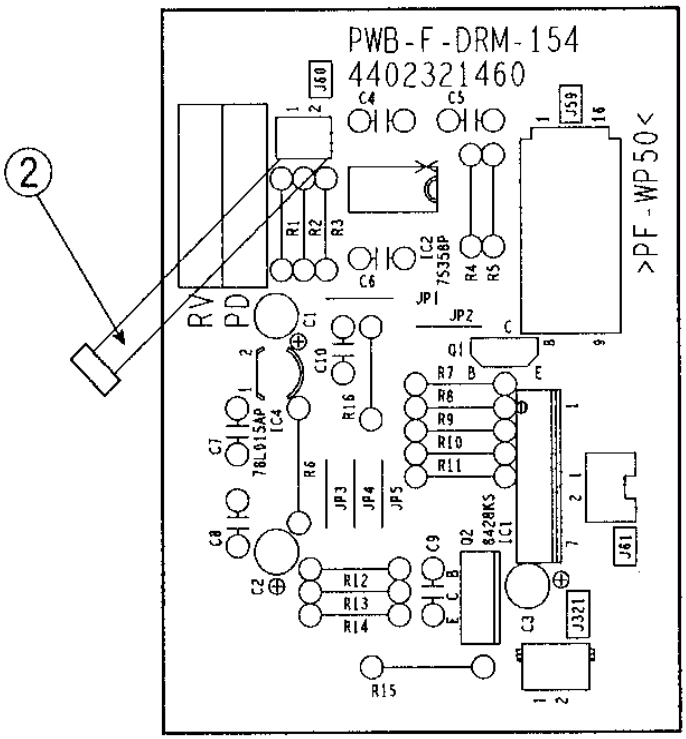
2
PWB-F-DRM-154
4402321460
J60
J59
16
>PF-WP50<
C4
C5
R1
R2
R3
IC2
7535BP
C6
R4
R5
JP1
JP2
RV
PD
C1
C10
Q1
B
E
R7
R8
R9
R10
R11
R16
IC4
78L015AP
C7
R6
JP3
JP4
JP5
C8
C2
C9
Q2
8428KS
IC1
J61
J321
C3
R12
R13
R14
R15

ITEM NO.	PARTS NO.	PARTS NAME	Q'TY / PAGE	Q'TY / PACK	SPE PRICE IN NONE	P	I	R	BSI NO.	TO	FROM	SERIAL NO.	REMARKS
0	4402 321260	PWA-F-DRM-154	1	1/SB									
1	4402 321460	PWB-F-DRM-154	1	N/A***									
2	4402 322020	WH-DRM-PCB-154	1	1/P									
11	3040 378538	IC-TA8428K(S)	1	1/S									
12	4843 113199	IC-LM358N	1	5/S									
14	3040 373520	IC-TA78L015AP	1	5/S									
31	3036 012010	Q-RN2201	1	5/P									
32	3036 868550	Q-2SD1417	1	5/S									
51	4843 406671	CE04W1H100M	1	10/P									
52	4843 406671	CE04W1H100M	1	10/P									
53	4843 406671	CE04W1H100M	1	10/P									
54	4843 413242	CK-45F1H104ZY	1	10/P									
55	4843 413242	CK-45F1H104ZY	1	10/P									
56	4843 413242	CK-45F1H104ZY	1	10/P									
57	4843 413242	CK-45F1H104ZY	1	10/P									
58	4843 413242	CK-45F1H104ZY	1	10/P									
59	4843 413242	CK-45F1H104ZY	1	10/P									
60	4843 413242	CK-45F1H104ZY	1	10/P									
81	4843 018059	RN1/4PR010KF	1	10/P									
82	4843 061436	RN1/4PR27.4KF	1	10/P									
83	4843 061440	RN1/4PR56.2KF	1	10/P									
84	4843 028635	RD1/4LA100KJ	1	10/P									
85	4843 028635	RD1/4LA100KJ	1	10/P									
86	4841 010041	RD1/2P-220HJ	1	10/P									
87	4843 028587	RD1/4LA001KJ	1	10/P									
88	4843 028599	RD1/4LA3.3KJ	1	10/P									
89	4843 028603	RD1/4LA4.7KJ	1	10/P									
90	4843 028603	RD1/4LA4.7KJ	1	10/P									
91	4843 028623	RD1/4LA033KJ	1	10/P									
92	4843 061440	RN1/4PR56.2KF	1	10/P									
93	4843 061439	RN1/4PR47.5KF	1	10/P									
94	4843 061434	RN1/4PR18.2KF	1	10/P									
95	4843 075264	RD-1/2P222JT	1	10/P									
96	4843 018064	RN1/4PR027KF	1	10/P									
129	4843 306168	J-1-175132-6	1	5/P									
131	4843 304946	J-53052-0210	1	5/P									
151	4843 304858	J-5483-02AX	1	5/P									
171	4407 782660	JUMPER-WIRE-10	5	10/P									

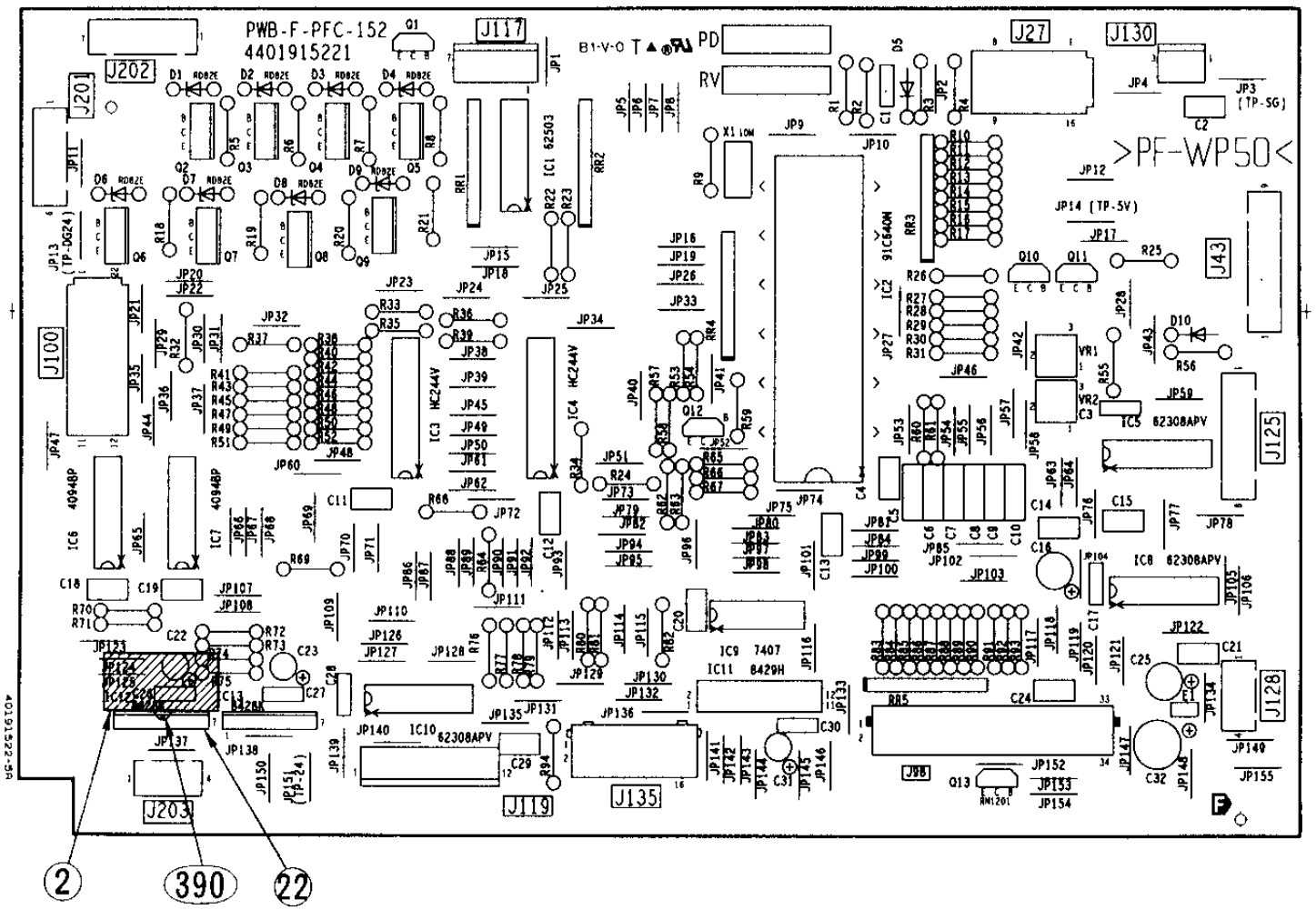
PWB-F-PFC-152
4401915221
>PF-WP50<
2
390
22

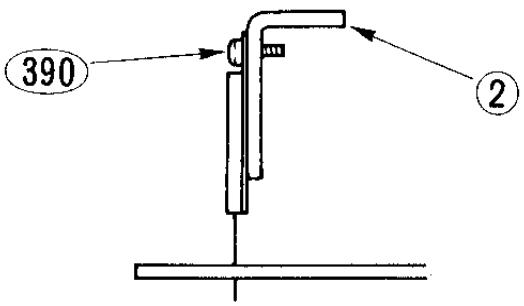
390
2

ITEM NO.	PARTS NO.	PARTS NAME	Q'TY / PAGE	Q'TY / PACK	SPE PRICE IN NONE	P	I	R	BSI NO.	TO	FROM	SERIAL NO.	REMARKS
0	4402 321310	PWA-F-PFC-154	1	1/SB									
1	4401 915220	PWB-F-PFC-152	1	N/A***									
2	4400 848380	HS-8050	1	1/P									IC12
11	3040 275018	IC-TD62503P(J)	1	5/S									
12	3040 571400	TMP91C640N-2224	1	1/S		A	E	E	F97H992			DG7	
13	4843 112190	IC-MC74HC244AN	1	5/S									
14	4843 112190	IC-MC74HC244AN	1	5/S									
15	3040 274681	IC-TD62308AP(J)	1	5/S									
16	3040 470942	IC-TC4094BP	1	5/S									
17	3040 470942	IC-TC4094BP	1	5/S									
18	3040 274681	IC-TD62308AP(J)	1	5/S									
19	4843 112339	IC-DM7407N	1	5/S									
20	3040 274681	IC-TD62308AP(J)	1	5/S									
21	3040 378580	IC-TA8429H	1	1/S									
22	3040 378538	IC-TA8428K(S)	1	1/S									
23	3040 378538	IC-TA8428K(S)	1	1/S									
41	3036 002010	Q-RN1201	1	5/P									
42	3036 868450	Q-2SD1415	1	5/S									
43	3036 868450	Q-2SD1415	1	5/S									
44	3036 868450	Q-2SD1415	1	5/S									
45	3036 868450	Q-2SD1415	1	5/S									
46	3036 868450	Q-2SD1415	1	5/S									
47	3036 868450	Q-2SD1415	1	5/S									
48	3036 868450	Q-2SD1415	1	5/S									
49	3036 868450	Q-2SD1415	1	5/S									
50	3036 012010	Q-RN2201	1	5/P									
51	3036 002010	Q-RN1201	1	5/P									
52	3036 012010	Q-RN2201	1	5/P									
53	3036 002010	Q-RN1201	1	5/P									
71	4843 101246	D-RD82E	1	5/P									
72	4843 101246	D-RD82E	1	5/P									
73	4843 101246	D-RD82E	1	5/P									
74	4843 101246	D-RD82E	1	5/P									
75	3037 249601	D-1S1588	1	5/P									
76	4843 101246	D-RD82E	1	5/P									
77	4843 101246	D-RD82E	1	5/P									
78	4843 101246	D-RD82E	1	5/P									
79	4843 101246	D-RD82E	1	5/P									
80	3037 249601	D-1S1588	1	5/P									
92	4408 216680	RA-V6EK-PV20K	1	5/P									
101	4843 250421	X-CST10.0MTW	1	5/S									
111	4843 410842	CKM-92E1E105ZY	1	10/P									
112	4843 413234	CK-45F1B104ZY-F	1	10/P									
113	4843 413242	CK-45F1H104ZY	1	10/P									
114	4843 413234	CK-45F1B104ZY-F	1	10/P									
115	4843 413238	CCM-45SL1H471JY	1	5/P									
116	4843 413238	CCM-45SL1H471JY	1	5/P									
117	4843 413238	CCM-45SL1H471JY	1	5/P									
118	4843 413238	CCM-45SL1H471JY	1	5/P									
119	4843 413238	CCM-45SL1H471JY	1	5/P									
120	4843 413238	CCM-45SL1H471JY	1	5/P									
121	4843 413234	CK-45F1B104ZY-F	1	10/P									
122	4843 413234	CK-45F1B104ZY-F	1	10/P									
123	4843 413234	CK-45F1B104ZY-F	1	10/P									
124	4843 413234	CK-45F1B104ZY-F	1	10/P									
125	4843 413234	CK-45F1B104ZY-F	1	10/P									
126	4843 406648	CE04W1C470M	1	10/P									
127	4843 413242	CK-45F1H104ZY	1	10/P									
128	4843 413234	CK-45F1B104ZY-F	1	10/P									
129	4843 413234	CK-45F1B104ZY-F	1	10/P									
130	4843 413234	CK-45F1B104ZY-F	1	10/P									
131	4843 413234	CK-45F1B104ZY-F	1	10/P									
132	4843 406663	CE04W1V100M	1	10/P									
133	4843 406663	CE04W1V100M	1	10/P									
134	4843 413234	CK-45F1B104ZY-F	1	10/P									
135	4843 406648	CE04W1C470M	1	10/P									
136	4843 413242	CK-45F1H104ZY	1	10/P									
137	4843 413242	CK-45F1H104ZY	1	10/P									
138	4843 413242	CK-45F1H104ZY	1	10/P									
139	4843 413234	CK-45F1B104ZY-F	1	10/P									
140	4843 413242	CK-45F1H104ZY	1	10/P									

ITEM NO.	PARTS NO.	PARTS NAME	Q'TY / PAGE	Q'TY / PACK	SPE PRICE IN NONE	P	I	R	BSI NO.	TO	FROM	SERIAL NO.	REMARKS
141	4843 406663	CE04W1V100M	1	10/P									
142	4843 406673	CE04W1H470M	1	10/P									
161	4407 917860	RR-S09LA561J	1	10/P									
162	4843 005108	RR125S08A-4.7KJ	1	10/P									
163	4843 005108	RR125S08A-4.7KJ	1	10/P									
164	4843 005108	RR125S08A-4.7KJ	1	10/P									
165	4843 005108	RR125S08A-4.7KJ	1	10/P									
181	4843 028603	RD1/4LA4.7KJ	1	10/P									
182	4843 028603	RD1/4LA4.7KJ	1	10/P									
183	4843 028635	RD1/4LA100KJ	1	10/P									
184	4843 028603	RD1/4LA4.7KJ	1	10/P									
185	4843 028575	RD1/4LA330HJ	1	10/P									
186	4843 028575	RD1/4LA330HJ	1	10/P									
187	4843 028575	RD1/4LA330HJ	1	10/P									
188	4843 028575	RD1/4LA330HJ	1	10/P									
189	4843 028659	RD1/4LA001MJ	1	10/P									
190	4843 028563	RD1/4LA100HJ	1	10/P									
191	4843 028563	RD1/4LA100HJ	1	10/P									
192	4843 028563	RD1/4LA100HJ	1	10/P									
193	4843 028563	RD1/4LA100HJ	1	10/P									
194	4843 028563	RD1/4LA100HJ	1	10/P									
195	4843 028563	RD1/4LA100HJ	1	10/P									
196	4843 028563	RD1/4LA100HJ	1	10/P									
197	4843 028563	RD1/4LA100HJ	1	10/P									
198	4843 028575	RD1/4LA330HJ	1	10/P									
199	4843 028575	RD1/4LA330HJ	1	10/P									
200	4843 028575	RD1/4LA330HJ	1	10/P									
201	4843 028575	RD1/4LA330HJ	1	10/P									
202	4843 028603	RD1/4LA4.7KJ	1	10/P									
203	4843 028603	RD1/4LA4.7KJ	1	10/P									
204	4843 028603	RD1/4LA4.7KJ	1	10/P									
205	4843 028603	RD1/4LA4.7KJ	1	10/P									
206	4843 028603	RD1/4LA4.7KJ	1	10/P									
207	4843 028619	RD1/4LA022KJ	1	10/P									
208	4843 028619	RD1/4LA022KJ	1	10/P									
209	4843 028603	RD1/4LA4.7KJ	1	10/P									
210	4843 028619	RD1/4LA022KJ	1	10/P									
211	4843 028603	RD1/4LA4.7KJ	1	10/P									
212	4843 028577	RD1/4LA390HJ	1	10/P									
213	4843 028635	RD1/4LA100KJ	1	10/P									
214	4843 028619	RD1/4LA022KJ	1	10/P									
215	4843 028635	RD1/4LA100KJ	1	10/P									
216	4843 028619	RD1/4LA022KJ	1	10/P									
217	4843 028603	RD1/4LA4.7KJ	1	10/P									
218	4843 028619	RD1/4LA022KJ	1	10/P									
219	4843 028619	RD1/4LA022KJ	1	10/P									
220	4843 028619	RD1/4LA022KJ	1	10/P									
221	4843 028603	RD1/4LA4.7KJ	1	10/P									
222	4843 028619	RD1/4LA022KJ	1	10/P									
223	4843 028603	RD1/4LA4.7KJ	1	10/P									
224	4843 028619	RD1/4LA022KJ	1	10/P									
225	4843 028603	RD1/4LA4.7KJ	1	10/P									
226	4843 028619	RD1/4LA022KJ	1	10/P									
227	4843 028603	RD1/4LA4.7KJ	1	10/P									
228	4843 028619	RD1/4LA022KJ	1	10/P									
229	4843 028603	RD1/4LA4.7KJ	1	10/P									
230	4843 028619	RD1/4LA022KJ	1	10/P									
231	4843 028603	RD1/4LA4.7KJ	1	10/P									
232	4843 028619	RD1/4LA022KJ	1	10/P									
233	4843 028603	RD1/4LA4.7KJ	1	10/P									
234	4843 028603	RD1/4LA4.7KJ	1	10/P									
235	4843 028619	RD1/4LA022KJ	1	10/P									
236	4843 028603	RD1/4LA4.7KJ	1	10/P									
237	4843 028619	RD1/4LA022KJ	1	10/P									
238	4843 028619	RD1/4LA022KJ	1	10/P									
239	4843 028563	RD1/4LA100HJ	1	10/P									
240	4843 028603	RD1/4LA4.7KJ	1	10/P									
241	4843 028603	RD1/4LA4.7KJ	1	10/P									
242	4843 028603	RD1/4LA4.7KJ	1	10/P									
243	4843 028603	RD1/4LA4.7KJ	1	10/P									
244	4843 028619	RD1/4LA022KJ	1	10/P									

ITEM NO.	PARTS NO.	PARTS NAME	Q'TY / PAGE	Q'TY / PACK	SPE PRICE IN NONE	P	I	R	BSI NO.	TO	FROM	SERIAL NO.	REMARKS
245	4843 028603	RD1/4LA4.7KJ	1	10/P									
246	4843 028619	RD1/4LA022KJ	1	10/P									
247	4843 028603	RD1/4LA4.7KJ	1	10/P									
248	4843 028619	RD1/4LA022KJ	1	10/P									
249	4843 028595	RD1/4LA2.2KJ	1	10/P									
250	4843 028603	RD1/4LA4.7KJ	1	10/P									
251	4843 028603	RD1/4LA4.7KJ	1	10/P									
252	4843 028603	RD1/4LA4.7KJ	1	10/P									
253	4843 028603	RD1/4LA4.7KJ	1	10/P									
254	4843 028603	RD1/4LA4.7KJ	1	10/P									
255	4843 028603	RD1/4LA4.7KJ	1	10/P									
256	4843 028619	RD1/4LA022KJ	1	10/P									
257	4843 028603	RD1/4LA4.7KJ	1	10/P									
258	4843 028619	RD1/4LA022KJ	1	10/P									
259	4843 028635	RD1/4LA100KJ	1	10/P									
260	4843 028635	RD1/4LA100KJ	1	10/P									
261	4843 028619	RD1/4LA022KJ	1	10/P									
262	4843 028603	RD1/4LA4.7KJ	1	10/P									
263	4843 028619	RD1/4LA022KJ	1	10/P									
264	4843 028619	RD1/4LA022KJ	1	10/P									
265	4843 028619	RD1/4LA022KJ	1	10/P									
266	4843 028619	RD1/4LA022KJ	1	10/P									
267	4843 028619	RD1/4LA022KJ	1	10/P									
268	4843 028619	RD1/4LA022KJ	1	10/P									
269	4843 028619	RD1/4LA022KJ	1	10/P									
270	4843 028619	RD1/4LA022KJ	1	10/P									
271	4843 028619	RD1/4LA022KJ	1	10/P									
272	4843 028619	RD1/4LA022KJ	1	10/P									
273	4843 028619	RD1/4LA022KJ	1	10/P									
274	4843 028577	RD1/4LA390HJ	1	10/P									
291	4843 321159	SKT-DICS-64A	1	1/S						291 1			IC2
291 1	4843 321159	SKT-DICS-64A	0	1/S		B	-	E	F97H992		291	DG7	IC2
301	4843 306168	J-1-175132-6	1	5/P									
311	4843 304149	J-DF1B-9P2.5DSA	1	5/P									
321	4843 303789	J-DF1B34DP-2.5D	1	5/P									
330	4843 306165	J-2-175132-2	1	5/P									
347	4843 304922	J-173981-7	1	5/P									
349	4843 304927	J-1-173981-2	1	5/P									
355	4843 306385	J-DF1B-08P-DSA	1	5/P									
358	4843 306381	J-DF1B-04P-DSA	1	5/P									
360	4843 304918	J-173981-3	1	5/P									
365	4843 303784	J-DF1B16DP-2.5D	1	5/P									
371	4843 306383	J-DF1B-06P-DSA	1	5/P									
372	4843 306384	J-DF1B-07P-DSA	1	5/P									
373	4843 306381	J-DF1B-04P-DSA	1	5/P									
381	4407 782660	JUMPER-WIRE-10	99	10/P									
382	4407 782660	JUMPER-WIRE-10	56	10/P									
390	7040 300611	PAN30*06MSZN3A	1	50/P									
355	4843 306385	J-DF1B-08P-DSA	1	5/P									

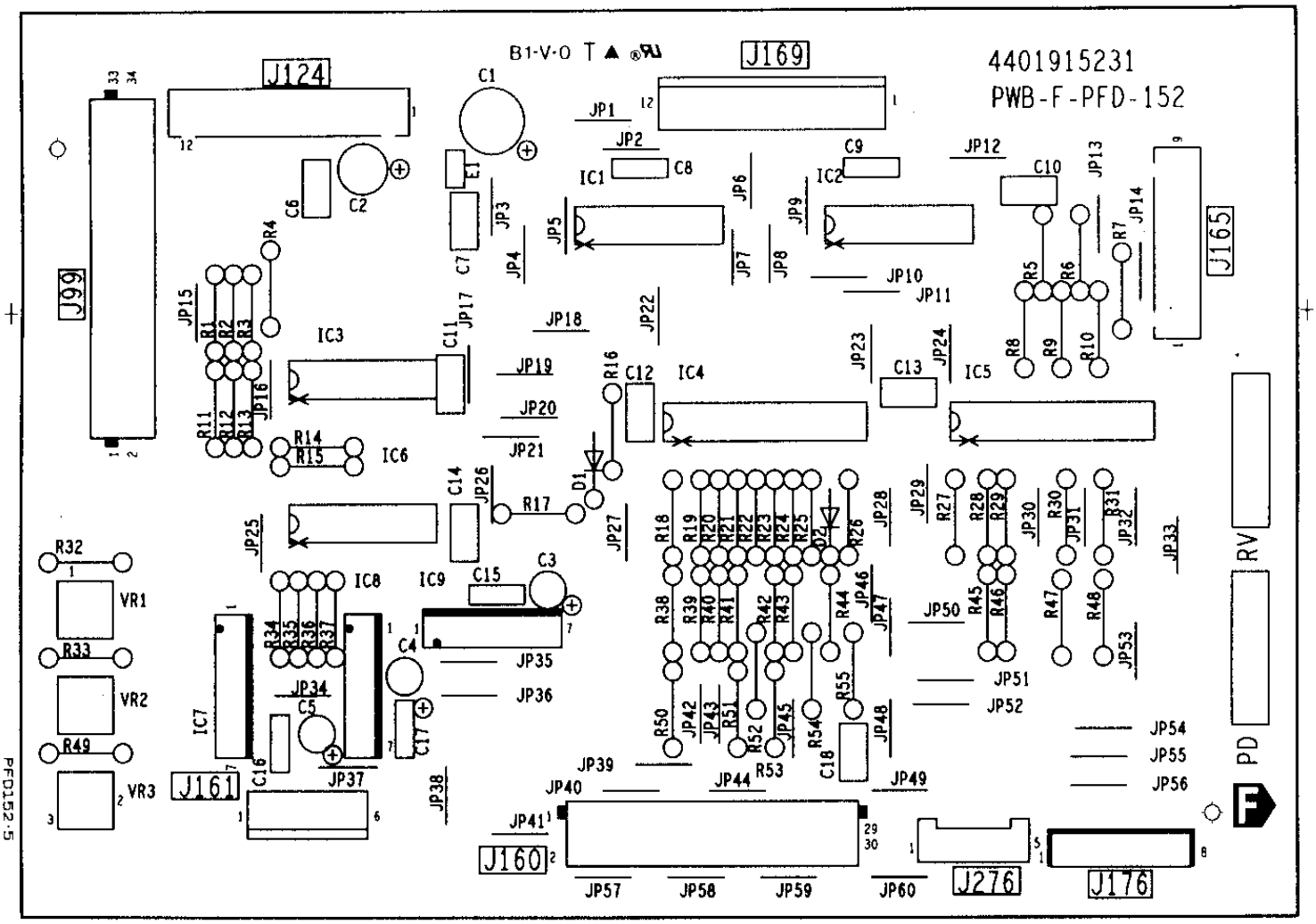
B1-V-0 T ▲
4401915231
PWB-F-PFD-152
J124
J169
J99
J165
J161
J160
J276
J176
IC1
IC2
IC3
IC4
IC5
IC6
IC7
IC8
IC9
VR1
VR2
VR3
RV
PD
F
PFD152-5

ITEM NO.	PARTS NO.	PARTS NAME	Q'TY / PAGE	Q'TY / PACK	SPE PRICE IN NONE	P	I	R	BSI NO.	TO	FROM	SERIAL NO.	REMARKS
0	4402 874110	PWA-F-PFD-155	1	1/SB									
1	4401 915230	PWB-F-PFD-152	1	N/A***									
12	3040 274681	IC-TD62308AP(J)	1	5/S									
13	3040 470942	IC-TC4094BP	1	5/S									
14	4843 112190	IC-MC74HC244AN	1	5/S									
15	4843 112190	IC-MC74HC244AN	1	5/S									
16	3040 470942	IC-TC4094BP	1	5/S									
17	3040 378538	IC-TA8428K(S)	1	1/S									
18	3040 378538	IC-TA8428K(S)	1	1/S									
31	3037 249601	D-1S1588	1	5/P									
42	4408 216680	RA-V6EK-PV20K	1	5/P									
43	4408 216680	RA-V6EK-PV20K	1	5/P									
51	4843 406673	CE04W1H470M	1	10/P									
52	4843 406648	CE04W1C470M	1	10/P									
54	4843 406663	CE04W1V100M	1	10/P									
55	4843 406663	CE04W1V100M	1	10/P									
56	4843 413234	CK-45F1B104ZY-F	1	10/P									
59	4843 413242	CK-45F1H104ZY	1	10/P									
60	4843 413234	CK-45F1B104ZY-F	1	10/P									
61	4843 413234	CK-45F1B104ZY-F	1	10/P									
62	4843 413234	CK-45F1B104ZY-F	1	10/P									
63	4843 413234	CK-45F1B104ZY-F	1	10/P									
64	4843 413234	CK-45F1B104ZY-F	1	10/P									
66	4843 413242	CK-45F1H104ZY	1	10/P									
67	4843 413242	CK-45F1H104ZY	1	10/P									
68	4843 413234	CK-45F1B104ZY-F	1	10/P									
81	4843 028569	RD1/4LA180HJ	1	10/P									
82	4843 028569	RD1/4LA180HJ	1	10/P									
83	4843 028569	RD1/4LA180HJ	1	10/P									
84	4843 028603	RD1/4LA4.7KJ	1	10/P									
85	4843 028603	RD1/4LA4.7KJ	1	10/P									
86	4843 028603	RD1/4LA4.7KJ	1	10/P									
87	4843 028603	RD1/4LA4.7KJ	1	10/P									
88	4843 028619	RD1/4LA022KJ	1	10/P									
89	4843 028619	RD1/4LA022KJ	1	10/P									
90	4843 028619	RD1/4LA022KJ	1	10/P									
91	4843 028595	RD1/4LA2.2KJ	1	10/P									
92	4843 028595	RD1/4LA2.2KJ	1	10/P									
93	4843 028595	RD1/4LA2.2KJ	1	10/P									
96	4843 028619	RD1/4LA022KJ	1	10/P									
97	4843 028603	RD1/4LA4.7KJ	1	10/P									
98	4843 028619	RD1/4LA022KJ	1	10/P									
99	4843 028619	RD1/4LA022KJ	1	10/P									
100	4843 028619	RD1/4LA022KJ	1	10/P									
101	4843 028619	RD1/4LA022KJ	1	10/P									
102	4843 028619	RD1/4LA022KJ	1	10/P									
103	4843 028619	RD1/4LA022KJ	1	10/P									
104	4843 028619	RD1/4LA022KJ	1	10/P									
105	4843 028619	RD1/4LA022KJ	1	10/P									
106	4843 028619	RD1/4LA022KJ	1	10/P									
107	4843 028619	RD1/4LA022KJ	1	10/P									
108	4843 028619	RD1/4LA022KJ	1	10/P									
109	4843 028619	RD1/4LA022KJ	1	10/P									
110	4843 028619	RD1/4LA022KJ	1	10/P									
111	4843 028619	RD1/4LA022KJ	1	10/P									
113	4843 028603	RD1/4LA4.7KJ	1	10/P									
114	4843 028603	RD1/4LA4.7KJ	1	10/P									
115	4843 028603	RD1/4LA4.7KJ	1	10/P									
116	4843 028603	RD1/4LA4.7KJ	1	10/P									
117	4843 028603	RD1/4LA4.7KJ	1	10/P									
118	4843 028603	RD1/4LA4.7KJ	1	10/P									
119	4843 028603	RD1/4LA4.7KJ	1	10/P									
120	4843 028603	RD1/4LA4.7KJ	1	10/P									
121	4843 028603	RD1/4LA4.7KJ	1	10/P									
122	4843 028603	RD1/4LA4.7KJ	1	10/P									
123	4843 028603	RD1/4LA4.7KJ	1	10/P									
124	4843 028603	RD1/4LA4.7KJ	1	10/P									
125	4843 028603	RD1/4LA4.7KJ	1	10/P									
126	4843 028603	RD1/4LA4.7KJ	1	10/P									
128	4843 028603	RD1/4LA4.7KJ	1	10/P									
129	4843 028603	RD1/4LA4.7KJ	1	10/P									

ITEM NO.	PARTS NO.	PARTS NAME	Q'TY / PAGE	Q'TY / PACK	SPE PRICE IN NONE	P	I	R	BSI NO.	TO	FROM	SERIAL NO.	REMARKS
130	4843 028577	RD1/4LA390HJ	1	10/P									
131	4843 028603	RD1/4LA4.7KJ	1	10/P									
132	4843 028635	RD1/4LA100KJ	1	10/P									
133	4843 028577	RD1/4LA390HJ	1	10/P									
134	4843 028635	RD1/4LA100KJ	1	10/P									
135	4843 028635	RD1/4LA100KJ	1	10/P									
150	4843 303789	J-DF1B34DP-2.5D	1	5/P									
155	4843 306387	J-DF1B-12P-DSA	1	5/P									
160	4843 303788	J-DF1B30DP-2.5D	1	5/P									
161	4843 301051	J-5045-06A	1	5/P									
165	4843 304149	J-DF1B-9P2.5DSA	1	5/P									
169	4843 301276	J-5045-12A	1	5/P									
176	4843 306502	J-53253-0810	1	5/P									
276	4843 304943	J-53052-0510	1	5/P									
281	4407 782660	JUMPER-WIRE-10	60	10/P									

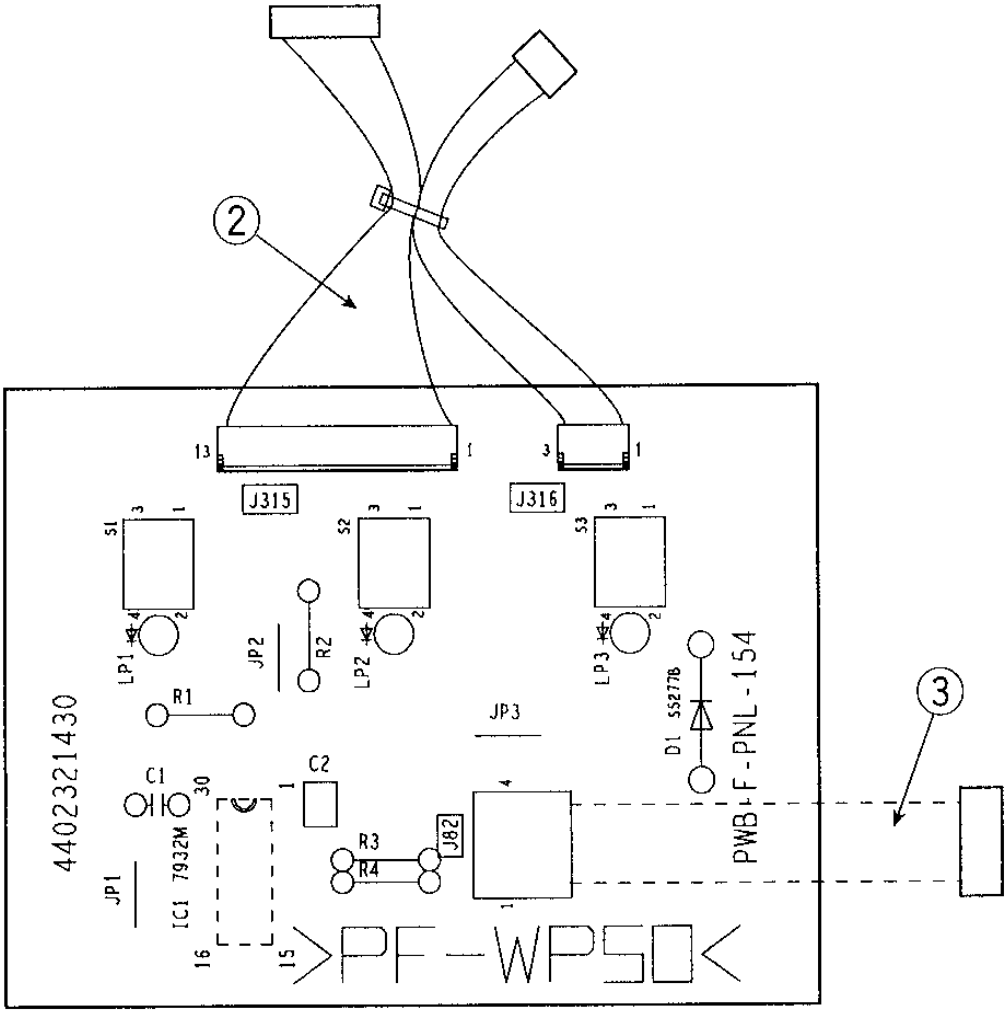
2
3
J315
J316
S1
S2
S3
LP1
LP2
LP3
JP2
R2
R1
JP3
D1 SS2778
C1
C2
JP1
IC1 7932M
R3
R4
J82
4402321430
PWB-F-PNL-154
PF-WP50

ITEM NO.	PARTS NO.	PARTS NAME	Q'TY / PAGE	Q'TY / PACK	SPE PRICE IN NONE	P	I	R	BSI NO.	TO	FROM	SERIAL NO.	REMARKS
0	4402 321230	PWA-F-PNL-154	1	1/SB									
1	4402 321430	PWB-F-PNL-154	1	N/A***									
2	4402 321980	WH-DSP-PNL-154	1	1/P									
3	4402 321990	WH-COUNTER-CNT1	1	1/P									
11	4843 114181	IC-LC7932M	1	1/S									
31	3037 978380	D-S5277B	1	5/P									
51	4843 412279	CKM-ECFZ1E104ZF	1	10/P									
52	4843 412928	CC-45CH1H330JYS	1	10/P									
71	4843 028563	RD1/4LA100HJ	1	10/P									
72	4843 028587	RD1/4LA001KJ	1	10/P									
73	4843 028563	RD1/4LA100HJ	1	10/P									
74	4843 028563	RD1/4LA100HJ	1	10/P									
101	4843 194552	LED-SLR-342MC3F	1	5/P									
102	4843 194552	LED-SLR-342MC3F	1	5/P									
103	4843 194552	LED-SLR-342MC3F	1	5/P									
131	4843 231490	SP-B3F-1000	1	5/S									
132	4843 231490	SP-B3F-1000	1	5/S									
133	4843 231490	SP-B3F-1000	1	5/S									
152	4843 304962	J-53025-0410	1	5/P									
171	4407 782660	JUMPER-WIRE-10	3	10/P									
73	4843 028563	RD1/4LA100HJ	1	10/P									

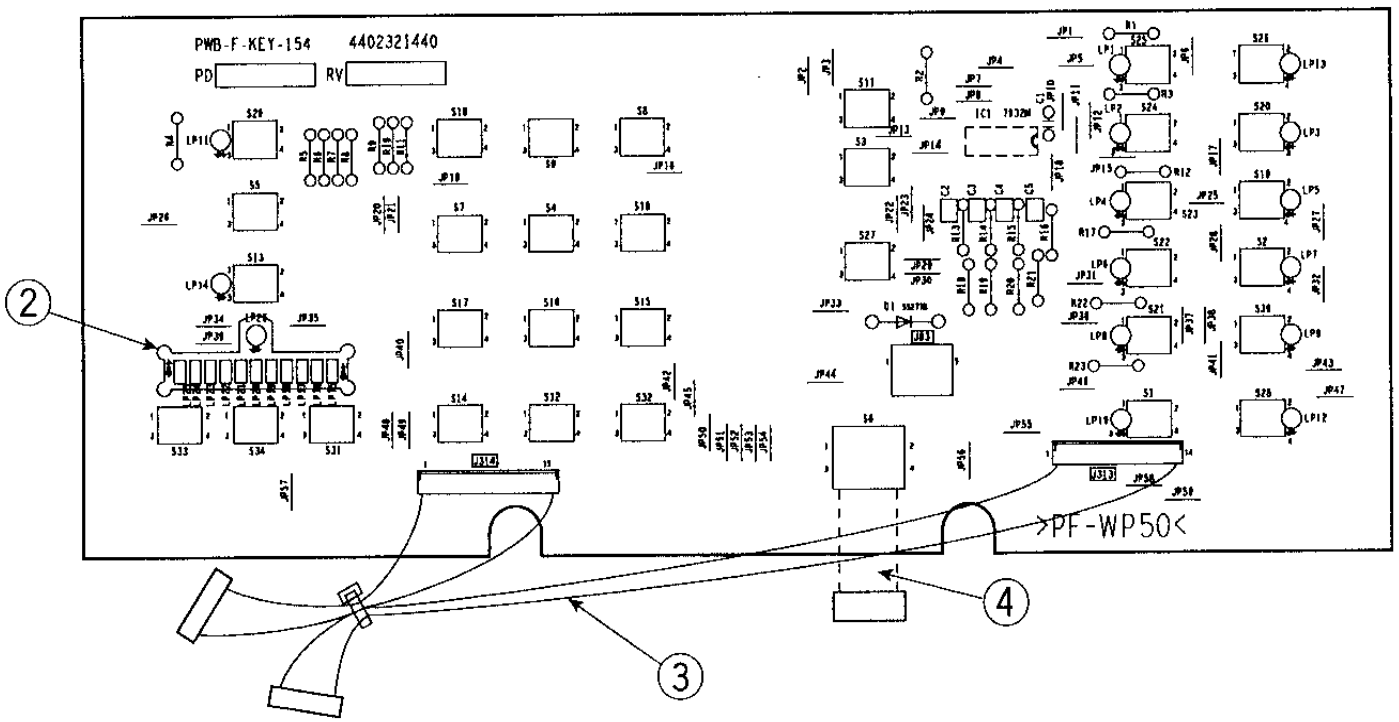
PWB-F-KEY-154 4402321440
PD
RV
>PF-WP50<
2
3
4

ITEM NO.	PARTS NO.	PARTS NAME	Q'TY / PAGE	Q'TY / PACK	SPE PRICE IN NONE	P	I	R	BSI NO.	TO	FROM	SERIAL NO.	REMARKS
0	4402 321240	PWA-F-KEY-154	1	1/SB									
1	4402 321440	PWB-F-KEY-154	1	N/A***									
2	4402 303870	CASE-LED	1	1/P									
3	4402 321970	WH-DSP-KEY-154	1	1/P									
4	4402 322000	WH-COUNTER-CNT2	1	1/P									
11	4843 114181	IC-LC7932M	1	1/S									
31	3037 978380	D-S5277B	1	5/P									
51	4843 412279	CKM-ECFZ1E104ZF	1	10/P									
52	4843 412928	CC-45CH1H330JYS	1	10/P									
53	4843 412928	CC-45CH1H330JYS	1	10/P									
54	4843 412928	CC-45CH1H330JYS	1	10/P									
55	4843 412928	CC-45CH1H330JYS	1	10/P									
81	4843 028563	RD1/4LA100HJ	1	10/P									
82	4843 028563	RD1/4LA100HJ	1	10/P									
83	4843 028563	RD1/4LA100HJ	1	10/P									
84	4843 028563	RD1/4LA100HJ	1	10/P									
85	4843 028563	RD1/4LA100HJ	1	10/P									
86	4843 028563	RD1/4LA100HJ	1	10/P									
87	4843 028563	RD1/4LA100HJ	1	10/P									
88	4843 028563	RD1/4LA100HJ	1	10/P									
89	4843 028563	RD1/4LA100HJ	1	10/P									
90	4843 028563	RD1/4LA100HJ	1	10/P									
91	4843 028563	RD1/4LA100HJ	1	10/P									
92	4843 028563	RD1/4LA100HJ	1	10/P									
93	4843 028587	RD1/4LA001KJ	1	10/P									
94	4843 028587	RD1/4LA001KJ	1	10/P									
95	4843 028563	RD1/4LA100HJ	1	10/P									
96	4843 028587	RD1/4LA001KJ	1	10/P									
97	4843 028563	RD1/4LA100HJ	1	10/P									
98	4843 028587	RD1/4LA001KJ	1	10/P									
99	4843 028587	RD1/4LA001KJ	1	10/P									
100	4843 028575	RD1/4LA330HJ	1	10/P									
101	4843 028587	RD1/4LA001KJ	1	10/P									
102	4843 028563	RD1/4LA100HJ	1	10/P									
103	4843 028563	RD1/4LA100HJ	1	10/P									
131	4843 194552	LED-SLR-342MC3F	1	5/P									
132	4843 194552	LED-SLR-342MC3F	1	5/P									
133	4843 194552	LED-SLR-342MC3F	1	5/P									
134	4843 194552	LED-SLR-342MC3F	1	5/P									
135	4843 194552	LED-SLR-342MC3F	1	5/P									
136	4843 194552	LED-SLR-342MC3F	1	5/P									
137	4843 194552	LED-SLR-342MC3F	1	5/P									
138	4843 194552	LED-SLR-342MC3F	1	5/P									
139	4843 194552	LED-SLR-342MC3F	1	5/P									
140	4843 194552	LED-SLR-342MC3F	1	5/P									
141	4843 194552	LED-SLR-342MC3F	1	5/P									
142	4843 194552	LED-SLR-342MC3F	1	5/P									
143	4843 194552	LED-SLR-342MC3F	1	5/P									
144	4843 194552	LED-SLR-342MC3F	1	5/P									
145	4843 194394	LED-SEL4426G	1	5/P									
146	4843 194394	LED-SEL4426G	1	5/P									
147	4843 194394	LED-SEL4426G	1	5/P									
148	4843 194394	LED-SEL4426G	1	5/P									
149	4843 194394	LED-SEL4426G	1	5/P									
150	4843 194394	LED-SEL4426G	1	5/P									
151	4843 194394	LED-SEL4426G	1	5/P									
152	4843 194394	LED-SEL4426G	1	5/P									
153	4843 194394	LED-SEL4426G	1	5/P									
154	4843 194394	LED-SEL4426G	1	5/P									
155	4843 194394	LED-SEL4426G	1	5/P									
156	4843 194552	LED-SLR-342MC3F	1	5/P									
201	4843 231490	SP-B3F-1000	1	5/S									
202	4843 231490	SP-B3F-1000	1	5/S									
203	4843 231490	SP-B3F-1000	1	5/S									
204	4843 231490	SP-B3F-1000	1	5/S									
205	4843 231490	SP-B3F-1000	1	5/S									
206	4843 231491	SP-B3F-4000	1	5/S									
207	4843 231490	SP-B3F-1000	1	5/S									
208	4843 231490	SP-B3F-1000	1	5/S									
209	4843 231490	SP-B3F-1000	1	5/S									
210	4843 231490	SP-B3F-1000	1	5/S									

ITEM NO.	PARTS NO.	PARTS NAME	Q'TY / PAGE	Q'TY / PACK	SPE PRICE IN NONE	P	I	R	BSI NO.	TO	FROM	SERIAL NO.	REMARKS
211	4843 231490	SP-B3F-1000	1	5/S									
212	4843 231490	SP-B3F-1000	1	5/S									
213	4843 231490	SP-B3F-1000	1	5/S									
214	4843 231490	SP-B3F-1000	1	5/S									
215	4843 231490	SP-B3F-1000	1	5/S									
216	4843 231490	SP-B3F-1000	1	5/S									
217	4843 231490	SP-B3F-1000	1	5/S									
218	4843 231490	SP-B3F-1000	1	5/S									
219	4843 231490	SP-B3F-1000	1	5/S									
220	4843 231490	SP-B3F-1000	1	5/S									
221	4843 231490	SP-B3F-1000	1	5/S									
222	4843 231490	SP-B3F-1000	1	5/S									
223	4843 231490	SP-B3F-1000	1	5/S									
224	4843 231490	SP-B3F-1000	1	5/S									
225	4843 231490	SP-B3F-1000	1	5/S									
226	4843 231490	SP-B3F-1000	1	5/S									
227	4843 231490	SP-B3F-1000	1	5/S									
228	4843 231490	SP-B3F-1000	1	5/S									
229	4843 231490	SP-B3F-1000	1	5/S									
230	4843 231490	SP-B3F-1000	1	5/S									
231	4843 231490	SP-B3F-1000	1	5/S									
232	4843 231490	SP-B3F-1000	1	5/S									
233	4843 231490	SP-B3F-1000	1	5/S									
234	4843 231490	SP-B3F-1000	1	5/S									
271	4843 304963	J-53025-0510	1	5/P									
300	4407 782660	JUMPER-WIRE-10	59	10/P									

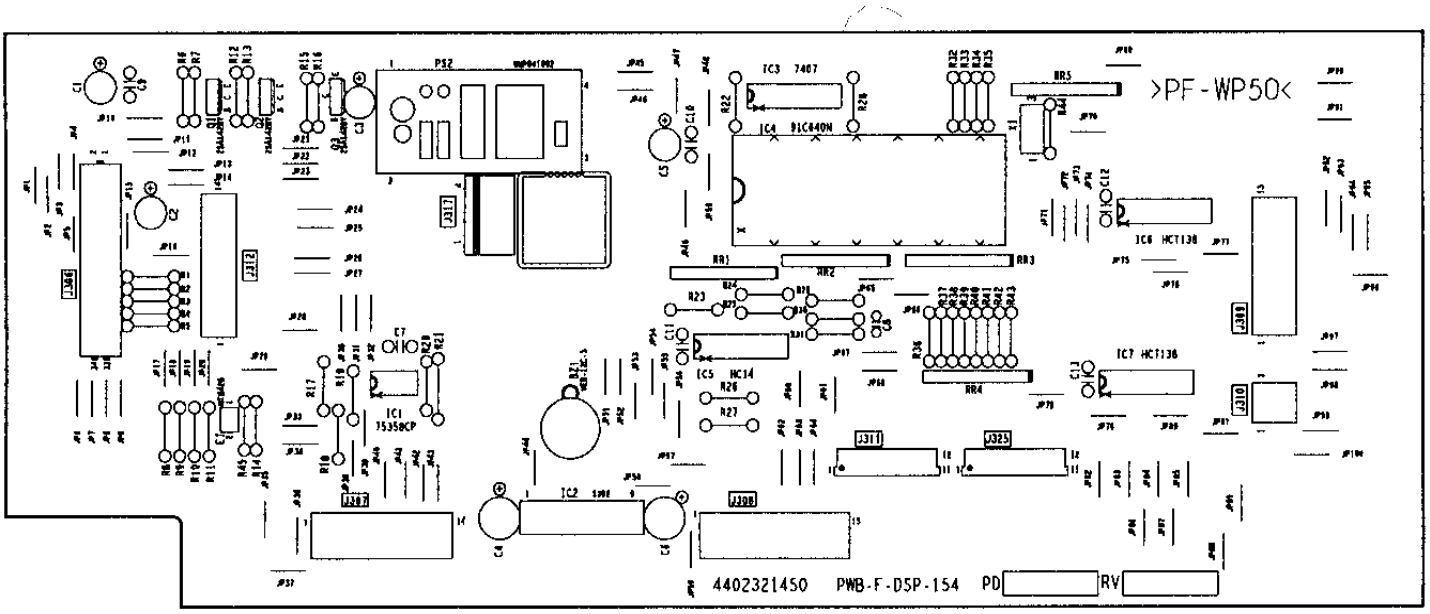
>PF-WP50<
IC3 7407
IC4 81C440N
IC6 HCT138
IC7 HCT136
IC5 HC14
IC1 TS358CP
IC2
4402321450 PWB-F-DSP-154 PD RV

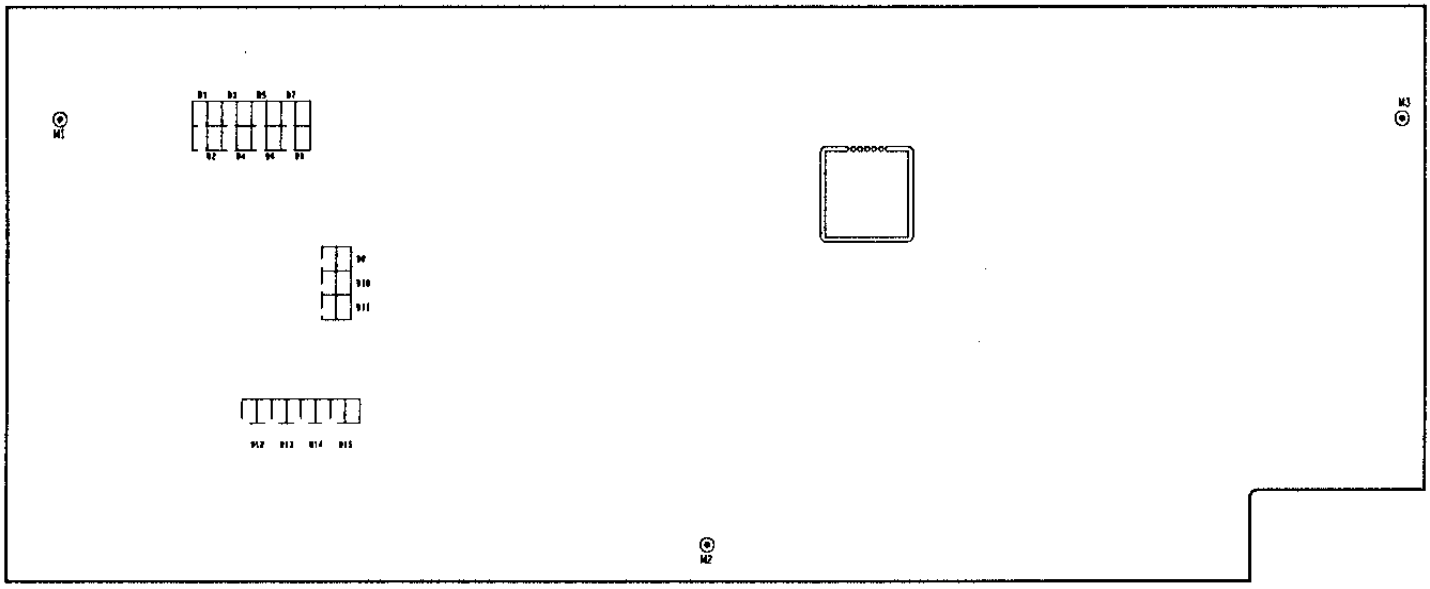

ITEM NO.	PARTS NO.	PARTS NAME	Q'TY / PAGE	Q'TY / PACK	SPE PRICE IN NONE	P	I	R	BSI NO.	TO	FROM	SERIAL NO.	REMARKS
0	4402 321250	PWA-F-DSP-154	1	1/SB									
1	4402 321450	PWB-F-DSP-154	1	N/A***									
11	3040 347530	IC-TA75358CP	1	5/S									
12	4843 524485	PS-BP5302	1	1/C									
13	4843 112339	IC-DM7407N	1	5/S									
14	3040 571402	TMP91C640N-2227	1	1/S		A	E	E	F97H991			DG7	
15	4843 112137	IC-MC74HC14AN	1	5/S									
16	3040 485505	IC-TC74HCT138AP	1	5/S									
17	3040 485505	IC-TC74HCT138AP	1	5/S									
41	3036 548970	Q-2SA1428-Y	1	5/P									
42	3036 548970	Q-2SA1428-Y	1	5/P									
43	3036 548970	Q-2SA1428-Y	1	5/P									
71	4843 410404	CE-04W1C470M	1	10/P									
72	4843 410404	CE-04W1C470M	1	10/P									
73	4843 410404	CE-04W1C470M	1	10/P									
74	4843 406673	CE04W1H470M	1	10/P									
75	4843 410404	CE-04W1C470M	1	10/P									
76	4843 406649	CE04W1C101M	1	10/P									
77	4843 413242	CK-45F1H104ZY	1	10/P									
78	4843 410264	CQ921M1H222K	1	10/P									
79	4843 412279	CKM-ECFZ1E104ZF	1	10/P									
80	4843 412279	CKM-ECFZ1E104ZF	1	10/P									
81	4843 412279	CKM-ECFZ1E104ZF	1	10/P									
82	4843 412279	CKM-ECFZ1E104ZF	1	10/P									
83	4843 412279	CKM-ECFZ1E104ZF	1	10/P									
111	3037 151102	D-1SS193(TE85R)	1	5/P									
112	3037 151102	D-1SS193(TE85R)	1	5/P									
113	3037 151102	D-1SS193(TE85R)	1	5/P									
114	3037 151102	D-1SS193(TE85R)	1	5/P									
115	3037 151102	D-1SS193(TE85R)	1	5/P									
116	3037 151102	D-1SS193(TE85R)	1	5/P									
117	3037 151102	D-1SS193(TE85R)	1	5/P									
118	3037 151102	D-1SS193(TE85R)	1	5/P									
119	3037 151102	D-1SS193(TE85R)	1	5/P									
120	3037 151102	D-1SS193(TE85R)	1	5/P									
121	3037 151102	D-1SS193(TE85R)	1	5/P									
122	3037 151102	D-1SS193(TE85R)	1	5/P									
123	3037 151102	D-1SS193(TE85R)	1	5/P									
124	3037 151102	D-1SS193(TE85R)	1	5/P									
125	3037 151102	D-1SS193(TE85R)	1	5/P									
151	4843 250714	X-CST3.80MGW	1	1/C									
171	4843 171408	THMS-4G42B104F	1	1/C									
191	4843 524484	INV-UHP041094	1	1/C									
211	4843 280134	BZ-MEB-12C-5	1	1/C									
251	4843 005108	RR125S08A-4.7KJ	1	10/P									
252	4843 005108	RR125S08A-4.7KJ	1	10/P									
253	4843 005108	RR125S08A-4.7KJ	1	10/P									
254	4843 024339	RR125S08A-056KJ	1	10/P									
255	4843 024339	RR125S08A-056KJ	1	10/P									
281	4843 028575	RD1/4LA330HJ	1	10/P									
282	4843 028575	RD1/4LA330HJ	1	10/P									
283	4843 028575	RD1/4LA330HJ	1	10/P									
284	4843 028575	RD1/4LA330HJ	1	10/P									
285	4843 028575	RD1/4LA330HJ	1	10/P									
286	4843 028567	RD1/4LA150HJ	1	10/P									
287	4843 028595	RD1/4LA2.2KJ	1	10/P									
288	4843 028575	RD1/4LA330HJ	1	10/P									
289	4843 028575	RD1/4LA330HJ	1	10/P									
290	4843 028575	RD1/4LA330HJ	1	10/P									
291	4843 028575	RD1/4LA330HJ	1	10/P									
292	4843 028567	RD1/4LA150HJ	1	10/P									
293	4843 028595	RD1/4LA2.2KJ	1	10/P									
295	4843 028580	RD1/4LA510HJ	1	10/P									
296	4843 028628	RD1/4LA051KJ	1	10/P									
297	4843 018064	RN1/4PR027KF	1	10/P									
298	4843 018059	RN1/4PR010KF	1	10/P									
299	4843 018060	RN1/4PR012KF	1	10/P									
300	4843 018064	RN1/4PR027KF	1	10/P									
301	4843 018063	RN1/4PR022KF	1	10/P									
302	4843 028603	RD1/4LA4.7KJ	1	10/P									
303	4843 028577	RD1/4LA390HJ	1	10/P									

ITEM NO.	PARTS NO.	PARTS NAME	Q'TY / PAGE	Q'TY / PACK	SPE PRICE IN NONE	P	I	R	BSI NO.	TO	FROM	SERIAL NO.	REMARKS
304	4843 028603	RD1/4LA4.7KJ	1	10/P									
305	4843 028619	RD1/4LA022KJ	1	10/P									
306	4843 028619	RD1/4LA022KJ	1	10/P									
307	4843 028603	RD1/4LA4.7KJ	1	10/P									
308	4843 028603	RD1/4LA4.7KJ	1	10/P									
309	4843 028603	RD1/4LA4.7KJ	1	10/P									
310	4843 028603	RD1/4LA4.7KJ	1	10/P									
311	4843 028573	RD1/4LA270HJ	1	10/P									
312	4843 028611	RD1/4LA010KJ	1	10/P									
313	4843 028611	RD1/4LA010KJ	1	10/P									
314	4843 028611	RD1/4LA010KJ	1	10/P									
315	4843 028611	RD1/4LA010KJ	1	10/P									
316	4843 028611	RD1/4LA010KJ	1	10/P									
317	4843 028611	RD1/4LA010KJ	1	10/P									
318	4843 028611	RD1/4LA010KJ	1	10/P									
319	4843 028611	RD1/4LA010KJ	1	10/P									
320	4843 028611	RD1/4LA010KJ	1	10/P									
321	4843 028611	RD1/4LA010KJ	1	10/P									
322	4843 028611	RD1/4LA010KJ	1	10/P									
323	4843 028611	RD1/4LA010KJ	1	10/P									
324	4843 028659	RD1/4LA001MJ	1	10/P									
325	4843 018071	RN1/4PR100KF	1	10/P									
366	4843 307788	J-53313-3415	1	5/P									
367	4843 307364	J-173979-14	1	5/P									
368	4843 304378	J-173979-15	1	5/P									
369	4843 307363	J-173979-13	1	5/P									
370	4843 304368	J-173979-03	1	5/P									
371	4843 309076	J-SLP12R-5	1	1/P									
372	4843 302644	J-DF3A-14P-2DS	1	5/P									
377	4843 303916	J-B4P-VH	1	5/P									
385	4843 309076	J-SLP12R-5	1	1/P									
401	4407 782660	JUMPER-WIRE-10	90	10/P									
402	4407 782660	JUMPER-WIRE-10	11	10/P									
420	4843 321159	SKT-DICS-64A	1	1/S						420 1			IC4
420 1	4843 321159	SKT-DICS-64A	0	1/S		B	-	E	F97H991		420	DG7	IC4

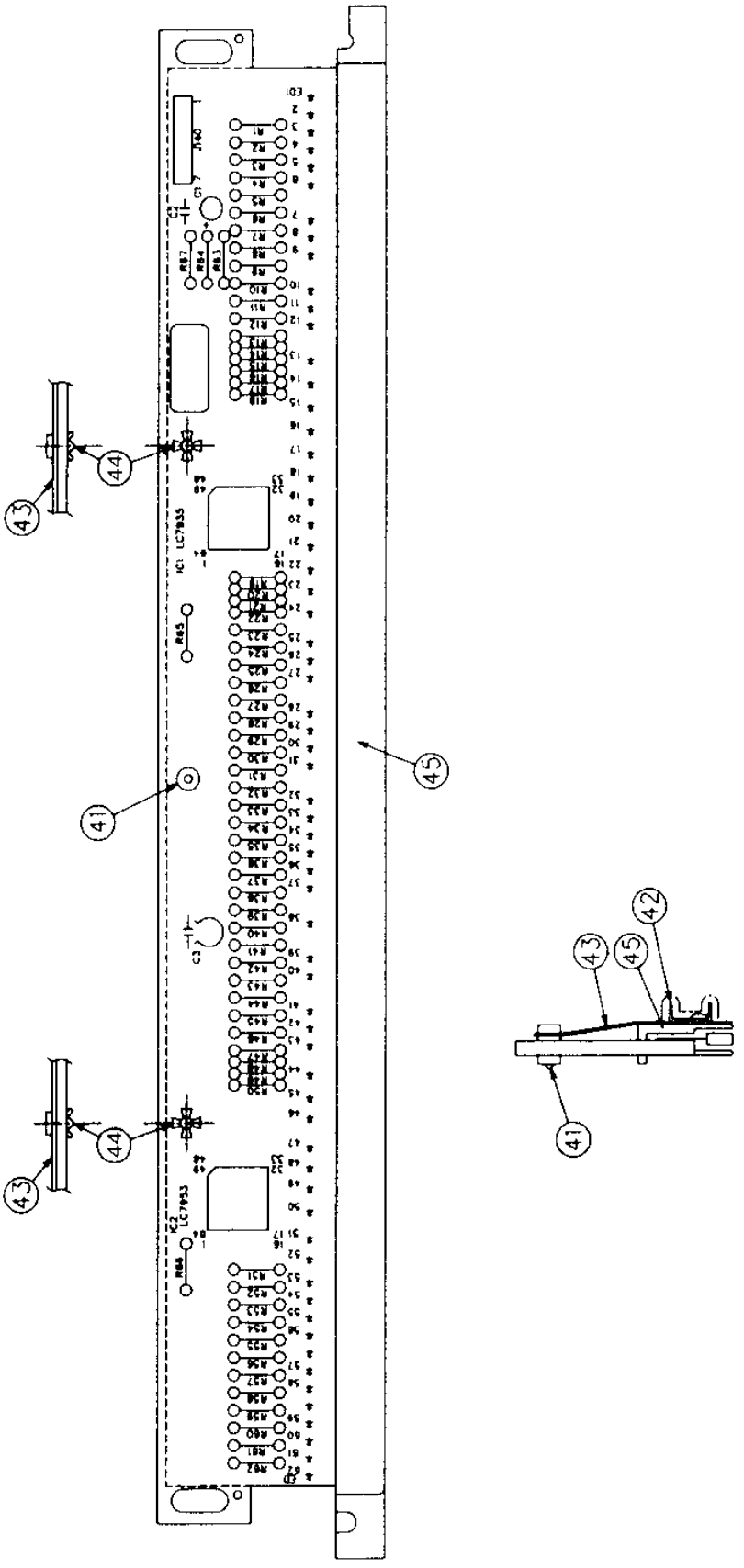
43
44
41
45
42
43
45
41
43
44

ITEM NO.	PARTS NO.	PARTS NAME	Q'TY / PAGE	Q'TY / PACK	SPE PRICE IN NONE	P	I	R	BSI NO.	TO	FROM	SERIAL NO.	REMARKS
0	4402 321290	PWA-F-DCH-154	1	1/SB									
1	4408 517180	PWB-F-DCH-572	1	N/A***									
11	4843 112931	IC-LC7935	1	1/S									
12	4843 112931	IC-LC7935	1	1/S									
15	4402 322600	LED-BR4353K	62	5/P									
20	4843 028585	RD1/4LA820HJ	62	10/P									
21	4843 028587	RD1/4LA001KJ	1	10/P									
22	4843 028603	RD1/4LA4.7KJ	4	10/P									
31	4843 406648	CE04W1C470M	1	10/P									
32	4843 413234	CK-45F1B104ZY-F	1	10/P									
33	4843 413234	CK-45F1B104ZY-F	1	10/P									
40	4843 304624	J-IL-G-7PS3T2E	1	5/P									
41	4408 302950	SLIDER-PWA-DCH	1	5/P									
42	4408 302880	PLATE-DCH	1	1/P									
43	4408 303480	SHIELD-PWA-DCH	1	N/A***									
44	4408 303370	PLA-RIVET-030	2	10/P									
45	4408 601940	CASE-LED	1	N/A***									

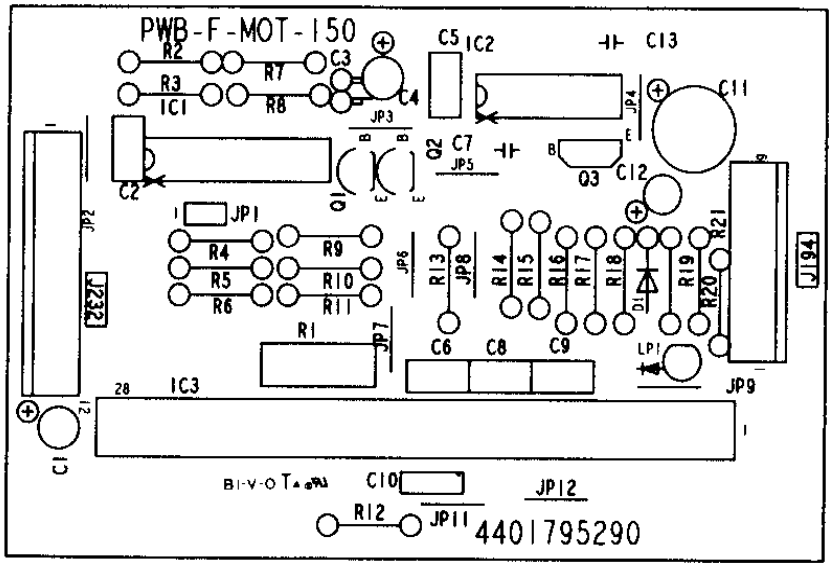
PWB-F-MOT-150
4401795290

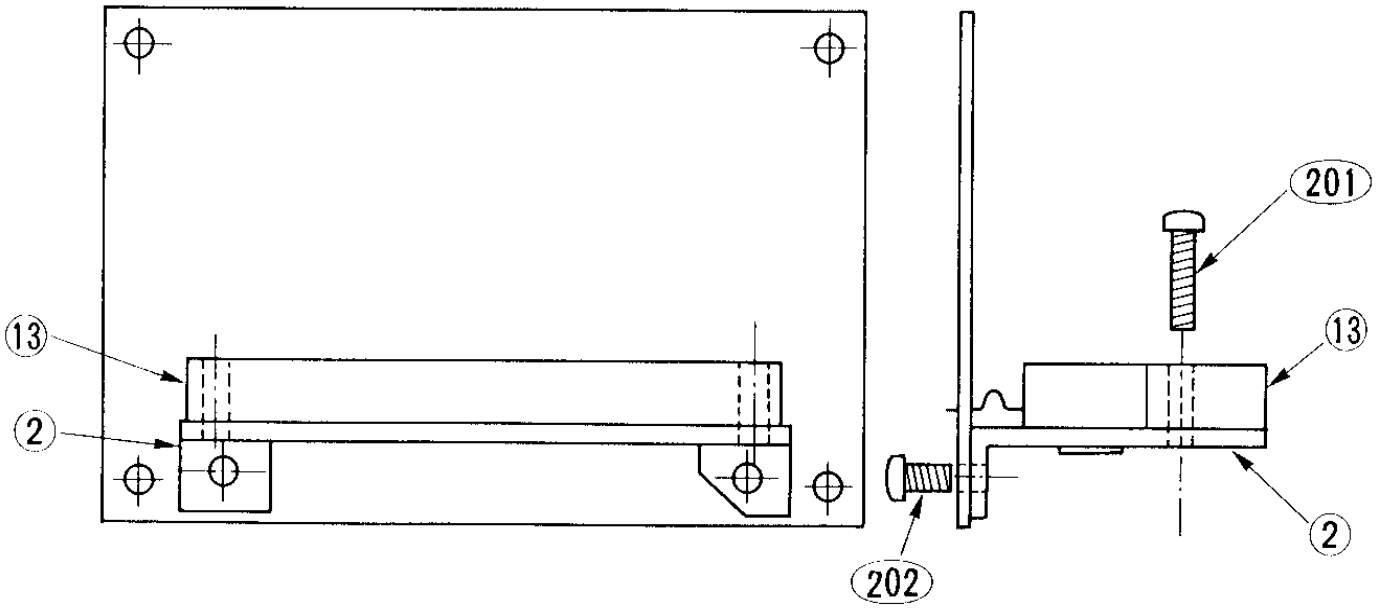
13
2
201
13
2
202

ITEM NO.	PARTS NO.	PARTS NAME	Q'TY / PAGE	Q'TY / PACK	SPE PRICE IN NONE	P	I	R	BSI NO.	TO	FROM	SERIAL NO.	REMARKS
0	4401 795490	PWA-F-MOT-150	1	1/SB									
1	4401 795290	PWB-F-MOT-150	1	N/A***									
2	4402 816630	HS-6103	1	1/P									
11	3040 411951	IC-TC9192AP	1	5/S									
12	4843 112137	IC-MC74HC14AN	1	5/S									
13	4843 113901	IC-STK6105-T	1	1/S									
31	3036 317440	Q-2SC1815-Y	1	5/P									
32	3036 317440	Q-2SC1815-Y	1	5/P									
33	3036 002030	Q-RN1203	1	5/P									
51	3037 249601	D-1S1588	1	5/P									
71	4843 406671	CE04W1H100M	1	10/P									
72	4843 413234	CK-45F1B104ZY-F	1	10/P									
73	4843 410141	CC92CH1H221K	1	5/P									
74	4843 410007	CE04W1H1R0M	1	10/P									
75	4843 413234	CK-45F1B104ZY-F	1	10/P									
76	4843 413234	CK-45F1B104ZY-F	1	10/P									
77	4843 411743	CKM-92F1H222Z	1	5/P									
78	4843 413234	CK-45F1B104ZY-F	1	10/P									
79	4843 413234	CK-45F1B104ZY-F	1	10/P									
80	4843 410177	CKM92F1H104ZYF	1	5/P									
81	4843 406674	CE04W1H101M	1	10/P									
82	4843 406646	CE04W1C100M	1	10/P									
83	4843 411743	CKM-92F1H222Z	1	5/P									
101	3038 601100	LP-TLR123	1	5/P									
111	4843 073118	RW-M003MR10JP	1	10/P									
112	4843 028587	RD1/4LA001KJ	1	10/P									
113	4843 028619	RD1/4LA022KJ	1	10/P									
114	4843 028647	RD1/4LA330KJ	1	10/P									
115	4843 028631	RD1/4LA068KJ	1	10/P									
116	4843 028631	RD1/4LA068KJ	1	10/P									
117	4843 028599	RD1/4LA3.3KJ	1	10/P									
118	4843 028587	RD1/4LA001KJ	1	10/P									
119	4843 028587	RD1/4LA001KJ	1	10/P									
120	4843 028603	RD1/4LA4.7KJ	1	10/P									
122	4843 028599	RD1/4LA3.3KJ	1	10/P									
123	4843 028603	RD1/4LA4.7KJ	1	10/P									
124	4843 028587	RD1/4LA001KJ	1	10/P									
125	4843 028603	RD1/4LA4.7KJ	1	10/P									
126	4843 028603	RD1/4LA4.7KJ	1	10/P									
127	4843 028585	RD1/4LA820HJ	1	10/P									
128	4843 028603	RD1/4LA4.7KJ	1	10/P									
129	4843 028603	RD1/4LA4.7KJ	1	10/P									
130	4843 028587	RD1/4LA001KJ	1	10/P									
131	4843 028587	RD1/4LA001KJ	1	10/P									
151	4843 301276	J-5045-12A	1	5/P									
152	4843 301273	J-5045-09A	1	5/P									
162	4407 782660	JUMPER-WIRE-10	10	10/P									
201	7040 301211	PAN30*12MSZN3AI	2	50/P									
202	7040 400611	PAN40*06MSZN3AI	2	50/P									

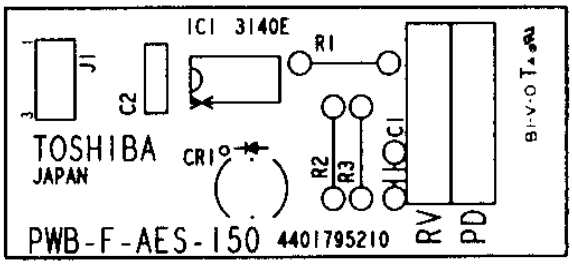
IC1 3140E
R1
J1
C2
TOSHIBA
JAPAN
CR1
R2
R3
C1
RV
PD
PWB-F-AES-150 4401795210

ITEM NO.	PARTS NO.	PARTS NAME	Q'TY / PAGE	Q'TY / PACK	SPE PRICE IN NONE	P	I	R	BSI NO.	TO	FROM	SERIAL NO.	REMARKS
0	4401 795410	PWA-F-AES-150	1	1/SB									
1	4401 795210	PWB-F-AES-150	1	N/A***									
11	4407 418360	CA3140E	1	5/S									
21	4843 171300	PHD-S4797-01	1	1/C									
31	4843 410262	CQ921M1H102K	1	10/P									
32	4843 413242	CK-45F1H104ZY	1	10/P									
41	4843 028637	RD1/4LA120KJ	1	10/P									
42	4843 028615	RD1/4LA015KJ	1	10/P									
43	4843 028643	RD1/4LA220KJ	1	10/P									
51	4843 304918	J-173981-3	1	5/P									
0	4401 795410	PWA-F-AES-150	1	1/SB									

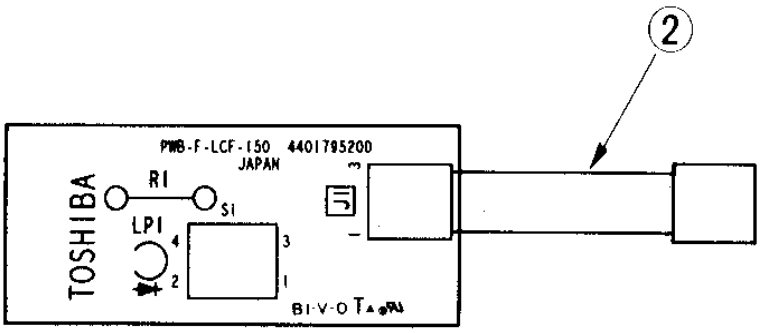
2
PWB-F-LCF-150 4401795200
JAPAN
TOSHIBA
RI
SI
LPI
4
3
2
1
J1

ITEM NO.	PARTS NO.	PARTS NAME	Q'TY / PAGE	Q'TY / PACK	SPE PRICE IN NONE	P	I	R	BSI NO.	TO	FROM	SERIAL NO.	REMARKS
0	4401 795400	PWA-F-LCF-150	1	1/SB									
1	4401 795200	PWB-F-LCF-150	1	N/A***									
2	4401 796520	WH-LCFKEY-150	1	1/P									
11	4843 028569	RD1/4LA180HJ	1	10/P									
21	4843 194552	LED-SLR-342MC3F	1	5/P									
31	4843 231490	SP-B3F-1000	1	5/S									

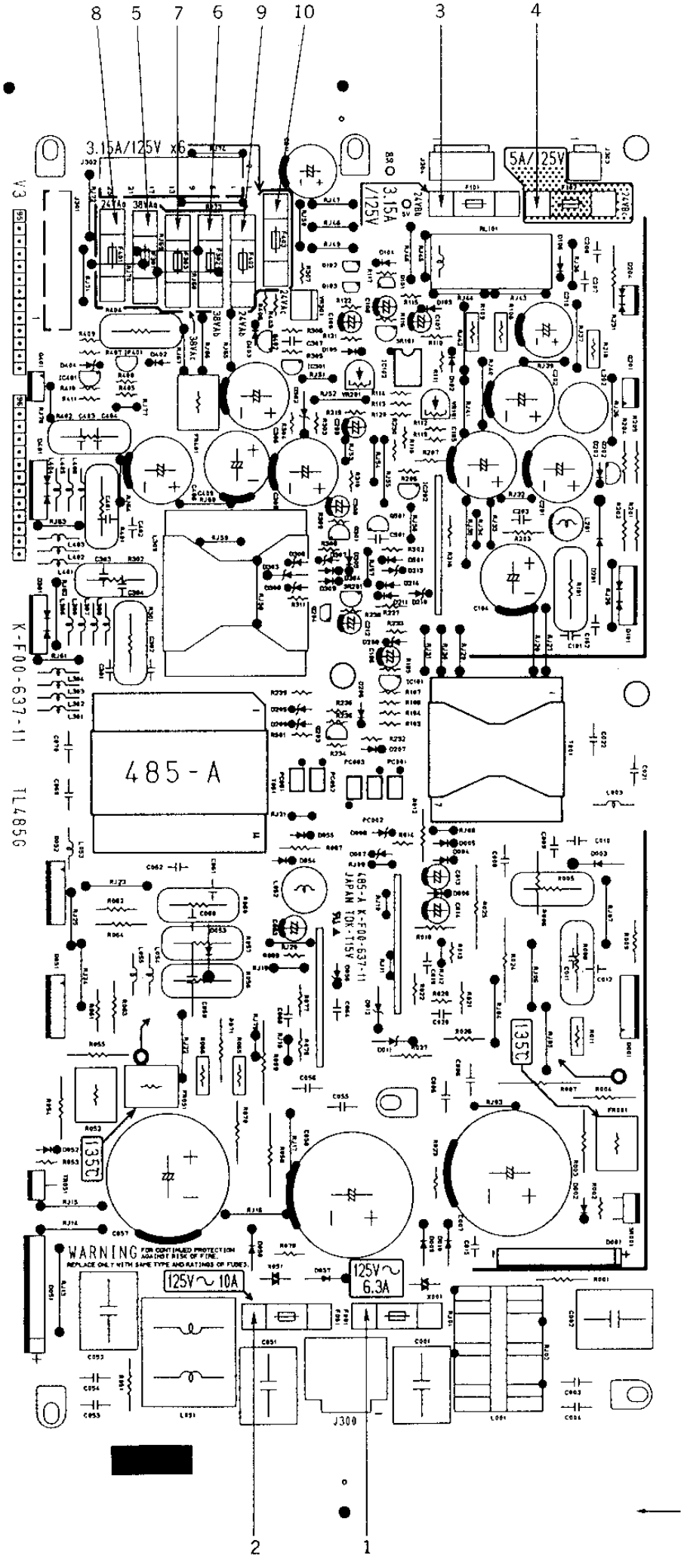
8
5
7
6
9
10
3
4
3.15A/125V x6
5A/125V
3.15A /125V
24VAa
38VAa
24VAb
38VAb
24VAc
38VAc
V3
K-F00-637-11
TL485G
485-A
485-A K-F00-637-11
JAPAN TOK-T15V
135℃
WARNING FOR CONTINUED PROTECTION AGAINST RISK OF FIRE, REPLACE ONLY WITH SAME TYPE AND RATINGS OF FUSES.
125V~ 10A
125V~ 6.3A
J300
2
1

TOSHIBA

ITEM NO.	PARTS NO.	PARTS NAME	Q'TY / PAGE	Q'TY / PACK	SPE PRICE IN NONE	P	I	R	BSI NO.	TO	FROM	SERIAL NO.	REMARKS
0	4402 322650	PS-100V-152	1	1/C									100V SERIES
1	4408 643910	FU-237-6.3A	1	5/P									
2	4408 643920	FU-237-10A	1	5/P									
3	4407 987640	FU-SB-3.15A	1	5/P									
4	4843 500687	FU-SB-5.0A	1	5/P									
5	4407 987640	FU-SB-3.15A	1	5/P									
6	4407 987640	FU-SB-3.15A	1	5/P									
7	4407 987640	FU-SB-3.15A	1	5/P									
8	4407 987640	FU-SB-3.15A	1	5/P									
9	4407 987640	FU-SB-3.15A	1	5/P									
10	4407 987640	FU-SB-3.15A	1	5/P									

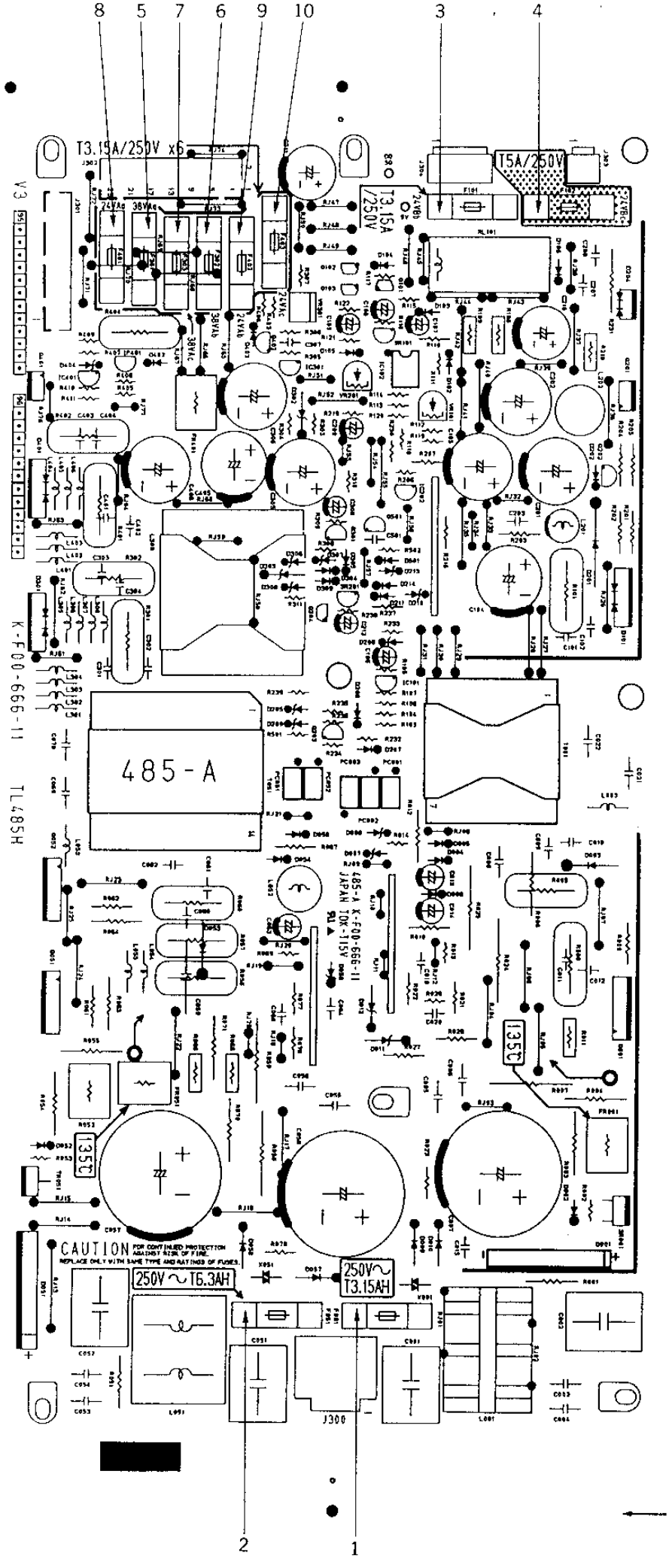
8
5
7
6
9
10
3
4
T3.15A/250V x6
T5A/250V
T3.15A/250V
485-A
CAUTION
250V~T6.3AH
250V~T3.15AH
J300
2
1

TOSHIBA

ITEM NO.	PARTS NO.	PARTS NAME	Q'TY / PAGE	Q'TY / PACK	SPE PRICE IN NONE	P	I	R	BSI NO.	TO	FROM	SERIAL NO.	REMARKS
0	4402 322660	PS-200V-152	1	1/C									200V SERIES
1	4843 501145	FUSE-2153.15	1	5/P									
2	4843 501146	FUSE-21506.3	1	5/P									
3	4843 501122	FU-2183.15	1	5/P									
4	4843 501144	FUSE-218005	1	5/P									
5	4843 501122	FU-2183.15	1	5/P									
6	4843 501122	FU-2183.15	1	5/P									
7	4843 501122	FU-2183.15	1	5/P									
8	4843 501122	FU-2183.15	1	5/P									
9	4843 501122	FU-2183.15	1	5/P									
10	4843 501122	FU-2183.15	1	5/P									

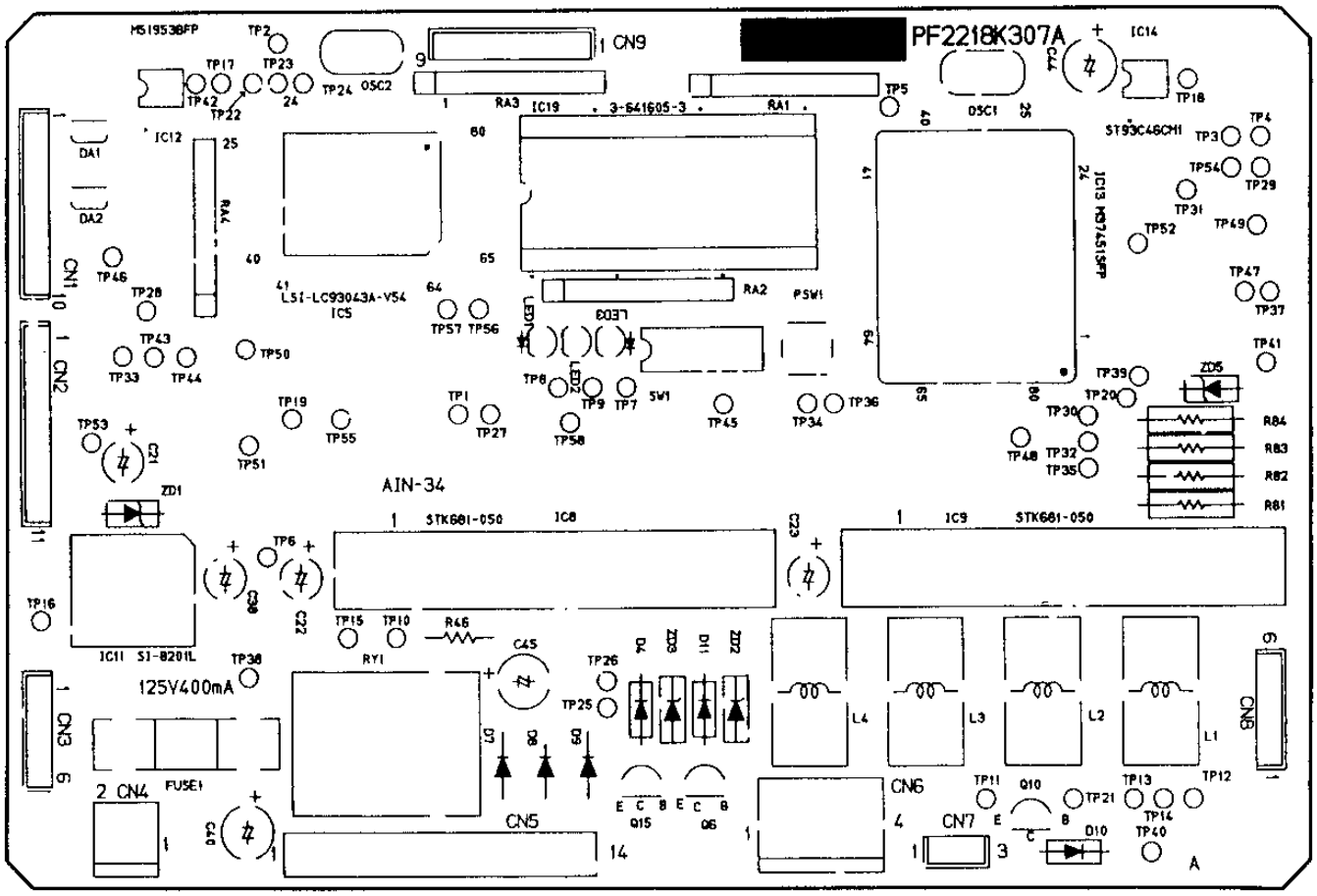
PF2218K307A
AIN-34
125V400mA
IC11 SI-8201L
IC8 STK681-050
IC9 STK681-050
IC5 LSI-LC93043A-V54
IC13 M37451SFP
IC14
CN1
CN2
CN3
CN4
CN5
CN6
CN7
CN8
CN9
FUSE1
RY1
RA1
RA2
RA3
RA4
LED1
LED2
LED3
PSW1
SW1

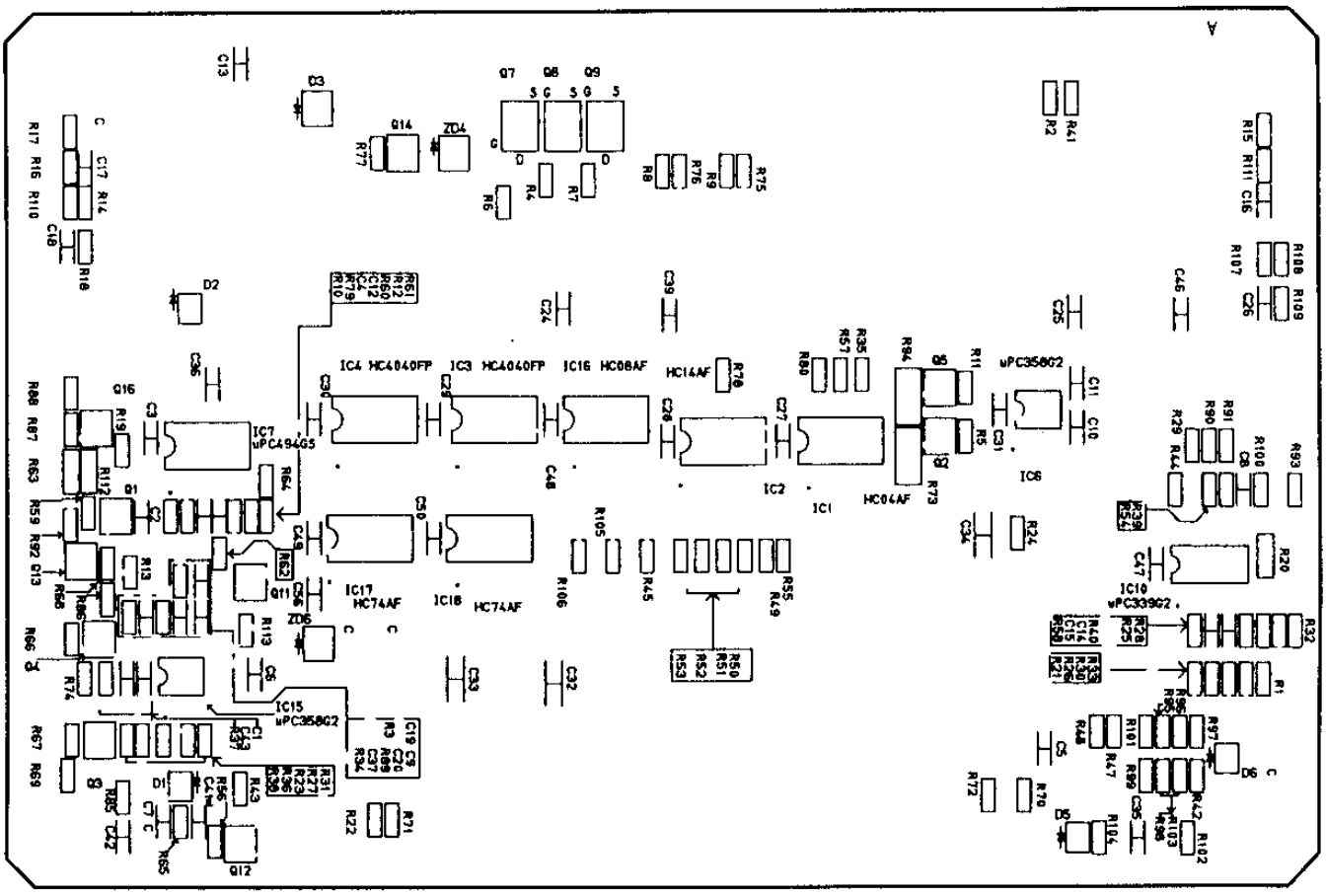
IC4 HC4040FP
IC3 HC4040FP
IC16 HC08AF
HC14AF
IC7 μPC494G5
IC2
IC1
HC04AF
IC6 μPC358G2
IC17 HC74AF
IC18 HC74AF
IC15 μPC358G2
IC19 μPC339G2

ITEM NO.	PARTS NO.	PARTS NAME	Q'TY / PAGE	Q'TY / PACK	SPE PRICE IN NONE	P	I	R	BSI NO.	TO	FROM	SERIAL NO.	REMARKS
0	4401 913800	PWA-F-LGC-758	1	1/SB									
1	4401 913920	PWB-F-LGC-758	1	N/A***									
8	4401 792570	FUSE-UL-TSC-400	1	5/P									
9	4401 792560	FUSE/H-0011-1	1	5/P									FUSE1
11	3040 485626	IC-TC74HC04AF	1	5/S									
12	3040 485884	IC-TC74HC14AF	1	5/S									
13	3040 488446	IC-TC74HC4040AF	1	5/S									
14	3040 488446	IC-TC74HC4040AF	1	5/S									
15	4401 914120	IC-LC93043A-V5A	1	1/S									
16	4401 793500	IC-UPC358GR	1	5/S									
17	4843 112636	IC-UPC494GS	1	1/S									
18	4401 914130	IC-STK681-050	1	1/S									
19	4401 914130	IC-STK681-050	1	1/S									
20	4401 914010	IC-UPC339G2	1	1/S									
21	4401 793250	IC-SI8201L	1	1/S									
22	4843 111791	IC-M51953BFP	1	5/S									
23	4401 793030	IC-M37451SFP	1	1/S									
24	4401 914140	IC-ST93C46CM1	1	1/S						024 1			
24 1	4401 793520	IC-M93C46MN6	1	1/S		C	E	H	F98C241		024		
25	4401 793500	IC-UPC358GR	1	5/S									
26	3040 485565	IC-TC74HC08AF	1	5/S									
27	3040 485997	IC-TC74HC74AF	1	5/S									
28	3040 485997	IC-TC74HC74AF	1	5/S									
41	3036 335481	Q-2SC2712-GR	1	5/P									
42	3036 335481	Q-2SC2712-GR	1	5/P									
43	3036 335481	Q-2SC2712-GR	1	5/P									
44	3036 335481	Q-2SC2712-GR	1	5/P									
45	3036 335481	Q-2SC2712-GR	1	5/P									
46	4402 246350	Q-2SD1616	1	5/P									
47	4401 914150	Q-2SK1726-TD	1	5/P									
48	4401 914150	Q-2SK1726-TD	1	5/P									
49	4401 914150	Q-2SK1726-TD	1	5/P									
50	4402 246350	Q-2SD1616	1	5/P									
51	4401 914020	Q-FA1L4M-T1B	1	5/P									
52	4401 914020	Q-FA1L4M-T1B	1	5/P									
53	4401 914020	Q-FA1L4M-T1B	1	5/P									
54	4401 914020	Q-FA1L4M-T1B	1	5/P									
55	4402 246350	Q-2SD1616	1	5/P									
56	4401 914030	Q-FN1L3N-T1B	1	5/P									
71	4843 194512	LED-GL3PR8	3	5/P									
81	4402 246440	D-MC932	1	5/P									
82	4402 246440	D-MC932	1	5/P									
91	4401 792980	D-RD5.6FB1	1	5/P									
92	4401 792940	D-RD16FB	1	5/P									
93	4401 792940	D-RD16FB	1	5/P									
94	4401 914050	D-RD9.1MB2-T1B	1	5/P									
95	4401 792970	D-RD12JSB2	1	5/P									
96	4401 914040	D-RD4.7MB2-T1B	1	5/P									
101	4401 793060	D-SB02-03Q	1	5/P									
102	4401 793060	D-SB02-03Q	1	5/P									
103	4401 793050	D-DSA010	1	5/P									
104	4401 793370	D-P10-4002	1	5/P									
105	4401 793060	D-SB02-03Q	1	5/P									
106	4401 793060	D-SB02-03Q	1	5/P									
107	4401 914160	D-SB040	1	5/P									
108	4401 914160	D-SB040	1	5/P									
109	4401 914160	D-SB040	1	5/P									
110	4401 793370	D-P10-4002	1	5/P									
111	4401 793370	D-P10-4002	1	5/P									
131	4401 914170	KM-MR301-24HUS	1	1/D									
141	4402 246820	COIL-SK-8MS-S	4	1/D									
191	4843 250421	X-CST10.0MTW	1	5/S									
192	4401 914180	X-CST5.00MGW040	1	5/P									
201	4401 793440	CTP-40B104K25PT	1	10/P									
202	4401 793440	CTP-40B104K25PT	1	10/P									
203	4401 914100	CTP-40B333K50PT	1	5/P									
204	4401 793440	CTP-40B104K25PT	1	10/P									
205	4401 793440	CTP-40B104K25PT	1	10/P									
206	4401 793440	CTP-40B104K25PT	1	10/P									
207	4843 410721	CTP-M1B1H102KT	1	10/P									
208	4843 410721	CTP-M1B1H102KT	1	10/P									

ITEM NO.	PARTS NO.	PARTS NAME	Q'TY / PAGE	Q'TY / PACK	SPE PRICE IN NONE	P	I	R	BSI NO.	TO	FROM	SERIAL NO.	REMARKS
209	4843 410721	CTP-M1B1H102KT	1	10/P									
210	4843 410721	CTP-M1B1H102KT	1	10/P									
211	4843 410721	CTP-M1B1H102KT	1	10/P									
212	4843 410733	CTP-M1B1H103KT	1	10/P									
213	4843 410733	CTP-M1B1H103KT	1	10/P									
214	4843 410737	CTP-M1B1H223KT	1	10/P									
215	4843 410737	CTP-M1B1H223KT	1	10/P									
216	4843 410721	CTP-M1B1H102KT	1	10/P									
217	4843 410721	CTP-M1B1H102KT	1	10/P									
218	4843 410733	CTP-M1B1H103KT	1	10/P									
219	4401 914110	CTP-40B473K50PT	1	5/P									
220	4843 410731	CTP-M1B1H682KT	1	10/P									
221	4843 411172	CE-04W1H010M-F	1	10/P									
222	4843 411172	CE-04W1H010M-F	1	10/P									
223	4843 411172	CE-04W1H010M-F	1	10/P									
224	4843 412139	CTP-M1F1H104ZT	1	10/P									
225	4843 412139	CTP-M1F1H104ZT	1	10/P									
226	4843 410721	CTP-M1B1H102KT	1	10/P									
227	4843 412139	CTP-M1F1H104ZT	1	10/P									
228	4843 412139	CTP-M1F1H104ZT	1	10/P									
229	4843 412139	CTP-M1F1H104ZT	1	10/P									
230	4843 412139	CTP-M1F1H104ZT	1	10/P									
231	4843 412139	CTP-M1F1H104ZT	1	10/P									
232	4401 914200	CTP-426F155Z16T	1	5/P									
233	4401 914200	CTP-426F155Z16T	1	5/P									
234	4401 914200	CTP-426F155Z16T	1	5/P									
235	4843 412139	CTP-M1F1H104ZT	1	10/P									
236	4843 412139	CTP-M1F1H104ZT	1	10/P									
237	4843 412139	CTP-M1F1H104ZT	1	10/P									
238	4401 914070	CE-SEM1E470-F	1	5/P						238 1			
238 1	4401 914260	CE-SMG16VB220MF	1	5/P		C	E	E	F98C238		238		
239	4843 412139	CTP-M1F1H104ZT	1	10/P									
240	4401 914090	CE-DSM1V101M-F	1	5/P									
241	4401 914190	CTP-40F334Z16PT	1	5/P									
242	4843 410709	CTP-M1CH1H101KT	1	10/P									
243	4843 410709	CTP-M1CH1H101KT	1	10/P									
244	4401 914080	CE-DSM1E101M-F	1	5/P									
245	4843 411175	CE04W1H470M-F	1	10/P									
246	4843 412139	CTP-M1F1H104ZT	1	10/P									
247	4843 412139	CTP-M1F1H104ZT	1	10/P									
248	4843 412139	CTP-M1F1H104ZT	1	10/P									
249	4843 412139	CTP-M1F1H104ZT	1	10/P									
250	4843 412139	CTP-M1F1H104ZT	1	10/P									
256	4843 410733	CTP-M1B1H103KT	1	10/P									
291	4843 024333	RR125S08A-010KJ	1	10/P									
292	4843 024333	RR125S08A-010KJ	1	10/P									
293	4843 024333	RR125S08A-010KJ	1	10/P									
294	4401 914240	RR-RGLD4A1392	1	10/P									
301	4843 072171	RTP-2B2A103JDT	1	10/P									
302	4843 072167	RTP-2B2A472JDT	1	10/P									
303	4843 072179	RTP-2B2A473JDT	1	10/P									
304	4843 072159	RTP-2B2A102JDT	1	10/P									
305	4843 072159	RTP-2B2A102JDT	1	10/P									
306	4843 072159	RTP-2B2A102JDT	1	10/P									
307	4843 072159	RTP-2B2A102JDT	1	10/P									
308	4843 072159	RTP-2B2A102JDT	1	10/P									
309	4843 072159	RTP-2B2A102JDT	1	10/P									
310	4401 793130	RTP-6GEYJ202V	1	10/P									
311	4843 072159	RTP-2B2A102JDT	1	10/P									
312	4843 072171	RTP-2B2A103JDT	1	10/P									
313	4843 072167	RTP-2B2A472JDT	1	10/P									
314	4843 072167	RTP-2B2A472JDT	1	10/P									
315	4843 072167	RTP-2B2A472JDT	1	10/P									
316	4843 072167	RTP-2B2A472JDT	1	10/P									
317	4843 072167	RTP-2B2A472JDT	1	10/P									
318	4843 072167	RTP-2B2A472JDT	1	10/P									
319	4843 072175	RTP-2B2A223JDT	1	10/P									
320	4401 914220	RTP-CRG8SG181J	1	5/P									
321	4843 072171	RTP-2B2A103JDT	1	10/P									
322	4843 072158	RTP-2B2A821JDT	1	10/P									
323	4843 072063	RTP-2B2A334JDT	1	10/P									

ITEM NO.	PARTS NO.	PARTS NAME	Q'TY / PAGE	Q'TY / PACK	SPE PRICE IN NONE	P	I	R	BSI NO.	TO	FROM	SERIAL NO.	REMARKS
324	4843 072171	RTP-2B2A103JDT	1	10/P									
325	4843 072179	RTP-2B2A473JDT	1	10/P									
326	4843 072179	RTP-2B2A473JDT	1	10/P									
327	4843 072165	RTP-2B2A332JDT	1	10/P									
328	4843 072167	RTP-2B2A472JDT	1	10/P									
329	4843 072163	RTP-2B2A222JDT	1	10/P									
330	4843 072167	RTP-2B2A472JDT	1	10/P									
331	4843 072169	RTP-2B2A682JDT	1	10/P									
332	4843 072167	RTP-2B2A472JDT	1	10/P									
333	4843 072167	RTP-2B2A472JDT	1	10/P									
334	4843 072171	RTP-2B2A103JDT	1	10/P									
335	4843 072171	RTP-2B2A103JDT	1	10/P									
336	4843 072163	RTP-2B2A222JDT	1	10/P									
337	4843 072159	RTP-2B2A102JDT	1	10/P									
338	4843 072167	RTP-2B2A472JDT	1	10/P									
339	4843 072171	RTP-2B2A103JDT	1	10/P									
340	4843 072171	RTP-2B2A103JDT	1	10/P									
341	4843 072159	RTP-2B2A102JDT	1	10/P									
342	4843 072175	RTP-2B2A223JDT	1	10/P									
343	4843 072171	RTP-2B2A103JDT	1	10/P									
344	4843 072167	RTP-2B2A472JDT	1	10/P									
345	4843 072159	RTP-2B2A102JDT	1	10/P									
346	4401 792590	RN-ERD25FAJ4R7	1	10/P									
347	4843 072171	RTP-2B2A103JDT	1	10/P									
348	4843 072171	RTP-2B2A103JDT	1	10/P									
349	4843 072171	RTP-2B2A103JDT	1	10/P									
350	4843 072171	RTP-2B2A103JDT	1	10/P									
351	4843 072171	RTP-2B2A103JDT	1	10/P									
352	4843 072171	RTP-2B2A103JDT	1	10/P									
353	4843 072171	RTP-2B2A103JDT	1	10/P									
354	4843 072171	RTP-2B2A103JDT	1	10/P									
355	4843 072171	RTP-2B2A103JDT	1	10/P									
356	4843 072171	RTP-2B2A103JDT	1	10/P									
357	4843 072171	RTP-2B2A103JDT	1	10/P									
358	4843 072171	RTP-2B2A103JDT	1	10/P									
359	4843 072647	RTP-2B2A302JDT	1	10/P									
360	4843 072169	RTP-2B2A682JDT	1	10/P									
361	4843 072167	RTP-2B2A472JDT	1	10/P									
362	4843 072069	RTP-2B2A105JDT	1	10/P									
363	4401 914230	RTP-CRG8SG331J	1	5/P									
364	4843 072171	RTP-2B2A103JDT	1	10/P									
365	4843 072175	RTP-2B2A223JDT	1	10/P									
366	4843 072167	RTP-2B2A472JDT	1	10/P									
367	4843 072167	RTP-2B2A472JDT	1	10/P									
368	4843 072163	RTP-2B2A222JDT	1	10/P									
369	4843 072155	RTP-2B2A471JDT	1	10/P									
370	4843 072069	RTP-2B2A105JDT	1	10/P									
371	4843 072069	RTP-2B2A105JDT	1	10/P									
372	4843 072153	RTP-2B2A331JDT	1	10/P									
373	4401 914210	RTP-CRG2G510J	1	5/P									
374	4843 072155	RTP-2B2A471JDT	1	10/P									
375	4843 072167	RTP-2B2A472JDT	1	10/P									
376	4843 072167	RTP-2B2A472JDT	1	10/P									
377	4843 072167	RTP-2B2A472JDT	1	10/P									
378	4843 072171	RTP-2B2A103JDT	1	10/P									
379	4843 072179	RTP-2B2A473JDT	1	10/P									
380	4843 072171	RTP-2B2A103JDT	1	10/P									
381	4401 792750	RN-RSSX1-0.2J	1	10/P									
382	4401 792750	RN-RSSX1-0.2J	1	10/P									
383	4401 792750	RN-RSSX1-0.2J	1	10/P									
384	4401 792750	RN-RSSX1-0.2J	1	10/P									
385	4843 072159	RTP-2B2A102JDT	1	10/P									
386	4843 072167	RTP-2B2A472JDT	1	10/P									
387	4843 072173	RTP-2B2A153JDT	1	10/P									
388	4843 072173	RTP-2B2A153JDT	1	10/P									
389	4843 072179	RTP-2B2A473JDT	1	10/P									
390	4843 072114	RTP-2B2A223FDT	1	10/P									
391	4843 072095	RTP-2B2A561FDT	1	10/P									
392	4843 072170	RTP-2B2A822JDT	1	10/P									
393	4843 072171	RTP-2B2A103JDT	1	10/P									
394	4401 914210	RTP-CRG2G510J	1	5/P									

ITEM NO.	PARTS NO.	PARTS NAME	Q'TY / PAGE	Q'TY / PACK	SPE PRICE IN NONE	P	I	R	BSI NO.	TO	FROM	SERIAL NO.	REMARKS
395	4843 072171	RTP-2B2A103JDT	1	10/P									
396	4843 072171	RTP-2B2A103JDT	1	10/P									
397	4843 072171	RTP-2B2A103JDT	1	10/P									
398	4843 072175	RTP-2B2A223JDT	1	10/P									
399	4843 072175	RTP-2B2A223JDT	1	10/P									
400	4843 072173	RTP-2B2A153JDT	1	10/P									
401	4843 072171	RTP-2B2A103JDT	1	10/P									
402	4843 072057	RTP-2B2A104JDT	1	10/P									
403	4843 072175	RTP-2B2A223JDT	1	10/P									
404	4843 072135	RTP-2B2A100JDT	1	10/P									
405	4843 072159	RTP-2B2A102JDT	1	10/P									
406	4843 072159	RTP-2B2A102JDT	1	10/P									
407	4843 072167	RTP-2B2A472JDT	1	10/P									
408	4843 072167	RTP-2B2A472JDT	1	10/P									
409	4843 072054	RTP-2B2A563JDT	1	10/P									
410	4843 072167	RTP-2B2A472JDT	1	10/P									
411	4843 072167	RTP-2B2A472JDT	1	10/P									
412	4401 914230	RTP-CRG8SG331J	1	5/P									
413	4843 072167	RTP-2B2A472JDT	1	10/P									
501	4843 230618	SZ-KSD05	1	1/S									
511	4401 793190	SP-SKHHPK	1	10/P									
521	4401 793200	TEST/P-LC-3-SBK	2	10/P									
601	4843 321428	SKT-2-641605-3	1	1/S									IC19
701	4843 304925	J-1-173981-0	1	5/P									
702	4843 304926	J-1-173981-1	1	5/P									
703	4843 304921	J-173981-6	1	5/P									
704	4843 303914	J-B2P-VH	1	10/P									
705	4843 304870	J-5483-14AX	1	5/P									
706	4843 300786	J-5273-04A	1	5/P									
707	4401 914060	J-B3B-PH-K-S	1	5/P									
708	4843 304921	J-173981-6	1	5/P									
709	4843 304924	J-173981-9	1	5/P									

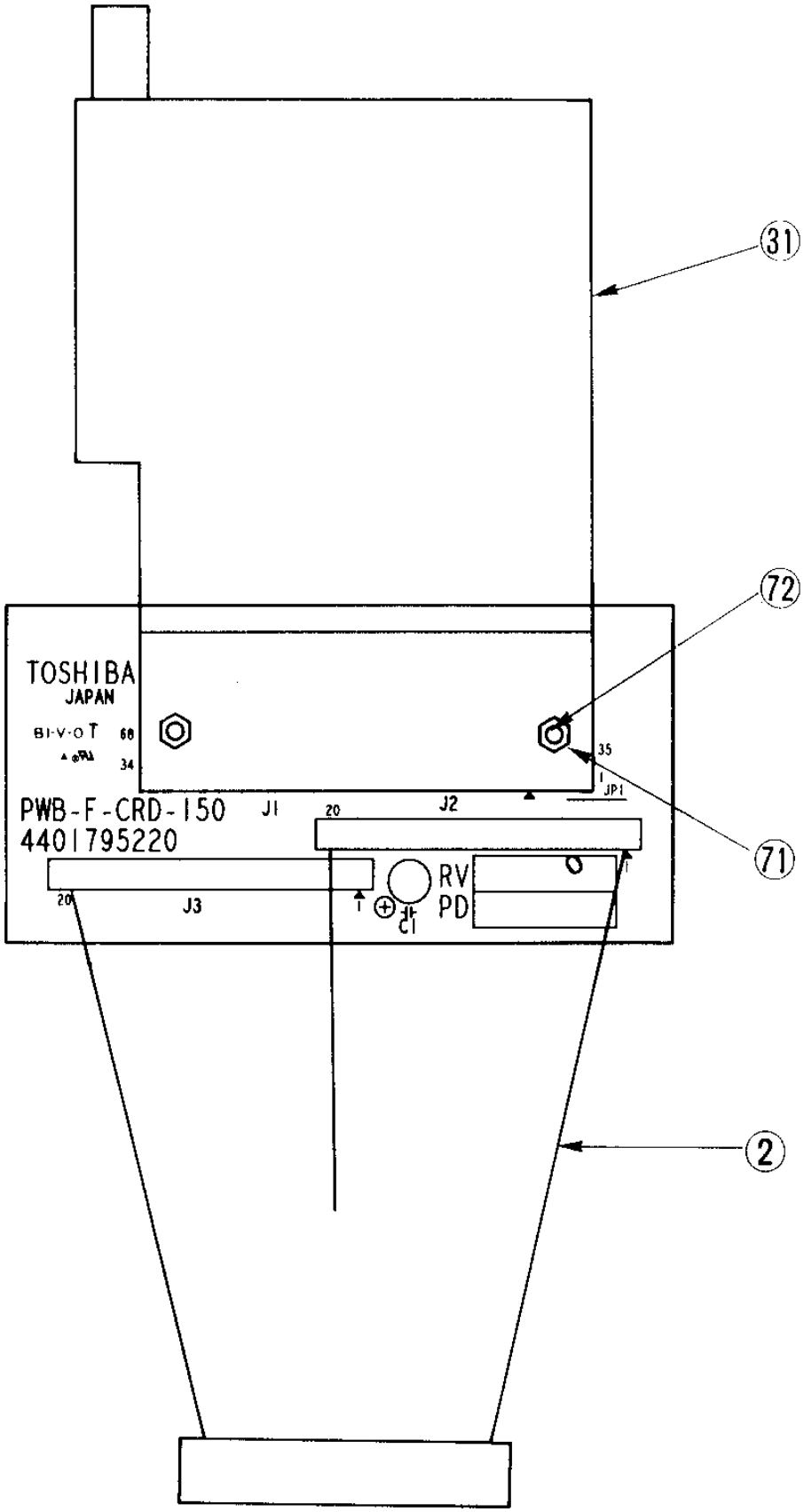
31
72
71
2
TOSHIBA
JAPAN
68
34
35
JP1
PWB-F-CRD-150
4401795220
J1
20
J2
20
J3
RV
PD
C1

ITEM NO.	PARTS NO.	PARTS NAME	Q'TY / PAGE	Q'TY / PACK	SPE PRICE IN NONE	P	I	R	BSI NO.	TO	FROM	SERIAL NO.	REMARKS
0	4401 795420	PWA-F-CRD-150	1	1/SB									
1	4401 795220	PWB-F-CRD-150	1	N/A***									
2	4401 796450	WH-LGC-MEM-150	1	1/P									
11	4843 406646	CE04W1C100M	1	10/P									
31	4843 307975	J-IC1G68PDDSEJ	1	1/D									
51	4407 782660	JUMPER-WIRE-10	1	10/P									
71	7360 200011	6/0NUT20MSZN3A	2	50/P									
72	7040 200611	PAN20*06MSZN3AI	2	50/P									

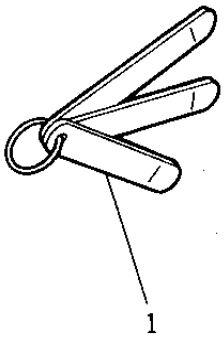
1

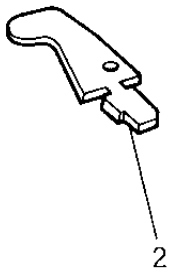
2

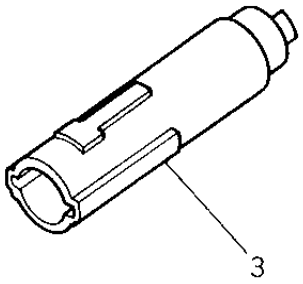
3

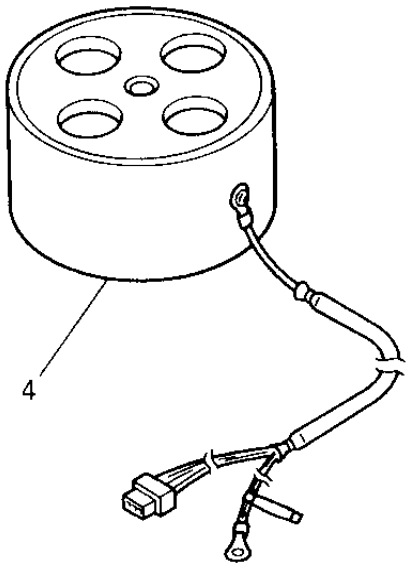
4

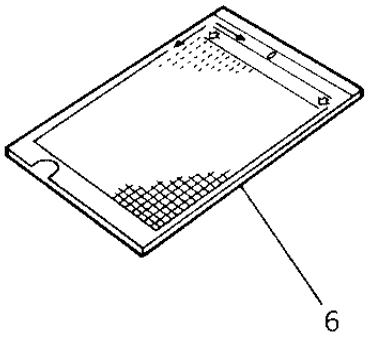
6

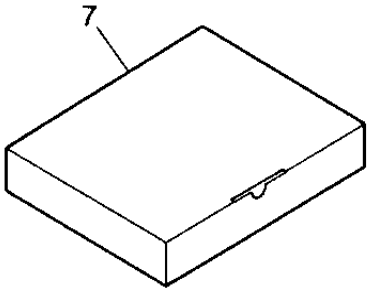
7

ITEM NO.	PARTS NO.	PARTS NAME	Q'TY / PAGE	Q'TY / PACK	SPE PRICE IN NONE	P	I	R	BSI NO.	TO	FROM	SERIAL NO.	REMARKS
1	4402 048100	ASM-JIG-DOC-180	1	1/P									
2	4407 915730	JIG-SW-F-COV	1	1/P									
3	4402 200960	ASM-JIG-DEV-545	1	1/P									
4	4401 763150	ASM-JIG-DRUM	1	1/C									
6A	4408 316430	AREA-SHEET-UC	1	1/KP									USA SIZE
6B	4408 316440	AREA-SHEET-JE	1	1/KP									EUR SIZE
7	4409 891170	PM-KIT6560/5560	1	1/S									

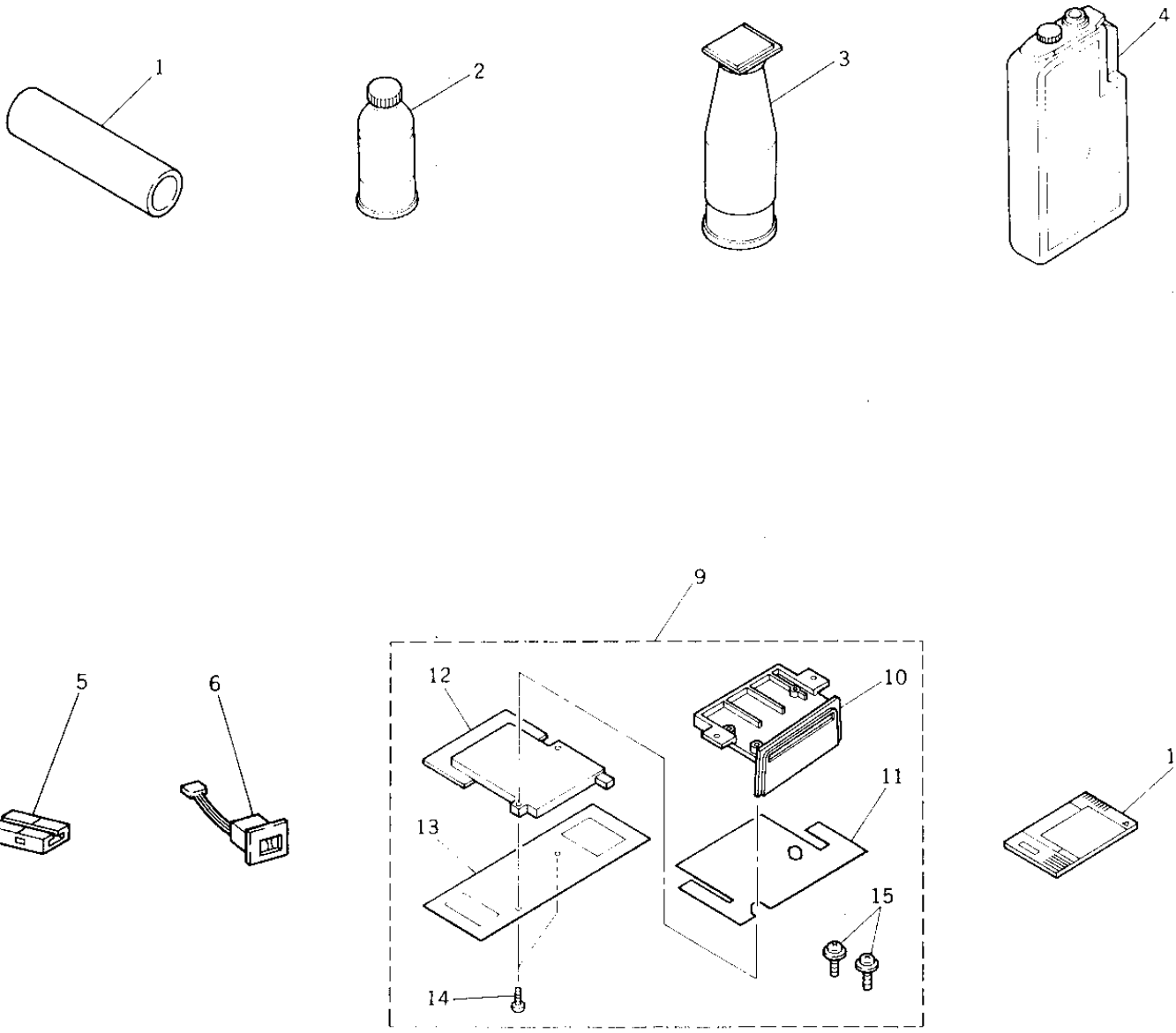
1
2
3
4
5
6
9
12
10
11
13
15
16
14
17
18
30

ITEM NO.	PARTS NO.	PARTS NAME	Q'TY / PAGE	Q'TY / PACK	SPE PRICE IN NONE	P	I	R	BSI NO.	TO	FROM	SERIAL NO.	REMARKS
1	6608 4995	PS-OD6560	1	SUPPLY									
2	6608 4996	PS-ZD6560	1	SUPPLY									10QTY/SET
3A	6606 1592	PS-ZT6560	1	SUPPLY									
3B	6606 2043	PS-ZT6560	1	SUPPLY									
3C	6606 1593	PS-ZT6560E	1	SUPPLY									FOR EUR
3D	6606 2044	PS-ZT6560E	1	SUPPLY									FOR EUR
4A	6608 4519	PS-TB6550	1	SUPPLY									4QTY/SET
4B	6608 4520	PS-TB6550E	1	SUPPLY									FOR EUR.
5	6600 2050	MU-8	1	SUPPLY									
6	6600 2051	MU-10	1	SUPPLY									
9	6608 4507	KP-2001	1	SUPPLY									
10	4401 751920	HOLDER-IC-CARD	1	1/P									
11	4401 751970	SHEILD-CARD-1	1	1/KP									
12	4401 795420	PWA-F-CRD-150	1	1/SB									
13	4401 751980	SHEILD-CARD-2	1	1/KP									
14	4842 040848	PTBR30*12MSZN3A	2	50/P									
15	4842 040702	TZPAN4010MSZN3L	2	50/P									
16A	6608 4508	KQ-1010	1	SUPPLY									
16B	6608 4509	KQ-1020	1	SUPPLY									
16C	6608 4510	KQ-1030	1	SUPPLY									
16D	6608 4511	KQ-1040	1	SUPPLY									
17A	6608 4492	MF-6550U	1	SUPPLY									115V
17B	6608 4493	MF-6550E	1	SUPPLY									220V
17C	6608 4494	MF-6550A	1	SUPPLY									240V
18A	6608 9175	KM-7660EN	1	SUPPLY									ENGLISH
18B	6608 9176	KM-7660GE	1	SUPPLY									GERMAN
18C	6608 9177	KM-7660FR	1	SUPPLY									FRENCH
18D	6608 9178	KM-7660SP	1	SUPPLY									SPANISH
18E	6608 9179	KM-7660IT	1	SUPPLY									ITALIAN
30	6608 4998	KK-6560	1	SUPPLY									
16D	6608 4511	KQ-1040	1	SUPPLY									