TOSHIBA

SERVICE HANDBOOK

DIGITAL PLAIN PAPER COPIER

8070/6570
5570/4580

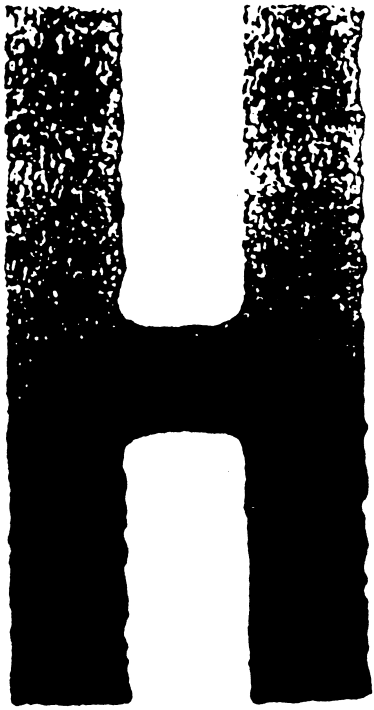

File No. 31110001

Copyright 2000

TOSHIBA TEC CORPORATION

GENERAL PRECAUTIONS REGARDING THE INSTALLATION AND SERVICE FOR THE COPIER 8070/6570/5570/(***)4580

The installation and service should be done by a qualified service technician.

1. Transportation/Installation

- When transporting/installing the copier, move it by the casters while lifting the stoppers.
  The copier is quite heavy and weighs approximately 250 kg (551 lb), therefore pay full attention when handling it.
- Be sure to use a dedicated outlet with AC 115V or 120V/20A (220V, 230V, 240V/10A) or more for its power source.
- The copier must be grounded for safety.
  Never ground it to a gas pipe or a water pipe.
- Select a suitable place for installation.
  Avoid excessive heat, high humidity, dust, vibration and direct sunlight.
- Also provide proper ventilation as the copier emits a slight amount of ozone.
- To insure adequate working space for the copying operation, keep a minimum clearance of 80 cm (32") on the left, 80 cm (32") on the right and 10 cm (4") in the rear.

2. Service of Machines

- Basically, be sure to turn the main switch off and unplug the power cord during service.
- Be sure not to touch high-temperature sections such as the exposure lamp, the fuser unit, the damp heater and their periphery.
- Be sure not to touch high-voltage sections such as the chargers, the transfer belt and the high-voltage transformer.
- Be sure not to touch rotating/operating sections such as gears, belts, pulleys, fan, etc.
- When servicing the machines with the main switch turned on, be sure not to touch live sections and rotating/operating sections. Avoid exposure to laser radiation.
- Use suitable measuring instruments and tools.
- Avoid exposure to laser radiation during servicing.
  - Avoid direct exposure to beam.
  - Do not insert tools, parts, etc. that are reflective into the path of the laser beam.
  - Remove all watches, rings, bracelets, etc. that are reflective.

3. Main Service Parts for Safety

- The breaker, door switch, fuse, thermostat, thermofuse, thermistor, etc. are particularly important for safety. Be sure to handle/install them properly.

4. Cautionary Labels

- During servicing, be sure to check the rating plate and the cautionary labels such as "Unplug the power cord during service", "Hot area", "Laser warning label" etc. to see if there is any dirt on their surface and whether they are properly stuck to the copier.

(***) Model 4580 is only for NAD, ASD and MJD.

5. **Disposition of Consumable Parts/Packing Materials**
   - Regarding the recovery and disposal of the copier, supplies, consumable parts and packing materials, it is recommended to follow the relevant local regulations or rules.

6. **When parts are disassembled, reassembly is basically the reverse of disassembly unless otherwise noted in this manual or other related documents. Be careful not to reassemble small parts such as screws, washers, pins, E-rings, toothed washers in the wrong places.**

7. **Basically, the machine should not be operated with any parts removed or disassembled.**

8. **Precautions Against Static Electricity**
   - The PC board must be stored in an anti-electrostatic bag and handled carefully using a wrist-band, because the ICs on it may become damaged due to static electricity.

   Caution: Before using the wrist band, pull out the power cord plug of the copier and make sure that there is no uninsulated charged objects in the vicinity.

Caution	:	Dispose of used RAM-IC's (including lithium battery) according to the manufacturer's instructions.
Vorsicht	:	Entsorgung des gebrauchten RAM-IC's (inklusive der Lithium Batterie) nach Angaben des Herstellers.

1. ADJUSTMENT

2. PERIODICAL MAINTENANCE

3. PRECAUTIONS FOR STORING & HANDLING SUPPLIES

4. TROUBLESHOOTING

5. INSTALLATION INSTRUCTIONS FOR FIRMWARE UPDATE THROUGH PC

6. MANUAL FOR FIRMWARE DOWNLOAD

7. HARNESS WIRING DIAGRAMS

CONTENTS

1. ADJUSTMENT 1-1
1.1 Error Codes 1-1
1.2 Self-Diagnostic Modes 1-6
1.2.1 Input signal check (test mode 03) 1-8
1.2.2 Output signal check (test mode 03) 1-10
1.2.3 Test print mode (test mode 04) 1-13
1.2.4 Adjustment mode (05) 1-14
1.2.5 Setting mode (08) 1-25
1.2.6 How to register/change ID codes (access control mode) 1-33
1.3 Formatting the Hard Disk 1-34
1.4 Auto-Toner Sensor Adjustment 1-35
1.5 Print Image Adjustment 1-37
1.5.1 Adjustment of paper aligning value 1-39
1.5.2 Adjusting the printer section 1-40
1.5.3 Adjusting the scanner section 1-46
1.6 Image Density 1-52
1.7 Automatic Adjustment of Gamma correction 1-53
1.8 Sharpness (HPF) Adjustment 1-55
1.9 Data Correction 1-56
1.10 High-Voltage Adjustment 1-57
1.11 Installation of Carriage Drive Wire 1-62
1.11.1 Wire tension adjustment 1-62
1.11.2 Adjustment of carriage 1 and carriage 2 1-62
1.11.3 Carriage drive wire assembling 1-63
1.12 Lens Unit 1-65
1.12.1 Adjusting the lens magnification 1-66
1.13 Adjusting Horizontal Deviation Caused by Paper Feed 1-68
1.14 Changing the Paper Size 1-69
1.14.1 LCF paper sizes 1-69
1.14.2 PFP paper sizes 1-70
1.15 Adjustment of Duplexer 1-71
1.15.1 Adjustment of the Stack Guide Unit 1-71
1.15.2 Holding gate position adjustment 1-73
1.16 Adjusting the Thickness of the Magnetic Brush (leveler) 1-75
1.17 Adjusting the Gap between the Drum and Sleeve 1-75
1.18 Adjustment of Developer Polarity Position 1-75
1.19 Adjusting the Heat Roller Pressure 1-75
1.20 Setting the Heat Roller Temperature and Heat Roller Pressure 1-76
1.21 Adjusting the Fuser Inlet Guide 1-78

1.22 Adjustment of ADF 1-79
1.22.1 Adjustment of skew with ADF 1-79
1.22.2 Adjustment of ADF horizontal deviation caused for ADF 1-80
1.22.3 Adjustment of ADF leading-edge position 1-81
1.22.4 Adjustment of leading-edge position for ADF (at the Time of Reversing) 1-81
1.22.5 Adjustment of magnetic catches installation 1-82
1.22.6 Adjustment of the separation area 1-83
1.22.7 EEPROM Initialization, Sensor Adjustment and Test Mode 1-84
1.23 Key Copy Counter (MU-8, MU-10) 1-85
1.24 Fine Adjustment of Binding Position/Folding Position 1-87
1.25 Adjustment of RADF Height 1-88
1.26 Flapper Solenoid Adjustment 1-89

2. PERIODICAL MAINTENANCE 2-1
2.1 Inspection every 440,000 Copies (8070), every 400,000 Copies (6570), every 340,000 Copies (5570), every 280,000 Copies (4580) 2-1
2.2 Inspection and Overhaul every 880,000 Copies (8070), every 800,000 Copies (6570/5570/4580) 2-1
2.3 Periodic Inspection Check List 2-1
2.4 Periodical Maintenance Kit (For 400k) 2-16
2.5 Jig List 2-17

3. PRECAUTIONS FOR STORING AND HANDLING SUPPLIES 3-1
3.1 Precautions for Storing TOSHIBA Supplies 3-1
3.2 Checking and Cleaning the OPC Drum 3-1
3.3 Checking and Cleaning the Drum Cleaning Blade, Transfer Belt Cleaning Blade 3-2
3.4 Checking and Cleaning the Heat Roller Cleaning Roller 1, 2, 3, 4 3-3
3.5 Checking and Cleaning the Upper and Lower Heat Rollers 3-3
3.6 Checking and Replacing Transfer Belt 3-4
3.7 Checking and Replacing Transfer Belt Power Supply Roller 3-4
3.8 Checking and Replacing Transfer Belt Cleaning Brush 3-4

4. TROUBLESHOOTING 4-1
4.1 Scanner System Related Service Call 4-1
4.2 Process System Related Service Call 4-3
4.3 Fuser Related Service Call 4-4
4.4 Communication Related Service Call 4-6
4.5 ADF Related Service Call 4-7
4.6 Other Troubles on the ADF System 4-8
4.7 Other Service Calls 4-12
4.8 Laser Optical system Related Service Call 4-13
4.9 Finisher Related Service Call 4-15
4.10 Image Quality Maintenance Control Related Troubleshooting 4-30

5. INSTALLATION INSTRUCTIONS FOR FIRMWARE UPDATE THROUGH PC 5-1
5.1 Outline 5-1
5.2 System Configuration 5-1
5.3 Preparation of PC to use a network 5-2
5.3.1 Setting Virtual Modem 5-2
5.3.2 Using Dial-Up Networking 5-6
5.3.3 Using New Connection 5-8
5.4 Installation of FTP Server 5-12

6. MANUAL FOR FIRMWARE DOWNLOAD 6-1
[3] [9] Mode operation 6-1
6.1 Outline 6-1
6.2 Preparation of PC 6-1
6.2.1 Software Installation 6-1
6.2.2 Preparation of Updated Files 6-2
6.2.3 Connection between Copier and PC 6-3
6.3 Download Operation 6-4
6.4 Screen Details 6-10

7. HARNESS WIRING DIAGRAMS 7-1
7.1 AC Wire Harness 7-2
7.2 DC Wire Harness ..... Appendix

1. ADJUSTMENT

1.1 Error Codes

When either the CLEAR PAPER (🖹) or CALL FOR SERVICE (🔧) symbol appears, press the CLEAR/STOP and [8] keys simultaneously and the corresponding error code will be displayed.
🖹/🔧 → [C] + [8] (error code)

Group	Error code	Machine status
Paper transport jam inside the copier 1	E01	Paper leading edge not reaching the fuser exit switch
	E02	Paper trailing edge not passing the fuser exit switch
	E03	Paper remaining inside the machine at power ON
	E09	HDD malfunction
	E0A	Image transport ready timeout
Paper feeding jam	E12	Manual feeding jam
	E15	PFP Feeding jam from the upper PFP
	E16	PFP Feeding jam from the middle PFP
	E17	PFP Feeding jam from the lower PFP
	E19	Feeding jam from LCF
Transport jam to aligning section after feeding	E31	PFP transport jam (not reaching the paper stop switch) E31: Feeding from the upper PFP
	E32	E32: Feeding from the middle PFP
	E33	E33: Feeding from the lower PFP
	E34	Not reaching the PFP transport path E34: Feeding from the upper PFP
	E35	E35: Feeding from the middle PFP
	E36	E36: Feeding from the lower PFP
Cover open jam	E41	Copier front cover is opened during copying
	E47	Exit cover is opened during copying
Transport jam in ADU and reversal section	E50	Paper not reaching the ADU aligning switch
	E51	Paper not reaching the ADU transport switch 1
	E52	Paper not reaching the ADU transport switch 2
	E53	Paper not reaching the PFP upper paper stop switch
	E54	Paper not reaching the ADU feed switch
	E55	Paper remaining on transport path when copy finished
	E56	Paper remaining on PFP transport path after door open/close
	E57	Paper not reaching the reversal switch
	E58	Paper not passing the reversal switch
	E59	Paper not passing the exit switch
	E5A	Paper not reaching the exit switch
	E5B	ADU transport start timeout jam
Original transporting jam at the ADF	E71	Original feeding jam at the feed section of the ADF
	E72	Original transporting jam at the transport section of the ADF
	E73	Original exiting jam at the exit section of the ADF

Group	Error code	Machine status
Finisher jam	E9F	Punch jam
Paper jam at the finisher	EA1	Transporting delay jam
	EA2	Transporting stationary jam
	EA3	Paper remaining in the finisher at power ON
	EA4	Finisher front door opened during copying
	EA5	Staple jam
	EA6	Early arrival jam
	EA8	Finisher saddle stitcher staple jam
	EA9	Finisher saddle stitcher front door open jam
	EAA	Paper remaining in the finisher at power ON
	EAB	Finisher saddle stitcher transport stationary jam
	EAC	Finisher saddle stitcher transport delay jam
	EAD	Print end command time-out jam
	EAE	Finisher receive time-out jam
Paper transport jam inside the copier 2	EB3	Finisher ready time-out error
	EB5	PSTPR-L standby time-out error
	EB6	PSTPR-H standby time-out error
Paper feeding error (Refer to page 1-4)	C11	Duplexer side guide is abnormal
	C12	Duplexer stopper guide is abnormal
	C15	PFP upper tray is abnormal
	C16	PFP middle tray is abnormal
	C17	PFP lower tray is abnormal
	C18	LCF tray is abnormal
Scanner system related service call	C26	Peak detection error
	C27	(Home switch does not turn OFF within a fixed time) Carriage initialization error
	C28	(Home switch does not turn ON within a fixed time) Carriage initialization error
	C29	Exposure lamp disconnection detected
Process system related service call 1	C36	Main charger wire cleaning operation abnormal
	C37	Transfer belt operation abnormal
Process system related service call 2	CD1	Brush motor lock error
	CD2	Auger motor lock error
Fuser related service call	C41	Thermistor abnormal or heater disconnection at power ON
	C43	Thermistor abnormal during warming-up or at standby after disconnection judgement
	C44	Heater abnormal during warming-up or at standby after disconnection judgement
	C45	Upper heat roller end thermistor abnormal
	C46	Lower heat roller thermistor abnormal at standby

Group	Error code	Machine status
Communication related service call	C56	Communication error between PFC and M-CPU
	C57	Communication error between M-CPU and IPC
	C58	Communication error between IPC and the finisher
	C59	Communication error between M-CPU and L-CPU
System communications related service call	F07	Communication error between SYS and LGC boards
	F11	Communication error between SYS and SLG boards
ADF related service call	C72	Error of aligning sensor adjustment
	C73	EEPROM initializing error
	C74	Error of exit sensor adjustment
	C76	Transmission time-out error
	C77	Transmission buffer full
	C78	ADF power ON I/F error
	C79	Reception time-out error
	C80	Error of timing sensor adjustment
Other service calls	C94	M-CPU is abnormal
	C99	PFC microcomputer is abnormal
Laser optical system related service call	CA1	Polygonal mirror motor is abnormal
	CA2	H-SYNC is abnormal
	CA3	Secondary scanning rough adjustment error
	CA4	Primary scanning counter load error
	CA5	Laser power adjustment error
	CA6	Laser PWM calibration error
	CA9	Image data transmission error from SYS board
	CAA	Secondary scanning fine adjustment error
	CAB	Secondary scanning inter-page compensation error
	CAC	Primary scanning dot adjustment error
	CAD	Primary scanning tap adjustment error
	CAE	Primary scanning tap amount measurement error
	CAF	Primary scanning inter-page compensation error
	CD0	Laser initializing time-out error
Finisher related service call	CB1	Feed motor is abnormal
	CB2	Delivery motor is abnormal
	CB3	Tray lift motor is abnormal
	CB4	Alignment motor is abnormal
	CB5	Staple motor is abnormal
	CB6	Stapler shift motor is abnormal
	CB7	Height sensor is abnormal
	CB8	Backup RAM data is abnormal
	CB9	Saddle stitcher paper pushing plate motor is abnormal

Group	Error code	Machine status
Finisher related service call	CBA	Saddle stitcher front stitcher motor is abnormal
	CBB	Saddle stitcher rear stitcher motor is abnormal
	CBC	Saddle stitcher alignment motor is abnormal
	CBD	Saddle stitcher guide motor is abnormal
	CBE	Saddle stitcher folding motor is abnormal
	CBF	Saddle stitcher paper positioning plate motor is abnormal
	CC0	Sensor connector connection error
	CC1	Microswitch error
	CC2	Communications error between finisher saddle
	CC4	Swing motor is abnormal
	CC5	Horizontal registration motor is abnormal
	CC6	Punch motor is abnormal
Option units related service call	F10	HDD formatting error

Addition to the explanation

(1) When a paper feeding error occurs:

: Error has occurred in the unit →Disabled

: No error has occurred in the unit →Enabled

: To operate continuously, error code ([C]+[8]) is not displayed.

(2) During C11 and C12 error codes

* If the mode which Duplexer is used is selected as “single-sided → duplex” or “two-sided → duplex”, the “install the Duplexer” message is displayed and printing is not possible.
* If the mode other than the above (the Duplexer is not used) is selected, the operation can be normally accepted.

(3) During C15, 16, 17 error codes

* If a cassette in which an error has occurred is selected:
  The “Add Paper” message is displayed even if the sheet is set, and copying can be performed when another paper cassette is selected.
* If a cassette other than the above is selected, the operation can be normally accepted.

Error history (08-253)

(Display example)

EA1	9 9 0 3 2 6 1 7 5 7 3 2	6 4	6 4	2 3 6 2 1 0 0 0 0 0 0 0
Error code	YYMMDDHHMMSS	MMM	NNN	A B C D E F G H I J K L
3 digit	12 digit (Date, time)	3 digit (Reproduction ratio)	3 digit	12 digit (Copy mode)

Copy mode	
A	Paper feed cassette
	0: Non-select 1: Bypass 2: LCF 3: PFP(U) 4: PFP(M) 5: PFP(L) 6: ADU
B	Paper size code
	0: Non-select 1: A5-R 2: ST-R 3: LT 4: A4 5: B5-R 6: LT-R 7: A4-R 8: OTHER/UNIV 9: B5
	A: FOL/COM B: LG C: B4 D: LD E: A3 F: 13'LG G: 8.5×8.5
C	Sort mode/Staple mode
	0: Non-select 1: Group 2: Sort 7: Staple (Front) 8: Staple (2 places) 9: Staple (Rear) A: Saddle stetch
D	DF mode
	0: Not used 1: AUTO FEED (SADF) 2: STACK FEED
E	APS/AMS mode
	0: Non-select 1: APS 2: AMS
F	Duplex mode
	0: Non-select 1: Book 2: Two-sided/Single-sided 4: Two-sided/Duplexed
	8: Single-sided/Duplexed
G	Not used
	0: Not used
H	Image shift
	0: Not used 1: Book 2: LEFT 3: RIGHT
I	Editing
	0: Not used 1: Masking 2: Trimming 3: Mirroring 4: Negative/Positive
J	Edge-erase/Dual-page
	0: Not used 1: Edge-erase 2: Dual-page 3: Edge-erase & Dual-page
K	Not used
	0: Not used
L	Function
	0: Not used 1: PPC 2: Not used 3: Not used 4: GDI 5: DSS

Reproduction ratio	
MMM	Primary scanning reproduction ratio (Y direction)
	Hexadecimal
NNN	Secondary scanning reproduction ratio (X direction)
	Hexadecimal

Setting mode, code "253" displays latest 8 error data

1.2 Self-Diagnostic Modes

This copier is a multi-function copier (net work printer, DSS). So, compared with conventional copiers:

1) It has more setting items in the self-diagnostic mode.
2) Setting items are related to each other.

For this reason, if normal operations are continued on the control panel (by [0] + [9] or [C] keys) when adjustments are completed, operation trouble (e.g. machine lock) may occur due to the internal structure of the program.

So, when the self-diagnostic mode in adjustments after unpacking, servicing or preventative maintenance, first turn the power OFF before handing the copier over to the user.

Mode	Input code	Definition	Clearing method	Display
All-LEDs-lit	[0]+[1]+ [PWR]	All LEDs on the control panel are lit, and all pixels on the LCD light and go out.	[C]or [0]+[9]	——
Test mode	[0]+[3]+ [PWR]	Input/output signals are checked.	[0]+[9]	100% C A4 TEST MODE
Test print mode	[0]+[4]+ [PWR]	Test print	[0]+[9]	100% P A4 TEST PRINT
Adjustment mode	[0]+[5]+ [PWR]	Adjustment of items	[0]+[9]	100% A A4 TEST MODE
Setting mode	[0]+[8]+ [PWR]	System switchover and setting of each priority mode, PM counter, etc.	[0]+[9]	100% D A4 TEST MODE
List print mode	[9]+[START] +[PWR]	Printing of 05, 08 code data lists	[PWR] OFF	100% P A4 LIST PRINT
Unit replace mode	[6]+[START] +[PWR]	Mode for executing auto-toner adjustment and drum counter clear	[PWR] OFF	100% K A4 TEST MODE

Note: To access the desired self-diagnostic mode, turn on the power switch while pressing the appropriate keys (e.g. [0]+[5]).

<Procedure>

• All-LEDs-lit mode (01):

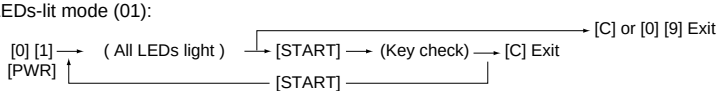

Notes: 1. The mode cannot be cleared by [0]+[9] during the key check; it can be cleared only by [C]. It can be cleared by both [0]+[9] and [C] when all LEDs on the control panel are lit.

2. Key Check With LED (Press to turn LED out.)
Without LED (Press to display this in message area.)

• Test mode (03): Refer to 1.2.1 and 1.2.2.

• Test print mode (04): Refer to “1.2.3 Test print mode”.

• Adjustment mode (05): Refer to “1.2.4 Adjustment mode”.

• List print mode

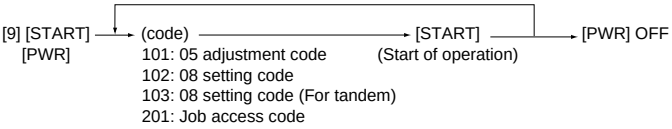

• Unit replace mode

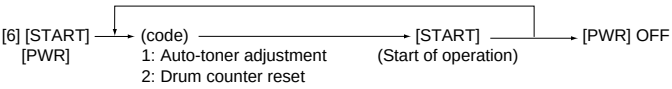

• Setting mode (08): Refer to “1.2.5 Setting mode”.

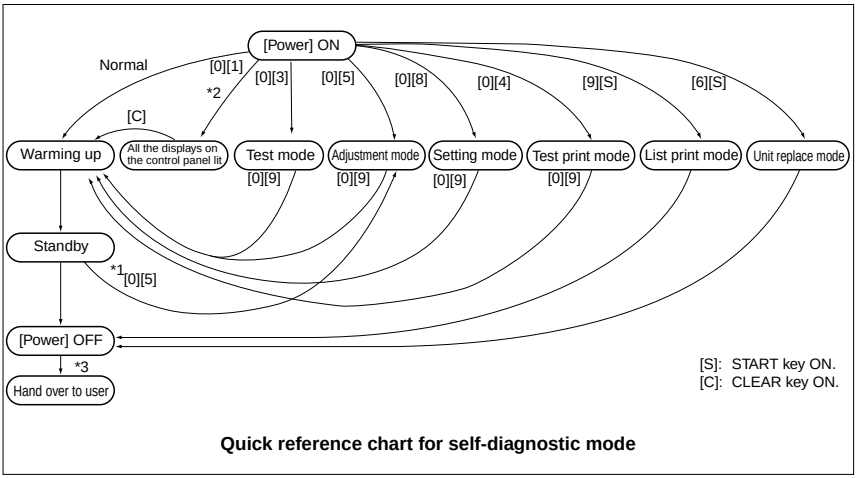

Quick reference chart for self-diagnostic mode

*1 When the copier is in the adjustment mode which you entered by turning the power switch ON while pressing keys [0] and [5] simultaneously, pressing keys [0] and [9] simultaneously will set the copier to the standby mode. In this standby mode only can the adjustment mode be accessed repeatedly by simply entering [0] and [5].

*2 While all the displays on the control panel are lit, copying is not available. When the copier enters the standby mode by pressing the [0] [9] or [C], copying is enabled.

*3 When the self-diagnostic mode was used, turn the power OFF, then hand over to the user.

1.2.1 Input signal check (Test mode 03)

In the [0] [3] test mode, the following input signal states can be checked by pressing the corresponding keys.

[A] When the ENERGY SAVER key is OFF (LED indicating the energy saver mode is out)

Icon / Key	A	B	C	D	E	F	G	H	Remarks
[1]	LCF bottom SW (Bottom)	LCF door SW (Open)	LCF tray up SW (Top)	LCF empty SW (Not empty)	Manual feed paper width switch 3 (OFF)	Manual feed paper width switch 2 (OFF)	Manual feed paper width switch 1 (OFF)	Manual feed paper width switch 0 (OFF)	–
[2]	ADU transport switch 2 (ON)	LCF paper start switch (OFF)	ADU feed switch (ON)	ADU transport switch 1 (ON)	LCF switch (Disconnection)	LCF tray down key (OFF)	Manual feed switch (OFF)	–	–
[3]	–	–	–	–	ADU end switch (ON)	ADU aligning switch (ON)	ADU side switch (ON)	ADU empty switch (Not empty)	–
[4]	PFP-U paper start SW (OFF)	PFP-U paper stop SW (OFF)	PFP-U tray up SW (ON)	PFP-U empty SW (OFF)	–	PFP upper cassette SW (ON)	PFP middle cassette SW (ON)	PFP lower cassette SW (ON)	–
[5]	PFP-M paper start SW (OFF)	PFP-M paper stop SW (OFF)	PFP-M tray up SW (ON)	PFP-M empty SW (OFF)	–	–	–	–	–
[6]	PFP-L paper start SW (OFF)	PFP-L paper stop SW (OFF)	PFP-L tray up SW (ON)	PFP-L empty SW (OFF)	–	–	–	–	–
[7]	–	–	–	–	–	–	ADU connection (Disconnection)	Copier paper stop switch (ON)	–
[8]	Front cover SW (OFF)	Reversal switch (ON)	Exit switch (ON)	–	Toner-full switch (ON)	–	Fuser exit switch (OFF)	–	–
[9]	–	–	–	IPC connection (Disconnection)	–	–	–	Developer unit not mounted SW	–
[0]	–	–	–	–	–	–	–	–	–

Icons on the control panel in the table states are displayed as white on a black background (ON state).

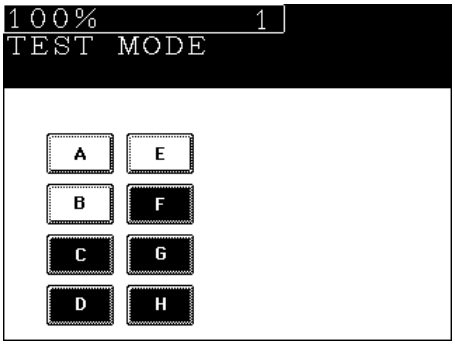

[B] When the ENERGY SAVER key is ON (LED indicating the energy saver mode is lit)

Icon / Key	A	B	C	D	E	F	G	H	Remarks
[1]	–	–	–	–	–	–	–	–	–
[2]	–	–	Total counter connection (Disconnection)	Auto toner sensor connection (Disconnection)	–	Cleaner connection (Disconnection)	Main charger cleaning switch (OFF)	Exit cover switch (Open)	–
[3]	–	–	–	–	–	Key counter connection (Disconnection)	Toner supply cover switch (Open)	Toner empty switch (OFF)	–
[4]	–	–	–	–	–	–	Transfer belt contact switch (OFF)	Transfer belt separation switch (OFF)	–
[5]	Platen switch (Close)	–	–	–	–	–	ADF connection (Disconnection)	Scanner home SW (OFF)	–
[6]	–	APS sensor 3 (OFF)	APS sensor 2 (OFF)	APS sensor 1 (OFF)	APS sensor 6 (OFF)	APS sensor 5 (OFF)	APS sensor 4 (OFF)	–	–
[7]	ADF size switch 1 (ON)	ADF size switch 2 (ON)	ADF empty switch (OFF)	ADF cover (Open)	ADF APS start SW (ON)	ADF exit sensor (ON)	ADF timing sensor (ON)	ADF aligning sensor (ON)	–
[8]	–	–	–	–	–	–	–	–	–
[9]	–	–	–	–	–	–	–	–	–
[0]	–	–	–	–	–	–	–	–	–

Icons on the control panel in the table states are displayed as white on a black background (ON state).

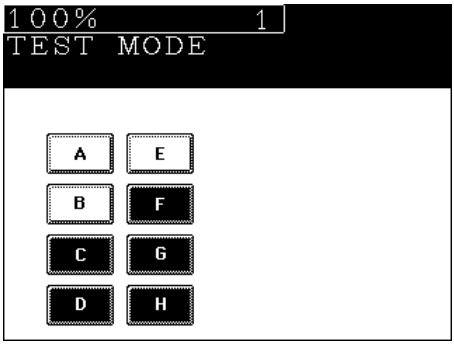

<Procedure>

[0] [3] [PWR] → [START] → [ENERGY SAVER] → [Digital keys] → (LCD ON) → [0] [9] (Exit)

Note: Initialization is executed before test mode is entered.

1.2.2 Output signal check (test mode 03)

In the [0] [3] test mode, the following output signal states can be checked by entering the corresponding codes.

Code	Function		Code	Function	Operation procedure group
101	Drum motor	ON	151	OFF	1
102	Toner motor	ON	152	OFF	1
103	Polygonal motor mirror (600 dpi)	ON	153	OFF	1
108	Aligning motor	ON	158	OFF	1
109	Pedestal motor	ON	159	OFF	1
110	ADU motor	ON	160	OFF	1
111	Scraper solenoid	ON	161	OFF	1
112	Developer motor	ON	162	OFF	1
113	Heat roller motor	ON	163	OFF	1
114	Transfer belt motor	ON	164	OFF	1
115	Fur brush motor	ON	165	OFF	1
116	Auger motor	ON	166	OFF	1
117	Laser bias	ON	167	OFF	1
118	Laser	ON	168	OFF	1
119	Fuser unit motor rotating slowly	ON	169	OFF	1
218	Total counter counts				2
219	Reversal fan	ON/OFF			3
220	ADU transport clutch	ON/OFF			3
221	ADU aligning clutch	ON/OFF			3
222	ADU feed clutch	ON/OFF			3
223	ADU stack clutch	ON/OFF			3
226	PFP upper feed clutch	ON/OFF			3
227	PFP middle feed clutch	ON/OFF			3
228	PFP lower feed clutch	ON/OFF			3
229	PFP upper aligning feed clutch	ON/OFF			3
230	PFP middle aligning feed clutch	ON/OFF			3
231	PFP lower aligning feed clutch	ON/OFF			3
233	Manual feed motor	ON/OFF			3
234	Manual feed pick-up solenoid	ON/OFF			3
235	Discharge LED lamp	ON/OFF			3
236	Exit fan, low speed	ON/OFF			3
237	Exit fan, high speed	ON/OFF			3
239	Main charger fan	ON/OFF			3
240	Developer fan	ON/OFF			3
241	Heater fan low-speed	ON/OFF			3
242	Heater fan high-speed	ON/OFF			3
243	Main charger wire cleaner	ON (reset)			2
244	Transfer belt cam motor	UP/DOWN			3
249	Developer bias -DC1	ON/OFF			3

Code	Function		Operation procedure group
250	Developer bias -DC2	ON/OFF	3
251	Developer bias -DC3	ON/OFF	3
252	Main Charger	ON/OFF	3
255	Transfer belt cleaning brush bias	ON/OFF	3
257	Duct (in/out) fan, low speed	ON/OFF	3
259	Duct (in/out) fan, high speed	ON/OFF	3
261	Scanning motor	ON	2
	(Automatically stops at the limit position, its speed is variable using the ZOOM keys.)		
262	Document (indicator) motor	ON	2
	(Automatically stops at the limit position)		
263	Exposure lamp	ON	3
	(Automatically goes OFF after 6 seconds, and the fan motors rotate at low speed.)		
264	Scanning optical system cooling fan motor 1	ON/OFF	3
265	Scanning optical system cooling fan motor 2	ON/OFF	3
266	SLG PC board cooling fan motor 3	ON/OFF	3
270	LCF feed motor	ON/OFF	3
271	LCF tray motor	UP/DOWN	2
272	ADU side guide motor	ON (reciprocating)	2
273	ADU end guide motor	ON (reciprocating)	2
274	ADU/exit switching gate solenoid	ON/OFF	3
275	ADU paper holding gate solenoid	ON/OFF	2
277	ADU reverse clutch	ON/OFF	3
278	PFP upper tray motor	UP/DOWN	2
279	PFP middle tray motor	UP/DOWN	2
280	PFP lower tray motor	UP/DOWN	2
281	ADF pick-up roller rotation	ON/OFF	3
282	ADF aligning roller rotation	ON/OFF	3
283	ADF transport belt CW rotation	ON/OFF	3
284	ADF transport belt CCW rotation	ON/OFF	3
285	ADF reverse roller rotation	ON/OFF	3
288	ADF reverse solenoid	ON/OFF	3
292	Laser unit fan	ON/OFF	3
295	Power off mode		4

List of System Output Check Functions

Code	Function	Operation procedure group
401	Get mounted PM (page memory) size	2
402	PM (page memory) read/write check	2

<Procedure>

Group (1)

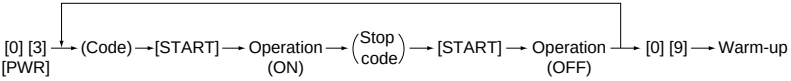

Group (2)

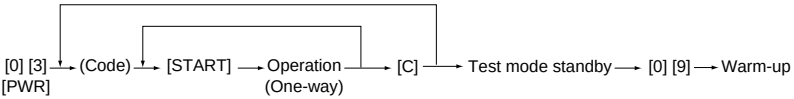

Group (3)

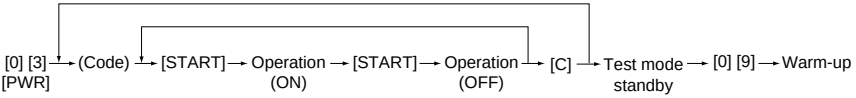

Group (4)

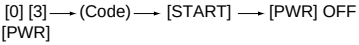

1.2.3 Test print mode (test mode 04)

In test mode “04”, you can print the test pattern generated by the following ASIC codes.

Code	ASIC	Test pattern type	Remarks
111	SH	Primary scanning. 33 gradations, error diffusion	
113	SH	Secondary scanning. 33 gradations, error diffusion	
142	POPS	2 dots grid pattern (10mm Pitch)	

<Operation procedure>

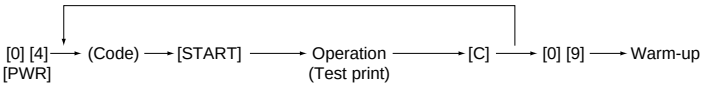

Note: Though errors are displayed when it occurs, recovery is not carried out. This is recovered by turning the power OFF then ON again.

1.2.4 Adjustment mode (05)

In this mode, the following adjustment items can be corrected or changed. To access this mode, turn the power ON while pressing the [0] and [5] keys.

05 MODE						
CODE	ADJUSMENT	MODE	DEFAULT	RANGE	DESCRIPTION	PROCEDURE GROUP
200	Automatic adjustment of the Auto-toner circuit.	All	—	—	Increasing the value increases the sensor out put. Output is automatically set in the range of 2.45 - 2.55V. Refer to the complete auto-toner adjustment.	
201	Manual adjustment of the Auto-toner circuit.	All	128	0-255	The current value of the auto-toner circuit is displayed and can be manually set.	2
♦203	Developer High 1 adjustment Out put is NOT available for measurement. Enter the value set in code 205-0.	Printer	104	0-255	The developer power supply output is increased when the value is increased.	1
♦205-0	Developer High 1 adjustment Output IS available for measurement. Adjust by measuring the output.	Copier (Text/ Photo)	104	0-255	Before performing this adjustment refer to the complete adjustment.	7
♦205-1	Developer High 1 adjustment Output is NOT available for measurement. Enter the value set in code 205-0.	Copier (Text)	104	0-255		6
♦205-2	Developer High 1 adjustment Output is NOT available for measurement. Enter the value set in code 205-0.	Copier (Photo)	104	0-255		6
♦207	Developer High 2 adjustment Out put IS available for measurement. Adjust by measuring the output.	All	104	0-255	The developer bias power supply output is increased when the value is increased. Before performing this adjustment refer to the complete adjustment.	2
♦216	Developer High 3 adjustment Output IS available for measurement.	All	133	0-255	The developer bias power supply output is increased when the value is increased. Before performing this adjustment refer to the complete adjustment.	2
♦Key in Code 205 press the START key, key in the Sub Code, then press the START key. For 205-0, 207 and 216 use the UP or DOWN key to change the value, press the SET key to store or the RESET key. For codes 203, 205-1 and 205-2 key in the value set in code 205-0, press the SET key to store or the CLEAR key to reset.						
♣210-0	Charge corona grid voltage adjustment. The developer unit must be removed. Output IS available for measurement. Adjust by measuring the grid voltage output.	Copier (Text/ Photo)	93	0-255	The charge corona power supply output is increased when the value is increased. Before performing this adjustment refer to the complete adjustment. Check or adjust the output voltage using code 210-0 first, then set the remaining codes 210-1, 210-2 and 212 to the value set in 210-0.	7
♣210-1	Charge corona grid voltage adjustment. Output is NOT available for measurement. Set to the value set in code 210-0.	Copier (Text)	93	0-255		6
♣210-2	Charge corona grid voltage adjustment. Output is NOT available for measurement. Set to the value set in code 210-0.	Copier (Photo)	93	0-255		6
♣212	Charge corona grid voltage adjustment. Output is NOT available for measurement. Set to the value set in code 210-0.	Printer	93	0-255		1
♣Key in Code 210 press the START key, key in the Sub Code, then press the START key. For 210-0 use the UP or DOWN key to change the value, press the SET key to store or the RESET key. For codes 210-1, 210-2 and 212 key in the value set in code 210-0, press the SET key to store or the CLEAR key to reset.						

05 MODE						
CODE	ADJUSMENT	MODE	DEFAULT	RANGE	DESCRIPTION	PROCEDURE GROUP
291	Image Quality Control circuit check value, not adjustable. Value indicates Status: Good or Error.	All	0	0-255	A value of 2 or 4 indicates an error in the image Quality Control circuit. All other values 0-255 indicate that the Image Quality Control circuit is working correctly. For additional information refer to the Image Quality Control Troubleshooting section.	3
292	Image Density Sensor output check value When the LED (light source) is turned OFF. (This is the current value stored in memory from the last time the machine performed the Image Quality Control compensation adjustment). It is not adjustable. Normal value is 102 - 307.	All	0	0-1023	Use this code only when checking or troubleshooting Image Quality Control problems. See Image Quality Control Troubleshooting section.	3
293	Image Density Sensor output check value When the LED (light source) is turned ON. (This is the current value stored in memory from the last time the machine performed the Image Quality Control compensation adjustment) not adjustable. Normal value is 388-819.	All	0	0-1023	Use this code only when checking or troubleshooting Image Quality Control problems. See Image Quality Control troubleshooting section.	3
296	Service Automatic adjustment of image Density Sensor LED intensity. The value displayed is the output check value after the light source is adjusted.	All	0	0-255	Use this code only when checking or troubleshooting Image Quality Control problems. The higher the number the dirtier the sensor or the greater the amount of drum wear. 255 = sensor is too dirty or drum is too worn for compensation. See Image Quality Control Troubleshooting section.	3
305	Leading to trailing edge image shift. Scanner (secondary scanning) start position deviation). Key in the value, press SET key to store or CLEAR key to reset.	All	128	0-255	When the value is increased by 1, the image shift approximately 0.1213mm towards the trailing edge of the paper(machine).	1
306	CCD primary scanning start position deviation. Key in the value, press SET key to store or CLEAR to key to reset.	All	45	0-90	When the value is increased by 1, the image shifts approximately 0.0423mm towards the front side of the paper (machine).	1
310	Exposure lamp intensity. Set to default value. Key in the value, press SET key to store or CLEAR key to reset.	All	55	30-70	The exposure lamp voltage increases or decreases 0.25V/step.	1
•335-0	Scanner acceleration curve setting (50-59%).	All	2	0-2	0: Acceleration ratio (1) 1: Acceleration ratio (2) 2: Acceleration ratio (3) Adjustment corrects for blurs in the leading 2 inches of the copy. Set to the default values when memory has been corrupted. Adjust only when replacing the scan drive motor.	6
•335-1	Scanner acceleration curve setting (60-79%).	All	0	0-2		6
•335-2	Scanner acceleration curve setting (80-95%).	All	1	0-2		6
•335-3	Scanner acceleration curve setting (96-103%).	All	1	0-2		6
•335-4	Scanner acceleration curve setting (104-190%).	All	1	0-2		6
•335-5	Scanner acceleration curve setting (191-400%).	All	1	0-2		6
• Key in code 335 press the START key, key in the Sub code, then press the START key. Key in the value, press the SET key to store or the CELAR key to reset.						

05 MODE						
CODE	ADJUSMENT	MODE	DEFAULT	RANGE	DESCRIPTION	PROCEDURE GROUP
♥340	Scanner copy length reproduction ratio adjustment.	Copier	128	0-255	Adjust the length of the copy image to 1:1 so that it is not stretched or compressed. Use a millimeter scale and ledger/ A3 paper to adjust. Increasing the value decreases the length 0.05% step(or 0.1mm/step).	1
♥350	RADF single sided original stop position.	All	8	0-15	The higher the value, the more the original is fed towards the paper feed side of the machine. 1 step is equal to approxi-mately 1mm change. Test copy can be made in 05 test mode.	1
♥351	RADF double sided original side 2 stop position.	All	8	0-15	The higher the value, the more the original is fed towards the exit side of the machine. 1 step is equal to approxi-mately 1mm change. Test copy cannot be made in 05 test mode. Press 09 to enter normal copy mode and toggle back to 05 mode to adjust.	1
356	RADF sensor automatic adjustment and EEPROM initialization. Press the START key, WAIT is displayed while the automatic adjustment is performed.	All	—	—	Perform RADF EEPROM Initialization when EEPROM, RADF logic PWA or sensors are replaced.	4
♥401	Polygonal motor speed fine adjustment.	Printer	128	0-255	Adjust the width of the printed image (front to rear of machine) to 1:1, so that it is not stretched or compressed. When the value is increased by 1, the width reproduction ratio is enlarged by approxi-mately 0.05% step (or 0.1mm/ step). After setting the value, select LT/A4 paper, then press the ENERGY SAVER key to make a test print.	1
♥405	Polygonal motor speed fine adjustment.	Copier	120	0-255	Adjust the width of the copied image (front to rear) to 1:1 so that it is not stretched or compressed. When the value is increased by 1, the width reproduction ratio is enlarged by approximately 0.05%/step (or 0.1mm/step). After setting the value, select LT/A4 paper, then press the ENERGY SAVER key to make a test copy.	1

05 MODE						
CODE	ADJUSMENT	MODE	DEFAULT	RANGE	DESCRIPTION	PROCEDURE GROUP
410	Laser write position(front to rear of machine image registration). After adjusting code 411, key in the value set in code 411, press the SET key to store in memory or the CLEAR key to reset.	Copier	140	0-255	Always perform code 411 first, then set the value of code 410 to the value set in code 411. When the value is increased by 1, the image on the drum is shifted by 0.0423mm to the rear of the copier(primary scanning direction). Refer to the complete adjustment procedure before performing this adjustment.	1
♥411	Laser write position (front to rear of machine image registration).	Printer	140	0-255		1
♥415	First beam laser power.	Copier	103	0-255	Laser power increases 2.34É W/step.	1
♥416	First beam laser power.	Printer	103	0-255	Set to 103 do not change from the setting.	1
♥430	Copy leading edge void adjustment.	Copier	24	0-255	Increasing the value by 1 increases the void by approximately 0.04233mm.	1
♥431	Copy top edge void adjustment (rear of machine). Top of copy LT/A4 or right side edge of ST-R/A5-R, LT-R/A4-R, Legal/B4 and Ledger/A3.	Copier	0	0-255	Increasing the value by 1 increases the void by approximately 0.04233mm.	1
♥432	Copy bottom edge void adjustment (front of Machine). Bottom of copy LT/A4 or left side edge of ST-R/A5-R, LT-R/A4-R, Legal/B4 and Ledger/A3.	Copier	0	0-255	Increasing the value by 1 increases the void by approximately 0.04233mm.	1
♥433	Copy trailing edge void adjustment.	Copier	30	0-255	Increasing the value by 1 increases the void by approximately 0.04233mm.	1
♥435	Printed page leading edge void adjustment.	Printer	24	0-255	Increasing the value by 1 increases the void by approximately 0.04233mm.	1
♥436	Printed page top edge void adjustment (rear of machine). Top of printed page LT/A4 or right side of ST-R/A5-R, LT-R/A4-R, Legal/B4 and Ledger/A3.	Printer	0	0-255	Increasing the value by 1 increases the void by approximately 0.04233mm.	1
♥437	Printed page bottom edge void adjustment (front of machine). Top of printed page LT/A4 or left side edge of ST-R/A5-R, LT-R/A4-R, Legal/B4 and Ledger/A3.	Printer	0	0-255	Increasing the value by 1 increases the void by approximately 0.04233mm.	1
♥438	Printed page trailing edge void adjustment.	Printer	0	0-255	Increasing the value by 1 increases the void by approximately 0.04233mm.	1
♥442	Bypass registration adjustment. Image on the drum to the paper's leading edge.	All	8	0-15	Increasing the value by 1 shifts the image on the paper by approximately 0.5mm towards the paper's leading edge. Increasing the value makes the paper arrive later.	1
♥443	LCC registration adjustment. Image on the drum to the paper's leading edge. Test copy available while in the 05 Mode.	All	15	0-40	Increasing the value by 1 shifts the image on the paper by approximately 0.5mm towards the papers' leading edge. Increasing the value makes the paper arrive later.	1

05 MODE						
CODE	ADJUSMENT	MODE	DEFAULT	RANGE	DESCRIPTION	PROCEDURE GROUP
♥444	PFP registration adjustment. Image on the drum to the paper's leading edge. Test copy available while in the 05 mode.	All	8	0-15	Increasing the value by 1 shifts the image on the paper by approximately 0.5mm towards the papers' leading edge. Increasing the value makes the paper arrive later.	1
♥445	Duplexer registration adjustment. Image on the drum to the papers' leading edge. Toggle between 09 and 05 Mode to make a test copy.	All	8	0-15	Increasing he value by 1 shifts the image on the paper by approximately 0.5mm towards the papers' leading edge. Increasing the value makes the paper arrive later.	1
♥Key in the value, press the SET key to store or the CLEAR key to reset.						
♠450-0	PFP upper paper alignment (paper buckle) at the main registration roller. Paper length 330mm and longer.	All	14	0-31	Increasing the value by 1 increases the aligning (paper buckle) by 0.9mm.	6
♠450-1	PFP upper paper alignment (paper buckle) at the main registration roller. Paper length 220mm to 329mm.	All	8	0-31	Increasing the value by 1 increases the aligning (paper buckle) by 0.9mm.	6
♠450-2	PFP upper paper alignment (paper buckle) at the main registration roller. Paper length 219mm and less.	All	5	0-31	Increasing the value by 1 increases the aligning (paper buckle) by 0.9mm.	6
♠452-0	PFP middle paper alignment (paper buckle) at the main registration roller. Paper length 330mm and longer.	All	2	0-31	Increasing the value by 1 increases the aligning (paper buckle) by 0.9mm.	6
♠452-1	PFP middle paper alignment (paper buckle) at the main registration roller. Paper length 220mm to 329mm.	All	8	0-31	Increasing the value by 1 increases the aligning (paper buckle) by 0.9mm.	6
♠452-2	PFP middle paper alignment (paper buckle) at the main registration roller. Paper length 219mm and less.	All	5	0-31	Increasing the value by 1 increases the aligning (paper buckle) by 0.9mm.	6
♠Key in Code 450 or 452 press the START key, key in the Sub Code, then press the START key. Key in the value, press SET key to store or the CLEAR key to reset.						
455	Duplexer paper alignment (paper buckle) at the main registration roller.	All	10	0-31	Increasing the value by 1 increases the aligning (paper buckle) by 0.9mm.	1
■456-0	PFP lower paper alignment (paper buckle) at the main registration roller. Paper length 330mm and longer.	All	2	0-31	Increasing the value by 1 increases the aligning (paper buckle) by 0.9mm.	6
■456-1	PFP lower paper alignment (paper buckle) at the main registration roller. Paper length 220mm to 329mm.	All	8	0-31	Increasing the value by 1 increases the aligning (paper buckle) by 0.9mm.	6
■456-2	PFP lower paper alignment (paper buckle) at the main registration roller. Paper length 229mm and less.	All	5	0-31	Increasing the value by 1 increases the aligning (paper buckle) by 0.9mm.	6
■Key in Code 456 press the START key, key in the Sub Code, then press the START key. Key in the value, press SET key to store or the CLEAR key to reset.						
#457	LCF paper alignment (paper buckle) at the main registration roller.	All	16	0-31	Increasing the value by 1 increases the aligning (paper buckle) by 0.9mm.	1
#458	Manual feed paper alignment (paper buckle) amount at he main registration roller.	All	14	0-31	Increasing the value by 1 increases the aligning (paper buckle) by 0.9mm.	1
#459	PFP upper paper alignment (paper buckle) at the PFP upper registration roller.	All	4	0-15	Increasing the value by 1 increases the aligning (paper buckle) by 0.9mm.	1
#460	PFP middle paper alignment (paper buckle) at the PFP middle registration roller.	All	7	0-15	Increasing the value by 1 increases the aligning (paper buckle) by 0.9mm.	1

05 MODE						
CODE	ADJUSMENT	MODE	DEFAULT	RANGE	DESCRIPTION	PROCEDURE GROUP
#461	PFP lower paper alignment (paper buckle) at the PFP lower registration roller.	All	7	0-15	Increasing the value by 1 increases the aligning (paper buckle) by 0.9mm.	1
#462	Duplexer registration roller paper alignment (paper buckle)	All	4	0-15	Increasing the value by 1 increases the aligning (paper buckle) by 0.9mm.	1
464 *	Duplexer end guide shifting amount	All	2	0-3	In stacking of only a few sheets in the case of the following values only, the end guide is moved towards the pickup roller compared with the standard pickup roller position. If the paper is a large size than the standard one or it has much curing or the edges are turned, then if a jam occurs, the position of the end guide is lowered. This will help to decrease the possibility of future jams. 0: A3/LD 0~2mm, other. 0~2mm 1: A3/LD 0~2mm, other. 0~0mm 2: A3/LD 0~4mm, other. 0~2mm 3: A3/LD 0~4mm, other. 0~0mm	1
# Key in the value, press the SET key to store or the CLEAR key to reset.						
▲468-0	Binding position/folding position fine adjustment (A4-R/LT-R)	All	0	-14-14	Position shifts to the right page 0.25mm/step.	6
▲468-1	Binding position/folding position fine adjustment (B4).	All	0	-14-14		
▲468-2	Binding position/folding position fine adjustment (A3/LD)	All	0	-14-14		
469 *	Finisher aligning speed adjustment	All	0	0-4	0: High 1: Middle-high 2: Middle 3: Middle-low 4: Low If the adjustment value is made larger, the finisher aligning speed becomes slower. If the paper exiting to the finisher becomes misaligned or there are staple jams, then only on these occasions these codes should be used.	1
▲ Key in Code 468 press the Start key, key in the Sub Code, then press the START key. Key in the value, press SET key to store or the CLEAR key to reset.						
470	Paper remaining indicator. Automatic adjustment for EMPTY condition. LCF and Drawers.	All	—	0-31	Remove all of the paper from the LCF and PFP, then perform the automatic adjustment.	8

(*) These new codes (464,469) are available from the 8070.

05 MODE						
CODE	ADJUSMENT	MODE	DEFAULT	RANGE	DESCRIPTION	PROCEDURE GROUP
471	Paper remaining indicator. LCF manual adjustment for LESS than 1/2 the capacity. Key in the value, press the START key to store or the CLEAR key to reset.	All	4	0-31	Perform the manual adjustment when the remaining amount of paper is less than 1/2. Perform adjustment code 470 first. Then adjust as necessary. Decrease the value in these codes when the remaining amount of paper indication is slower than the actual amount of paper. Example: When the paper remaining indicator shows "▤" then changes suddenly to "▁"	1
472	Paper remaining indicator. PFP upper manual adjustment for LESS than 1/2 the capacity. Key in the value, press the START key to store or the CLEAR key to reset.	All	10	0-31		
473	Paper remaining indicator. PFP middle manual adjustment for LESS than 1/2 the capacity. Key in the value, press the START key to store or the CLEAR key to reset.	All	10	0-31		
474	Paper remaining indicator. PFP lower manual adjustment for LESS than 1/2 the capacity. Key in the value, press the START key to store or the CLEAR key to reset.	All	10	0-31		
475	Paper remaining indicator. Automatic adjustment for FULL condition. LCF and PFP.	All	—	—	Load 4,000 sheets of paper in the LCC and 500 sheets in the Drawers, then perform the automatic adjustment.	8
△476	Paper remaining indicator. LCF manual adjustment for MORE than 1/2 the capacity.	All	2	0-31	Perform the manual adjustment when the remaining amount of paper is greater than 1/2. Perform adjustment code 475 first. Then adjust as necessary. Increase the value in these codes when the remaining amount of paper indication is greater than the actual amount of paper. Example: When the paper remaining indicator shows "▤" then changes suddenly to "▤"	1
△477	Paper remaining indicator. PFP upper manual adjustment for MORE than 1/2 the capacity.	All	2	0-31		
△478	Paper remaining indicator. PFP middle manual adjustment for MORE than 1/2 the capacity.	All	LT size: 4 A/B size: 8	0-31		
△479	Paper remaining indicator. PFP lower manual adjustment for MORE than 1/2 the capacity.	All	LT size: 7 A/B size: 3	0-31		
△481	Drum motor speed fine adjustment.	Copier	128	0-255	Increasing the value by 1 increases the motor speed by 0.067%. Set value to 128 for the copier and 120 for the printer.	1
△482	Drum motor speed fine adjustment.	Printer	120	0-255		
△483	Registration motor speed fine adjustment.	Copier	128	0-255	Increasing the value by 1 increases the motor speed by 0.097%. Set value to 128 for the copier and printer.	1
△484	Registration motor speed fine adjustment.	Printer	128	0-255		
△485	Fuser drive motor speed fine adjustment.	Copier	128	0-255	Increasing the value by 1 increases the motor speed by 0.061%. Set value to 128 for the copier and printer.	1
△486	Fuser drive motor speed fine adjustment.	Printer	128	0-255		
△487	Transfer belt drive motor speed fine adjustment.	Copier	128	0-255	Increasing the value by 1 increases the motor speed by 0.127%/step (or 0.254mm/step). Refer to the complete adjustment procedure before performing this adjustment.	1
△488	Transfer belt drive motor speed fine adjustment.	Printer	132	0-255		
△489	Pedestal drive motor speed fine adjustment.	Copier	128	0-255	Increasing the value by 1 increases the motor speed by 0.061%. Set value to 128 for the copier and printer.	1
△490	Pedestal drive motor speed fine adjustment.	Printer	128	0-255		

05 MODE						
CODE	ADJUSMENT	MODE	DEFAULT	RANGE	DESCRIPTION	PROCEDURE GROUP
△491	Duplexer drive motor speed fine adjustment.	Copier	128	0-255	Increasing the value by 1 increases the motor speed by 0.148%. Set value to 128 for the copier and the printer.	1
△492	Duplexer drive motor speed fine adjustment.	Printer	128	0-255		
△ Key in the value, press the SET key to store or the CLEAR key to reset.						
▼493-0	Developer drive motor speed fine adjustment. Set to the default value.	Copier (Text/Photo)	6	0-15	Increasing the value by 1 increases the motor speed by 3.85%. Set value to 6.	1
▼493-1	Developer drive motor speed fine adjustment. Set to the default value.	Copier (Text)	6	0-15		
▼493-2	Developer drive motor speed fine adjustment. Set to the default value.	Copier (Photo)	6	0-15		
▼ Key in code 493 press the START key, key in the Sub Code, then press the START key. Key in the value, press the SET key to store or the CLEAR key to reset.						
★495	Developer drive motor speed fine adjustment.	Printer	6	0-15	Increasing the value by 1 increases the motor speed by 3.85%. set value to 6.	1
★501	Manual exposure fine adjustment for the center setting.	Copier (Photo)	128	0-255	Increasing the value darkens the copy at the center setting of manual exposure.	1
★503	Manual exposure fine adjustment for the center setting.	Copier (Text/Photo)	128	0-255		1
★504	Manual exposure fine adjustment for the center setting.	Copier (Text)	128	0-255		1
★505	Manual exposure fine adjustment for the lighter setting.	Copier (Text/ Photo)	20	0-255	Increasing the value lightens the copy at the lighter setting of manual exposure.	1
★506	Manual exposure fine adjustment for the lighter setting.	Copier (Photo)	10	0-255		1
★507	Manual exposure fine adjustment for the lighter setting.	Copier (Text)	30	0-255		1
★508	Manual exposure fine adjustment for the darker setting.	Copier (Text/Photo)	13	0-255	Increasing the value darkens the copy at the darker setting of manual exposure.	1
★509	Manual exposure fine adjustment for the darker setting.	Copier (Photo)	20	0-255		1
★510	Manual exposure fine adjustment for the darker setting.	Copier (Text)	12	0-255		1
★512	Automatic exposure fine adjustment.	Copier (Photo)	128	0-255	Increasing the value darkens the copy at the automatic exposure setting.	1
★514	Automatic exposure fine adjustment.	Copier (Text/Photo)	128	0-255		1
★515	Automatic exposure fine adjustment.	Copier (Text)	128	0-255		1
★ Key in the value, press the SET key to store or the CLEAR key to reset.						
580	Image mode automatic gamma adjustment for error diffusion. The TEST PRINT must be on the exposure glass or ERROR will occur.	Copier	None	None	Automatically corrects the image quality after reading the test print pattern. Before performing this adjustment refer to the complete adjustment.	5
593	Image mode gamma data slope correction. Data adjustment for gamma correction.	Copier (Text/Photo)	0	0-9	Increasing the value darkens the image. 0: Default value is the center value 5 (Same as set value 5). 1-9: Slope correction (the higher the value, the darker the image becomes).	1
594	Image mode gamma data slope correction. Data adjustment for gamma correction.	Copier (Photo)	0	0-9		
595	Image mode gamma data slope correction. Data adjustment for gamma correction.	Copier (Text)	0	0-9		

05 MODE						
CODE	ADJUSMENT	MODE	DEFAULT	RANGE	DESCRIPTION	PROCEDURE GROUP
620	HPF(High Pass Filter) strength setting. Normally set it to 1 this places the filtering in the optimum range for the Text/Photo mode.	Copier (Text/Photo)	1	1 Right digit 0-9 Left digit	Right hand digit (2nd digit entered): 1: Text/Photo (fixed at the optimum level) do not enter values other than 1 for the right hand digit. Left hand digit (1st digit entered): 0: Default value is used 1-9: Increasing the value setting enhances the image sharpness Do not set to values other than these: 1, 11, 21, 31, 41, 51, 61, 71, 81, 91.	1
621	HPF(High Pass Filter) strength setting. Normally set it to 2 this places the filtering in the optimum range for the Photo mode.	Copier (Photo)	2	2 Right digit 0-9 Left digit	Right hand digit (2nd digit entered): 2: Photo (fixed at the optimum level) do not enter values other than 2 for the right hand digit. Left hand digit (1st digit entered): 0: Default value is used 1-9: Increasing the value setting enhances the image sharpness Do not set to values other than these: 2, 12, 22, 32, 42, 52, 62, 72, 82, 92.	1
622	HPF(High Pass Filter) strength setting. Normally set it to 3 this places the filtering in the optimum range for the Text mode.	Copier (Text)	3	3 Right digit 0-9 Left digit	Right hand digit (2nd digit entered): 3: Text (fixed at the optimum level) do not enter values other than 3 for the right hand digit. Left hand digit (1st digit entered): 0: Default value is used 1-9: Increasing the value setting enhances the image sharpness Do not set to values other than these: 3, 13, 23, 33, 43, 53, 63, 73, 83, 93.	1

<Procedure>

Group 1

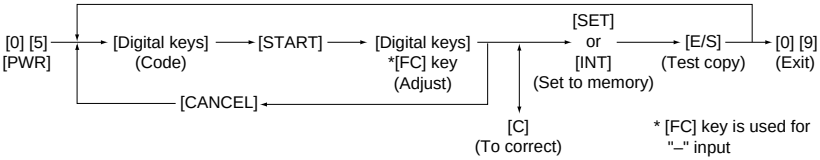

Group 2

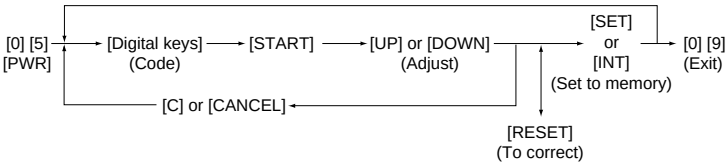

Group 3

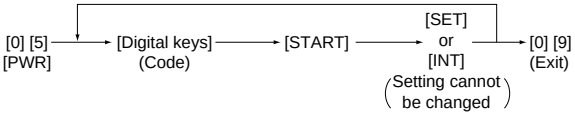

Group 4

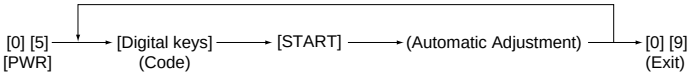

Group 5

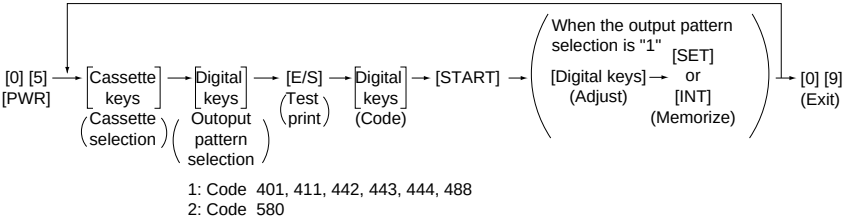

1: Code 401, 411, 442, 443, 444, 488
2: Code 580

Group 6

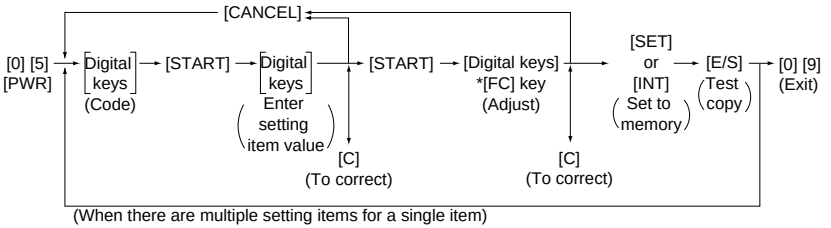

(When there are multiple setting items for a single item)

*[FC] key is used for "–" input

Group 7

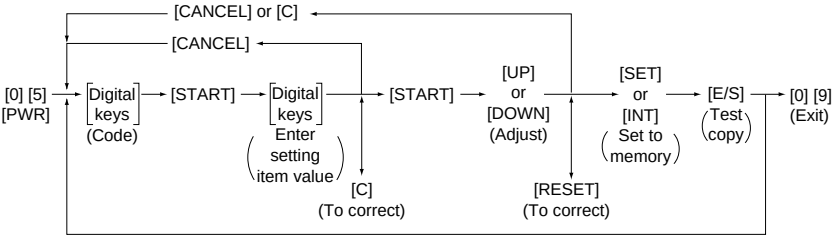

(When there are multiple setting items for a single item)

Group 8

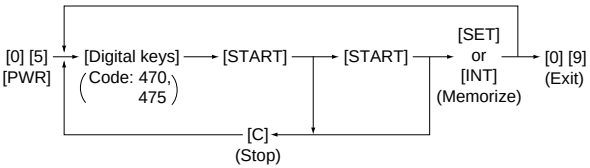

1.2.5 Setting mode (08)

In this mode, the various special modes listed in the Setting Code List can be set or changed.

<Procedure>

Group 1

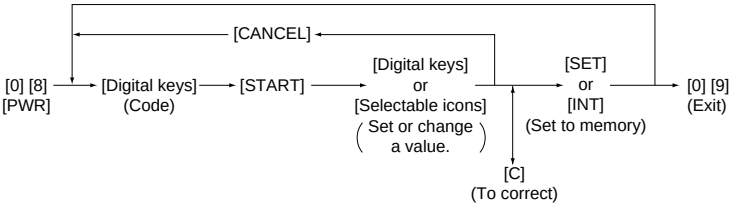

Group 2

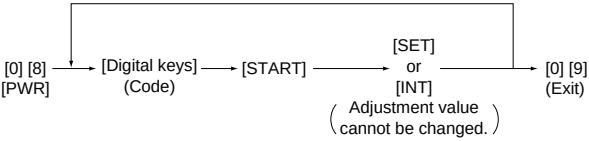

Group 3

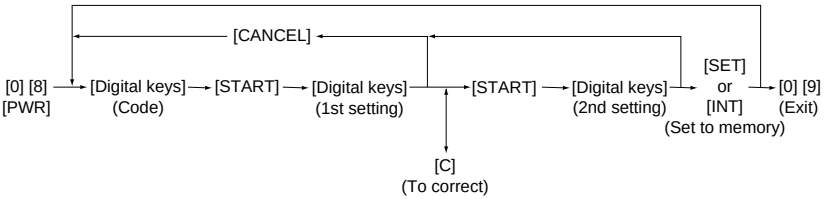

08 MODE							
CODE	NAME	MODE	IMAGE MODE	DEFAULT	ALLOWABLE INPUT VALUES	CONTENTS	PROCE-DURE GROUP
200	Date and time setting	All			13 digits	Year/month/date/day/hour/minute/second Example: 99:08:07:5:11:30:48	1
201	Country paper size change.	All		0/1	0-2	0: Europe (A4/A3/Follio) 1: USA/Canada (Letter/Ledger) 2: Japan (A4/B4)	1
202	Externally installed copy counter/control device	All		0	0-3	Function Clear	
						0: No external copy counter/control device — Not applied 1: Coin controller — Not applied 2: Copy key card — Applied 3: Key counter — Applied	1
						* Condition for Function Clear 2: when card is pulled out 3: when key copy counter is pulled out	
203	Line adjustment mode	All		0	0-1	0: factory shipment 1: for line *Field: Indispensable "0" *When exchanging K-SRAM: needed check	1
204	Clear control panel settings and return to default settings time out	All		3	0-10	0: Disabled 1 to 10: Set number X 15 seconds	1
205	Timer for switching from Readymode to Energy Saver mode.	All		11: JPN 11: UC 11: EUR 0: Others	0-15	0: Disabled 1: 30 sec. 2: 60 sec. 3: 90 sec. 4: 120 sec. 5: 150 sec. 6: 3 min. 7: 4 min. 8: 5 min. 9: 7 min. 10: 10 min. 11: 15 min. 12: 20 min. 13: 30 min. 14: 45 min. 15: 60 min.	1
206	Timer for switching from Ready mode to Auto-Power Shut OFF. US Energy Star Compliance.	All		12: JPN 12: UC 12: EUR 20: Others	0-20	0: 3 min. 1: 5 min.. 2: 10 min. 3: 15 min. 4: 20 min. 5: 25 min.. 6: 30 min. 7: 40 min. 8: 50 min. 9: 60 min. 10: 70 min. 11: 80 min. 12: 90 min. 13: 100 min. 14: 110 min. 15: 120 min. 16: 150 min. 17: 180 min. 18: 210 min. 19: 240 min. 20: Disabled	1
209	Timer for Print job start up time from copy mode	All		1	1-10	1 to 10 Set number X 15 seconds	1
220	Message display language priority.	All		0	0-2	0: English 1: French 2: Spanish After setting the desired language turn the machine power OFF then ON to change the current language in the display. Note: the customer can change the language from the display using the ADJUST icon key.	1
223	Copy or Printer priority mode.	All		0	0-1	0: Copy Mode can interrupt the Print mode during a print job. 1: Copy Mode cannot interrupt the Print Mode during a print job.	1
224	Bypass paper size selection.	All		0-255	Undefined	Select a paper size from the display ICON list of paper sizes. The range changes with the paper size selected.	1
225	LCF upper paper size selection.	All		0-255	Letter		
226	PFP upper paper size selection.	All		0-255	Letter-R /A4-R		
227	PFP middle paper size selection.	All		0-255	Legal/A3		
228	PFP lower paper size selection.	All		0-255	Ledger/A4		
229	Paper size A3 length/width	All		420 X 297	182~432 X 140~297	420 X 297mm	3
230	Paper size A4-R length/width	All		297 X 210	182~432 X 140~297	297 X 210mm	3
231	Paper size A5-R length/width	All		210 X 148	182~432 X 140~297	210 X 148mm	3
232	Paper size B4 length/width	All		364 X 257	182~432 X 140~297	364 X 257mm	3
233	Paper size B5-R length/width	All		257 X 182	182~432 X 140~297	257 X 182mm	3

08 MODE							
CODE	NAME	MODE	IMAGE MODE	DEFAULT	ALLOWABLE INPUT VALUES	CONTENTS	PROCE-DURE GROUP
234	Paper size Letter-R length/width	All		279 X 216	182~432 X 140~297	279 X 216mm	3
235	Paper size Ledger length/width	All		432 X 279	182~432 X 140~297	432 X 279mm	3
236	Paper size Legal length/width	All		356 X 216	182~432 X 140~297	356 X 216mm	3
237	Paper size ST-R length/width	All		216 X 140	182~432 X 140~297	216 X 140mm	3
238	Paper size Computer length/ width	All		356 X 257	182~432 X 140~297	356 X 257mm	3
239	Paper size Folio length/width	All		330 X 210	182~432 X 140~297	330 X 210mm	3
240	Paper size 13 inch Legal (Officio) length/width	All		330 X 216	182~432 X 140~297	330 X 216mm	3
241	Paper size 8.5 X 8.5 inch square length/width	All		216 X 216	182~432 X 140~297	216 X 216mm	3
242	Paper size Universal length/ width	All		432 X 279	182~432 X 140~297	When setting the Universal paper size, remember that the size entered here will limit the maximum size paper the customer can load in a drawer when the Universal paper size is selected from the display.	3
250	Telephone number for "CALL FOR SERVICE"	All		0	14 digits	A telephone number up to 14 digits can be entered. Use the HELP key to enter hyphens (-).	1
251	PM (Preventative Maintenance) counter setting value.	All		400000	0-99999999	Set the counter to the amount of copies/prints that the customer wants to have preventative maintenance performed at. Note: When this counter is set to 0 the counter in code 252 will not count up, it remains at 0.	1
252	PM (Preventative Maintenance) counter Current value.	All		0	0-99999999	Set to 0 after the PM is performed. When code 251 is set to 0, this counter will remain at 0.	1
253	Error code history display.	All		—	—	See page from 1-1 to 1-4 for complete error code history information.	2
300	Maximum number of copies allowed.	Copier		0	0-2	0: 999 1: 99 2: 9	1
302	Resettable Copy and Original counter display.	All		0 3:EUR	0-3	0: off 1: Resettable Copy counter 2: Resettable Original counter 3: Resettable Copy and Original counters	1
351	Electronic total copy/print counter.	All		0	0-99999999	Electronic counter counts all copies and prints including all test mode copies. Note: The mechanical counter only counts the customers' copies and prints not test mode copies or prints.	1
352	Ledger/A3 double count.	All		0:6570 5570 4580 1:8070	0-1	0: Single count (count LD or A3 copies and prints as a 1 page) 1: Double count (count LD or A3 copies and prints as 2 pages)	1
353	Short size counter	All		0	0-99999999	Each counter can be set to 0 (zero) or any other value. When set to 0 this will accurately record the number of pages from each area from the last PM or service call. The counter information can also be supplied to the customer for tracking the usage of an area of the machine.	1
354	Long size counter	All		0	0-99999999		
358	Bypass counter	All		0	0-99999999		
359	LCF counter	All		0	0-99999999		
360	PFP upper counter	All		0	0-99999999		
370	PFP middle counter	All		0	0-99999999		
371	PFP lower counter	All		0	0-99999999		
372	Duplexer counter	All		0	0-99999999		
374	RADF original counter	All		0	0-99999999		
375	Copy job counter	All		0	0-99999999		
376	Pint job counter	All		0	0-99999999		

08 MODE							
CODE	NAME	MODE	IMAGE MODE	DEFAULT	ALLOWABLE INPUT VALUES	CONTENTS	PROCE-DURE GROUP
382	LCF tray lockout counter. Note: For tray lockout clearing to take effect set to 0, then turn the machinepower switch x machine ON.	All		0	0-1	The LCF tray operation is displayed when there is a problem detected with the tray raising or lowering. The machine logic disables the LCF tray movement by placing a 1 in the memory at code 382. To enable the LCF set code 382 to 0 and determine the cause of the LCF tray movement problem.	1

08 MODE							
CODE	NAME	MODE	IMAGE MODE	DEFAULT	ALLOWABLE INPUT VALUES	CONTENTS	PROCE-DURE GROUP
390	HDD (Hard Disk Drive) error counter Note: Only the counter value can be displayed. A value cannot be entered or changed.	Copier		0	0-32767	When an internal problem with the HDD occurs, an error is recorded in the memory at code 390. When too many errors occur, it is then necessary to replace the HDD.	2
393	HDD (Hard Disk Drive) machine (system) error counter Note: Only the counter value can be displayed. A value cannot be entered or changed.	Copier/ Printer (system)		0	0-32767	When there is a problem communicating to the HDD through the machine interfaces an error is recorded in memory in code. When this occurs often, the machine interface cables and PWA's that provide communications to the HDD must be checked and replaced as necessary.	2
400	Thermistor status counter To clear enter 0 then press SET or INTERRUPT. Note: Entering a value other than 0 will create a "CALL FOR SERVICE" condition.	All	All	0	0-9	0: No error 1: C41 occurred once 2: C41 occurs continuously 3: C46 error 4: C43 error 5: C44 error 6: C43 error 7: C44 error 8: C45 error 9: C44 error See the trouble shooting section for additional information.	1
401	Drum counter	All	All	0	0-99999999	Set this counter to 0 anytime the drum is replaced. The count is determined by the amount of time the drum drive motor runs.	1
404	Developer counter	All	All	0	0-99999999	Set this counter to 0 anytime the material is replaced. The count is the total of all copies and prints, including all test mode copies and prints.	1
407	Fuser pre-running time. The time allowed for the fuser to rotate during the warm up mode.	All	—	8	0-14	0: 120 sec. 1: 135 sec. 2: 150 sec. 3: 165 sec. 4: 180 sec. 5: 195 sec. 6: 210sec. 7: 225 sec. 8: 240 sec. 9: 255 sec. 10: 270 sec. 11: 285 sec. 12: 300 sec. 13: 315 sec. 14: 330 sec.	1
410	Fuser temperature in the Print mode.	Printer	—	8	0-15	0: 173°C 1: 180°C 2: 183°C 3: 186°C 4: 189°C 5: 192°C 6: 195°C 7: 198°C 8: 200°C 9: 203°C 10: 206°C 11: 209°C 12: 212°C 13: 215°C 14: 218°C 15: 221°C	1
411	Fuser temperature when the copier is Ready.	All	All	8	0-15	0: 173°C 1: 180°C 2: 183°C 3: 186°C 4: 189°C 5: 192°C 6: 195°C 7: 198°C 8: 200°C 9: 203°C 10: 206°C 11: 209°C 12: 212°C 13: 215°C 14: 218°C 15: 221°C	1
412	Fuser temperature in the ENERGY SAVER mode	All	—	3	0-15	0: 160°C 1: 164°C 2: 167°C 3: 170°C 4: 173°C 5: 180°C 6: 183°C 7: 186°C 8: 189°C 9: 192°C 10: 195°C 11: 198°C 12: 200°C 13: 203°C 14: 206°C 15: 210°C	1

08 MODE							
CODE	NAME	MODE	IMAGE MODE	DEFAULT	ALLOWABLE INPUT VALUES	CONTENTS	PROCE-DURE GROUP
414	Developer powder life control switching	All		0	0-4	0:X-10bit 1:X-14bit 2:X-20bit 3:X-30bit 4:X X: Correction control value before the following versions PRA-300M-09 PRA-302M-03 PRA-304M-01	1
418	Charge corona wire cleaning	All		0	0-1	0: Enabled (cleans every 2,000 copies/prints) 1: Disabled (no cleaning)	1

08 MODE							
CODE	NAME	MODE	IMAGE MODE	DEFAULT	ALLOWABLE INPUT VALUES	CONTENTS	PROCE-DURE GROUP
449	Temporary laser running service mode when the laser beam position adjustment fails. Key in the value, press the SET key to store or the CLEAR key to reset. Set to 1 until copier laser unit can be replaced. Service call Error Codes CA3, CA4, CA5, CA6, CAA, CAB, CAC, CAD, CAE, CAF, or CD0. See troubleshooting section for additional information.	All		0	0-1	0: Normal Mode the laser unit operates in this mode unless a service call is indicated when the beam position adjustment fails. 1: Continuous Mode Set to this mode when the laser beam adjustment has failed. The results of this setting places the laser beam close to target even though the beam position adjustment has failed.	1
460	RADF reversing of transfer belt during original feed to align originals against the original stop.	All		0	0-1	0: Disabled 1: Enabled	1
461	RADF automatic detection of the original size.	All		0	0-1	0: Non-standard(Machine will not stop and prompt operator to select copy size when non-standard originals are used). 1: Standard(Machine will stop and prompt operator to select copy size when non-standard originals are used).	1
464	Correspondence for Exposure fluetuations	All		1	0-1	0: Disabled 1: Enabled	1
480	Paper source priority selection	All		1	0-4	0: LT/A4 1: LCC 2: Upper drawer 3: Middle drawer 4: Lower drawer	1
481	Automatic paper source change.	All		1	0-2	0: OFF 1: Normal 3: Extended when 1 is set, a paper source becomes empty and the same size paper is present in another source the machine will automatically switch to that source of paper.	1
482	Paper feed retry.	All		0	0-1	0: Enabled 1: Disabled when set to 0 the machine will only attempt to feed the paper 1 time before display a misfeed condition. When set to 1 the machine will attempt to feed the paper 2 times before displaying a misfeed condition.	1
483	Polygonal motor pre-running.	All	All	0	0-2	0: Enabled - RADF (when originals are placed in the tray) and Exposure Glass (when RADF is lifted). 1: Disabled - Motor starts running when the START key is pressed. This will delay the start of copying by 30 seconds. 2: Enabled - RADF only (when originals are placed in the tray) Note: This code is effective only when 08-485 is set to 1.	1
484	Polygonal motor stops at an auto clear (time out) of control panel settings.	All	All	0	0-1	0: Enabled - RADF and exposure glass. 1: Disabled Note: This code is effective only when 08-485 is set to 1.	1
485	Polygonal motor rotation or stop mode.	All	All	0	0-1	0: Rotation 1: Stop When Code 485 is set to 1 the polygonal motor runs all the time. When Code 485 is to 1 the polygonal motor runs according to the settings of Codes 483 and 486.	1
486	Polygonal motor stop time	All	All		0-2	0: 1 minute 1: 3 minutes 2: 5 minutes Effective when 08-484 is set to 0.	1
487 *	Duplexer initial alignment operation	All		0	0-1	0: Enabled 1: Disabled Correct the side skew and the paper corner folding within three copies. If default 1 is selected, the copying speed is a little lower than normal.	1

(*) These new codes (487, 488) are available from the 8070.

08 MODE							
CODE	NAME	MODE	IMAGE MODE	DEFAULT	ALLOWABLE INPUT VALUES	CONTENTS	PROCE-DURE GROUP
488 *	Alignment of the system ROM and the printer ROM	All		0	0-1	When the alignment between the FROM on the SYS Board and MROM on the LGC Board is wrong, this code should be used for preventing operation error. (Note) Production before March, 2000 Default: 0 Old version Production after April, 2000 Default: 1 New version	1
503	Exposure priority power on.	Copier	All	0	0-1	0: Automatic exposure 1: Manual exposure	1
550	Image mode priority	Copier	All	0	0-2	0: Text/Photo 1: Photo 2: Text	1
600	Electronic access code. Note: When this is enabled it does not provide Electronic Access control for the Print mode.	Copier	All	0	0-1	0: Disabled 1: Enabled How to set the Electronic Access Codes is provided in the separate operators manual that is included with the copier at the time of shipping. The information is also provided in this service manual.	1
602	Automatic Energy Saver Icon Automatic Power OFF Icon	All	All	0: Australia Taiwan Saudi Arabia Asian Region 1: JPN, UC, EUR	0-1	0:OFF - Icons are NOT in the display. The customer cannot adjust the Energy Saver and Auto Power Off times. They can only be set by a service technician using 08-205 and 08-206. 1: ON - Icons are in the display. The customer can adjust the Energy Saver and Power OFF times.	1
603	Automatic duplexing mode	Copier	All	0	0-3	0: Displayed 1: Single sided to Double sided 2: Double sided to Double sided 3: User selection	1
604	APS (Auto Paper Size) AMS (Auto Magnification Selection) Mode priority at power on.	Copier	All	0	0-2	0: APS mode 1: AMS mode 3: None	1
607	RADF priority mode at power on.	Copier	All	0	0-1	0: START key (place originals in the tray then press the START key). 1: Auto Start (machine automatically starts copying when originals are placed 1 at a time in the RADF).	1
611	Book double-sided original selection	Copier	All	0	0-1	0: Opening book (copying) from front 1: Opening book (copying)) from back	1
613	User paper size selection for the OTHER key. Note : The customer can change the paper size using the adjust selections.	Copier	All	EUR: FOLIO UC : COMPUTER	0-255	Select the Icon of the paper size requested.	1
618	Mixed size originals priority selection. Note: For USA only Letter-R and Legal size originals can be mixed. For Europe only A4 and A3 size originals can be mixed.	Copier	All	0	0-1	0: Same size originals 1: Mixed originals	1
625	Non-printed sheet prevention mode	Copier		0	0-1	0: Disabled 1: Enabled	1

(*) These new codes (487, 488) are available from the 8070.

08 MODE							
CODE	NAME	MODE	IMAGE MODE	DEFAULT	ALLOWABLE INPUT VALUES	CONTENTS	PROCE-DURE GROUP
626	Bypass feed paper size recognition	Copier	All	1	0-1	0: Disabled 1: Enabled	1
636	Image shift copying width setting singly (linkage of front side and back side)	All		0	0-1	0: Enabled 1: Disabled	1
638	Paper size change in drawer or LCC enable	Copier	All	2	0-2	0: All menu operations allowed 1: All menu operations prohibited 2: Sheet cassette selectable	1
639	Date and Time display	Copier	All	0	0-1	0: Disabled 1: Enabled	1
640	Date format	Copier	All	0: Japan 1: Europe 2: UC, Others	0-2	0: 1999.10.16 1: 16.10.1999 2: 10.16.1999	1
641	Automatic sorting mode from the RADF.	Copier	All	2	0-3	0: OFF 1: STAPLE 2: SORT 3: STACK	1
642	Finisher mode priority selection at power on.	Copier	All	0	0-3	0: NON SORT 1: STAPLE 2: SORT 3: STACK	1
645	Reproduction ratio in the editing mode.	Copier	All	10	0-10	0: 90% 3: 93% 6: 96% 9: 99% 1: 91% 4: 94% 7: 97% 10: 100% 2: 92% 5: 95% 8: 98%	1
646	2 on 1 and 4 on 1 placement of images.	Copier	All	0	0-1	0: Horizontally centers the 2 on 1 images. 1: Vertically centers 4 on 1 images.	1
648	Finisher tray reset	All		0	0-1	0: Disabled 1: Enabled	1
649	Magazine sort	Copier	All	0	0-1	0: Opening from the front of the book. 1: Opening from the rear of the book.	1
650	2 on 1 and 4 on 1 order of image placement.	Copier	All	0	0-1	0: Forward image placement 1: Reverse image placement	1
651	Page Numbering	Copier	All	0	0-3	Hyphen / White area provided on black Solids for number 0: OFF / OFF 1: ON / OFF 2: OFF / ON 3: ON / ON hyphen = -1- Example of Hyphen and White area	1
652	Cascade operation setting	Copier		0	0-1	0: OFF 1: ON	1
653	Cascade operation setting	Printer		0	0-1	0: OFF 1: ON	1
657	Annotation default direction when the power is turned on.	Copier	All	0	0-1	0: Short edge 1: Long edge	1
658	Restart setting when supplying paper during the bypass feeding job.	Printer		0	0-1	0: Disabled 1: Enabled	1
680	SCSI ID setting.	DSS		0	0-15		1
681	Tandem copy setting	DSS		0	0-1	0: Disabled 1: Enabled	1
682	Language supported by SC-2	DSS	—	0	0-1	0: Enabled 1: Disabled (English fixing)	1
690	HDD formatting (Hard Disk Drive). Perform the formatting when the HDD is replaced or the data has been corrupted.	All	—	—	2-4	2: DSI Type formatted. The power switch must be turned OFF/ON after the “WAIT” message is no longer displayed. 3: Tandem type formatted. 4: Only Tamdem area formatted.	1
691	HDD Type display	All	—	—	0-3	0 : Not formatted. 1 : Not used. 2 : DSI Type formatted. 3 : Tandem type formatted. This item is added from the 8070. Power must be turned OFF after "WAIT" is cleared.	2

08 MODE							
CODE	NAME	MODE	IMAGE MODE	DEFAULT	ALLOWABLE INPUT VALUES	CONTENTS	PROCE-DURE GROUP
692	HDD size display	All		—	—	X.X GB	2
800	Toner adhesion amount sensor error count/clear	All		0	0-16		1
802	Image quality maintenance control ON/OFF	All		0	0-1	0: ON 1: OFF	1
803	Image quality maintenance control startup count setting	All		2	0-30	unit : X1,000 sheets	1

08 MODE							
CODE	NAME	MODE	IMAGE MODE	DEFAULT	ALLOWABLE INPUT VALUES	CONTENTS	PROCE-DURE GROUP
805	Test pattern data-1 setting	All		88	0-255		1
814	Toner adhesion amount sensor abnormal value	All		97	0-255		1
900	Displays the System FLASH ROM version for all 6 programs data.	All	—	—	—	JPN : T300SJXXXX UC : T300SUXXXX EU : T300SEXXXX Others: T300SXXXX	2
903	Displays the Main Logic EPROM version	All	—	—	—	30*M-XXX	2
904	Displays the Laser Logic EPROM version	All	—	—	—	300L-XXX	2
905	Displays the Scanner Logic EPROM version	All	—	—	—	300S-XXX	2
921	Displays the System Logic FLASH ROM program data version.	All	—	—	—	VXXX.XXX Example : V006.148 U	
922	Displays the System Logic FLASH ROM Fixed UI (User interface) data fixed area version.	All	—	—	—	VXXX.XXX Example : V006.000 0	
923	Displays the System Logic FLASH ROM Common UI (User interface) data common area version.	All	—	—	—	VXXX.XXX Example : V005.000 0	
924	Displays the System Logic FLASH ROM 1st language UI (User interface) data version.	All	—	—	—	VXXX.XXX Example : V010.001 3	
925	Displays the System Logic FLASH ROM 2nd language UI (User interface) data version.	All	—	—	—	VXXX.XXX Example : V006.000 0	
926	Displays the System Logic FLASH ROM 3rd language UI (User interface) data version.	All	—	—	—	VXXX.XXX Example : V004.001 11	

Supplementary:

(1) Mode "08-203"
When the K-SRAM as a service part is installed, the setting mode "08-203" must be changed at "0". When it is set at "1" the copier may not be able to operate.

(2) Mode "08-449"
Due to the error of an optical component such as the galvanomirror or an error caused by the passing time of the housing, if the beam positioning adjustment is not finished correctly, an temporary countermeasure will be brought about and a mode in which printing can continue to operate be applied. (if the HSYNK is not taken, printing is impossible).
If there is an error in the galvanomirror, then correction control is not performed and "Service Call" is displayed so the copier stops. When image deterioration is allowable, copier can be used without any judgement as to whether adjustment has been finished or not. This can continue until a replacement unit is available and service technician can use this mode for that purpose.

(3) Mode "08-658"
If paper runs out during printing with the bypass, "automatic start or not" is set after paper has been added to the bypass.

(4) Mode "08-653, 658, 680"
To use these codes, each function should be mounted in advance.

(5) Mode "08-202"
Function clear when there is no key copy counter. When the key copy counter or the card is pulled out, all the setting contents will be cleared. Only when the setting value of 08/202 is 2 or 3, this funcion is effective.

1.2.6 How to register/change ID codes (Access control mode)

When ID codes are registered, copies made will be classified according to each ID code. The copier will not start unless one of the ID codes registered is keyed in.

<Preparation to enter the access control mode>

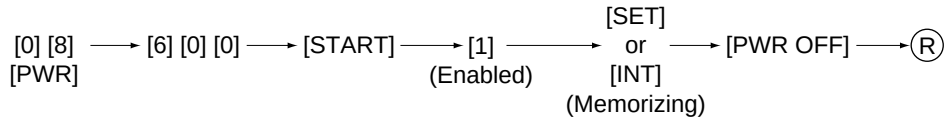

Procedure to register ID codes:

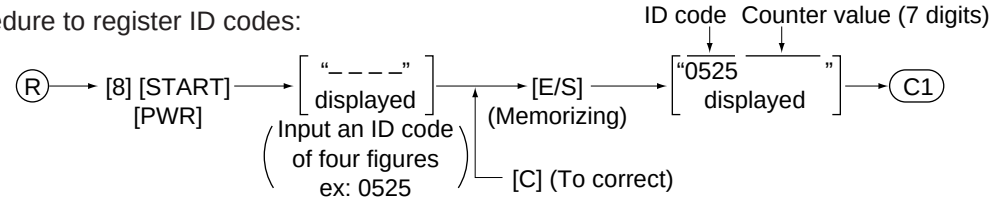

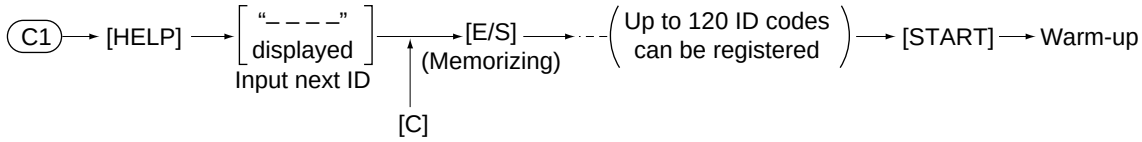

Procedure to change ID codes:

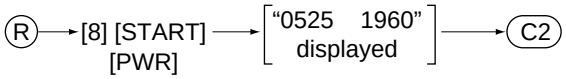

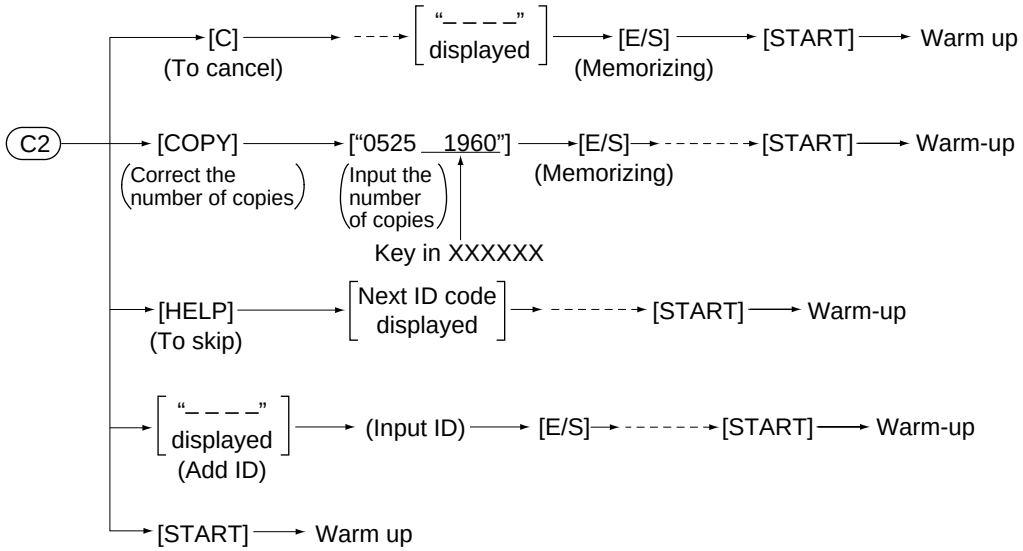

1.3 Formatting the Hard Disk

<Procedure>

(1) Turn the power switch ON while pressing [0] and [8] keys simultaneously.
(2) Make sure that the display indicates the system mode, enter the code [690] and press the [START] key.
(3) Next, input [2] and press the [INT] key.
(4) “Wait” appears on the display.
(5) When “wait” disappears, turn the power switch OFF.

1.4 Auto-Toner Sensor Adjustment

Note: Before performing this adjustment, make sure that the main blade is pressed against the drum.

<Procedure> (Use code "200" in the "05" mode.)

(1) Install the process unit to the copier (main blade contacts with drum).

(2) Press the keys [0] and [5] at the same time and turn on the power switch.
The following display appears indicating that the adjustment mode has been entered.

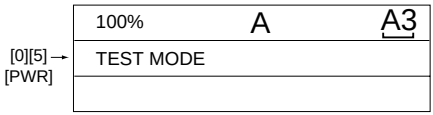

(3) Enter [200] using the digital keys and press the [START] key.
The following display will appear.

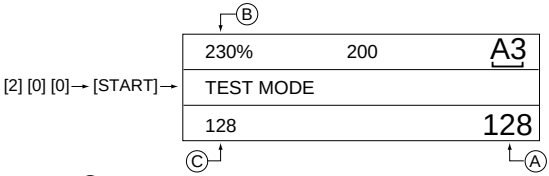

Note: Ⓐ: Indicates the control data value of the auto-toner sensor output. Use the Up, Down icon to change the numerical values.
Ⓑ: The above display indicates an output voltage of 2.30V.
Ⓒ: Indicates the latest adjustment value.
The drum, developer unit, etc., are operating at this time.

(4) After approximately two minutes, the Ⓑ on the message display will automatically start changing.

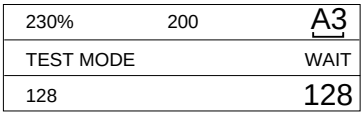

(5) After a short time, the Ⓑ on the message display will automatically stop changing and, at the same time, the message will also change as shown below, indicating that the auto-toner adjustment has finished completely.

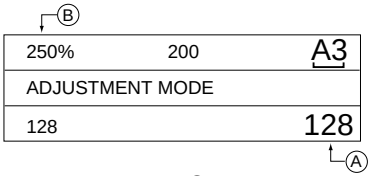

(6) In this status, check if the numerical value in Ⓑ is within the range of 245 ~ 255 (auto-toner sensor output range of 2.45 V ~ 2.55 V).

(7) If the numerical value in Ⓑ is not within the range of 245 ~ 255, use the Up, Down icon to adjust the numerical values manually to within the range of 245 ~ 255.

Note: The relationship between the icon and the numerical values in Ⓐ and Ⓑ is as shown below.

Key used	Ⓐ value	Ⓑ value
Up icon	Increase	Increase
Down icon	Decrease	Decrease

(8) Press the [SET] icon or the [INTERRUPT] key.
The drum, developer unit, etc., will stop operating and the following will be displayed.

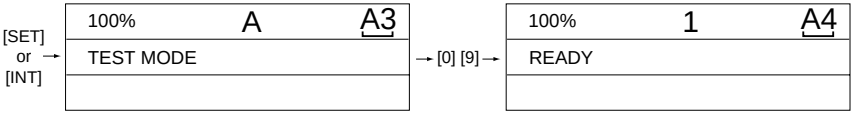

(9) Simultaneously press [0] and [9] to exit the adjustment mode.

1.5 Print Image Adjustment

As for the print image adjustment, the adjustment items are listed below.
The adjustment should be performed in the following order.

Adjustment Item	Code
(1) Aligning value	(450) ~ (458)
(2) Printer unit adjustment	
a) Primary scanning reproduction ratio Polygonal motor 600 dpi/Printer	(401)
b) Primary scanning position Laser write start position	(411) (410)
c) Secondary scanning reproduction ratio Transfer belt speed adjustment/Printer	(488)
d) Secondary scanning position Laser write start position	(443) (444) (442)
(3) Scanner unit adjustment	
a) Image distortion	–
b) Primary scanning reproduction ratio Polygonal motor 600 dpi/PPC	(405)
c) Primary scanning position CCD primary scanning deviation	(306)
d) Secondary scanning reproduction ratio Scanner secondary scanning reproduction ratio	(340)
e) Secondary scanning position Scanner secondary scanning deviation	(305)
f) Top margin	(430)
g) Right margin	(432)
h) Bottom margin	(433)

[How to Enter Adjustment Values]

Follow the procedure below to adjust each of the adjustment values so that the measurement values obtained from the test copy satisfy specification values. After starting up in adjustment mode "05", only single-sided test copies (in the regular copy mode) can be made with the [ENERGY SAVER] key.

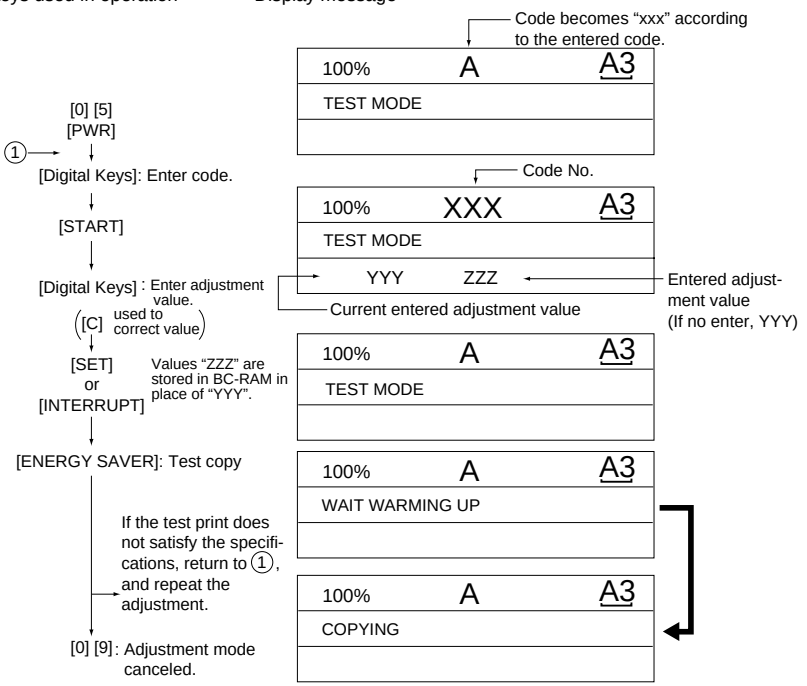

1.5.1 Adjustment of paper aligning value

If necessary, you can extend the feed roller life slightly by increasing the paper aligning value as a temporary measure.

<Procedure> (Use code 450~458 in the test mode "05".)

Copier cassette (PFP)					
Upper (Long)	Middle (Long)	Lower	Duplexer	LCF	Manual feed
(450)	(452)	(456)	(455)	(457)	(458)

(1) [0] [5] [PWR] → [4] [5] [0] (Cassette code) → [START] → (About No.450, 452, 456) [Digital keys] (Setting item value) → [START] → [0] [8] (Current value display) → [1] [5] (New value input) → [SET] or [INT] (Memory set) → [Cassette] → [E/S] (Test copy) → [0] [9]

(2) Check the copy for image void and if there is any, reduce the new value to "31" → "30" → "29"… until no void occurs. Check for paper misfeeding.
When the aligning value is increased, noise caused by the paper scraping against the mylar may possibly be increased.

(3) The same procedure can be used for the Duplexer, LCF and manual feed.

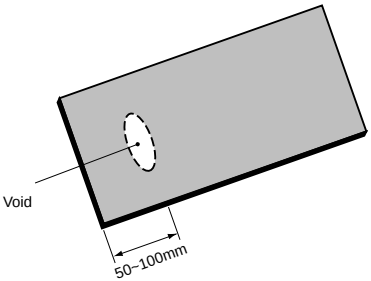

Note: When frequent paper jams occur near the aligning roller caused by using special thin paper other than that specified, the aligning value can be changed (reduced) as a measure. However, when the aligning value is reduced excessively, this may cause the deviation of leading edge registration. Therefore, make sure that no deviation occurs while adjusting the value.

1.5.2 Adjusting the printer section

(a) Polygonal motor 600 dpi (Primary scanning reproduction ratio of the printer unit)
Follow the procedure below to make a test print (Paper source: LCF, Paper size: A4/LT).
(1) [0] [5] + [PWR] ON → [1] → [E/S] →①
(Digital keys)
(2) Measure the distance "A" the distance between the 1st line and 21st line.
(3) In order to set the distance "A" to 200 mm ± 0.5 mm, adjust using the following steps:
① → [401] → [START] → Set the value → [INT] key or LCD [SET] icon (Carry out the same in the following.) → [1] → [E/S] → ①
* An increase in the value makes the reproduction scale (distance "A") longer (0.05mm/STEP).

Notes: 1. Before making a test print, make sure that [100% A] is appeared on the top of the message display after the [SET] icon or the [INT] key is pressed, and then make a test print.
2. The effective adjustment value is within the range 86 to 168. The default adjustment value is 128.

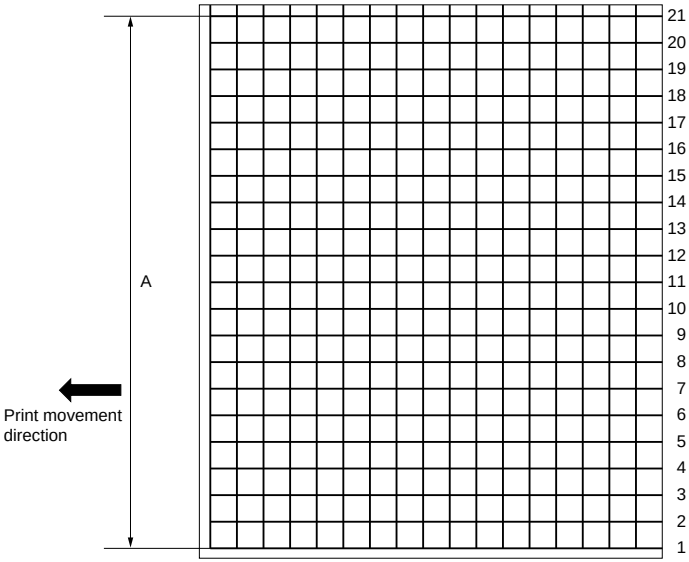

(b) Laser write start position (primary scanning)

Follow the procedure below to make a test print (Paper source: LCF, size: A4/LT).

(1) [0] [5] + [PWR] ON → [1] → [E/S] → ①
(Digital keys)

(2) Measure the distance "B" the distance from the edge of the test print paper to the 6th line.

(3) In order to set the distance "B" to 52 mm ± 0.5 mm, adjust using the following steps:

① → [411] → [START] → Set the value → [SET]/[INT] → [1] → [E/S] → ①

* An increase in the value makes the distance "B" longer (in increments of 0.0423 mm/step).

② [0] [5] + [PWR] ON → [410] → [START] → Value set in ① → [SET]/[INT] → [PWR] OFF

Notes: 1. Before making a test print, make sure that [100% A] is appeared on the top of the message display after the [SET] icon or the [INT] key is pressed, and then make a test print or turn [PWR] OFF.

2. The effective adjustment value is within the range 0 to 255. The default adjustment value is 128.

3. Take notice that the first line may be illegible or invisible in some cases.

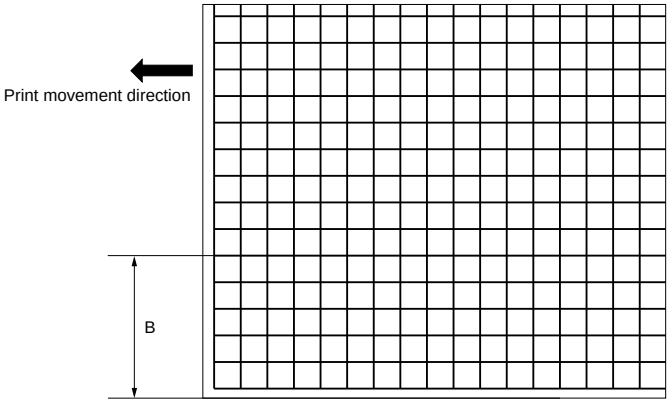

(c) Transfer belt speed adjustment/printer (Secondary scanning reproduction ratio)

Follow the procedure below to make a test print (PFP middle or lower cassette, A3/LD).

(1) [0] [5] + [PWR] ON → [1] → [E/S] → ①
(Digital keys)

(2) Measure the distance "A" the distance between the 5th line and 25th line.

(3) In order to set the distance "A" to 200 mm ± 0.5 mm, use following steps to make the adjustment:
① → [488] → [START] → Set the value → [SET] or [INT] → [1] → [E/S] → ①
*An increase in the value makes the reproduction scale (distance "A") longer (in increments of 0.25mm/step).

Notes: 1. Before making a test print, make sure that [100% A] is appeared on the top of the message display after the [SET] icon or the [INT] key is pressed, and then make a test print.
2. The effective adjustment value is within the range 1 to 255.
The default adjustment value is 128.

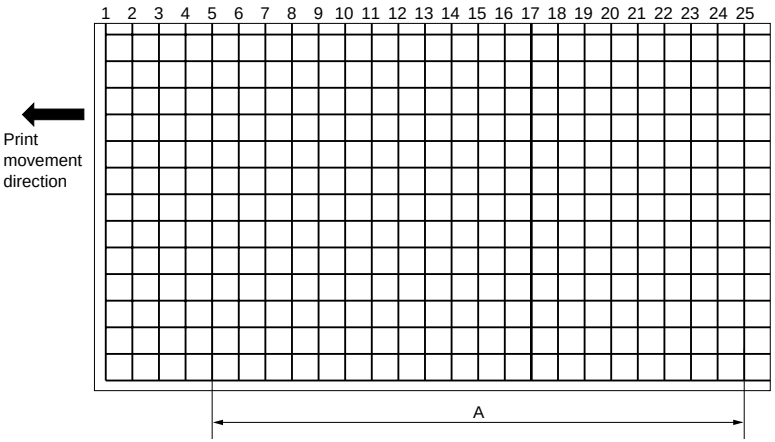

(d) Laser write start position (secondary scanning)

<Adjustment Order>	(Code)	(Paper size)
LCF	(443)	A4/LT
↓		
PFP middle/lower	(444)	A3/LD
↓		
Manual feed	(442)	A3/LD

<Procedure>

Follow the procedure below to make a test print.

(1) [0] [5] + [PWR] ON → [1] → [E/S] → ①
(Digital keys)

(2) Measure the distance "B" the distance from the edge of the test print paper to the 6th line.

(3) In order to set the distance "B" to 52 mm ± 0.5 mm, use the following steps:

① → [Code] → [START] → Set the value → [SET]/[INT] → [1] → [E/S] → ①

*An increase in the value makes the blank space (distance "B") shorter (in increments of 0.5 mm/STEP).

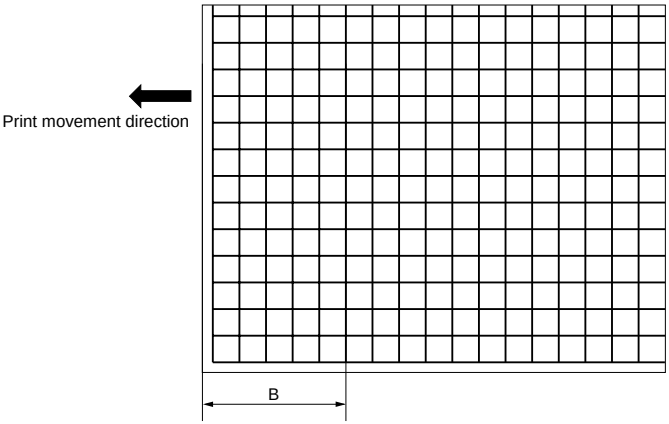

Notes: 1. Before making a test print, make sure that [100% A] is appeared on the top of the message display after the [SET] icon or the [INT] key is pressed, and then make a test print.

2. The effective adjustment value is within the range 1 to 15. The default adjustment value is 8.
The adjustment range is 0 to 40 for code 443 only, and the default is 20.

3. LCF (443) values become the reference for all adjustment values. So, be sure to execute the adjustment in the order described above.

4. The first line in the primary scanning direction may not be printed depending on the initial setting for the leading edge margin.

(e) Image distortion adjustment

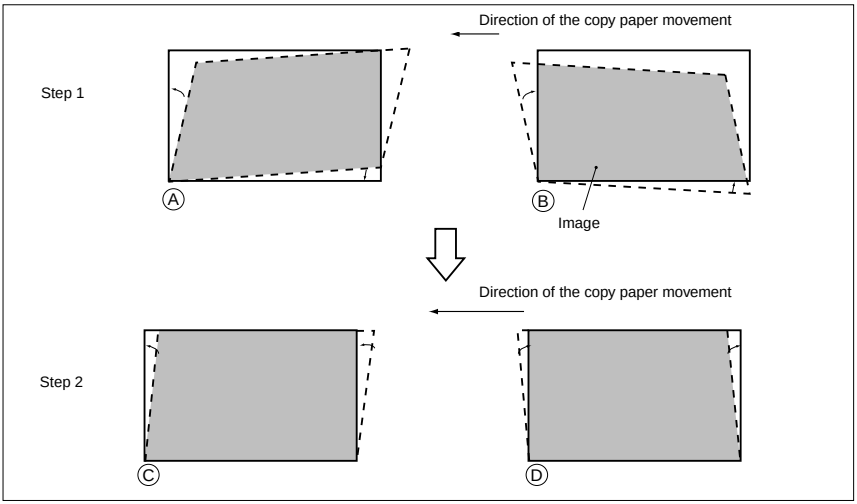

(1) Make an A3-size copy.

(2) Remove the original glass.
(Adjustment order: step 1 → step 2)
Step 1
In case of A:
Loosen the mirror-2 adjustment screw (CCW).
In case of B:
Tighten the mirror-2 adjustment screw (CW).
Step 2
In case of C:
Loosen the mirror-1 adjustment screw (CCW).
In case of D:
Thighten the mirror-1 adjustment screw (CW).

(3) Coat with screw lock after the image distortion adjustment.

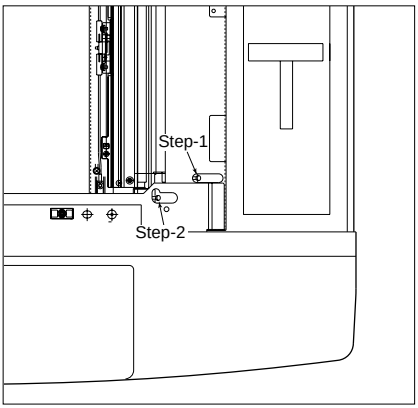

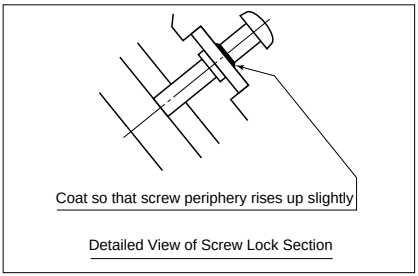

Note: Each can contains 1kg agent, so you should divide up the amount into smaller containers for easy operation.

Part No.	Part Name
4406361350	BOND-1401E

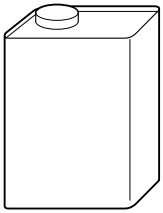

Screw locking agent

(f) Image inclination adjustment

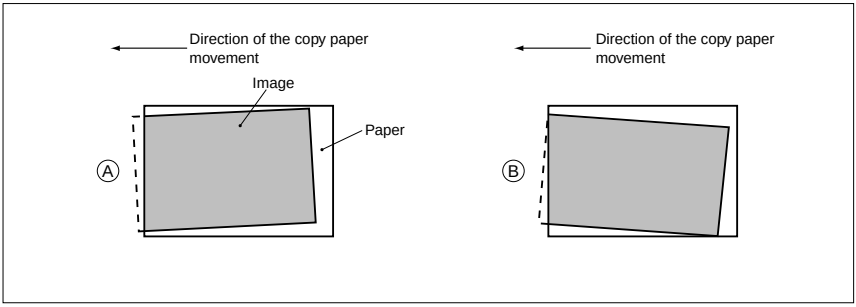

(1) If inclination of the image occurs even the edges of the original are properly aligned with the scale, adjust it by moving the stopper holder on the front side.

(2) In case of A:

Move the stopper holder in the direction indicated by ➡

In case of B:

Move the stopper holder in the direction indicated by ➡

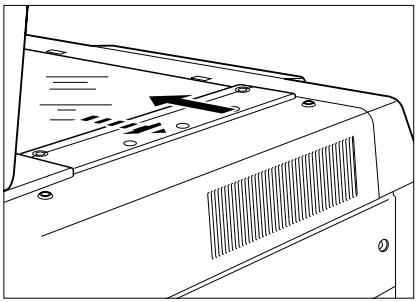

1.5.3 Adjusting the scanner section

(a) Polygonal motor 600 dpi/PPC (Primary scanning reproduction ratio)

(1) Place the scale on the original glass as shown in the illustration below, and make an A4/LT 100% test copy from LCF.

(2) Measure the copy and compare its size with the actual scale.

(3) Follow the procedure below to adjust value so that the interval between 10 mm and 210 mm on the scale is 200 ± 0.5 mm.

① → [405] → [START] → Adjust by digital keys → [SET]/[INT] →[E/S] → ①
(Test copy)

* An increase in the value corresponds to an increase in the division of the reproduction scale (in increments of 0.1mm/step)

Notes: 1. Before making a test print, make sure that [100% A] is appeared on the top of the message dispaly after the [SET] icon or the [INT] key is pressed, and then make a test copy.

2. The effective adjustment value is within the range 86 to 168. The default adjustment value is 128.

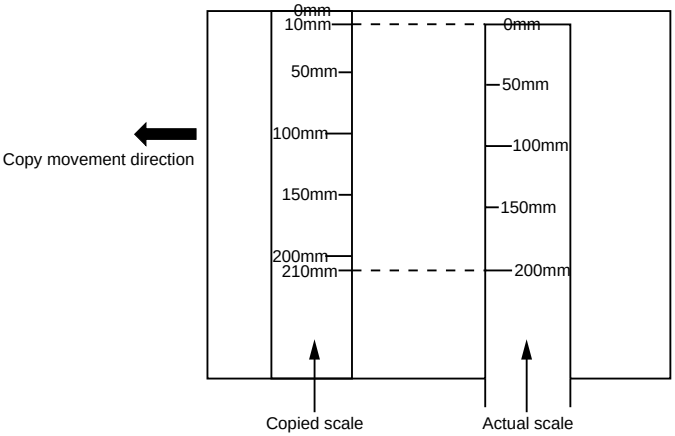

(b) CCD primary scanning deviation

(1) Place the scale on the original glass as shown in the illustration below and make an A4/LT 100% test copy from LCF.

* Place the scale with its leading edge aligned with the line (on the rear side) indicating A3/Ledger size on the left-side original scale, and the scale side face pushed up against the left-side original scale.

(2) Adjust the distance "A", which should be 100 ± 1 mm from the position copied to the edge of the paper, using the following steps:

① → [306] → [START] → Adjust by digital keys → [SET]/[INT] →[E/S] → ①
(Test copy)

* When the value increases, the image moves toward front side of the paper. (in increments of 0.169 mm/step)

Notes: 1. Before making a test copy, make sure that [100% A] is appeared on the top of the message display after the [SET] icon or the [INT] key is pressed, and then make a test copy.

2. The effective adjustment value is within the range 0 to 90. The default adjustment value is 45.

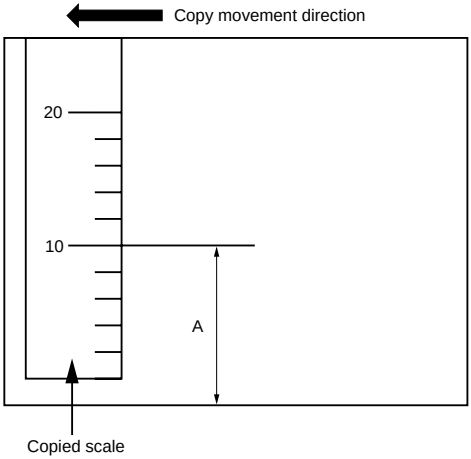

(c) Secondary scanning reproduction ratio

(1) Place the scale on the original glass and make an A3/LD 100% test copy from PFP middle or lower cassette.

(2) Compare the copy with the actual scale.

(3) Follow the procedure below to adjust so that the interval between 10 mm and 210 mm on the scale is adjusted at 200 ± 0.5 mm.

① → [340] → [START] → Adjust by digital keys → [SET]/[INT] → [E/S] → ①
(Test copy)

*When the value increases, reproduction ratio decreases: intervals of the scale become narrower. (in increments of 0.1mm/step).

Notes: 1. Before making a test copy, make sure that [100% A] is appeared on the top of the message display after the [SET] icon or the [INT] key is pressed, and then make a test print.

2. The effective adjustment value is within the range 0 to 255. The default adjustment value is 128.

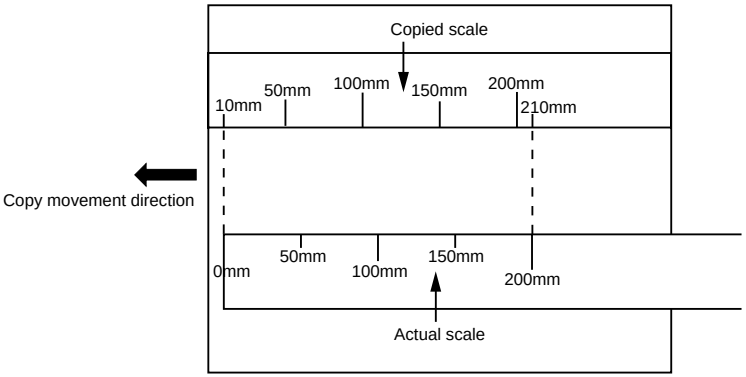

(d) Scanner secondary scanning deviation

(1) Set the top margin adjustment value to 0 (zero).

① → [430] → [START] → Enter 0 by digital keys → [SET] or [INT] → ①

(2) Place the scale on the original glass and make an A4/LT 400% test copy from LCF.

* Press the leading edge of the scale against the original scale on the leading edge side.

(3) Follow the procedure below to adjust so that the scale on the copied paper starts from the 2 mm ± 0.5 mm position.

① → [305] → [START] → Adjust by digital keys → [SET] or [INT] → [E/S] → ①
(Test copy)

*When the value increases, the image moves to the leading edge (in increments of 0.22 mm/STEP).

Notes: 1. Before making a test copy, make sure that [100% A] is appeared on the top of the message display unit after the [SET] icon or the [INT] key is pressed, and then make a test copy.

2. The effective adjustment value is within the range 0 to 255. The default adjustment value is 128.

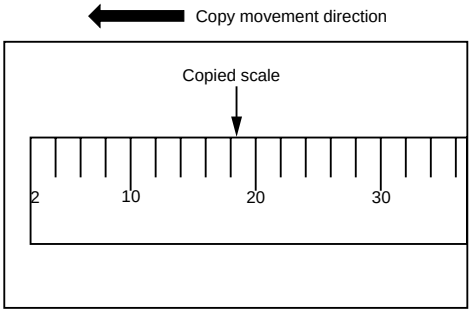

(e) Top margin

Follow the procedure below to make a test copy.

([0] [5] + [PWR] ON → [C] → [E/S])

(1) Make an A4/LT 100% test copy from LCF with the ADF open.

(2) Follow the procedure below to adjust so that the blank space at the leading edge of the copy is adjusted exactly at 3 ± 0.5 mm.

① → [430] → [START] → Adjust by digital keys → [SET] or [INT] → [E/S] → ①
(Test copy)

*When the value increases, the image moves to the leading edge (0.0423 mm/STEP).

Notes: 1. Before making a test copy, make sure that [100% A] is appeared on the top of the message display after the [SET] icon or the [INT] key is pressed, and then make a test copy.

2. The effective adjustment value is within the range 0 to 255. The default adjustment value is 24.

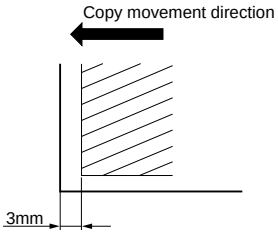

(f) Right margin

(1) Make an A4/LT 100% test copy from LCF with the ADF open.

(2) Follow the procedure below so that the blank space at the right edge of the copy is adjusted at 2mm ± 0.5 mm.

Note: The combination of the right edge blank space and the left edge blank space should be 4mm ± 1mm.

① → [432] → [START] → Adjust by digital keys → [SET] or [INT] → [E/S] → ①
(Test copy)

*When the value increases, margin becomes wider (0.0423 mm/STEP).

Notes: 1. Before making a test copy, make sure that [100% A] is appeared on the top of the message display after the [SET] icon or the [INT] key is pressed, and then make a test copy.

2. The effective adjustment value is within the range 0 to 255. The default adjustment value is 0.

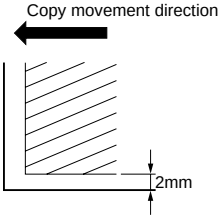

(g) Bottom margin

Follow the procedure below to make a test copy.

([0] [5] + [PWR] ON → [C] → [E/S])

(1) Make an A4/LT 100% test copy from LCF with the ADF open.

(2) Follow the procedure below to adjust so that the blank space at the trailing edge of the copy is adjusted exactly to 2 mm ± 0.5 mm.

① → [433] → [START] → Adjust by digital keys → [SET]/[INT] → [E/S] → ①
(Test copy)

*When the value increases, margin becomes wider (0.0423 mm/STEP).

Notes: 1. Before making a test copy, make sure that [100% A] is appeared on the top of the message display after the [SET] icon or the [INT] key is pressed, and then make a test copy.

2. The effective adjustment value is within the range 0 to 255. The default adjustment value is 0.

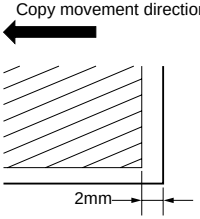

1.6 Image Density

If the user wants to change the image density, adjust the image density in adjustment mode “05.”

	Image mode			Adjustment item		Remarks
	Text/Photo	Photo	Text			
Code	503	501	504	PPC	Manual exposure center value	The larger the value, the darker the image
	505	506	507	Light side	Manual exposure step value	The larger the value, the lighter the light range
	508	509	510	Dark side		The larger the value, the darker the dark range
	514	512	515	PPC	Automatic exposure	The larger the value, the darker the image

Follow the procedure below to adjust the image density to suit the user's preferences while comparing the image obtained in the test copy with the currently entered allowable values.

<Keys used in operation> <Display messages>

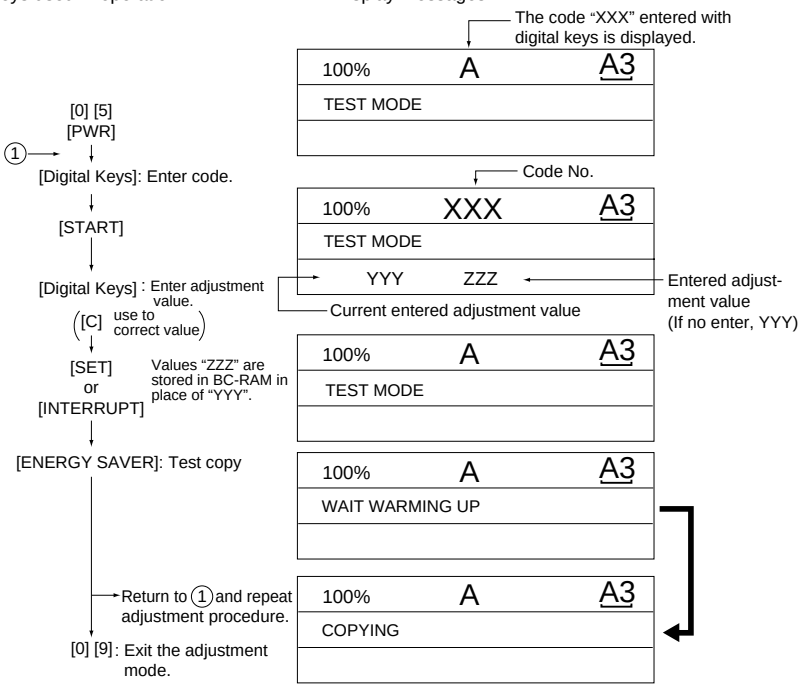

Notes: 1. Only one copy of single-sided originals can be made.
2. Duplex copying cannot be carried out.
Make test copies in these modes after exiting the adjustment mode.

1.7 Automatic Adjustment of Gamma correction

(1) At the time of unpacking

When the gradation reproduction deviation is too large, it can be corrected by the automatic adjustment of gamma correction.

This adjustment shall be done upon user's request when the gradation reproduction is too high or too low.

(2) When any of the following parts are replaced, check the image and judge whether adjustment is necessary or not.

- Exposure lamp
- Indicator unit with shading board
- Lens unit
- Laser optical system unit

(3) When any of the following parts is replaced or adjusted, check the copy image and determine the necessity of this adjustment.

- Optical system position (CRG1, CRG2 position)
- Mirror 1, 2, 3
- Reflector
- Drum
- Developer
- Main charger
- Development bias
- Transfer/bias

Note: This adjustment must be done only after the image adjustment described in 1.5.
After this adjustment, the image density adjustment described in 1.6 must be done.

Code	Adjustment item	Procedure
580	Automatic adjustment of gamma correction	[Procedure] (1) Turn on the power switch with [0] [5]. (2) Select A3 or LD paper for the output paper size. (3) Press the [2] key and then [ENERGY SAVER] key. (One copy of the 33-gradation pattern is outputted.) (4) Confirm that there is no blank or line on the gradation pattern outputted in the above step (3) and the density changes gradually. If there is any problem in the gradation pattern, repeat the step (3) to output a gradation pattern again. (5) Face the darker side of the output gradation pattern to the original scale at the exit side and put it on the original glass with the printed face down. (6) Input the code [580] through the control panel and press the [START] key. (The scanner automatically reads the original and the operation for the automatic adjustment of gamma correction will be done. About 10 seconds) (7) When the operation completes normally, the machine returns to the stand-by status. If the operation ends abnormally, "TEST MODE ERROR" will be displayed. (See the indication on the next page.) For the abnormal ending, press the [C] key to release the error indication. When released, the display on the control panel returns to the stand-by status. Check the position, direction and skew of the gradation pattern on the original glass, and repeat the steps from (5).

<Keys used in operation>

<Display messages>

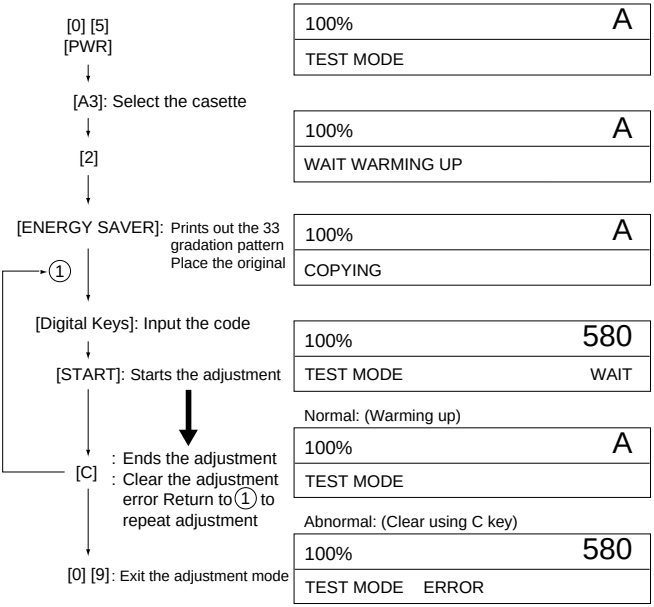

1.8 Sharpness (HPF) Adjustment

If the user wants to change the image sharpness to softer or harder, adjust the HPF intensity in adjustment mode “05”.

	Image mode			Adjustment item	Remarks
	Text/Photo	Photo	Text		
Code	620	621	622	Sharpness setting (HPF intensity)	1st digit : 1 (fixed): Text/Photo 2 (fixed): Photo 3 (fixed): Text 2nd digit : 0: Use default value 1~9: Change the intensity (If the value is increased, the sharpness is increased)

<Keys used in operation> <Display messages>

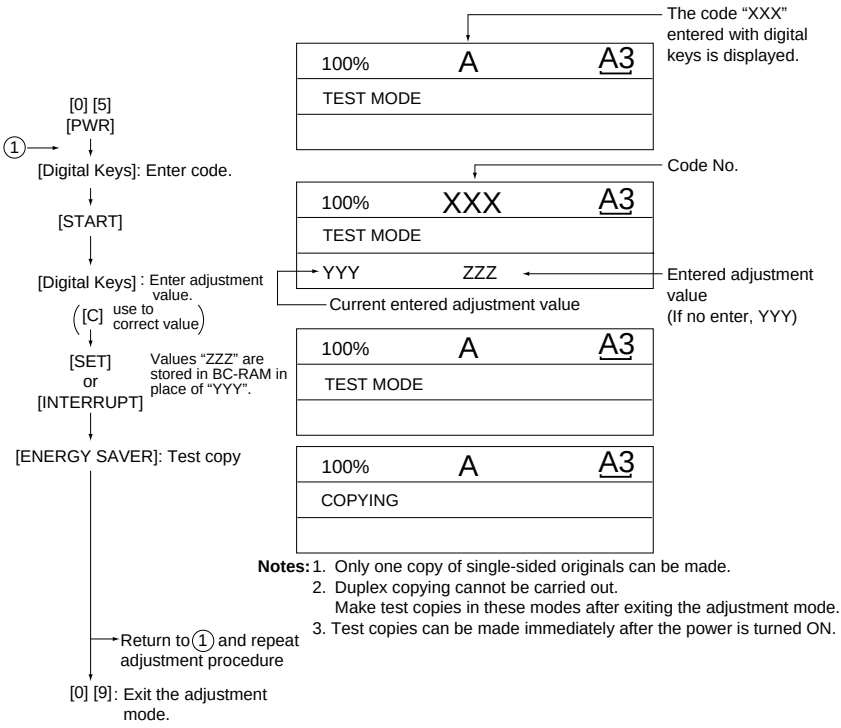

Notes: 1. Only one copy of single-sided originals can be made.
2. Duplex copying cannot be carried out.
Make test copies in these modes after exiting the adjustment mode.
3. Test copies can be made immediately after the power is turned ON.

1.9 Data Correction

If the user wants to change the gamma curve, adjust the gamma slope correction in adjustment mode “05.”

	Image mode			Adjustment item		Remarks
	Text/Photo	Photo	Text			
Code	593	594	595	PPC	Gamma data slope correction	0: Default used (same as set value 5) 1 to 9: Slope correction (The larger the setting, the darker the image becomes.)

Input procedure of the adjustment value is same as the 1.6 image density adjustment.

1.10 High-Voltage Adjustment

The charger and developer bias outputs must be checked and adjusted when the high-voltage transformer is replaced.

Charger output					
Item	Code	Mode	Image Mode	Adjustment Value	Adjustment Method
Main charger grid voltage	210-0 *2	PPC	TEXT/PHOTO	720 ± 5V	Change the output by changing the bit states.
	210-1 *3	PPC	Text	↑ *4	Input the BIT value of 210-0
	210-2 *3	PPC	Photo	↑ *4	↑
	212 *1	PRINT	——	↑ *4	↑ *5

Developer bias output					
Item	Code	Mode	Image Mode	Adjustment Value	Adjustment Method
Developer bias value Hi1	205-0 *2	PPC	TEXT/PHOTO	387 ± 5V	Change the output by changing the bit states.
	205-1 *3	PPC	Text	↑ *4	Input the BIT value of 205-0
	205-2 *3	PPC	Photo	↑ *4	↑
	203 *1	PRINT	——	↑ *4	↑ *5
Developer bias value Hi2	207 *1	ALL	——	↑ *4	↑
Developer bias value Hi3	216 *1	ALL	——	452 ± 5V	Change the output by changing the bit states.

Note 1: *1, *2 and *3 indicate sequence of operation patterns 1, 2 and 3, respectively.
Note 2: BIT of *4 can be changed, however voltage is not output.
Note 3: The BIT value of *5 must be entered by the digital keys.

(1) Preparing for measurement

① Main charger grid

1. Remove the developer unit.
2. Connect the digital tester as follows. However, that a digital tester with input resistance of 10 MΩ must be used.
   - Setting range 1000 VDC
   - (+) terminal Connect to the rail for the main charger.
   - (–) terminal Fix to frame earth.
3. Start up the power supply using the door switch jig and then, make adjustment.

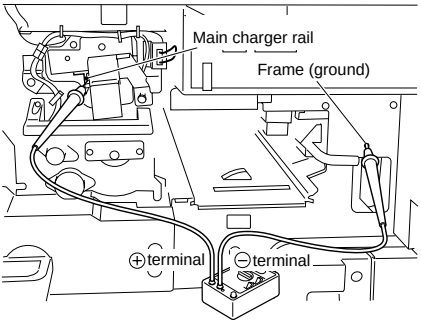

② Developer bias

1. Set the developer unit.
2. Connect the digital tester as follows. However, a digital tester with an input resistance of 10 MΩ must be used.
   - Setting range 1000 VDC
   - (+) terminal Connect to upper magnet roller shaft on developer unit front side.
   - (–) terminal Fix to frame earth.
3. Start up the power supply using the door switch jig and make adjustment.

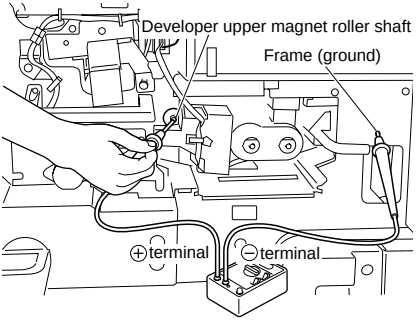

(2) Operation procedure

- Be sure to set the drum counter (08-401) to "0" when you have replaced the drum with a new one.
- Regarding the main charger grid and developer bias output values from the high-voltage transformer, connect a digital tester following (1) and then, make adjustment using the following procedure.

Sequence of Operation, Pattern 1

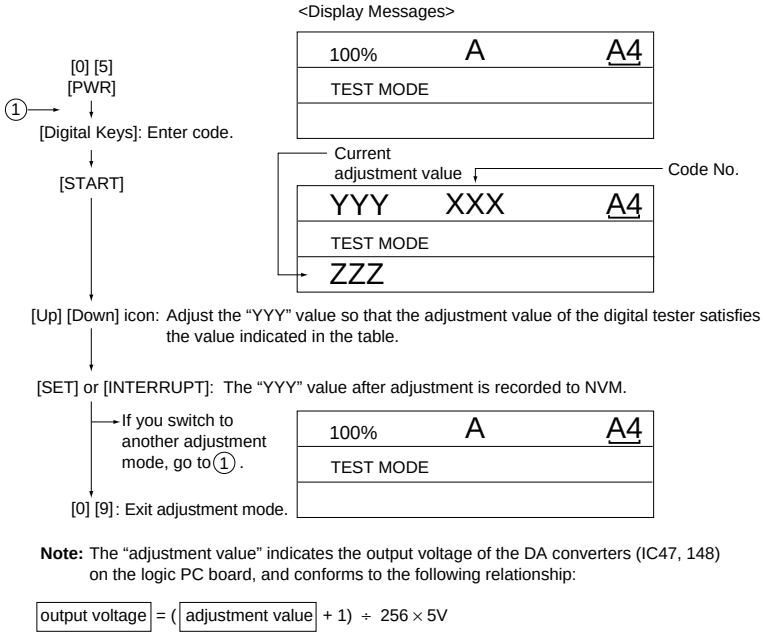

Note: The "adjustment value" indicates the output voltage of the DA converters (IC47, 148) on the logic PC board, and conforms to the following relationship:

$$\boxed{\text{output voltage}} = \left(\boxed{\text{adjustment value}} + 1\right) \div 256 \times 5\text{V}$$

Sequence of Operation, Pattern 2

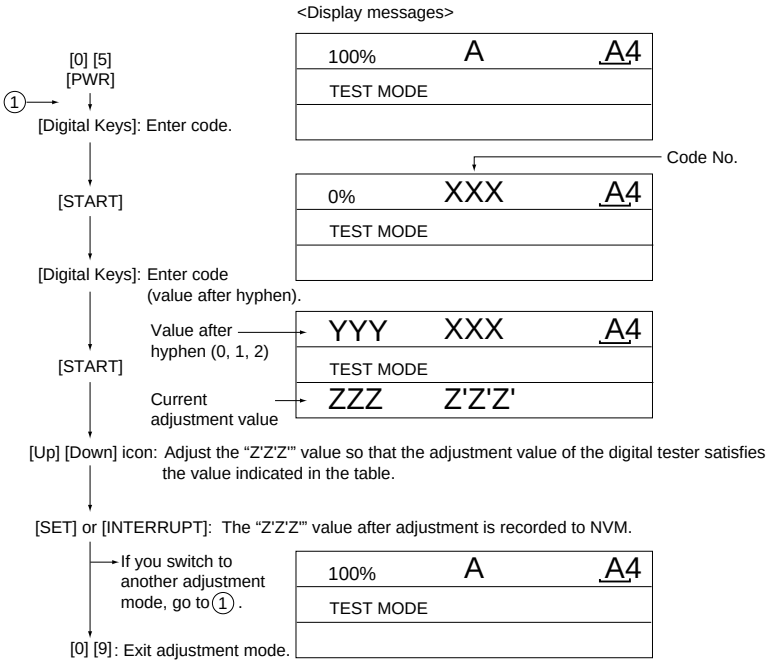

Note: The "adjustment value" indicates the output voltage of the DA converters (IC47, 148) on the logic PC board, and conforms to the following relationship:

$$\boxed{\text{output voltage}} = \left(\boxed{\text{adjustment value}} + 1\right) \div 256 \times 5\text{V}$$

Sequence of Operation, Pattern 3

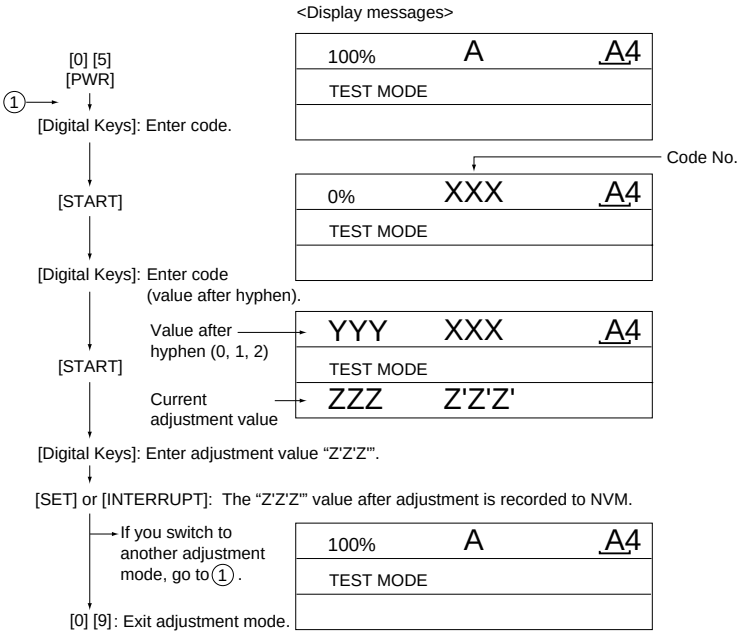

Note: The "adjustment value" indicates the output voltage of the DA converters (IC47, 148) on the logic PC board, and conforms to the following relationship:

$$\boxed{\text{output voltage}} = \left(\boxed{\text{adjustment value}} + 1\right) \div 256 \times 5\text{V}$$

Precautions During Developer Bias Adjustment

If the entire image is foggy in spite of appropriate main charger grid voltage or toner density, adjust the developer bias on the control panel (lower the BIT). If the developer bias is lowered too much, however, the following problems may occur:

- The image contrast drops (tend to produce faint images).
- The carrier in the developer adheres to the photosensitive drum, and scratches tend to occur more easily on the cleaning section.

1.11 Installation of Carriage Drive Wire

When the carriage drive wire is replaced, attach the new wire as shown:

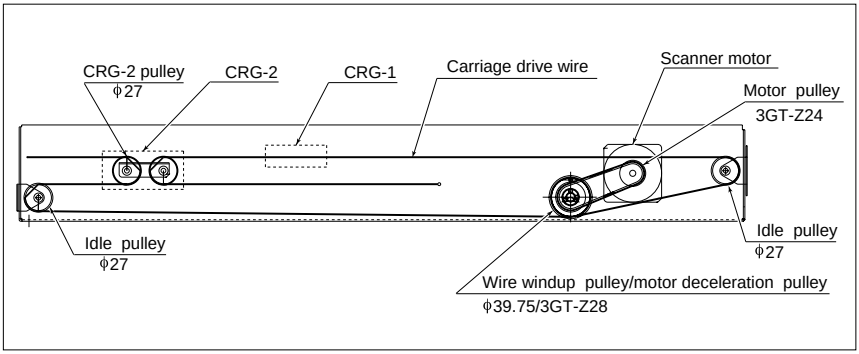

1.11.1 Wire tension adjustment

(1) For this model, it is unnecessary to adjust the carriage drive wire tension since its tension spring maintains constant tension.

Note: Make sure that the tension of the wire on both the front and rear sides is equivalent and hanged properly.

1.11.2 Adjustment of carriage 1 and carriage 2

(1) Loosen the screws fixing carriage-1 (2 screws; front, rear, 1 screw each) and -2 (2 screws in front) to the wire.

(2) While pressing carriage-2 against the feed side frame (both A & B), tighten the screws fixing carriage-2 (front side).

(3) Also while pressing carriages 1 and 2 against the feed side frame (C & D), tighten the screws fixing carriage-1.

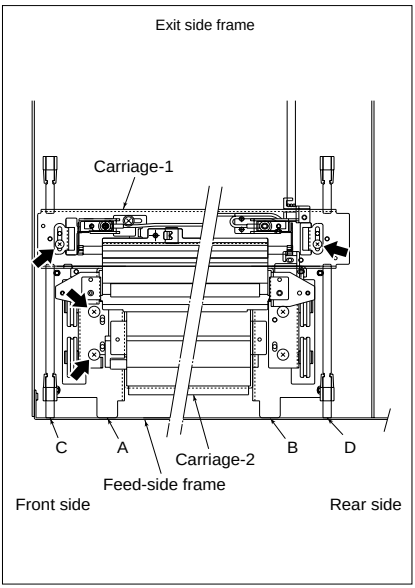

1.11.3 Carriage drive wire assembling

• Winding the wire to the wire winding pulley

(1) Fit the ϕ3 spherical terminal (on the central part of the wire) into the hole of the wire winding pulley.
Set the wire so that the part of the wire with a hook on its crimped side be on the upperside.

(2) Wind the wire to the each front and rear side pulleys.
Winding turns are:
- 2 and 3/4 turns on the opposite to the boss side (outside) of the pulley.
- 4 and 3/4 turn on the boss side (inside). After winding, secure the wire with the wire holder jig.

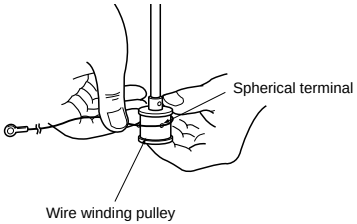

<Front side>

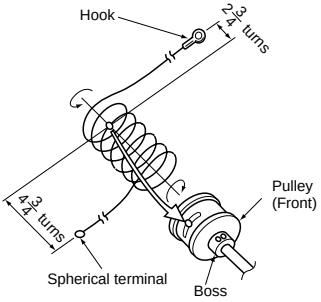

<Rear side>

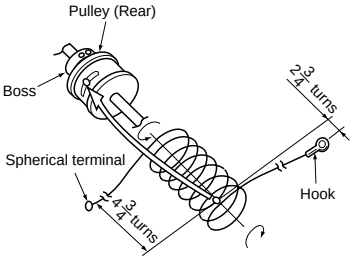

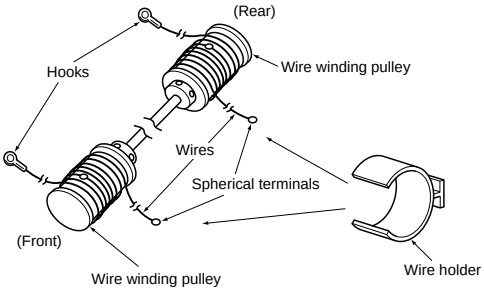

Notes: 1. When winding the wires on pulleys, take the following precautions:
- Never twist the wire when winding.
- Wind the wire tightly to make it come into close contact with the pulley.
- Wind the wire taking care not to leave any gap between the wraps.

2. When the wire holder jig is installed, do not slide or loosen the wound wire.

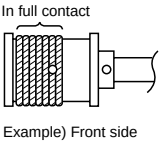

<Installation phase>

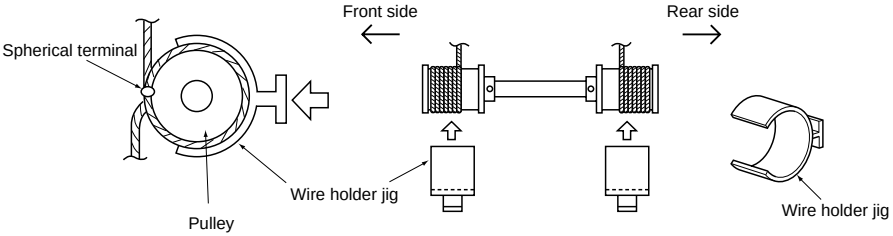

1.12 Lens Unit

It is impossible to adjust the lens unit. Replace the entire unit with a new one.

Notes: 1. Do not touch the fixing screw (arrow in the figure: 8 points) indicated with arrows below when replacing the lens unit. The screw color is red.

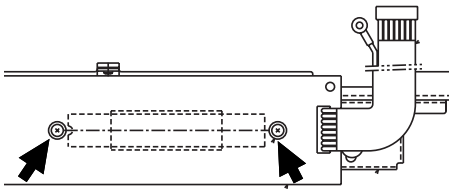

• Pay attention to the two screws (see above figure) on the rear side (see in the figure A.)

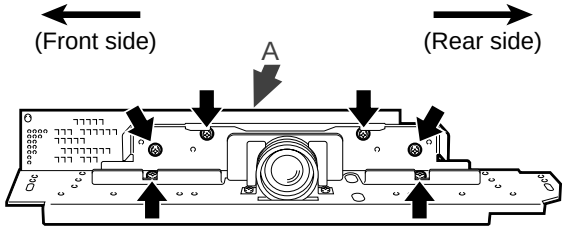

2. Take sufficient care when handling the unit not to hold the adjustment area.

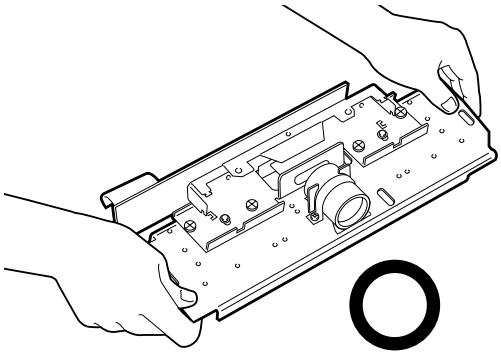

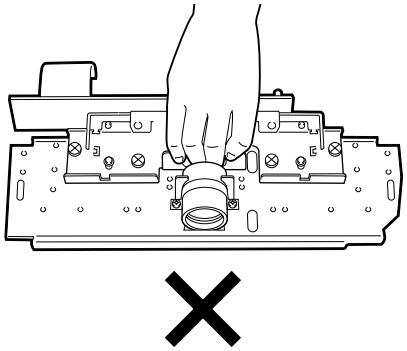

1.12.1 Adjusting the lens magnification

Notes: 1. This adjustment must be carried out only when the scanner lens unit has been removed or replaced.
2. Before this adjustment, check that the primary scanning reproduction ratio of the printer is corrected.

(1) Place the scale on the original glass, and make an A4 100% copy.
(2) Compare the copied scale with the actual scale to measure the error in the reproduction ratio.

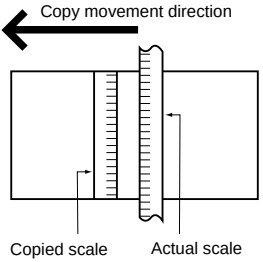

(3) Follow the procedure below to make adjustment so that the distance between each mark of both scales becomes equal.

Notes: 3. After adjusting the lens magnification, be sure to adjust the deviation in the CCD primary scanning direction.

<Procedure>

(1) Remove the original glass, lens cover (11 screws), damp heater unit and lens shield bracket (2 screws).
(2) Screw in the 2 lens magnification adjustment pins into the oblong holes on the lens base.

Notes: 4. When screwing in the pin, take care not to nip the harness under the lens base.

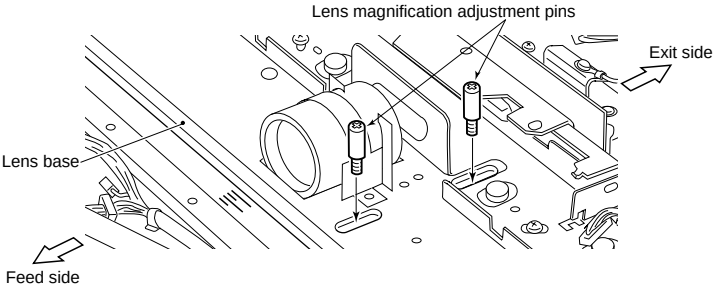

(3) Loosen the 2 screws fixing lens unit.

(4) Slide the lens unit either backwards or forwards using the scales on the scanner base as a guide. The following table shows the estimated lens unit movement to adjust the reproduction ratio error between the copy and the actual scale compared to be measured.

Reproduction Ratio Error	Estimated Amount of Adjustment
0.1 %	0.5 mm
0.2 %	1.1 mm
0.3 %	1.6 mm
0.4 %	2.1 mm
0.5 %	2.6 mm
0.6 %	3.2 mm
0.7 %	3.7 mm
0.8 %	4.2 mm
0.9 %	4.8 mm
1.0 %	5.3 mm

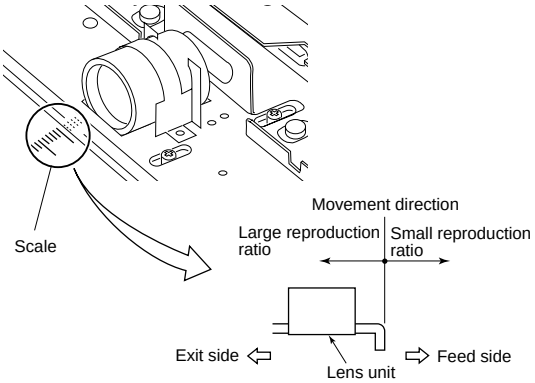

Notes: 5. If the finer adjustment than that in the above is required, refer to "Polygonal motor 600 dpi/ PPC Adjutment".

(5) Re-attach the lens cover and original glass, make a copy and check the reproduction ratio.
(6) Tighten the 2 lens unit screws to fix in place.
(7) Remove the pins for adjusting the lens magnification.
(8) Re-attach the lens cover and original glass.

1.13 Adjusting Horizontal Deviation Caused by Paper Feed

<Procedure>

- When the center of the image moves to the rear side: Move the guide to the rear side (direction of arrow Ⓐ).

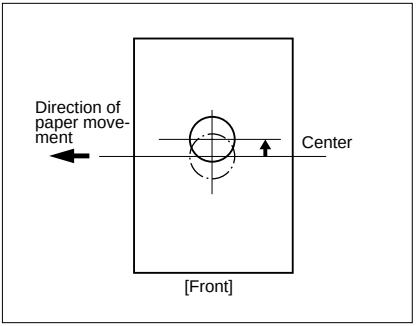

- When the center of the image moves to the front side: Move the guide to the front side (direction of arrow Ⓑ).

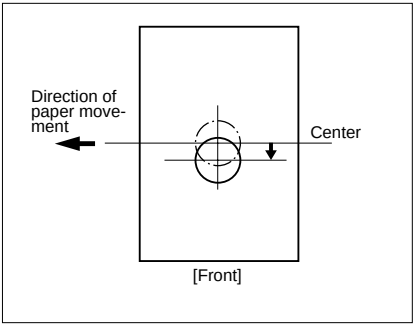

• Manual feed

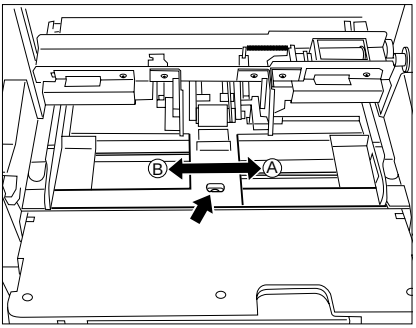

• LCF feed

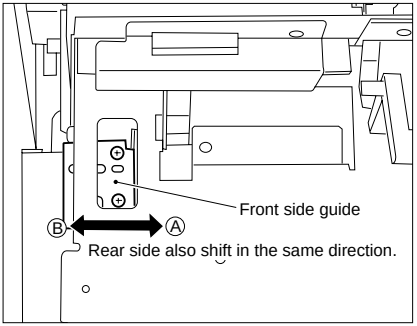

• Pedestal cassette feed

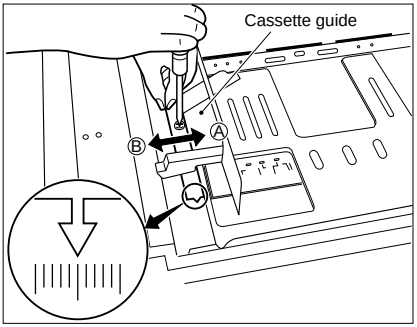

1.14 Changing the Paper Size

1.14.1 LCF paper sizes

(1) Draw out the LCF unit, and remove the manual feed unit.

(2) Attach the stay guides to match the size of the paper used.

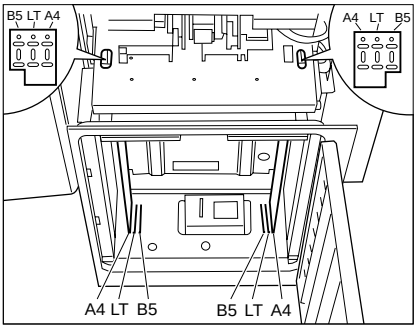

Note: In case of B5 size
The bracket must be fastened onto the LCF door cover by 2 screws only in the case of B5 size.

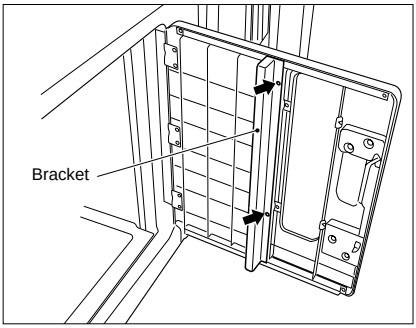

(3) Change the cassette size on the control panel. For details, refer to the setting mode (08) item.

1.14.2 PFP paper sizes

Before the copier is shipped from the factory, A4-R, A3 and B4 (LT-R, LG and LD) are set to the upper, middle and lower cassettes, respectively. The following procedure describes how to change the paper sizes of the cassettes in accordance with a request from the user.
Note: Since the PFP upper is not usable for B5 size paper, do not change its size to B5.

Mechanical Modifications

(1) Draw out the cassette that you want to modify, remove the stopper screws (one each on feed and exit side), and draw out the cassette.

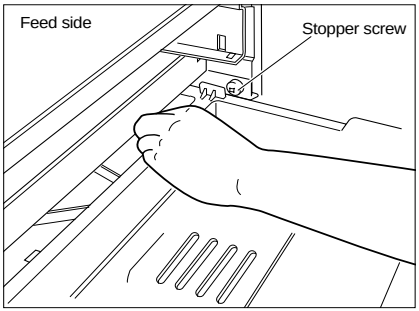

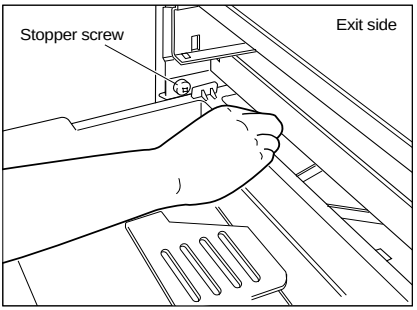

(2) Remove the cassette side walls (2 screws for each) on the front and rear sides, and fix the cassette side walls with the screws matched to the paper size marked on the cassette guide.
(3) Remove the back plate (1 screw), and fix the back plate with the screws matched to the paper size marked on the base frame.

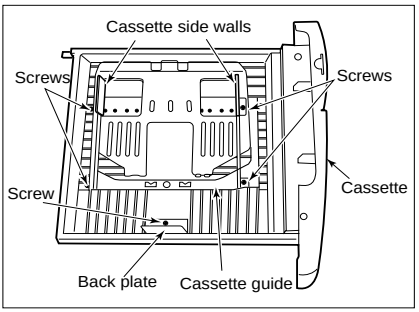

(4) Slide the cassette size label on the right front of the cassette to upward to remove it.
(5) The cassette size label should be folded to display the designated paper size, and then inserted into the cassette.
(6) Insert the cassette into the feeder, and tighten the 2 stopper screws.

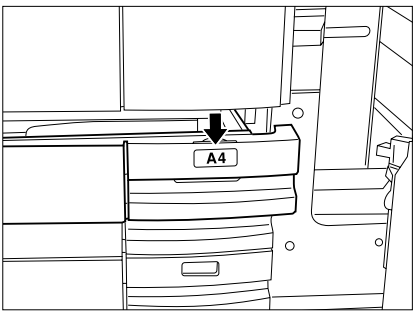

Changes on the Control Panel

Change the cassette size on the control panel. For details, refer to the setting mode (08) item.

1.15 Adjustment of Duplexer

1.15.1 Adjustment of the stack guide unit

[A] Stack guide stop position adjustment

When making copies in the double-sided mode on the Duplexer, make sure that the horizontal deviation on both sides of the paper is less than ±2 mm.

If the deviation is outside of this range, follow the procedure below to adjust.

(1) Stack paper on the stack guide, and make sure that the gap between the paper and the stack stopper on the stack guide is 1±0.5mm. To adjust the gap, loosen the fixing screw on the rear side of the stack guide unit, and then, make adjustment with the adjusting screw.

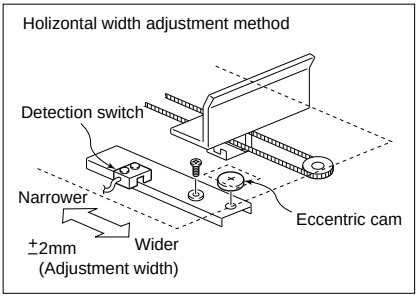

[B] Duplexer horizontal deviation adjustment

When the image on the double-sided copy deviates horizontally even after adjustment [A]

(1) Loosen the 2 screws for fixing the stack guide unit. If the paper drifts toward either the front or the rear side, move the stack guide unit toward the opposite side by the amount of the paper drift, using the scales on the unit as a guide.

(2) After adjustment, tighten the 4 fixing screws on the stack guide unit.

Note: The 1mm interval scales are useful in making this adjustment.

(3) After adjustment, make a copy to check that horizontal deviation is corrected.

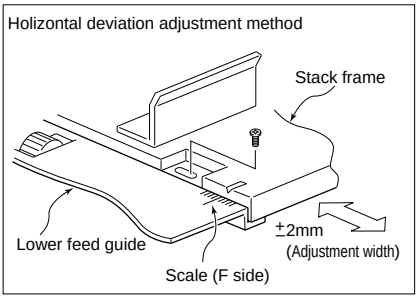

[C] Checking the operation of empty detection lever

(1) Move the empty detection lever up/down by hand. When the lever goes down, check that the leading edge of the lever is always in the concave of the empty sensor (as shown in the illustration.).

(2) This operation should be repeated several times, to ensure that no error condition occur. (as shown in the illustration.)

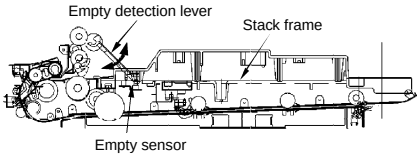

(Supplementary)
When determining the adjustment amount for the horizontal deviation, make copies using the following mode. Decide the amount observing the 8th, 9th and 10th copy images.

[Mode]
Original: A4 size (or LT size) manually placed original (2 sheets)
Paper sheet: A4 size (or LT size)
(LCF paper feeding is preferable.)
Single-sided original → Duplexed copies, Group mode copy Quantity: 10 sheets

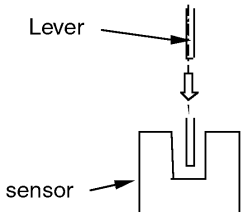

Expanded sectionl figure of sensor and lever from the paper feed direction (OK)

(Supplementary)
Several sheets from the head stacked in the Duplexer will be fed right after stacked for the purpose of increasing efficiency of duplex copying. At this time, stacking operation comes as first priority so the width guide of the Duplexer becomes slightly wider than that of other feeding operation (2mm exterior from both edges of the paper). Depending on the mode, the timing to switch the width guide position changes.
Thus, make copies using always the above mode and procedure described in (Supplementary) of [C] to make precise horizontal deviation adjustment.

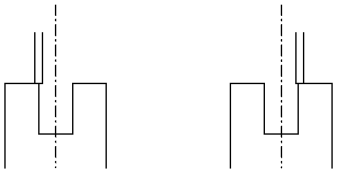

Expanded sectionl figure of sensor and lever from the paper feed direction (No Good)

1.15.2 Holding gate position adjustment 1

When the holding gate is removed for replacement, the holding gate position must be adjusted when it is installed.

(1) When installing the drive gears of the holding gate, match each of the drive gear positions withe the positions of the dowels on the gear. Turn only the gear on the holding gate in the direction of the arrow by 2.5 teeth, and install the drive gears. (The front side gear is installed first, and the dowels on the rear side should be aligned).

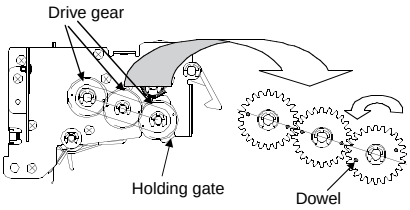

Front side driving gears

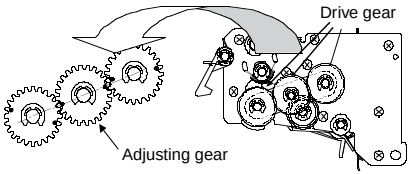

Rear side driving gears (addition)

Note1: This adjustment had been performed based on the condition: the rear side drive gears are adjusted automatically when the front side drive gears are adjusted. But the rear side drive gears sometimes do not follow the front. Thus, the procedure has been changed: the front side drive gears are adjusted first, and then, that of the rear side will be adjusted to match the dowel. This procedure has been performed starting with the following models:.

8070: From the first production	6570: From LJ913007
5570: NJ913571	4580: From ZJ910707

Note2: Adjust the front/rear side gears with the central gear. The spring clutch may lock when the gear is operated. So, push the projection of the clutch unit to turn the gear.

(2) Align the projection on the clutch unit of the holding gate, and fasten with an E-ring as shown figure.

Note3: When it is fixed by an E-ring, be sure to check that the holding gate position is as in the illustration (correct position of holding gate).

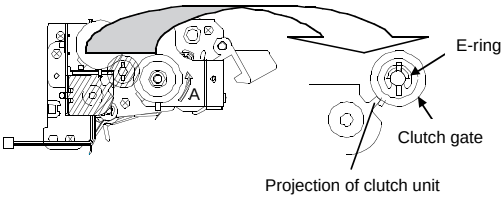

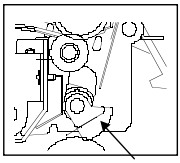

(3) Make sure that drive gear is installed correctly checking the following points. If it not installed correctly, perform the above (1)~(2)procedures.

Note

When a new arbor is installed, perform the groove for spring installation of 1.15.3 Holding gate position adjustment 2 SLEEVE-P/U-80 in "B"(center).

0) Open the bypass feed unit (Check below while it is opened).

~~1) Open the clutch unit. (solenoid not pulled out)~~

While the solenoid of the clutch unit is attracted (armature is pushed), turn the gear a limited small amount, release the armature.

2) Turn the gear in the direction "A" in the figure till the holding gate is stopped.

3) When the holding gate is stopped, check that B face and C or D face are roughly parallel.

B face: flat face of holding gate

C face: end face of frame

D face: end face of frame

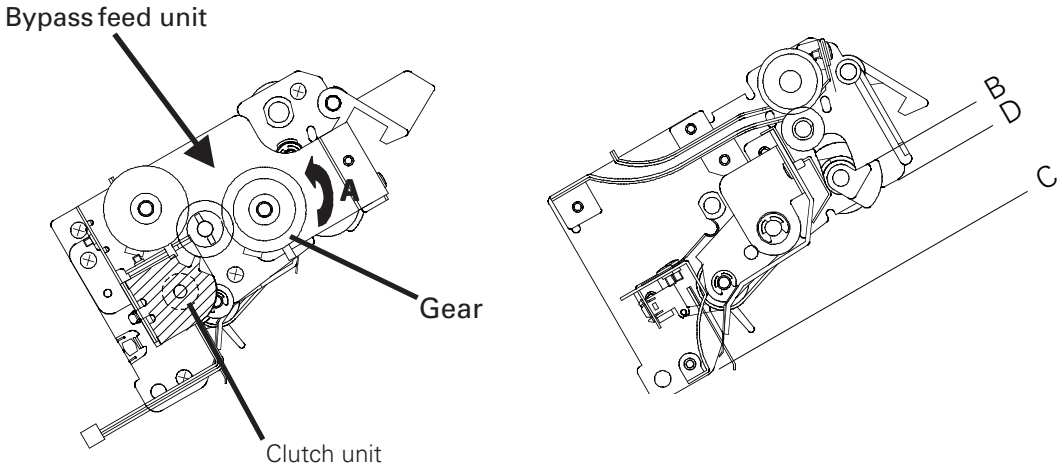

1.15.3 Holding gate position adjustment 2

There are two kinds of sleeves, SLEEVE-P/U and SLEEVE-P/U-80.

In the case of SLEEVE-P/U-80, the pushing gate angle can be adjusted as described below.

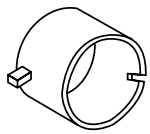

4406344910

SLEEVE-P/U

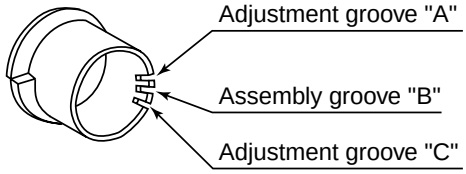

4408843921

SLEEVE-P/U-80

(1) There are 3 grooves for installing the spring to SLEEVE-P/U-80.
If the installment position of the spring is changed, then the pushing gate angle can be adjusted.

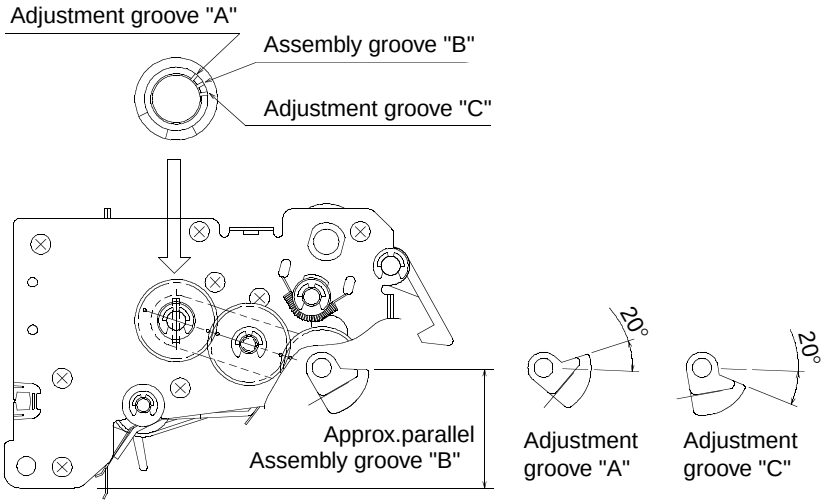

(2) Check that the pushing gate angle is parallel to the frame.

Note1: At the time of shipping, assembly has been performed using assembly groove “B”.

Note2: If after performing adjustment of the pushing gate position as in 1.15.2 and the angle does not become parallel, then the angle should be adjusted ±20˚ using adjustment groove “A” or “C”.

1.15.4 Operation Check of Holding Gate

(1) Pull out the ADU, after removing the gray cover which is covering the feed unit (two screws). Replace it inside the copier.
(2) Start Duplex copying with the left front cover of the copier opened by using the door switch jig.
(3) Check the turning of the shaft S shown on the left side (below figure) of the ADU.
- When shaft S turns two times ⇨ Normal
- When shaft S does not turn at all or only once ⇨ **Poor turning**

Note1:

To connect with the shaft S and the holding gate, it is possible to check the movement of the holding gate by looking at the rotation of shaft S.

Note2:

If it is not possible to make a visual evaluation, one can judge by the noise of the rotation of the holding gate.

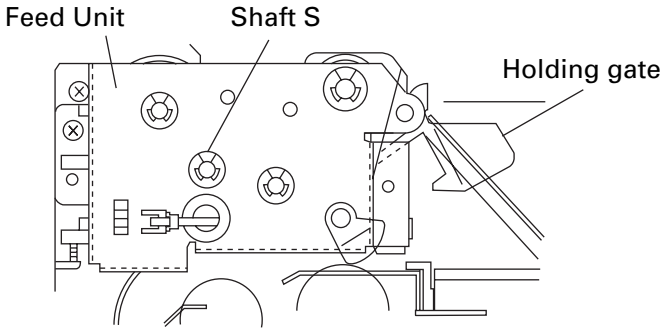

1.16 Adjusting the Thickness of the Magnetic Brush (leveler)

Bring both edges of the developer leveler up against the projections on the front and rear side frames. Positional adjustment is not needed as the thickness of the transport roller magnetic brush is already fixed.

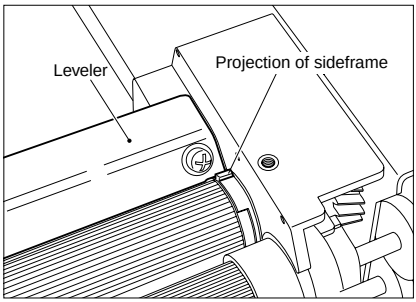

1.17 Adjusting the Gap between the Drum and Sleeve

Since the guide roller of the developer unit is pressed against the drum, no adjustment is necessary.

1.18 Adjustment of Developer Polarity Position

As the developer polarity position is determined by the magnet roller and polarity fixing bush, no adjustment is necessary.

1.19 Adjusting the Heat Roller Pressure

Normally, the heat roller pressure need not be adjusted. However, it must be carried out when wrinkles frequently appear on copies made on plain paper.

<Procedure>

(1) Make an A3 size copy (entirely black) with the ADF open.
(2) Turn the power switch OFF after copying is finished.
(3) Quickly open the front cover, and draw out the belt transport unit.
(4) Insert the copy made in (1) into the fuser inlet guide with the entirely black side facing down then turning the jam release lever CCW until the center of the copy paper is nipped by the heat roller.
(5) After approx. 20 seconds, take the copy paper out by quickly turning the jam release lever CCW again.
(6) Measure the width of the section of the copy paper nipped by the heat rollers at the both front and rear sides.

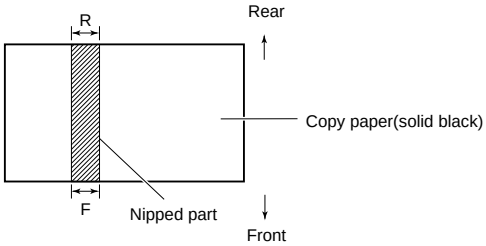

(7) If |F-R|≧0.5mm, loosen the fixing screw of the pressure spring on the side that having the broader nipped section. One half turn corresponds to narrowing the nipped section by about 0.5mm.
(8) If |F-R|<0.5mm, end the adjustment, and make five copies of A3 size white paper with the ADF closed to clean the heat rollers.

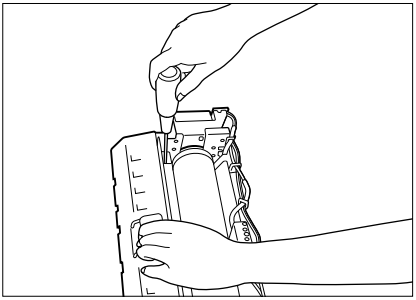

1.20 Setting the Heat Roller Temperature and Heat Roller Pressure

The fuser has been set (heat roller surface temperature: 200˚C, pressurizing pressure: 100 kg) taking the fusing performance, wrinkling, curling and toner transfer deficiency on the leading/trailing edge of duplexing copy into consideration when our company recommended paper is used. This is to allow the characteristics of the paper to be demonstrated in a well-balanced manner. However, various types of paper are used in the field, and factors such as the paper thickness and surface flatness greatly affect the fusing performance, in particular. If the fusing performance deteriorates while using a specific type of paper, adopt the following procedures to cope with each case:

<Procedures>
① Increase the preset temperature of the heat roller surface by keying in the temperature with the control panel.
② Increase the pressurizing pressure of the heat rollers by inserting spacers in the pressure springs.
③ Carry out both ① and ②.

Perform this procedure in order ① to ③ while confirming the effect and adverse influence of the adjustment.

<Procedure ①: Increase the preset temperature of the heat roller surface>
Change the heat roller preset temperature (when the copier is ready) by code 411 in setting mode (08). The default is “8” (200˚C), and can be changed within the range “8” to “11” ((200˚C to 209˚C).

Notes: 1. When a large value is set (to increase the temperature), the level of wrinkling, curling and toner transfer deficiency on the leading/trailing edge of duplexing copy tend to worsen.
2. Do not set the temperature to value larger than “12” (210˚C or more). The fuser thermostat actuates to turn the power OFF, and the thermostat must be replaced.

<Procedure ②: Increase the pressurizing pressure of the heat rollers.>
(Carry this out when procedure ① does not produce the desired result. If the preset value has been changed in procedure (1), it must be returned to its original value before this procedure is carried out.)

Insert spacers (4401 903180/WAS-15-105-FUS) under the pressurizing spring as shown in the figure to increase the pressurizing force. (Up to three spacers may be inserted on one side.) Inserting one spacer on each side increases the pressurizing force by 5kg. This means that the current force of 100kg can be increased to 115kg (when a total of six spacers, three on each side, are inserted).

Notes: 1. The spacers must be inserted under the spring as shown in the figure below.
2. The same number of spacers must be inserted at the front and rear sides. (Skew occurs when a different number of spacers are inserted on the front and rear sides.)
3. Do not insert four or more spacers on one side. (The spring may deform.)
4. When the pressure is increased, the level of wrinkling, curling and toner transfer deficiency on the leading/trailing edge of duplexing copy tend to worsen.

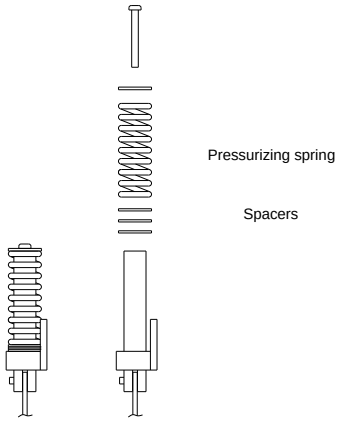

<Procedure ③: Carry out both ① and ②>
(Carry this out when procedure ② does not produce the desired result.)

1.21 Adjusting the Fuser Inlet Guide

Check the gap between the inlet guide and the lower heat roller when the following troubles occur:
- Stain on the back side of the paper
- Fuser inlet jam
- Wrinkled paper

(1) Move the screw fixing position to the oblong hole to make adjustment using the stamped mark as a guide.

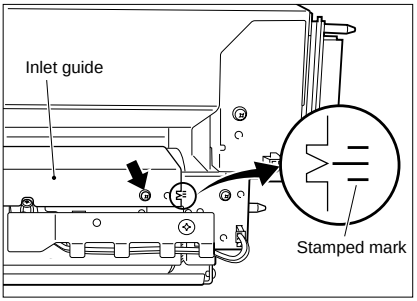

(2) Adjust the gap between the inlet guide and the lower heat roller. (0.4 ≦ gap < 1.7)

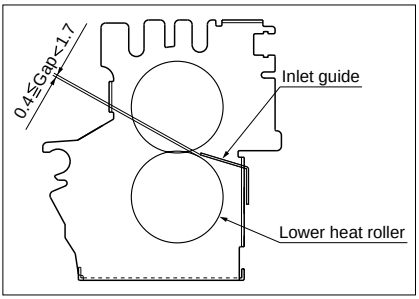

1.22 Adjustment of ADF

1.22.1 Adjustment of skew with ADF

(1) Check that the right hinge is installed as shown below figure.

Note: Fix the screw on the center of scale.

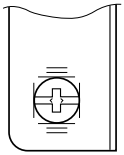

RIGHT HINGE

(2) Place the test original face up in the tray, press PRINT to make a copy.
Check that the copy isn't skew.

(3) If there is a skew, loosen the two screws on right/left hinges and adjust the position of RIGHT HINGE.
Repeat the procedure until the skew is rectified.

Note: After the adjustment, tighten the two screws of LEFT and RIGHT HINGE without fail.

Image Inclination



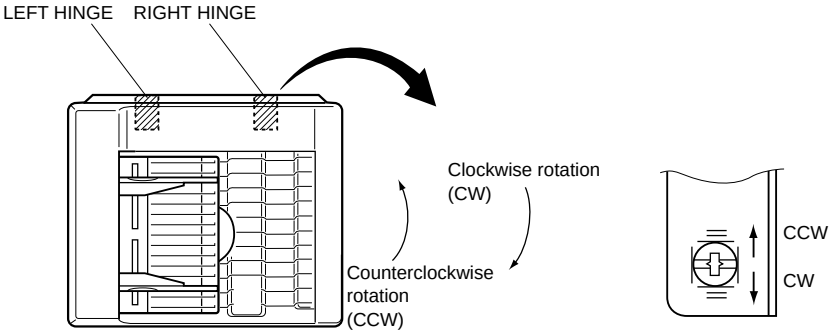

1.22.2 Adjustment of ADF horizontal deviation caused for ADF

(1) Make a test original as shown: First draw a center line on an A4 sized copy paper.

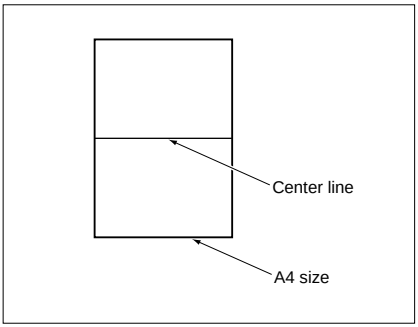

(2) Place the test original on the original feed tray with the center line side facing up and align the side guides to the sides of the original.

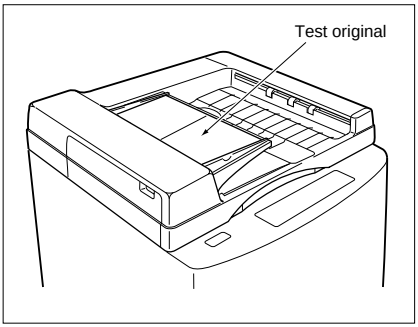

(3) Press the START key to make a copy. Fold the copy in half and check that the center line is in the center of the copy: If it is not, adjust the original feed tray until the center line is copied in the center. After adjustment, tighten the two screws securely to fasten the original feed tray.

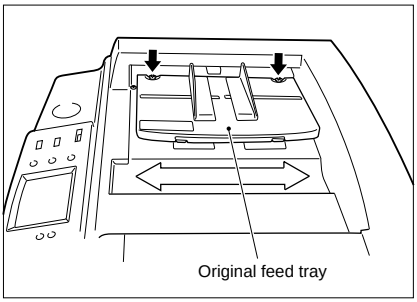

1.22.3 Adjustment of ADF leading-edge position

If the original fed from the ADF has not stopped in the preset position, make adjustment using the following procedure:

① While pressing the “0” and “5” keys on the copier’s control panel simultaneously, turn on the power switch.

② After confirming that “TEST MODE” is shown on the display, key in “3”,“5” and “0” and press the START key.

③ To make the original stop at the feed side of the ADF, key in a number smaller than the one shown now and press the SET key or the INTERRUPT key. If you want to stop the original at the exit side of the ADF, key in a number larger than the one shown now and press the SET key or the INTERRUPT key.

1 step: Approx. 1mm adjustable Allowable input values: 0 ~ 15

④ With an original set on the original feed tray, if you press the ENERGY SAVER key, an original is fed in and copied.

⑤ After adjustment is completed, press the “0” and “9” keys simultaneously to go into the normal copy mode.

1.22.4 Adjustment of leading-edge position for ADF (at the Time of Reversing)

If the original fed from the ADF has not stopped in the preset position after reversing, make adjustment using the following procedure:

① While pressing the “0” and “5” keys on the copier’s control panel simultaneously, turn on the power switch.

② After confirming that “TEST MODE” is shown on the display, key in “3”,“5” and “1” and press the START key.

③ To make the original stop at the feed side of the ADF, key in a number smaller than the one shown now and press the SET key or the INTERRUPT key. If you want to stop the original at the exit side of the ADF, key in a number larger than the one shown now and press the SET key or the INTERRUPT key.

1 step: Approx. 2mm adjustable Allowable input values: 0 ~ 15

④ With an original set on the original feed tray, if you press the ENERGY SAVER key, an original is fed in and copied.

⑤ After adjustment is completed, press the “0” and “9” keys simultaneously to go into the normal copy mode.

1.22.5 Adjustment of magnetic catches installation

Place the belt unit on the glass face, and make magnetic catches adsorb to the metal plate in the state where the spacers L, R and glass are in contact, and then secure the belt unit with fixing screws.
Space between each spacer and the glass face shall be 0.5mm or less.

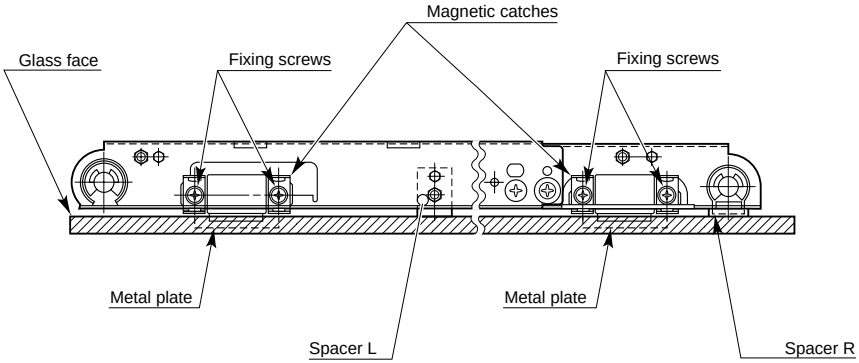

1.22.6 Adjustment of the separation area

When the separation plate is attached using the thickness gage, there should be a 0.6±0.2mm clearance between the separation mylar and the rubber of the feed roller (the difference by the side of the front and rear is 0.2mm or less).

Adjust the gap between the separation mylar and the feed roller in the thrust direction by sliding the bracket to right and left so that the gap becomes 0.3mm or more (see the view from B).

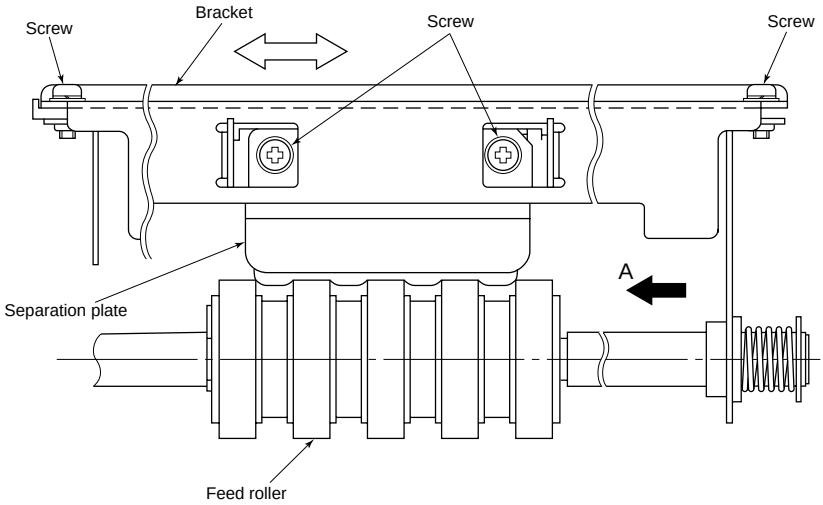

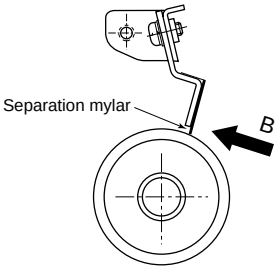

View from "A"

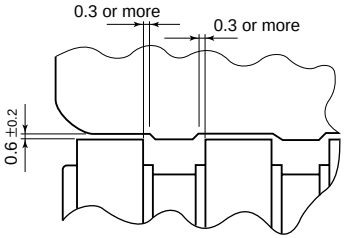

View from "B"(detailed drawing)

1.22.7 EEPROM Initialization, Sensor Adjustment and Test Mode

(1) EEPROM initialization and sensor adjustment

Whenever the logic PC board, aligning sensor, timing sensor or exit sensor is replaced, it is necessary to initialize the EEPROM and adjust the sensor by adjustment mode (05).

If the initialization and/or adjustment is not performed, errors (paper jam etc.) may occur.

(2) Test mode

The independent test modes below can be performed by test mode (output check: 03). Refer to the Service Manual for the PPC.

- Pick-up roller rotation
- Aligning roller rotation
- Transport belt rotation CW
- Transport belt rotation CCW
- Reversal roller rotation

1.23 Key Copy Counter (MU-8, MU-10)

The following two parts are needed for installing the key copy counter.

- MU-10 counter socket
- MU-8 key copy counter

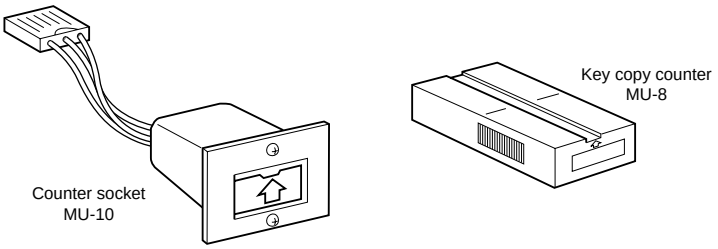

<Installation Procedure>

(1) Remove the rear cover (1 screw).
(2) Remove the right top cover and cut the window for the counter.
(3) Draw out the harness connector from the frame hole, and cut the short harness of the connector. (Treat the cut end of the harness properly to avoid it causing short-circuit with the frame.) And then remove the short connector.

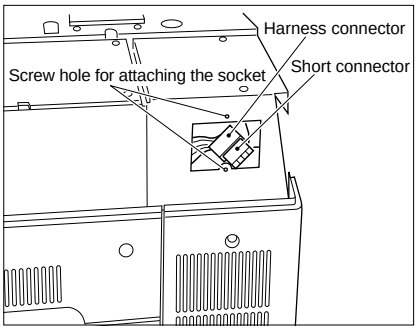

(4) Connect the counter socket connector to the harness connector of the machine.
(5) Install the counter socket onto the frame. (2 M3 screws)
(6) Reinstall the right top cover and rear cover.

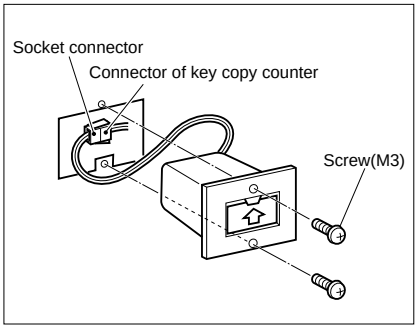

(7) Insert the key copy counter with its arrow facing up and pointing toward the copier.

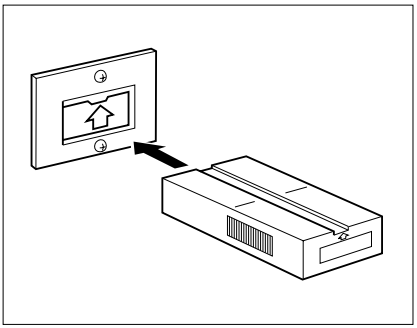

(8) In the “08” setting mode, enter “3” under code 202.

1.24 Fine Adjustment of Binding Position/Folding Position

By moving the paper positioning plate up or down, fine adjustment of the binding position/folding position can be made.

Adjustment Code "05" - Code "468-0~2

* Increasing the adjustment value shifts the binding position/folding position towards the right-hand page by 0.25mm for each/step.
* Decreasing the adjustment value shifts the binding position/folding position towards the left-hand page by 0.25mm for each/step.

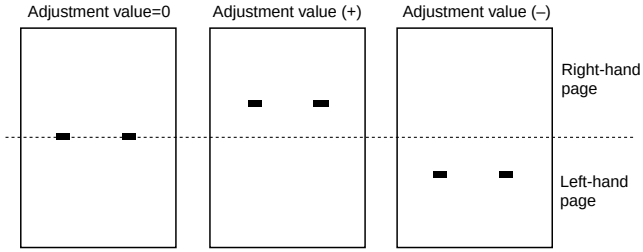

Notes: 1. When fine adjustment of the binding positio/folding position is performed, the following result should be obtained.

2. The outermost of the book (“A” in the figure below) will be:
the book opening from the left: A will be the last page
the book opening from the right: A will be the first page.

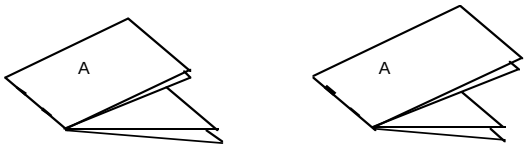

Adjustment value (+) Adjustment value (–)

1.25 Adjustment of RADF Height

The adjustment screws attached to the hinge are to adjust the height of the gap between the glass and the RADF.

(1) Adjustment screws:
    If they are turned counterclockwise, the gap becomes narrower.
    The adjustment screws are on the right hinge and the left hinge (2 places).

(2) The gap (arrow A) of the adjustment value is 0 ~0.5mm.

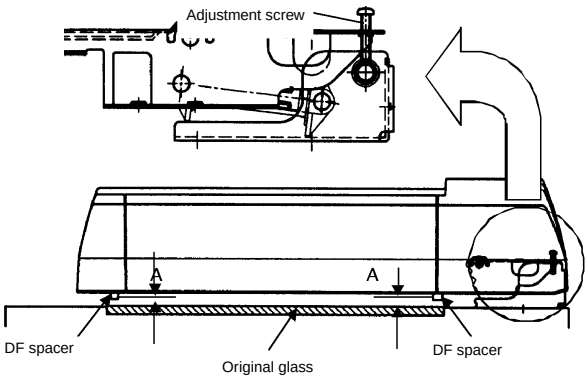

1.26 Flapper Solenoid Adjustment

(1) Push the flapper solenoid plunger by hand.
(This makes the solenoid able to be pulled in electrically.)
(2) Install BRKT-SOL-RVS so that the flapper rubber can contact with the flapper lever.
(3) Fix BRKT-SOL-RVS with the screw.
(4) With the solenoid pulled, confirm that there is no gap between the flapper rubber and the flapper lever.

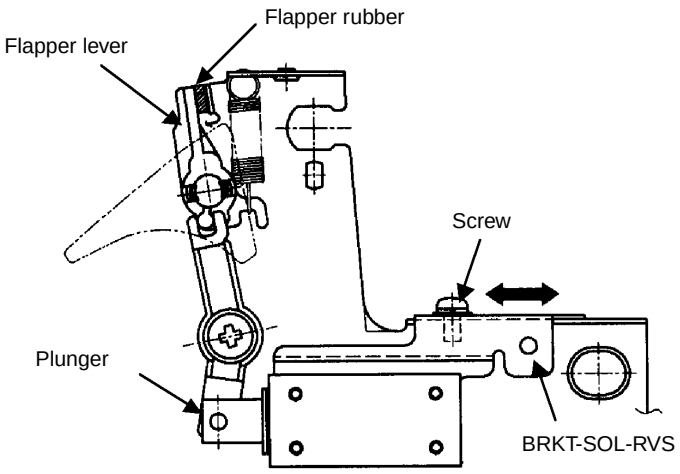

1.27 Developer powder life control switching ("08-414")

(1) Usually select **"0".**
Even if **"0"** is selected, it can be found that toner scattering does not stop in special cases such as repeat printing of small quantities.
In this instance, select 1, 2, 3 in steps.
(2) Select **"2"** in the following case. When **"0"** is selected and toner scattering soils the image after 200,000 to 300,000 copies. **"1"** is an intermediate stage between **"0"** and **"2",** whereas **"3"** is above this.
However in low humidity conditions, **"2"** and **"3"** can reduce the image density.
(3) When the new ROM is applied; If toner scattering occurs on the market, as a countermeasure manually return the machines which have had 10 bits reduced to their previous status by the following method.

New ROM PRA-300M-10~
PRA-302M-04~
PRA-304M-02~

(Adjustment Method)

1) Write the value of 08/404.
2) With the UP key in 05/200, raise the current control bit value by 10 bits.
3) Press the setting key.
4) n 04/404 once again, input the written value (1) using the digital keys.

1.27 Additional Parts when Installing the Paper Exit Tray

To ensure perfomance of exiting-paper under all conditions, the parts used in the copier exit area for the installation of the exit tray and the finisher differ as follows.

[Installation Method]

(1) Remove the lower exit cover (4 screws)

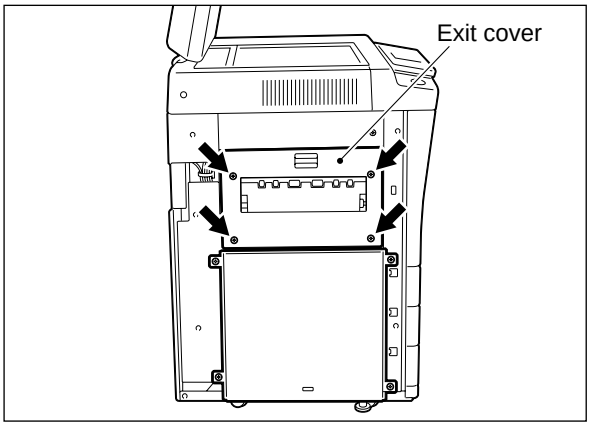

(2) Remove the rear E-ring, and slide the bearing to the inside of the frame.

(3) Slide the exit roller to the rear and the bearing to the inside of the frame, and remove the exit roller while pulling out the exit roller rear side.

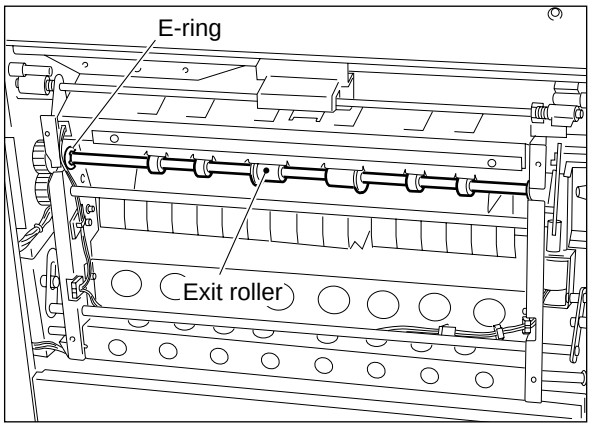

(4) Install RING-EXIT-24-UR (2 pieces) to the exit roller groove from the front side.

Note

*****The exit roller has the groove for installation.

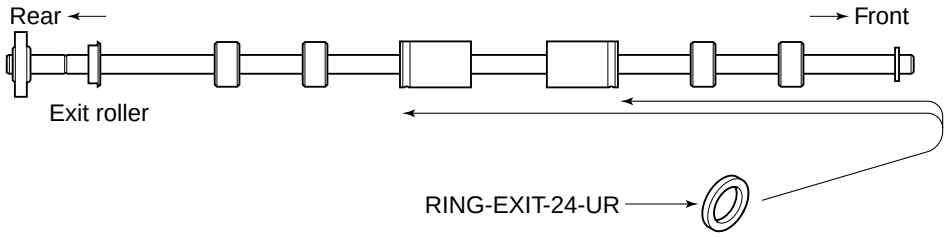

(5) Remove the following parts of the rear side (refer to the figure on the right).

*1 pusher
*2 gears

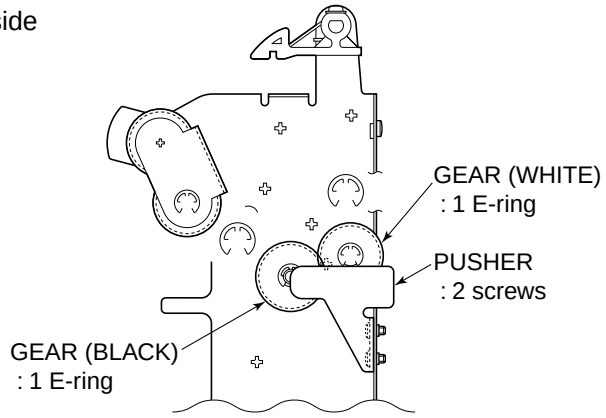

(6) Remove the SHAFT-TRAY.
(screws: 1 at the rear, 1 at the front)

(7) Install the COLLER-SFT-TRAY (2 pieces).

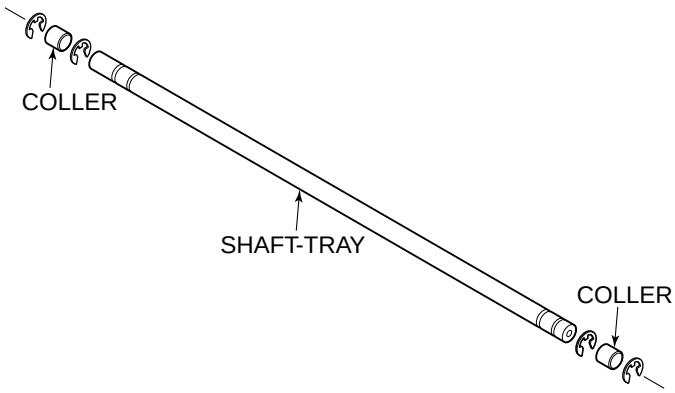

Notes

*When attaching the SHAFT-TRAY, Pay attention to whether it is facing the front or the rear (see below).

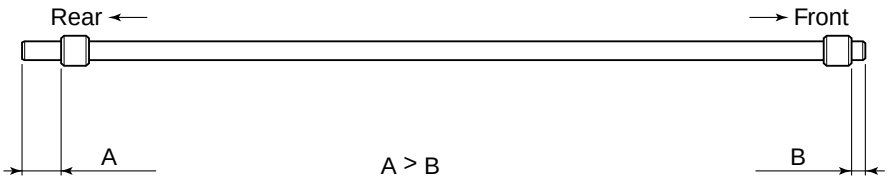

*When attaching the gear, be careful to the direction of the gears. (See below; both should face in the same direction)

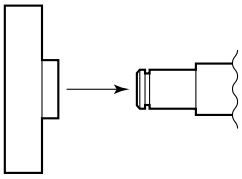

2. PERIODICAL MAINTENANCE

2.1 Inspection every 440,000 Copies (8070), every 400,000 Copies (6570), every 340,000 Copies (5570), every 280,000 Coies (4580)

(1) Preparation

① Ask the copier operator about the present machine conditions and note them down.

② Before starting the maintenance work, make and retain a few sample copies for comparison reference purposes.

③ Turn the power switch OFF and disconnect the power cord plug.

(2) The periodic inspection should be conducted in accordance with the Periodic Inspection Check list shown below.
Perform the inspection by referring to the figures, as well as to the explanation in the Service Manual when necessary.

(3) After the inspection has been completed, plug in the machine and turn the power switch ON, and check the general operation of the machine by making a few copies and comparing them to those made previously.

2.2 Inspection and Overhaul every 880,000 Copies (8070), every 800,000 Copies (6570/5570/4580)

(1) Replace all the consumables.

(2) Check that if there is any damage to the parts in the driving section (gear, pulley, timing belt, etc.). In principle, replace those parts at this time.

(3) Check to see if there is any damage or peeling of adhered parts (tape, Mylar sheet, etc.). Replace any affected parts if necessary.

(4) Check that if all the switches and sensors operate properly. Replace them if they are not operating properly.

(5) Clean the inside of the machine thoroughly.

Note: Before inspecting and overhauling the feed section of the 3-cassette feed unit, remove the PFP upper aligning unit and PFP feed unit from the copier.

2.3 Periodic Inspection Check List

Symbols used in the Periodic Inspection Check List

Cleaning	Lubrication	Replacement	Operation check	Date
Ⓐ: Cleaning with alcohol	Ⓛ: Launa 40	100: Every 100,000 copies	◯: Check for abnormalities after cleaning or replacement.	User's name
◯: Cleaning with soft pad, cloth, or cleaner (vacuum cleaner)	Application	280: Every 280,000 copies		
	Ⓢⓘ: Silicon Oil	340: Every 340,000 copies		Machine No.
	Ⓦ: White grease (Molycoat)	400: Every 400,000 copies		
	Ⓐⓥ: Alvania No.2	440: Every 440,000 copies		Inspector
		Same from here on		
		△: Replace in event of deformation or other damage		Remarks

PERIODIC INSPECTION CHECK LIST For 6570/5570

Category	Item to check	Clean at 400,000 copies (340,000 copies)	Lubricate at 400,000 copies (340,000 copies)	Replace x 1,000	Check while on	Remarks <Page-Item>
Cleaner	1. Overall unit	◯				
	2. Main blade			400 (340)		*1 <P54-I24>
	3. Toner bag			100		Conducted by copier operator <P57-I29>
	4. Recovery blade	◯		△		*2
	5. Separation claw (for Drum)			400 (340)	◯	*3 <P56-I21>
	6. Fur brush			400 (340)		<P55-I23>
	7. Toner transport auger drive		Ⓦ			*13
	8. Cleaner lower guide	◯				
	8-1. Toner adhesion amount sensor	◯				*22
	8-2. Drum shaft bearing	◯				*22
Drum	9. Discharge LED	◯				
	10. Drum shaft	◯				
	11. Drum			400 (340)		*4 <P47-I1>
	12. Ozone filter (for exit fan)			400 (340)		<P61-I11>
Scanner	13. Glass	◯ or Ⓐ				
	14. Glass holder	◯ or Ⓐ				
	15. Mirror 1	◯				
	16. Mirror 2	◯				
	17. Mirror 3	◯				
	18. Reflector	◯				
	19. Lens	◯				
	20. Exposure lamp			△	◯	
	21. Copy area indicator				◯	
	21-1. Shading glass	◯				<P44-I7>
	22. Automatic paper-size detector	◯			◯	
	23. Slide sheet (front, rear)	◯ or Ⓐ		△		
	24. Air filter	◯		△		*5
Charger	25. Case	◯				*6
	26. Charger wire			400 △ (340)	◯	*6 <P46-I16>
	27. Terminal contact	◯				
	28. Charger wire cleaner			400 (340)		<P46-I9>
	29. Grid			400 (340)		<P46-I24>
Around laser unit	30. Slit glass on the copier	◯				*20
Developer	31. Overall unit	◯				
	31-1. Duct cover	◯				*23
	32. Developer material			400 (340)		*7
	33. Front shield	◯		△		

Notes: 1. Figures in parentheses indicate the inspection cycle of the 5570.

2. The “Remarks” column indicates page and item numbers in the Parts List for consumable parts. The consumable replacement cycle on the feeding system is the number of sheets fed on each feeding source.

For 6570/5570

Category	Item to check	Clean at 400,000 copies (340,000 copies)	Lubricate at 400,000 copies (340,000 copies)	Replace x 1,000	Check while on	Remarks <Page-Item>
Developer	34. Oil seal (9 portions)		Ⓐⓥ			*16
	35. Guide roller	◯ or Ⓐ		△		
	36. Duct filter	◯		△		*5
	37. Toner filter			400 (340)		<P48-I12>
	38. Toner hopper drive worm gear		Ⓦ			
Paper feed section	42. Aligning roller	Ⓐ		△		
	43. Paper guide	◯		△		
	44. Brush	◯		△		
	46. Paper feed system drive gears (tooth faces)		Ⓦ			
	47. Aligning unit support bush and pressurizing leaf spring		Ⓦ			*11
Fuser unit	69. Upper heat roller (Teflon roller)			400 (340)		*8 <P31-I17>
	70. Lower heat roller (rubber roller)			400 (340)		*8 <P31-I19>
	71. Upper separation claw			400 (340)		*9 <P32-I20>
	72. Lower separation claw			△		*9
	73. Cleaning roller 1			400 (340)		*10 <P33-I7>
	74. Cleaning roller 2			400 (340)		*10 <P33-I5>
	75. Cleaning roller 3			400 (340)		*10 <P33-I16>
	75-1. Cleaning roller 4			400 (340)		*10 <P32-I37>
	76. Upper and lower thermistors	Ⓐ		△		
	77. Heat roller entrance guide	Ⓐ				
	78. Heat roller exit guide	Ⓐ				
	79. Paper dust recovery bracket	◯				
	80. Exit roller	Ⓐ				
	81. Heat roller/cleaning roller drive gear		Ⓢⓘ			
	82. Cleaning roller bush		Ⓢⓘ			
Transfer belt	83. Transfer belt			400 (340)		*17 <P29-I42>
	84. Transfer belt power supply roller			400 (340)		*18 <P29-I38>
	85. Transfer belt cleaning brush			400 (340)		*19 <P29-I8>
	86. Transfer belt drive roller	Ⓐ		△		
	87. Transfer belt follower roller	Ⓐ		△		
	88. Transfer belt separation auxiliary roller	Ⓐ		△		
	89-1. Transfer belt cleaning blade			400 (340)		*21 <P29-I27>
	89-2. Flicker periphery	◯				
	89-3. GCB bush and plastic bush		Ⓛ			

For 6570/5570

Category	Item to check	Clean at 400,000 copies (340,000 copies)	Lubricate at 400,000 copies (340,000 copies)	Replace x 1,000	Check while on	Remarks <Page-Item>
Transfer belt	89-4. Transfer belt separation auxiliary roller bearing and GCB	Ⓐ	Ⓛ			
ADU	90. ADU pick-up roller	Ⓐ		△		
	91. ADU feed roller	Ⓐ		△		
	92. ADU separation belt	Ⓐ		△		
	93. Transport rollers 1 to 4	Ⓐ		△		
	94. ADU aligning roller	Ⓐ		△		
	95. GCB bush and plastic bush		Ⓛ			
	96. Drive gear tooth faces		Ⓦ			
	97. Exit/ADU switching gate and Main unit eixt section/ADU relay roller	Ⓐ				
PFP	48. PFP pick-up roller			100		<P11-I43>
	49. PFP feed roller			100		*24 <P11-I21>
	50. PFP separation roller		Ⓐ/Ⓥ	100		*14 <P12-I21>
	51. PFP aligning roller	Ⓐ		△		
	52. Paper guide	◯				
	53. Tray drive worm wheel and gear (tooth faces)		Ⓦ			*12
	54. PFP drive gear (tooth faces)		Ⓦ			
	55. GCB bush and plastic bush		Ⓛ			
ADF	98. ADF pick-up roller			400 (340)		<P81-I18>
	99. ADF feed roller			400 (340)		<P81-I14>
	100. ADF separation pad			400 (340)		<P81-I53>
	101. Transport belt			400 (340)		<P84-I22>
	102. ADF aligning roller	Ⓐ				
	103. ADF reversal roller	Ⓐ				
	104. ADF empty sensor	◯				
	105. ADF aligning sensor	◯				
	106. ADF size sensor	◯				
	107. Exit sensor	◯				
	108. ADF timing sensor	◯				
	109. Transport belt cleaning brush	◯				
LCF	56. LCF pick-up roller			400 (340)		<P17-I19>
	57. LCF feed roller			400 (340)		*24 <P17-I9>
	58. LCF separation roller		Ⓐ/Ⓥ	400 (340)		*14, *24 <P17-I40>
	59. Manual pick-up roller			100		<P18-I19>
	60. Manual feed roller			100		<P18-I15>
	61. Manual separation roller		Ⓐ/Ⓥ	100		*14 <P16-I32>
	62. Paper guide	◯				
	63. Paper feed system drive gears		Ⓦ			
	64. GCB bush and plastic bush		Ⓛ			
	65. Gear		Ⓦ			*15
	66. Worm and worm wheel		Ⓦ			*15
	67. Worm shaft		Ⓦ			*15
	68. Wire pulley shaft		Ⓦ			*15

Note: When lubricating, do not allow oil to come in contact the rollers, belts and belt pulleys.

PERIODIC INSPECTION CHECK LIST For 8070/4580

Category	Item to check	Clean at 440,000 copies (280,000 copies)	Lubricate at 440,000 copies (280,000 copies)	Replace x 1,000	Check while on	Remarks <Page-Item>
Cleaner	1. Overall unit	◯				
	2. Main blade			440 (280)		*1 <P54-I24>
	3. Toner bag			100		Conducted by copier operator <P57-I29>
	4. Recovery blade	◯		△		*2
	5. Separation claw (for Drum)			440 (280)	◯	*3 <P56-I21>
	6. Fur brush			440 (280)		<P55-I23>
	7. Toner transport auger drive		Ⓦ			*13
	8. Cleaner lower guide	◯				
	8-1. Toner adhesion amount sensor	◯				*22
	8-2. Drum shaft bearing	◯				*22
Drum	9. Discharge LED	◯				
	10. Drum shaft	◯				
	11. Drum			440 (280)		*4 <P47-I1>
	12. Ozone filter (for exit fan)			440 (280)		<P61-I11>
Scanner	13. Glass	◯ or Ⓐ				
	14. Glass holder	◯ or Ⓐ				
	15. Mirror 1	◯				
	16. Mirror 2	◯				
	17. Mirror 3	◯				
	18. Reflector	◯				
	19. Lens	◯				
	20. Exposure lamp			△	◯	
	21. Copy area indicator				◯	
	21-1. Shading glass	◯				<P44-I7>
	22. Automatic paper-size detector	◯			◯	
	23. Slide sheet (front, rear)	◯ or Ⓐ		△		
	24. Air filter	◯		△		*5
Charger	25. Case	◯				*6
	26. Charger wire			440 △ (280)	◯	*6 <P46-I16>
	27. Terminal contact	◯				
	28. Charger wire cleaner			440 (280)		<P46-I9>
	29. Grid			440 (280)		<P46-I24>
Around laser unit	30. Slit glass on the copier	◯				*20
Developer	31. Overall unit	◯				
	31-1. Duct cover	◯				*23
	32. Developer material			440 (280)		*7
	33. Front shield	◯		△		

Notes: 1. Figures in parentheses indicate the inspection cycle of the 4580.

2. The “Remarks” column indicates page and item numbers in the Parts List for consumable parts. The consumable replacement cycle on the feeding system is the number of sheets fed on each feeding line.

For 8070/4580

Category	Item to check	Clean at 440,000 copies (280,000 copies)	Lubricate at 440,000 copies (280,000 copies)	Replace x 1,000	Check while on	Remarks <Page-Item>
Developer	34. Oil seal (9 portions)		Ⓐⓥ			*16
	35. Guide roller	◯ or Ⓐ		△		
	36. Duct filter	◯		△		*5
	37. Toner filter			440 (280)		<P48-I12>
	38. Toner hopper drive worm gear		Ⓦ			
Paper feed section	42. Aligning roller	Ⓐ		△		
	43. Paper guide	◯		△		
	44. Brush	◯		△		
	46. Paper feed system drive gears (tooth faces)		Ⓦ			
	47. Aligning unit support bush and pressurizing leaf spring		Ⓦ			*11
Fuser unit	69. Upper heat roller (Teflon roller)			440 (280)		*8 <P31-I17>
	70. Lower heat roller (rubber roller)			440 (280)		*8 <P31-I19>
	71. Upper separation claw			440 (280)		*9 <P32-I20>
	72. Lower separation claw			△		*9
	73. Cleaning roller 1			440 (280)		*10 <P33-I7>
	74. Cleaning roller 2			440 (280)		*10 <P33-I5>
	75. Cleaning roller 3			440 (280)		*10 <P33-I16>
	75-1. Cleaning roller 4			440 (280)		*10 <P32-I37>
	76. Upper and lower thermistors	Ⓐ		△		
	77. Heat roller entrance guide	Ⓐ				
	78. Heat roller exit guide	Ⓐ				
	79. Paper dust recovery bracket	◯				
	80. Exit roller	Ⓐ				
	81. Heat roller/cleaning roller drive gear		Ⓢⓘ			
	82. Cleaning roller bush		Ⓢⓘ			
Transfer belt	83. Transfer belt			440 (280)		*17 <P29-I42>
	84. Transfer belt power supply roller			440 (280)		*18 <P29-I38>
	85. Transfer belt cleaning brush			440 (280)		*19 <P29-I8>
	86. Transfer belt drive roller	Ⓐ		△		
	87. Transfer belt follower roller	Ⓐ		△		
	88. Transfer belt separation auxiliary roller	Ⓐ		△		
	89-1. Transfer belt cleaning blade			440 (280)		*21 <P29-I27>
	89-2. Flicker periphery	◯				
	89-3. GCB bush and plastic bush		Ⓛ			

For 8070/4580

Category	Item to check	Clean at 440,000 copies (280,000 copies)	Lubricate at 440,000 copies (280,000 copies)	Replace x 1,000	Check while on	Remarks <Page-Item>
Transfer belt	89-4. Transfer belt separation auxiliary roller bearing and GCB	Ⓐ	Ⓛ			
ADU	90. ADU pick-up roller	Ⓐ		△		
	91. ADU feed roller	Ⓐ		△		
	92. ADU separation belt	Ⓐ		△		
	93. Transport rollers 1 to 4	Ⓐ		△		
	94. ADU aligning roller	Ⓐ		△		
	95. GCB bush and plastic bush		Ⓛ			
	96. Drive gear tooth faces		Ⓦ			
	97. Exit/ADU switching gate and Main unit eixt section/ADU relay roller	Ⓐ				
PFP	48. PFP pick-up roller			100		<P11-I43>
	49. PFP feed roller			100		*24 <P11-I21>
	50. PFP separation roller		Ⓐ/Ⓦ	100		*14 <P12-I21>
	51. PFP aligning roller	Ⓐ		△		
	52. Paper guide	◯				
	53. Tray drive worm wheel and gear (tooth faces)		Ⓦ			*12
	54. PFP drive gear (tooth faces)		Ⓦ			
	55. GCB bush and plastic bush		Ⓛ			
ADF	98. ADF pick-up roller			440 (280)		<P81-I18>
	99. ADF feed roller			440 (280)		<P81-I14>
	100. ADF separation pad			440 (280)		<P81-I53>
	101. Transport belt			440 (280)		<P84-I22>
	102. ADF aligning roller	Ⓐ				
	103. ADF reversal roller	Ⓐ				
	104. ADF empty sensor	◯				
	105. ADF aligning sensor	◯				
	106. ADF size sensor	◯				
	107. Exit sensor	◯				
	108. ADF timing sensor	◯				
	109. Transport belt cleaning brush	◯				
LCF	56. LCF pick-up roller			440 (280)		<P17-I19>
	57. LCF feed roller			440 (280)		*24 <P17-I9>
	58. LCF separation roller		Ⓐ/Ⓦ	440 (280)		*14, *24 <P17-I40>
	59. Manual pick-up roller			100		<P18-I19>
	60. Manual feed roller			100		<P18-I15>
	61. Manual separation roller		Ⓐ/Ⓦ	100		*14 <P16-I32>
	62. Paper guide	◯				
	63. Paper feed system drive gears		Ⓦ			
	64. GCB bush and plastic bush		Ⓛ			
	65. Gear		Ⓦ			*15
	66. Worm and worm wheel		Ⓦ			*15
	67. Worm shaft		Ⓦ			*15
	68. Wire pulley shaft		Ⓦ			*15

Note: When lubricating, do not allow oil to come in contact the rollers, belts and belt pulleys.

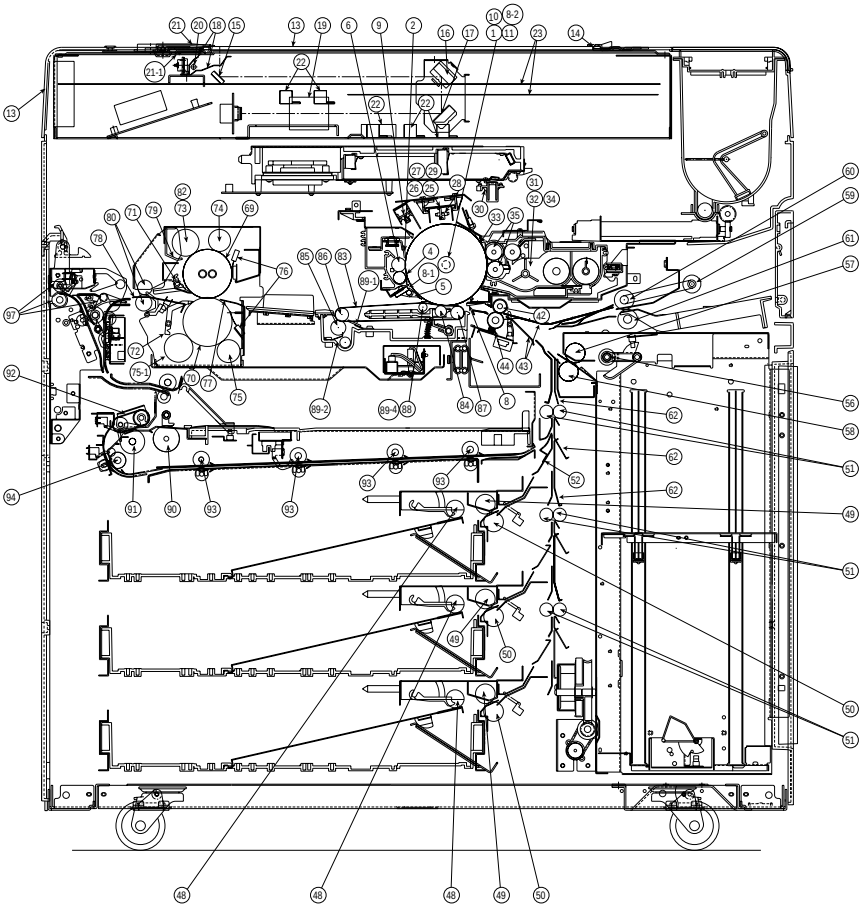

Front sectional view (ec. drive system)

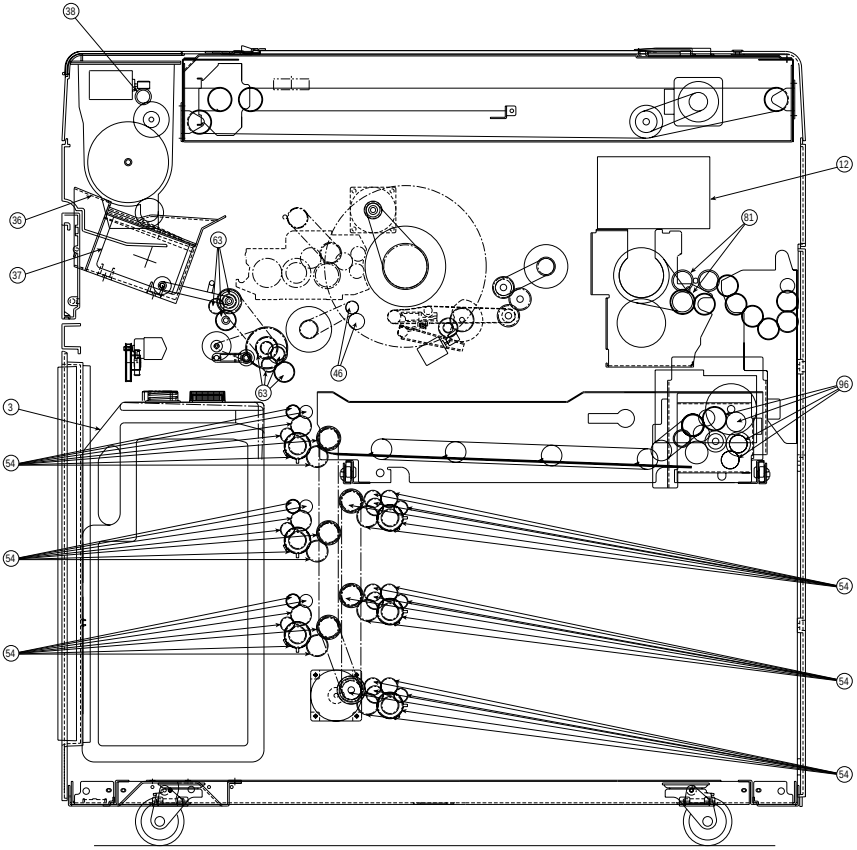

Rear drive system

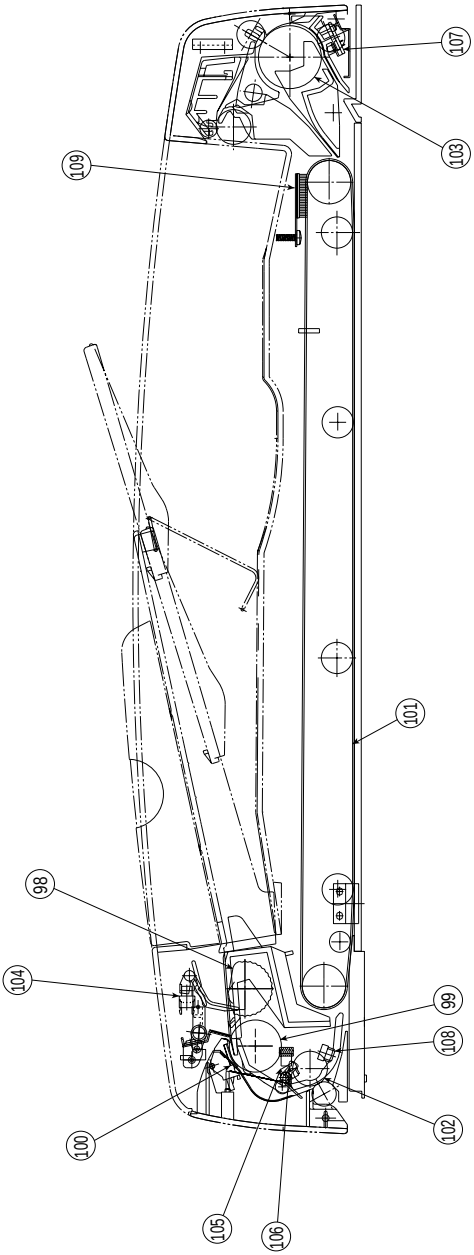

ADF front sectional view

Explanation of the items in the "Remarks" column of the Periodic Inspection Check List

*1 Main blade and fur brush
If defective cleaning occurs due to the adhesion of paper dust, etc., the edge of the blade might have been damaged. Replace the blade regardless of the number of the copies made so far. Also replace the fur brush at this time

*2 Recovery blade
If the edge of the blade is damaged, replace the blade regardless of the number of copies made so far.

*3 Drum separation claw
If the tip of the separation claw has been damaged (e.g. worn coating) or separation claw marks are apparent in the copied image, replace the claw regardless of the number of copies made so far. Clean the tip of the claw by lightly wiping with a dry cloth. After cleaning, be sure to remove bits of lint from the claw. In addition, be sure to apply patting powder (lubricant) to the separation claw after cleaning the claw and when replacing the claw or drum.

*4 Drum
Refer to section "3.2 Checking and Cleaning the OPC Drum".

*5 Air filter, Duct filter
Replace the air filter if it is heavily dirty.

*6 Charger wire and case
Use a cloth which should be soaked in water and then wrung lightly to clean those.

*7 Developer material
After replacing the developer material, be sure to adjust the corresponding auto-toner sensor.

*8 Upper and lower heat rollers
Refer to section "3.5 Checking and Cleaning Upper and Lower Heater Rollers".

*9 Heat roller separation claw
If the tip of the separation claw is chipped, replace it regardless of the number of copies made so far. If toner adhering to the separation claw is forcibly scraped off, the claw may be damaged. Therefore, replace the claw if its tip is heavily coated with toner.

*10 Heat roller cleaning roller 1, 2, 3, 4
Refer to section "3.4 Checking and Replacing Heat roller cleaning roller 1, 2, 3, 4".

*11 Aligning unit support bush and pressurizing leaf spring

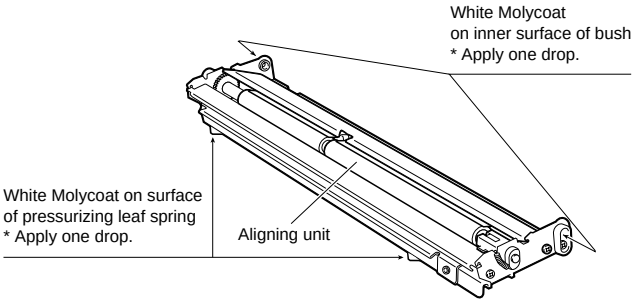

*12 Apply white grease to the tray drive worm wheel and to the faces of the gear teeth.

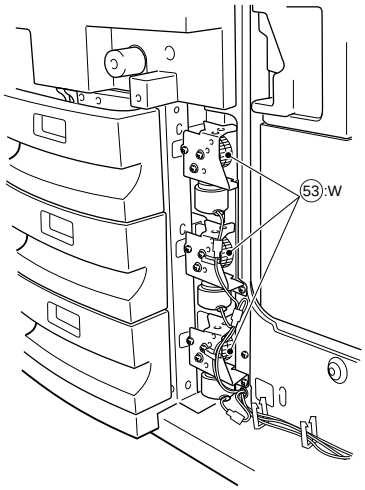

*13 Used toner transport auger drive section

Apply white grease to the used toner transport auger drive section (shown by arrow).

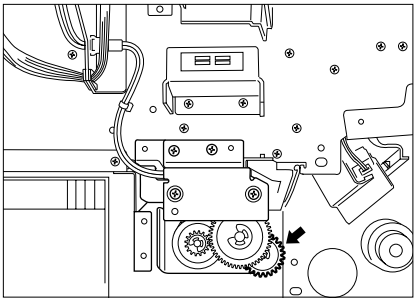

*14 PFP/LCF/manual separation rollers

Apply Alvania No.2 to the separation roller boss.

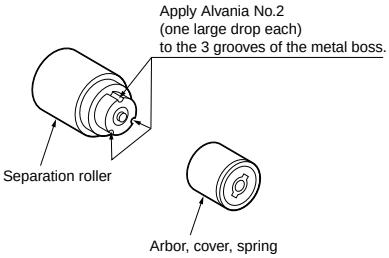

*15 LCF drive unit

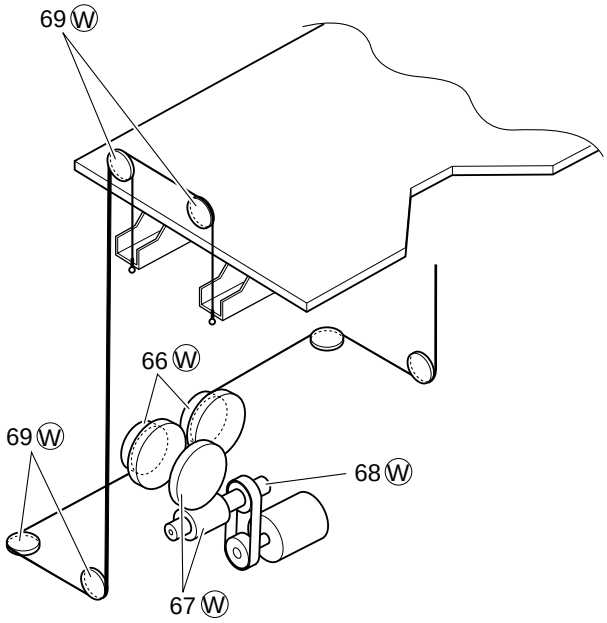

*16 Oil seal

Mixer shaft ..... 4 pcs.
Paddle shaft ..... 2 pcs.
Developer roller (U) ..... 1 pc.
Developer roller (L) ..... 1 pc.
Transport roller ..... 1 pc.

Replace the 9 oil seals on the developer unit every 800,000 copies (6570), 880,000 copies (8070), 680,000 copies (5570), 560,000 copies (4580).

During replacement, coat the oil seal with grease (Alvania No.2) using the following steps:

Oil Seal

(1) Push in a new oil seal parallel to the mounting hole section of the developer frame or outside of the nozzle mixer.
    * Pay attention to the direction in which the oil seal is attached. (See figure on right.)
(2) Apply an even coat of grease to the inside of the oil seal.
    • Amount: About two small drops
(3) Wipe off any grease exuded from the inside.

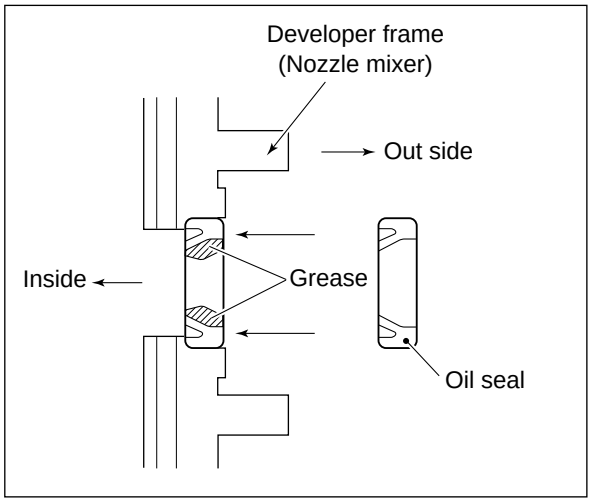

Mixer Shaft

Apply a coating of grease (Alvania No.2) to the entire periphery of the mixer shaft before attaching the bearing.

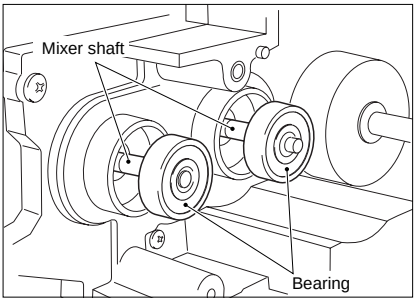

*17 Transfer belt

Refer to section “3.6 Checking and Replacing the Transfer Belt”.

*18 Transfer belt power supply roller

Refer to section “3.7 Checking and Replacing the Transfer Belt Power Supply Roller”.

*19 Transport belt cleaning brush

Refer to section “3.8 Checking and Replacing the Transport Belt Cleaning Brush”.

*20 Slit glass on the main unit

Remove the slit glass, and clean the front and back sides.

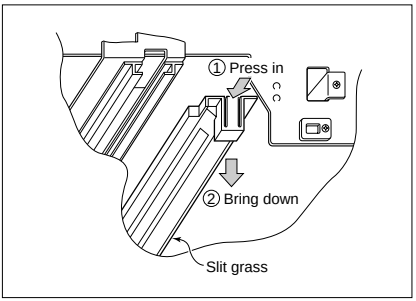

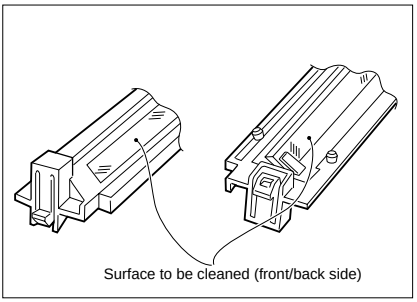

*21 Transfer belt cleaning blade

Refer to section “3.3 Checking and Cleaning the Drum Blade, the Transfer Belt Cleaning Blade”.

*22 Cleaner Unit

Be sure to connect the ground lead to the aluminum die cast on the rear of the cleaner (exit side) before you clean the cleaner unit. Then clean the unit with, for example, a vacuum cleaner.
(If the cleaner unit is not grounded, static electricity may damage the toner adhesion amount sensor.)
Also wipe the window of the toner adhesion amount sensor with a cotton wool bud or tissue.
(If the window of the toner adhesion amount sensor is dirty, the sensor may no longer function properly.)

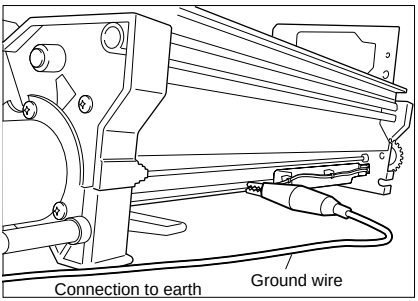

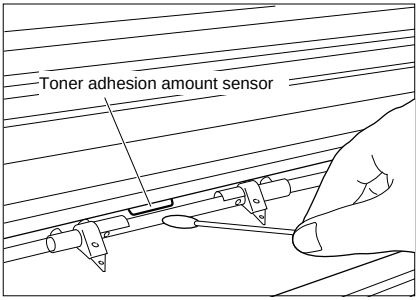

Next, wipe the inner diameter of the drum shaft bearing with a cloth.
(If toner adheres to the inner diameter, you may no longer be able to draw out the drum shaft.)

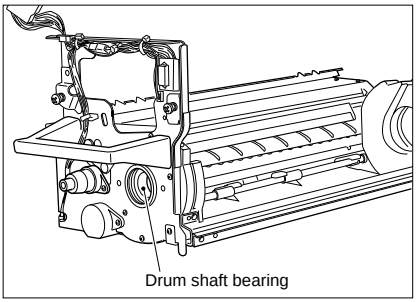

*23 Duct cover

Clean the duct cover by means of the following procedure immediately after extracting the old developer material.

(1) Turn over the developer unit.

(2) The claws on the right and left shown in figure **A** on the right are removed from the developer unit. (see arrow **1**), and the duct is withdrawn towards the front (see arrow **2**).

(3) Remove the dirt and toner from the duct.

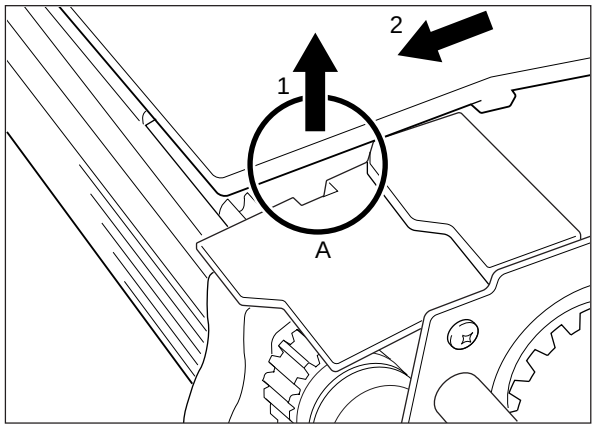

(4) The new duct cover is attached using the procedure opposite to that in (3). At this time, be careful to how you turn the harness of **B**. The projecting area of the duct should be slid into the developer unit groove (arrow **3**).

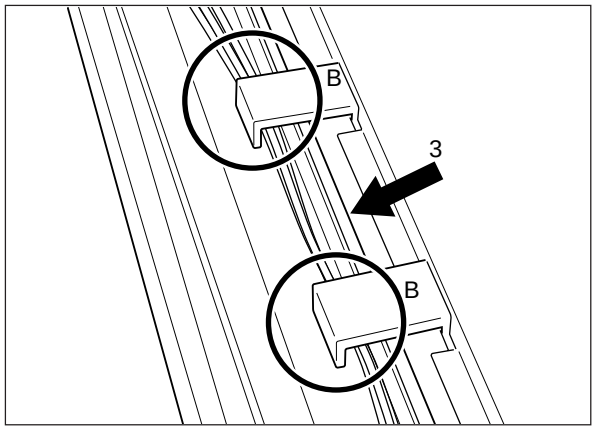

*24 Paper feeding related rollers

Refer to this illustration when servicing the paper feeding related rollers.

Be especially careful of the roller orientation (elephant skin texture).

(Notes)

P: Pickup roller : Paper path direction

F: Feed roller : Continuous line arrow, Forward rotation

S: Separation roller : Chain line arrow, Backward rotation

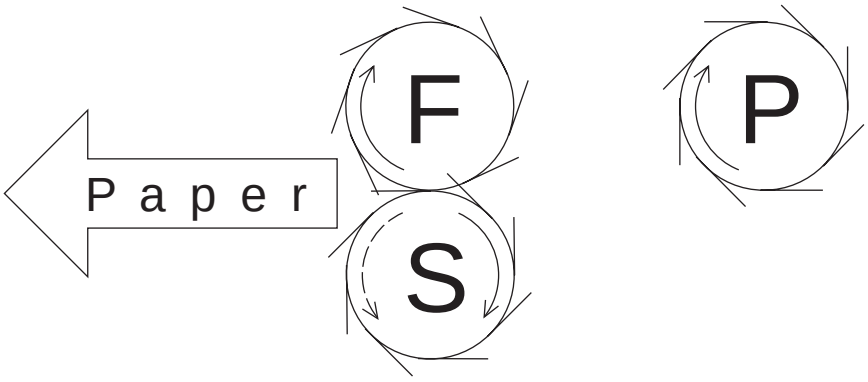

2.4 Periodical Maintenance Kit (For 400k)

[Layout Inside Copier]

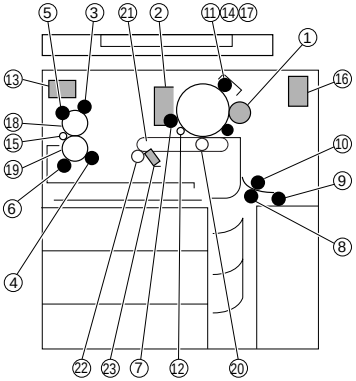

[Kit Components]

No.	Item	Item name	Q'ty
1	Developer material	D-6570	1
2	Main blade	BL-6570D	1
3	Cleaning roller 2	SR-6570H	1
4	Cleaning roller 3	SR-6570L	1
5	Cleaning roller 1	B-6570H	1
*6	Cleaning roller 4	B-6570L, B-8070L	1
7	Fur brush (cleaner)	B-6570	1
8	Separation roller (LCF)	K-ROL-SPT-CW-S	1
9	Pick-up roller (LCF)	K-ROL-PICK-2	1
10	Feed roller (LCF)	K-ROL-FEED-2	1
11	Charger wire cleaner (for main charger)	K-BASE-PAD-CH-M	1
12	Drum separation claw	K-CLAW-DRUM	2
13	Ozone filter	K-FILTER-OZON	1
14	Charger wire (for main charger)	WIRE-CH-060*398	1
15	Upper heat roller separation claw	SCRAPER-212	6
16	Toner filter (developer unit)	FILTER-DEV-F300	1
17	Grid (for main charger)	GRID-154	1
18	Heat roller (upper)	HR-6570-U	1
19	Heat roller (lower)	HR-6570-L	1
*20	Transfer belt power supply roller	CR-6570TR, CR-8070TR	1
21	Transfer belt	BT-6570TR	1
22	Fur brush (Transfer belt)	B-6570TR	1
23	Transfer belt cleaning blade	BL-6570TR	1

Note: *6. The B-8070L is available for 8070.
Both the B-6570 and B-8070L are available for 6570/5570/4580.
*20. The CR-8070TR is available for 8070.
Both the CR-6570 and CR-8070TR are available for 6570/5570/4580.

2.5 Jig List

Name	Parts List	
	Page	Item
Door switch jig	201	2
Lens adjustment jig	201	3
Wire holder jig	201	1

3. PRECAUTIONS FOR STORING & HANDLING SUPPLIES

3.1 Precautions for Storing TOSHIBA Supplies

A. Toner and Developer

Toner and developer should be stored in a place where the ambient temperature is between 10 to 35°C (no condensation), and should also be protected against direct sunlight during transportation.

B. OPC Drum

Like the toner and developer, OPC drums should be stored in a dark place where the ambient temperature is between 10 to 35°C (no condensation). Be sure to avoid places where drums may be subjected to high humidity, chemicals and/or their fumes.

C. Drum Blade

This item should be stored "horizontally" on a flat place where the ambient temperature is between 10 to 35°C, and should also be protected against high humidity, chemicals and/or their fumes.

D. Heat Roller

Avoid places where the heat rollers may be subjected to high humidity, chemicals and/or their fumes.

E. Cleaning Roller

Avoid places where felt roller may be subjected to high humidity, chemicals and/or their fumes. It should also be stored "horizontally" on a flat place.

F. Copy Paper

Avoid storing copy paper in places where it may be subjected to high humidity.

After a package is opened, be sure to place and store it in a storage bag.

3.2 Checking and Cleaning the OPC Drum

(1) Use of Gloves

If fingerprints or oil adhere to the drum surface, the characteristics of the photosensitive drum may degrade, affecting the quality of the copy image. So, do not touch the drum surface with your bare hands.

(2) Handling Precautions

As the OPC drum surface is very sensitive, be sure to handle the drum carefully when installing and removing it so as not to damage its surface.

Be sure to apply "patting powder" (lubricant) to the entire surface of the drum and separation claws on the cleaner before installing the drum into the machine. When the drum has been replaced with a new one, the drum counter (setting mode "08", code "401") must be cleared to 0 (zero).

Notes: 1. Application of the patting powder is for reducing the friction between the drum, cleaning blade, and separation claws. If the application of patting powder is neglected, the drum and cleaning blade may be damaged.

2. When paper fibers adhere to the cleaning blade edge, they may reduce the cleaning efficiency and, in addition, may damage the blade and the drum. Be sure to remove any fibers found adhering to the blade.

(3) Installation of Copier and Storage of Drum

Avoid installing the copier where it may be subjected to high temperature, high humidity, chemicals and/or their fumes.

Do not leave drums in a brightly lit place for a long time. Otherwise the drum will fatigue, and will not produce sufficient image density immediately after being installed in the machine. However, this effect may decrease as time elapses.

(4) Cleaning the Drum

At periodic maintenance calls, wipe the entire surface of the drum clean using the designated cleaning cotton. Use sufficiently thick cleaning cotton (dry soft pad) so as not to scratch the drum surface inadvertently with your fingertips or nails. Also, remove your rings and wristwatch before starting cleaning work to prevent accidental damage to the drum.

Do not use alcohol, selenium refresher and other organic solvents or silicon oil as they will have an adverse effect on the drum.

(5) Scratches on OPC Drum Surface

If the surface is scratched in such a way that the aluminum substrate is exposed, black spots or streaks will be produced on the copy images. In addition, the cleaning blade will be damaged so replacement with a new drum will be necessary.

(6) Collecting Used OPC Drums

Regarding the recovery and disposal of used OPC drums, we recommend following the relevant local regulations or rules.

3.3 Checking and Cleaning the Drum Cleaning Blade, Transfer belt cleaning blade

(1) Handling Precautions

Pay attention to the following points as the cleaning blade life is determined by the condition of its edge:

① Do not allow hard objects to hit or rub against blade edge. Do not rub the edge with a dry cloth or soft pad.
② Do not stain the edge with any oil (or fingerprints, etc.).
③ Do not apply solvents such as paint thinner to the blade.
④ Do not leave any lint or dirt on the blade edge.
⑤ Do not place the blade near a heat source.

(2) Cleaning Procedure

① Clean the blade edge lightly with a cloth moistened with water.

3.4 Checking and Cleaning the Heat Roller Cleaning Roller 1, 2, 3, 4

(1) Handling Precautions

Never allow solvents such as paint thinner to adhere to the cleaning roller.

(2) Defective Heat-Roller Cleaning and Corrective treatment

Defective heat-roller cleaning should be judged by the toner deposited on the upper heat roller.

If toner is heavily adhered on the heat roller sarface, defective cleaning any occur. If this happens, replace the cleaning roller.

The cleaning roller will be gradually degraded due to subjection to the heat from the heat roller over a long period of time. Replace it preferably after about 440,000 copies (8070), 400,000 copies (6570), 340,000 copies (5570), 280,000 copies (4580) copies have been made.

3.5 Checking and Cleaning the Upper and Lower Heat Rollers

(1) Handling Precautions

A Upper Heat Roller

① Do not leave oil (fingerprints, etc.) on the upper heat roller.

② Be extremely careful not to allow a hard object to hit or rub against the roller because the thin Teflon layer coated on the aluminum substrate is easily damaged and, if damaged, will result in defective drum cleaning.

B Lower Heat Roller

① Do not leave oil (fingerprints, etc.) on the lower heat roller.

(2) Checking

① Check for stain and damage on the heat roller and clean or replace if necessary.

② Clean the separation claws and check for chipped claws.

③ Check the cleaning condition of the cleaning roller.

④ Check the thermistor for proper contact with the heat roller.

⑤ Check the fused condition of the toner image.

⑥ Check the gap between the inlet guide and lower heat roller.

⑦ Check the heat rollers for proper rotation.

(3) Cleaning Procedure for Heat Rollers

When the heat roller becomes dirty, it will cause paper jamming. If this happens, wipe the roller surface clean with cotton moistened in alcohol. For a better cleaning effect, clean the roller while it is still warm.

Note: Be careful not to rub the Teflon-coated surface with your fingernails or hard objects because it is easily damaged. Do not use silicon oil on the upper heat roller.

3.6 Checking and Replacing Transfer Belt

(1) Handling Precautions

① Do not touch the belt surface with your bare hands.
② Prevent oil or other foreign matter from adhering to the belt surface.
③ Do not touch the transfer belt with alcohol or other organic solvents.
④ Do not apply external pressure that might scratch the transfer belt.

3.7 Checking and Replacing Transfer Belt Power Supply Roller

(1) Handling Precautions

① Do not touch the charger roller surface with your bare hands.
② Be carefull not to scratch or hit on to the charger roller surface.

3.8 Checking and Replacing Transfer Belt Cleaning Brush

(1) Handling Precautions

① Do not touch the brush surface with your bare hands.

4. TROUBLESHOOTING

4.1 Scanner System Related Service Call

[C27] [C28] Carriage initialization error

Remove the original glass, turn the power switch ON with the carriage moved to the feed side, and check the following items.

[C27] The carriage moves only slightly in the feed direction, or the carriage stays at a position other than the home position and does not move.

Yes → Check the circuits on the SLG and SDV boards for troubles.

No

- Check the connector pins for disconnection and the harness for breaks and short-circuits.
- Check the SDV board for breaks and short-circuits.
- Check the SLG board for breaks and short-circuits.
- Replace the SDV board.
- Replace the SLG board.

[C28] Is a loud sound emitted after the carriage bumps into the home position?

Yes → Cause: The home switch does not turn ON.

- Make sure that the switch connector is connected.
- Check the circuits on the SLG and SDV boards for troubles.

No

Cause: The carriage is located at the home position and does not move.

- Check the connector pins for disconnection and the harness for breaks and short-circuits.
- Check the SDV board for breaks and short-circuits.
- Check the SLG board for breaks and short-circuits.
- Replace the SDV board.
- Replace the SLG board.

[C26] [C29] Peak detection error exposure lamp disconnection detected

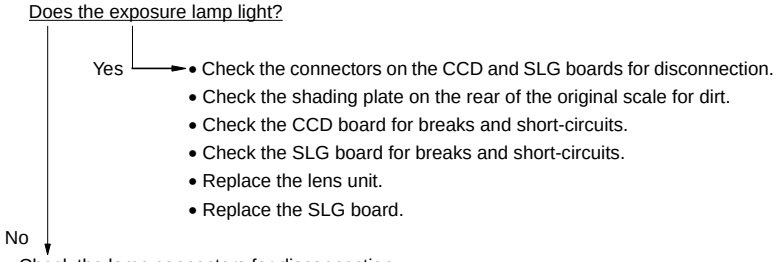

- Check the lamp connectors for disconnection.
- Check the thermostat to see if it has blown.
- Check electrical continuity of the lamp.
- Check SLG board connector pins J9-22, 23, 24, 25 and 26 for disconnection and the harness for breaks and short-circuits.
- Check the SLG board for breaks and short-circuits.
- Replace the SLG board.
- Replace the lamp regulator.

4.2 Process System Related Service Call

[C36] Main charger wire cleaning operation abnormal

(1) Check the main charger.
- Is the main charger disconnected?

(2) Check the cleaning motor.
- Is the motor operating?

(3) Replace the LGC board.

[C37] Transfer belt operation abnormal

(1) Check the transfer belt.
- Are the connectors disconnected?
- Are the contact switche and separation switche normal?

(2) Replace the LGC board.

4.3 Fuser Related Service Call

[C41] Thermistor abnormal or heater disconnection at power ON

Note) Before carrying out checks (1) and (2) below, first disconnect the power cord to prevent the danger of electric shock.

(1) Check the thermistor.
- Are the connectors disconnected?
- Are the main and sub (end section) thermistors firmly contacting the heat roller?
- Are the harness of the main and sub (end section) thermistors broken?

(2) Check the heater lamp and SSR.
- Is the heater lamp open-circuited?
- Is the heater lamp connector disconnected?
- Is the thermostat blown?
- Is the SSR connector disconnected?
- Are the SSR and switching power supplies damaged?

(3) Check the LGC board.
- Is connector J326 disconnected?
- Check the circuits for open-or, short-circuits, or other troubles.
- Replace the LGC board.

(4) Reset the status counter.

Carry out the following after you have repaired the location where error [C41] occurred:
- Turn the power ON while pressing the [0] and [8] keys simultaneously.
- Enter “400” from the number key pad, and press the START key.
- Overwrite currently displayed status counter 1 or 2 to 0, and press the [SET] or [INTERRUPT] key to exit error [C41].
- Turn the power OFF then back ON, and check the machine enters a normal standby state.

[C43] Thermistor abnormal during warming-up or at standby after disconnection judgement
[C44] Heater abnormal during warming-up or at standby after disconnection judgement

Carry out the same checks (1) to (3) in error [C41].

(4) Reset the status counter.

- The status counter for error [C43] indicates 4 or 6, and 5, 7 or 9 for error [C44]. Reset these counters to 0 by following the same procedure for error [C41].

[C45] Upper heat roller end thermistor abnormal

(1) Check the sub (end section) thermistor.

- Are the connectors disconnected?
- Is the sub (end section) thermistor firmly contacting the heat roller?
- Is the sub (end section) thermistor harness broken?

(2) Check the LGC board.

- Is connector J326 disconnected?
- Check the circuits for breaks, short-circuits or other troubles.
- Replace the LGC board.

(3) Reset the status counter.

Reset status counter 8 to 0 by following the same procedure for error [C41].

[C46] Lower heat roller themistor abnormal at standby

(1) Check the thermistor.

- Are the connectors disconnected?
- Is the themistor fimly contacting the pressure roller?
- Is the thermistor harness broken?

(2) Checking of the LGC board is the same as with [C41].

(3) Reset the status counter.

- When [C46] occurs, reset the status counter 3 to 0 by the same procedure as for error [41].

4.4 Communication Related Service Call

[C56] Communication error between PFC and M-CPU

(1) Check the signal patterns (REQ, ACK, RXD, TXD) between IC11 (G/A) and IC21 (PFC) on the LGC board for open-or short-circuits.
(2) Replace the LGC board.

[C57] Communication error between M-CPU and IPC

(1) Check the circuit patterns mainly on IC50 and IC56 on the LGC board for open-or short-circuits.
(2) Check the pattern on the IPC board for open-or short-circuits.
(3) Replace the IPC board.
(4) Replace the LGC board.

[C58] Communication error between IPC and the finisher

(1) Make sure that only the specified finisher is attached.
(2) Check the pattern on the IPC board for open-or short-circuits.
(3) Check the harness connected to connector J2 on the IPC board for disconnected pins and open-circuits.
(4) Check fuse F5 on the power supply unit to see if it is blown.
(5) Check the pattern on the control board inside the finisher for open-or short-circuits.
(6) Check the connectors leading up to the PPC board for disconnected pins and the harness for open-circuits.
(7) Replace the IPC board.
(8) Replace the LGC board.

[C59] Communication error between M-CPU and L-CPU

(1) Check the harness between the LGC board and the laser unit for disconnection and open-circuits.
(2) Check mainly the IC circuits on the LGC board for open-or short-circuits.
(3) Replace the LGC board.
(4) Replace the laser optical unit.

[F07] Communication error between SYS and LGC boards
[F11] Communication error between SYS and SLG boards

(1) Check the connectors J102 and J108 on the SYS board for disconnection.
(2) Check the connector J330 on the LGC for disconnection.
(3) Check the connector J2 on the SLG board for disconnection.
(4) Check the harness between the SYS and the SLG for breaks and disconnected pins.
(5) Check the harness between the SYS and the LGC for breaks and disconnected pins.
(6) CHECK THE FROM version on the SYS board.
(7) Check the MROM (IC36) version on the LGC board.
(8) Check the SROM version on the SLG board.
(9) Replace the SYS board.
(10) Replace the SLG board.
(11) Replace the LGC board.

4.5 ADF Related Service Call

[C72] Error of aligning sensor adjustment

(1) Check between the aligning sensor and the reflection mirror for foreign objects, and the reflection mirror for dirt.
(2) Check the harness between the aligning sensor and the LGC board for open-circuit.
(3) Check mainly IC4, IC5 and CN6 on the LGC board for open-or short-circuits.
(4) Replace the aligning sensor.
(5) Replace the LGC board.
(6) Initialize the ADF EEPROM, and perform automatic sensor adjustment.

[C73] EEPROM initializing error

(1) Check mainly IC1 on the LGC board for open-or short-circuits.
(2) Replace the LGC board.
(3) Initialize the ADF EEPROM, and perform automatic sensor adjustment.

[C74] Error of exit sensor adjustment

(1) Check between the exit sensor and the reflection mirror for foreign objects, and the reflection mirror for dirt.
(2) Check the harness between the exit sensor and the LGC board for open-circuit.
(3) Check mainly IC4, IC5 and CN7 on the LGC board for open-or short-circuits.
(4) Replace the exit sensor.
(5) Replace the LGC board.
(6) Initialize the ADF EEPROM, and perform automatic sensor adjustment.

[C76] Transmission time-out error
[C77] Transmission buffer full
[C78] ADF power ON I/F error
[C79] Reception time-out error

(1) Check the harness between the ADF control PC board and the scanner control PC board for disconnections or open-circuits.
(2) Check mainly the IC2, IC3, IC14, CN1 on the ADF control PC board for open-or short-circuits.
(3) Check mainly the IC1, IC7, J8 on the scanner control PC board for open-or short-circuits.
(4) Replace the ADF control PC board.
(5) Replace the scanner control PC board (SLG board).

[C80] Error of timing sensor adjustment

(1) Check between the timing sensor and the reflection mirror for foreign objects, and the reflection mirror for dirt.
(2) Check the harness between the timing sensor and the LGC board for open-circuit.
(3) Check mainly IC4, IC5 and CN6 on the LGC board for open-or short-circuits.
(4) Replace the timing sensor.
(5) Replace the LGC board.
(6) Initialize the ADF EEPROM, and perform automatic sensor adjustment.

4.6 Other Troubles on the ADF System

[Originals other than set on the lowest are fed.]

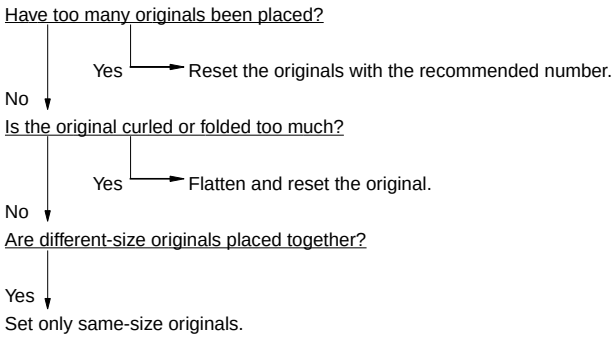

[Two or more originals are fed simultaneously.]

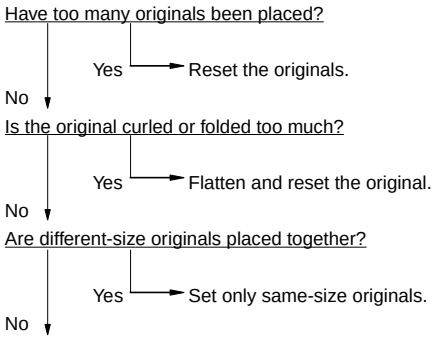

Is the gap between the aligning plate and feed roller too large?

Yes → Adjust the gap.

No

Is the separation pad dirty?

Yes

Clean the separation pad.

[The original is not fed up to the aligning roller.]

Are the pick-up roller and feed rollers dirty?

Yes → Clean the rollers.

No

Is the gap between the aligning plate and feed roller too small?

Yes → Adjust the gap.

No

Is the transporting force of the pick-up roller and feed rollers insufficient?

Yes

Replace the rollers.

[The original stop, skewed on the original glass.]

Is the aligning roller dirty?

Yes → Clean the roller.

No

Is the transport belt dirty?

Yes → Clean the belt.

No

Is the ADF correctly installed?

No

Properly install the ADF in parallel to the main unit.

Make sure that the skew and height are properly adjusted.

[The side edges of the original are out of alignment with the side edges of the copy.]

Is the slide set too wide in relation to the width of the original?

Yes → Move the slide so that its matches the width of the original.

No

Move the original feeding tray to the left or right to adjust.

[The ADF does not work (excluding paper jams, open cover)]

Is the interface harness correctly connected?

No → Re-connect the harness.

Yes

Is 24V DC being supplied to CN2?

No → Check the main unit.

Yes

Is the voltage across TP26 and TP43 +5V DC?

No → Check or replace the control board.

Yes

Is the voltage measured at EMP-SNS (TP30) +5V when there is no paper?

No → Check or replace the empty sensor.

Yes

Check or replace the control board.

[Motor error]

Is a normal load placed on the motor shaft?

No → Reduce the mechanical load on the motor by adjusting the drive system.
Remove foreign objects.

Yes

Is voltage being supplied to the motor connector?

No → Check or replace the control board.

Yes

Is an excitation pattern signal being supplied to the motor connector?

No → Check or replace the control board.

Yes

Check or replace the motor.

[Communications error]

Is the interface cable normal?

No → Replace the interface cable.

Yes

(1) Check or replace the control board.

(2) Check or replace the main unit PPC board.

[Size detection error]

Is the voltage measured at SIZE-SNS1 (TP9) +5V when there is paper?

No → Check or replace size sensor 1.

Yes

Is the voltage measured at SIZE-SNS2 (TP29) +5V when there is paper?

No → Check or replace size sensor 2.

Yes

Is the original slipping off the aligning roller?

No → Check or replace the control board.

Yes

Clean or replace the aligning roller.

Check and adjust the roller pressure.

[Error of the STOP position of original's leading edge]

Is the voltage measured at REG-SNS (TP25) +5V when there is paper?

No → Check or replace the aligning sensor.

Yes

Is the reflection mirror at the aligning sensor normal?

No → Clean or replace the reflection mirror.

Yes

Check or replace the control board.

4.7 Other Service Calls

[C94] M-CPU is abnormal

Is the service call displayed even after the power switch on the main unit is turned OFF then ON again?

No → Leave as it is and see what happens.

Yes

- Check the circuit pattern between MCPU (IC32) and MROM (IC31) for open-or short-circuits.
- Replace the LGC board if this trouble occurs frequently.

[C99] PFC microcomputer is abnormal

Is the service call displayed even after the power switch on the main unit is turned OFF then ON again?

No → Leave as it is and see what happens.

Yes

- Check the circuit pattern around the PFC microcomputer (IC21) for open-or short-circuits.
- Replace the PFC microcomputer or LGC board if this trouble occurs frequently.

[CD1] Fur brush motor lock error

(1) Check whether the fur brush has become locked mechanically.
- Are there any foreign objects?
- Are there any toner clumps in the transport section?

(2) Check whether connectors on the LGC board are come off or the pins disconnected, etc..

(3) Replace the brush motor.

(4) Replace the LGC board.

[CD2] Toner auger motor lock error

(1) Check whether the auger has become locked mechanically.
- Are there any foreign objects?
- Are there any toner clumps in the transport section?

(2) Check whether connectors on the LGC board are come off or the pins disconnected, etc..

(3) Replace the auger motor.

(4) Replace LGC board.

[F10] HDD formatting error

(1) Perform the "HDD formatting" (Setting Mode: 08-> 690->2).
(2) Make sure that the HDD is mounted.
(3) Make sure that a dedicated HDD is mounted.
(4) Make sure that the HDD connector pins are not bent.
(5) Check HDD connector J106 ont the SYS board for disconnection.
(6) Replace the harness.
(7) Replace the HDD.
(8) Replace the SYS board.

4.8 Laser Optical System Related Service Call

[CA1] Polygon mirror motor is abnormal

Is the polygon motor rotating?

No →
- Check connector J206 on the PLG board for disconnection.
- Check connector CN1 on the POL board for disconnection.
- Check the harness for open-circuit or the connector pins for disconnection.
- Check the patterns on the PLG and POL boards for open-or short-circuits.
- Replace the POL board.
- Replace the PLG board.

Yes ↓

Are pins 2 and 3 of connector CN1 on the POL board always at the level “L”?

No →
- Check the patterns on the PLG and POL boards for open-or short-circuits.
- Replace the POL board.
- Replace the PLG board.

Yes ↓

- Check the pattern on the PLG board for open-or short-circuits.
- Replace the PLG board.

[CA2] HSYNC is abnormal

Is the harness between the PLG and the HSYNC boards open-circuited? Is the connector between the PLG and HSYNC boards disconnected?

Yes → Replace the harness, and re-connect the connector.

No ↓

- Replace the PLG board.
- Replace the unit.

[CA3] [CA4] [CA5] [CA6] [CAA] [CAB] [CAC] [CAD] [CAE] [CAF] [CD0] Laser beam adjustment trouble

Between the PLG board and the galvanomirror, PLG board and laser drive board, and PLG board and HSYNC board, are the harnesses open-circuited or connectors disconnected?

Yes → Replace the harness(es), and re-connect the connector(s).

No

- Replace the PLG board.
- Replace the unit.

[CA9] Image data transmission error SYS board

Is the harness between the PLG board and the SYS board open-circuited, or connector disconnected?

Yes → Replace the harness, and re-connect the connector.

No

- Replace the PLG board.
- Replace the SYS board.

4.9 Finisher Related Service Call

[CB1] Feed motor is abnormal

[Procedure 1]

Is feed motor 2 (M8) operating in reverse at the specified timing?
- No → Replace the feed motor or finisher controller board.

Yes

Is the shutter correctly coupled to the shutter upper/lower bars?
- No → Couple properly.

Yes

Try turning the feed roller 2 in reverse by hand. Do the shutter upper/lower bars move up and down?
- No → Correct the mechanism from the shutter upper/lower bars up to the gears of feed roller 2.

Yes

Is the shutter close detection switch (MS4) normal?
- No → Replace the switch.

Yes

Replace the finisher controller board.

[Procedure 2]

Is the feed motor 2 (M8) operating in reverse at the specified timing?
- No → Replace the transport motor or finisher controller board.

Yes

Is the shutter correctly coupled to the shutter upper/lower bars?
- No → Couple properly.

Yes

Try turning the feed roller 2 in reverse by hand. Do the shutter upper/lower bars move up and down?
- No → Correct the mechanism from the shutter upper/lower bars up to the gears of transport roller 2.

Yes

Is the shutter open sensor (PI5) normal?
- No → Replace the sensor.

Yes

Replace the finisher controller board.

[Procedure 3]

Check safety area detection switch (MS3). Is the switch normal?

No → Replace the switch.

Yes

Is safety area detection switch (MS3) correctly pressed?

No → Correct the mechanical mechanism.

Yes

Is shutter close detection switch (MS4) normal?

No → Replace the switch.

Yes

Is shutter close detection switch (MS4) correctly pressed?

No → Correct the mechanical mechanism.

Yes

Replace the finisher controller board.

[CB2] Delivery motor is abnormal

[Procedure 1]

Try rotating the exit motor by hand. Does it operate smoothly?

No → Correct the mechanical mechanism.

Yes

Is the delivery motor clock sensor (PI10) normal?

No → Replace the sensor.

Yes

Is the voltage across J11-6* and -7* on the finisher controller board 24V when the delivery motor operates?

* J11-6 & 7 : MJ-1006/1007
* J11-4 & 5 : MJ-1015/1016

No → Replace the finisher controller board.

Yes

Is the wiring from the motor up to the controller board normal?

No → Correct the wiring.

Yes

Replace the motor.

[Procedure 2]

Try turning the delivery motor in the reverse by hand. Does the swing guide move up and down?

No → Correct the swing mechanism.

Yes

Is swing guide close detection switch 2 (MS6) normal?

No → Replace the microswitch.

Yes

Is the delivery motor (M2) operating in reverse at the specified timing?

No → Replace the motor.

Yes

Replace the finisher controller board.

[Procedure 3]

Try turning the delivery motor in the reverse by hand. Does the swing guide move up and down?

No → Correct the swing mechanism.

Yes

Is swing guide open sensor (PI18) normal?

No → Replace the sensor.

Yes

Is the delivery motor (M2) operating in reverse at the specified timing?

No → Replace the motor.

Yes

Replace the finisher controller board.

[Procedure 4]

Is the safety area detection switch (MS3) normal?

No → Replace the switch.

Yes

Is the safety area detection switch (MS3) correctly pressed?

No → Correct the mechanical mechanism.

Yes

Is the swing guide close detection switch 2 (MS6) normal?

No → Replace the switch.

Yes

Is the swing guide close detection switch 2 (MS6) correctly pressed?

No → Correct the mechanical mechanism.

Yes

Replace the finisher controller board.

[CB3] Tray lift motor is abnormal

[Procedure 1]

Is the tray home position sensor (PI8) normal?

No → Replace the sensor.

Yes

Is the tray lift mechanism normal?

No → Correct the mechanism.

Yes

Is 24V DC being supplied to the tray lift motor (M5) from the finisher controller during tray drive?

No → Replace the finisher controller board.

Yes

Is the wiring from the finisher controller board up to the tray lift motor (M5) normal?

No → Correct the wiring.

Yes

Replace the tray lift motor (M5).

[Procedure 2]

Is the tray arriving at the tray upper limit switch (MS5) position?

Yes → Lower the tray position.

No

Is the tray upper limit switch (MS5) normal?

No → Replace the switch.

Yes

Is the wiring from the finisher controller board up to the tray upper limit detection switch normal?

No → Correct the wiring.

Yes

Replace the finisher controller board.

[Procedure 3]

Is the tray elevated?

No → Is power being supplied to the motor from the finisher controller board during tray elevation?

No → Replace the finisher controller board.

Yes

Is there a trouble on the tray elevation mechanism?

No → Replace the tray lift motor (M5).

Yes

Correct the tray elevation mechanism.

Yes

Are tray lift motor clock sensors 1/2 (PI19/PI9) normal?

No → Replace the sensor board.

Yes

Replace the finisher controller.

[CB4] alignment motor is abnormal

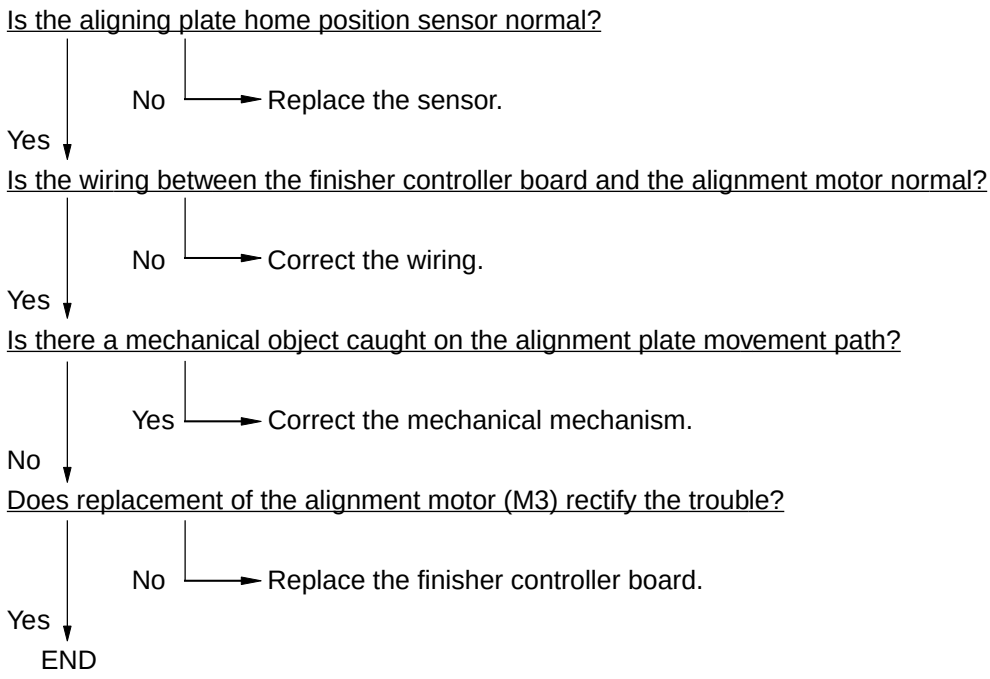

[CB5] Stapler motor is abnormal

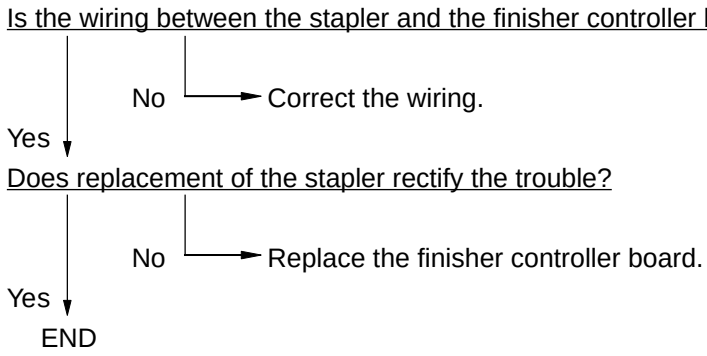

[CB6] Stapler shift motor is abnormal

Is the stapler shift home position sensor (PI7) normal?

No → Replace the sensor.

Yes

Is the wiring between the finisher controller board and the stapler shift motor normal?

No → Correct the wiring.

Yes

Is there any mechanical object caught on the stapler stand shift path?

Yes → Correct the mechanical mechanism.

No

Does replacement of the stapler shift motor (M4) rectify the trouble?

No → Replace the finisher controller board.

Yes

END

[CB7] Hight sensor is abnormal

[Procedure 1]

Does turning the copier's power switch OFF then ON again rectify the trouble?

Yes → END

No

Is the wiring between the finisher controller board and the sensor normal?

No → Correct the wiring.

Yes

Is the voltage across J6-2(+) and J6-4(-) on the finisher controller board 5V DC?

No → Replace the finisher controller board.

Yes

Re-adjust the height sensor. Replace the height sensor if this trouble occurs frequently.

[Procedure 2]

Is connector J6 on the finisher controller board, J114 on the height sensor or relay connector J212 disconnected?

Yes → Re-connect the connector(s).

No ↓

Is the voltage across J6-2(+) and J6-4(-) on the finisher controller board 5V DC?

No → Replace the finisher controller board.

Yes ↓

Is the wiring between the finisher controller board and the sensor normal?

No → Correct the wiring.

Yes ↓

Replace the height sensor.

[Procedure 3]

Does re-adjusting by the DIP switches rectify the trouble?

Yes → END

No ↓

Is the wiring between the finisher controller board and the sensor normal?

No → Correct the wiring.

Yes ↓

Is the voltage across J6-2(+) and J6-4(-) on the finisher controller board 5V DC?

No → Replace the finisher controller board.

Yes ↓

Replace the height sensor.

[CB8] Backup RAM data is abnormal

Is the condition modified by turning OFF and ON the power switch of the copier?

Yes → END

No ↓

Replace the finisher controller board and punch driver board (MJ-1015/1016).

[CB9] Saddle stitcher paper pushing plate motor is abnormal

Is the paper pushing plate home position sensor (PI14S) normal?

No → Replace the sensor.

Yes

Is the paper pushing plate motor (M8S) operating at the specified timing?

Yes → Replace the saddle stitcher controller board.

No

Is the paper pushing plate drive mechanism normal?

No → Correct the mechanism.

Yes

Does replacement of the paper pushing plate motor (M8S) rectify the problem?

No → Replace the saddle stitcher controller board.

Yes

END

[CBA] [CBB] Saddle stitcher front/rear stitcher motor is abnormal

Are the front or rear stitcher and receptacles installed properly?

No → Install them correctly.

Yes

Are the stitching home position switches (PS4S/PS2S*) on the front or rear stitchers normal?

* PS4S/PS2S : MJ-1006/1007
* MS7S/MS5S : MJ-1015/1016

No → Replace the front or rear stitcher.

Yes

Is the front or rear stitcher operating at the predetermined timing?

No → Replace the front or rear stitcher.

Yes

Check the wiring between the stitcher and saddle stitcher controller board. If it is normal, replace the controller board.

[CBC] Saddle stitcher alignment motor is abnormal

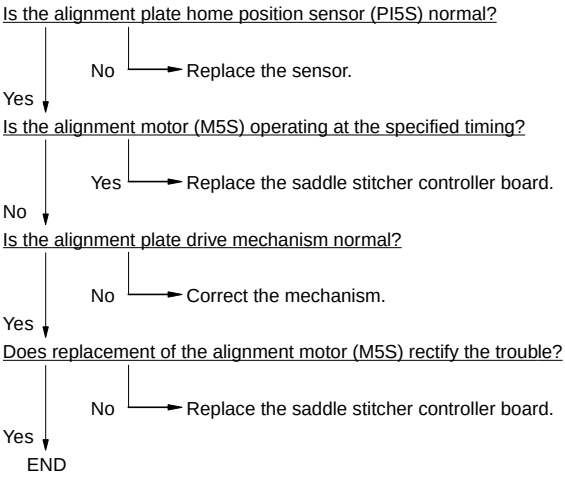

[CBD] Saddle stitcher guide motor is abnormal

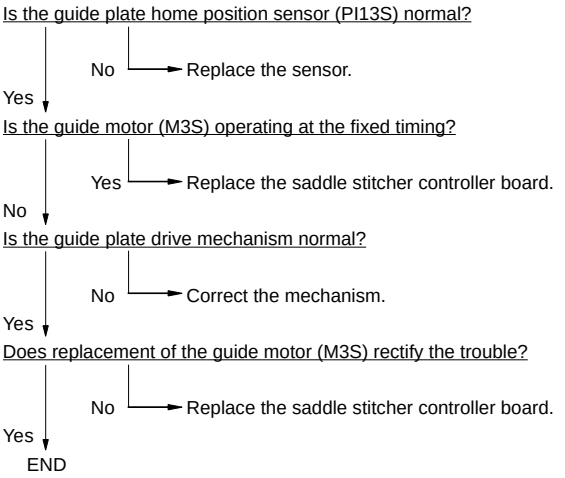

[CBE] Saddle stitcher folding motor is abnormal

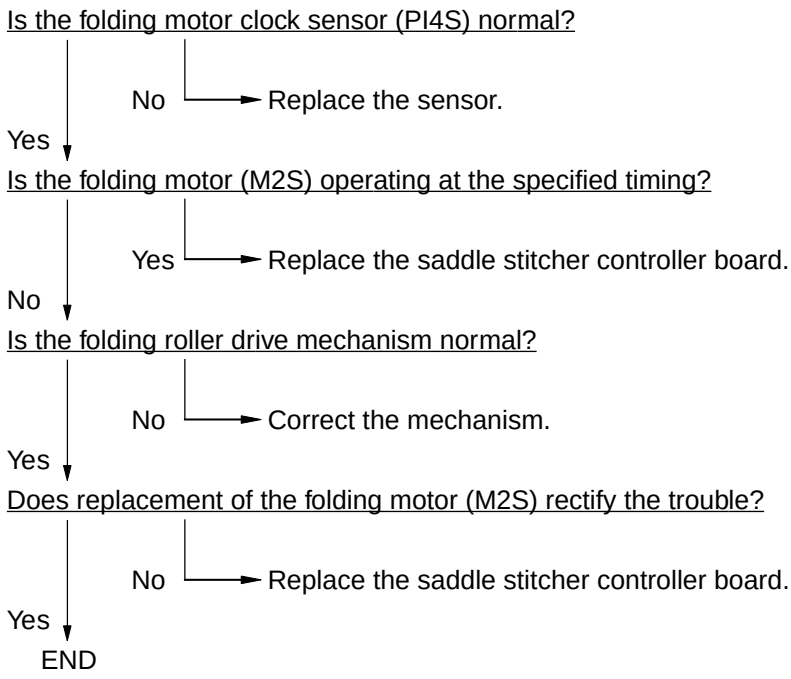

[CBF] Saddle stitcher paper positioning plate is abnormal

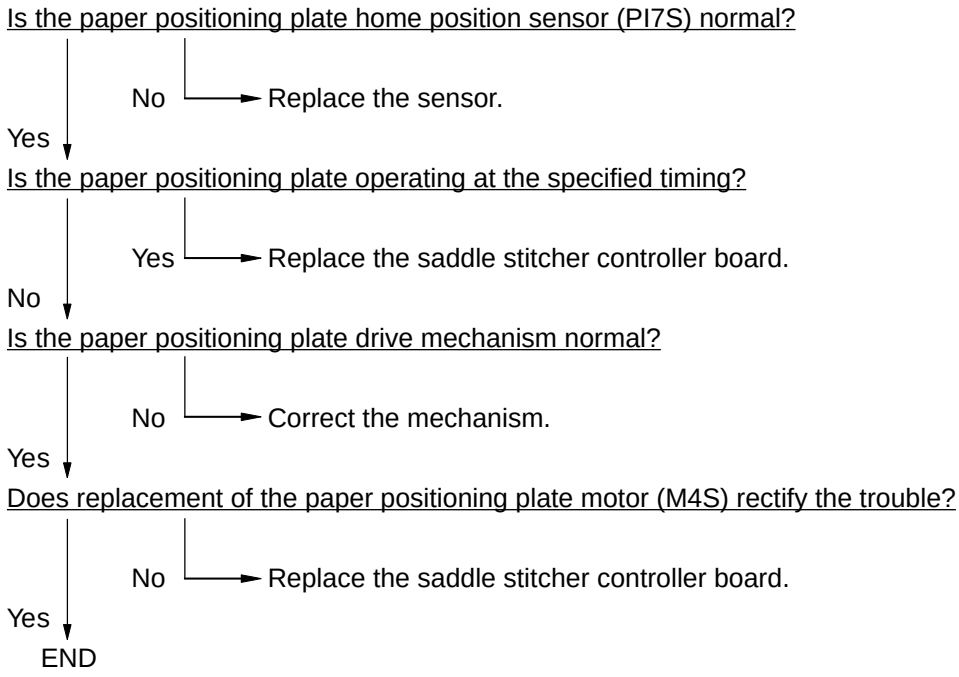

[CCO] Sensor connector connection error

[Procedure 1]

Is the guide home position sensor (PI13S) or saddle stitcher controller board connector connected?
- No → Connect the connector.
- Yes ↓

Is there a open-circuit between the sensor and the saddle stitcher?
- No → Correct this.
- Yes ↓

Is DC5V being supplied from J9-7 on the saddle stitcher control board?
- No → Replace the sabble stitcher controller board.
- Yes ↓

Is J9-8 of the saddle stitcher controller board correctly connected to the ground?
- No → Replace the saddle stitcher controller board.
- Yes ↓

END

[Procedure 2]

Is the connector of the paper pushing plate home position sensor (PI14S) or the connector of the saddle stich controller board connected?
- No → Connect it.
- Yes ↓

Is the connector between the sensor and the stitcher open-circuited?
- No → Connect it.
- Yes ↓

Is DC5V from J9-10 of the saddle stitcher controller board supplied?
- No → Replace the sabble stitcher controller board.
- Yes ↓

Is J9-11 of the saddle stitcher controller board correctly connected to the ground?
- No → Replace the saddle stitcher controller board.
- Yes ↓

END

[Procedure 3]

Is the connector of the paper pressing top position (PI15S) or the saddle stitcher controller board connected?
No → Connect it.
Yes ↓
Is the connection between the sensor and the saddle stitcher disconnected?
No → Connect it.
Yes ↓
Is DC5V from J9-13 of the saddle stitcher controller board supplied?
No → Replace the saddle stitcher controller board.
Yes ↓
Is J9-14 on the saddle stitcher controller board correctly connected to the ground?
No → Replace the saddle stitcher controller board.
Yes ↓
END

[CC1] Microswitch error

[Procedure 1]

Check the switch actuator in the entrance door. Are the switch and the sensor being moved correctly?
No → Correct the mechanism.
Yes ↓
Check the entrance door switch. Is the switch normal?
No → Replace the switch.
Yes ↓
Measure J10-8 voltage on the saddle stitcher controller board when the entrance door is open. Is there 5V being supplied?
Yes → The sensor is broken, so replace it.
No ↓
Measure the voltage across J19-1 (+) and J19-2 (–) on the finisher controller board. Is it 24V?
No → Replace the finisher controller board.
Yes ↓
Check and correct the wiring between J19 of the finisher controller board and J1 of the saddle stitcher controller board. Replace the saddle stitcher controller board if the wiring is normal.

[Procedure 2]

Check the switch actuator of the front door. Are the switch and the sensor being working properly?

No → Connect the connector.

Yes ↓

Check the front door switch. Is the switch normal?

No → Replace the switch.

Yes ↓

Measure J11-12 voltage of the saddle switcher controller with the front door open. Is 5V being supplied?

Yes → The sensor is broken, so replace it.

No ↓

Replace the saddle stitcher controller board.

[Procedure 3]

Check the switch actuator of the exit door. Are the switch and the sensor being working properly?

No → Correct the mechanism.

Yes ↓

Check the exit door switch. Is the switch normal?

No → Replace the switch.

Yes ↓

Measure J11-9 voltage access of the saddle stitcher with the exit door is open. Is it 5V ?

Yes → the sensor is broken, so replace it.

No ↓

Replace the saddle stitcher controller board.

[CC2] Communication error between finisher saddle

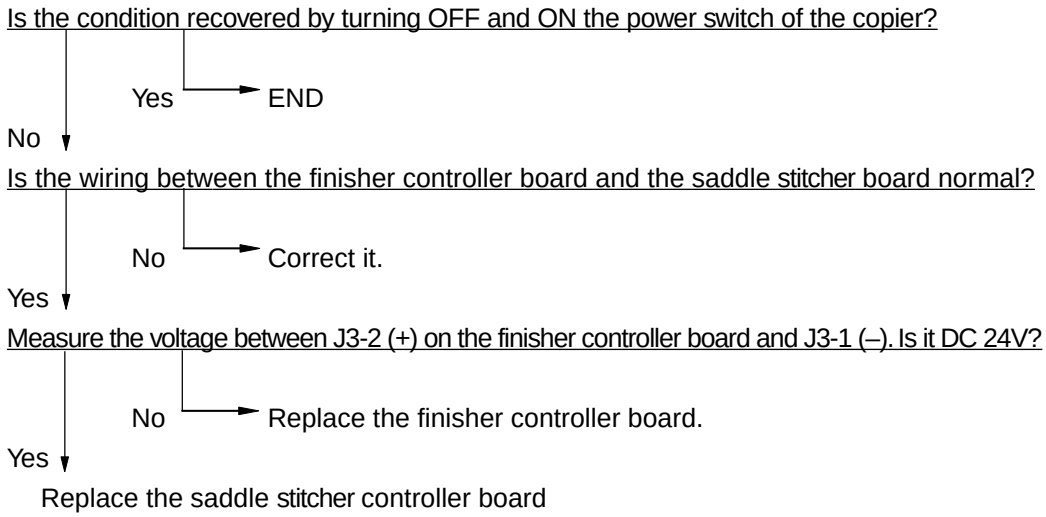

5.3 Preparation of PC to Use a Network

5.3.1 Setting Virtual Modem

The connection between PC and copier is made using PPP(Point-to-Point Protocol). It is necessary to use a dial-up networking, and use a virtual modem.
First, install the virtual modem. The virtual modem can be downloaded from the following web site.

URL: http://www.kevin-wells.com/net/mdmcbx4.inf

After download, set up the modem as follows.

Click “Start” button, point at “Settings”, and then click “Control Panel”.
Click on Modems.

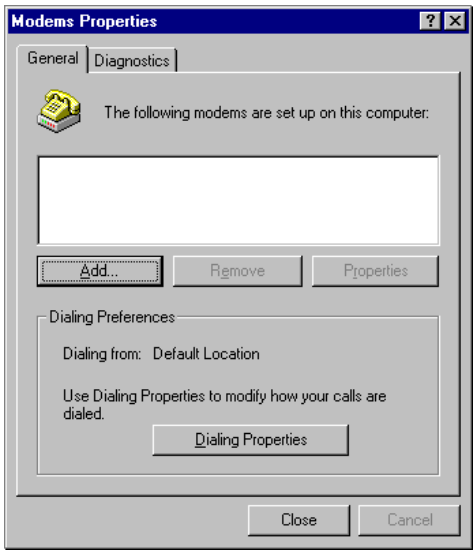

[Procedure 3]

Is the swing guide clock sensor (PI20) working normally?

No → Replace the sensor.

Yes ↓

Is the voltage between J11-6 and -7 on the finisher controller PC board 24V when the swing motor is rotating?

No → Replace the finisher controller PC board.

Yes ↓

Is the harness connecting the motor and finisher controller PC board (open-or short-circuited?

Yes → Replace the harness.

No ↓

Replace the motor.

[CC5] Horizontal registration motor is abnormal

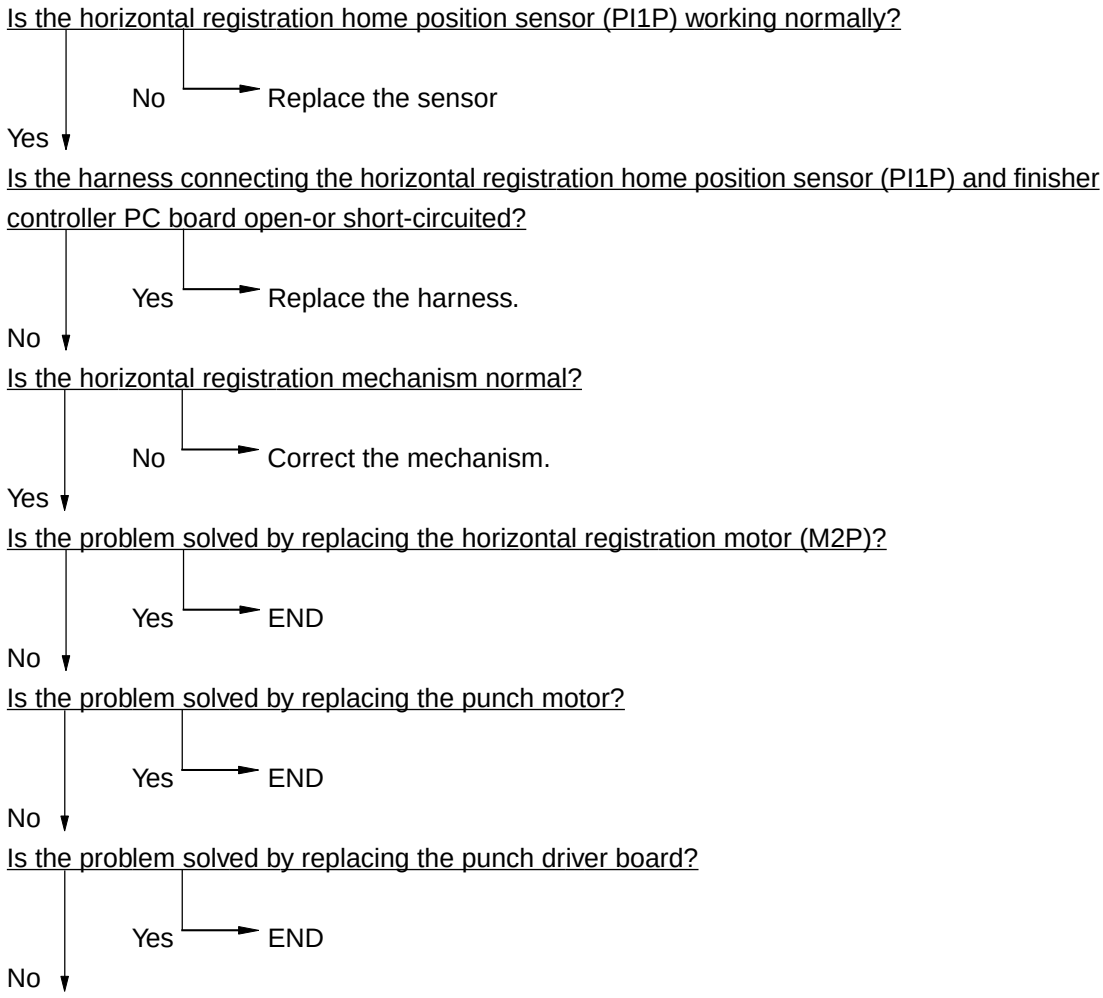

[CC6] Punch motor is abnormal

Is the punch home position sensor (PI3P) working normally?

No → Replace the sensor.

Yes

Is the harness connecting the punch home position sensor (PI3P) and finisher controller PC board open-or short-circuited?

Yes → Replace the harness.

No

Is the punching mechanism normal?

No → Correct the mechanism.

Yes

Is the problem solved by replacing the punch motor (M1P) ?

Yes → END

No

Is the problem solved by replacing the punch driver board?

Yes → END

No

Replace the finisher controller PC board.

4.10 Image Quality Maintenance Control Related Troubleshooting

[Corrective action when "Service Recommended for IQC" is flashing]

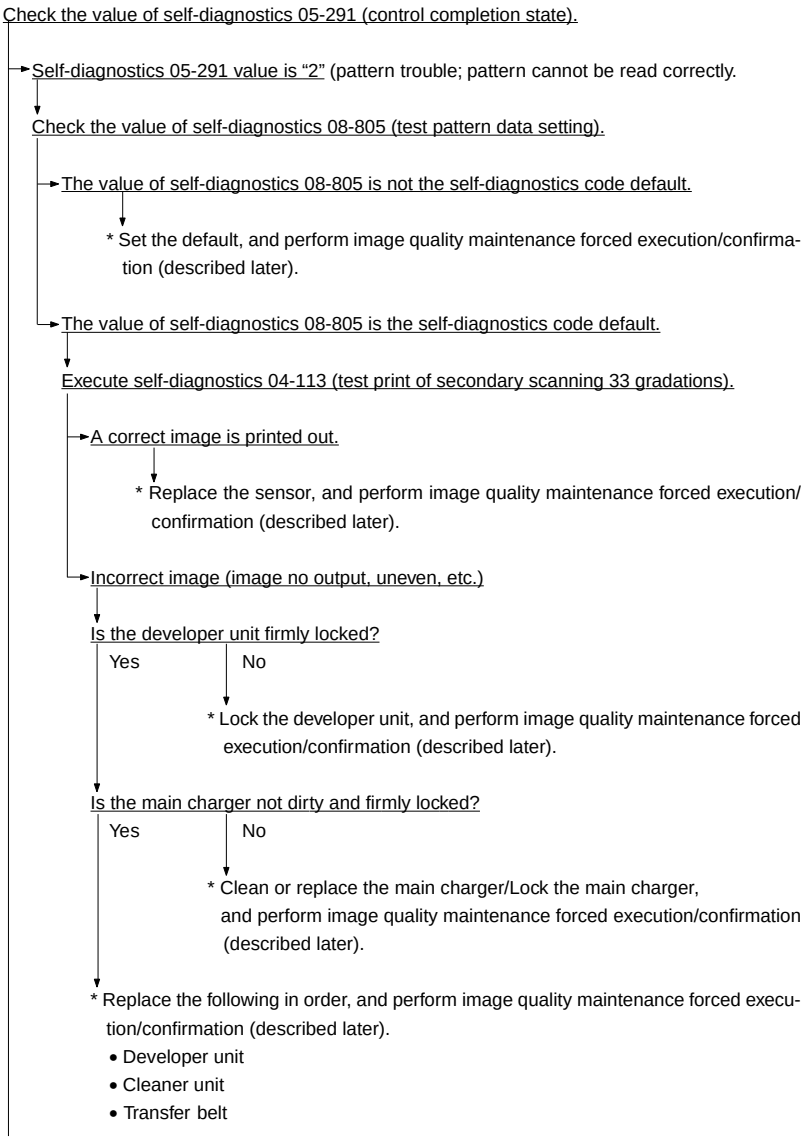

The value of self-diagnostics 05-291 is 4 (sensor trouble; sensor output is not within the normal range.).

Is the value of self-diagnostics 05-292 (sensor output value when LED light source is OFF) within the range 102 to 307?

Yes / No

* Check the connector, replace the sensor, and the LGC board, and then perform image quality maintenance forced execution/confirmation (described later).

Is the value of self-diagnostics 05-293 (sensor output value with respect to the drum) within the following range?

([(self-diagnostics 08-814) x4] to 819)

Yes / No

Self-diagnostics 05-293 < [(self-diagnostics 08-814) x4]

Is the value of self-diagnostics 05-296 (sensor light intensity adjustment result) 255?

Yes / No

* Replace the sensor and LGC board, and perform image quality maintenance forced execution/confirmation (described later).

Is the sensor window dirty?

No / Yes

* Clean the sensor window, and perform image quality maintenance forced execution/confirmation (described later).

Is the center of the drum scratched or dirty?

No / Yes

* Replace the drum, and perform image quality maintenance forced execution/confirmation (described later).

* Replace the sensor and LGC board, and perform image quality maintenance forced execution/confirmation (described later).

Self-diagnostics 05-293>819

* Replace the sensor and LGC board, and perform image quality maintenance forced execution/confirmation (described later).

Perform image quality maintenance forced execution/confirmation (described later).

<<Image Quality Maintenance Forced Execution/Confirmation >>

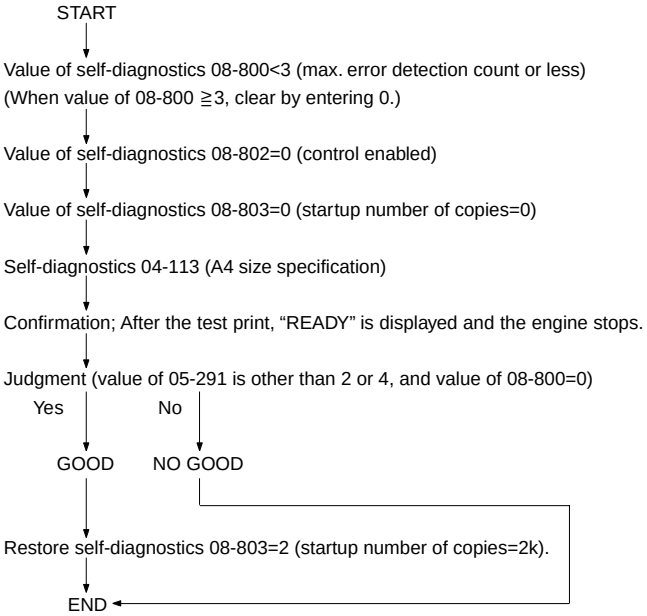

5. Installation Instructions for Firmware Update through PC

5.1 Outline

These instructions show how to set up your PC to use a system firmware download operation using FTP(File Transfer Protocol).

5.2 System Configuration

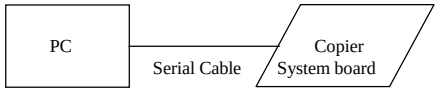

Software Requirements for PC.
- Microsoft Windows95.
- Virtual Modem.
- FTP Server tools. (Ex. War FTP Daemon)

Serial Cable.
- PC and System board are connected with the following cross line cable.

DTE-DTE connections (D-SUB 9 PIN/RS-232C)

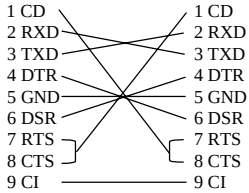

Protocol specifications between PC and system board.

SPEED	115200bps
DATA BITS	8 BITS
PARITY	NONE
STOP BITS	1 BIT
FLOW CONTROL	NONE
ECHO	OFF

5.3 Preparation of PC to Use a Network

5.3.1 Setting Virtual Modem

The connection between PC and copier is made using PPP(Point-to-Point Protocol). It is necessary to use a dial-up networking, and use a virtual modem.
First, install the virtual modem. The virtual modem can be downloaded from the following web site.

http://www.kevin-wells.com/net/mdmcbx4.inf

After download, set up the modem as follows.

Click “Start” button, point at “Settings”, and then click “Control Panel”.
Click on Modems.



Click “Add” Button, and open “Install New Modem” wizard.
And then, check “Don’t detect my modem; I will select it from a list”, and click “Next” button.

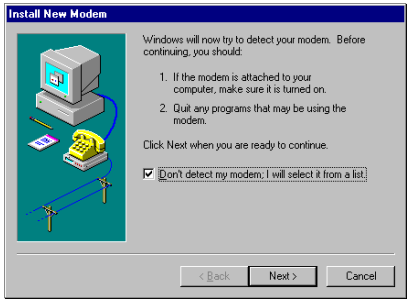

Click “Have Disk” button, and then select a folder download file is stored in.

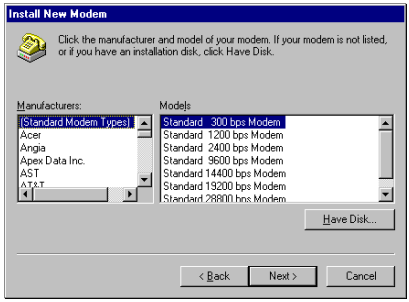

Select “Direct Connection”, and then click “Next” button.

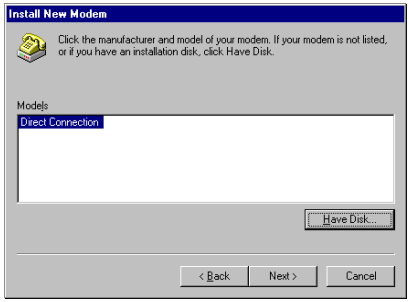

Select “Communications Port(COM1)”,and then click “Next” button.

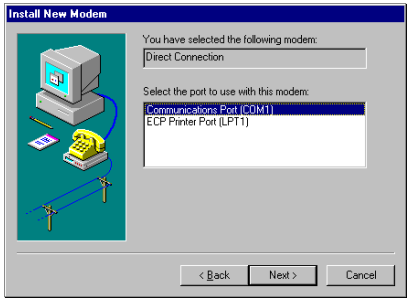

Click “Finish” button, then Virtual Modem installation is completed.

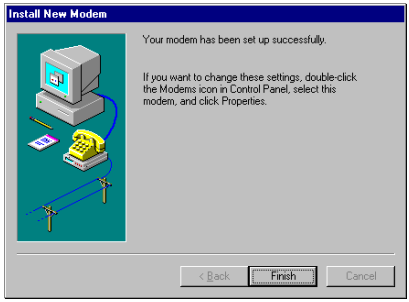

5.3.2 Using Dial-Up Networking

Note; Your computer may be already set up to use a network. If Windows prompts you for a network password at startup and if Network Neighborhood icon appears on Windows desktop, your network is already set up. In this case, you can skip this section.

In Network dialog box, click “Configuration” tab.
Confirm that “Dial-Up Adapter” and “TCP/IP” are displayed.

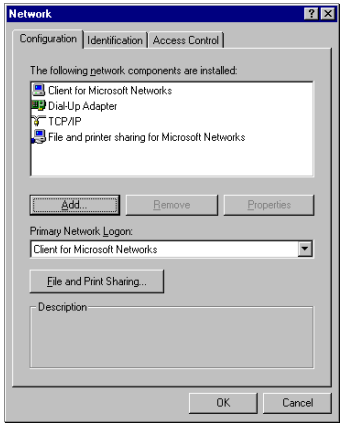

If your PC does not have “Dial-Up Adapter”, then click “Add” button.

Select “Microsoft” in Manufactures list box, and select “Dial-Up Adapter” in Network Adapters list box, and then click “OK” button.

When you click “OK” button, Windows automatically set up the TCP/IP Protocol components with dial-Up Adapter.

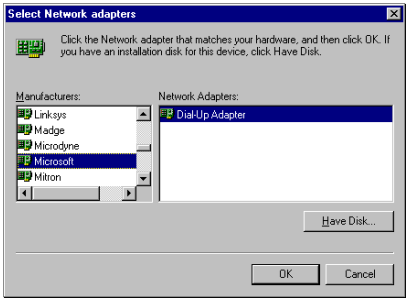

5.3.3 Using New Connection

Double-click “My Computer”. If “Dial-Up Networking” icon is not in the window, click “Add/Remove Programs” in Control Panel.
Otherwise, skip to the next step to create a connection.

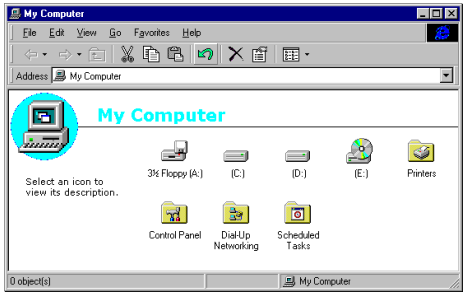

Double-click “Dial-Up Networking”.

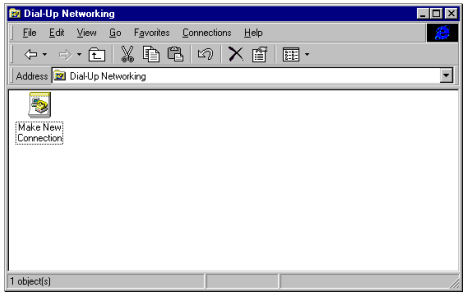

Type something in “Type a name for the computer you are dialing”.
Select “Direct Connection” for “Select a modem”, and click “Configure” button.

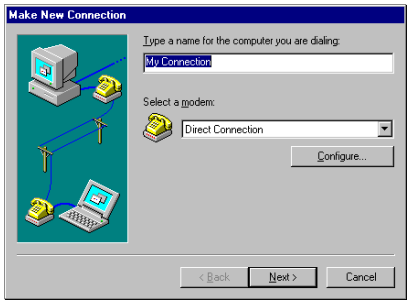

Click “General” tab in “Direct Connection Properties” box, select 115200 for “Maximum speed”, check “Only connect at this speed”.

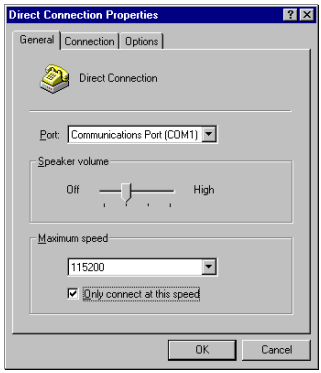

Click “Connection” tab, confirm that all check boxes in “Call preferences” are not selected, and click “Advanced” button.

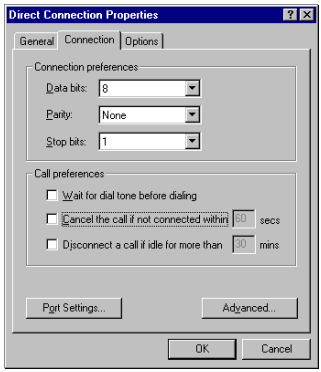

Confirm that all check boxes in “Advanced Connection Settings” dialog box is not selected, click “OK” button, and then return to “Make New Connection” dialog box.

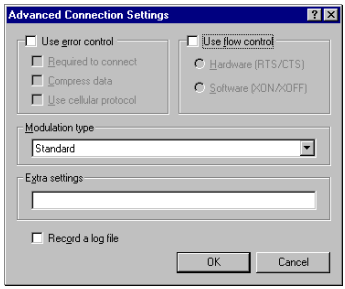

After returning to “Make New Connection” dialog box, click “Next” button.

Type #39 for “Telephone number”.
To change “Country code”, click the arrow next to the country, and select a country you want. After that, click “Next” button.

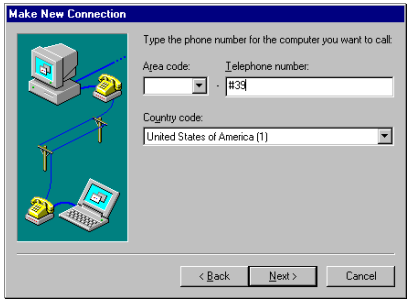

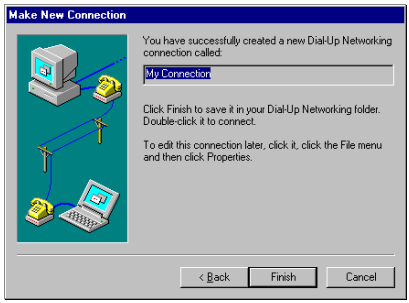

Click “Finish” button, then “Make New Connection” is completed.

5.4 Installation of FTP Server

First, it is necessary to install Free Software “War FTP Daemon Version 1.65” as an FTP server.

War FTP Daemon can be downloaded from the following web site.

URL: http://www.jgaa.com/downloadpage.htm

Download the file “ward165.exe” from the above site, and execute it. Some files are created, and then execute “Setup.exe”.

Create the C:\WEBSHARE\FTPROOT folder.

After that, execute “war-ftpd.exe” in “war-ftpd” folder.

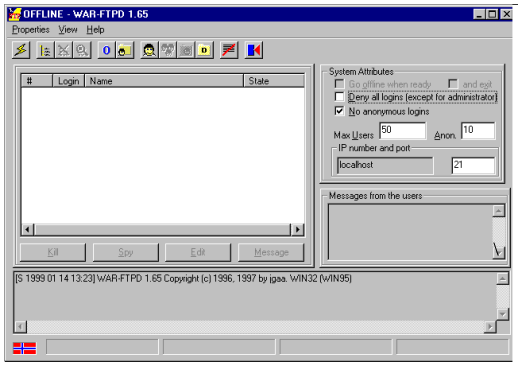

Select [Properties]-[Security]-[Edit User]

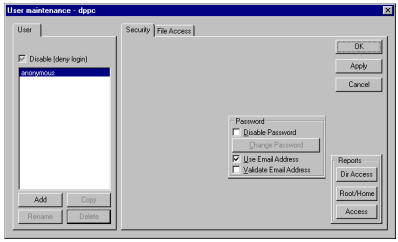

Click “Add” button, and key in dppc for “New name”.



Key in dppc for “New Password” and “Verify Password”, and click “OK” button.

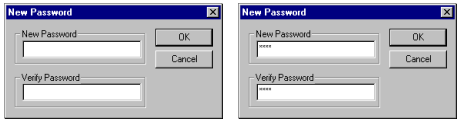

Select “dppc” and click “File Access”. Click “Add” button.

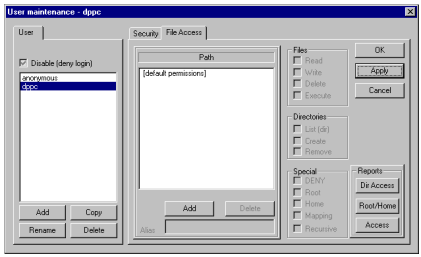

Double-click “Webshare”.

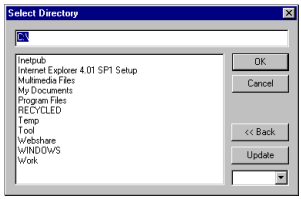

Double-click “Ftproot” and click “OK” button.

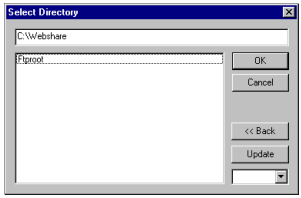

Change “Read”, “Write”, Delete”, Execute”, “List”, “Create” and “Remove” from Gray Check to Black Check.
Check “Root”, “Home” and “Recursive” in “Special” box as follows.
And then, click “Apply” and “OK”.

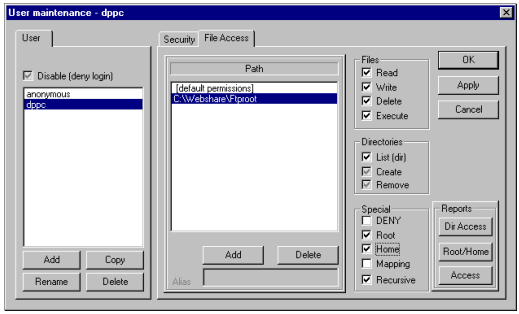

To make the connection “ONLINE” mode, click  button before firmware downloading.

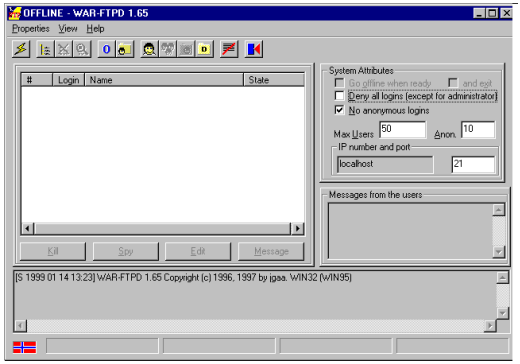

6. Manual for Firmware Download [3][9] Mode Operation

6.1 Outline

Connect copier and PC with serial cable and turn the power on pressing 3 and 9 keys, the copier goes into “Firmware Version Up Mode”. Then you can update system software data and/or UI data through the PC.

6.2 Preparation of PC

To update the firmware of copier, the following preparations are necessary.

6.2.1 Software Installation

“Virtual modem” and “War FTP Daemon” have to be installed in your PC.
Please refer to “Installation Instructions for Firmware Update through PC”

And also, War FTP Daemon has to be “ONLINE” mode.

6.2.2 Preparation of updated files

New files for update are stored in the following folder of the PC.
And also, the files must be named as follows

Folders :

C:\Webshare\Ftproot

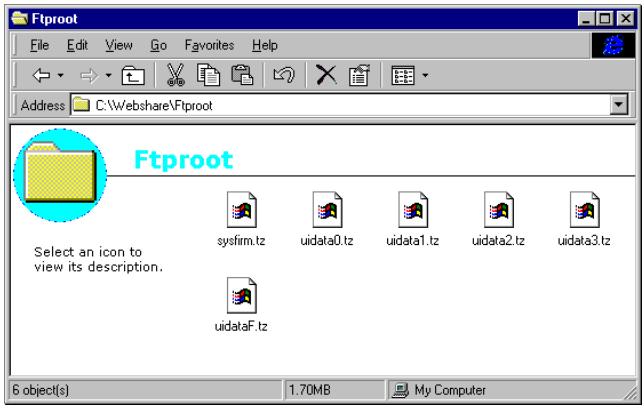

New files for update :

Kind of date	File name
- Program date	sysfirm.tz
- Fixed UI data	uidataf.tz
- Common UI data	uidata0.tz
- 1st language UI data	uidata1.tz
- 2nd language UI data	uidata2.tz
- 3rd language UI data	uidata3.tz

6.2.3 Connection between copier and PC

Connect MMF(FSMS) port of the copier and serial communication port of PC specified by the setup of virtual modem using a crossing cable.

6.3 Download Operation

1. Turn ON the power switch of the copier on pressing 3 and 9 keys.
2. The following messages are displayed on the copier control panel.

```
Firmware Version Up Mode

> Make a connection from PC.
```

3. Serial connection is made by dial-up from PC.
   Refer to “Installation Instructions for Firmware Update through PC” about procedures for dial up network connection.

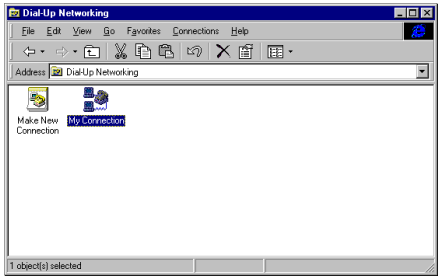

Key in "#39" for “Phone number”.

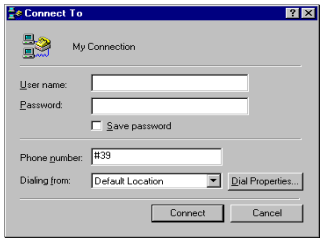

4. The following screens will be displayed if it succeeds in serial connection.

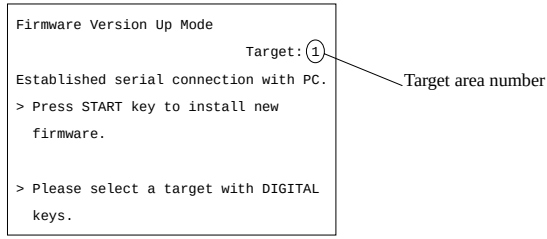

Depress [HELP], and you can confirm the version number of firmware and UI data, before updating to new one. (To return to previous screen, depress [HELP] again.)

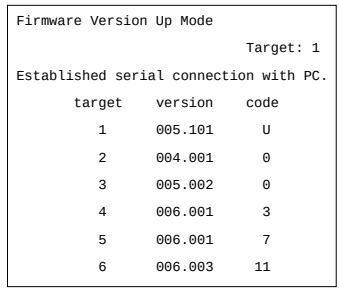

The number of “target” provides with following information.

1 : Program data
2 : Fixed UI data
3 : Common UI data
4 : 1st language UI data
5 : 2nd language UI data
6 : 3rd language UI data

“version” is displayed like “XXX.YYY”.
“XXX” is major version and “YYY” is minor version.

"code" provides with following information.

A. In the case of Program data("target" is 1), "code" means the destination.
   U: for USA and Canada
   E: for European countries
   X: for Australia and Asian countries

B. In the case of UI data("target" is 4-6), "code" means Language.

Code	Language
2	Japanese
3	American English
4	English
5	reserved
6	French
7	German
8	Swedish
9	Dutch
10	Italian
11	Spanish
12	Danish
13	Finnish
14	Norwegian
15	reserved
16	reserved
17	reserved

5. Select the area for update using digital keys.
   Using [1] to [6] keys and [INTERRUPT] key, you can select a target area.
   A selected number is displayed at target area. Press [INTERRUPT] to input "#".
   The relation of target area number and firmware data is as follows.
   1 : Only Program data
   2 : Fixed UI data
   3 : Common UI data
   4 : 1st language UI data
   5 : 2nd language UI data
   6 : 3rd language UI data
   #1: All data (1, 2, 3, 4, 5 and 6)
   #2: All UI data (2, 3, 4, 5 and 6)
   #3: All language UI data (4, 5 and 6)

6. Depress START key and copier starts to update the data.
   Do not turn off the power to the copier or the computer, or disconnect the connection between the copier and computer after pressing the Start key. Interrupting the transmission of a file to the copier will result in corrupting the file in F-ROM of the copier. If this file is corrupted, you have to re-install the data again.

In the case of 1 - 6 :

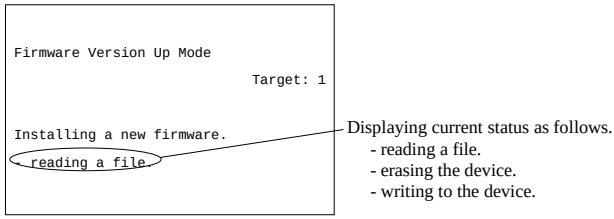

In the case of #1 - #3

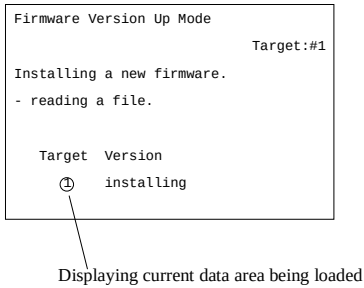

7. The following screen will be displayed after firmware data is updated.
   In the case of 1 – 6:
   If you want to update other area continuously, press [START] key and repeat the operation from step 5.
   After finished, turn off the power or depress [CLEAR] key.

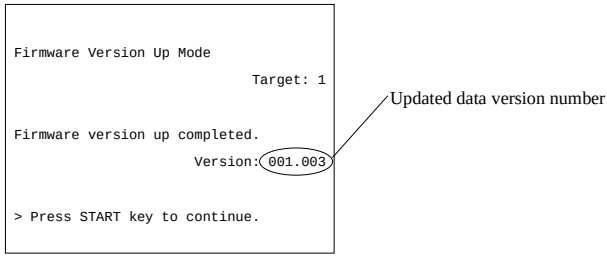

In the case of #1 - #3:
The following screen is displayed after finished.

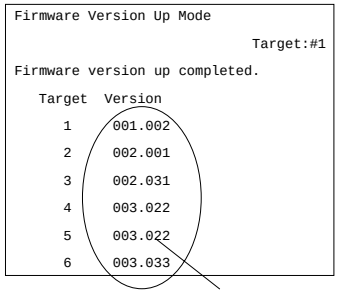

8. Press CLEAR key to cancel downloading on the way.
   However, it becomes unable to cancel after start of elimination process of flash ROM.

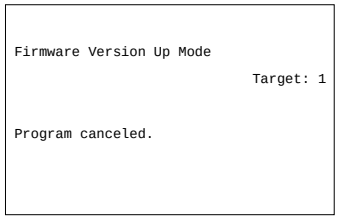

9. When failing in update, the following error message is displayed.
   (If the error occurs, “Recovery Mode” starts automatically when you turns on the power next time. See 10:Recovery mode)

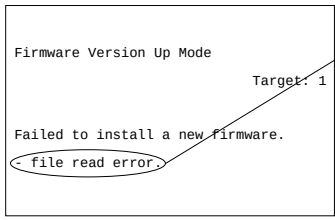

ERROR MESSAGE
- file read error.
- file information error.
- unfit device.
- device erase error.
- device write error.
- verify error.
- cannot set NvRAM flags.

10. Recovery mode
When you turns on the power after an error occurs, you'll see following display.

```
Firmware Version Up Mode


Recovery mode : target 3-6 failed
>make a connection from PC
```

Connect with dial up network(See procedure 3), and the display changes as follows.

```
Firmware Version Up Mode
                              Target: #3
Recovery mode : target 3-6 failed
>Press START key to install new firmware
```

Further procedure is the same as normal sequence.

6.4 Screen Details

The following screen will be displayed in [3][9] mode.

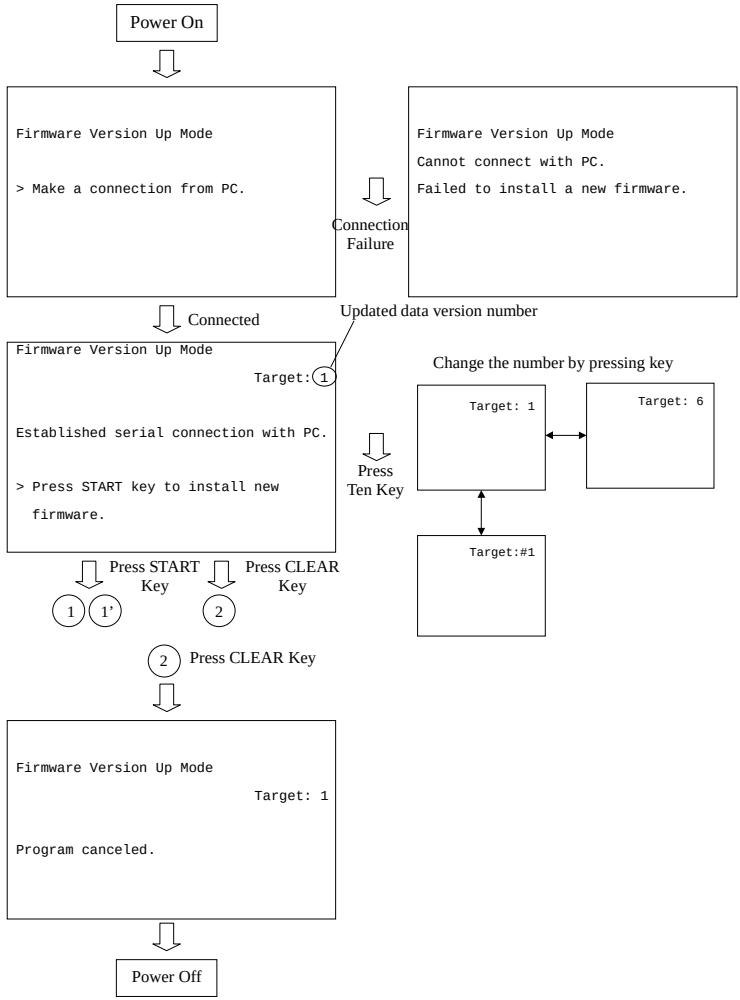

In the case of 1 – 6:

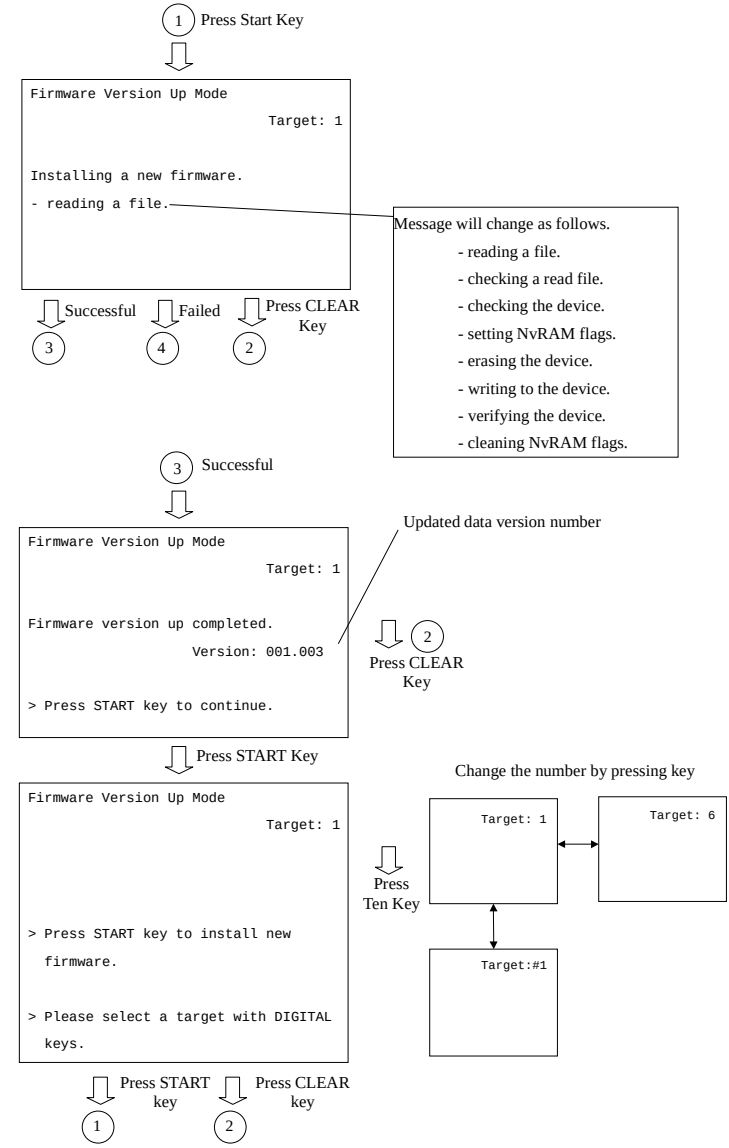

In the case of #1- #3:

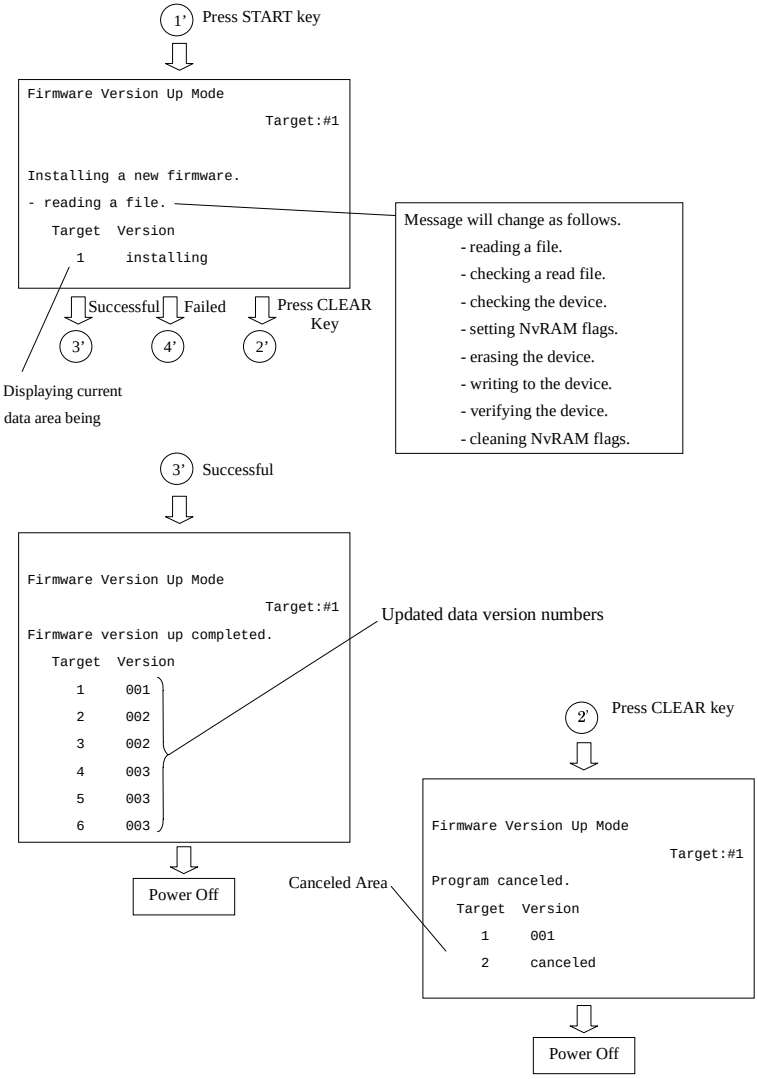

In the case of 1 – 6:

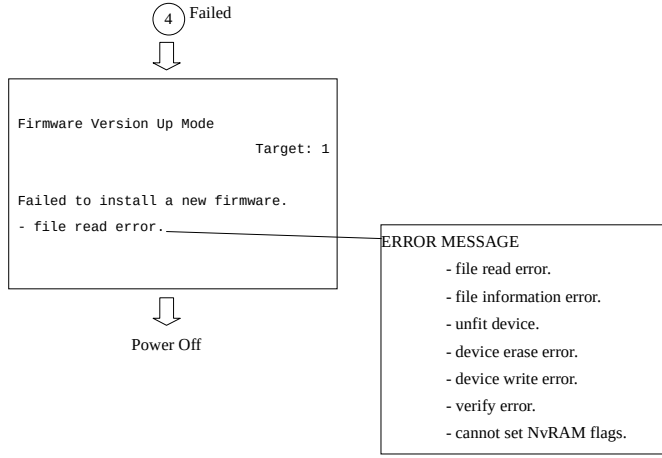

In the case of #1 - #3:

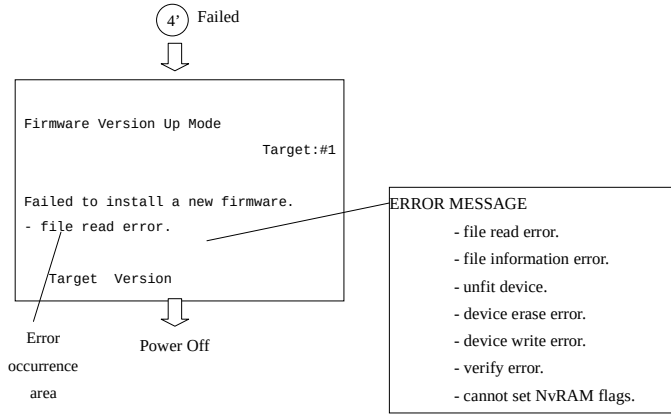

7. HARNESS WIRING DIAGRAMS

7.1 AC Wire Harness

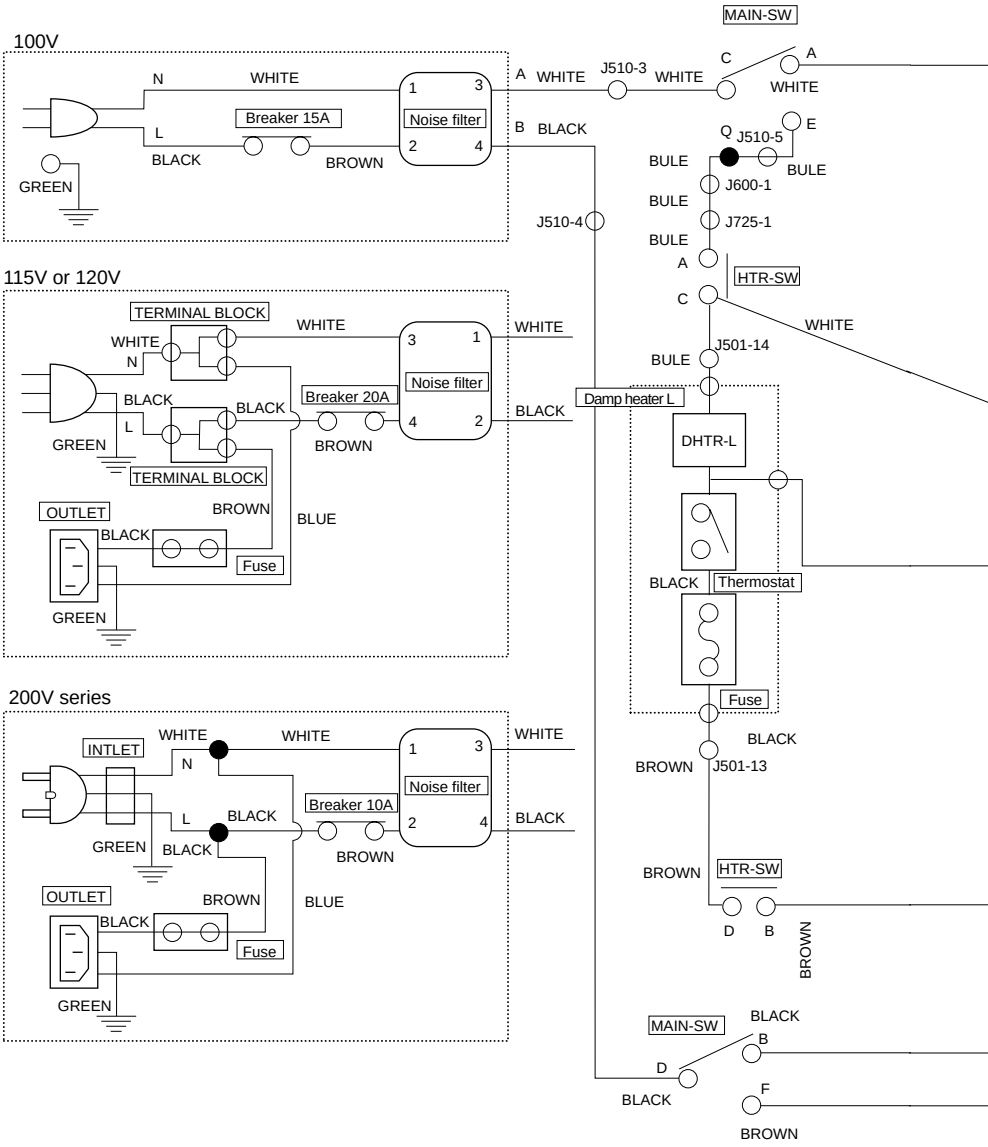

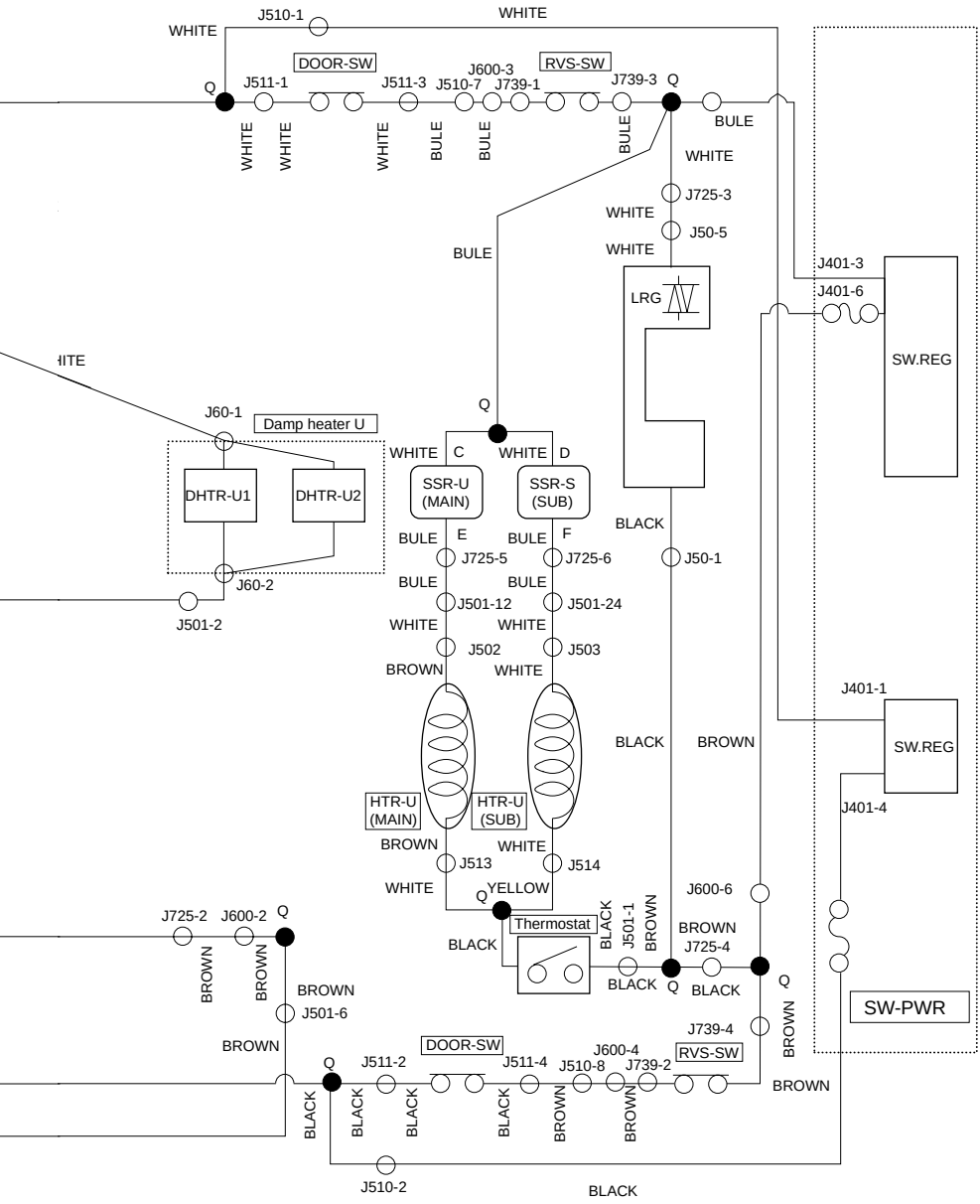
J510-1
WHITE
WHITE
DOOR-SW
RVS-SW
J600-3
Q
J511-1
J511-3
J510-7
J739-1
J739-3
Q
BULE
WHITE
WHITE
WHITE
BULE
BULE
BULE
WHITE
J725-3
WHITE
J50-5
WHITE
BULE
LRG
J401-3
J401-6
SW.REG
ITE
J60-1
Damp heater U
Q
WHITE
C
WHITE
D
DHTR-U1
DHTR-U2
SSR-U
(MAIN)
SSR-S
(SUB)
BULE
E
BULE
F
BLACK
J725-5
J725-6
J50-1
J60-2
BULE
BULE
J501-12
J501-24
J501-2
WHITE
WHITE
J502
J503
BROWN
WHITE
J401-1
SW.REG
BLACK
BROWN
HTR-U
(MAIN)
HTR-U
(SUB)
J401-4
BROWN
WHITE
J513
J514
WHITE
Q
YELLOW
J600-6
J725-2
J600-2
Q
Thermostat
BLACK
BLACK
J501-1
BROWN
BROWN
J725-4
BROWN
J501-6
BLACK
Q
BLACK
Q
SW-PWR
BROWN
J739-4
BROWN
DOOR-SW
J600-4
RVS-SW
Q
J511-2
J511-4
J510-8
J739-2
BROWN
BLACK
BLACK
BLACK
BLACK
BROWN
BROWN
J510-2
BLACK

7.2 DC Wire Harness

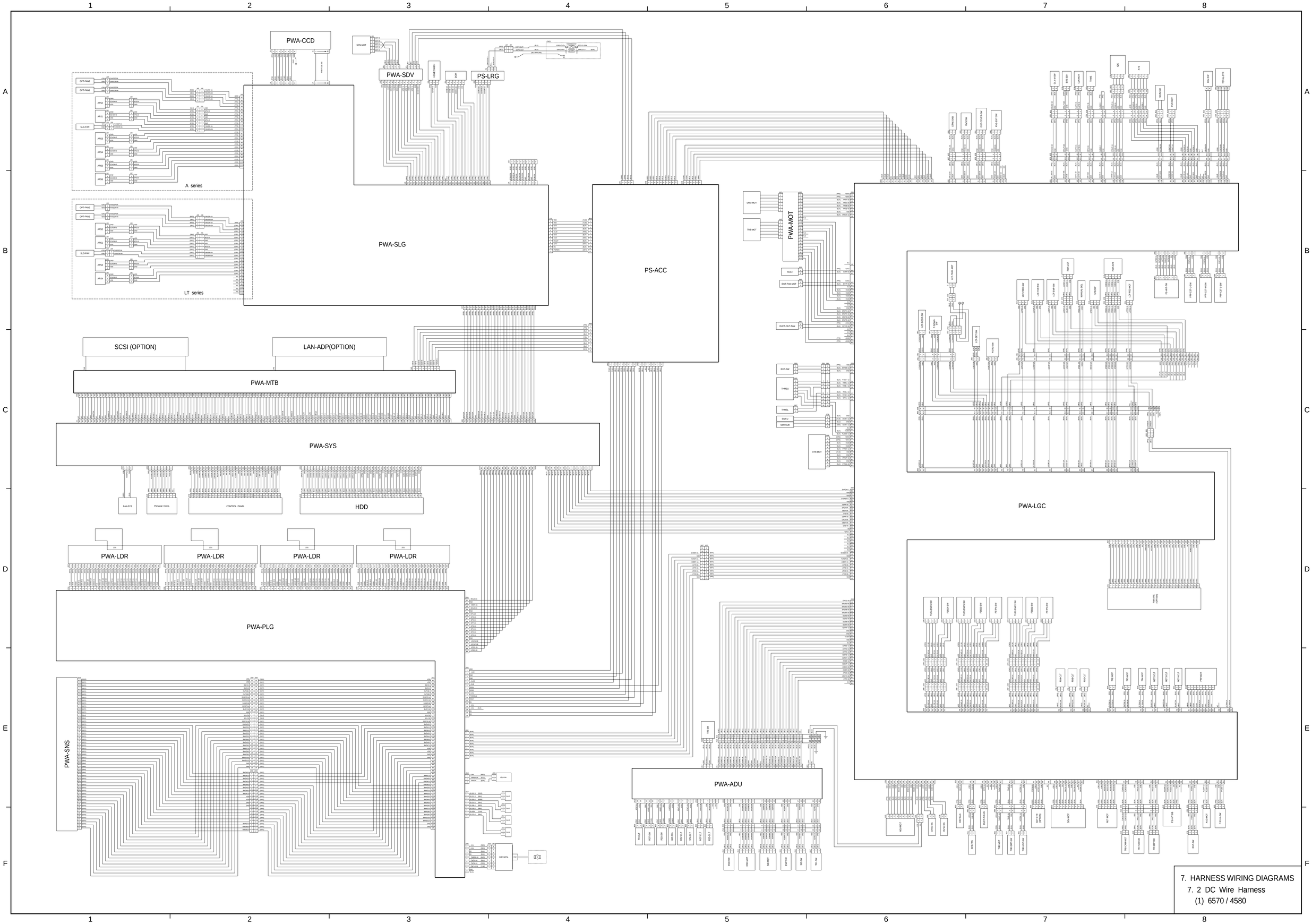

7. HARNESS WIRING DIAGRAMS
7. 2 DC Wire Harness
(1) 6570 / 4580

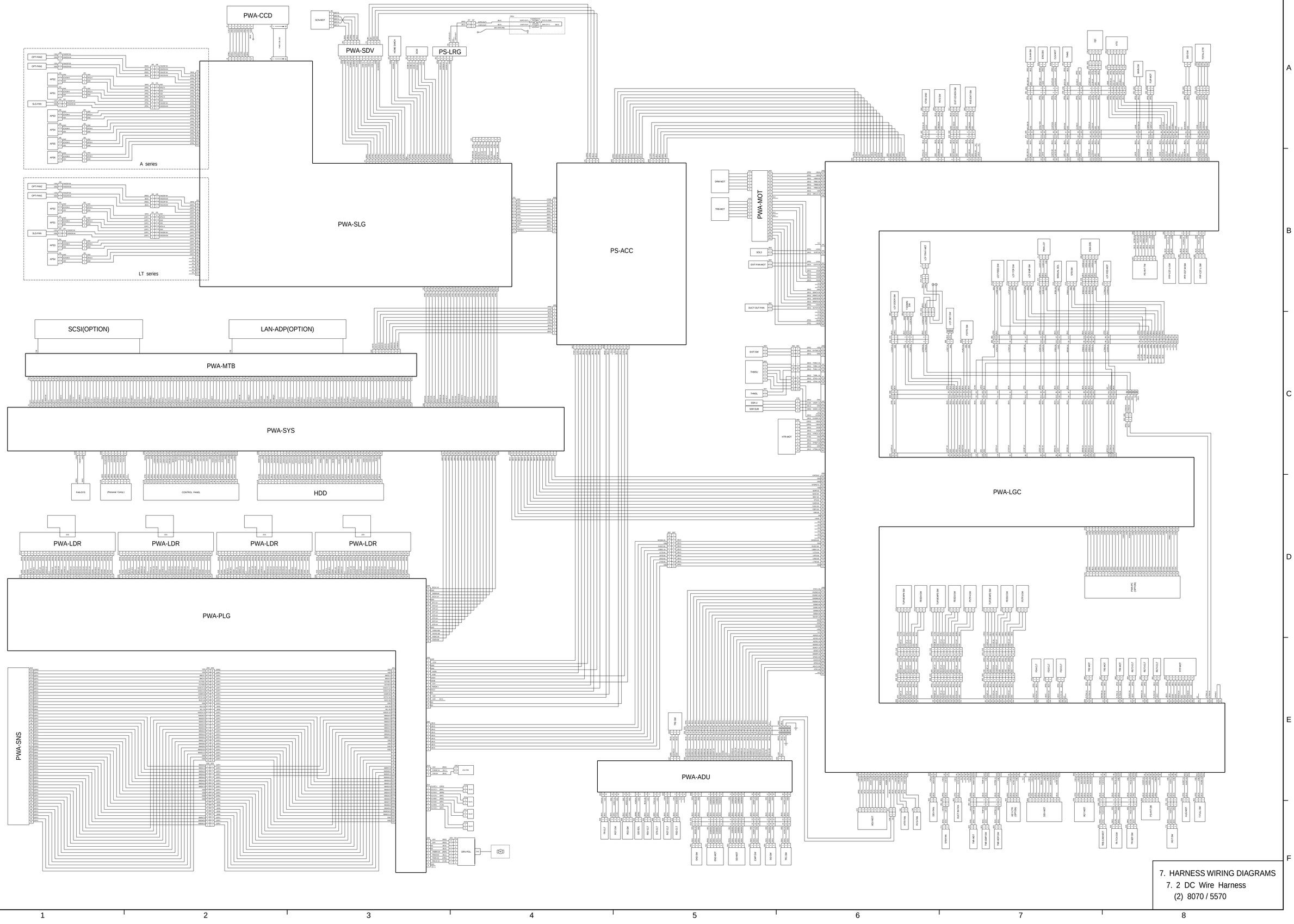
PWA-CCD
SCN MOT
PWA-SDV
PS-LRG
PWA-SLG
PS-ACC
PWA-MOT
PWA-LGC
PWA-MTB
SCSI(OPTION)
LAN-ADP(OPTION)
PWA-SYS
FAN-SYS
(Personal Comp.)
CONTROL PANEL
HDD
PWA-LDR
PWA-LDR
PWA-LDR
PWA-LDR
PWA-PLG
PWA-SNS
PWA-ADU
A series
LT series
OPT-FAN2
OPT-FAN1
APS2
APS1
SLG-FAN
APS3
APS4
APS5
APS6
DRM-MOT
TRB-MOT
SOL3
EXIT-FAN-MOT
DUCT-OUT-FAN
EXIT-SW
THMSU
THMSL
SSR-U
SSR-SUB
HTR-MOT
DRV-POL
PWA-LCF
PWA-SPB
PWA-TTM
PWA-OPC
PWA-OPC
PWA-OPC
PWA-OPC
PWA-SPC
PWA-SPC
PWA-S

MEMO

MEMO

MEMO

MEMO

MEMO

MEMO

TOSHIBA

TOSHIBA TEC CORPORATION
1-1, KANDA NISHIKI-CHO, CHIYODA-KU, TOKYO, 101-8442, JAPAN