TOSHIBA

SERVICE MANUAL

DIGITAL PLAIN PAPER COPIER

DP1200/1500



File No. 31100024

Copyright 2001

TOSHIBA TEC CORPORATION

CAUTION

This product is a class 1 laser product that complies with 21CFR 1040.10 and 1040.11 of the CDRH standard and IEC825. This means that this machine does not produce hazardous laser radiation. The use of controls, adjustments or performance of procedures other than those specified herein may result in hazardous radiation exposure.

This laser radiation is not a danger to the skin, but when an exact focusing of the laser beam is achieved on the eye's retina, there is the danger of spot damage to the retina.

The following cautions must be observed to avoid exposure of the laser beam to your eyes at the time of servicing.

1) When a problem in the laser optical unit has occurred, the whole optical unit must be exchanged as a unit, not as individual parts.
2) Do not look into the machine with the main switch turned on after removing the developer unit, toner cartridge, and drum cartridge.
3) Do not look into the laser beam exposure slit of the laser optical unit with the connector connected when removing and installing the optical system.
4) The middle frame contains the safety interlock switch.
   Do not defeat the safety interlock by inserting wedges or other items into the switch slot.

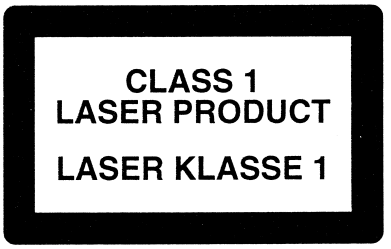

LASER WAVE – LENGTH : 780 ~ 795
Pulse times : 0.481 ms/6 mm
Out put power : 0.20 ± 0.03 mW

CAUTION

INVISIBLE LASER RADIATION,
WHEN OPEN AND INTERLOCKS DEFEATED.
AVOID EXPOSURE TO BEAM.

VORSICHT

UNSICHTBARE LASERSTRAHLUNG,
WENN ABDECKUNG GEÖFFNET UND
SICHERHEITSVERRIEGELUNG ÜBERBRÜCKT.
NICHT DEM STRAHL AUSSETZEN.

VARO !

AVATTAESSA JA SUOJALUKITUS
OHITETTAESSA OLET ALTTIINA
NÄKYMÄTTÖMÄLLE LASERSÄTEILYLLE ÄLÄ
KATSO SÄTEESEEN.

ADVARSEL

USYNLIG LASERSTRÅLNING VED ÅBNING, NÅR
SIKKERHEDSBRYDERE ER UDE AF
FUNKTION. UNDGÅ UDSAETTELSE FOR
STRÅLNING.

VARNING !

OSYNLIG LASERSTRÅLNING NÄR DENNA DEL
ÄR ÖPPNAD OCH SPÄRREN ÄR URKOPPLAD.
BETRAKTA EJ STRÅLEN. – STRÅLEN ÄR FARLIG.

At the production line, the output power of the scanner unit is adjusted to 0.57 MILLI-WATT PLUS 20 PCTS and is maintained constant by the operation of the Automatic Power Control (APC). Even if the APC circuit fails in operation for some reason, the maximum output power will only be 15 MILLI-WATT 0.1 MICRO-SEC. Giving an accessible emission level of 42 MICRO-WATT which is still-less than the limit of CLASS-1 laser product.

Caution
This product contains a low power laser device. To ensure continued safety do not remove any cover or attempt to gain access to the inside of the product. Refer all servicing to qualified personnel.

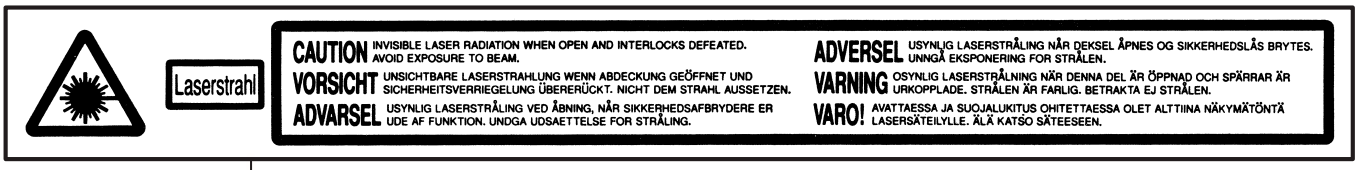



VAROITUS! LAITTEEN KÄYTTÄMINEN MUULLA KUIN TÄSSÄ KÄYTTÖOHJEESSA MAINITULLA TAVALLA SAATTAA ALTISTAA KÄYTTÄJÄN TURVALLISUUSLUOKAN 1 YLITTÄVÄLLE NÄKYMÄTTÖMÄLLE LASERSÄTEILYLLE.

VARNING - OM APPARATEN ANVÄNDS PÅ ANNAT SÄTT ÄN I DENNA BRUKSANVISNING SPECIFICERATS, KAN ANVÄNDAREN UTSÄTTAS FÖR OSYNLIG LASERSTRÅLNING, SOM ÖVERSKRIDER GRÄNSEN FÖR LASERKLASS 1.

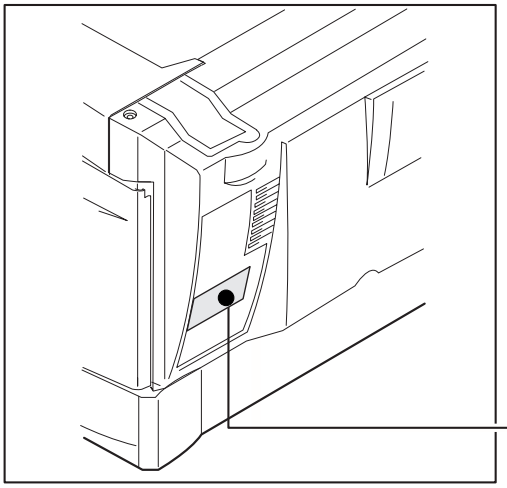



LUOKAN 1 LASERLAITE
KLASS 1 LASER APPARAT

The foregoing is applicable only to the 220V model, 230V model and 240V model.

CONTENTS

1. GENERAL 1-1

1. DP1200/1500 major functions 1-1
2. System Configuration 1-1

2. SPECIFICATIONS 2-1

1. Basic specifications of copier 2-1

3. CONSUMABLE PARTS 3-1

1. Supply system table 3-1
2. Environmental 3-1
3. Production control number (lot No.) identification 3-1
4. TD cartridge replacement 3-2

4. EXTERNAL VIEWS AND INTERNAL STRUCTURES 4-1

1. Appearance 4-1
2. Internal 4-1
3. Operational panel 4-2
4. Motors and solenoids 4-3
5. Sensors and switches 4-4
6. PWB unit 4-5
7. Cross sectional view 4-6

5. UNPACKING AND INSTALLATION

1. A WORD ON COPIER INSTALLATION 5-1
2. CHECKING PACKED COMPONENTS AND ACCESSORIES 5-1
3. UNPACKING 5-1
4. REMOVING PROTECTIVE PACKING MATERIALS 5-1
5. DEVELOPER UNIT INSTALLATION 5-2
6. TONER CARTRIDGE INSTALLATION 5-3
7. LOADING COPY PAPER 5-3
8. POWER TO COPIER 5-4
9. CONNECTING THE INTERFACE CABLE (DP1200 Only) 5-4

6. INSTALLING THE PRINTER DRIVER SOFTWARE (DP1200 Only) 6-1

1. Description of the printer driver 6-1
2. Checking the hardware and software requirements 6-1
3. Installing the printer driver 6-1
4. Printer driver group 6-3
5. Parallel interface 6-3

7. OPERATIONAL DESCRIPTIONS 7-1
1. Outline of operation 7-1
2. Scanner section 7-2
3. Laser unit 7-2
4. Fuser section 7-3
5. Paper feed section and paper transport section 7-4
6. Printing process 7-7

8. DISASSEMBLY AND ASSEMBLY 8-1
1. High voltage section 8-1
2. Operation panel section 8-4
3. Optical section 8-5
4. Fusing section 8-6
5. Tray paper feed/Transport section 8-9
6. Manual paper feed section 8-13
7. Rear frame section 8-17
8. Power section 8-18

9. ADJUSTMENTS 9-1
1. Optical section 9-1
2. Copy density adjustment 9-8
3. High voltage adjustment 9-9

10. SIMULATION, TROUBLE CODES 10-1
1. Entering the simulation mode 10-1
2. List of simulations 10-2
3. Contents of simulations 10-3
4. TROUBLE CODES 10-13

11. USER PROGRAM 11-1

12. MAINTENANCE 12-1
1. Maintenance table 12-1
2. Maintenance display system 12-1

13. ELECTRICAL SECTION 13-1
1. Block diagram 13-1
2. Circuit descriptions 13-3

14. CIRCUIT DIAGRAM 14-1

[1] GENERAL

1. DP1200/1500 major functions

Item / Model	CPM	SB/MB	2 tray	SPF (ADF)	GDI without USB	GDI with USB	PCL6 with USB	SOPM	FAX
DP1200	12CPM	MB	×	×	○	×	×	×	×
DP1500	15CPM	MB	Opt	Opt	×	Opt	Opt	○	Opt

Descriptions of items

CPM:	Copy speed (Copies Per Minute)
SB/MB:	SB = Manual feed single bypass, MB = Manual feed multi bypass
2 tray:	Second cassette unit. The 1 tray unit (MY-1019) is optionally available.
SPF (ADF):	Original feed unit (Automatic document feeder)
GDI with USB:	GDI printer function with USB. The GA-1090 (GDI + USB kit) is optionally available.
SOPM:	Scan One Print Many function (Many copies are made by one scan.)
PCL6 with USB:	PCL printer function with USB. The GA-1100 (PCL6 + USB kit) is optionally available.
FAX:	FAX unit. The GD-1100 (FAX unit) is optionally available.

Descriptions of table

○ : Standard provision

× : No function or no option available

Opt: Option

* PCL6 with USB (GA-1100) + FAX (GD-1100) is not available.

2. System Configuration

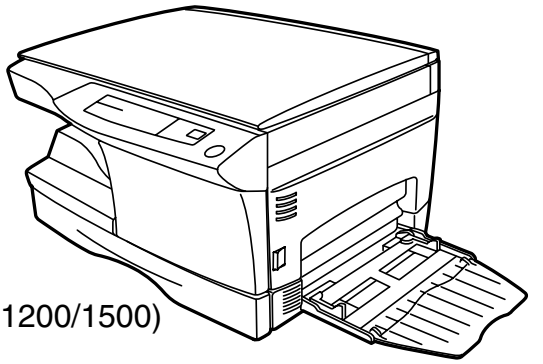

(DP-1200/1500)

(Options)

MR-2013

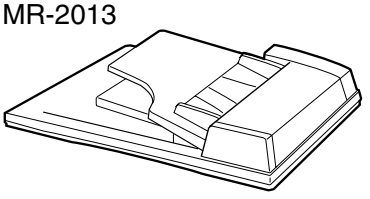

GD-1100

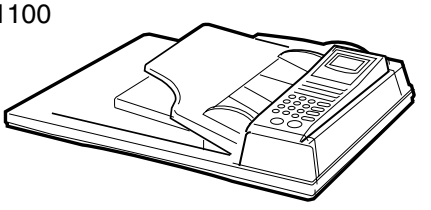

MY-1019

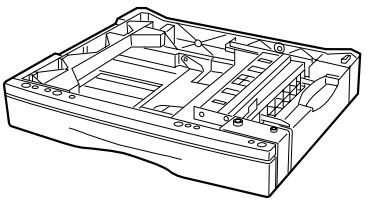

GA-1100

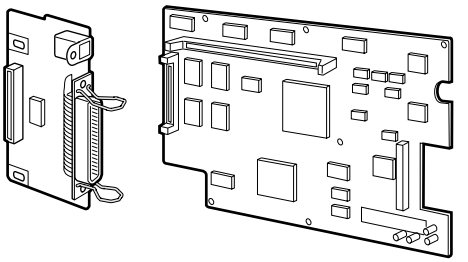

GA-1090

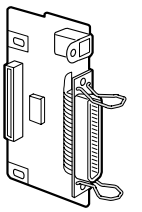

[2] SPECIFICATIONS

1. Basic specifications of copier

A. Basic specifications

Item	Spec.
Type	Desktop
Copy system	Dry, electrostatic
Segment (class)	Digital personal copier
External dimensions (W x D x H) (mm)	DP1200: 293mm x 518mm x 445mm (TBD) DP1500: 293mm x 518mm x 483mm (TBD)
Weight	DP1200: Approx. 17.4kg (TBD) DP1500: Approx. 19kg (TBD)

B. Operation specification

Section	Item		Details	Spec.
Paper feed section	Paper feed system			DP1200, DP1500: 1 tray (250 sheets) + multi bypass (50 sheets)
	AB system	Tray paper feed section	Paper size	A4, B5, A5 (Landscape)
			Paper weight	56 – 80g/m^2
			Paper feed capacity	250 sheets
			Kinds	Standard paper, specified paper, recycled paper
			Remark	User adjustment of paper guide available
		Multi bypass paper feed section	Paper size	A4, B5, A5, B6, A6 (Landscape)
			Paper weight	52 – 128g/m^2
			Paper feed capacity	50 sheets
			Kinds ∗1	Standard paper, specified paper, recycled paper, OHP, Label, Postal card
			Remark	User adjustment of paper guide available
	Inch system	Tray paper feed section	Paper size	8-1/2" x 14", 8-1/2 x 11", 8-1/2" x 5-1/2" (Landscape)
			Paper weight	15 – 21 lbs.
			Paper feed capacity	250 sheets
			Kinds	Standard paper, specified paper, recycled paper
			Remark	User adjustment of paper guide available
		Multi bypass paper feed section	Paper size	8-1/2" x 14", 8-1/2 x 11", 8-1/2" x 5-1/2", 3-1/2" x 5-1/2" (Landscape)
			Paper weight	14 – 34.5 lbs.
			Paper feed capacity	50 sheets
			Kinds ∗1	Standard paper, specified paper, recycled paper, OHP, Label, Postal card
			Remark	User adjustment of paper guide available

∗1:OHP, Label, Postal card: each 1 pc.
As special media have wide variety of forms by country or region, they may not be used in some cases.

Section		Item	Details	Spec.
Paper exit section		Exit way		Face down
		Capacity of output tray		100 sheets
Originals		Original set		Center Registration (left edge)
		Max. original size		B4 (10″ × 14″)
		Original kinds		Sheet and book
		Original size detection		None
Optical section	Scanning section	Scanning system		CCD sensor scanning by lighting lamp scanner
		CCD sensor	Resolution	400 dpi
		Lighting lamp	Type	Xenon lamp
			Voltage	1.5kV
			Power consumption	11 ± 3W
		Gradation		256 gradations/8bit
	Writing section	Writing system		Writing to OPC drum by the semiconductor laser
		Laser unit	Resolution	600 dpi
Image forming		Photoconductor	Type	OPC (30ϕ)
			Life	25k
		Charger	Charging system	Saw -tooth charging with a grid, / (–) scorotron discharge
			Transfer system	(+) DC corotron system
			Separation system	(–) DC corotron system
		Developing	Developing system	Dry, 2-component magnetic brush development system
		Cleaning	Cleaning system	Counter blade system (Counter to rotation)
Fusing section		Fusing system		Heat roller system
		Upper heat roller	Type	Teflon roller
		Lower heat roller	Type	Silicon rubber roller
		Heater lamp	Type	Halogen lamp
			Voltage	100V/240V
			Power consumption	800W
Electrical section		Power source	Voltage	Local AC voltage
			Frequency	Common use for 50 and 60Hz
		Power consumption	Max.	DP1200/DP1500: 1000W
			Average (operating) *1)	DP1500: 310Wh/H, DP1200: 270Wh/H
			Stand-by mode (initial condition) *1)	DP1200/DP1500: 70Wh/H
			Pre-heat mode *1)	DP1200/DP1500: 40Wh/H
			Auto power shut-off mode *1)	DP1200/DP1500: 18Wh/H

*1) May fluctuate due to environmental conditions and the input voltage.

C. Copy performance

Section		Item		Details	Spec.	
Copy magnification		Fixed magnification ratios			3R + 2E (AB system: 50, 70, 81, 100, 141, 200%) (Inch system: 50, 64, 78, 100, 129, 200%)	
		Zooming magnification ratios			50 200% (151 steps in 1% increments)	
Manual steps (manual, photo)					5 steps	
Copy speed		First copy time		Tray paper feed	9.6 sec. or below (A4), 9.4 sec. or below (8-1/2" × 14") (Pre-heat mode: 16 sec. or below / Auto power-shut-off mode: 23 sec. or below)	
				Manual paper feed	10.0 sec (Pre-heat mode: 16 sec. or below / Auto power-shut-off mode: 23 sec. or below)	
	AB system: A4 (Landscape)	Copy speed (CPM)		Same size	DP1200: 12	DP1500: 15
				Enlargement	DP1200: 12	DP1500: 15
				Reduction	DP1200: 11	DP1500: 15
	B5 (Landscape)	Copy speed (CPM)		Same size	DP1200: 12	DP1500: 15
				Enlargement	DP1200: 12	DP1500: 15
				Reduction	DP1200: 12	DP1500: 15
	Inch system 8-1/2" × 14" (Landscape)	Copy speed (CPM)		Same size	DP1200: 10	DP1500: 12
				Enlargement	DP1200: 10	DP1500: 12
				Reduction	DP1200: 10	DP1500: 12
	8-1/2" × 11" (Landscape)	Copy speed (CPM)		Same size	DP1200: 12	DP1500: 15
				Enlargement	DP1200: 12	DP1500: 15
				Reduction	DP1200: 12	DP1500: 15
Max. continuous copy quantity					99	
Void		Void area		Leading edge	1 ~ 4 mm	
				Trailing edge	4 mm or less	
				Side edge void area	4 mm or less (per side)	
		Image loss	OC mode	Leading edge	Same size: 3.0mm or less / Enlarge (200%): 2.0mm or less / Reduction (50%): 6.0mm or less	
			SPF mode	Leading edge	Same size: 4.0mm or less / Enlarge (200%): 3.0mm or less / Reduction (50%): 8.0mm or less	

[3] CONSUMABLE PARTS

1. Supply system table

No.	Name	Model name	Life	Package unit	Remark
1	Toner Cartridge	PS-ZT1200	6.5K	10	Life based on 6% coverage of A4 original.
2	Developer	D-1200	25K (6%)	10	
3	Drum Kit	OD-1200	25K	10	

2. Environmental

The environmental conditions for assuring the copy quality and the machine operations are as follows:

(1) Normal operating condition

Temperature: 20℃~25
Humidity: 65 ± 5%RH

(2) Acceptable operating condition

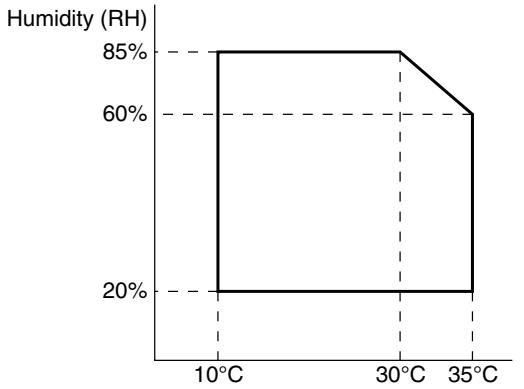

(3) Transportation condition

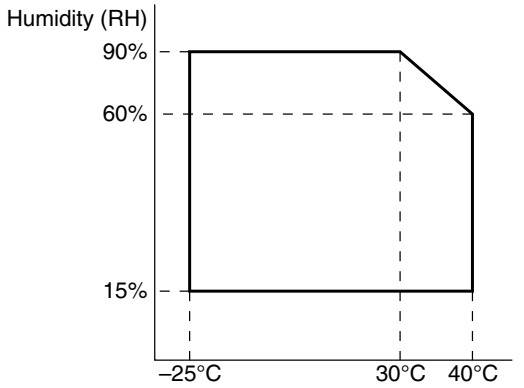

(4) Supply storage condition

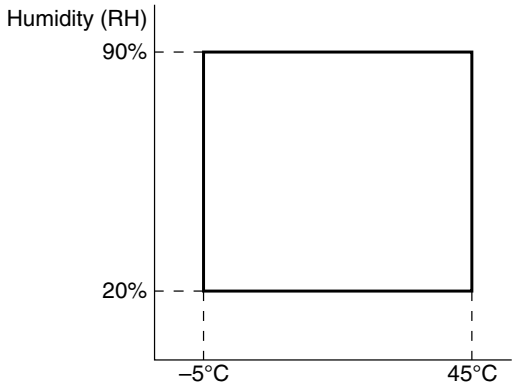

3. Production control number (lot No.) identification

Developing cartridge

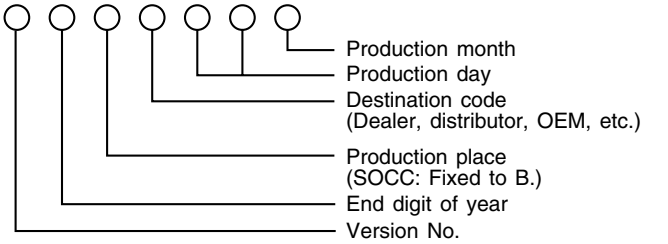

:Destination

Division		No.
EX Destination	A same pack	G
	B same pack	H
Option Destination	A	P
	B	Q

Drum cartridge

The label on the drum cartridge shows the date of production. (SOCC production)

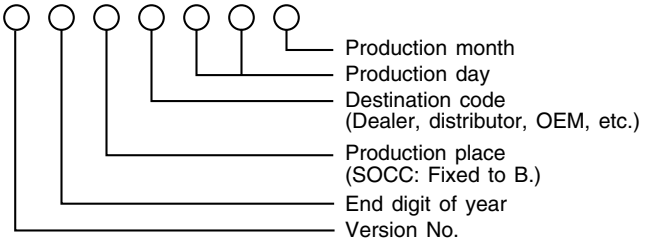

JAPAN production

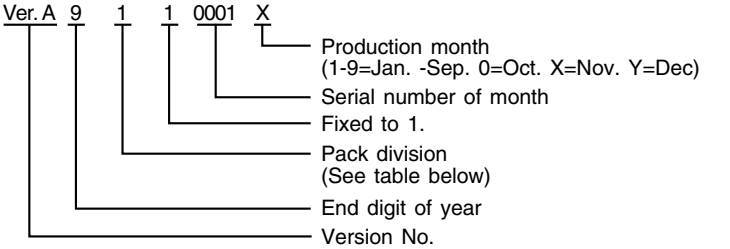

Division	No.
Ex production	1
Option	2
Same pack	3

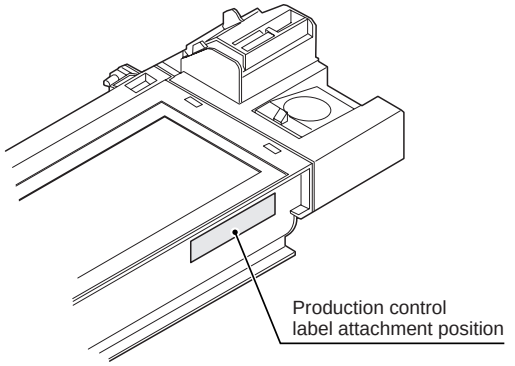

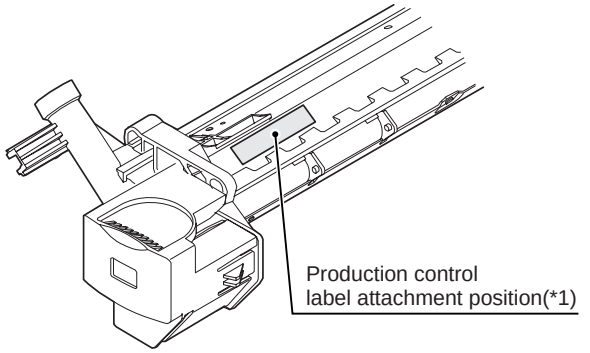

*1 The production control label is not attached to the cartridge of a China product.

4. TD cartridge replacement

1) Open the front and side cabinets of the copier.
2) Keep holding Toner lover, and
3) Carefully pull out Toner unit from the copier.

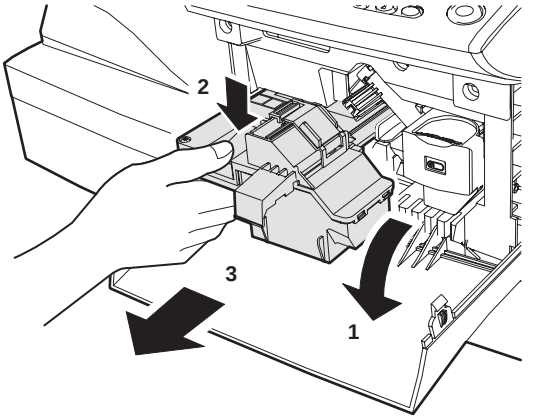

4) Put Toner unit in a collection bag immediately after removing it from the copier

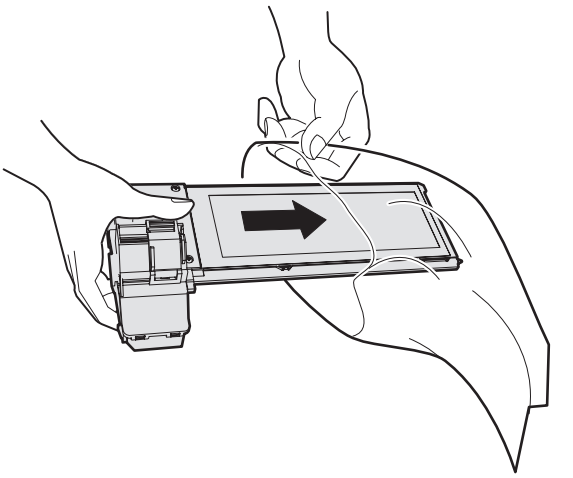

Note: Never carry exposed Toner unit. Be sure to put it in the collection bag.

[4] EXTERNAL VIEWS AND INTERNAL STRUCTURES

1. Appearance

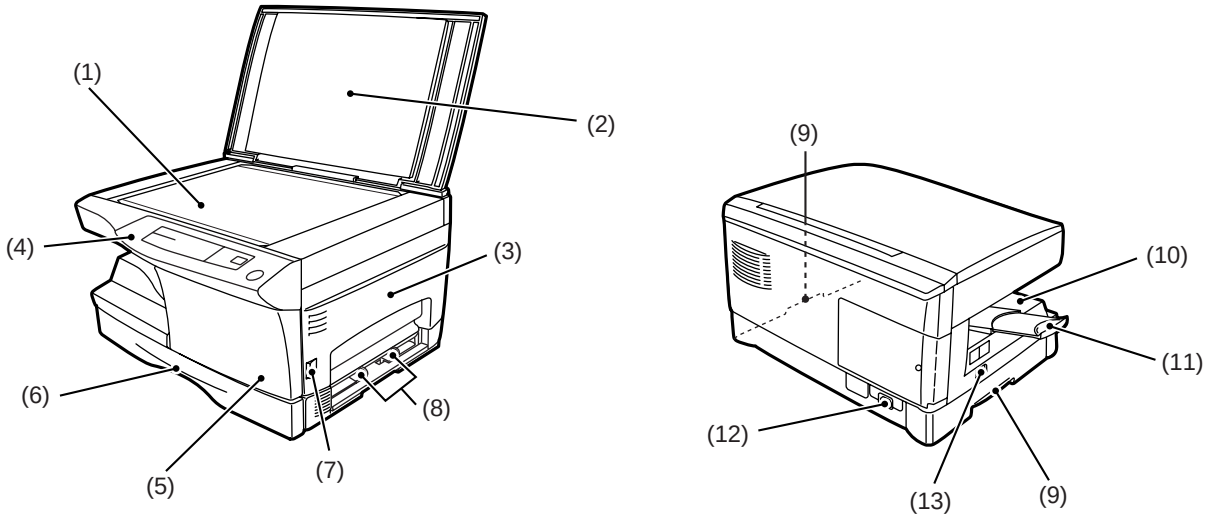

(1)	Original table	(2)	Original cover	(3)	Side cover
(4)	Operation panel	(5)	Front cover	(6)	Paper tray
(7)	Side cover open button	(8)	Paper guides	(9)	Handle
(10)	Paper output tray	(11)	Paper output tray extension	(12)	Power cord socket
(13)	Power switch				

2. Internal

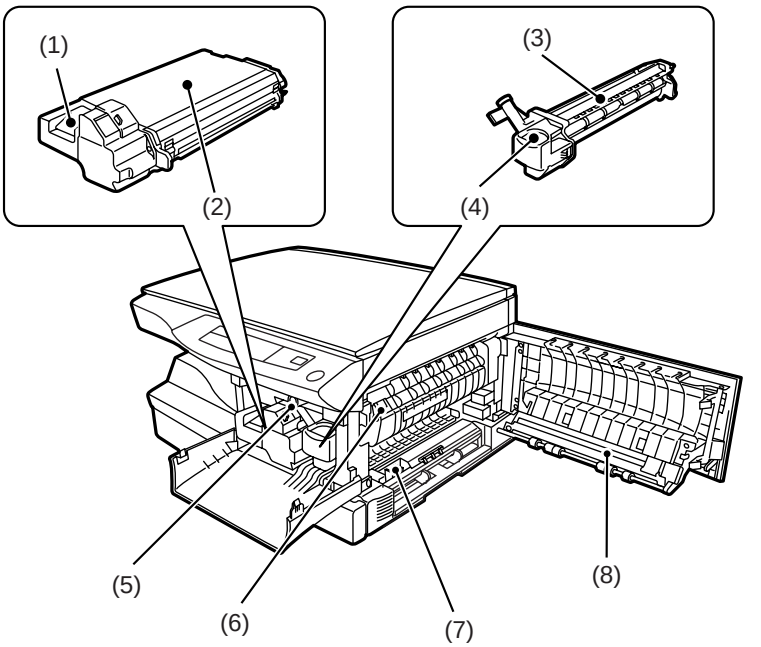

(1)	TC cartridge lock release button	(2)	TD cartridge	(3)	Drum cartridge
(4)	Drum cartridge handle	(5)	Paper feed roller	(6)	Fusing unit release lever
(7)	Charger cleaner	(8)	Transfer charger		

3. Operational panel

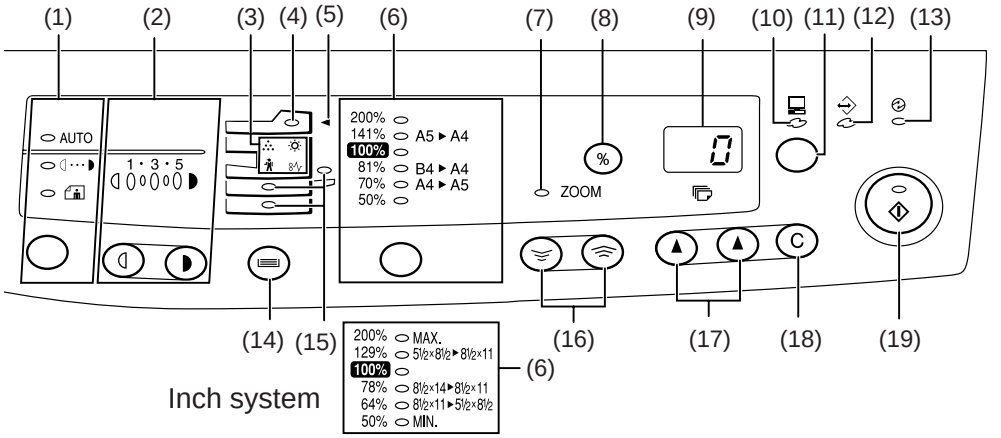

(1)	Exposure mode selector key and indicators	(2)	Light and dark keys and exposure indicators	(3)	Alarm indicators*1
(4)	SPF indicator	(5)	SPF misfeed indicator	(6)	Copy ratio selector key and copy ratio indicators
(7)	Zoom indicator	(8)	Copy ratio display (%) key	(9)	Display
(10)	ON LINE indicator	(11)	ON LINE key	(12)	DATA indicator
(13)	Power save indicator	(14)	Tray select key	(15)	Paper feed location indicators
(16)	Zoom keys	(17)	Copy quantity keys	(18)	Clear key
(19)	Print key and ready indicator				

*1
- Developer replacement required indicator
- Misfeed indicator
- Toner cartridge replacement required indicator
- Maintenance indicator

*2 ON: Indicates that the machine is in the energy saving (pre-heat) mode.
Blink: Indicates that the machine is in the process of resetting from the energy saving mode or just after supplying the power.
OFF: Indicates that resetting from the energy saving mode is completed and that the fusing temperature is in ready state.
The combinations of the above display lamps are as follows: (● = ON, × = OFF)

Lamp	Immediately after power ON	Ready	Copying
Pre-heat lamp	Blink	×	×
Ready lamp	●	●	×
Other lamps	●	●	●

Lamp	Energy saving mode (Pre-heating)	Energy saving mode (Auto power shut off)	Resetting from energy saving mode	Copy is started during resetting from energy saving mode
Pre-heat lamp	●	●	Blink	Blink
Ready lamp	●	×	●	×
Other lamps	●	×	●	●

4. Motors and solenoids

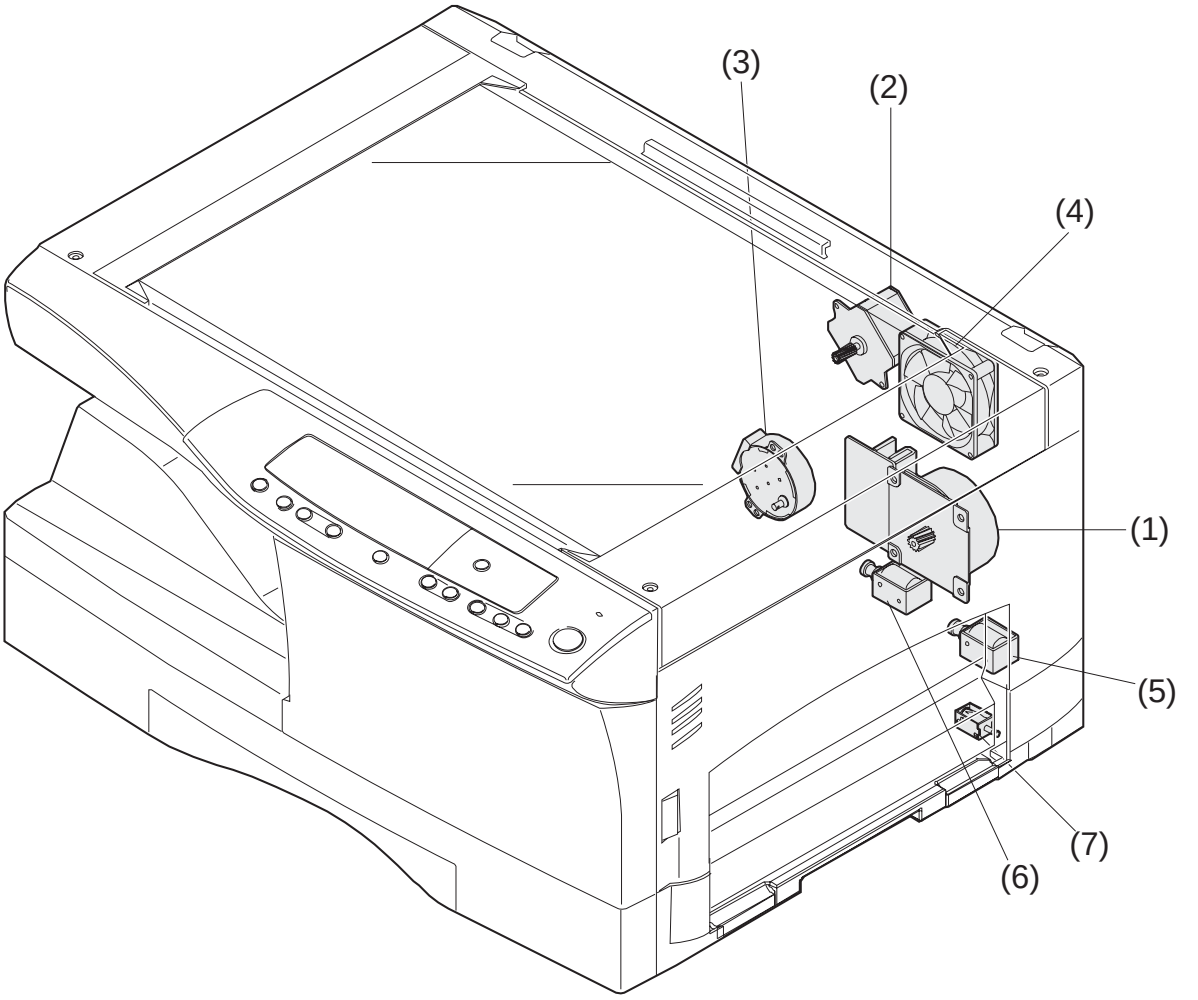

No.	Part name	Control signal	Function,operation
(1)	Main motor	MM	Drives the copier.
(2)	Mirror motor	MRMT	Drives the optical mirror base (scanner unit).
(3)	Toner motor	TM	Supplies toner.
(4)	Cooling fan motor	VFM	Cools the optical section.
(5)	Resist roller solenoid	RRS	Resist roller rotation control solenoid
(6)	Paper feed solenoid	CPFS1	Cassette Paper feed solenoid
(7)	Multi paper feed solenoid	MPFS	Multi manual pages feed solenoid

5. Sensors and switches

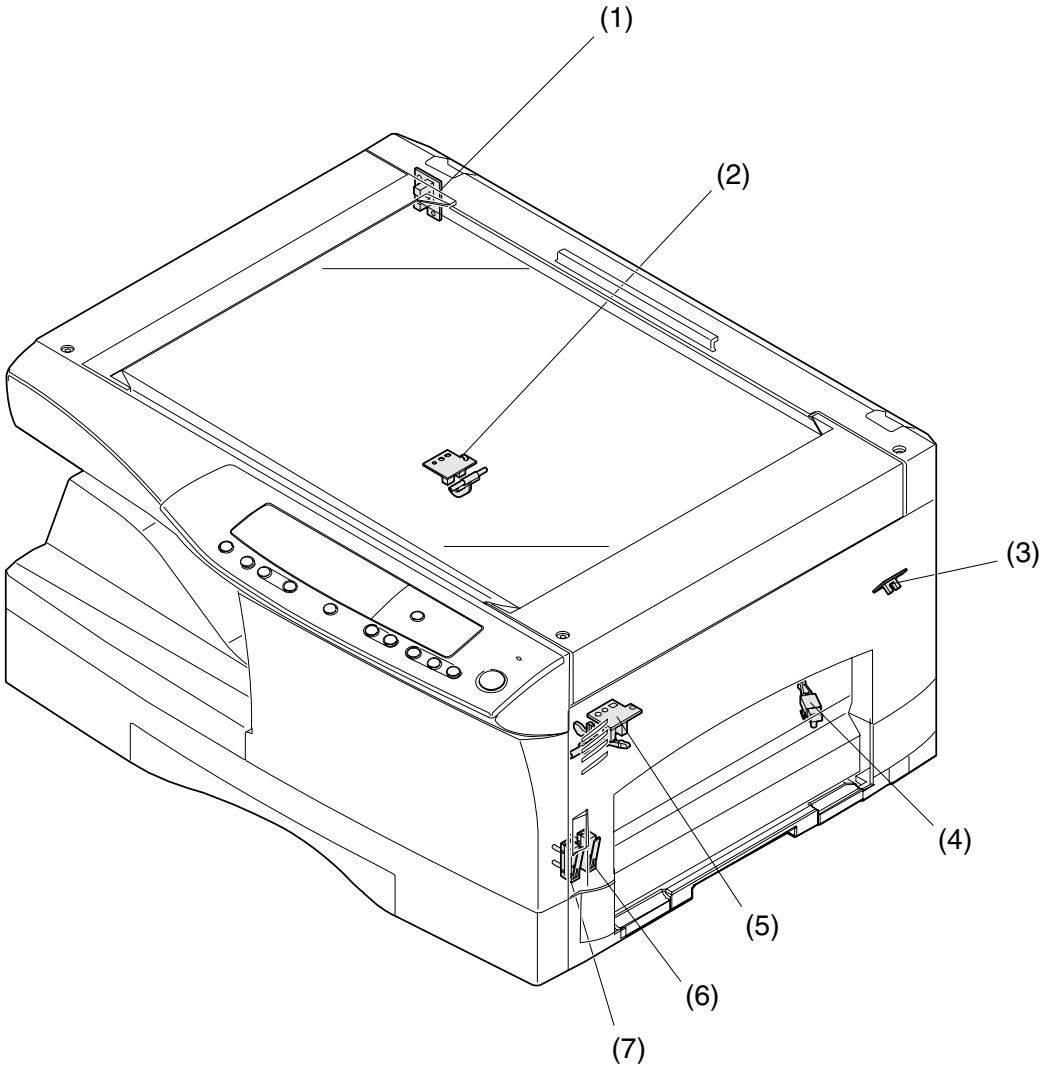

No.	Name	Signal	Type	Function	Output
(1)	Mirror home position sensor	MHPS	Transmission sensor	Mirror (scanner unit) home position detection	“H” at home position
(2)	POD sensor	POD	Transmissions sensor	Paper exitdetection	“H” at paper pass
(3)	PPD2 sensor	PPD2	Transmission sensor	Paper transport detection 2	“L” at paper pass
(4)	Cassette detection switch	CED1	Microswitch	Cassette installation detection	“H” at cassette insertion
(5)	PPD1 sensor	PPD1	Transmission sensor	Paper transport detection 1	“L” at paper pass
(6)	Door switch	DSW	Micro switch	Door open/close detection (safety switch for 5V)	1 or 0V of 5V at door open
(7)	Door switch	DSW	Micro switch	Door open/close detection (safety switch for 24V)	1 or 0V of 24V at door open

6. PWB unit

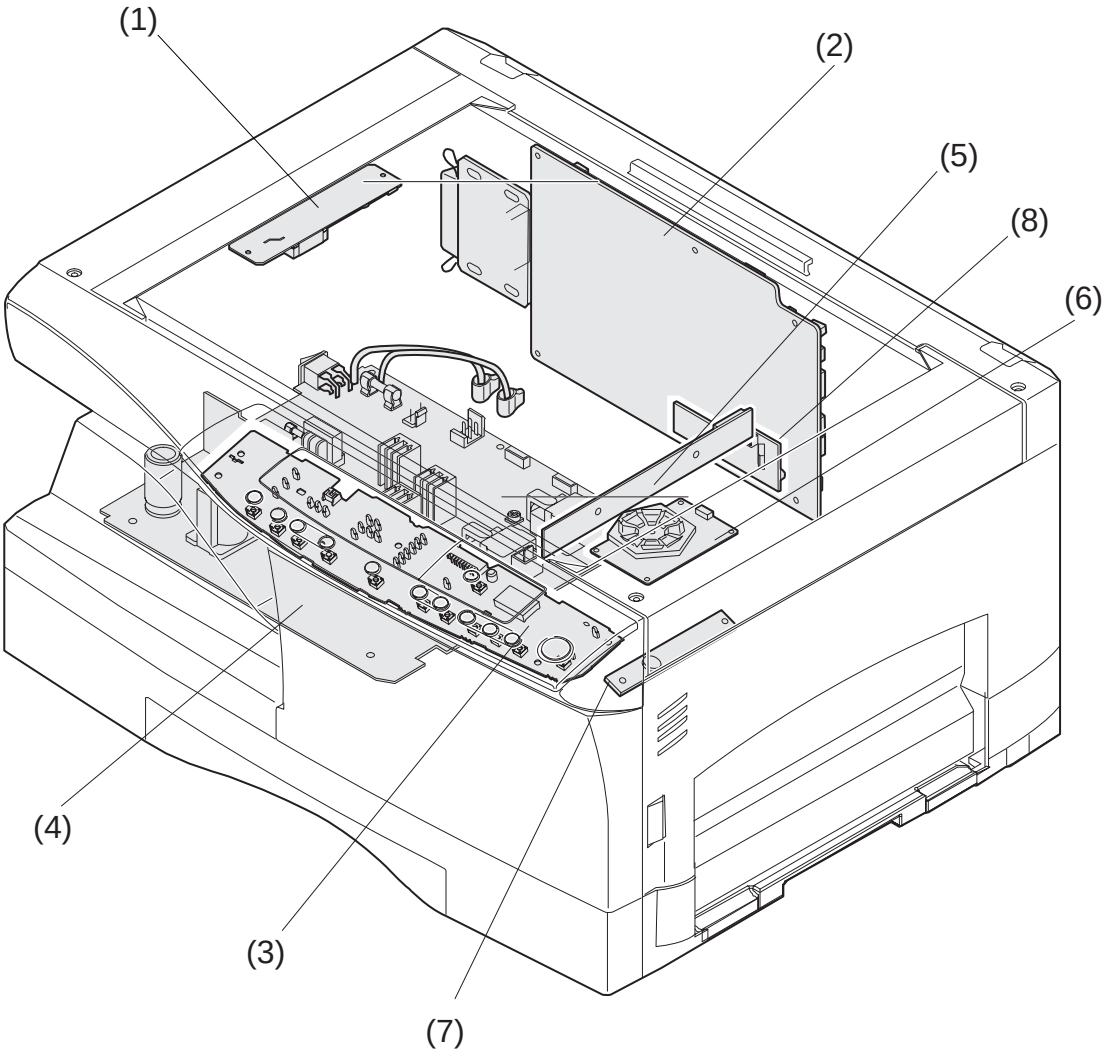

No.	Name	Function
(1)	Exposure lamp invertor PWB	Exposure lamp (Xenon lamp) control
(2)	Main PWB (MCU)	Copier control
(3)	Operation PWB	Operation input/display
(4)	Power PWB	AC power input, DC voltage control, High voltage control
(5)	CCD sensor PWB	For image scanning
(6)	LSU motor PWB	For polygon motor drive
(7)	TCS PWB	For toner sensor control
(8)	LSU PWB	For laser control

7. Cross sectional view

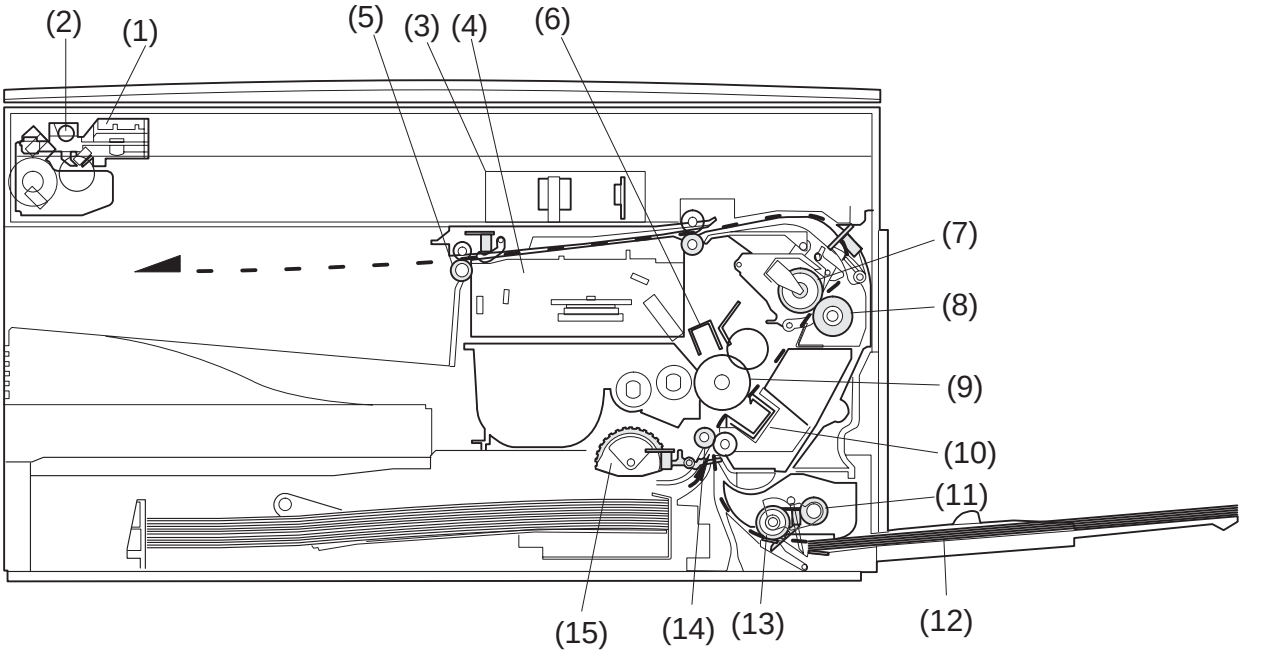

No.	Part name	Function and operation
(1)	Scanner unit	Illuminates the original with the copy lamp and passes the reflected light to the lens unit (CCD).
(2)	Exposure lamp	Exposure lamp (Xenon lamp) Illuminates original
(3)	Lens unit	Scans the original image with the lens and the CCD.
(4)	LSU (Laser unit)	Converts the original image signal into laser beams and writes onto the drum.
(5)	Paper exit roller	Roller for paper exit
(6)	Main charger	Provides negative charges evenly to the drum surface.
(7)	Heat roller	Fuses toner on the paper. (Teflon roller)
(8)	Pressure roller	Fuses toner on the paper. (Silicon rubber roller)
(9)	Drum	Forms images.
(10)	Transfer unit	Transfers images onto the drum.
(11)	Pickup roller	Picks up the manual feed paper. (In multi feed only)
(12)	Manual paper feed tray	Tray for manual feed paper
(13)	Manual paper feed roller	Transport the paper from the manual paper feed port.
(14)	PS roller unit	Takes synchronization between the lead edge and the rear edge of the paper.
(15)	Paper feed roller	Picks up a sheet of paper from the cassette.

[5] UNPACKING AND INSTALLATION

1. A WORD ON COPIER INSTALLATION

Improper installation may damage the copier. Please note the following during initial installation and whenever the copier is moved.

Do not install your copier in areas that are:

- damp, humid, or very dusty

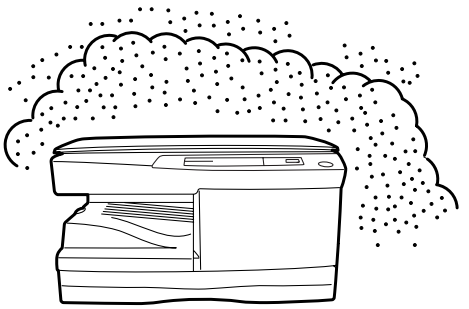

- exposed to direct sunlight

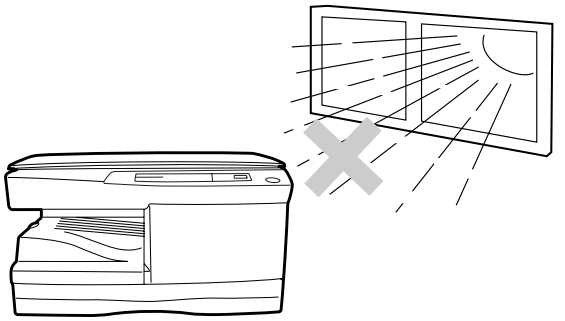

- poorly ventilated

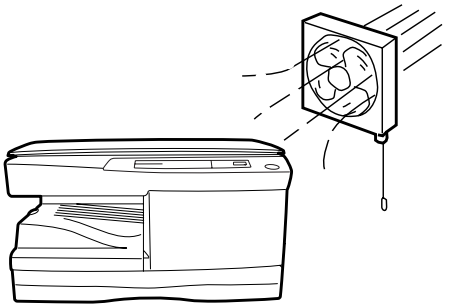

- subject to extreme temperature or humidity changes, e.g., near an air conditioner or heater.

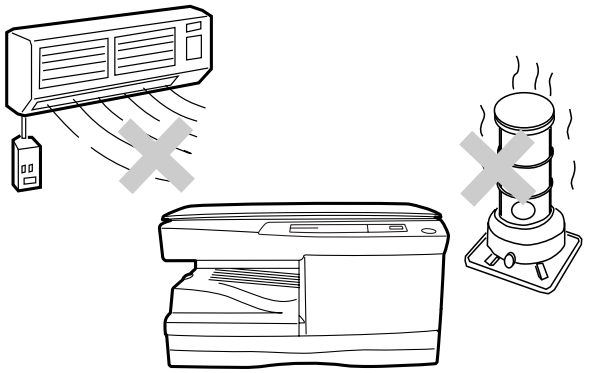

Be sure to allow the required space around the machine for servicing and proper ventilation.

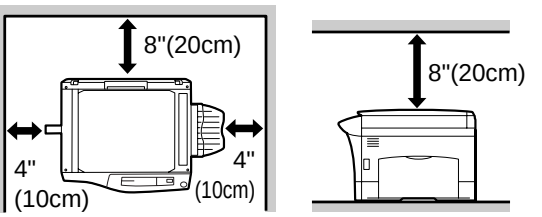

2. CHECKING PACKED COMPONENTS AND ACCESSORIES

Open the carton and check if the following components and accessories are included.

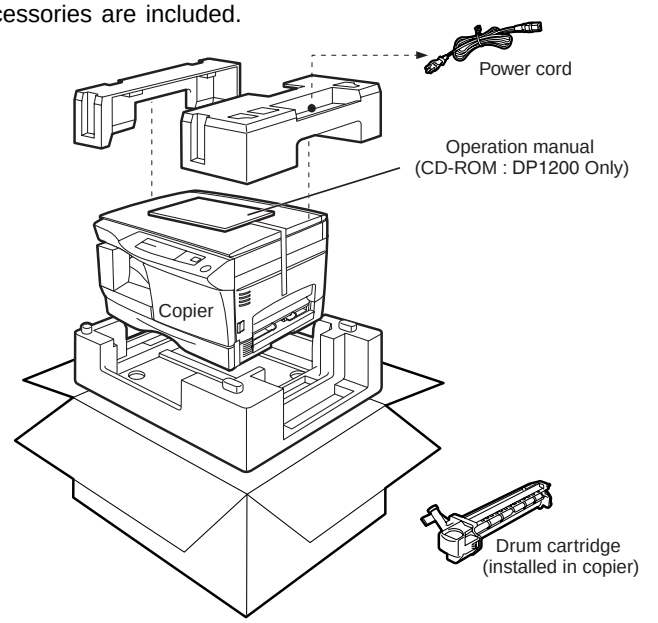

3. UNPACKING

Unpack the copier and carry it to the installation location by holding the handles on both sides of the copier.

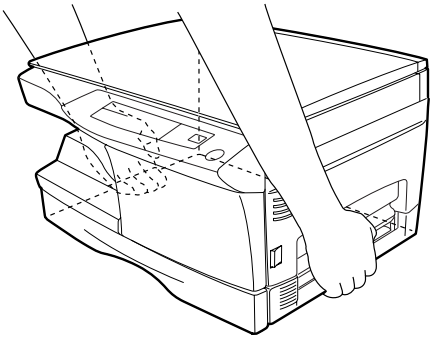

4. REMOVING PROTECTIVE PACKING MATERIALS

1) Remove pieces of tape (a), (b), (c), (d) and (e) and protective cover (f). Then open the original cover and remove protective materials (g) and (h).

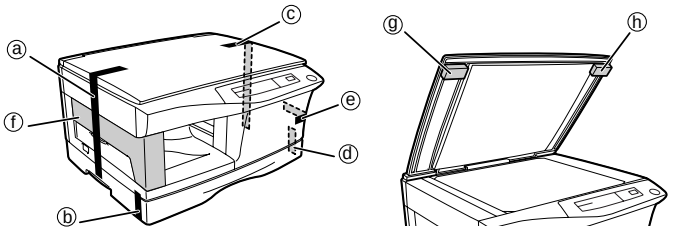

2) Use a coin (or suitable object) to remove the screw. Store the screw in the paper tray because it will be used if the copier has to be moved.

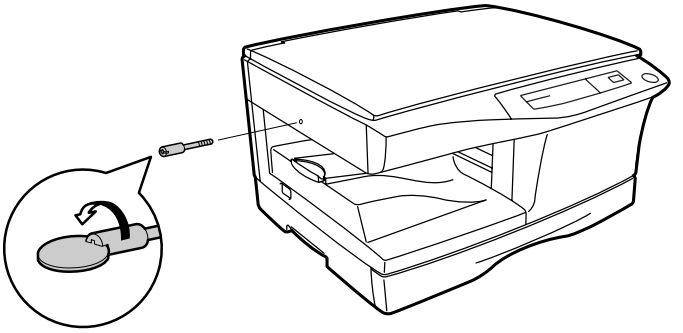

3) Open the bypass tray and then open the side cover whilst pressing the side cover open button.

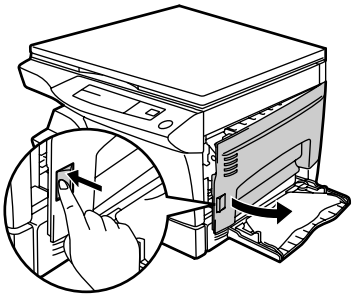

4) Remove the CAUTION tape from the front cover and remove the two protective pins from the fusing unit by pulling the strings upward one at a time.

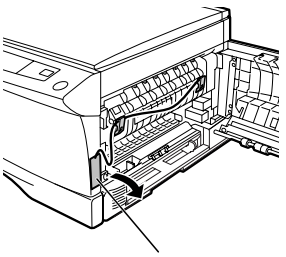

CAUTION tape

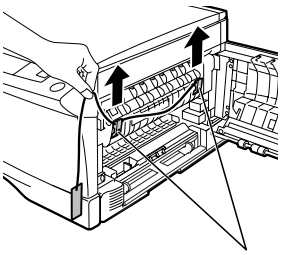

Protective pins

5. DEVELOPER UNIT INSTALLATION

1) 2) 3) Open the side and front cabinets of the copier.
4) Remove the locking tape of the developer unit.
5) Remove the screw which is fixing the copier and Developer unit.
6) Remove Developer unit slowly from the copier.

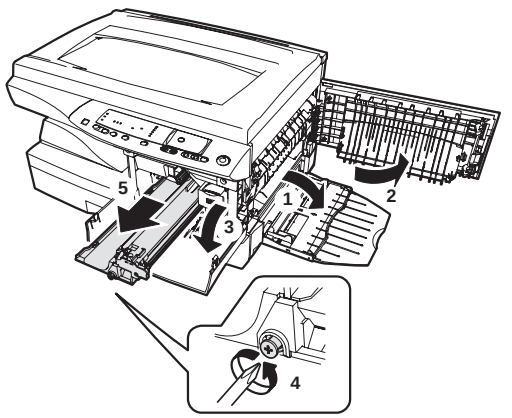

7) Remove the screw (1 pc).

8) Remove Upper developer unit.

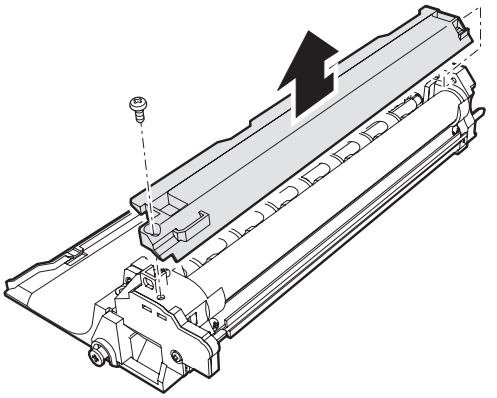

9) Shake the aluminum bag to stir developer
10) Supply developer from the aluminum bag to the top of the MX roller evenly.

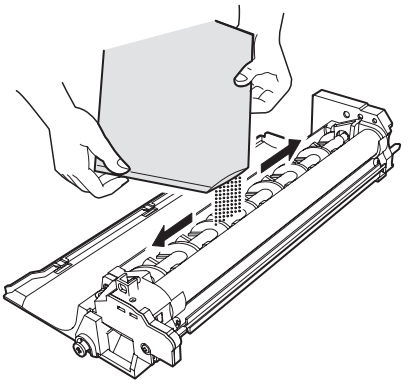

Note: Be careful not to splash developer outside Developer unit.

11) Attach Upper developer unit and fix it with a screw.
12) Rotate the MG roller gear to distribute developer evenly.

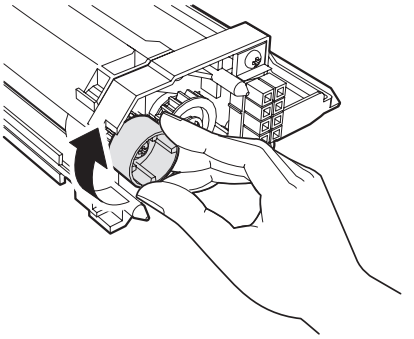

Note: Never rotate the gear in the reverse direction.
Note: When carrying Developer unit, do not tilt it extremely as shown with the arrow in the figure below. (Prevention of splash of developer)

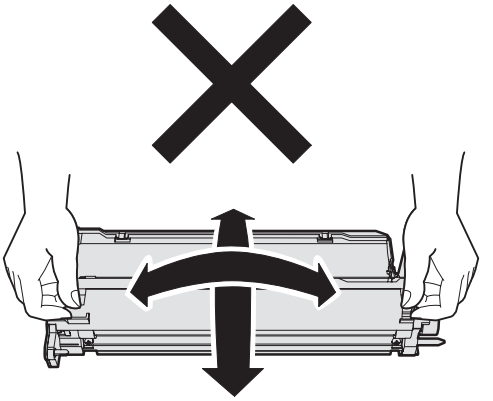

13) Insert Developer unit carefully into the copier.
Note: Quick insertion may result in splash of developer. Be sure to insert carefully.
14) Confirm that Developer unit is completely inserted to the bottom of the machine, fix Developer unit and the machine with a screw.
15) Completion of Developer unit installation

6. TONER CARTRIDGE INSTALLATION

1) To prevent against uneven distribution of toner, hold Toner unit with both hands and shake it several times horizontally.

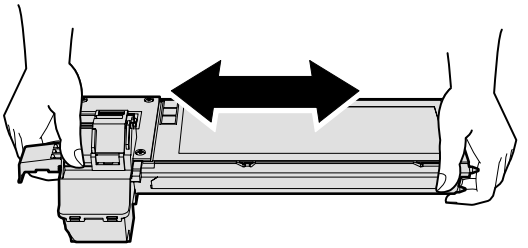

2) Hold the section of Toner unit shown in the figure below, remove the packing tape, and remove the cushion.
3) Remove the tape securing the shutter, and pull out the cushion in the arrow direction.

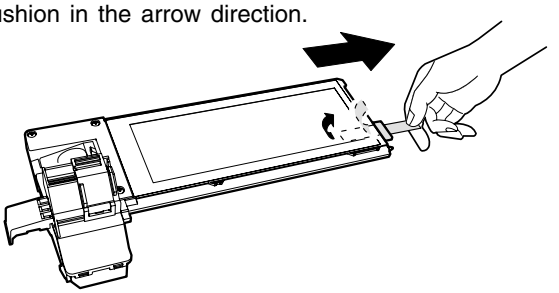

4) Insert Toner unit carefully into the copier.
5) Insert until the hook is engaged with the copier as shown in the figure below.

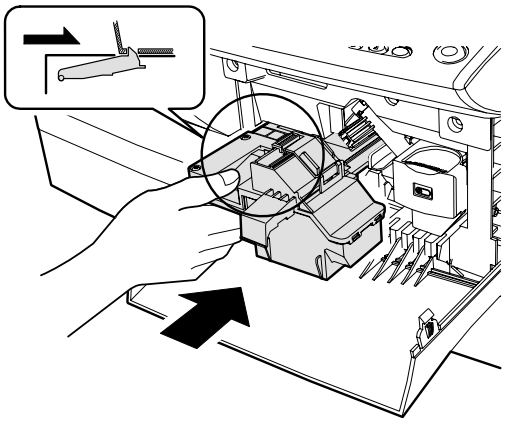

6) Pull out the shutter in the arrow direction.

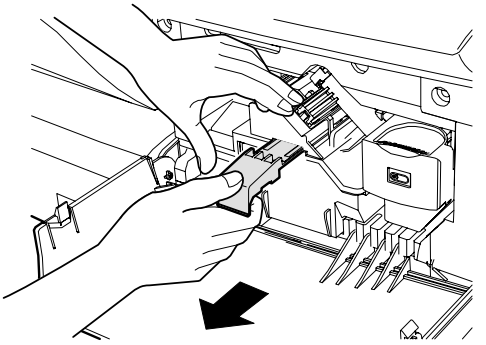

Note: Do not hold and carry the shutter. Otherwise the shutter may drop and Toner unit may drop.
7) Completion of Toner unit installation
Close the front and side cabinets.

7. LOADING COPY PAPER

Note: This copier is equipped with two paper trays. Load copy paper into the two paper trays.

1) Raise the handle of the paper tray and pull the paper tray out until it stops.

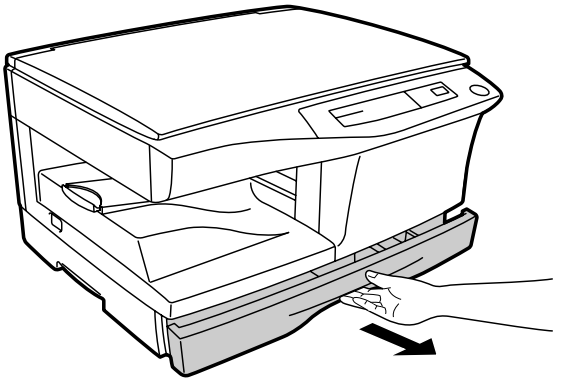

2) Remove the pressure plate lock. Rotate the pressure plate lock in the direction of the arrow to remove it while pressing down the pressure plate of the paper tray.

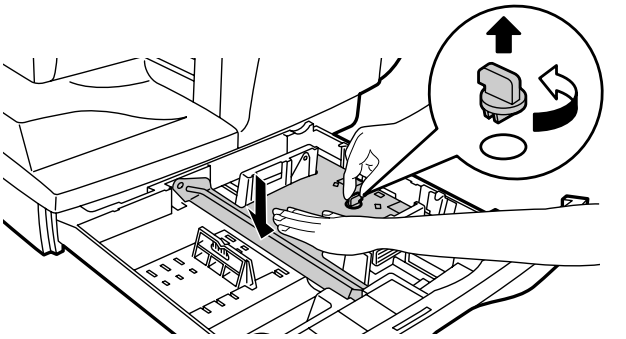

3) Store the pressure plate lock which has been removed in step 2 and the screw which has been removed when unpacking (see page 5-2, step 2 of REMOVING PROTECTIVE PACKING MATERIALS) in the front of the paper tray. To store the pressure plate lock, rotate the lock to fix it on the relevant location.

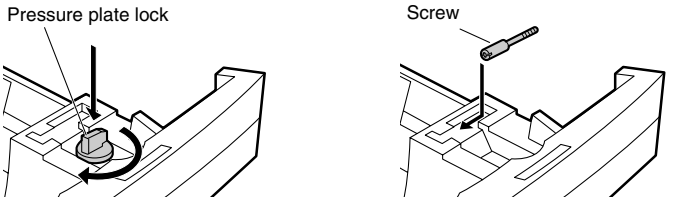

4) Adjust the paper guides on the paper tray to the copy paper width and length.
Squeeze the lever of paper guide (A) and slide the guide to match with the width of the paper.
Move paper guide (B) to the appropriate slot as marked on the tray.

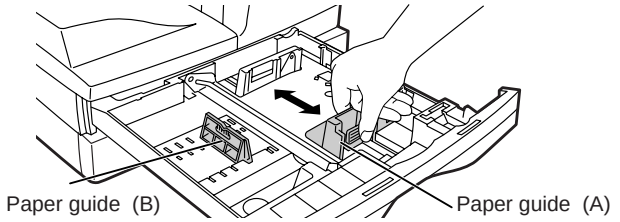

5) Fan the copy paper and insert it into the tray. Make sure the edges go under the corner hooks.

Note: Do not load paper above the maximum height line (▼▼). Exceeding the line will cause a paper misfeed.

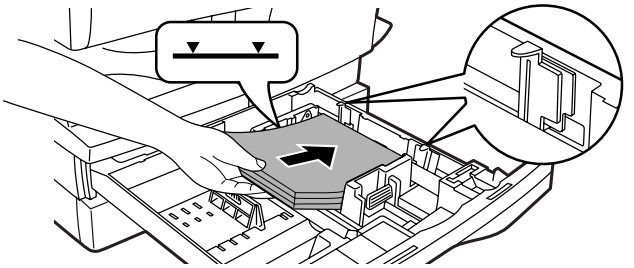

6) Gently push the paper tray back into the copier.

Note: After loading copy paper, to cancel the blinking "P" without restarting copying, press the clear (C) key. The "P" in the display will go out and the ready ( ) indicator will light up.

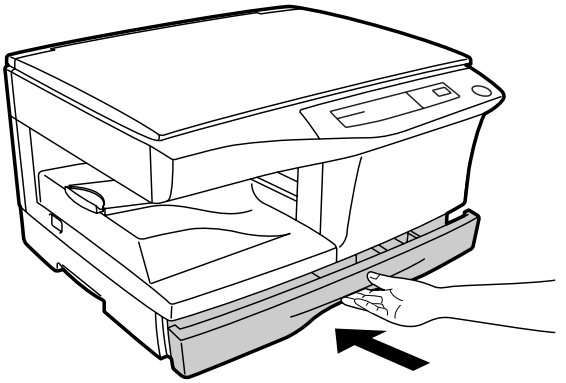

8. POWER TO COPIER

1) Ensure that the power switch of the copier is in the OFF position. Insert the attached power cord into the power cord socket at the rear of the copier.
2) Plug the other end of the power cord into the nearest outlet.

9. CONNECTING THE INTERFACE CABLE (DP1200 Only)

● For specifications of the parallel interface, see page 6-3.

1) Check that the power switches of both the printer and the computer are in the OFF position.
2) Plug the parallel interface cable into the printer interface connector. Fasten the two bail clips at the side of the printer connector to hold the interface connector in place.
3) Plug the other end of the cable into the parallel interface connector on your computer. (Refer to your computer manual for details.)

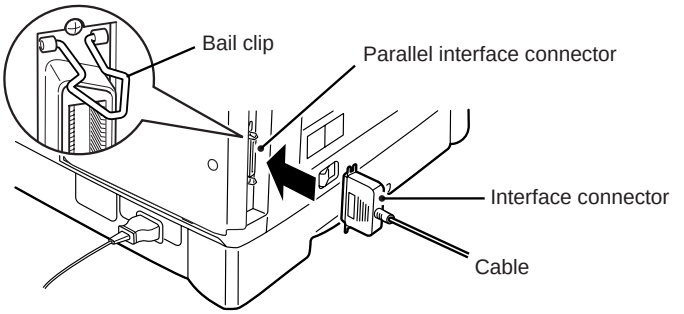

● The printer sends and receives data bi-directionally and at high speed. Some switch boxes and pass-through devices cannot support high-speed, bi-directional transfer of data, and using them may cause printing errors.

[6] INSTALLING THE PRINTER DRIVER SOFTWARE (DP1200 Only)

1. Description of the printer driver

The printer driver is the software program which runs the printer. It converts the data in your file into information that the printer can understand. It also controls communication between the printer and computer as the data is printed.

2. Checking the hardware and software requirements

You will need the following hardware and software in order to install the printer driver.

Computer type	IBM PC/AT or compatible computer equipped with a bi-directional parallel interface and CD-ROM drive
Windows type	Windows 3.1x, Windows 95, Windows 98, Windows NT 4.0
CPU	486DX 66 MHz or better
Physical RAM	Windows 95, Windows 3.1x: 8 MB (16 MB or more is recommended.) Windows 98, Windows NT 4.0: 16MB (32MB or more is recommended.)
Virtual storage (swap file)	8 MB or moreDisplay 640 480 dots (VGA) or better
Hard disk free space	10 MB or more

- The printer driver included in this product cannot be used under Windows NT3.5x, OS/2, pure MS-DOS and other operating systems which are not described above.

- If you are using some of your computers memory as a RAM drive, the printer driver may not be allocated the correct amount of memory. In such a case, reduce the size of your RAM disk, or do not use the RAM disk. Please refer to your MS Windows documentation for further information.

3. Installing the printer driver

The software for your printer is provided on CD-ROM.
Before installing the printer driver, be sure to check the following items.

- Is the printer connected properly to the computer?
- Does the printer have paper?
- Is there another GDI printer driver or Windows Printing System printer driver already installed? If installed, change the printer port setting.

In this description, the following drive configuration is supposed. Specify proper drives depending on the configuration of your computer.

Drive R: CD-ROM drive (installation source)
Drive C: Hard disk drive (installation destination)

A. Windows 95/Windows NT 4.0:

1) Load paper into the paper tray of the printer.

2) Turn on the printer.

3) Turn on your computer and start Windows.
   - Before installing the printer driver, be sure to close all other applications which may be open.

4) When using Windows 95 on a personal computer with plug & play*, the "Update Device Driver Wizard" window will appear. Insert the installation CD-ROM into the CD-ROM drive. Click the **Next** button and follow the on-screen instructions. Proceed to step 7. If the "Copying Files" window appears during this operation, enter **R:** (if the CD-ROM is designated as drive R) and click the **OK** button.

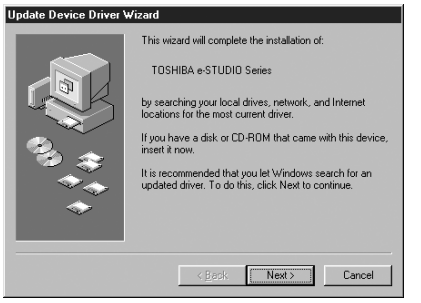

   - If you use Windows 95 and the "New Hardware Found" window will appear, click the **Driver from Disk Provided by Hardware Manufacturer** button and then click **OK.** Proceed to step 6.
   - If you use Windows 95 and the screen shown above or the "New Hardware Found" window does not appear, proceed to step 5.
   - If you use Windows NT 4.0, proceed to step 5.

   ★ Plug & play
   This feature is effective if both the computer and peripheral equipment are equipped with IEEE 1284 compliant parallel interface.

- The screen displayed depends on the version of Windows.

5) Insert the installation CD-ROM into the CD-ROM drive. Click the **Start** button and select **Run.** When the screen shown below appears, type **R:\SETUP** (if the CD-ROM is designated as drive R) and click the **OK** button. Proceed to step 7.



6) "Installation from CD-ROM" window will appear. Insert the installation CD-ROM into the CD-ROM drive. Type **R:** (if the CD-ROM is designated as drive R) and click the **OK** button. Proceed to step 7.

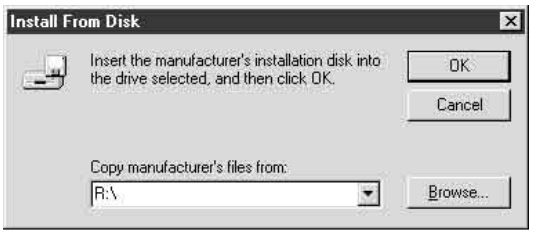

7) The installation program will start. To install the printer driver to the default folder, click the **Next** button. To select a different folder, select **Browse** and type in the new path and folder name. Click **OK** and say **YES** to create the folder, select the **Next** button to continue.

8) On the display, you will see "printer port to be used". Normally, this is LPT1 and it is selected automatically.
Ensure that **Yes** is checked to use the printer as the default printer.
Finally click the **Next** button.

9) A "Confirm installation" window will be displayed. To continue installation, click the **Yes** button.

10) When the installation is complete, you will be asked whether or not to print a test page. If you wish to do so, click the **Yes** button. At this time, ensure that paper is loaded in the paper tray.

11) If the test print completes successfully, click the **Finish** button. "The installation of the TOSHIBA e-STUDIO Series Software is complete." window will be displayed. Click the **OK** button.

B. Windows 98:

1) Load paper into the paper tray of the printer.

2) Turn on the printer.

3) Turn on your computer and start Windows.
● Before installing the printer driver, be sure to close all other applications which may be open.

4) When using Windows 98 on a personal computer with plug & play*, the "Add New Hardware Wizard" window will appear. Click the **Next** button and follow the on-screen instructions.
● If the "Add New Hardware Wizard" window does not appear, proceed to step 8.
★ Plug & play: For plug & play information, see page 4-1.



5) Select **Search for the best driver for your device** and click the **Next** button.

6) Insert the installation CD-ROM into the CD-ROM drive. Select the **CD-ROM drive** and click the **Next** button.



7) Windows driver file search will find the device TOSHIBA e-STUDIO Series. Click the **Next** button. Proceed to step 9.

8) Insert the installation CD-ROM into the CD-ROM drive. Click the **Start** button and select **Run.** When the window shown below appears, type **R:\SETUP** (if the CD-ROM is designated as drive R) and click the **OK** button. Proceed to step 9.

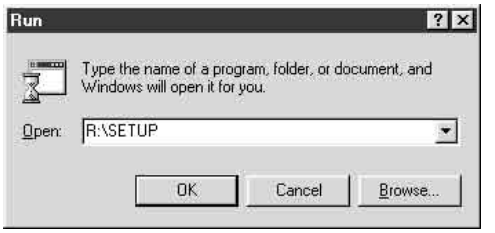

9) The installation program will start. To select a different folder, select **Browse** and type in the path and folder name where the printer driver will be installed. Click **OK** and say **YES** to create the folder, select the **Next** button to continue. To install the printer driver to the default folder, click the **Next** button.

10) On the display, you will see "printer port to be used". Normally, this is LPT1 and it is selected automatically. Ensure that **Yes** is checked to use the printer as the default printer. Finally click the **Next** button.

11) A "Confirm installation" window will be displayed. To continue installation, click the **Yes** button.

12) When the installation is complete, you will be asked whether or not to print a test page. If you wish to do so, click the **Yes** button. At this time, ensure that paper is loaded in the paper tray.

13) If the test print completes successfully, click the **Finish** button. "The installation of the TOSHIBA e-STUDIO Series Software is complete." window will be displayed. Click the **OK** button.

C. Windows 3.1x:

1) Load paper into the paper tray of the printer.

2) Turn on the printer and then start Windows on your computer.
● Before installing the printer driver, be sure to close all other applications which may be open.

3) Insert the installation CD-ROM into a CD-ROM drive.

4) Choose **File** from the Menu bar in Program Manager, and then choose the **Run...** command.

5) Type **R:\SETUP** (if the CD-ROM is designated as drive R) in the command line box and then click the **OK** button.

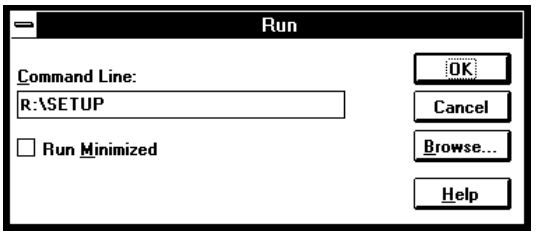

6) Select a directory to which the printer driver will be installed and click the **Next** button. To install it to the default directory, click the **Next** button.

7) A “printer port to be used” window will be displayed. Normally, LPT1 is automatically set.
Then ensure that **Yes** is checked to use this printer as the default printer.

8) A “Confirm installation” window will be displayed. To continue installation, click **Yes.**

9) When the installation is complete, restart Windows.

4. Printer driver group

When the printer driver is installed, the TOSHIBA e-STUDIO Series printer driver group will be created. This group allows the following functions to be executed.

Uninstall
The printer driver can be uninstalled. If the driver is uninstalled, printing cannot be performed on the printer.
For proper uninstallation, be sure to use uninstallation program of the printer driver group.

Readme
The latest information on the printer driver is included in this note. Read the Readme first.

Advanced Settings
See help for application support and application problems that may occur when printing. See help for the applicable method of usage.

Status Monitor
The printer state and information on current printing are displayed on the status monitor window.

DOS Emulation Setup

Status Monitor HELP

DOS Emulation HELP

Advanced Settings HELP

● Be sure to read “Readme” found in the printer driver group before starting to print from application programs.

5. Parallel interface

This printer uses a bi-directional parallel interface. Use the supplied interface cable.

Connector
36-pin DDK 57LE-40360-730B (D29) female connector or equivalent connector

Cable
Shielded type bi-directional parallel interface
For best results,, use a printer interface cable which is IEEE1284 compliant.

Pin configuration
The pin numbers and signal names are listed in the following table.

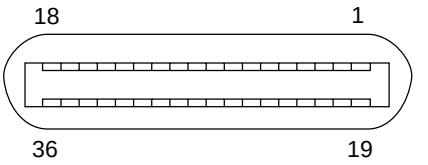

Pin No.	Signal name	Pin No.	Signal name
1	$\overline{\text{STB}}$	19	GND ($\overline{\text{STB}}$ RET)
2	DATA1	20	GND (DATA1 RET)
3	DATA2	21	GND (DATA2 RET)
4	DATA3	22	GND (DATA3 RET)
5	DATA4	23	GND (DATA4 RET)
6	DATA5	24	GND (DATA5 RET)
7	DATA6	25	GND (DATA6 RET)
8	DATA7	26	GND (DATA7 RET)
9	DATA8	27	GND (DATA8 RET)
10	$\overline{\text{ACKNLG}}$	28	GND ($\overline{\text{ACKNLG}}$ RET)
11	BUSY	29	GND (BUSY RET)
12	PE (Paper End)	30	GND (PE RET)
13	SLTC	31	INPRM
14	$\overline{\text{AUTO LF}}$	32	$\overline{\text{FAULT}}$
15	(NC)	33	(NC)
16	GND (0 V)	34	(NC)
17	FG	35	+5 V
18	+5 V	36	$\overline{\text{SLTC IN}}$

[7] OPERATIONAL DESCRIPTIONS

1. Outline of operation

The outline of operation is described referring to the basic configuration.

(Basic configuration)

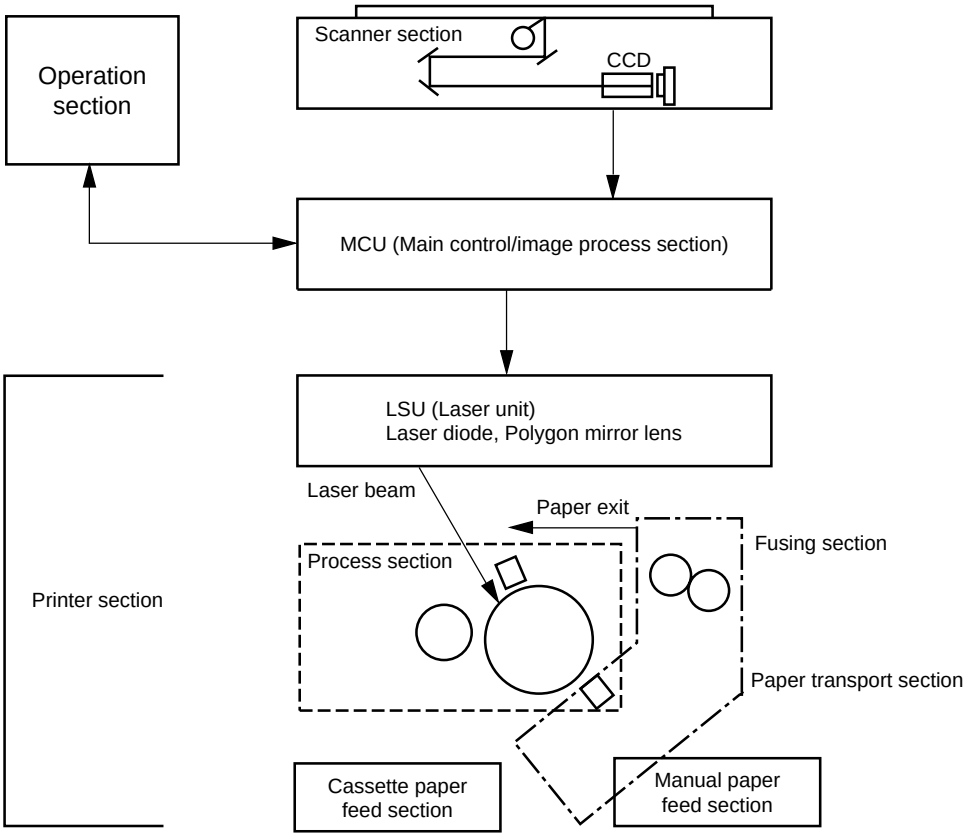

(Outline of copy operation)

Setting conditions

1) Set copy conditions such as the copy quantity and the copy density with the operation section, and press the COPY button. The information on copy conditions is sent to the MCU.

Image scanning

2) When the COPY button is pressed, the scanner section starts scanning of images.
   The light from the copy lamp is reflected by the document and passed through the lens to the CCD.

Photo signal/Electric signal conversion

3) The image is converted into electrical signals by the CCD circuit and passed to the MCU.

Image process

4) The document image signal sent from the CCD circuit is processed under the revised conditions and sent to the LSU (laser unit) as print data.

Electric signal/Photo signal (laser beam) conversion

5) The LSU emits laser beams according to the print data.
   (Electrical signals are converted into photo signals.)
6) The laser beams are radiated through the polygon mirror and various lenses to the OPC drum.

Printing

7) Electrostatic latent images are formed on the OPC drum according to the laser beams, and the latent images are developed to be visible images (toner images).
8) Meanwhile the paper is fed to the image transfer section in synchronization with the image lead edge.
9) After the transfer of toner images onto the paper, the toner images are fused to the paper by the fusing section. The copied paper is discharged onto the exit tray.

2. Scanner section

A. How to scan documents

The scanner has sensors that are arranged in a line. These sensors scan a certain area of a document at a time and deliver outputs sequentially. When the line is finished, the next line is scanned, and this procedure is repeated. The figure below shows the case where the latter two sections of an image which are scanned are shown with solid lines and the former two sections which are being transmitted are shown with dotted lines.
The direction of this line is called “main scanning direction,” and the scanning direction “sub scanning direction.”
In the figure above, one line is divided into 4 sections. Actually, however, one line is divided into thousands of sections. For scanning, the light receiving element called CCD is used.
The basic resolution indicates the scanner capacity. The basic resolution is expressed in dpi (dot/inch) which shows the number of light emitting elements per inch on the document.
The basic resolution of this machine is 400dpi.
In the sub scanning direction, at the same time, the motor that drives the optical system is controlled to scan the image at the basic resolution.

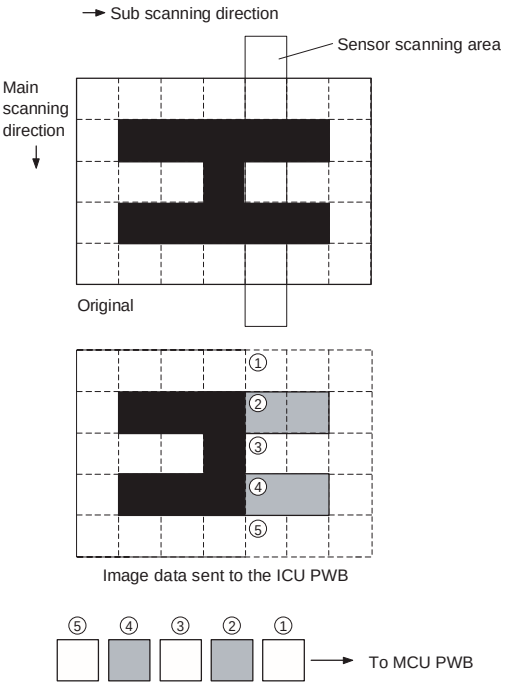

B. Basic structure of scanner section

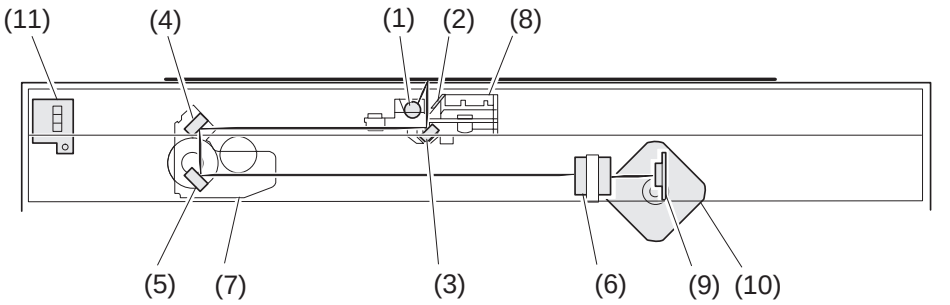

1	Copy lamp (Xenon lamp)	2	Reflector (light conversion plate)	3	No. 1 mirror
4	No. 2 mirror	5	No. 3 mirror	6	Lens
7	No. 2/3 mirror unit	8	Copy lamp unit	9	CCD
10	Mirror motor	11	MHPS (Mirror home position sensor)		

The scanner unit performs scanning in the digital optical system.
The light from the light source (Xenon lamp) is reflected by a document and passed through three mirrors and reduction lenses to the CCD element (image sensor) where images are formed. This system is known as the reduction image sensor system. Photo energy on the CCD element is converted into electrical signals (analog signals). (Photo-electric conversion). The output signals (analog signals) are converted into digital signals (A/D conversion) and passed to the MCU (main control/image process section). The resolution at that time is 400dpi.
The mirror unit in the scanner section is driven by the mirror motor.
The MHPS is provided to detect the home position of the copy lamp unit.

3. Laser unit

The image data sent from the MCU (image process circuit) is sent to the LSU (laser unit), where it is converted into laser beams.

A. Basic structure

The LSU unit is the writing section of the digital optical system.
The semiconductor laser is used as the light source, and images are formed on the OPC drum by the polygon mirror and fθ lens, etc.
The laser beams are passed through the collimator lens, the cylindrical lens, the polygon mirror, the fθ lens, and the mirror to form images on the OPC drum in the main scanning direction. The laser emitting PWB is provided with the APC (auto power control) in order to eliminate fluctuations in the laser power. The BF PWB works for measurement of the laser writing start point.

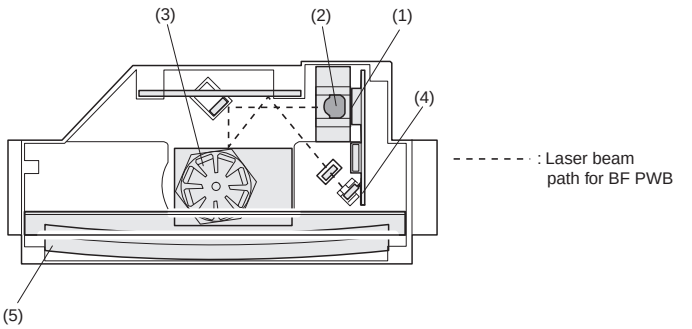

No.	Component	Function
(1)	Semiconductor laser	Generates laser beams.
(2)	Collimator lens	Converges laser beams in parallel.
(3)	Polygon mirror, polygon motor	Reflects laser beams at a constant rpm.
(4)	BD (Mirror, lens, PWB)	Detects start timing of laser scanning.
(5)	fθ lens	Converges laser beams at a spot on the drum.
		Makes the laser scanning speeds at both ends of the drum same as each other. (Refer to the figure below.)

Makes the laser scanning speeds at both ends of the drum same as each other.

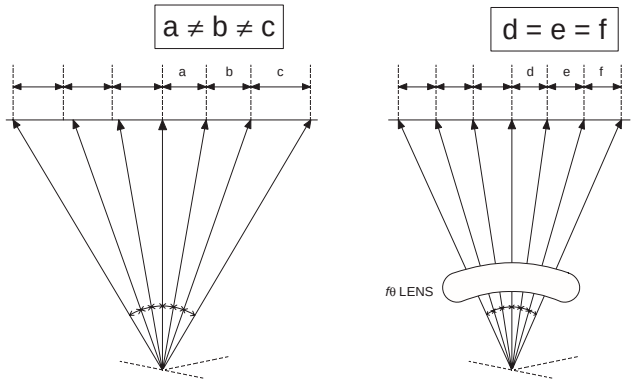

B. Laser beam path

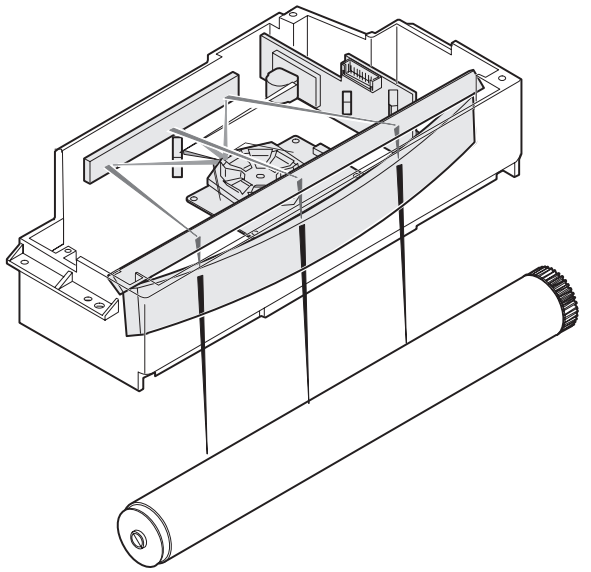

C. Composition

Effective scanning width:	216mm (max.)
Resolution:	600dpi
Beam diameter:	75um in the main scanning direction, 80um in the sub scanning direction
Image surface power:	0.20 ±0.03mW (Laser wavelength 780 – 795nm)
Polygon motor section:	Brushless motor 20.787rpm No. of mirror surfaces: 6 surfaces

4. Fuser section

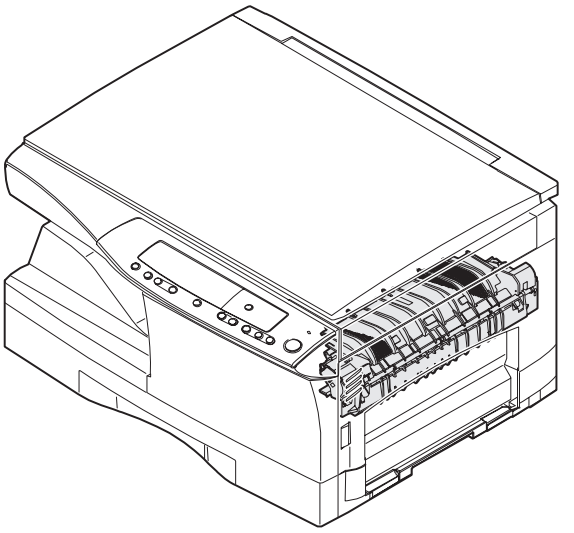

A. General description

General block diagram (cross section)

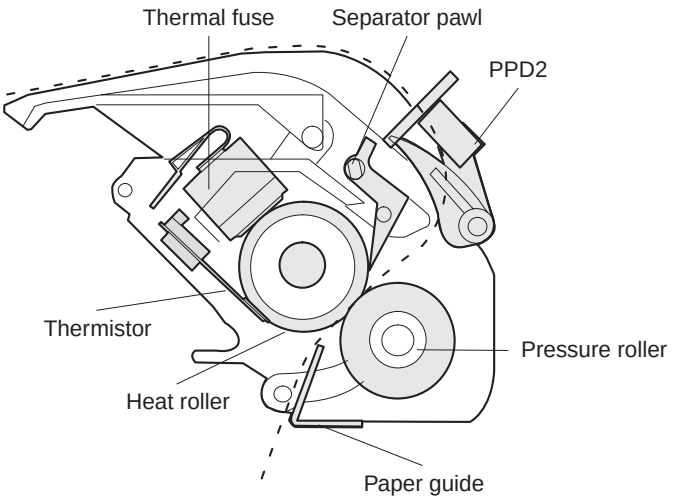

Top view

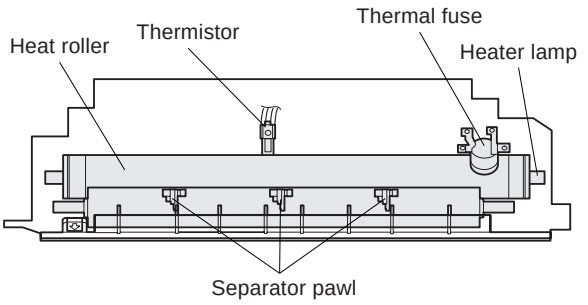

(1) Heat roller

A Teflon roller is used for the heat roller and a silicone rubber roller is used for the lower heat roller for better toner fusing performance and paper separation.

(2) Separator pawl

Three separator pawls are used on the upper heat roller. The separator pawls are teflon coated to reduce friction with the roller and prevent a smear on the paper caused by the separator pawl.

(3) Thermal control

1. The heater lamp, thermistor, main PWB, DC power supply PWB, and triac within the power supply unit are used to control the temperature in the fuser unit.
   To prevent against abnormally high temperature in the fuser unit, a thermal breaker and thermal fuse are used for safety purposes.

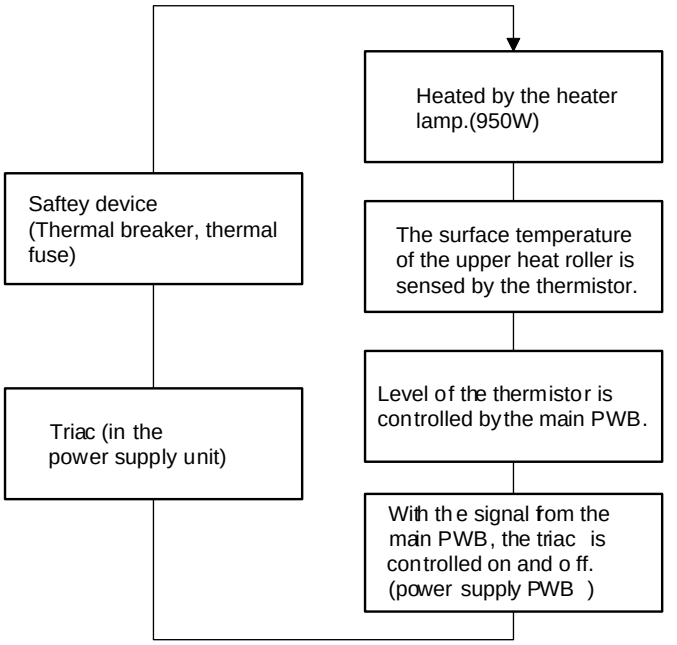

2. The surface temperature of the upper heat roller is set to 165˚C ~ 190˚C. The surface temperature during the power save mode is set to 100˚C.

3. The self-check function comes active when one of the following malfunctions occurs, and an "H" is displayed on the multicopy window.
   a. When the heat roller surface temperature rises above 240˚C.
   b. When the heat roller surface temperature drops below 100˚C during the copy cycle.
   c. Open thermistor
   d. Open thermal fuse
   e. When the heat roller temperature does not reach 190˚C within 27 second after supplying the power.

(4) Fusing resistor

Fusing resistor

This model is provided with a fusing resistor in the fusing section to improve transfer efficiency.
General descriptions are made in the following.

General descriptions

Since the upper heat roller is conductive when copy paper is highly moist and the distance between the transfer unit and the fusing unit is short, the transfer current leaks through the copy paper, the upper heat roller and the discharging brush.

5. Paper feed section and paper transport section

A. Paper transport path and general operations

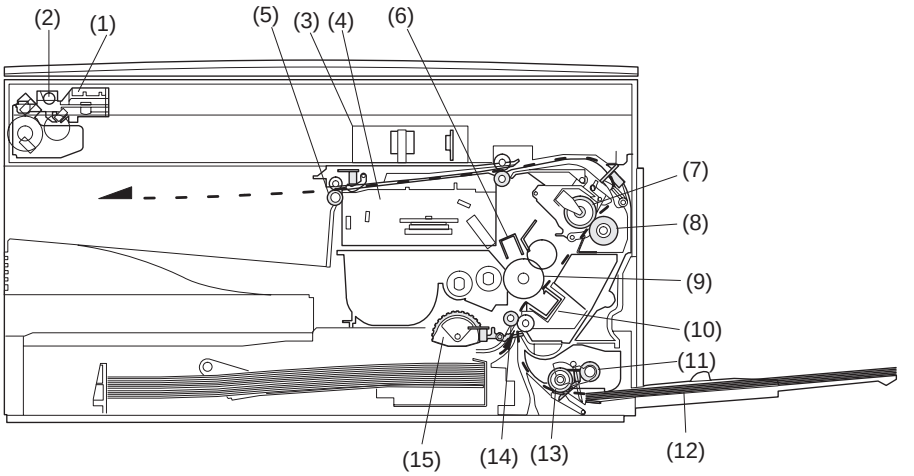

(1)	Scanner unit	(6)	Main charger	(11)	Pickup roller
(2)	Copy lamp	(7)	Heat roller	(12)	Manual paper feed tray
(3)	Lens unit	(8)	Pressure roller	(13)	Manual paper feed roller
(4)	LSU (Laser unit)	(9)	Drum	(14)	PS roller unit
(5)	Paper exit roller	(10)	Transfer unit	(15)	Paper feed roller

Paper feed is made in two ways; the tray paper feed and the manual paper feed. The tray is of universal-type, and has the capacity of 250 sheets. The front loading system allow you to install or remove the tray from the front cabinet.
The general descriptions on the tray paper feed and the manual paper feed are given below.

(1) Cassette paper feed operation

1) The figure below shows the positions of the pick-up roller, the paper feed clutch sleeve, and the paper feed latch in the initial state without pressing the COPY button after lighting the ready lamp.
The paper feed latch is in contact with the projection of the clutch sleeve.

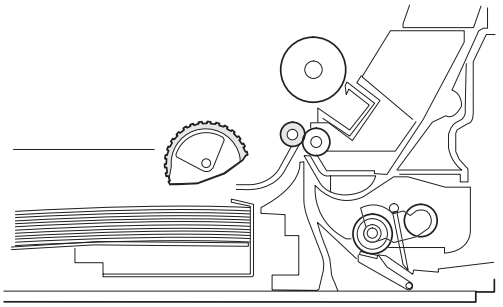

2) When the COPY button is pressed, the main drive motor starts rotating to drive each drive gear.
The pick-up drive gear also is driven at that time. Since, however, the paper feed latch is in contact with the projection of the clutch sleeve, rotation of the drive gear is not transmitted to the pick-up roller, which does not rotate.

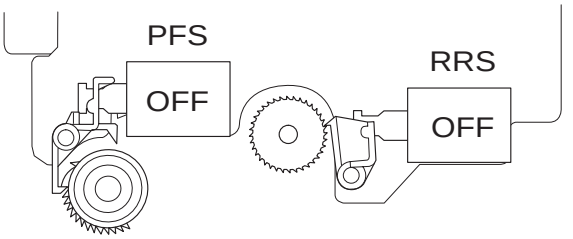

3) After about 0.1 sec from when the main motor start rotating, the tray paper feed solenoid (PFS) turns on momentarily.
This disengages the paper feed latch from the projection of the clutch sleeve, transmitting rotation of the pick-up drive gear to the paper feed roller shaft, rotating the pick-up roller to feed the paper.

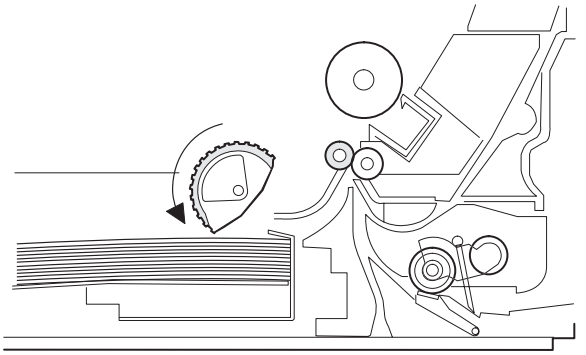

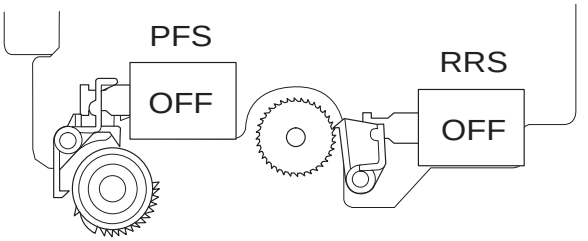

4) After more than half rotation of the pick-up roller, the paper feed latch is brought in contact with the projection of the clutch sleeve, stopping rotation of the pick-up roller.

5) At this time, the paper is fed past the paper entry detection switch (PPD1), and detected by it. After about 0.15 sec from detection of paper by PPD1, the tray paper feed solenoid (PFS) turns on so that the clutch sleeve projection comes into contact with the paper feed latch to stop the pick-up roller. Then the pick-up roller rotates for about 0.15 sec so that the lead edge of the paper is evenly pressed on the resist roller, preventing against skew feeding.

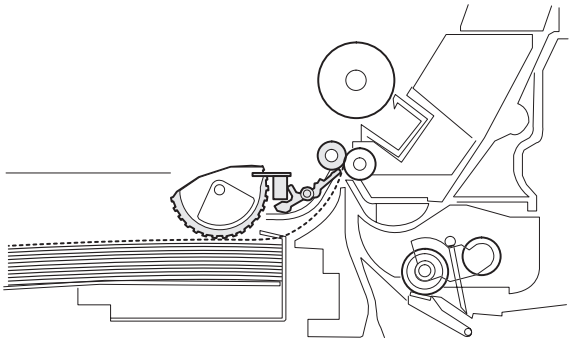

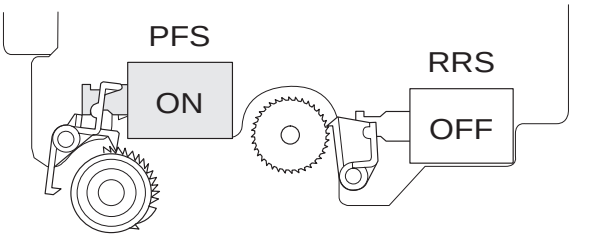

6) To release the resist roller, the tray paper feed solenoid and the resist solenoid are turned on by the paper start signal to disengage the resist start latch from the clutch sleeve projection, transmitting rotation of the resist drive gear to the resist roller shaft. Thus the paper is transported by the resist roller.

7) After the resist roller starts rotating, the paper is passed through the pre-transfer guide to the transfer section. Images are transferred on the paper, which is separated from the OPC drum by the drum curve and the separation section.

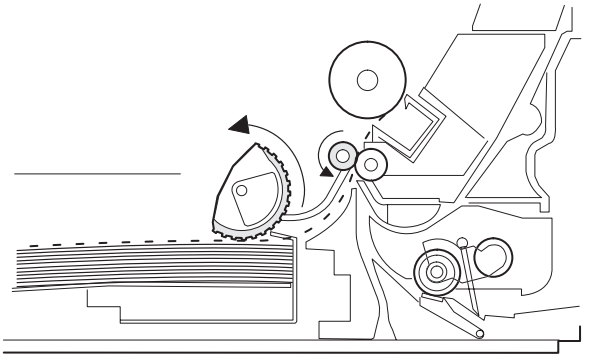

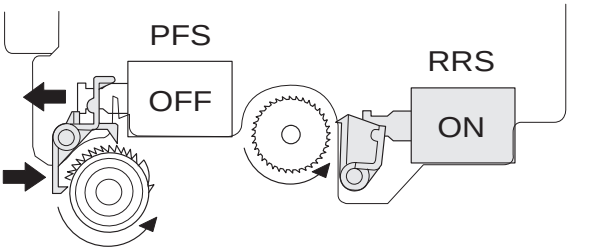

8) The paper separated from the drum is passed through the fusing paper guide, the heat roller (fusing section), POD (paper out detector) to the copy tray.

(2) Manual multi paper feed operation

1) Before paper feed operation, the manual paper feed solenoid (MPFS) is turned OFF as shown in the figure below.

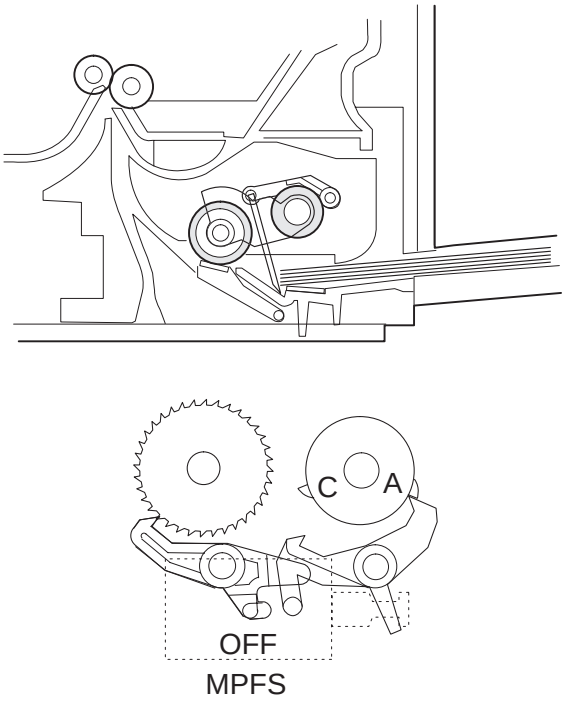

2) When the PRINT button is pressed, the manual paper feed solenoid (MPFS) turns on to disengage the manual paper feed latch A from the manual paper feed clutch sleeve A, rotating the manual paper feed roller and the manual take-up roller. At the same time, the manual paper feed stopper opens and the manual take-up roller is pressed to the surface of the paper to start paper feeding.

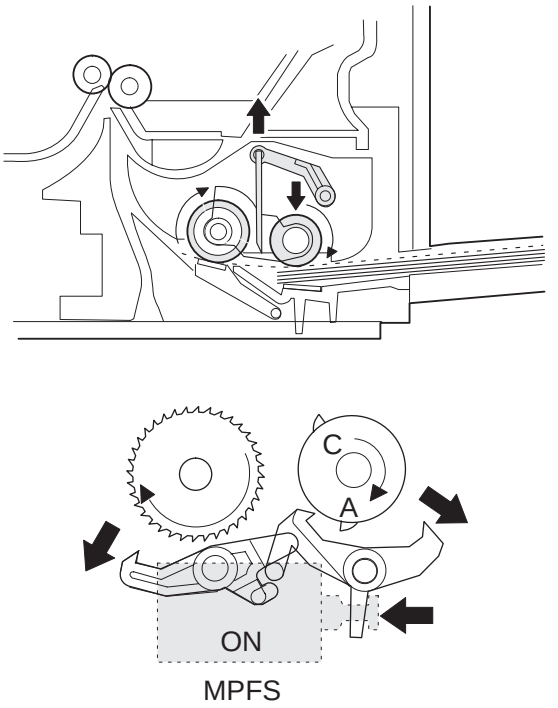

3) When pawl C of the manual paper feed clutch sleeve is hung on the manual feed latch, the manual feed stopper falls and the manual take-up roller rises. At that time, the manual paper feed roller is rotating.

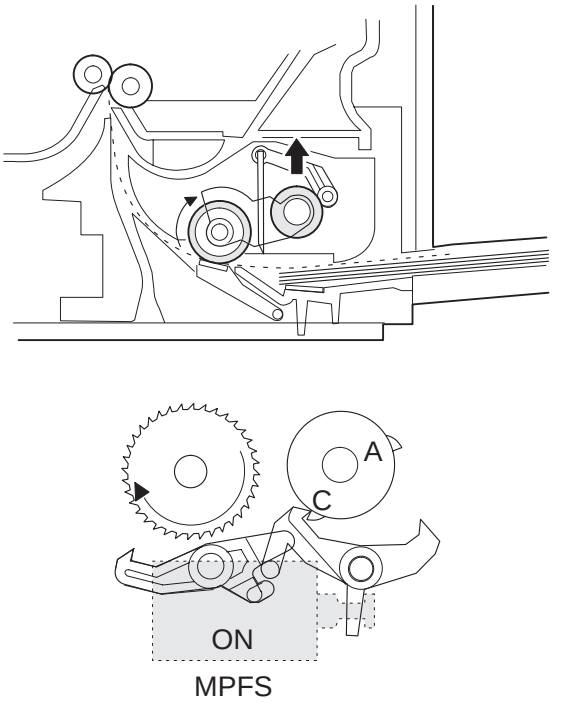

4) The lead edge of the transported paper is pressed on the resist roller by the transport roller. Then the paper is stopped temporarily to make synchronization with the lead edge of the image on the OPC drum.
The operations hereinafter are the same as the paper feed operations from the tray. (Refer to A-5 ~ 8.)

5) The solenoid turns off to close the gate and return to the initial state.

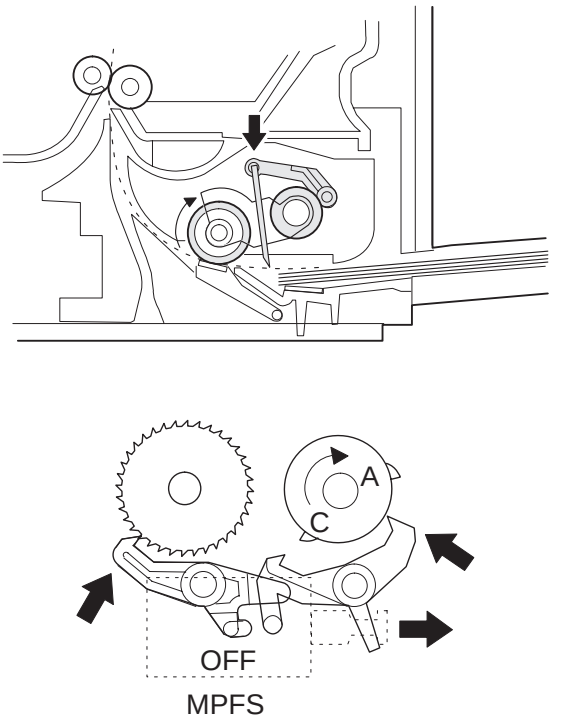

(3) Conditions of occurrence of paper misfeed

a. When the power is turned on:
PPD or POD is ON when the power is turned on.

b. Copy operation

a. PPD1 jam
1) PPD1 does not turn off within 4 sec after turning on the resist roller.

b. PPD2 jam
1) PPD2 is off immediately after turning on the resist roller.
2) PPD2 does not turn off within 1.2 sec after turning off the resist roller.

c. POD jam
1) POD does not turn on within 2.9 sec after turning on the resist roller.
2) POD does not turn off within 1.5 sec ~ 2.7 sec after turning off PPD2.

6. Printing process

An OPC drum is used for the photoconductor.
(Structure of the OPC drum layers)

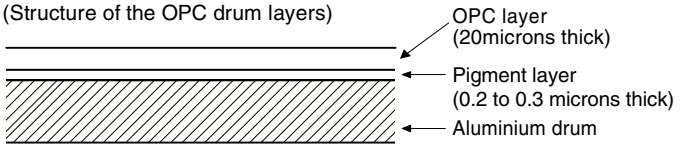

(1) Functional diagram

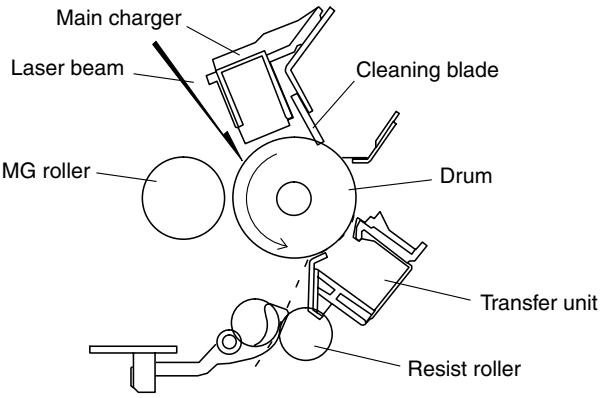

(Basic operation cycle)

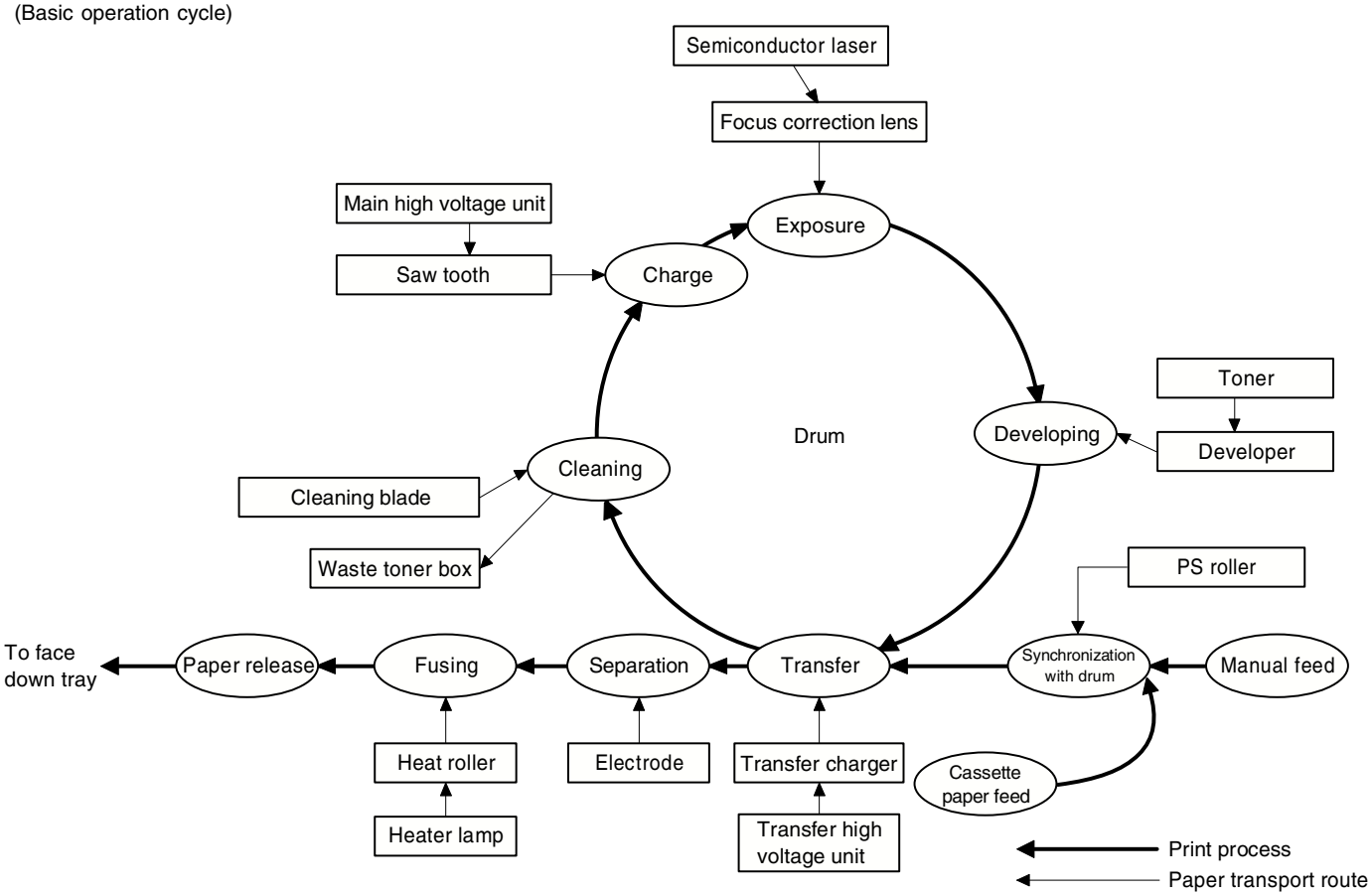

(2) Outline of print process

This printer is a non-impact printer that uses a semiconductor laser and electrostatic print process. This printer uses an OPC (Organic Photo Conductor) for its photoconductive material. First, voltage from the main corona unit charges the drum surface and a latent image is formed on the drum surface using a laser beam. This latent image forms a visible image on the drum surface when toner is applied. The toner image is then transferred onto the print paper by the transfer corona and fused on the print paper in the fusing section with a combination of heat and pressure.

Step-1: Charge

Step-2: Exposure
∗ Latent image is formed on the drum.

Step-3: Developing
Latent image formed on the drum is then changed into visible image with toner.

Step-4: Transfer
The visible image (toner image) on the drum is transfered onto the print paper.

Step-5: Cleaning
Residual toner on the drum surface is removed and collected by the cleaning blade.

Step-6: Optical discharge
Residual charge on the drum surface is removed, by semiconductor laser beam.

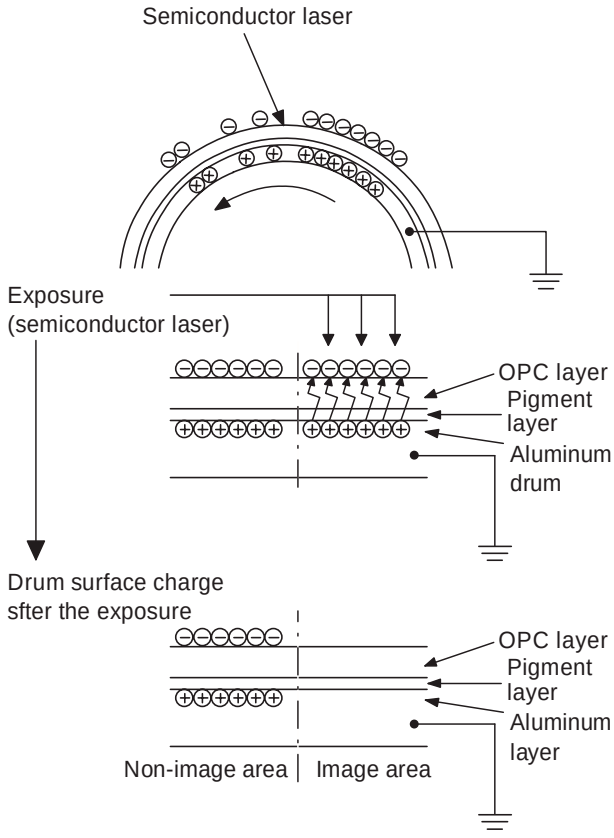

(3) Actual print process

Step-1: DC charge

A uniform negative charge is applied over the OPC drum surface by the main charging unit. Stable potential is maintained by means of the Scorotron charger.
Positive charges are generated in the aluminum layer.

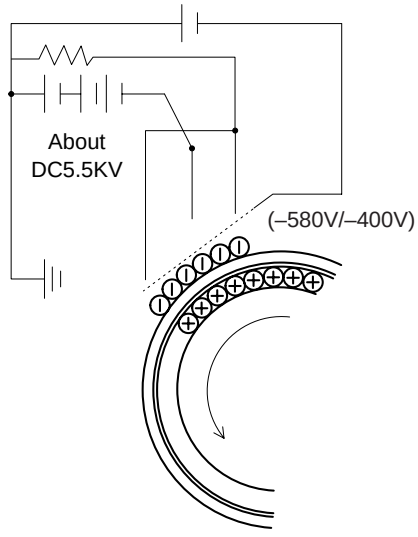

Step-2: Exposure (laser beam, lens)

A Laser beam is generated from the semiconductor laser and controlled by the print pattern signal. The laser writes onto the OPC drum surface through the polygon mirrors and lens. The resistance of the OPC layer decreases for an area exposed by the laser beam (corresponding to the print pattern signal). The beam neutralizes the negative charge. An electrostatic latent image is formed on the drum surface.

Step-3: Developing (DC bias)

A bias potential is applied to the MG roller in the two component magnetic brush developing method, and the toner is charged negative through friction with the carrier.
Non-image area of the drum surface charged with negative potential repel the toner, whereas the laser exposed portions where no negative charges exist, attract the toner. As a result, a visible image appears on the drum surface.

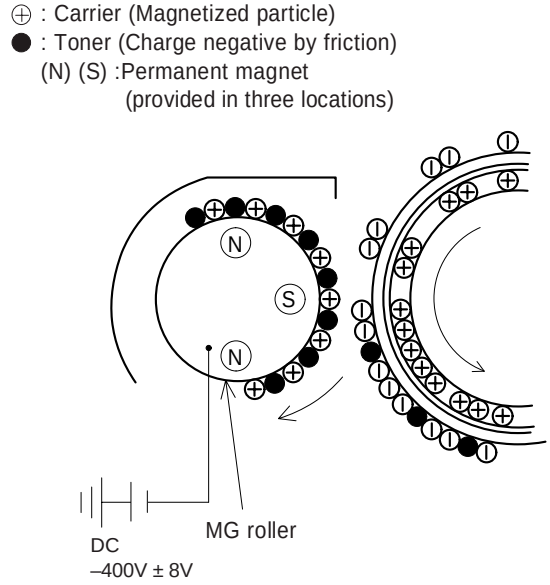

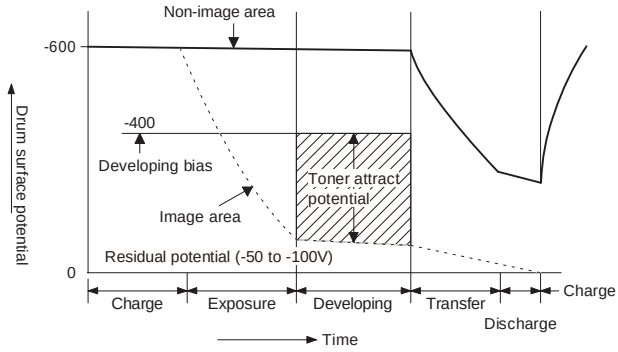

Toner is attracted over the shadowed area because of the developing bias.

Step-4: Transfer
The visible image on the drum surface is transferred onto the print paper by applying a positive charge from the transfer corona to the backside of the print paper.

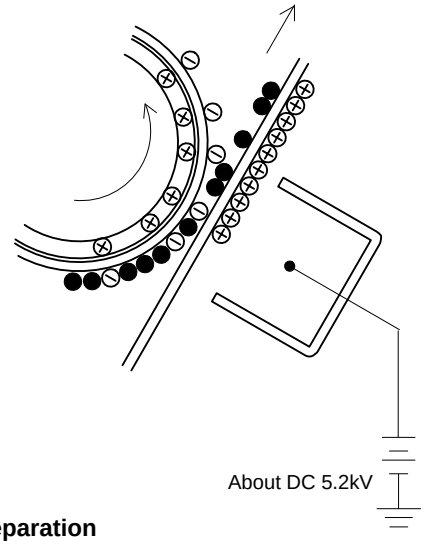

Step-5: Separation
Since the print paper is charged positively by the transfer corona, it is discharged by the separation corona. The separation corona is connected to ground.

Step-6: Cleaning
Toner remaining on the drum is removed and collected by the cleaning blade. It is transported to the waste toner collecting section in the cleaning unit by the waste toner transport roller.

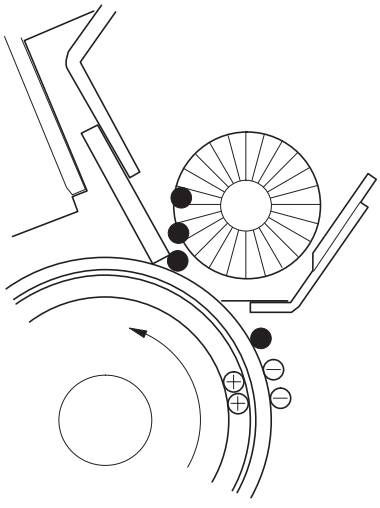

Step-7: Optical discharge (Semiconductor laser)
Before the drum rotation is stopped, the semiconductor laser is radiated onto the drum to reduce the electrical resistance in the OPC layer and elimate residual charge, providing a uniform state to the drum surface for the next page to be printed.
When the electrical resistance is reduced, positive charges on the aluminum layer are moved and neutralized with negative charges on the OPC layer.

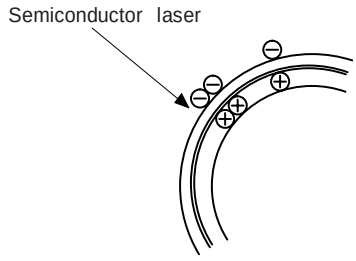

Charge by the Scorotron charger

Function
The Scorotron charger functions to maintain the surface potential of the drum even at all times which. It is used to control the surface potential regardless of the charge characteristics of the photoconductor.

Basic function
A screen grid is placed between the saw tooth and the photoconductor. A stable voltage is added to the screen grid to maintain the corona current on the photoconductor.
As the photoconductor is charged by the saw tooth from the main corona unit, the surface potential increases. This increases the current flowing through the screen grid. When the photoconductor potential nears the grid potential, the current turns to flow to the grid so that the photoconductor potential can be maintained at a stable level.

Process controlling

Function
The print pattern signal is converted into an invisible image by the semiconductor laser using negative to positive (reversible) developing method. Therefore, if the developing bias is added before the drum is charged, toner is attracted onto the drum. If the developing bias is not added when the drum is charged, the carrier is attracted to the drum because of the strong electrostatic force of the drum.
To avoid this, the process is controlled by adjusting the drum potential and the grid potential of the Scorotron charger.

Basic function
Voltage added to the screen grid can be selected, high and low. To make it easily understood, the figure below shows voltage transition at the developer unit.

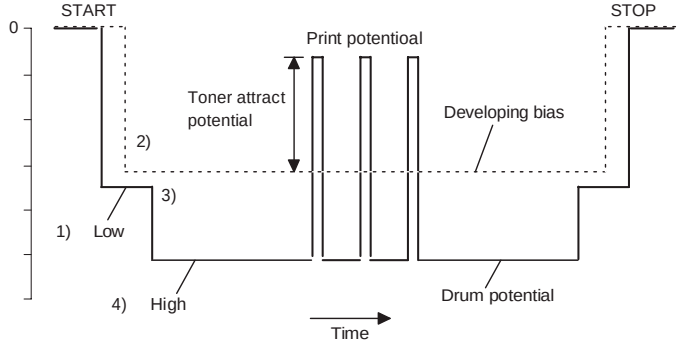

Start

1) Because the grid potential is at a low level, the drum potential is at about –400V. (Carrier may not be attracted though the carrier is pulled towards the drum by the electrostatic force of –400V.
2) Developing bias (–400V) is applied when the photoconductor potential is switched from LOW to HIGH.
3) Once developing bias (–400V) is applied and the photo conductor potential rises to HIGH, toner will not be attracted to the drum.

Stop

The reverse sequence takes place.

Retaining developing bias at an abnormal occurrence

Function

The developing bias will be lost if the power supply was removed during print process. In this event, the drum potential slightly abates and the carrier makes deposits on the drum because of strong static power. To prevent this, the machine incorporates a function to retain the developing bias for a certain period and decrease the voltage gradually against possible power loss.

Basic function

Normally, the developing bias voltage is retained for a certain time before the drum comes to a complete stop if the machine should stop before completing the normal print cycle. The developing bias can be added before resuming the operation after an abnormal interruption. Therfore, carrier will not make a deposit on the drum surface.

[8] DISASSEMBLY AND ASSEMBLY

Before disassembly, be sure to disconnect the power cord for safety. The disassembly and assembly procedures are described for the following sections:

1. High voltage section
2. Operation panel section
3. Optical section
4. Fusing section
5. Tray paper feed/transport section
6. Manual paper feed section
7. Rear frame section
8. Power section
9. SPF section
10. 2nd cassette section
11. DUP motor section
12. Reverse roller section
13. FAX MCU PWB section
14. FAX-SPF section

1. High voltage section

A. List

No.	Part name Ref.
1	Drum
2	Transfer charger unit
3	Charger wire

B. Drum replacement

1) Remove the drum cover. (4 Lock Tabs)

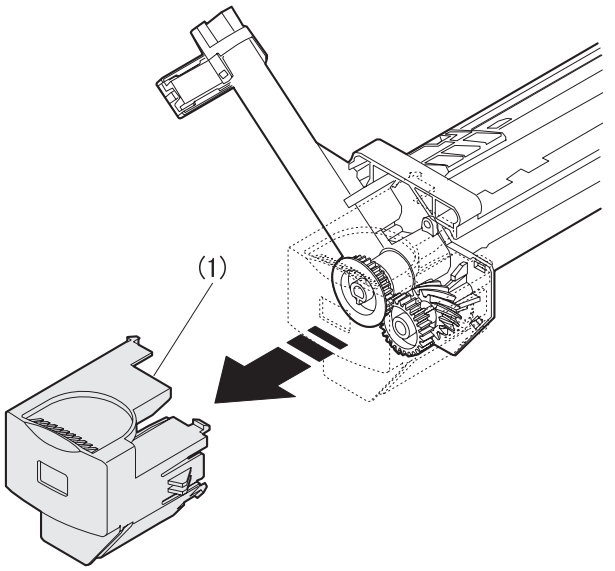

2) Remove the drum fixing plate and the photoconductor drum.
(Note) Dispose the drum fixing plate which was removed.

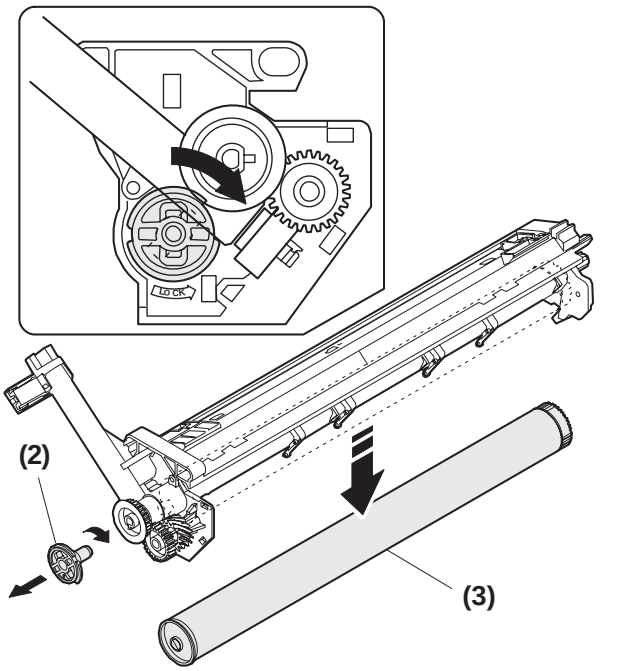

3) Check the cleaning blade and the red felt for no damage.
   - If there is any damage, execute all procedures from item 5) and later.
   - If there is no damage, execute the procedure of item 12).
4) Remove the main charger.
(Cleaning the screen grid and the sawteeth.)

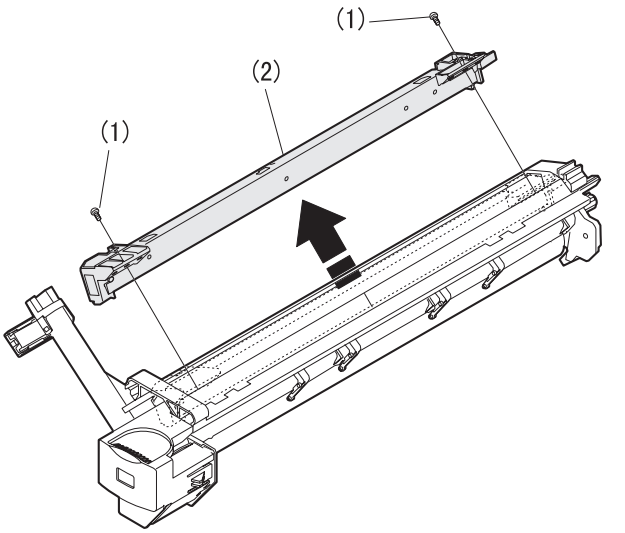

5) Remove the cleaning blade.
Note: Dispose the cleaning blade which was removed.

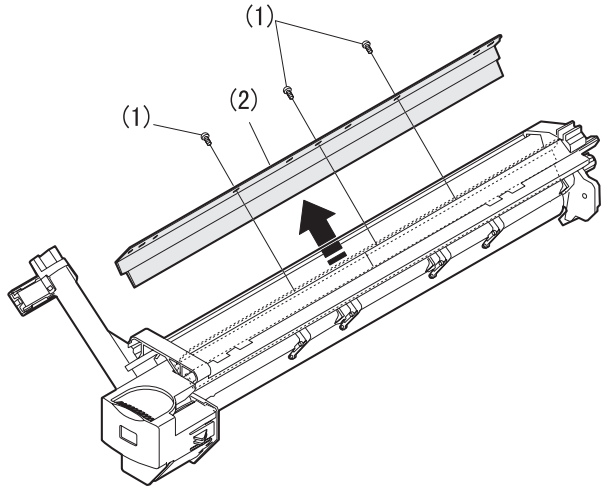

6) Clean the cleaning section and the waste toner pipe to remove waste toner completely with a vacuum cleaner.
7) Remove the felt and duplex tape completely.
Note: Be careful not to scratch or bend the sub blade.
8) Attach the cleaning blade.
Securely insert the plate section of the cleaning blade into the unit and fix it with a screw.
Do not touch the cleaning blade rubber with your hand.
When attaching the cleaning blade, press the cleaning blade in the arrow direction and attach.

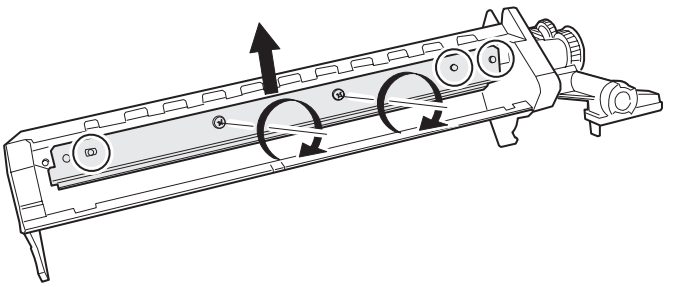

9) Attach the felt.

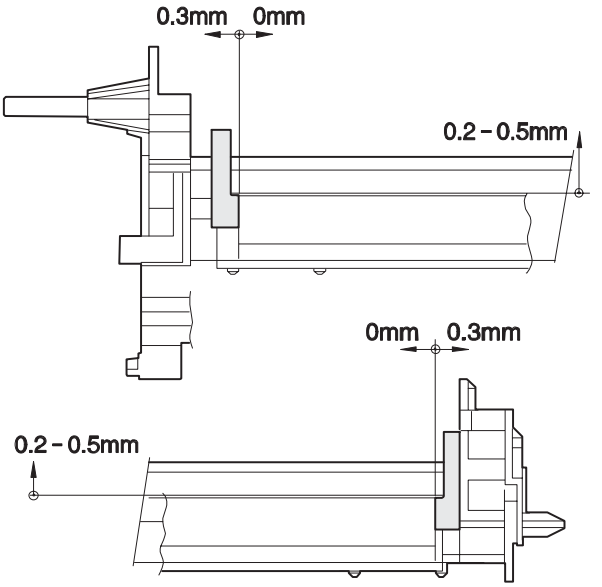

Attach the mocket with slightly pressing section A of the cleaning blade.
Do not touch the tip of the cleaning blade.
Do not put the mocket under the cleaning blade.
Do not put the mocket on the sub blade.
Do not press the sub blade with the mocket.
10) Attach the main charger.
Securely set the MC holder on the projection of the process frame.
Securely insert two projections of the MC holder into the groove in the process frame.
When attaching the MC holder ass'y, be careful not to make contact with the cleaning blade.

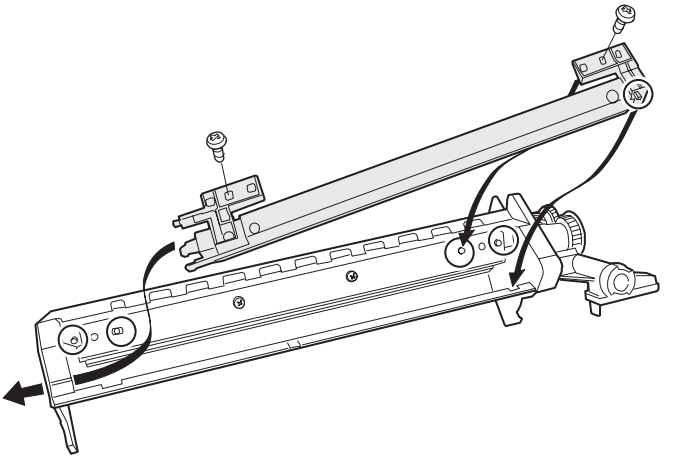

11) Attach the drum fixing plate and the photoconductor drum.
Apply grease to the inside of the photoconductor drum. (Dia. 2)

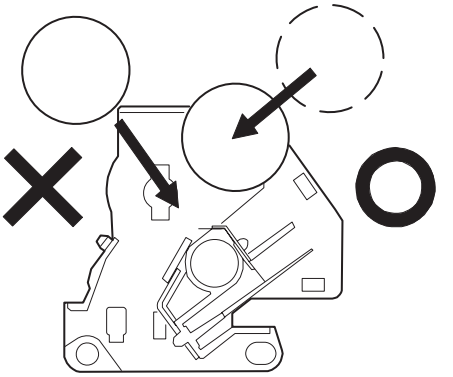

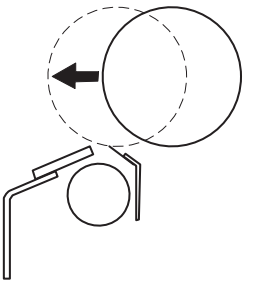

Attach the drum from (b). (Prevention against the sub blade edge breakage)
Attach the drum so that its position with the sub blade is as shown.

12) Attach the detection gear.
Note:
- The detection gear is not installed to the drum cartridge packed with the main body. Add a new one.

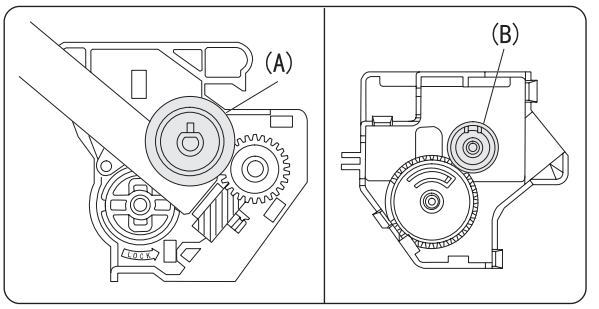

13) Attach the drum cover.
Note: After attaching the drum cover, do not make a copy.
When attaching the drum cover, engage the detection gear 20T rib with the 30T gear rib, and attach the drum cover to the process frame.

C. Disassembly procedure

(1) Press the side cover open/close button and open the side cover.

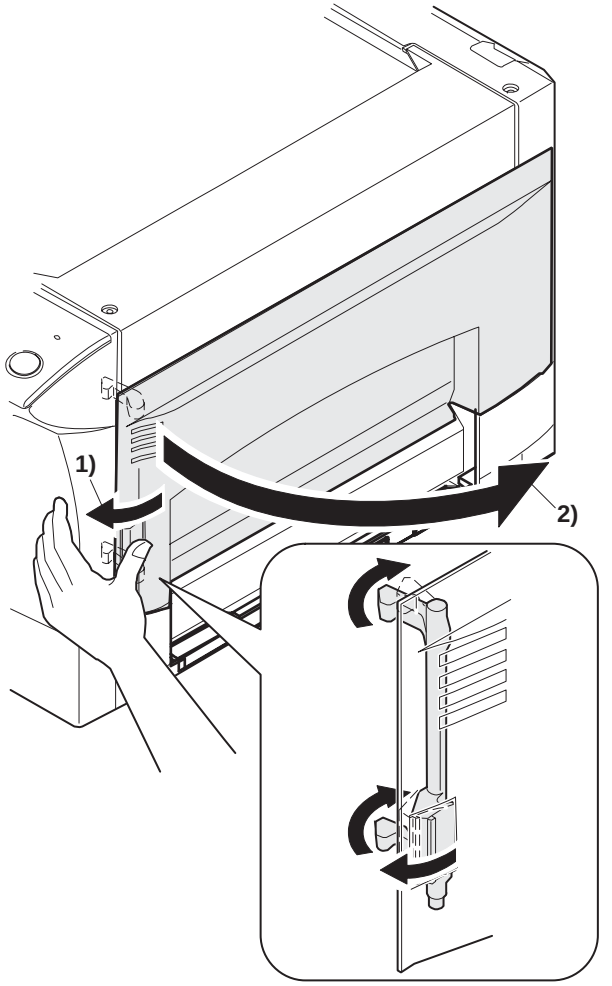

(2) Push up the lock pawls (2 positions) of the side cover, and remove the transfer charger.

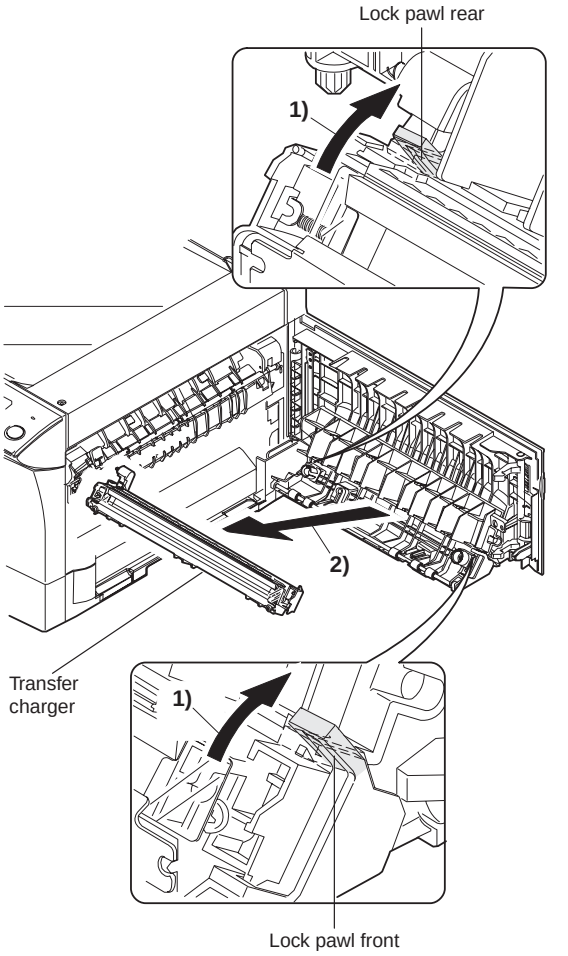

D. Assembly procedure

For assembly, reverse the disassembly procedure.

E. Charger wire cleaning

(1) Remove the charger cleaner from the manual paper feed unit.

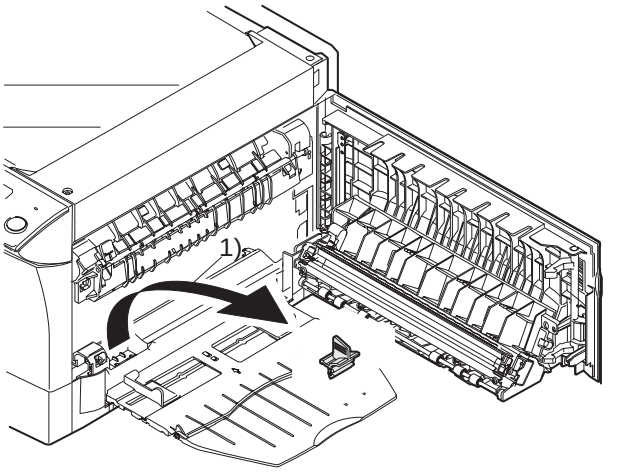

(2) Set the charger cleaner to the transfer unit, and move it reciprocally a few times in the arrow direction shown in the figure below.

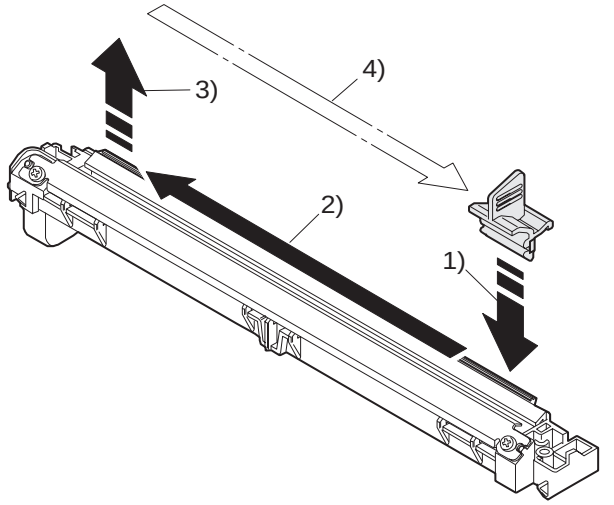

F. Charger wire replacement

(1) Remove the TC cover and remove the screw.
(2) Remove the spring and remove the charger wire.
(3) Install a new charger wire by reversing the procedures (1) and (2). At that time, be careful of the following items.
- The rest of the charger wire must be within 1.5mm.
- The spring hook section (charger wire winding section) must be in the range of the projection section.
- Be careful not to twist the charger wire.

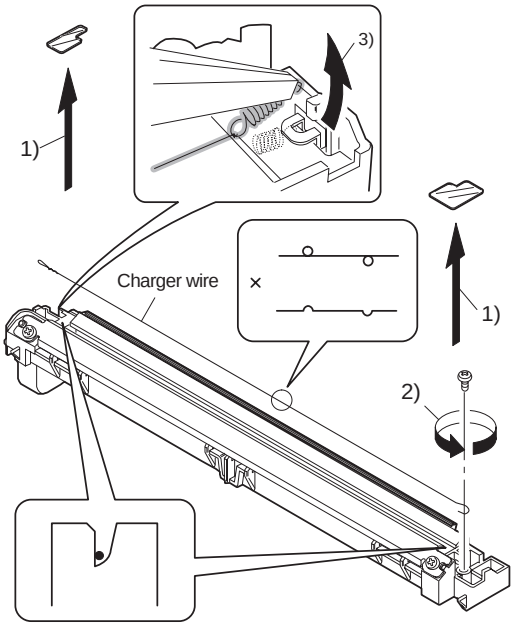

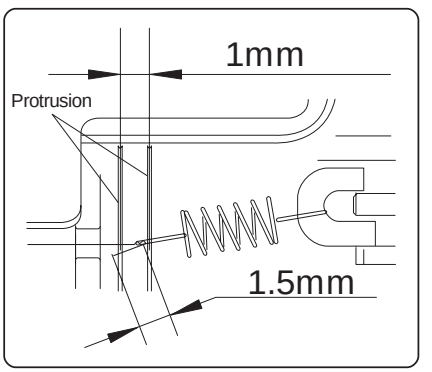

2. Operation panel section

A. List

No.	Part name Ref.
1	Operation panel unit
2	Operation PWB

B. Disassembly procedure

(1) Remove the screws (4 pcs.), the harness, and the operation panel unit.

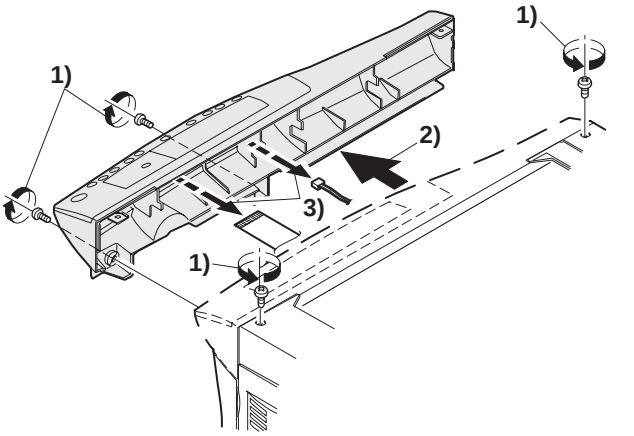

(2) Remove the screws (3 pcs.) and the PWB holder.
(3) Remove the screws (3 pcs.) and the operation PWB.

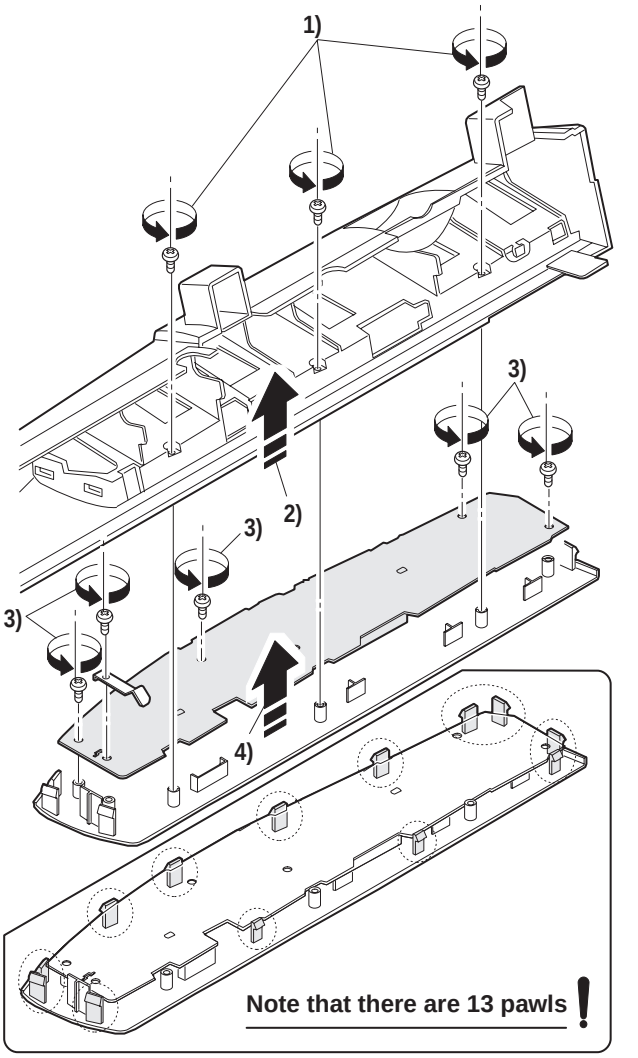

C. Assembly procedure

For assembly, reverse the disassembly procedure

3. Optical section

A. List

NO.	Part name Ref.
1	Copy lamp unit
2	Copy lamp
3	Lens unit

B. Disassembly procedure

(1) Remove the parts as shown below.

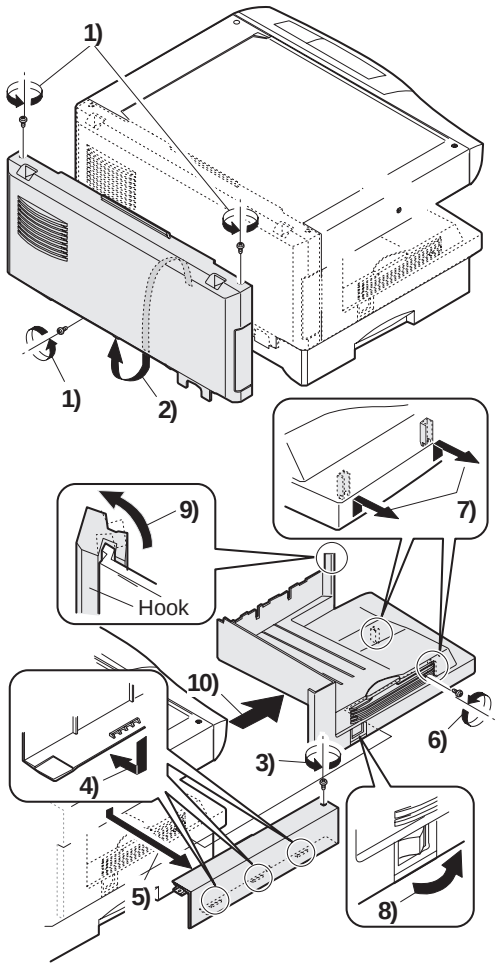

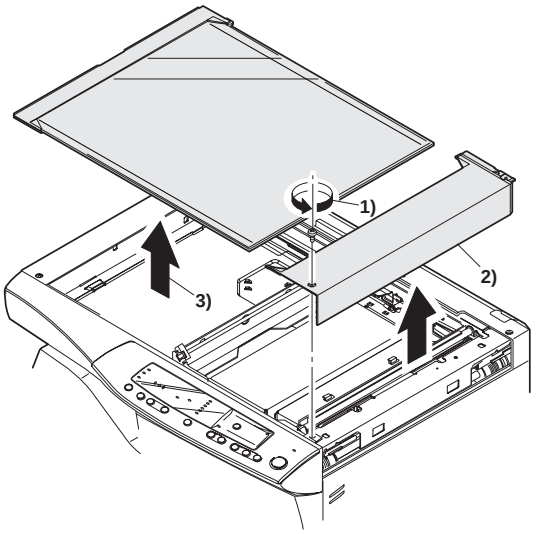

(2) Remove the screws (2pcs.), and remove the copy lamp unit from the mirror base drive wire.

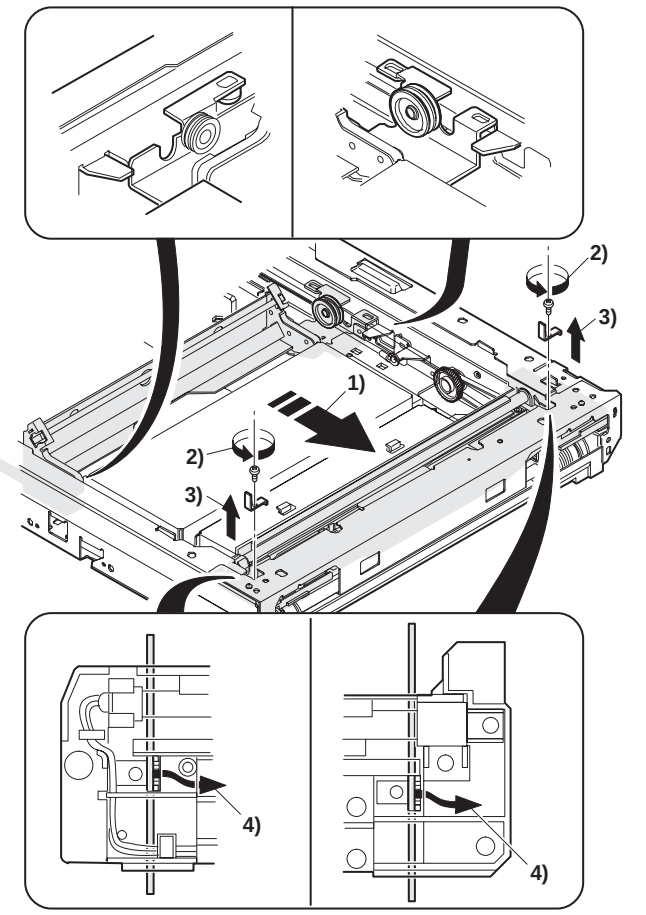

(3) Pull the copy lamp unit toward you to remove the harness.

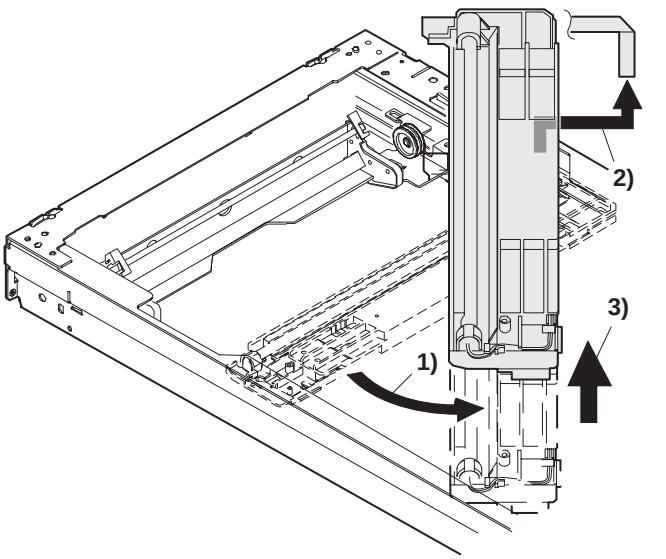

(4) Remove the screw (4 pc) and remove the cover.

(5) Remove the screws (2 pcs.), the harness, and the optical unit.

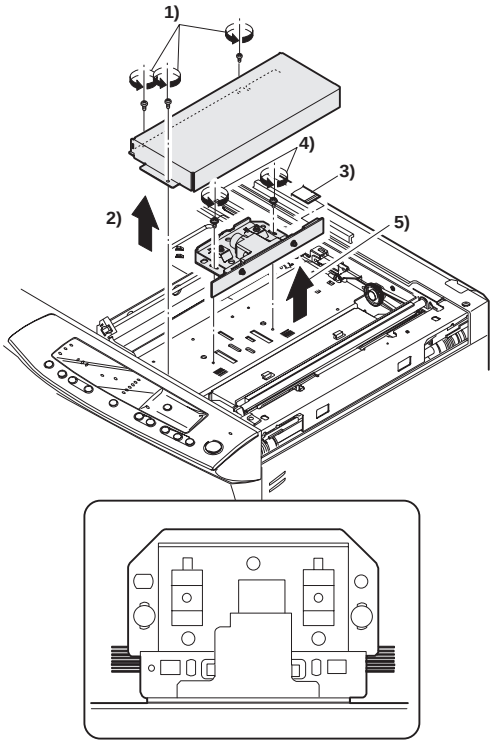

When installing the lens unit, refer to “8-6. Lens unit installation reference.”

C. Assembly procedure

Basically reverse the disassembly procedure.
The mirror base drive wire and the lens drive wire stretching methods are described below.

a. Mirror base drive wire stretching
   1. Hook the metal fixture of the mirror base drive wire on the projection of the optical base plate.
   2. Pass the wire through the external groove of the double pulley. (At that time, check that No. 2/3 mirror unit is in contact with the mirror base positioning plate.)
   3. Hold so that the winding pulley groove is up, and wind the mirror base drive wire 9 turns.
   4. Put the 8th turn of the mirror base drive wire in the winding pulley groove and fix with a screw.
   5. Pass the wire under No. 2/3 mirror unit plate and wind it around pulley A.
   6. Pass the wire through the internal groove of the double pulley, and pass through pulley B.
   7. Hook the spring hook on the optical base plate.

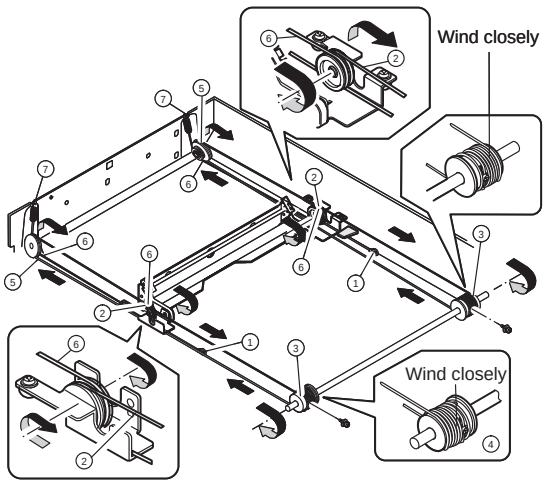

After installing the mirror base drive wire, be sure to perform main scanning direction image distortion adjustment.

4. Fusing section

A. List

No.	Part name Ref.
1	Thermistor
2	PPD2 sensor
3	Heater lamp
4	Pressure roller
5	Heat roller

B. Disassembly procedure

(1) Remove the connectors (3 pcs.) of the rear cabinet.
(2) Open the side cover, remove two screws, and remove the fusing unit.

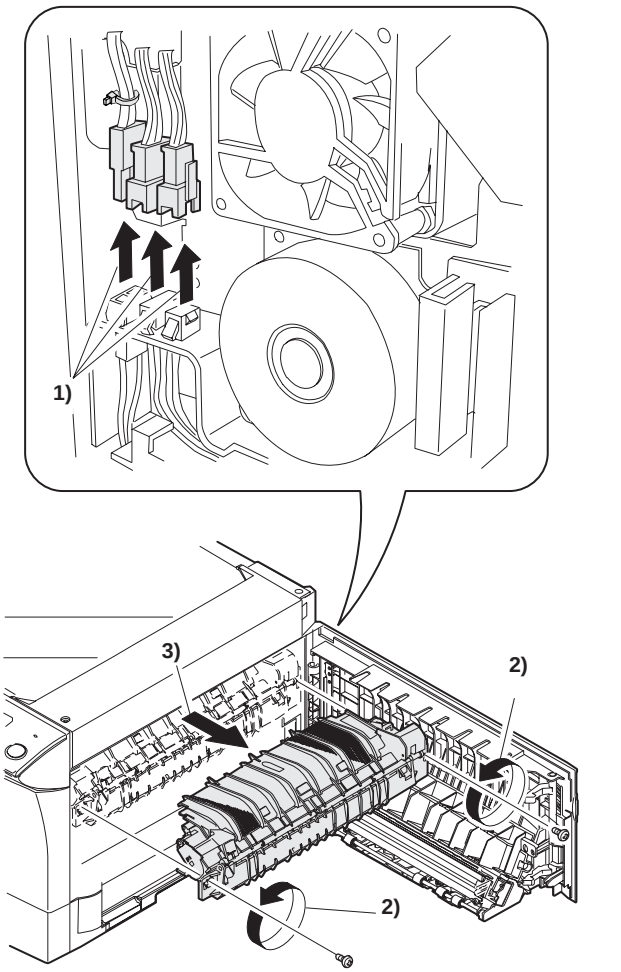

(3) Cut the binding band, remove the screw, and remove the thermistor.

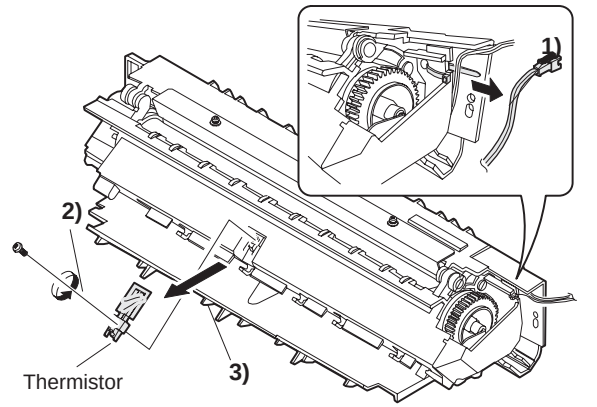

(4) Remove the screw and remove the U-turn guide.

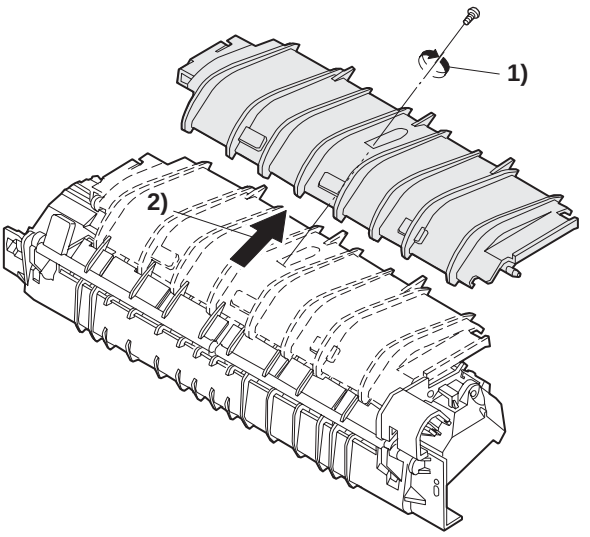

Pressure roller section disassembly

(5) Remove the three screws, remove the fusing cover lower on the right side, and open the heat roller section.

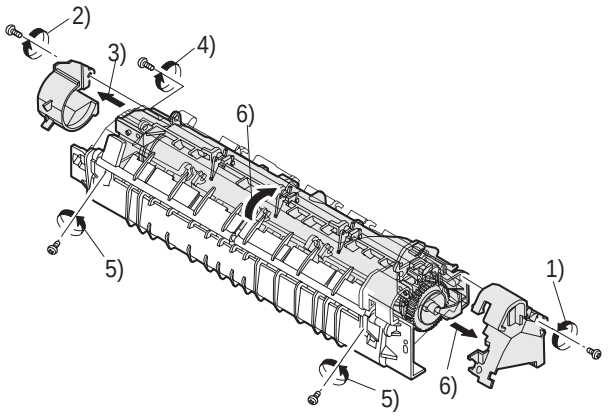

(6) Remove the screw and remove the PPD2 sensor.

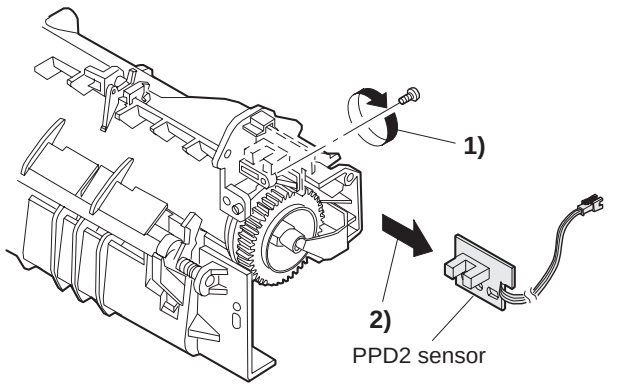

(7) Remove the plate spring on the right and remove the heater lamp.

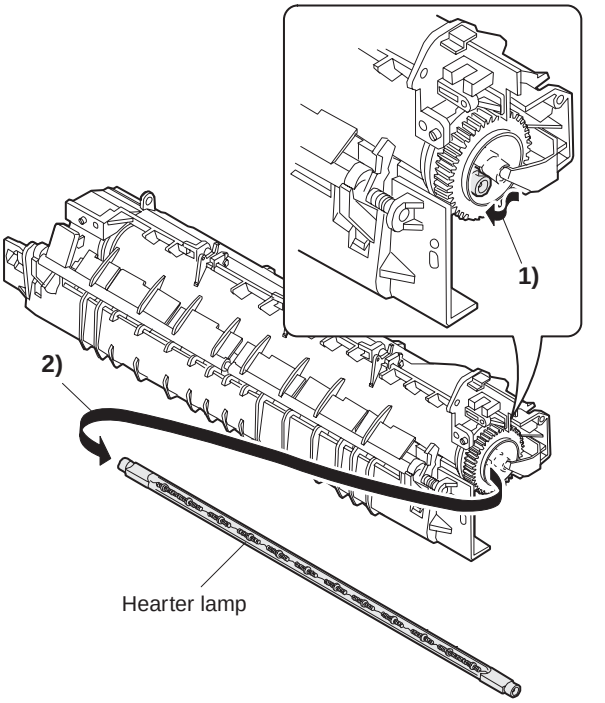

(8) Remove the spring and remove the separation pawls (3 pcs.).

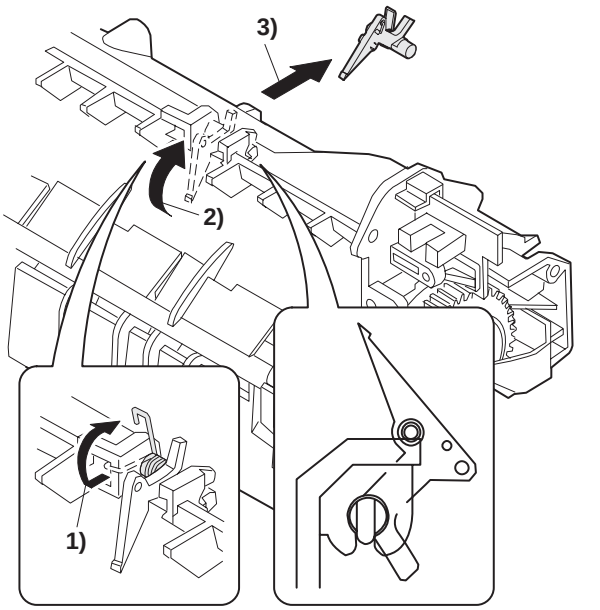

(9) Remove the E-ring and remove the reverse gate.

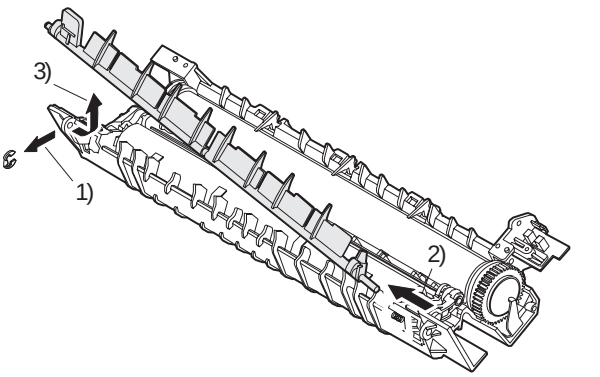

(10) Remove the pressure release levers on the right and the left sides.

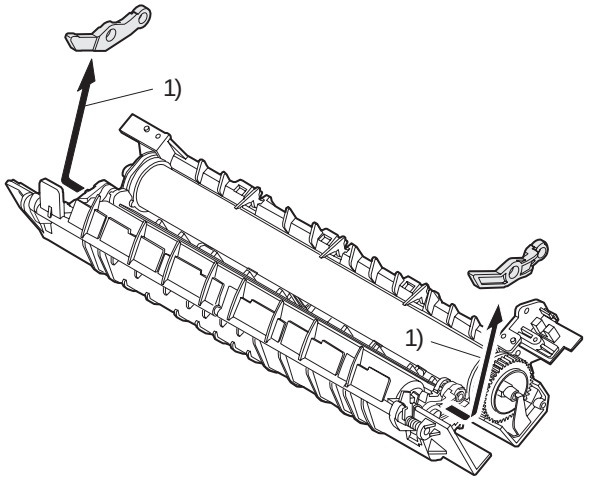

(11) Remove the pressure roller, the pressure bearing, and the spring.
Note: Apply grease to the sections specified with ✻.

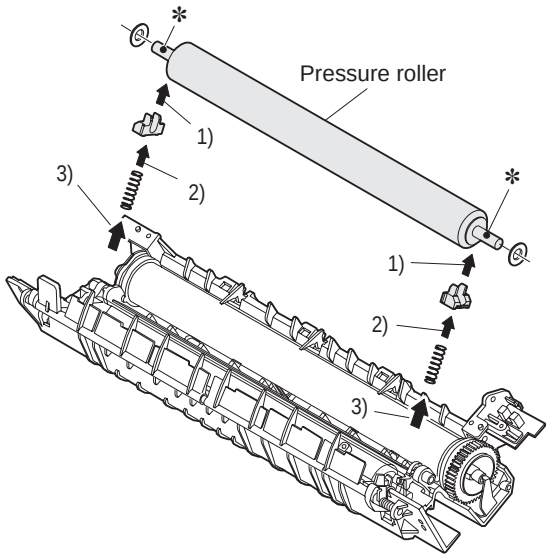

Heat roller disassembly

(Continued from procedure (4).)

(5) Remove screws, remove the fusing cover, and open the heat roller section.

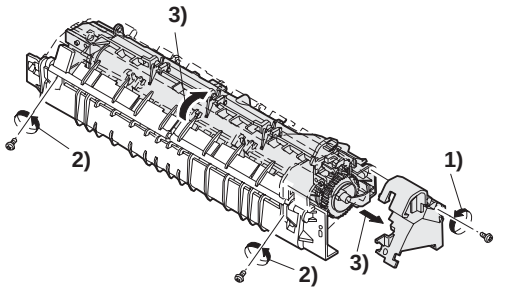

(6) Remove the C-ring and the fusing bearing, and remove the heat roller.

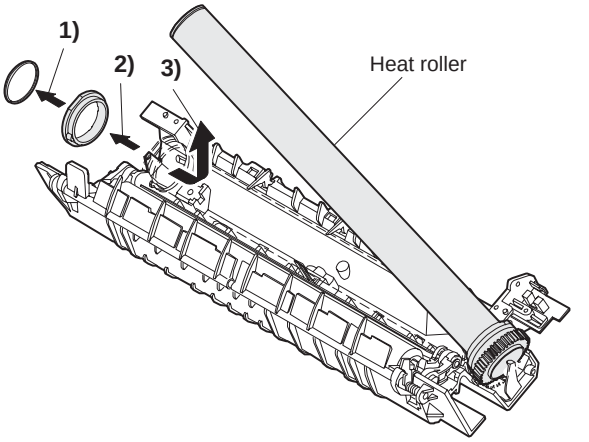

(7) Remove the parts from the heat roller.
Note: Apply grease to the sections specified with ✻.

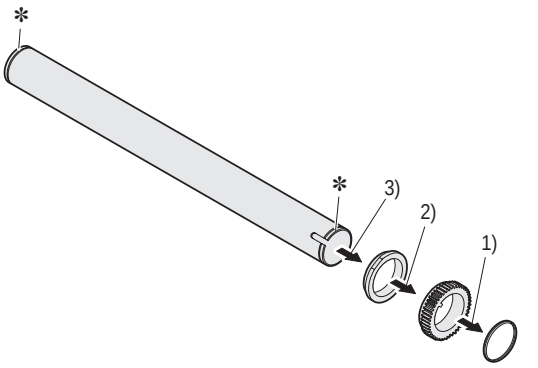

(8) Remove two screws and remove the thermostat.

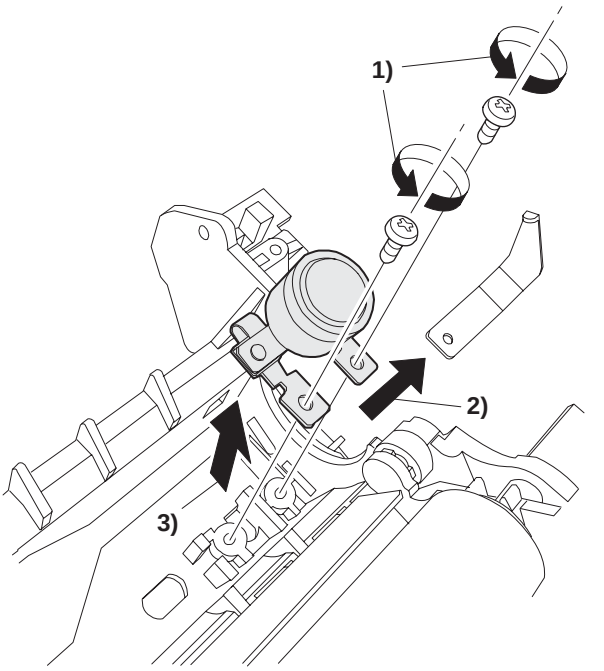

C. Assembly procedure

For assembly, reverse the disassembly procedure.

5. Tray paper feed/transport section

A. List

No.	Part name Ref.
1	PPD1 sensor PWB
2	LSU unit
3	Intermediate frame unit
4	Paper feed roller

B. Disassembly procedure

(1) Remove six connectors and screws of the main PWB, and lift the optical unit and the main PWB to remove.

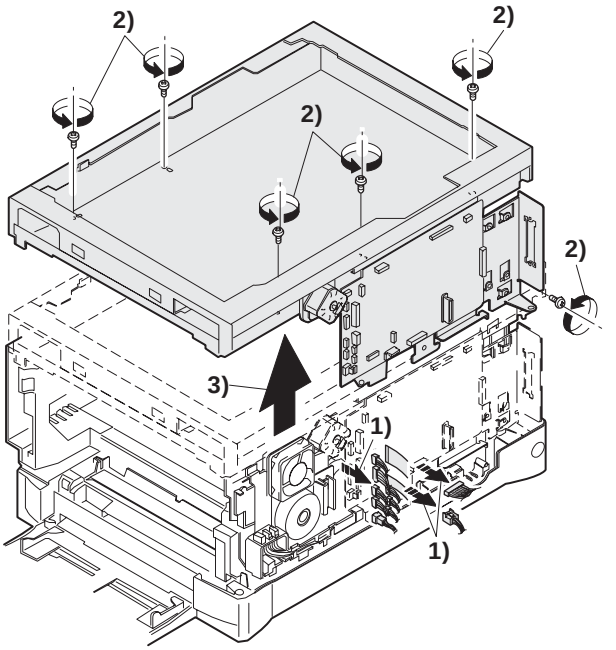

(2) Remove the PWB insulation mylar and remove the paper transport detection sensor (PPD2).

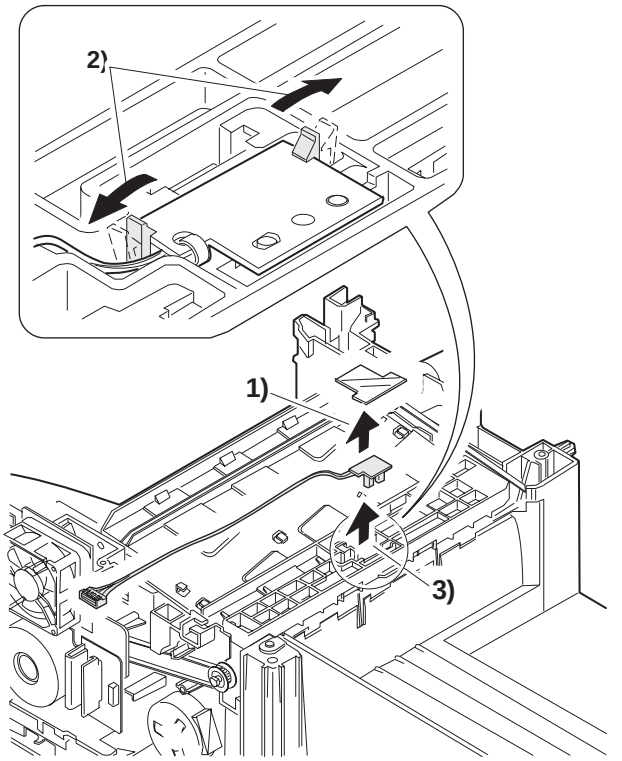

(3) Remove two screws and remove the toner motor.

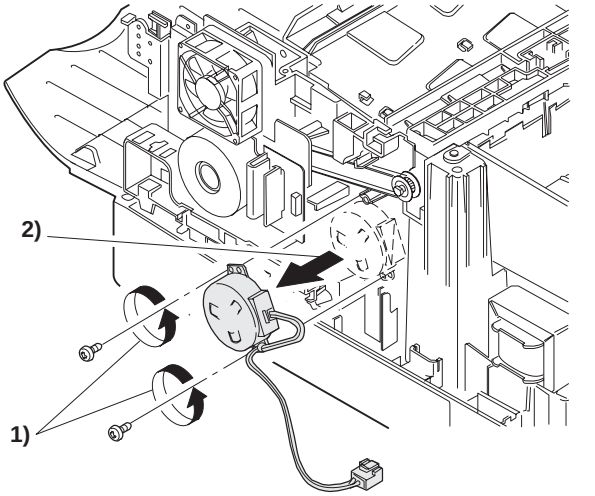

(4) Remove two springs and open the intermediate frame unit.

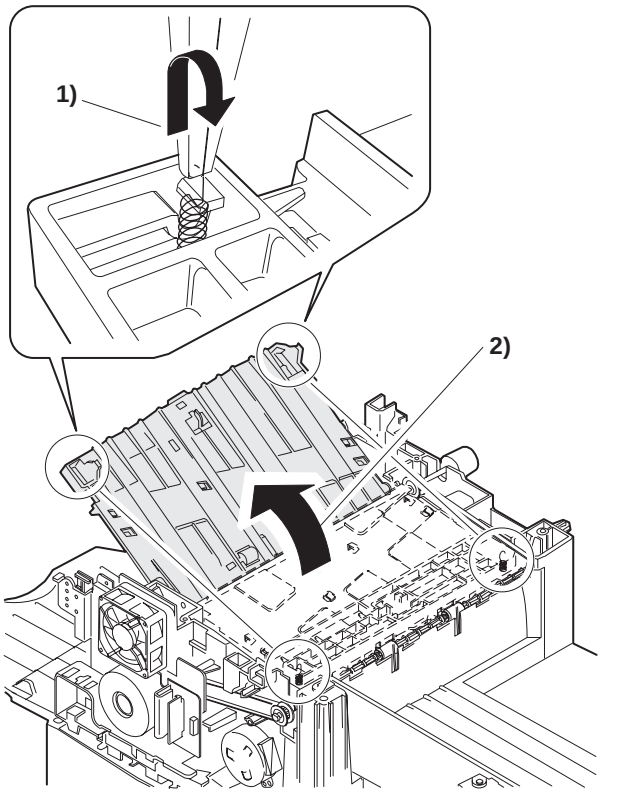

(5) Remove the pulleys on the both sides and remove the paper exit roller.

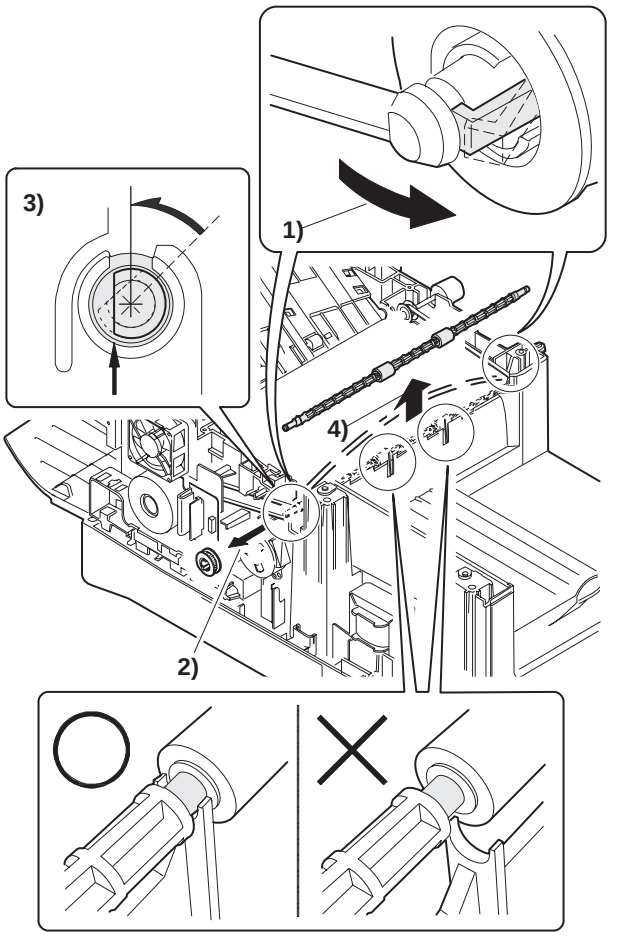

(6) Pull out the paper exit roller knob and remove the belt.

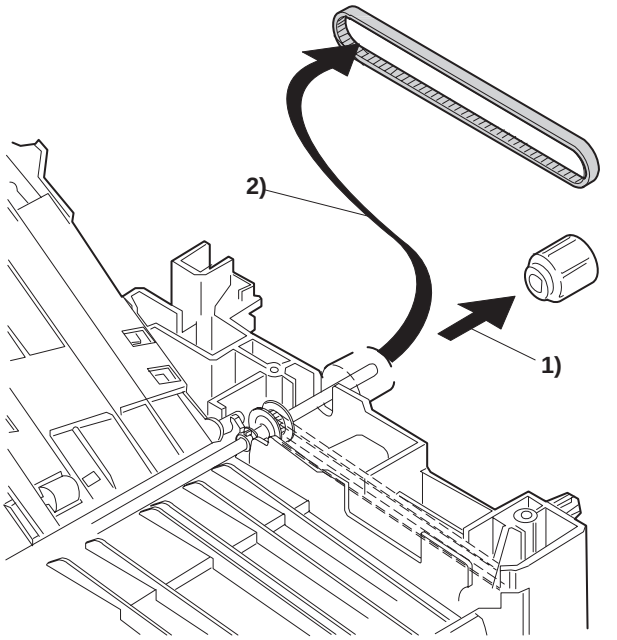

(7) Release the belt pulley lock and remove the belt pulley bearing.

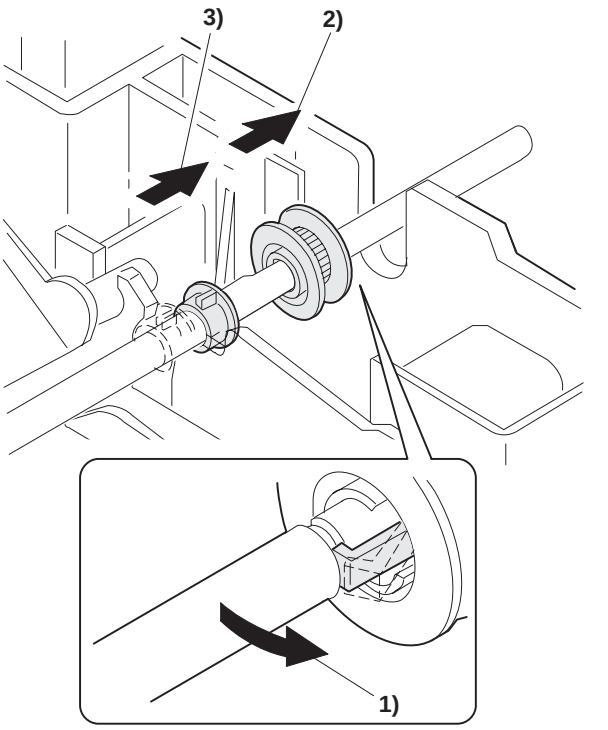

(8) Remove the paper exit roller.

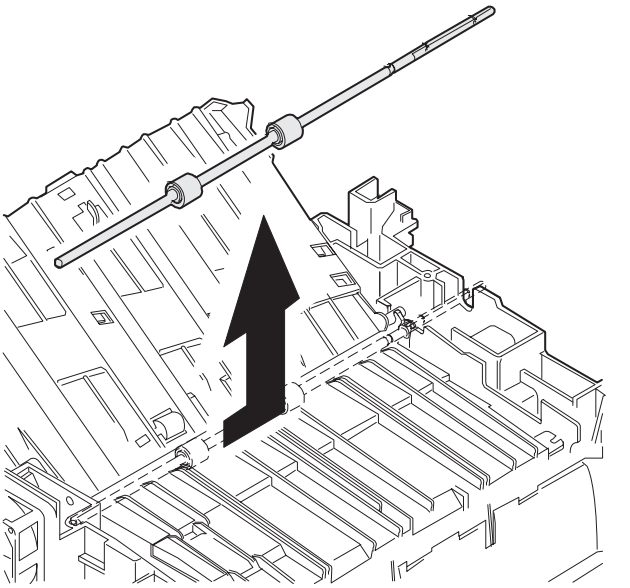

(9) Remove the harness guide.

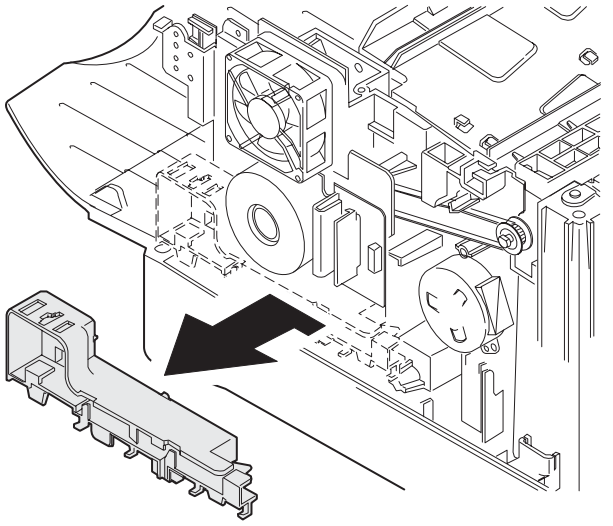

(10) Remove five screws and remove the main drive plate and the belt.

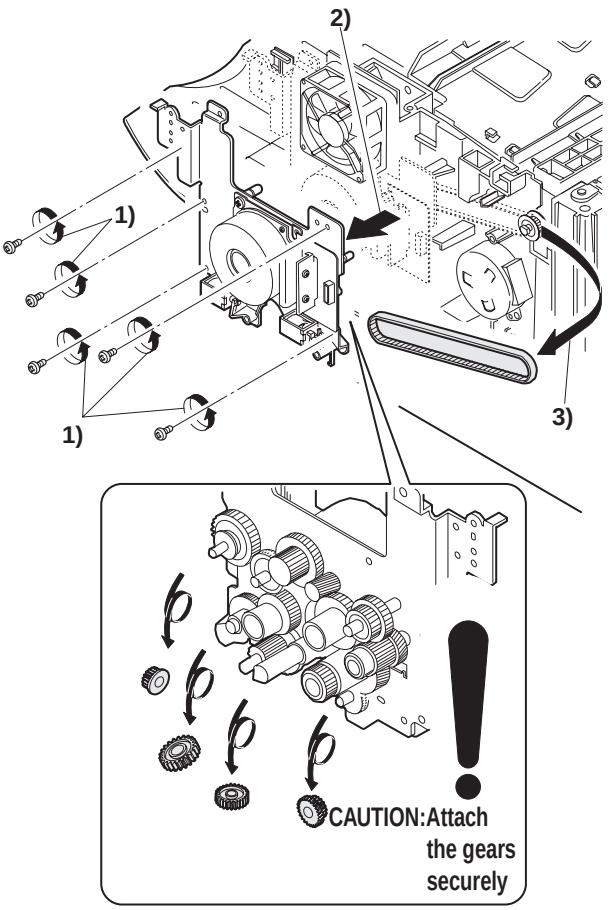

(11) Remove the parts as shown below, and remove the pressure release solenoid and the paper feed solenoid.

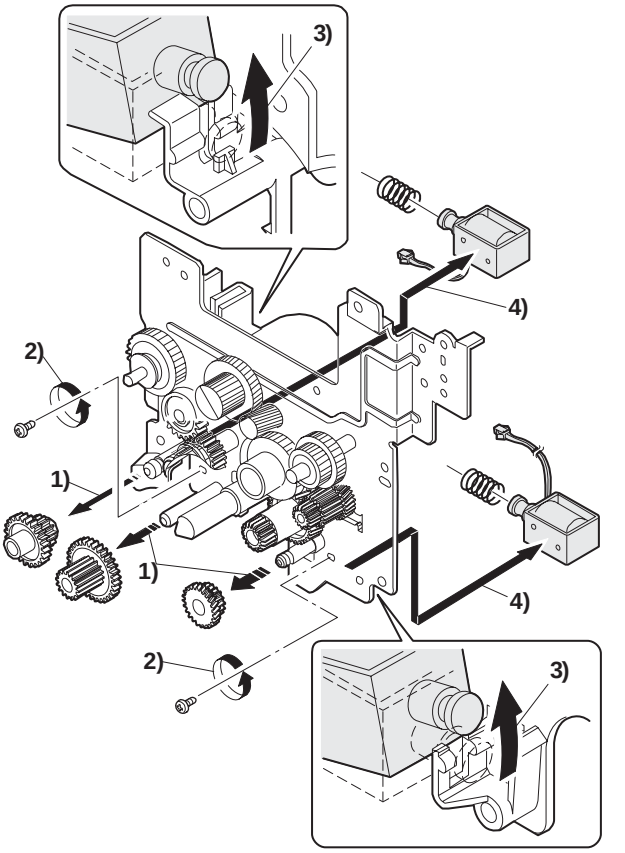

(12) Remove six screws and remove the LSU unit.

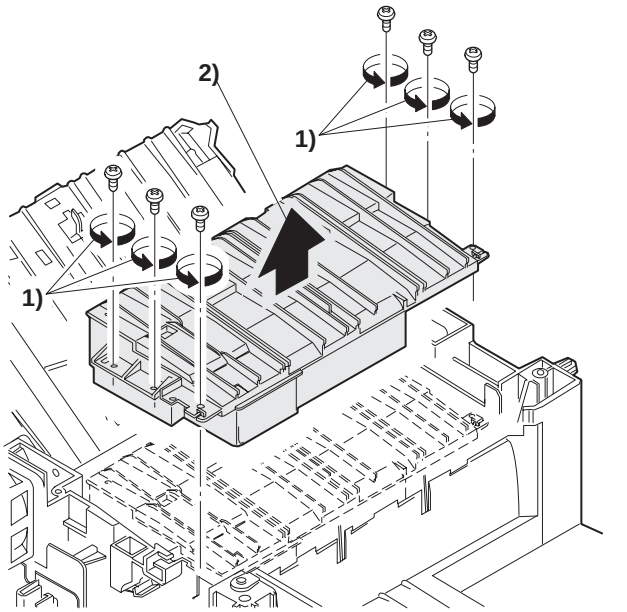

(13) Remove two screws and remove the fusing connector.
(14) Remove five screws and the connector, and lift the intermediate frame unit to remove.

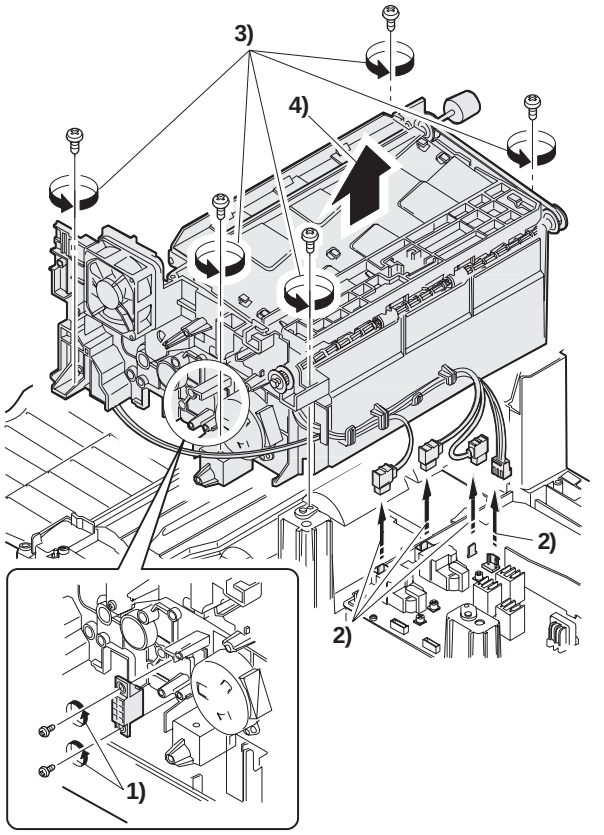

(15) Remove the screw and the E-ring, and remove the PS semi-circular earth plate and the PS roller unit.
(16) Remove the E-ring and remove the spring clutch from the PS roller unit.

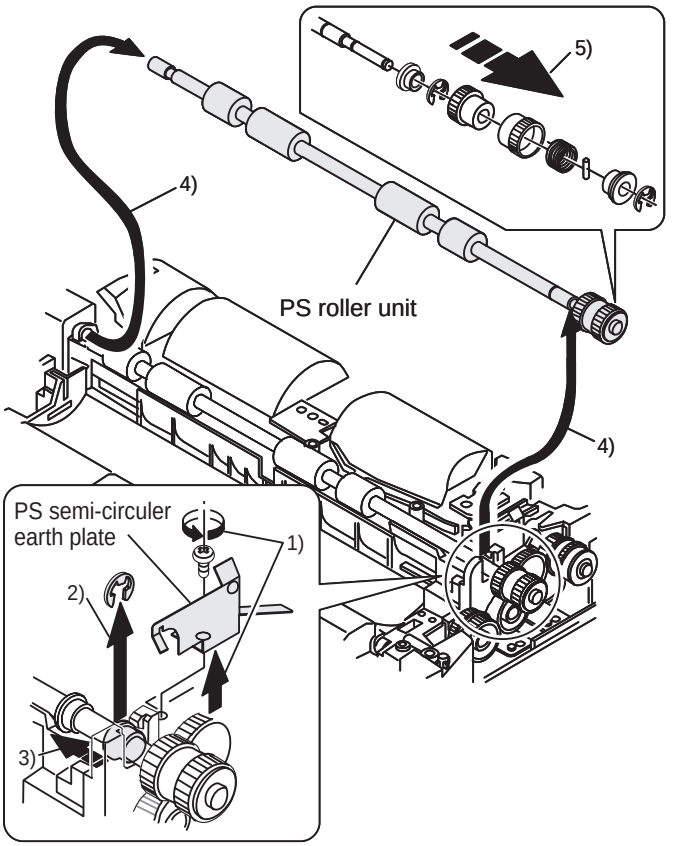

(17) Remove three screws and remove the TC front paper guide.

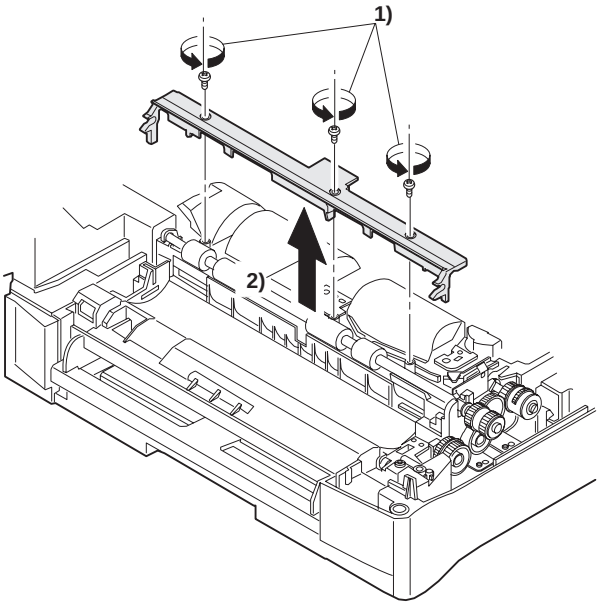

(18) Remove the screw and the connector, and remove the PPD1 sensor PWB.

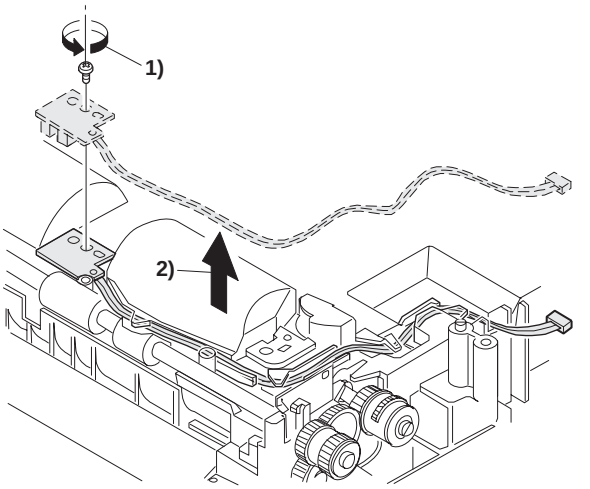

(19) Remove two E-rings and remove the paper feed roller.
(20) Remove three E-rings and remove the clutch unit.

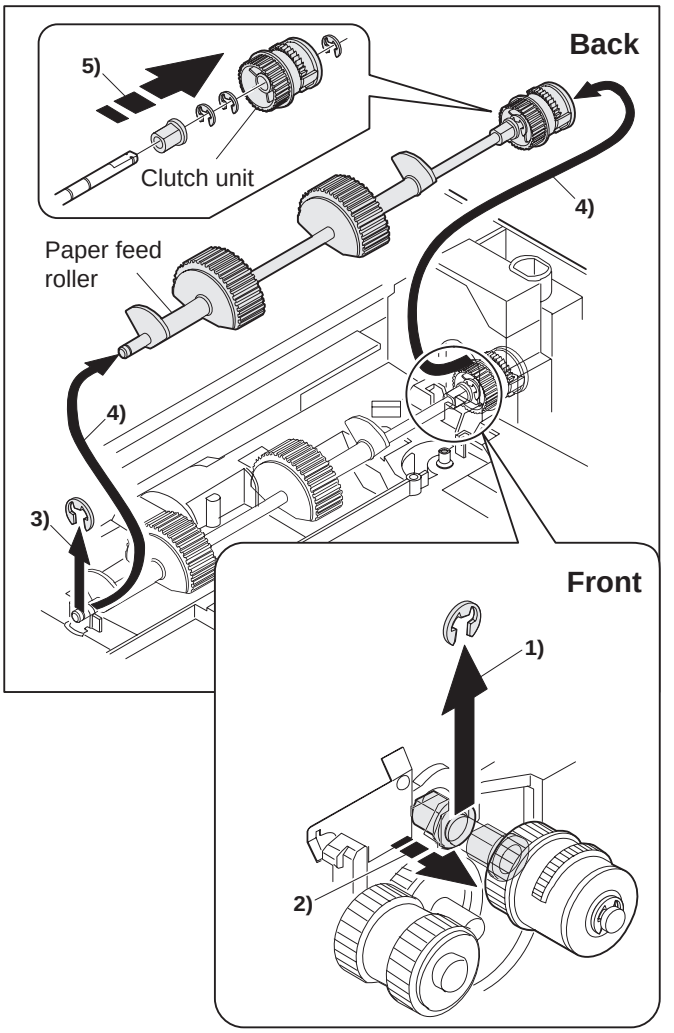

C. Assembly procedure

For assembly, reverse the disassembly procedure.

6. Manual paper feed section

A. List

No.	Part name Ref.
1	Manual transport roller
2	Cassette detection switch
3	PPD1 sensor PWB
4	Side door detection unit

B. Disassembly procedure

Single unit

(1) Remove the screw and remove the single upper cover.

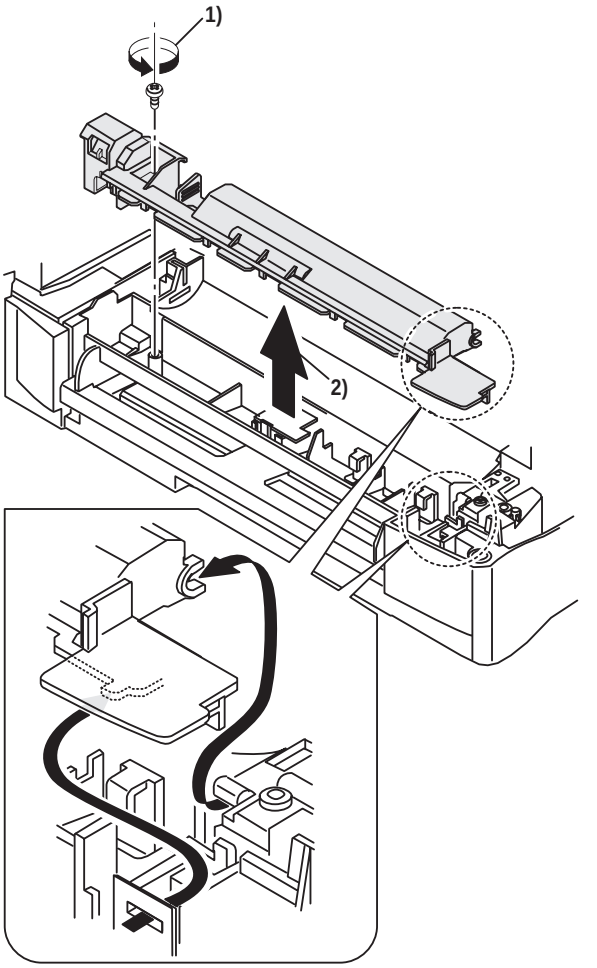

(2) Remove the screw and remove the side door detection unit.

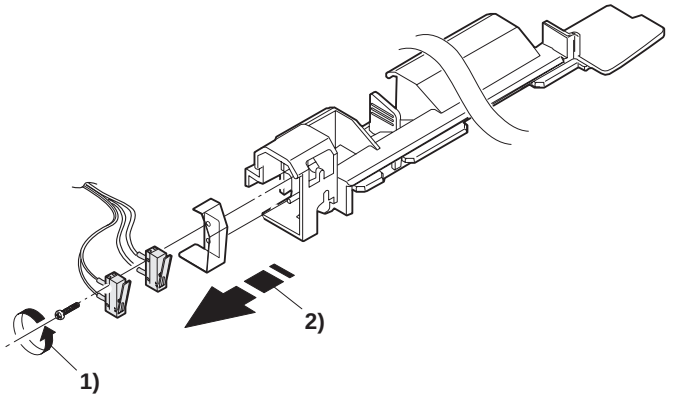

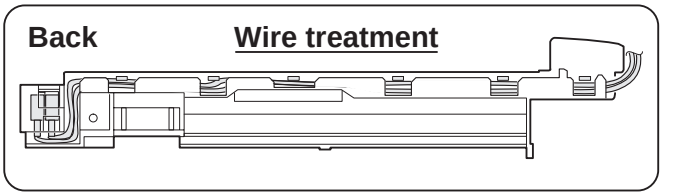

(3) Remove three screws and remove the single manual feed upper frame.

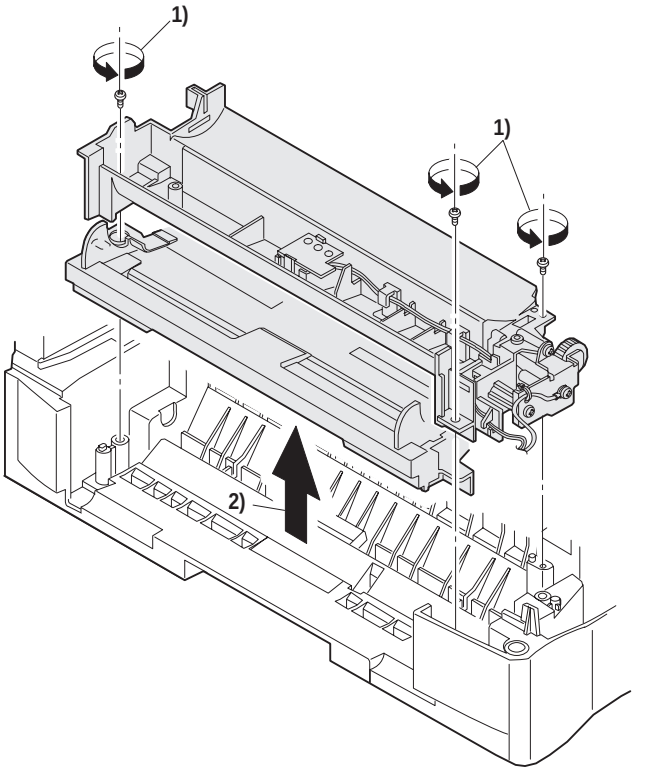

(4) Remove the PPD1 sensor PWB.

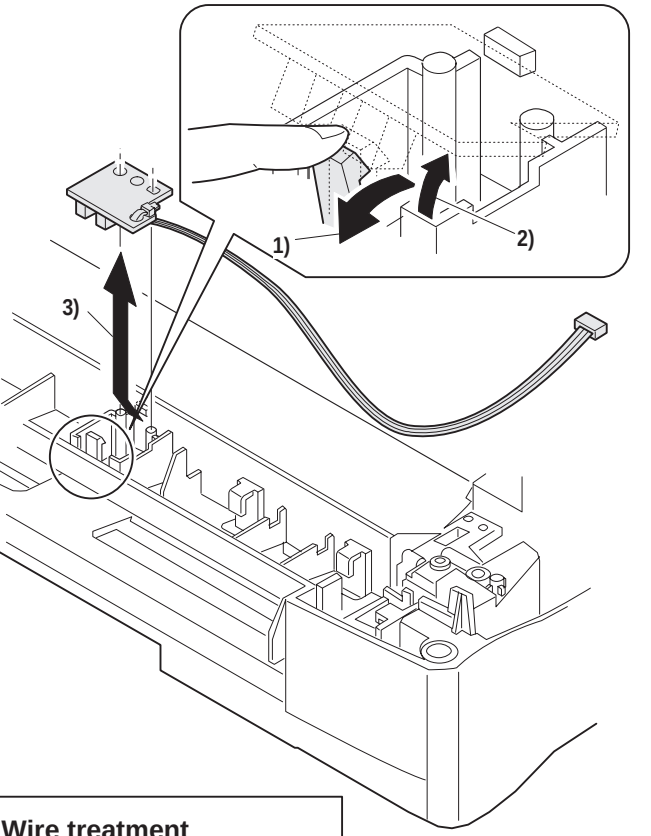

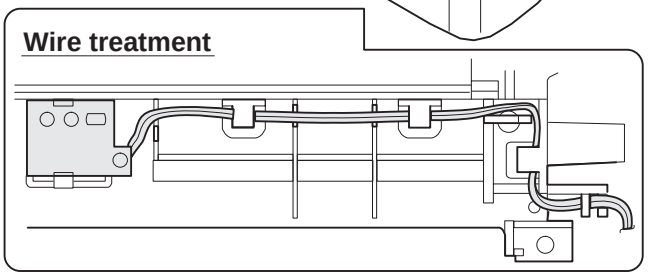

(5) Remove the E-ring and remove the manual paper feed transport roller.

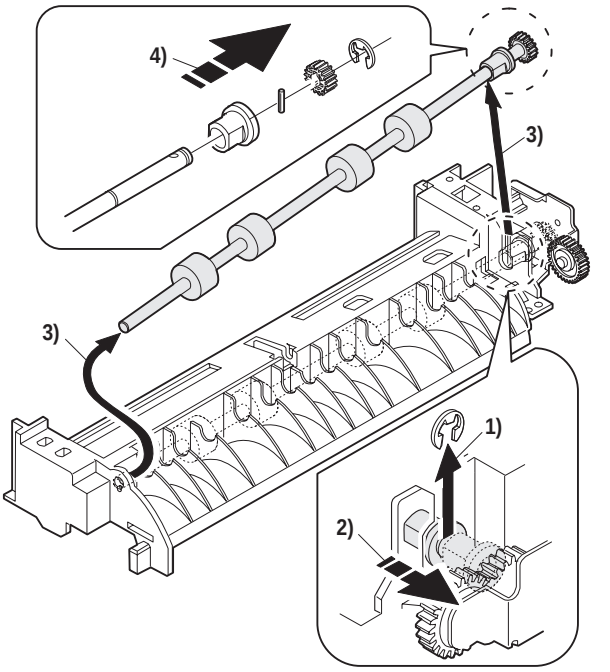

(6) Remove the cassette detection switch.

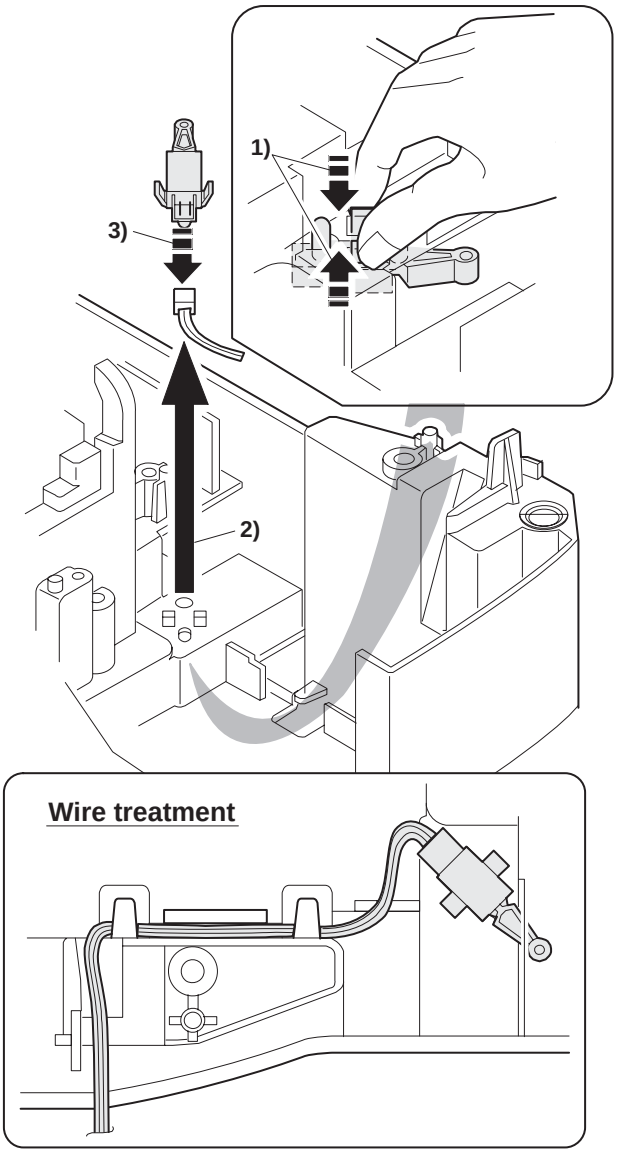

(7) Remove the multi cover.

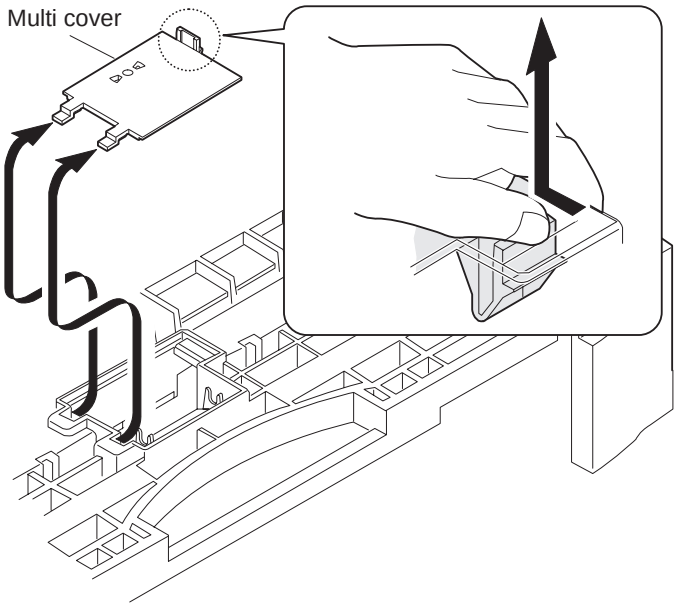

Multi unit

(1) Remove the screw and remove the multi upper cover.

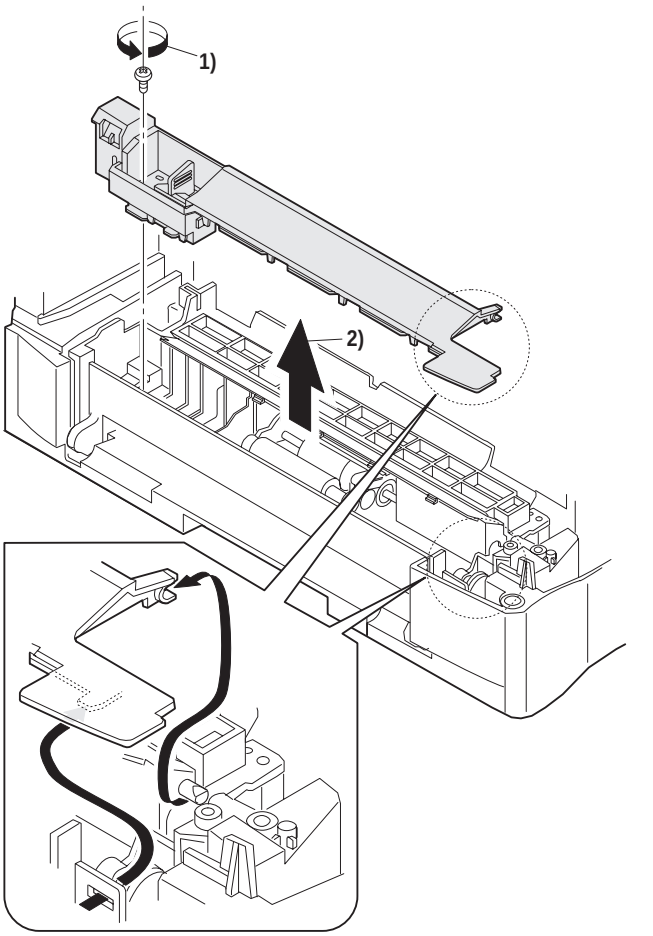

(2) Remove the screw and remove the side door detection unit.

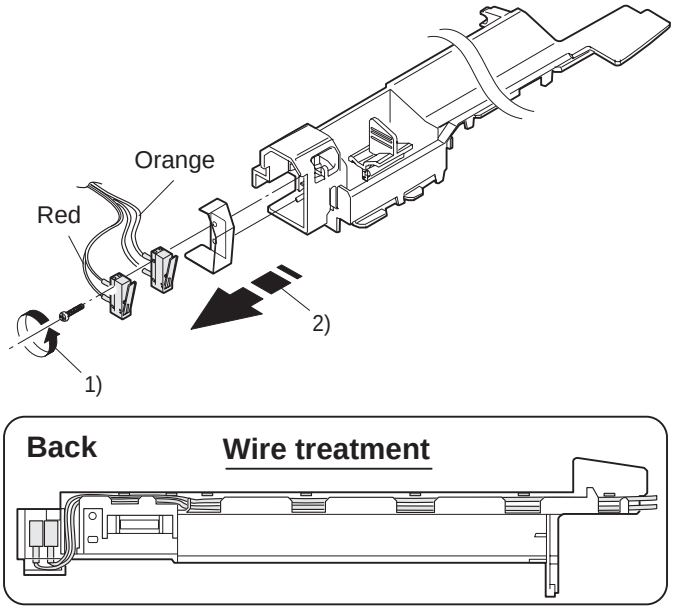

(3) Remove three screws and remove the multi paper feed upper frame.

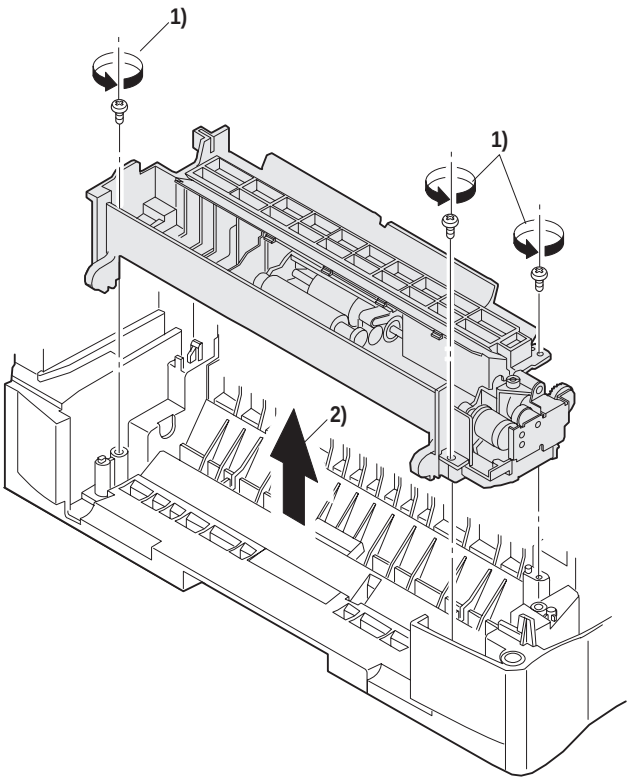

(4) Remove two screws and remove the multi feed bracket unit from the multi paper feed upper frame.

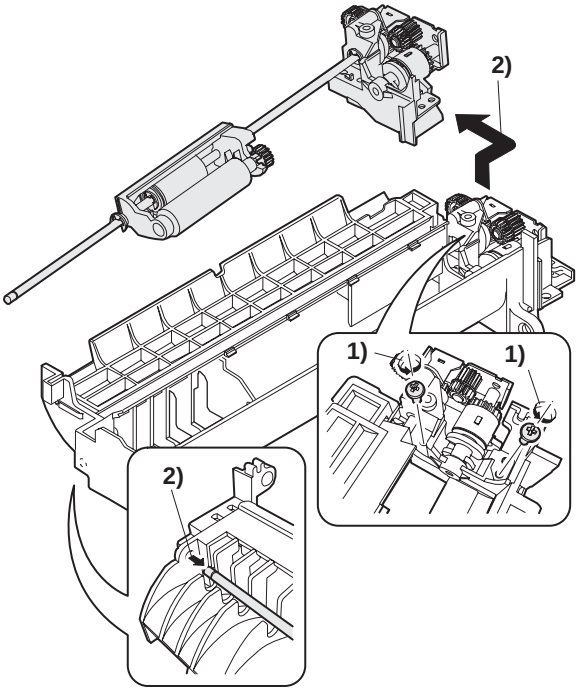

(5) Remove three E-rings and remove the manual paper feed roller.

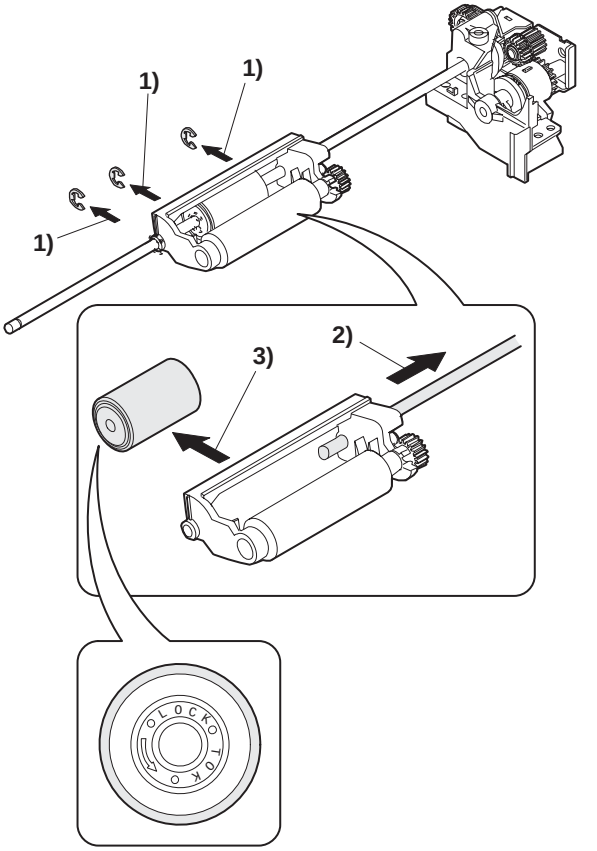

(6) Remove the pick-up roller.

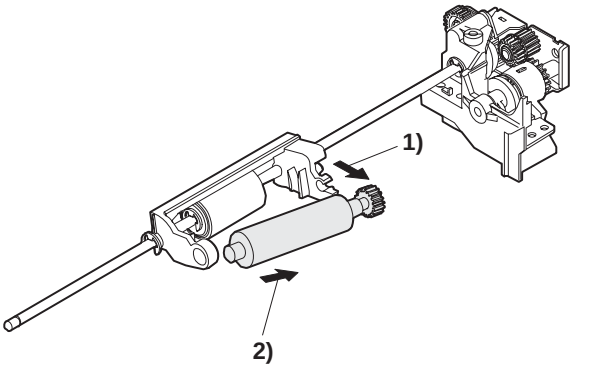

(7) Cut the binding band and remove the multi paper feed solenoid.

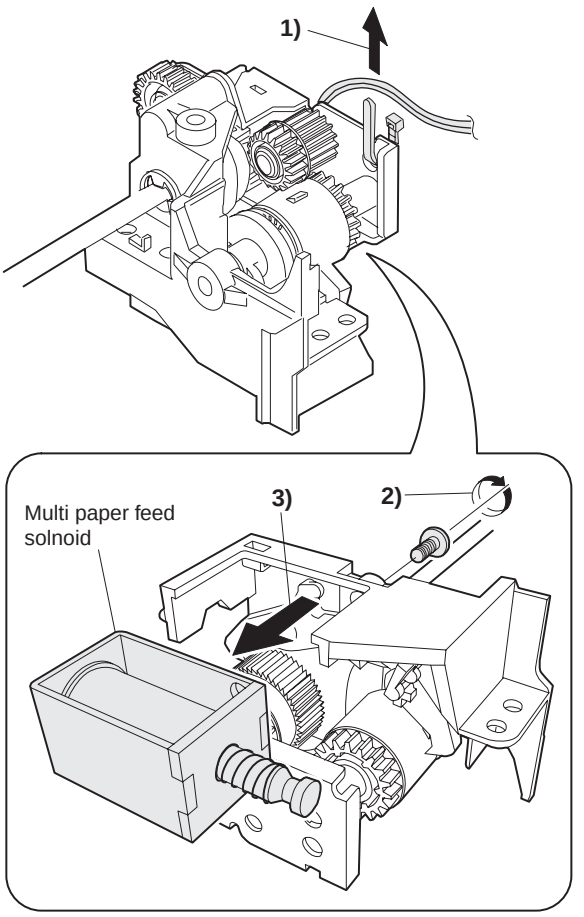

C. Assembly procedure

For assembly, reverse the disassembly procedure.

D. Pressure plate holder attachment

(1) Attach the pressure plate holder so that the resin section is not covered with the seal M1-N.

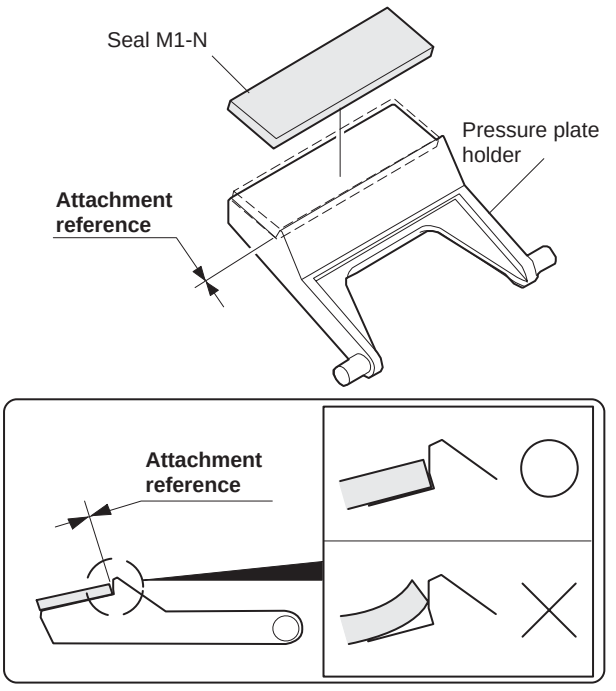

7. Rear frame section

A. List

No.	Part name Ref.
1	Mirror motor
2	Main motor
3	Exhaust fan motor

B. Disassembly procedure

(1) Remove three screws and remove the rear cabinet.

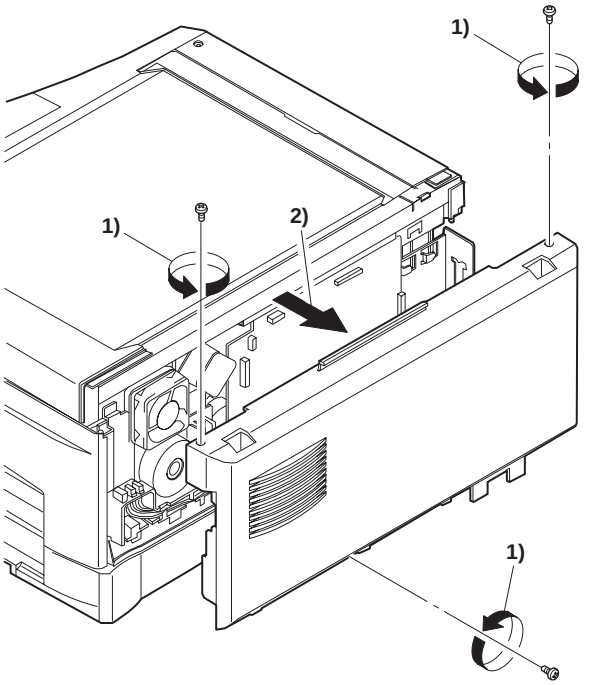

(2) Remove two screws, the harness, and the mirror motor.

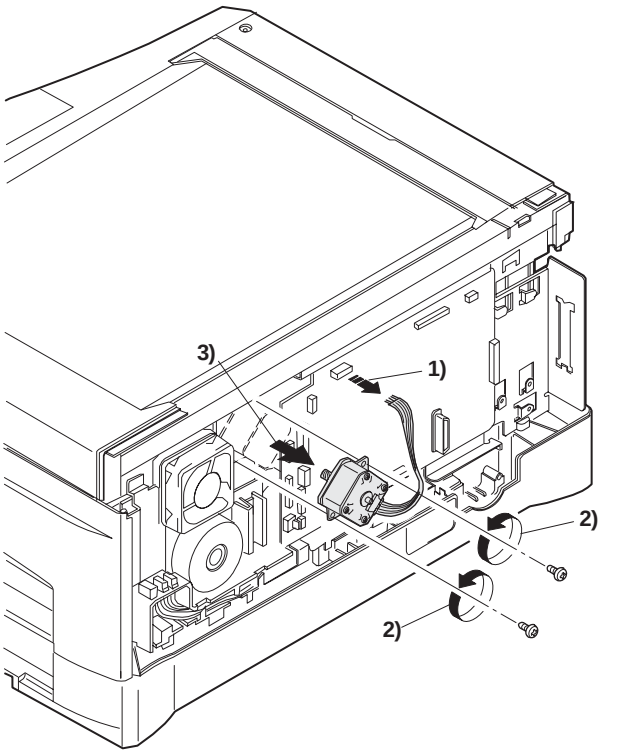

(3) Remove two screws and one harness, and remove the main motor.

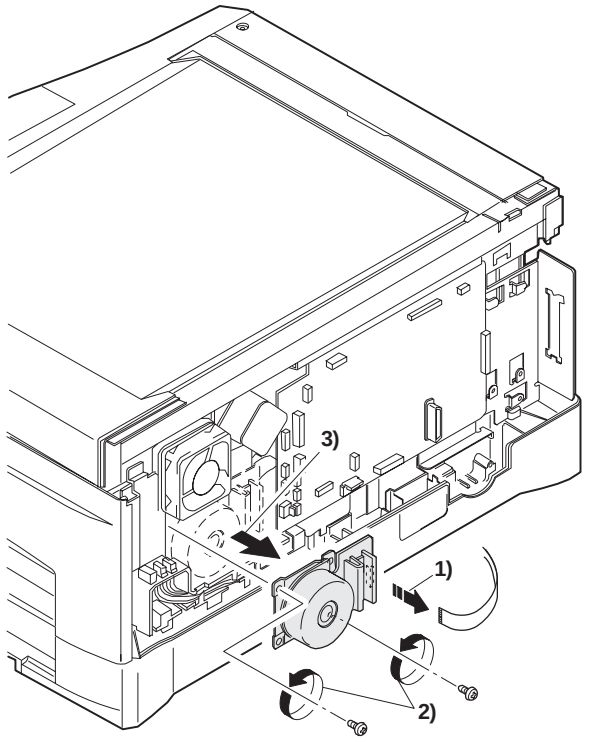

(4) Remove two screws and one connector, and remove the exhaust fan motor.

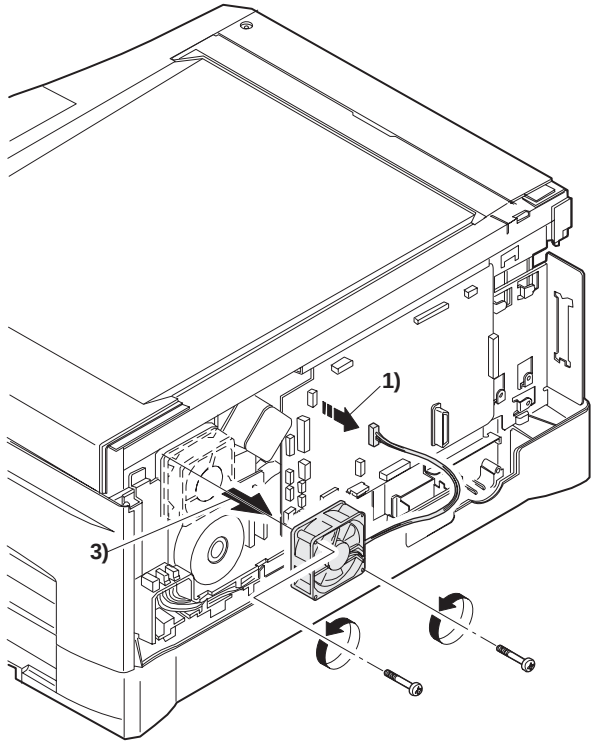

C. Assembly procedure

For assembly, reverse the disassembly procedure.

8. Power section

A. List

No.	Part name Ref.
1	Power PWB

B. Disassembly procedure

(1) Remove two screws and one connector, and remove the power PWB.

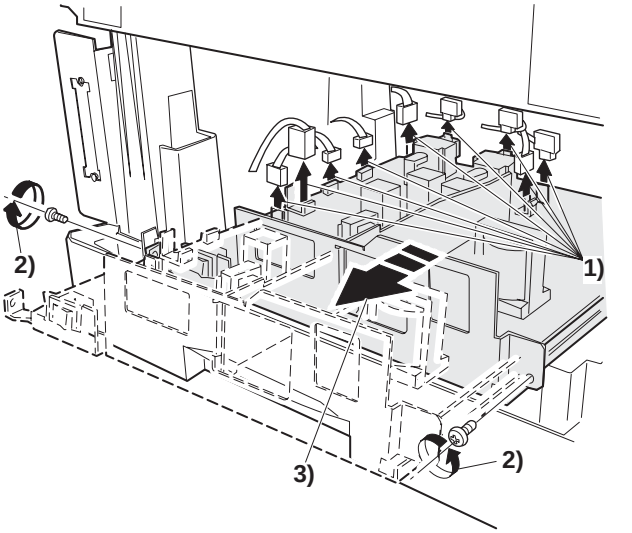

C. Assembly procedure

For assembly, reverse the disassembly procedure.

[9] ADJUSTMENTS

1. Optical section

A. Image distortion adjustment

There are following two types of image distortion.

- Horizontal image distortion
- Vertical image distortion

In this machine, the image distortion is adjusted by changing the parallelism of mirrors (copy lamp unit, No. 2/3 mirror unit).

(1) Horizontal image distortion adjustment

a. Summary

Parallelism of mirrors can be made by installing the copy lamp unit and No. 2/3 mirror unit to the reference position. However, it must be checked by making a copy, and must be adjusted if necessary.

b. Cases when the adjustment is required

1) When the copy lamp unit and No.2/3 mirror unit are disassembled or their part is replaced.

2) When the copy lamp unit and No.2/3 mirror unit drive section is disassembled or its part is replaced.

3) When the copy image is distorted as shown below:

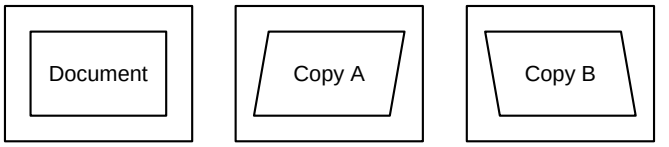

c. Necessary tools

- Screwdriver (+)
- Hex wrench
- Scale
- Test chart for distortion adjustment (Make a chart shown below by yourself.)
  Draw a rectangle on a paper (B4 or 8 1/2″ × 14″) as shown below.
  Be sure to make four right angles.

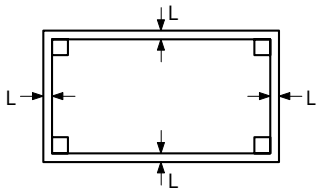

L = 10mm

d. Adjustment procedure

1) Remove the right cabinet (manual paper feed unit), the document reference plate.

2) Remove the document glass.

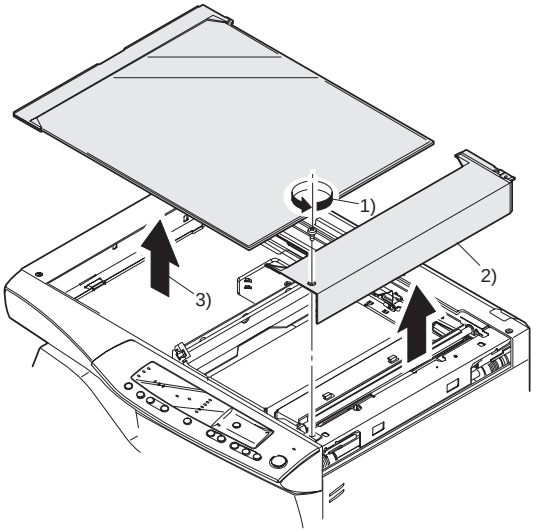

3) Loosen the fixing screw of the copy lamp unit wire.

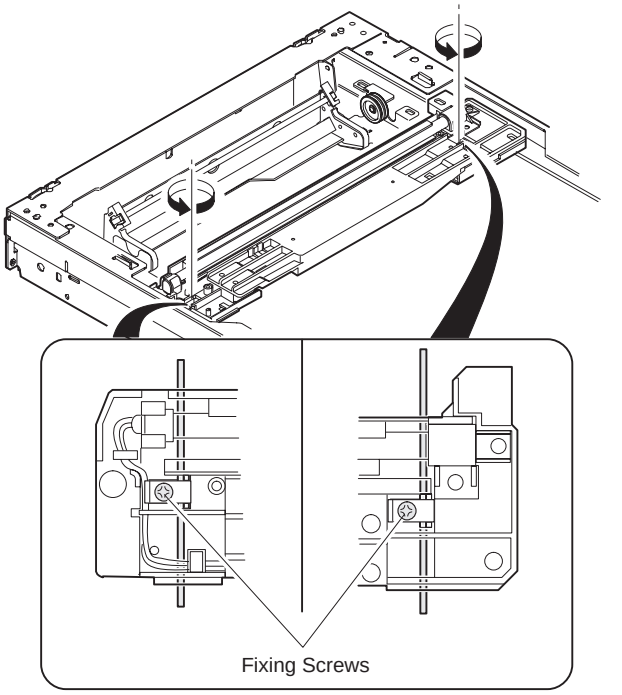

4) Manually turn the copy lamp unit/No.2/3 mirror unit drive gear to bring No.2/3 mirror unit into contact with No.2/3 mirror unit positioning plate. When No.2/3 mirror unit makes contact with No.2/3 mirror unit positioning plate in the Freat and rear frame side simultaneously, the mechanical parallelism of No.2/3 mirror unit is proper.
   If one side of No.2/3 mirror unit makes contact with No.2/3 mirror unit positioning plate and the other side does not, the parallelism is improper.
   If the parallelism is improper, perform the procedure of step 5).

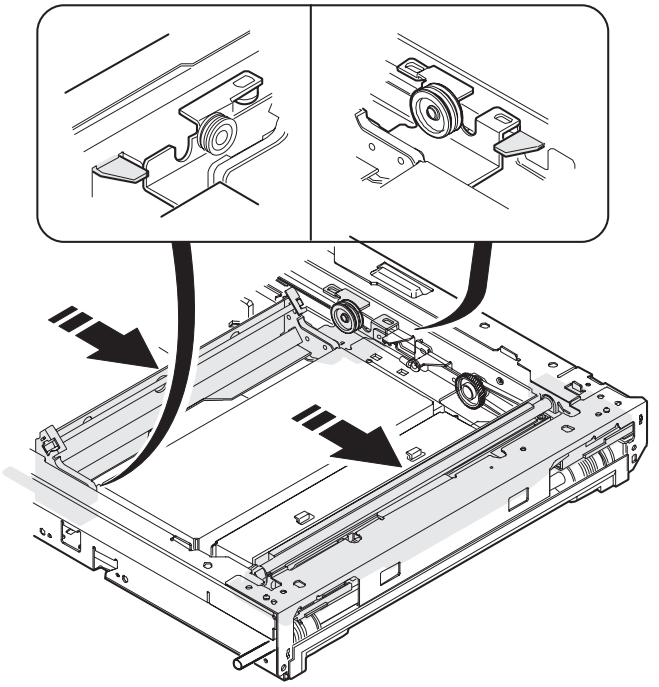

5) Loosen the copy lamp unit/No.2/3 mirror unit drive pulley setscrew in the side where No.2/3 mirror unit does not make contact with No.2/3 mirror unit positioning plate.

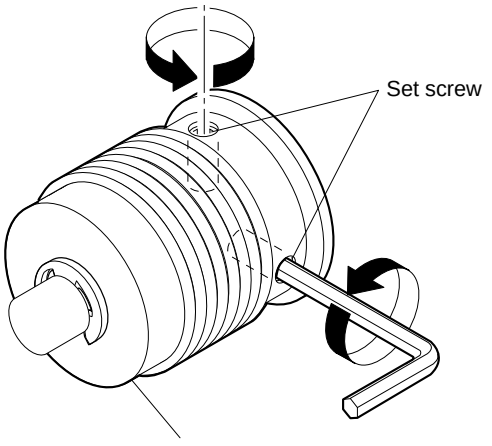

6) Without moving the copy lamp unit/No.2/3 mirror unit drive pulley shaft, manually turn the copy lamp unit/No.2/3 mirror unit drive pulley in the same direction of the loosened setscrew. When it makes contact with No.2/3 mirror unit positioning plate, tighten and fix the setscrew.

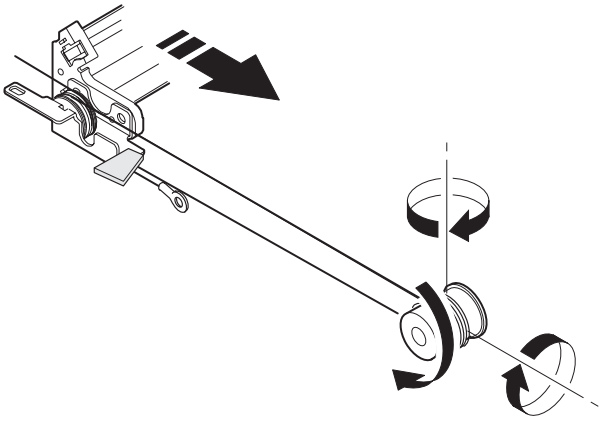

7) Manually turn the copy lamp unit/No.2/3 mirror unit drive gear to bring No.2/3 mirror unit into contact with the positioning plate, and perform the procedure of step 4).
Repeat procedures of steps 4) to 7) until the parallelism of No.2/3 mirror unit is properly set.

8) With No.2/3 mirror unit positioning plate in contact with No.2/3 mirror unit, bring the copy lamp unit into contact with the right frame and fix the copy lamp unit to the drive wire.
Procedures 1) to 8) are for adjustment of mechanical horizontal parallelism. The copy lamp unit and No.2/3 mirror are fixed to the specified positions and the mechanical horizontal parallelism of No.2/3 mirror is adjusted.
Then the optical horizontal parallelism must be adjusted in the following procedures.

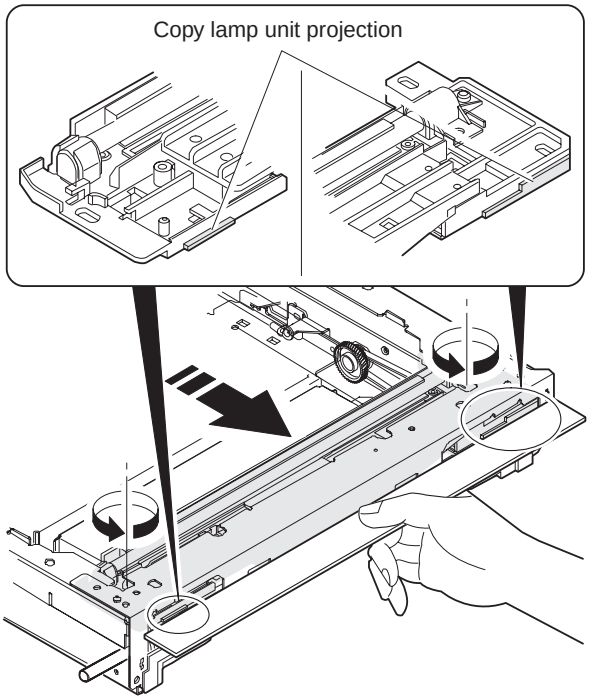

9) Set the image distortion check chart on the document table, and make a reduction copy (75%) on an A4 or 11″ × 8 1/2″ paper with the document cover open.

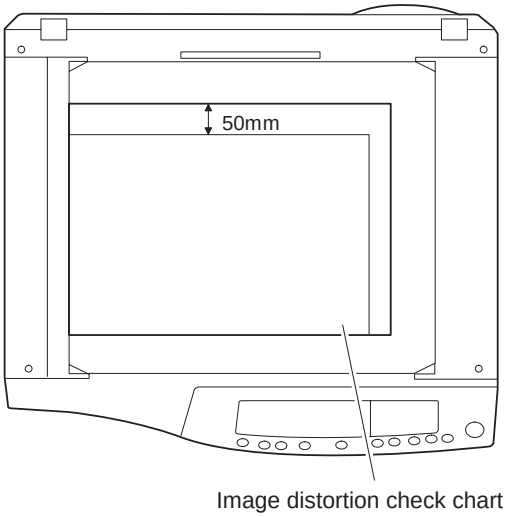

10) Check the horizontal image distortion.
If LL = LR, there is no horizontal distortion

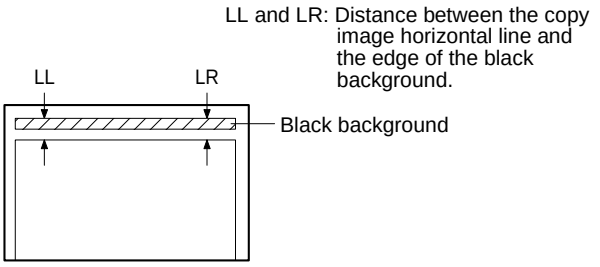

11) If LL is not equal to LR, perform the following procedure.
Loosen the setscrew of the copy lamp unit/No.2/3 mirror unit drive pulley in the front or the rear frame.

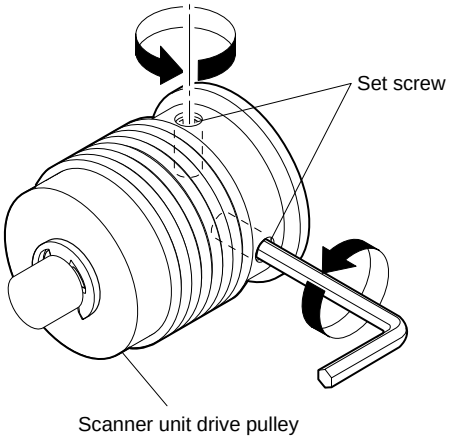

12) Without moving the copy lamp unit/No.2/3 mirror unit drive pulley shaft, manually turn the copy lamp unit/No.2/3 mirror unit drive pulley whose setscrew was loosened, and adjust the parallelism of copy lamp unit/No.2/3 mirror unit.

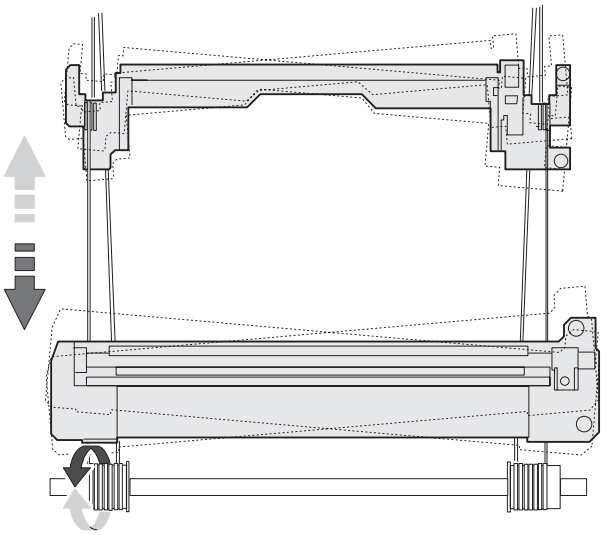

13) Tighten the set screw of the copy lamp unit/No.2/3 mirror unit drive pulley.

14) Check the image distortion in the same manner as step 10).
Repeat procedures 11) to 14) until horizontal image distortion is eliminated.

(2) Vertical image distortion adjustment

a. Summary

In this adjustment, the left and right balance is adjusted by changing the left and right balance of the No. 2 scanner unit frame on the front frame side.

b. Note

- Horizontal image distortion adjustment

c. Cases when the adjustment is required

1) When the copy lamp unit/No.2/3 mirror unit drive section is disassembled or its part is replaced.

2) When the copy image is distorted as follows:

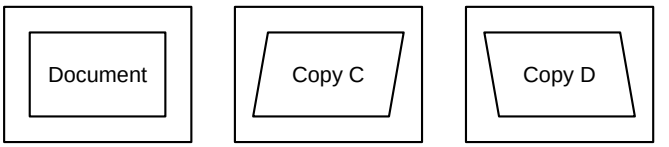

d. Necessary tools

- Screwdriver (+)
- Screwdriver (–)
- Scale
- Test chart for distortion adjustment (Make by yourself.)
Draw a rectangle on A4 or 8 1/2″ × 11″ paper as shown below:
Be sure to make four right angles.

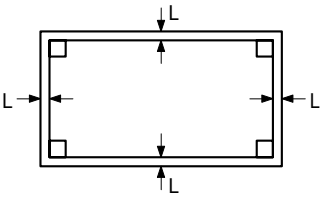

L = 10mm

e. Adjustment procedure

1) Set the test chart for image distortion adjustment on the document glass, and make a normal copy on a paper of A4 or 8 1/2″ × 11″.

2) Check image distortion in the right and the left sides.
If the both vertical lines are in parallel with each other, the right-left distortion balance is proper. (However, there may be some distortion.)

If all the four angles are right angles, there in no distortion and the following procedures are not required.

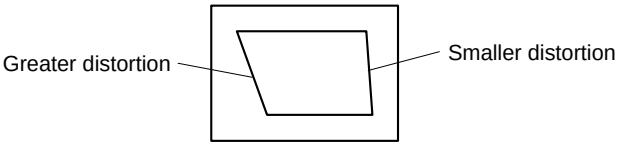

3) If the right-left distortion balance is improper, loosen the fixing screw of No.2/3 mirror unit rail to change and adjust the right-left balance of No.2/3 mirror unit rail.

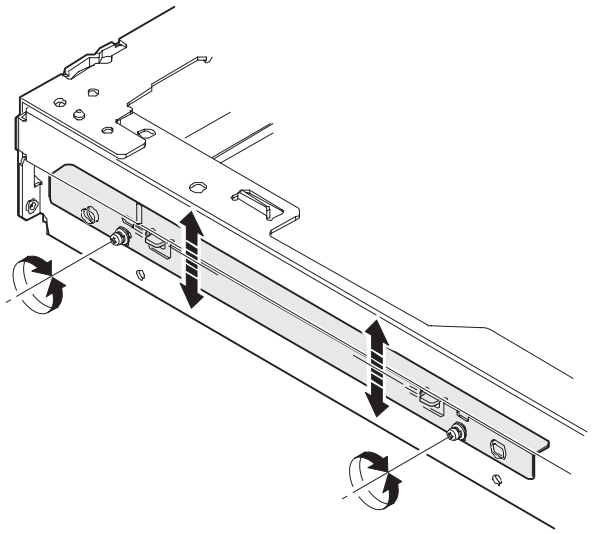

(Note)

If the distortion in the lead edge side (when viewed in the paper transport direction) is greater, change the height of the left rail of No.2/3 mirror unit.
If the distortion in the rear edge side (when viewed in the paper transport direction) is greater, change the height of the right rail of No.2/3 mirror unit.

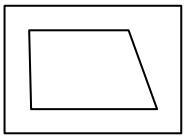

Change the height of the right side of the rail.

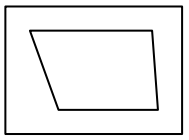

Change the height of the left side of the rail.

4) Make a copy to check the vertical image distortion.
If the four angles are right angles, the adjustment is completed.

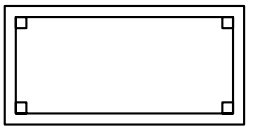

B. Copy magnification ratio adjustment

The copy magnification ratio must be adjusted in the main scanning direction and in the sub scanning direction. To adjust, use SIM 48-1.

(1) Outline

The main scanning (front/rear) direction magnification ratio adjustment is made automatically or manually.

Automatic adjustment: The width of the reference line marked on the shading correction plate is scanned to perform the main scanning (front/rear) direction magnification ratio adjustment automatically.

Manual adjustment: The adjustment is made by manual key operations. (In either of the automatic and manual adjustments, the zoom data register set value is changed for adjustment.)

The magnification ratio in the sub scanning direction is adjusted by changing the mirror base (scanner) scanning speed.

(2) Main scanning direction magnification ratio adjustment

a. Note

Before performing this adjustment, the following adjustments must have been completed. If not, this adjustment cannot be performed properly.

- Image distortion adjustment
- The lens unit must be installed in the reference position.

b. Cases when the adjustment is required

1) When the lens and the mirror unit are disassembled or the part is replaced.
2) When the copy lamp unit/No.2/3 mirror unit drive section is disassembled or the part is replaced.
3) When the main PWB is replaced.
4) When the EEPROM in the main PWB is replaced.
5) When “U2” trouble occurs.
6) When the copy image distortion adjustment is performed.

c. Necessary tools

- Screwdriver (+)
- Scale

d. Adjustment procedure

1) Set the scale vertically on the document table. (Use a long scale for precise adjustment.)

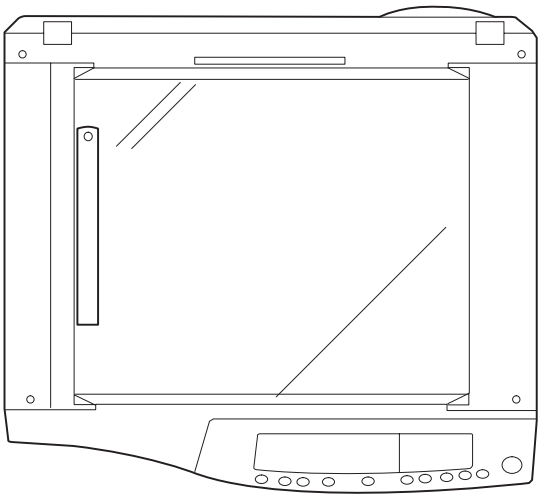

2) Set the copy magnification ratio to 100%.
3) Make a copy on A4 or 8½″ × 11″ paper.

4) Measure the length of the copied scale image.

5) Calculate the main scanning direction magnification ratio.
Main scanning direction magnification ratio
$= \frac{\text{Copy image dimensions}}{\text{Original dimension}} \times 100\ (\%)$

(When a 100mm scale is used as the original.)

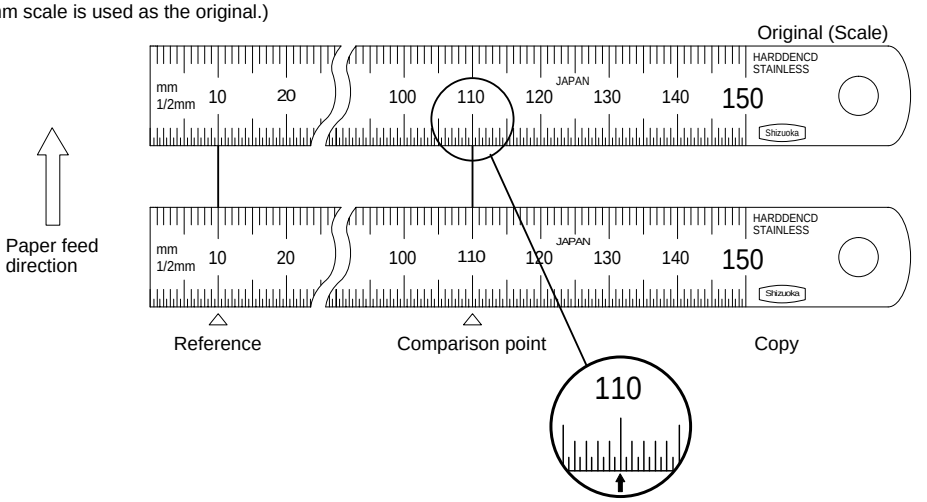

6) Check that the copy magnification ratio is within the specified range. If it is not within the specified range, perform the following procedures.

7) Execute SIM 48-1 to select the main scanning direction copy magnification ratio adjustment mode.
To select the adjustment mode, use the copy mode select key.

In the case of the automatic adjustment, when the PRINT switch is pressed, the mirror base unit moves to the white plate for shading to scan the width of the reference line, calculating the correction value and displaying and storing this value.
After execution of the automatic adjustment, go out from the simulation mode and make a copy to check the magnification ratio.
If the magnification ratio is not in the specified range (100 ±1.0%), manually adjust as follows.

Adjustment mode	Lighting lamp
Main scanning direction auto copy magnification ratio adjustment	Auto exposure lamp ON
Main scanning direction manual copy magnification ratio adjustment	Manual exposure lamp ON
Sub scanning direction copy magnification ratio adjustment	Photo exposure lamp ON

8) Set the adjustment mode to Manual with the copy mode select key.

9) Enter the new set value of main scanning direction copy magnification ratio with the copy quantity set key, and press the COPY button.

10) Change the set value and repeat the adjustment until the ratio is within the speoified range.
When the set value is changed by 1, the magnification ratio is changed by 0.1%.

(3) Sub scanning direction copy magnification ratio

a. Note

Before performing this adjustment, the following adjustments must have been completed. If not, this adjustment cannot be performed properly.

- Image distortion adjustment
- Must be installed to the lens unit reference position.

b. Cases when the adjustment is required

1) When the lens and the mirror unit are disassembled or the part is replaced.
2) When the scanner unit drive section is disassembled or the part is replaced.
3) When the main PWB is replaced.
4) When the EEPROM in the main PWB is replaced.
5) When “U2” trouble occurs.
6) When the copy image distortion adjustment is performed.

c. Necessary tools

- Screwdriver (+)
- Scale

d. Adjustment procedure

1) Set the scale on the document table as shown below. (Use a long scale for precise adjustment.)

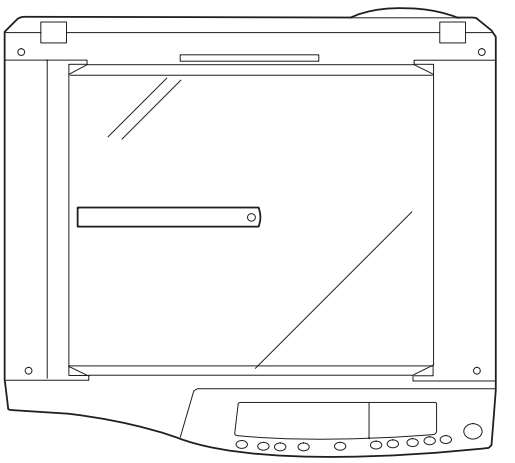

2) Set the copy magnification ratio to 100%.

3) Make a copy on A4 or 8½″ × 11″ paper.

4) Measure the length of the copied scale image.

5) Calculate the sub scanning direction copy magnification ratio.
Sub scanning direction copy magnification ratio
$= \frac{\text{Copy image dimension}}{\text{Original dimension}} \times 100\ (\%)$

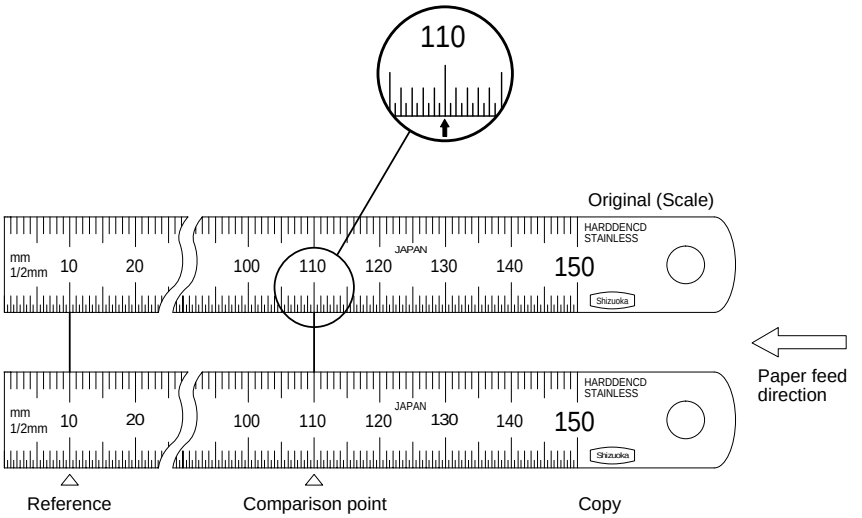

6) Check that the actual copy magnification ratio is within the specified range. (100 ± 1.0%).
   If it is not within the specified range, perform the following procedures.
7) Execute SIM 48-1 to select the sub scanning direction copy magnification ratio adjustment mode.
   To select the adjustment mode, use the copy mode select key. (Photo exposure lamp ON)
8) Enter the new set value of sub scanning direction copy magnification ratio with the copy quantity set key, and press the COPY button.

Repeat procedures 1) — 8) until the sub scanning direction actual copy magnification ratio in 100% copying is within the specified range.

When the set value is changed by 1, the magnification ratio is changed by 0.1%.

C. Lens unit attachment reference

Attach the lens unit so that the lens unit number on the lens adjustment plate is aligned with the scribe line on the base plate.

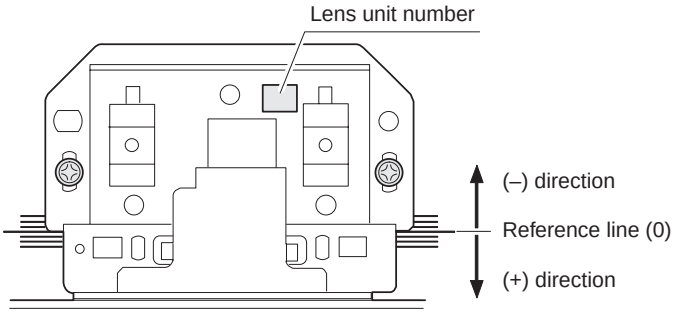

Example: Lens unit number –2.8
Attach the lens unit at 2 scales in the paper exit direction from the reference line.

Note: Never touch the other screws than the unit attachment screw. The lens unit is supplied only in a whole unit.

D. Image position adjustment

There are following five kinds of image position adjustments, which are made by laser control except for the image scan start position adjustment. For the adjustments, SIM 50 – 01 and SIM 50 – 10 are used.

No.	Adjustment item	Simulation
1	Print start position	50 – 01
2	Image lead edge void amount	50 – 01
3	Image scan start position	50 – 01
4	Image rear edge void amount	50 – 01
5	Center offset	50 – 10

To select the adjustment mode with SIM 50 – 01, use the copy density select key.
The relationship between the adjustment modes and the lighting lamps are as shown in the table below.

Adjustment mode	Lighting lamp
Print start position	Auto (AE) lamp
Image lead edge void amount	Manual (TEXT) lamp
Image scan start position	Photo lamp
Image rear edge void amount	Auto, Manual, Photo lamps

To select the adjustment mode with SIM 50 – 10, use the copy mode select key.

The relationship between the adjustment modes and the lighting lamps are as shown in the table below.

Machine with the multi manual paper feed unit

Adjustment mode	Lighting lamp
Print center offset (cassette)	Auto, Cassette
Print center offset (manual feed)	Auto, Manual
Document center offset	Auto, Manual

Machine with the single manual paper feed unit

Print center offset (cassette)	Auto, Cassette
Print center offset (manual feed)	Auto
Document center offset	Auto, Manual

(1) Lead edge adjustment

1) Set a scale to the center of the paper lead edge guide as shown below, and cover it with B4 or 8 1/2″ × 14″ paper.

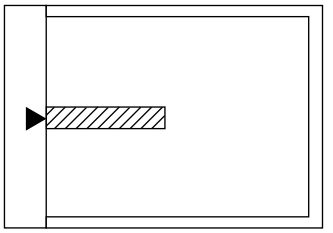

2) Execute SIM 50 – 01
3) Set the print start position (AE lamp ON) (A), the lead edge void amount (TEXT lamp ON) (B), and the scan start position (PHOTO lamp ON) (C) to 0, and make a copy of a scale at 100%.
4) Measure the image loss amount (R mm) of the scale image.
   Set C = 10 × R (mm). (Example: Set the value of C to 30.)
   When the value of C is increased by 10, the image loss is decreased by 1mm. (Default: 50)
5) Measure the distance (H mm) between the paper lead edge and the image print start position.
   Set A = 10 × H (mm). (Example: Set the value of A to 50.)
   When the value of A is increased by 10, the image lead edge is shifted to the paper lead edge by 1mm. (Default: 50)
6) Set the lead edge void amount to B = 50 (2.5mm).
   When the value of B is increased by 10, the void amount is increased by about 1mm. For 25 or less, however, the void amount becomes zero. (Default: 50)

(Example)

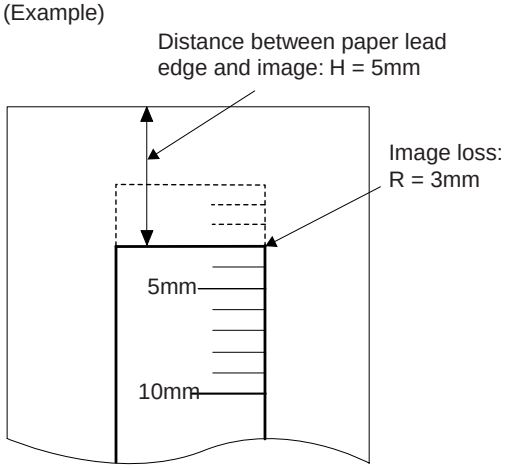

(2) Image rear edge void amount adjustment

1) Set a scale to the rear edge section of A4 or 11″ × 8 1/2″ paper size as shown in the figure below, and cover it with B4 or 8 1/2″ × 14″ paper.

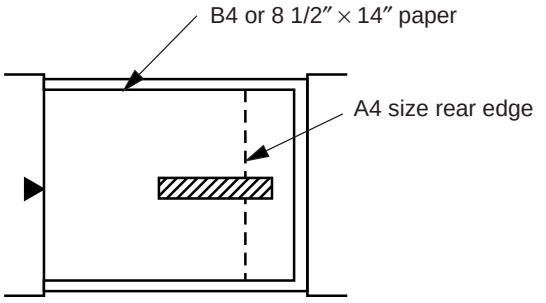

2) Execute SIM 50 – 01 to select the image rear edge void amount adjustment mode.
   The set adjustment value is displayed on the copy quantity display.
3) Make a copy and measure the void amount of image rear edge.

Void amount (Standard value: 2 – 3mm)

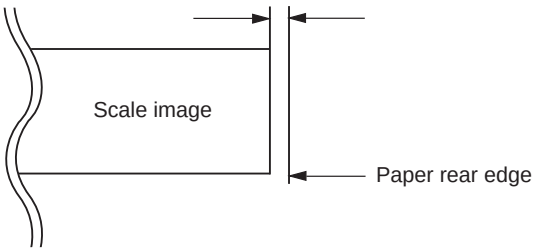

4) If the measurement value is out of the specified range, change the set value and repeat the adjustment procedure.
   The default value is 50.
   Note: The rear edge void cannot be checked with the first sheet after entering the simulation mode, the first sheet after turning off/on the power, or the first sheet after inserting the cassette. Use the second or later sheet to check the rear edge void.

(3) Center offset adjustment

1) Set the self-made test chart for the center position adjustment so that its center line is aligned with the center mark of the document guide.
   - Test chart for the center position adjustment
     Draw a line at the center of A4 or 8 1/2″ × 11″ paper in the paper transport direction.

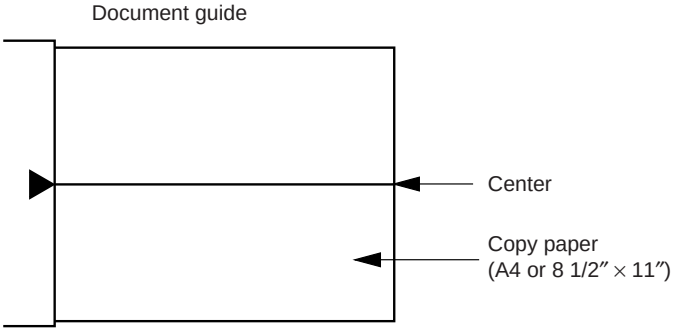

2) Execute SIM 50 – 10 to select the print center offset (cassette paper feed) adjustment mode.
   The set adjustment value is displayed on the copy quantity display.
3) Make a copy and check that the copied center line is properly positioned.
   The standard value is 0 ± 2mm from the paper center.

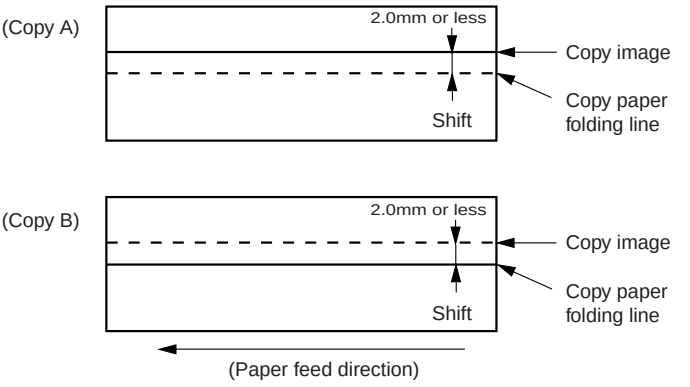

4) If the measured value is out of the specified range, change the set value and repeat the adjustment procedure.
When the set value is increased by 1, the copy image is shifted by 0.1mm toward the rear frame.
For the manual paper feed, change the manual paper feed adjustment mode and perform the similar procedures.
Since the document center offset is automatically adjusted by the CCD which scan the reference lines (F/R) on the back of document guide, there is no need to adjust manually.

2. Copy density adjustment

A. Copy density adjustment timing

The copy density adjustment must be performed in the following cases:
When maintenance is performed.
When the developing bias/grid bias voltage is adjusted.
When the optical section is cleaned.
When a part in the optical section is replaced.
When the optical section is disassembled.
When the OPC drum is replaced.
When the main control PWB is replaced.
When the EEPROM on the main control PWB is replaced.
When the memory trouble (U2) occurs.

B. Note for copy density adjustment

1) Arrangement before execution of the copy density adjustment
Clean the optical section.
Clean or replace the charger wire.
Check that the voltage at the high voltage section and the developing bias voltage are in the specified range.

C. Necessary tool for copy density adjustment

TOSHIBA TEST CHART No.15-1.
B4 (14″ × 8 1/2″) white paper
The user program AE setting should be "3."

D. Features of copy density adjustment

For the copy density adjustment, the image data shift function provided in the image process LSI is used.

List of the adjustment modes

Auto Mode	Brightness 1 step only
Manual Mode	Brightness 5 steps. Adjustment of only the center brightness is made.
Photo Mode	Brightness 5 steps. Adjustment of only the center brightness is made.
Manual T/S mode	Brightness 5 steps. Adjustment of only the center brightness is made.
T/S Auto mode	Brightness 1 step only

E. Copy density adjustment procedure

Use SIM 46-01 to set the copy density for each copy mode.
For selection of modes, use the copy mode select key.

(1) Test chart setting

1) Place the test chart so that its edge is aligned with the A4 (Letter) reference line on the document table. Then place a B4 (14″ × 8 1/2″) white paper on the test chart and close the document cover.

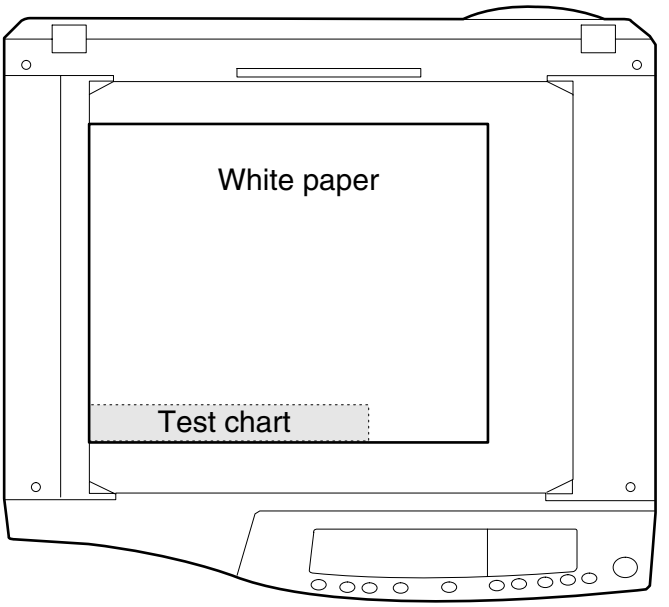

(2) Perform the adjustment in each mode.

1) Execute SIM 46-1.

2) Select the mode to be adjusted with the exposure mode select key.

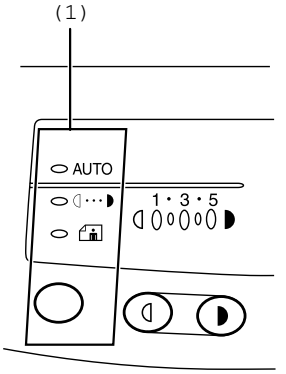

(1) Mode select key/display lamp

Adjustment mode	Exposure mode display lamp	Gray chart adjustment level
Auto mode	Auto lamp ON	"S3" is slightly copied.
Manual mode	Manual lamp ON	"S3" is slightly copied.
Photo mode	Photo lamp ON	"S3" is slightly copied.
Manual T/S mode	Manual lamp/Photo lamp ON	"S4" is slightly copied.
Auto T/S mode	Auto lamp/Photo lamp ON	"S4" is slightly copied.

3) Make a copy.
Check the adjustment level (shown in the above table) of the exposure test chart (Gray Scale).

(When too bright): Decrease the value displayed on the copy quantity display.
(When too dark): Increase the value displayed on the copy quantity display.
* The value can be set in the range of 1 – 99.

3. High voltage adjustment

A. Main charger (Grid bias)

Note:
- Use a digital multi meter with internal resistance of 10MΩ or more measurement.
- After adjusting the grid LOW output, adjust the HIGH output. Do not reverse the sequence.

Procedures

1. Set the digital multi meter range to DC700V.
2. Set the positive side of the test rod to the connector CN11-3 (GRID) of high voltage section of the power PWB and set the negative side to the frame ground (radiating plate).
3. Execute SIM 8-3. (The main charger output is supplied for 30 sec in the grid voltage LOW output mode.)
4. Adjust the control volume (VR-141) so that the output voltage is −400 ± 20V.
5. Execute SIM 8-2. (The main charger output is supplied for 30 sec in the grid voltage HIGH output mode.)
6. Adjust the control volume (VR-142) so that the output voltage is 580 ±10V.

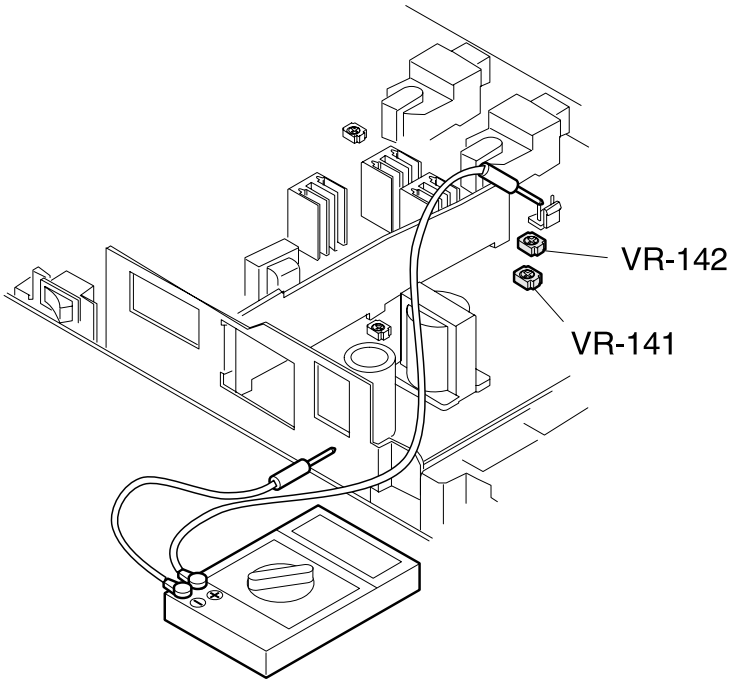

B. DV bias adjustment

Note:
- A digital multi meter with internal resistance of 1GΩ must be used for correct adjustment.

Procedures

1. Set the digital multi meter range to DC500V.
2. Set the positive side of the test rod to the connector CN-10-1 (DV BIAS) and set the negative side to the connector CN10-2 (FG).
3. Execute SIM 8-1. (The developing bias is outputted for 30 sec.)
4. Adjust the control volume (VR-121) so that the output voltage is −400 ± 5V.

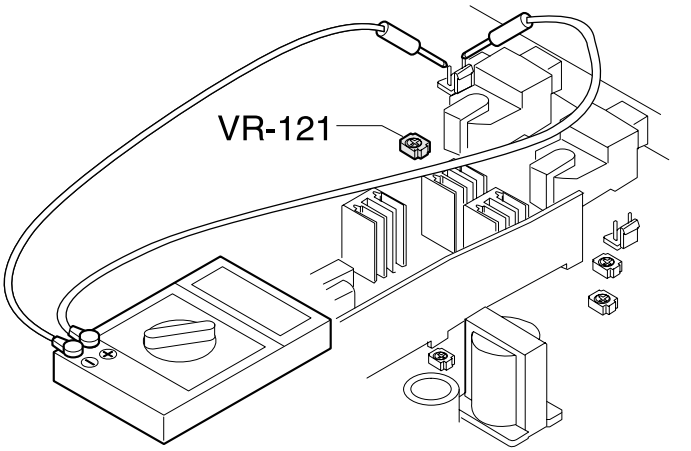

[10] SIMULATION, TROUBLE CODES

1. Entering the simulation mode

To enter the serviceman simulation mode, press the keys as follows:
Clear → Density select → Clear → Density select
To cancel the simulation mode, press the clear key.
Flow chart o entering the simulation mode

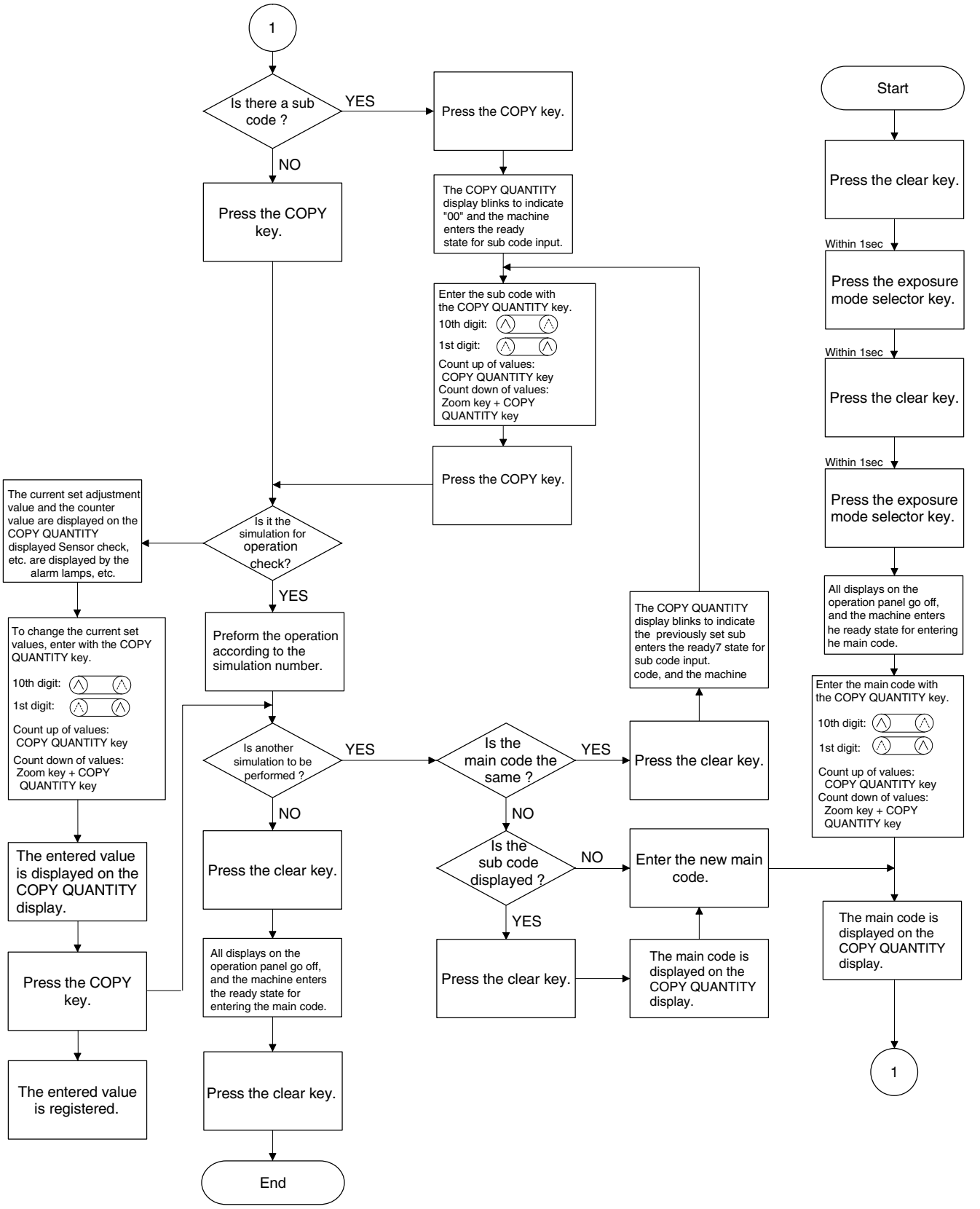

2. List of simulations

Note: In the DP1200, simulations related to option units cannot be executed.

Sim No.	Kind of main code	Sub code	Operation
01	Optical system	01	Mirror scan operation
02	SPF Individual load operation	**02** 03 04	**SPF sensor status display** Motor ON Paper feed solenoid ON
05	Lamp ON check	**01** 02 03	**Operation panel display check** Fusing lamp ON + Cooling fan HIGH/LOW speed Copy lamp ON
06	Machine individual load operation	01 02	Paper feed solenoid ON Resist solenoid ON
07	Aging	01 06	Warm up display and aging with jam Intermittent aging
08	High voltage output check	01 02 03 06	Developing bias (5V signal) Main charger (Grid high) Grid voltage (Low) Transfer charger
10	Other	None	Toner motor aging
14	Trouble reset	None	Cancel troubles other than U2
16	U2 trouble reset	None	Cancel of U2 trouble
20	Maintenance counter clear	01	Maintenance counter clear
21	Counter setup (When maintenance)	01	Maintenance cycle setup
22	Counter display	01 02 04 05 06 08 12 14 17 18 21 22	Maintenance counter display Maintenance preset display Jam total counter display Total counter display Developer counter display SPF counter display Drum counter display P-ROM version display Copy counter display Printer counter display Scanner counter display SPF jam total counter display
24	Special counter clear	01 04 06 07 08 09 13 14	Jam total counter clear SPF counter clear Developer counter clear Drum counter clear Copy counter clear Printer counter clear Scanner counter clear SPF jam total counter clear
25	Main motor ON	01 10	Developing bias (High voltage output) Polygon motor ON
26	Various setup	01 02 03 06 07 20 30 37 39 40 42 43 44	Manual feed setup SPF setup Second cassette setup Destination setup Machine conditions check Rear edge void setup CE mark conformity control ON/OFF setup Cancel of stop at developer over Memory capacity setup Polygon motor OFF time setup Transfer ON timing control setup Side void setup SPF document rear edge read setup
30	Sensor operation check (Standard provision)	01	Paper sensor status display
43	Fusing temperature setup	01 04 09	Normal copy Fusing temperature setup 2 Postcard size paper fusing control setup
46	Exposure adjustment	01 19	Copy density adjustment γ Table adjustment (Copy mode)
48	Magnification ratio correction	01	Front/rear scan direction
50	Lead edge adjustment	01 10	Lead edge image position adjustment Paper lead edge/rear edge void adjustment Paper center offset + OC/Document center offset + SPF document center offset
51	Timing adjustment	02 06	Resist quantity adjustment SPF exposure correction
61	Laser system operation	03	Polygon motor check (HSYNC output check)
63	Shading	01	Shading check
64	Self print	01	Self print only with the engine (1 by 2 mode)
67	Program Download	14	PCL PWB program download

3. Contents of simulations

Input method: Clear key → Exposure Select key → Clear key → Exposure Select key

<table>
<tr><th>Main code</th><th>Sub code</th><th>Content</th></tr>
<tr><td>01</td><td>01</td><td>Mirror scan operation
(Operation/Procedure)
1. When this simulation is executed, the mirror home position is detected.
<table>
<tr><th>Sensor name</th><th>Display lamp</th></tr>
<tr><td>Mirror home position sensor</td><td>Developer replacement lamp</td></tr>
</table>
2. When the _START key is pressed, scanning is executed at the speed corresponding to the currently set copy magnification ratio.
The copy magnification ratio can be arbitrarily set with the magnification ratio select key/zoom key.</td></tr>
<tr><td rowspan="4">02</td><td>02</td><td>SPF sensor status display
ON/OFF of the sensors in the SPF can be checked with the following lamps.
<table>
<tr><th>Display</th><th>Sensor</th></tr>
<tr><td>Toner cartridge replacement lamp</td><td>Document set detection (SPID)</td></tr>
<tr><td>Jam lamp</td><td>SPF document transport detection (SPPD)</td></tr>
<tr><td>Developer replacement lamp</td><td>SPF cover open detection (SCOD)</td></tr>
<tr><td>SPF jam lamp</td><td>SPF open/close detection (SDSW)
FAX document size detection
Paper size detection</td></tr>
<tr><td>SPF lamp</td><td>FAX/SPF B4 size detection (SB4D)</td></tr>
</table></td></tr>
<tr><td>03</td><td>Motor ON
(Operation/Procedure)
When the start key is pressed, the SPF motor rotates for 10 sec at the speed corresponding to the currently set magnification ratio.</td></tr>
<tr><td>04</td><td>Paper feed solenoid ON
(Operation/Procedure)
When the start key is pressed, the SPF paper feed solenoid repeats ON (500 ms) and OFF (500 ms) 20 times.</td></tr>
<tr><td rowspan="3">05</td><td>01</td><td>Operation panel display check
When the PRINT switch is pressed, the LED on the operation panel is lighted for 5 sec. The LED on the FAX panel and the LCD black background are displayed simultaneously.</td></tr>
<tr><td>02</td><td>Fusing lamp ON + cooling fan HIGH/LOW speed
(Operation/Procedure)
When the START key is pressed, the fusing lamp repeats ON (500ms) and OFF (500msec) 5 times.
During this period, the cooling fan rotates in the high speed mode. After completion of the operation, the cooling fan rotates in the low speed mode.</td></tr>
<tr><td>03</td><td>Copy lamp ON
(Operation/Procedure)
When the START key is pressed, the copy lamp is lighted for 5 sec.</td></tr>
<tr><td rowspan="2">06</td><td>01</td><td>Paper feed solenoid ON
(Operation/Procedure)
When the START key is pressed, the paper feed solenoid selected by the tray select key repeats ON (500ms) and OFF (500ms) 20 times.</td></tr>
<tr><td>02</td><td>Resist solenoid ON
(Operation/Procedure)
When the START key is pressed, the resist solenoid (RRS) repeats ON (500ms) and OFF (500ms) 20 times.</td></tr>
<tr><td rowspan="2">07</td><td>01</td><td>Warm-up display and aging with jam
(Operation/Procedure)
1. When the simulation is executed, warming up is started.
2. Warm-up time is counted and displayed every second on the copy quantity display.
3. After completion of warm-up, the time count is stopped and the ready lamp is lighted.
4. Press the clear key to clear the warm-up time display, set the copy quantity, and press the START key, and the machine will copy the set quantity repeatedly.</td></tr>
<tr><td>06</td><td>Intermittent aging
(Operation/Procedure)
1. When the simulation is executed, warming up is started.
2. After completion of warm-up, the ready lamp is lighted.
3. Set the copy quantity and press the START key, and the machine will copy the set quantity repeatedly.
4. After 3 sec of the interval time from completion of copying the set quantity, the machine will resume copying.
5. The above operation 4 is repeated.</td></tr>
</table>

<table>
<tr><th>Main code</th><th>Sub code</th><th>Content</th></tr>
<tr><td rowspan="4">08</td><td>01</td><td>Developing bias (5V signal)
(Operation/Procedure)
When the START key is pressed, the developing bias is outputted for 30 sec.</td></tr>
<tr><td>02</td><td>Main charger (Grid high)
(Operation/Procedure)
When the START key is pressed, the main charger output is supplied for 30 sec in the grid voltage HIGH mode.</td></tr>
<tr><td>03</td><td>Grid voltage (Low)
(Operation/Procedure)
When the START key is pressed, the main charger output is supplied for 30 sec in the grid voltage LOW mode.</td></tr>
<tr><td>06</td><td>Transfer charger
(Operation/Procedure)
When the START key is pressed, the transfer charger output is supplied for 30 sec.</td></tr>
<tr><td>10</td><td>None</td><td>Toner motor aging
(Operation/Procedure)
When the START key is pressed, the toner motor output is supplied for 30 sec.</td></tr>
<tr><td>14</td><td>None</td><td>Cancel of troubles code H2 - H4
(Operation/Procedure)
After canceling the trouble, the simulation is also automatically canceled.</td></tr>
<tr><td>16</td><td>None</td><td>Cancel of U2 trouble
(Operation/Procedure)
1. When the START key is pressed, the EEPROM total counter check sum is rewritten and the trouble is canceled.
2. After canceling the trouble, the simulation is also automatically canceled.</td></tr>
<tr><td>20</td><td>01</td><td>Maintenance counter clear
When the Print switch is pressed, the maintenance counter is cleared, and 000000 is displayed. When the destination has been set to Japan AB series, the mini-maintenance counter is cleared.</td></tr>
<tr><td>21</td><td>01</td><td>Maintenance cycle setup
The currently set maintenance cycle code is displayed (initial display), and the set data is stored.
<table>
<tr><th>Code</th><th>Setup</th></tr>
<tr><td>0</td><td>3,000 sheets</td></tr>
<tr><td>1</td><td>6,000 sheets</td></tr>
<tr><td>2</td><td>9,000 sheets</td></tr>
<tr><td>3</td><td>13,000 sheets</td></tr>
<tr><td>4</td><td>25,000 sheets</td></tr>
<tr><td>5</td><td>Free (999,999 sheets) * Default</td></tr>
</table></td></tr>
<tr><td rowspan="4">22</td><td>01</td><td>Maintenance counter display
The display is the same as the total counter value display.
When the destination is set to other than Japan AB series, the maintenance counter is displayed.
When the destination is set to Japan AB series, the mini-maintenance counter is displayed. The display is the same as the total counter value display.</td></tr>
<tr><td>02</td><td>Maintenance preset display
The preset value corresponding to the code set in 21-01 and 21-02.
The display is the same as the total counter value display.
When the destination is set to other than Japan AB series, the maintenance preset value is displayed.
When the destination is set to Japan AB series, the mini-maintenance preset value is displayed.</td></tr>
<tr><td>04</td><td>Jam total counter display
The display method is the same as the total count value display.</td></tr>
<tr><td>05</td><td>Total counter display
The total count value is dispalyed in 3 digits × 2 times repeatedly.
<Display example: 12345>
012 → Blank → 345 → Blank → 012
0.7s 0.3s 0.7s 1.0s 0.7s</td></tr>
</table>

<table>
<tr><th>Main code</th><th>Sub code</th><th>Content</th></tr>
<tr><td rowspan="8">22</td><td>06</td><td>Developer counter display
The display method is the same as the total count value display.</td></tr>
<tr><td>08</td><td>SPF counter display
The display method is the same as the total count value display.</td></tr>
<tr><td>12</td><td>Drum counter display
The display method is the same as the total count value display.</td></tr>
<tr><td>14</td><td>P-ROM versiondisplay
The P-ROM version is displayed in 3 digits on the value display section.
(AR, DM, PCL models: 100% Zoom lamp display)</td></tr>
<tr><td>17</td><td>Copy counter display
The display method is the same as the total count value display.</td></tr>
<tr><td>18</td><td>Printer counter display
The display method is the same as the total count value display.</td></tr>
<tr><td>21</td><td>Scanner counter display
The display method is the same as the total count value display.</td></tr>
<tr><td>22</td><td>SPF jam total counter display
The display method is the same as the total count value display.</td></tr>
<tr><td rowspan="8">24</td><td>01</td><td>Jam total counter clear
When the PRINT switch is pressed, the jam total count value is reset to 0.</td></tr>
<tr><td>04</td><td>SPF counter clear
When the PRINT switch is pressed, the SPF count value is reset to 0.</td></tr>
<tr><td>06</td><td>Developer counter clear
When the PRINT switch is pressed, the developer count value is reset to 0.</td></tr>
<tr><td>07</td><td>Drum counter clear
When the PRINT switch is pressed, the drum count value is reset to 0.</td></tr>
<tr><td>08</td><td>Copy counter clear
When the PRINT switch is pressed, the copy count value is reset to 0.</td></tr>
<tr><td>09</td><td>Printer counter clear
When the PRINT switch is pressed, the printer count value is reset to 0.</td></tr>
<tr><td>13</td><td>Scanner counter clear
When the PRINT switch is pressed, the scanner count value is reset to 0.</td></tr>
<tr><td>14</td><td>SPF jam total counter clear
When the PRINT switch is pressed, the SPF jam total count value is reset to 0.</td></tr>
<tr><td rowspan="2">25</td><td>01</td><td>Main motor system ON + Cooling fan low speed (For the duplex model, the duplex motor is simultaneously turned on.)
(Operation/Procedure)
When the START key is pressed, the main motor is rotated for 30 sec.
To save toner consumption, the different operations are executed depending on installation of the developing unit.
· When the developing unit is installed, the developing bias, the main charger, and the grid are also outputted.
· When the developing unit is not installed, only the motor is rotated.
* Do not turn on the door open/close switch forcibly to execute this simulation.</td></tr>
<tr><td>10</td><td>Polygon motor ON
(Operation/Procedure)
When the START key is pressed, the polygon motor is operated for 30sec.</td></tr>
<tr><td>26</td><td>01</td><td>Manual feed setup
(Operation/Procedure)
1. When this simulation is executed, the currently set bypass code number is displayed.
2. Enter the code number corresponding to the bypass and press the START key, and the setting will be changed.
<table>
<tr><th>Code number</th><th>Bypass</th></tr>
<tr><td>0</td><td>Single bypass</td></tr>
<tr><td>1</td><td>Multi bypass</td></tr>
</table>
</td></tr>
</table>

<table>
<tr><th>Main code</th><th>Sub code</th><th>Content</th></tr>
<tr><td>26</td><td>02</td><td>SPF setup
When this simulation is executed, the currently set SPF code number is displayed. Enter the code number of the SPF to be set and press the PRINT switch. The setup is changed.
<table>
<tr><th>Code No.</th><th>SPF</th></tr>
<tr><td>0</td><td>Without SPF</td></tr>
<tr><td>1</td><td>With SPF (In the case an SPF or FAX option is installed.)</td></tr>
</table></td></tr>
<tr><td></td><td>03</td><td>Second cassette setup
(Operation/Procedure)
1. When this simulation is executed, the currently set code number of the second cassette is displayed.
2. Enter the code number and press the start key. The setting is changed.
<table>
<tr><th>Code number</th><th>Second cassette</th></tr>
<tr><td>0</td><td>Without second cassette</td></tr>
<tr><td>1</td><td>With second cassette</td></tr>
</table></td></tr>
<tr><td></td><td>06</td><td>Destination setup
(Operation/Procedure)
1. When this simulation is executed, the currently set destination code number is displayed.
2. Enter the code number corresponding to the destination and press the START key, and the setting will be changed.
<table>
<tr><th>Code number</th><th>Destination</th></tr>
<tr><td>0</td><td>Inch series</td></tr>
<tr><td>1</td><td>EX AB series</td></tr>
<tr><td>2</td><td>Japan AB series</td></tr>
</table></td></tr>
<tr><td></td><td>07</td><td>Machine conditions check
(Operation/Procedure)
When this simulation is executed, the current machine setting is displayed.
<table>
<tr><th>CPM</th><th>Copy quantity display</th></tr>
<tr><td>10 cpm</td><td>10</td></tr>
<tr><td>12 cpm</td><td>12</td></tr>
<tr><td>15 cpm</td><td>15</td></tr>
</table>
(The machine type is shown with the lamp display.
No setup: None
BTA-A: AE mode lamp ON
BTA-B: TEXT mode lamp ON
BTA-C: Photo mode lamp ON)</td></tr>
<tr><td></td><td>20</td><td>Rear edge void setup
(Operation/Procedure)
1. When this simulation is executed, the currently set code number of rear edge void setting is displayed.
2. Enter the code number of rear edge void setting and press the START key, and the setting will be changed.
<table>
<tr><th>Code number</th><th>Rear edge void setting</th></tr>
<tr><td>0</td><td>Rear edge void allowed</td></tr>
<tr><td>1</td><td>Rear edge void not allowed</td></tr>
</table></td></tr>
<tr><td></td><td>30</td><td>CE mark conformity control ON/OFF setup
(Operation/Procedure)
1. When this simulation is executed, the currently set code number of CE mark application is displayed.
2. Enter the code number of CE mark application and press the START key, and the setting will be changed.
<table>
<tr><th>Code number</th><th>CE mark application setting</th></tr>
<tr><td>0</td><td>CE mark application control OFF</td></tr>
<tr><td>1</td><td>CE mark application control ON</td></tr>
</table></td></tr>
</table>

<table>
<tr><th>Main code</th><th>Sub code</th><th>Content</th></tr>
<tr><td>26</td><td>37</td><td>Cancel of stop at developer life over
When this simulation is executed, the current set code is displayed. Enter a new code and press the PRINT switch, and the entered code is registered.
<table>
<tr><th>Code number</th><th>Setting</th></tr>
<tr><td>0</td><td>Stop at developer life over</td></tr>
<tr><td>1</td><td>Stop cancel at developer life over</td></tr>
</table></td></tr>
<tr><td></td><td>39</td><td>Memory capacity setup
(Operation/Procedure)
1. When this simulation is executed, the currently set code number is displayed.
2. Enter the code number and press the START key, and the setting will be changed.
<table>
<tr><th>Code number</th><th>Setting</th></tr>
<tr><td>0</td><td>No memory</td></tr>
<tr><td>1</td><td>4 Mbyte</td></tr>
<tr><td>2</td><td>6 Mbyte</td></tr>
</table></td></tr>
<tr><td></td><td>40</td><td>Polygon motor OFF time setup
(Operation/Procedure)
1. When this simulation is executed, the currently set code number is displayed.
2. Enter the code number and press the START key, and the setting will be changed.
<table>
<tr><th>Code number</th><th>Setting</th></tr>
<tr><td>0</td><td>0 sec</td></tr>
<tr><td>1</td><td>30 sec</td></tr>
<tr><td>2</td><td>60 sec</td></tr>
<tr><td>3</td><td>90 sec</td></tr>
</table></td></tr>
<tr><td></td><td>42</td><td>Transfer ON timing control setup
(Operation / Procedure)
1. When this simulation is executed, the currently set code number is displayed.
2. Enter the code number and press the START key, and the setting will be changed. (For any number different from the following ones, the default time is automatically set.)
<table>
<tr><th>Code number</th><th>Setting</th></tr>
<tr><td>0</td><td>Default (330 msec)</td></tr>
<tr><td>1</td><td>–40 msec</td></tr>
<tr><td>2</td><td>–30 msec</td></tr>
<tr><td>3</td><td>–20 msec</td></tr>
<tr><td>4</td><td>–10 msec</td></tr>
<tr><td>5</td><td>Default (330 msec)</td></tr>
<tr><td>6</td><td>+10 msec</td></tr>
<tr><td>7</td><td>+20 msec</td></tr>
<tr><td>8</td><td>+30 msec</td></tr>
<tr><td>9</td><td>+40 msec</td></tr>
</table></td></tr>
</table>

<table>
<tr><th>Main code</th><th>Sub code</th><th>Content</th></tr>
<tr><td>26</td><td>43</td><td>Side void setup
(Operation/Procedure)
1. When this simulation is executed, the currently set code number of the side void amount is displayed.
2. Enter the code number and press the start key. The setting is changed.
<table>
<tr><th>Code number</th><th>Setting</th></tr>
<tr><td>0</td><td>0 mm</td></tr>
<tr><td>1</td><td>0.5 mm</td></tr>
<tr><td>2</td><td>1.0 mm</td></tr>
<tr><td>3</td><td>1.5 mm</td></tr>
<tr><td>4</td><td>2.0 mm *Default</td></tr>
<tr><td>5</td><td>2.5 mm</td></tr>
<tr><td>6</td><td>3.0 mm</td></tr>
<tr><td>7</td><td>3.5 mm</td></tr>
<tr><td>8</td><td>4.0 mm</td></tr>
<tr><td>9</td><td>4.5 mm</td></tr>
<tr><td>10</td><td>5.0 mm</td></tr>
</table></td></tr>
<tr><td></td><td>44</td><td>SPF document rear edge read setup + Fax document rear edge scan setup.

When this simulation is executed, the currently set code number is displayed. Enter the desired code number and press the START key, and the display will be changed. The document rear edge scanning area in SPF reduction (less than 100%) copy is changed.

The code number is changeable in the range of 0 – 8.
The default value is 4, and 2 mm of the document rear edge is cut.
When the value is changed by 1, the area is changed by 1 mm.</td></tr>
<tr><td>30</td><td>01</td><td>Paper sensor status display
The paper sensor status is displayed with the lamps on the operation panel.
<table>
<tr><th>Display</th><th>Sensor</th></tr>
<tr><td>Toner cartridge replacement lamp</td><td>Paper detection before resist (PPD1)</td></tr>
<tr><td>JAM lamp</td><td>Fusing section paper detection (PPD2)</td></tr>
<tr><td>Developer cartridge replacement lamp</td><td>Paper exit paper detection (POD)</td></tr>
<tr><td>2nd cassette lamp</td><td>2nd CS paper detection (PPD3)</td></tr>
<tr><td>AE lamp</td><td>Single manual feed paper detection (MFD)</td></tr>
<tr><td>Exposure level 1 (Light) lamp</td><td>Main cassette A4 width detection (PSW1)</td></tr>
<tr><td>Exposure level 5 (Dark) lamp</td><td>2nd cassette A4 width detection (PSW2)</td></tr>
</table></td></tr>
<tr><td>43</td><td>01</td><td>Fusing temperature setup (Normal copy)
(Operation/Procedure)
1. When this simulation is executed, the currently set code number is displayed.
2. Enter the code number and press the START key, and the setting will be changed.
<table>
<tr><th>Code number</th><th>Set temperature (˚C)</th></tr>
<tr><td>0</td><td>175</td></tr>
<tr><td>1</td><td>180</td></tr>
<tr><td>2</td><td>185</td></tr>
<tr><td>3</td><td>190</td></tr>
<tr><td>4</td><td>195 (* Default)</td></tr>
<tr><td>5</td><td>200</td></tr>
</table></td></tr>
<tr><td></td><td>04</td><td>Fusing temperature setup 2
(Operation/Procedure)
1. When this simulation is executed, the currently set code number is displayed.
2. Enter the code number and press the START key, and the setting will be changed.
<table>
<tr><th>Code number</th><th>Set temperature (˚C)</th></tr>
<tr><td>0</td><td>155</td></tr>
<tr><td>1</td><td>160</td></tr>
<tr><td>2</td><td>165</td></tr>
<tr><td>3</td><td>170 (* Default)</td></tr>
<tr><td>4</td><td>175</td></tr>
<tr><td>5</td><td>180</td></tr>
</table></td></tr>
</table>

<table>
<tr><th>Main code</th><th>Sub code</th><th>Content</th></tr>
<tr><td>43</td><td>09</td><td>Postcard size paper fusing control setup
<table>
<tr><th>Code number</th><th>Setup</th></tr>
<tr><td>0</td><td>Cancel (Default)</td></tr>
<tr><td>1</td><td>Setup</td></tr>
</table></td></tr>
<tr><td>46</td><td>01</td><td>Copy density adjustment
(Outline)
Used to adjust the copy density in each copy mode.(The copy density can be set by changing the set value of ASIC GAMMA ADJUST register.)
Setting in each copy mode is performed at exposure level 3. When the copy density (exposure) is adjusted arbitrarily, the max, and min. exposure levels are automatically calculated and set. (The change amounts (gradient, change amount) at level 1 – 5 are predetermined.)
(Operation/Procedure)
1. When this simulation is executed, warming up and shading are performed and the current set value is displayed in two digits.
2. Press the copy mode select key to select each setting mode and setting display.
∗ The copy mode setting is indicated with the following lamps as shown below.
3. Change the setting with the value up-down key and press the START key, and a copy will be made with the entered set value.
4. Press the clear key to store the set value and exit the simulation.
<table>
<tr><th>Copy mode</th><th>Display lamp</th></tr>
<tr><td>AE mode</td><td>AE mode lamp</td></tr>
<tr><td>TEXT mode</td><td>TEXT mode lamp</td></tr>
<tr><td>PHOTO mode</td><td>PHOTO mode lamp</td></tr>
<tr><td>TS mode (TEXT)</td><td>TEXT mode lamp & PHOTO mode lamp</td></tr>
<tr><td>TS mode (AE)</td><td>AE mode lamp & PHOTO mode lamp</td></tr>
</table>
Relationship between the displayed values and the GAMMA ADJUST register
<table>
<tr><th></th><th>Exp1</th><th>Exp2</th><th>Exp3</th><th>Exp4</th><th>Exp5</th></tr>
<tr><td>AE</td><td>–24</td><td>–12</td><td>0</td><td>+12</td><td>+24</td></tr>
<tr><td>TEXT</td><td>–24</td><td>–12</td><td>0</td><td>+12</td><td>+24</td></tr>
<tr><td>PHOTO</td><td>–24</td><td>–12</td><td>0</td><td>+12</td><td>+24</td></tr>
<tr><td>T/S</td><td>–24</td><td>–12</td><td>0</td><td>+12</td><td>+24</td></tr>
</table>
The value displayed after execution of this simulation can be set in the range of 0 – 99 with 50 as the center value.
When the text mode set value is Gat3, for example, the GAMMA ADJUST register value set at Exp1 is:
Text Exp1 = Gat3 – 50 – 24
When 40 is set to Gat3, Text Exp1 = 40 – 50 – 24 = –34
Then set the GAMMA ADJUST register set value to –34.
Perform the same procedure for each mode and each Exp.
∗ The above table may subject to change.
∗ For the gradient, there is a similar table, though not specified here. The value set with SIM 46, however, is not reflected.
∗ The AE mode Exp selection is not specified, but corresponds to the grades for AE exposure selection in the former models.</td></tr>
<tr><td></td><td>19</td><td>γ table setup
When this simulation is executed, the currently set gamma table code number is displayed. Enter the code number corresponding to your desired gamma table and press the PRINT switch, and the setup will be changed.
<table>
<tr><th>Code number</th><th>γ table</th></tr>
<tr><td>1</td><td>Japan</td></tr>
<tr><td>2</td><td>EX Japan</td></tr>
</table></td></tr>
</table>

<table>
<tr><th>Main code</th><th>Sub code</th><th>Content</th></tr>
<tr><td>48</td><td>01</td><td>
Front/rear scan direction
(Outline)
(1) Front/rear scanning direction magnification ratio auto correction: (Performed by changing the set value of ZOOM DATA register for asic.) The width of the reference line marked on the shading correction plate is scanned to perform the front/rear direction magnification ratio adjustment automatically. (Performed by changing the set value of ZOOM DATA register for ASIC.)
(2) Front/rear scanning direction magnification ratio manual correction: Used to set the front/rear (main scanning) direction magnification ratio by key operations. (Performed by changing the set value of ZOOM DATA register for ASIC.)
(3) Scanning direction magnification ratio correction: The scanning direction magnification ratio in the OC mode is set by key operations. (Performed by changing the scanning speed.)
(4) SPF mode scanning direction magnification ratio correction: The scanning direction magnification ratio in the OC mode is set by key operations. (Performed by changing the scanning speed.)
(Operation/Procedure)
1. When this simulation is executed, the current set value is displayed in two digits. (Center value: 50)
2. When the copy mode select key is pressed, the setting mode and the setting display are changed sequentially.
∗ The selected adjustment mode is indicated by the lamps as follows:
3. In the front/rear scanning direction adjustment, when the START key is pressed, the mirror base unit moves to the white plate for shading and the width of the reference line is read and the correction value is calculated and displayed and the value is stored.
In the case of the manual adjustment, enter the adjustment value with the 10-key and press the START key. Then the entered value is stored and a copy is made. (An increase of 1 in the set value corresponds to an increase of 0.1mm.)
4. Press the clear key to store the set value and exit the simulation.
<table>
<tr><th>Adjustment mode</th><th>Lamps ON</th></tr>
<tr><td>Front/rear direction magnification ratio auto correction</td><td>AE lamp</td></tr>
<tr><td>Front/rear direction magnification ratio manual correction</td><td>TEXT lamp</td></tr>
<tr><td>Scanning direction magnification ratio correction</td><td>PHOTO lamp</td></tr>
<tr><td>SPF mode scanning direction magnification ratio correction</td><td>AE, TEXT, PHOTO lamps</td></tr>
</table>
In the front-rear direction magnification ratio correction:
(1) The result of calculation of the scan correction value is ±5% or less, “- -” is displayed.
(Cause) The white plate reference position error or the lens unit installing error
(2) In case of a scanning error of the reference line, the JAM lamp is turned on.
(Cause) CCD error or no white plate
∗) If the automatic correction of magnification ratio does not work properly, adjust and correct manually.
</td></tr>
<tr><td>50</td><td>01</td><td>
Lead edge image position adjustment + Paper lead edge/rear edge void adjustment
(Outline)
This adjustment is used to adjust the copy image position and lead edge/rear edge void amount on the copy paper by adjusting the image scan start position and the print start position (resist roller ON timing) at 100%.
(Operation/Procedure)
1. When this simulation is executed, the currently set value is displayed in two digits. (Center value: 50)
2. When the copy mode select key is pressed, each setting mode and the display are changed.
∗ The selected adjustment mode is indicated by the lamps as shown in the table below.
3. Enter the adjustment value with the 10-key and press the start key. The set value is stored and a copy is made. (When the set value is increased by 1, the void amount is shifted by 0.1 mm.)
4. When the clear key is pressed, the set value is stored and the simulation mode is terminated.
<table>
<tr><th>Adjustment mode</th><th>Lighting lamps</th></tr>
<tr><td>Print start position (Main cassette)</td><td>AE, Main cassette lamps</td></tr>
<tr><td>Print start position (2nd cassette)</td><td>AE, 2nd lamps</td></tr>
<tr><td>Print start position (Manual paper feed)</td><td>AE, Manual feed lamps</td></tr>
<tr><td>Image lead edge void quantity</td><td>TEXT lamp</td></tr>
<tr><td>Image scan start position</td><td>PHOTO lamp</td></tr>
<tr><td>Image rear edge void quantity</td><td>AE, TEXT, PHOTO lamps</td></tr>
<tr><td>SPF image scan start position</td><td>AE, TEXT lamps</td></tr>
</table>
</td></tr>
</table>

<table>
<tr><th>Main code</th><th>Sub code</th><th>Content</th></tr>
<tr><td>50</td><td>01</td><td>
(Adjustment method)
1. Set the print start position (A: AE ON), the lead edge void amount (B: TEXT ON), the scanning start position (C: PHOTO ON) to zero and make a copy of a scale at 100%.
2. Measure the image loss R (mm) of the scale.
Set as C = 10 × R (mm). (Example: Set to 30.)
∗ When C is increased by 10, the image loss is decreased by 1 mm. (Default: 5)
3. Measure the distance H (mm) from the paper lead edge to the image print start position.
Set as A = 10 × R (mm). (Example: Set to 50.)
∗ When the value of A is increased by 10, the image lead edge is shifted toward the paper lead edge by 1 mm. (Default: 50)
4. Set the lead edge void amount as B = 50 (2.5 mm). (Default: 50)
∗ When the value of B is increased by 10, the void is increased by about 1 mm.
(For 25 or less, however, the void amount becomes zero.)
(Example)
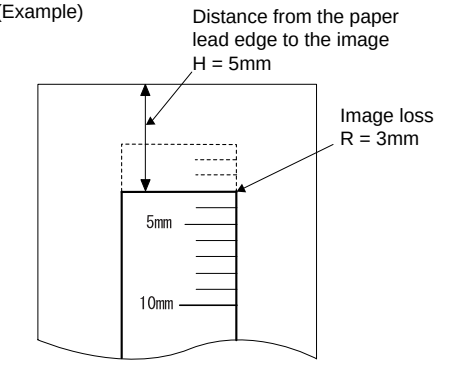

☆ The SPF adjustment is made by adjusting the SPF image scan start position immediately after turning on the power.
</td></tr>
<tr><td></td><td>10</td><td>
Paper center offset + OC/Document center offset + SPF document center offset
(Outline)
The center offset position of copy image on the copy paper and that of document scan are adjusted by adjusting the scan left margin of ASIC and the print left margin register set value.
(Operation/Procedure)
1. When this simulation is executed, the currently set value is displayed.
2. For a machine with a multi manual paper feed unit installed, when the copy mode select key is pressed, each set mode and display are changed.
For a machine with a single manual paper feed unit installed, when the copy mode select key is pressed, each set mode and display are changed.

☆ Machine with a multi manual paper feed unit
<table>
<tr><th>Adjustment mode</th><th>Display lamp</th></tr>
<tr><td>Print center offset (Main cassette paper feed)</td><td>AE, main cassette lamp</td></tr>
<tr><td>Print center offset (2nd cassette paper feed)</td><td>AE, 2nd cassette lamp</td></tr>
<tr><td>Print center offset (Manual paper feed)</td><td>AE, Manual paper feed lamp</td></tr>
<tr><td>OC/Document center offset</td><td>AE, TEXT lamp</td></tr>
<tr><td>SPF/Document center offset</td><td>AE, TEXT, PHOTO lamp</td></tr>
</table>

☆ Machine with a single manual paper feed unit
<table>
<tr><th>Adjustment mode</th><th>Display lamp</th></tr>
<tr><td>Print center offset (Main cassette paper feed)</td><td>AE, Main cassette lamp</td></tr>
<tr><td>Print center offset (Manual paper feed)</td><td>AE lamp (Blinking)</td></tr>
<tr><td>OC/Document center offset</td><td>AE, TEXT lamp</td></tr>
<tr><td>SPF/Document center offset</td><td>AE, TEXT, PHOTO lamp</td></tr>
</table>
</td></tr>
<tr><td>51</td><td>02</td><td>
Resist quantity adjustment
Used to adjust the contact pressure of paper onto the copier resist roller.
(Operation/Procedure)
1. When this simulation is executed, the currently set value is displayed.
2. In a machine with the multi paper feed unit installed, press the copy mode select key, and each setting mode and display are changed sequentially.
In a machine with the single paper feed unit installed, press the copy mode select key, and each setting mode and display are changed sequentially.
∗ The selected adjustment mode is indicated by the lamps as follows:
3. Enter the adjustment value with the 10-key and press the SORT key. Then the set value is stored and a copy is made.
4. Press the clear key to store the set value and exit the simulation.
</td></tr>
</table>

<table>
<tr><th>Main code</th><th>Sub code</th><th>Content</th></tr>
<tr><td>51</td><td>02</td><td>
＊ Machine with the multi manual paper feed
<table>
<tr><th>Adjustment mode</th><th>Display lamp</th></tr>
<tr><td>Main cassette paper feed</td><td>AE, Main cassette lamp</td></tr>
<tr><td>2nd cassette paper feed</td><td>AE, 2nd cassette lamp</td></tr>
<tr><td>Manual paper feed</td><td>AE, Manual paper feed lamp</td></tr>
</table>
＊ Machine with the single manual paper feed
<table>
<tr><th>Adjustment mode</th><th>Display lamp</th></tr>
<tr><td>Main cassette paper feed</td><td>AE, Main cassette lamp</td></tr>
<tr><td>Manual paper feed</td><td>AE blinking (Main cassette lamp ON)</td></tr>
</table>
</td></tr>
<tr><td></td><td>06</td><td>
SPF exposure correction
(Outline)
The SPF exposure correction amount is adjusted by adjusting the change in Vref voltage for the OC mode.
(Operation/Procedure)
1. When this simulation is executed, the currently set value is displayed.
2. Enter the adjustment value with the 10-key and press the start key. The entered value is stored and a copy is made.
＊ When the adjustment value is changed by 1, the D/A output is changed by +1 digit (dark) for OC exposure. When it is changed by –1, the output is changed by –1 digit (light).
3. When the clear key is pressed, the entered value is stored and the simulation mode is terminated.
</td></tr>
<tr><td>61</td><td>03</td><td>
Polygon motor check (HSYNC output check)
(Operation/Procedure)
When the START key is pressed, HSYNC is performed and the polygon motor is rotated for 30 sec.
At that time, the Zoom lamp is lighted for 100msec every time when HSYNC is detected.
</td></tr>
<tr><td>63</td><td>01</td><td>
Shading check
(Outline)
Used to display the detection level of the white plate for shading. (Vref of AD conversion IC is fixed.)
(Operation/Procedure)
When the START key is pressed, the mirror base unit moves to the white plate for shading and Vref+ voltage of AD conversion IC is set to 4.5V and Vref- voltage to 0.5V, and the copy lamp is lighted.
This state is kept for 10 sec, and the level of one pixel at the center is detected every second to display on the value display section.
</td></tr>
<tr><td>64</td><td>1</td><td>
Self print only with the engine (1 by 2 mode)
(Outline)
Used to print in the 1 by 2 mode by ignoring the state of the optical system.
(Operation/Procedure)
1. When this simulation is executed, warming up is made and the ready lamp is lighted.
2. Select with the cassette select key and press the start key. Paper is fed from the selected cassette and printing is performed.
In the 1 by 2 mode, one line is printed and two lines are not printed.
</td></tr>
</table>

Main code	Sub code	Content
67	14	PCL PWB program download Used to download the control program for PCL PWB. (Operating procedure) 1. Download procedure 1) Enter the simulation code, and the Ready LED will light up and the On-line LED will go off. 2) Press the PRINT switch, and the Ready LED will go off and the Flash ROM data will be deleted. 3) After completion of deletion, the On-line LED lights up. 4) Get your PC into the DOS mode and execute "COPY /Bxxx.BIN LPT1", and downloading will be started and the On-line LED will blink. 5) After completion of downloading, execute SUM check. If there is no problem, the On-line LED will go off and the Ready LED will light up. If there is any problem, "F9-10:PCL PWB trouble" is displayed. 6) Turn OFF/ON the power. 2. In case of a fail in downloading, turn OFF/ON the power and perform procedure 1. 3. Items required for Flash downloading 1) PC 2) Parallel cable 3) Program data file

4. TROUBLE CODES

A. Trouble codes list

Main code	Sub code	Trouble content	Detail of trouble
E7	03	HSYNC not detected.	LSU (laser diode, reception element, APC circuit) trouble LSU drive circuit (ASIC) trouble
E7	04	CCD white level trouble	CCD drive circuit (CCD PWB, ASIC harness) trouble Copy lamp lighting trouble (Copy lamp, invertor PWB)
E7	05	CCD black level trouble	CCD drive circuit (CCD PWB, ASIC, harness) trouble
E7	12	Shading trouble (White correction)	Dirt on white plate for scanning white level
E7	14	ASIC connection trouble	Improper connection between CPU and ASIC (pattern cut, improper connection of lead pin)
E7	15	Copy lamp disconnection trouble	Copy lamp or copy lamp drive circuit (invertor PWB) trouble Copy lamp disconnection
E7	16	Abnormal output of laser	LSU (laser diode, reception element, APC circuit) trouble LSU drive circuit (ASIC) trouble
L1	00	Feeding is not completed within the specified time after starting feeding.	When the mirror base is returned for the specified time (6 sec) in mirror initializing after turning on the power, the mirror home position sensor (MHPS) does not turn OFF. Or when the mirror base is fed for the specified time (about 6 sec) after start of copy return, the mirror home position sensor (MHPS) does not turn OFF.
L3	00	Return is not completed within the specified time.	When the mirror base is returned for the specified time (6 sec) in mirror initializing after turning on the power, the mirror home position sensor (MHPS) does not turn ON. Or when the mirror base is returned for the specified time (about 6 sec) after start of copy return, the mirror home position sensor (MHPS) does not turn ON.
L4	01	Main motor lock	When the main motor encoder pulse is not detected for 100msec.
L6	10	Polygon motor lock	The lock signal (specified rpm signal) does not return within a certain time (about 20sec) from starting the polygon motor rotation
H2	00	Thermistor open detection	The fusing thermistor is open.
H3	00	Heat roller abnormally high temperature	The fusing temperature rises above 240°C.
H4	00	Heat roller abnormally low temperature	The fusing temperature does not reach 185°C within 27sec of turning on the power, or the fusing temperature keeps at 140°C.
U2	01	Counter sum check error	When the counter check sum value stored in the EEPROM is abnormal.
U2	04	EEPROM serial communication error	When a communication trouble occurs with the EEPROM.

[11] USER PROGRAM

The conditions of factory setting can be changed according to the use conditions.

Functions which can be set with the user program

Function	Contents	Factory setting
Auto clear time	● When a certain time is passed after completion of copying, this function returns to the initial state automatically. The time to reach the initial state can be set in the range of 30 sec to 120 sec by the unit of 30 sec. This function can be disabled.	60 sec
Preheat	● When the copier is left unused with the power ON, the power consumption is automatically reduced to about 40Wh/H (∗ Note). The time to start this function can be set in the range of 30 sec to 90 sec by the unit of 30 sec. This function cannot be disabled. ● When this function is operated, the pre-heat lamp on the operation panel lights up. To return to the initial state, press any key on the operation panel. (When the COPY button is pressed, a copy is made after returning to the initial state.)	90 sec
Auto shut off timer	● When the copier is left unused with the power ON, the power consumption is automatically reduced to about 18Wh/H (∗ Note). The time to start this function can be set in the range of 2 min to 120 min. ● When this function is operated, all the lamps except for the pre-heat lamp on the operation panel turn off. To return to the initial state, press the COPY button.	5 min
Stream feeding	Only models with SPF.	Cancel
Auto shut off	● Used to set or cancel this function.	Set

∗Note: The power consumption values in preheat and auto shut off may be varied depending on the use conditions.

Setting the power save modes, auto clear time, and stream feeding mode

1) Press and hold down the light (◁) and dark (▷) keys simultaneously for more than 5 seconds until all the alarm indicators (☼ , ⚡ , ⁂ and 🚶) blink and "- -" appears in the display.
2) Use the left copy quantity (▲) key to select a user program number (1: auto clear time, 2: preheat mode, 3: auto power shut-off timer, 4: stream feeding mode, 5: auto power shut-off mode). The selected number will blink in the left side of the display.

Function name	Function code
Auto clear time	1
Preheat	2
Auto shut off timer	3
Stream feeding	4*
Auto shut off	5

[Cancel] If a wrong code is entered, press the clear key and enter the correct function code.

∗ SPF only

3) Press the print (◇) key. The entered program number will be steadily lit and the currently selected parameter number for the program will blink on the right side of the display.
4) Select the desired parameter using the right copy quantity (▲) key. The entered parameter number will blink on the right of the display.

Function name	Set code	Function name	Set code	Function name	Set code	Function name	Set code	Function name	Set code
Auto clear time	0 (Cancel)	Preheat	0 (30 sec)	Auto shut off timer	0 (2 min)	Stream feeding	∗0 (Cancel)	Auto shut off	0 (Cancel)
	1 (30 sec)		1 (60 sec)		∗1 (5 min)		1 (Setting)		∗1 (Setting)
	∗2 (60 sec)		∗2 (90 sec)		2 (15 min)				
	3 (90 sec)				3 (30 min)				
	4 (120 sec)				4 (60 min)				
	5 (10 sec)				5 (120 min)				

∗ : Factory setting

5) Press the print (◇) key. The right-hand number in the display will be steadily lit and the entered value will be stored.
Note: To change the setting or to set another mode, press the clear (C) key. The copier will return to step 2).
6) Press the light (◁) or dark (▷) key to return to the normal copy mode.

[12] MAINTENANCE

1. Maintenance table

×: Check (Clean, adjust, or replace when required.) ○ : Clean ▲: Replace △ : Adjust ☆: Lubricate

Section	Parts	25K	50K	75K	100K	125	Remark
Developing	Developer	▲	▲	▲	▲	▲	
	DV blade	○	▲	○	▲	○	
	DV side seal (F/R)	○	▲	○	▲	○	
Process peripheral	Drum	▲	▲	▲	▲	▲	

2. Maintenance display system

Developer	Life	25K
	LED	ON at 25K of the developer count.
	Machine	Selection is available between Not Stop and Stop by Service Simulation (SIM 26-37) Setup. (If Stop is selected, the LED will flash and stop at 25K.) * Default: Not Stop * Clear: SIM 24-06
Maintenance	LED	Selection is available among 18K, 13K, 9K, 6K, 3K, and free (no lighting) with SIM 21-1. * Default: free * Clear: SIM 20-1
	Machine	Not stop.

*1: Installation of a new toner cartridge allows to display the remaining quantity.

[13] ELECTRICAL SECTION

1. Block diagram

A. Overall block diagram

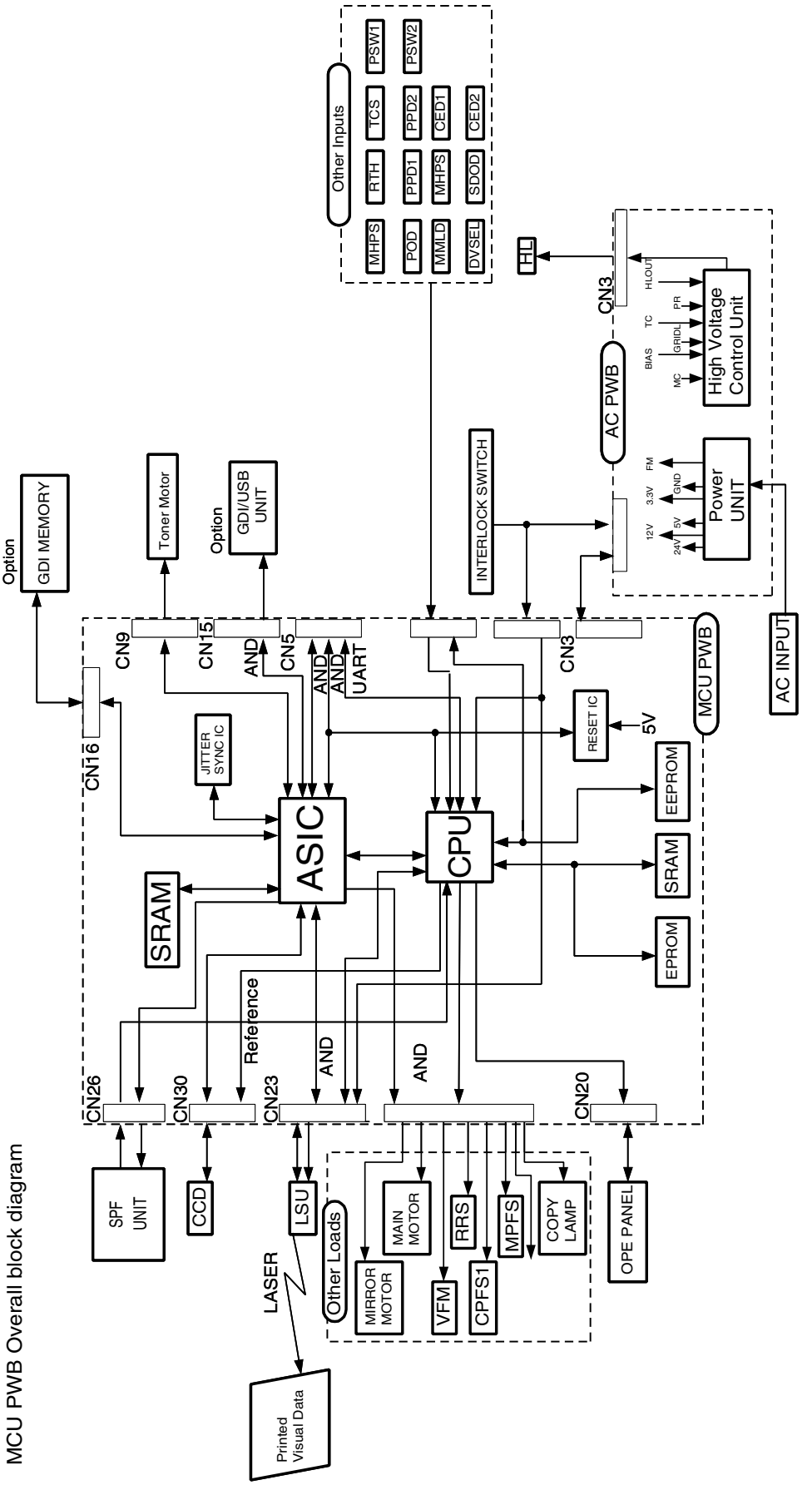

B. MCU PWB unit

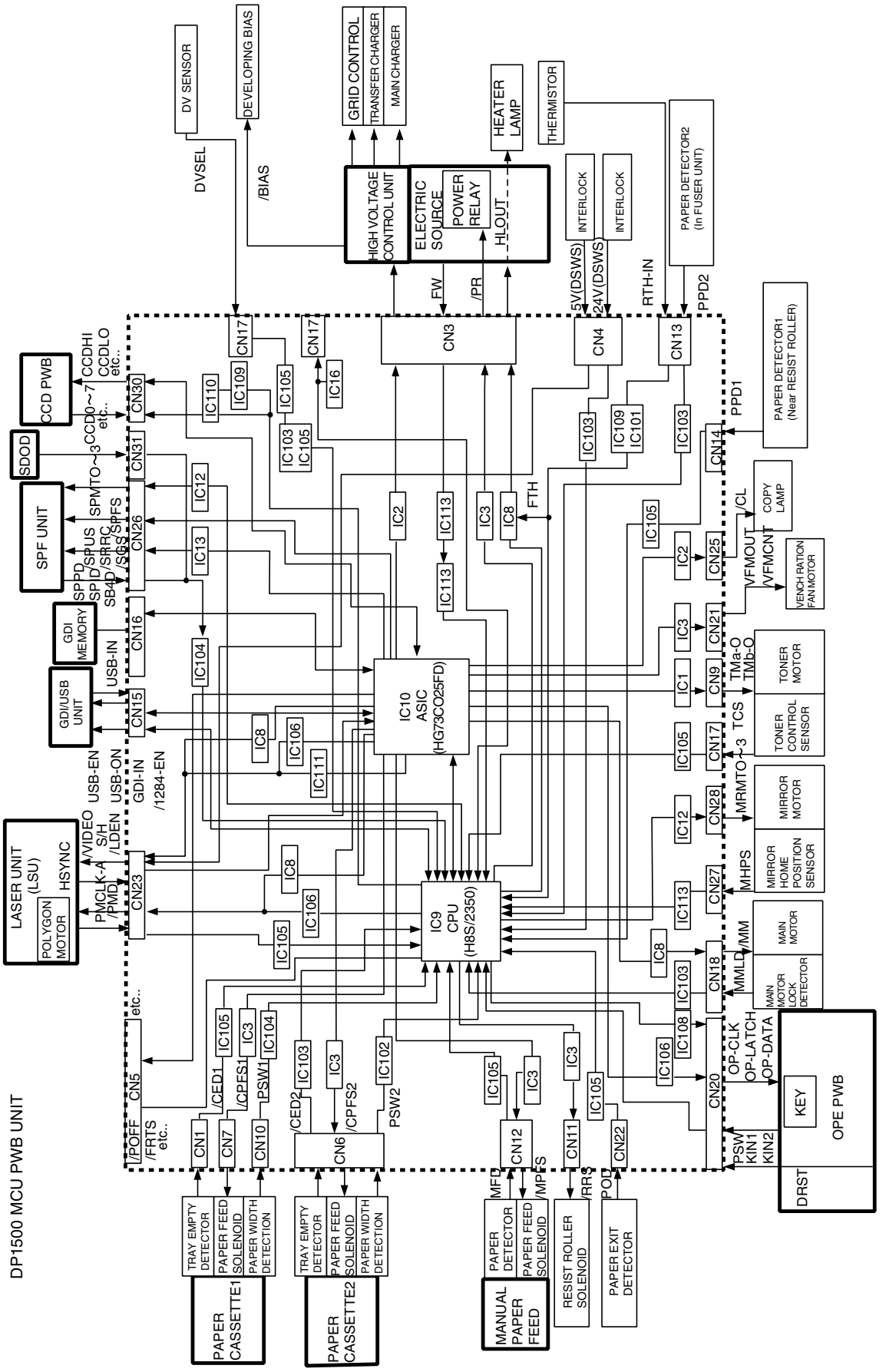

2. Circuit descriptions

A. Man PWB (MCU)

(1) CPU signal table

PIN No.	Signal code	Input/output	Operating
1	/CS1	Output	Chip Select for SRAM
2	/CS0	Output	Chip Select for EPROM
3			D-GND
4			D-GND
5			5V
6	A0	Output	Address Bus (NC-pull up)
7	A1	Output	Address Bus
8	A2	Output	Address Bus
9	A3	Output	Address Bus
10			D-GND
11	A4	Output	Address Bus
12	A5	Output	Address Bus
13	A6	Output	Address Bus
14	A7	Output	Address Bus
15	A8	Output	Address Bus
16	A9	Output	Address Bus
17	A10	Output	Address Bus
18	A11	Output	Address Bus
19			D-GND
20	A12	Output	Address Bus
21	A13	Output	Address Bus
22	A14	Output	Address Bus
23	A15	Output	Address Bus
24	A16	Output	Address Bus
25	A17	Output	Address Bus
26	A18	Output	Address Bus
27	A19	Output	Address Bus (NC-pull up)
28			D-GND
29	A20	Output	Address Bus (NC-pull up)
30			NC-pull up
31	(SPPD)	Interruption level input	SPF Paper Pass Detector
32	USB-IN	Input	USB Connector-In Detect
33	(MHPS)	Interruption level input	Mirror Home Position Sensor
34	/CPU SYNC	Interruption level input	Horizontal Synchronous (from G/A)
35			D-GND
36			D-GND
37	ZC	Interruption level input	Zero-cross signal
38	/ASICINT	Interruption level input	Intterupt from G/A

PIN No.	Signal code	Input/output	Operating
39			5V
40	D0	Data input/output	Data Bus
41	D1	Data input/output	Data Bus
42	D2	Data input/output	Data Bus
43	D3	Data input/output	Data Bus
44			D-GND
45	D4	Data input/output	Data Bus
46	D5	Data input/output	Data Bus
47	D6	Data input/output	Data Bus
48	D7	Data input/output	Data Bus
49	D8	Data input/output	Data Bus
50	D9	Data input/output	Data Bus
51	D10	Data input/output	Data Bus
52	D11	Data input/output	Data Bus
53			D-GND
54	D12	Data input/output	Data Bus
55	D13	Data input/output	Data Bus
56	D14	Data input/output	Data Bus
57	D15	Data input/output	Data Bus
58			5V
59	(OP-DATA)	Output	Data Signal for Operation Panel
60	FTXD	Output	TXD for Additional Board
61	FRTS	Output	RTS for Additional Board
62	FRXD	Input	RXD for Additional Board
63	(OP-CLK)	Output	Clock for Operation Panel
64	TMON	Output	Power Supply Signal for Toner Motor Driver IC
65			D-GND
66	FCTS	Input	CTS for Additional Board
67			D-GND
68			D-GND

PIN No.	Signal code	Input/output	Operating
69	PSW	Input	Print switch input
70	KIN1	Input	Key input 1
71	KIN2	Input	Key input 2
72	TMCLK	Timer output	Clock for Toner Motor
73	/TMEN	Output	On-Off Control for Toner Motor
74	/POFF	Output	Power Off Signal for Additional Board
75	PMCLK	Timer output	Clock for Polygon Motor
76	/PRSTART	Output	Printing Start Signal
77	/SCANSP	Output	Scaning Stop Signal
78	/SCANST	Output	Scaning Start Signal
79	HL	Output (Timer output)	On-Off Control for Heatrer Lamp
80	WDTOVF-	Output	Watchdog Timer
81	RES-	Input	Reset
82		Input	pull up
83		Input	pull up
84			5V
85	XTAL		Clock
86	EXTAL		Clock
87			D-GND
88	CPUCLK	Output	System Clock for G/A
89			5V
90	/AS	Output	pull up
91	/RD	Output	Read Signal
92	/HWR	Output	Write Signal (High Address)
93	/LWR	Output	Write Signal (Low Address)
94	SELIN3	Output	Input select 3
95	SELIN2	Output	Input select 2
96	SELIN1	Output	Input select 1
97	PR	Output	Power relay control PR
98	RRS	Output	Resist roller solenoid RPC
99			D-GND
100			D-GND
101	SCLK	Output	Clock Line for EEPROM
102	SDA	Output	Data Line for EEPROM
103			A5V
104			Analog Reference Voltage-A5V
105	RTH	Analog input	Fusing Thermister
106			
107	SIN1	Input	Sensor input 1
108	SIN2	Input	Sensor input 2
109	SIN3	Input	Sensor input 3
110	SIN4	Input	Sensor input 4
111	DAH	Analog output	Reference Voltage (High) for CCD
112	DAL	Analog output	Reference Voltage (Low) for CCD
113			AN-GND
114			D-GND
119	MRMT3	Motor output	Mirror Motor Excitement
120	MRMT2	Motor output	Mirror Motor Excitement
121	MRMT1	Motor output	Mirror Motor Excitement
122	MRMT0	Motor output	Mirror Motor Excitement
123		Input	CPU MODE SET <MODE 4> - GND
124		Input	CPU MODE SET <MODE 4> - GND
125		Input	CPU MODE SET <MODE 4> - Vcc
126			NC-pull up
127	DRST	Input	Drum reset detection
128	/CS2	Output	Chip Select for ASIC

* The signals which are hatched are added or revised to or from the e-STUDIO.

(2) ASIC (Signal table)

PIN No.	Signal name	IN/OUT	Connected to	Description
1	/SCANSP	IN	CPU (I/O)	Scanner process interrupt signal
2	/PRSTART	IN	CPU	Print start trigger signal
3	/TMEN	IN	CPU	Toner motor ON/OFF
4	TMCLK	IN	CPU	Toner motor reference clock
5	3.3V	Power		
6	CPUAD7	IN	CPU	CPU address bus
7	CPUAD6	IN	CPU	CPU address bus
8	GND	Power		
9	CPUAD5	IN	CPU	CPU address bus
10	CPUAD4	IN	CPU	CPU address bus
11	CPUAD3	IN	CPU	CPU address bus
12	CPUAD2	IN	CPU	CPU address bus
13	CPUAD1	IN	CPU	CPU address bus
14	/CPUSYNC	OUT	CPU	Horizontal synchronization signal
15	/ASICINT	OUT	CPU	Interruption request signal
16	/CS2	IN	CPU	CPU chip select signal
17	/RESET	IN	RESET IC	Reset signal
18	5V	Power		
19	GND	Power		
20	3.3V	Power		
21	GND	Power		
22	MDATA15	IN/OUT	DRAM	Data bus of DRAM (page memory)
23	MDATA14	IN/OUT	DRAM	Data bus of DRAM (page memory)
24	MDATA13	IN/OUT	DRAM	Data bus of DRAM (page memory)
25	MDATA12	IN/OUT	DRAM	Data bus of DRAM (page memory)
26	MDATA11	IN/OUT	DRAM	Data bus of DRAM (page memory)
27	MDATA10	IN/OUT	DRAM	Data bus of DRAM (page memory)
28	MDATA9	IN/OUT	DRAM	Data bus of DRAM (page memory)
29	MDATA8	IN/OUT	DRAM	Data bus of DRAM (page memory)
30	MDATA7	IN/OUT	DRAM	Data bus of DRAM (page memory)
31	3.3V	Power		
32	MDATA6	IN/OUT	DRAM	Data bus of DRAM (page memory)
33	MDATA5	IN/OUT	DRAM	Data bus of DRAM (page memory)
34	GND	Power		
35	MDATA4	IN/OUT	DRAM	Data bus of DRAM (page memory)
36	MDATA3	IN/OUT	DRAM	Data bus of DRAM (page memory)
37	MDATA2	IN/OUT	DRAM	Data bus of DRAM (page memory)
38	MDATA1	IN/OUT	DRAM	Data bus of DRAM (page memory)
39	MDATA0	IN/OUT	DRAM	Data bus of DRAM (page memory)
40	/RAS0	OUT	DRAM	RAS signal 0 of DRAM (page memory)
41	/RAS1	OUT	DRAM	RAS signal 1 of DRAM (page memory)
42	/RAS2	OUT	DRAM	RAS signal 2 of DRAM (page memory)
43	/RAS64	OUT	DRAM control (for panther)	(Reserved)
44	3.3V	Power		
45	/RAS16	OUT	DRAM control (for panther)	(Reserved)
46	MAD0	OUT	DRAM	Address bus of DRAM (page memory)

PIN No.	Signal name	IN/OUT	Connected to	Description
47	GND	Power		
48	MAD1	OUT	DRAM	Address bus of DRAM (page memory)
49	MAD2	OUT	DRAM	Address bus of DRAM (page memory)
50	MAD3	OUT	DRAM	Address bus of DRAM (page memory)
51	MAD4	OUT	DRAM	Address bus of DRAM (page memory)
52	MAD5	OUT	DRAM	Address bus of DRAM (page memory)
53	MAD6	OUT	DRAM	Address bus of DRAM (page memory)
54	MAD7	OUT	DRAM	Address bus of DRAM (page memory)
55	MAD8	OUT	DRAM	Address bus of DRAM (page memory)
56	MAD9	OUT	DRAM	Address bus of DRAM (page memory)
57	3.3V	Power		
58	MAD10	OUT	DRAM	Address bus of DRAM (page memory)
59	MAD11	OUT	DRAM	Address bus of DRAM (page memory)
60	GND	Power		
61	/CAS0	OUT	DRAM	CAS signal of DRAM (page memory)
62	/CAS1	OUT	DRAM	CAS signal of DRAM (page memory)
63	/OE	OUT	DRAM	Read enable signal of DRAM (page memory)
64	/WE	OUT	DRAM	Write enable signal of DRAM (page memory)
65	OUTD0	OUT	FAX board data bus	Transmission data 0 to expanded board
66	OUTD1	OUT	FAX board data bus	Transmission data 1 to expanded board
67	OUTD2	OUT	FAX board data bus	Transmission data 2 to expanded board
68	OUTD3	OUT	FAX board data bus	Transmission data 3 to expanded board
69	3.3V	Power		
70	OUTD4	OUT	FAX board data bus	Transmission data 4 to expanded board
71	OUTD5	OUT	FAX board data bus	Transmission data 5 to expanded board
72	GND	Power		
73	OUTD6	OUT	FAX board data bus	Transmission data 6 to expanded board
74	OUTD7	OUT	FAX board data bus	Transmission data 7 to expanded board
75	OUTD8	OUT	FAX board data bus	Transmission data 8 to expanded board
76	OUTD9	OUT	FAX board data bus	Transmission data 9 to expanded board
77	OUTD10	OUT	FAX board data bus	Transmission data 10 to expanded board
78	OUTD11	OUT	FAX board data bus	Transmission data 11 to expanded board
79	OUTD12	OUT	FAX board data bus	Transmission data 12 to expanded board
80	OUTD13	OUT	FAX board data bus	Transmission data 13 to expanded board
81	OUTD14	OUT	FAX board data bus	Transmission data 14 to expanded board
82	OUTD15	OUT	FAX board data bus	Transmission data 15 to expanded board
83	/HSYNC	OUT	PCL, FAX board	Horizontal sync signal with print area output only
84	/PCLPRD	IN	PCL board	Print video data (serial) from PCL board
85	/PCLREQ	OUT	PCL board	DREQ signal to PCL board
86	/PCLACK	IN	PCL board	ACK signal from PCL board
87	/PCLCS	IN	PCL board	
88	3.3V	Power		
89	GND	Power		
90	5V	Power		
91	GND	Power		
92	/FAXPRD	IN	FAX board	Print video data (serial) from FAX board
93	/FAXREQ	OUT	FAX board	DREQ signal to FAX board
94	/FAXACK	IN	FAX board	ACK signal from FAX board
95	3.3V	Power		

PIN No.	Signal name	IN/OUT	Connected to	Description
96	/FAXCS	IN	FAX board	OUTD bus enable signal H bus impedance HIGH state
97	/ESPRD	IN	Electric sort board * (Reserved)	(Reserved)
98	GND	Power		
99	/ESREQ	OUT	Electric sort board * (Reserved)	(Reserved)
100	/ESACK	IN	Electric sort board * (Reserved)	(Reserved)
101	/ESCS	IN	Electric sort board * (Reserved)	(Reserved)
102	PARAD0	IN/OUT	1284 board connector	DATA bus (IEEE1284 communication port)
103	PARAD1	IN/OUT	1284 board connector	DATA bus (IEEE1284 communication port)
104	PARAD2	IN/OUT	1284 board connector	DATA bus (IEEE1284 communication port)
105	PARAD3	IN/OUT	1284 board connector	DATA bus (IEEE1284 communication port)
106	PARAD4	IN/OUT	1284 board connector	DATA bus (IEEE1284 communication port)
107	PARAD5	IN/OUT	1284 board connector	DATA bus (IEEE1284 communication port)
108	5V	Power		
109	PARAD6	IN/OUT	1284 board connector	DATA bus (IEEE1284 communication port)
110	PARAD7	IN/OUT	1284 board connector	DATA bus (IEEE1284 communication port)
111	GND	Power		
112	/REV	OUT	1284 board connector	ECP mode I/O select (LOW:P → H)
113	INIT	IN	1284 board connector	INIT signal (IEEE1284 communication port)
114	/SLCTIN	IN	1284 board connector	/SLCTIN signal (IEEE1284 communication port)
115	/AUTOFD	IN	1284 board connector	/AUTOFD signal (IEEE1284 communication port)
116	/STB	IN	1284 board connector	/STB signal (IEEE1284 communication port)
117	/ACK	OUT	1284 board connector	/ACK signal (IEEE1284 communication port)
118	BUSY	OUT	1284 board connector	BUSY signal (IEEE1284 communication port)
119	PE	OUT	1284 board connector	PE signal (IEEE1284 communication port)
120	/FAULT	OUT	1284 board connector	/FAULT signal (IEEE1284 communication port)
121	5V	Power		
122	SLCT	OUT	1284 board connector	/SLCTIN signal (IEEE1284 communication port)
123	/TESTPIN0	IN	TEST PIN	High: Normal Low: Test
124	GND	Power		
125	PFCLK	IN	Transmitter	Write clock
126	/TESTPIN1	IN	TEST PIN	High: Normal Low: Test
127	/SYNCEN	OUT	JITTER ADJUSTMENT IC	Jitter adjustment IC trigger signal
128	SD10	IN/OUT	SRAM (separation)	Data line to SRAM before are separation
129	SD11	IN/OUT	SRAM (separation)	Data line to SRAM before are separation
130	SD12	IN/OUT	SRAM (separation)	Data line to SRAM before are separation
131	SD13	IN/OUT	SRAM (separation)	Data line to SRAM before are separation
132	SD14	IN/OUT	SRAM (separation)	Data line to SRAM before are separation
133	5V	Power		
134	SD15	IN/OUT	SRAM (separation)	Data line to SRAM before are separation
135	SD16	IN/OUT	SRAM (separation)	Data line to SRAM before are separation
136	GND	Power		
137	SD17	IN/OUT	SRAM (separation)	Data line to SRAM before are separation
138	SOE1	OUT	SRAM (separation)	Read enable line to SRAM before area separation
139	SWE1	OUT	SRAM (separation)	Write enable line to SRAM before area separation
140	SCS1	OUT	SRAM (separation)	Chip select line to SRAM before area separation

PIN No.	Signal name	IN/OUT	Connected to	Description
141	SOE0	OUT	SRAM (separation)	Read enable line to SRAM before area separation
142	SWE0	OUT	SRAM (separation)	Write enable line to SRAM before area separation
143	SCS0	OUT	SRAM (separation)	Chip select line to SRAM before area separation
144	SD00	IN/OUT	SRAM (separation)	Data line to SRAM before are separation
145	SD01	IN/OUT	SRAM (separation)	Data line to SRAM before are separation
146	5V	Power		
147	SD02	IN/OUT	SRAM (separation)	Data line to SRAM before are separation
148	SD03	IN/OUT	SRAM (separation)	Data line to SRAM before are separation
149	GND	Power		
150	SD04	IN/OUT	SRAM (separation)	Data line to SRAM before are separation
151	SD05	IN/OUT	SRAM (separation)	Data line to SRAM before are separation
152	SD06	IN/OUT	SRAM (separation)	Data line to SRAM before are separation
153	SD07	IN/OUT	SRAM (separation)	Data line to SRAM before are separation
154	SAD0	OUT	SRAM (separation)	Address line to SRAM before area separation
155	SAD1	OUT	SRAM (separation)	Address line to SRAM before area separation
156	SAD2	OUT	SRAM (separation)	Address line to SRAM before area separation
157	SAD3	OUT	SRAM (separation)	Address line to SRAM before area separation
158	SAD4	OUT	SRAM (separation)	Address line to SRAM before area separation
159	SAD5	OUT	SRAM (separation)	Address line to SRAM before area separation
160	SAD6	OUT	SRAM (separation)	Address line to SRAM before area separation
161	SAD7	OUT	SRAM (separation)	Address line to SRAM before area separation
162	GND	Power		
163	SAD8	OUT	SRAM (separation)	Address line to SRAM before area separation
164	SAD9	OUT	SRAM (separation)	Address line to SRAM before area separation
165	SAD10	OUT	SRAM (separation)	Address line to SRAM before area separation
166	SAD11	OUT	SRAM (separation)	Address line to SRAM before area separation
167	SAD12	OUT	SRAM (separation)	Address line to SRAM before area separation
168	SAD13	OUT	SRAM (separation)	Address line to SRAM before area separation
169	/f1	OUT	CCD PWB	CCD drive signal transfer clock (First phase)
170	/f2	OUT	CCD PWB	CCD drive signal transfer clock (Second phase)
171	/SH	OUT	CCD PWB	CCD drive signal shift pulse
172	5V	Power		
173	RS	OUT	CCD PWB	CCD drive signal reset pulse
174	SP	OUT	CCD PWB	CCD drive signal sampling hold pulse
175	GND	Power		
176	CP	OUT	CCD PWB	A/D conversion IC latch clock
177	BCLK	OUT	CCD PWB	CCD shield output latch signal
178	IDIN0	IN	CCD PWB (AD conversion)	Image scan data (after 8bit A/D conversion)
179	IDIN1	IN	CCD PWB (AD conversion)	Image scan data (after 8bit A/D conversion)
180	IDIN2	IN	CCD PWB (AD conversion)	Image scan data (after 8bit A/D conversion)
181	IDIN3	IN	CCD PWB (AD conversion)	Image scan data (after 8bit A/D conversion)
182	IDIN4	IN	CCD PWB (AD conversion)	Image scan data (after 8bit A/D conversion)
183	IDIN5	IN	CCD PWB (AD conversion)	Image scan data (after 8bit A/D conversion)
184	IDIN6	IN	CCD PWB (AD conversion)	Image scan data (after 8bit A/D conversion)

PIN No.	Signal name	IN/OUT	Connected to	Description
185	5V	Power		
186	IDIN7	IN	CCD PWB (AD conversion)	Image scan data (after 8bit A/D conversion)
187	/SDCLK	OUT	CHECK	Effective image area signal
188	GND	Power		
189	SFCLK	IN	Transmitter	CCD drive clock (48MHz), Also used as an internal clock.
190	TEST port 0	IN	AUTO SCAN TEST	High: Normal Low: Test
191	/SYNC	IN	LSU	Horizontal synchronization signal (HSYNC) from LSU
192	/LD	OUT	LSU	Laser drive signal
193	/LEND	OUT	LSU	Laser APC signal
194	USB-EN	OUT	GDI/USB PWB	USB port enable signal
195	1284-EN	OUT	GDI/USB PWB	1284 port enable signal
196	PORTOUT26	OUT		(Not used)
197	3.3V	Power		
198	PORTOUT25	OUT		(Not used)
199	PORTOUT24	OUT		(Not used)
200	GND	Power		
201	SGS	OUT	Tr array IC	SPF gate solenoid
202	SRRC	OUT	Tr array IC	SPF resist roller solenoid
203	SPUS	OUT	Tr array IC	SPF PU solenoid
204	/READY	OUT	FAX PWB	READY signal (Expansion PWB)
205	OP-LATCH	OUT	Tr array IC	Latch signal for operation circuit. Data latch at LOW.
206	MRPS2	OUT	Tr array IC	Mirror speed control signal. Mirror speed 2 at LOW.
207	MRPS1	OUT	Tr array IC	Mirror speed control signal. Mirror speed 1 at LOW.
208	SPFS	OUT	Tr array IC	SPF paper feed solenoid
209	SMSEL	OUT	Tr array IC	SPF motor/Mirror motor select signal
210	3.3V	Power		
211	TC	OUT	Tr array IC	Transfer charger control signal. ON at HIGH.
212	GRIDL	OUT	Tr array IC	Main charger grid control signal. ON at HIGH.
213	GND	Power		
214	MC	OUT	Tr array IC	Main charger control signal. ON at HIGH.
215	BIASL	OUT	Tr array IC	DV bias voltage control signal. ON at HIGH.
216	BIASH	OUT	Tr array IC	DV bias voltage control signal. ON at HIGH.
217	BIAS	OUT	Tr array IC	DV bias output control signal. ON at HIGH.
218	CL	OUT	Tr array IC	Copy lamp control signal. ON at HIGH.
219	VFMCNT	OUT	Tr array IC	Ventilation fan rotating speed control signal. Low speed at HIGH, high speed at LOW.
220	VFM	OUT	Tr array IC	Ventilation fan control signal. Fan ON at HIGH.
221	LDEN	OUT	Tr array IC	Laser circuit control signal. Laser circuit ON at HIGH.
222	PMD	OUT	Tr array IC	Polygon motor control signal. Polygon motor ON at HIGH.
223	5V	Power		
224	MM	OUT	Tr array IC	Main motor control signal. Main motor ON at HIGH.
225	MPFS	OUT	Tr array IC	Manual paper feed solenoid control signal. Multi paper feed ON at HIGH.
226	GND	Power		
227	CPFS2	OUT	Tr array IC	Second cassette paper feed solenoid control signal. Second cassette paper feed at HIGH.
228	CPFS1	OUT	Tr array IC	Cassette paper feed solenoid control signal. One-stage cassette paper feed at HIGH.
229	TM	OUT	Tr array IC	Toner motor drive output (+)

PIN No.	Signal name	IN/OUT	Connected to	Description
230	TM_	OUT	Tr array IC	Toner motor drive output (–)
231	CPUD15	IN/OUT	CPU	CPU data bus
232	CPUD14	IN/OUT	CPU	CPU data bus
233	CPUD13	IN/OUT	CPU	CPU data bus
234	CPUD12	IN/OUT	CPU	CPU data bus
235	CPUD11	IN/OUT	CPU	CPU data bus
236	5V	Power		
237	CPUD10	IN/OUT	CPU	CPU data bus
238	CPUD9	IN/OUT	CPU	CPU data bus
239	GND	Power		
240	CPUD8	IN/OUT	CPU	CPU data bus
241	CPUD7	IN/OUT	CPU	CPU data bus
242	CPUD6	IN/OUT	CPU	CPU data bus
243	CPUD5	IN/OUT	CPU	CPU data bus
244	CPUD4	IN/OUT	CPU	CPU data bus
245	CPUD3	IN/OUT	CPU	CPU data bus
246	CPUD2	IN/OUT	CPU	CPU data bus
247	CPUD1	IN/OUT	CPU	CPU data bus
248	CPUD0	IN/OUT	CPU	CPU data bus
249	3.3V	Power		
250	/CPUWR	IN	CPU	CPU write signal
251	/CPURD	IN	CPU	CPU read signal
252	GND	Power		
253	CPUCLK	IN	CPU	CPU system clock
254	GND	Power		
255	TEST PORT1	IN	AUTO SCAN TEST	High: Normal Low: Test
256	/SCANST	IN	CPU (I/O)	Scanner process start signal

* The signals which are hatched are added or revised to or from e-STUDIO.

(3) Expanded PWB interface section

The MCU PWB and the expanded PWB are connected by CN5 connector to make serial communication (UART).
The FAX PWB uses signals in Table A, and the PCL PWB uses signals in Table B.
Recognition of FAX PWB or PCL PWB:
If /FREADY is LOW, the FAX PWB expansion is recognized.
If /PREADY is LOW, the PCL PWB expansion is recognized.

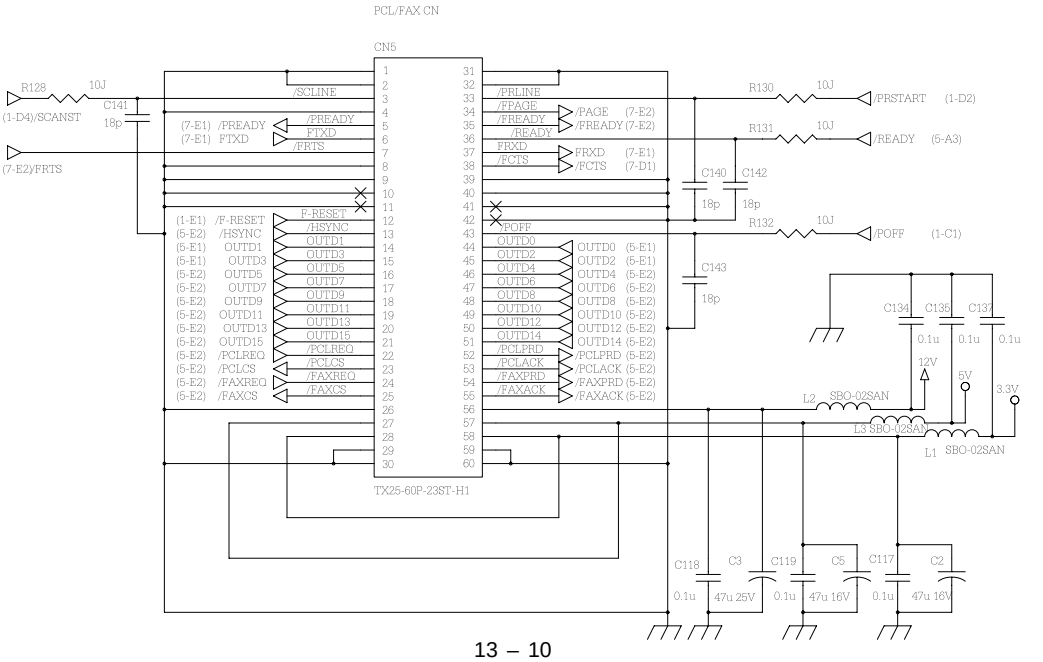

Table A (Signals used in PCL PWB)

PIN No. (CN5)	Signal name	IN/OUT	Descriptions
5	/PREADY	IN	PCL PWB recognition signal
6	FTXD	OUT	Serial communication data
7	/FRTS	OUT	Serial reception READY (Machine side)
12	/F-RESET	OUT	Reset signal
13	/HSYNC	OUT	Horizontal sync signal
34	/FPAGE	IN	Page data READY
36	/READY	OUT	READY signal on the machine side
37	FRXD	IN	Serial communication data
38	/FCTS	IN	Serial reception READY (PCL side)
52	/PCLPRD	IN	Video data from PCL PWB

(4) 1284/USB circuit select control section

The GDI/USB PWB is connected to CN15 connector to control switching between IEEE1284 port and USB port.
If USB cable isn't connected to the GDI/USB PWB, the /1284-EN signal becomes LOW to allow the user of IEEE1284 port.

If USB cable is connected, the /USB-EN signal becomes LOW to allow the use of USB port.
Since USB has priority, when USB cable is connected, it is selected. That is, when USB cable is connected, IEEE1284 port (parallel port) is disabled.

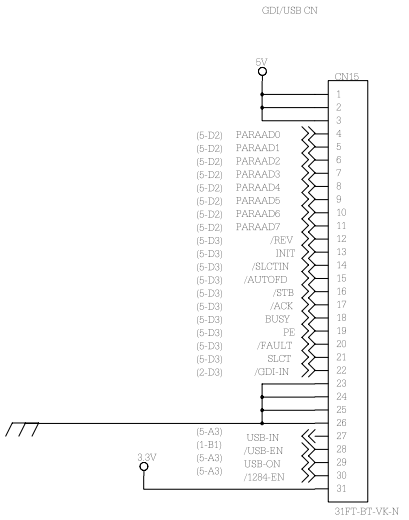

[14] CIRCUIT DIAGRAM

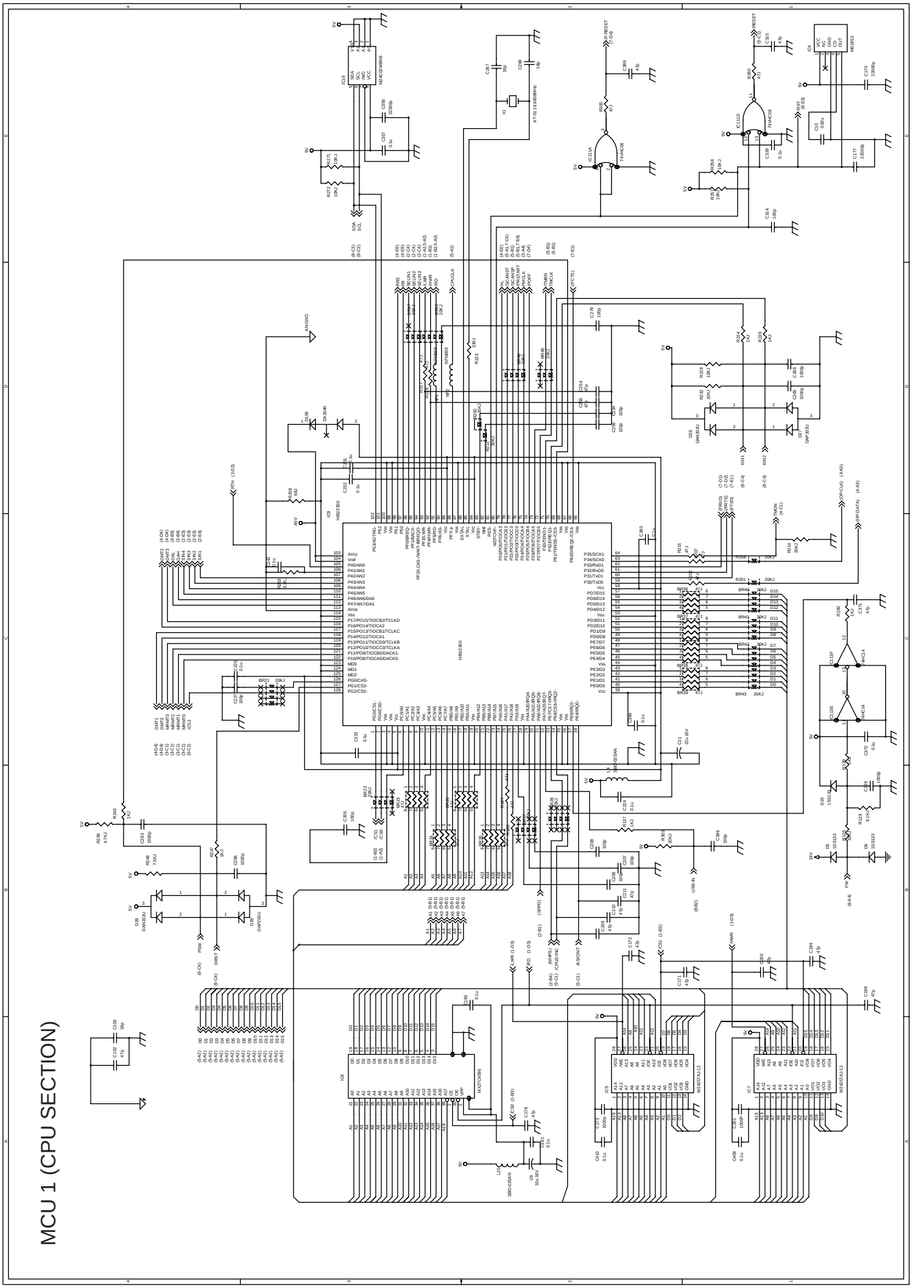

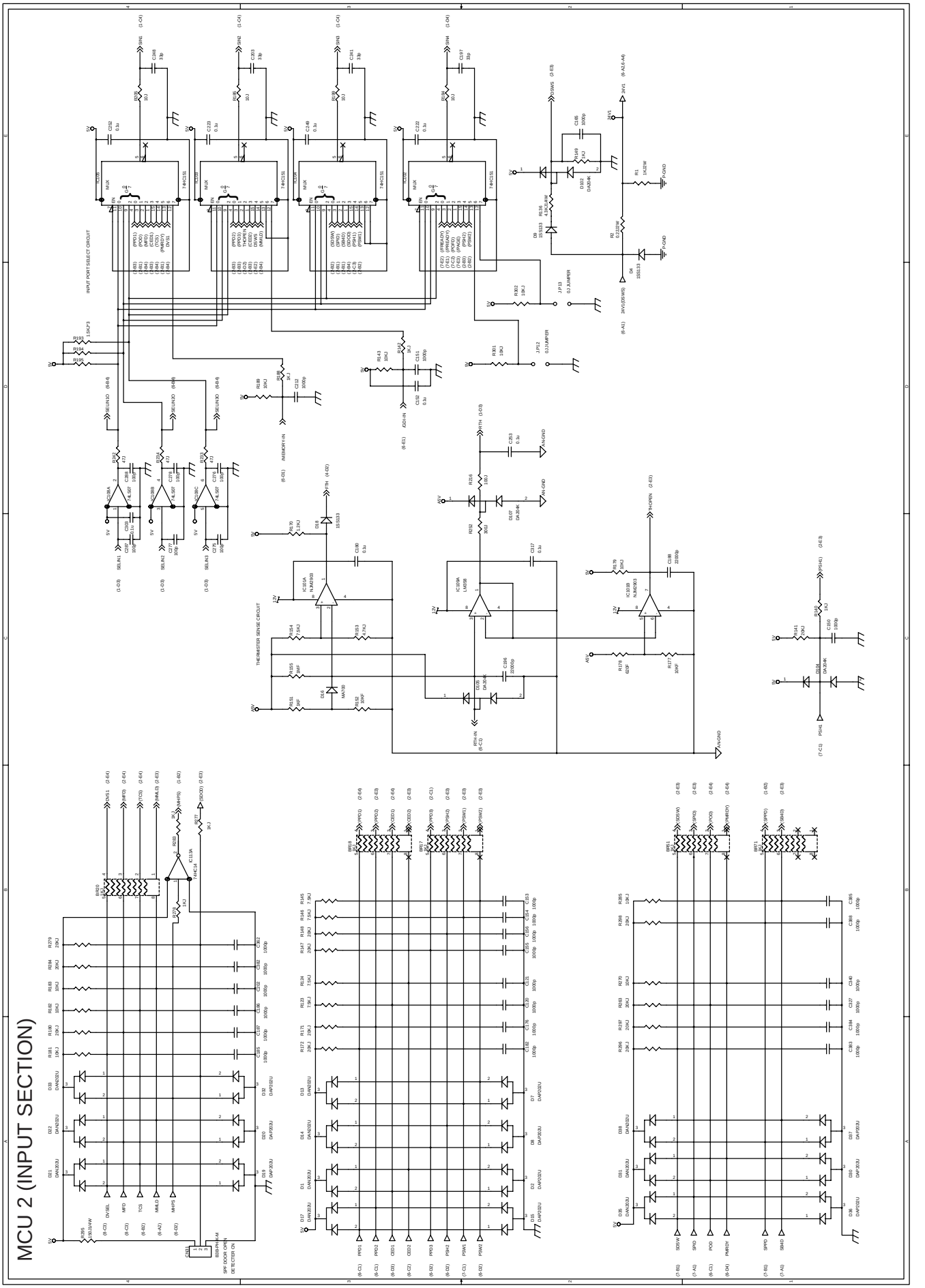
MCU 2 (INPUT SECTION)
INPUT PORT SELECT CIRCUIT
THERMISTER SENSE CIRCUIT

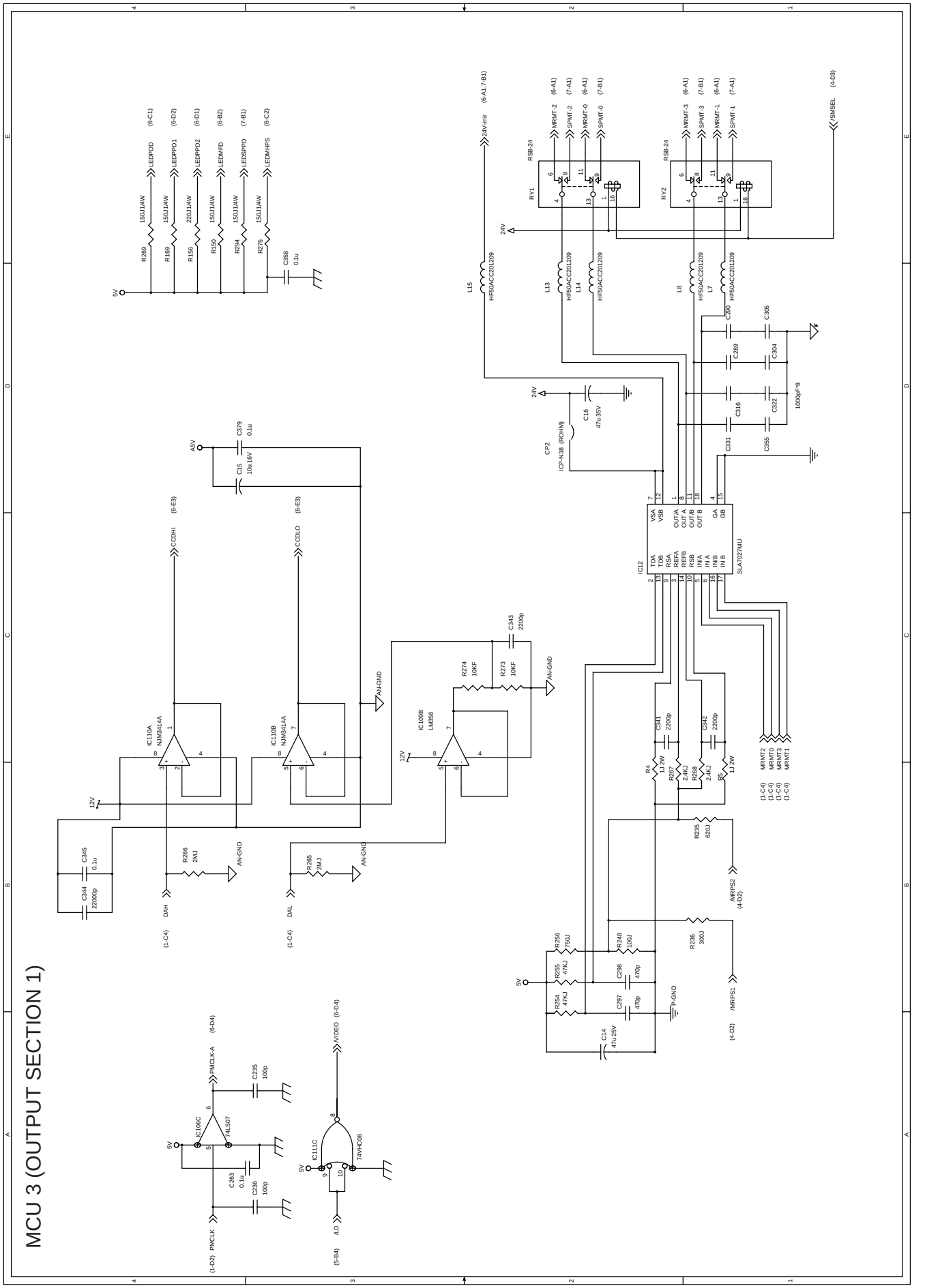
MCU 3 (OUTPUT SECTION 1)
IC12
SLA7027MU
IC110A
NJM3414A
IC110B
NJM3414A
IC109B
LM358
IC106C
74LS07
IC111C
74VHC08
RY1
RY2
RSB-24
CP2
ICP-N38 (ROHM)
L15
HF50ACC201209
L13
L14
L8
L7
24V-mir
24V
5V
A5V
12V
AN-GND
P-GND
DAH
DAL
PMCLK
PMCLK-A
/VIDEO
/LD
/MRPS1
/MRPS2
/SMSEL
MRMT1
MRMT2
MRMT3
MRMT0
MRMT-0
MRMT-1
MRMT-2
MRMT-3
SPMT-0
SPMT-1
SPMT-2
SPMT-3
CCDHI
CCDLO
LEDPOD
LEDPPD1
LEDPPD2
LEDMFD
LEDSPPD
LEDMHPS
R269
R169
R156
R150
R294
R275
150J1/4W
220J1/4W
C358
0.1u
C379
0.1u
C15
10u 16V
C343
2200p
R274
10KF
R273
10KF
C345
0.1u
C344
22000p
R266
2MJ
R265
2MJ
C341
2200p
C342
2200p
R4
1J 2W
R267
2.4KJ
R268
2.4KJ
R5
1J 2W
R235
620J
R236
300J
R256
750J
R248
100J
R255
47KJ
R254
47KJ
C298
470p
C297
470p
C14
47u 25V
C16
47u 35V
C290
C305
C289
C304
C316
C322
C331
C355
1000pF*8
C235
100p
C263
0.1u
C236
100p

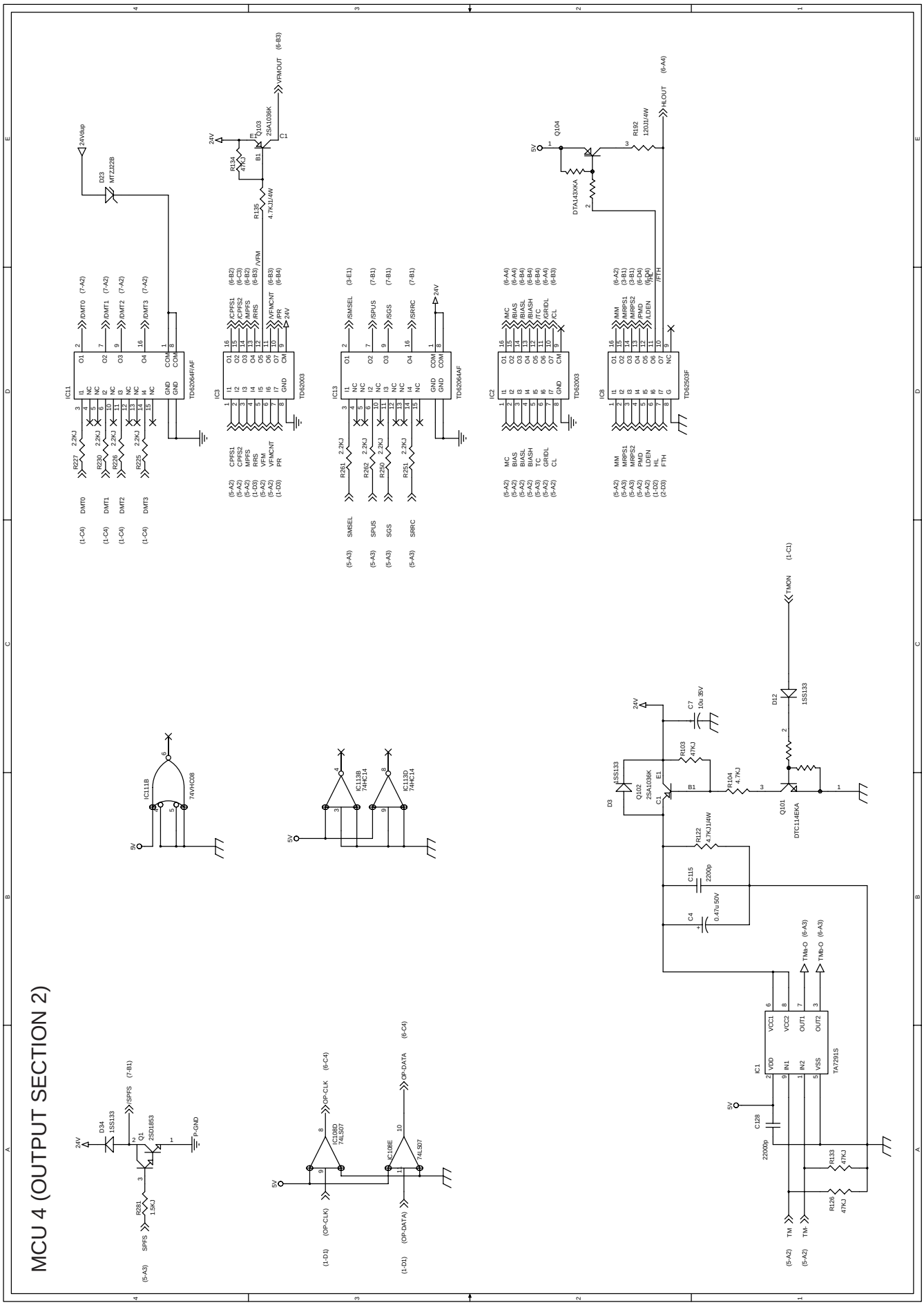
MCU 4 (OUTPUT SECTION 2)
24Vdsp
D23
MTZJ22B
IC11
TD62064F/AF
R227 2.2KJ
R230 2.2KJ
R226 2.2KJ
R225 2.2KJ
/DMT0 (7-A2)
/DMT1 (7-A2)
/DMT2 (7-A2)
/DMT3 (7-A2)
DMT0 (1-C4)
DMT1 (1-C4)
DMT2 (1-C4)
DMT3 (1-C4)
24V
R134 4.7KJ
Q103 2SA1036K
R135 4.7KJ1/4W
/VFM (6-B3)
/VFMOUT (6-B3)
IC3
TD62003
/CPFS1 (6-B2)
/CPFS2 (6-C3)
/MPPS (6-B2)
/RRS (6-B3)
/VFMCNT (6-B3)
/PR (6-B4)
CPFS1 (5-A2)
CPFS2 (5-A2)
MPPS (5-A2)
RRS (1-D3)
VFM (5-A2)
VFMCNT (5-A2)
PR (1-D3)
IC13
TD62064AF
/SMSEL (3-E1)
/SPUS (7-B1)
/SGS (7-B1)
/SRRC (7-B1)
R261 2.2KJ
R262 2.2KJ
R260 2.2KJ
R251 2.2KJ
SMSEL (5-A3)
SPUS (5-A3)
SGS (5-A3)
SRRC (5-A3)
IC2
TD62003
/MC (6-A4)
/BIAS (6-A4)
/BIASL (6-B4)
/BIASH (6-B4)
/TC (6-B4)
/GRDL (6-A4)
/CL (6-B3)
MC (5-A2)
BIAS (5-A2)
BIASL (5-A2)
BIASH (5-A2)
TC (5-A2)
GRDL (5-A2)
CL (5-A2)
Q104
DTA143XKA
R192 120JJ/4W
HLOUT (6-A4)
IC8
TD62503F
/MM (6-A2)
/MRPS1 (3-B1)
/MRPS2 (6-B1)
/PMD (6-C4)
/LDEN (6-A4)
/HL (6-A4)
/FTH
MM (5-A2)
MRPS1 (5-A3)
MRPS2 (5-A3)
PMD (5-A2)
LDEN (5-A2)
HL (1-D2)
FTH (2-D3)
IC111B
74VHC08
IC113B
74HC14
IC113D
74HC14
5V
8V
D34
1SS133
/SPFS (7-B1)
Q1
2SD1853
P-GND
R281 15KJ
SPFS (5-A3)
IC108D
74LS07
IC108E
74LS07
/OP-CLK (6-C4)
/OP-DATA (6-C4)
OP-CLK (1-D1)
OP-DATA (1-D1)
D3
1SS133
Q102
2SA1036K
R103 47KJ
C7 10u 35V
R104 4.7KJ
D12
1SS133
TMCN (1-C1)
Q101
DTC114EKA
R122 4.7KJ1/4W
C115 2200p
C4 0.47u 50V
IC1
TA7291S
C128 22000p
R133 47KJ
R126 47KJ
TMh-O (6-A3)
TMh-O (6-A3)
TM (5-A2)
TM- (5-A2)

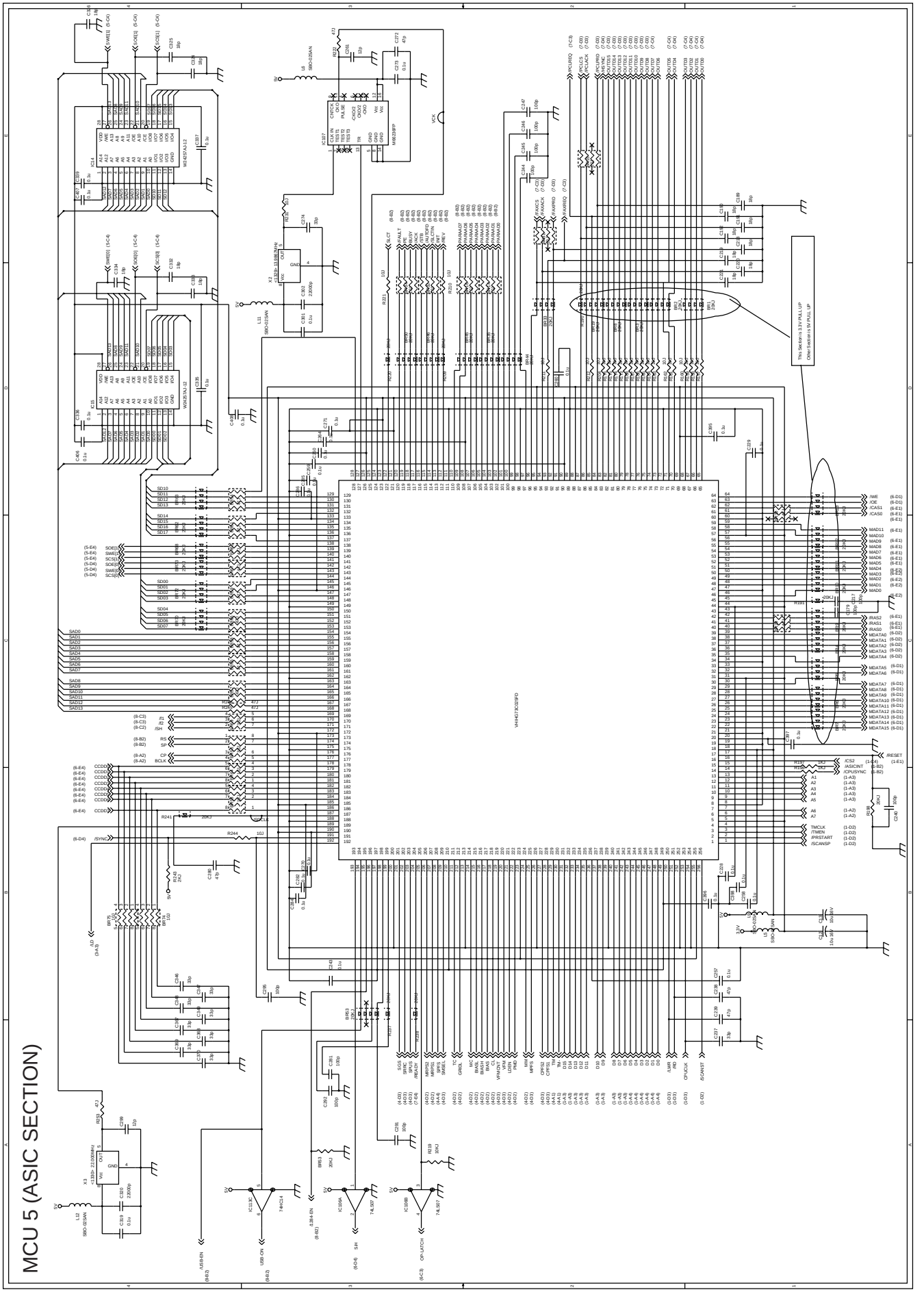
MCU 5 (ASIC SECTION)

MCU 6 (CONNECTOR SECTION/POWER SECTION)

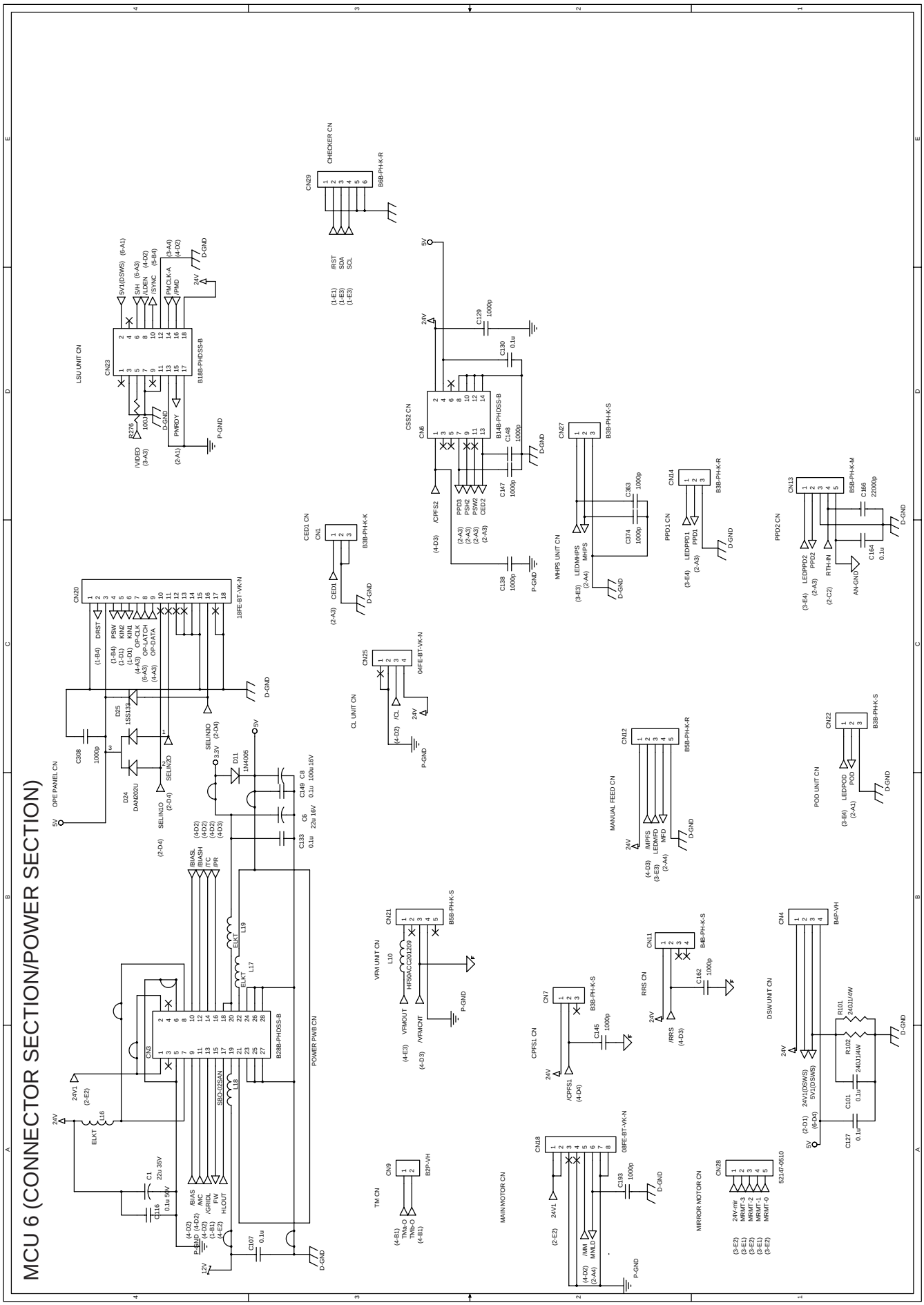

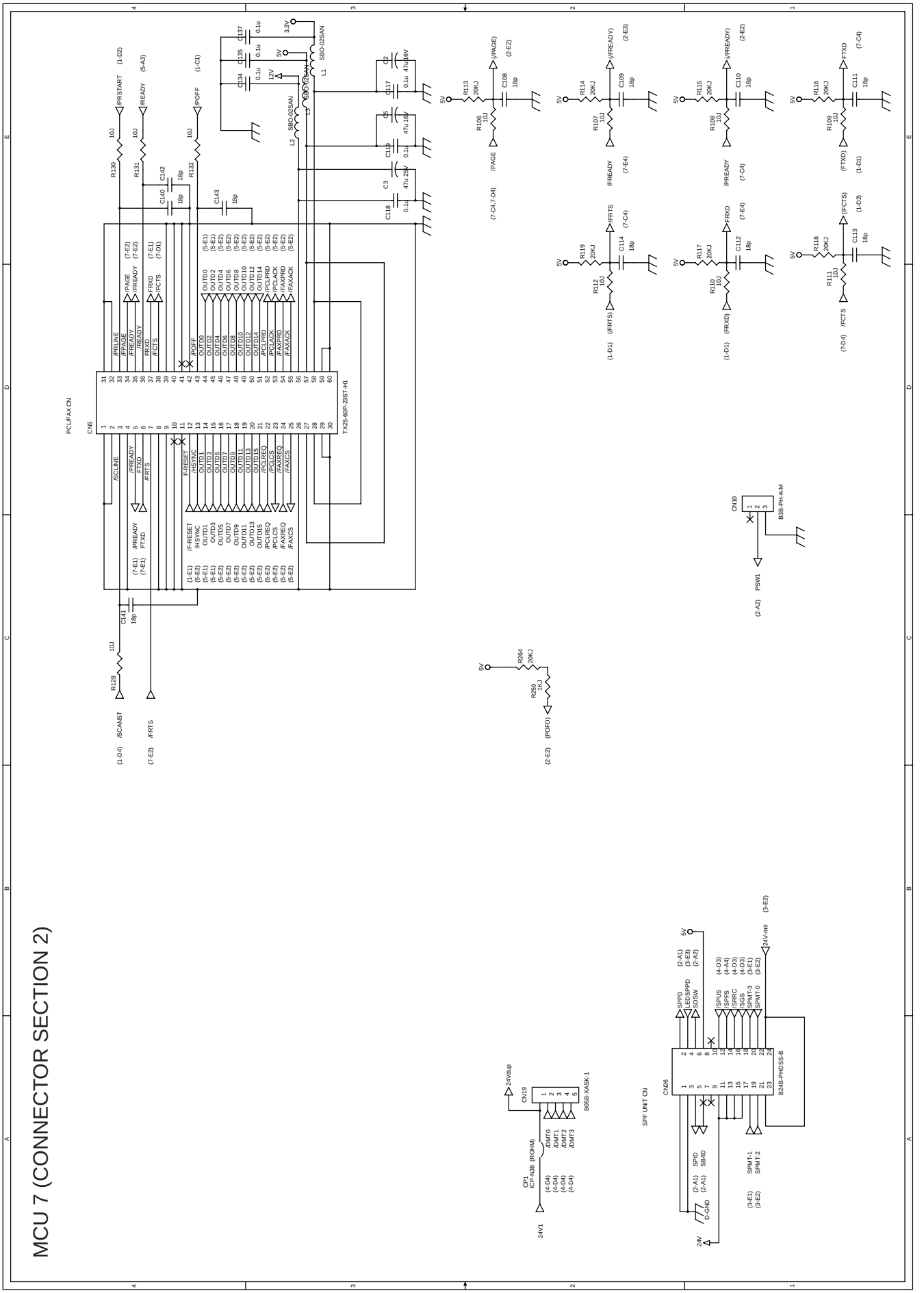
MCU 7 (CONNECTOR SECTION 2)
PCL/FAX CN
CN5
TX25-60P-2ST-H1
SBO-02SAN
L1
L2
L3
3.3V
5V
12V
24V
24V1
24V-mir
24Vdup
SPFD
SDSW
SPMT-1
SPMT-2
SPMT-3
SPMT-0
SPD
SB4D
D-GND
SFF UNIT CN
CN26
B24B-PHDSS-B
CN19
B05B-XASK-1
CP1
ICP-N38 (RCHM)
CN10
B3B-PH-K-M
PSW1
R128
R130
R131
R132
R259
R264
R106
R107
R108
R109
R110
R111
R112
R113
R114
R115
R116
R117
R118
R119
C134
C137
C138
C140
C141
C142
C143
C118
C3
C119
C5
C117
C2
C108
C109
C110
C111
C112
C113
C114
/PRLINE
/PPAGE
/PREADY
/PFREADY
/PREADY
/PRXD
/PFCTS
/POFF
/SCLINE
/SCANST
/FRTS
/PREADY
FTXD
/FRTS
F-RESET
/HSYNC
OUTD0
OUTD1
OUTD2
OUTD3
OUTD4
OUTD5
OUTD6
OUTD7
OUTD8
OUTD9
OUTD10
OUTD11
OUTD12
OUTD13
OUTD14
OUTD15
/PCLREQ
/PCLCS
/FAXREQ
/FAXCS
/PCLACK
/FAXPRD
/FAXACK
/PCLPRD
/PCLACK
/FAXPRD
/FAXACK
/SPUS
/SPFS
/SSRC
/SGS
/DMT0
/DMT1
/DMT2
/DMT3
PRSTART
READY
POFF
PPAGE
FRREADY
PREADY
FRXD
FFCTS
FTXD
FRTS
PCFD
/PAGE
/FREADY
/FRXD
/FRTS
/FTXD
/FCTS
/FTXD
(1-D2)
(5-A3)
(1-C1)
(7-E2)
(7-E1)
(7-D1)
(5-E1)
(5-E2)
(7-E1)
(7-E2)
(7-E3)
(7-E4)
(7-C4)
(1-D1)
(1-D2)
(7-C4)
(7-C4,7-D4)
(1-D4)
(7-E2)
(2-E2)
(2-A2)
(2-A1)
(2-A3)
(4-D3)
(4-A4)
(4-D3)
(4-D3)
(3-E1)
(3-E2)
(3-E2)
(4-D4)
(4-D4)
(4-D4)
(4-D4)

MCU 8 (CONNECTOR SECTION 3)

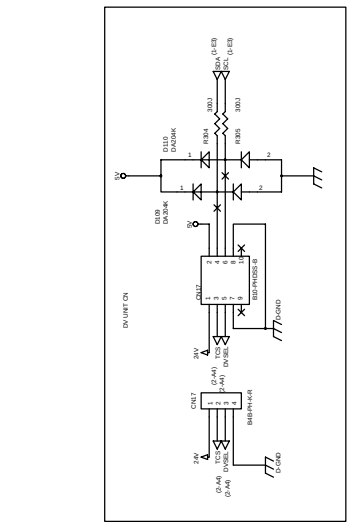

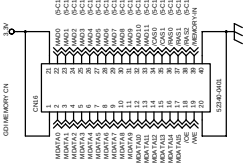

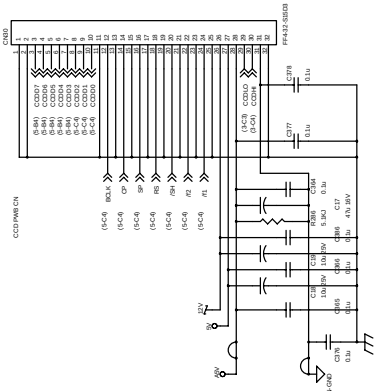

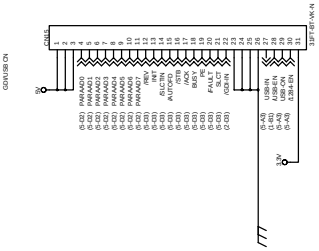

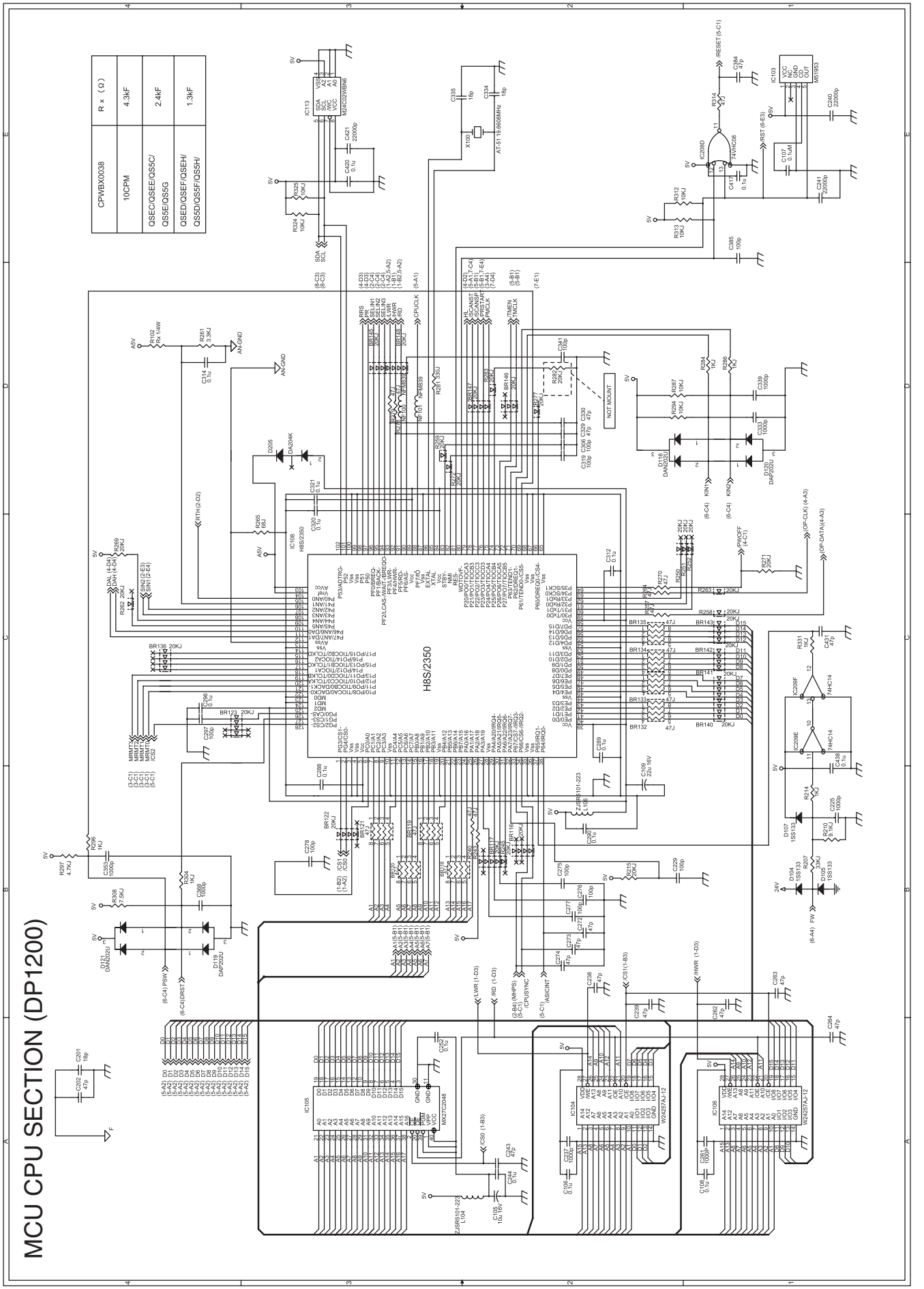
MCU CPU SECTION (DP1200)
H8S/2350
CPWBX0038
10CPM
QSEC/QSEE/QS5C/
QS5E/QS5G
QSED/QSEF/QSEH/
QS5D/QS5F/QS5H/
R x （Ω）
4.3kF
2.4kF
1.3kF

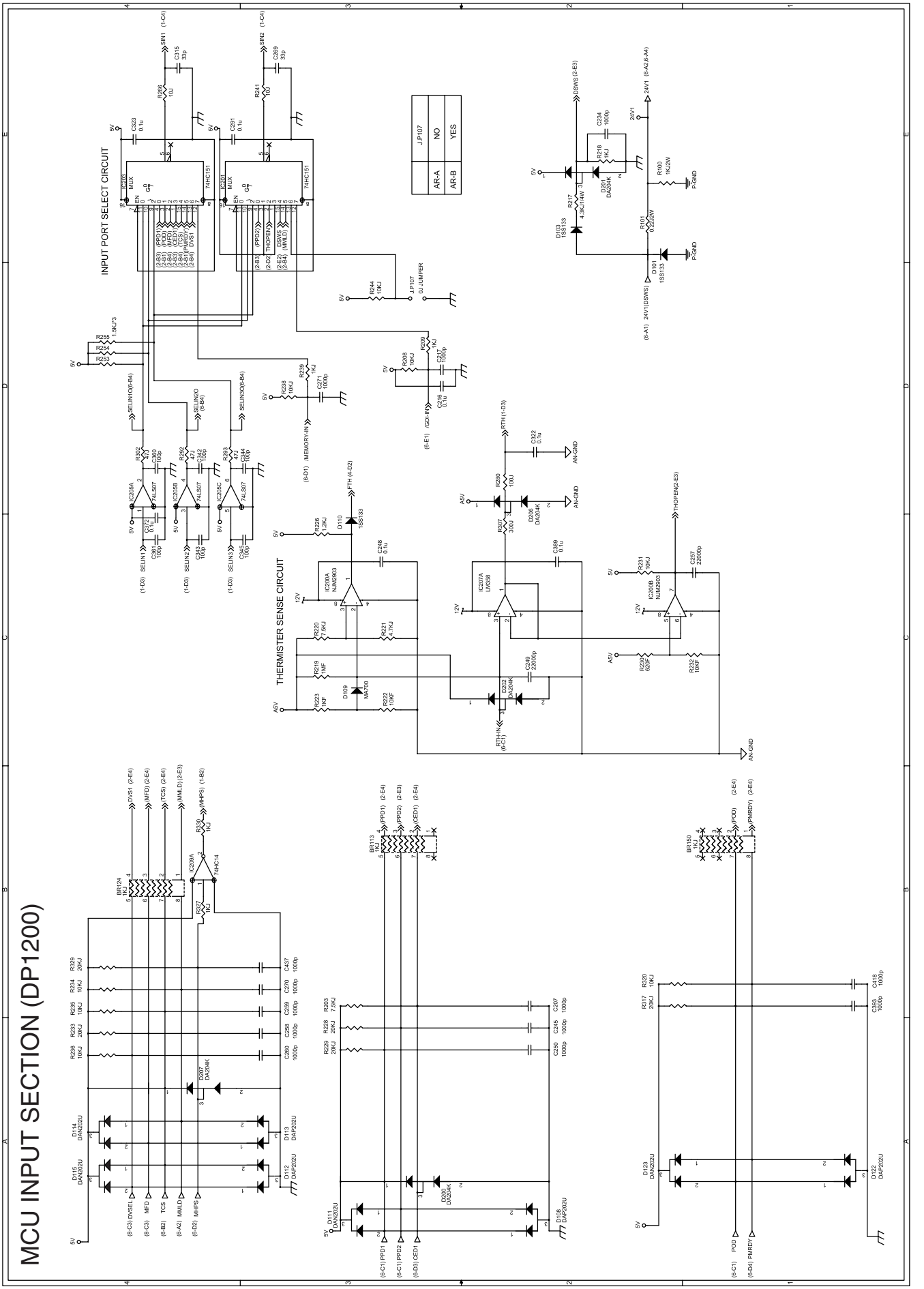
MCU INPUT SECTION (DP1200)
INPUT PORT SELECT CIRCUIT
THERMISTER SENSE CIRCUIT
J.P107
AR-A
NO
AR-B
YES

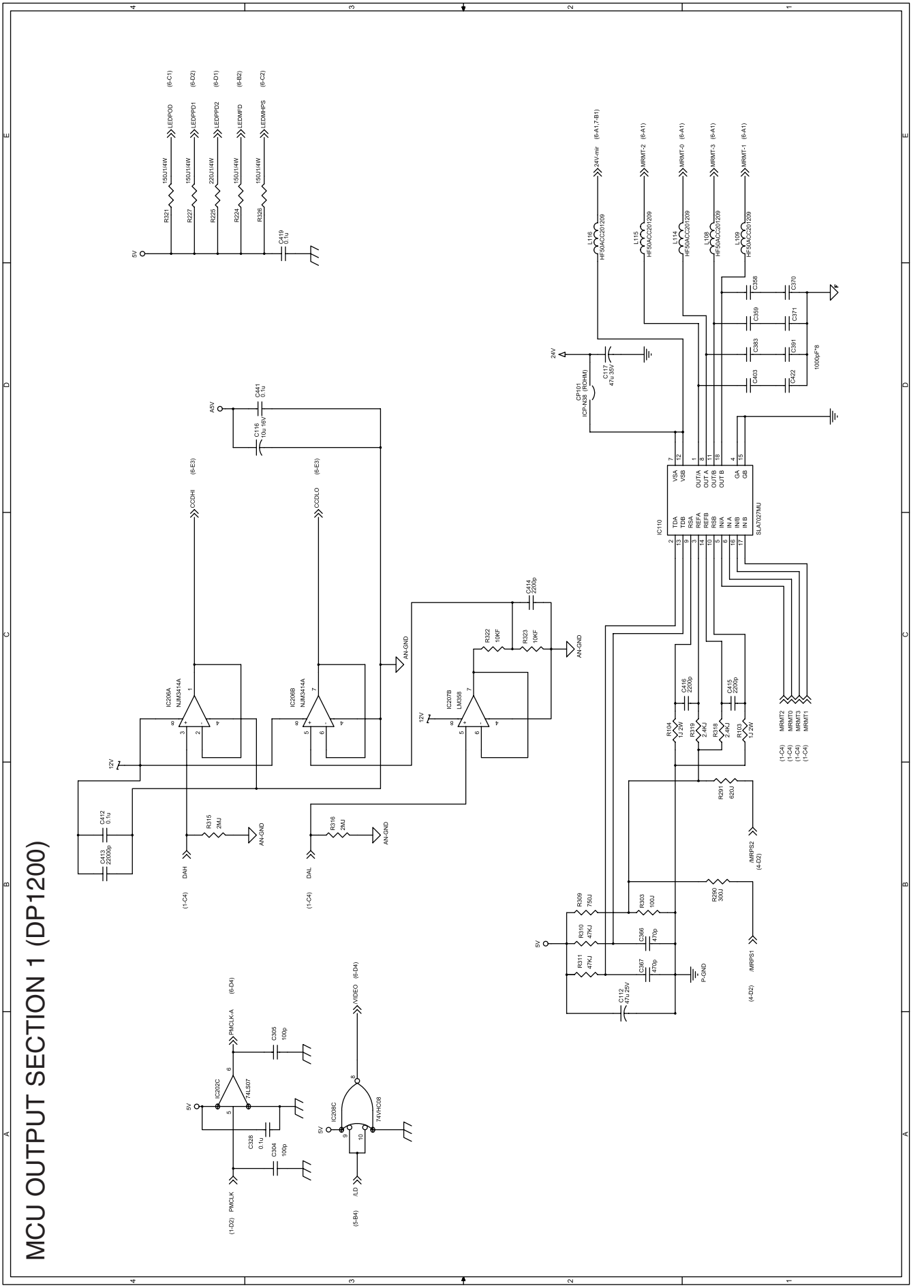
MCU OUTPUT SECTION 1 (DP1200)
EDPPOD (6-C1)
EDPPD1 (6-D2)
EDPPD2 (6-D1)
EDMFD (6-B2)
EDMHPS (6-C2)
R321 150J/1/4W
R227 150J/1/4W
R225 220J/1/4W
R224 150J/1/4W
R326 150J/1/4W
C419 0.1u
5V
L116 HF50ACC201209
L115 HF50ACC201209
L114 HF50ACC201209
L109 HF50ACC201209
+4V-vmir (6-A17,7-B1)
MRMT-2 (6-A1)
MRMT-0 (6-A1)
MRMT-3 (6-A1)
MRMT-1 (6-A1)
C358
C369
C383
C403
C370
C371
C391
C422
1000pF*8
24V
CP101 ICP-N38 (ROHM)
C117 47u 35V
IC110 SLA7027M/U
VSA VSB OUT A OUT B OUT B GA GB
TDA TDB RSA REFA REFB RSB IN A IN B IN B
MRMT2 (1-C4)
MRMT0 (1-C4)
MRMT3 (1-C4)
MRMT1 (1-C4)
C416 2200p
C415 2200p
R104 1.2W
R319 2.4kJ
R318 2.4kJ
R103 1.2W
R291 620J
/MRPS2 (4-D2)
R290 300J
/MRPS1 (4-D2)
R309 750J
R303 100J
R310 47KJ
R311 47KJ
C366 470p
C367 470p
C112 47u 25V
P-GND
C414 2200p
R322 10KF
R323 10KF
AN-GND
IC206A NJM3414A
IC206B NJM3414A
IC207B LM358
CCDHI (6-E3)
CCDLO (6-E3)
A5V
C441 0.1u
C116 10u 16V
12V
C412 0.1u
C413 2200p
R315 2MJ
R316 2MJ
DAH (1-C4)
DAL (1-C4)
IC202C 74LS07
PMCLK-A (6-D4)
C305 100p
C328 0.1u
C304 100p
PMCLK (1-D2)
IC208C 74VHC08
VIDEO (6-D4)
/LD (5-B4)

MCU OUTPUT SECTION 2 (DP1200)

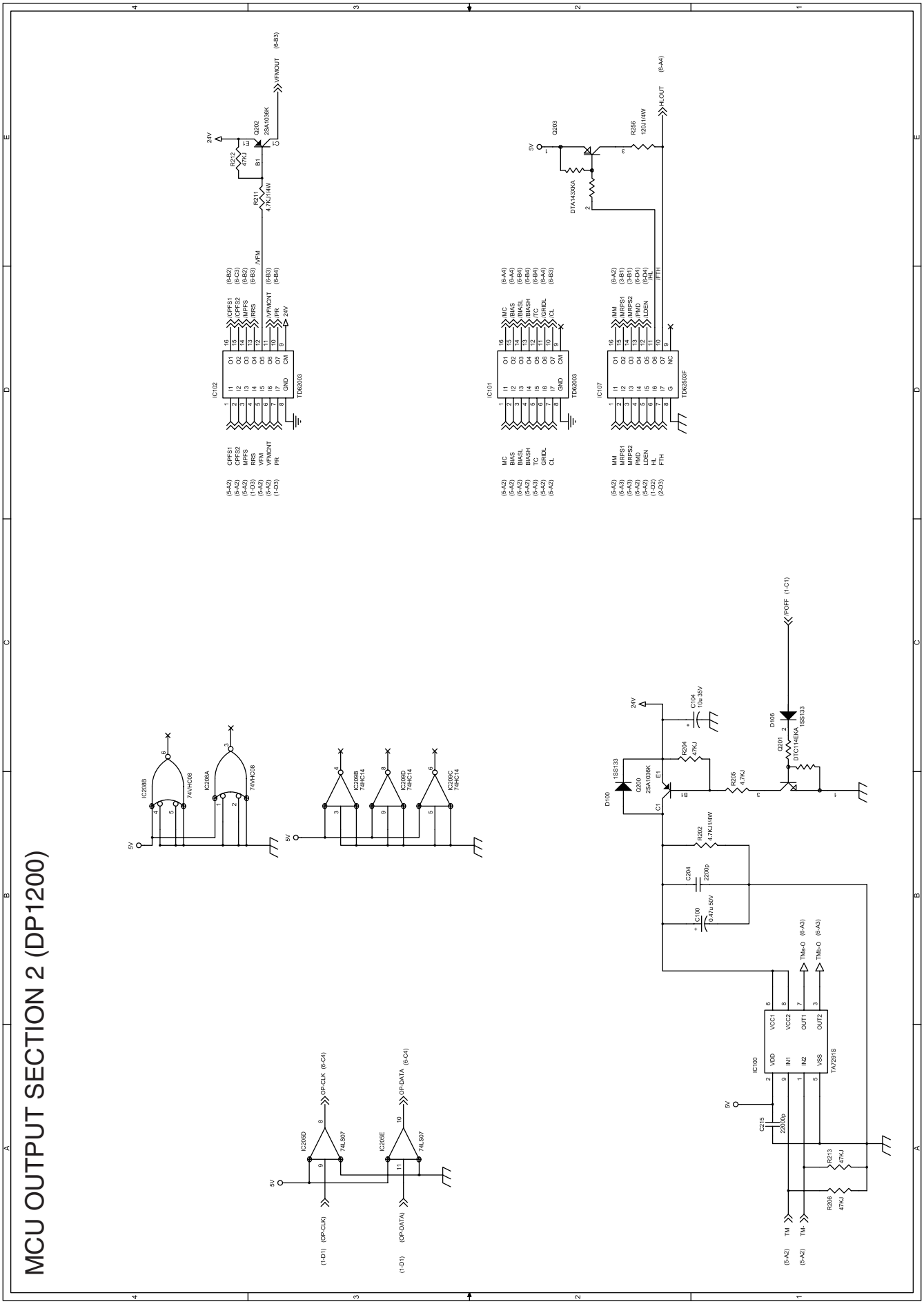

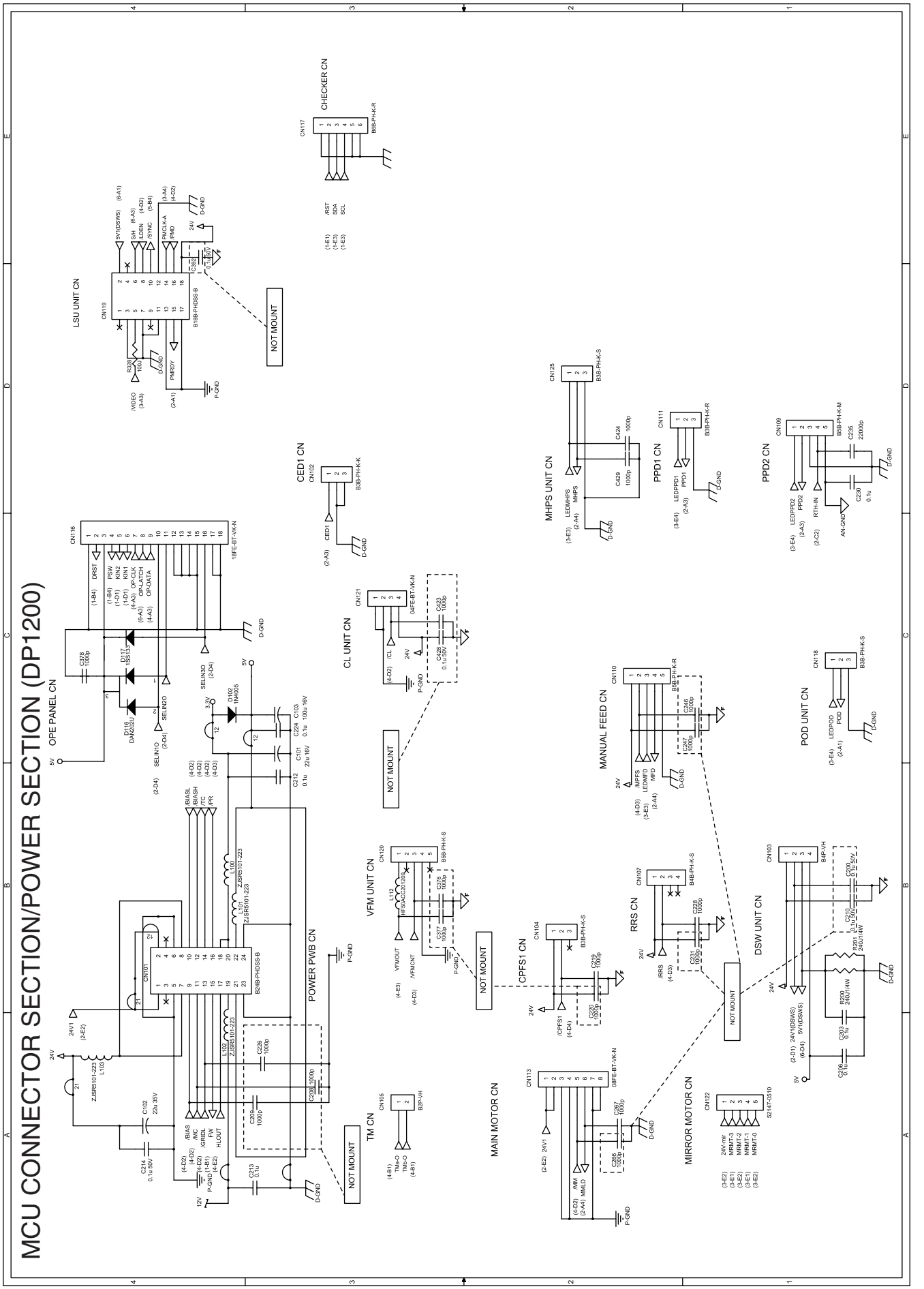
MCU CONNECTOR SECTION/POWER SECTION (DP1200)
POWER PWB CN
OPE PANEL CN
LSU UNIT CN
CHECKER CN
CED1 CN
CL UNIT CN
MHPS UNIT CN
PPD1 CN
PPD2 CN
MANUAL FEED CN
POD UNIT CN
VFM UNIT CN
RRS CN
CPFS1 CN
DSW UNIT CN
TM CN
MAIN MOTOR CN
MIRROR MOTOR CN
NOT MOUNT
D-GND
P-GND

MCU CONNECTOR SECTION 2 (DP1200)

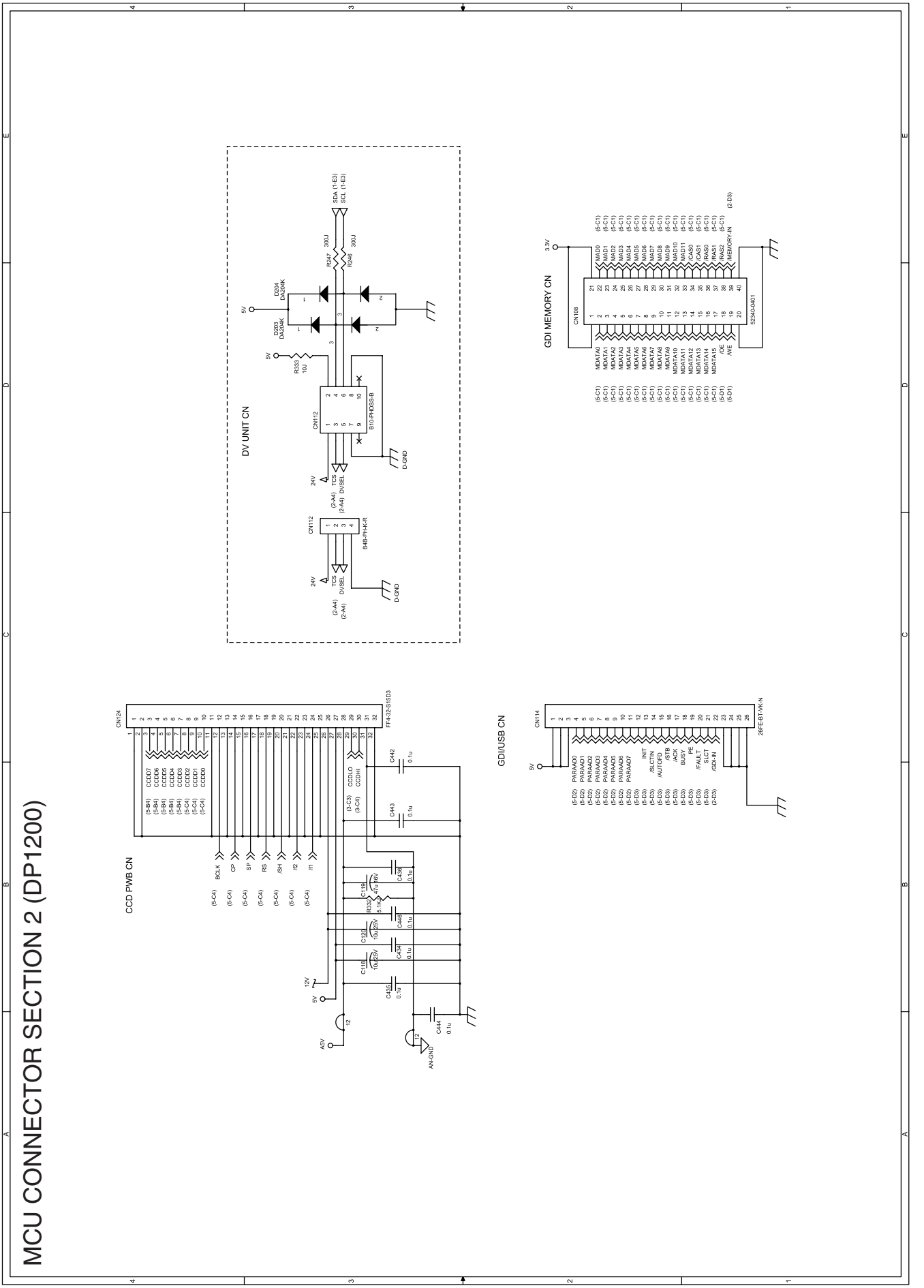

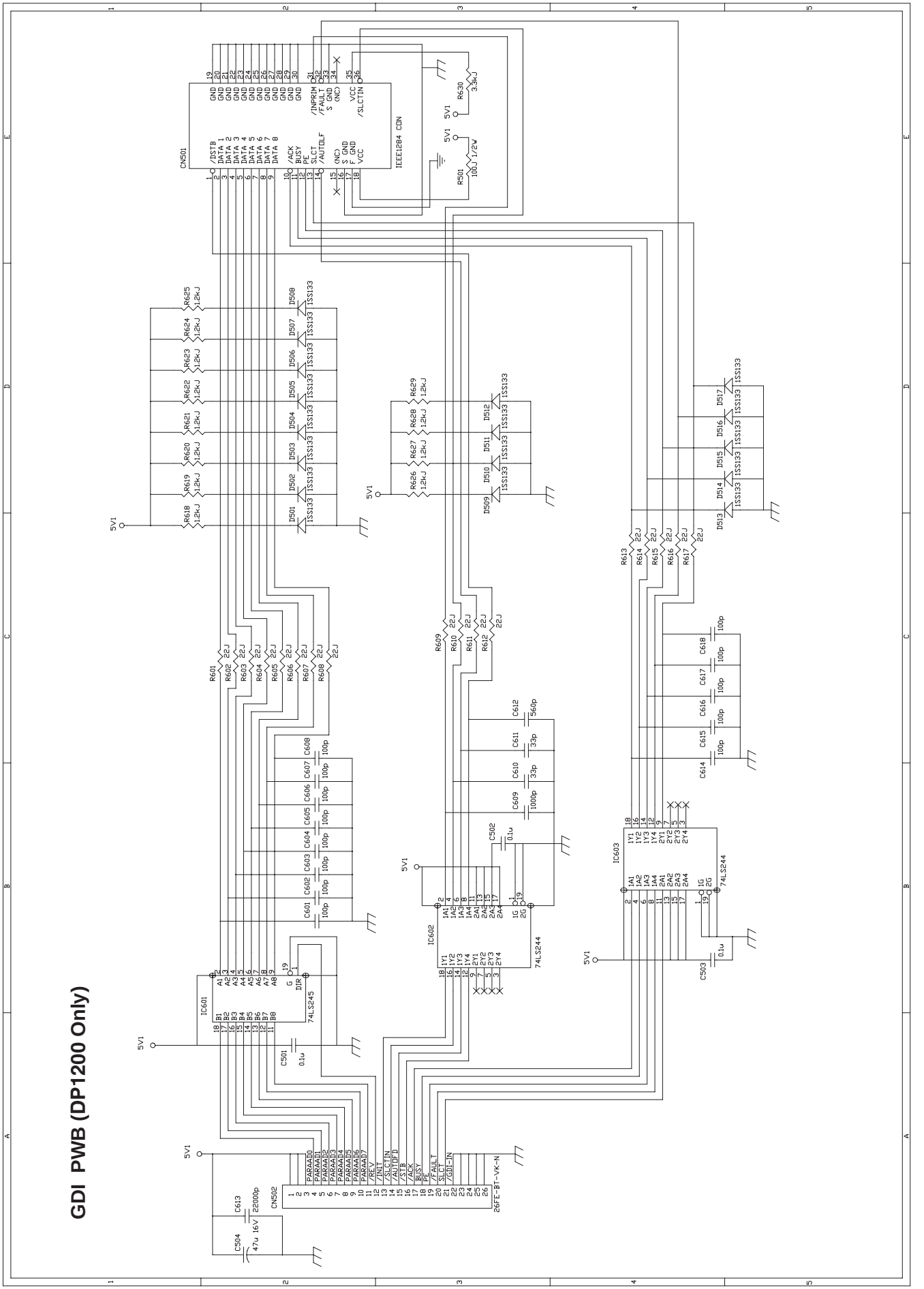
GDI PWB (DP1200 Only)
CN501
IEEE1284 CON
CN502
26FE-BT-VK-N
IC601
74LS245
IC602
74LS244
IC603
74LS244
5V1

GDI MEMORY PWB (4MB) (DP1200 Only)

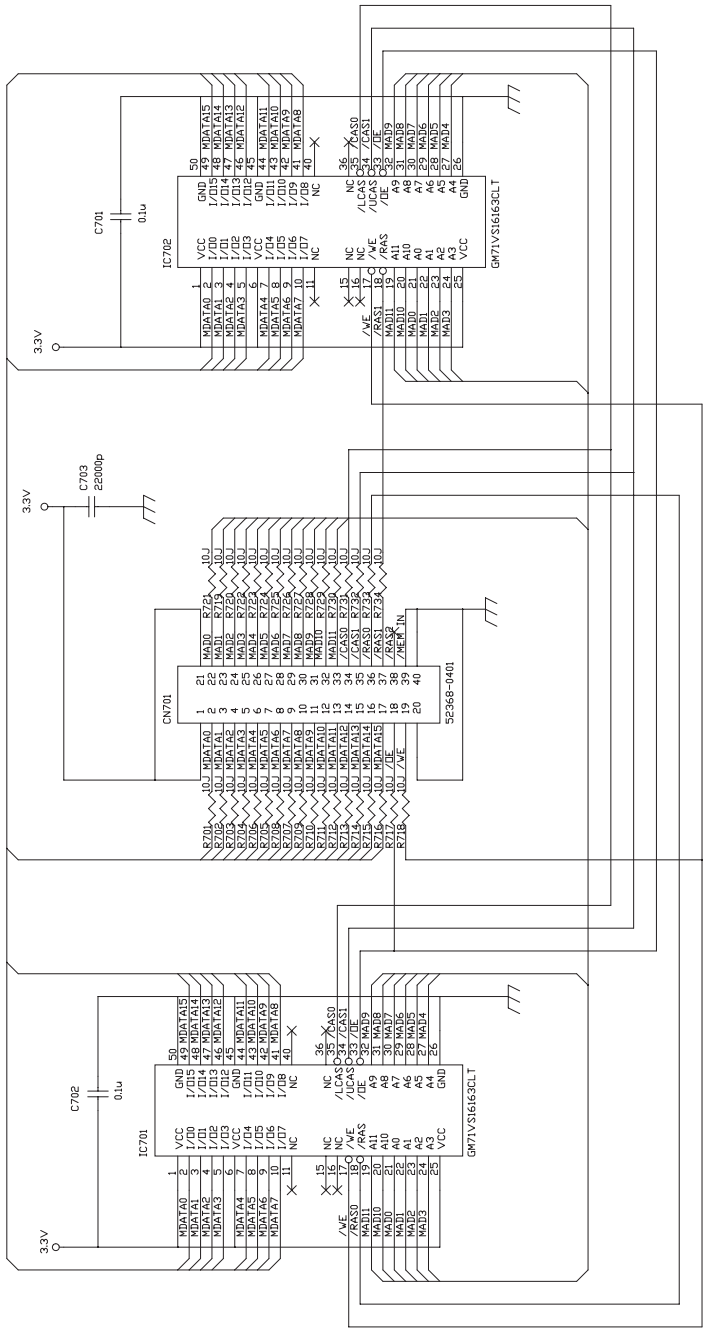

CIRCUIT DIAGRAM (LOW VOLTAGE BLOCK)

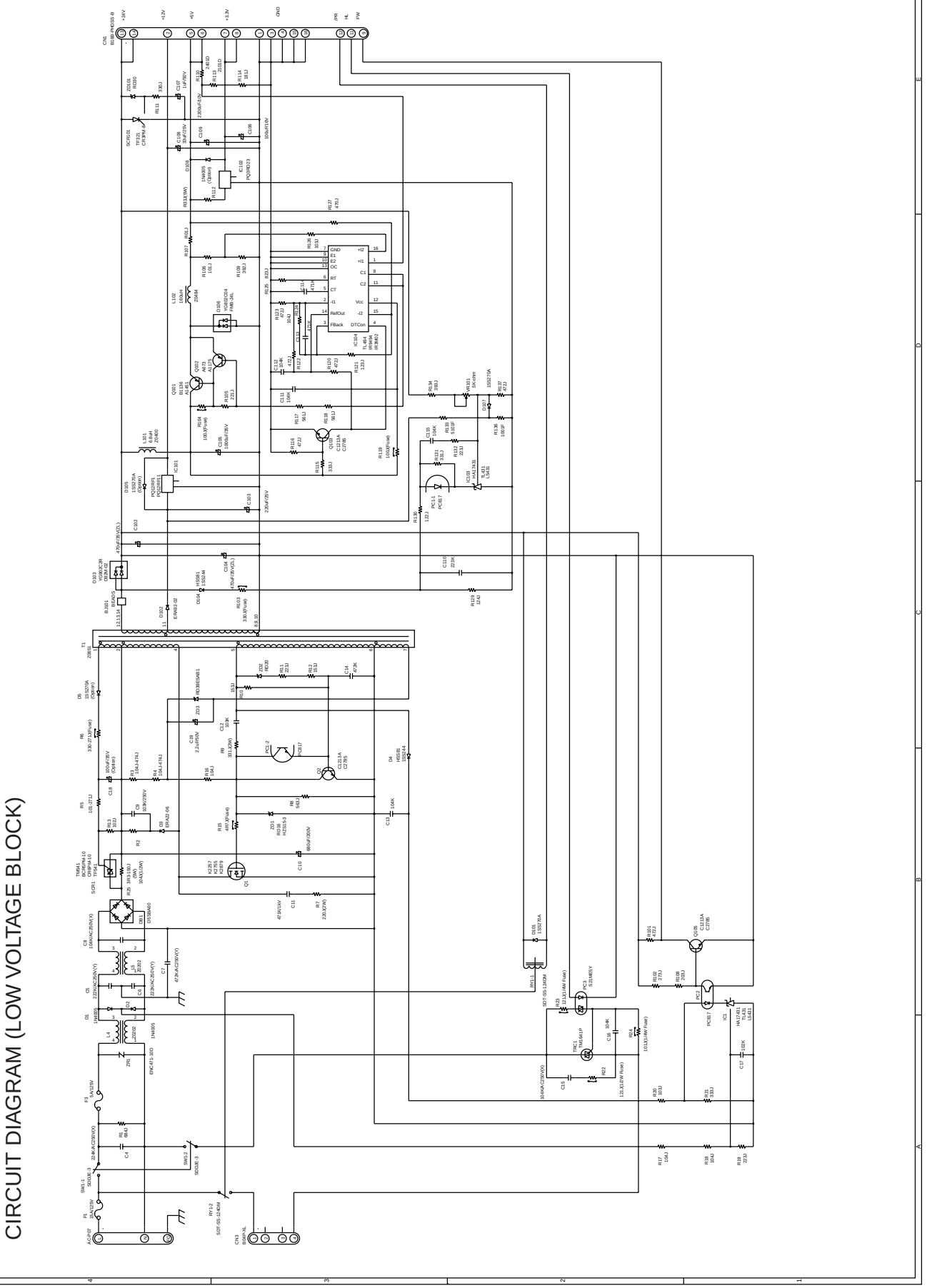

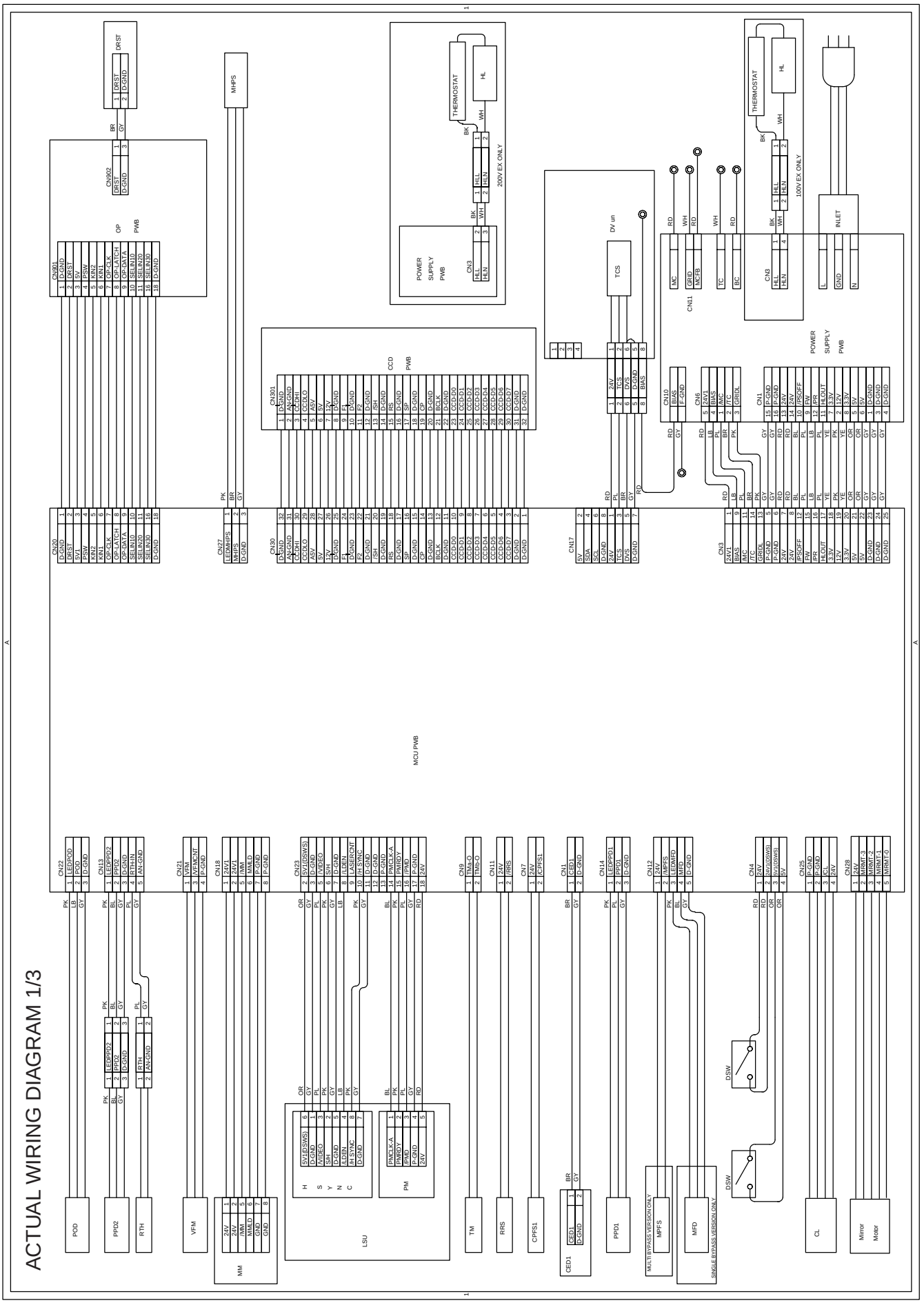
ACTUAL WIRING DIAGRAM 1/3
MCU PWB
POWER SUPPLY PWB
CCD PWB
OP PWB
LSU
MM
PM
H
S
Y
N
C
POD
PPD2
RTH
VFM
TM
RRS
CPPS1
CED1
PPD1
MFD
CL
Mirror Motor
MPF'S
DSW
MULTI BYPASS VERSION ONLY
SINGLE BYPASS VERSION ONLY
200V EX ONLY
100V EX ONLY
THERMOSTAT
HL
TCS
DV un
MHPS
CN20
CN301
CN30
CN27
CN17
CN10
CN6
CN1
CN3
CN11
CN4
CN12
CN14
CN25
CN28
CN902
CN901
CN21
CN18
CN23
CN9
CN11
CN7
CN1
CN13
IN-LET

ACTUAL WIRING DIAGRAM 2/3

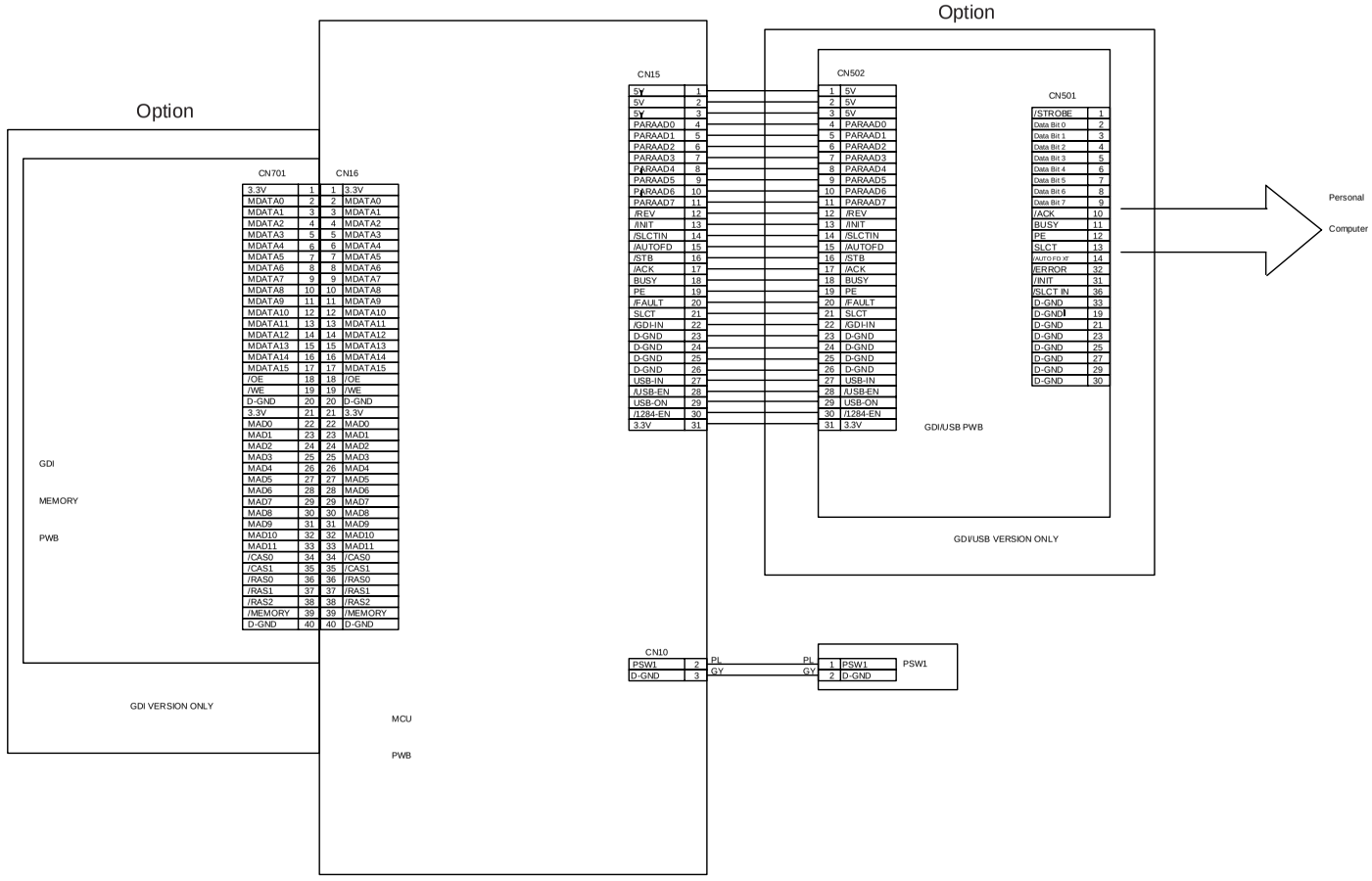

ACTUAL WIRING DIAGRAM 3/3

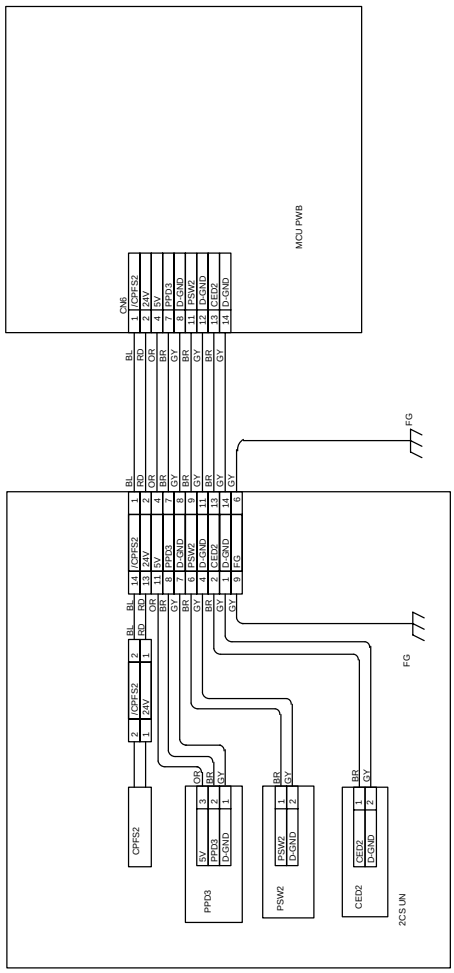

CAUTION FOR BATTERY REPLACEMENT

(Danish) ADVARSEL !
Lithiumbatteri – Eksplosionsfare ved fejlagtig håndtering.
Udskiftning må kun ske med batteri
af samme fabrikat og type.
Levér det brugte batteri tilbage til leverandoren.

(English) Caution !
Danger of explosion if battery is incorrectly replaced.
Replace only with the same or equivalent type
recommended by the manufacturer.
Dispose of used batteries according to manufacturer's instructions.

(Finnish) VAROITUS
Paristo voi räjähtää, jos se on virheellisesti asennettu.
Vaihda paristo ainoastaan laitevalmistajan suosittelemaan
tyyppiin. Hävitä käytetty paristo valmistajan ohjeiden
mukaisesti.

(French) ATTENTION
Il y a danger d'explosion s' il y a remplacement incorrect
de la batterie. Remplacer uniquement avec une batterie du
même type ou d'un type équivalent recommandé par
le constructeur.
Mettre au rebut les batteries usagées conformément aux
instructions du fabricant.

(Swedish) VARNING
Explosionsfara vid felaktigt batteribyte.
Använd samma batterityp eller en ekvivalent
typ som rekommenderas av apparattillverkaren.
Kassera använt batteri enligt fabrikantens
instruktion.

(German) Achtung
Explosionsgefahr bei Verwendung inkorrekter Batterien.
Als Ersatzbatterien dürfen nur Batterien vom gleichen Typ oder
vom Hersteller empfohlene Batterien verwendet werden.
Entsorgung der gebrauchten Batterien nur nach den vom
Hersteller angegebenen Anweisungen.

TOSHIBA

TOSHIBA TEC CORPORATION
1-1, KANDA NISHIKI-CHO, CHIYODA-KU, TOKYO, 101-8842 JAPAN