TOSHIBA

SERVICE MANUAL
FACSIMILE (FOR DP1600/2000/2500)

GD-1060



Click the Navigation Pane button to open the overview area and display bookmarks and thumbnails palettes.

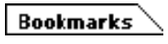

Click the Bookmarks to open the Contents and display Bookmarks created for the document. Click a bookmark's name to go to the Page marked by that bookmark.

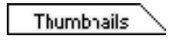

Click the Thumbnails to open the overview area and display thumbnail images of each document page. Click a thumbnail to go to the Page marked by that thumbnail.

Copyright TOSHIBA TEC CORPORATION 2001
ALL RIGHTS RESERVED

GENERAL PRECAUTIONS REGARDING THE INSTALLATION AND SERVICE FOR DP1600/2000/2500 AND GD-1060

The installation and service should be done by a qualified service technician.

1. Transportation

- When transporting/installing the copier, employ two persons and be sure to use the positions as indicated below.

  The copier is fairly heavy and weighs approximately 50 kg (110 lb), therefore pay full attention when handling it.

4 portions

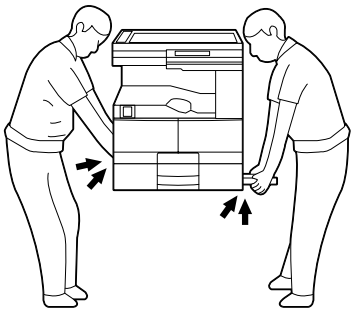

2. Installation

- Be sure to use a dedicated outlet with AC 115 or 120V/15A (220V, 230V, 240V/10A) or more for its power source.
- The copier must be grounded for safety.

  Never ground it to a gas pipe or a water pipe.
- Select a suitable place for installation.

  Avoid excessive heat, high humidity, dust, vibration and direct sunlight.
- Also provide proper ventilation as the copier emits a slight amount of ozone.
- To insure adequate working space for the copying operation, keep a minimum clearance of 80 cm (32") on the left, 80 cm (32") on the right and 10 cm (4") in the rear.
- After having installed the copier, be sure to push the carrying handles into the copier.

3. Service of Machines

- Basically, be sure to turn the main switch off and unplug the power cord during service.
- Be sure not to touch high-temperature sections such as the exposure lamp, the fuser unit, the damp heater and their periphery.
- Be sure not to touch high-voltage sections such as the chargers and the high-voltage transformer.
- Be sure not to touch rotating/operating sections such as gears, belts, pulleys, fans, etc.
- When servicing the machines with the main switch turned on, be sure not to touch live sections and rotating/operating sections. Avoid exposure to laser radiation.
- Use suitable measuring instruments and tools.

- Avoid exposure to laser radiation during servicing.
  - Avoid direct exposure to beam.
  - Do not insert tools, parts, etc. that are reflective into the path of the laser beam.
  - Remove all watches, rings, bracelets, etc. that are reflective.

4. Main Service Parts for Safety

- The breaker, door switch, fuse, thermostat, thermofuse, thermistor, etc. are particularly important for safety. Be sure to handle/install them properly.

5. Cautionary Labels

- During servicing, be sure to check the rating plate and the cautionary labels such as “Unplug the power cord during service”, “Hot area”, “Laser warning label” etc. to see if there is any dirt on their surface and whether they are properly stuck to the copier.

6. Disposition of Consumable Parts/Packing Materials

- Regarding the recovery and disposal of the copier, supplies, consumable parts and packing materials, it is recommended to follow the relevant local regulations or rules.

7. When parts are disassembled, reassembly is basically the reverse of disassembly unless otherwise noted in this manual or other related documents. Be careful not to reassemble small parts such as screws, washers, pins, E-rings, toothed washers in the wrong places.

8. Basically, the machine should not be operated with any parts removed or disassembled.

9. Precautions Against Static Electricity

- The PC board must be stored in an anti-electrostatic bag and handled carefully using a wristband, because the ICs on it may become damaged due to static electricity.

Caution: Before using the wrist band, pull out the power cord plug of the copier and make sure that there is no uninsulated charged objects in the vicinity.

Caution:	Dispose of used batteries and RAM-ICs including lithium batteries according to the manufacturer's instructions.
Attention:	Se débarrasser de batteries et RAM-ICs usés y compris les batteries en lithium selon les instructions du fabricant.
Vorsicht:	Entsorgung des gebrauchten Batterien und RAM-ICs (inklusive der Lithium-Batterie) nach Angaben des Herstellers.

1. FORM OF FAX OPTIONS OF DP1600/2000/2500

1.1 Fax Options (Necessary options to install the fax unit)

Several options can be supplied, which are necessary for extension, to extend the box function when you install the fax unit. (Refer to 2.4 in detail)

2. SPECIFICATIONS • ACCESSORIES • OPTIONS

2.1 Specifications

2.1.1 Scanning system

- Scanning method: CCD line sensor (Movable mirror type, Optical minification reading method)
- Light source: Xenon lamp
- Effective scanning area:

  Standard mode

  For NAD model

  Horizontal scanning: Max. 280 mm (Ledger width)

  Vertical scanning: Max. 432 mm (Ledger length)

  For MJD, AUD, ASD, SAD, TWD, and CND models

  Horizontal scanning: Max. 297 mm (A3 width)

  Vertical scanning: Max. 420 mm (A3 length)

  Long original mode

  For NAD model

  Horizontal scanning: Max. 280 mm (Ledger width)

  Vertical scanning: Max. 1000 mm

  For MJD, AUD, ASD, SAD, TWD, and CND models

  Horizontal scanning: Max. 297 mm (A3 width)

  Vertical scanning: Max. 1000 mm

Note: The maximum vertical scanning length is 700 mm when transmission is performed satisfying all of the following conditions.

- The copier is in the long original mode.
- Direct transmission is performed.
- The original has the same width as of A3 or ledger.
- The receiving facsimile machine is capable of receiving originals with A4 only.

- Scanning density (Horizontal x Vertical)

  STANDARD: 8 dots/mm x 3.85 lines/mm

  FINE: 8 dots/mm x 7.7 lines/mm

  U-FINE: 16 dots/mm x 15.4 lines/mm

- Density control: Automatic density mode and manual density selectable in 7 steps

- Speed of reading into memory (TTEC ITU-T#1 original, STANDARD resolution)

  For DP1600 series
  - A4R 2.3 seconds (with platen)
  - A4R 1.3 seconds (with ADF)
  - A4 1.8 seconds (with platen)

  For DP2000/2500 series
  - A4R 1.8 seconds (with platen)
  - A4R 1.8 seconds (with ADF)
  - A4 1.4 seconds (with platen)

- Acceptable originals

  Type: sheet, book, and 3-dimensional object.
  However, the automatic document feeder (option) only accepts sheets of paper (Multi-sheet: 50 - 105 g/m^2, or 13 - 29 lb/Single-sheet: 105 - 127 g/m^2, or 29 - 34 lb.), excluding carbon paper, pasted sheets and stapled sheets.
  Max size: A3/LD

- Capacity of originals

  For NAD model
  - LT, LT-R, ST-R, LG, Comp, LD : 50 sheets (with ADF)
  - LT, LT-R, ST-R, LG, Comp, LD : 100 sheets (with RADF)

  For MJD, AUD, ASD, SAD, TWD, and CND models
  - A4, A4-R, B5, B5-R, A5-R, B4, Folio, A3: 50 sheets (with ADF)
  - A4, A4-R, B5, B5-R, A5-R, B4, Folio, A3: 100 sheets (with RADF)

2.1.2 Transmission system

- Line used

  Telephone line

- Communication mode

  Exclusive mode (CRP connection)
  G3 mode
  ECM (Error Correction Mode)

- Transmission time

  Less than 3 seconds (in the case of the memory transmission of a TTEC ITU-T#1 original at 33.6 Kbps, STANDARD resolution, no TTI, and JBIG (ECM))

- Numbers of files / jobs

  Transmission reservation jobs:
  Max. 100 jobs (Memory Tx, Group Tx, Polling Rx, Relay Tx, Sending to Mail Box)
  Numbers of page at 1 memory transmission: Max. 999 sheets

• Communication mode specifications

	Exclusive mode (CRP call-out)	G3 mode	ECM
Horizontal scanning density	8 dots/mm,16 dots/mm	8 dots/mm, 16 dots/mm	8 dots/mm, 16 dots/mm
Vertical scanning density	3.85 lines/mm 7.7 lines/mm 15.4 lines/mm	3.85 lines/mm 7.7 lines/mm 15.4 lines/mm	3.85 lines/mm 7.7 lines/mm 15.4 lines/mm
Data compression system	MH/MR/MMR/JBIG	MH/MR	MH/MR/MMR/JBIG
Transmission speed (image signal) Modulation system (V.17/V.29/V.27ter/V.21)	14.4K/12.0K/9.6K 7.2K/4.8K/2.4K	14.4K/12.0K/9.6K/ 7.2K/ 4.8K/2.4K	14.4K/12.0K/9.6K/7.2K/ 4.8K/2.4K
Transmission speed (image signal) Modulation system (V.34)	————	————	33.6K/31.2K/28.8K/ 26.4K/24.0K/21.6K/ 19.2K/16.8K/14.4K/ 12.0K/9.6K/7.2K/4.8K/ 2.4K
Control signals FSK	300 bps (V.21)	300 bps (V.21)	1200 bps (V.34) 300 bps (V.21)
Transmission control sequence	Exclusive sequence	Conforming to T.30	Conforming to T.30

2.1.3 Telephone functions

- Dial-line function — Pulse method - 10 pps
DTMF method
On/Off-hook dial function
Chain dial
- Keypad dial — Max. 128 digits
- Re-dial — Automatic / Manual
- Alphabet dial — Max. 425 stations (OT75 + Abb300 + G50)
- Abbreviated dial — Max. 300 stations (001 - 999)
- One touch dial — Max. 75 stations
- Multi-address group dial — Max. 50 groups, 375 stations / group
- Multi-address using [MULTI] key — Max. 475 stations (OT75 + Abb300 + Keypad100)
- Chain dial — Max. 128 digits (using Abb / OT / Keypad)
- Number of dialing — Max. 100 jobs x 128 digits

2.1.4 Recording system

- Recording method — Plain paper recording by laser beam printer
- Resolution — Horizontal density: 16 dots/mm
  Vertical density: 15.4 lines/mm
- Paper feeding — Automatic feeding: Copier's cassette 1 piece standard (expandable up to 4 pieces by installing optional cassettes)
  PFU-optional (Stack height 60.5 mm, Equivalent to 550 sheets; 64 to 90 g/m^2 (17 to 24 lb.))
  PFP-optional (Stack height 60.5 mm, Equivalent to 550 sheets; 64 to 90 g/m^2 (17 to 24 lb.))
  LCF-optional (Stack height 137.5 mm, Equivalent to 1250 x 2 sheets; 64 to 80 g/m^2 (17 to 22 lb.))
  Bypass feeding (Stack height 16 mm, Equivalent to 100 sheets; 64 to 80 g/m^2 (17 to 21 lb.))

2.1.5 Software performance Table

Item	Sub. Item	Limitation	Note
Maximum address numbers of diabl	Keypad dial	128 digits	
	Abbreviated dial	300 numbers (Maximum)	001-999
	Alphabet dial	425 stations	OT75+Abb300+G50
	One touch dial	75 numbers (Maximum)	
	Multi-address group	50 groups (Maximum) 375 stations per 1 group	001-1999
	Multi-address using [MULTI] key	475 stations (Maximum)	OT75+Abb300+Key pad100
	ITU-T Mailbox/Relay box	100 boxes (Maximum) Relay box: 50 end stations per 1 box (Maximum)	
	Chain dial	128 digits (Maximum)	Using Abb. /OT / keypad
	Maximum number of dialing	100 jobs x 128 digits	
Memory capability	Transmission pix memory	5696 Kbyte : a)	a)Approx. 490 pages *1 (*1 : ITU-T No.1/JBIG/STD)
	Memory reception pix memory	5856 Kbyte : b) 160 Kbyte+a)	b)Approx. 500 pages *1 (*1 : ITU-T No.1/JBIG/STD)
Maximum numbers of	Tx reservation jobs	100 jobs (Maximum)	Memory Tx, Group Tx, Polling Rx, Relay Tx, Sending to Mail Box
	Numbers of page at 1 memory Tx	999 pages (Maximum)	

2.2 Specifications of LSU-related Performances

2.2.1 Recording paper size

The following recording paper sizes can be used:

(For NAD model) : LD, LG, LT, LT-R, ST-R, COMP, A4, A4-R

(For MJD, AUD, ASD, SAD, TWD, CND models) : A3, A4, A4-R, A5-R, B4, FOLIO, LT, LT-R

2.2.2 Effective recording area

a) Head : 4 mm (0.16 inch)

b) Foot : 4 mm (0.16 inch)

c) Effective Recording Limits:

1) For NAD model [Unit: mm (inch)]

Paper size	Size (Horizontal x Vertical)	Effective recording area
LD	279 x 432 (11 x 17)	275 x 424 (10.8 x 16.7)
LG	216 x 356 (8.5 x 14)	212 x 348 (8.3 x 13.7)
LT	279 x 216 (11 x 8.5)	275 x 208 (10.8 x 8.2)
LT-R	216 x 279 (8.5 x 11)	212 x 271 (8.3 x 10.7)
ST-R	140 x 216 (5.5 x 8.5)	136 x 208 (5.4 x 8.2)
COMP	257 x 356 (10.125 x 14)	253.2 x 348 (9.97 x 13.7)
A4	297 x 210	293 x 202
A4-R	210 x 297	206 x 289

2) For MJD, AUD, ASD, SAD, TWD, and CND models [Unit: mm (inch)]

Paper size	Size (Horizontal x Vertical)	Effective recording range
A3	297 x 420	293 x 412
A4	297 x 210	293 x 202
A4-R	210 x 297	206 x 289
A5-R	148 x 210	144 x 202
B4	257 x 364	253 x 356
FOLIO	210 x 330	206 x 322
LT	279 x 216 (11 x 8.5)	275 x 208 (10.8 x 8.2)
LT-R	216 x 279 (8.5 x 11)	212 x 271 (8.3 x 10.7)

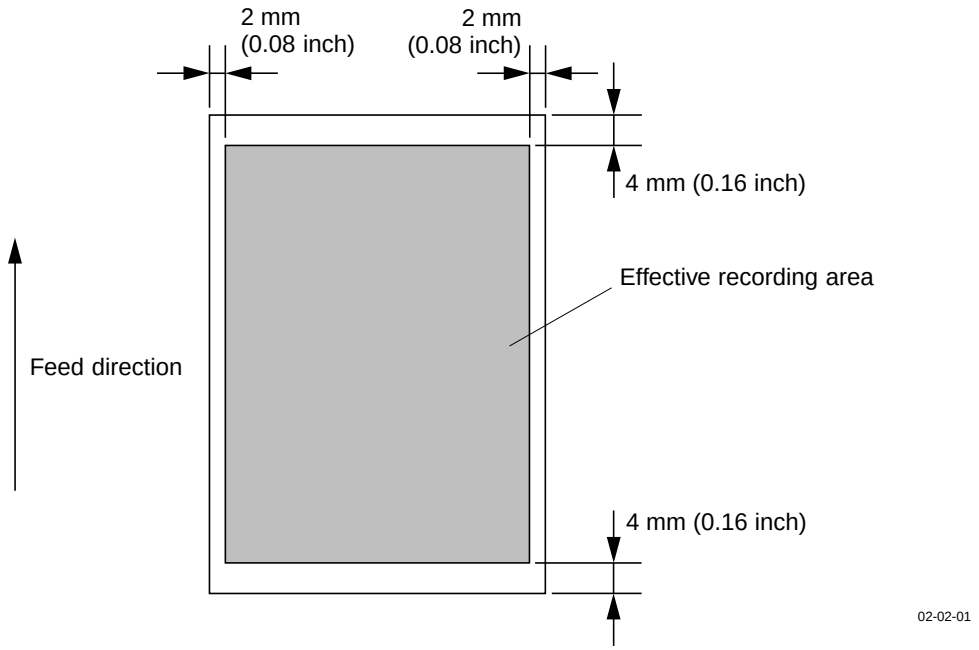

Fig. 2-2-1

2.2.3 Print mode

The machine provides various print modes to meet various requests from users, such as applicable recording paper types, recording methods, etc.

2.2.4 Recording paper selection algorithm and print algorithm

A) Recording paper selection algorithm

Capable of identifying the above-mentioned recording paper size of a received image, this machine prints on the recording paper of the same size as when sent, as a rule. If no recording paper of the identified size is not available, it selects recording paper for printing according to the set mode. The mode is set by using Func. 15 bit 3.

(1) Automatic reduction mode (Func. 15 bit 3 = 0, Default)

Selects recording paper on which the received document can be printed and prints on it.

(2) Reduction OFF mode (Func. 15 bit 3 = 1)

Selects recording paper on which the received document can be printed in a full size.

B) Print algorithm

A reception print image is basically printed on one page. Consequently, the algorithm of reception print is in the order of same size print, discard extra, vertical reduction print, and divided print.

(Refer to the reception print flowchart.)

Reception print flowchart

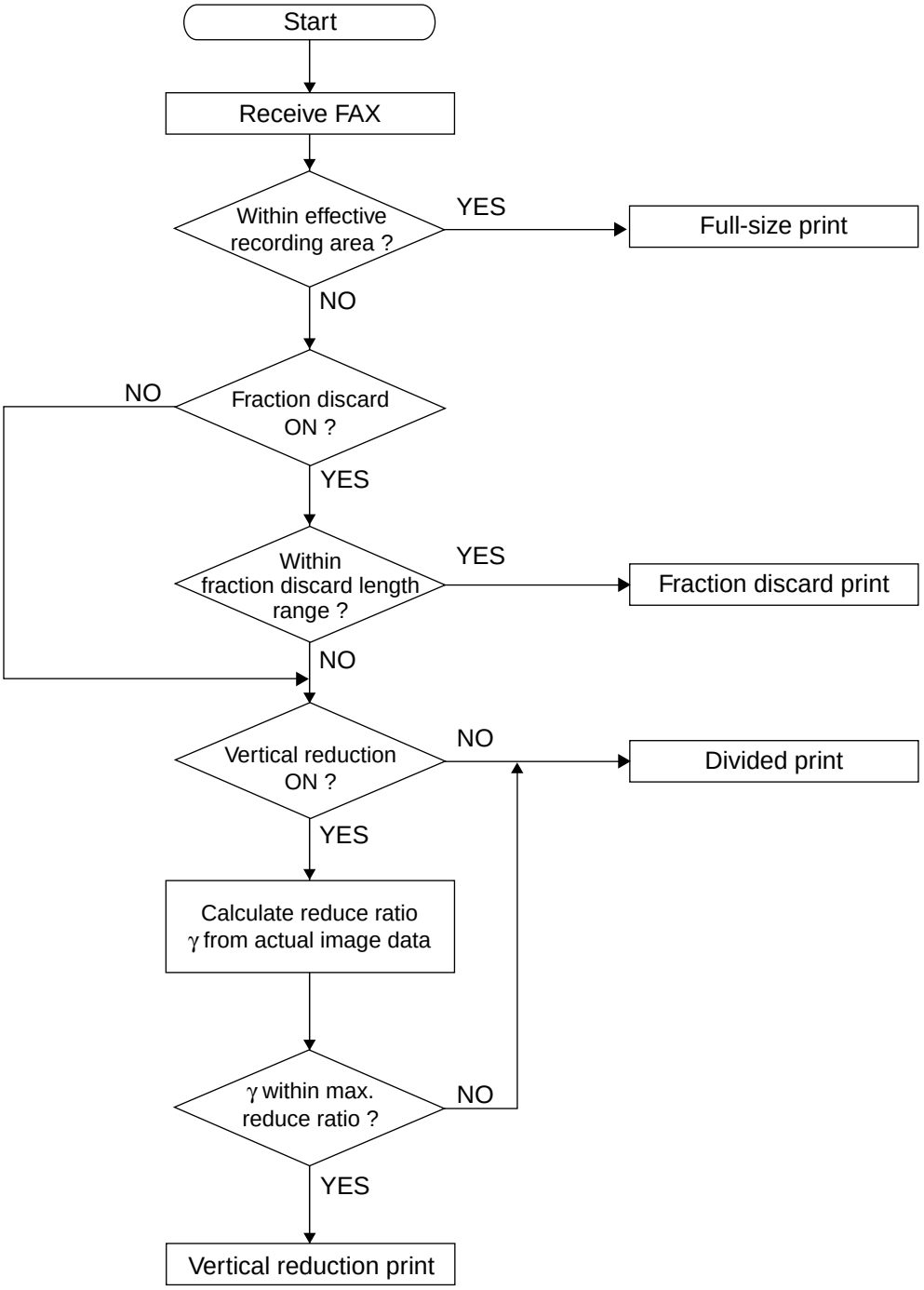

Judgment parameter	
Effective recording area	Area excluding 4 mm from the top of recording paper and 4 mm from the bottom.
Discard	Function setting by user
Vertical reduction	Function setting by user
Discard parameter	Func. 15 bit 6, 7

(1) Discard printing

Func. 15 bit 2 permits selecting between ON and OFF of the option for discard extra.

Func. 15 bit 2 = 0 : OFF

Func. 15 bit 2 = 1 : ON (Default)

Func. 15 bits 6 and 7 allow the discard parameter to be set.

Func. 15 (Default Setting bit 2 = 0, bit 6 = 1, bit 7 = 0)

bit 2	bit 6	bit 7	Discard parameter
0	X	X	Discard OFF
1	0	0	0 mm (Discard OFF)
1	1	0	10 mm
1	0	1	17 mm
1	1	1	34 mm

- When the option for discard extra is ON:

  When the length of the received document in the feed direction exceeds the effective recording area and the part exceeding one page is within the discard parameter, printing takes place with the exceeding part discarded. When the length of the received document in the feed direction exceeds the discard parameter range and is within the reduction range of the maximum reduce ratio, vertical reduction print takes place. When it is not within the reduction range of the maximum reduce ratio, divided print takes place. The discard extra takes preference over the vertical reduction print.

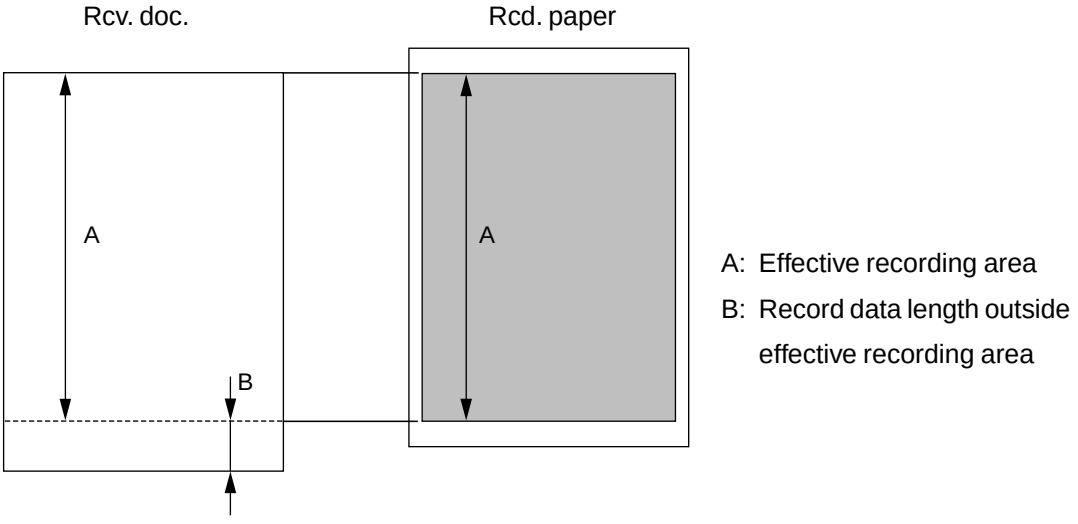

If the length of B is less than the set discard parameter, B is discarded.

- When the option for discard extra is OFF:

  The vertical reduction takes preference without performing discard extra print.

(2) Vertical reduction print

Func. 15 bit 5 permits selecting between ON and OFF of the option for Vertical reduction print.

Func. 15 bit 5 = 0 : OFF

Func. 15 bit 5 = 1 : ON (Default)

- When the option for Vertical reduction print is ON:

  When the length of the received document in the feed direction exceeds the effective recording area, the feed length is reduced in an appropriate reduce ratio and then the received document is printed on one sheet of recording paper.

  The following two patterns of maximum reduce ratio are available according to the setting of Func. 15 bit 1.

  Func. 15 bit 1 = 0 : Max. reduce ratio 90 % → The reduce ratio settings of 95% and 90 % are valid.

  Func. 15 bit 1 = 1 : Max. reduce ratio 73 % → The reduce ratio settings of 95 %, 90 %, 86 %, 80%, 83 % and 73 % are valid.

- When the option for vertical reduction print is OFF:

  When the length of the received document in the feed direction exceeds the effective recording area, divided print takes place.

(3) Divided print

When received data cannot be recorded on one sheet, even if reception reduction and reception discard are carried out, the recorded data is divided in the vertical direction and printed on two or more sheets with maximum length set up in the copier, without reduction.

If a long original with length of 216 mm which cannot be recorded on one B4 sheet with the maximum reduction is received, when A4, B4, and A5 paper is loaded in the first, second, and third cassettes, respectively, for example, the maximum recording paper (B4) is selected and received data is divided and printed on two or more sheets without reduction (see Table 5-2-2).

Ex.1 Divided into two sheets

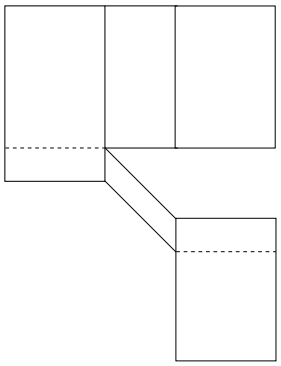

Ex.2 Divided into three sheets

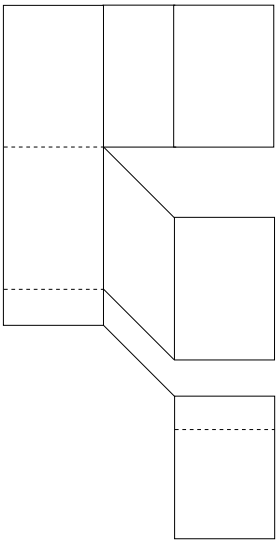

(4) Similar reduction print

When recording paper of the same size as that of the received document is not available due to running out of paper or no paper is available to cover the received document, the received document is similarly reduced and printed on recording paper smaller than the received document.

Ex.1 To print A3-size received document on an A4-R sheet because of running out of paper.

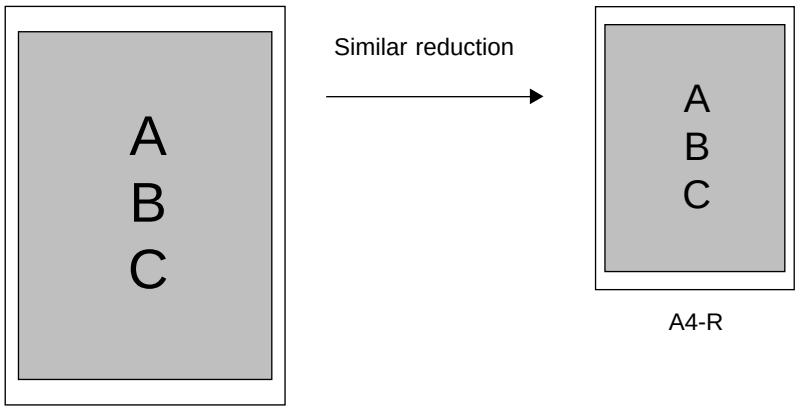

(5) Rotation print

When recording paper of the same size as that of the received document exists but the orientations are different on those sheets, the received document is rotated by 270 degrees before being printed. The rotation function is performed after discard extra, reduction or dividing processing. The rotation function is valid for received documents of A4, LT, A5, and ST-R sizes.

(6) Printing with no recording paper

When recording paper has run out during printing, printing takes place on another printable recording paper starting from the next page, if available. However, if recording paper has run out in the middle of divided print, reprinting takes place on another recording paper starting from the first one of the divided pages. (The same operation is done when recording paper of the same size is set in a different paper cassette.)

For the selection order of recording paper, refer to Table 2-2-1.

(7) RTI

When printing a received document with the RTI setting ON, RTI is printed on each page but RTI is printed on the first page only in the case of divided print.

(ON or OFF of RTI is possible by means of the user setting. Default: OFF)

RTI is created for the LT or A4-R width. When printing RTI on A5, B5 and ST-R smaller than those sheets, the information to be printed is reduced to a printable length.

• LT size or up

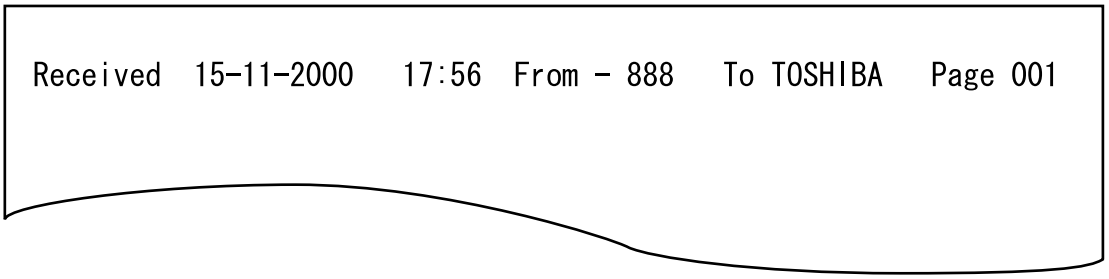

• A5, B5, ST-R

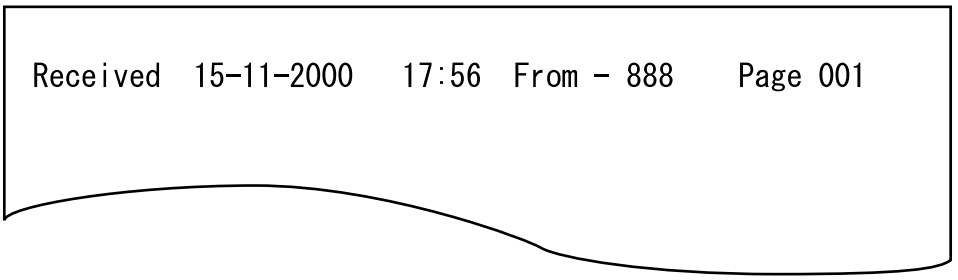

(8) Received document and selection of recording paper

The procedure for selecting recording paper handled by this machine is briefly described below. Recording paper for reception print is selected according to the print recording paper range and priority as listed in Table 2-2-1. A printable print recording paper range is selected according to the scanning width and feed length of the received document. A print recording paper range is selected by taking the discard length and feed reduce ratio into consideration.

Shown is an example where an EU model is used, the discard parameter is 10 mm, the feed reduce ratio is max. 75 %, the scanning width of the received image is A4, the number of lines received is STD or 2000 lines. Since the scanning width is A4, the recording paper range to be selected is one of A5R, A4R, FOLIO, B4 and A3.

Since 2000 lines are converted to 519 mm, a feed length to allow 390 mm to be printed on one page with a max. reduce ratio of 75 % is selected. The recording paper length of A4 is 297 mm, the recording paper length of B4 is 364 mm, and the recording paper length of A3 is 420 mm. Therefore, an A3 paper range covering 390 mm is selected. After an A3 range is selected, recording paper is selected according to the priority in Table 2-2-1, followed by printing.

(Recording paper range selection for NAD model)

		Scanning		
		216 mm	256 mm	303 mm
Feed length ↓	ST (140 mm)	ST-R	COMP	LT
	LT (216 mm)	LT-R	COMP	LT
	LT-R (279 mm)	LT-R	COMP	LD
	LG/COMP (356 mm)	LG	COMP	LD
	LD (432 mm)	LD	LD	LD
	Long original (over 432 mm)	LT (long)	COMP (long)	LD (long)

(Recording paper range selection for MJD, AUD, ASD, SAD, TWD, CND models)

		Scanning width		
		216 mm	256 mm	303 mm
Feed length ↓	A5 (148.5 mm)	A5-R	B5	A4
	B5 (182 mm)	A4-R	B5	A4
	A4 (210 mm)	A4-R	B4	A4
	A4-R (297 mm)	A4-R	B4	A3
	FOLIO (330 mm)	FOLIO	B4	A3
	B4 (364 mm)	B4	B4	A3
	A3 (420 mm)	A3	A3	A3
	Long original (over 421 mm)	A4 (long)	B4 (long)	A3 (long)

* When there is no recording paper which received data can be printed on one sheet of, the maximum paper loaded in the copier is selected and data is divided and printed on two or more sheets without reduction (see table 5-2-2).

Table 2-2-1 Selection of recording paper

For NAD model

		Recording paper range					
		LT-R	LT	LG	COMP	LD	ST
Priority of recording paper	1	LT-R	LT	LG	COMP	LD	ST-R *3
	2	LT *3	LT-R *3	COMP *2	LD *2	COMP *1	LT-R
	3	LG	LD	LD *2	LT-R *1	LT-R *1	LT *3
	4	A4-R	LG *2*3	LT-R	LT *1*3	LT *1*3	LG
	5	A4 *3	A4	LT *3	LG *1	LG *1	A4-R
	6	COMP *2	A4-R *3	A4-R	A4-R *1	A4-R *1	A4 *3
	7	LD *2	COMP *2*3	A4 *3	A4 *1*3	A4 *1*3	COMP *2
	8	ST-R *1	ST-R *1*3	ST-R *1	ST-R *1	ST-R *1	LD *2

For MJD, AUD, ASD, SAD, TWD, and CND models

		Recording paper range						
		A4-R	B4	A3	A4	A5	FOLIO	B5
Priority of recording paper	1	A4-R	B4	A3	A4	A5-R *3	FOLIO	B4
	2	A4 *3	A3 *2	B4 *1	A4-R *3	A4-R	B4 *2	A4 *2
	3	FOLIO	A4-R *1	A4-R *1	A3	A4 *3	A3 *2	A4-R *2*3
	4	LT-R	A4 *1*3	A4 *1*3	FOLIO *2*3	FOLIO	A4-R	A3 *2*3
	5	LT *3	FOLIO *1	FOLIO *1	B4 *2*3	LT-R	A4 *3	FOLIO *2*3
	6	B4 *2	LT-R *1	LT-R *1	LT	LT *3	LT-R	LT *2
	7	A3 *2	LT *1*3	LT *1*3	LT-R *3	B4 *2	LT *3	LT-R *2*3
	8	A5-R *1	A5-R *1	A5-R *1	A5-R *1*3	A3 *2	A5-R *1	A5-R *1*3

*1 : Similar reduction possible.

*2 : Center printing when printing out to a size larger in the scanning direction.

*3 : Rotation processing.

Table 2-2-2 Selection of recording paper (Long original)

For NAD model

		Recording paper range		
		LT (long)	COMP (long)	LD (long)
Priority of recording paper	1	LD *2	LD *2	LD
	2	COMP *2	COMP	COMP *1
	3	LT-R	LT-R *1	LT-R *1
	4	LT *3	LT *1*3	LT *1*3
	5	LG	LG *1	LG *1
	6	A4-R	A4-R *1	A4-R *1
	7	A4 *3	A4 *1*3	A4 *1*3
	8	ST-R *1	ST-R *1	ST-R *1

For MJD, AUD, ASD, SAD, TWD, and CND models

		Recording paper range		
		A4 (long)	B4 (long)	A3 (long)
Priority of recording paper	1	A3 *2	A3 *2	A3
	2	B4 *2	B4	B4 *1
	3	A4-R	A4-R *1	A4-R *1
	4	A4 *3	A4 *1*3	A4 *1*3
	5	FOLIO	FOLIO *1	FOLIO *1
	6	LT-R	LT-R *1	LT-R *1
	7	LT *3	LT *1*3	LT *1*3
	8	A5-R *1	A5-R *1	A5-R *1

*1 : Similar reduction possible.

*2 : Center printing when printing out to a size larger in the scanning direction.

*3 : Rotation processing.

2.2.5 Error processing

If paper has run out or a cassette has been pulled out, follow the procedure described below.

(1) If recording paper of a larger size has run out during communication:
For DIS redeclaration in the mode change procedure, declare the first recording paper size declared, as it is.

(2) If a document has been received with recording paper of a larger size empty:
Declare the maximum value of the remaining recording paper or the attached cassette. Conform to the setting of Func. 8 bit 4.

(3) If the cassette has been pulled out:
Assume A4 if none of the cassettes is left.

(4) If all paper has run out:
When the recording paper width capacity is recording paper and all paper has run out, assume A4. (Same processing is done when only the recording paper of scan width less than 216 mm is set.)

2.2.6 Limitations on reception print

The following limitations are imposed on reception print.

(1) Reception print is not performed from the SFB.

(2) When the JSP is installed, reception print is always performed from the upper cassette.
After the upper tray becomes full, memory reception is performed. When the lower tray becomes full, printing of received facsimile is possible.

(3) Even if the OCT is installed, it cannot be used during reception print.

(4) When the finisher is installed, it cannot be used.

(5) Even if the ADU is installed, it cannot be used.

(6) After the output tray is full, printout does not take place but delayed delivery is performed.

(7) When illegal paper is selected and printed on due to an operator mistake, the completion of printout is assumed and no printout is performed again.

(8) The feed length of a received document is not limited. That is, printing is performed even if the received document has several lines for printing. However, if the top lines are less than 5 lines, no printing takes place. This also applies to multiple pages in divided print.

(9) Paper of the same size is present in multiple cassettes, printing takes place according to the following cassette priority.

Order	Cassette
1	Cassette selected by code 480 in system mode
2	1st cassette
3	2nd cassette
4	3rd cassette
5	LCF or 4th cassette

2.3 Accessories and cartoned parts

The following accessories and other parts come with the fax kit:

Accessory name	Q'ty
Operator's manual (for facsimile function)	1 pc.
Installation procedures	1 pc.
TEL LINE cable	1 pc.
SUPER G3 label	1 pc.
T/A label	*1

Cartoned parts name	Q'ty
Fax panel	1 pc.
Fax panel bottom cover	1 pc.
Fax PWA	1 pc.
NCU PWA	1 pc.
Battery	1 pc.
Fax panel harness	1 pc.
Ground wire	1 pc.
Locking support	1 pc.
Band	2 pcs.
BAIND screw M-3x8	4 pcs.
PAN Head screw M-3x8	2 pcs.

*1 The label that differs according to destination is packed.

2.4 Options

Extends the fax functions when the fax unit is installed.

Option	Function	DP1600	DP2000 DP2500
Original Cover	Document cover	KA-1600PC	KA-1600PC
ADF	Automatic document feeder	MR-2012 MR-2012N	MR-2012 MR-2012N
RADF	Reverse automatic document feeder	MR-3011	MR-3011
PFU (2nd CASSETTE)	Paper feed unit A cassette, which can be installed under the copier.	MY-1015 MY-1015N	MY-1015 MY-1015N
PFP (3rd CASSETTE)	Paper feed pedestal A cassette, which can be installed under the PFU.	KD-1009 KD-1009N	KD-1009 KD-1009N
CM (4th CASSETTE)	Cassette module The cassette module, which can be installed in the PFP.	-----	MY-1017 MY-1017N
LCF	Large capacity feeder Large capacity feeder for A4 or LETTER size, which can be installed under the PFU.	-----	KD-1010

Note: If options, other than the ones listed above, are installed, the copier will operate; however the options will not.

2.5 System List

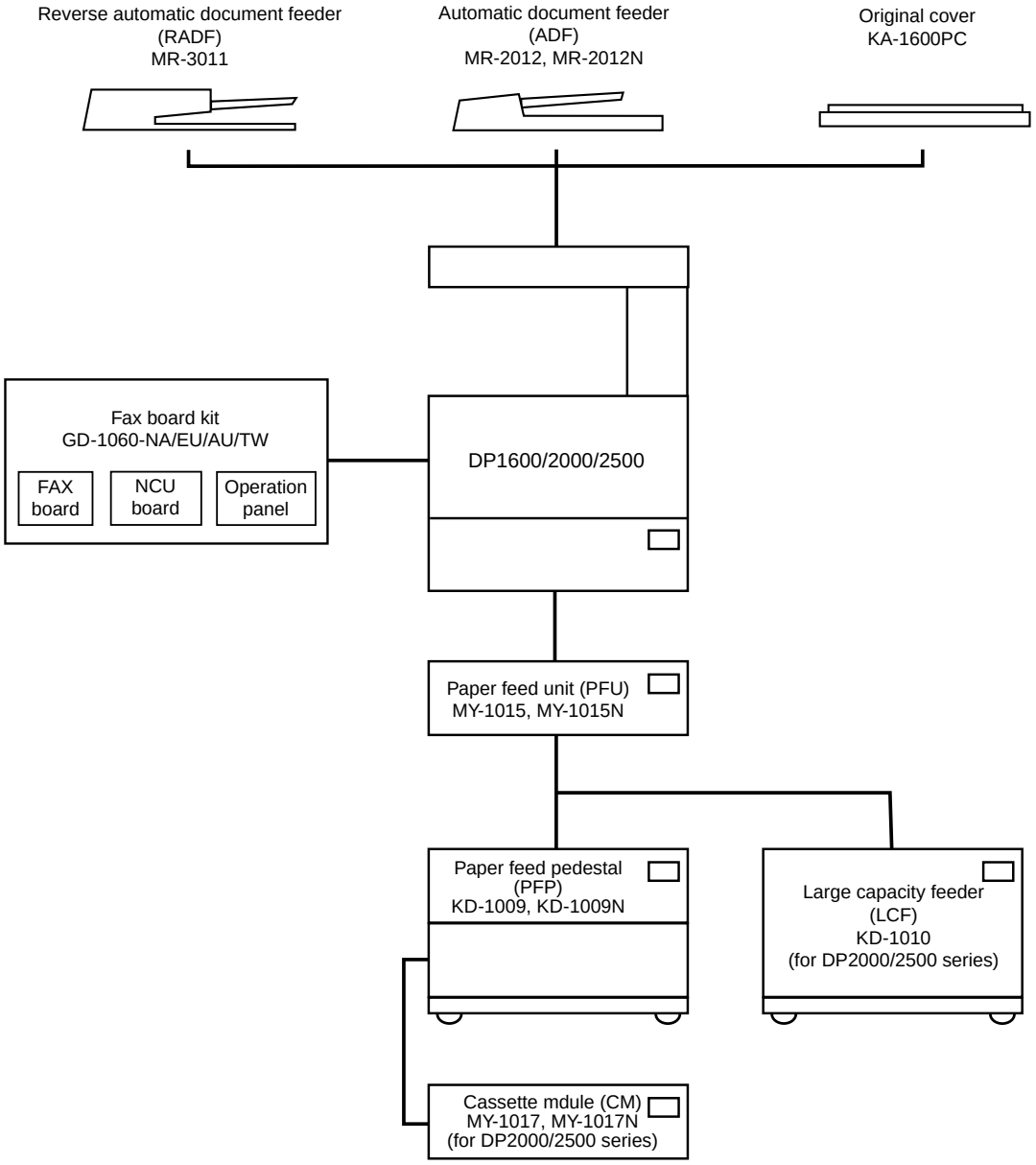

3. GENERAL

3.1 Main Functions

This machine has following features.

High-speed scanning:

The GD-1060-NA/TW/AU/EU scans one Letter (A4) size Original page in 1.4 seconds (line density 8 dots/mm x 3.85 lines/mm) and stores it into memory.

High-speed transmission:

The GD-1060-NA/TW/AU/EU uses a V.34 modem designed for 33,600 bps communications.

Multi-access:

Using the multi-access facility, multiple processes can be performed in parallel. Functions, such as transmission reservation during reception, copying during memory transmission/ reception, etc. Maximizing the GD-1060-NA/TW/AU/EU's high-speed scanning and multi-access capabilities provides maximum office productivity and efficiency. Patterns of the multi-access are as follows:

(1) Scan to Memory during Memory Transmission
(2) Scan to Memory during Reception
(3) Scan to Memory during Substitute Reception
(4) Copying during Memory Transmission
(5) Reception during Copying
(6) Reception during Memory printing
(7) Reception during List printing
(8) Scan to Memory during Memory printing
(9) Scan to Memory during List printing

Laser recording on plain paper:

Recording is performed on fixed sizes of paper - Ledger, Legal, Letter, Letter-R, Statement, Statement-R, Computer, A4, A4-R (to NAD model) or A3, A4, A4-R, A5-R, B4, FOLIO, Letter, Letter-R (to MJD/AUD/ASD/SAD/TWD/CND models) - using a laser beam printer.

Halftone system:

Photographic images are clearly recorded by the 256 grayscales using the error diffusion method.

High resolution mode:

The GD-1060-NA/TW/AU/EU can transmit in ultra-fine mode (406 x 392).

Image memory communication function:

Picture data can be stored in the image memory. For a delayed transmission, the picture data created by scanning Originals is stored in the image memory and to be transmitted at the designated time. Other memory functions include multi-address transmission, substitute reception, ECM communication, etc.

The memory contents will be retained by a backup battery for up to 2 hours if a power failure occurs. The memory size is 5.7 MB.

75 one touch keys:

The remote party's address data can be registered to a one touch key. Communication options can be registered for each address. Some one touch keys also operate as direct function access keys. For further details, refer to page 3-9.

300 abbreviated dial numbers:

300 abbreviated dial numbers can be assigned in the range from No. 001 to 999.

Alternate number dialing:

It is possible to assign two facsimile telephone numbers to one abbreviated dial number or one touch dial key (one as the primary telephone number and the other as an alternate telephone number). The facsimile first dials the primary telephone number, then redials if the line is busy until the redialing limit count is reached. It will then begin to dial the alternate number. (Except for Relay/Mailbox/Confidential/Polling)

Multi-address transmission function:

Transmissions of the same original to multiple addresses (up to 375 addresses) are possible using one operation sequence, in which preset abbreviated dial numbers (300), and one touch dial keys (75) can be used. When the multi-key is specified, key pad dialing of up to 100 locations, is also possible.

Multi-polling reception:

Polling receptions from multiple remote parties (up to 375 parties) are possible using one operation sequence, in which preset abbreviated dial numbers (300), and one touch dial keys (75) can be used. When the multi-key is specified, key pad dialing of up to 100 locations, is also possible.

Relay transmission request function:

The GD-1060-NA/TW/AU/EU can originate a relay transmission or serve as a relay station in relay transmission transactions.

Secure RX:

Secure RX allows reception to memory to secure Originals during unattended periods. The user can select a specific time period and all day (24-hour) operation on selected days. The feature can be activated and deactivated by using a 4-digit security code.

Memory transmission:

Allows you to dial the remote party while scanning the original in memory. The original page data is cleared as the sending of each page is completed. Therefore, the memory is utilized effectively for transmissions. A maximum of 100 jobs of memory transmission are possible.

Public fax box:

An original can be reserved in image memory to be polled by remote stations multiple times. One of its merits is that any remote station (even one with a non-TOSHIBA facsimile) can poll such originals without a password.

Program continuous polling:

By designating the starting interval, time, and day-of-week, an endless polling can be set. Once set, polling receptions are repeated at the same time on the designated day-of-week.

Sub-address communication:

The GD-1060-NA/TW/AU/EU supports communication applications using sub-address (SUB/SEP/PWD) commands conforming to ITU-T. Sub-address communication is possible by keypad dialing, one touch key dialing, and abbreviated dialing using the sub-address settings in Comm. Options.

Security communication:

For transmissions, the facsimile checks if the telephone number of the remote party's facsimile CSI matches the number dialed on the unit itself. If it matches, the transmission will start. For receptions, the facsimile checks if the telephone number of the remote party's TSI matches any number assigned to an abbreviated dial number or one touch key. If it matches, the reception will start. Thus transmissions or receptions with any authorized party will be prevented at the earliest stage.

Substitute reception into memory:

When there is no paper remaining in the cassette(s), when a recording paper jam occurs, the toner is empty, or printing is already in progress, the received data is stored into memory instead of being output to recording paper. When the trouble is corrected, or the active printing job is completed, the received data in memory will then be printed.

Communication options:

If necessary, the function may be changed and options can be selected for page number, line monitoring, turnaround polling, ECM communication and security transmission, etc.

Automatic dialing functions:

(1) Dialing with a time designated

Transmitting a original to a designated party at a designated time.

(2) Redialing

When an automatic dialing has been performed and the destination party is busy, redialing will be repeated as many times as programmed with a certain time interval also programmed.

Cover sheet function:

This facsimile has a facsimile cover sheet preparation feature built in, allowing the operator to enter the destination name, sender name at the time of the original transmission. This cover sheet also allows image data, such as a company logo, to be included.

Account code:

By entering a different account code for each destination at the time of transmission, account codes will identify when, for whom, and to whom a particular facsimile message was sent.

Department code:

Permits assigning 99 department codes to control access and track activity. These codes are set up beforehand, and must be used to access machine functions.

Separator page function:

GD-1060-NA/TW/AU/EU has the feature which divide print jobs (received original) using separator page. Also the customer can program the specified paper cassette for this function.

Auto supplies order

GD-1060-NA/TW/AU/EU has the feature which send a supplies order report to the programmed facsimile number automatically when the terminal detect toner end condition and drum low and/or end condition.

List output:

This allows the operator to print data stored in the memory (reservation list, preset dial number lists, function list, communication journal, transmission report, etc.).

Super power saver mode:

This feature turns off virtually all power to minimize power consumption. Only the sub-MPU remains operation sensing for ringing signals, original insertion, or activation of the [SUPER ENERGY SAVER] key.

Sleep mode:

Reduces power consumption by cutting off power for the fuser during periods when printing is not expected. The fast warm up time ensures the printer section will be ready before a full page of image data can be received.

Recovery transmission:

Originals that have gone through the redial count limit will not be cleared, but stored for a programmed period of time. Such originals can be recovered to be transmitted again.

F-code mailbox/relay box communication:

Bulletin board F-code mailbox transmissions using ITU-T standard protocol is possible. Permitting confidential communications with any other similarity equipped facsimile made by TOSHIBA or some other company.

3.2 Overview

3.2.1 Front view

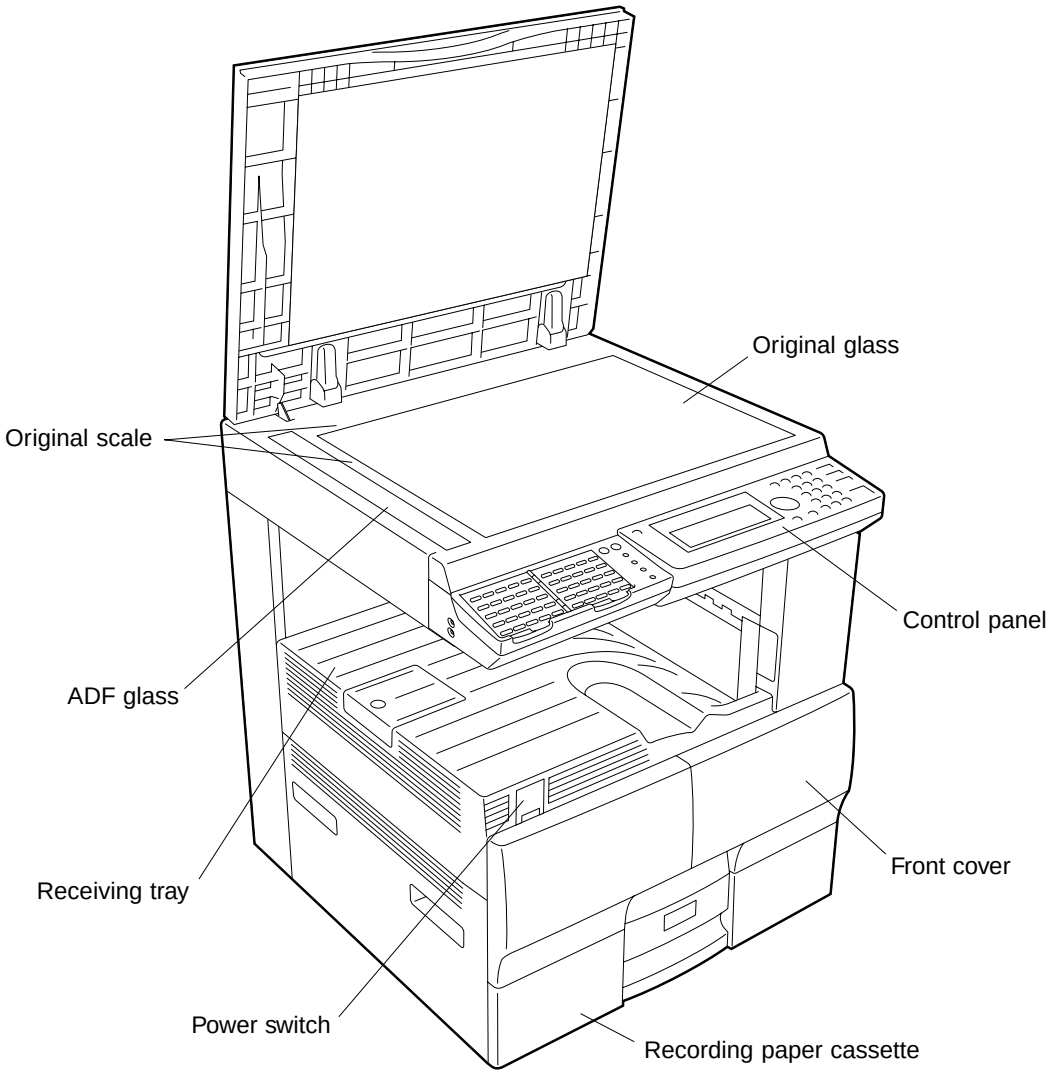

03-02-01

Fig. 3-2-1

3.2.2 Rear view

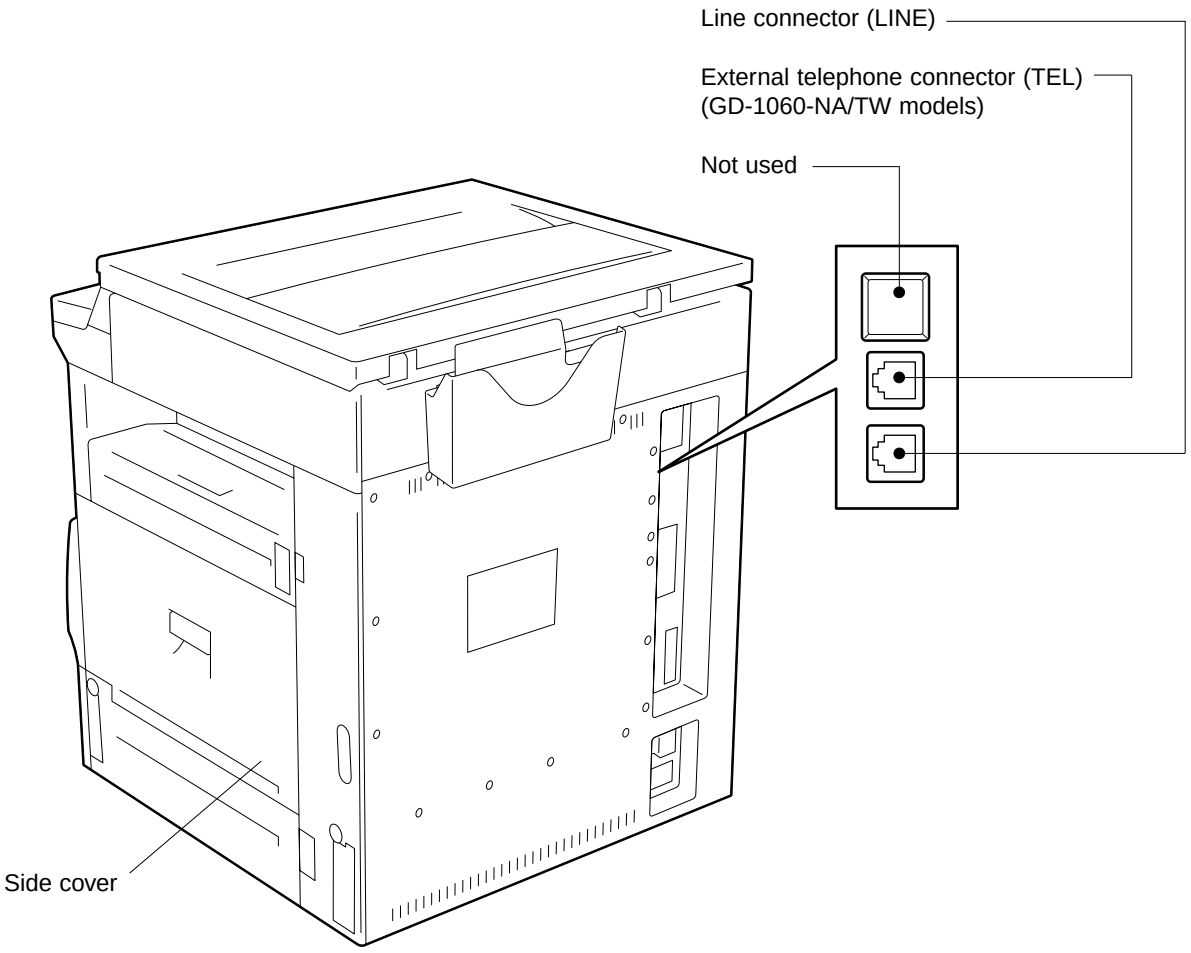

03-02-02

Fig. 3-2-2

3.2.3 Control panel for facsimile

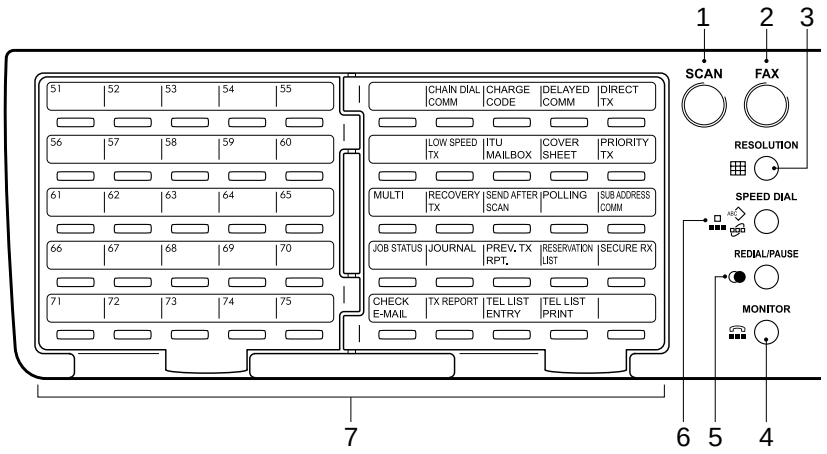

1. SCAN key and SCAN lamp

Press this key to switch from the other modes to the SCAN mode.

Illuminated when the machine is in the SCAN mode.

2. FAX key and FAX lamp

Press this key to switch from other modes to the FAX/E-MAIL mode.

Illuminated when the machine is in the FAX/E-MAIL mode.

3. RESOLUTION key

Selects the desired resolution for transmission.

A selected resolution is shown on the LCD.

4. MONITOR key

Used to enable the speaker monitor, for monitoring call progress during non-memory original feeder transmission.

5. REDIAL/PAUSE key

Press this key to redial a facsimile/telephone number if the number was busy on your first try. Or, use this key to enter a pause between telephone digits when entering a remote facsimile number.

6. SPEED DIAL key

Used for accessing Abbreviated, Alphabet, or Group dialing telephone receptions.

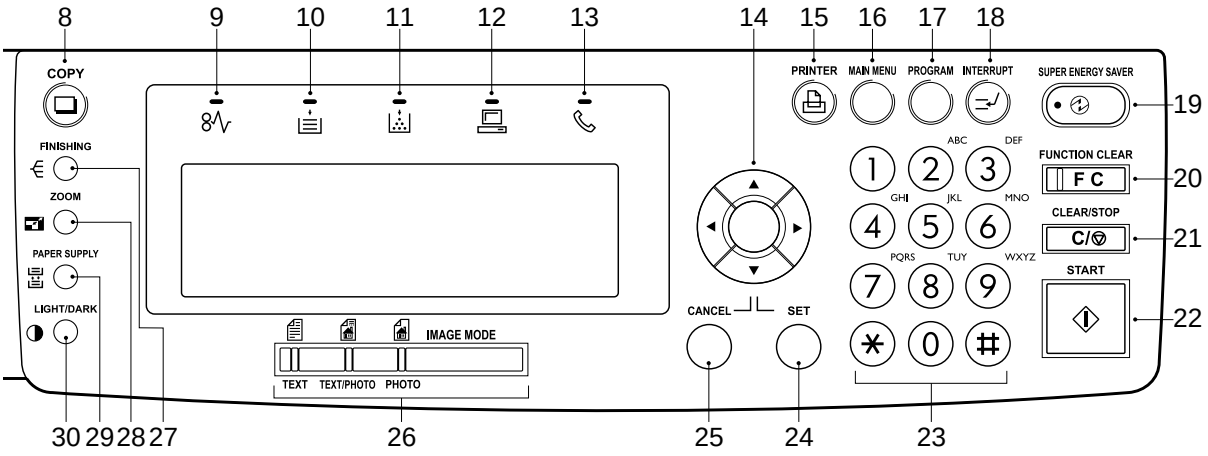

03-02-03A

7. One Touch keys (01-75), Function keys, and Keyboard

View the one touch One Touch keys, Function keys, and Keyboard by turning the Flip panels.

One Touch keys (01-75)

Used to select telephone/ facsimile number by simply pressing these keys.

Function keys

Refer to page 3-12.

Keyboard

Used to enter alphabetic characters when setting the speed dials, etc.

8. COPY key and COPY lamp

Press this key to switch from the other modes to the COPY mode.

Please refer to the “Operator’s Manual for Copying Function” for further information about the settings and operation in the COPY mode.

9. Paper Jam Lamp

This lamp blinks when an original or recording paper is jammed.

10. Recording Paper Lamp

Used to accessing Abbreviated, Alphabet, or Group dialing telephone directories.

This lamp blinks in the FAX mode when no paper is loaded in one of the paper cassette.

11. Toner Lamp

This lamp illuminates when the toner is about to run out or runs out completely.

12. PC Communication Lamp

This lamp is not used in the FAX mode.

This lamp blinks while the copier is serving as a printer and communicating with your computer, while it is printing out in the PRINTER mode, or while it is communicating as a local scanner.

13. Fax Communication Lamp

This lamp blinks when the machine is during facsimile communication.

14. Arrow keys

Use these keys to select a desired setting option or to enter a desired name or value in the PROGRAM mode or COMM. Option.

15. PRINTER key and PRINT lamp

Use this key to make the printer settings or perform printing automatically.

Illuminated when the machine is in the PRINTER mode.

16. MAIN MENU key and MAIN MENU lamp

Press this key to switch from the PROGRAM mode to the MAIN MENU (COPY, SCAN, FAX, or PRINTER mode).

Illuminated when the machine is in the MAIN MENU.

17. PROGRAM key and PROGRAM lamp

Use this key to reset the settings of the copier or the default settings.

Illuminated when the machine is in the PROGRAM mode.

18. INTERRUPT key and INTERRUPT lamp

This key and lamp are not used in the FAX mode.

19. SUPER ENERGY SAVE key and SUPER ENERGY SAVE lamp

Press this key to enter or exit the Super Energy Saver Mode.

Illuminated when the facsimile is in the Super Energy Saver Mode.

20. FUNCTION CLEAR key and FUNCTION CLEAR lamp

Clear all items selected in the FAX mode such as FAX SETUP and EDIT MENU.

21. CLEAR/STOP key

Use this key to correct the dialed remote FAX number when sending an original or to stop an operation.

22. START key

Press this key to start scanning of the originals to the memory or direct TX.

23. Dial keypad

Use these keys to enter telephone/facsimile number or to set the ID number, etc.

24. SET key

Use this key to accept the data that you have entered in the PROGRAM mode or Added Feature.

25. CANCEL key

Use this key to return to a previous menu in the PROGRAM mode or COMM option.

26. IMAGE MODE key and IMAGE MODE Lamps

Selects the desired image mode (TEXT, TEXT/PHOTO and PHOTO) for transmission.

A selected image mode lamp is illuminated.

27. FINISHING key

This key is not used in the FAX mode.

28. ZOOM key

This key is not used in the FAX mode.

29. PAPER SUPPLY key

This key is not used in the FAX mode.

30. LIGHT/DARK key

Use this key to specify the scanning density.

3.2.4 Function keys

The Function Keys are located on the left of the Control Panel and enable the following frequently used functions and settings by pressing the desired key.

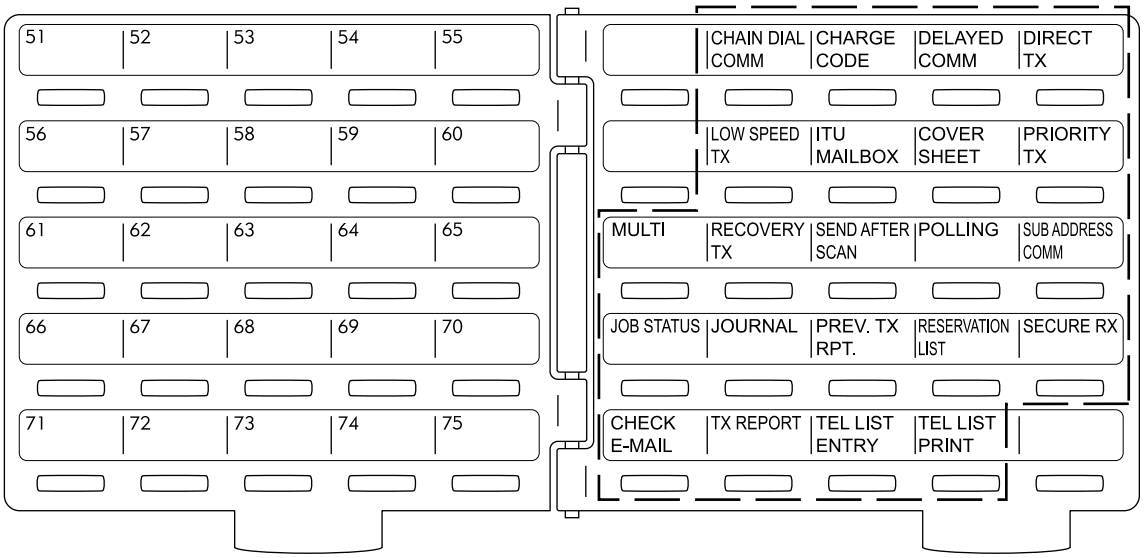

03-02-04

CHAIN DIAL COMM

Used to dial a remote party using Chain Dialing.

CHARGE CODE

Allows entry of a Charge Code at the time of dialing or during Abbreviated Dial and One Touch Dial programming.

DELAYED COMM

Schedules a delayed communication job to be performed at a designated time.

DIRECT TX

Allows transmission direct from the original glass or the optional document feeder without the use of memory.

LOW SPEED TX

Used to select a lower transmission speed to transmit an original when poor line conditions are expected, such as when transmitting to a foreign country that can only accept low speed data.

ITU MAILBOX

Used for Mailbox Communications or Relay Transmission, with remote facsimiles that support the ITU-T F-code functions.

COVER SHEET

Used to attach a cover sheet to an original to be transmitted.

PRIORITY TX

Sends pages set on the original glass or in the document feeder ahead of all previously scheduled transmissions.

MULTI

Used to create a manual grouping for multi-address transmission.

RECOVERY TX

Recovers from memory and sends incomplete transmissions.

SEND AFTER SCAN

Used to select whether the dialing starts while the machine is scanning the originals or after the machine has scanned all originals to memory.

POLLING

Designate polling communication.

SUB ADDRESS COMM

Add sub-address digits to the remote facsimile number for routing or security.

JOB STATUS

Used to confirm the status of the job or canceling a job.

JOURNAL

Used to print a communication journal.

PREV. TX RPT

Displays or prints the result of latest 150 transmission jobs.

RESERVATION LIST

Prints a Job Reservation List.

SECURE RX

Enables or disables Secure RX.

CHECK E-MAIL

Used to receive an E-mail immediately. (Requires optional GD-1040 (Internet FAX Kit) and GF-1110 (NIC Kit) be installed.)

TX REPORT

Print the transmission reports.

TEL LIST ENTRY

Used to register Abbreviated, One Touch, Group, and Relay Group Dialing numbers.

TEL LIST PRINT

Prints desired telephone/facsimile lists.

3.3 Layout of Electrical Parts

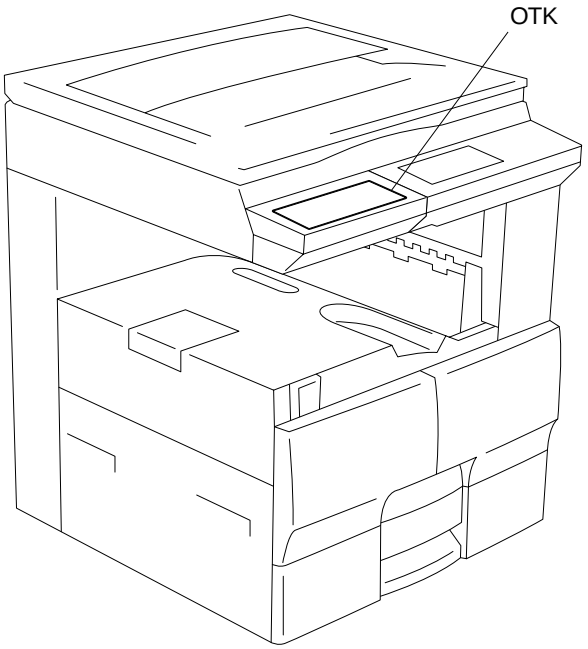

Fig. 3-3-1

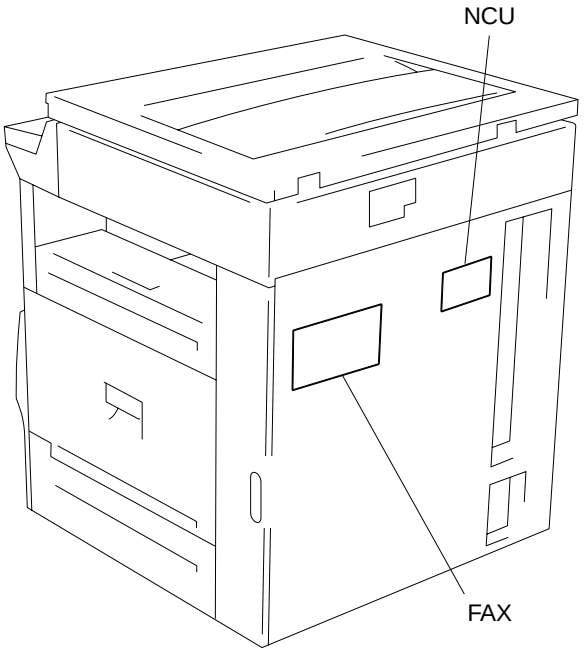

Fig. 3-3-2

■ Symbols and Functions of Various Devices

Symbol	Name	Function
OTK	PWA-F-OTK-TO One touch key PWA	Control panel PWA of facsimile functions.
FAX	PWA-F-FAX FAX PWA	PWA which controls the facsimile functions.
NCU	PWA-F-NCU-US NCU PWA (NAD/TWD/SAD models)	PWA which controls the line of telephone.
	PWA-F-NCU-EU NCU PWA (ASD/ADU/CND/MJD models)	

4. DIALING AND COMMUNICATION PROCEDURE

4.1 Line Connection and Mode Change Procedure

4.1.1 Call to external telephone line

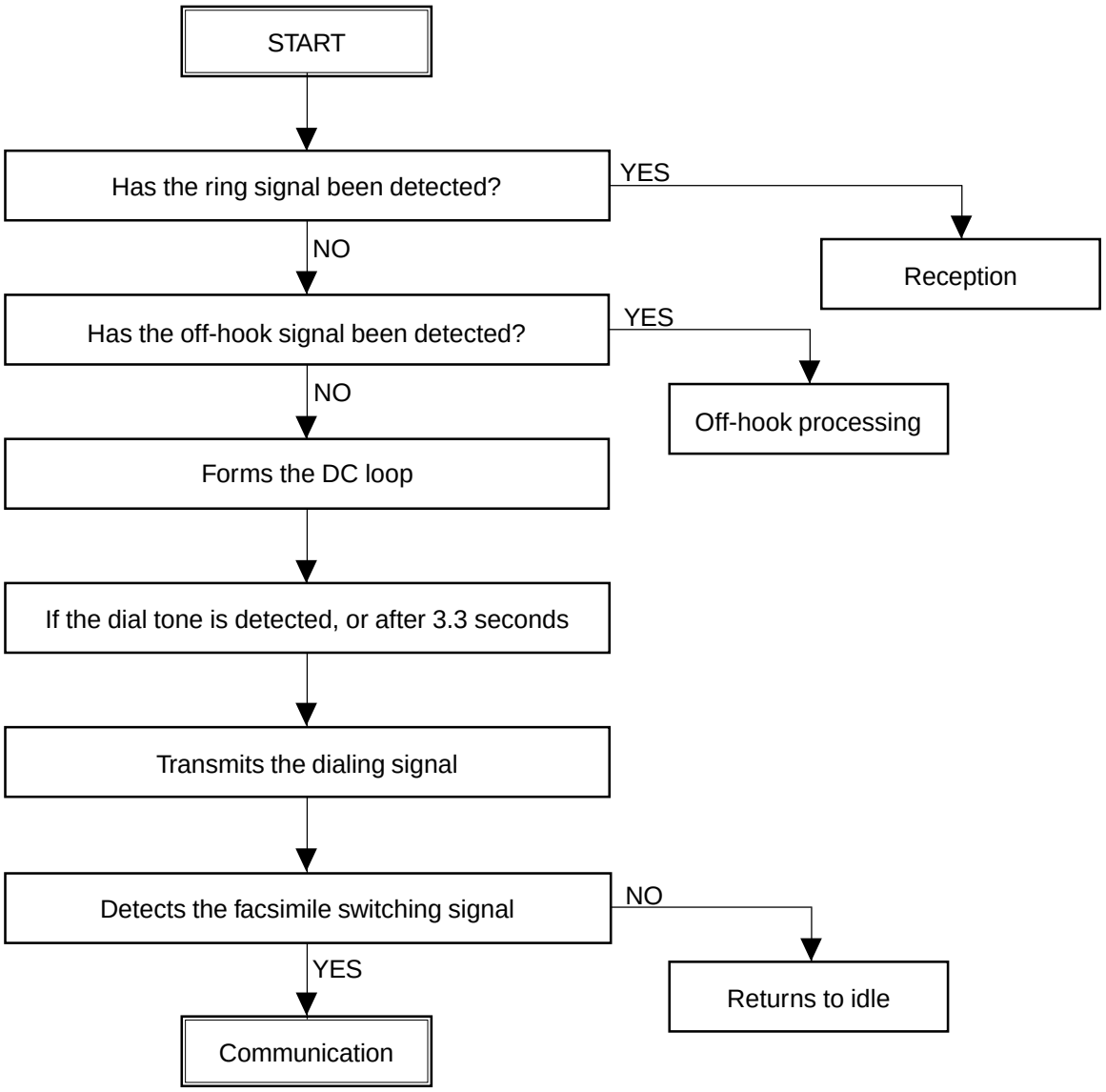

4.1.2 Tx mode selecting procedure

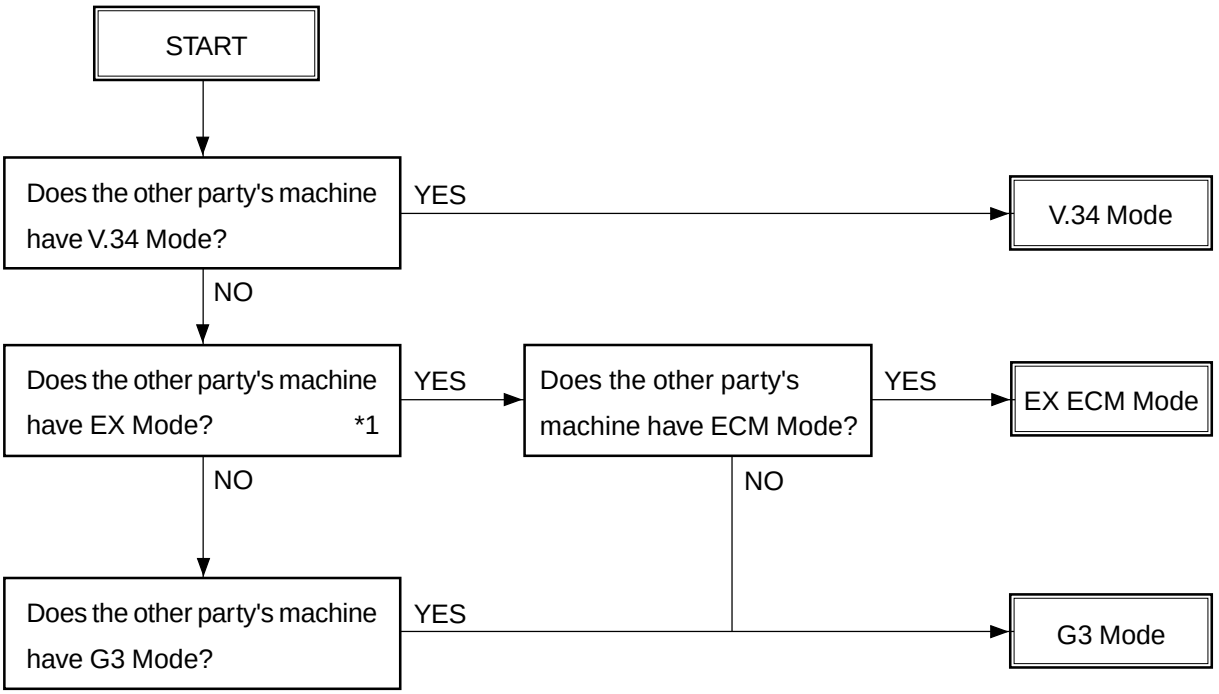

*1 Applicable only when the other party's machine has CRP or the transmission is started by CRP calling.

4.2 Signal Format and Communication Procedure

4.2.1 Network control signal format

The following signals are used as part of both the binary procedure and tonal procedure.

4.2.1.1 Network control signals

CED	Called Electronic Device Indicates that the facsimile is in the automatic called mode. (*1)
CNG	Calling Tone Indicates that the facsimile is in the automatic calling mode. (*1)

*1: This machine can generate the signal by manual operation as well.

4.2.1.2 Signal format

Signal name	Signal format	Specifications
CED	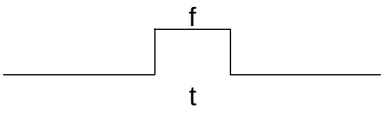	f: 2100 ± 15 Hz t: 2.6 to 4.0 sec.
CNG	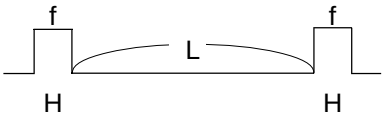	f: 1100 ± 38 Hz (H: 0.5 sec., L: 3 sec.)

4.2.2 Communication by binary signals

In the G3 mode, the communication is achieved according to the following binary procedure.

4.2.2.1 Binary procedure

- **Tx and Rx in G3 mode**

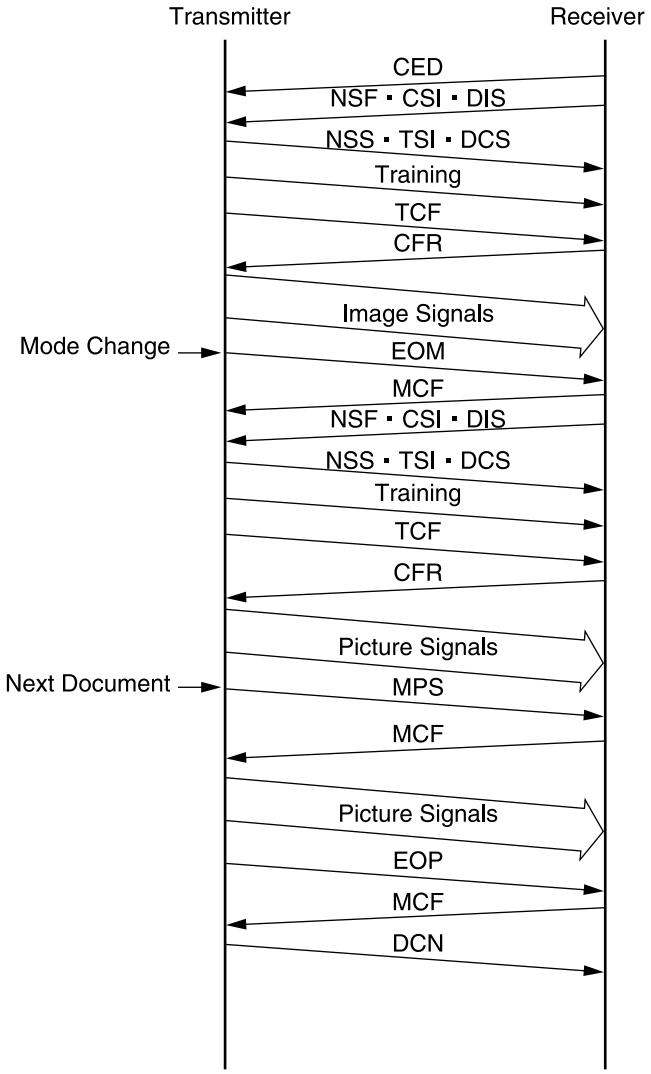

- **Tx and Rx in ECM mode**

  The ECM (Error Correction Mode) conforms to T.30. When an error occurs in the received image data, the receiving station notifies the sending station and the sending station transmits the image data again.

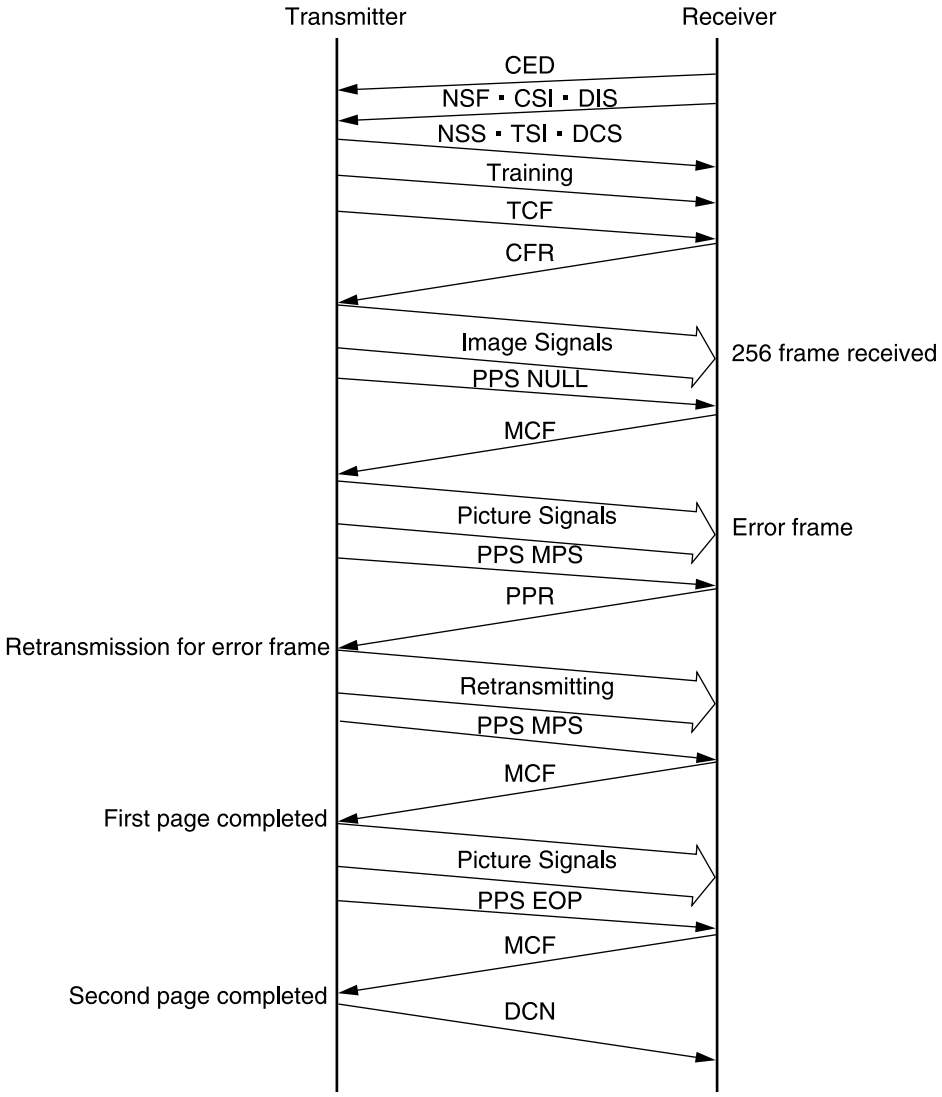

- **Resetting during transmission**

  If the [CLEAR/STOP] key is pressed during transmission of image data, the communication ends normally regardless of existence of the next document pages and mode changes.

  If the [CLEAR/STOP] key is pressed in any time except transmission of picture data, DCN is forcibly sent to end the communication.

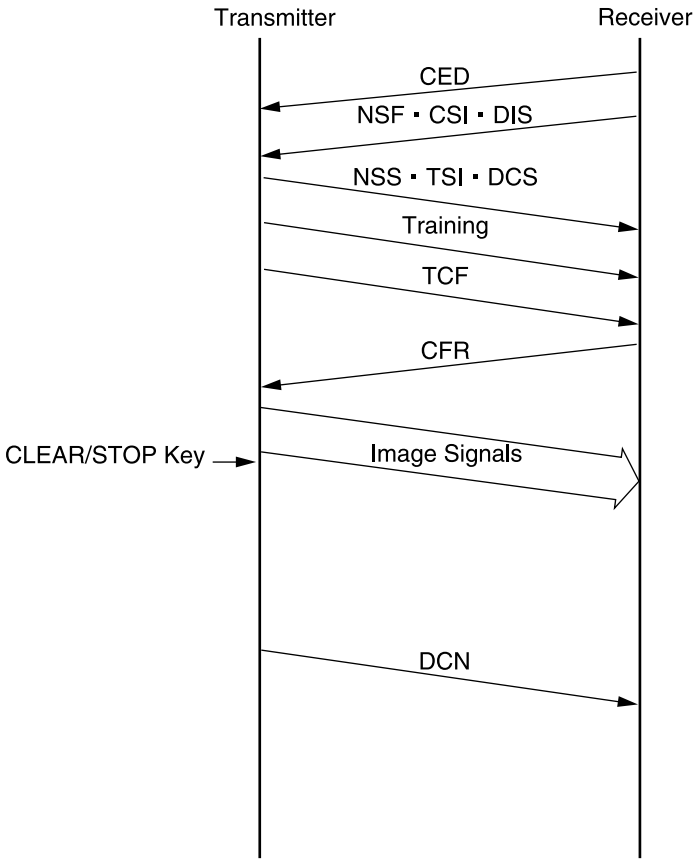

4.2.2.2 Binary signals

NSF	Non-Standard Facility Informs that the receiving station (machine) has a non-standard facility (i.e., HS/ECM, etc.).
NSC	Non-Standard Facility Command Commands to transmit with the non-standard facility which is selected corresponding to NSF (i.e., Polling etc.).
NSS	Non-Standard Facility Set-up Commands to transmit with the non-standard facility which is selected corresponding to NSF or NSC.
CSI	Called Station Identification Provides the telephone number of the called station. Used to check the identity of the called station.
CIG	Calling Station Identification Provides the telephone number of the calling station. Used to check the identity of the calling station (Polling, etc.).
TSI	Transmitting Station Identification Provides the telephone number of transmitting station. Used to check the identity of the transmission station.
DIS	Digital Identification Signal Informs that the receiving station (machine) has a standard facility (G3/G2).
DTC	Digital Transmit Command Commands to transmit with the standard facility which is selected corresponding to DIS (i.e., Polling, etc.).
DCS	Digital Command Signal Commands to transmit with the standard facility which is selected corresponding to DIS or DTC.
CFR	Confirmation to Receive Informs that the facsimile is in the receivable status.
FTT	Failure to Train Informs that the TCF signal has not received correctly and requests re-training.
EOM	End of Message Informs that a document has been transmitted and another document is loaded; commands to return to the beginning of phase B.
MPS	Multi-page Signal Informs that a document has been transmitted and another document is loaded; commands to return to the beginning of phase C.
EOP	End of Procedure Informs that a document has been transmitted and no additional documents are loaded.

MCF	Message Conformation A reply of MPS, EOM, or EOP; informs that picture signals have been received correctly. For EOM and MPS, informs that the facsimile is in the receivable status.
RTN	Retrain Negative Informs that a document has not been received correctly; demands a re-training (HS/G3) or phase signal (G2) before receiving another document.
PIP	Procedure Interrupt Positive Informs that a document has been received correctly and demands a voice reply by telephone or to return to the beginning of phase B in order to receive another document (i.e., CALL Request, etc.).
PIN	Procedure Interrupt Negative Informs that a document has not been received correctly and demands a voice reply by telephone or to return to the beginning of phase B in order to receive another document.
DCN	Disconnect Commands to disconnect the FAX line and to connect the telephone line. A reply is not required.
RR	Receive Ready Informs that the facsimile is in the receivable status and demands the data to be specified the received mode. (ECM mode)
RNR	Receive Not Ready Informs that the facsimile is not in the receivable status. (ECM mode)
PPR	Partial Page Request Informs that the ECM block (partial page) has not been received correctly. The frame number required a correction is informed by the FIF. (ECM mode)
PPS	Partial Page Signal Informs that the ECM block (partial page) or one page has been transmitted. (ECM mode)
CTC	Continue to Correct Replies for the 4th PPR which demands to correct the picture signal; informs that the transmitting station will continue to correct the frame data. (ECM mode)
CTR	Response for Continue to Correct Replies for CTC and informs that the receiving station has received and consented to the CTC. (ECM mode)
EOR	End of Retransmission Informs that the transmitting station has completed the correction of the error frame data (binary signal) of previous ECM block. (ECM mode)
ERR	Response for End Retransmission Replies for EOR and demands to transmit the picture signal of next ECM block. (ECM mode)

RTP	Retrain Positive Informs that the message has been received completely and that the message can be continued after receiving the synchronization signal and CFR signal.
CRP	Command Repeat Requests to send all the commands again including optional frames because the preceding command has been received incorrectly.
SUB	Sub-address Indicates that the FIF information is a sub-address in the domain on the call-in side.
SEP	Select Polling Indicates that the FIF information is a sub-address for polling mode.
PWD	Password Indicates that the FIF information is a sub-address for polling mode in a reception. Indicates that the FIF information is a password for transmission in a transmission.

4.2.2.3 Frame structure of binary signals

Each binary signal frame is composed of the following sequences and fields. However, some binary signals have an FIF field inserted, and others do not.

F	F	A	C	FCF	FIF	FCS	F

F: Flag Sequence
Indicates the start or end of a frame. It also establishes the frame synchronization.

A: Address Field
Informs of the address.

C: Control Field
Informs whether this frame is the final frame in this procedure or not.

FCF: Facsimile Control Field
Informs of the kind of binary signal.

FIF: Facsimile Information Field
Informs of the functions of the facsimile, etc.

FCF: Frame Check Sequence
Checks if there was any error in the transmission from “A” to “FIF.”

- **Formats of F, A, and C**

	Format							
	b_1	b_2	b_3	b_4	b_5	b_6	b_7	b_8
F	0	1	1	1	1	1	1	0
A	1	1	1	1	1	1	1	1
C	1	1	0	0	X	0	0	0

When this frame is the final fame, X=1.

- **FCF format of each binary signal**

Bynary Signal	Format							
	b_1	b_2	b_3	b_4	b_5	b_6	b_7	b_8
NSF	0	0	0	0	0	1	0	0
NSC	1	0	0	0	0	1	0	0
NSS	X	1	0	0	0	1	0	0
CSI	0	0	0	0	0	0	1	0
CIG	1	0	0	0	0	0	1	0
TSI	X	1	0	0	0	0	1	0
DIS	0	0	0	0	0	0	0	1
DTC	1	0	0	0	0	0	0	1
DCS	X	1	0	0	0	0	0	1
CFR	X	0	1	0	0	0	0	1
FTT	X	0	1	0	0	0	1	0
EOM	X	1	1	1	0	0	0	1
MPS	X	1	1	1	0	0	1	0
EOP	X	1	1	1	0	1	0	0
MCF	X	0	1	1	0	0	0	1
RTN	X	0	1	1	0	0	1	0
PIP	X	0	1	1	0	1	0	1
PIN	X	0	1	1	0	1	0	0
SUB	X	1	0	0	0	0	1	1
SEP	1	0	0	0	0	1	0	1
PWD (Rx)	1	0	0	0	0	0	1	1
PWD (Tx)	X	1	0	0	0	1	0	1
DCN	X	1	0	1	1	1	1	1
RR	X	1	1	1	0	1	1	0
RNR	X	0	1	1	0	1	1	1
PPR	X	0	1	1	1	1	0	1
PPS	X	1	1	1	1	1	0	1
CTC	X	1	0	0	1	0	0	0
CTR	X	0	1	0	0	0	1	1
EOR	X	1	1	1	0	0	1	1
ERR	X	0	1	1	1	0	0	0
RTP	X	0	1	1	0	0	1	1
CRP	X	1	0	1	1	0	0	0

- X=1 for the station that receives the DIS signal.
- X=0 for the station that receives the reply signal to the DIS signal.

4.2.2.4 Training

The training signal involves a pre-determined picture signal which is used to check the capability of the phone line to reliably support facsimile traffic.

- **Training signal**

  The training signal is transmitted following DCS with the modem speed to be selected by DCS. At the receiving station, the automatic equalizer is adjusted by the training signal.

- **Format of the training signal**

  <14.4 K bps, 12 K bps>

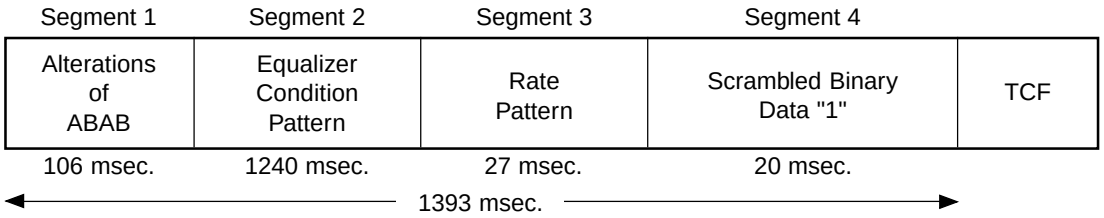

  <9600 bps, 7200 bps>

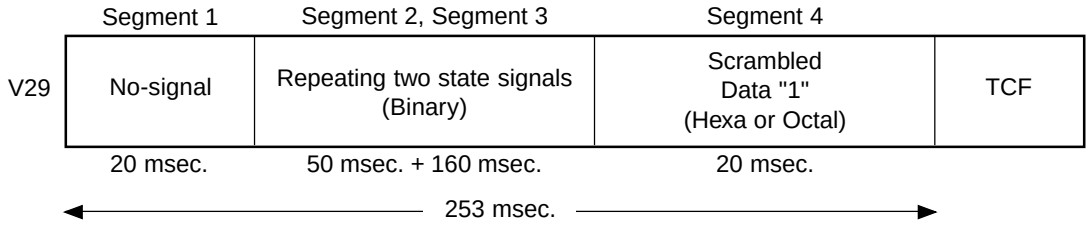

  <4800 bps, 2400 bps>

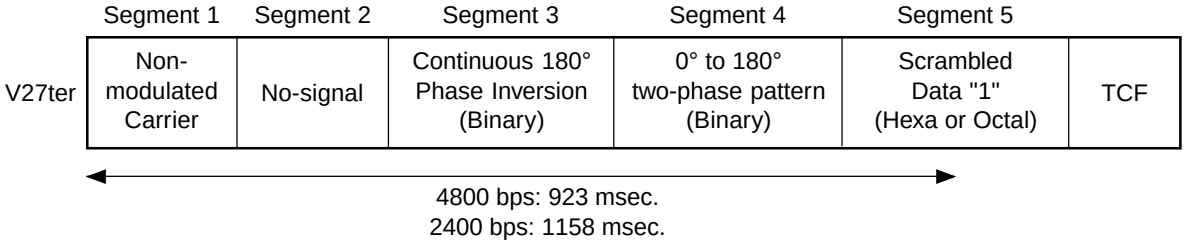

- **TCF signal**

  When training is not performed correctly, an error may occur in the picture signal. The Tx station transmits a TCF signal and checks if any error occurs in picture data before the picture data communication to follow. When the Rx station detects an error in the TCF signal, the Rx station sends an FTT signal to the Tx station and request for re-training. When normal, a CFR signal is sent instead.

  The modem speed of TCF signal is the same as the training signal, and it transmits all zeros for 1.5 seconds.

4.3 High-speed Transmission Procedure

The V.34 modem recommended by ITU-T (Max. transmission rate: 33.6 Kbps) is used. Therefore, the transmission time of the image data is cut substantially when compared to conventional model.

4.3.1 V.8/V.34 procedure

a) Outline

- V.8 is performed as a start up procedure to switch to V.34. V.8 can connect an existing facsimile machine to equipment using data modem or other V series modems. The V.34 modem includes a modem circuit which can also be connected to the previously recommended modems. Therefore, it is downwardly compatible.
- The new techniques such as the pre-emphasis techniques *1 and the probing techniques *2, are fully used. Pre-emphasis techniques not only make the speed of modulation method high, but also gain the S/N ratio. Probing techniques measure the line characteristics and optimize the modem for the line state. Therefore, these techniques do not simply speeding-up transmission momentarily, but do so at the average level when the data transmission is actually performed.
- For V.8 and the pre/post-fax transmission for V.34, the procedure is speeded up by full duplex communication.
- The following 14 types of image transmission speed are available: *3
  33.6 kbps/31.2 kbps/28.8 kbps /26.4 kbps /24.0 kbps /21.6 kbps /19.2 kbps /16.8 kbps /14.4 kbps /12.0 kbps /9.6 kbps /7.2 kbps /4.8 kbps /2.4 kbps
- The modulating speed (baud rate) can be selected from 2400, 3000, 3200 symbol/sec (mandatory), or 2743, 2800, 3429 symbol/sec (option). The data rate can be set more accurately than the conventional modem. *4

  *1: A signal is sent by raising the output level in the high-frequency band - in which the noise is relatively loud.

  *2: The tone called “Probing Tone” is sent. The receiver measures the line characteristics.

  *3: In the ITU-T Recommendation, it is described as “data rate”. “Image transmission speed” is the same as “data rate”.

  *4: In the ITU-T Recommendation, it is described as “symbol speed”. “Symbol rate”, “Modulating speed”, and “Baud rate” have the same meaning. This machine cannot use the speed of “2743 symbol/sec”.

Notes: 1. In the V.34 procedure, ECM is used. If the ECM transmission/reception of user data is set to "Not performed", the V.8 procedure is not performed. Therefore, the procedure does not switch to V.34, and V.17 or the prior, is selected.

2. Also when the transmission/reception speed is set to 14.4 kbps or less, the V.8 procedure is not performed, and V.17 or the prior, is selected.
3. To switch to the V. 8/V.34 procedure after starting V.21 procedure, see "c-1".
4. After the V.34 procedure starts, fallback is performed in the V.34 procedure. However, fallback for V.17 mode or before is not performed.

b) Standard procedure

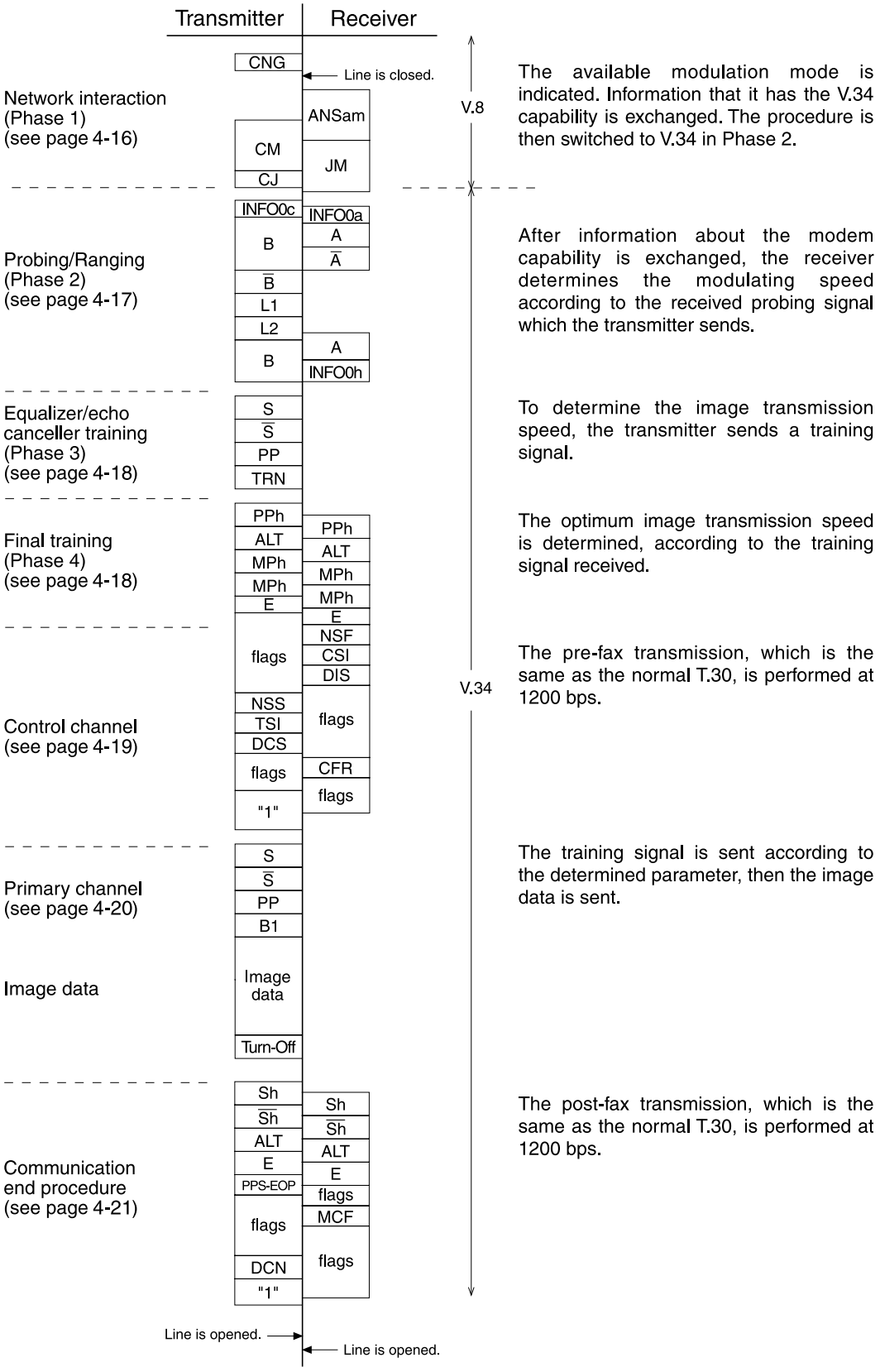

Fig. 4-3-1

b-1) Network interaction (Phase 1)

The V.8 procedure is performed as the start up procedure for the V.34 high-speed modem. In the V.8 procedure, mainly the optimum modulation method (V series modem mode) that can be operated between transmitter and receivers, is determined.

• Transmitter

Signal name	Abbreviation	Meaning	Remark
Calling tone	CNG	1,100-Hz tone specified by T.30 indicating the facsimile machine has the automatic call function.	
Call Menu signal	CM	It mainly indicates an available modulation method such as V.21, V.27ter, V.29, V17 and V.34.	It is modulated by V.21 (L) *1. Transmission rate: 300 bps
CM terminator	CJ	It indicates the detection of the JM signal or the termination of CM signal.	It is modulated by V.21 (L) *1. Transmission rate: 300 bps
Call Indicator signal	CI	It indicates the general communication functions. It is sent when the V.8 procedure restarts.	For late start only. See Fig. 4-3-2. It is modulated by V.21 (L) *1. Transmission rate: 300 bps

• Receiver

Signal name	Abbreviation	Meaning	Remark
Answer amplitude tone	ANSam	2,100-Hz tone amplitude-modulated to 15 Hz.	Tone equivalent to CED of the conventional machine.
Joint Menu signal	JM	It indicates the terminal type such as a facsimile machine, and is a response to a CM sent from the transmitter and indicates jointly available modulation method.	It is modulated by V.21 (H) *1. Transmission rate: 300 bps

*1 V.21 (L) ..... Low frequency channel defined by V.21 recommendation
1,080 ± 100 Hz (980 Hz: 1,1180 Hz: 0)
V.21 (H) ..... High frequency channel defined by V.21 recommendation
1,750 ± 100 Hz (1,650 Hz: 1,1850 Hz: 0)

b-2) Probing/Ranging (Phase 2)

Line characteristics are measured, then the parameter setting for modulation such as the modulating speed, is made.

• Transmitter

Signal name	Abbreviation	Meaning	Remark
INFO sequence	INFO0c	It indicates modem capability such as modulating speed and frequency transmission capability (two frequency bands - high and low - used for measuring the line characteristics), and requests for adjusting.	Transmission rate: 600 bps
Tone $\overline{B}$ Tone B	$\overline{B}$ B	Synchronization between modems by 1200-Hz tone	$\overline{B}$ is a signal that shifts phase B 180°.
Line probing signal L1 Line probing signal L2	L1 L2	Tone for analyzing the line characteristics by probing	Probing is to measure the line characteristics. Tone between 150 Hz and 3750 Hz in units of 150 Hz

• Receiver

Signal name	Abbreviation	Meaning	Remark
INFO sequence	INFO0a	It indicates the modem capability such as the modulating speed and frequency transmission capability.	Transmission rate: 600 bps
Tone A Tone $\overline{A}$	A $\overline{A}$	Synchronization between modems by 2400-Hz tone	$\overline{A}$ is a signal that shifts phase A 180°.
INFO sequence	INFO0h	Based on the analysis of the line probing signal sent from the transmitter, it indicates the pre-emphasis filter and modulating speed to be used for the data transmission.	Transmission rate: 600 bps

b-3) Equalizer and echo canceller training (Phase 3)

To optimize the filters such as an equalizer, the training (adjustment) is performed according to the parameters set in phase 2.

• Transmitter

Signal name	Abbreviation	Meaning	Remark
S signal	S	Short training	$\overline{S}$ is a signal that makes a transition from phase S.
$\overline{S}$ signal	$\overline{S}$		
PP signal	PP	The modem of receiver uses it for training the equalizer.	
TRN signal	TRN	It is used for determining the transmission rate by the receiver.	

b-4) Final training (Phase 4)

The settings such as the maximum value for the data rate, selection of the trellis encoder, and data rate which can be supported, are made.

• Calling/receivers

Signal name	Abbreviation	Meaning	Remark
PPh signal	PPh	The modem of other unit uses it for training the equalizer.	
ALT signal	ALT	——	
Modulation parameter	MPh	It indicates the parameters used for image transmission such as the maximum data signaling rate, type of trellis coding, and type of pre-coding.	
E sequence	E	——	20-bit sequence of “1”s in binary

b-5) Control channel

The conventional T.30 procedure is performed. The transmission rate is 1200 bps.

- Transmitter

Signal name	Abbreviation	Meaning	Remark
Flag	flags	It maintains synchronization.	7E (H)
Non-standard facilities setting	NSS	It receives an NSF sent from the receiver. It selects the available mode according to the received NSF, then specifies the mode for reception.	
Transmitting Subscriber ID	TSI	It indicates the telephone number of the transmitter.	
Digital Command Signal	DCS	It specifies the mode that can be communicated.	
——	1	It declares to switch to the high-speed procedure.	"1" is sent continuously.

- Receiver

Signal name	Abbreviation	Meaning	Remark
Non-Standard Facilities	NSF	It indicates the facilities which are not recommended by ITU-T, abbreviated user's name, and manufacturer code.	
Called Subscriber ID	CSI	It indicates the telephone number of the receiver.	
Digital Identification Signal	DIS	It indicates the standard facilities recommended by ITU-T.	
Flag	flags	It maintains synchronization.	7E (H)
Confirmation to receive	CFR	It indicates that the training of the modem is complete, and the receiver is ready to receive the image signal.	

Note: In the control channel, the frequency of a signal to be sent is different between transmission and reception. The signal echoed back has never been misidentified as a signal sent from the other unit. Therefore, this channel is not influenced by a signal echoed back.

b-6) Primary channel

The training is performed according to the parameters set in phase 4. The transmission rate is 1200 bps.

• Transmitter

Signal name	Abbreviation	Meaning	Remark
S signal	S	Short training	$\overline{S}$ is a signal that makes a transition from phase S.
$\overline{S}$ signal	$\overline{S}$		
PP signal	PP	The modem of receiver uses it for training the equalizer.	
B1 sequence	B1	Scrambled data frame to be sent when startup is completed	

b-7) Image data

Image data is sent.

• Transmitter

Signal name	Abbreviation	Meaning	Remark
Image data	Image data	Encoded image data	
—	Turn-off	—	Scrambled 1 is sent for 35 ms.

b-8) Communication end procedure

This procedure ends the communication. The transmission rate is 1200 bps.

- Transmitter

Signal name	Abbreviation	Meaning	Remark
Sh signal	Sh	Short training	
$\overline{\text{Sh}}$ signal	$\overline{\text{Sh}}$		
ALT signal	ALT	—	
E sequence	E	—	
End of procedure signal	PPS-EOP	The transmission of one page is completed.	
Flag	flags	It maintains synchronization.	7E (H)
Disconnect signal	DCN	It signals to release the line.	

- Receiver

Signal name	Abbreviation	Meaning	Remark
Sh signal	Sh	Short training	
$\overline{\text{Sh}}$ signal	$\overline{\text{Sh}}$		
ALT signal	ALT	—	
E sequence	E	—	
Flag	flags	It maintains synchronization.	7E (H)
Message confirmation	MCF	It indicates that the image signal is received normally, and the receiver is ready for receiving more pages.	

c) Example of protocol

The signal shaded below means the most noteworthy one in the procedure.

c-1) Late start

The receiver cannot detect a CM signal while sending the ANSam signal. Therefore, it sends a DIS signal to indicate V.8 support. The transmitter sends a CI signal that causes the receiver to send another ANSam signal, which makes the receiver switch to the V.8 procedure.

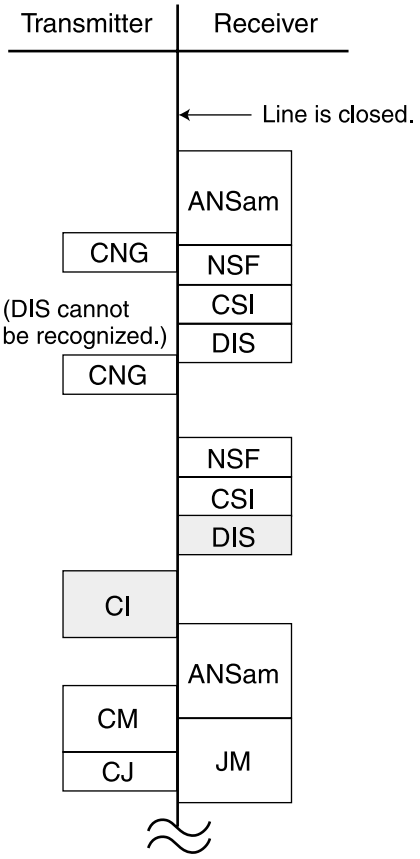

Fig. 4-3-2

c-2) Multi-page sequence

In the same manner as the T.30 procedure, the transmitter sends a PPS-MPS signal after sending the image data. The receiver sends an MCF signal and switches to the next page transmission.

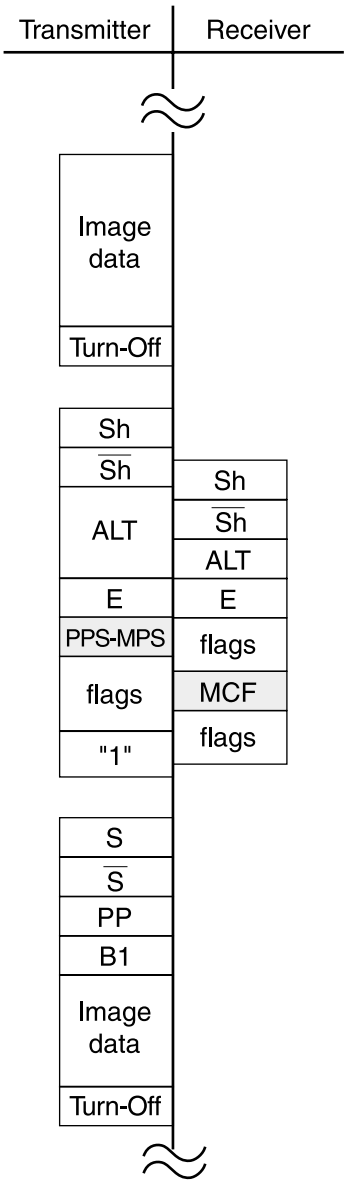

Fig. 4-3-3

c-3) Mode change

The transmitter and receiver send a PPS-EOM signal and an MCF signal, respectively. Then, to change the mode, the receiver and transmitter send a DIS signal and a DCS signal, respectively.

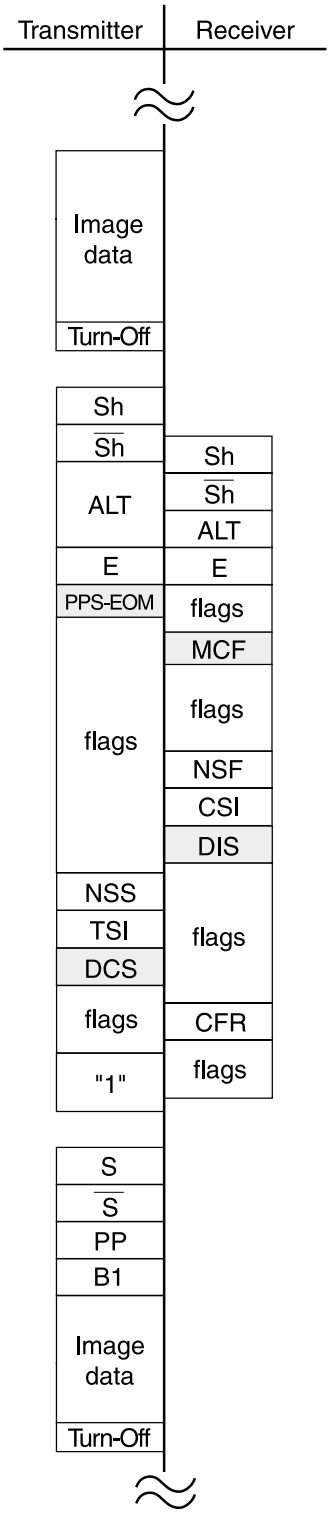

Fig. 4-3-4

c-4) Change of image transmission speed by the receiver

The receiver sends a PPh signal for an Sh signal sent by the transmitter. Then, the image transmission speed is determined, according to the MPh sequence sent from both modems.

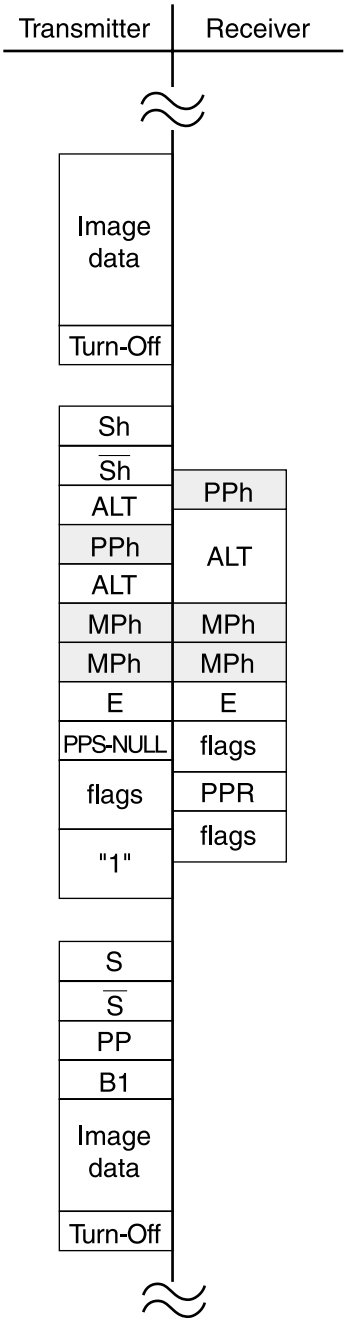

Fig. 4-3-5

c-5) Change of image transmission speed by the transmitter

The transmitter sends a PPh signal after sending the image data. The receiver returns a PPh signal. Then, the image transmission speed is determined, according to the MPh sequence sent from both modems.

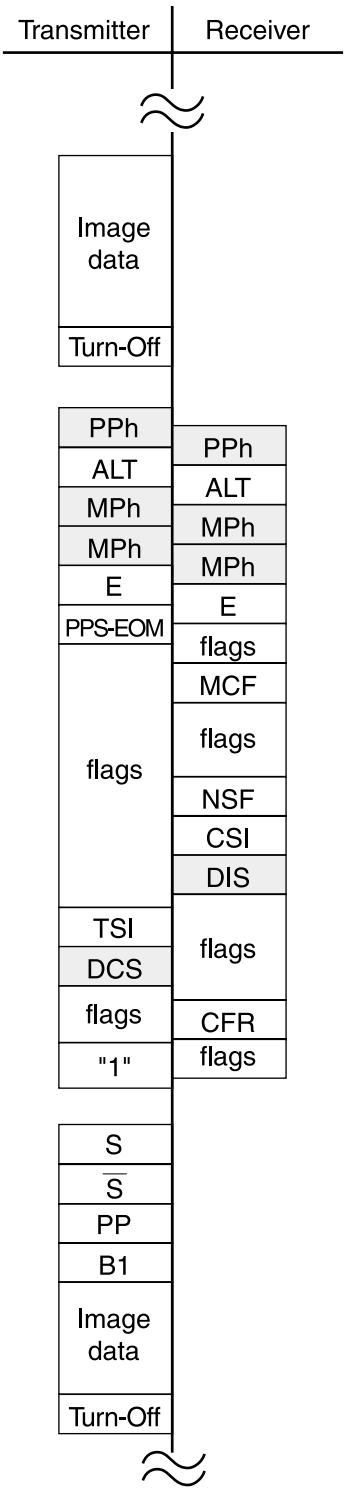

Fig. 4-3-6

5. CIRCUIT DESCRIPTION

5.1 Block Diagram

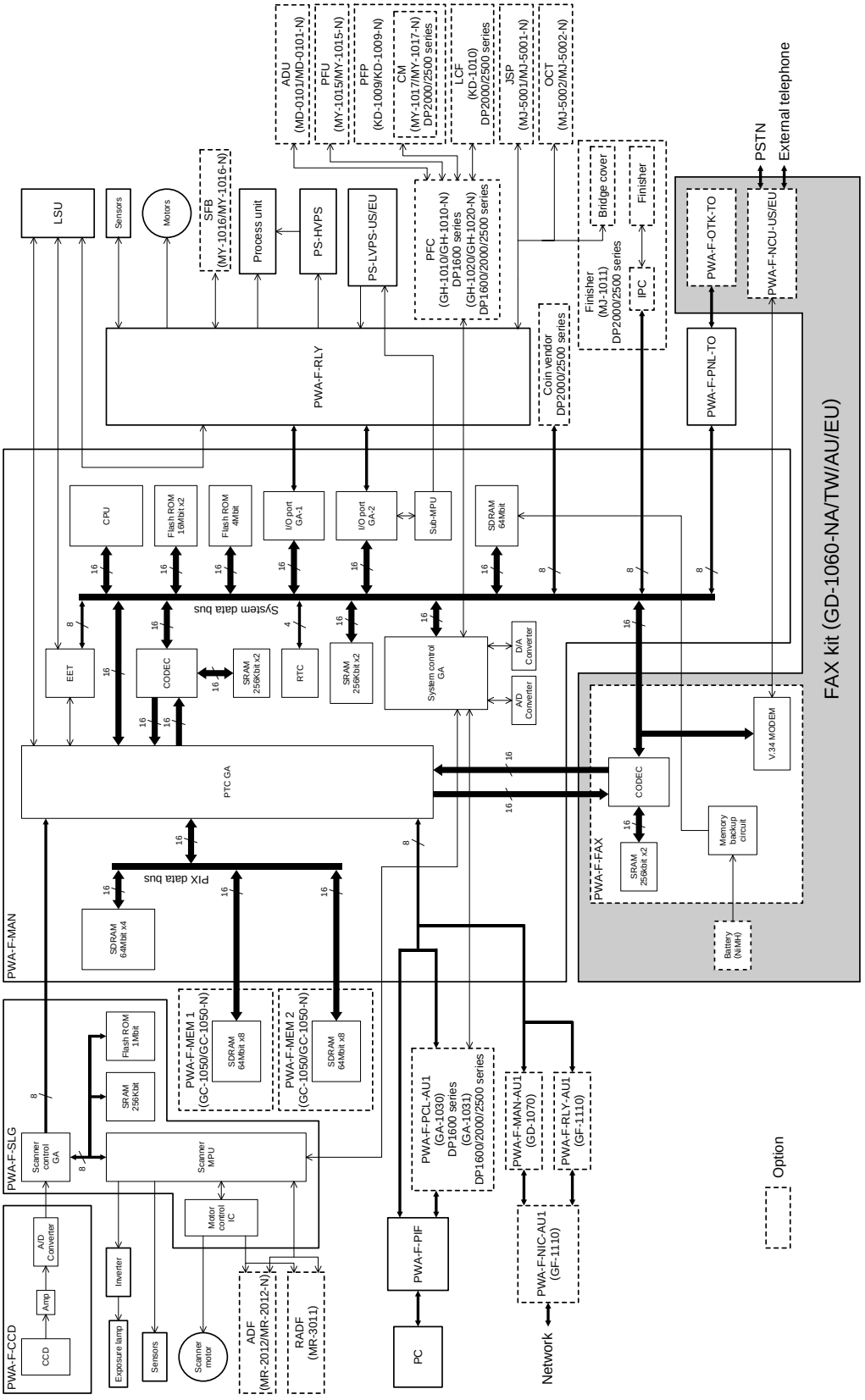

05-01-01

Fig. 5-1-1

5.2 Flow of Image Signals

This section charts and outlines the processes of image signals during facsimile transmission (direct transmission/memory transmission) and facsimile reception.

5.2.1 Direct transmission

The direct transmission scans the originals placed and transmits them page by page.

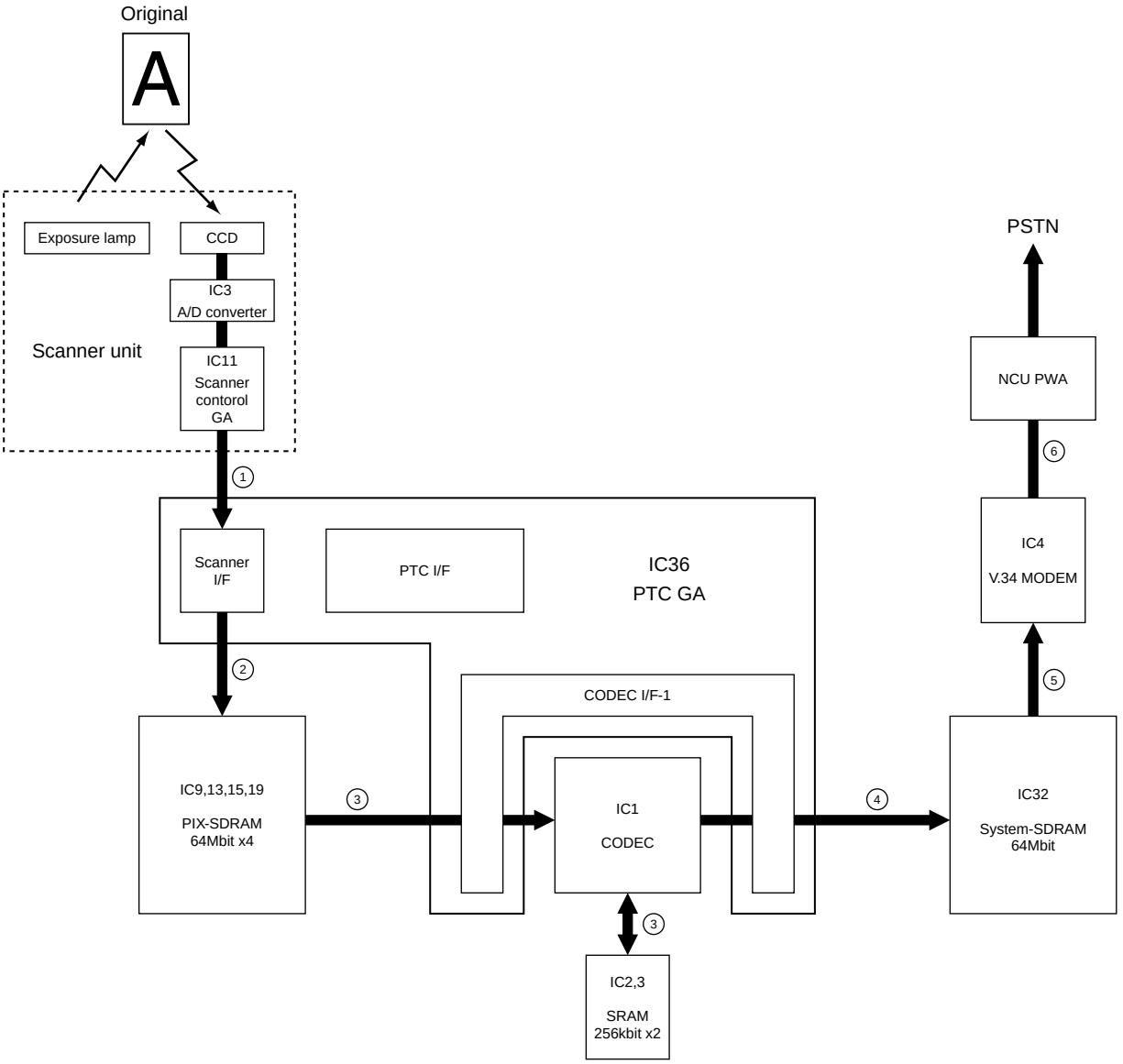

Fig. 5-2-1

① The scanner unit has the exposure lamp's light irradiated to the original placed for transmission. At this time, it converts the light reflected from the original into electrical signals through the CCD. Then the A/D converter (IC3) converts the electrical signals into digital signals. The scanner control GA (IC11) converts them into parallel signals and processes them for correction, converts them into raster data (digital image data), and sends it to the scanner I/F of the PTC GA (IC36).

② The raster data is arranged in words (16 bits) by the scanner I/F and transferred in DMA mode to the PIX-SDRAM (IC9, IC13, IC15, IC19) where it is stored. During this period, this machine also communicates with the destination and determines the coding method for transmit data.

③ The raster data is transferred in DMA mode through the CODEC I/F-1 of the PTC GA to the CODEC (IC1) installed on the FAX PWA. Then the CODEC converts the raster data into the coded data (MH, MR, MMR or JBIG) to meet the destination.

④ The coded data is transferred in DMA mode through the CODEC I/F-1 to the system-SDRAM (IC32) where it is stored.

⑤ The coded data is transferred in DMA mode to the MODEM (IC4) installed on the FAX PWA. Then the MODEM modulates the coded data into analog signals for the telephone line.

⑥ The analog signals are sent to the telephone line network through the NCU PWA. Then the data of the original is transmitted to the destination through the telephone line network.

5.2.2 Memory transmission

The memory transmission reads all the original(s) into memory as transmit data before transmission.

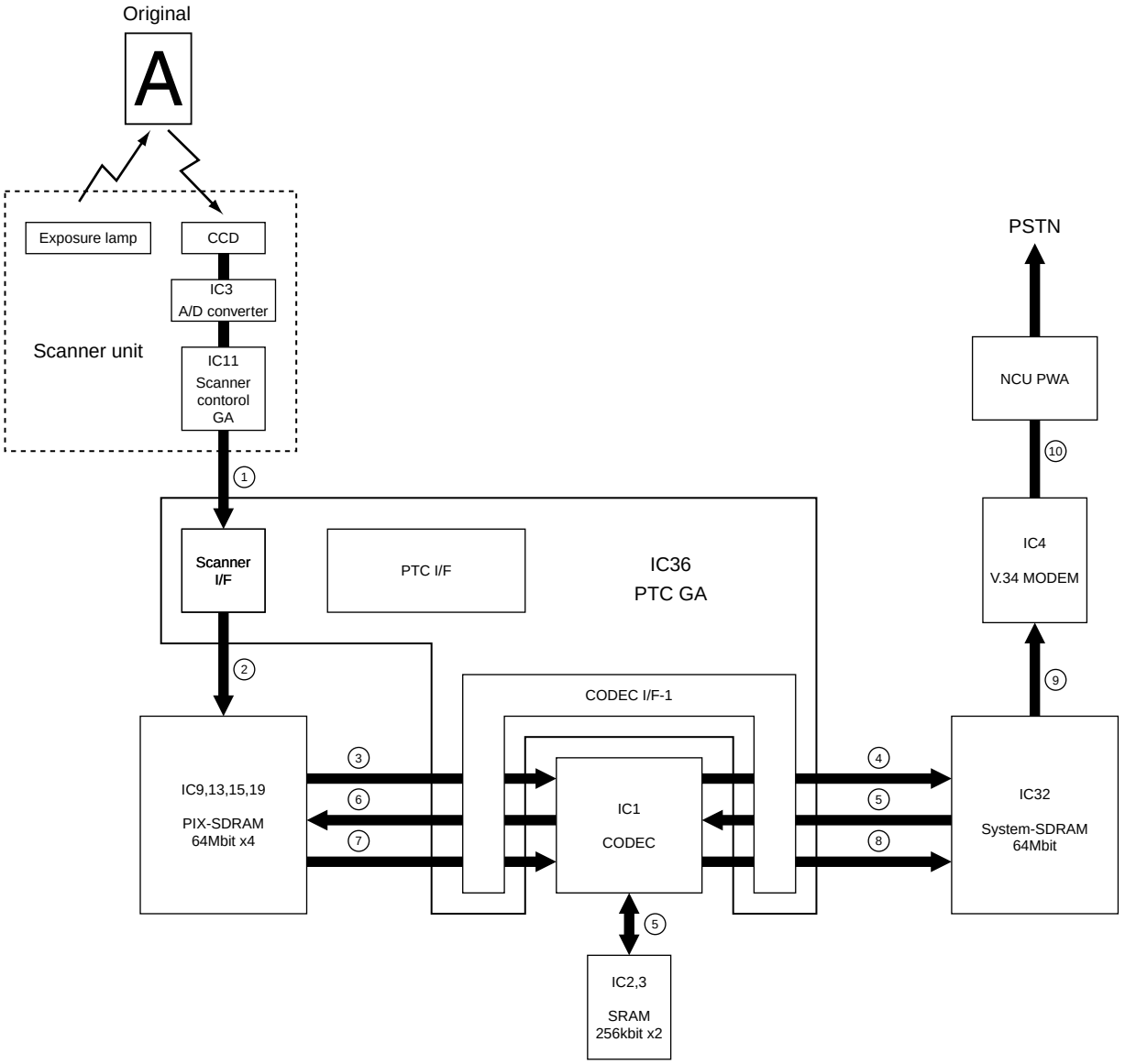

Fig. 5-2-2

05-02-02

① The scanner unit has the exposure lamp's light irradiated to the original placed for transmission. At this time, it converts the light reflected from the original into electrical signals through the CCD. Then the A/D converter (IC3) converts the electrical signals into digital signals. The scanner control GA (IC11) converts them into parallel signals and processes them for correction, converts them into raster data (digital image data), and sends it to the scanner I/F of the PTC GA (IC36).

② The raster data is arranged in words (16 bits) by the scanner I/F and transferred in DMA mode to the PIX-SDRAM (IC9, IC13, IC15, IC19) where it is stored. During this period, this machine also communicates with the destination and determines the coding method for transmit data.

③ The raster data is transferred in DMA mode through the CODEC I/F-1 of the PTC GA to the CODEC (IC1) installed on the FAX PWA. Then the CODEC converts the raster data into the data coded in JBIG.

④ The JBIG data is transferred in DMA mode through the CODEC I/F-1 to the system-SDRAM (IC32) where it is stored. Then the JBIG data of the original(s) is stored in the SDRAM.

⑤ The stored JBIG data is transferred in DMA mode through the CODEC I/F-1 to the CODEC. Then the CODEC converts the JBIG data into the raster data, and stores it in the SRAM (IC2,3).

⑥ The raster data is transferred in DMA mode through the CODEC I/F-1 to the PIX-SDRAM where it is stored.

⑦ The raster data is transferred in DMA mode through the CODEC I/F-1 to the CODEC. Then the CODEC converts the raster data into the coded data (MH, MR, MMR or JBIG) to meet the destination.

⑧ The coded data is transferred in DMA mode through the CODEC I/F-1 to the system-SDRAM where it is stored.

⑨ The coded data is transferred in DMA mode to the MODEM (IC4) installed on the FAX PWA. Then the MODEM modulates the coded data into analog signals for the telephone line.

⑩ The analog signals are sent to the telephone line network through the NCU PWA. Then the data of the original(s) is transmitted to the destination through the telephone line network.

5.2.3 Reception

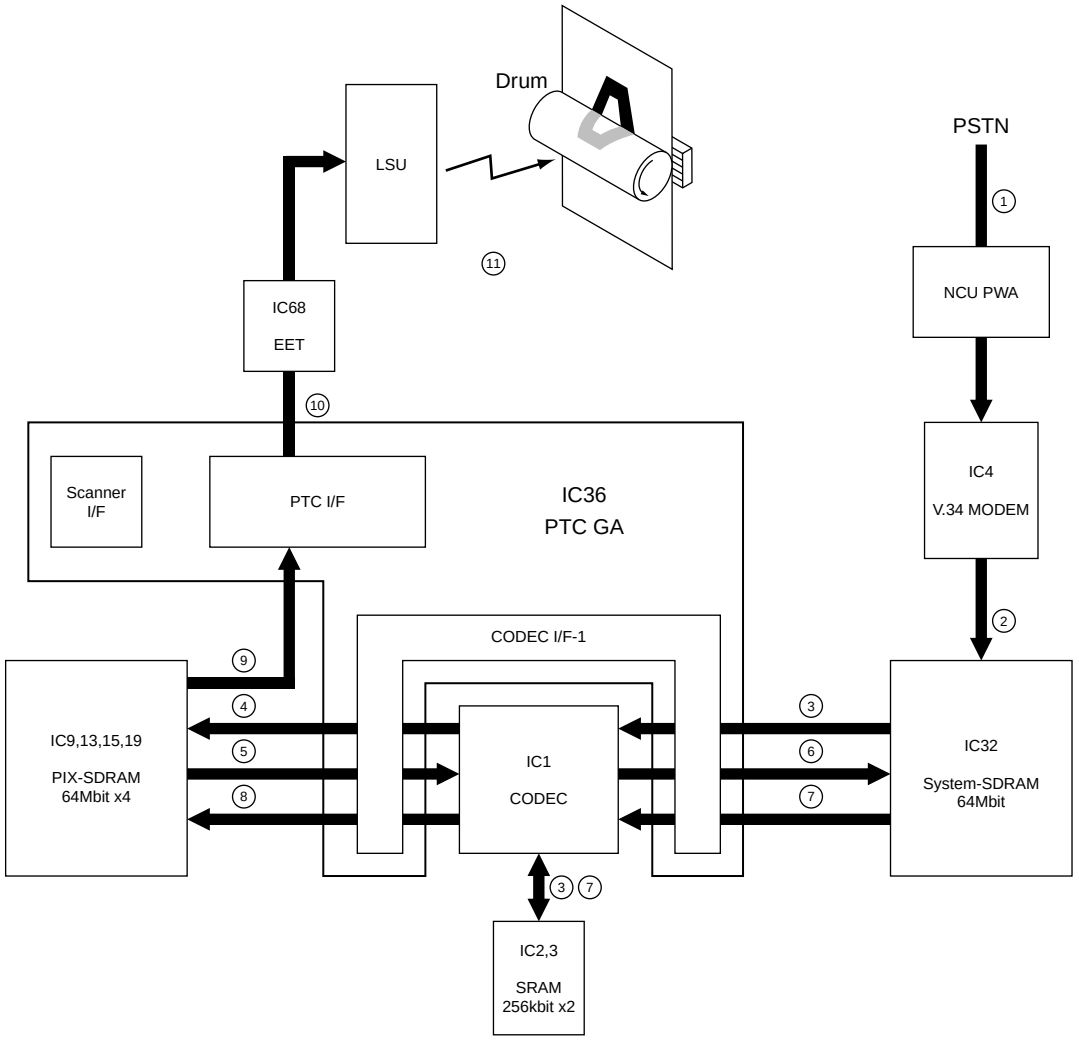

Fig. 5-2-3

05-02-03

① The MODEM (IC4) installed on the FAX PWA receives analog signals from the telephone line through the NCU PWA. Then the MODEM decodes the received analog signals into coded data.

② The coded data is transferred in DMA mode to the system-SDRAM (IC32) where it is stored.

③ The coded data is transferred in DMA mode through the CODEC I/F-1 of the PTC GA (IC36) to the CODEC (IC1) installed on the FAX PWA. Then the CODEC converts the coded data into the raster data, and stores it in the SRAM (IC2,3).

④ The raster data is transferred in DMA mode through the CODEC I/F-1 to the PIX-SDRAM (IC9, IC13, IC15, IC19) where it is stored.

⑤ The raster data is transferred in DMA mode through the CODEC I/F-1 to the CODEC. Then the CODEC converts the raster data into the data coded in JBIG.

⑥ The JBIG data is transferred in DMA mode through the CODEC I/F-1 to the system-SDRAM where it is stored. Then the received data or JBIG data is stored in the SDRAM.

⑦ The stored JBIG data is transferred in DMA mode through the CODEC I/F-1 to the CODEC. Then the CODEC converts the JBIG data into the raster data, and stores it in the SRAM (IC2,3).

⑧ The raster data is transferred in DMA mode through the CODEC I/F-1 to the PIX-SDRAM where it is stored.

⑨ The raster data is transferred in DMA mode to the PTC I/F of the PTC GA.

⑩ The PTC I/F serially transfers the raster data to the EET (IC68). The EET smoothes the raster data and transfers it to the LSU.

⑪ The LSU irradiates a laser beam to the drum to form a latent image on it according to the raster data. Then toner adheres to the latent image on the drum. The toner is transferred to the paper, thereby printing the received data.

5.3 FAX PWA

The FAX PWA consists of the CODEC (IC1) for facsimile communication, 256k-bit SRAM (IC2, IC3) used as work memory for the CODEC, V.34 MODEM (IC4), and other peripheral devices. It codes/decodes and modulates/demodulates the facsimile transmit/received data and performs backup control for the facsimile data.

The FAX PWA is connected to CN6 of the Main PWA.

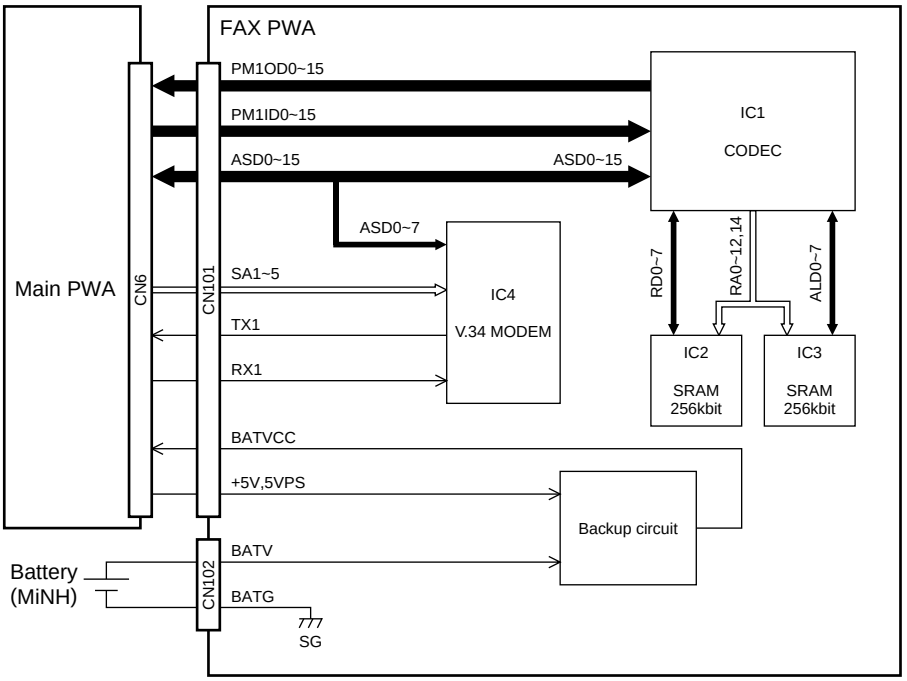

Fig. 5-3-1

05-03-01

5.4 NCU PWA

The NCU PWA consists of the transformer, relay, analog switch, and other peripheral devices. It controls switching of the line path, generates dial pulses, detects line current, detects a ring signal, and monitors the line.

The NCU PWA is connected to CN3 on the Main PWA.

NAD/SAD/TWD models

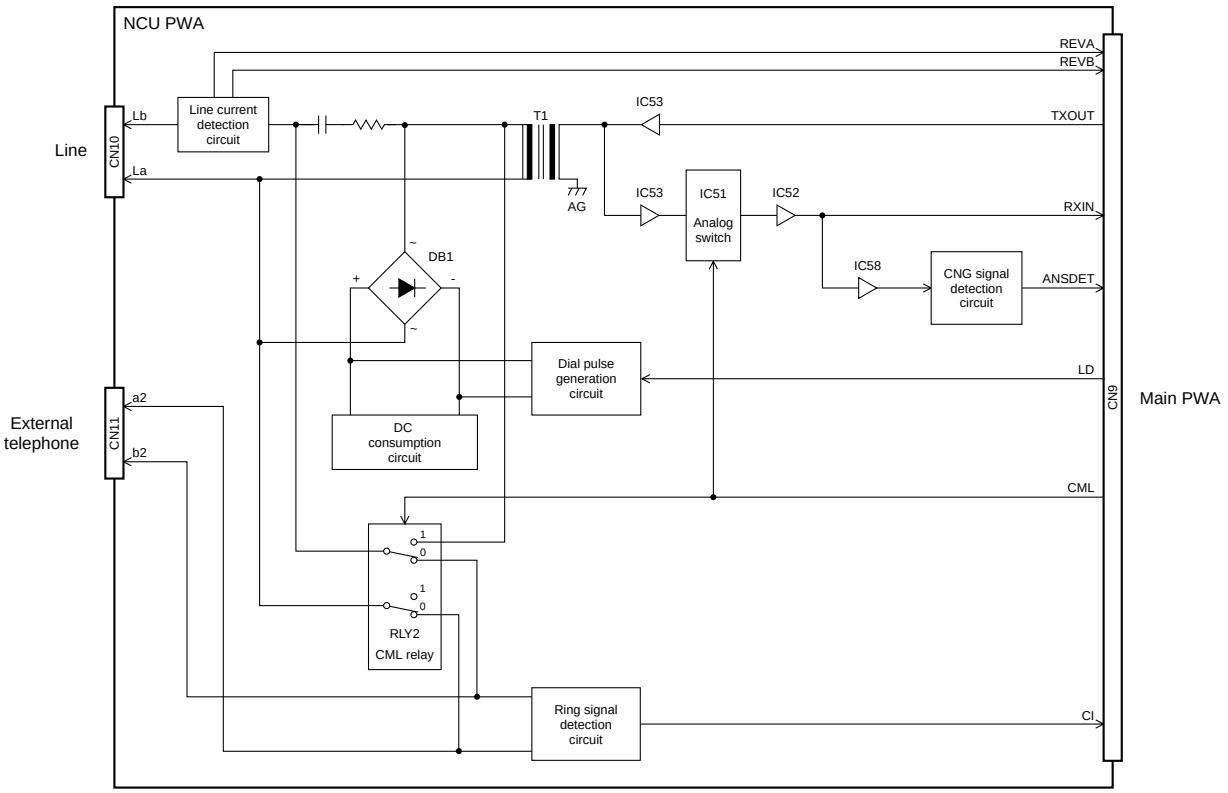

05-04-01-U

Fig. 5-4-1

ASD/AUD/CND/MJD models

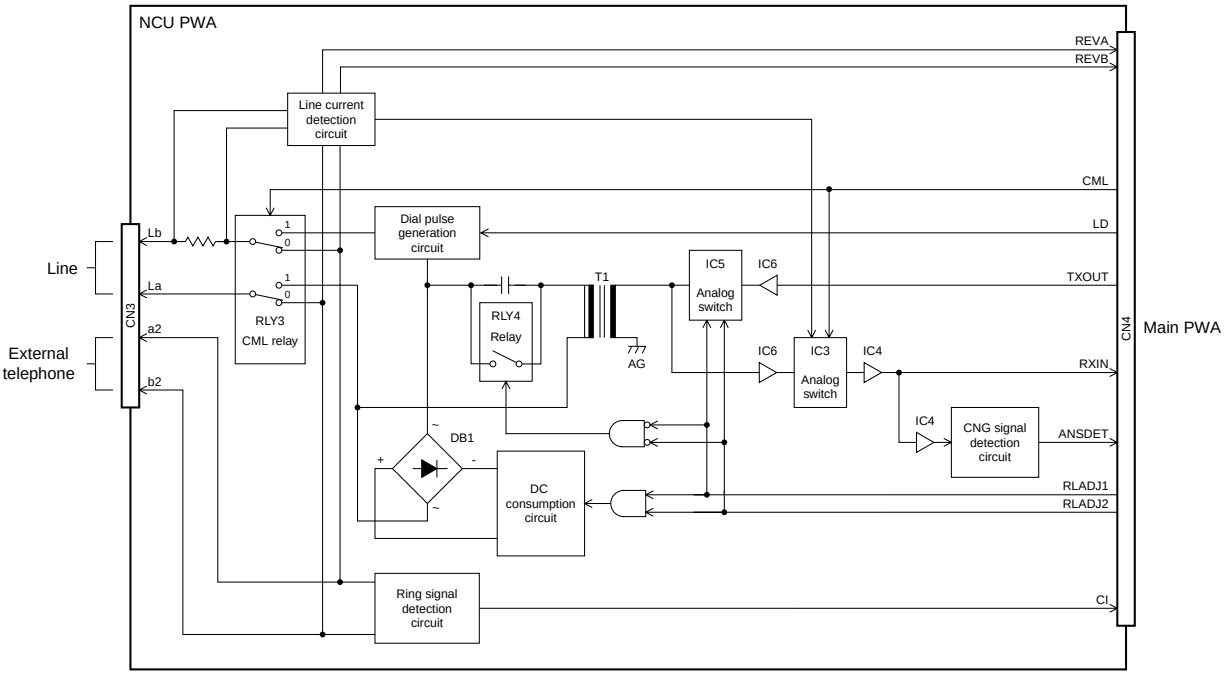

05-04-01-E

Fig. 5-4-2

5.4.1 Line path switching control circuit

NAD/SAD/TWD models

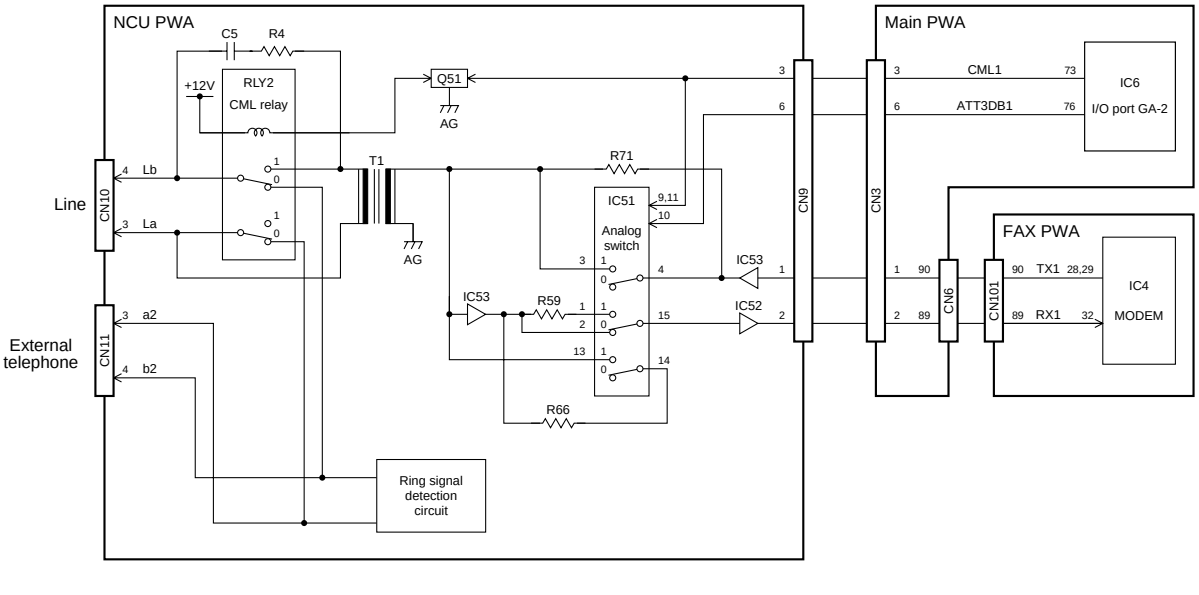

Fig. 5-4-3

The line path switching control circuit consists of the CML relay (RLY2) and analog switch (IC51) on the NCU PWA, the I/O port GA-2 (IC6) on the Main PWA, and other peripheral devices.

The CML relay is switched according to the CML1 signal output from the I/O port GA-2 on the Main PWA. When the CML1 signal goes HIGH, Q51 turns on to turn on the CML relay.

The analog switch is switched according to the CML1 signal and ATT3DB1 signal. When the CML1 signal or ATT3DB1 signal goes HIGH, the analog switch turns on.

Turning on the CML relay and analog switch allows the MODEM to be connected to the line.

Signal Name	I/O	Active	Description	Destination
CML1	O	H	CML Relay Control Signal	RLY2, IC51
ATT3DB1	O	H	Attenuator Control Signal	IC51

ASD/AUD/CND/MJD models

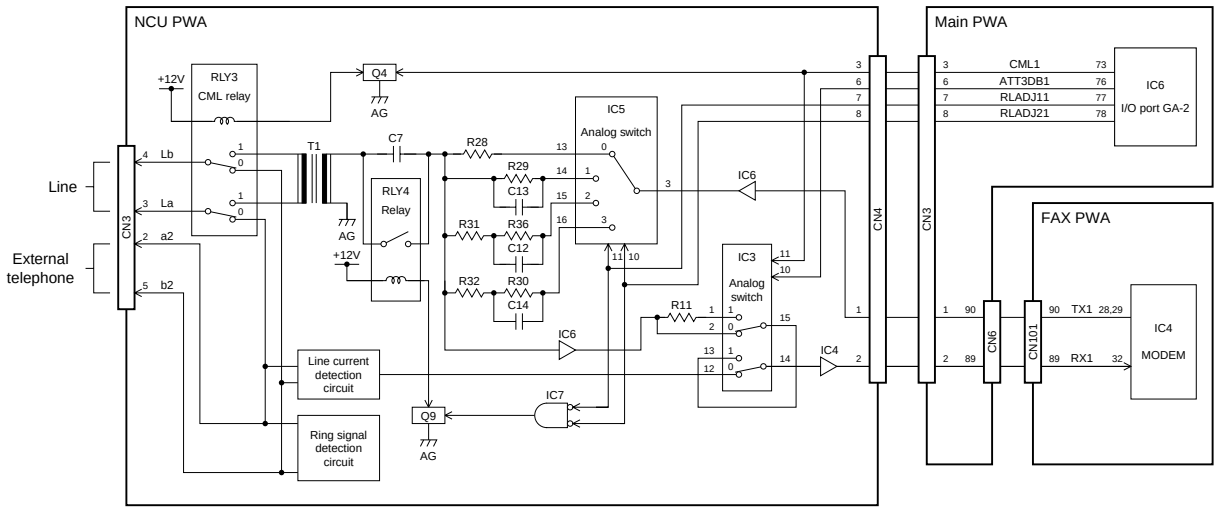

05-04-02-E

Fig. 5-4-4

The line path switching control circuit consists of the CML relay (RLY3) and analog switch (IC3, IC5) on the NCU PWA, the I/O port GA-2 (IC6) on the Main PWA, and other peripheral devices. It changes the path for facsimile send/receive signals and connects it to each control circuit.

The CML relay is switched according to the CML1 signal output from the I/O port GA-2 on the Main PWA. When the CML1 signal goes HIGH, Q4 turns on to turn on the CML relay.

The analog switch (IC3) is switched according to the CML1 signal and ATT3DB1 signal. When the CML1 signal or ATT3DB1 signal goes HIGH, the analog switch turns on.

The analog switch (IC5) is switched according to the RLADJ11 and RLADJ12 signals.

The analog switch is switched according to the states of the RLADJ11 and RLADJ12 signals.

Turning on the CML relay and analog switch allows the MODEM to be connected to the line.

Signal Name	I/O	Active	Description	Destination
CML1	O	H	CML Relay Control Signal	RLY3, IC3
ATT3DB1	O	H	Attenuator Control Signal	IC3
RLADJ11,2	O	H	Return Loss Adjust Signal	IC5

5.4.2 Dial pulse generation circuit

NAD/SAD/TWD models

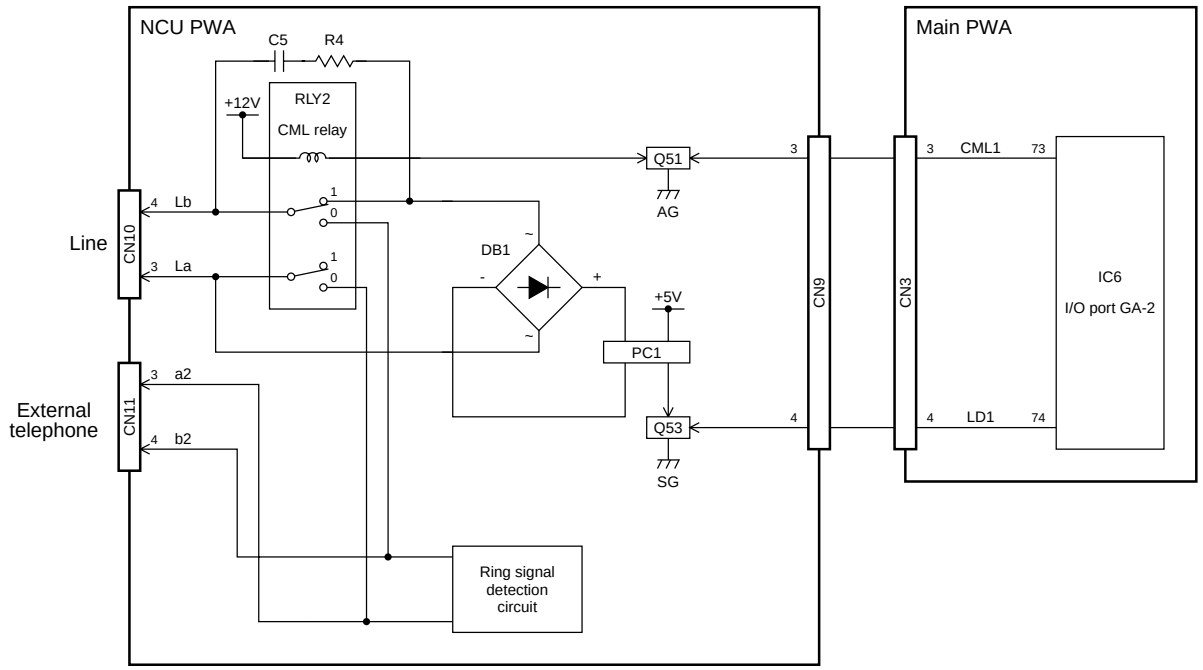

05-04-03-U

Fig. 5-4-5

The dial pulse generation circuit consists of the diode bridge (DB1), photo-coupler (PC1), the I/O port GA-2 (IC6) on the Main PWA, and other peripheral devices. It generates dial pulses in facsimile transmission and dialing outside.

The I/O port GA-2 causes the CML1 signal to be HIGH to connect the line to the MODEM side. To achieve a dial make, the I/O port GA-2 causes the LD1 signal to be HIGH to turn on Q53. This allows the photo-coupler to turn on and allow current to flow through the diode bridge for sending dial pulses to the line.

Signal Name	I/O	Active	Description	Destination
LD1	O	H	Dial Pulse Generate Signal	Q53

ASD/AUD/CND/MJD models

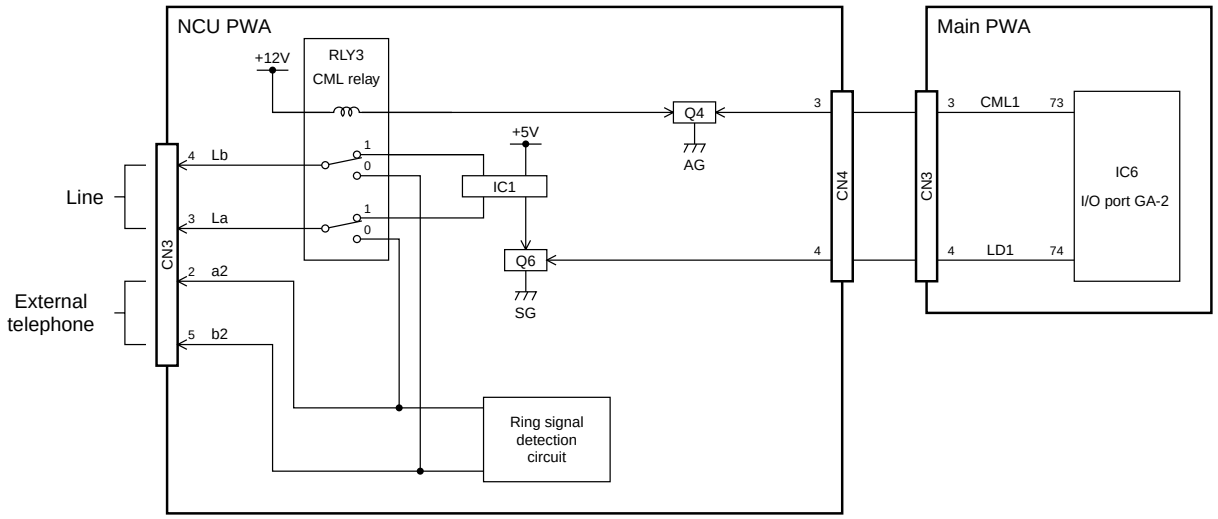

05-04-03-E

Fig. 5-4-6

The dial pulse generation circuit consists of the photo-coupler (IC1), the I/O port GA-2 (IC6) on the Main PWA, and other peripheral devices. It generates dial pulses in facsimile transmission and dialing outside. The I/O port GA-2 causes the CML1 signal to be HIGH to connect the line to the MODEM side. To generate dial pulses, the I/O port GA-2 causes the LD1 signal to be HIGH to turn on Q6. This allows the photo-coupler to turn on and allow current to flow through the line for sending dial make.

Signal Name	I/O	Active	Description	Destination
LD1	O	H	Dial Pulse Generate Signal	Q6

5.4.3 Line current detect circuit

NAD/SAD/TWD models

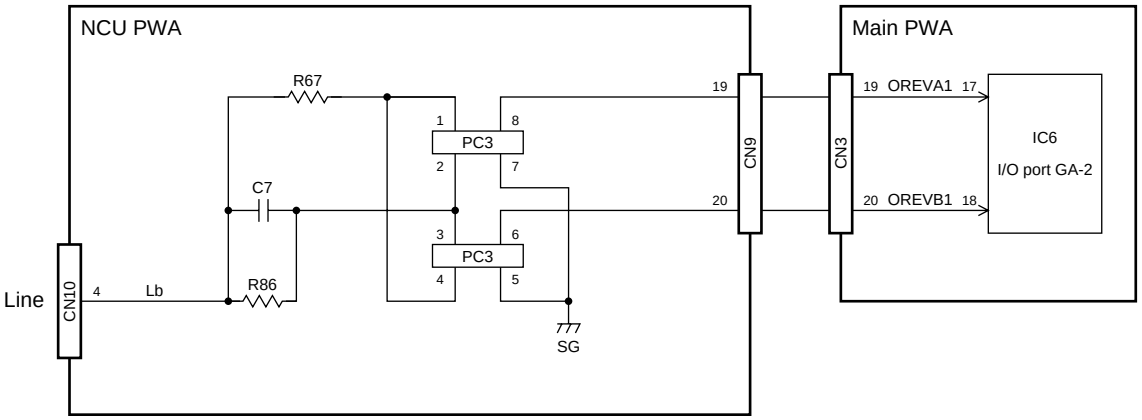

05-04-04-U

Fig. 5-4-7

The line current detect circuit consists of the photo-coupler (PC3), I/O port GA-2 (IC6) on the Main PWA, and other peripheral devices. It detects a dial tone and the hook status of the external telephone from the current flowing through the line.

When a dial tone is input from the telephone line, current flows through the line and the photo-coupler repeats turning on and off. This allows the OREVA1 and OREVAB1 to be pulse signals and input to the I/O port GA-2 to detect the dial tone.

When the handset is lifted from the external telephone, current also flows through the line and the photo-coupler turns on and off to detect the off-hook status.

Signal Name	I/O	Active	Description	Destination
OREVA1	I	-	Line Current Detect Signal	I/O port GA-2
OREVB1	I	-	Line Current Reverse Current Detect Signal	I/O port GA-2

ASD/AUD/CND/MJD models

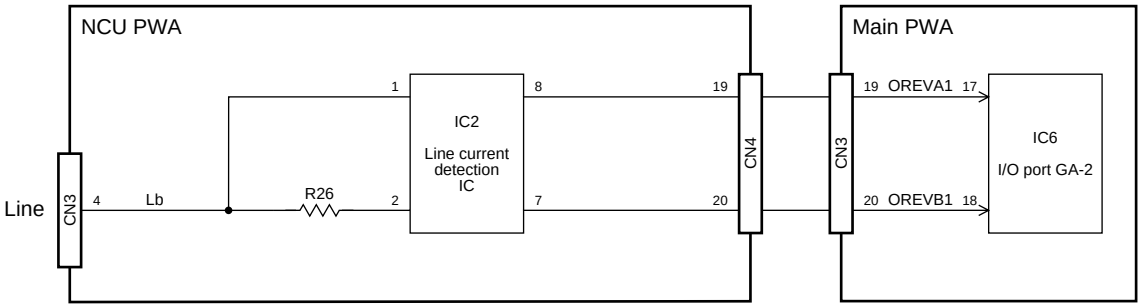

05-04-04-E

Fig. 5-4-8

The line current detection circuit consists of the line current detection IC (IC2), I/O port GA-2 (IC6) on the Main PWA, and other peripheral devices. It detects a dial tone and the hook status of the external telephone from the current flowing through the line.

When a dial tone is input from the telephone line, current flows through the line. The line current detection IC sends the OREVA1 and OREVB1 to the I/O port GA-2 as pulse signals. This allows a dial tone to be detected.

When the handset is lifted from the external telephone, current also flows through the line and the line current detection IC turns on and off to detect the off-hook status.

Signal Name	I/O	Active	Description	Destination
OREVA1	I	-	Line Current Detect Signal	I/O port GA-2
OREVB1	I	-	Line Current Reverse Current Detect Signal	I/O port GA-2

5.4.4 CI detect circuit

NAD/SAD/TWD models

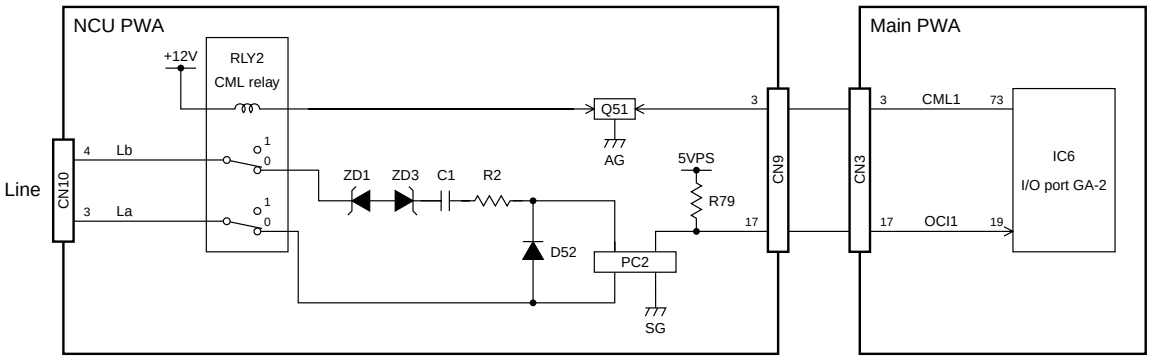

05-04-05-U

Fig. 5-4-9

The CI detect circuit consists of the photo-coupler (PC2), I/O port GA-2 (IC6) on the Main PWA, and other peripheral devices to detect a ring signal input from the telephone line.

The I/O port GA-2 causes the CML1 signal to be LOW to connect the CI detection circuit to the telephone line. When a ring signal is input from the telephone line, the photo-coupler repeats turning on and off. This allows the OCI1 signal to be a pulse signal and input to the I/O port GA-2 on the Main PWA, thereby detecting the ring signal.

Signal Name	I/O	Active	Description	Destination
OCI1	I	-	CI Detect Signal	I/O port GA-2

ASD/AUD/CND/MJD models

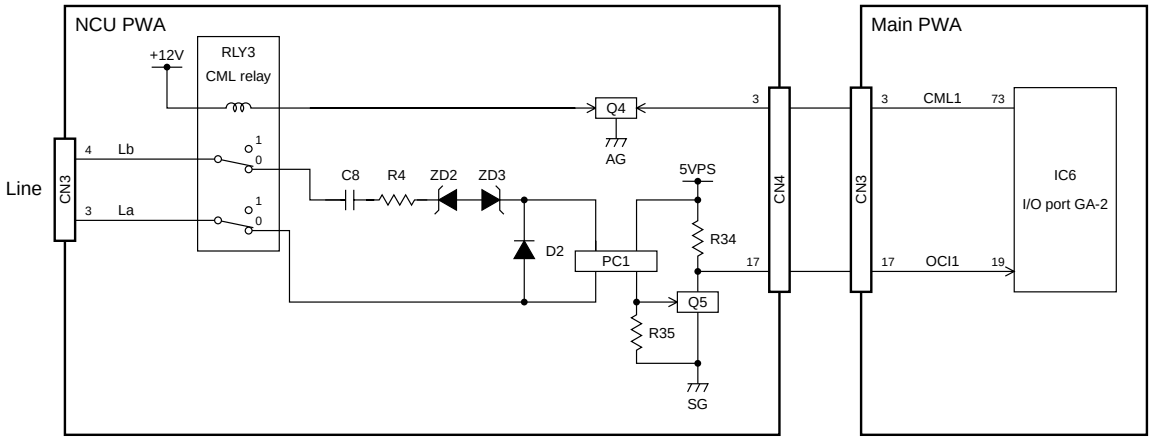

Fig. 5-4-10

The CI detect circuit consists of the photo-coupler (PC1), I/O port GA-2 (IC6) on the Main PWA, and other peripheral devices to detect a ring signal input from the telephone line.

The I/O port GA-2 causes the CML1 signal to be LOW to connect the CI detection circuit to the line. When a ring signal is input from the telephone line, the photo-coupler repeats turning on and off. This allows Q5 to turn on and off and the OCI1 signal to be a pulse signal and input to the I/O port GA-2 on the Main PWA, thereby detecting the ring signal.

Signal Name	I/O	Active	Description	Destination
OCI1	I	-	CI Detect Signal	I/O port GA-2

5.4.5 Line monitor circuit

NAD/SAD/TWD models

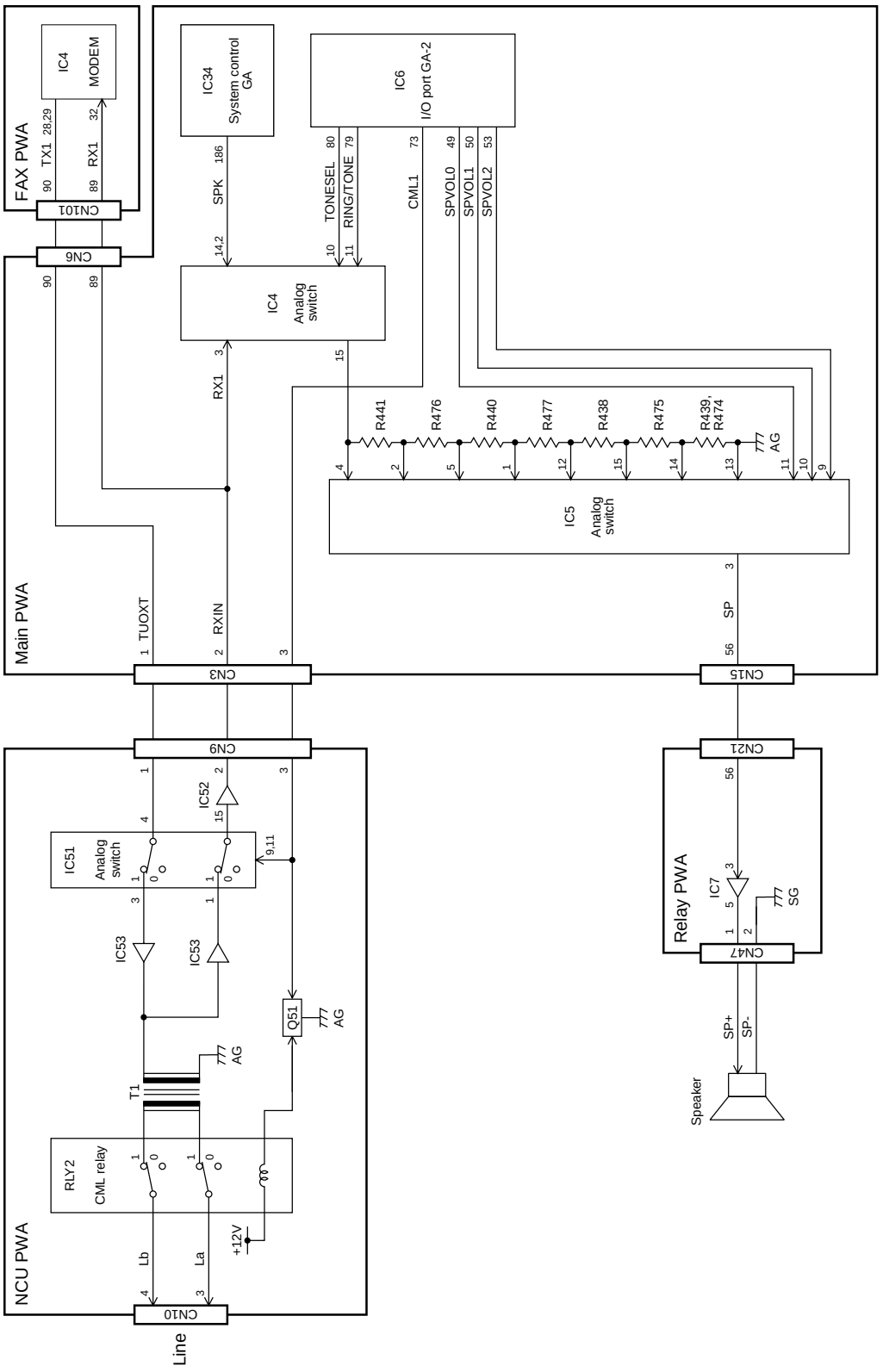

05-04-06-U

Fig. 5-4-11

ASD/AUD/CND/MJD models

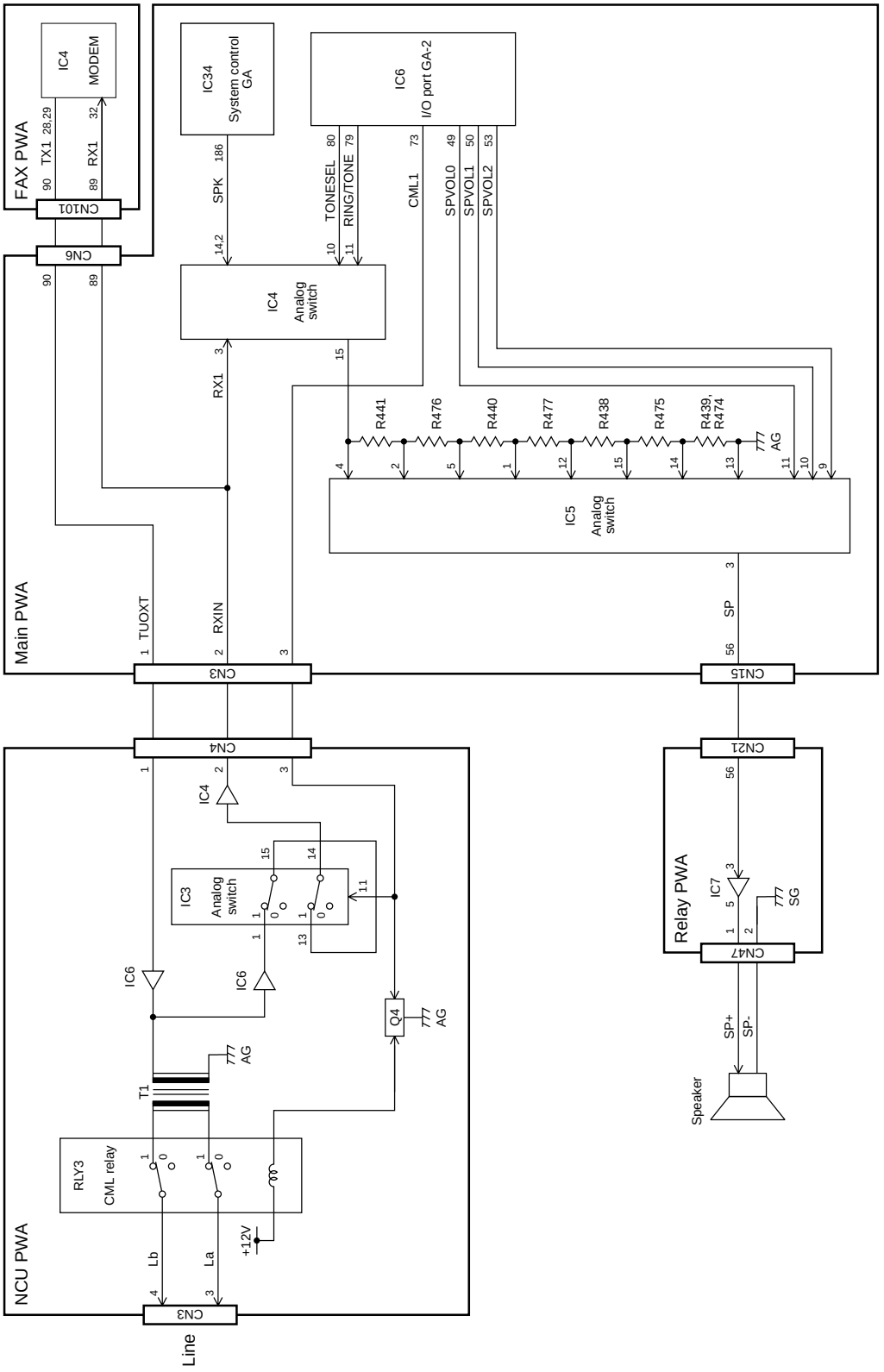

05-04-06-E

Fig. 5-4-12

The line monitor circuit consists of the CML relay (NAD/SAD/TWD models: RLY2, ASD/AUD/CND/MJD models: RLY3), analog switch (NAD/SAD/TWD models: IC51, ASD/AUD/CND/MJD models: IC3), the I/O port GA-2 (IC6) and analog switches (IC4, IC5) on the Main PWA, and other peripheral devices. It switches the telephone line path with the analog switch and monitors the line status, pseudo-ring signal, and tone signal in facsimile transmission and reception with the speaker connected to CN47 on the Relay PWA. It also switches the analog switch to output a buzzer tone from the speaker.

The signal to be monitored is selected by switching the analog switch (IC4) according to the TONESEL signal and RING/TONE signal, which are output from the I/O port GA-2.

To monitor the line during transmission and reception, the I/O port GA-2 causes the CML1 signal to be HIGH to switch the analog switch and connect the line to the MODEM side.
For line path switching control, refer to “4. 1 Line Path Switching Control Circuit” in this chapter.

The correspondence between the respective signal levels and monitoring signals is shown in the table below.

Monitoring signal	TONESEL	RING/TONE
Line monitor	HIGH	-
Pseudo-ring	LOW	HIGH
Alarm/Key touch Tone	LOW	LOW

The monitoring signal selected by IC4 is input to the analog switch (IC5) to select an output sound volume. The sound volume is controlled according to the SPVOL0-2 signals output from the I/O port GA-2.

The correspondence between the respective signals and sound volumes is shown in the table below.

Sound volume	SPVOL2	SPVOL1	SPVOL0
Silent (0)	LOW	LOW	LOW
Min. (1)	LOW	LOW	HIGH
(2)	LOW	HIGH	LOW
(3)	LOW	HIGH	HIGH
(4)	HIGH	LOW	LOW
(5)	HIGH	LOW	HIGH
(6)	HIGH	HIGH	LOW
Max. (7)	HIGH	HIGH	HIGH

The monitoring signal volume-controlled by IC5 is amplified by the OP amplifier (IC7) on the Relay PWA and output to the speaker.

Signal Name	I/O	Active	Description	Destination
TONESEL	O	H	Tone Select Signal	IC4
RING/TONE	O	H	Ring/Tone Select Signal	IC4
SPVOL0-2	O	H	Speaker Volume Control Signals 0-2	IC5

5.5 OTK PWA

The OTK PWA is an interface PWA for operating the facsimile functions. It consists of the key switches and other peripheral devices.

The OTK PWA is connected to CN62 of the operation panel PWA.

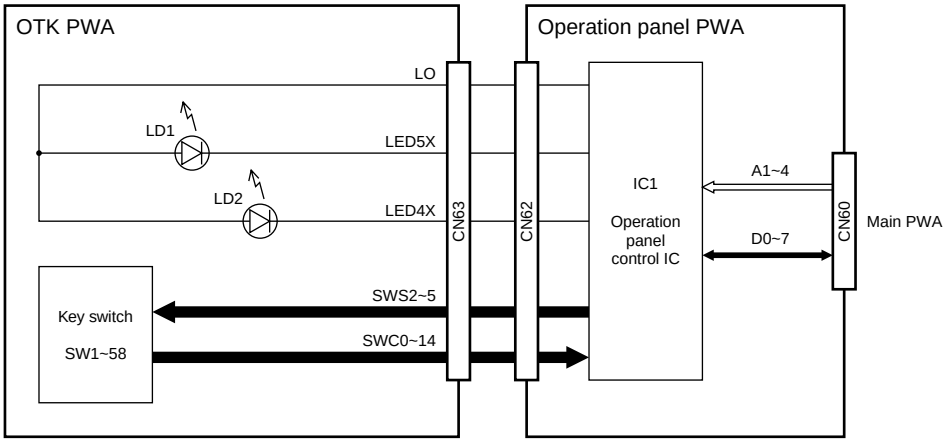

05-05-01

Fig. 5-5-1

6. DISASSEMBLY AND REPLACEMENT

[A] FAX panel bottom cover

1. Open platen.

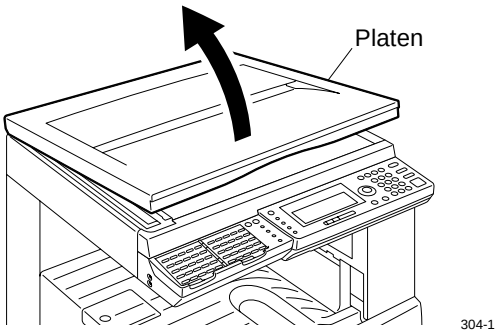

Fig. 6-1-1

2. Remove 3 cushion rubbers.

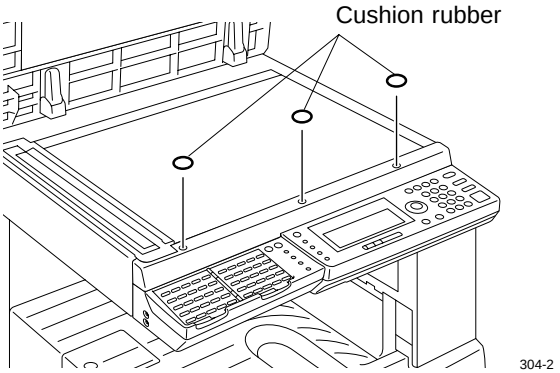

Fig. 6-1-2

3. Remove 3 screws and detach the scanner cover.

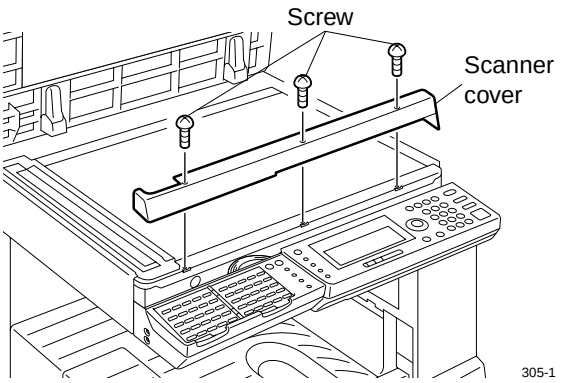

Fig. 6-1-3

4. Remove one screw and detach the FAX panel bottom cover.

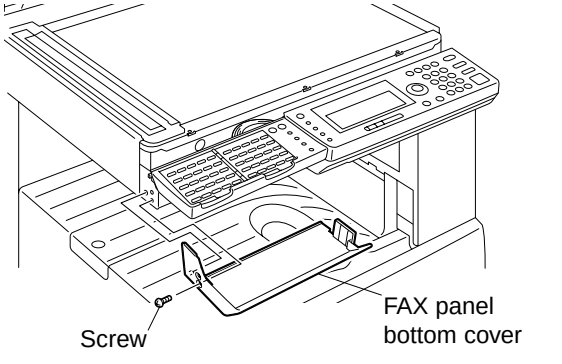

Fig. 6-1-4

[B] FAX panel

1. Remove the FAX panel bottom cover.
   (See Figs. 6-1-1 to 6-1-4)
2. Remove 2 screws.

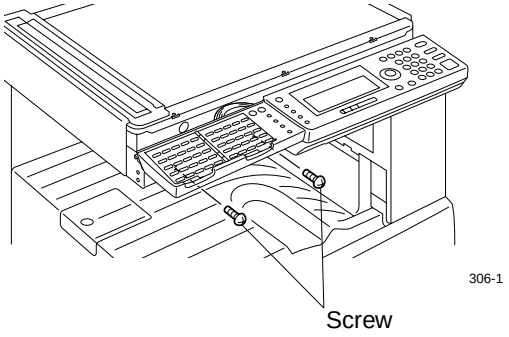

Fig. 6-1-5

3. Release 2 hooks and detach one connector, to remove the FAX panel.

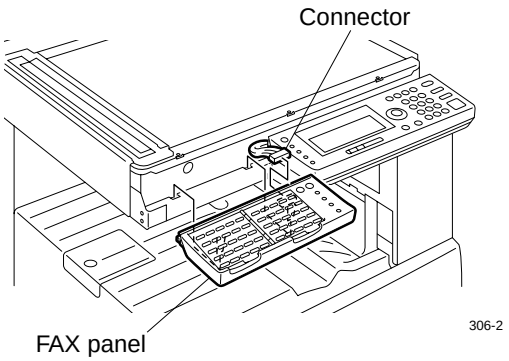

Fig. 6-1-6

[C] FAX PWA

1. Detach the modular jack.

NA/TW models

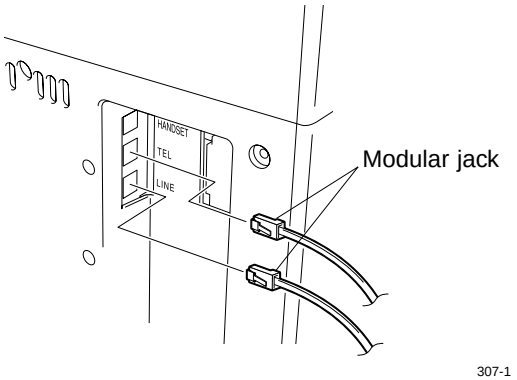

Fig. 6-1-7

EU/AU models

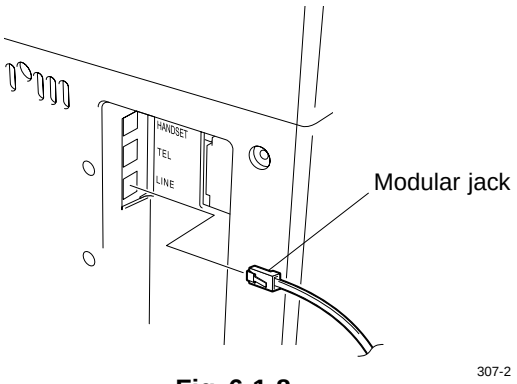

Fig. 6-1-8

2. Remove 17 screws and detach rear cover.

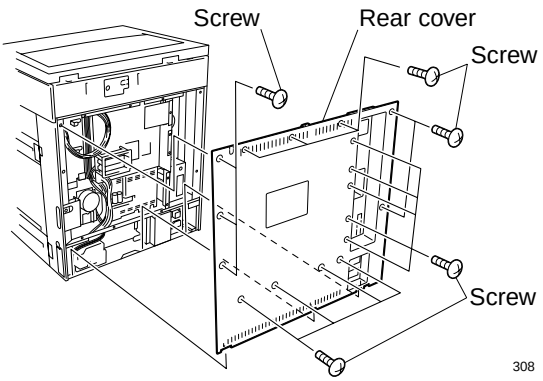

Fig. 6-1-9

3. Detach the battery connector from FAX PWA (CN102).

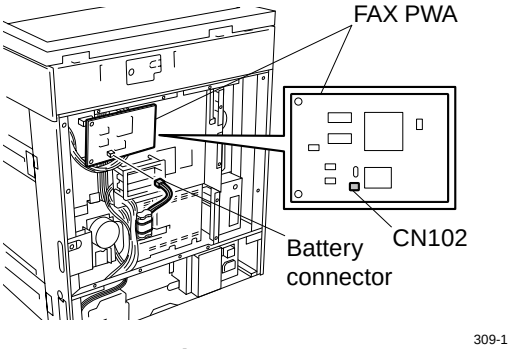

Fig. 6-1-10

4. Remove 2 screws and detach FAX PWA from MAIN PWA (CN6).

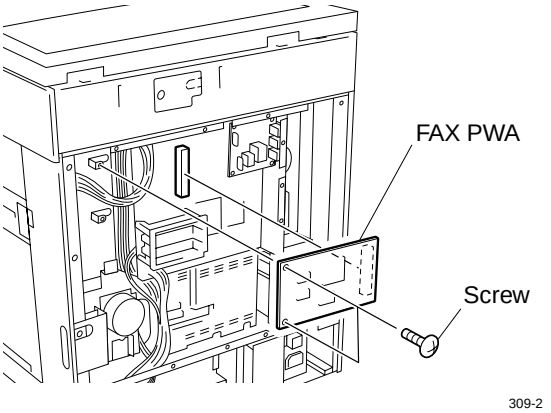

Fig. 6-1-11

[D] NCU PWA

1. Detach rear cover. (See Fig. 6-1-9)
2. Remove 2 screws and locking support, and detach NCU PWA from MAIN PWA (CN3).

Note: To mount the NCU PWA, fix it in place together with the ground wire using the upper screw.

NA/TW models

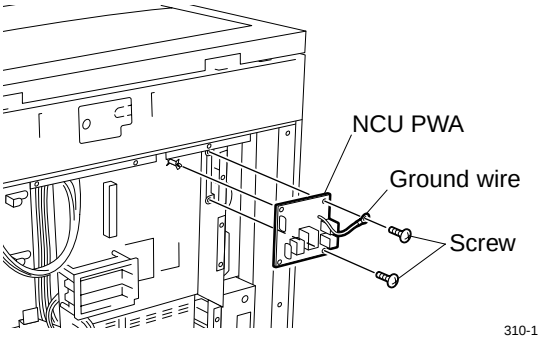

Fig. 6-1-12

EU/AU models

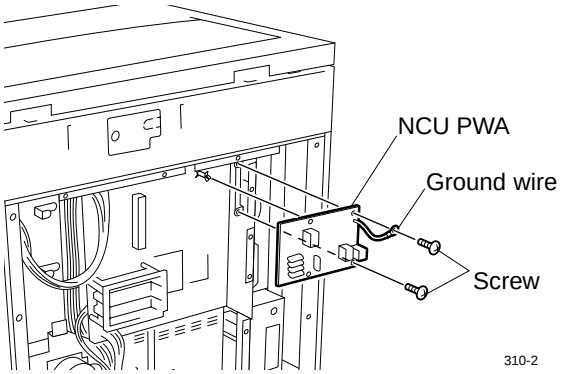

Fig. 6-1-13

3. Detach the ground wire.

Note: The ground wire installation differs according to country of destination. Refer to the following table.

NA/TW models
W1
US/CA/LA1/LA2/TW/SA

EU/AU models	
W1	W2
IT/DK/FI	DE/GB/NL/AT/BE/CH/SE/NO/PT/FR/ES/GR/IE/AU/NZ/ZA/SG/HK/RU/PL/HU/CZ/TR/CN

NA/TW models

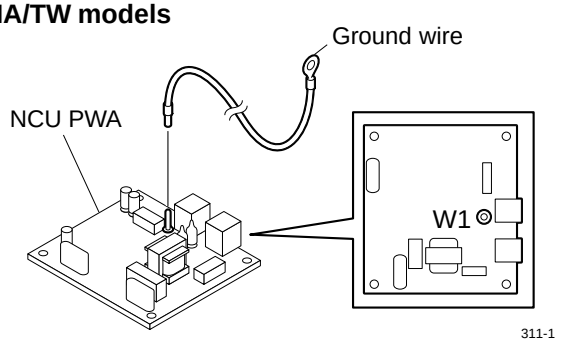

Fig. 6-1-14

EU/AU models

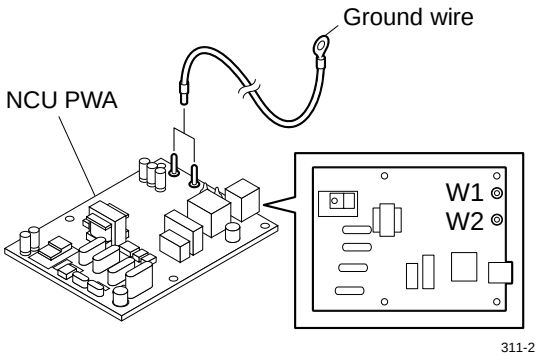

Fig. 6-1-15

[E] Battery

1. Detach rear cover. (See Fig. 6-1-9)
2. Detach battery harness connector from FAX PWA (CN102). (See Fig. 6-1-10)
3. Release the cable from the clamp of HVPS cover.

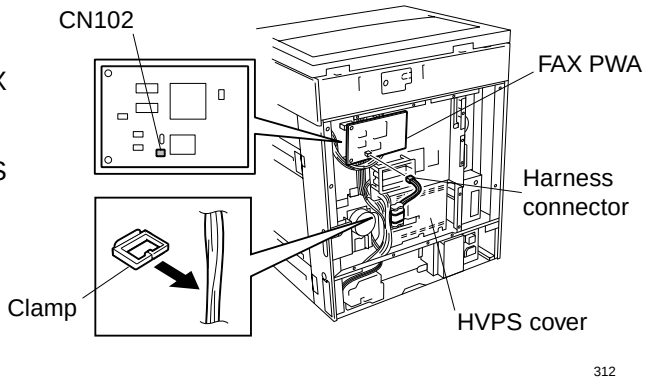

Fig. 6-1-16

4. Detach the band and remove battery.

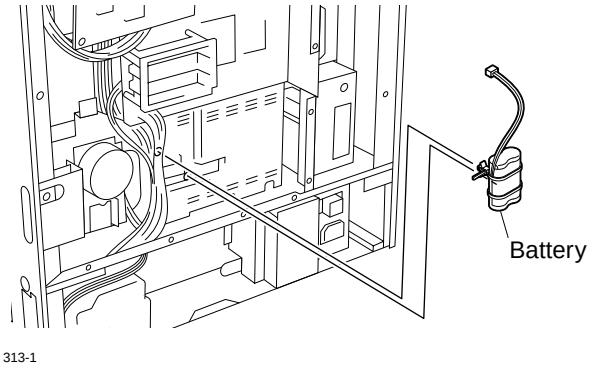

Fig. 6-1-17

7. INSTALLATION

7.1 Explanation to the User

After installing the fax board kit, explain the following items to the user by referring to the operator's manual.

For the items in [ ], actually follow the procedure to demonstrate the operation to the user.

Items to be explained

1) Switches and control panel
   - Summary of the control panel (fax functions)
   - When the power is interrupted (at a power failure or when the Power switch is off), the memory backup function retains image data for about 2 hours (by using fully charged backup battery).
     It takes 8 hours to fully charge the battery.

2) How to set documents
   - Acceptable document sizes and scanning widths.
   - [How to insert documents] : Multiple documents placed on ADF or RADF are read, starting with the last page.
   - Unacceptable documents
   - How to set the mode (image quality) and the density (contrast)

3) Transmission functions
   - Manual transmission
   - Monitor dialing
   - Direct dialing (dial buttons)
   - Phonebook dialing
   - Delayed transmission
   - Multi-transmission
   - Fax communication network, NCC line, overseas communication
   - Redialing

4) Recording paper size
   - Recording paper sizes
   - How to change the recording paper size

5) Automatic/manual reception
   - How to switch between automatic and manual reception
   - How the machine works and how to operate it when a fax is received in the respective modes.
   - Remote reception
   - TEL/FAX

6) Other functions
   - Memory reception (with the power not cut)
   - Power saving mode setup

7) Polling
   - Polling operation
   - How to operate polling reception and transmission
   - How multi-polling reception works and hot to operate it

8) How to register addresses
   - How to register new addresses in the phonebook
   - How to correct or cancel the contents of the phonebook
   - Group registration in the phonebook for multi-transmission and multi-polling

9) List printing
   - Transmission Journal and Reception Journal
   - Reservation List, Preset Dial Number List, and Function List
   - Reports for transmission, polling, etc