Copying

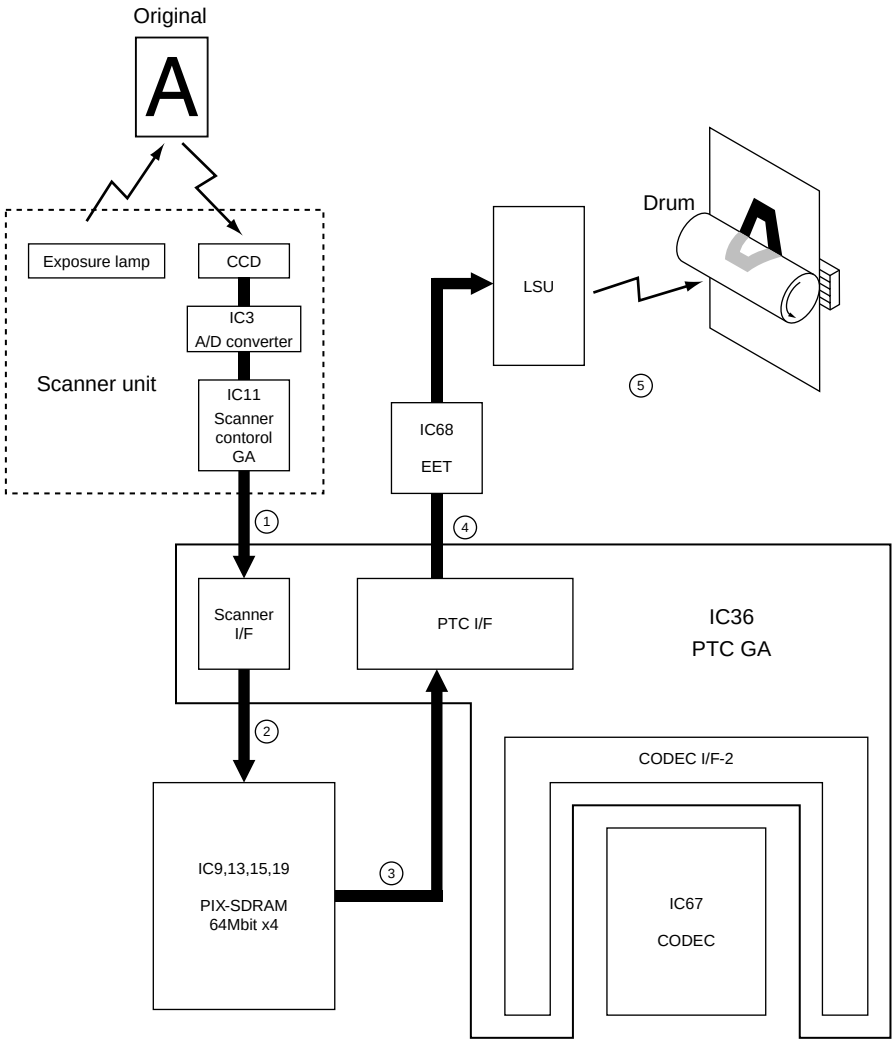
Original
A
Exposure lamp
CCD
IC3
A/D converter
Scanner unit
IC11
Scanner
contorol
GA
LSU
Drum
5
IC68
EET
1
4
Scanner
I/F
PTC I/F
IC36
PTC GA
2
CODEC I/F-2
IC9,13,15,19
PIX-SDRAM
64Mbit x4
3
IC67
CODEC

This machine has two patterns of copying process.

Copying

1
The light irradiated by the exposure lamp to the original is reflected.
Then the CCD reads the reflected light.
The CCD converts the light to an electric signal, and outputs it to the A/D converter (IC3).
The A/D converter converts the electric signal into digital data, and outputs it to the Scanner control GA (IC11).
The Scanner control GA corrects the image data, and outputs it to the Scanner interface of PTC GA (IC36) as raster data.

2
The Scanner interface converts the raster data into the parallel.
Then the data is DMA transferred to PIX-SDRAM (IC9, 13, 15, 19) and stored.

3
The raster data is DMA transferred to PTC Interface of PTC GA.

4
The PTC interface transfers the raster data to the EET (IC68) serially.
The EET transfers the raster data to the LSU.
(The EET doesn’t provide smoothing for the raster data, and transfers it to the LSU.)

5
The LSU applies the laser beam onto the drum based on the print data, and forms a latent image on the drum.
The toner adheres on the drum according to the latent image.
Then the data is printed out by transferring the toner onto the recording paper.

Memory Copying

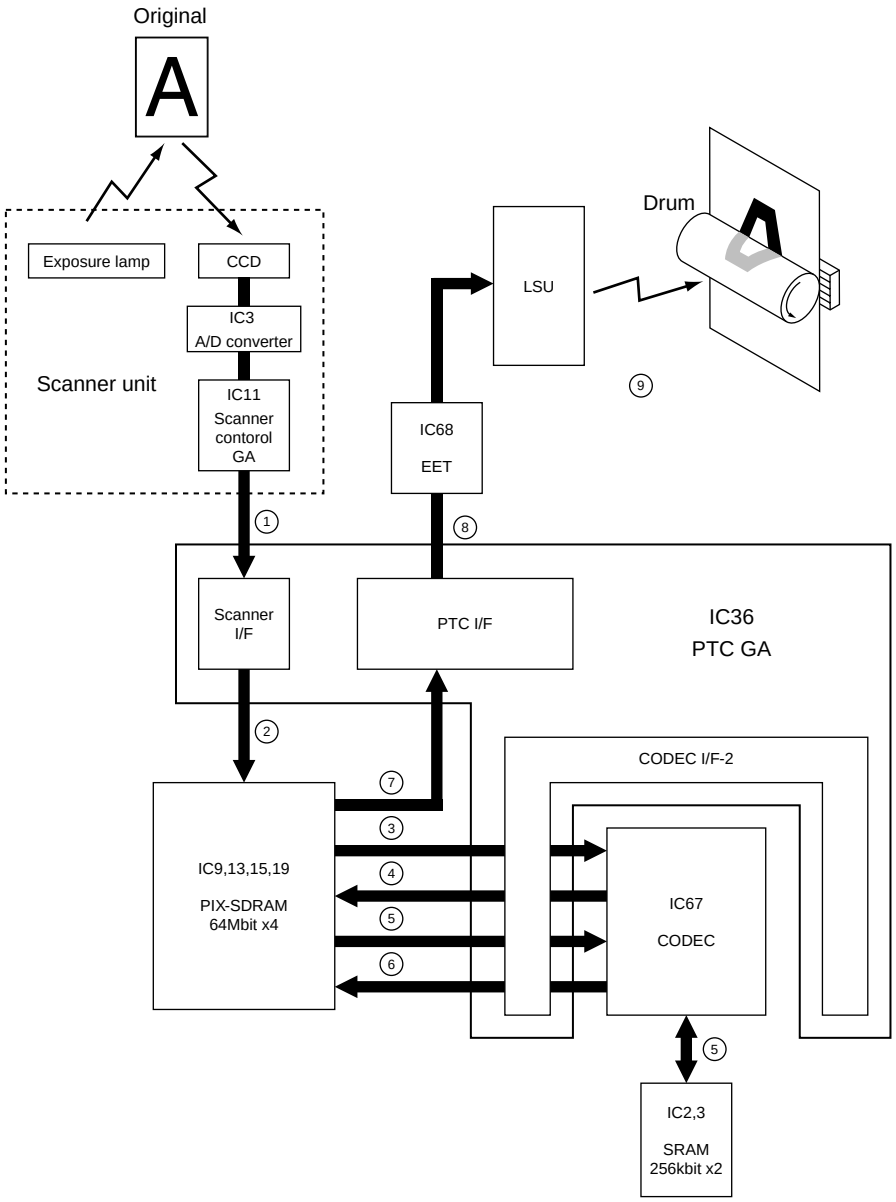

Memory Copying

1

The light irradiated by the exposure lamp to the original is reflected.
Then the CCD reads the reflected light.
The CCD converts the light to an electric signal, and outputs it to the A/D converter (IC3).
The A/D converter converts the electric signal into digital data, and outputs it to the Scanner control GA (IC11).
The Scanner control GA corrects the image data, and outputs it to the Scanner interface of PTC GA (IC36) as raster data.

2

The Scanner interface converts the raster data into the parallel.
Then the data is DMA transferred to PIX-SDRAM (IC9, 13, 15, 19) and stored.

3

The raster data is DMA transferred to CODEC (IC67) via CODEC Interface-2 of PTC GA.
And CODEC converts the raster data into the JBIG data.

4

The JBIG data is DMA transferred to CODEC (IC67) via CODEC Interface-2 of PIX-SDRAM.
Then the JBIG data of all originals to be copied is stored in the SDRAM.

5

The stored JBIG data is DMA transferred to CODEC (IC67) via CODEC Interface-2 of PTC GA.
Then CODEC decodes the JBIG data into the raster data, and stores it in the SRAM.

6

The raster data is DMA transferred to PIX-SDRAM via CODEC Interface-2.

7

The raster data is DMA transferred to PTC Interface of PTC GA.

8

The PTC interface transfers the raster data to the EET (IC68) serially.
The EET transfers the raster data to the LSU.
(The EET doesn’t provide smoothing for the raster data, and transfers it to the LSU.)

The LSU applies the laser beam onto the drum based on the print data, and forms a latent image on the drum.

The toner adheres on the drum according to the latent image.

Then the data is printed out by transferring the toner onto the recording paper.

GDI Printer

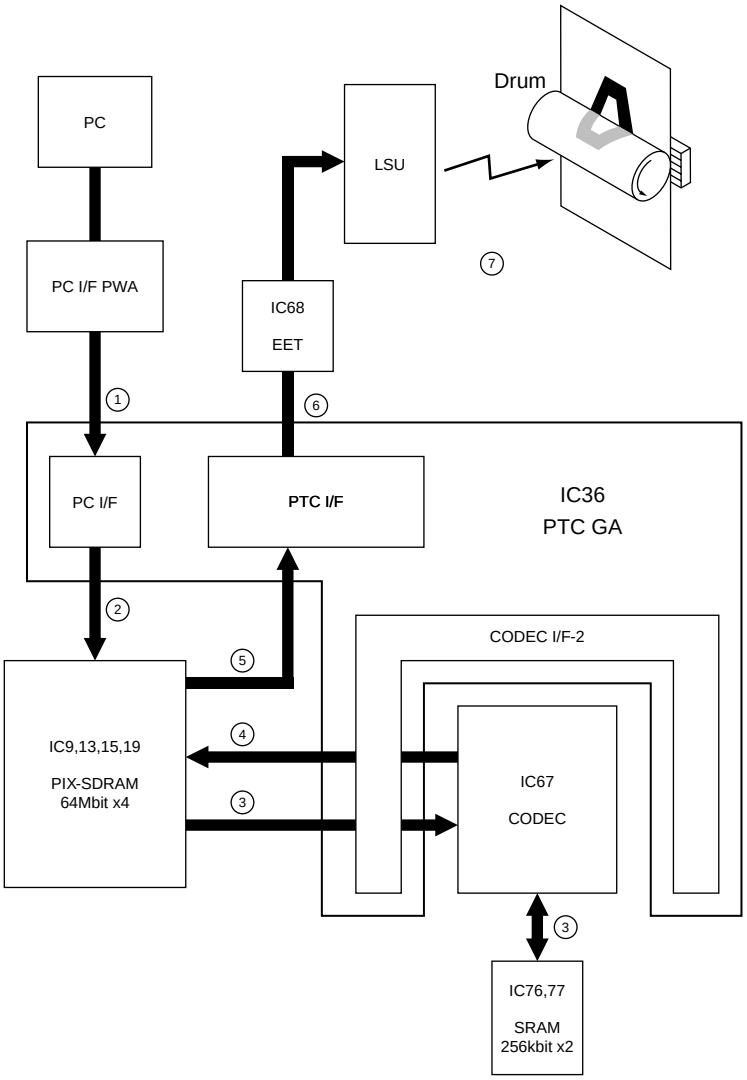
PC
PC I/F PWA
LSU
Drum
IC68
EET
PC I/F
PTC I/F
IC36
PTC GA
CODEC I/F-2
IC9,13,15,19
PIX-SDRAM
64Mbit x4
IC67
CODEC
IC76,77
SRAM
256kbit x2
1
2
3
4
5
6
7

GDI Printer

1

The coded data is output from the PC.

The coded data is transferred to the PC interface of the PTC GA via PC interface board.

2

The coded data is DMA transferred to PIX-SDRAM (IC9, 13, 15, 19) and stored.

3

The coded data is DMA transferred to CODEC (IC67) via CODEC Interface-2 of PTC GA. Then CODEC decodes the coded data into the raster data, and stores it in the SRAM.

4

The raster data is DMA transferred to PIX-SDRAM via CODEC Interface-2.

5

The raster data is DMA transferred to PTC Interface of PTC GA.

6

The PTC interface transfers the raster data to the EET (IC68) serially. The EET provides smoothing for the raster data, and transfers it to the LSU.

7

The LSU applies the laser beam onto the drum based on the print data, and forms a latent image on the drum.

The toner adheres on the drum according to the latent image.

Then the data is printed out by transferring the toner onto the recording paper.

FAX Direct Transmission

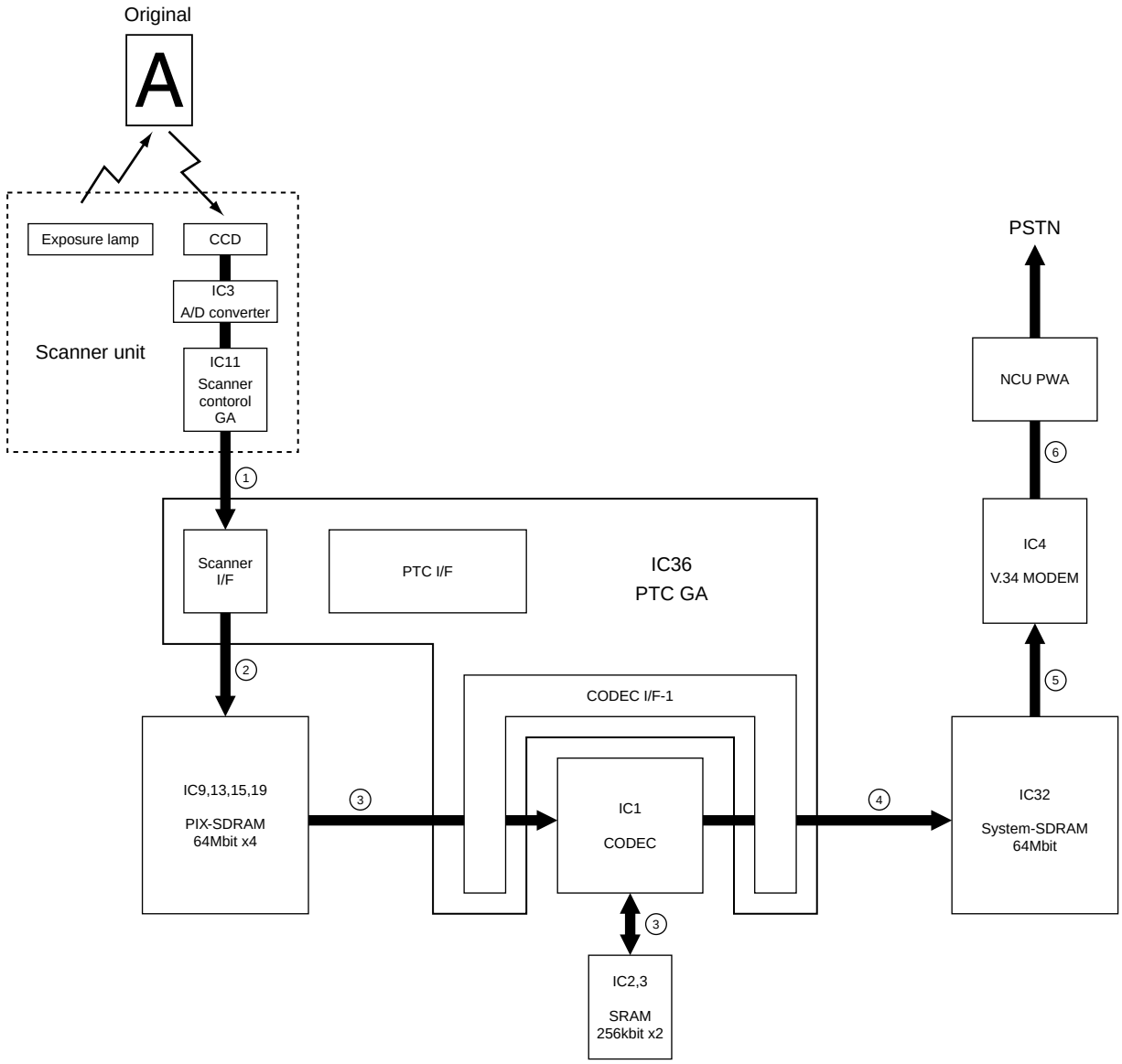

FAX direct transmission

In the direct transmission, the originals are scanned, and transmitted page by page.

1

The light irradiated by the exposure lamp to the original is reflected.

Then the CCD reads the reflected light.

The CCD converts the light to an electric signal, and outputs it to the A/D converter (IC3).

The A/D converter converts the electric signal into digital data, and outputs it to the Scanner control GA (IC11).

The Scanner control GA corrects the image data, and outputs it to the Scanner interface of PTC GA (IC36) as raster data.

2

The Scanner interface converts the raster data into the parallel.

Then the data is DMA transferred to PIX-SDRAM (IC9, 13, 15, 19) and stored.

During this period, this machine also communicates with the destination and determines the coding method for transmit data.

3

The raster data is DMA transferred to CODEC (IC1) mounted on FAX board via CODEC Interface-1 of PTC GA.

And CODEC converts the raster data into the coded data (MH, MR, MMR, JBIG).

4

The coded data is DMA transferred to CODEC (IC1) mounted on FAX board via CODEC Interface-1 of System-SDRAM.

5

The coded data is DMA transferred to MODEM (IC4) mounted on FAX board. And MODEM modulates the coded data into the analog signals for telephone line.

6

The analog signals are sent to the telephone line network via the NCU board.

Then the data of the original is transmitted to the destination through the telephone line network.

FAX Memory Transmission

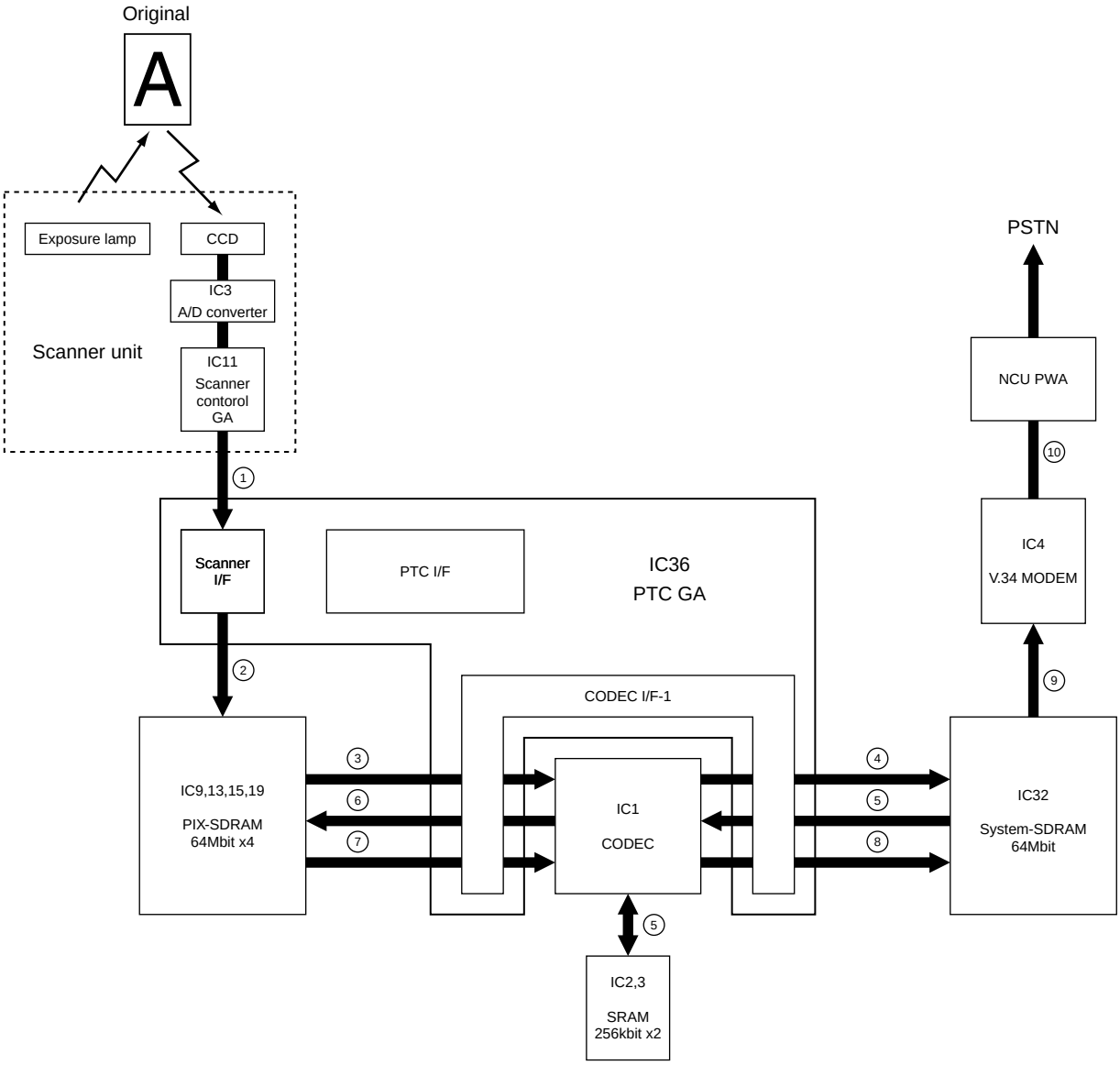

FAX memory transmission

The memory transmission reads all the original(s) into memory as transmit data before transmission.

1

The light irradiated by the exposure lamp to the original is reflected. Then the CCD reads the reflected light.

The CCD converts the light to an electric signal, and outputs it to the A/D converter (IC3).

The A/D converter converts the electric signal into digital data, and outputs it to the Scanner control GA (IC11).

The Scanner control GA corrects the image data, and outputs it to the Scanner interface of PTC GA (IC36) as raster data.

2

The Scanner interface converts the raster data into the parallel.

Then the data is DMA transferred to PIX-SDRAM (IC9, 13, 15, 19) and stored.

During this period, this machine also communicates with the destination and determines the coding method for transmit data.

3

The raster data is DMA transferred to CODEC (IC1) mounted on FAX board via CODEC Interface-1 of PTC GA.

And CODEC converts the raster data into the JBIG data.

4

The JBIG data is DMA transferred to CODEC (IC1) via CODEC Interface-1 of System-SDRAM.

Then the JBIG data of all originals to be copied is stored in the SDRAM.

5

The stored JBIG data is DMA transferred to CODEC (IC1) mounted on FAX board via CODEC Interface-1 of PTC GA.

Then CODEC decodes the JBIG data into the raster data, and stores it in the SRAM.

6

The raster data is DMA transferred to PIX-SDRAM via CODEC Interface-1.

7

The raster data is DMA transferred to CODEC (IC1) mounted on FAX board via CODEC Interface-1 of PTC GA.

And CODEC converts the raster data into the coded data (MH, MR, MMR, JBIG).

8

The coded data is DMA transferred to CODEC (IC1) mounted on FAX board via CODEC Interface-1 of System-SDRAM.

9

The coded data is DMA transferred to MODEM (IC4) mounted on FAX board.

And MODEM modulates the coded data into the analog signals for telephone line.

10

The analog signals are sent to the telephone line network via the NCU board.

Then the data of the original is transmitted to the destination through the telephone line network.

FAX Reception

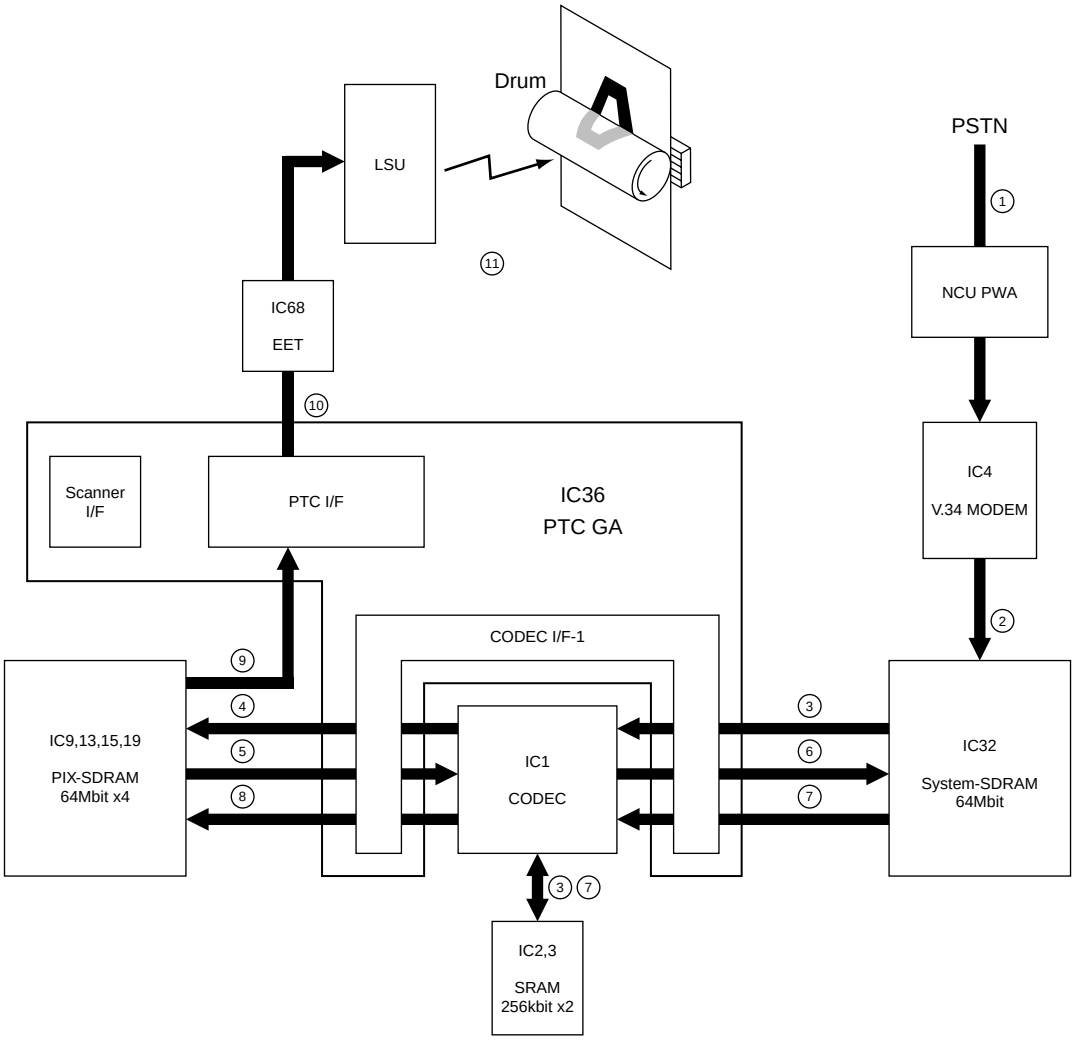

FAX reception

1

The MODEM (IC4) mounted on FAX board receives analog signals from the telephone line via the NCU board.

Then the MODEM demodulates the received analog signals into coded data.

2

The coded data is DMA transferred to System-SDRAM (IC32) and stored.

3

The coded data is DMA transferred to CODEC (IC1) mounted on FAX board via CODEC Interface-1 of PTC GA.

Then CODEC decodes the coded data into the raster data, and stores it in the SRAM.

4

The raster data is DMA transferred to PIX-SDRAM via CODEC Interface-1.

5

The raster data is DMA transferred to CODEC (IC1) mounted on FAX board via CODEC Interface-1 of PTC GA.

And CODEC converts the raster data into the JBIG data.

6

The JBIG data is DMA transferred to CODEC (IC1) mounted on FAX board via CODEC Interface-1 of System-SDRAM.

7

The JBIG data is DMA transferred to CODEC (IC1) mounted on FAX board via CODEC Interface-1 of PTC GA.

Then CODEC decodes the JBIG data into the raster data, and stores it in the SRAM.

8

The raster data is DMA transferred to PIX-SDRAM via CODEC Interface-1.

9

The raster data is DMA transferred to PTC Interface of PTC GA.

10

The PTC interface transfers the raster data to the EET (IC68) serially.

The EET provides smoothing for the raster data, and transfers it to the LSU.

11

The LSU applies the laser beam onto the drum based on the print data, and forms a latent image on the drum.

The toner adheres on the drum according to the latent image.

Then the data is printed out by transferring the toner onto the recording paper.

PCL Printer

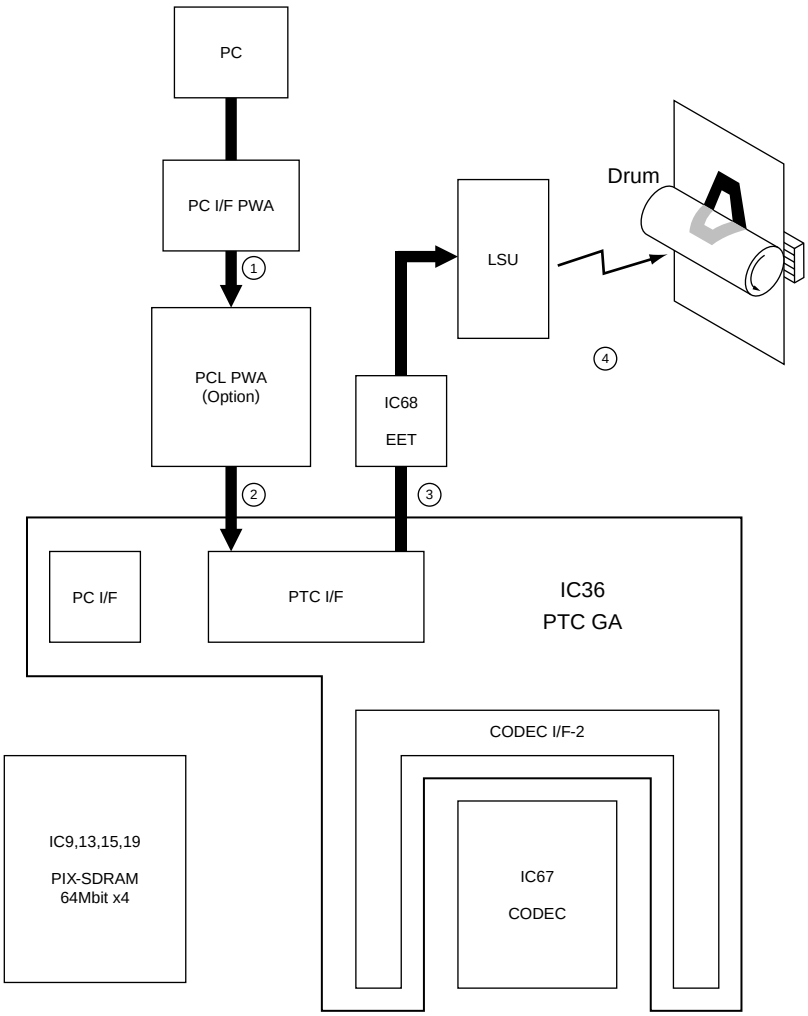
PC
PC I/F PWA
1
PCL PWA
(Option)
2
IC68
EET
3
LSU
Drum
4
PC I/F
PTC I/F
IC36
PTC GA
CODEC I/F-2
IC9,13,15,19
PIX-SDRAM
64Mbit x4
IC67
CODEC

PCL Printer

When the optional PCL board installed, this machine can be used as a PCL6 printer.
PCL board (GA-1030/1031)

1
The command of PCL6 format is output from the PC.
The command is transferred to the PCL board via PC interface board.
And the PCL board converts the command into the raster data.

2
The raster data is transferred to the PTC interface of the PTC GA.

3
The PTC interface transfers the raster data to the EET (IC68) serially.
The EET provides smoothing for the raster data, and transfers it to the LSU.

4
The LSU applies the laser beam onto the drum based on the print data, and forms a latent image on the drum.
The toner adheres on the drum according to the latent image.
Then the data is printed out by transferring the toner onto the recording paper.

Internet FAX Transmission

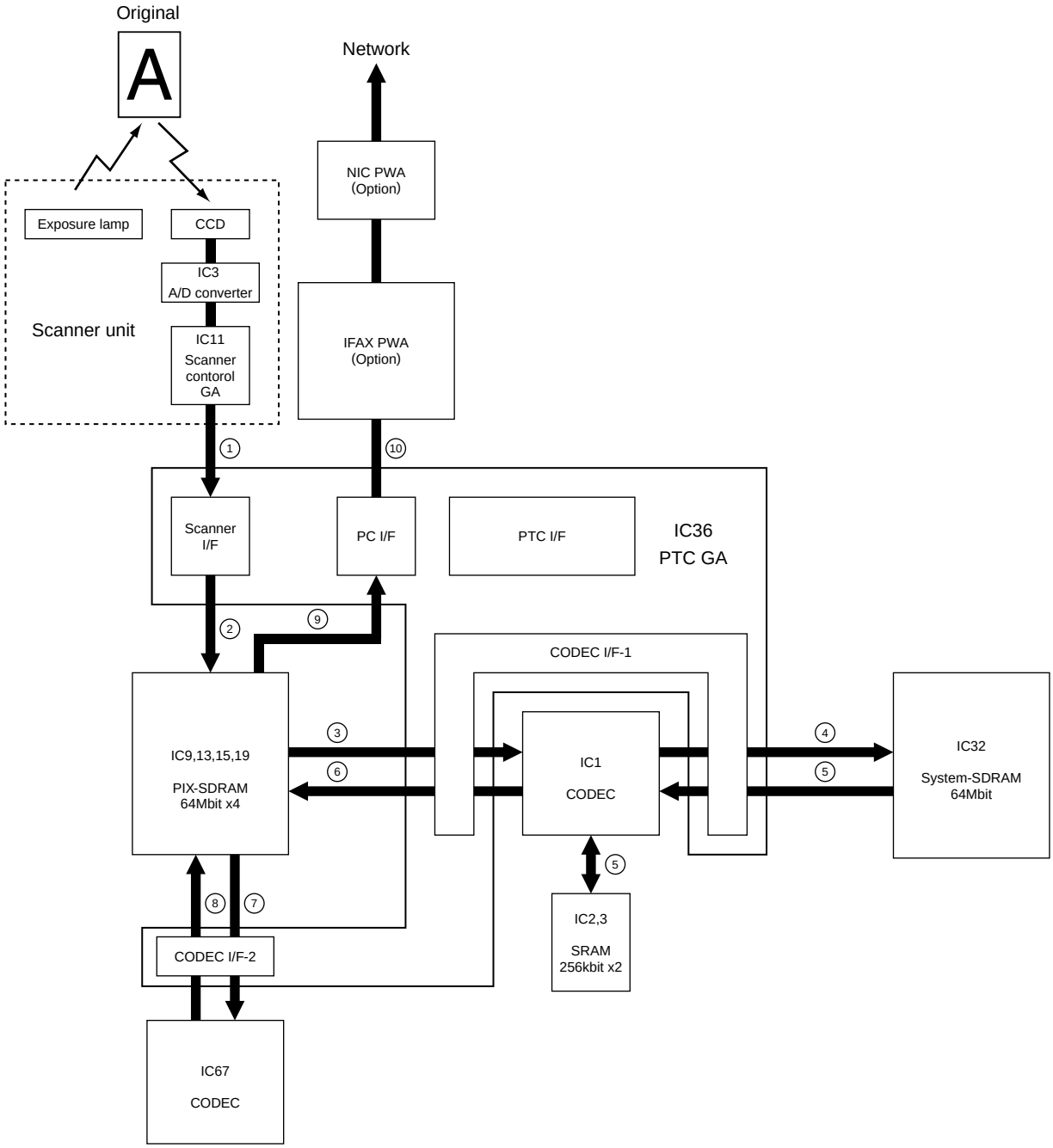

When the optional NIC kit and the I-FAX kit installed, this machine can be used as the Internet facsimile.
NIC kit (GF-1110), I-FAX kit (GD-1070)

I-FAX transmission

1
The light irradiated by the exposure lamp to the original is reflected. Then the CCD reads the reflected light.
The CCD converts the light to an electric signal, and outputs it to the A/D converter (IC3).
The A/D converter converts the electric signal into digital data, and outputs it to the Scanner control GA (IC11).
The Scanner control GA corrects the image data, and outputs it to the Scanner interface of PTC GA (IC36) as raster data.

2
The Scanner interface converts the raster data into the parallel.
Then the data is DMA transferred to PIX-SDRAM (IC9, 13, 15, 19) and stored.

3
The raster data is DMA transferred to CODEC (IC1) mounted on FAX board via CODEC Interface-1 of PTC GA.
And CODEC converts the raster data into the JBIG data.

4
The JBIG data is DMA transferred to CODEC (IC1) via CODEC Interface-1 of System-SDRAM.
Then the JBIG data of all originals to be copied is stored in the SDRAM.

5
The stored JBIG data is DMA transferred to CODEC (IC1) mounted on FAX board via CODEC Interface-1 of PTC GA.
Then CODEC decodes the JBIG data into the raster data, and stores it in the SRAM.

6
The raster data is DMA transferred to PIX-SDRAM via CODEC Interface-1.

7

The raster data is DMA transferred to CODEC (IC67) via CODEC Interface-2 of PTC GA.
And CODEC converts the raster data into the coded data.(MH)

8

The raster data is DMA transferred to PIX-SDRAM via CODEC Interface-2.

9

The coded data is DMA transferred to PC interface of the PTC GA.

10

The coded data is transferred to the optional I-FAX board.
The I-FAX board converts the coded data into the attached file in emailing.
Then it is transmitted to the Internet through the mail server via network.

Internet FAX Reception

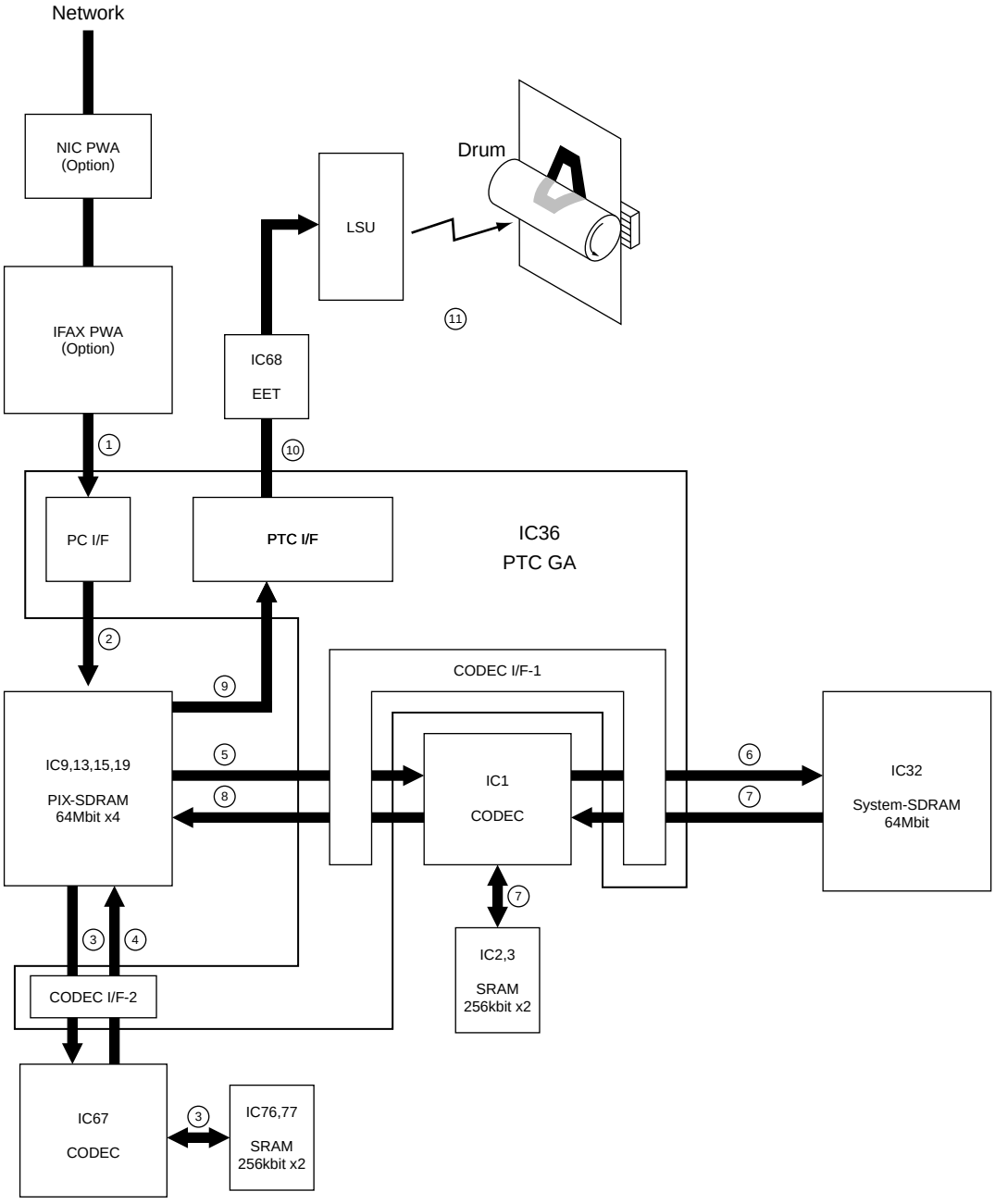

I-FAX reception

1

The I-FAX board downloaded attached file in emailing from the Internet via mail saver.
The I-FAX board converts the attached file into the coded data.
Then the coded data is transferred to the PC interface of the PTC GA.

2

The coded data is DMA transferred to PIX-SDRAM (IC9, 13, 15, 19) and stored.

3

The coded data is DMA transferred to CODEC (IC67) via CODEC Interface-2 of PTC GA.
Then CODEC decodes the coded data into the raster data, and stores it in the SRAM.

4

The raster data is DMA transferred to PIX-SDRAM via CODEC Interface-2.

5

The raster data is DMA transferred to CODEC (IC4) mounted on FAX board via CODEC Interface-1 of PTC GA.
And CODEC converts the raster data into the JBIG data.

6

The JBIG data is DMA transferred to CODEC (IC1) mounted on FAX board via CODEC Interface-1 of System-SDRAM.

7

The JBIG data is DMA transferred to CODEC (IC1) mounted on FAX board via CODEC Interface-1 of PTC GA.
Then CODEC decodes the JBIG data into the raster data, and stores it in the SRAM.

8

The raster data is DMA transferred to PIX-SDRAM via CODEC Interface-1.

9

The raster data is DMA transferred to PTC Interface of PTC GA.

10

The PTC interface transfers the raster data to the EET (IC68) serially.

The EET provides smoothing for the raster data, and transfers it to the LSU.

11

The LSU applies the laser beam onto the drum based on the print data, and forms a latent image on the drum.

The toner adheres on the drum according to the latent image.

Then the data is printed out by transferring the toner onto the recording paper.