FILM PROJECTOR UNIT

(Machine Code: A998)

1. SPECIFICATION

Acceptable Film Type:	• Type:	Positive film/Negative film
	• Size:	35 mm - Approx. 140 x 210 mm
	Others:	60 x 45 mm, 60 x 60 mm, 60 x 70 mm, 60 x 80 mm, 60 x 90 mm, 6 cm x 6 cm 4" x 5"
	Max:	140 x 210 mm or 5.5" x 8.2"
	• Mount: Yes	(Up to 5 frames can be set in a film holder.)
	• Strip: Yes	(A series of 6 frames can be set in a film holder.)
Focusing:	Fixed/Manual	
Effective Film Area:	• 35 mm:	Approx. 22.2 x 33.3 mm
	• Other Sizes:	Full Size
Projection Ratio	• 35 mm:	Approx. x 6
	• Other Sizes:	x 1
Copy Image Size	• 35mm mount:	124 x 195 mm
	• 35mm strip:	133 x 200 mm
	• Other Sizes:	Full Size

The reproduction features of the copier are available.

Power Source:	☞ inside page of the front cover.	
Power Consumption:	Maximum:	55W
Dimensions (W x D x H):	Projector:	300 x 442 x 204 mm 11.8" x 17.4" x 8.03"
	Mirror Unit:	295 x 232 x 50 mm 11.61" x 9.13" x 1.97"
Weight:	11 kg or 24.3 lb	

Remarks: The holder is required for installation.

2. ELECTRICAL COMPONENT LAYOUT AND DESCRIPTIONS

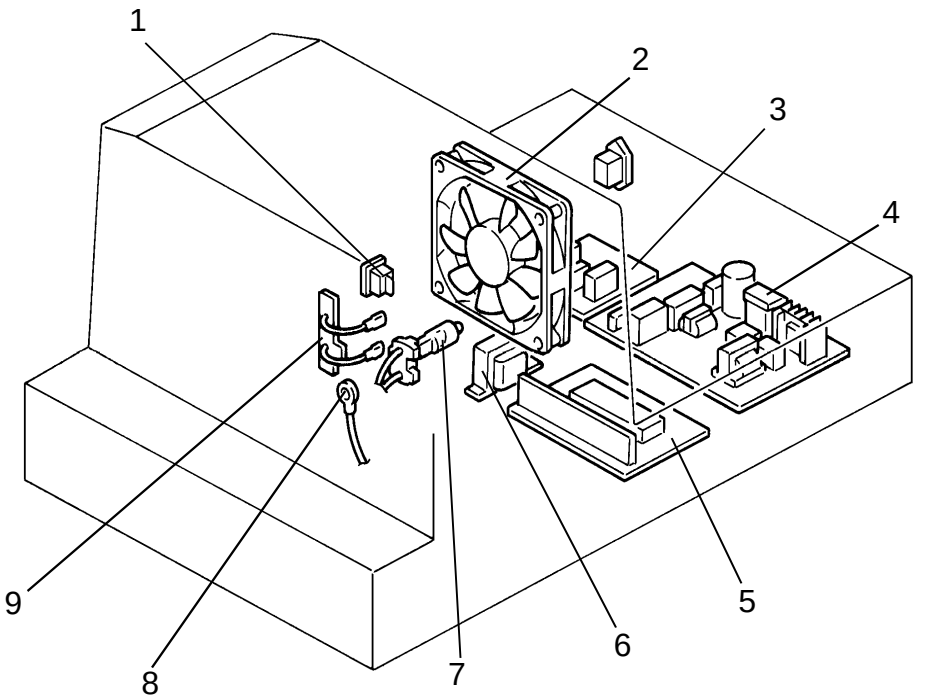

Symbol	Name	Function	Index No.
PCB1	Projector Lamp Regulator	Supplies dc voltage to the projector lamp and lamp cooling fan.	4
PCB2	Projector Control Board	Controls the projector unit, communicating with the copier main board.	5
PCB3	Noise Filter Board (220–240V machine only)	Removes electrical noise.	3
M1	Lamp Cooling Fan	Blows air to the projector lamp section.	2
SW1	Projector Switch	Provides power to the projector unit.	1
L1	Projector Lamp	Applies light to the film for exposure.	7
TH1	Lamp Thermistor	Detects the temperature around the projector lamp to control the lamp cooling fan.	8
TF1	Lamp Thermofuse	Opens the projector lamp circuit if the projector lamp section overheats.	9
TR1	Transformer	Steps down the wall voltage to 17 ~ 18 V ac.	6

3. SECTIONAL DESCRIPTIONS

3.1 OVERVIEW

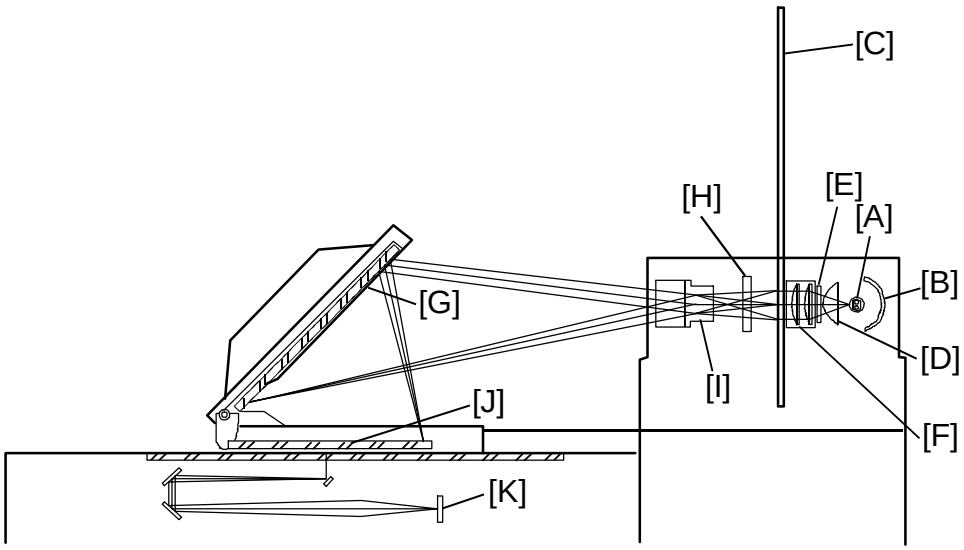

This film projector unit allows making copies from the following kinds of films:

35 mm positive slides (both mount films and glass mount films)
35 mm negative or positive strip films
Positive or negative films of wide size
(60 x 45 / 60 x 60 / 60 x 70 / 60 x 80 / 60 x 90 mm / 4" x 5" / maximum size of 140 x 210 mm or 5.5" x 8.2")

The light from the projector lamp [A] is reflected by the reflector [B] and reaches the film (35 mm) in the film/slide holder [C] through the non-spherical lens [D], heat filter [E], and condenser lenses [F]. The projected film image reaches the mirror [G] through the correction filter (positive or negative) [H] and projection lens [I]. Then the mirror reflects the image to the exposure glass through the Fresnel lens [J]. The first scanner moves under the exposure glass to read the projected film image and the light of the image is converted to R/G/B electrical signals by the CCD [K].

The projected image on the exposure glass is enlarged about 6 times the 35 mm film's image.

In the case of wide size films, the first scanner reads the film placed on the exposure glass directly using the light from the projector lamp.

The lamp cooling fan turns on and off according to the temperature of the projector lamp section detected by the lamp thermistor. It turns on at around 45℃ and turns off at around 44℃.

3.2 SHADING

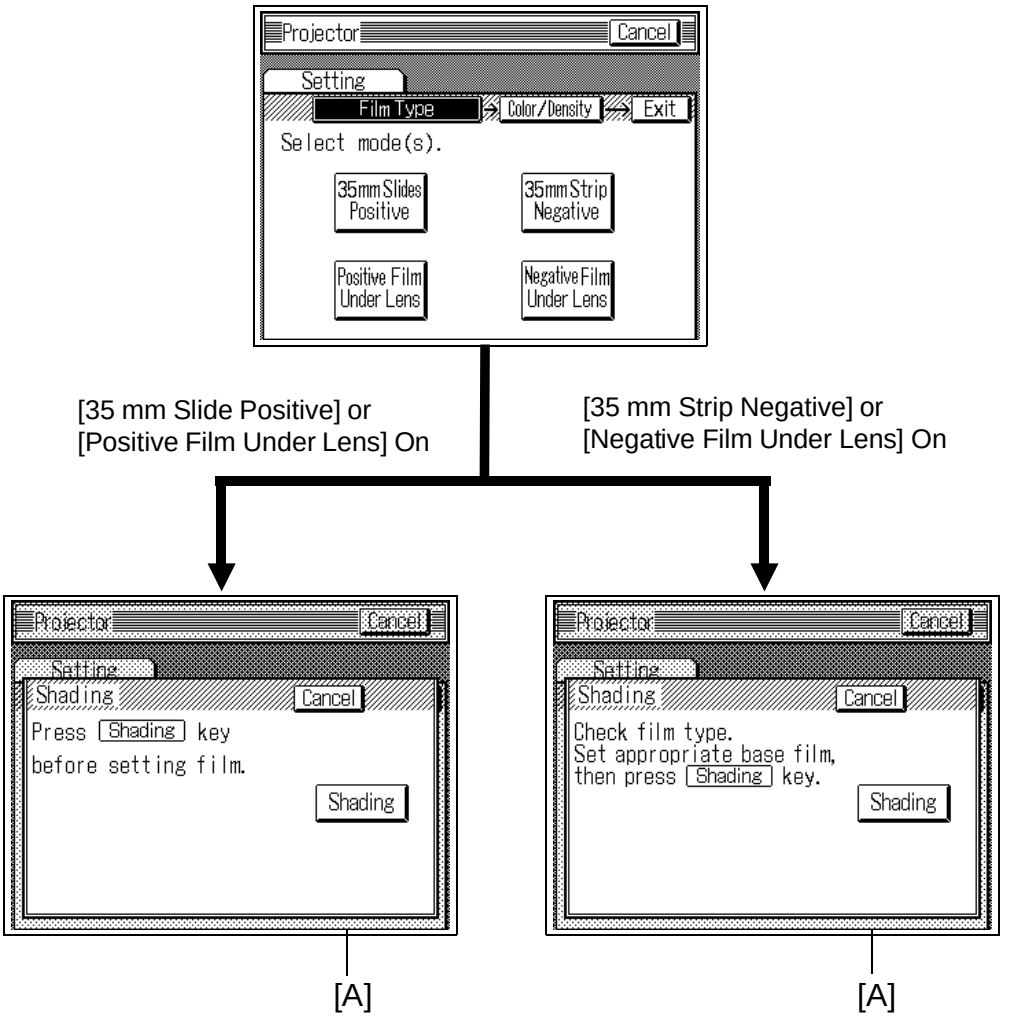

When the projector unit is selected, shading should be done after selecting the type of films. The shading should be done with a base film and the N-correction filter for the negative films and with the P-correction filter for the positive films.

The N-correction filter corrects color of the projected light. The P-correction filter corrects the light intensity of the projected light so that it becomes similar to that for the negative films.

When "Shading" [A] on the touch panel display is pressed, the first scanner moves and stops under the mirror unit. Then AGC (Auto Gain Control) for the light intensity from the projector lamp is performed. Shading for black and white levels is also performed after the AGC.

This "Shading" should be performed whenever the type of film is changed or the mirror unit is moved.

3.3 MIRROR UNIT

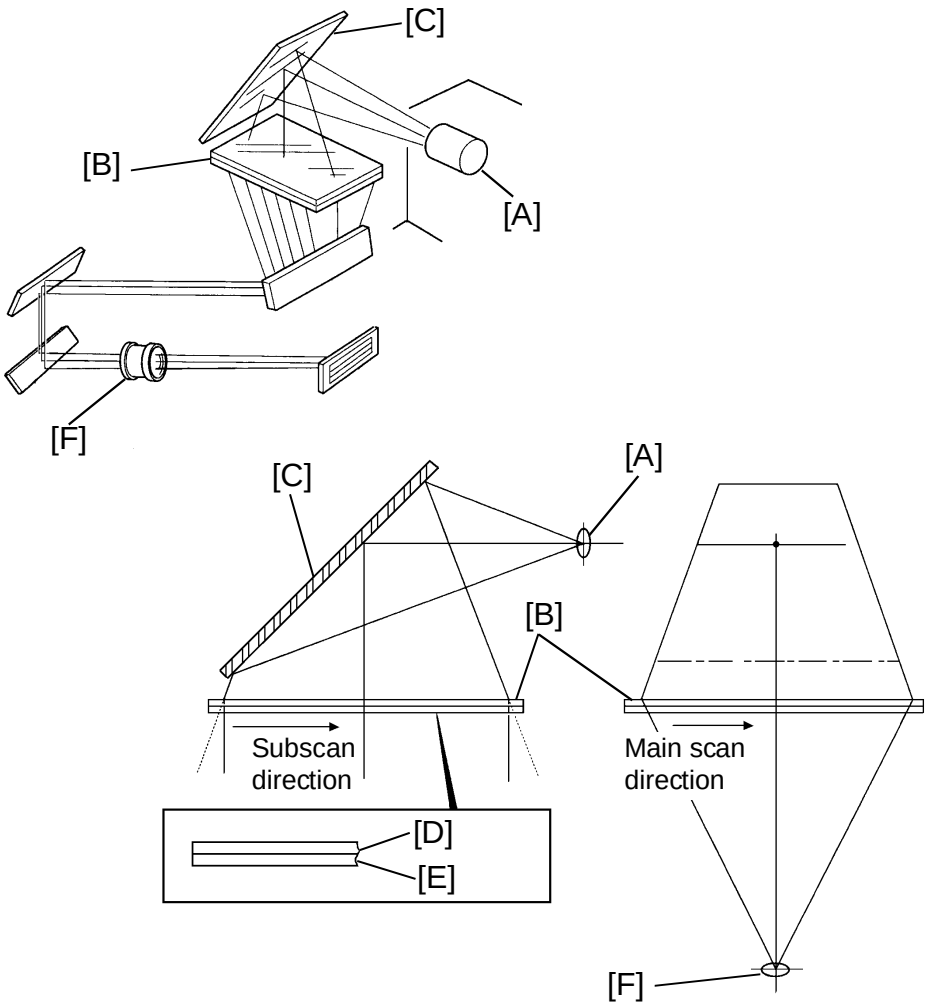

The film image projected through the projection lens [A] is reflected to the Fresnel lens [B] by the mirror [C].

The Fresnel lens consists of two components, a circle pitch Fresnel lens [D] and a parallel pitch Fresnel lens [E]. The circle pitch Fresnel lens changes the spreading light to the parallel light. The parallel Fresnel lens collects the light from the circle pitch Fresnel lens in the main scan direction so that all the light reaches the color CCD lens [F].
The use of these two types of Fresnel lens makes the most of the light intensity from the projector lamp.

4. INSTALLATION

4.1 ACCESSORY CHECK

Make sure that each accessory listed in the following table is in the box. Also check the condition of each item.

1. Mirror Unit 1
2. Power Cord 1
3. Optical Fiber Cable 1
4. Film Strip Holder 1
5. Slide Holder 1
6. Glass Mount Holder 1
7. Base Film (FUJI, KODAK, AGFA) 3
8. Slide Mount 1
9. Correction Filter (P, N) 2
10. Blower Brush 1
11. Projection Lamp 1
12. Film Position Sheet 2
13. Positioning Pin 2
14. Spacer 4
15. Philips Pan Head Screw - M4 x 8 2
16. Philips Pan Head Screw - M4 x 12 4
17. Installation Procedure 1
18. New Equipment Condition Report1 (-17/-27 only) 1
19. Envelope for NECR (-17 only) 1

4.2 INSTALLATION PROCEDURE

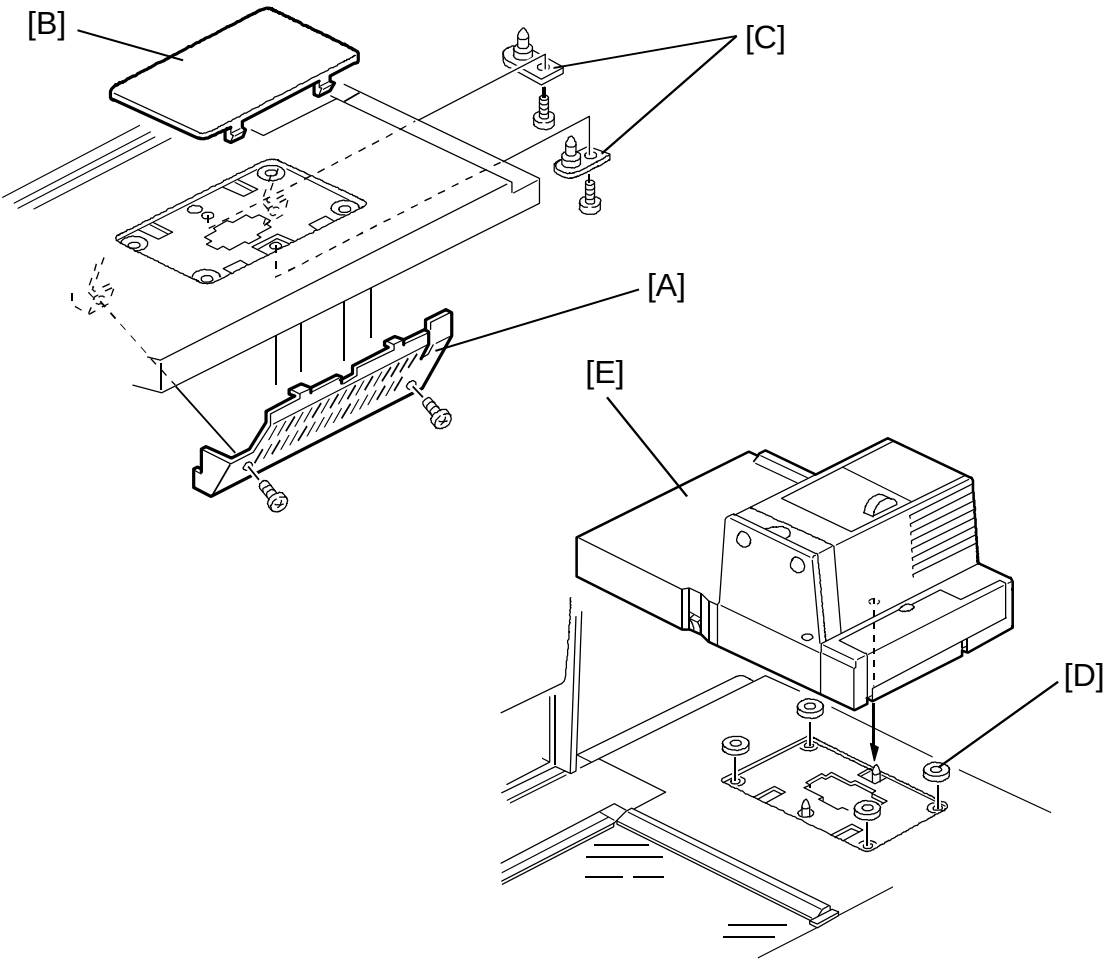

NOTE: Holder (A702) must be installed before starting the following procedure.

1. Remove the lower cover [A] from the holder bracket (2 screws).
2. Remove the cover plate [B] from the holder.
3. Install two positioning pins [C] on the holder bracket as shown (2 screws - M4 x 8) and reinstall the lower cover.
4. Set four spacers [D] at the four corners on the hollow surface of the holder.
5. Place the projector unit [E] on the holder by aligning the holes of the projector base plate with the positioning pins.

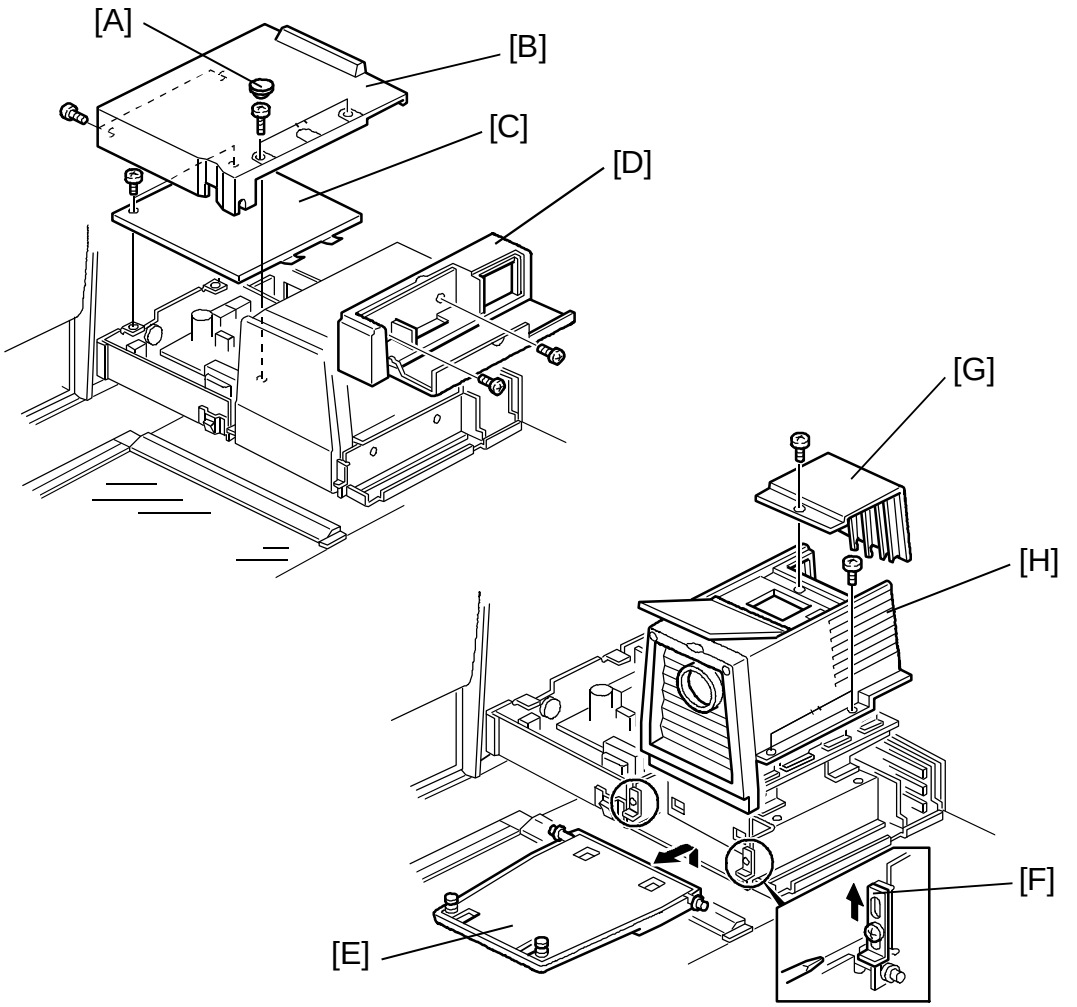

6. Remove two rubber caps [A] and the rear cover [B] (4 screws).
7. Remove the shield plate [C] (2 screws).
8. Open the front cover and remove the front cover assembly [D] (2 screws).
9. Lower the lens cover [E] and loosen the screws for the lens cover shaft stoppers [F].
10. Remove the lens cover.
11. Remove the lamp cover [G] (1 screw) and the top cover [H] (2 screws).

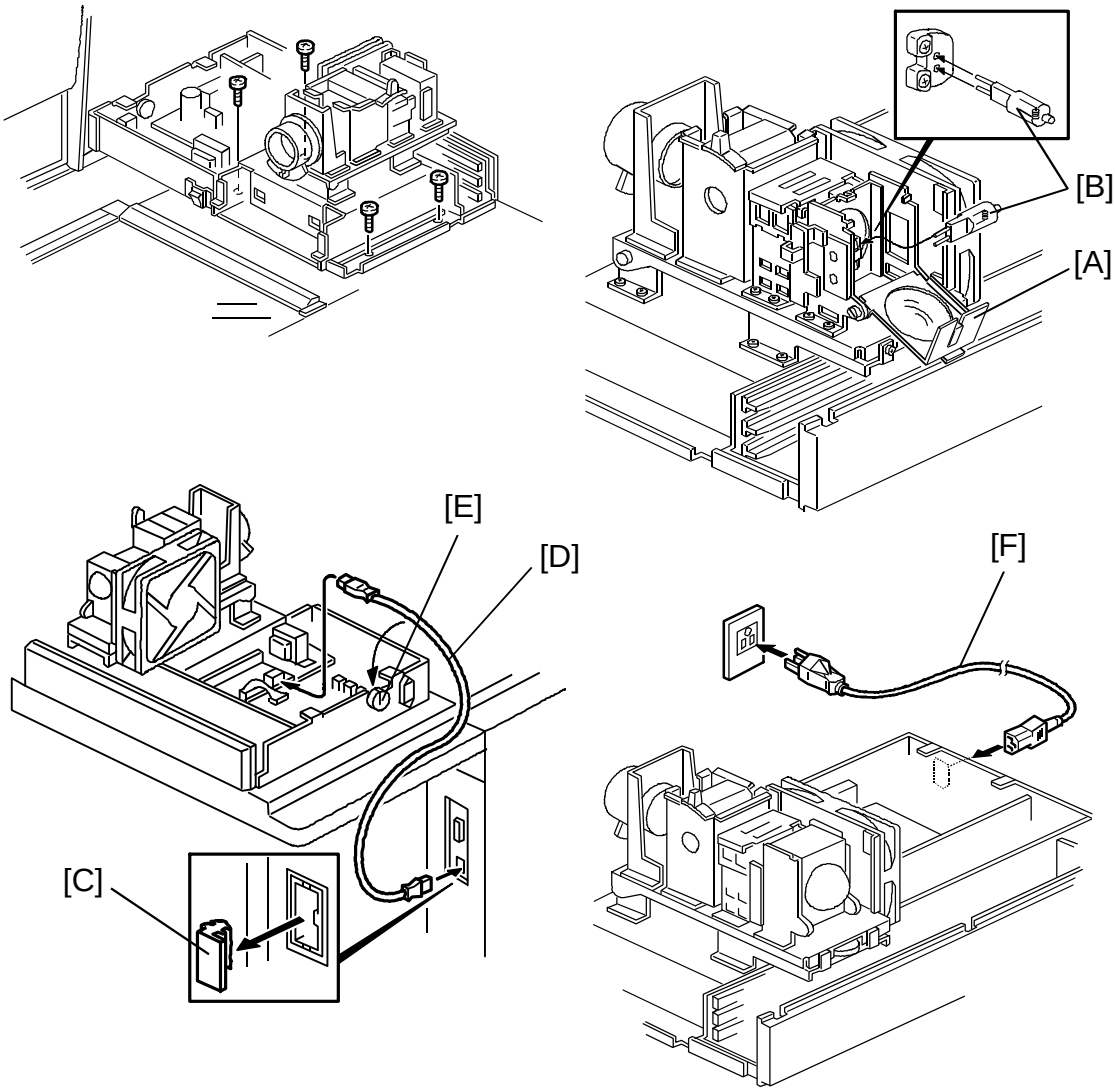

12. Fix the projector unit on the holder with 4 screws (M4 x 12).
13. Open the reflector cover [A], set the projection lamp [B] on the socket, then close the reflector cover.

    NOTE: The projection lamp should be inserted horizontally until it stops.
14. Remove the rubber block [C] from the optical fiber connector on the copier.
15. Set the optical fiber cable [D] between the projector control board (CN6) and the copier through the rubber bushing [E] as shown.
16. Set the power cord [F] to the power inlet and plug it in the wall outlet.

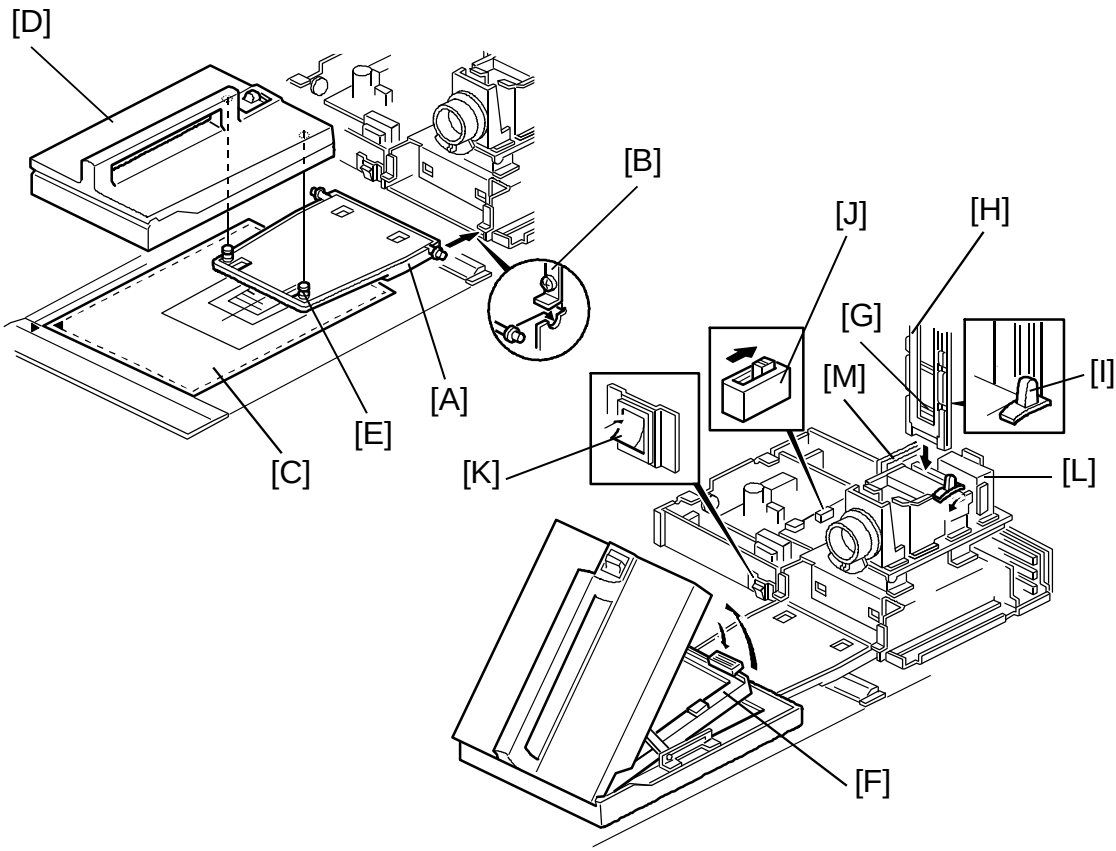

17. Replace the lens cover [A] on the projector unit and lower it on the exposure glass.

    NOTE: It is unnecessary to fix the lens cover shaft stoppers [B].

18. Place the film position sheet [C] on the exposure glass, aligning it at the left rear corner.

19. Set the mirror unit [D] on the exposure glass by aligning the holes with the positioning pins [E] of the lens cover.

20. Open the mirror unit and set the fresnel lens [F] at the lower position.

21. Set the slide mount (the empty one) [G] to the glass mount holder [H].

22. Insert the glass mount holder to the holder slot and position the slide mount in front of the lenses by pressing and releasing the holder lever [I].

23. Turn on the test switch [J] on the projector control board and turn on the projector main switch [K] so that the projection lamp turns on.

CAUTION: The lamp housing and reflector [L] will become very hot. The lamp cooling fan [M] will start turning suddenly when the lamp housing temperature becomes high. Keep hands away from those components to avoid any injury.

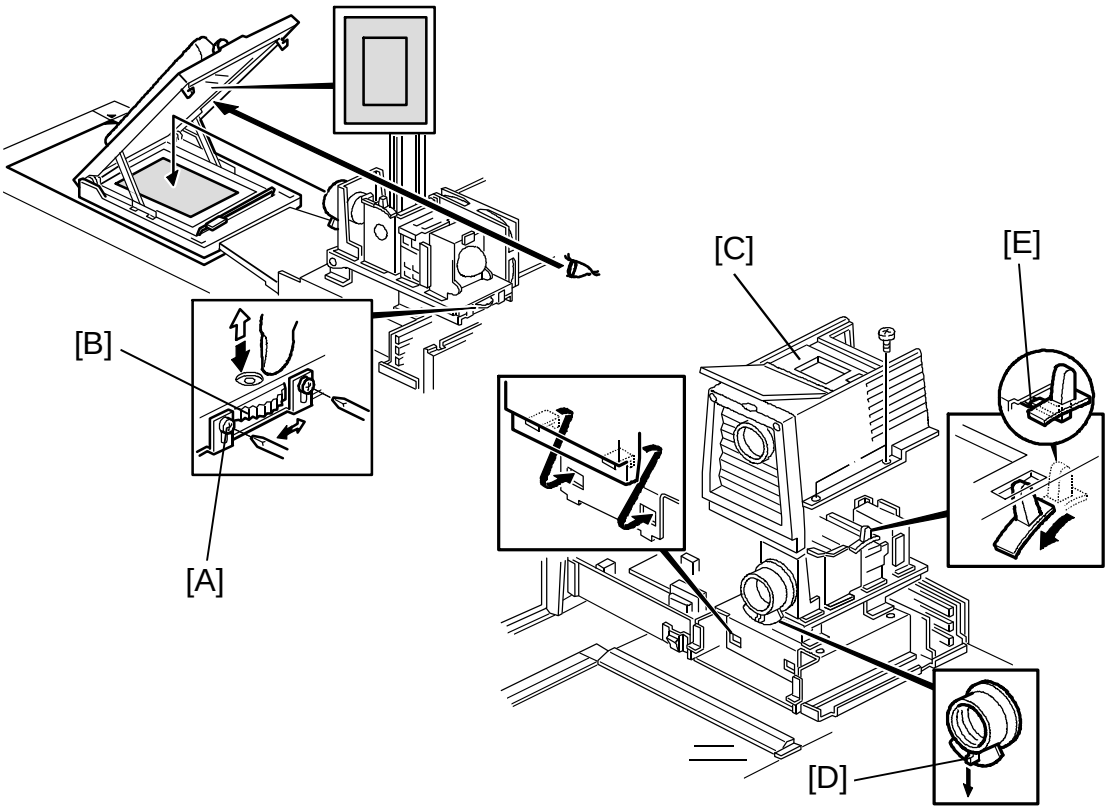

24. Loosen the fixing screws [A] for the optical base plate.
25. While pressing down on the optical base plate, adjust the position of the projected light by turning the adjusting dial [B] so that the position becomes at the center of the fresnel lens.

    NOTE: Use the mirror to look at the projected light on the fresnel lens. Use the frames of the film position sheet as a reference. The side to side position may be adjusted little by repositioning the projector unit on the holder.
26. Tighten the fixing screws for the optical base plate.
27. Turn off the projector main switch and the test switch.
28. Reinstall the shield plate.
29. Remove the slide holder, the mirror unit, the lens cover, and the film position sheet.
30. Reinstall the top cover [C].

    NOTE: Install the top cover from the lens side. The focusing lever [D] should be properly positioned. Be careful not to bend the holder lever arm [E].
31. Reinstall the lens cover and other covers.

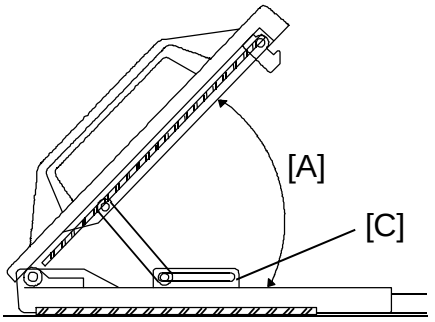

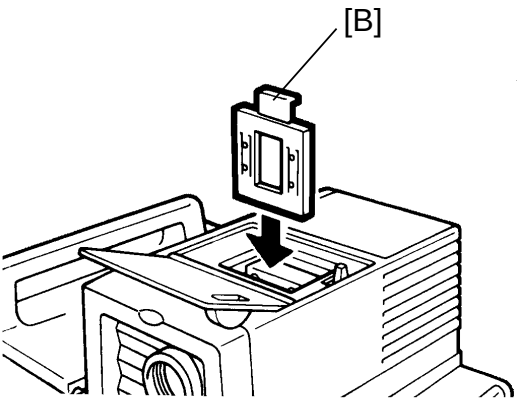

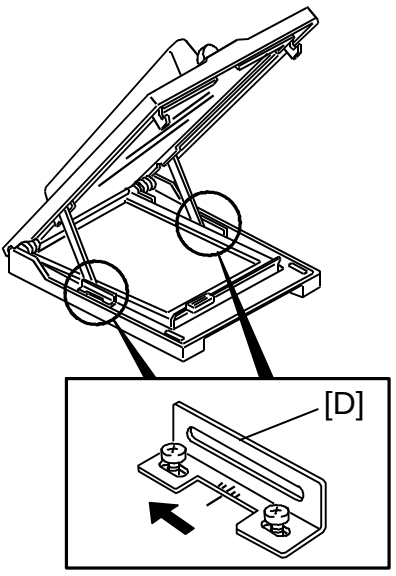

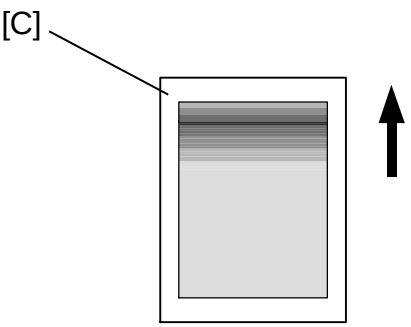

32. Adjust the angle [A] of the mirror unit as follows:
    1) Turn on the copier main switch and wait for the ready condition.
    2) Open the lens cover and set the mirror unit.
    3) Set the correction filter [B] for positive films to the filter slot.
    4) Turn on the projector main switch and press the option key.
    5) Perform shading in positive 35 mm slides mode.
    6) Set one of the orange base film in the slide holder and position it in the projector unit.
    7) Make a copy of the orange film.
    8) Check if the orange image is even or not. If the image is uneven, adjust the mirror angle as follows:
        8-1) When the leading part is dark [C].
            a) Move the front and rear arm guides [D] to the left so that the mirror angle is increased (2 screws each).
            NOTE: Position the front and rear arm guides evenly by using the ruler decals.
            b) Make a copy of the orange film.
            c) Repeat a) and b) until the orange image becomes even.

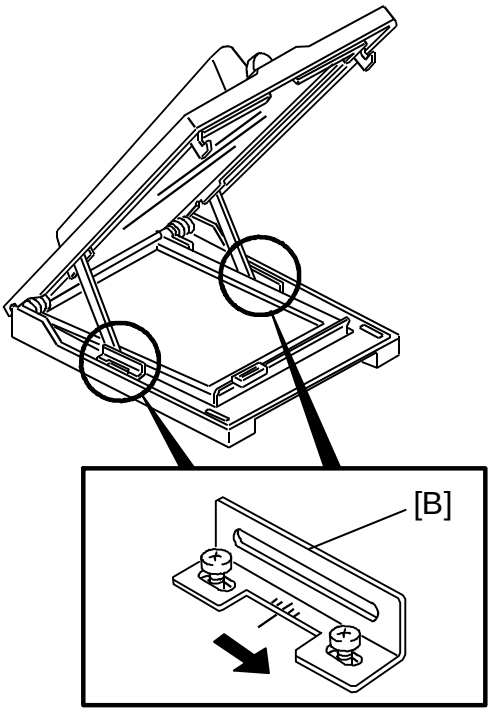

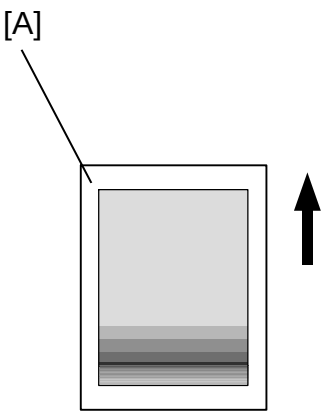

8-2) When the trailing part is dark [A].

a) Move the front and rear arm guides [B] to the right so that the mirror angle is reduced (2 screws each).
NOTE: Position the front and rear arm guides evenly by using the ruler decals.
b) Make a copy of the orange film.
c) Repeat a) and b) until the orange image becomes even.

33. Check copy images from positive or negative films.