SECTION 1

OVERALL MACHINE INFORMATION

1. SPECIFICATIONS

Specifications are subject to change without notice.

Configuration: Console

Copy Process: Dry electrostatic transfer system

Resolutions: 400 dpi

Gradations: 256 gradations

Original Type: Sheet/book, object

Original Size: Maximum: A3 (lengthwise), 11" x 17" (lengthwise)

Original Alignment: Rear-left corner

Copy Paper Weight:
- Paper Tray: 64 - 104.7g/m^2 or 17 - 28 lb
- Bypass Feed Tray: 64 - 157 g/m^2 or 17 - 42 lb

NOTE: With paper heavier than 104.7g/m^2 or 28 lb, use the bypass feed tray and select Thick Paper mode.

Available Copy Paper Size:

Tray	Paper Direction	A4/A3 version	LT/DLT version
1st Tray	Lengthwise	A3, A4, 8 1/2" x 13" (F4), 8 1/4" x 13"	11" x 17"(DLT), 11" x 15", 10" x 14" , 8 1/2" x 14"(LG), 8" x 13"(F), 8 1/2" x 11"(LT), 8" x 10 1/2", 8" x 10"
	Sideways	A4, A5	11" x 8 1/2"(LT), 8 1/2" x 5 1/2"(HLT)
2nd/ 3rd Tray	Lengthwise	A3, B4, A4, B5, A5, 11" x 17"(DLT), 11" x 15", 10" x 14", 8 1/2" x 14"(LG), 8 1/2" x 13"(F4), 8 1/4" x 13", 8" x 13"(F), 8 1/2" x 11"(LT), 8" x 10 1/2", 8" x 10", 5 1/2" x 8 1/2"(HLT)	
	Sideways	A4, B5, A5, 11" x 8 1/2"(LT), 8 1/2" x 5 1/2"(HLT)	
Bypass Feed Tray	Lengthwise	A3, B4, A4, B5, A5, B6, A6	11" x 17" (DLT), 10" x 14", 8 1/2" x 11" (LT), 8" x 13" (F), 5 1/2" x 8 1/2" (HLT)
	Sideways	A4, B5, A5, B6, 8 1/2" x 11"	8 1/2" x 11" (LT) 5 1/2" x 8 1/2" (HLT)
	Odd paper size	Horizontal direction: 148 – 432 mm or 5.8" – 17.0" Vertical direction: 100 – 297 mm or 3.9" – 11.7"	

Warm-up Time:	About 8.5 minutes (at 20°C or 68°F)
First Copy Time: (A4 or 8 1/2" x 11" sideways)	• Full Color (4 scans): 15.5 seconds • Single Color: Black. Yellow, Magenta, Cyan: 9.0 seconds Red, Green, Blue, Orange, Light Green: 11.0 seconds **NOTE:** 1) When selecting OHP/Thick Paper modes, copying speed is reduced. 2) After changing some modes, the first copy time will take longer than usual.
Copying Speed: (Standard modes)	• Full Color (4 scans): A4 or 8 1/2" x 11" sideways: 6 copies/minute A3 or 11" x 17": 3 copies/minute • Single Color (Black, Yellow, Magenta, Cyan): A4 or 8 1/2" x 11" sideways: 31 copies/minute A3 or 11" x 17": 15 copies/minute • Single Color (Red, Green, Blue, Orange, Light Green): A4 or 8 1/2" x 11" sideways: 10 copies/minute A3 or 11" x 17": 5 copies/minute **NOTE:** When selecting OHP/Thick Paper modes, copying speed is reduced.
Non-reproduction Area:	• Leading edge: 5±2 mm or 0.2"±0.08" • Side: 2±2 mm or 0.08"±0.08", Total less than 4 mm or 0.16" • Trailing edge: 2±2 mm or 0.08"±0.08"
Copy Number Input:	Number keys, 1 to 99
Automatic Reset:	1 minute standard setting; can also be set to 10 to 900 seconds in 1 second steps, or to no auto reset.
Paper Feed:	Paper Tray x 3 (500 sheets of paper each) Bypass Feed Tray (50 sheets of paper with paper lighter than 104.7g/m^2 or 28 lb)

Copy Tray Capacity:	100 sheets of paper
Toner Replenishment:	Bottle type (340g/bottle)
Reproduction Ratio:	• A4/A3 version: 25%, 50%, 65%, 71%, 75%, 82%, 93%, 100% (Full SIze), 115%, 122%, 141%, 200%, 400% + User ratio x 2 • LT/DLT version: 25%, 50%, 65%, 74%, 77% 85%, 93%, 100% (Full Size), 121%, 129%, 155%, 200%, 400% + User ratio x 2
Zoom:	From 25% to 400% in 1% steps
Power Source:	115 V 60 Hz, more than 12 A (for NA) 220 ~ 240 V 50/60 Hz, more than 7 A (for EU and AA)
Power Consumption: (Copier only)	• Maximum: 1.4 kW • Warm-up: 1.25 kW • Stand-by: 0.5 kW • Copy Cycle: 1.15 kW
Noise Emission	• Maximum: Copier Only: less than 62 dB (A) Full System: less than 69 dB (A) • Stand-by: Copier Only: less than 40 dB (A) Full System: less than 44 dB (A) • Copy-cycle: Copier Only: less than 56 dB (A) Full System: less than 58 dB (A)
Dimensions (W x D x H):	• Copier Only: 692 x 685 x 1026 mm or 27.3" x 27.0" x 40.4" • Full System*: 1524 x 685 x 1099 mm or 60.0" x 27.0" x 43.2" (*= Copier + Dual Job Feeder + Sorter + Display Editor + Holder)
Weight:	• Copier Only: 200 kg or 440.8 lb

Optional Equipment:

- Dual Job Feeder
- Sorter
- Sorter Adapter
- Projector Unit
- Display Editor
- Holder for Projector Unit/Display Editor
- Key Counter

2. MACHINE CONFIGURATION

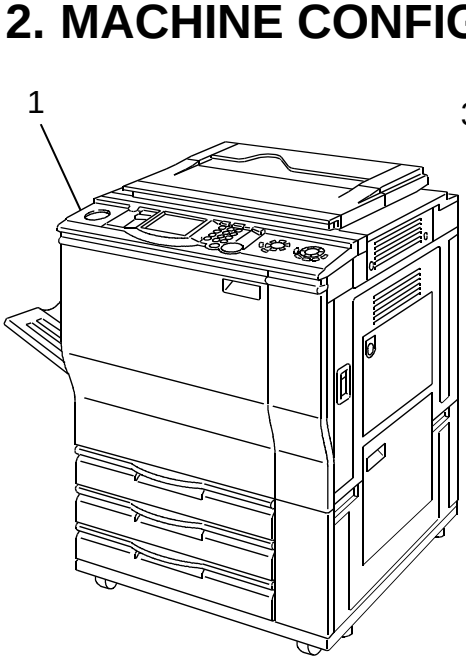

<Copier>

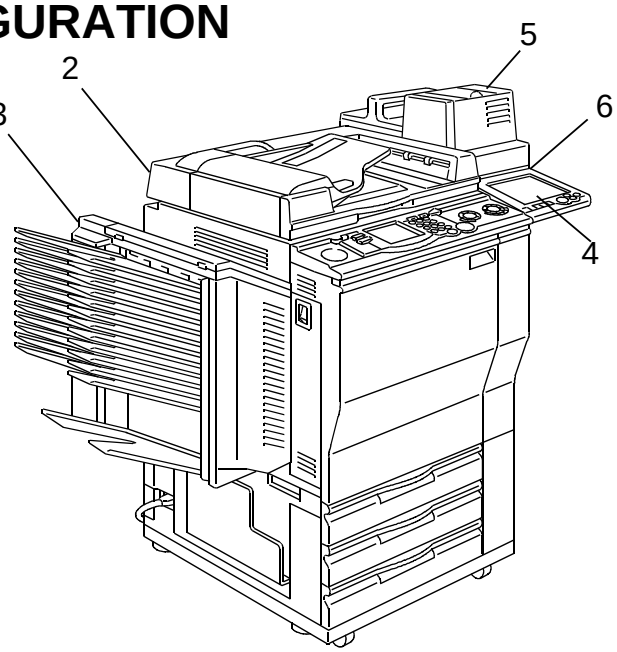

<Full System>

Item	Machine Code	Note	No.
Copier	A109	• English language ROM is installed on –17/10/22 machines • No language ROM is installed on –27/26 machines.	1
Dual Job Feeder	A376	• Common with A095/A096 copiers.	2
10-bin Sorter	A511	• Common with A099 copier. • Sorter adapter (A527) is required for installation.	3
Display Editor	A997	• Holder (A702) is required for installation.	4
Film Projector Unit	A998	• Holder (A702) is required for installation.	5
Holder	A702	• Holder can be installed independently as an original table.	6
Language ROM (for operation panel)	A544	• The following languages are available: English (A4), German, French, Italian, Spanish, (Universal)	—

3. COPY PROCESS

3.1 OVERVIEW

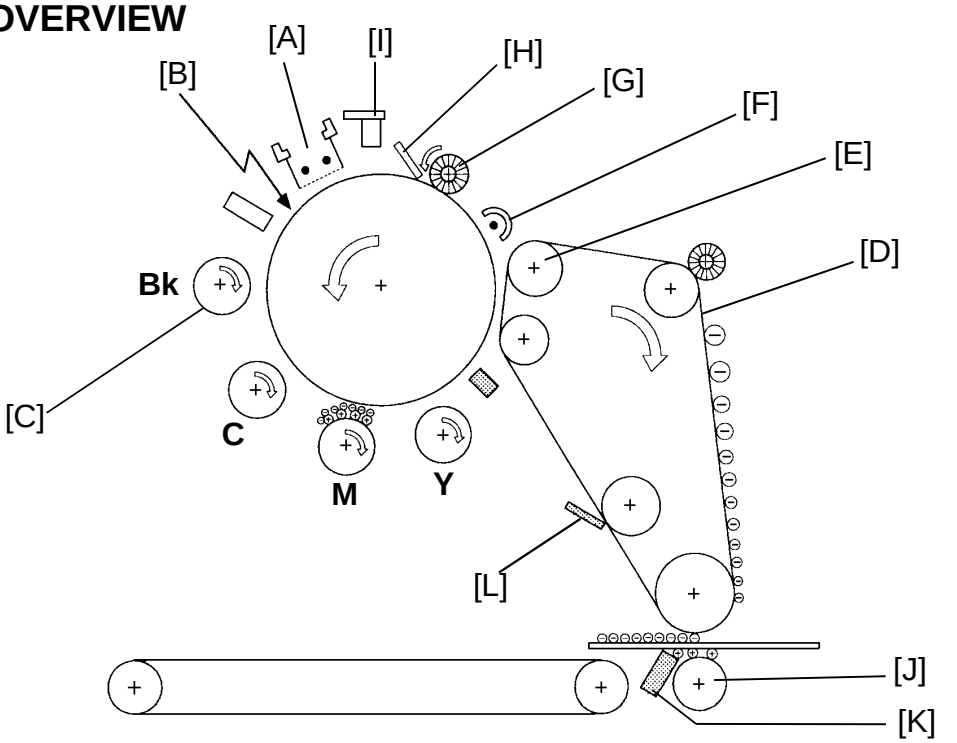

This copier scans the original image four times to develop the latent image on the OPC drum with black, cyan, magenta, and yellow toner.

First, the drum is negatively charged by the charge corona unit [A] and is exposed by the laser beam [B] for producing the black latent image. Then the latent image is developed with negatively charged black toner by the black development section [C]. (Refer to the development process description in section 2, 3.2)

When the developed black image has almost reached the transfer belt [D], the transfer belt contacts the drum and starts rotating at the same peripheral speed of the drum (180 mm/sec). A high positive voltage is applied to the belt bias roller [E] to attract black toner onto the transfer belt electrically.

When the whole black image is transferred to the transfer belt, the belt releases from the drum and rotates the same amount in reverse.

After the black toner transfer to the transfer belt, the PCC (pre-cleaning corona) [F] applies a strong ac corona discharge with a negative bias to the drum surface. This makes it easier for the cleaning brush [G] to remove the remaining toner from the drum surface.

Then the drum surface is cleaned by the cleaning brush and the cleaning blade [H]. The quenching lamp [I] exposes the drum to electrically neutralize the drum surface.

Next the charged drum is exposed by the laser beam again for producing the cyan latent image. The image is developed with cyan toner and it is transferred to the transfer belt aligned with the black image.

The same image transfer process is performed for magenta and yellow toners, producing the full color image on the transfer belt.

Then, the transfer roller [J] contacts the transfer belt and starts rotating at the same speed as the transfer belt (180 mm/sec for normal paper mode, 90 mm/sec for thick paper / OHP mode). Copy paper is fed to the nip band between the transfer belt and transfer roller aligned with the lead edge of the full color image.

A high positive voltage is applied to the transfer roller to attract toner onto the paper.

A high ac voltage is applied to the discharge plate [K]. This discharges the remaining electricity on the paper to help the paper separate from the transfer belt.

After the toner is transferred to the paper, the belt cleaning blade [L] contacts the transfer belt to clean its surface.

3.2 DEVELOPMENT PROCESS

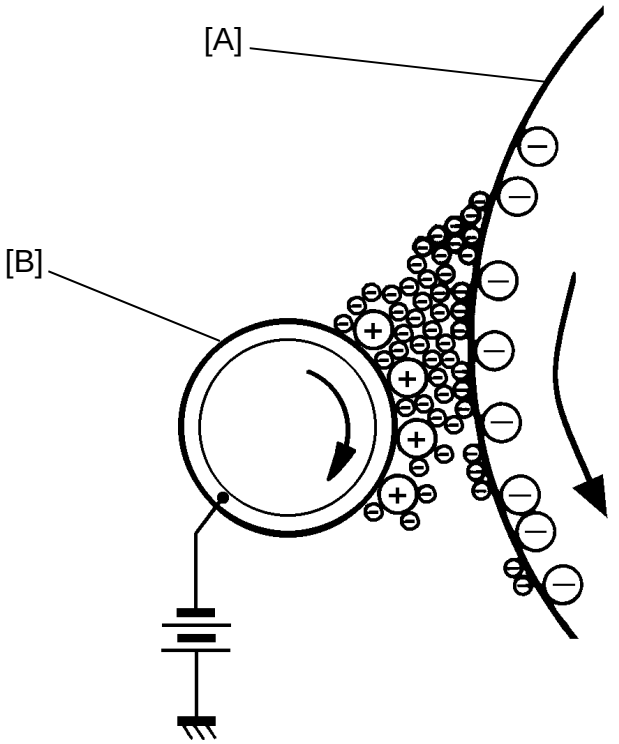

A: OPC Drum
B: Development Roller

Most copiers use either a positively charged photoconductor and negatively charged toner or a negatively charged photoconductor and positively charged toner. However, this machine uses process where both the drum surface charge and the toner charge are negative. This process has certain advantages for laser printing, but some copy problems are exactly opposite from what many copier service people have intuitively come to expect. The table on the following page gives some of the differences between the standard process and the this model's process.

	Standard Copier Process		This Copier's Process
Type of Laser	He-neon (gas, 630 nm)	He-neon or semiconductor	Semiconductor (780 nm)
Photoconductor	Se Drum	OPC	OPC
Charge Corona	Positive	Negative	Negative
Carrier Charge	Positive	Negative	Positive
Toner Charge	Negative	Positive	Negative
Photoconductor Exposure	Background exposure (write to white) ⇒ Positive latent image		Image exposure (write to black) ⇒ Negative latent image
P: Pitch (1/400" in this model) D: Laser beam diameter V_D: Drum potential (Dark) V_B: Bias voltage V_L: Drum potential (Light) L1, L2: Line width (L1 < L2 for the same laser beam diameter)	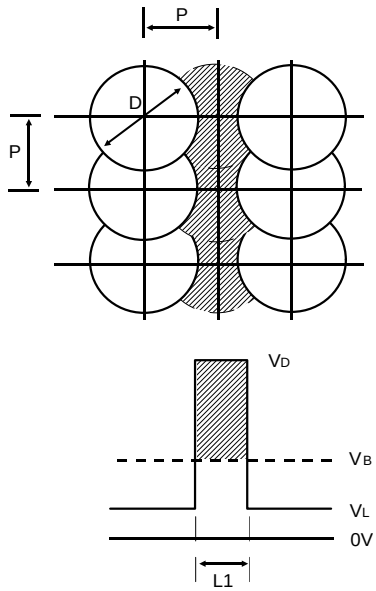		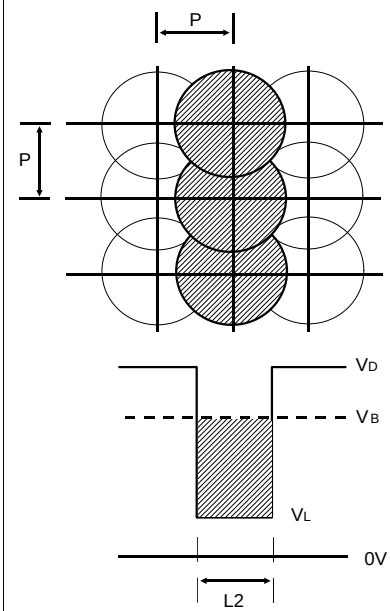
Copy Problems			
1. No photoconductor charge	White copy		Black solid copy
2. Low photoconductor charge	Low image density		Dirty background
3. High development bias	Low image density		Dirty background
4. Low development bias	Dirty background		Low image density
5. Stained toner shield glass	Black stripes		White stripes

4. MECHANICAL COMPONENT LAYOUT

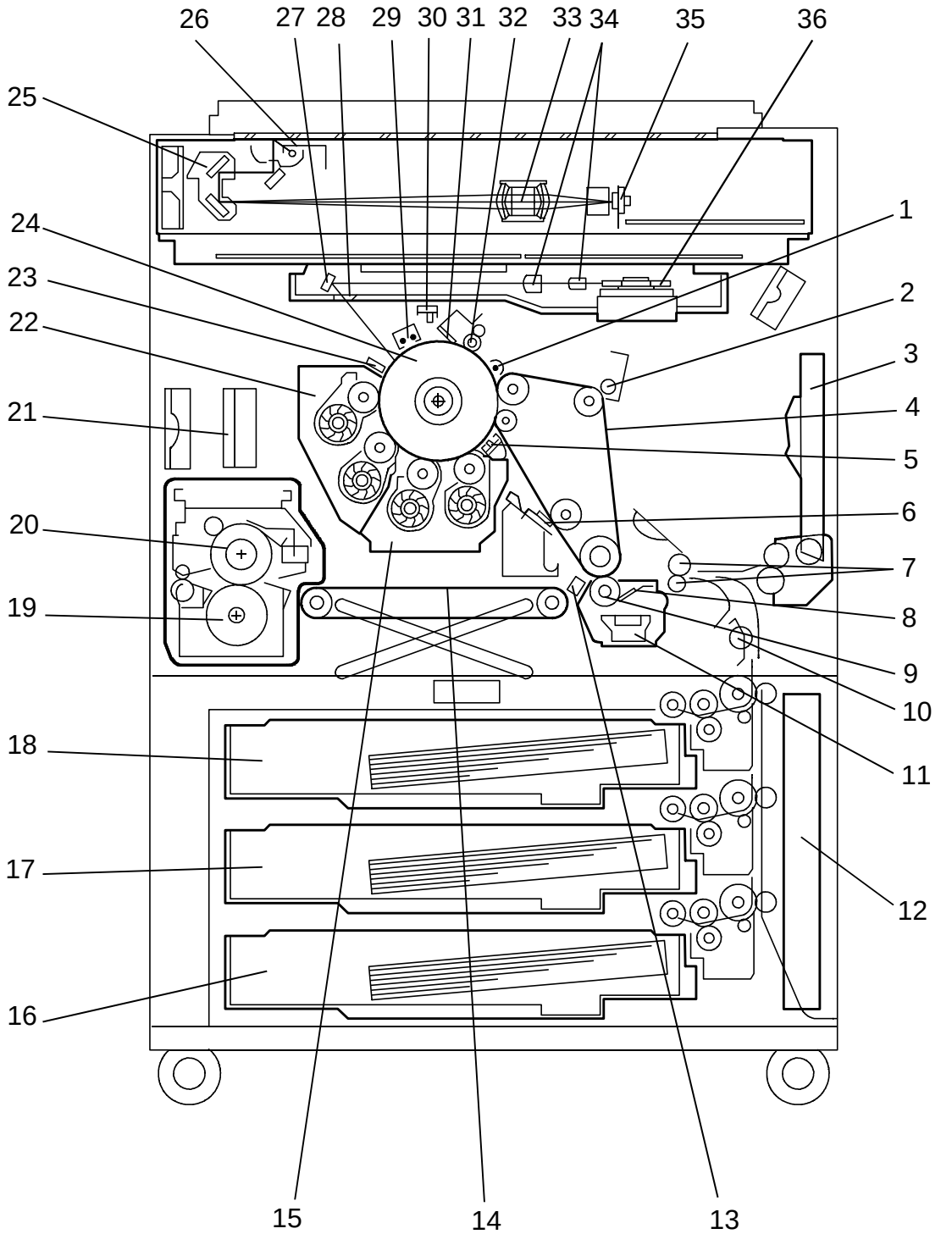

1. Pre-cleaning Corona Unit
2. Lubricant Brush
3. By-pass Feed Table
4. Transfer Belt
5. ID Sensor
6. Belt Cleaning Blade
7. Registration Rollers
8. Transfer Roller Blade
9. Transfer Roller
10. Relay Roller
11. Toner Catch Pan
12. Toner Collection Bottle
13. Paper Discharge Plate
14. Transport Belt
15. Magenta/Yellow Development Unit
16. 3rd Paper Tray
17. 2nd Paper Tray
18. 1st Paper Tray
19. Pressure Roller
20. Hot Roller
21. Development Ozone Filter
22. Black/Cyan Development Unit
23. Drum Potential Sensor
24. OPC Drum
25. 2nd Scanner
26. 1st Scanner
27. Drum Mirror
28. Toner Shield Glass
29. Charge Corona Unit
30. Quenching Lamp
31. Drum Cleaning Blade
32. Cleaning Brush
33. Lens
34. f-theta Lenses
35. CCD Board
36. Polygon Mirror

5. DRIVE LAYOUT

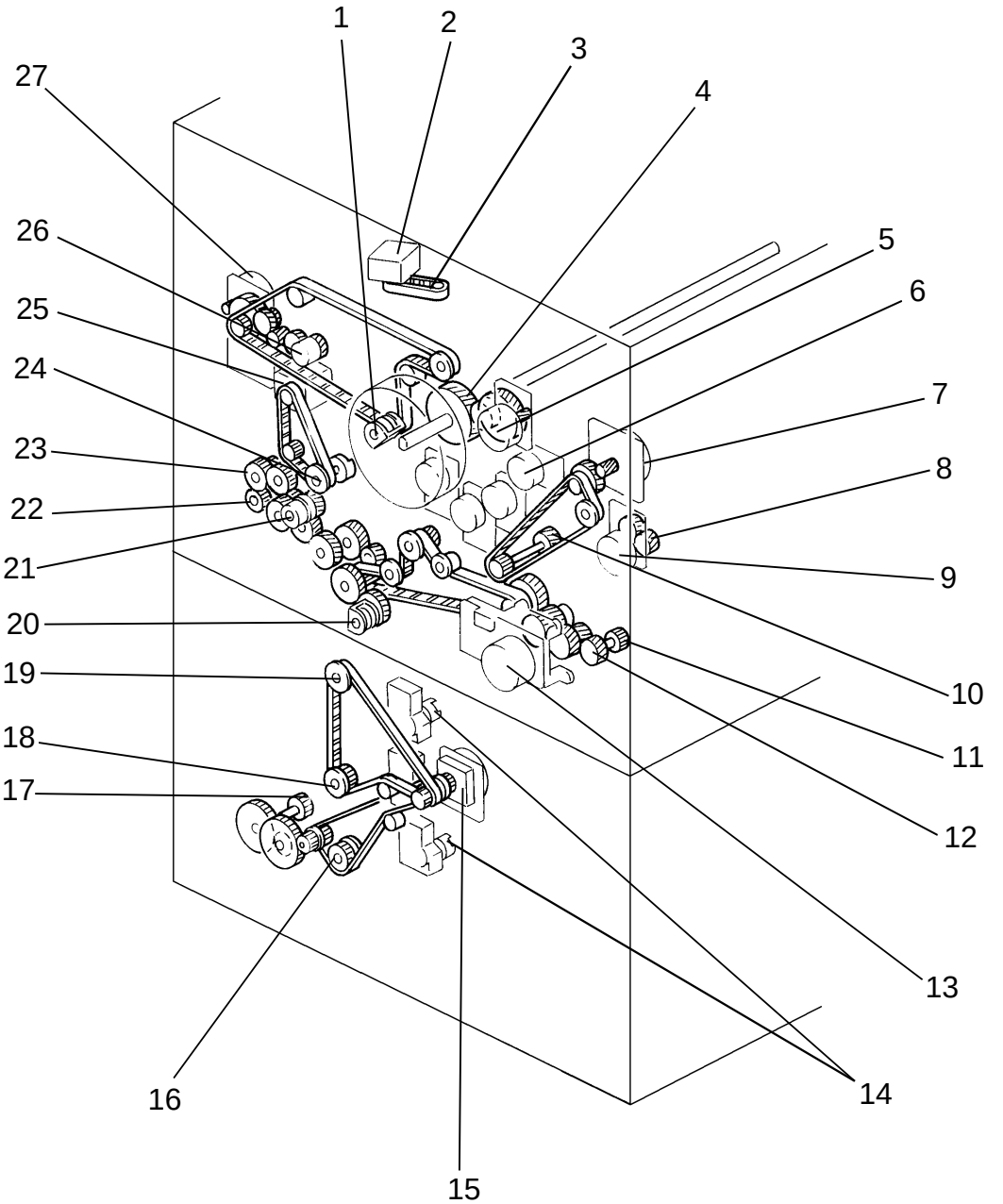

1. Transfer Belt Position Clutch
2. Scanner Motor
3. Scanner Drive Pulley
4. Drum Drive Gear
5. Drum Motor
6. Bk-Sleeve Motor
7. Color-Development Drive Motor
8. Bk-Development Drive Gear
9. Bk-Development Drive Motor
10. Color-Development Drive Gear
11. Transport Unit Drive Gear
12. Fusing Unit Drive Gear
13. Transport Motor
14. Tray Lift Motors
15. Paper Feed Motor
16. 3rd Paper Feed Drive Pulley
17. Toner Collection Tank Drive Gear
18. 2nd Paper Feed Drive Pulley
19. 1st Paper Feed Drive Pulley
20. Transfer Roller Position Clutch
21. Registration Clutch
22. Relay Roller Drive Gear
23. By-pass Feed Drive Gear
24. Transfer Belt Drive Pully
25. Transfer Belt Motor
26. Lubricant Brush Clutch
27. Cleaning Motor

6. AIR FLOW

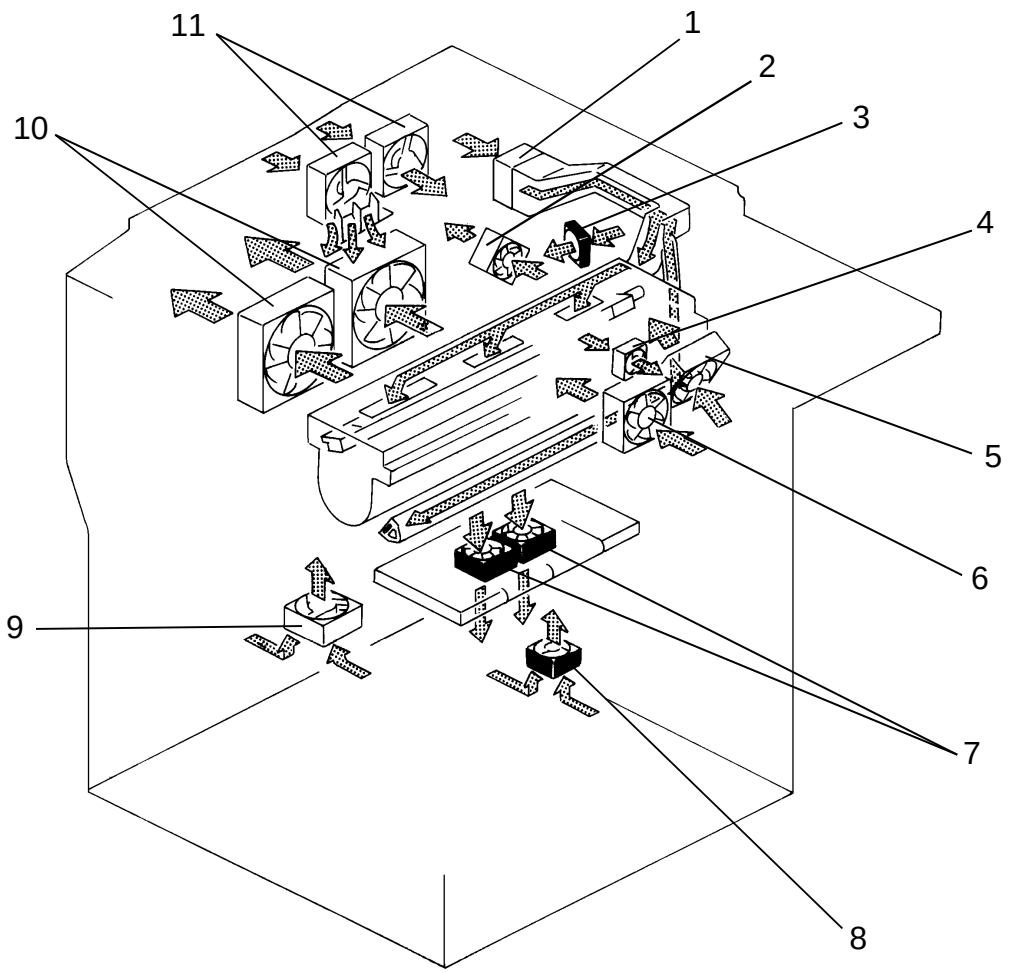

1. Charge Inlet Fan
2. Fusing Exhaust Fan
3. LD Cooling Fan
4. Optics Exhaust Fan
5. IPU Cooling Fan
6. Polygon Motor Cooling Fan
7. Transport Fans
8. DC Power Supply Cooling Fan
9. Inner Cooling Fan
10. Development Exhaust Fans
11. Optics Cooling Fans

7. ELECTRICAL COMPONENT DESCRIPTIONS

Refer to the electrical component layout on the water proof paper in the pocket for symbols and index numbers.

Symbol	Name	Function	Index No.
Printed Circuit Boards			
PCB 1	DC power supply	Provides dc power.	18
PCB 2	Lamp regulator	Provides dc power for the exposure lamp.	1
PCB 3	AC drive	Provides ac power for the fusing and pressure lamps.	9
PCB 4	High voltage supply - C/G	Supplies high voltage to the charge corona and grid plate.	10
PCB 5	High voltage supply - B	Supplies high voltage to the Y/M/C/Bk sleeve rollers as development bias or to the OPC drum for drum potential sensor calibration.	23
PCB 6	High voltage supply - T1/Pcc/BR	Supplies high voltage to the belt bias roller, pre-cleaning corona, and cleaning bias roller.	11
PCB 7	High voltage supply - T2	Supplies high voltage to the transfer roller.	15
PCB 8	High voltage supply - D	Supplies high voltage to the paper discharge plate.	20
PCB 9	Main control	Controls all copier functions both directly or through other control boards.	14
PCB10	Interface 1	Interfaces the input/output of electrical components with the main control board.	19
PCB11	Interface 2	Interfaces the input/output of electrical components with the main control board.	16
PCB12	Transfer belt motor drive	Controls the speed and direction of the transfer belt motor.	13

Symbol	Name	Function	Index No.
PCB13	Paper feed interface	Interfaces the input/output of electrical components in the paper supply unit with the main control board.	17
PCB14	Noise filter	Removes electrical noise.	21
PCB15	ID sensor	Detects the density of the ID sensor pattern.	120
PCB16	Operation panel	Controls the touch panel display and monitors the key matrix.	22
PCB17	Polygon motor drive	Controls the polygon motor speed.	7
PCB18	CCD	Converts the light reflected from the original into analog electrical signals for the three basic colors (R/G/B).	8
PCB19	Scanner control	Processes R/G/B video signals from the CCD board to be sent to the IPU board.	6
PCB20	Scanner drive	Interfaces the input/output electrical components in the optics cavity with the scanner control board.	3
PCB21	IPU board	Processes R/G/B video signals from the scanner control board and sends Y/M/C/Bk video signals to the LD unit.	2
PCB22	IPU interface	Changes the clock frequency of R/G/B video signals and also sends the synchronizing signal for the polygon motor.	4
PCB23	Option interface	Interfaces the display editor and film projector unit with the main control board and IPU board.	12
PCB24	LD drive	Generates the laser beam to the drum for printing the image.	5
PCB25	Laser synchronizing detector	Detects the laser beam to control the start timing of main scan writing.	62
PCB26	Paper width detecting	Detects paper width in the by-pass feed table.	121

Symbol	Name	Function	Index No.
Motors			
M 1	Bk - Development drive	Drives the Bk dual mixing roller.	42
M 2	C - Sleeve	Turns the C - sleeve roller in both directions.	28
M 3	M - Sleeve	Turns the M - sleeve roller in both directions.	32
M 4	Y - Sleeve	Turns the Y - sleeve roller in both directions.	31
M 5	Drum	Turns the OPC drum.	25
M 6	Bk - Sleeve	Turns the Bk - sleeve roller in both directions.	27
M 7	Transport	Drives the transport unit, fusing unit, transfer roller, and transfer belt cleaning unit.	41
M 8	Color - Development drive	Drives the Y/M/C - dual mixing rollers simultaneously.	24
M 9	Cleaning	Drives the drum cleaning brush, the lubricant brush, and the transfer belt release mechanism.	29
M10	Scanner	Drives the 1st and 2nd scanners.	26
M11	Transfer belt	Turns the transfer belt drive roller in both directions.	30
M12	Paper feed	Drives the paper feed sections and the cam gear for the toner collection bottle.	36
M13	Polygon	Turns the polygon mirror.	43
M14	Bk - Toner supply	Drives the Bk - toner transport and agitation mechanism.	40
M15	C - Toner supply	Drives the C - toner transport and agitation mechanism.	39
M16	M - Toner supply	Drives the M - toner transport and agitation mechanism.	38
M17	Y - Toner supply	Drives the Y - toner transport and agitation mechanism.	37
M18	1st tray lift	Lifts the 1st tray bottom plate.	33
M19	2nd tray lift	Lifts the 2nd tray bottom plate.	34
M20	3rd tray lift	Lifts the 3rd tray bottom plate.	35

Symbol	Name	Function	Index No.
Fan Motors			
FM 1	Fusing exhaust	Removes the heat from around the fusing unit.	45
FM 2	Charge inlet	Provides air flow around the drum charge section.	44
FM 3	Inner cooling	Provides air flow around the toner tank and development units.	53
FM 4	IPU cooling	Provides air flow around the IPU board.	48
FM 5	Polygon motor cooling	Provides air flow around the polygon motor.	49
FM6/7	Transport	Sucks in air to attract copy paper on the transport belts.	51/50
FM8/9	Development exhaust	Removes air and heat from around the drum and development units.	54/55
FM10	Optics exhaust	Exhausts air from under the lens housing cover.	47
FM11	LD cooling	Provides air flow to the LD unit.	46
FM12/13	Optics cooling	Blows air into the optics cavity.	56/57
FM14	DC power supply cooling	Provides air flow to transformers and radiation plates on the dc power supply board.	52
Sensors			
S 1	By-pass feed table	Detects if the by-pass feed table is open or closed.	69
S 2	Oil end	Detects if the silicon oil tank is nearly empty or not.	86
S 3	Exit	Detects misfeeds.	91
S 4	Transfer belt position	Detects if the transfer belt is in contact with the drum or not.	63
S 5	Humidity	Detects humidity and temperature to calculate the absolute humidity.	84
S 6	Drum potential	Detects the drum surface potential.	118
S 7	M - Toner density	Detects the toner density in the M - development unit.	89

Symbol	Name	Function	Index No.
S 8	Y - Toner density	Detects the toner density in the Y - development unit.	88
S 9	Bk - Toner density	Detects the toner density in the Bk - development unit.	92
S10	C - Toner density	Detects the toner density in the C - development unit.	90
S11	Transport	Detects misfeeds.	87
S12	Registration	Detects the lead edge or trailing edge of copy paper to control the rotation of the paper feed and registration rollers.	70
S13	Registration guide set	Detects if the registration guide plate is set or not.	66
S14	Transfer roller position	Detects if the transfer roller is in contact with the transfer belt or not.	68
S15	By-pass paper end	Detects if there is paper on the By-pass feed table or not.	67
S16	By-pass length	Detects if paper on the by-pass feed table is longer than A4 (Letter) sideways or not.	65
S17	Toner overflow	Detects if the toner collection bottle is full or not.	82
S18	1st lift	Detects the height of the paper stack in the 1st paper tray to stop the 1st tray lift motor.	72
S19	2nd lift	Detects the height of the paper stack in the 2nd paper tray to stop the 2nd tray lift motor.	73
S20	3rd lift	Detects the height of the paper stack in the 3rd paper tray to stop the 3rd tray lift motor.	76
S21	1st paper end	Detects if there is paper in the 1st paper tray or not.	85
S22	2nd paper end	Detects if there is paper in the 2nd paper tray or not.	83
S23	3rd paper end	Detects if there is paper in the 3rd paper tray or not.	80

Symbol	Name	Function	Index No.
S24	1st paper feed	Controls the 1st paper feed clutch off/on timing and the 1st pick-up solenoid off timing.	78
S25	2nd paper feed	Controls the 2nd paper feed clutch off/on timing and the 2nd pick-up solenoid off timing.	81
S26	3rd paper feed	Controls the 3rd paper feed clutch off/on timing and the 3rd pick-up solenoid off timing.	79
S27	Original length - 1	Detects original length.	61
S28	Original length - 2	Detects original length.	59
S29	Original width	Detects original width.	98
S30	Scanner unit lift	Detects if the scanner unit is lifted or not.	60
S31	Platen cover position	Informs the CPU if the platen cover is up or down (related to APS/ARE function).	58
S32	Scanner HP	Informs the CPU if the 1st and 2nd scanners are at the home position or not.	99
Switches			
SW1/2/3/4	Front door safety	Cuts the ac power line through RA1 and detects if the front door is open or not.	94/95/ 96/97
SW5/6	Vertical transport set	Cuts the ac power line through RA1 and detects if the vertical transport guide is open or not.	74/75
SW 7	Main	Provides power to the copier. When it is at stand by position, the electrical power is supplied only to the heaters (drum/optics anticondensation/tray/transfer belt).	93
SW 8	2nd tray set	Detects if the 2nd paper tray is set or not.	71
SW 9	3rd tray set	Detects if the 3rd paper tray is set or not.	77

Symbol	Name	Function	Index No.
SW10	1st paper size	Detects the paper size for the 1st paper tray and if the tray is set or not.	64
Magnetic Clutches			
MC1	Lubricant brush	Transmits the drive from the cleaning motor to the lubricant brush.	101
MC2	Transfer belt position	Controls the touch and release operation of the transfer belt by using the cleaning motor's drive.	100
MC3	By-pass feed	Starts paper feed from the by-pass feed table.	104
MC4	Registration	Drives the registration rollers.	103
MC5	Transfer roller position	Controls the touch and release operation of the transfer roller unit by using the transport motor's drive.	102
MC6	1st feed	Starts paper feed from the 1st paper tray.	106
MC7	2nd feed	Starts paper feed from the 2nd paper tray.	107
MC8	3rd feed	Starts paper feed from the 3rd paper tray.	108
Solenoids			
SOL 1	Cleaning entrance seal	Controls the touch and release operation of the cleaning entrance seal on the transfer belt cleaning unit.	115
SOL 2	Lubricant brush	Controls the touch and release operation of the lubricant brush.	117
SOL 3	Cleaning blade	Controls the touch and release operation of the belt cleaning blade.	116
SOL 4	By-pass pick-up	Controls the up/down movement of the pick-up roller for by-pass feed.	105

Symbol	Name	Function	Index No.
SOL 5	1st pick-up	Controls the up/down movement of the pick-up roller in the 1st feed station.	114
SOL 6	2nd pick-up	Controls the up/down movement of the pick-up roller in the 2nd feed station.	112
SOL 7	3rd pick-up	Controls the up/down movement of the pick-up roller in the 3rd feed station.	110
SOL 8	1st separation roller	Controls the up/down movement of the separation roller in the 1st feed station.	113
SOL 9	2nd separation roller	Controls the up/down movement of the separation roller in the 2nd feed station.	111
SOL10	3rd separation roller	Controls the up/down movement of the separation roller in the 3rd feed station.	109
Lamps			
L1	Fusing	Provides heat to the hot roller.	135
L2	Pressure roller	Provides heat to the pressure roller.	134
L3	Exposure	Applies high intensity light to the original for exposure.	122
L4	Quenching	Neutralizes any charge remaining on the drum surface after cleaning.	119
Heaters			
H1	Lower tray (option)	Turns on when the main switch is off to keep paper dry in the 3rd paper tray.	129
H2	Upper tray (option)	Turns on when the main switch is off to keep paper dry in the 1st and 2nd paper trays.	127

Symbol	Name	Function	Index No.
H3	Transfer belt	Turns on when the main switch is off to prevent moisture from forming on the transfer belt.	128
H4	Optics anti-condensation	Turns on when the main switch is off to prevent moisture from forming on the optics.	140
H5	Drum	Turns on when the main switch is off to prevent moisture around the drum.	124
Thermistors			
TH1	Fusing	Monitors the temperature of the hot roller.	126
TH2	Pressure roller	Monitors the temperature of the pressure roller.	133
Thermofuses			
TF1	Fusing	Opens the fusing lamp circuit if the fusing unit overheats.	125
TF2	Pressure roller	Opens the pressure roller lamp circuit if the fusing unit overheats.	132
Thermoswitch			
TS1	Optics	Opens the exposure lamp circuit if the 1st scanner overheats.	123
Counters			
CO1	Black total	Keeps track of the total number of scans for black development in both the black and color copy modes.	136
CO2	Full color total	Keeps track of the total number of scans for Yellow, Magenta, and Cyan developments in both the single and full color copy modes.	137

Symbol	Name	Function	Index No.
Others			
CB1	Circuit breaker	Provides back-up high current protection for the electrical components.	130
RA1	Main power relay	Controls main power.	138
NF1	Noise filter	Removes electrical noise.	131
CC1	Choke coil	Removes high frequency current.	139

SECTION 2

DETAILED SECTION DESCRIPTIONS

1. PROCESS CONTROL

1.1 OVERVIEW

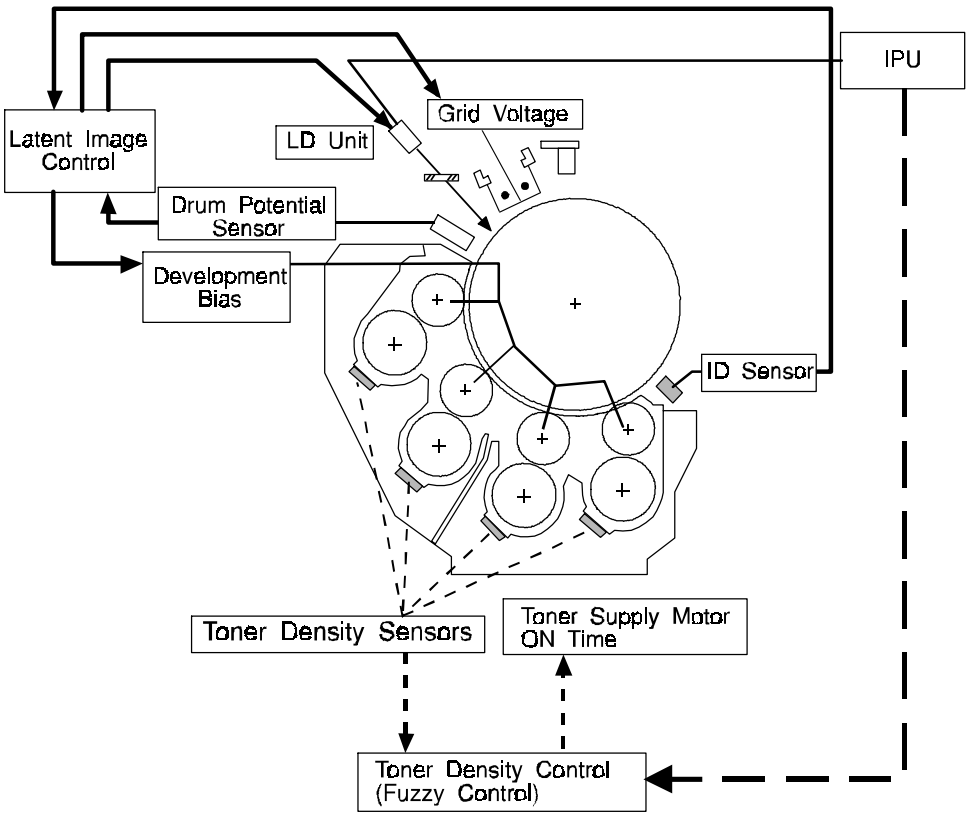

This model uses two control methods. One compensates for variation in the drum potential and toner chargeability (latent image control) and the other controls the toner concentration and toner supply amount (toner density control).

1.1.1 Latent Image Control

<Factors to change the development potential>

After long usage following installation or PM, drum potential will gradually change due to the following factors:

- Dirty charge corona and grid plate
- Change of the drum characteristics

Due to changes in humidity conditions, the toner potential (chargeability) varies and affects the image density even if the toner concentration is kept constant.

- When humidity is low, toner chargeability increases resulting in lower image density.
- When humidity is high, toner chargeability decreases resulting in higher image density.

Also, after long usage following installation or PM, the surface of carrier particles is gradually coated with melted toner (filming). This decreases the toner chargeability.

<Methods to maintain the development potential constant>

In this copier, the change in drum potential is detected by the potential sensor and the change in the toner potential is detected by the ID sensor. The following items are controlled to maintain good copy quality.

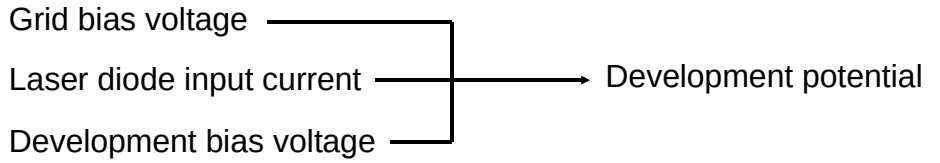

1.1.2 Toner Density Control

Toner density in the developer is controlled by the toner density sensor. Data from the toner density sensor is used to keep the toner concentration in the developer at a constant level. Neither the ID sensor nor the drum potential sensor affect the toner density control. This is different from previous models using TD sensors.

1.2 PROCESS CONTROL SELF CHECK

The following flow chart shows all the steps that will be performed under the following conditions:

- Whenever the machine is turned on while the hot roller temperature is below 100°C.
- After the series of copy job is completed and more than 150 copies have been made since the last process control self check. This initializes all the process control settings.

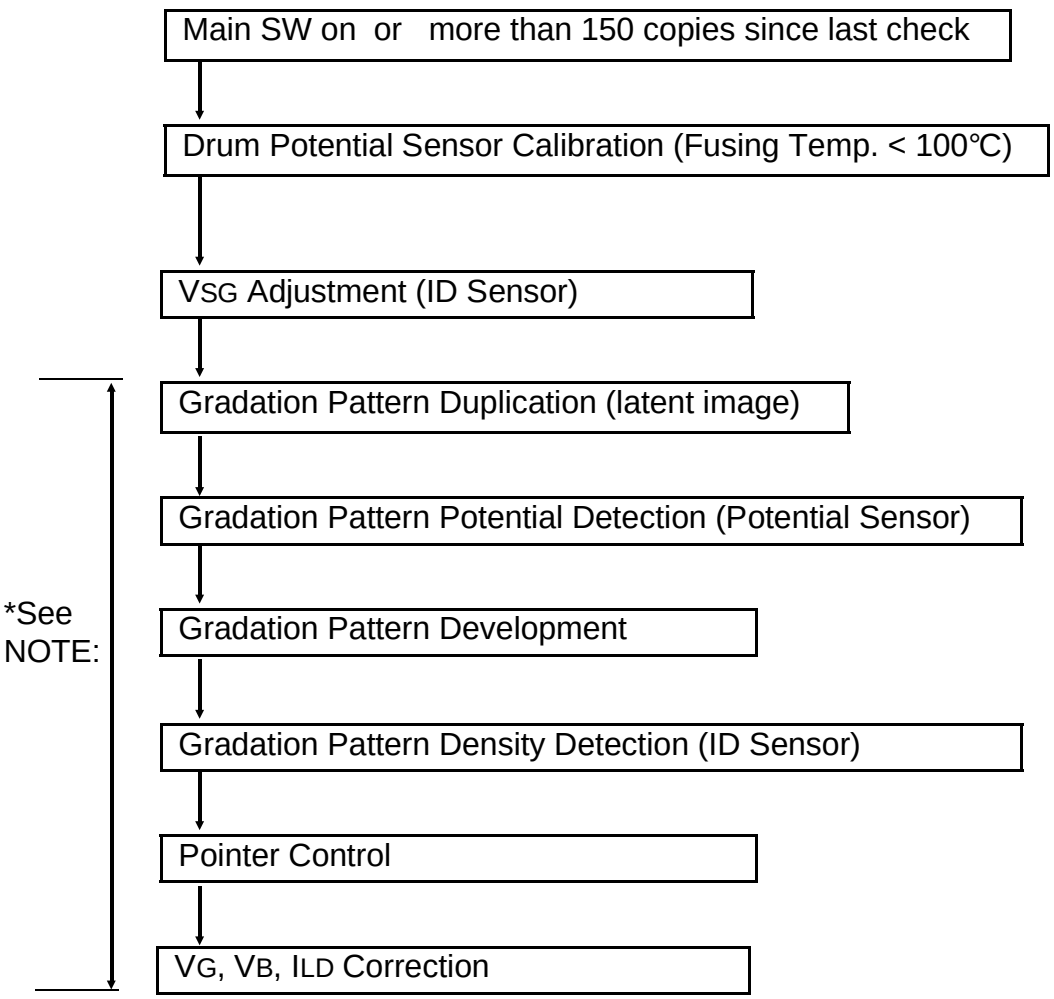

NOTE: Continue this procedure four times (Bk, C, M, Y)

1.3 LATENT IMAGE CONTROL

1.3.1 Drum Potential Sensor Calibration

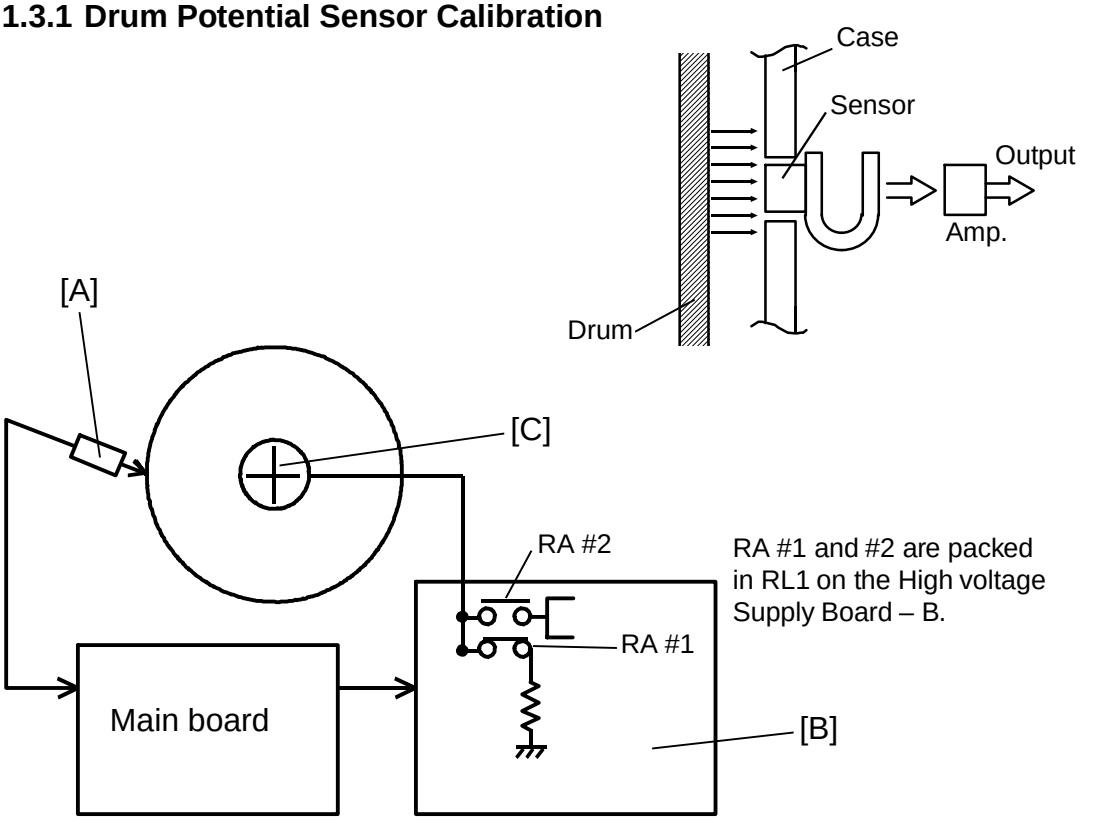

The drum potential sensor [A] is located just above the development unit. The sensor has a detector which detects the strength of the electric field from the electric potential on the drum. The output of the sensor depends on the strength of the electric field.

Since the output of the sensor is affected by environmental conditions, such as temperature and humidity, the sensor output is calibrated during process control self check.

The High Voltage Supply Board - B [B] has two relay contacts. Usually RA #1 grounds the drum. However, during the self-check, the main CPU turns RA #2 on and RA #1 off and applies the voltage to the drum shaft [C].
In this condition, the OPC drum is isolated from the ground (floating).

By measuring the output of the drum potential sensor when -200V (V_{200}) or -800V (V_{800}) are applied to the drum, the sensor output is calibrated automatically. (The machine recognizes the relationship between actual drum potential and the potential sensor output.)

1.3.2 VSG Adjustment

During drum conditioning, the ID sensor checks the bare drum's reflectivity and calibrates the output of the ID sensor to 4 ± 0.2V.

1.3.3 Gradation Patterns Detection

10 grades of latent gradation patterns are created for each color (Bk, C, M, Y) by changing the LD input current.

The drum potential sensor detects the potential for each pattern and the output is stored in memory. Then the latent gradation patterns pass the development unit and are developed. The ID sensor detects the density of the gradation patterns and the output is stored in memory.

[LD power level]

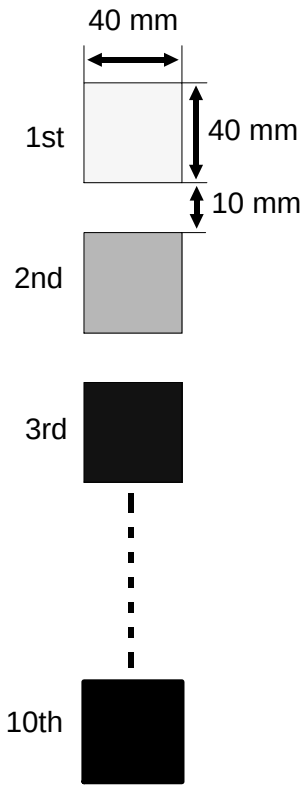

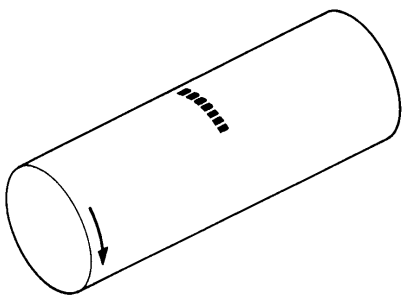

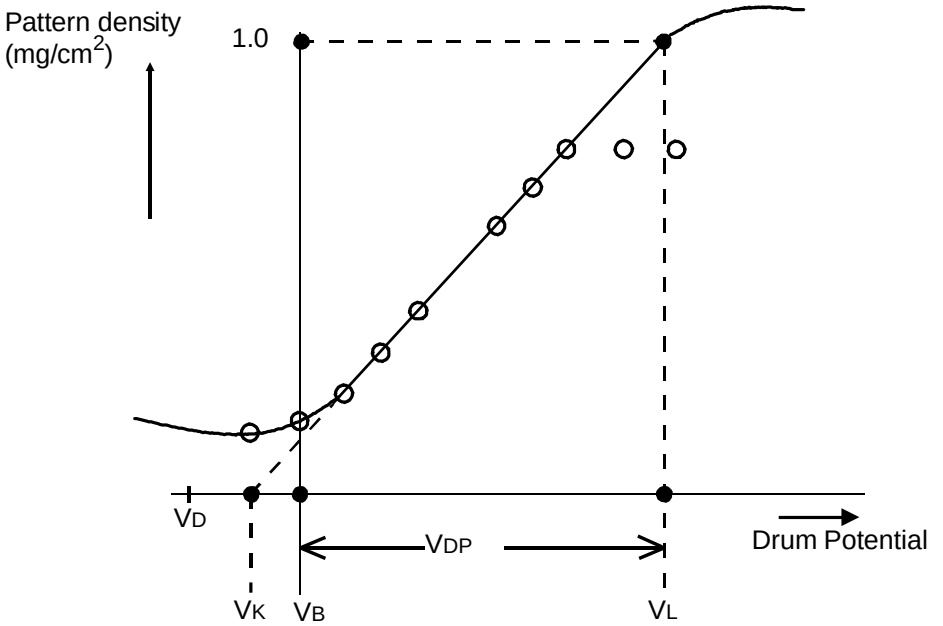

1.3.4 Pointer Control

The main CPU converts the gradation pattern density (ID sensor output) to the actual toner quantity on the pattern (mg/cm^2) based on a characteristics table stored in memory.
Then the potential sensor output and pattern density (mg/cm^2) for each of the 10 patterns are plotted as shown. The CPU approximates the line from the data and calculates the V_{DP}.
The inclination of this line is called the development gamma (γ) factor. It represents the characteristic between the drum potential and toner amount developed on the drum.

From the V_{DP}, the copier determines V_D (Drum potential made without exposure), V_B (Development bias), and V_L (Drum potential with strongest LD exposure). Each V_{DP} value points to a record containing the V_D, V_B, and V_L values deemed optimal by this copier's designers.

V_{DP}, V_D, V_B, and V_L have 20 sets of combination.

1.3.5 Confirmation Procedure

Using the selected V_D, V_B and V_L data, the darkest (V_L pattern: Pattern made with strongest LD exposure) and the lightest pattern (V_D pattern: Pattern made without exposure) are duplicated again. The potential sensor detects the potential of each pattern (V_D and V_L) to evaluate whether the drum potential for each pattern is within specification ($\pm$5 V from the target) or not.

If V_D is out of specification, V_G is shifted. Then the V_D is detected again.

The same is done for V_L with I_{LD}.

V_B is fixed at the value determined by the pointer control.

The above process continues until both V_D and V_L fall within specification.

1.3.6 Related Abnormal Conditions

If V_{200} or V_{800} at drum potential sensor calibration is out of specification or if V_D or V_L do not fall within specification for any color after V_G or I_{LD} are shifted 30 times, the machine stops V_D or V_L correction and uses the previous V_G and I_{LD} values for all color during copying. When the V_D is not adjustable (SC382) or V_L is not adjustable (SC383), nothing is indicated on the LCD but the SC counter (SC382 or 383) is incremented.

Related SC codes (see troubleshooting section for details):

Code	Condition
380	Incomplete drum potential sensor calibration
381	Abnormal drum potential sensor detection
382	Abnormal V_D detection
383	Abnormal V_L detection
384	Abnormal L_D current
390	Incomplete V_{SG} adjustment

1.4 TONER DENSITY CONTROL

1.4.1 Toner Density Sensor

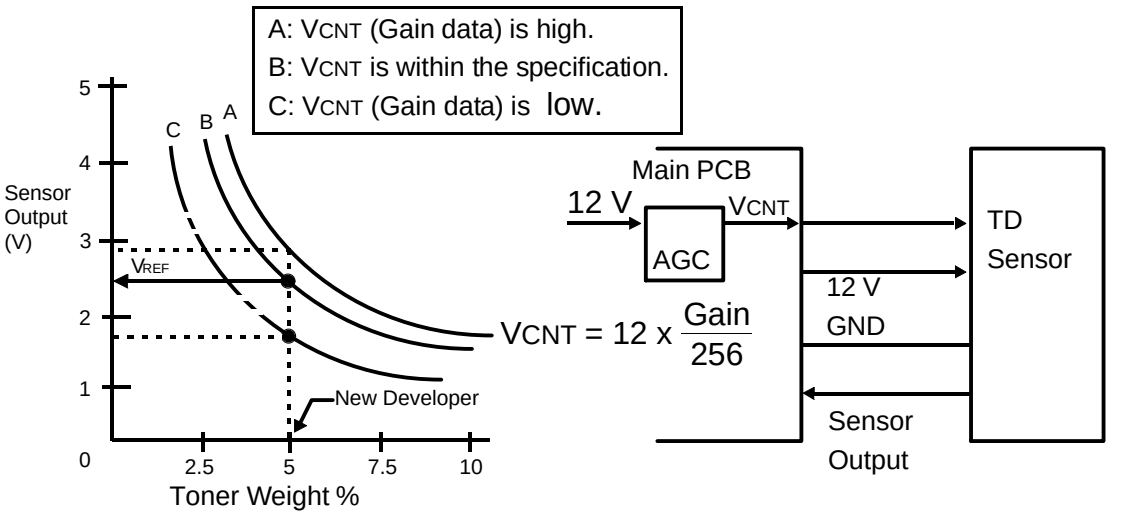

Developer consists of carrier particles (ferrite) and toner particles (resin and pigment). Inside the development unit, developer passes through a magnetic field created by coils inside the toner density sensor. When the toner concentration changes, the voltage output by the sensor changes accordingly.

1.4.2 Toner Density Sensor Initial Setting

When new developer with the standard toner concentration (5% by weight, 20g of toner in 400g of developer) is installed, developer initial setting must be performed by using SP mode.

During this setting, the output voltage (VCNT) from the auto gain control circuit (AGC) on the main control board varies to change the output voltage from the toner density (TD) sensor. This is done by changing the gain data, (see below).

VCNT = 12 (V) X Gain Data/256

If the data is high, VCNT becomes high, and the sensor output voltage becomes high. As a result, the sensor characteristic becomes as illustrated by curve A. If the data is low, VCNT becomes low, and the sensor output voltage becomes low. As a result, the sensor characteristic shifts as illustrated by Curve C.

By selecting the proper gain data, the sensor output is set within the targeted control level (VREF : 2.5 ± 0.1V). Now, the sensor characteristic is illustrated by curve B and the TD sensor initial setting is completed.

The selected gain data is stored in memory, and VCNT from the auto gain control circuit stays constant during the toner sensor detection cycle.

1.4.3 Toner Supply Criteria

At every copy cycle, toner density in the developer is detected once. The sensor output voltage (V_T) during the detection cycle is compared with the toner supply level voltage (V_{REF}).

1.4.4 Toner Supply Motor ON Time

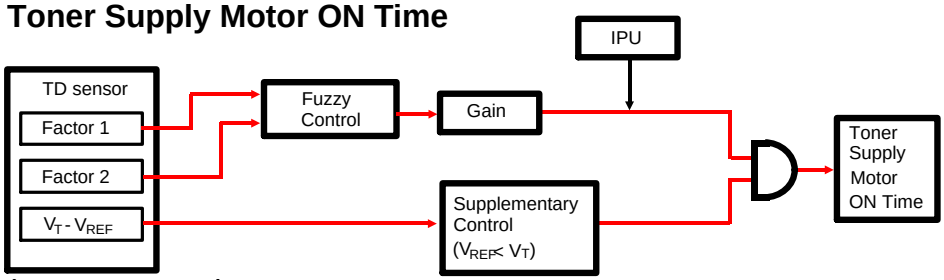

1) Fuzzy control

To stabilize toner concentration, the toner supply amount (toner supply motor on time) is controlled by referring to V_{REF} and V_T.
The toner supply amount is calculated at every copy. The toner supply amount is determined by using the following factors.

Factor 1. Average of the previous 20 V_T output values ($\overline{V_T}(20)$)
Factor 2. V_T change tendency during the last 20 detections

By referring to these factors, the machine recognizes the difference between the current toner concentration and the target toner concentration. It then outputs the data to determine the toner supply motor on time. The machine also understands by how much the toner supply amount will probably change. The CPU also refers to the solid area ratio on the copy image informed from the IPU (image area integration data) to improve the precision of the toner density change prediction.
By changing the toner supply amount precisely, toner concentration (image density) is kept at a constant level.
Since the toner supply motor on time update is done under fuzzy control, the relation between factor 1, factor 2, and V_{REF} cannot be expressed by a simple algebraic formula.
The maximum toner supply amount is 60% (this corresponds to the toner quantity for an A3 size original with 60% image area).

2) Supplementary control

Under the following conditions, the toner concentration is low.

- Just after the toner end recovery.
- After continuous high solid area ratio copies.

In these cases, the toner supply amount should be large but if the original solid area ratio is low, the supply amount will be small

because the solid area ratio (image area integration data) affects the toner supply motor on time, as mentioned above.

To help the toner concentration return to normal more quickly, supplementary control is used. The supplementary control supplies more toner when the original image area ratio is low. Usually, the effect of supplementary control is much lower than that of fuzzy control. Supplementary control functions only when V_T is larger than V_{REF} and original image ratio is less than 60%. In this condition, both fuzzy control and supplementary control function.

The toner supply amount by supplementary control is:

$1287 \times (V_T - V_{REF}) \times (1 - \text{image ratio data}/748)$

NOTE: 748 corresponds to 60% of image area ratio (A3)

1.4.5 V_{CNT} Correction

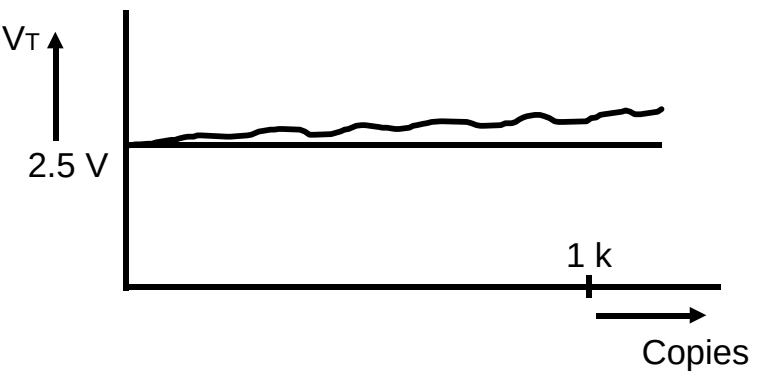

Even if the toner concentration is constant, the toner sensor output gradually increases after the new developer is installed because of developer characteristics.
This increases the toner concentration because the machine controls the toner concentration so that V_T stays constant.

To compensate this, the V_{CNT} gain data is decreased by 1 at every 200 copies. The maximum compensation value is shown in the table below.

	Bk	Y	M	C
Maximum Compensation Value	–6	–6	–6	–5

1.4.6 Toner End Detection

1) Toner near end
The toner density sensor detects when toner is about to run out.
Under the following conditions, a **toner near end** condition is detected:

Condition 1) $\overline{V_T}$ (20) > V_{REF} + 0.3 V and $V_T > V_{REF}$ + 0.2 V

Condition 2) $V_T > V_{REF}$ + 0.5 V

Condition 3) $\overline{V_T}$ (20) > V_{REF} +0.3 V and $V_T > V_{REF}$ + 0.5 V

NOTE: VT (20): Average of the last 20 V_T detected data

2) Toner end
Under the following conditions, **a toner end** condition is detected and copying is allowed only for the following 10 copies:

Condition 1 is detected 5 times continuously.
Condition 2 is detected 5 times continuously.
Condition 3 is detected once.

When color toner (Y, M, C) runs out, black copies can still be made and when black toner runs out, single color copies can still be made.

1.4.7 Toner End Recovery

After the toner is added and the front door is closed, the machine detects whether toner concentration has returned to normal.

The toner end recovery sequence is:

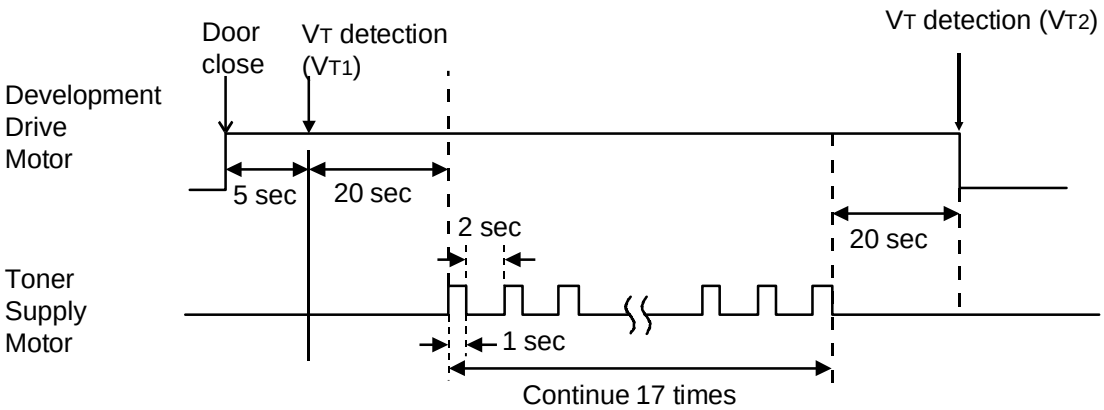

Under the following condition, toner end recovery is completed.

$V_{T1} - V_{T2} > 0.10\ V$ or $V_{T2} < V_{REF}$

If the above conditions are not satisfied, the toner end condition is not canceled. After the front door is opened and closed, the machine starts the toner end recovery again.

If the toner end recovery sequence is done 3 times and the above condition is not satisfied, the toner end condition is reset and copying is enabled.

After toner end recovery, the first V_T data is used as $V_{T\,(20)}$ for the subsequent 20 copies.

2. DRUM UNIT

2.1 OVERVIEW

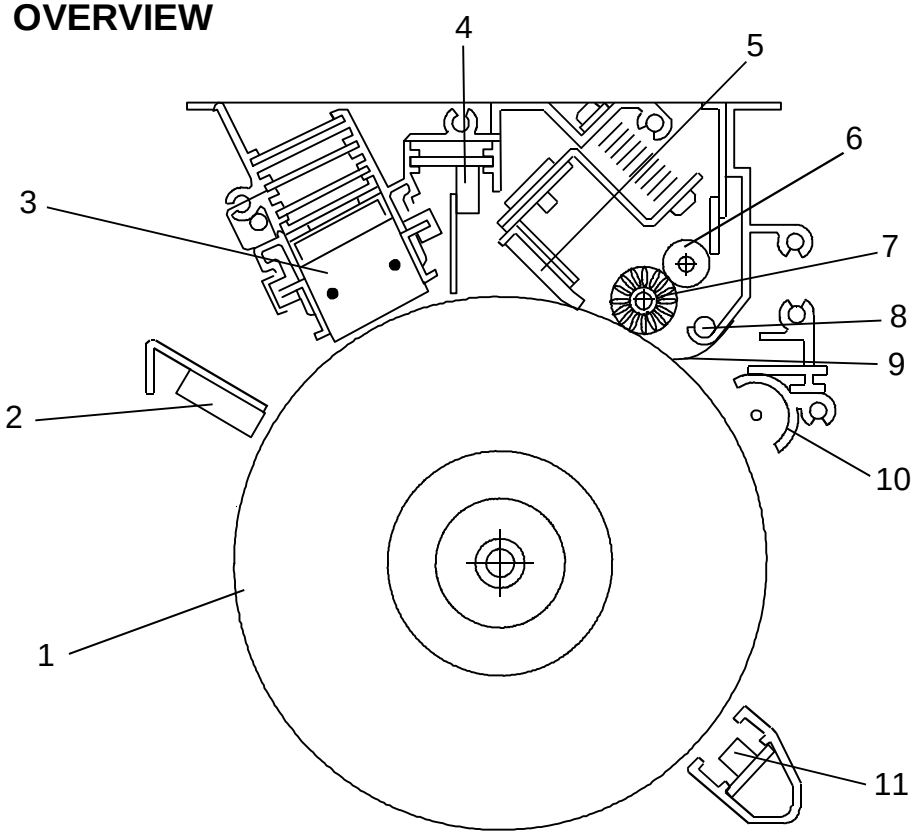

The drum unit consists of the components shown in the above illustration.

An organic photoconductor drum (diameter: 120 mm) is used for this model.

1. OPC Drum
2. Drum Potential Sensor
3. Main Charge Corona Unit
4. Quenching Lamp
5. Drum Cleaning Blade
6. Cleaning Bias Roller
7. Drum Cleaning Brush
8. Toner Collection Coil
9. Cleaning Entrance Seal
10. Pre-Cleaning Corona Unit
11. ID Sensor

2.2 OPC DRUM CHARACTERISTICS

An OPC has the characteristics of:

1. Being able to accept a high negative electrical charge in the dark. (The electrical resistance of a photoconductor is high in the absence of light.)
2. Dissipating the electrical charge when exposed to light. (Exposure to light greatly increases the conductivity of a photoconductor.)
3. Dissipating an amount of charge in direct proportion to the intensity of the light. That is, where stronger light is directed to the photoconductor surface, a smaller voltage remains on the OPC.
4. Being less sensitive to changes in temperature (when compared to selenium F type drums).
5. Being less sensitive to changes in rest time (light fatigue). This makes it unnecessary to compensate development bias voltage for variations in rest time.

2.3 DRUM CHARGE

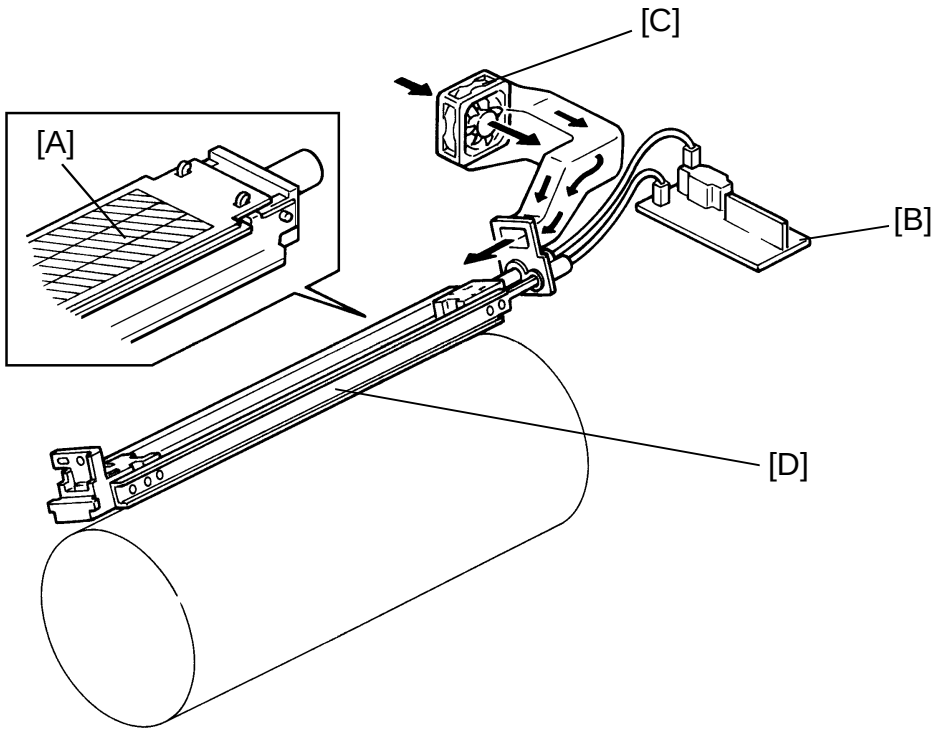

This copier uses a double corona wire scorotron system for the drum charge.

The two corona wires apply a sufficient negative charge to the drum surface. The striped stainless steel grid plate [A] makes the corona charge uniform and controls the amount of negative charge on the drum surface by applying the negative grid bias voltage.

The high voltage supply board-C/G [B] gives a constant corona current (–700 μA)to the corona wires, and controls the grid voltage to maintain proper image density. Grid voltage is controlled to match changing factors such as a dirty grid plate, dirty charge corona casing, and OPC chargeability. (Refer to the Process Control section.)

The charge fan [C] provides a flow of air through the corona unit [D] in order to prevent an uneven build up of negative ions. This helps maintain even image density.

2.4 DRIVE MECHANISM

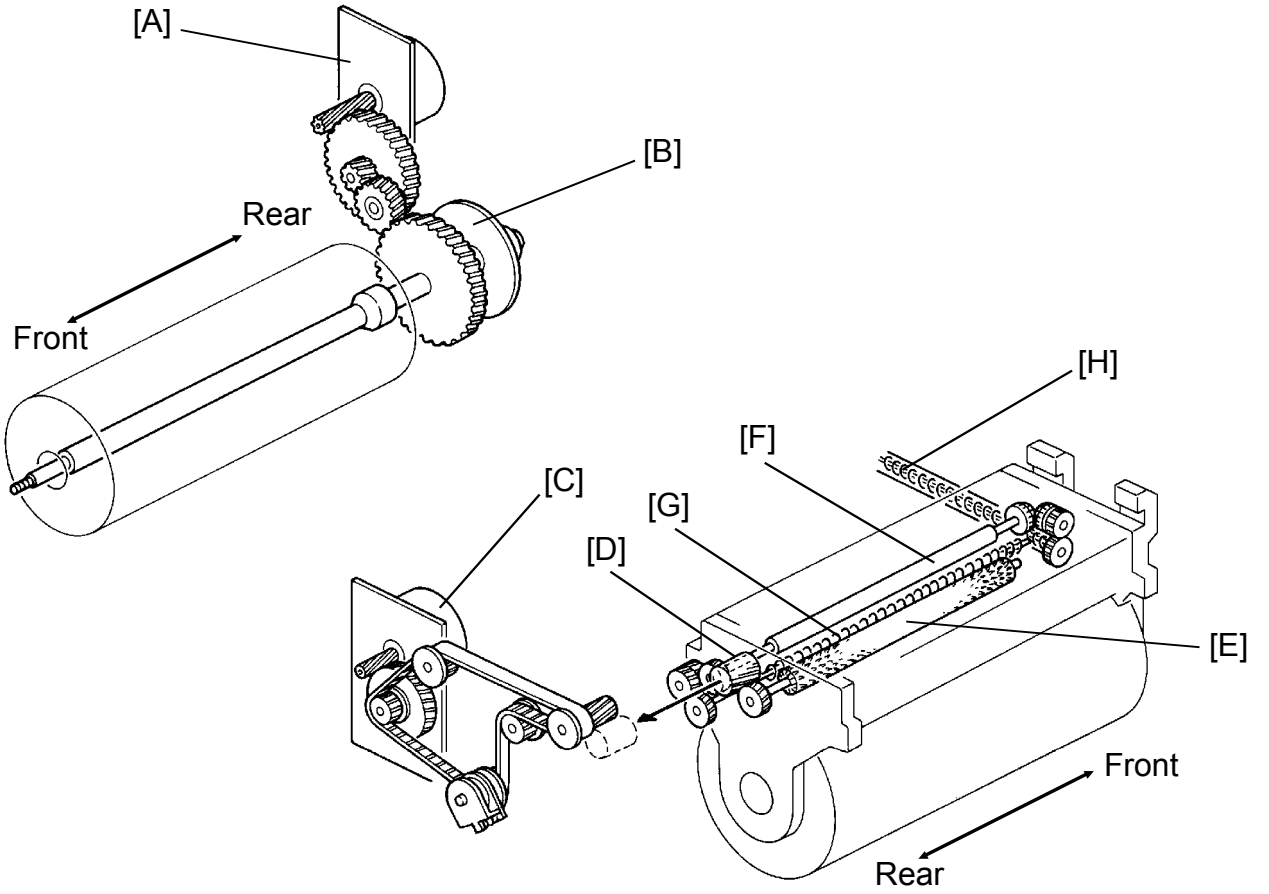

The drum rotation speed is 180 mm/second. The OPC drum is driven by the drum motor [A]. This motor has a drive controller so that it can control the drum rotation by itself. When the rotation speed becomes out of specification, the drive controller outputs a motor lock signal.

A fly-wheel [B] is installed on the end of the drum shaft to stabilize the rotation speed.

The cleaning mechanism is driven by the cleaning motor [C]. The drive from the cleaning motor is transmitted to the cleaning drive gear [D] via the timing belt.

The cleaning drive gear then rotates the cleaning brush [E], the cleaning bias roller [F], and the toner collection coil [G]. The cleaning bias roller has a bevel gear at the front end to drive the upper toner collection coil [H].

2.5 DRUM CLEANING

2.5.1 Counter Blade System

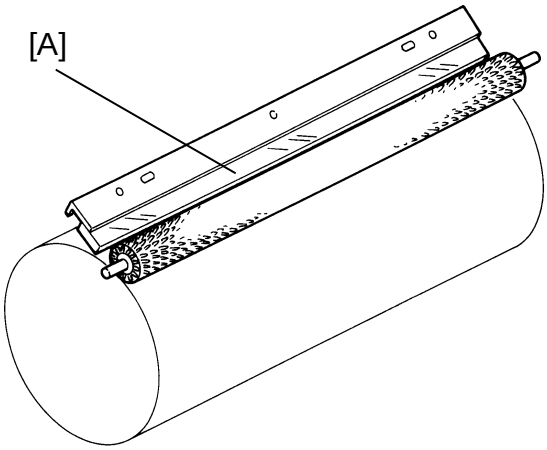

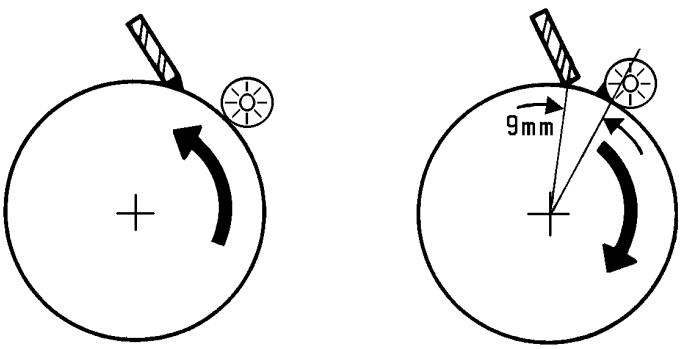

This copier uses the counter blade system for drum cleaning.

The cleaning blade [A] is angled against drum rotation. This counter blade system has the following advantages:

- Less wearing of the cleaning blade edge
- High cleaning efficiency

The cleaning pressure is continuously applied with a pressure spring.

To remove the accumulated toner at the edge of the cleaning blade, the drum turns in reverse for about 9 mm (0.05 sec.) before starting the normal rotation when the main switch is turned on. The accumulated toner is removed by the cleaning brush.

2.5.2 PCC And Cleaning Bias

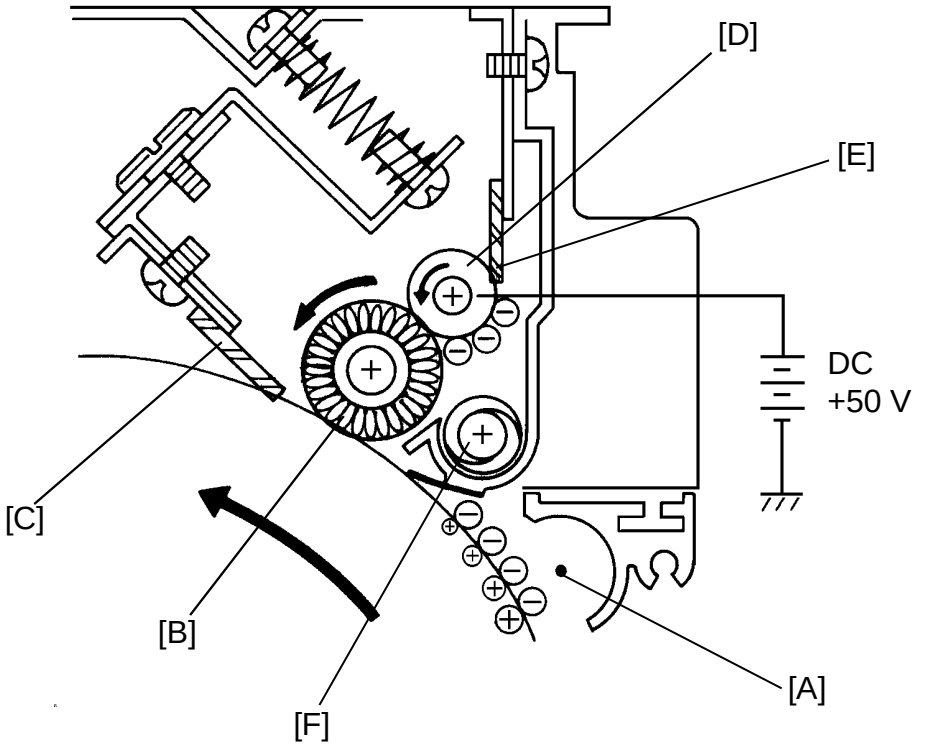

To ensure OPC drum cleaning, the pre-cleaning corona (PCC) [A] applies an AC voltage (100μA) with a negative DC bias (-40μA) to the surface of the drum. This gives the residual toner a uniform negative charge (to be easily attracted by the cleaning bias) and neutralizes the positive charge on the drum (after the image transfer, the drum surface is positively charged).

The cleaning brush (looped brush) [B] is used to support the cleaning blade.

The brush collects toner (mechanically and electrically) from the drum surface and the remaining toner is scraped off by the cleaning blade [C]. Toner on the cleaning brush is electrically attracted to the cleaning bias roller [D] then scraped off by the bias blade [E]. The toner falls on the toner collection coil [F]. Toner is transported to the toner collection bottle by the toner collection coil.

A +50V cleaning bias is applied to the cleaning bias roller and to the cleaning brush which is an electrical conductor (resistance:$10^7\Omega$)

2.5.3 Toner Collection Mechanism

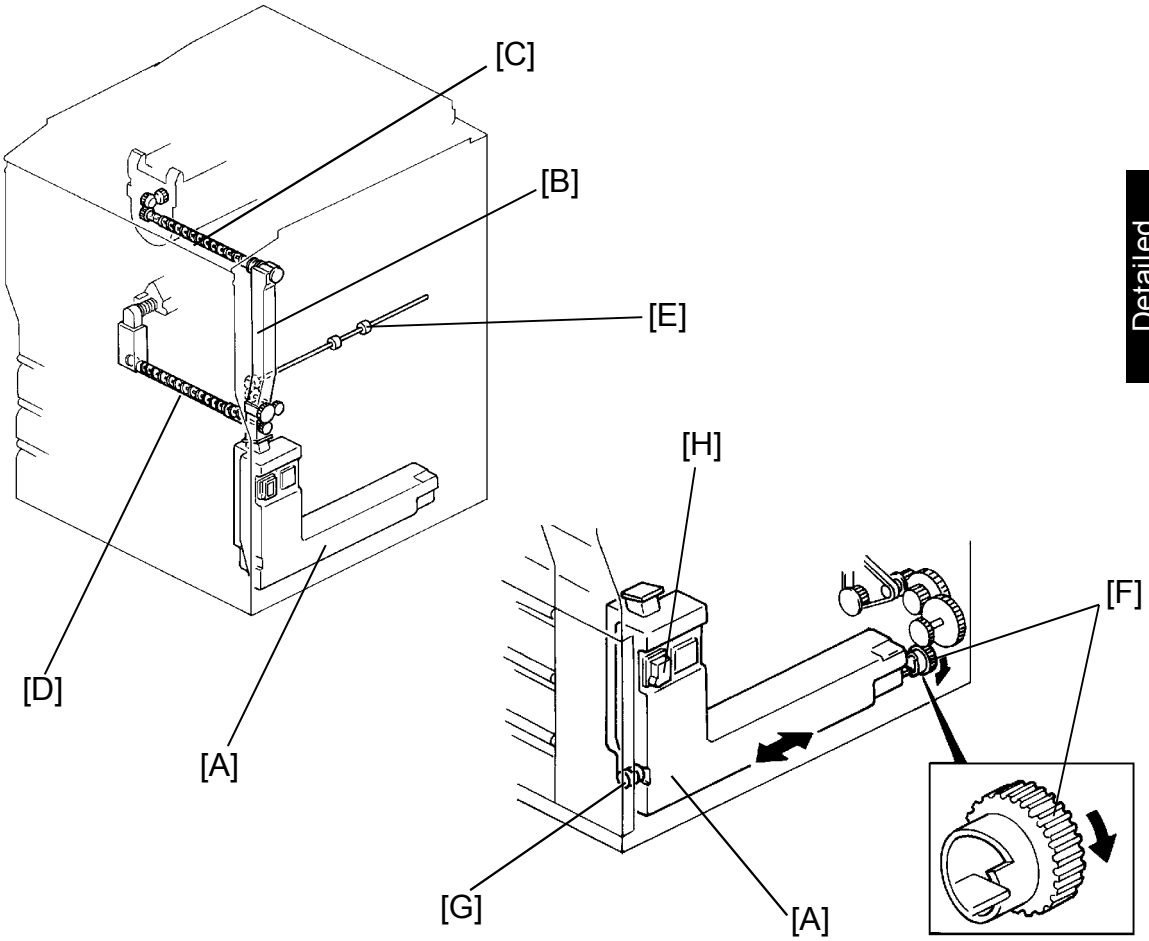

Toner collected by the cleaning section is transported to the toner collection bottle [A] through the toner collection duct [B].

The drive from the OPC cleaning bias roller drives the upper toner collection coil [C]. Toner collected by the transfer belt cleaning section is also transported to the toner collection bottle through the toner collection coil [D]. The drive from the relay roller [E] drives the lower toner collection coil.

The toner collection bottle is pressed against the cam gear [F] by a spring [G]. The drive from the paper feed motor drives the cam gear and shakes the toner collection bottle front to rear to make the level of the collected toner even.

The toner overflow sensor [H] detects the toner full condition. After the toner overflow sensor is activated, 250 copies are allowed, then copying is prohibited and a call service guidance appears on the LCD.

2.6 QUENCHING

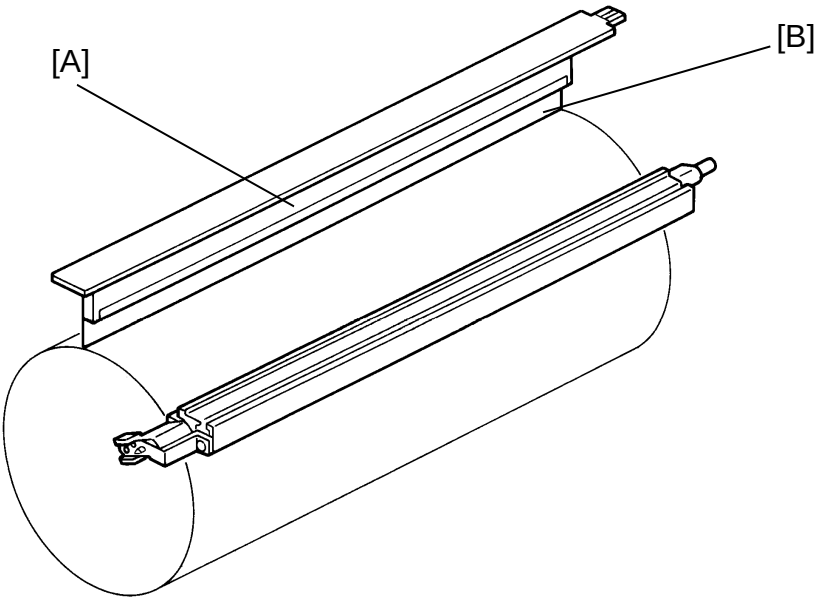

In preparation for the next copy cycle, light from the quenching lamp (QL) [A] neutralizes any charge remaining on the drum.

The erase lamp turns on at the same time as the drum motor activates.

Red colored LEDs are used for the quenching lamp to reduce ultra violet light that would cause light fatigue on the OPC drum.

The mylar [B] on the side of the quenching lamp stops the air flow from the cleaning section to the main charge corona to prevent the charge corona unit from becoming dirty with toner.

3. SCANNING

3.1 OVERVIEW

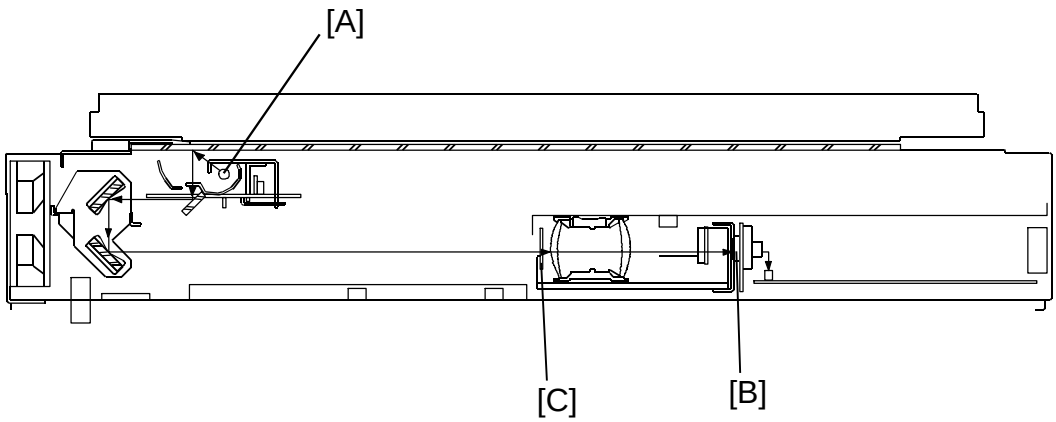

An image of the original exposed by the exposure lamp (halogen lamp) [A] is reflected on a color CCD (charge coupled device) [B] via the 1st, 2nd, 3rd mirrors, filter [C], and lens.

The number of scan depends on the copy mode, black, full color, auto color select, or single color. The scanner moves 4 times at most, once for each development cycle. The order of the cycles is black, cyan, magenta, and yellow.

One chip color CCD with R/G/B color filter is used for photo-electric conversion.

The scanning capability is 400 dpi (5,000 pixels).

3.2 SCANNER UNIT

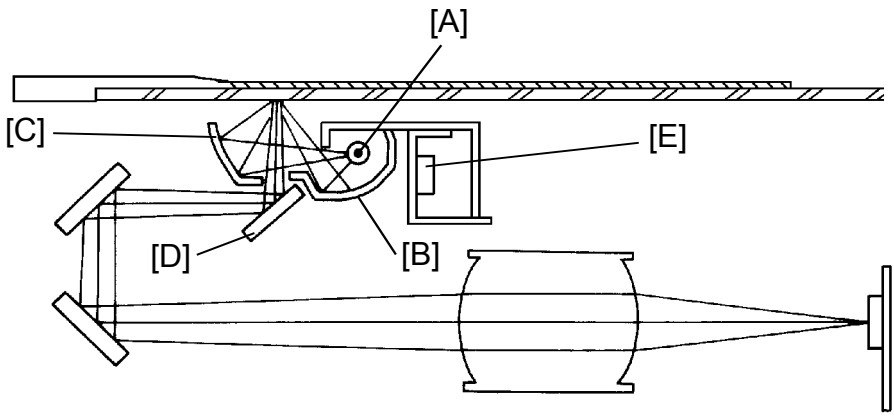

The 1st scanner consists of the exposure lamp [A], main and sub reflectors [B, C], and 1st mirror [D].

This model uses a halogen lamp for the exposure lamp unlike other digital copiers which use fluorescent lamps. This is because the color CCD requires a greater light intensity than a black/white CCD due to its color filters. The exposure lamp is energized by a dc current to avoid uneven light intensity in the sub scan direction. The entire exposure lamp surface is frosted to ensure even exposure in the main scan direction.

The light intensity reflected by the main and sub reflectors are almost even to reduce shadows of pasted originals.

The thermoswitch [E] is installed on the 1st scanner to protect against overheating. It will turns off at around 140°C.

3.3 SCANNER DRIVE

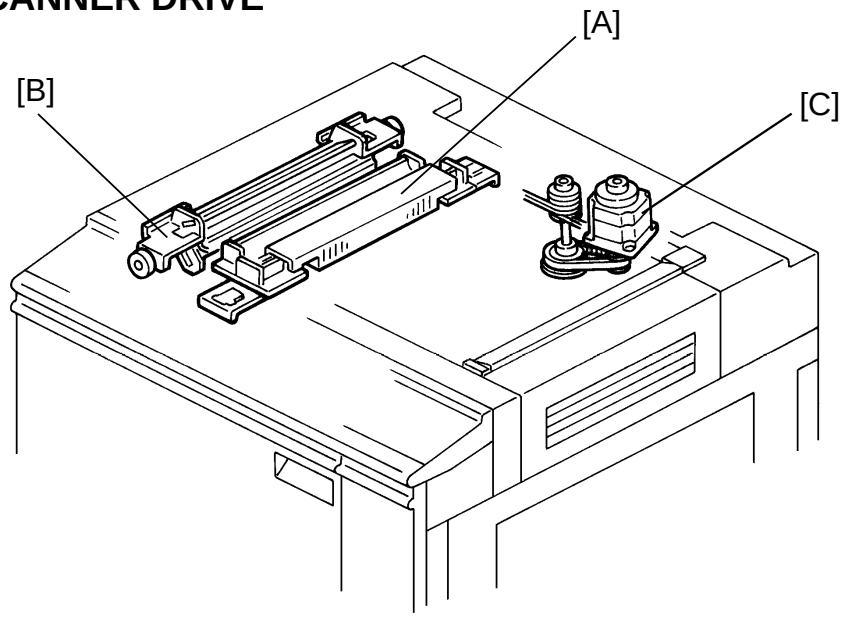

A five phase stepper motor is used for a scanner drive. The 1st and 2nd scanners [A, B] are driven by this scanner drive motor [C] via 4 scanner wires. The length of each wire is different.

In full size mode, the 1st scanner speed is 180 mm/sec. during scanning, and 1,040 mm/sec. when the scanner returns. The 2nd scanner speed is half that of the 1st scanner.

In reduction or enlargement mode, the scanning speed is changed according to the magnification ratio (M: 0.25 to 4.00) e.g. 180/M mm/sec. The returning speed is always the same. The image length change in the sub scan direction is done by the scanner speed change and that in the main scan direction is done by the image processing through the IPU board.

The number of scan changes according to the color selection mode as shown in the following table:

Mode	Number of scans	Development order	Note
Black	1	Bk	—
Auto Color Select	1	Bk	For black/white originals
	4	Bk–C–M–Y	For colored originals
Single Color	1	C, M, or Y	For toner colors
	2	C–M, C–Y, or M–Y	For complementary colors
	4	Bk–C–M–Y	For user color
Full Color	4	Bk–C–M–Y	4C mode
	4	C–M–Y	3C mode

3.4 COLOR CCD

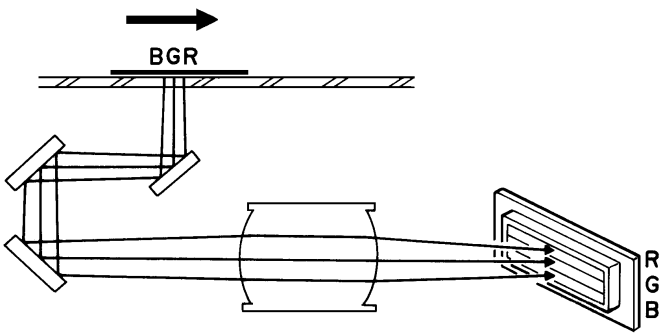

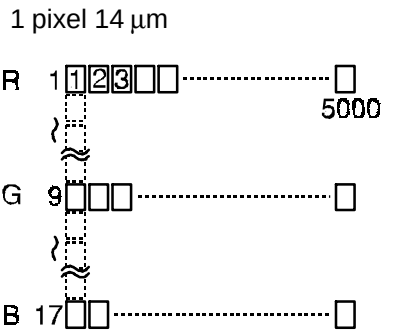

The color CCD converts light reflected from the original into three analog signals, one for each of the three basic colors Red, Green, and Blue. The signals are called the R, G, and B signals. Each of the four scans (for toner colors YMCBk) uses all three signals (RGB).

The CCD consists of three lines of 5000 elements, giving the CCD a resolution of 400 dpi (15.7 dots/mm). Each line of elements has a color separation filter for each of the three basic colors.

The lines are spaced 8 pixels apart for full size magnification. To correct this spacing, the R, G, and B signals must be synchronized. This is done by delay memories in the scanner control board before the three signals are sent to the IPU board (refer to the Image Processing section.)

3.5 WHITE PLATE SCANNING

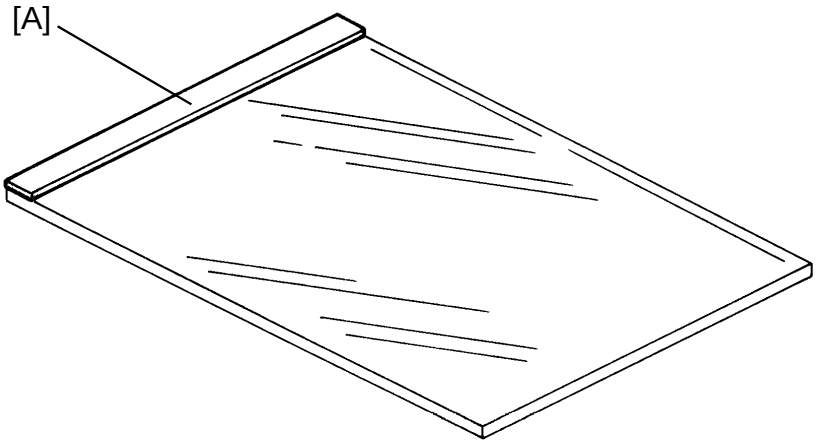

For auto shading, a white plate [A] is stuck on the exposure glass, underneath the left scale.

When this white plate is exposed, the output from all the CCD elements in a line should in theory be equal, but actually they are not, because of the following:

- Variations in sensitivity between elements of the CCD
- Variations in characteristics of the lens and mirror reflectivity
- Loss of brightness toward the ends of the exposure lamp

To correct this uneven output from the CCD elements, auto shading is performed based on the light reflected from the white reference plate.

Auto shading is done for every copy cycle at the scanner home position before starting the first scan. However, it is done only once at the first copy cycle during a multicopy run in single color (1C) mode because the interval between copy cycles is too short.

3.6 ORIGINAL SIZE DETECTION

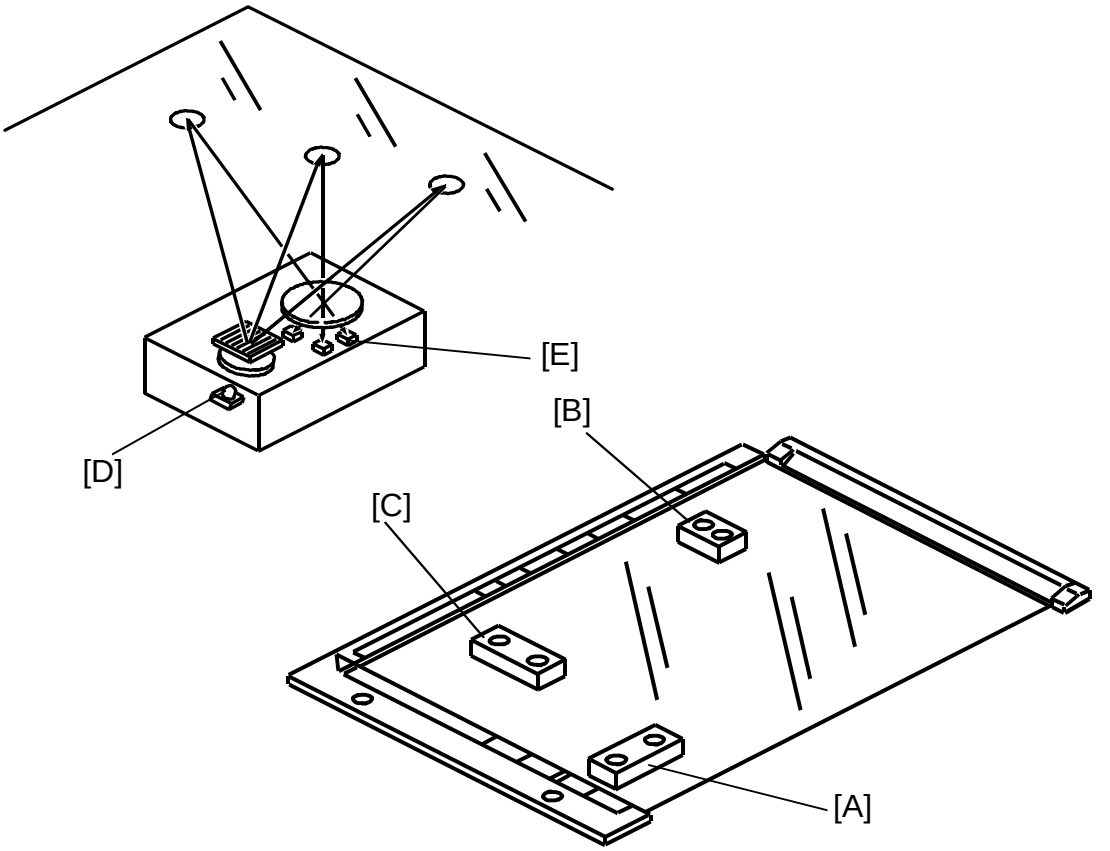

There are three reflective sensors (APS sensors) in the optics cavity for the original size detection. Original width Sensor [A] is used for sensing the original width while Original Length Sensor-1 [B] and Original Length Sensor-2 [C] sense the original length.

Inside each APS sensor, there is an LED [D] and three photoelectric devices [E]. The light generated by the LED is broken up in three beams and each beam scans a different point of the exposure glass. If the original or platen cover is present over the scanning point, the beam is reflected and each reflected beam exposes a photoelectric device and activates it.

While the main switch is on, these sensors are active and the original size data is always sent to the main CPU. However, the main CPU checks the data only when the platen cover is opened.

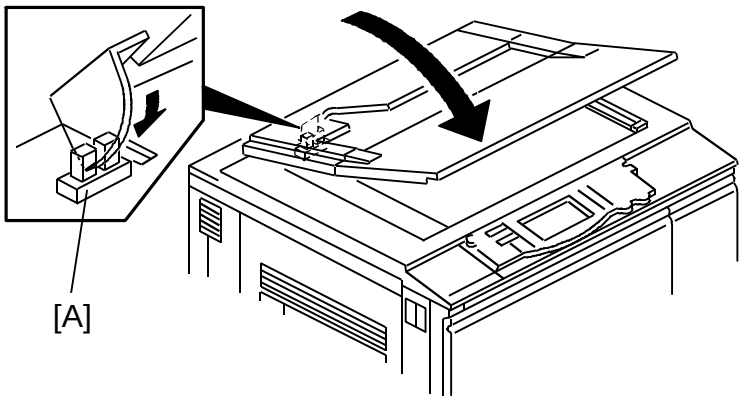

Original Size		Length Sensor 1			Length Sensor 2	Width Sensor		
A4/A3 version	LT/DLT version	1	2	3	4	5	6	7
A3	11 x 17 (11 x 15)	1	1	1	1	1	1	1
B4	10 x 14	0	1	1	1	1	1	1
—	8 1/2 x 14	0	1	1	1	1	1	0
F4	8 1/2 x 13 (8 x 13)	0	0	1	1	1	1	0
A4–L	8 1/2 x 11 (8 x 10)	0	0	0	1	1	1	0
B5–L	—	0	0	0	1	1	0	0
A5–L	5 1/2 x 8 1/2	0	0	0	1	0	0	0
A4–S	11 x 8 1/2	0	0	0	1	1	1	1
B5–S	—	0	0	0	0	1	1	1
A5–S	8 1/2 x 5 1/2	0	0	0	0	1	1	0

NOTE: –L: Lengthwise
–S: Sideways

The check is done when the platen position sensor [A] turns on. This is when the platen is positioned about 15 cm above the exposure glass. At this time, only the sensors located underneath the original receive the reflected light and are on. Other sensors are off. Through the on/off data of the seven sensors, the main CPU can recognize the original size.

In case the copy is made with the platen open, the main CPU decides the original size only through the data when the Start key is pressed.

This original size detection method eliminates the necessity for a pre-scan and increases the machine's productivity.

3.7 OTHERS

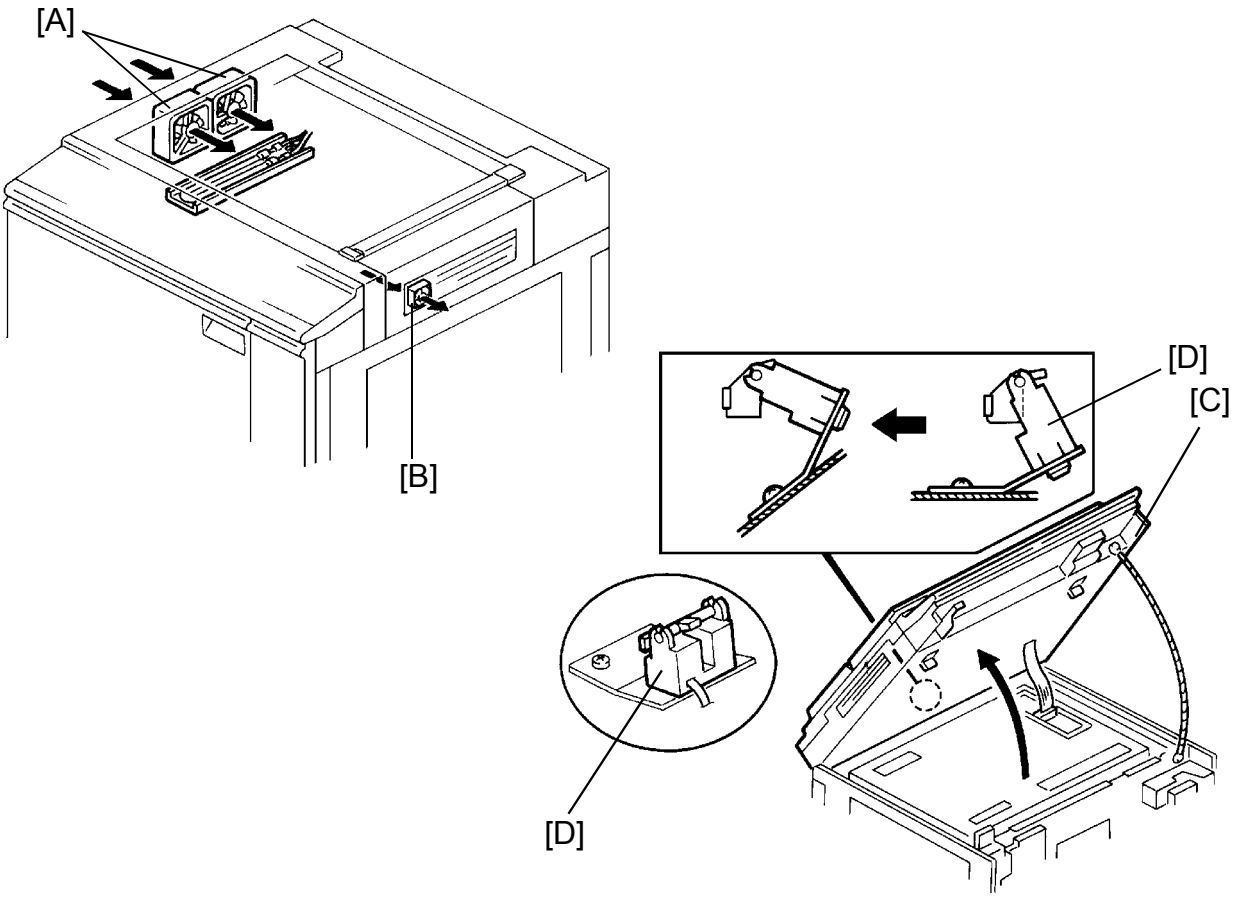

A pair of optics cooling fan [A] is located at the left side of the optics cavity. These fans blow air into the optics cavity to prevent the exposure lamp and optics cavity from overheating during copy cycles.

The optics exhaust fan [B] is located at the right side of the optics cavity under the lens housing cover. This fan blows air out to keep the CCD board and the scanner control board from overheating.
It rotates at low speed (dc 15 V) in standby condition and at high speed (dc 24 V) during copy cycles.

An anticondensation heater is installed on the left side of the optical base plate. It turns on when the main switch is off.

For field servicing, the scanner unit [C] can be opened. When the scanner unit is lifted, the actuator of the scanner unit lift sensor [D] moves the sensor out. Then, for safety, the CPU prohibits the scanner motor from rotating. The start key stays red under this condition.

3.8 SCANNER SECTION BLOCK DIAGRAM

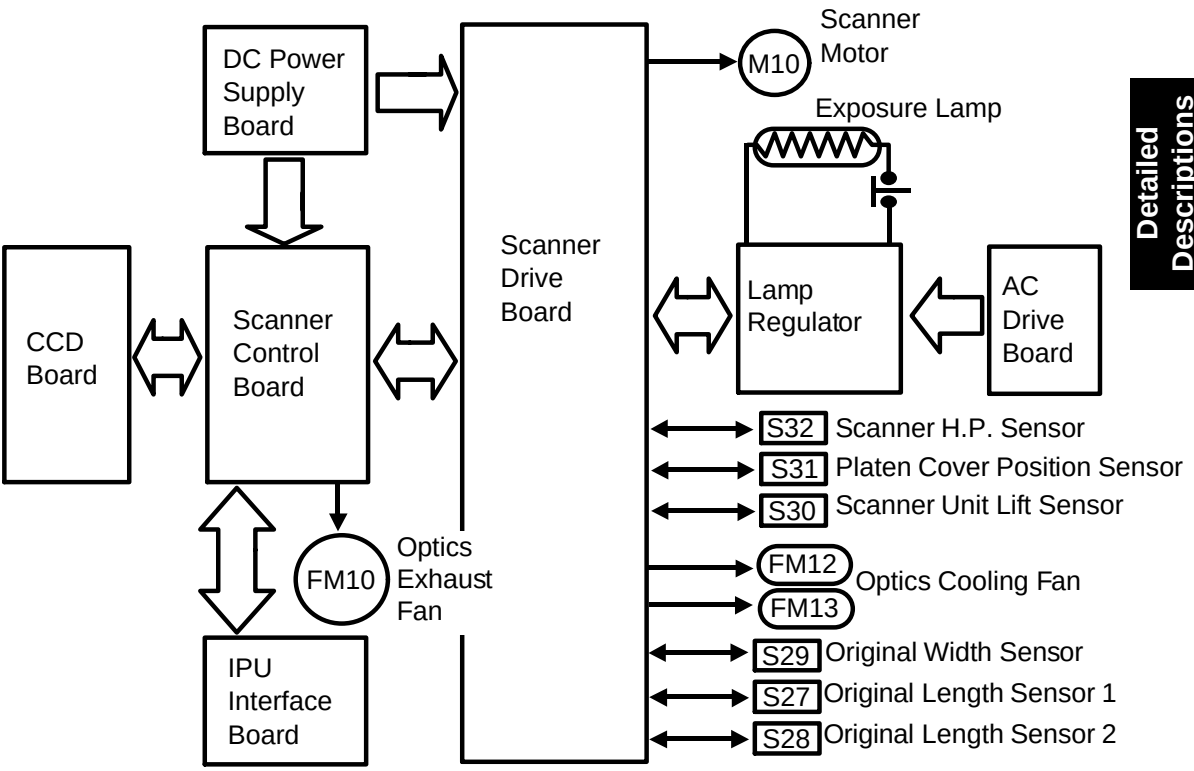

4. IMAGE PROCESSING

4.1 OVERVIEW

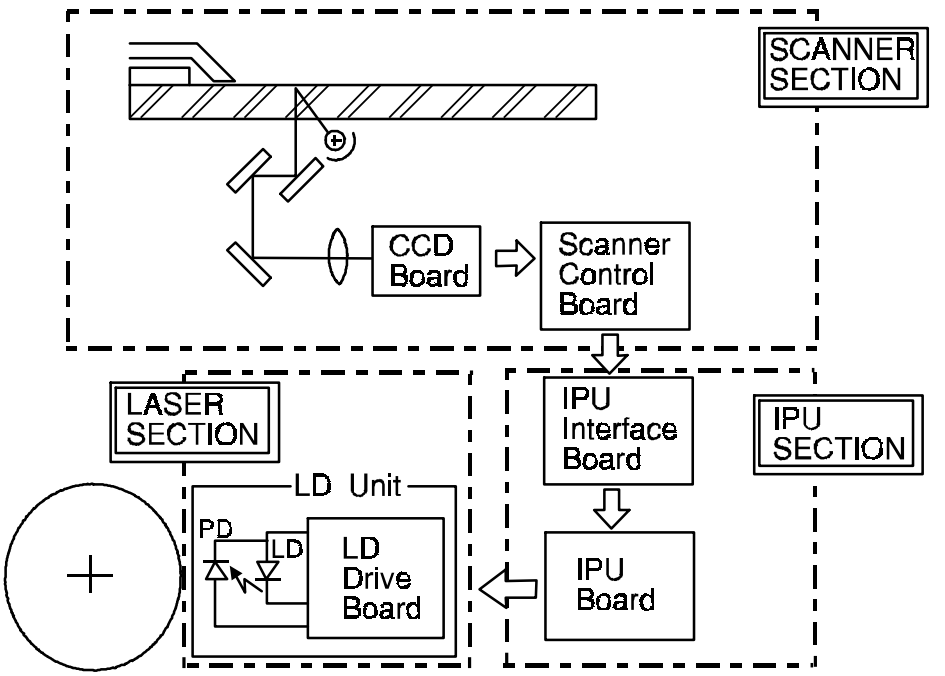

The CCD board has three CCD lines with red, green, and blue filters; it generates an analog video signal for each color when the original is scanned. Three signals are sent to the scanner control board.

The processing by the scanner control board includes:

> Signal amplification, A/D conversion and signal composition, auto shading, D/A conversion, scan line correction

The processed R/G/B digital video signals (8 bits for each color) are sent to the IPU (Image Processing Unit) board through the IPU interface board. These signals can be considered as the raw data from the original image detected by the scanner section.

Then the IPU board applies correction for the next step. According to the operation mode, the following image processing is applied:

> Auto color selection, auto letter/photo separation, filtering and color conversion, magnification adjustment, image creation, printer gamma correction, dither processing

Finally, the video controller on the IPU board sends 8-bit video data to the LD drive board at the proper time for each scanning cycle (Bk, C, M, Y).

4.2 SCANNER SECTION BLOCK DIAGRAM

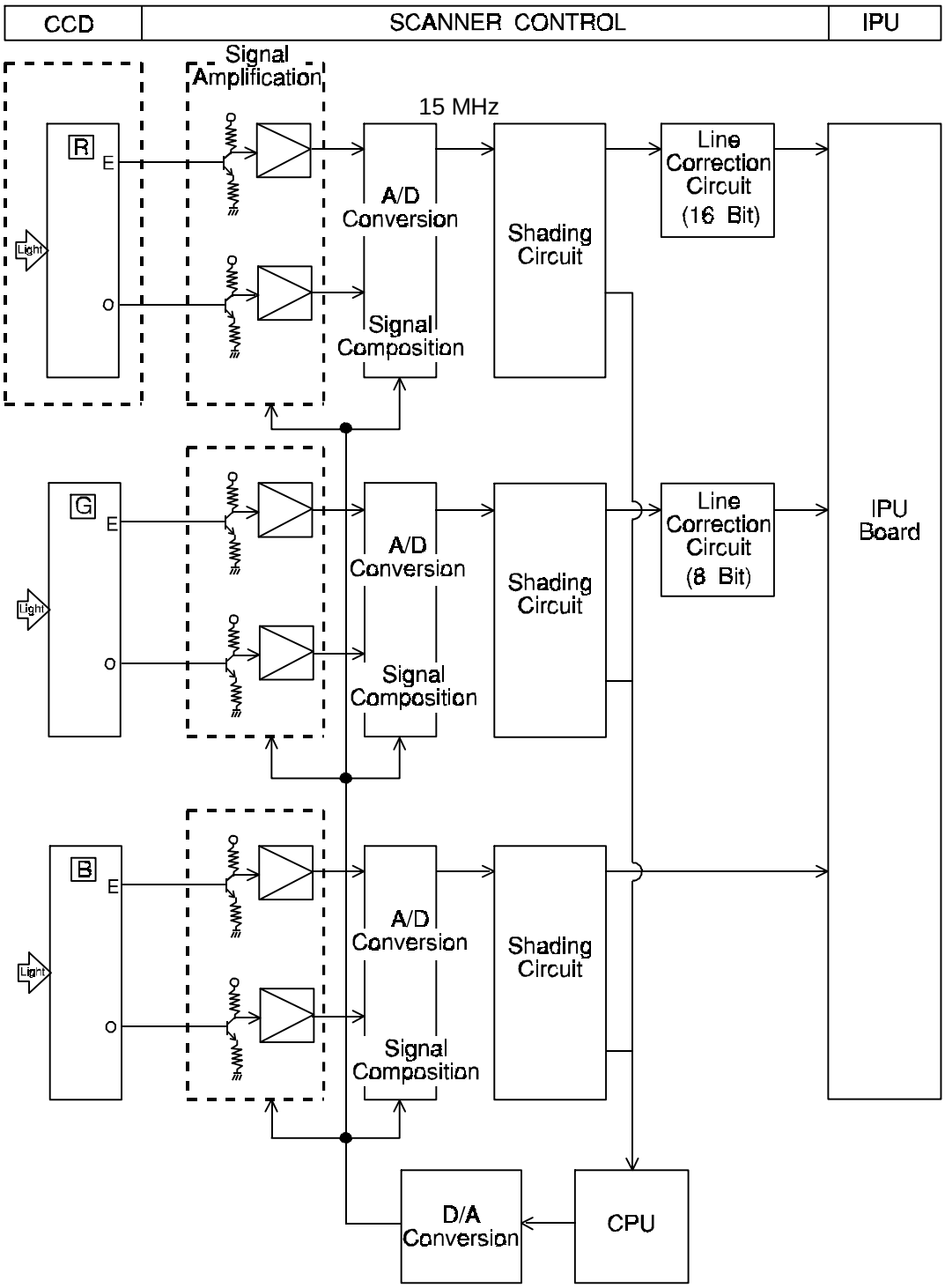

4.3 CCD BOARD

The color CCD converts the light reflected from the original into R/G/B analog signals (15 MHz). Each CCD line has 5,000 pixels and the resolution is 400 dots per inch (15.7 lines/mm).

Each color CCD has two output lines, odd and even, to the scanner control board. Since the processing speed for one pixel is very fast, odd and even pixels are read from the CCD separately so that the signals can be amplified in the scanner control board properly. Therefore, the processing speed of each CCD output line is 7.5 MHz.

4.4 SCANNER CONTROL BOARD

4.4.1 Signal Amplification

Odd and even R/G/B analog signals from the CCD board are amplified independently by operational amplifiers. The gain ranges of the operational amplifier are controlled by the scanner CPU by judging the feedback signals from the shading circuits.

4.4.2 A/D Conversion and Signal Composition

A/D conversion:
The amplified analog signals are converted to 8-bit digital signals (7.5 MHz) for each color (R/G/B). This will give 256 gradations for each pixel.

Signal composition:
Then the digitized odd and even signals for each color are merged by a switching device, producing an 8-bit digital signal at 15 MHz.

4.4.3 Auto Shading

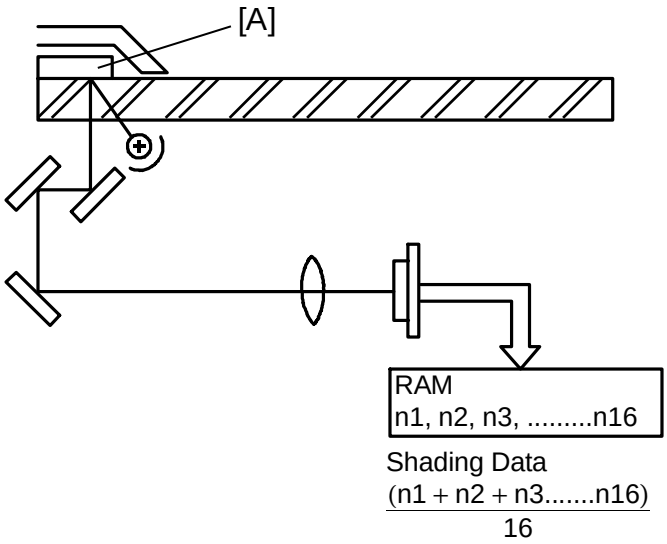

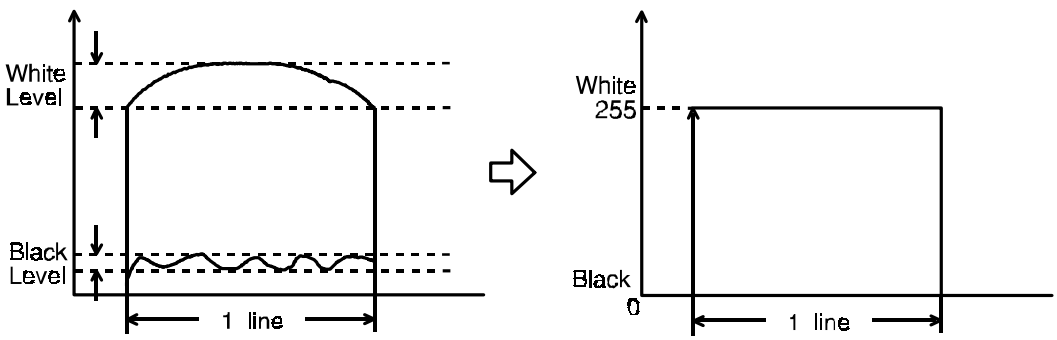

Before scanning the original, the machine reads a reference wave form from the white reference plate [A] (below the left scale) 16 times. The average of the white video level for each pixel is stored as the white shading data in the memory of the shading circuit.

To improve image reproduction for high density areas, the machine also reads the black video level 16 times with the exposure lamp turned off. This is done before white shading. The average of the black video level for each pixel is stored as the black shading data in the memory of the shading circuits.

The video signal information for each pixel obtained during image scanning is corrected by the shading circuit as follows:

$$\text{Output} = \frac{(\text{Video data}) - (\text{Black shading data})}{(\text{White shading data}) - (\text{Black shading data})} \times 255$$

4.4.4 D/A Conversion

The scanner CPU monitors the feed back signals from the shading circuits and calculates correction factors. The digital data in the CPU is converted to analog data to feed them back to the signal amplification and A/D conversion sections.

- Black level data is fed back to the signal amplification section.
- White level data (Vref) is fed back to the A/D conversion section.

4.4.5 Scan Line Correction

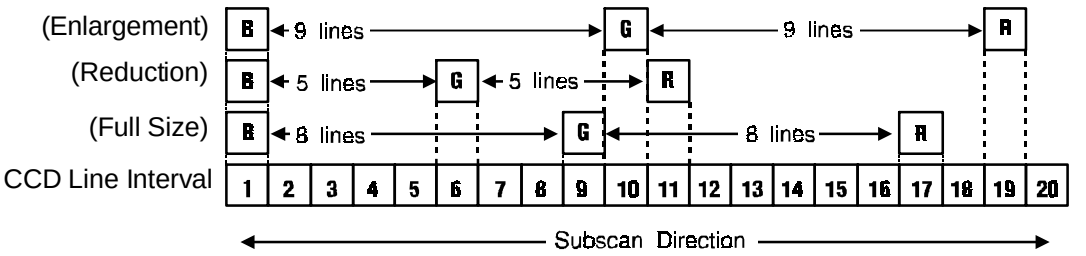

The three CCD lines providing the R/G/B signals (red, green and blue) are spaced 1/50 inch apart. To compensate for this discrepancy, the line correction circuits synchronize the output timing of the R/G/B signals to the IPU board by storing the scan data for each line in memory.

As the discrepancy between R/G/B video signals changes depending on the magnification ratio, the correction data is calculated as follows:

B: Standard (No correction)
G: (8 lines) x (Magnification ratio)
R: (16 lines) x (Magnification ratio)

If this calculation does not result in an integer, the correction data is set to the closest integer, but further correction is needed (see section 4.7.2 for details).

4.5 IPU SECTION BLOCK DIAGRAM

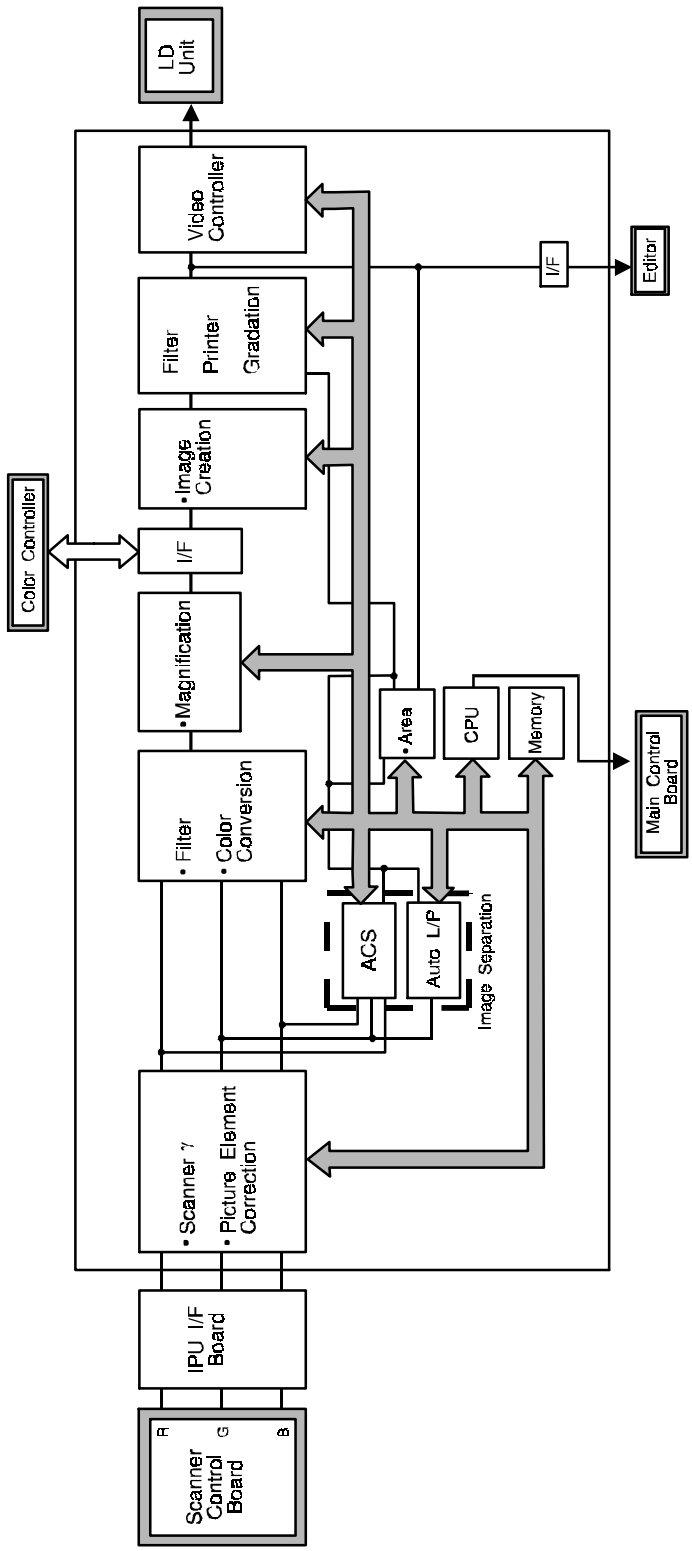

4.6 IPU INTERFACE BOARD

The IPU interface board changes the clock frequency of the R/G/B video signals from 15 MHz to 14.318 MHz to protect the signals from noise.

It also sends the synchronizing signal for the polygon motor and other components to the scanner control board.

4.7 IPU BOARD

4.7.1 Scanner Gamma Correction

<R/G/B Video Signal>

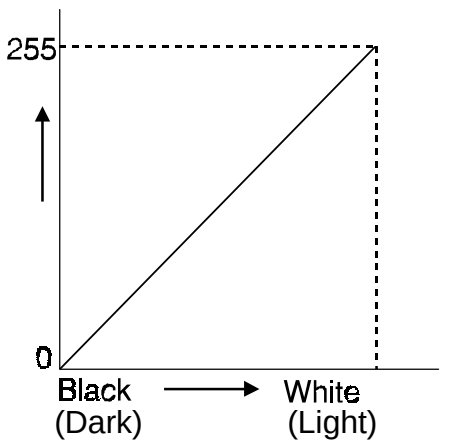

<Reflected light from originals>
Fig. 1

<R/G/B signal after scanner γ correction>

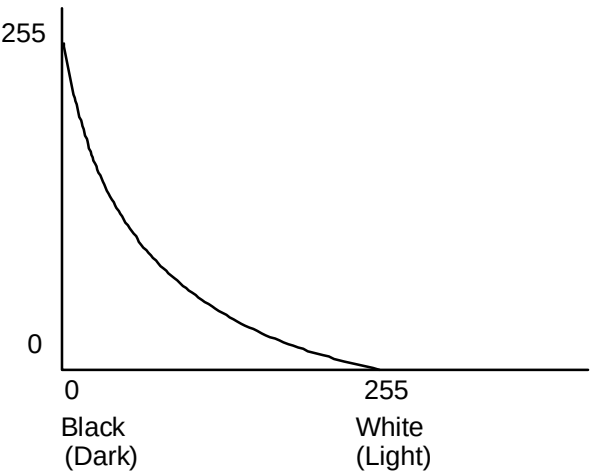

<R/G/B signal from scanner control board>
Fig. 2

The R/G/B video signals detected by the CCD are converted to 8-bit digital signals in the scanner control board and sent to the IPU board. These signals are proportional to the light intensity reflected from the original image (Fig. 1).

However, the IPU board converts the signal levels as shown in figure 2 by using a gamma correction table in order to improve the color conversion accuracy. The same table is used for R, G, and B signals.

The scanner γ correction converts the video signal levels as follows:

	[Black]	[White]
Scanner Input (R/G/B)	0	255
After γ correction (R/G/B)	255	0
→[Color Conversion]→		
Printer Output (Y/M/C)	255	0

4.7.2 Picture Element Correction

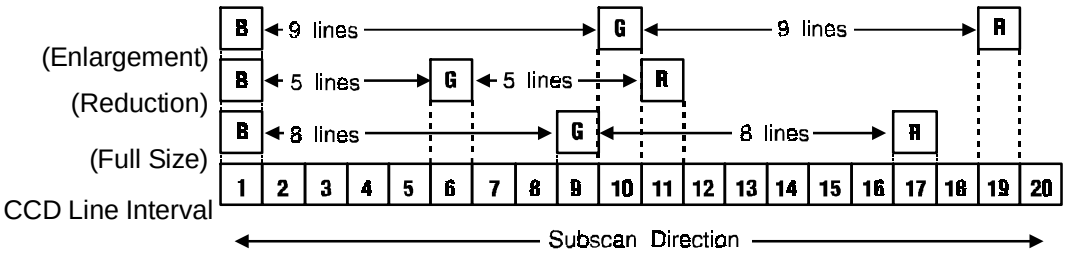

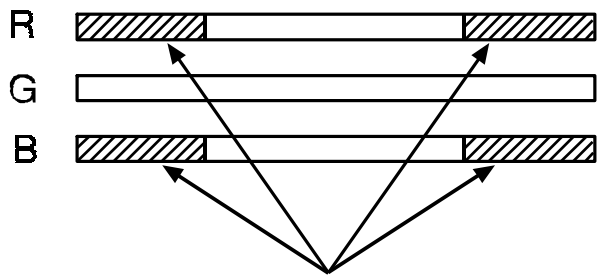

Picture Element Correction

The discrepancy of the R/G/B signals from the CCD in the subscan direction is corrected by the line correction circuit of the scanner control board (see section 4.4.5 for details). However, if the correction data corresponding to the magnification ratio is not an integer, then further correction is needed to synchronize the R/G/B signals.

If the CCD board is not positioned perpendicularly to the light axis, the position of each pixel is different from the original image position. This difference becomes larger towards the ends. Under this condition, vertical black lines (in the subscan direction) at the ends are colored because Y, M, C toner dots are not properly positioned. (Example: vertical lines at the right and left edge of the C4 color chart)

Therefore, the CCD line spacing is also corrected here. The target areas for this correction are shown above. The vertical line correction level can be changed by the SP mode (page 1-20, No.130).

4.7.3 Auto Color Selection (ACS)

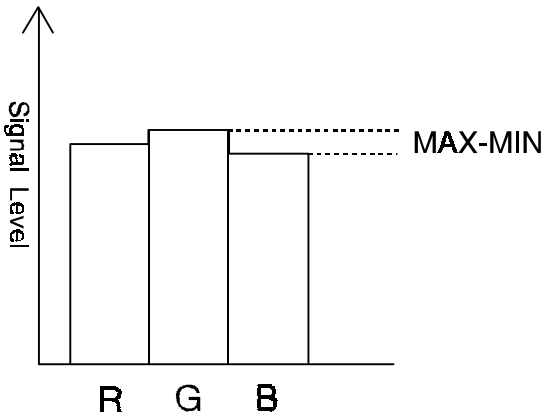

In auto color selection mode, the black copy mode or full color mode is automatically selected according to the original image. During the 1st scanning cycle, the original image is developed with black toner according to the corrected R/G/B video signals. If the original does not have any colored image, the 2nd scanning is aborted and the developed image is transferred from the transfer belt to copy paper. Then the black and white copy comes out. If the original has a colored image, copying operation resumes in the full color copy mode (4 scans).

To recognize if the original has a colored image or not, R/G/B video signals are compared. If the maximum difference among R/G/B signal levels is within a certain range, it is considered a black and white original.

4.7.4 Auto Letter/Photo Separation

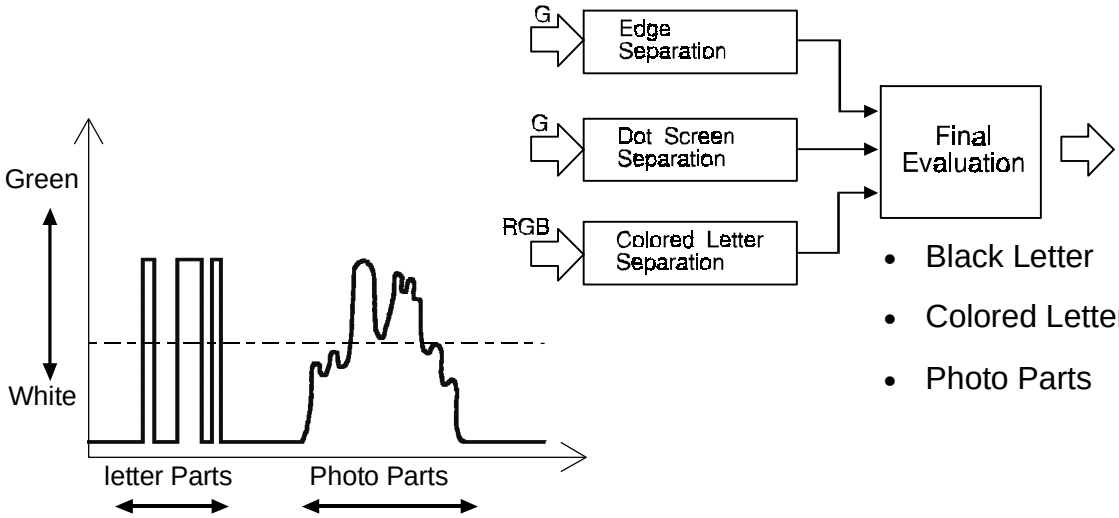

In auto letter/photo mode, the original image is separated into letter and photo parts (dot screen areas).

Generally letter parts have strong contrast between the image and the background. Photo parts (dot screen areas) have a middle range of signal levels of contrast. By using these characteristics and the following separation methods, the original image is separated into black letter parts, colored letter parts, and photo parts for the final evaluation.

(1) Edge separation
The edge of letters are separated by using the following characteristics: Strong contrast, continuity of black or color pixels, continuity of white pixels around the black or color pixels

(2) Dot screen separation
Dot screen areas are separated from non-dot screen areas (mainly letters) by using the following characteristics:
White pixels are not detected around the pixels in dot screen areas.

(3) Colored letter separation
Black pixels and color pixels in letter parts are separated by judging the difference among R/G/B maximum signal levels and the output levels of R/G/B video signals.

The letter parts are processed in letter mode and the photo parts are processed in photo mode in the subsequent image processing steps.

However, auto letter/photo separation is mostly effective only for small letters. If there are big letters or solid patterns in the original, only the edges of those images is processed in the letter mode. The inside of those images is processed in photo mode.

4.7.5 Filter and Color Conversion

(1) Filter

According to the results of auto letter/photo separation, the appropriate software filters (fixed) are applied to R/G/B video signals.

- High contrast (emphasizing edges) filter for letter parts
- Smoothing filter for photo parts

(2) Positive/Negative Reverse

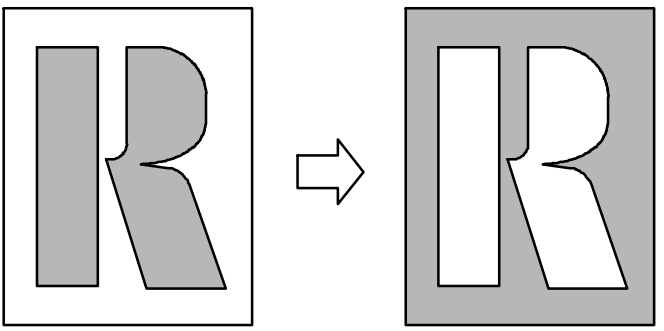

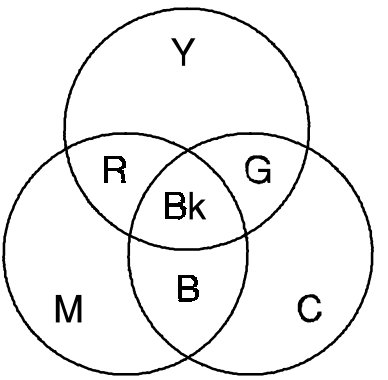

In the positive/negative image mode, colors are changed to their complement, as shown below:

Red	–	Cyan
Green	–	Magenta
Blue	–	Yellow
Yellow	–	Blue
Magenta	–	Green
Cyan	–	Red
Black	–	White
White	–	Black

(3) Color Conversion

<Transparency of M Toner>

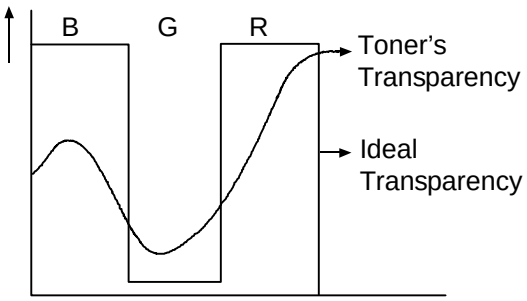

<Color Conversion Table>

Original Color / Toner	Bk	R	Y	G	C	B	M	W
Y	1	1	1	1	0	0	0	0
M	1	1	0	0	0	1	1	0
C	1	0	0	1	1	1	0	0
Bk	1	0	0	0	0	0	0	0

R/G/B video signals from each scanning cycle are processed by color correction and color conversion.

a) Color correction
The transparency of each color toner is not ideal, as shown above. Color correction compensates for the difference between ideal and actual characteristics. According to the actual transparency of each color toner, a proper masking coefficient is applied to R/G/B video signals to convert them into Y/M/C/Bk video signals.

b) Color conversion
In color conversion mode, a selected color (C/M/Y/R/G/B/Bk/W) of an original is converted into a different color on the copy. Up to 4 colors can be converted at one time. Colors that can be used after conversion are Yellow, Orange, Red, Magenta, Blue, Cyan, Green, Light Green, White, Black, Scan Color, and 3 User colors. Only one scan color can be selected at one time.

Color conversion is processed by changing the coefficients of the above color conversion table.

For example, when changing Yellow to Black, coefficients for the Yellow video signal become as follows:

Y:1, M:1, C:1, Bk:1

When changing Green to Light Green, coefficients for Green video signal should be as follows:

Y:1, M:0, C:0.5, Bk:0

c) UCR (Under Color Removal)

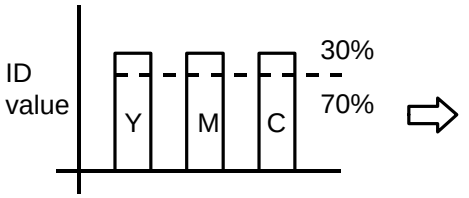

Fig. 1

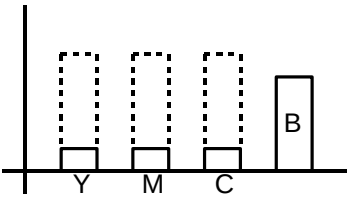

Fig. 2

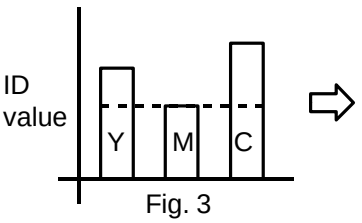

Fig. 3

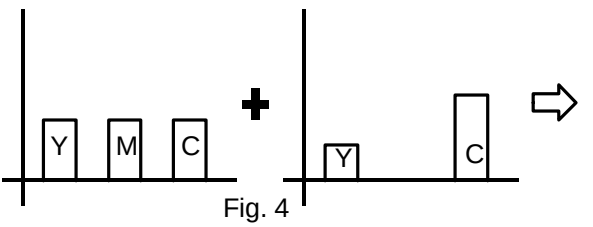

Fig. 4

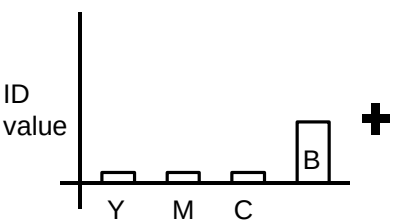

Fig. 5

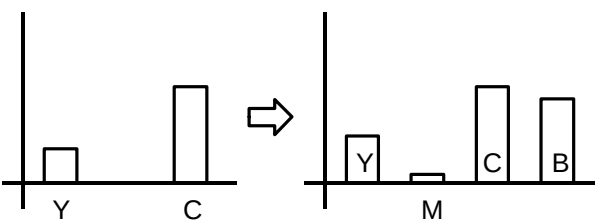

Fig. 6

If for each color (Y/M/C) the same quantity of toner is put on the paper, ideally the image should become black, but in reality it becomes dark blue.

To compensate for this, an equal portion of the ID value for each color is subtracted. This reduces the amount of color toner on the paper, and a proportional amount of black toner is added. This turns dark blue results into black.

When a black image is copied, the ID values for all colors are equal (figure 1). For each color, the ID value is reduced by 70% (UCR: 70%) and a black ID value is added to compensate for the color ID reduction (figure 2).

When a color image is copied, the color ID values are different from one another (figure 3). But the ID values for this image can be decomposed into two parts (figure 4): A set of values equal to the lowest color ID value, and the remainder of the two higher values.

The part with equal values can be treated as a black image (figure 1 and 2), then added to the remainder part (figure 5). The final result gives us the copy ID value for each color and for black (figure 6).

The UCR standard ratio in the photo mode is 70% on this model. But this ratio can be increased (made stronger) or decreased (made weaker) over 9 steps by using the user tools.

d) UCA (Under Color Addition)

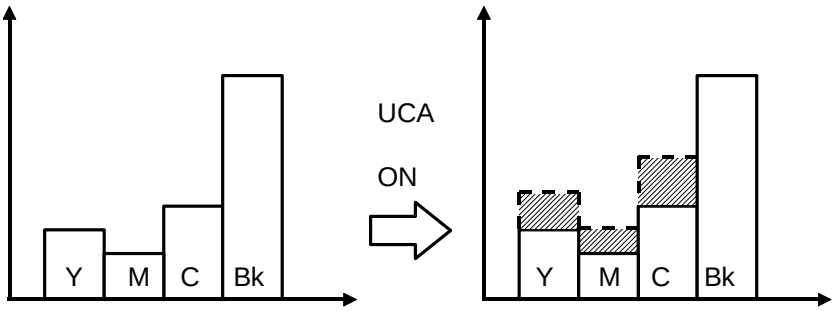

Using only UCR processing, the copy image lacks depth. So, a specified ratio of toner is added for each color (Y/M/C). The amount of additional toner for a color is in proportion to that color's density. The UCA ratio is fixed and it is always ON for all modes (4 scan modes).

4.7.6 Main Scan Magnification

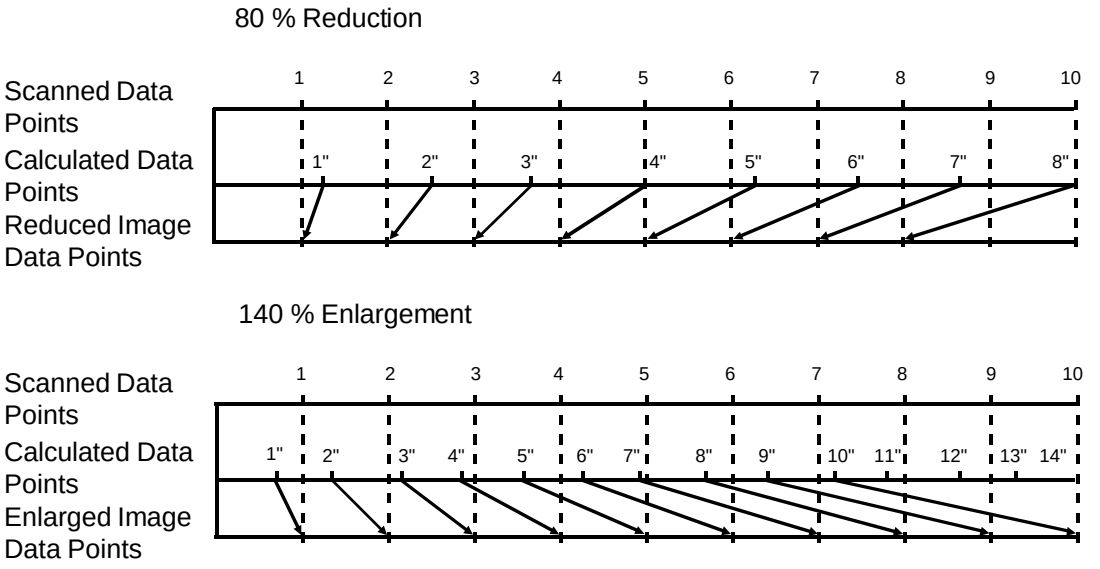

Reduction and enlargement in the sub scan direction is done by changing the scanner speed. However, reduction and enlargement in the main scan direction is handled by IPU board 1.

Scanning and laser writing are done at a fixed pitch (the CCD elements cannot be squeezed or expanded). So, to reduce or enlarge an image, imaginary points are calculated that would correspond to a physical enlargement or reduction of the image. The correct image density is then calculated for each of the imaginary points based on the image data of the nearest four true points. The calculated image data then becomes the new (reduced or enlarged) image data.

NOTE: The actual calculations for main scan magnification are performed following the polynomial convolution method. This mathematical process is beyond the scope of a service manual and will not be covered here.

4.7.7 Image Creation

(1) Mirror Image

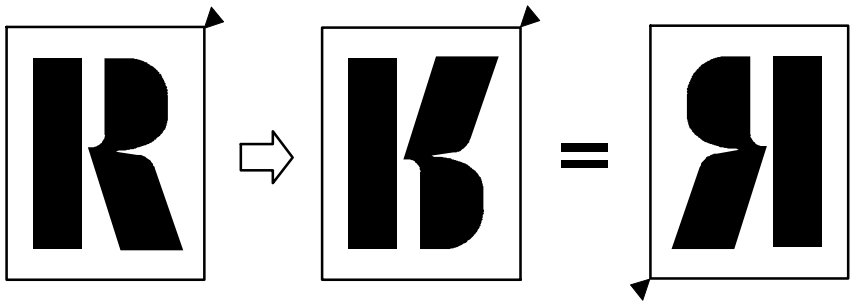

The image is inverted relative to the subscan axis.
The main scanning data is transferred to the laser unit from the end.

(2) Slanted Image

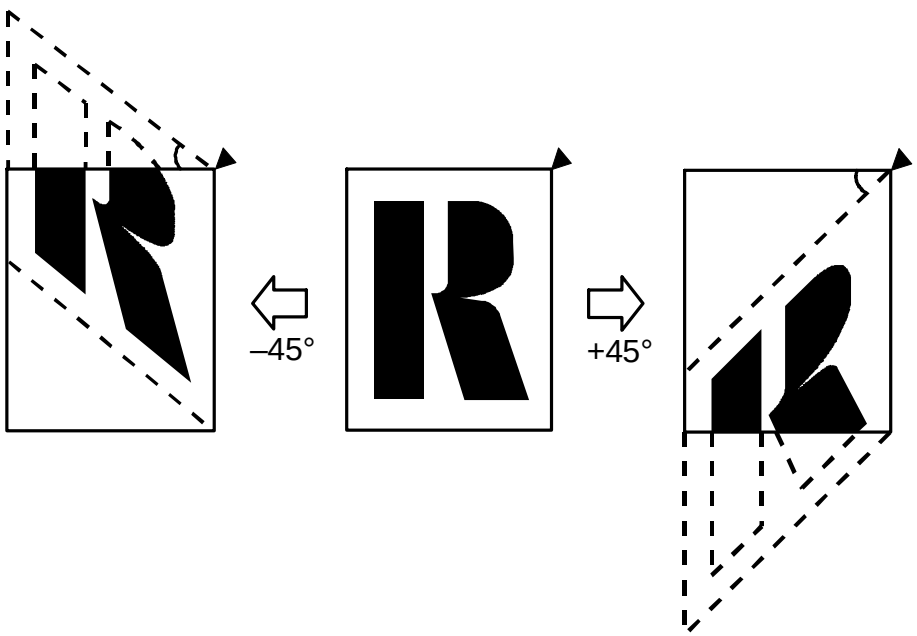

The image is slanted as shown above. The slant angle can be selected at ± 45 degrees by 1 degree steps. If a greater slant angle is selected, portions of the image might not be printed.

(3) Image Repeat

Part of the original image is copied repeatedly in the main scan direction.

There are three methods to designate the repeated image.

a) Size input

The original image designated with the length in the main scan direction is repeated as many times as will fit on the copy width. The length (size) can be entered with the number keys. It should be less than 300 mm.

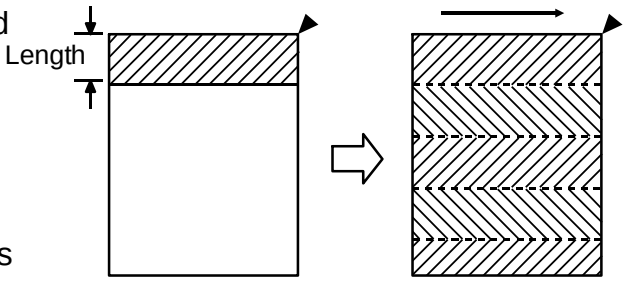

b) Number of images

The image is repeated in the main scan direction for the specified number of image repetition (2 to 9). The repeated image width is calculated from the number of repetition, paper width, and magnification.

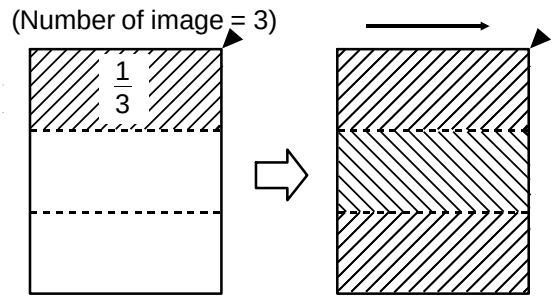

c) Editor input

When the display editor is equipped, the specified image with rectangle is repeated in the main scan direction. The repetitions are made one below the other, and are all aligned with the lead edge.

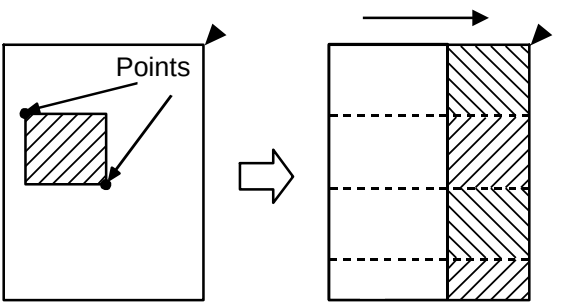

(4) Paint area

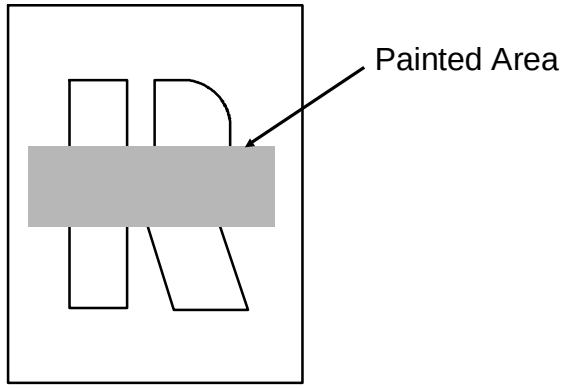

When the display editor is installed, the specified area is painted with a selected color. Colors that can be used for paint area are Yellow, Orange, Red, Magenta, Blue, Cyan, Green, Light Green, Black, and the 3 User Colors.

(5) Color Background

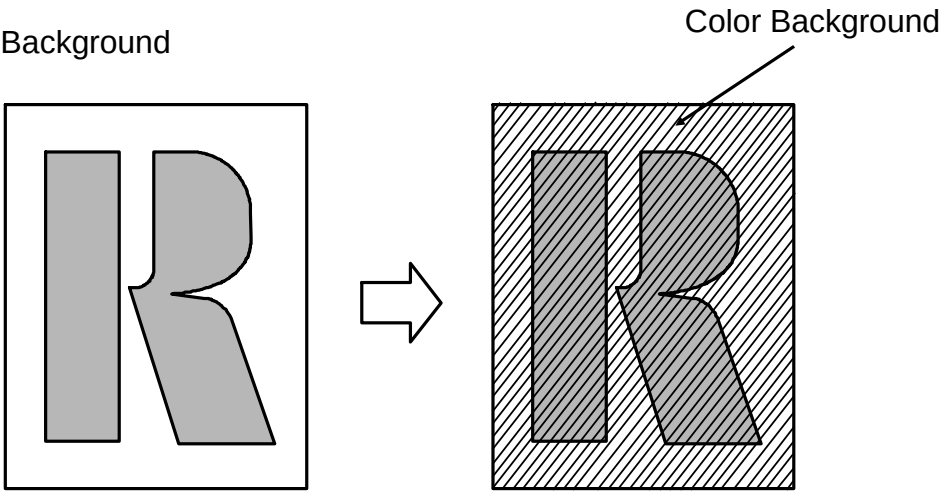

This mode adds the selected color to the entire image background.
The background can be any of 13 colors: Yellow, Orange, Red, Magenta, Blue, Cyan, Green, Light Green, Black, Scan Color, and the 3 User Colors.

This mode is suitable for letter, and line originals since the color tone of photo/picture originals is changed due to the color of the background. The color background density can be adjusted lighter or darker over 5 levels by user tools.

(6) Outline image

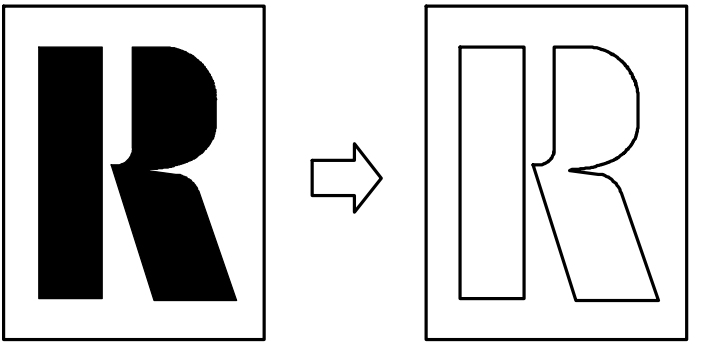

When the outline mode is selected, the image data is converted into binary data and only the outline image is printed. The outline width can be selected from 0.25, 0.5, and 0.75 mm (0.01", 0.02", and 0.03").

(7) Shadow image

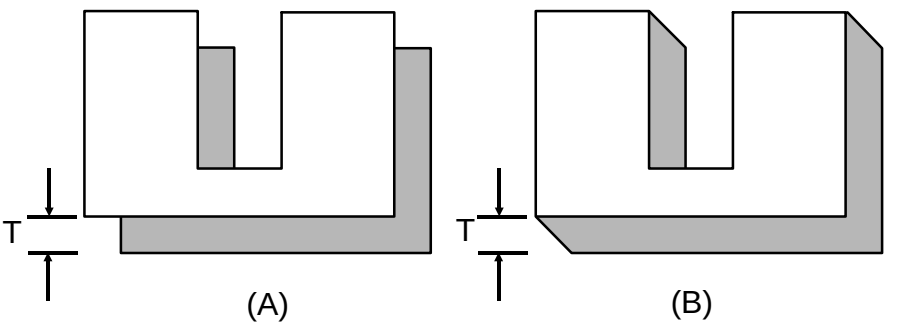

There are two types of the shadow image: offset shadowing (A) and block shadowing (B).

The shadow falls below and to the right of the image (at 45 degrees). The shadow can be any of the 13 colors: Yellow, Orange, Red, Magenta, Blue, Cyan, Green, Light Green, Black, Scan Color, and 3 User Colors.

The width (T) of the shadow can be adjusted between 1 and 4 mm (0.04" and 0.16") in 1mm (0.04") steps.

When the shadow image and the outline image are selected together, the shadow should be the same color as the original. Otherwise, the image will be printed in a single color (selected shadow color).

4.7.8 Filter

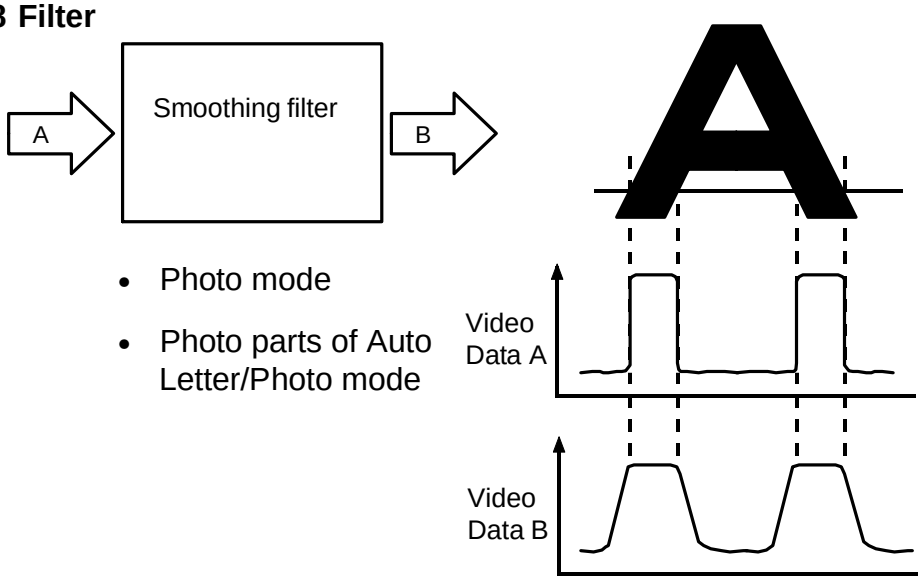

- Photo mode
- Photo parts of Auto Letter/Photo mode

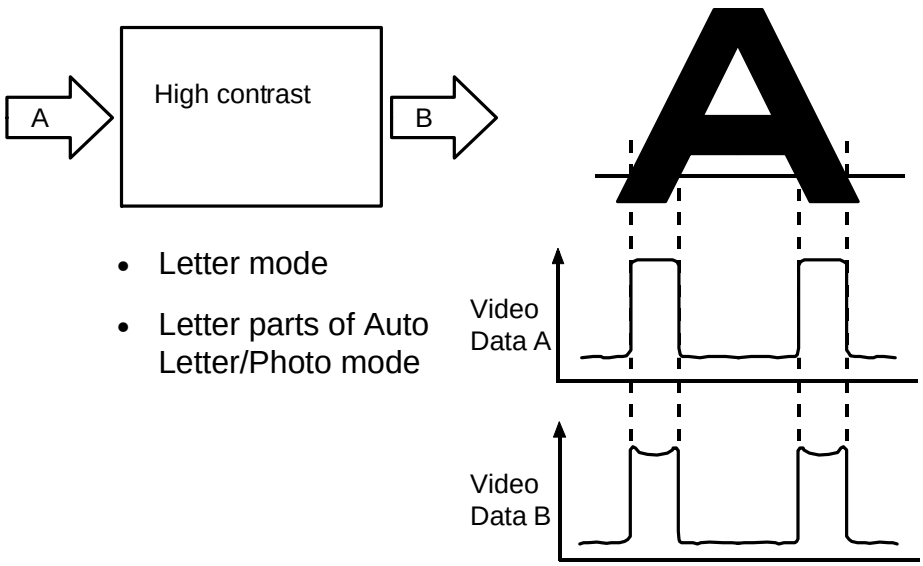

- Letter mode
- Letter parts of Auto Letter/Photo mode

The filter in section 4.7.5 is the fixed one for the letter and photo parts of the original image. Other filters (smoothing filter and high contrast filter) are used here again to improve the printed image.

The smoothing filter improves the image by smoothing the gradient of the half tone areas. The high contrast filter improves letters by contrasting the edge of the image.

By changing the effect of the smoothing or high contrast filter, the image can be made sharper or softer. It can be adjusted over 5 levels from the image adjustment screen.

4.7.9 Auto Image Density (ADS)

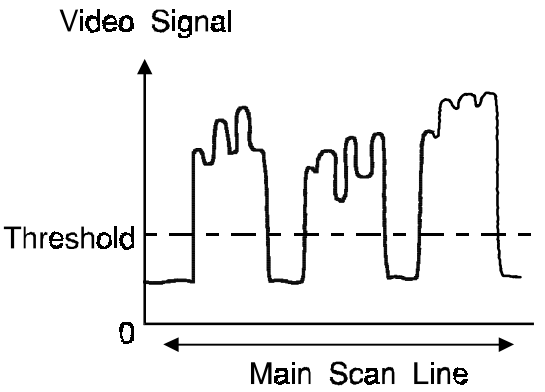

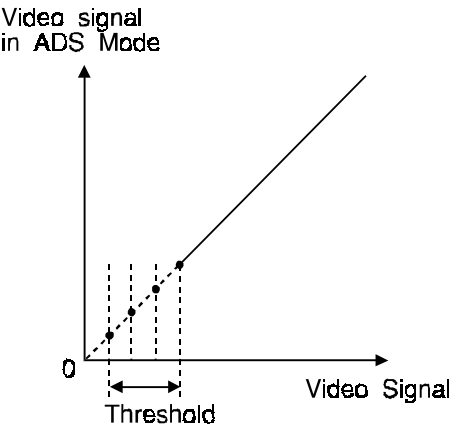

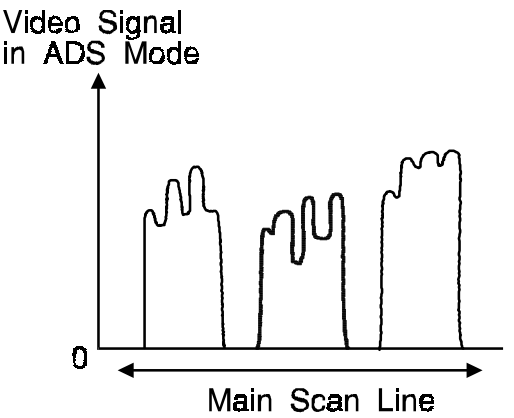

Auto image density mode can be selected in black or single color (1C or 2C) modes. This mode prevents the background of an original from appearing on copies.

The video signals from the original background do not include high frequency components and their levels are lower than those from the actual image. From these characteristics, video signals corresponding to the background are judged in this block and their output levels become zero. This treatment is done for each main scan line through the whole sub scan direction.

The threshold level (actually it is a range) of video signals for judging the background can be changed over 4 levels by user tools.

Unlike analog copiers, manual image density can be adjusted together with auto image density mode. This is useful when making copies from an original that has light image density with background.

4.7.10 Printer Gamma Correction

(1) YMCBk Gamma

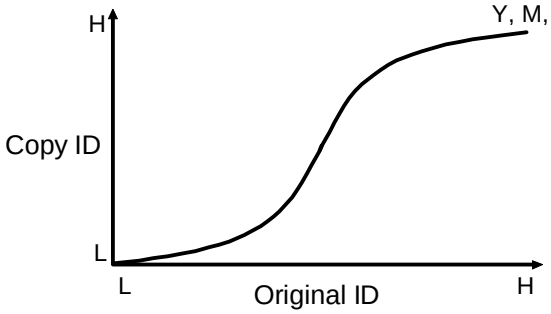

Fig. 1

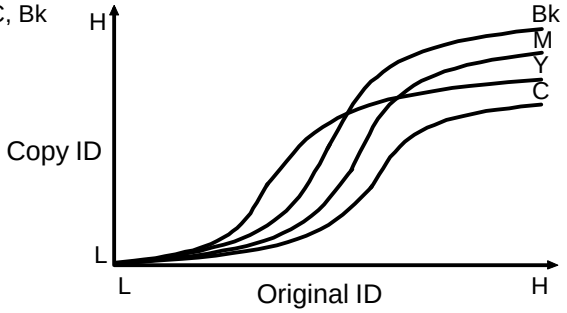

Fig. 2

Ideally, the gamma curves for Yellow, Magenta, Cyan, and Black should be identical, as shown in figure 1, but they are not because electrical component always vary slightly, resulting in varying gamma curves, as shown in figure 2. To compensate for this discrepancy, the gamma curve for each color can be adjusted by a service program (Page 4-3 to 4-6).

The gamma curve can be adjusted through 4 different modes: ID max, High ID, Low ID, and Middle ID

a) ID max

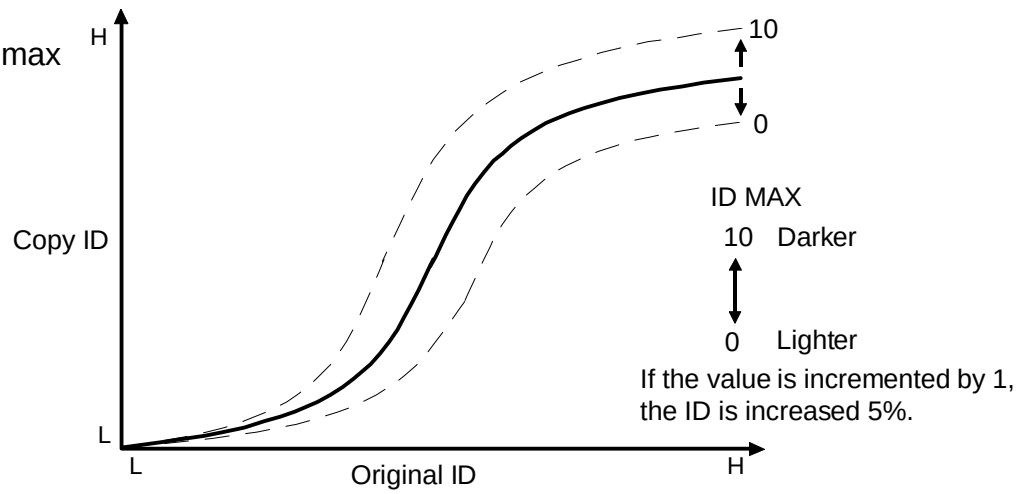

Fig. 3

This mode is used to adjust the total image density level as shown in the figure 3.

This adjustment should be done when replacing the OPC drum, or the specified ID (Level 10 of the color gradation scale on the C- 4 test chart) cannot be obtained even after performing the process control self check in the SP mode (Page 2-6, No.210). If ID max is adjusted, the High, Low, and Middle ID's should also be adjusted.

b) High ID

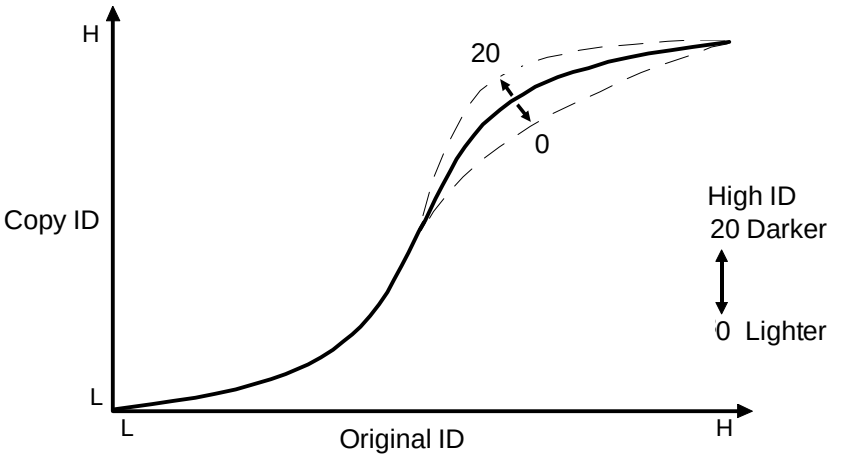

Fig. 4

The High ID mode should be used to adjust the image density between Level 6 and Level 9 of the color gradation scale on the C-4 test chart (figure 4).

c) Low ID

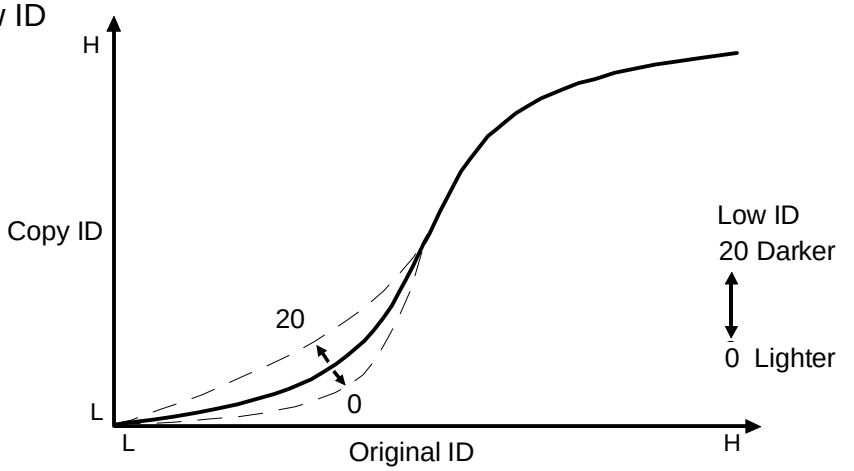

Fig. 5

The Low ID mode should be used to adjust the image density between Level 2 and Level 5 of the color gradation scale on the C-4 test chart (figure 5).

d) Middle ID

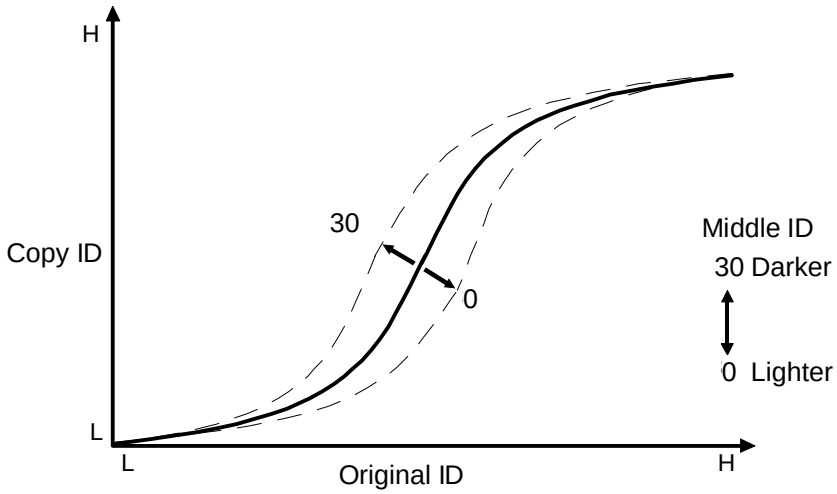

The Middle ID mode should be used to adjust the image density between Level 3 and Level 7 of the color gradation scale on the C-4 test chart (figure 6).

(2) Image Density

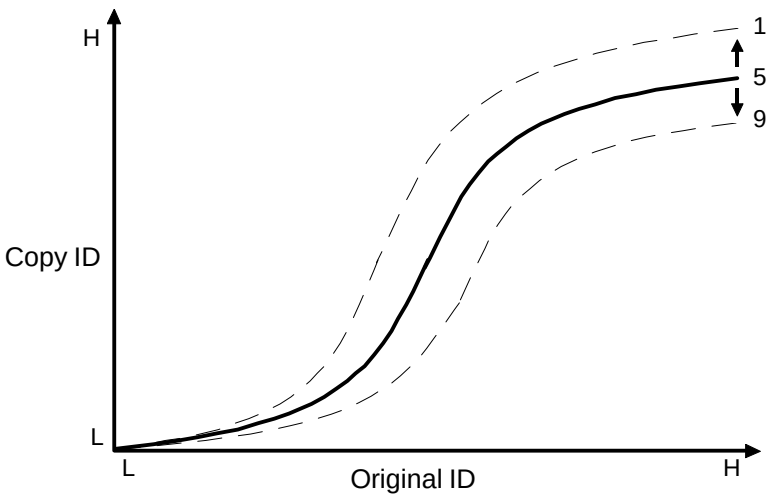

Image density can be adjusted by the Manual Image Density setting in the touch panel display. There are 9 levels of image density.

(3) Contrast

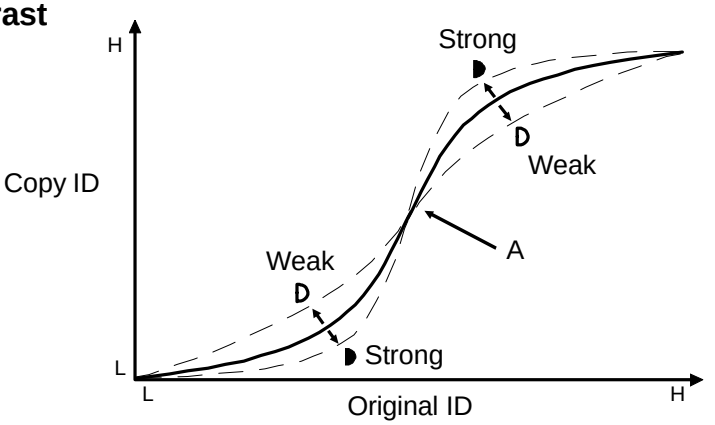

Contrast between light parts and dark parts of the image can be adjusted over 9 levels by the Contrast setting of Image Adjustment in the touch panel display. The slope of the line in the graph changes, but stays centered around point "A".

(4) Color Balance

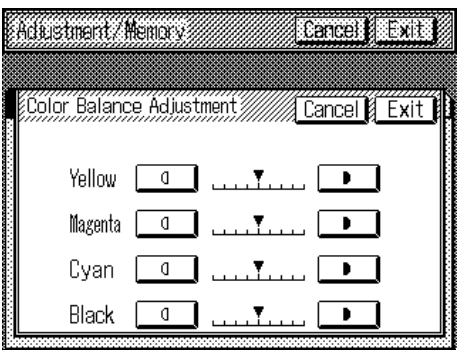

Image density control changes every color density setting at the same time. But each color density setting can be changed independently by the Color Balance Adjustment of Image Adjustment in the touch panel display.

(5) Pastel

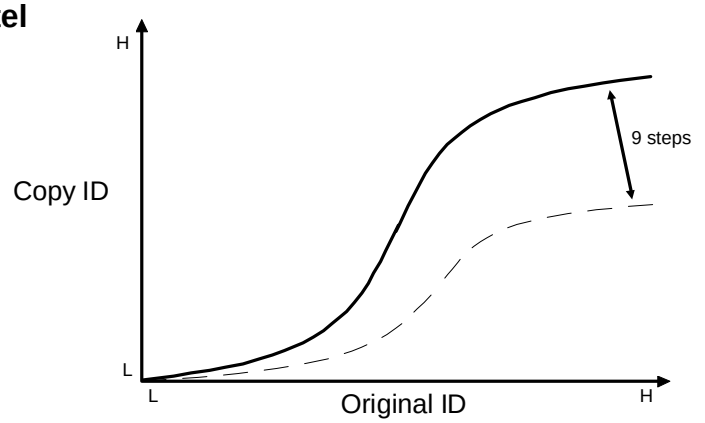

This function can be used to decrease the copy density more than by using the image density control. The copies are made in pastel tones.

4.7.11 Gradation Treatment

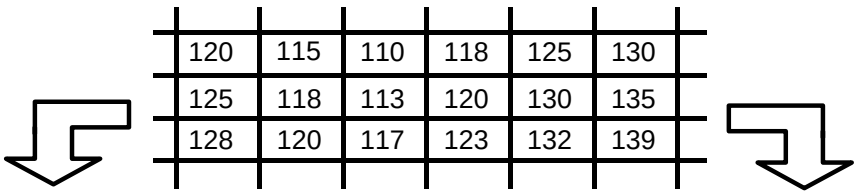

<Letter Mode>

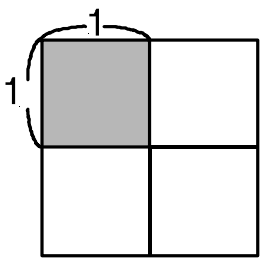

120	115	110	118	125	130
125	118	113	120	130	135
128	120	117	123	132	139

<Photo Mode>

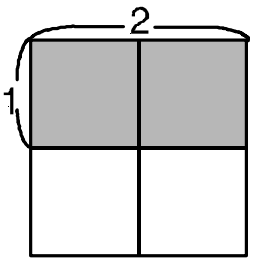

235	0	228	0	255	0
243	0	233	0	255	10
248	0	240	0	255	16

On this model, the following gradation treatment is applied to improve the image quality:

Letter mode and letter parts in Auto L/P: 1 x 1 dot
Photo mode and photo parts in Auto L/P: 2 x 1 dot (Main x Sub)

1 x 1 dot processing for the letter mode attaches importance to the resolution, while 2 x 1 dot dither processing for the photo mode attaches importance to the gradation.

Each dot (pixel) has a video signal level between 0 and 255. In 2 x 1 dither processing, the levels of 2 dots are summed up and the total level is written (exposed by the laser beam) at the first dot. If the total level exceeds 255, the remainder is written at the second dot. Therefore, if you look at the photo parts of the copy with a scope, you can recognize the alternating lines in the main scan direction.

1 x 1 dot processing corresponds to "Full Dot Pattern" and 2 x 1 dot dither processing corresponds to "1 Dot Sub Scan Lines" of the test patterns (SP mode, Page 2-3, No.205).

4.7.12 Video Controller

The video controller has the following functions:

(1) It produces the final video signal data to be sent to the LD unit.

(2) It controls the writing timing from the IPU board, corresponding to the synchronizing signal from the synchronizing detector board.

(3) It decides the start timing of main scan writing. This corresponds to side-to-side registration.

(4) It changes the clock frequency of the Y/M/C/Bk video signals from 14.318 MHz to 18.6 MHz for LD writing.

(5) It sends a start signal for the transfer belt in order to align the LD writing position with the image position on the transfer belt.

(6) It sums up the LD output levels to calculate the image area integration data. (This calculation is done by sampling one dot out of every three dots.) The data is sent to the main control board to be used for toner supply control.

(7) It outputs the video data when printing the test patterns and the gray scales.

4.7.13 Area Data Processing

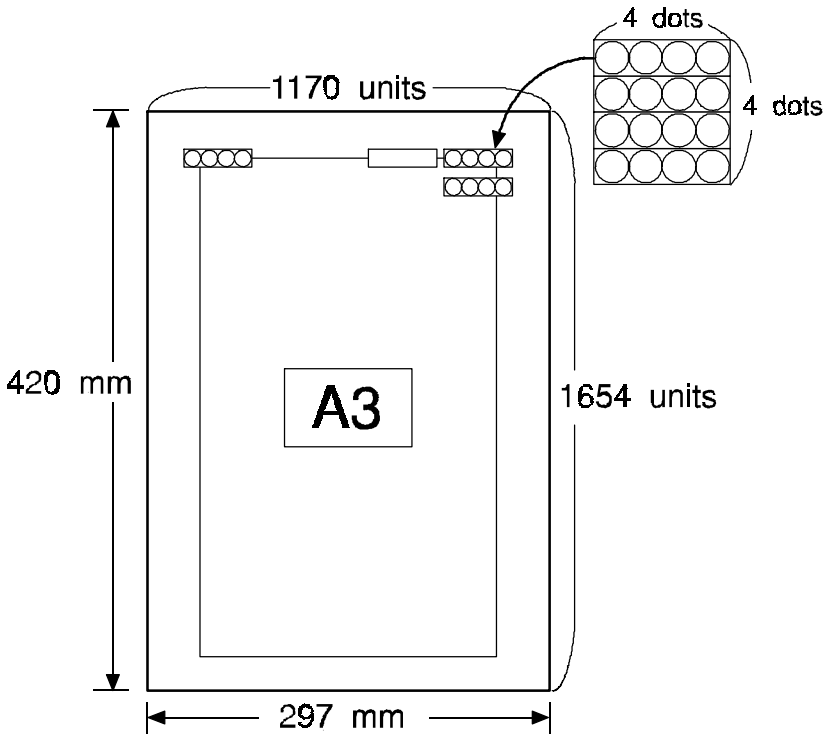

When using the display editor, the scanned image is stored in the Area block (see section 4.5). The Area block memory size is 2 M-bit and it can hold an entire A3 image. One unit of Area block memory corresponds to a 4 x 4 dot section of the original image.

For this reason, the screen pointer of the display editor covers a 4 x 4 dot area of the original, so users must allow for a tolerance of about 0.25 mm (0.01") between the editor and actual images.

Also, logging data text is processed in the Area block so that the resolution for data text is much lower. The Area block has fonts to speed up the output.

5. LASER EXPOSURE

5.1 OVERVIEW

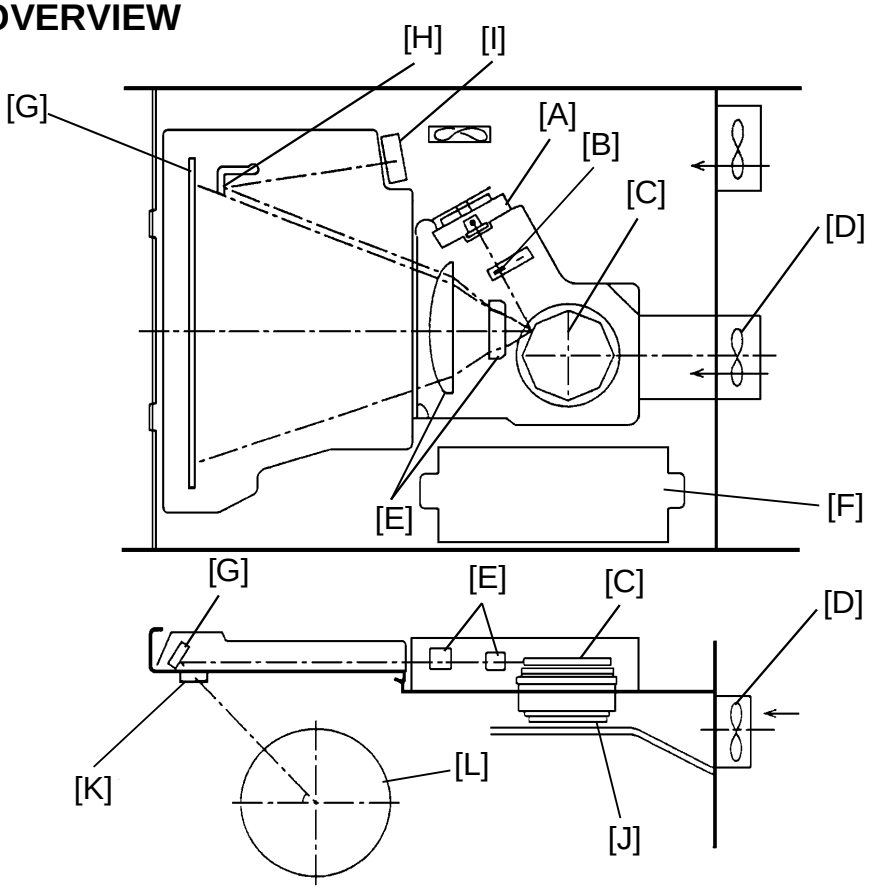

A: Laser Diode Unit
B: Cylindrical Lens
C: Polygon Mirror
D: Polygon Motor Cooling Fan
E: fθ Lenses
F: Polygon Motor Drive Board
G: Drum Mirror
H: Synchronizing Mirror
I: Laser Synchronizing Detector Board
J: Polygon Motor
K: Toner Shield Glass
L: OPC Drum

This machine uses a laser diode to produce electrostatic images on an OPC (organic photoconductor) drum [L]. The laser diode unit [A] converts image data from the IPU board into laser pulses, and the optical components direct these pulses to the OPC drum.

To produce a high quality copy image, there are 256 gradations for the laser pulses, controlled through power modulation and pulse width modulation.

Exposure of the drum by the laser beam creates the latent image. The laser beam makes the main scan while drum rotation controls the sub scan.

5.2 OPTICAL PATH

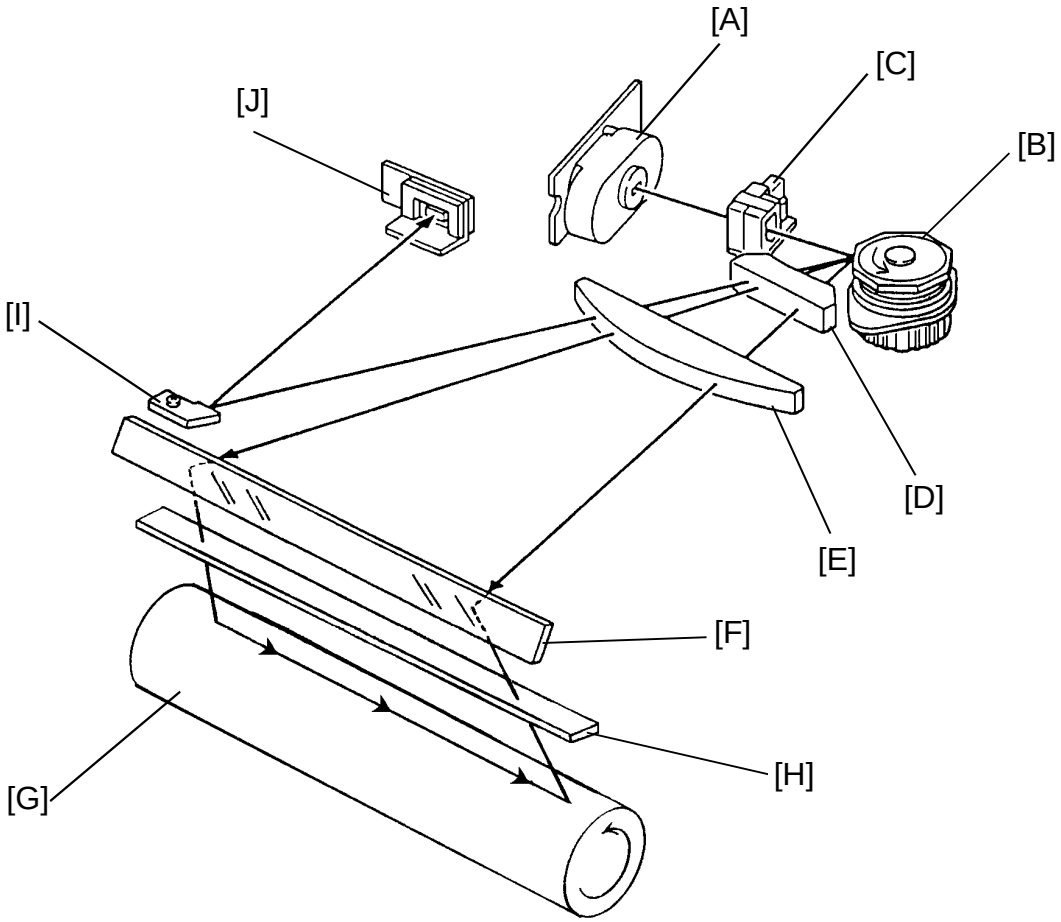

The output path from the laser diode to the OPC drum is shown above.

The LD unit [A] outputs the laser beam to the polygon mirror [B] through the cylindrical lens [C].

The polygon mirror reflects a full main scan line with a single surface of the mirror. The laser beam goes through the 1st fΘ lens [D] and 2nd fΘ lens [E]. The drum mirror [F] reflects the laser beam to the drum [G] through the toner shield glass [H].

To determine the main scan starting position, the laser beam is reflected from the synchronizing mirror [I] to the laser synchronizing detector board [J].

5.2.1 Laser Diode Unit

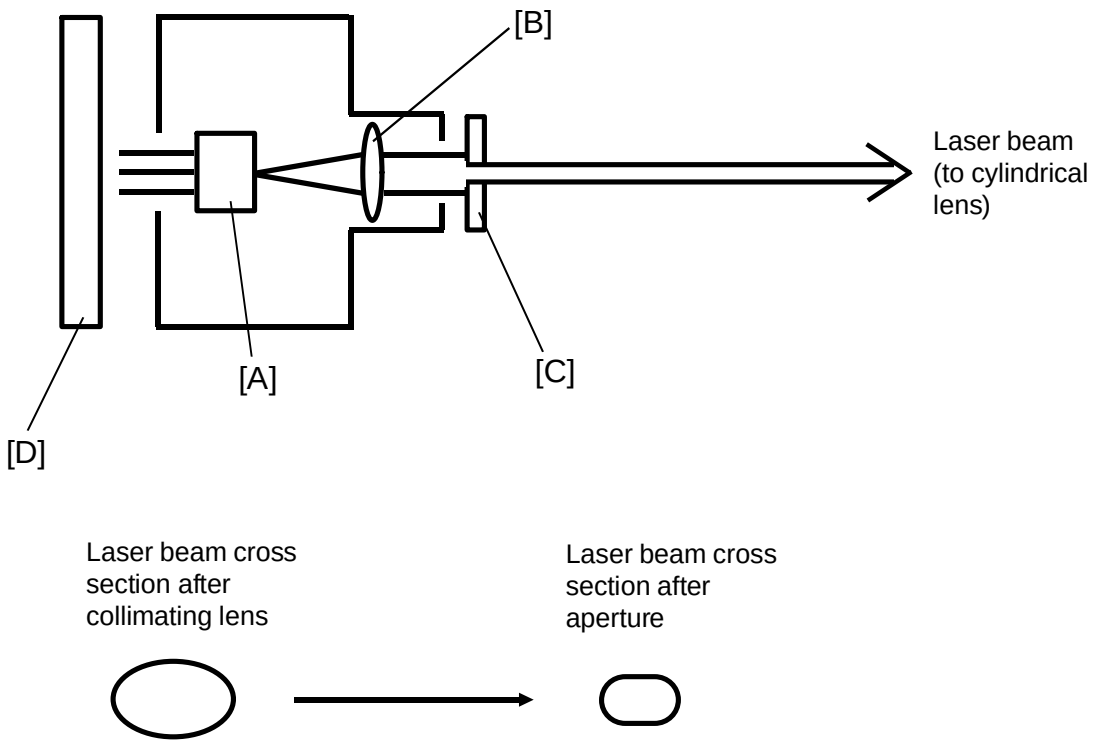

The laser diode unit consists of the laser diode [A], collimating lens [B], aperture [C], and LD drive board [D].

The LD drive board excites the laser diode, causing it to radiate coherent light at 780 nm with about 10 mW power.

The collimating lens forms the radiating beams into a parallel beam.

After the collimating lens, the aperture alters the beam, giving it a smaller cross-section, as shown above.

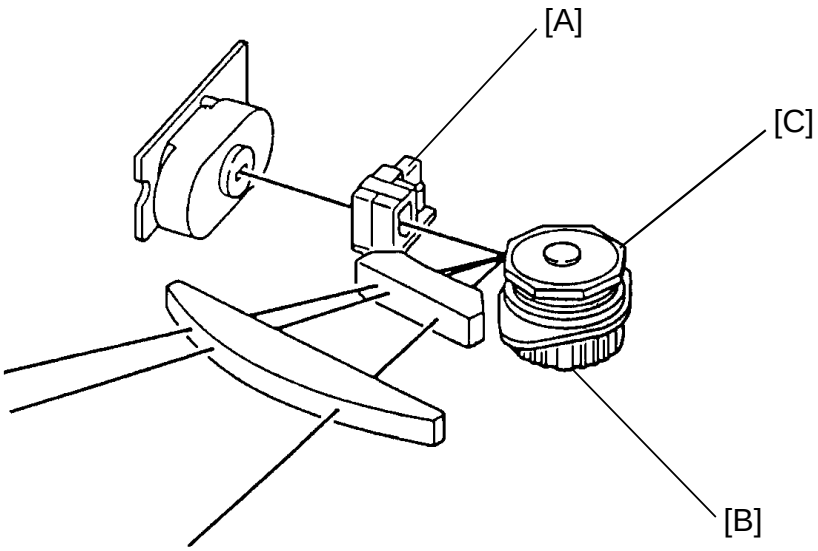

5.2.2 Cylindrical Lens

The laser beam is focused by the cylindrical lens [A], and sent to the polygon mirror.

5.2.3 Polygon Mirror

The polygon mirror assembly consists of the polygon motor [B] and the polygon mirror itself [C].

As the mirror rotates, it reflects the laser beam across the OPC drum, via the fΘ lens and the drum mirror. One main scan line is made by the beam reflected from one face of the polygon mirror.

The mirror is precisely ground to enable high reflectivity and to prevent pixel (picture element) misalignment on the drum in both the main scan and sub scan directions.

The polygon mirror motor rotates at 21,260 rpm. One rotation corresponds to eight main scans.

5.2.4 F-Theta Lenses

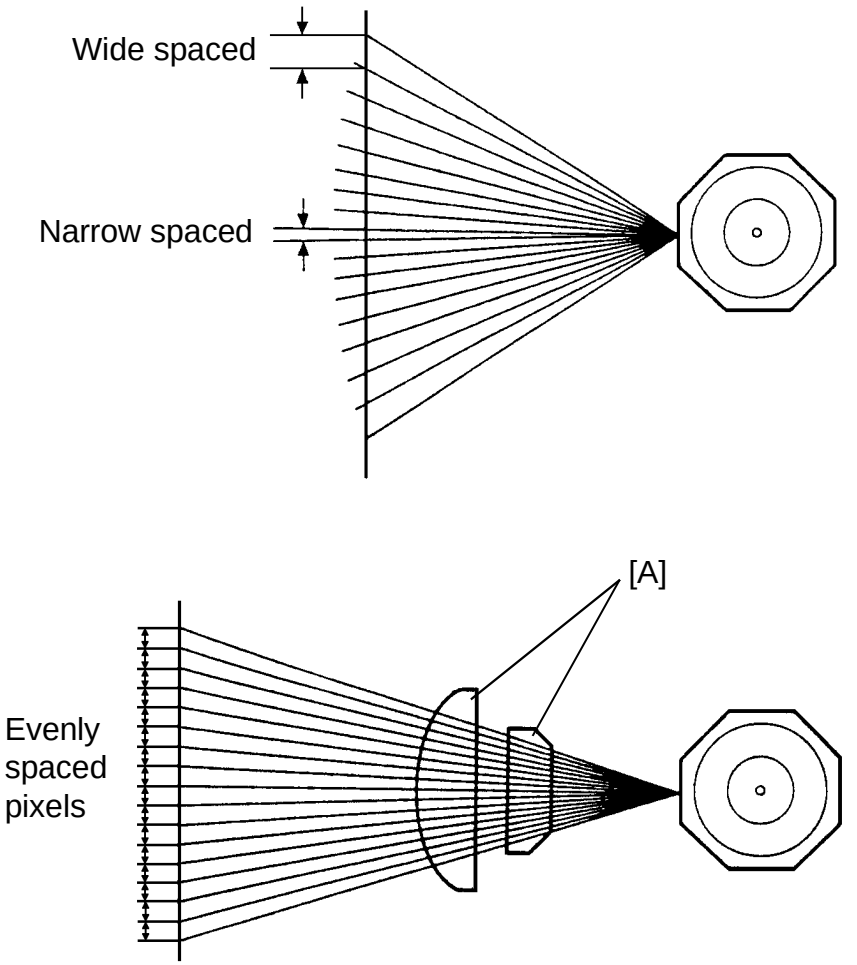

The angles between pixels are equal. However, if the beam were to go directly to the drum as shown in the upper illustration, the spacing between pixels would differ according to the angle of the beam. The pixels near the end of the drum would be further apart than those near the middle of the drum. The pixels would also be slightly thicker toward the ends of the drum than in the middle.

The fΘ lenses [A] correct for this by deflecting the beam slightly inward to insure uniform picture element spacing and diameter. The fΘ lenses also correct for irregularities in the polygon mirror face, focusing irregular beams onto the correct part of the drum.

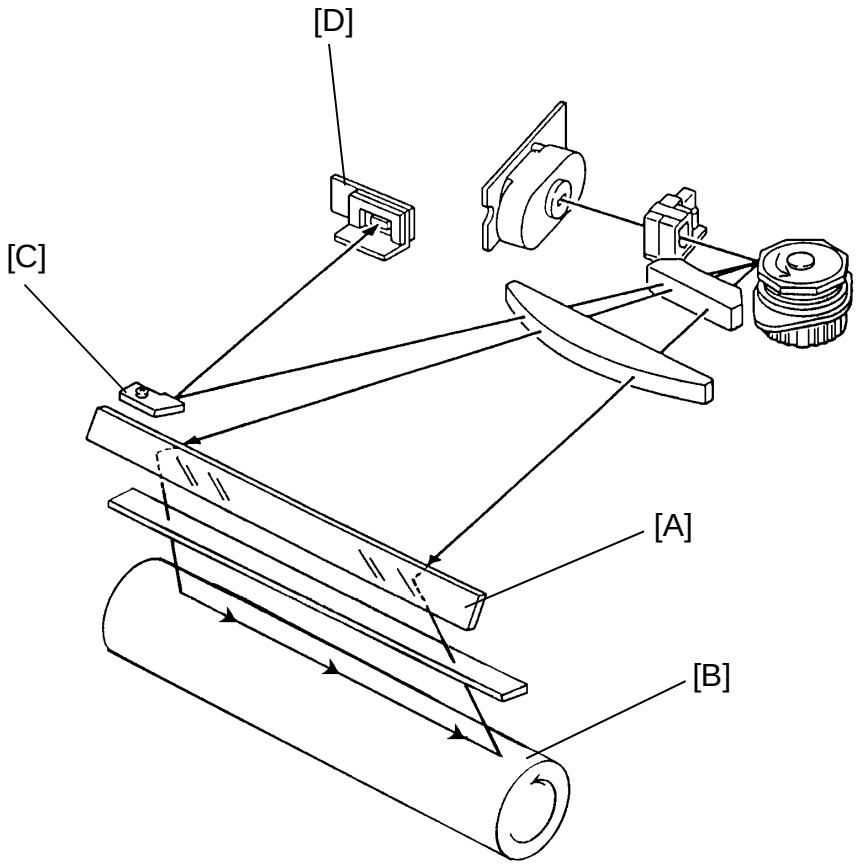

5.2.5 Drum Mirror

The drum mirror [A] reflects the corrected laser beam to the drum [B].

5.2.6 Laser Synchronizing Mirror and Detector Board

At the start of each scan line, the synchronizing mirror [C] reflects the laser beam to the laser synchronizing detector board [D] as shown above. Activation of this detector signals the start of main scan writing by the laser beam.

5.3 LASER EXPOSURE CONTROL

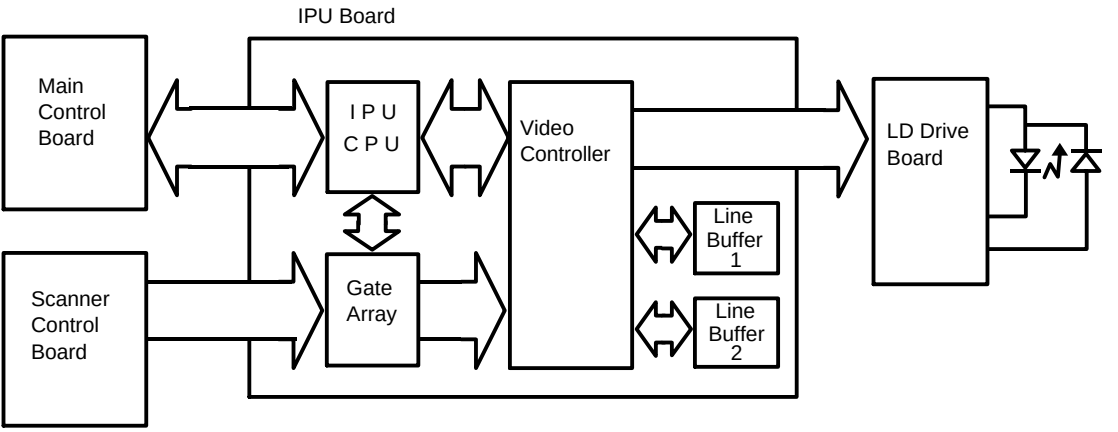

The IPU-CPU in the IPU board communicates with the main control board through serial data transmission.

The image data scanned from an original via the CCD board is processed in the scanner control board. Then the processed image data is sent to the gate array in the IPU board. The gate array sends the 8 bit video data to the video controller. The video controller holds it in one of two line buffers (line buffer 1 or line buffer 2). The two line buffers are used alternately and hold one scan line of video data each.

When it is time for the data to be written to the drum, the gate array sends the 8 bit video data from the line buffer to the LD drive board.

The IPU-CPU controls the writing timing of the laser beam to the drum for both the main and sub scans.

5.4 GRADATION CONTROL

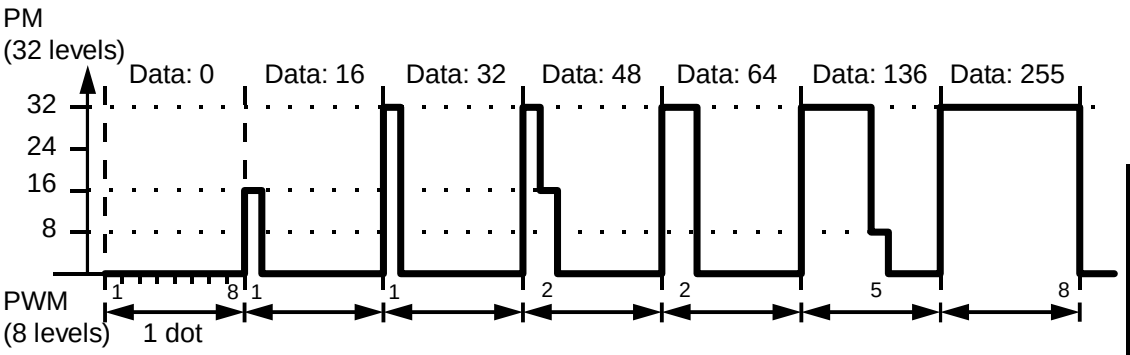

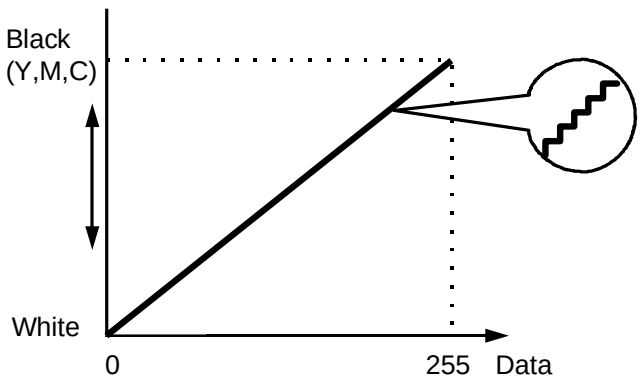

To make the latent image, the laser beam exposes the image area of the drum surface. When the laser beam exposes the drum, the longer it is on and the stronger its intensity is, the darker the developed image becomes.

For one dot, the laser on time is controlled by pulse width modulation (PWM). The laser on/off timing is controlled by a pulse signal. Modulating (changing) the width of the pulse makes the on time of the laser longer or shorter. There are eight levels, meaning eight different laser on times for each dot.

While the laser is on to make one dot, the intensity of the laser is controlled by power modulation (PM). The laser's intensity is controlled by the amount of current sent to the laser diode. Modulating the power makes the laser brighter or dimmer. There are 32 power levels, or laser intensity levels, for each PWM level.

The power is modulated ONLY at the end of the on/off cycle. If the PWM level is 2, the laser is on for 2/8 of a cycle. It will be at full power for 1/8 of a cycle and then the power will modulated to the required level for 1/8. If the PWM level is 5, the laser is at full power for 4/8 of a cycle, and then it will be modulated for 1/8. If the PWM level is 1, the laser is not at full power, and is modulated for 1/8 of a cycle. (See graph.)

By using the 8 PWM levels through the PWM IC and the 32 PM levels through the current drive IC on the LD drive board, the latent image can have 256 (= 8 x 32 = 2^8) gradations. These 256 gradations can be described by the 8 bit video data, data 0 to data 255 as shown above.

Since each color (Y, M, C) can have 256 gradations, the theoretical color gradations reproduced by this copier is as follows:

Y M C

256 x 256 x 256 = 16,777,216

2^8 x 2^8 x 2^8 = 2^{24}

5.5 AUTO POWER CONTROL (APC)

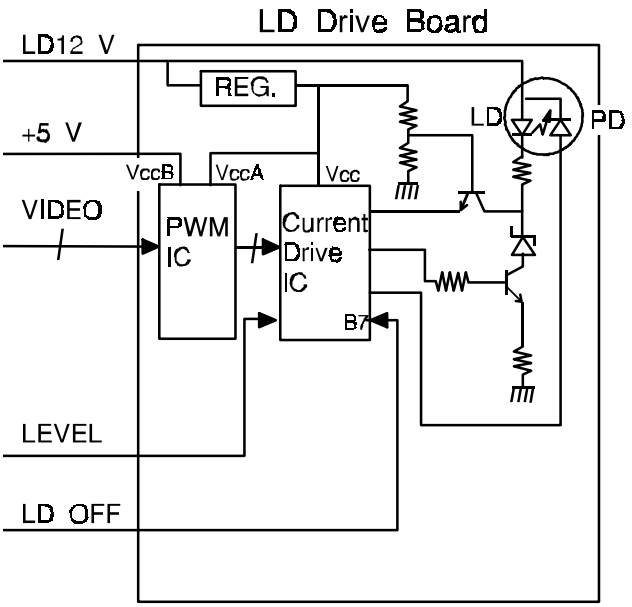

Even if a constant electric current is applied to the laser diode, the intensity of the output light changes with the temperature. The intensity of the output decreases as the temperature increases.

In order to keep the output level constant, the output light intensity is monitored through a photo diode enclosed in the laser diode. The photo diode passes an electrical current proportionally according to the light intensity and regardless of the temperature change.

Whenever the main switch is turned on, the current drive IC in the LD drive board excites the laser diode with at full power (32nd PM level) and stores the current data of the photo diode as a reference in the IC. The current drive IC monitors the current passing the photo diode. Then it increases or decreases the current to the laser diode as necessary, comparing with the reference current data. Such auto power control is done in real time while exciting the laser diode.

5.6 LASER SYNCHRONIZING DETECTOR

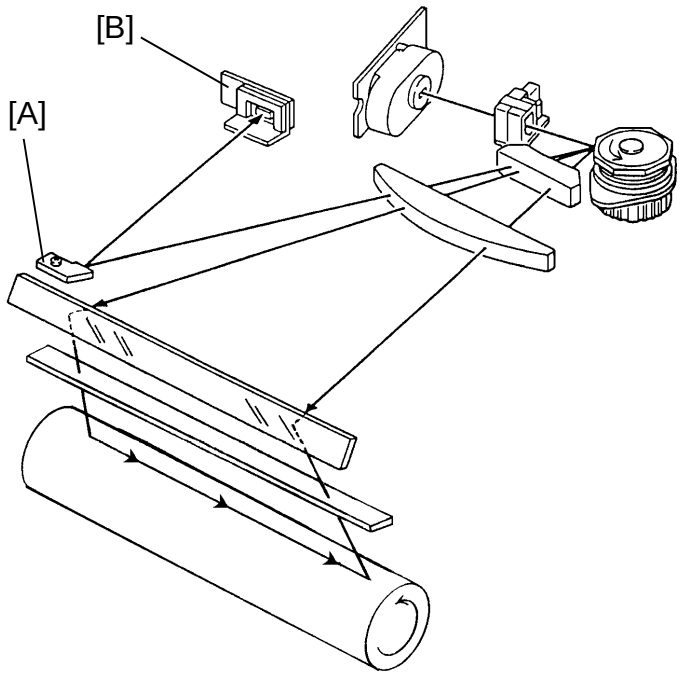

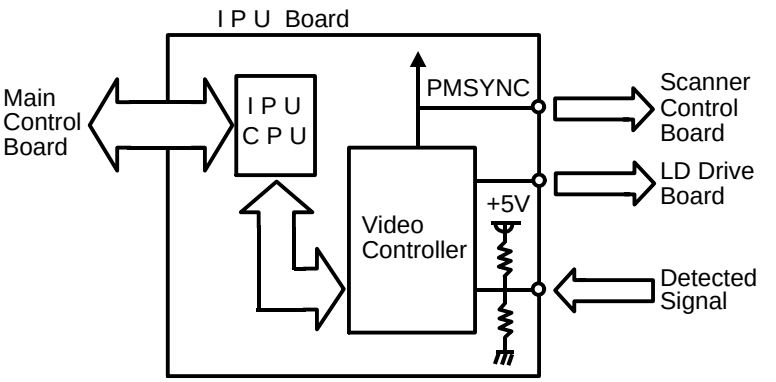

The start of each scan line is controlled as follows:

The synchronizing mirror [A] reflects the laser beam to the synchronizing detector board [B]. The detector board has an IC with a photo diode. When the laser beam reaches the photo diode, a synchronizing signal is sent to the video controller on the IPU board. Then the video controller signals the start of main scan writing by the laser beam.

At the same time the video controller also outputs a PMSYNC signal which is used to control the operation of the IPU board and scanner control board.

5.7 LD SWITCH

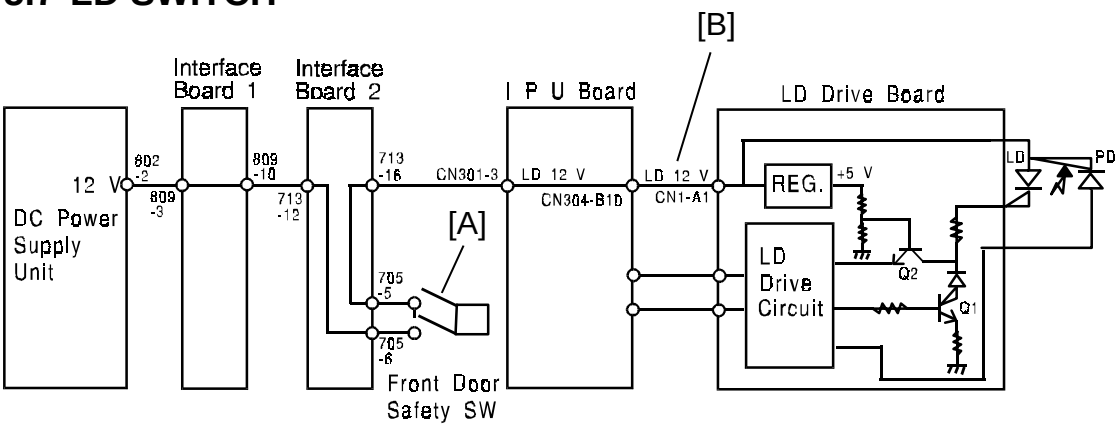

To ensure that the laser beam does not inadvertently expose the drum at servicing, there are two LD switches located at the front door. These two switches [A] are installed in series on the LD12 V line coming from the dc power supply unit through interface boards 1 and 2.

When a front door is opened, the switches cut the power to CN301-3 (LD12 V) of the IPU board. Then, the DC 12 volts (LD12 V) for LD power [B] cannot be supplied to the LD drive board.

6. DEVELOPMENT

6.1 OVERVIEW

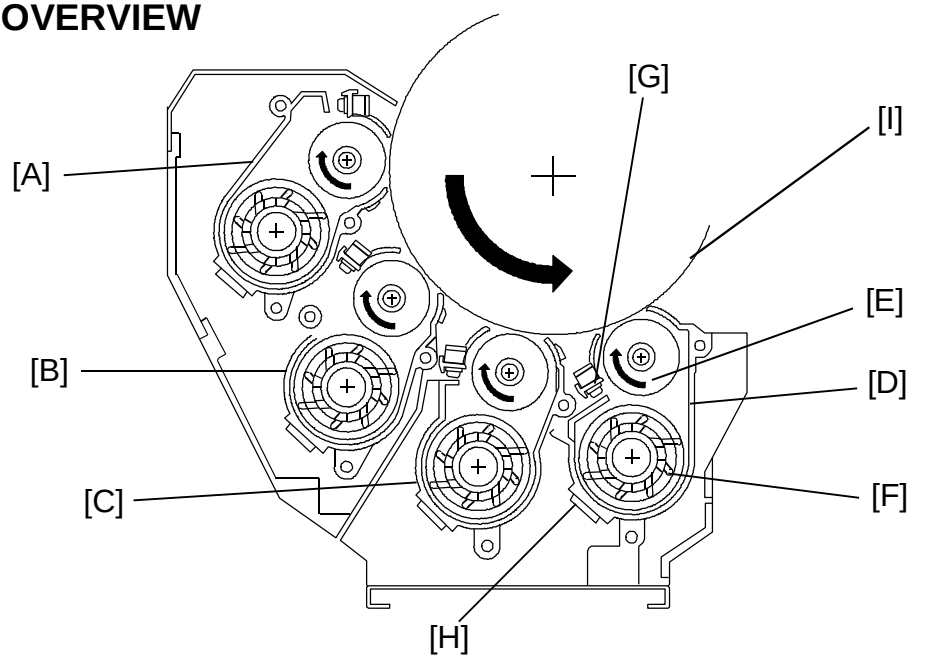

There are four sections in the development unit. From the left they are the black development section [A], the cyan development section [B], the magenta development section [C] and the yellow development section [D]. Each development section has a sleeve roller [E], dual mixing roller [F], doctor plate [G] and toner density sensor [H].

The development unit is separated in two parts. The black and cyan development unit make up one part, the magenta and yellow development unit make up the other part.

The color development drive motor drives the dual mixing rollers in the cyan, magenta, and yellow development sections. The black development drive motor drives those in the black development unit.

The sleeve rollers in each section are driven by independent sleeve motors. When the sleeve turns clockwise, developer is carried to the OPC drum [I]. When the sleeve turns counterclockwise, all the developer left on the sleeve roller surface is returned to the development section.

The developer is trimmed to the desired thickness by the doctor blade, and it is then carried to the OPC drum where the latent image is developed.

Each development section can hold 400g (2 packages) of developer. Developer is supplied and removed by using SP modes.

Black is developed first, then in order, cyan, magenta, and yellow.

6.2 DRIVE MECHANISM

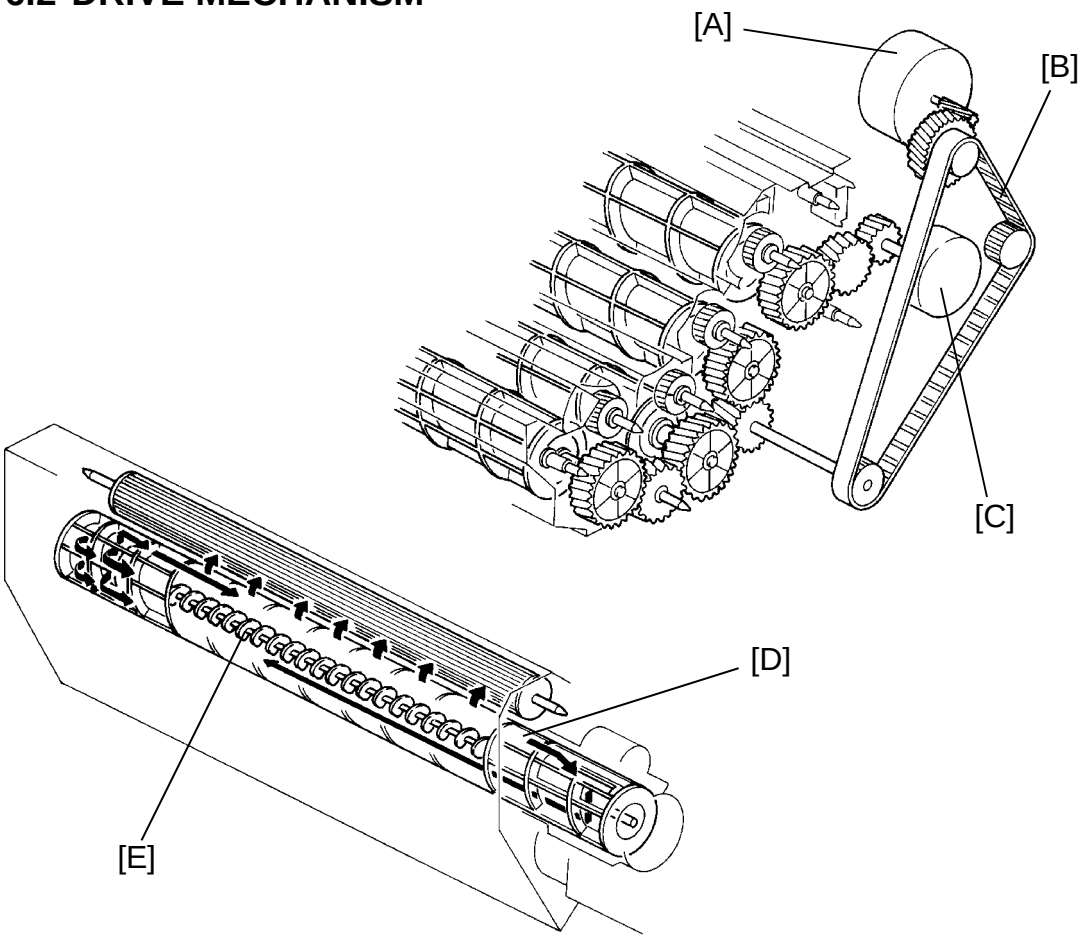

1) Developer mixing

When the color development drive motor [A] turns, C, M, Y development drive gears are driven via a timing belt [B].

The black development drive gear is driven by the black development drive motor [C] independently.

The life of the developer has a direct proportional relationship with its mixing time. The black and color mixing drive sources are separated to let the color developer mixture rest during the black copying process.
This lengthens the life of the developer.

2) Dual mixing

As the dual mixing roller turns, the outer paddle [D] carries developer to the front and the inner auger [E] carries developer to the rear.

6.3 DEVELOPER SUPPLY AND RELEASE

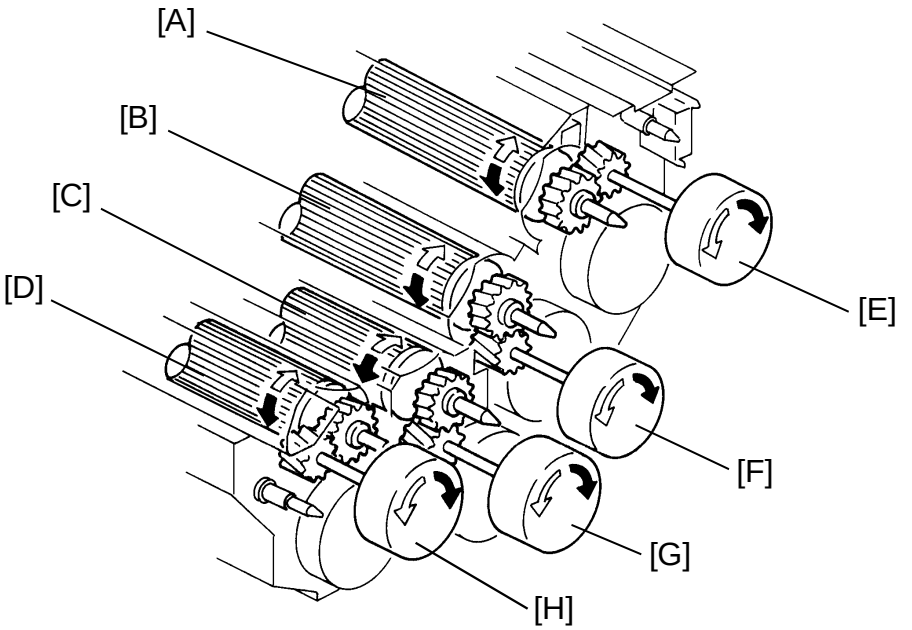

The development sleeve rollers are driven separately by sleeve motors, not by the development drive motors.

[A]:	Black sleeve	[E]:	Black sleeve motor
[B]:	Cyan sleeve	[F]:	Cyan sleeve motor
[C]:	Magenta sleeve	[G]:	Magenta sleeve motor
[D]:	Yellow sleeve	[H]:	Yellow sleeve motor

When the sleeve motors turn in the direction of the black arrows, developer is carried up to the OPC drum. When the motors turn in the direction of the white arrows, developer is returned to the development unit. Only one color development section at a time can send developer to its development sleeve roller. The developer inside the other color sections is not carried up to the sleeve rollers. Since the black developer brush angle is more horizontal than that of the other brushes, it is rather difficult to carry the black developer back to the development section.
To ensure that the black developer returns, the reverse rotation speed of the black sleeve roller is 1/4 of the reverse rotation speed of the color sleeve rollers.

The rotation speeds of sleeve rollers are as follows:

While developing the image (all colors) : 172 rpm

While returning black developer: 43 rpm

While returning color developer: 172 rpm

6.4 DEVELOPMENT BIAS

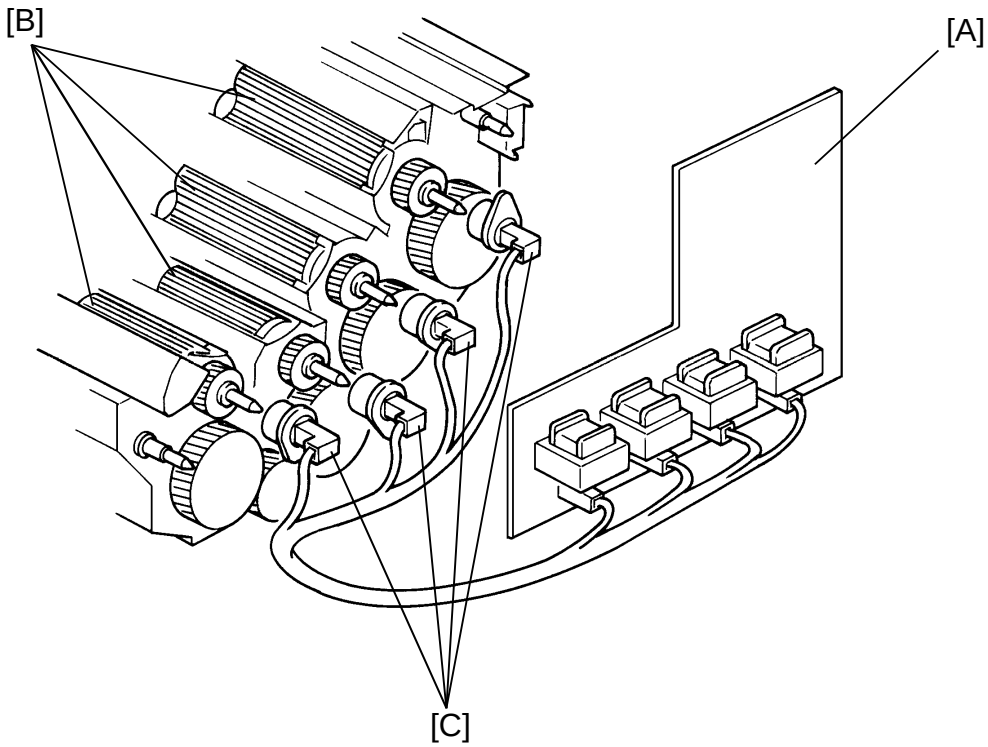

The high voltage supply board-B [A] applies the development bias to each sleeve roller [B] through the receptacles [C] and the development roller shafts. The development bias prevents toner from being attracted to non-image areas on the OPC drum where there is a residual voltage.

Bias voltage is decided during the process control self check. Concerning development bias control, refer to the process control section.

7. TONER TANK

7.1 OVERVIEW

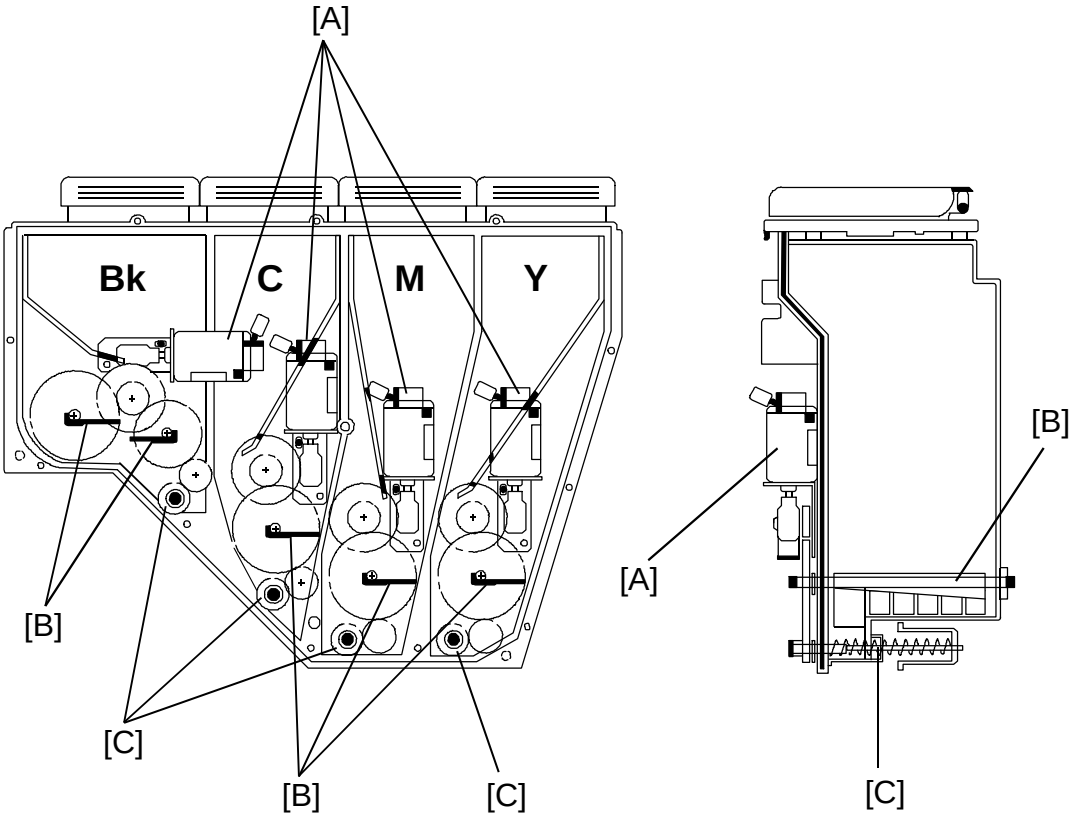

Each color (Bk, C, M and Y) has its own toner tank. The capacity of each tank is at most 1500 cc (Bk), 1350 cc (C), 1400 cc (M, Y). This is about 1.5 times the toner in quantity in new bottles. When the machine CPU sends the toner supply motor [A] on signal based on the toner density sensor output (in each color development section), the toner supply motor of each color toner tank turns on. The toner end condition is also decided based on the toner density sensor output. (For details of toner supply control, refer to the process control section) The toner is agitated by the agitators [B] then transported to the development unit via the transport coils [C].

7.2 TONER TRANSPORTATION AND AGITATION

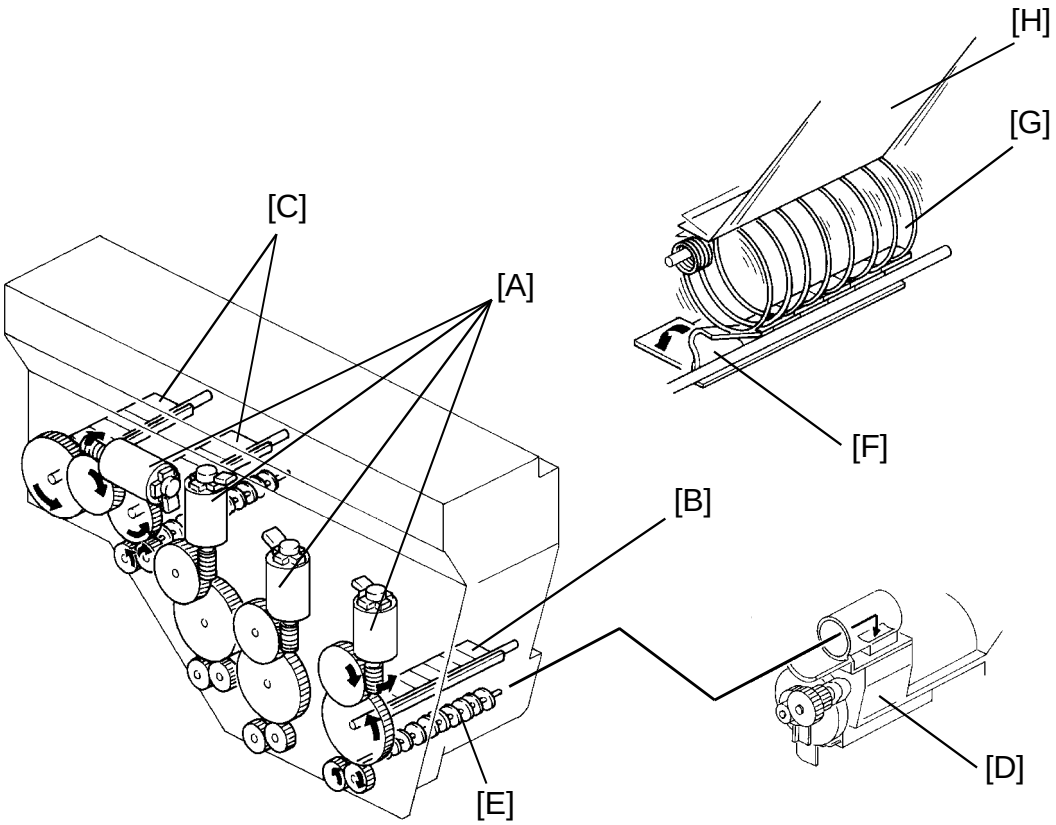

The toner supply motors [A] turn on when the main switch is turned on or the machine CPU sends the toner supply signal.

There is an agitator [B] in each C,M and Y toner tank and there are two agitators [C] in the black toner tank because the black toner supply tank is wider than the other color toner tanks.

When the toner supply motors turns on, the agitators start rotating. The rotation of the toner supply motor is also transmitted to the transport coil gear through the agitator gears. The toner is transported to the development unit [D] by the transport coil [E].

In order to prevent the toner agitators from being deformed, the toner supply motor rotates in both directions when the main switch is turned on. During this operation, the toner is not supplied. During the copy cycle, the toner supply motor only rotates forward (black arrow).

The projection [F] on the agitator hits the agitation spring [G] and vibrates it. This vibration supports the toner agitation.

Also, this vibration is transmitted to the contacting vibration plate [H]. The vibration plate prevents the toner from clogging in the upper part of the toner hopper.

7.3 TONER BOTTLE

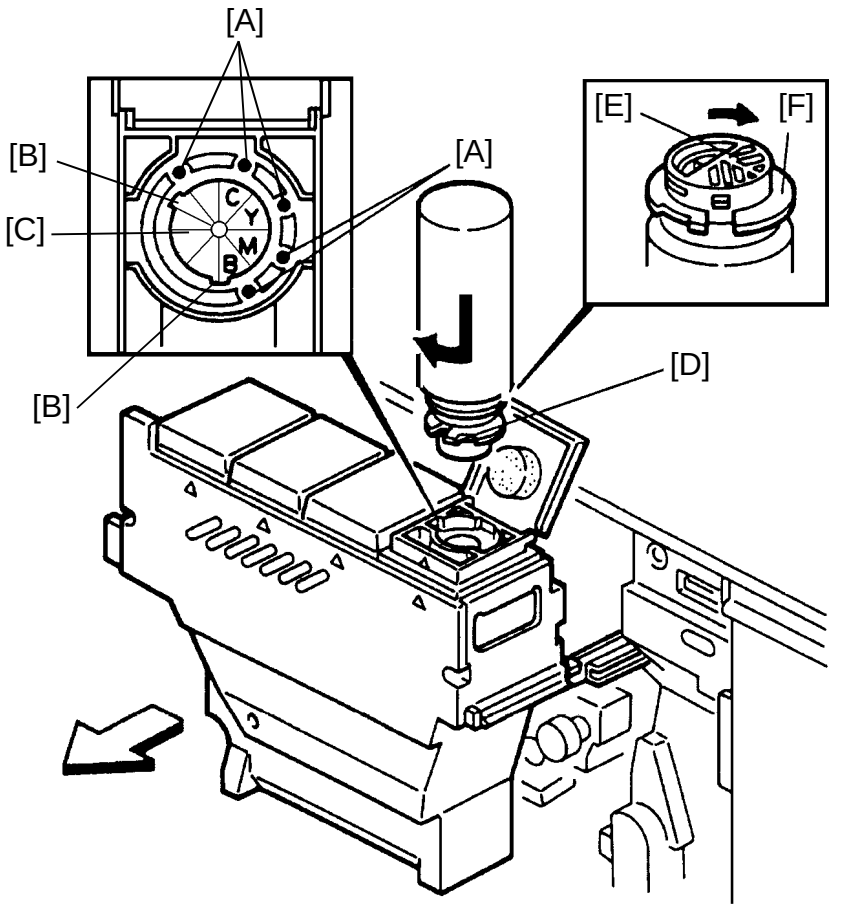

At the top of the toner tank, there is a toner bottle guide which has a positioning pin [A], a notch cut-in [B], and an entrance seal [C].

A position for both the positioning pin and the notch cut-in matches each color to prevent a color bottle from being installed on the wrong tank. When the correct color toner bottle is set to the toner bottle guide, with the tab [D] aligned with the notch, the positioning pin fits into the notch cut-in of the toner bottle. By rotating the bottle 90° clockwise, the inner shutter [E] of the toner bottle is opened as the positioning pin holds the outer shutter [F]. Then the toner inside the bottle is supplied to the tank.

The entrance seal prevents toner from scattering when the toner bottle is being removed. This is necessary because the toner is very fine.

CAUTION: Even though the toner tank capacity exceeds the amount in one bottle, never add more than one bottle, and always wait until the Add toner indicator lights.

8. TRANSFER BELT UNIT

8.1 OVERVIEW

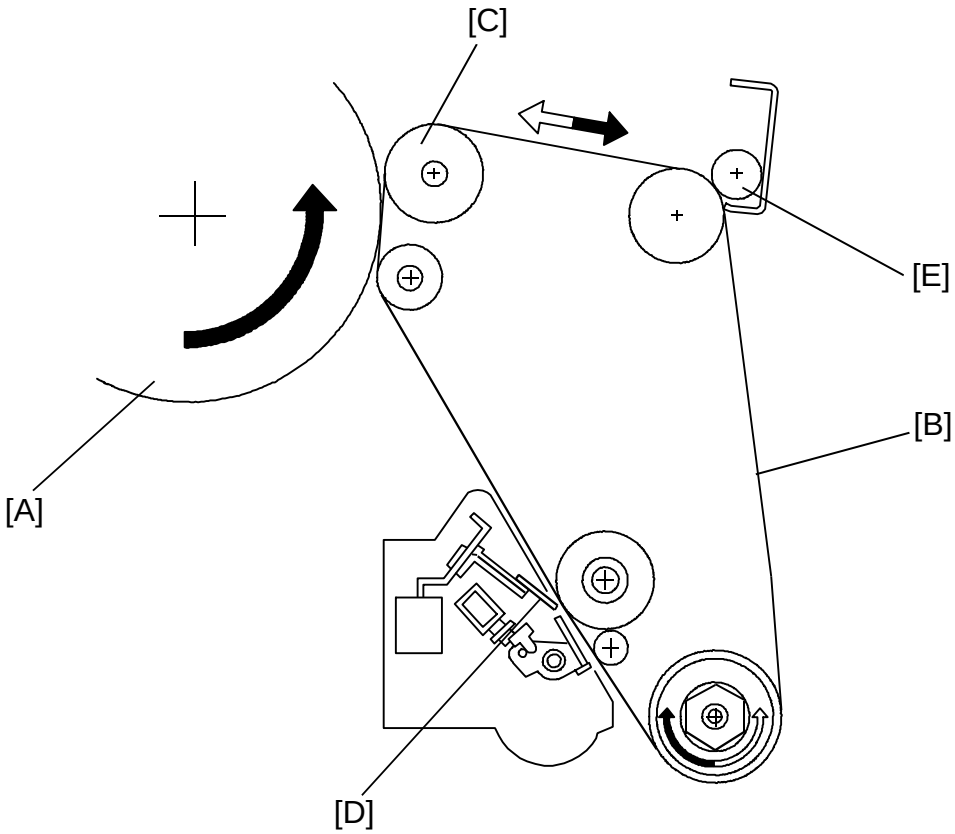

Each single color image developed on the OPC drum [A] is transferred separately on the transfer belt [B]. After each single color image has been transferred to the transfer belt, the full color image is then transferred to the copy paper by the transfer roller. (Refer to the transfer roller section.)

A single color image (Bk, C, M, Y) is transferred in one transfer cycle, so at most four transfer cycles are performed during the full color copy process. They are performed in order: Bk, C, M, Y.

The belt bias roller [C] applies positive bias voltage from the rear side of the transfer belt and attracts the negatively charged toner from the OPC drum onto the transfer belt.

After the copy image is transferred to the copy paper, the remaining toner on the transfer belt is cleaned by the transfer belt cleaning blade [D].

The lubricant brush [E] applies a small amount of lubricant on the surface of the transfer belt to help the cleaning blade remove toner from the transfer belt.

8.2 TRANSFER BELT DRIVE MECHANISM

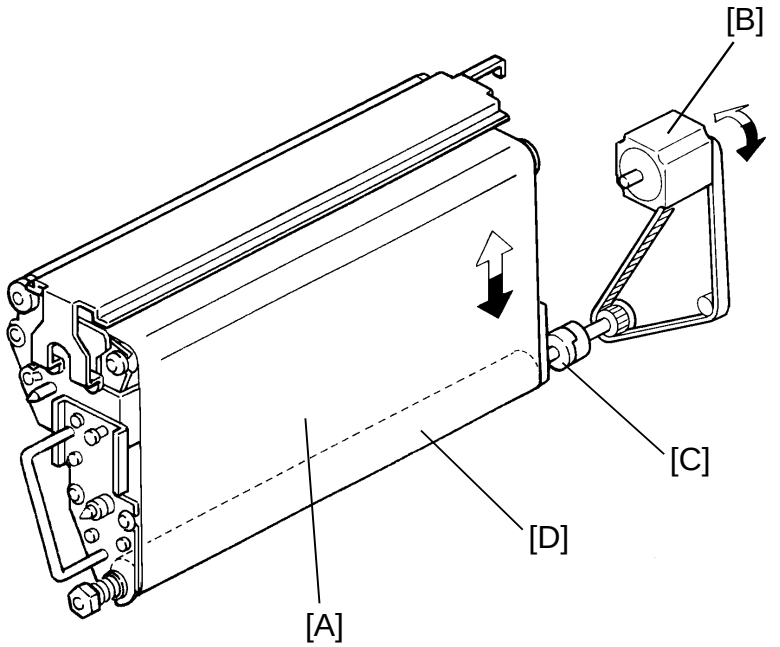

The transfer belt [A] is driven by the transfer belt motor (stepping motor) [B] via a timing belt, coupling gears [C], and drive roller [D]. It rotates both forward (black arrow) and in reverse (white arrow). There are three drive speeds. Normally the transfer belt drive speed is 180 mm/sec. When the transfer belt is driven in reverse for the switch back operation (refer to the next page), the belt drive speed is 1135 mm/sec.

During the image transfer from the transfer belt to the paper, in OHP/thick paper mode, the belt drive speed is 90mm/sec.

8.3 TRANSFER BELT DRIVE CONTROL

8.3.1 Switch Back Operation

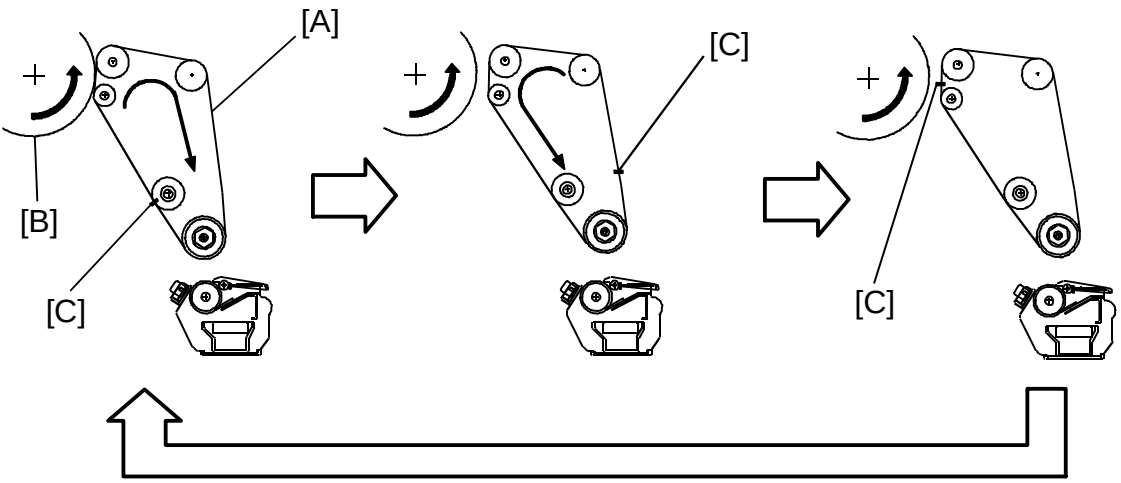

To achieve accurate four single color (Bk, C,M,Y) image registration, after one color image transfer is completed, the transfer belt [A] is separated from the OPC drum [B] and the transfer belt rotates in reverse exactly the same amount as the transfer belt rotated for the single color image transfer just completed. ([C] corresponds to the leading edge of the transferred image)

The returned transfer belt waits there until the leading edge of the next color image on the OPC drum arrive. Then the transfer belt contacts the OPC drum and starts to rotate forward for the next color image transfer.

There are only two transfer belt rotation amounts.

If the image size is letter (sideways) or shorter, the transfer belt rotates the same amount as it would rotate for letter. If the image size is longer than letter, the transfer belt rotates the same amount as it would rotate for double letter.

NOTE: A4 sideways shorter than letter sideways.

This switch back operation is done for all copy modes except 1C (single color) mode.

[Fig. 1]: If the image is letter (sideways) or shorter

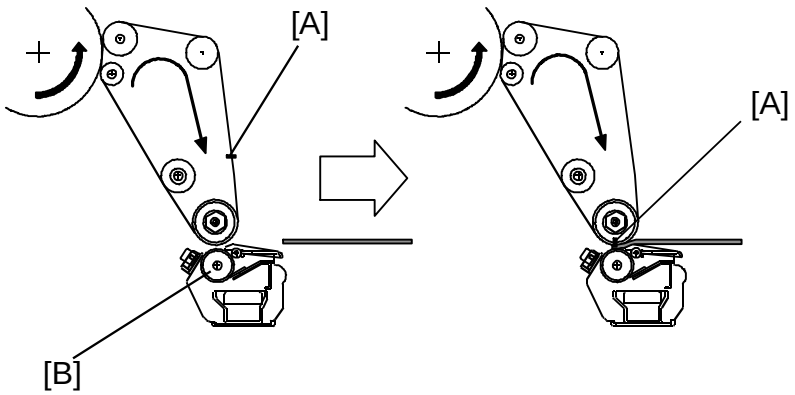

[Fig. 2]: If the image is longer than letter (sideways)

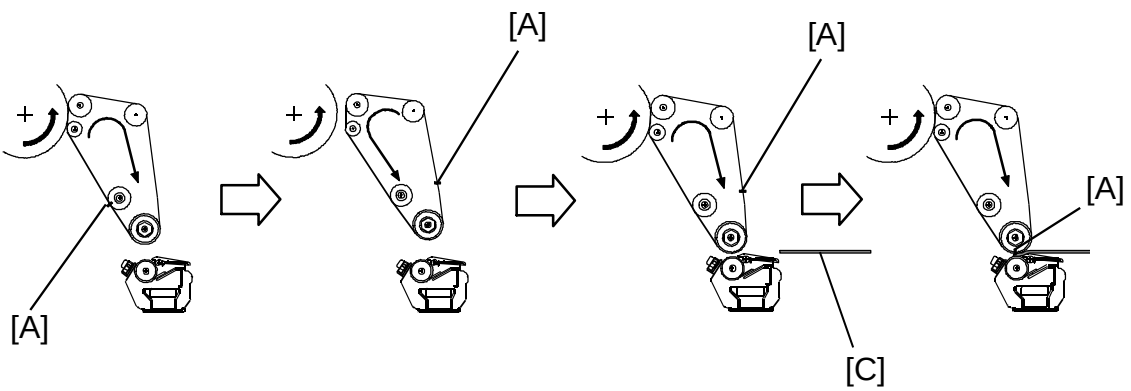

If the image is letter (sideways) or shorter, the leading edge of the image [A] on the transfer belt just after completing the entire transfer process (Bk, C, M, Y) is prior to the transfer roller [B]. In this case, the transfer belt rotates forward to bring the leading edge of the image above the transfer roller [Fig.1].
If the image is longer than letter (sideways), the leading edge of the image on the transfer belt just after completing the transfer process will have already passed the transfer roller. In this case, the transfer belt rotates in reverse to bring the leading edge of the image above the transfer roller. Then, forward rotation starts to transfer the image onto the paper [C]. [Fig.2]

NOTE: A4 (sideways) is shorter than letter sideways.

8.3.2 Idling Rotation

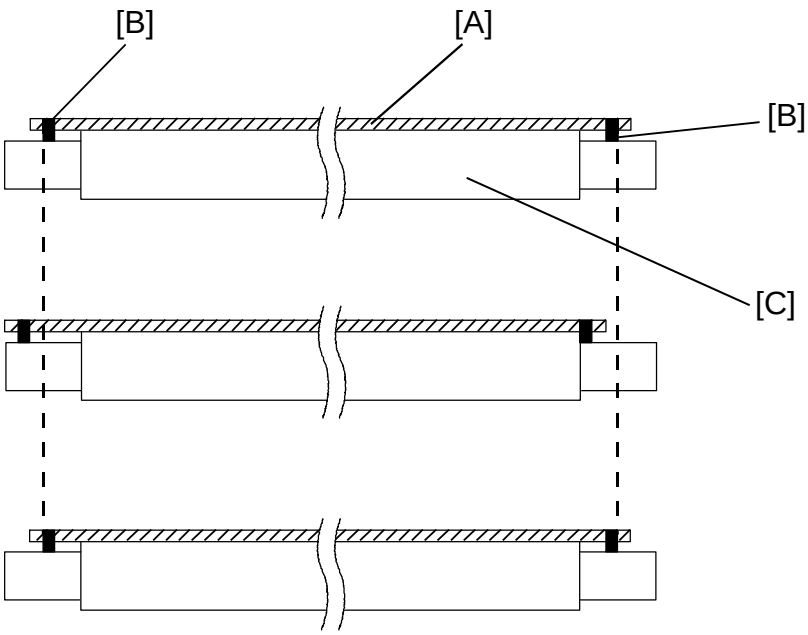

When 1C copies are continuously made, the transfer belt [A] tends to shift to the front or rear because there is no reverse rotation during a continuous 1C copy job.

The belt stopper [B] prevents the transfer belt from being shifted too much. When the belt shifts, the belt stopper touches the edge of the transfer belt drive roller [C] so that it does not shift anymore.

If a full color copy is made under this condition, the transfer belt position returns to the center position during the reverse rotation between the transfer processes. This results in a side-to-side mis-alignment of the color images.

To prevent this in 2C, 3C, 4C modes, before starting the copy process, the transfer belt rotates three times in reverse to position the transfer belt to the center position.

8.4 TRANSFER BELT RELEASE MECHANISM

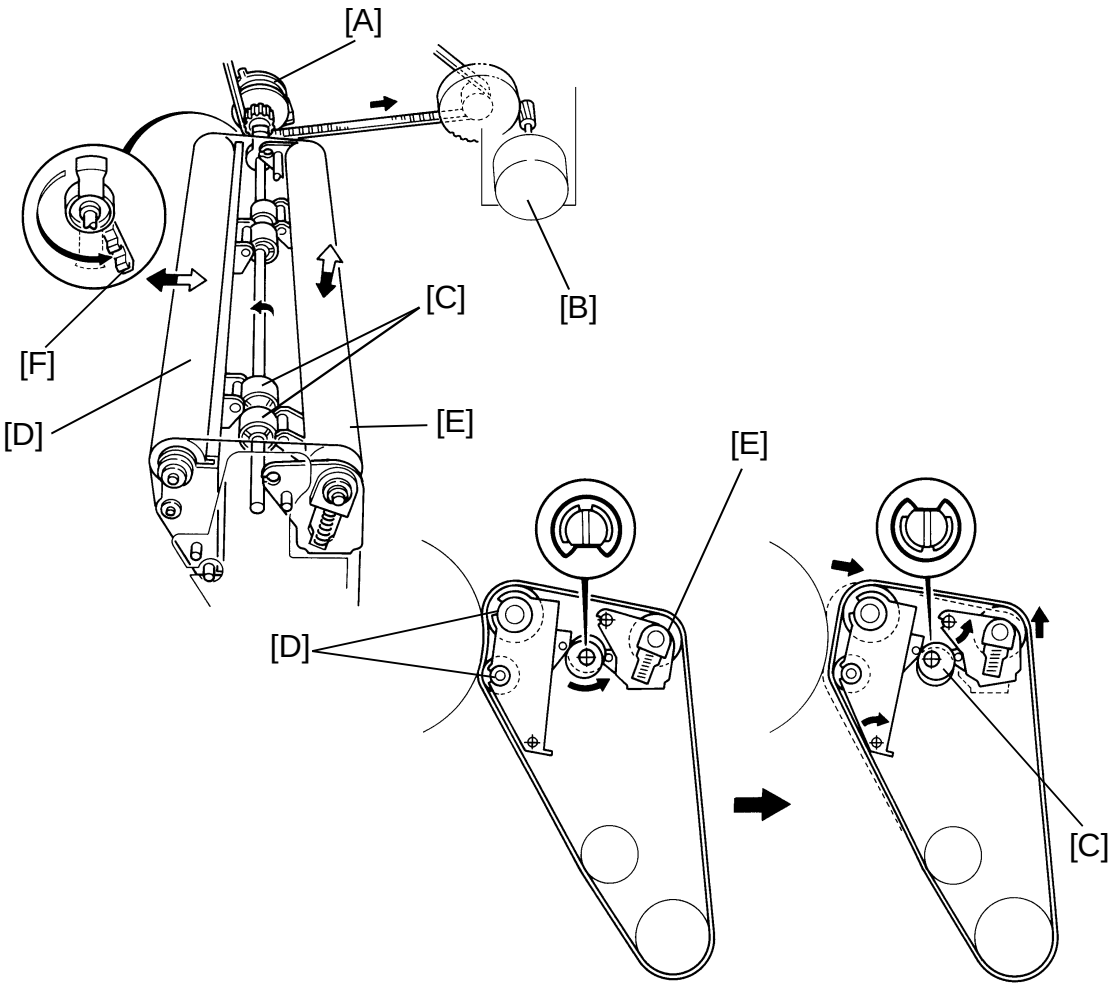

The transfer belt is released from the OPC drum surface when the transfer belt is rotating in reverse. This release and touch operation is controlled by the transfer belt position clutch [A].

When the transfer belt position clutch turns on, the drive from the cleaning motor [B] via the timing belt is transmitted to the cam shaft and the release cam [C] rotates 180 degrees. In this case, the rollers [D] are moved 3mm away from the OPC drum. The transfer belt tension roller [E] is moved outside to keep applying the constant belt tension.

When the transfer belt position clutch turns on again, the release cam rotates another 180 degrees. In this case the bias roller is pressed against the OPC drum (the nip band is approximately 10mm) and the transfer belt tension roller is also pushed inside.

The transfer belt position sensor [F] is actuated when the transfer belt moves away from the drum.

8.5 TRANSFER BELT BIAS

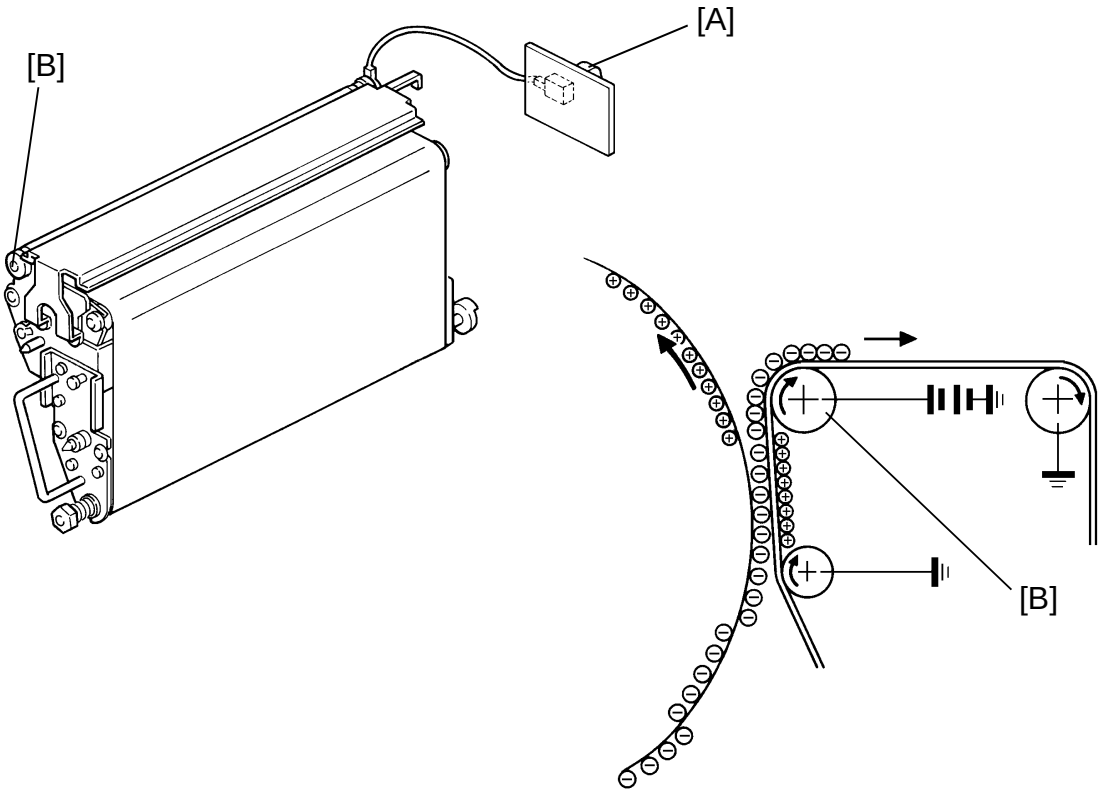

The high voltage supply board - T1/PCC/BR [A] – applies a positive bias voltage to the transfer belt through the belt bias roller [B]. This bias voltage attracts negatively charged toner from the OPC drum onto the transfer belt.

During the second and subsequent image transfer cycles, a positive voltage higher than that used in the previous cycle must be applied to the transfer belt to attract the next color toner from the drum to the transfer belt.

The transfer voltage of each mode is as follows (next page):

<1C (C, M, Y single color) mode>

A humidity sensor is used to compensate the transfer belt bias voltage, (as mentioned in the table below) to maintain constant image quality against changes in the humidity of the surrounding area.
The transfer voltage compensation also depends on paper mode.

		Humidity		
	Paper mode	Low	Middle	High
		Less than 4.3 g/m^3	4.3 ~ 11.3 g/m^3	More than 11.3 g/m^3
Bias voltage	Normal	2000 V	1600 V	1200 V
	Thick	2000 V	2000 V	1200 V
	OHP	2000 V	1200 V	1200 V

- When the humidity is low, the transfer bias is high.

This compensation is necessary because toner will not have sufficient charge to transfer to paper after only one cycle.

<2C ~ 4C modes>

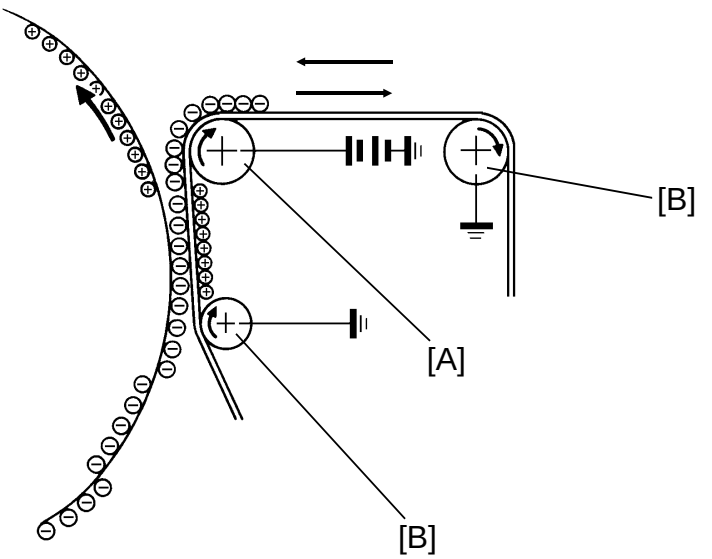

During several transfer cycles, the transfer belt continues to be charged by the bias roller [A] and discharged by rollers [B]. This charges the toner properly and it does not require compensation as for 1C mode.
The bias voltage for each color cycle is as follows regardless the total cycle number.

Copy cycle	1st	2nd	3rd	4th
Bias voltage	1200	1300	1400	1500

8.6 TRANSFER BELT CLEANING

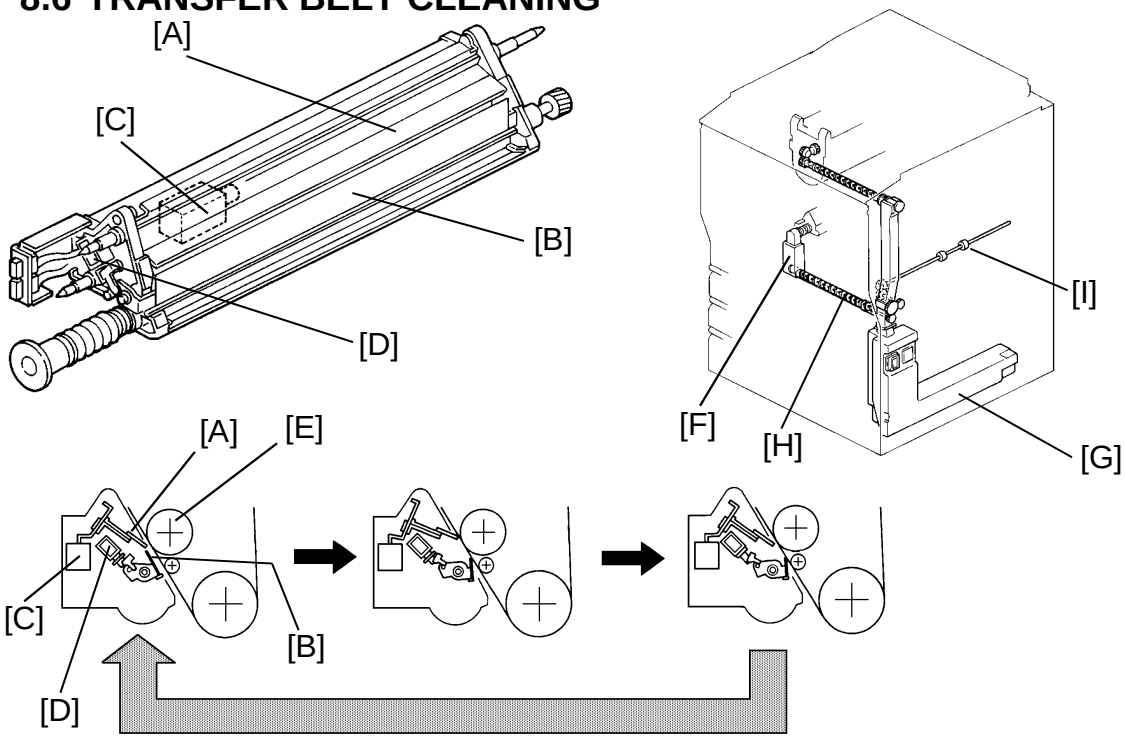

After the image on the transfer belt is transferred to the paper, the remaining toner on the transfer belt is removed by the cleaning blade [A]. The counter blade system is used, like the OPC cleaning section.

The entrance seal [B] prevents the removed toner from falling on the transfer roller unit.

The cleaning blade and the entrance seal are away from the transfer belt during the transfer process. The cleaning blade solenoid [C] and entrance seal solenoid [D] control the touch and release actions as shown. For these two solenoids, the position of the plunger depends on the direction of the current flowing through. When de-energized, the plunger stays where it is and does not return to the previous position. When the plunger of each solenoid is out, the cleaning blade and entrance seal contact the transfer belt.

The cleaning support roller [E] presses the transfer belt from the inside against the cleaning blade to ensure the transfer belt is cleaned properly.

The removed toner is transported from the cleaning unit to the toner collection duct [F] by the toner collection coil in the unit. This coil is driven by the transport motor via a timing belt.

Then the collected toner is transported to the toner collection bottle [G] through the lower toner collection coil [H]. This coil is driven by the drive from the relay roller [I].

8.6.1 Cleaning Mode

The machine performs extra transfer belt cleaning (Cleaning mode) under the following conditions:

- After the last copy job is completed and more than 50 copies have been made since the last cleaning mode.
- In ADF mode, at every 150 copies, even if it is during a continuous copy job. The machine temporarily stops the copy job (about 10 sec) until the cleaning mode is completed. Then it resumes the rest of the copy job automatically.

8.7 LUBRICATION MECHANISM

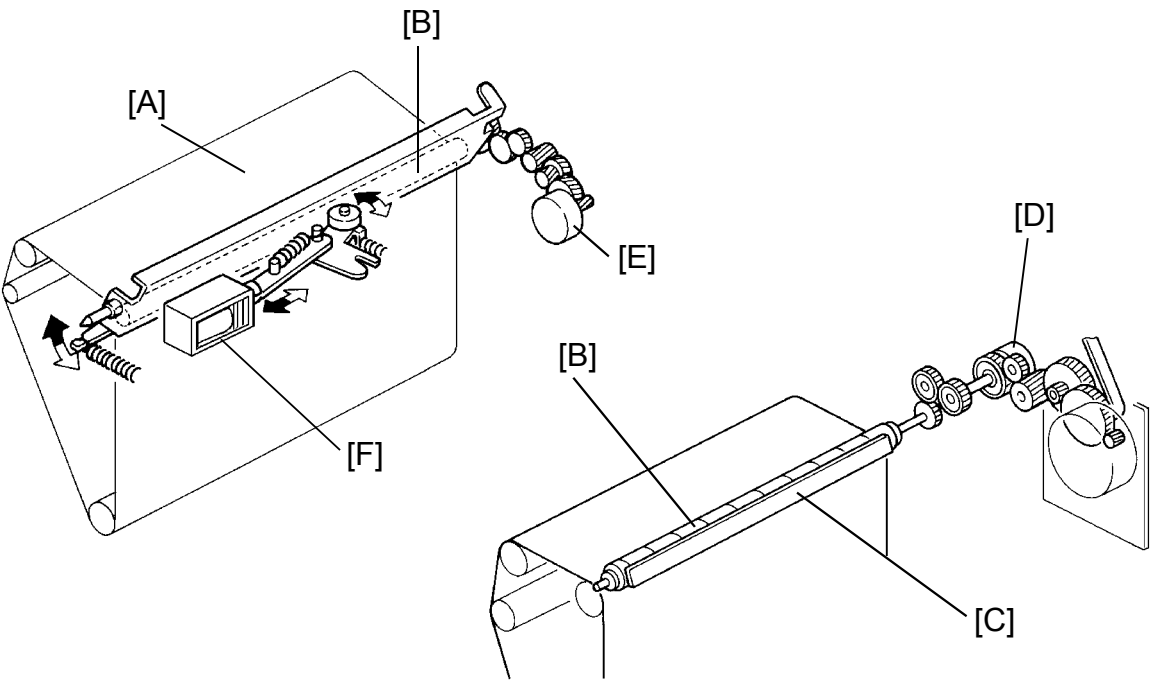

A small amount of lubricant is regularly applied on the surface of the transfer belt [A] to help the cleaning blade easily remove toner from the transfer belt.

The lubricant brush [B] distributes lubricant from the lubricant bar [C] to the transfer belt.

The lubricant brush clutch [D] transmits the drive from the cleaning motor [E] to the lubricant brush.

Basically, the lubricant brush is away from the transfer belt and contacts the belt under the control of the lubricant brush solenoid [F]. The position of the solenoid's plunger depends on the direction of the current flowing through. When de-energized, the plunger stays in the same position.
When the plunger is in, the lubricant brush touches the belt.

9. TRANSFER ROLLER UNIT

9.1 OVERVIEW

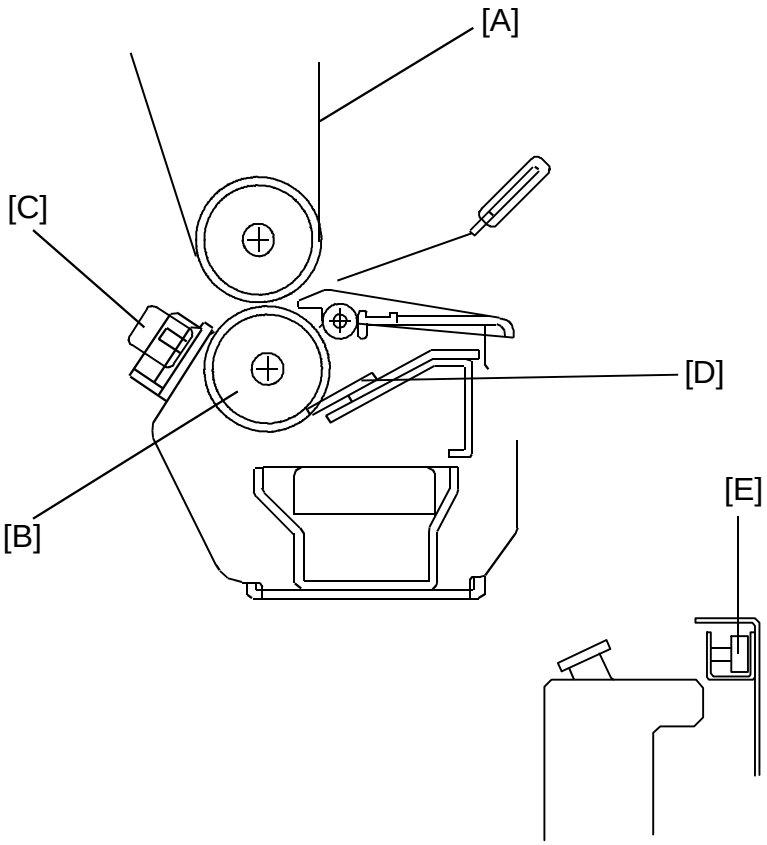

After the entire color (Bk, C,M,Y) image transfer is completed, the composed image on the transfer belt [A] is transferred to the copy paper. The transfer roller [B] applies a positive bias voltage to the rear side of the copy paper to attract the negatively charged toner from the transfer belt.

The discharge plate [C] discharges the remaining electricity on the paper to separate the paper from the transfer belt.

The transfer roller cleaning blade [D] scrapes off the toner left on the transfer roller to prevent the rear side of the paper from being stained by the toner.

A humidity sensor [E] is used to compensate the transfer roller bias and transfer belt bias to maintain a constant image quality against changes in the humidity of surrounding areas.

9.2 ROLLER TOUCH AND RELEASE MECHANISM

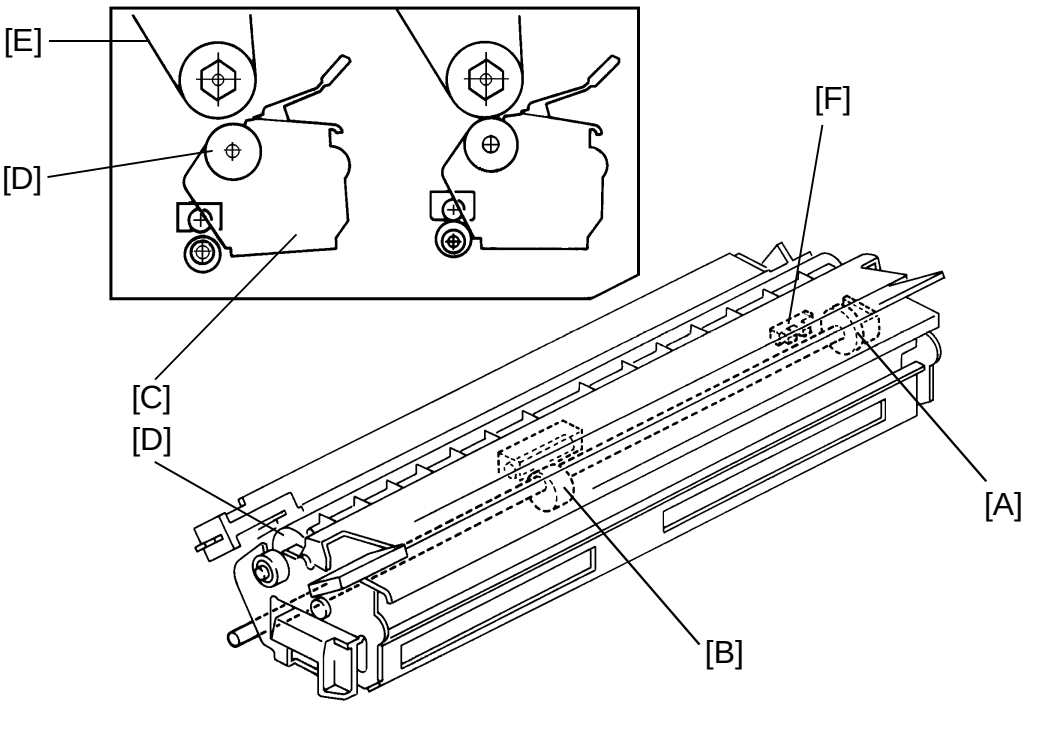

After the entire color (Bk, C,M,Y) image transfer is completed and the copy paper arrives at the registration rollers, the transfer roller position clutch [A] turns on to rotate the positioning cam [B] 180 degrees. The positioning cam raises the whole transfer roller unit [C] to contact the transfer roller [D] with the transfer belt [E]. In this case, the nip band width between the transfer belt and the transfer roller is approximately 1.2 mm (0.05").

When the transfer roller position clutch turns on again, the positioning cam rotates another 180 degrees. In this case, the transfer roller unit moves away from the transfer belt.

This release and contact operation is monitored by the transfer roller position sensor [F].

9.3 TRANSFER ROLLER DRIVE

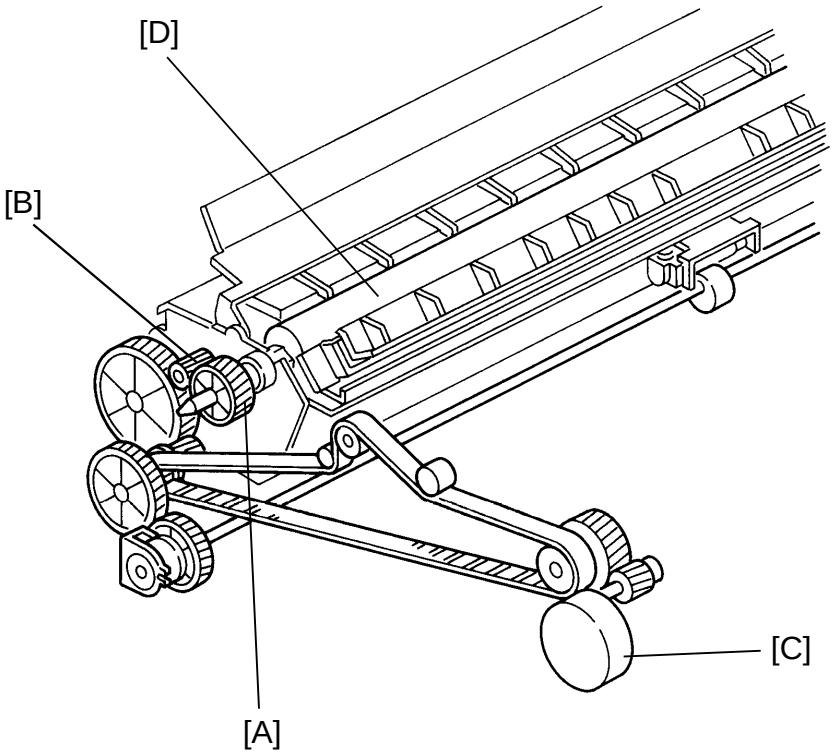

When the transfer roller unit is raised, the gear [A] engages the gear [B] and the drive from the transport motor [C] is transmitted to the transfer roller [D].

9.4 TRANSFER ROLLER BIAS

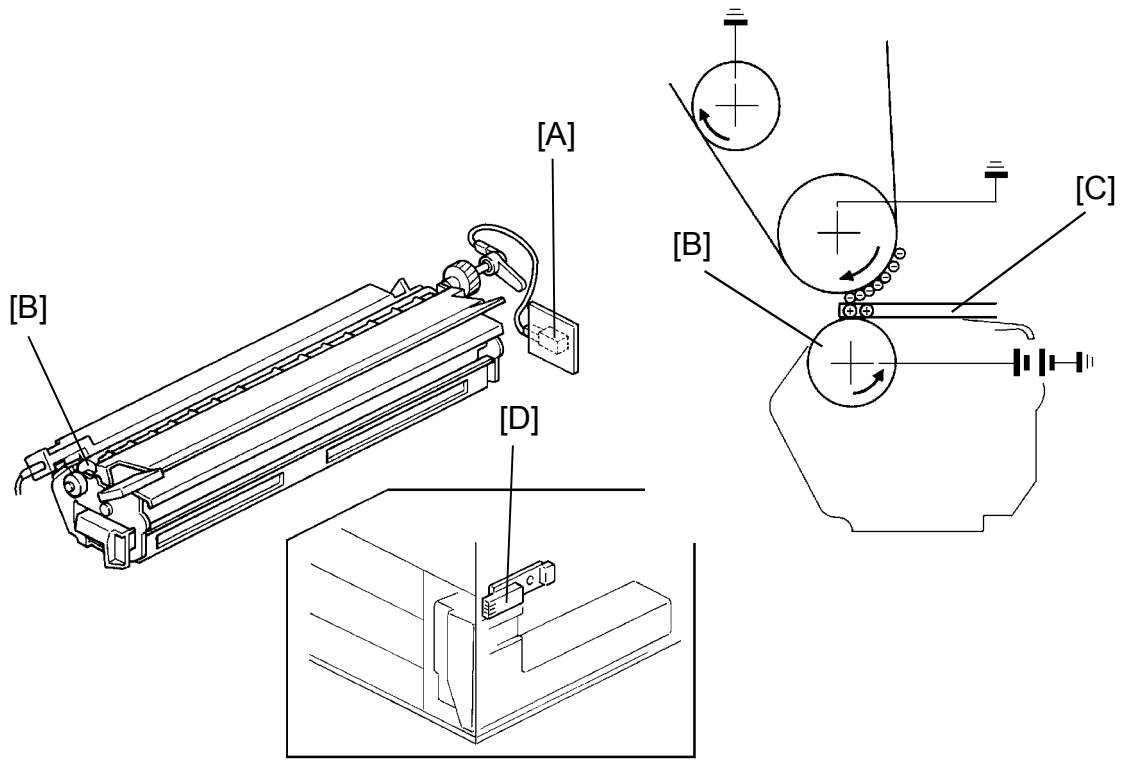

The high voltage supply board - T2 [A] applies positive bias voltage to the transfer roller [B]. The transfer roller applies positive bias voltage to the rear side of the copy paper [C] to attract the negatively charged toner from the transfer belt.

In multiple color copy mode, during the second and subsequent image transfer cycles on the transfer belt, a positive voltage higher than that used in the previous cycle is applied to the transfer belt. According to the charge amount of toner particles on the transfer belt the transfer roller bias voltage differs for different copy modes.

A humidity sensor [D] (see the illustration on the previous page) is used to compensate the transfer roller bias voltage to maintain constant image quality against changs in the humidity of surrounding areas.

			Humidity		
	Paper mode	Cycle	Low ($4.3\ g/m^3$ >)	Middle ($4.3 \sim 11.3\ g/m^3$)	High ($11.3\ g/m^3$ <)
Bias voltage	Normal	1C	1100 V	1000 V	800 V
		2C	1800 V	1600 V	1400 V
		3C	2100 V	1800 V	1450 V
		4C	1700 V	1300 V	1200 V
	Thick	1C	1100 V	1000 V	800 V
		2C	2000 V	1600 V	1400 V
		3C	2000 V	1750 V	1200 V
		4C	1450 V	1300 V	1100 V
	OHP (Length-wise)	1C	1800 V	1400 V	1100 V
		2C	2050 V	2200 V	2200 V
		3C	2650 V	2650 V	2650 V
		4C	2000 V	2150 V	2150 V
	OHP (Side-ways)	1C	1600 V	1500 V	1350 V
		2C	1950 V	2050 V	2100 V
		3C	2650 V	2650 V	2650 V
		4C	1800 V	2050 V	2100 V

- When humidity is low, paper resistance is high.
  Therefore, the bias voltage is high because the potential of the paper side facing the transfer belt is reduced due to the high resistance of paper.
- The transfer bias increases with each cycle. This is simply because the toner quantity on the transfer belt increases.
  However in 4C mode, black toner is used instead of Y M C toner combination (UCR), so that the toner quantity on the transfer belt is lower than in 3C mode. Therefore, the bias voltage in 4C mode is lower than in 3C mode.

9.5 PAPER DISCHARGE

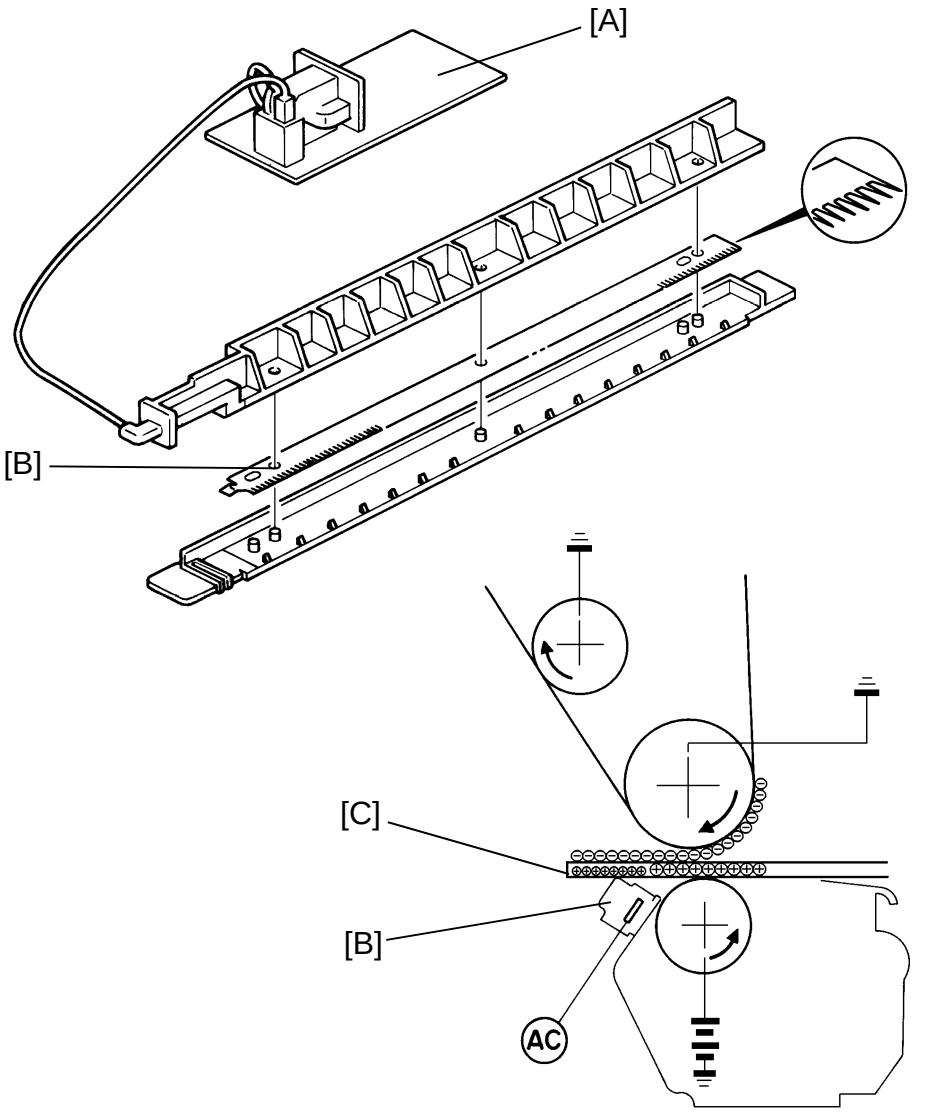

The high voltage supply board - D [A] applies ac 4kV to the discharge plate [B].

The discharge plate discharges the remaining electricity on the paper [C] to separate the paper from the transfer belt.

The high voltage supply board - D does not apply ac 4kV to the discharge plate in OHP mode because the OHP is separated from the transfer belt by its stiffness.

9.6 TRANSFER ROLLER CLEANING

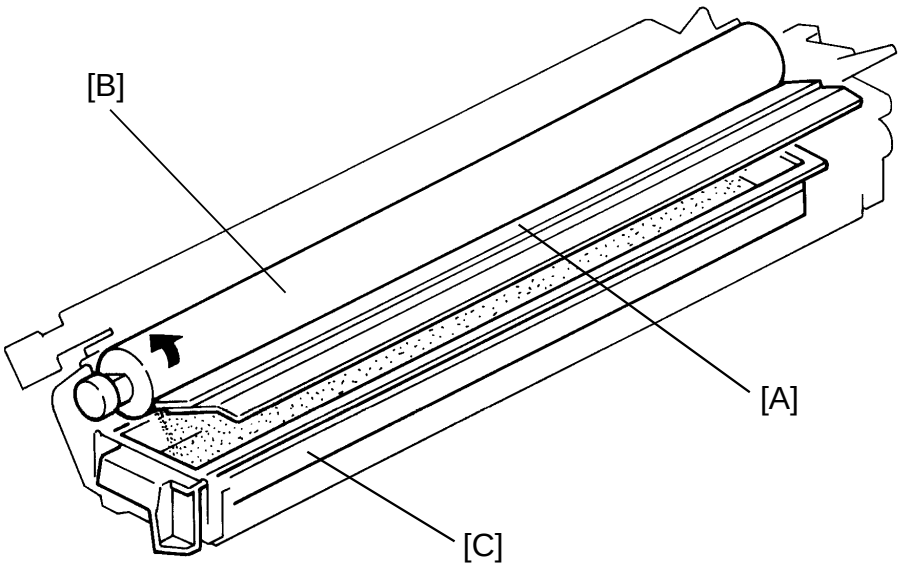

The transfer roller cleaning blade [A] scrapes off the toner adhering on the transfer roller [B] to prevent the back side of the paper from being stained by toner.

The transfer roller cleaning blade continuously cleans the transfer roller. The transfer roller surface is covered with a teflon tube to improve its cleaning ability.

The removed toner is collected in the toner catch pan [C] in the transfer roller unit.

10. PAPER TRANSPORT AND IMAGE FUSING

10.1 OVERVIEW

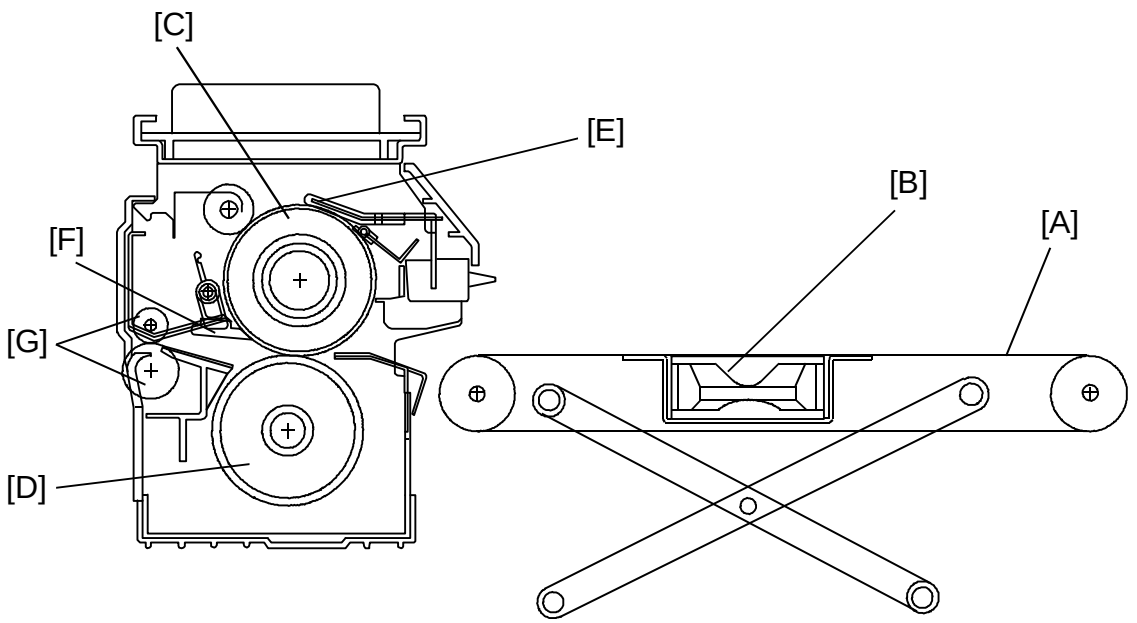

After the image is transferred to the paper, the copy paper is transported by the transport belts [A]. Two vacuum fans [B] hold the paper firmly against the transport belts so that there is enough friction between the paper and the transport belts for smooth transportation of the paper. Then the paper enters the fusing unit and the image is fused to the copy paper by a heat and pressure process through the use of a hot roller [C] and pressure roller [D].

The fusing lamps located inside the hot roller (650W) and the pressure roller (400W) are turned on and off to maintain the operating temperature. The CPU monitors the hot roller and pressure roller surface temperature through thermistors which are in contact with the hot roller's surface and pressure roller's surface. Two thermofuses that cut current at 150 degrees protect the fusing unit from overheating.

An oil supply pad [E] applies silicone oil to the hot roller. The hot roller strippers [F] separate the copy paper from the hot roller and direct it to the exit rollers [G].

10.2 FUSING ENTRANCE GUIDE

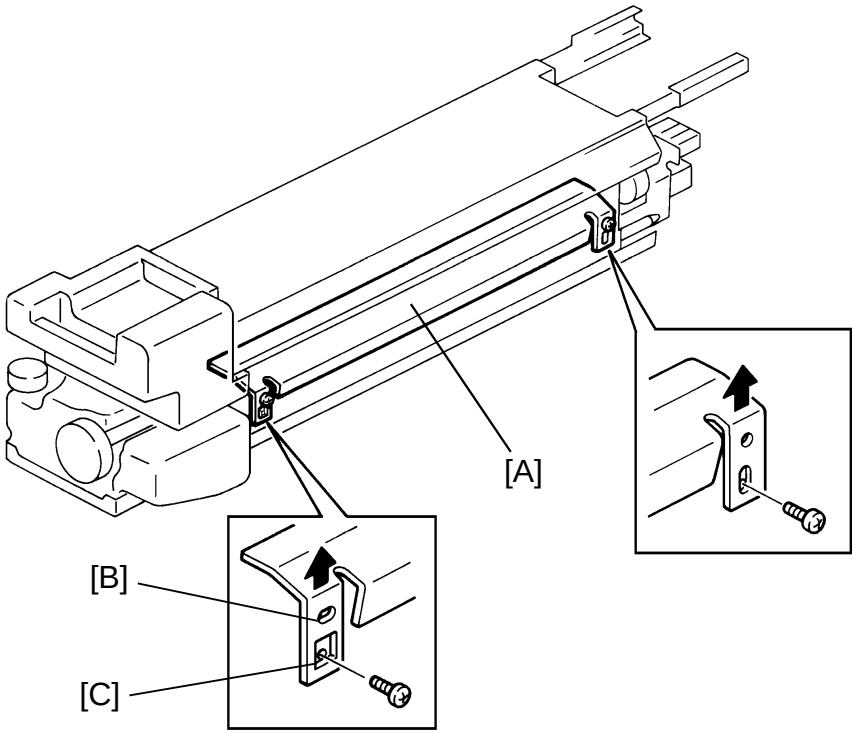

The entrance guide [A] for this machine is adjustable for thick or thin paper.

With thin paper, set the entrance guide in the upper position. This slightly lengthens the paper path which prevents the paper from creasing in the fusing unit. With thick paper, set the entrance guide in the lower position.

This is because thick paper does not bend as easily, and is therefore less prone to creasing. Also, the lower setting allows more direct access to the gap between the hot and pressure rollers. This prevents thick paper from buckling against the hot roller, which can cause blurring at the leading edge of the copy.

The guide plate standard position is the center position (upper hole [B]). The guide plate position can be adjusted when the fixing screws are set to the lower holes [C].

10.3 DRIVE MECHANISM

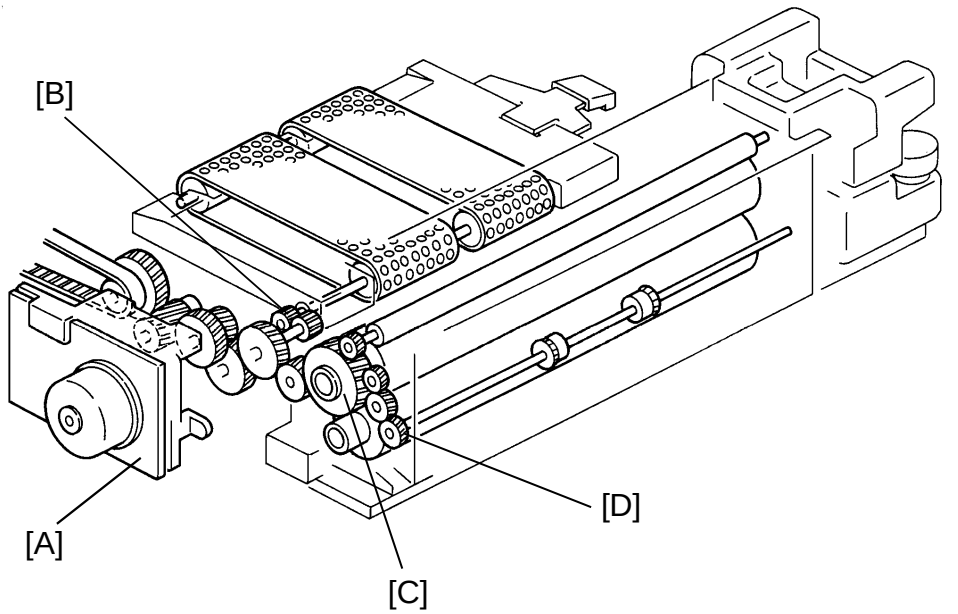

The paper transport, fusing and the paper exit sections are driven by the transport motor [A].

The drive from the transport motor is transmitted to the transport drive gear [B], to the fusing roller drive gear [C], then to the paper exit drive gear [D] via idle gears.

When the OHP mode or thick paper mode is selected, the paper transport speed becomes low (90 mm/sec) to sufficiently fuse toner onto the OHP or thick paper.
This speed is half of the normal one (180 mm/sec).

10.4 FUSING DRIVE RELEASE MECHANISM

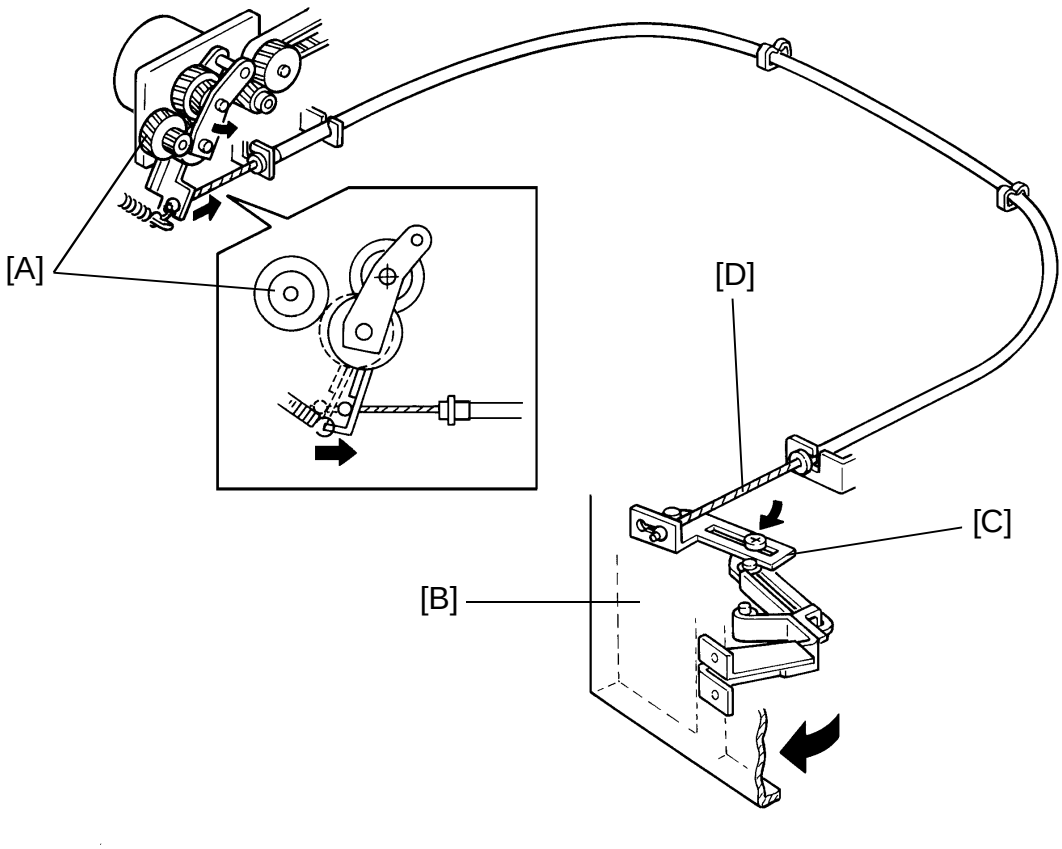

The fusing unit drive release mechanism automatically disengages the fusing unit drive gear [A] when the left front door [B] is opened.

This allows the fusing unit drive gear to rotate freely so that misfed paper can be easily removed.

When the left front door is opened, the actuator plate [C] pulls the release wire [D] and the fusing unit drive gear is disengaged.

10.5 OIL SUPPLY MECHANISM

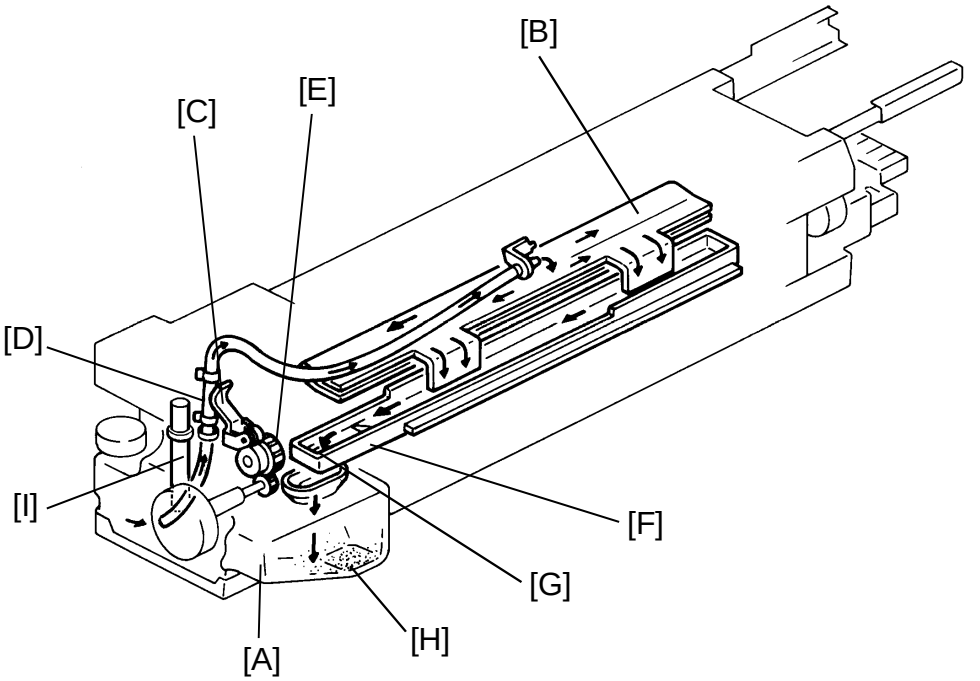

Silicone oil is applied to the hot roller to help prevent toner and paper from sticking to the hot roller, to reduce paper curl, and to help in roller cleaning.

A small pump with a one-way valve moves the oil from the oil tank [A] to the oil supply pad [B]. The oil pump lever [C] alternately presses and releases the rubber sleeve [D] between the valves as the oil cam [E] turns.

The oil supply pad then applies the oil to the hot roller as the roller turns. The oil blade spreads the oil on the hot roller evenly. Excess oil flows down the felt wick to the oil sump [F]. Oil flows out through hole [G] in the bottom of the oil sump and returns to the oil tank.

The oil supply pad distributes oil to the hot roller and removes the remaining toner from the hot roller's surface.

The hollow [H] collects foreign matter such as paper dust in the silicone oil. The oil end sensor [I] detects the end condition. When the oil end condition is detected, copying is immediately disabled and a call service guidance is displayed on the LCD.

10.6 CLEANING MECHANISM

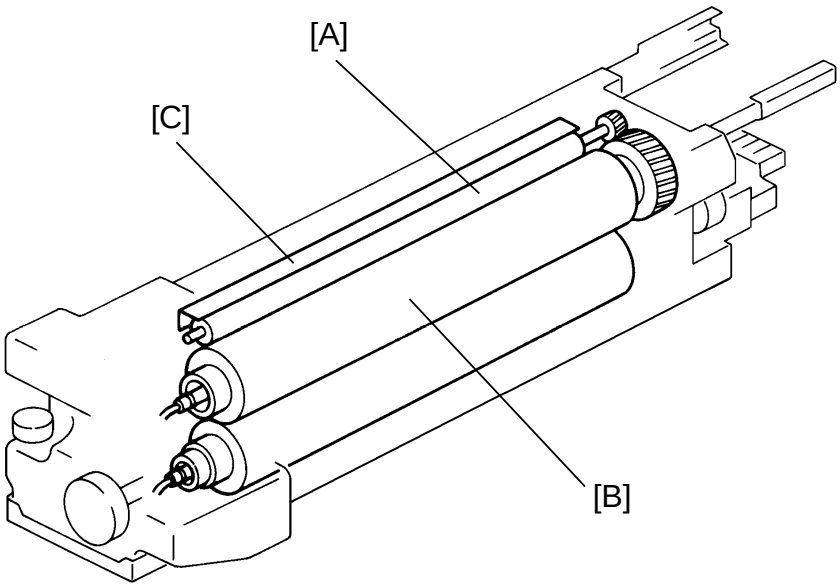

The cleaning roller [A], which is always in contact with hot roller, collects the toner and paper dust adhering on the surface of the hot roller [B]. This is because the teflon coating on the surface of the cleaning roller is more sticky than the hot roller surface (silicone rubber).

The collected matter is scraped off by a stainless steel blade [C].

10.7 JAM DETECTION

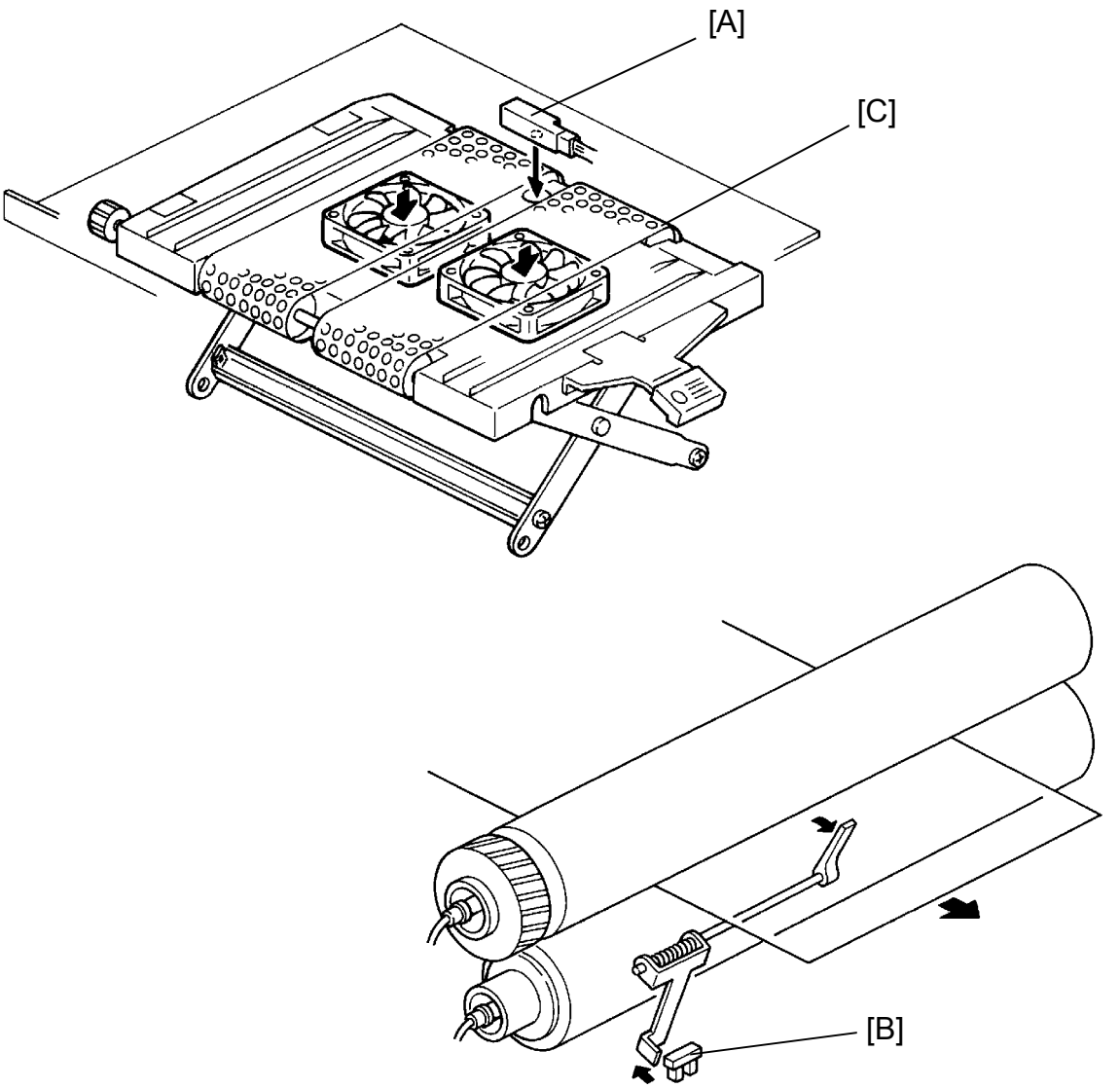

The transport sensor [A] and the exit sensor [B] monitor the paper jam.

The transport sensor is a reflective sensor located above the transport belts [C]. When the machine detects that the paper is not properly separated from transfer belt and not arriving below the transport sensor, the machine stops the operation immediately (ON check only).

The exit sensor (photointerruptor) makes an ON and OFF check to detect the paper jams.

.

10.8 FUSING PRESSURE MECHANISM

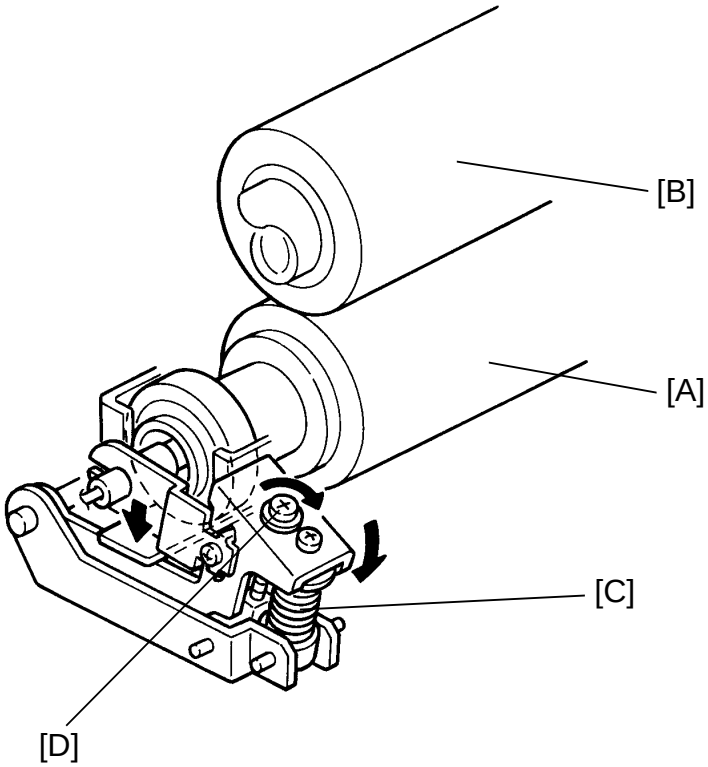

The pressure roller [A] is pressed up against the hot roller [B] by a pressure spring [C].

When the pressure release screw [D] is turned clockwise, the fusing pressure spring is pressed down to release the fusing pressure. The purpose of this screw is not for adjustment but just for pressure release. Normally the pressure release screw is fully loosened. This screw is tightened in the factory to prevent deformation of the fusing rollers during transportation and storage.

.

10.9 FUSING TEMPERATURE CONTROL

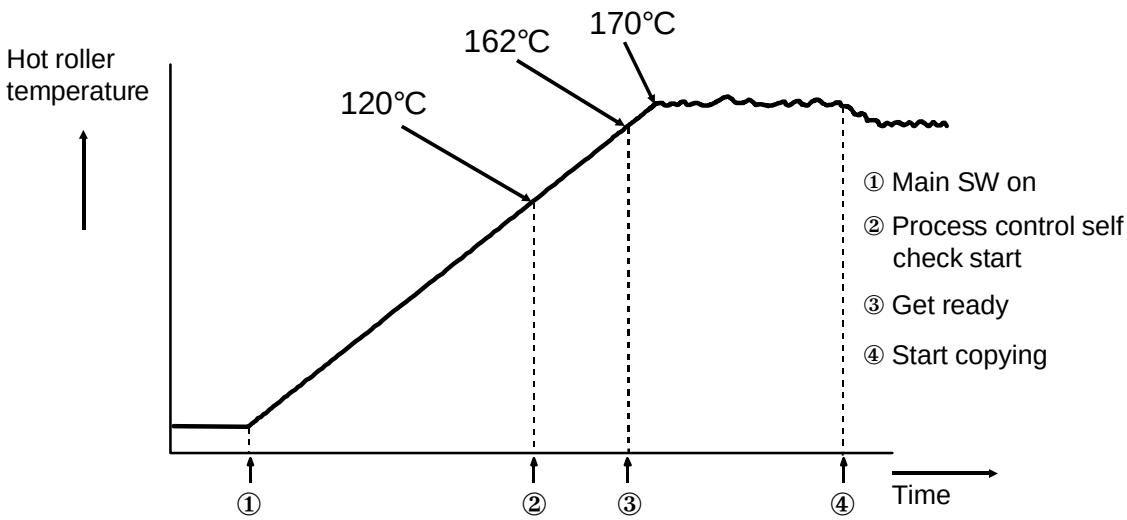

To control the temperature of the hot roller and the pressure roller, the fusing lamps are turned off and on by the SSR (Solid State Relay).

Because there are fusing lamps in both hot and pressure rollers, there is no fusing idling needed for the machine to get ready when the main switch is turned on.

During stand by, the hot roller temperature is controlled at 170°C and the pressure roller temperature is controlled at 120°C.

While copying, the fusing temperature is controlled as shown in the table below. These temperatures are lower than the ready temperature.

Condition	Stand-by	During copying			
Modes		Normal		OHP/thick paper	
		1C	2C,3C,4C	1C	2C,3C,4C
Hot roller temp.	170°C	150°C	160°C	160°C	
Pressure roller temp.	120°C	140°C			

Two development exhaust fans are installed just above the fusing unit and a fusing exhaust fan is installed at the rear left side. These fans let the hot air escape to prevent overheating.

11. PAPER FEED

11.1 OVERVIEW

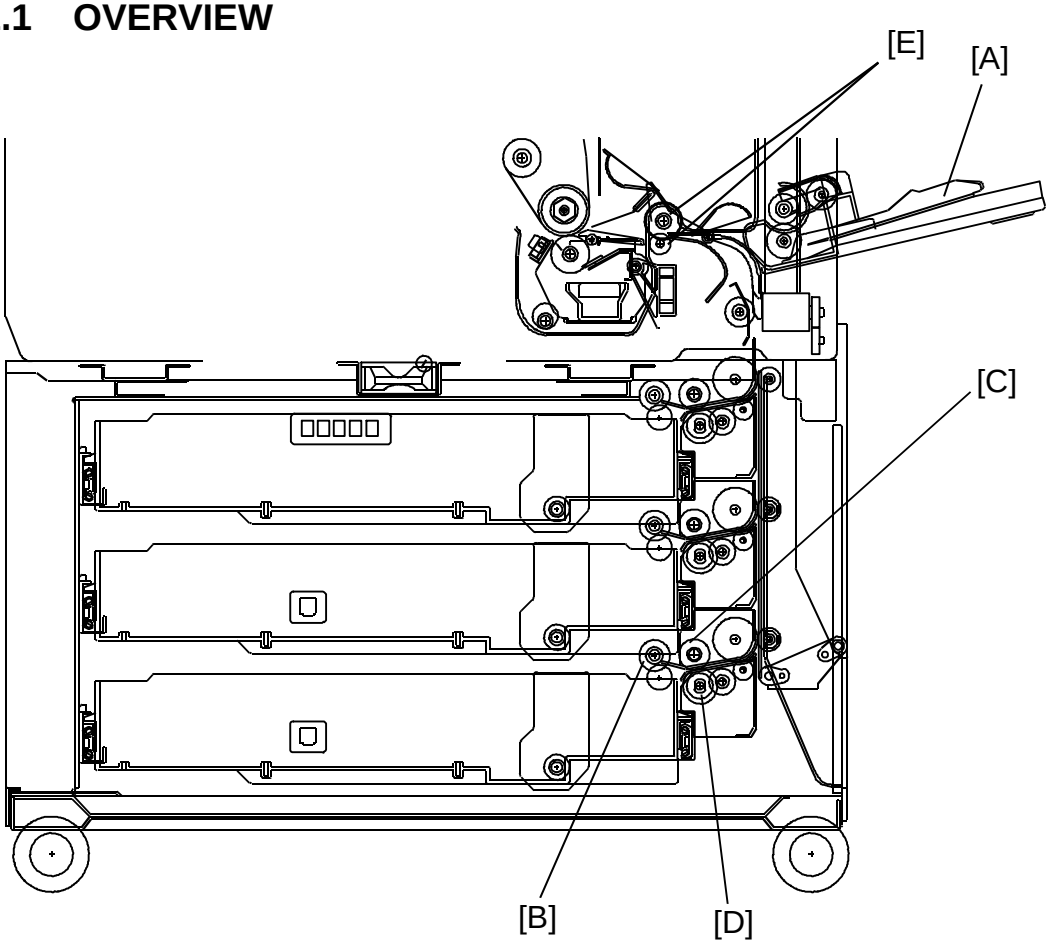

This model has three drawer tray paper feed stations.

The first feed station is a 500 sheet universal tray, the second and third feed stations are 500 sheet trays.
Paper can also be fed using the by-pass feed table [A] which has an independent feed mechanism. The by-pass feed table can hold 50 sheets of paper.

All feed stations use an FRR feed system. Rotation of the pick-up roller [B] drives the top sheets of paper from each tray to the feed [C] and the separation [D] rollers. The feed and separation rollers then take over paper drive. If more than one sheet is fed by the pick-up roller, the separation roller rotates in the opposite direction and prevents all but the top sheet from passing through to the registration rollers [E].

11.2 FRR FEED SYSTEM

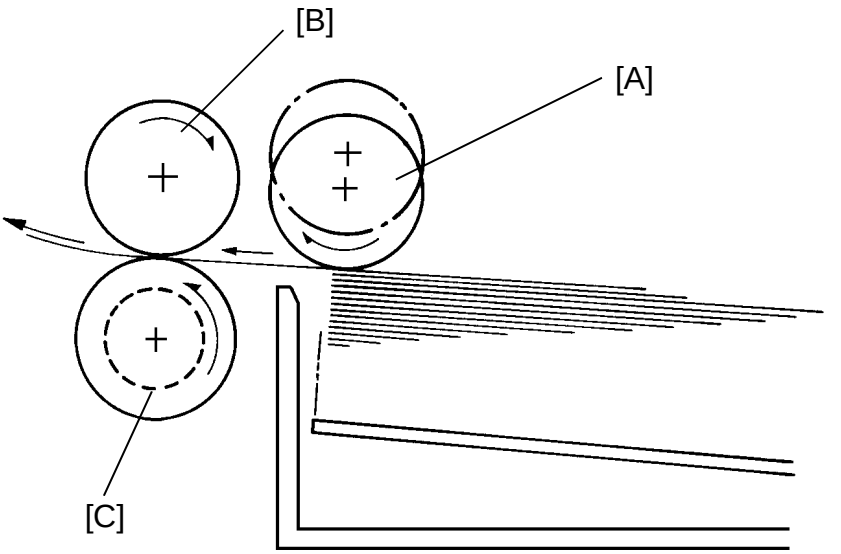

This copier uses an FRR paper feed system using three rollers.

11.2.1 Pick-up Roller

The pick-up roller [A] is not in contact with the paper stack before it starts feeding paper. Shortly after the Start key is pressed, the pick-up roller drops down and feeds the top sheet between the feed [B] and the separation rollers [C]. At almost the same time that the paper's leading edge arrives at the feed roller, the pick-up roller lifts off the paper stack so that it does not interfere with the operation of the feed and separation rollers. The feed and separation rollers then take over the paper feed process.

11.2.2 Feed and Separation Rollers

There is a one-way bearing inside the feed roller so it can turn only in one direction. The separation roller is driven in the opposite direction to the feed roller. The separation roller, however, is driven through a slip clutch (torque limiter clutch) which allows it to turn in either direction depending on the friction between the rollers. The separation roller solenoid keeps the separation roller in contact with the feed roller.

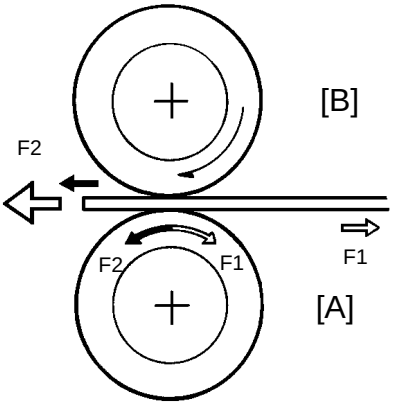

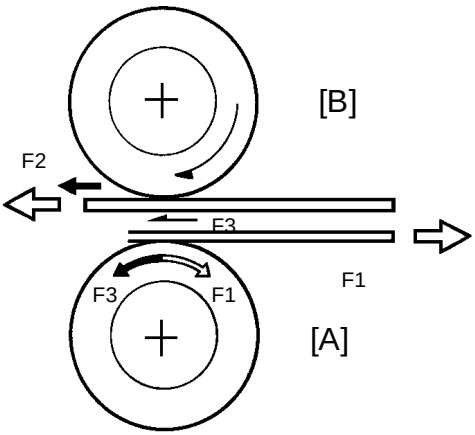

The direction in which the separation roller [A] turns depends on the frictional forces acting on it. The slip clutch applies a constant clockwise force (F1). When there is a single sheet of paper being driven between the rollers, the force of friction between the feed roller [B] and the paper (F2) is greater than F1. So, the separation roller turns counterclockwise.

If two or more sheets are fed between the rollers, the forward force on the second sheet (F3), becomes less than F1 because the friction between the two sheets is small. So, the separation roller starts turning clockwise and drives the second sheet back to the tray.

11.3 SLIP CLUTCH MECHANISM

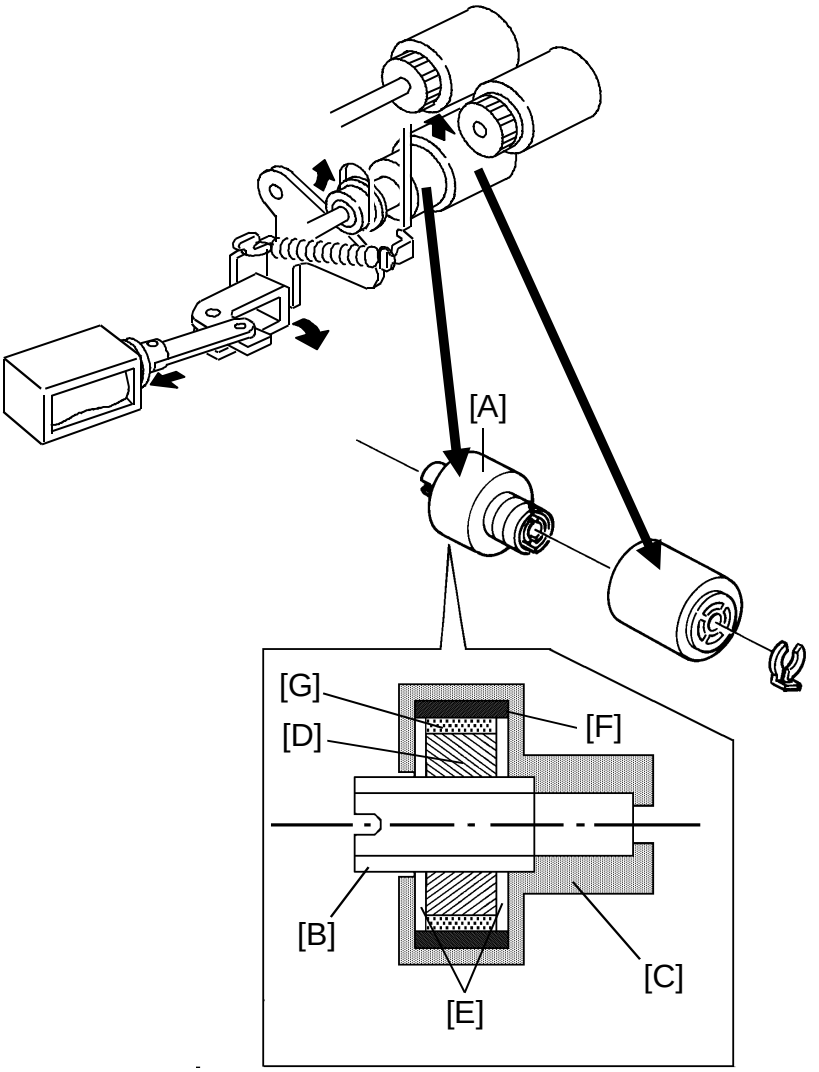

The slip clutch [A] consists of the input hub [B] and the output hub [C] which is the case of the clutch as well. The magnetic ring [D] and the steel spacers [E] are fitted onto the input hub. The ferrite ring [F] is fitted into the output hub. Ferrite powder [G] packed between the magnetic ring and the ferrite ring [F] generates a constant torque due to magnetic force. The input hub and the output hub slip when the rotational force exceeds the constant torque.

This type of slip clutch does not require lubrication.

11.4 FRR FEED DRIVE MECHANISM

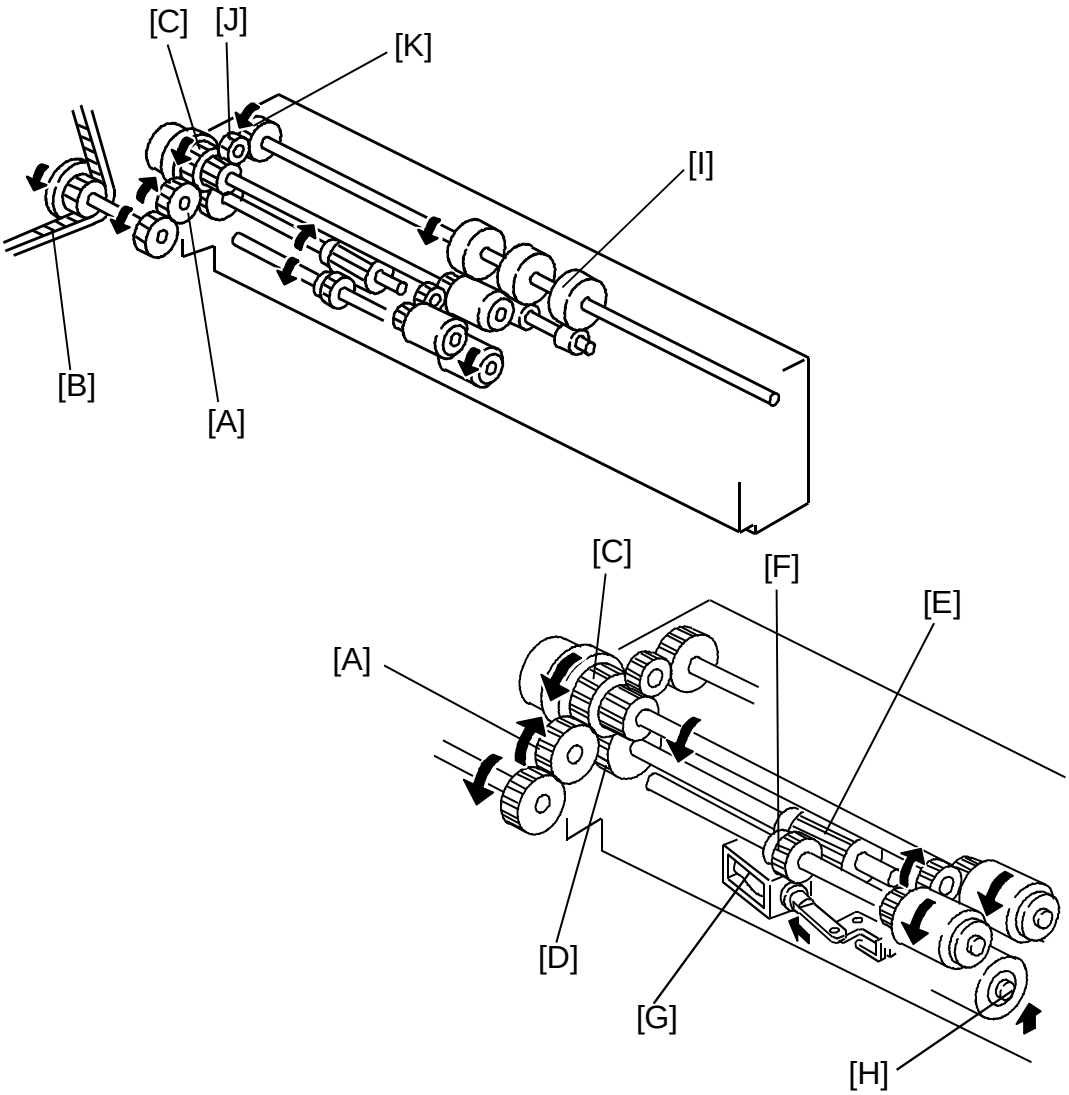

The rotation of the paper feed motor is transmitted to the gear [A] via the timing belt [B], and then transmitted to the separation roller via the feed clutch gear [C], gear [D], gear [E] and gear [F].

If the paper feed station is not selected, the separation roller solenoid [G] de-activates and the separation roller [H] rotates freely in the reverse direction of paper feeding.

Gear [A] also transmits the drive to the vertical transport roller [I] via gear [C], idle gear [J] and gear [K].

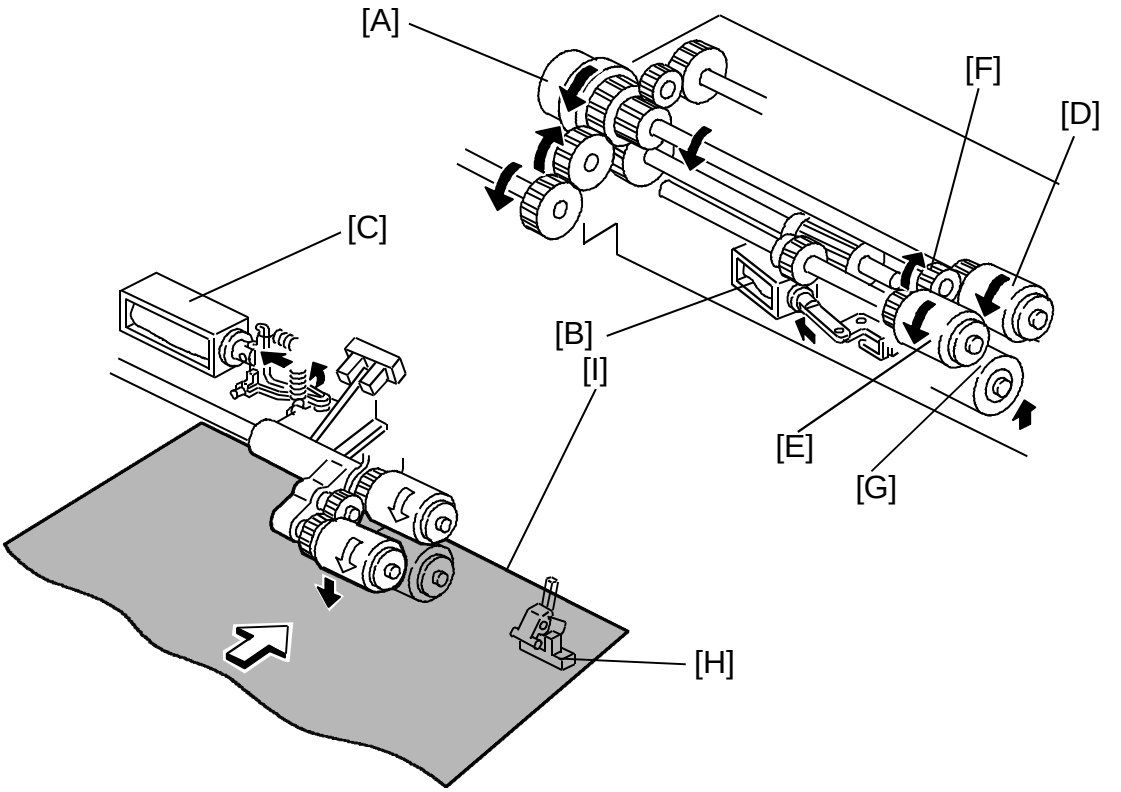

When the paper feed station is selected and the Start key is pressed, the feed clutch [A], separation roller solenoid [B], and the pick-up solenoid [C] turn on at once.

When the feed clutch [A] activates to rotate the feed roller [D], the feed roller and the pick-up roller [E] turn together because they are linked by the idle gear [F].

When the separation roller solenoid [B] turns on, the separation roller [G] contacts the feed roller [D] and both rollers rotate together.
The drive from the feed roller causes the separation roller to resist the drive from its shaft.
Because of this resistance, the torque limiter between the separation roller and the shaft breaks transmission of the drive from the shaft.

When the pick-up solenoid [C] activates, the pick-up roller [E] lowers to make contact with the top sheet of the paper stack and send it to the feed and separation rollers.
When the paper feed sensor [H] detects the leading edge of the paper [I], the pick-up solenoid de-energizes to lift the pick-up roller and the paper feed clutch de-energizes at a certain time to wait until it is ready to feed to the registration rollers.

11.5 SEPARATION ROLLER RELEASE MECHANISM

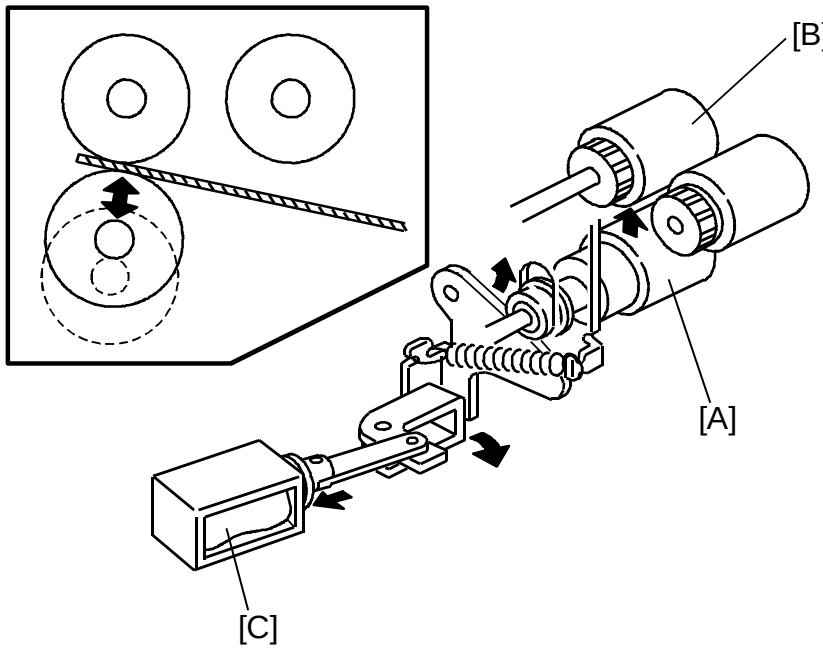

In this model, the separation roller [A] is normally away from the feed roller [B]. When the paper feed station is selected, the separation roller solenoid [C] contacts the separation roller to the feed roller as explained in the previous two pages.

This contact/release mechanism has the following three advantages:

1. When the paper feed motor turns on, all separation rollers in each feed station rotate. If the separation roller is away from the feed roller, it reduces the mechanical load to the paper feed motor and drive mechanism, and also reduces wear on the rubber surface of the separation roller due to the friction between the feed roller and the separation roller.

2. After paper feeding is completed, paper sometimes remains between the feed roller and the separation roller.
   If the feed tray is drawn out in this condition, it is possible for the remaining paper to be torn.
   When the separation roller is away from the feed roller, remaining paper is released from between the feed and the separation rollers.

3. When paper misfeeds occur around this area, users can easily pull out jammed paper between the feed and the separation rollers because the separation roller is away from the feed roller.

11.6 PAPER RETURN MECHANISM

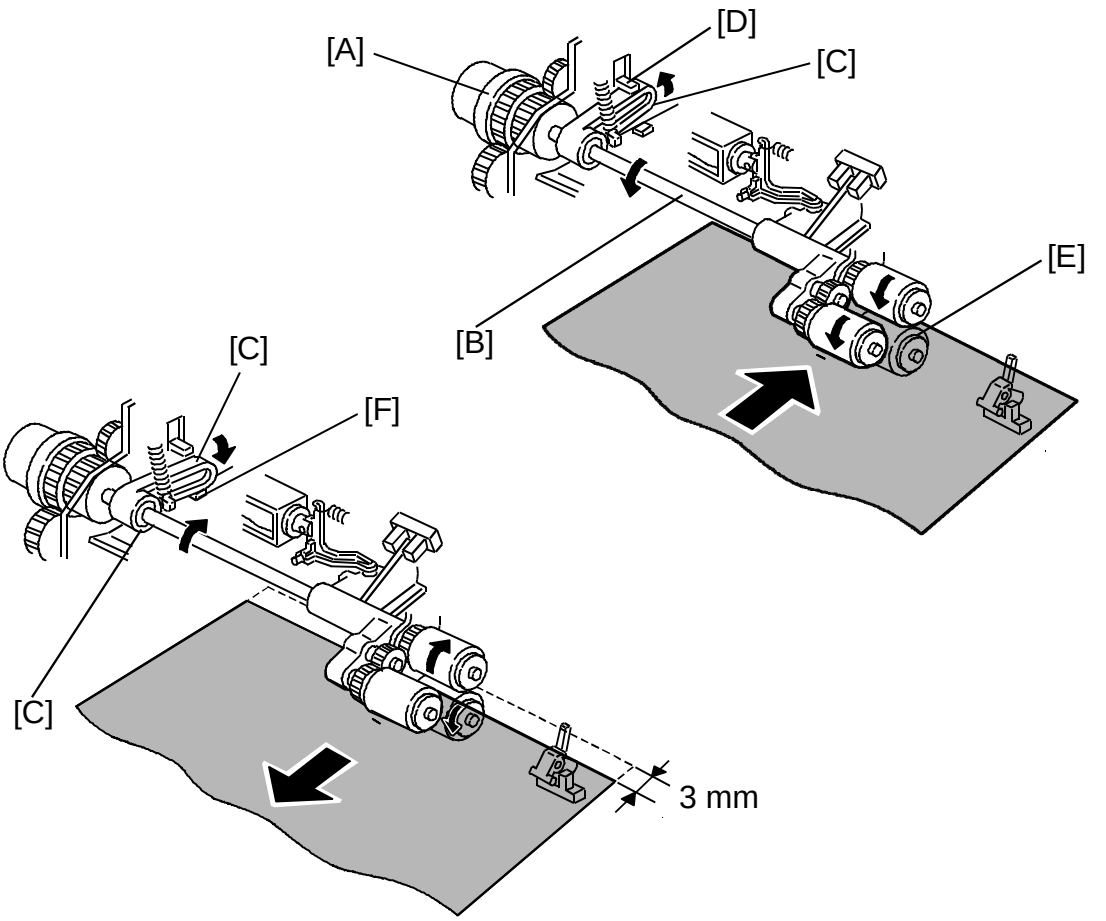

When the paper feed clutch [A] activates and the feed roller drive shaft [B] rotates, the lever [C] rotates together with the shaft. However, the lever is immediately stopped by the stopper [D].

After all paper is fed and the paper feed clutch turns off, the paper feed motor still rotates to turn the separation roller [E] in the reverse direction. The separation roller, still contacting the feed roller, turns the feed roller in the reverse direction until the lever hits the rubber cushion [F].

By this feed roller reverse mechanism, the paper remaining between the feed and the separation rollers returns 3mm to the paper feed tray.

After that, the separation roller solenoid turns off to move the separation roller away from the feed roller. This releases the leading edge of the paper and drops the paper to the paper feed tray.

This prevents remaining paper from being torn when the feed tray is drawn out.

11.7 PAPER SKEW PREVENTION MECHANISM

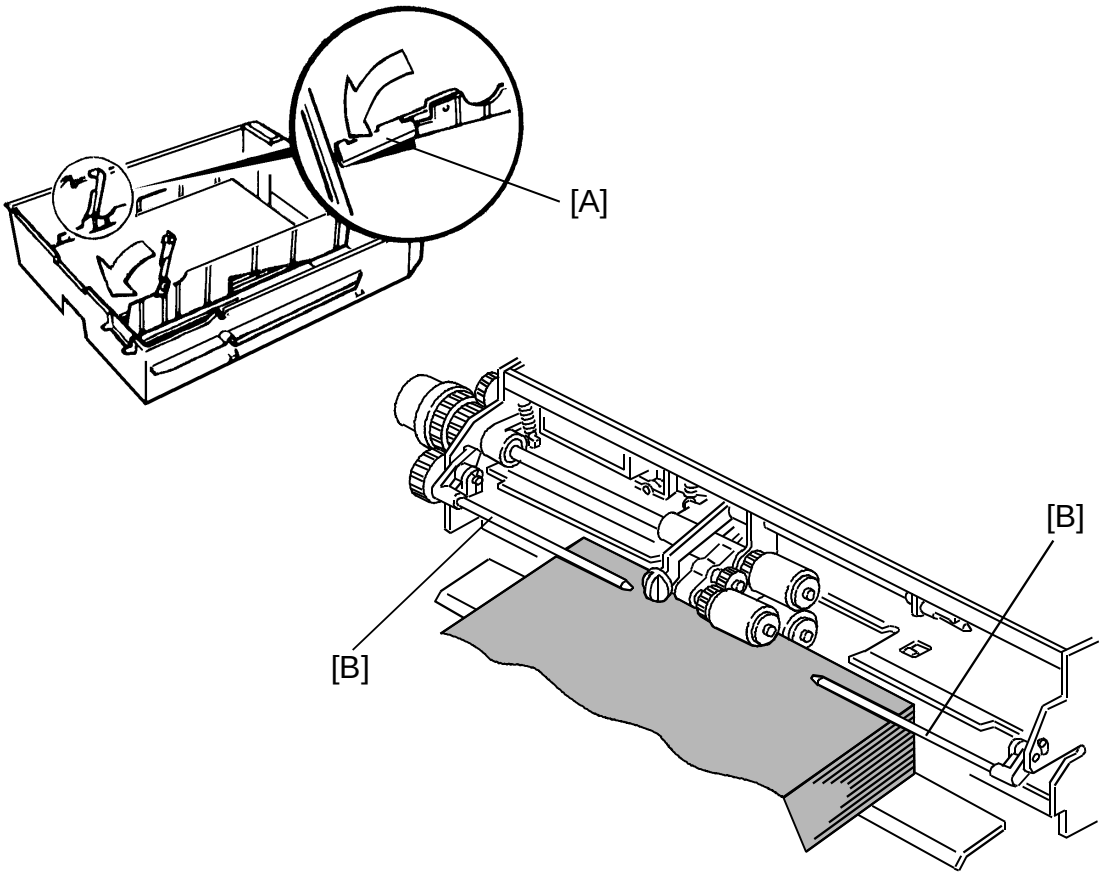

In this model, paper corner holders [A] are not used to facilitate paper loading.

Instead of the corner holders, both paper press arms [B] press down both paper side edges, especially in the case of paper with a face curl. This helps the tray side fences guide the paper to prevent paper skew or jams.

11.8 PAPER LIFT MECHANISM

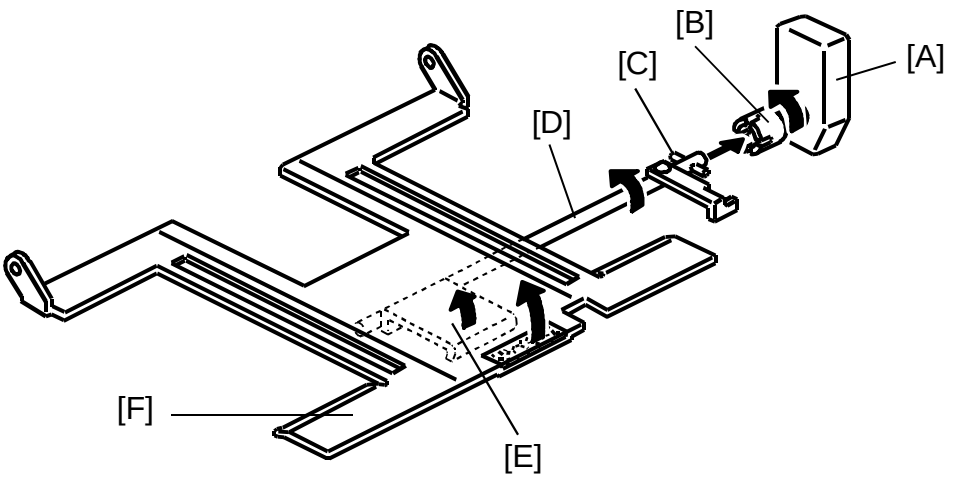

When the tray is set in the machine, the machine detects this condition by using several detection methods as shown in the table:

Feed station	Switches
1st	Paper size switch
2nd	Tray set switch
3rd	Tray set switch

When the machine detects that the paper tray is set in the machine, the lift motor [A] rotates and the coupling gear [B] on the tray lift motor engages the pin [C] of the lift arm shaft [D], then turns the tray lift arm [E] to lift the tray bottom plate [F].

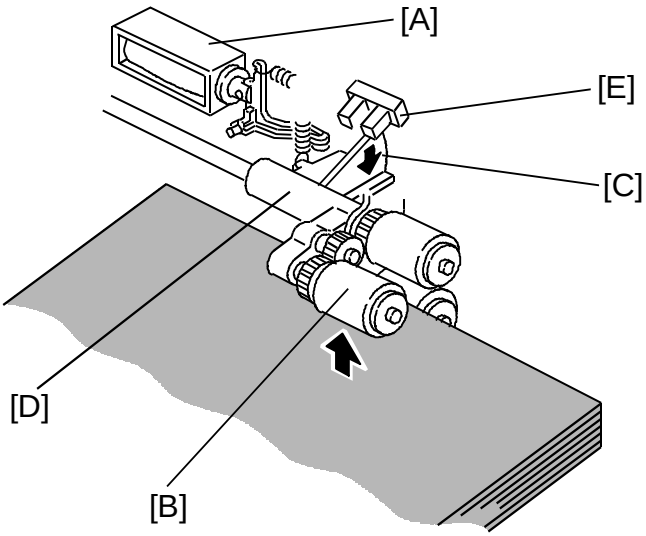

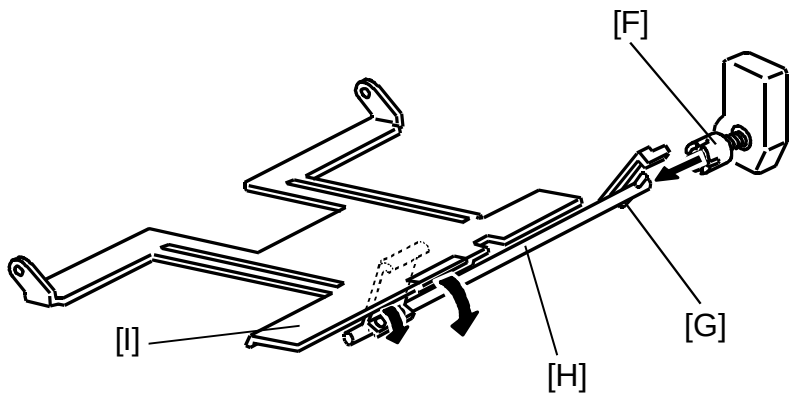

When the lift motor turns on, the pick-up solenoid [A] activates to lower the pick-up roller [B]. When the top sheet of paper reaches the proper paper feed level, the paper pushes up the pick-up roller and the actuator [C] on the pick-up roller supporter [D] activates the lift sensor [E] to stop the lift motor.

After several paper feeds, the paper level gradually lowers then the lift sensor is de-activated and the lift motor turns on again until the lift sensor is activated again.

When the tray is drawn out of the feed unit, the lift motor coupling gear [F] disengages the pin [G] of the lift arm shaft [H], then the tray bottom plate [I] drops.

11.9 PAPER END DETECTION

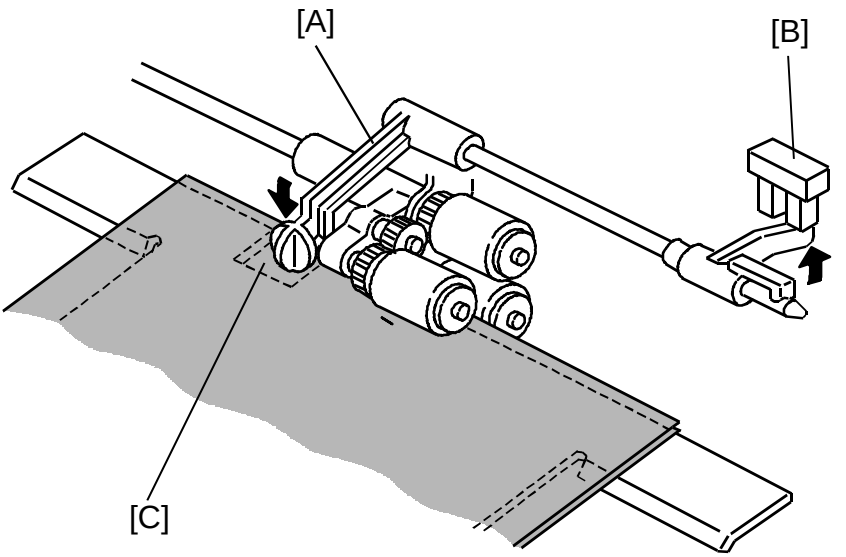

If paper is loaded in the paper tray, the paper end feeler [A] is raised by the paper stack and the paper end sensor [B] is deactivated. When the paper tray runs out of paper, the paper end feeler drops in the cut out [C] of the tray bottom plate and the paper end sensor is activated.

11.10 PAPER SIZE DETECTION

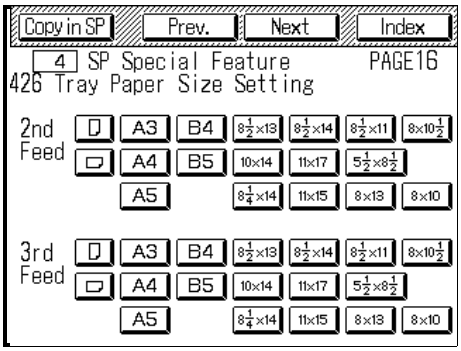

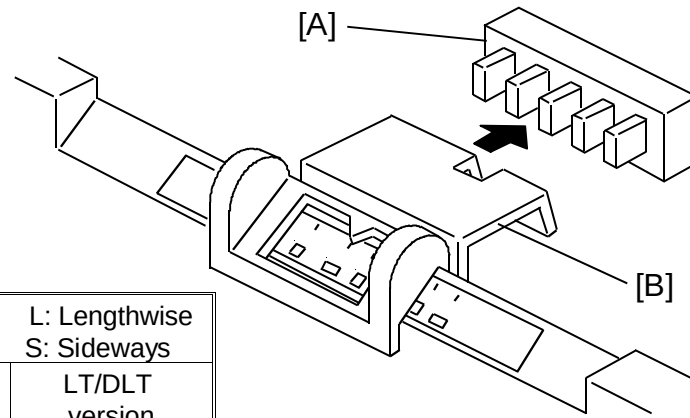

SW Actuate....0 De-actuate....1 1 2 3 4 5	Paper size	L: Lengthwise S: Sideways
	A4/A3 Version	LT/DLT version
01111	A3–L	11 x 17–L
00111	B4–L	8 1/2 x 14–L
10011	A4–L	8 1/2 x 11–L
01001	A4–S	8 1/2 x 11–S
00100	8 1/2 x 13	5 1/2 x 8 1/2–S
00010	–	8 x 10–S
00001	A5–S	8 x 10–L
10000	–	8 x 13–L
11000	–	10 x 14–L
11100	–	11 x 15–L
11110	A5–L	5 1/2 x 8 1/2–L

For the second and the third feed trays, the paper size is put in memory by using the SP mode. (4 SP Special Feature – PAGE 16)

For the first feed tray (universal tray), the paper size switch [A] detects the paper size. The paper size switch has five microswitches inside. The paper size switch is actuated by an actuator plate [B] located on the rear of the tray. Each paper size has its own unique combination of actuation, as shown in the table, and the CPU judges the paper size by this combination of activated switches.

11.11 VERTICAL TRANSPORT MECHANISM

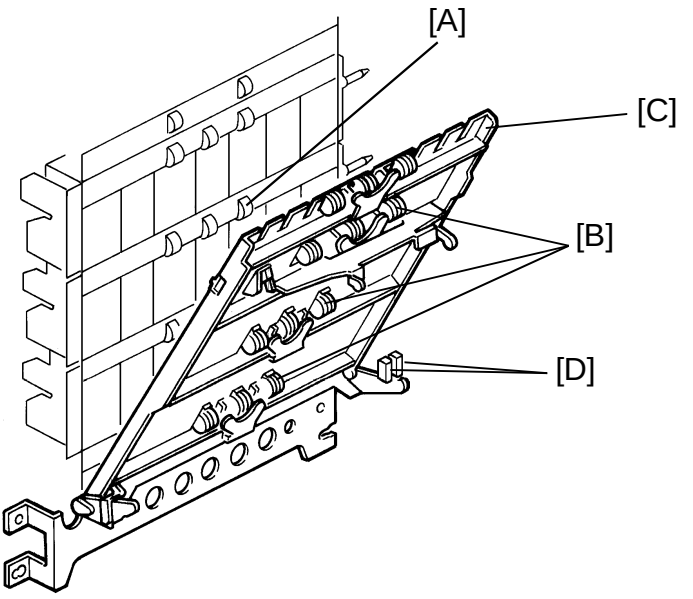

The vertical transport rollers [A] in each feed unit is driven by the paper feed motor. The vertical transport rollers, and the driven vertical transport rollers [B] on the vertical guide plate [C], transport the paper from each feed unit to the registration rollers.

The transport guide can be opened to access jammed paper in the vertical transport area.

The vertical transport set switches [D] detect whether the vertical transport guide is open or not.

11.12 TRAY POSITIONING MECHANISM

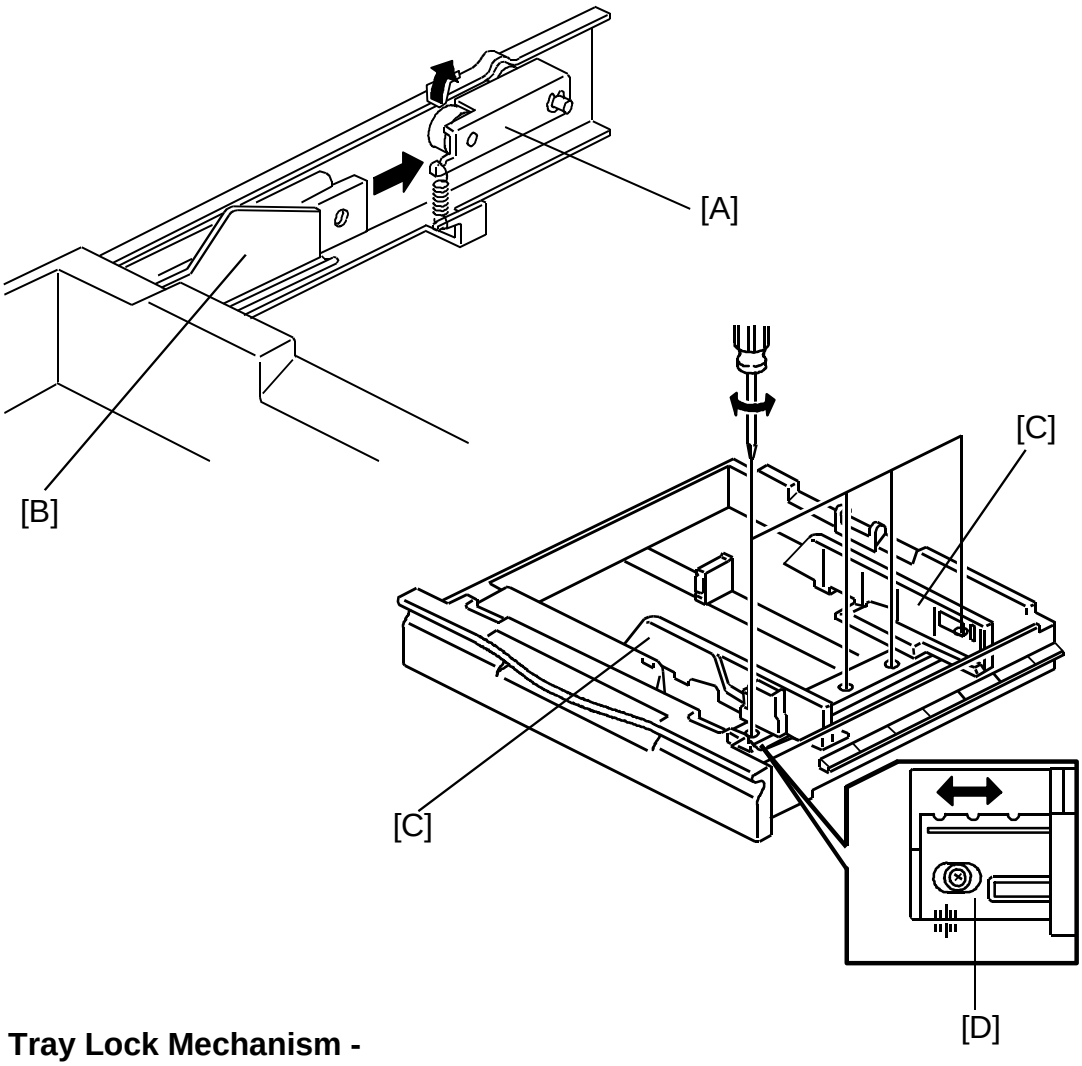

- Tray Lock Mechanism -

When the feed tray is set in the paper feed unit, the lock lever [A] drops behind the lock plate [B] on the Accuride support bracket to lock the tray in the proper position.

- Side-to-side Positioning Mechanism -

Side plates [C] are fixed on the positioning plate [D]. By moving the positioning plate (fixed by four screws), the paper position can be changed to adjust the side-to-side registration.

NOTE: As the paper tray was commonly designed with other models, this side-to-side positioning mechanism is remaining on this model. However, **do not use this adjustment in the field**. The side-to-side registration can be adjusted for each feeding station by SP mode (SP1-3, No. 104).

11.13 BY-PASS FEED TABLE

11.13.1 Feed Mechanism / Paper End Detection

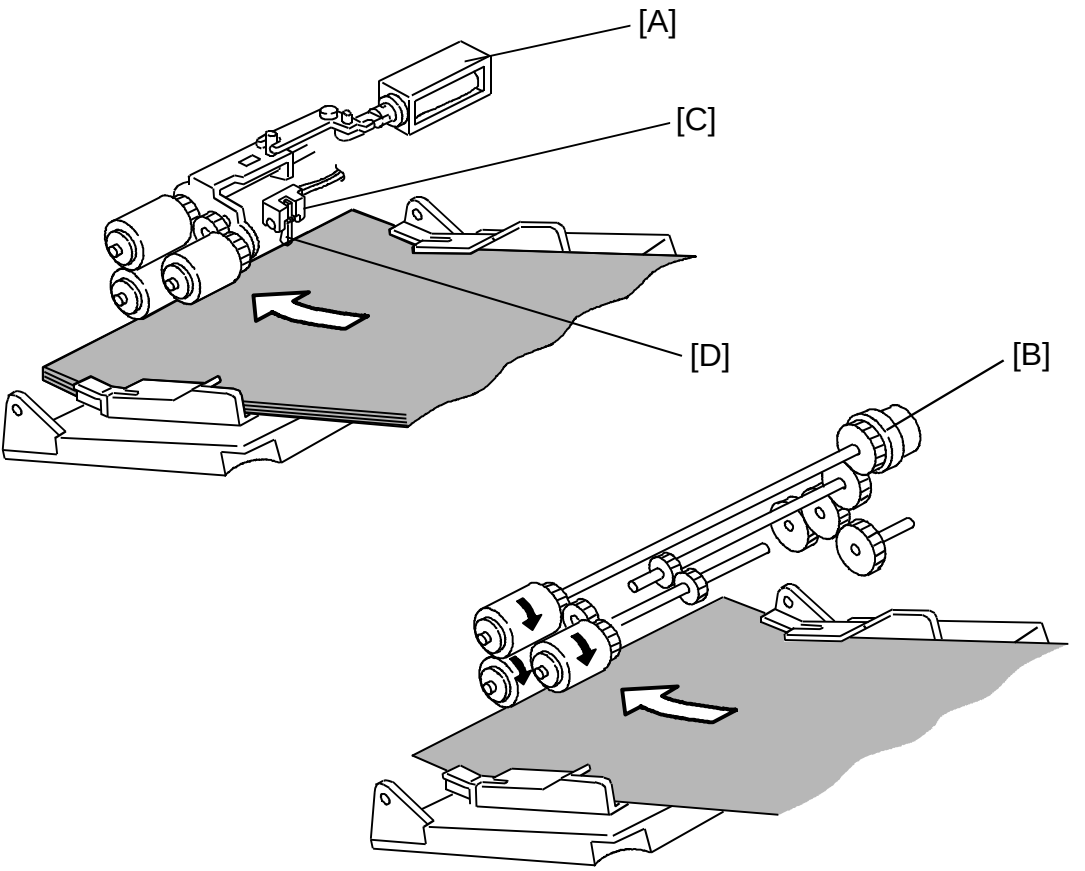

The by-pass feed table uses the FRR feed system. The pick-up solenoid [A], and by-pass feed clutch [B] control paper feeding from the by-pass feed table.

The by-pass paper end sensor [C] detects if there is paper on the by-pass feed table.

When there is no paper on the by-pass feed table, the paper end feeler [D] drops in the cut out of the lower guide plate and the paper end sensor deactivates. When paper is present on the by-pass feed table, the paper pushes up the end feeler [D] to activate the paper end sensor [C]. The CPU turns off the paper end indicator on the LCD panel and turns the start key from red to green.

11.13.2 Table Open/Close Detection

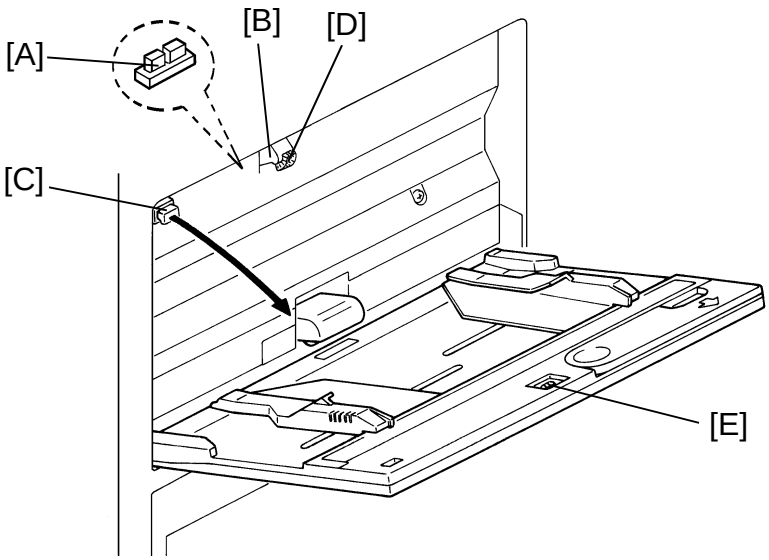

When the by-pass feed table is opened, the by-pass feed table sensor [A] is activated by the actuator [B]. Then the CPU turns on the by-pass feed indicator on the operation panel.

When the by-pass feed table is opened, the LCD indicates the OHP, Thick paper, and Odd size keys.
These modes can be selected only when the paper is fed from the by-bass feed table.

On this model, opening the by-pass feed table does not shift the copier into interrupt mode. The selected modes and input data before opening the by-pass feed table remain. Also other paper trays can be selected while the by-pass feed table is open.

The by-pass feed table is held by the latch [C]. When the upper left corner of the by-pass feed table is pressed, this latch comes out and unlocks the feed table.
When the by-pass feed table is closed, the latch is pressed in and catches the feed table.

The brush [D] on the by-pass feed table sensor actuator cleans the by-pass length sensor surface when the table is closed.

11.13.3 Paper Size Detection

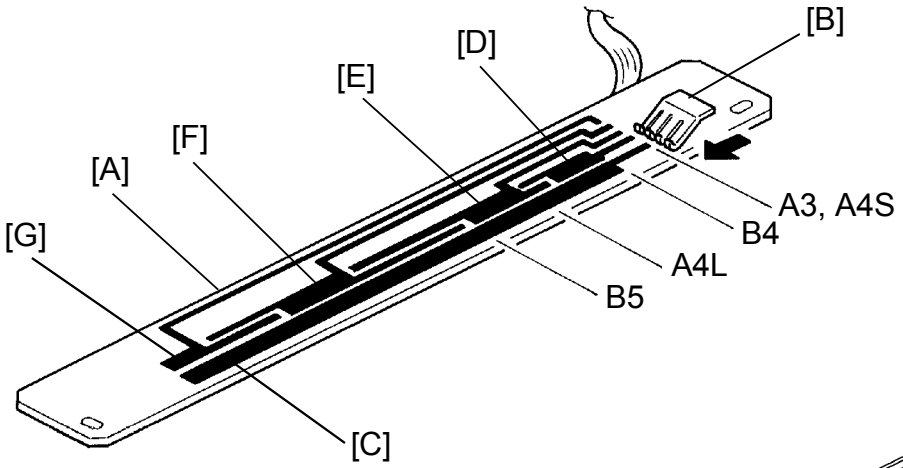

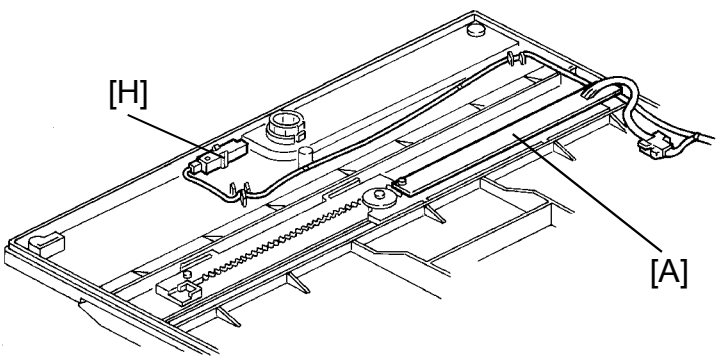

As for editing functions such as centering, edge erase etc. paper size information is necessary. The paper size detection mechanism is equipped with the by-pass feed table.

The paper width detecting board [A] monitors the paper width. The rear side fence is connected to the terminal plate [B]. When the side fences are positioned according to the paper width, the terminal plate is shifted accordingly. The terminal plate consists of four terminals and two of them always touches the ground pattern [C]. The other two terminals touch the patterns on the board. The pattern is separated into four areas [D], [E], [F], [G]. The high or low (grounded) condition of these four areas differ according to the paper size and the main CPU monitors each area condition and judges the paper width.

The by-pass length sensor [H] detects whether the paper is longer than A4 (letter) sideways or not.
By the combination of the paper width data and the paper length sensor output, the machine decides the paper size.

11.14 PAPER REGISTRATION

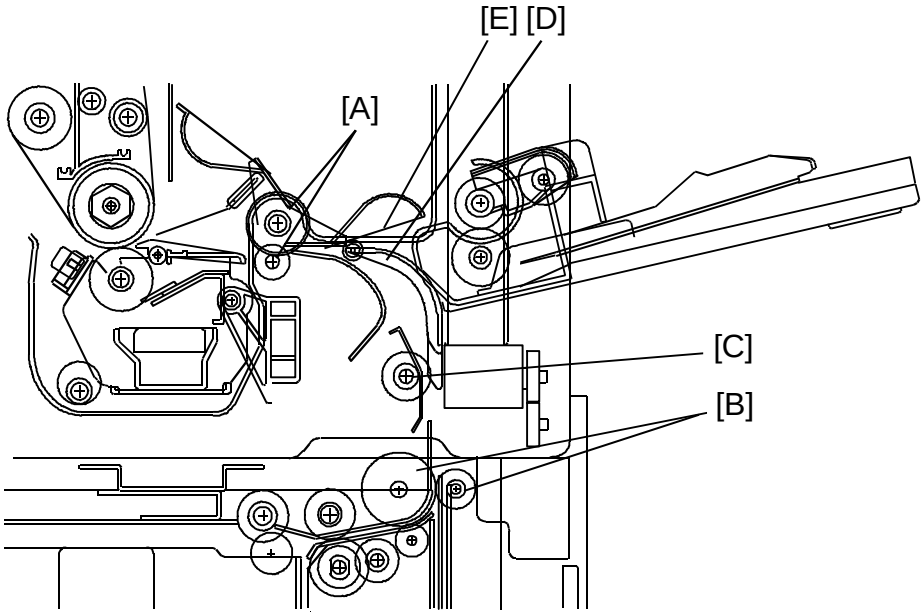

The registration rollers [A] have two functions. One is aligning the lead edge of the paper with the leading edge of the image on the transfer belt. Registration clutch turns on at the programmed time. It turns off 30 pulses after the trailing edge of the paper is detected by the registration sensor.

The other function is to correct skewing of paper fed from the trays. When the leading edge of the paper reaches the registration rollers, the vertical transport rollers [B] and relay roller [C] continuously turn to transport the paper. When the registration rollers are not turning, the leading edge of the paper is pushed against the registration rollers. This makes a little buckle on the paper between the vertical transport rollers and the registration rollers to correct paper skew.

The registration sensor makes "ON" check to detect if the paper is arriving correctly.

Shortly after the leading edge of the paper reaches the registration roller, the registration clutch activates to feed the paper.

To have a large enough paper buckle during paper registration without damaging the paper, the upper guide plate [D] (for paper from the paper trays) and the guide mylar [E] (for paper from the by-pass feed table) are moved up by the paper when the paper buckle is fully created.

11.15 REGISTRATION DRIVE MECHANISM

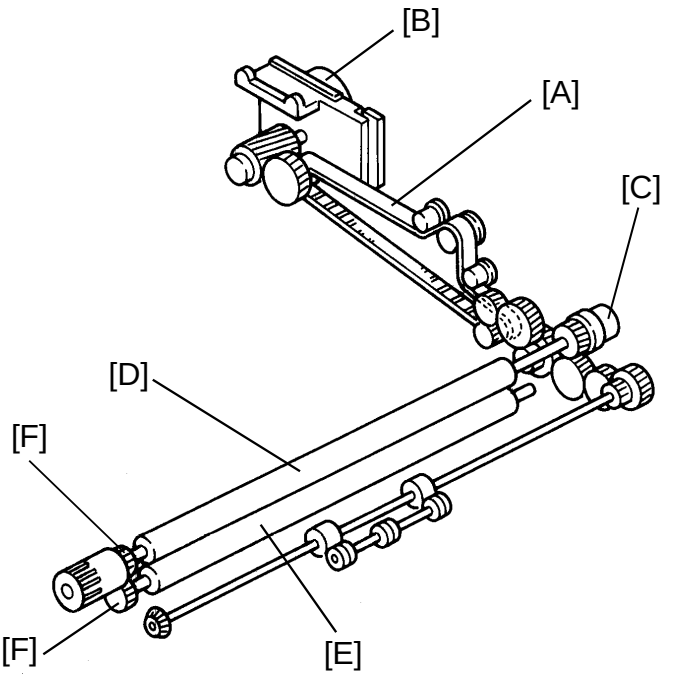

Through the timing belt [A], transport motor [B] rotation is transmitted to the registration clutch [C]. When the registration clutch activates, the transport motor drive is transmitted to the upper registration roller [D], then to the lower registration roller [E] via two gears [F] at the front side.

SECTION 3

INSTALLATION

1. INSTALLATION REQUIREMENTS

1.1 ENVIRONMENT

1. Temperature Range: 10°C to 32°C (50°F to 89°F)
2. Humidity Range: 15% to 90% RH
3. Ambient Illumination: Less than 2,000 lux (Do not expose to direct sunlight.)
4. Ventilation: Minimum space 20 m^3.
   Room air should turn over at least 30 m^3/hr/person
5. Ambient Dust: Less than 0.15 mg/m^3 (4 x 10^{-6}, 4 x 10^{-6}, Oz/yd^3)
6. If the place of installation is air-conditioned or heated, do not place the machine
   a) where it will be subjected to sudden temperature changes,
   b) where it will be directly exposed to cool air from an air conditioner,
   c) where it will be directly exposed to heat from a heater.
7. Do not place the machine where it will be exposed to corrosive gasses.
8. Do not install the machine at any location over 2,000 m (6,500 feet) above sea level.
9. Place the copier on a strong and level base.
10. Do not place the machine where it may be subjected to strong vibrations.

1.2 MACHINE LEVEL

1. Front to back: Within 5 mm (0.2") of level
2. Right to left: Within 5 mm (0.2") of level

NOTE: The machine legs may be screwed up or down in order to level the machine. Set a carpenter's level on the exposure glass when you do this.

1.3 MINIMUM SPACE REQUIREMENTS

Place the copier near the power source, providing clearance as shown:

Copier only

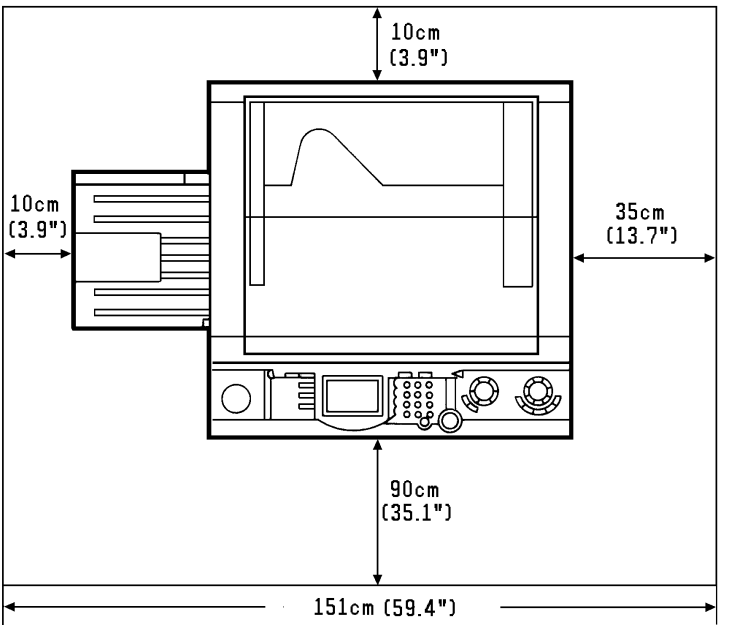

Full system

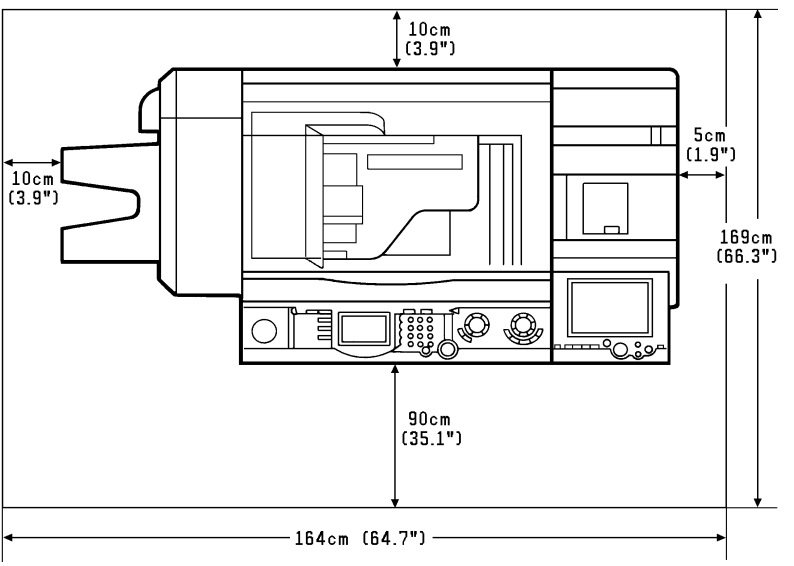

NOTE: A space of at least 10 cm (3.9") at the rear of the machine is necessary for smooth air inlet into the machine.

1.4 POWER REQUIREMENTS

1. Input voltage level: 115 V/60 Hz: More than 12 A
   220 ~ 240 V, 50/60 Hz: More than 7 A

2. Permissible voltage fluctuation: 10%

3. Do not set anything on the power cord.

NOTE: a) Make sure the plug is firmly inserted in the outlet.
b) Avoid multi-wiring.

2. COPIER INSTALLATION

2.1 ACCESSORY CHECK

Check the quality and condition of the accessories in the box according to the following list:

2.1.1 Copier

1. Operating Instructions (Except -27 machine) 1
2. Envelop - NECR (-17 Only) 1
3. NECR (-17, -27, machine only) 1
4. Exit tray 1
5. Operating Instructions Holder 1
6. Total Counter Resetting Tool 1
7. Leveling Shoe 4
8. Instructions Procedure Sheet 1
9. Philips Truss Head screws M4 x 8 2
10. Caution Decal -4 Languages (-22, -26, -27 only) 1
11. Ferrite Core - Large (-22, -26, -27 only) 1
12. Ferrite Core - Small (-22, -26, -27 only) 1
13. Additional Procedure Sheet for DJF Installation (-22, -26, -27 only) 1

2.1.2 Optional Table (Option: A702)

1. Base Bracket 1
2. Table Cover 1
3. Front Cover 1
4. Lower Cover 1
5. Philips Pan Head screws M4 x 6 9
6. Philips Truss Head screws M4 x 6 2

2.2 COPIER SEPARATION

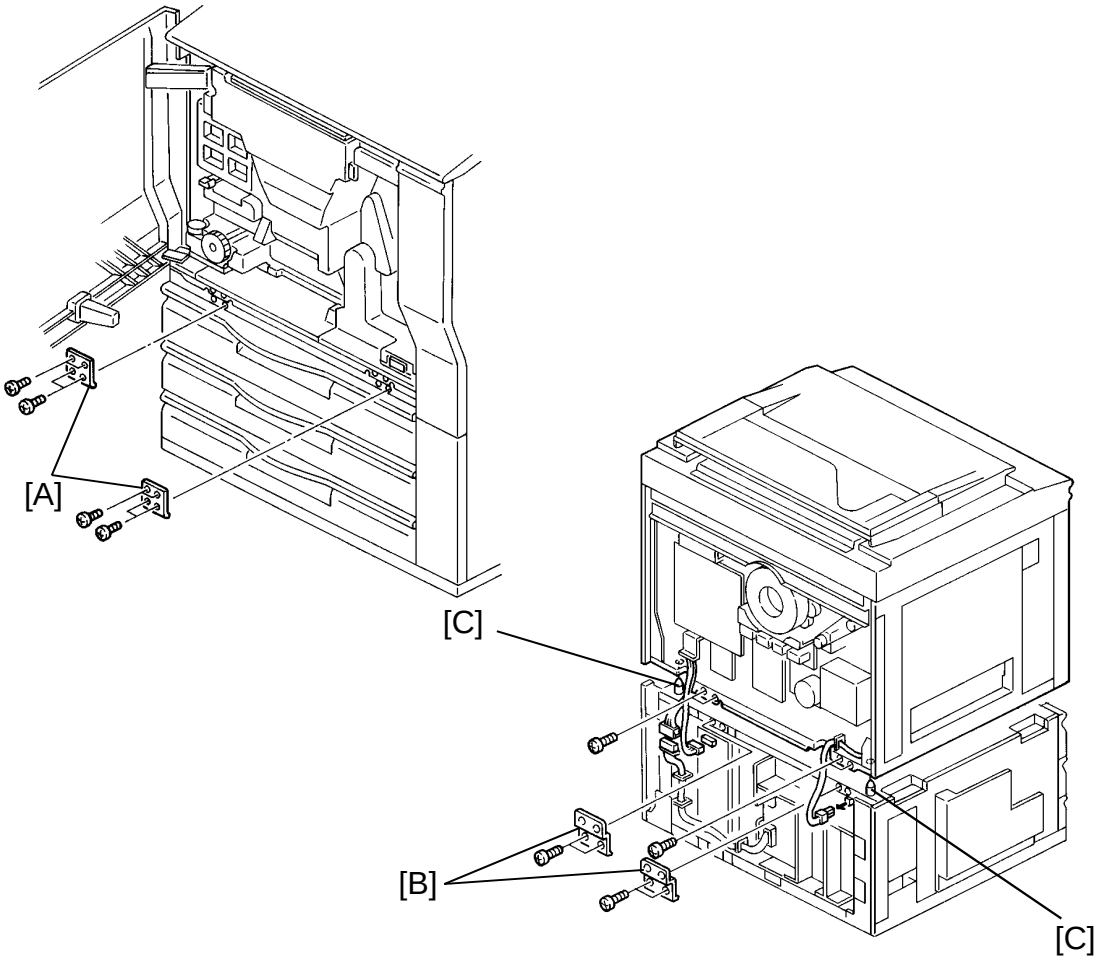

The machine can be separated into two units (the main frame and paper supply unit).
Separation of the machine will help the transportation to the customer's site.

1. Open the front door and remove the front securing brackets [A] (4 screws each).
2. Remove both upper and lower rear covers (4 screws each).
3. Remove the rear securing brackets [B] (4 screws each).
4. Disconnect the connectors running between both units, and free them from the harness clamps.
5. Lift-up the machine by using the handles.

NOTE: a) When lifting the machine, lift straight up. Positioning pins [C] are located at the rear.
b) When attaching, make sure to clear the harnesses out of the way.

2.3 COPIER INSTALLATION PROCEDURE

NOTE: Since the installation procedure is not packed with the copier as an accessory, always bring this manual with you.

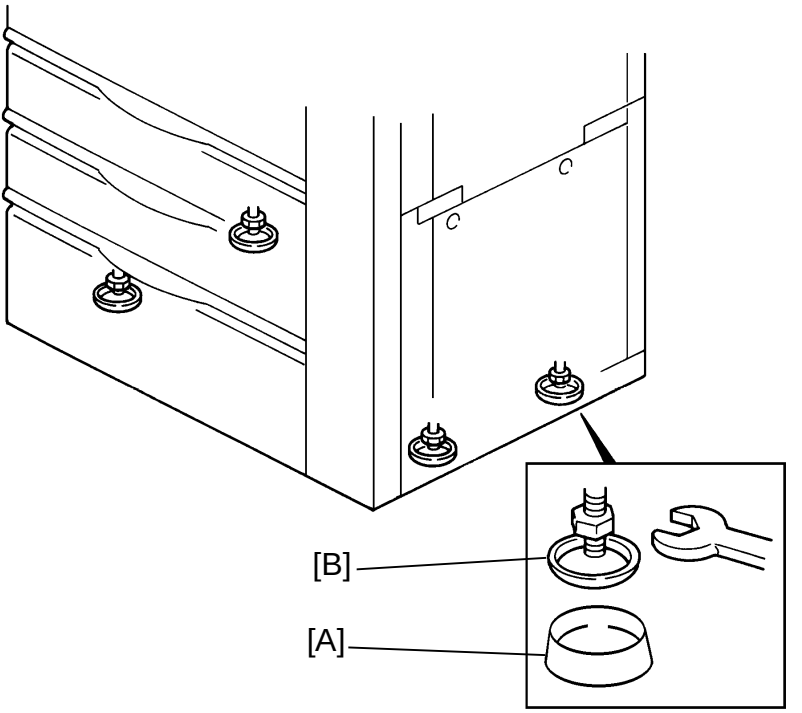

CAUTION: 1) When removing the drum protective sheet, always remove all the development units out of the copier.
2) When installing the copier, make sure that the copier is unplugged.

NOTE: a) Insert the leveling shoes [A] under the leveling foots [B], and level the machine if necessary. (The leveling foots can be screwed up or down.)

b) Keep the factory set data sheet under the operation panel for future use. We recommend making a copy to be kept at your office also.

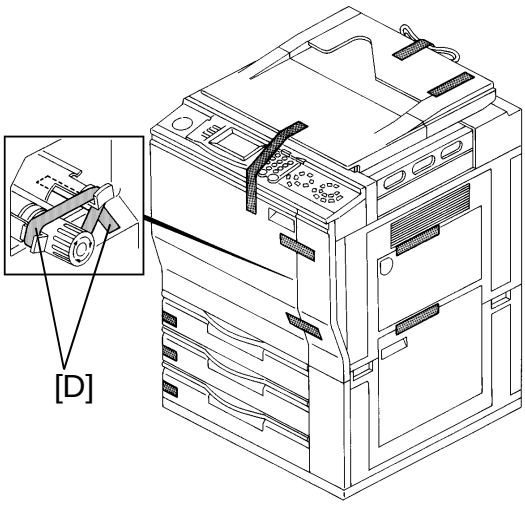

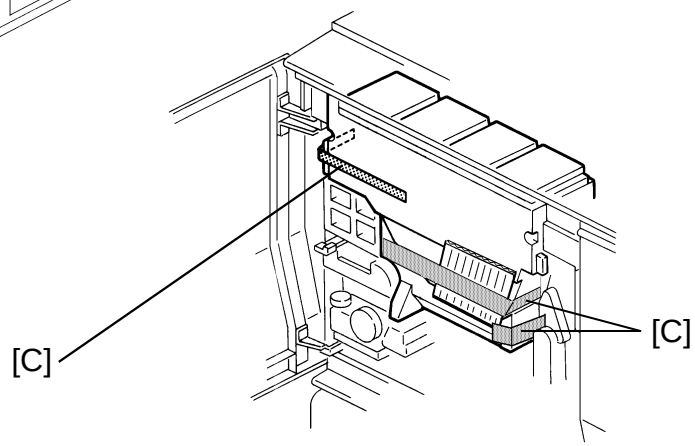

1. Remove the tape strips.
2. Open the front doors then remove the tape strips [C] around the toner tank and two tapes [D] fixing the registration guide plates (B_1 and B_3 knobs).

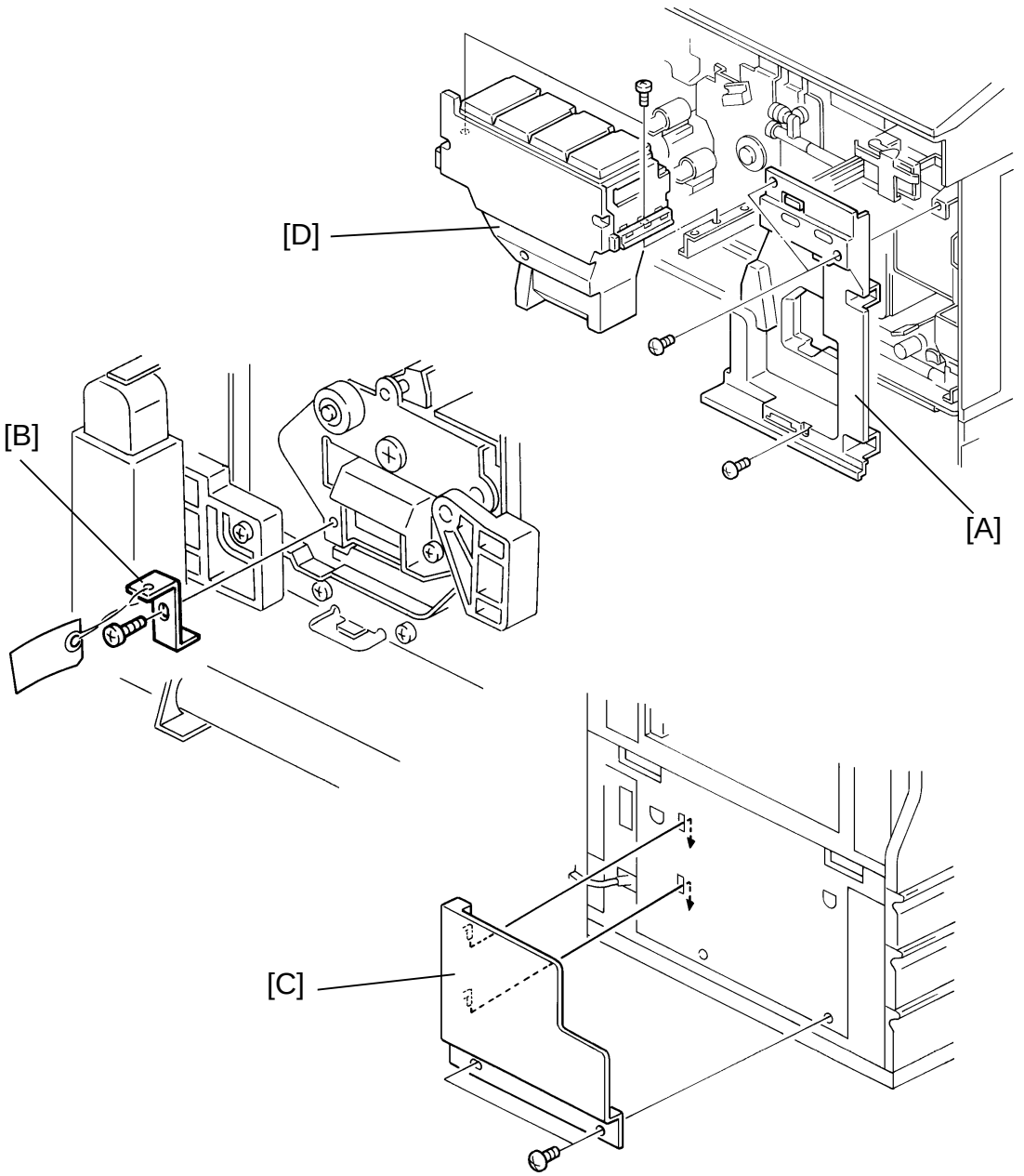

3. Remove the right inner cover [A] (3 screws).
4. Remove the bracket [B] fixing the transfer roller unit (1 screw).
5. Install the operating instruction holder [C] (two M4 x 8 truss screws).
6. Push and slide out the toner tank [D]. Then remove the toner tank [D] (2 screws).

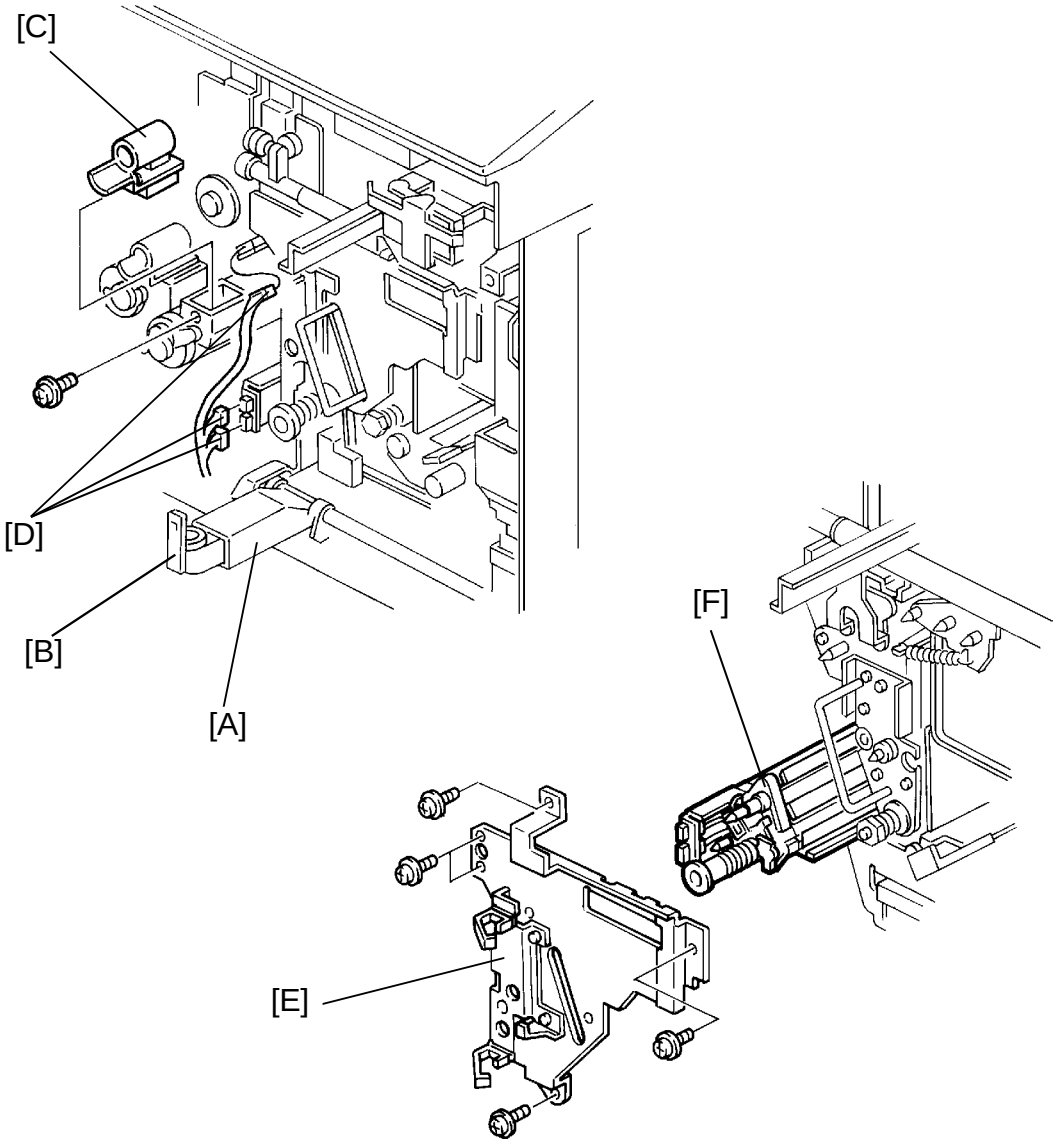

7. Lower the toner collection duct [A] (1 hook [B]).
8. Remove the yellow toner supply receptacle [C] (1 screw).
9. Disconnect the three connectors [D] and free them from the three harness clamps.
10. Remove the transfer belt stay [E] (5 screws).
11. Pull and remove the transfer belt cleaning unit [F] out.

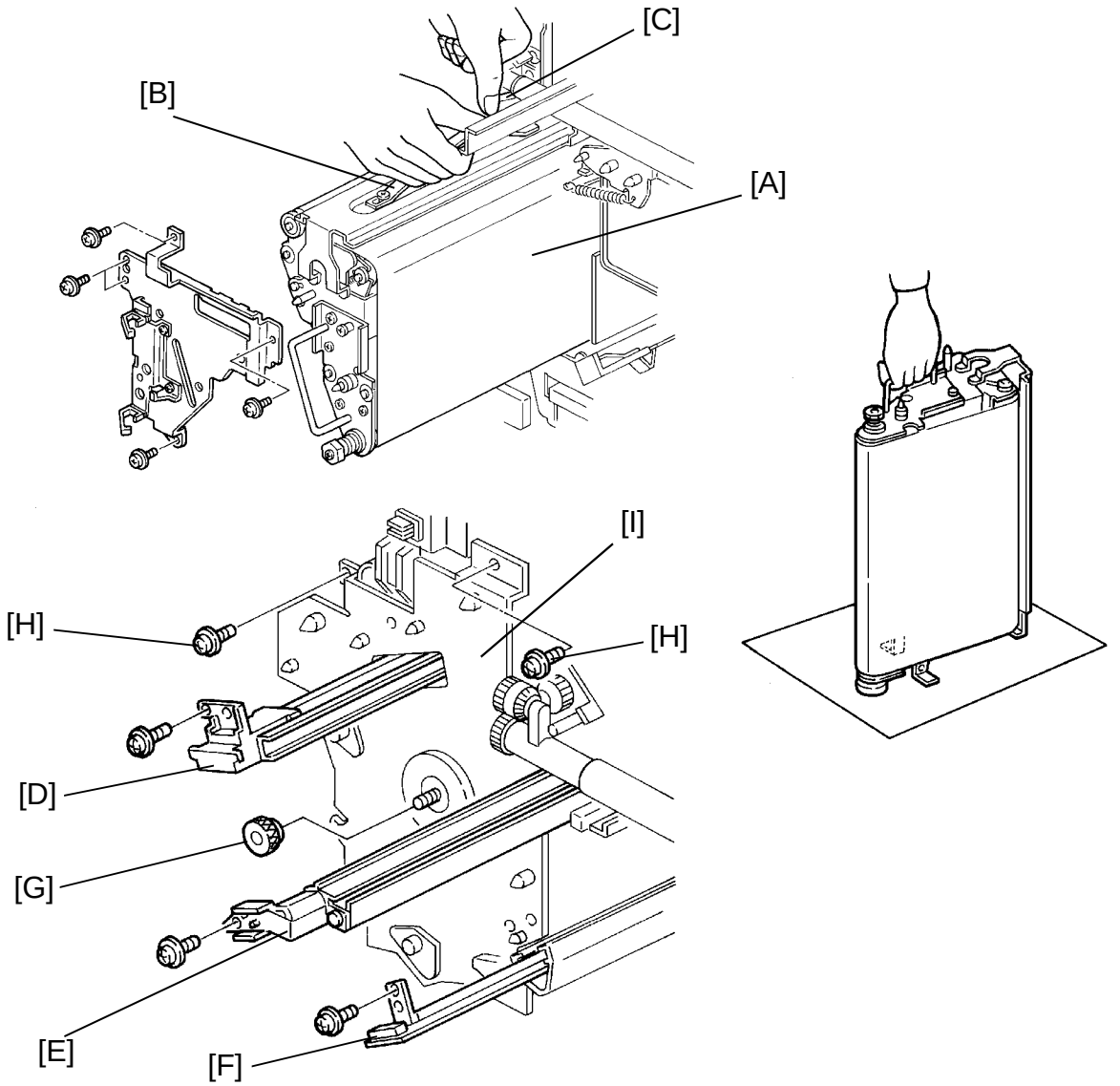

12. Carefully pull and remove the transfer belt unit [A]. (While holding the handle [B], release the lever [C])

    NOTE: There are stands at the rear side of the transfer belt unit. After pulling out the unit out of the machine, make the transfer belt unit stand as shown.
    Do not touch the transfer belt surface with your oily bare hands.

13. Remove the charge corona unit [D] (1 screw), PCC [E] (1 screw) and ID sensor board [F] (1 screw).

14. Remove the knob [G] and the two screws [H] and slightly (2 ~ 3 cm) pull out all the development units then remove the drum stay [I].

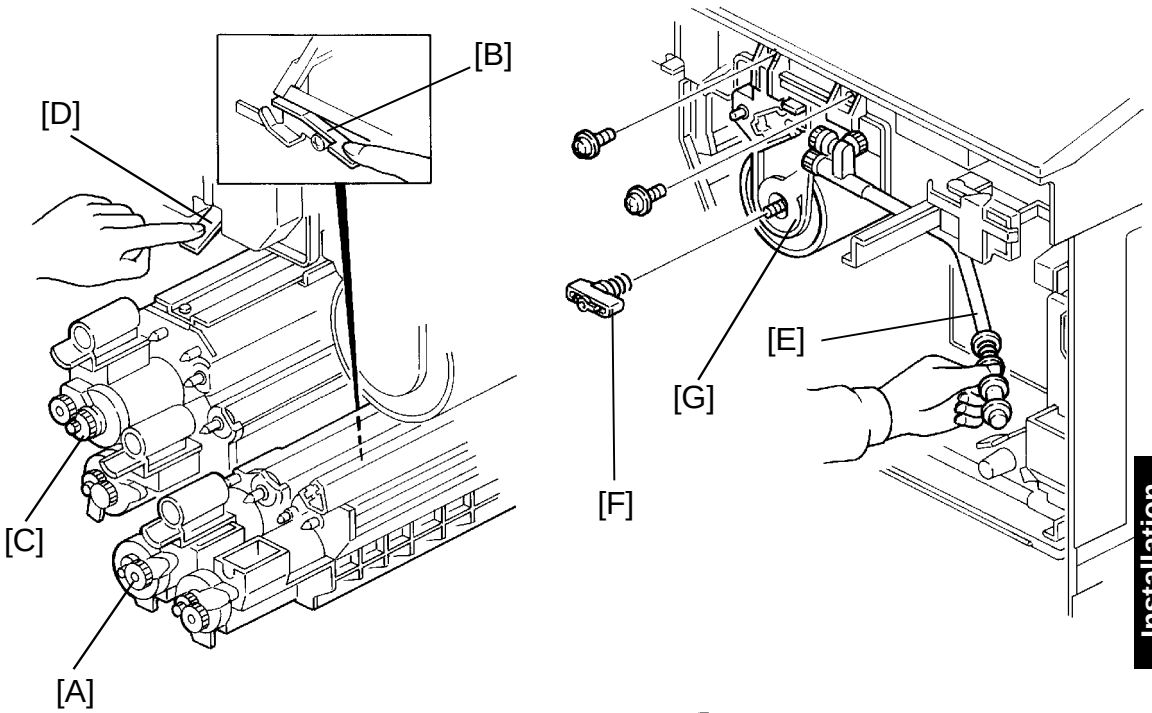

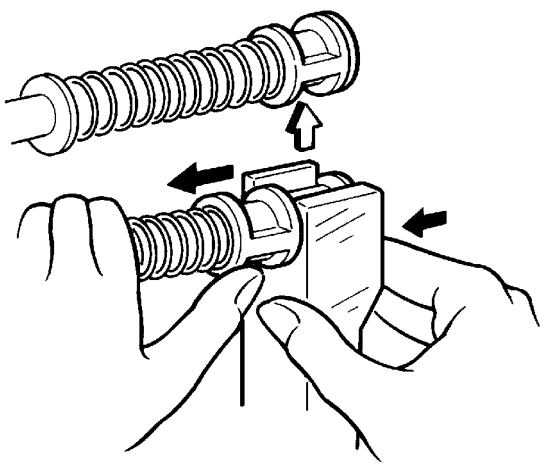

15. Remove the magenta/yellow development unit [A] (1 release lever [B]) and remove the black/cyan development unit [C] (1 release lever [D]).
16. Disconnect the drum's toner collection pipe [E] as shown.
17. Remove the knob screw [F] (counterclockwise) and pull out the quenching lamp.
18. Remove the drum unit [G] (2 screws).

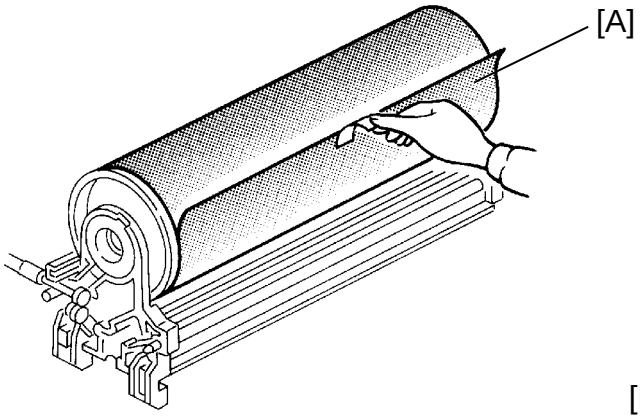

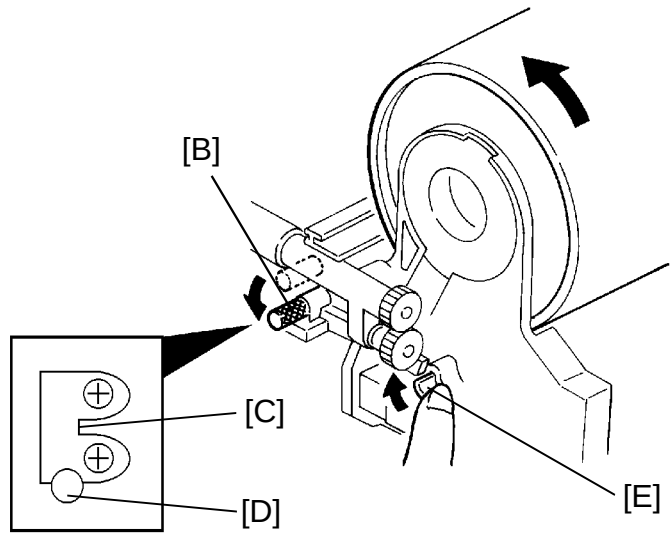

19. Turn over the drum unit.

    NOTE: Let the unit rest on it's casing.

20. Remove the OPC drum protective sheet [A].

21. Loosen then move the knob [B]. (Move the knob from [C] to [D].)
    - [C] position = No pressure applied
    - [D] position = Pressure being applied

22. Tighten the knob [B] at the lower position [D].

23. While pressing up the latch [E] to apply the cleaning blade pressure, rotate the OPC drum counterclockwise 3 times to ensure the setting powder is evenly applied, as shown.

    NOTE: Hold only the edge of the OPC drum to rotate it (within 1 cm from the end).

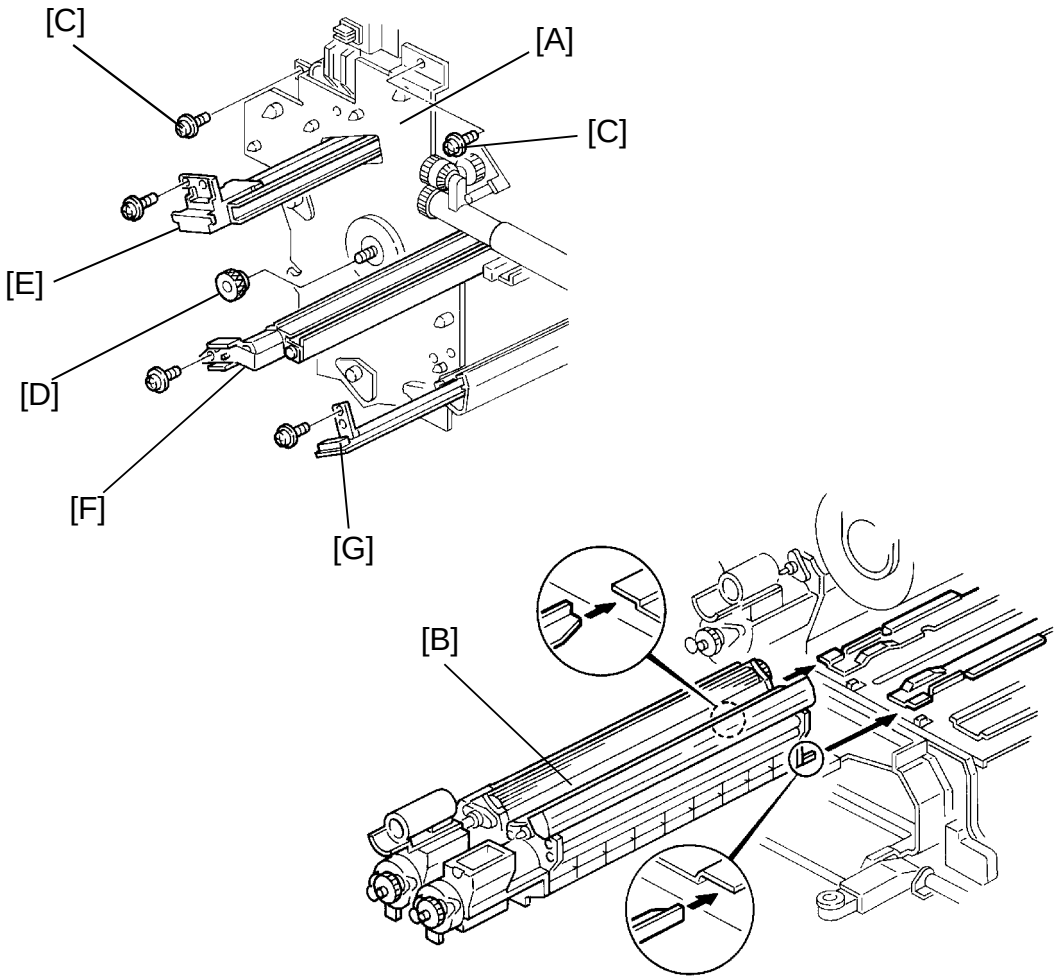

24. Reinstall the following units or parts in the machine as follows.
    1) Slide in the drum unit and secure it to the shaft with the knob screw.
    2) Set the drum stay [A] in position and secure the drum unit (2 screws).
    3) Remove the drum stay [A] and reinstall the quenching lamp, toner collection tube and development units.

    NOTE: When reinstalling the magenta/yellow development unit [B], make sure that the bottom plate fits the rails as shown.

    4) Set the drum stay by securing the 2 screws [C] then the knob [D].
    5) Reinstall the charge corona unit [E], PCC [F], and the ID sensor board [G] (1 screw each).

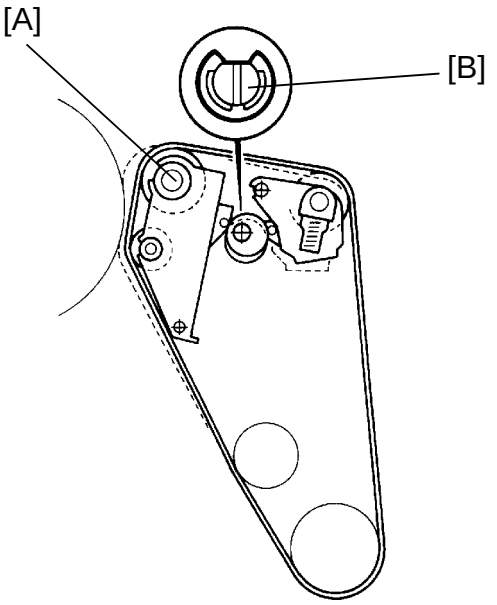

25. Confirm the belt bias roller [A] is in the release position (most inner position) as shown. If not, turn the shaft [B] with a flat head screw drive until the belt bias roller comes in the release position.

    NOTE: If the belt bias roller is not in the release position, it will touch the OPC drum and damage it.

26. Re-install the following units or parts in the following order.
    1) Transfer belt unit.
    2) Transfer belt cleaning unit
    3) Transfer belt stay (5 screws)
    4) Three connectors (6P white, 3P red, 3P white)
    5) Toner collection duct (1 hook)

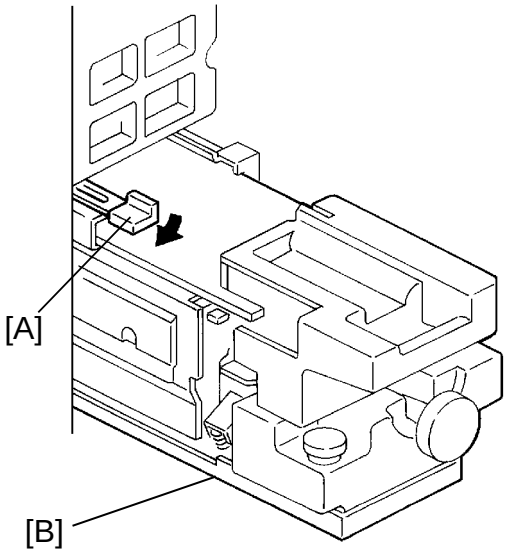

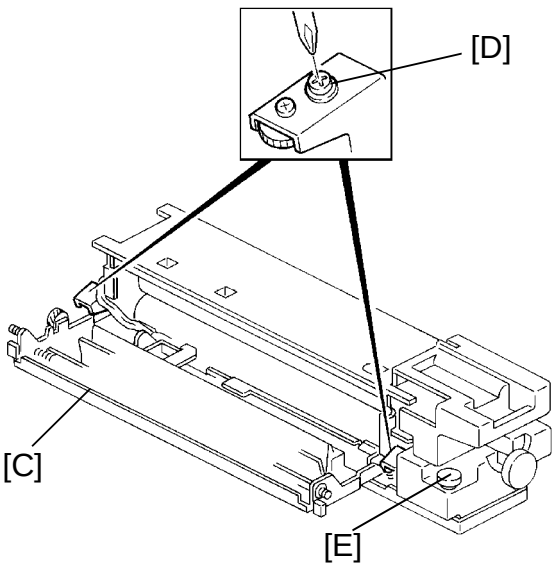

27. While releasing the lever [A], pull out the fusing unit [B].

28. Open the exit unit [C] (2 "D4" release levers).

29. Loosen the 2 black screws [D] until it moves freely so that the fusing pressure is being applied.

    NOTE: Do not turn the pressure adjustment screws which are located just beside the screws [D].

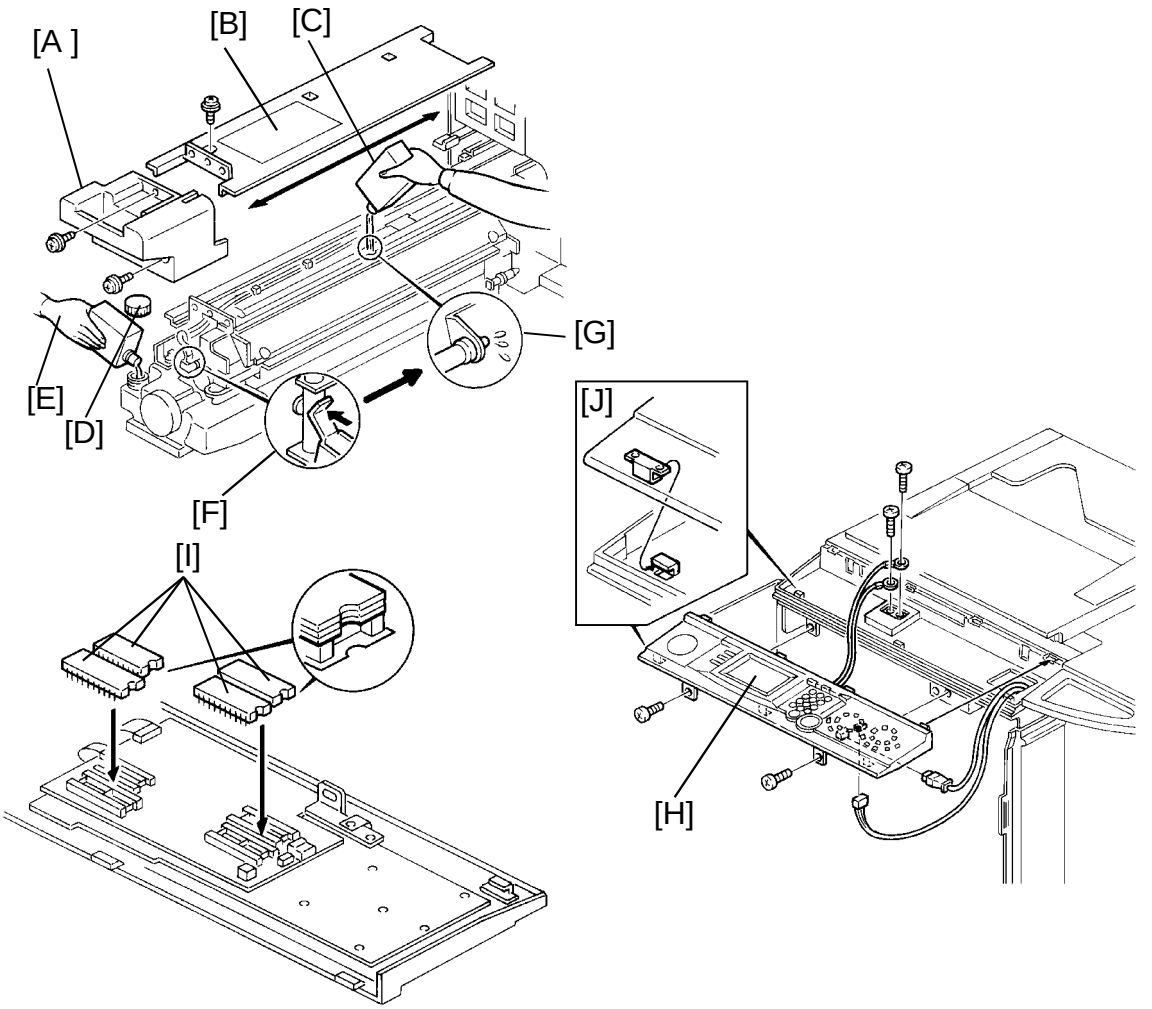

30. Remove the fusing handle cover [A] (2 screws) and the fusing top cover [B] (1screws).

31. Prime the oil supply pad with silicone oil [C].

32. Remove the oil cap [D] and fill the tank with silicone oil to its max level [E].

33. Manually operate the oil pump lever [F] and confirm the proper operation of the silicon oil supply system [G].

34. Reset the covers, the exit unit, oil cap and the fusing unit.

35. For **-26 and -27** machines, perform the following language ROM installation procedures. For **-22** machine, perform if replacement is needed.
    1) Remove the operation panel [H] (4 screws and 2 connectors).
    2) Install the requested language roms [I].
    3) Reinstall the operation panel making sure that the panel is properly hooked in [J].

36. Locate the switch actuator [H] inside the right door and actuate the front safety switch.

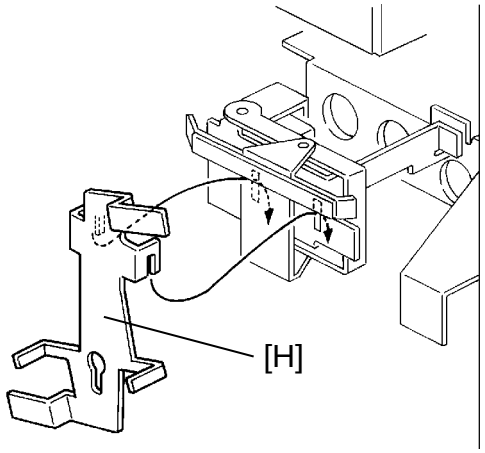

37. Plug in the power cord and turn on the main switch.

38. Enter SP mode as follows.
    1) Press the clear modes key.
    2) Enter "107" with number keys.
    3) Press the clear/stop keys for more than 3 seconds.

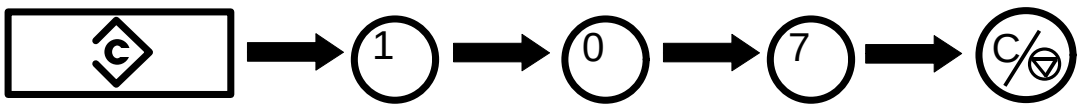

39. Touch the SP Test Mode key [A].

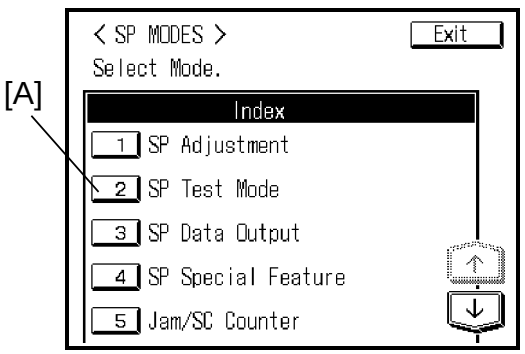

40. Touch the Next key [B] to open page 7.

    NOTE: Wait until the development unit drive stops then start the step 41.

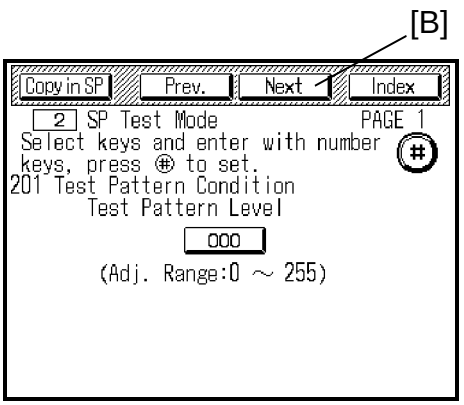

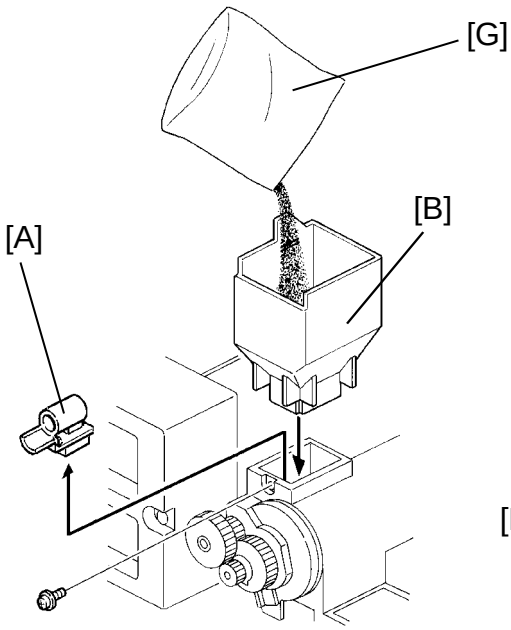

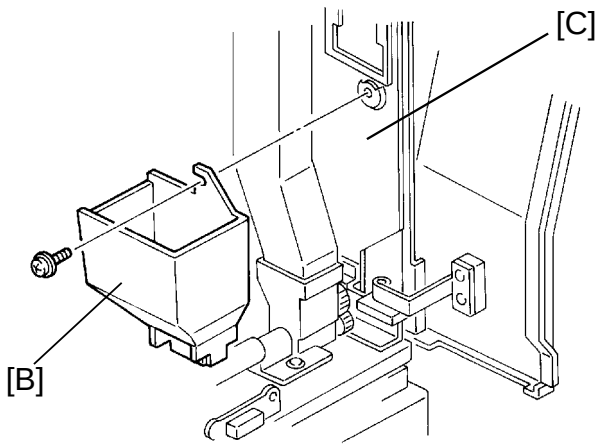

41. Remove the black toner supply receptacle [A] (1 screw).

    NOTE: Refer to the toner tank lid for the color of the development unit.

42. Remove the developer supply funnel [B] from the bracket [C] and clean the inner surface.

43. Set the developer supply funnel on the black development section as shown.

44. Touch the key [D], to enter the output mode.

45. Enter "30" by using the number keys then touch the enter key [E], to select test mode #30 "black development drive motor ON".

46. Touch the Start key [F].

47. Shake a pack of black developer [G] 20 times then pour them in.

48. 1 minute after pouring the developer, touch the stop key [H].

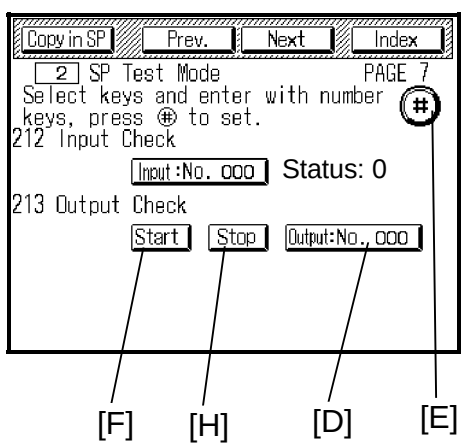

    NOTE: Do not touch the stop key within 1 minute, otherwise, the developer will not be evenly distributed in the development unit.

49. Remove the developer supply funnel, then install the toner supply receptacle.

50. Install the cyan, magenta and yellow developer in the same manner as black developer installation (step #40 to #49).

    NOTE: To select the "color development drive motor ON" mode, enter "31" for color instead of 30 for black (refer to step #45).

51. Return the developer supply funnel to the original position.

52. Touch the Previous key [A] to open page 5.

53. Perform the developer initial setting as follows.
    1) Confirm if the main charge corona, PCC, ID sensor boards are set correctly (1 screw each).
    2) Confirm that the toner tank is not set.

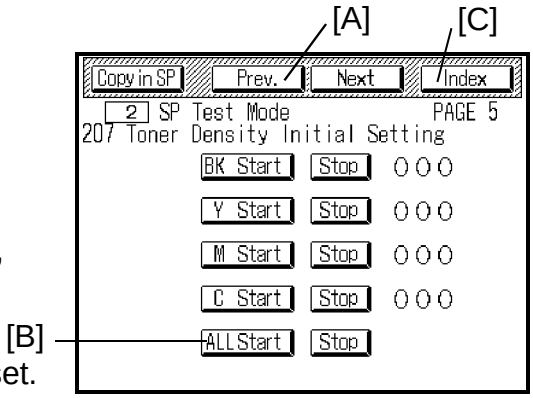

    NOTE: If the toner tank is set, toner is supplied during the developer initial setting and the machine cannot figure out the proper toner concentration of the new developer.

    3) Touch the All Start key [B] to start the developer initial setting. After the adjustment is completed, the machine stops automatically.

54. Touch the Index key [C].

55. Touch the SP Data Output key [D].

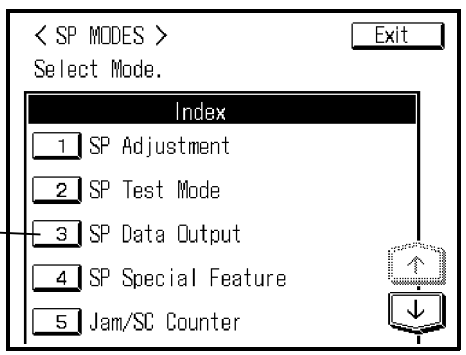

56. Touch the Next key [E] to open page 2.

57. Confirm whether if the VT has the same values as Vref for all colors (Bk, Y, M, C). If not, touch the Index key [F] then return to the test mode page 5 to perform the developer initial setting (step 53) again.

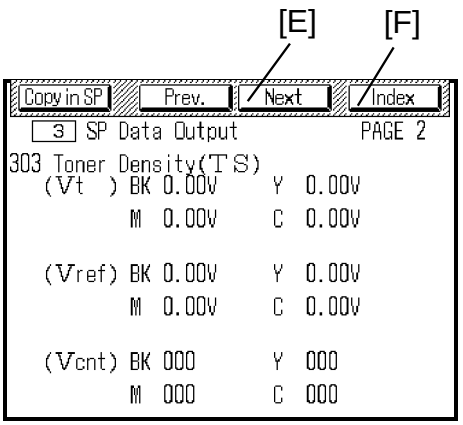

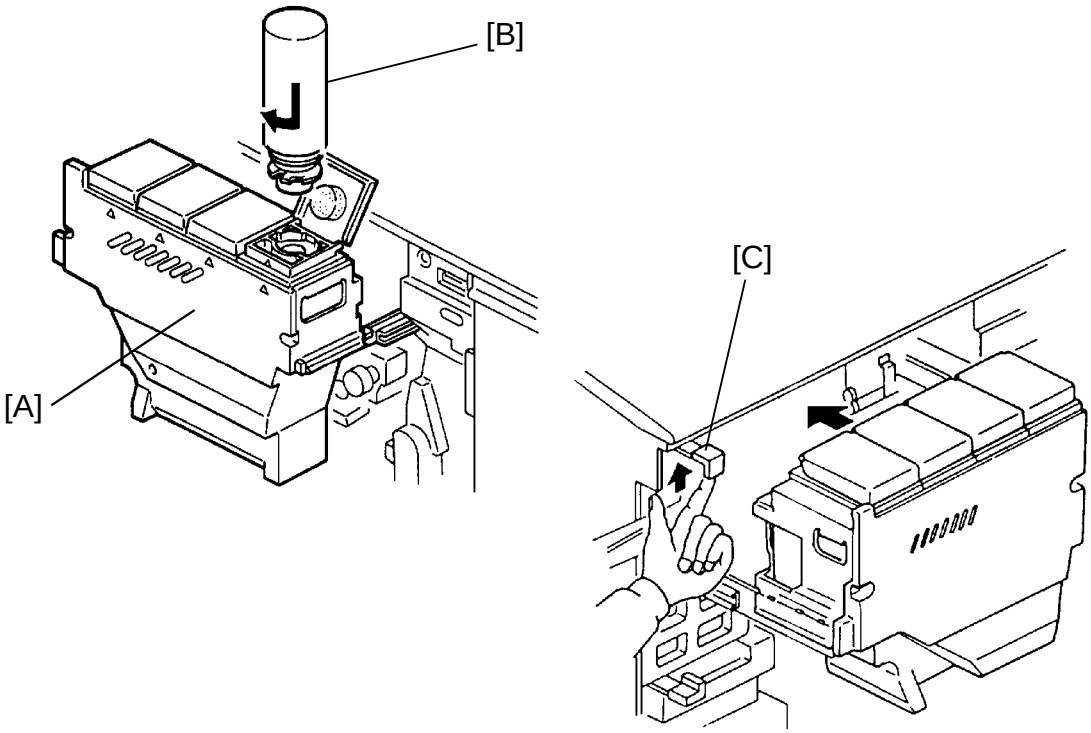

58. Set the toner tank [A] on the Accuride rails (2 screws).

59. Add toner [B] for all colors.

NOTE:
- Read the instructions on the box for how to add toner.
- Before reinstalling the toner tank, wait at least 30 seconds to let the toner settle.

60. Slowly push the toner tank [A] back in until it hits the green lever [C]. Then lift the green lever [C] and push the unit until it locks.

61. Close the front doors and set the copy tray.

62. Load A3 or 11" x 17" paper in the 3rd paper tray.

63. Place the C-4 test chart on the exposure glass.

64. Touch the Copy In SP key [D] and make 30 full color copies using A3 or 11" x 17" size paper. (60 full color copies using A4 or 11" x 8 1/2" is also acceptable.)

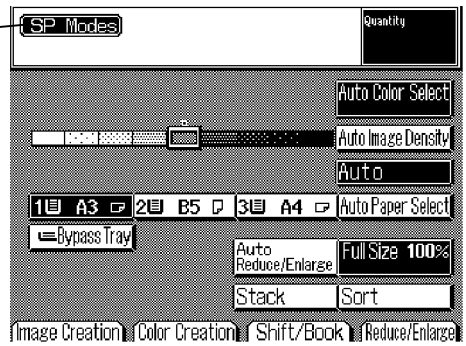

65. **Wait 5 minutes** to ensure that no residual voltage remains on the OPC drum.

    NOTE: The process control self check (step 67) must be performed when there is no residual voltage on the OPC drum.

66. Touch the SP Mode key [A] to enter the SP mode.

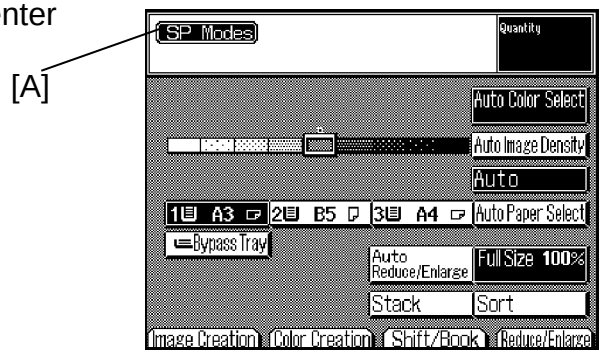

67. Touch the Index key.

68. Touch the SP Special Feature key [B].

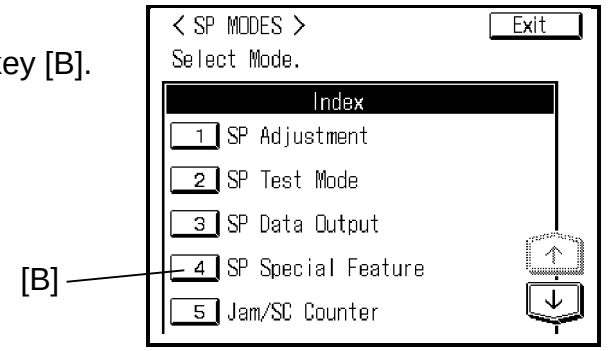

69. Touch the Next key [C] to open page 2.

70. Confirm that the PID key [D] is selected for the Process Control Mode Selection. If not, touch the PID key [D].

71. Touch the Index key [E].

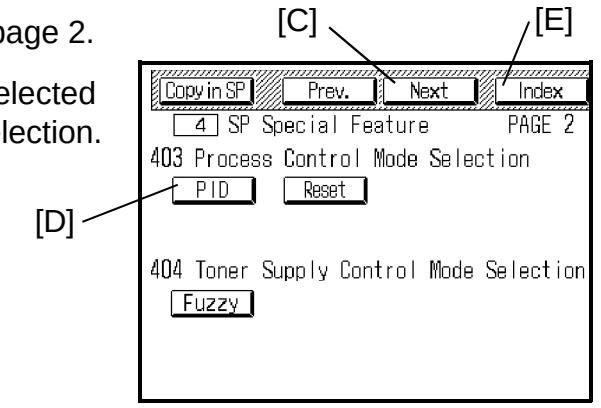

72. Touch the SP Test Mode key [A].

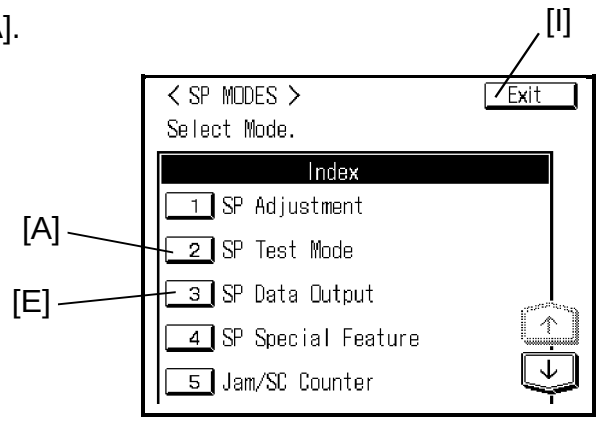

73. Touch the Next key [B] to open page 6.

74. Touch the Process Control Self Check Start key [C]. After the self check is completed, the machine stops automatically.

75. Touch the Index key [D].

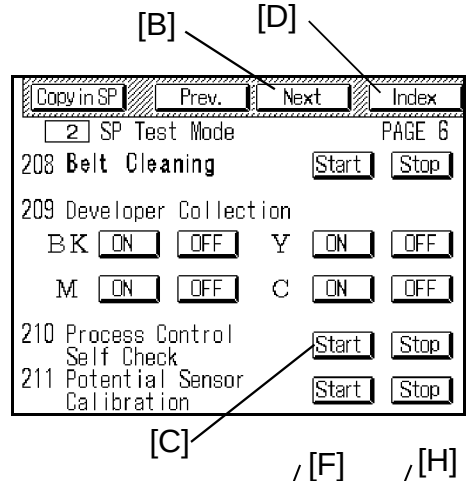

76. Touch the SP Data Output key [E].

77. Touch the Next key [F] and open page 4.

78. Check the VD and VL [G] for each color. If the difference between 'Target' and 'Actual' for any color exceeds 5, wait 5 minutes and go back to step 72 and perform the process control self check again.

79. Touch the Index key [H].

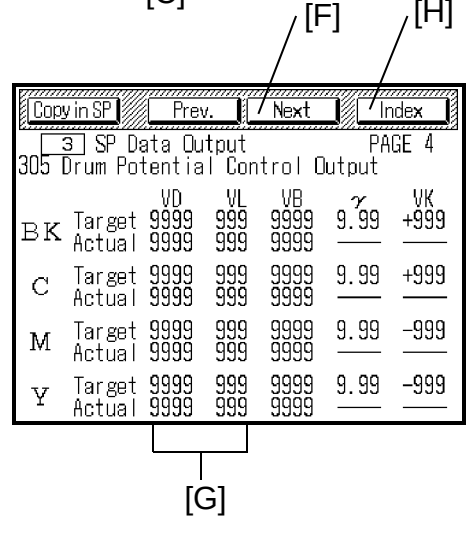

80. Touch the Exit key [I].

81. Turn off the main switch and place the accessory switch actuator to it's original position.

82. Reinstall the right inner cover (3 screws) and turn on the main switch.

83. Check the copy quality and adjust if necessary. (Refer to section 5.)

2.4 PAPER SIZE CHANGE

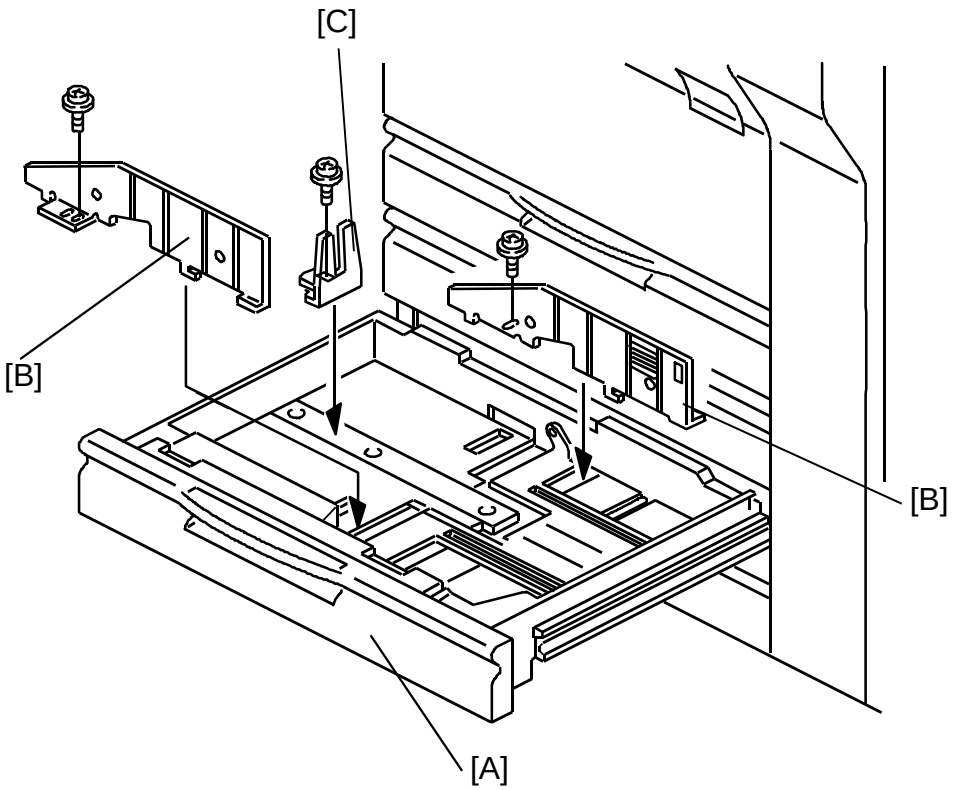

At the customer's request, change the paper size of 2nd and 3rd feed trays as follows.

1. Draw out the paper feed tray [A].
2. Change the position of the front and the rear side fences [B] (1 screw each) and the end fence [C] (1 screw) according to the paper size.

3. Enter SP Mode as follows:
   1) Press the clear modes key.
   2) Enter "107".
   3) Press the clear/stop key more than 3 seconds.

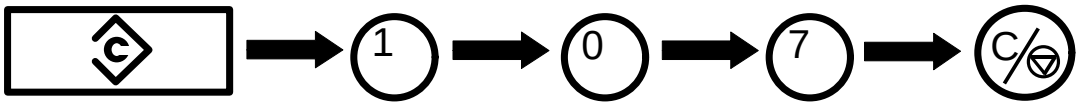

4. Touch the SP special feature key [A].

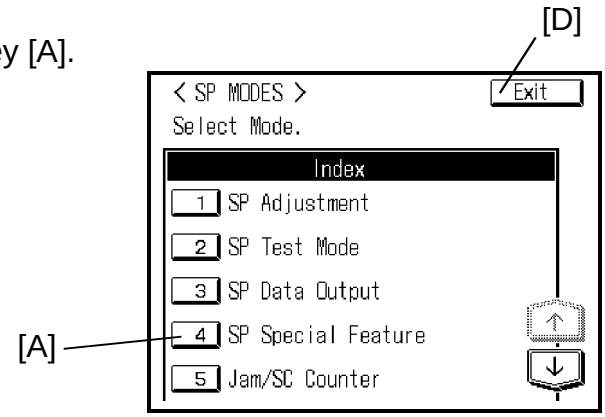

5. Touch the Previous key [B] to select the paper tray size setting mode (page 16) and touch appropriate paper size key and direction key of the 2nd or the 3rd feed station.

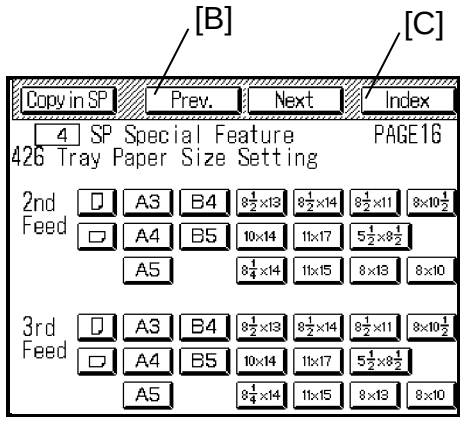

6. Touch the Index key [C].

7. Touch the Quit key [D] to exit SP mode.

8. Check copy quality and machine operation.

2.5 OPTIONAL HOLDER (A702) INSTALLATION

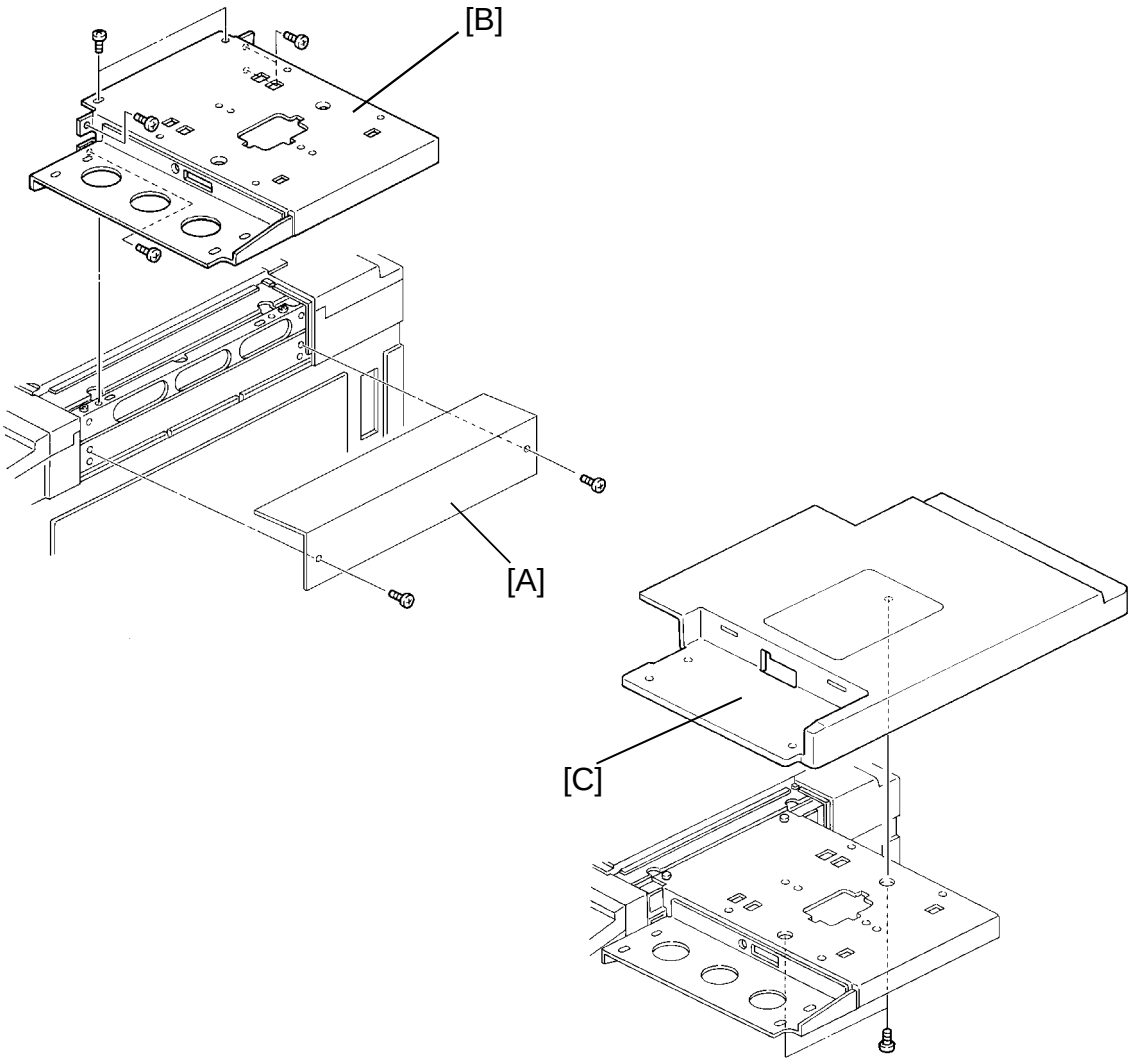

1. Remove the right upper cover [A] (2 screws).
2. Install the holder base bracket [B] (6 screws).
3. Install the holder cover [C] (2 screws).

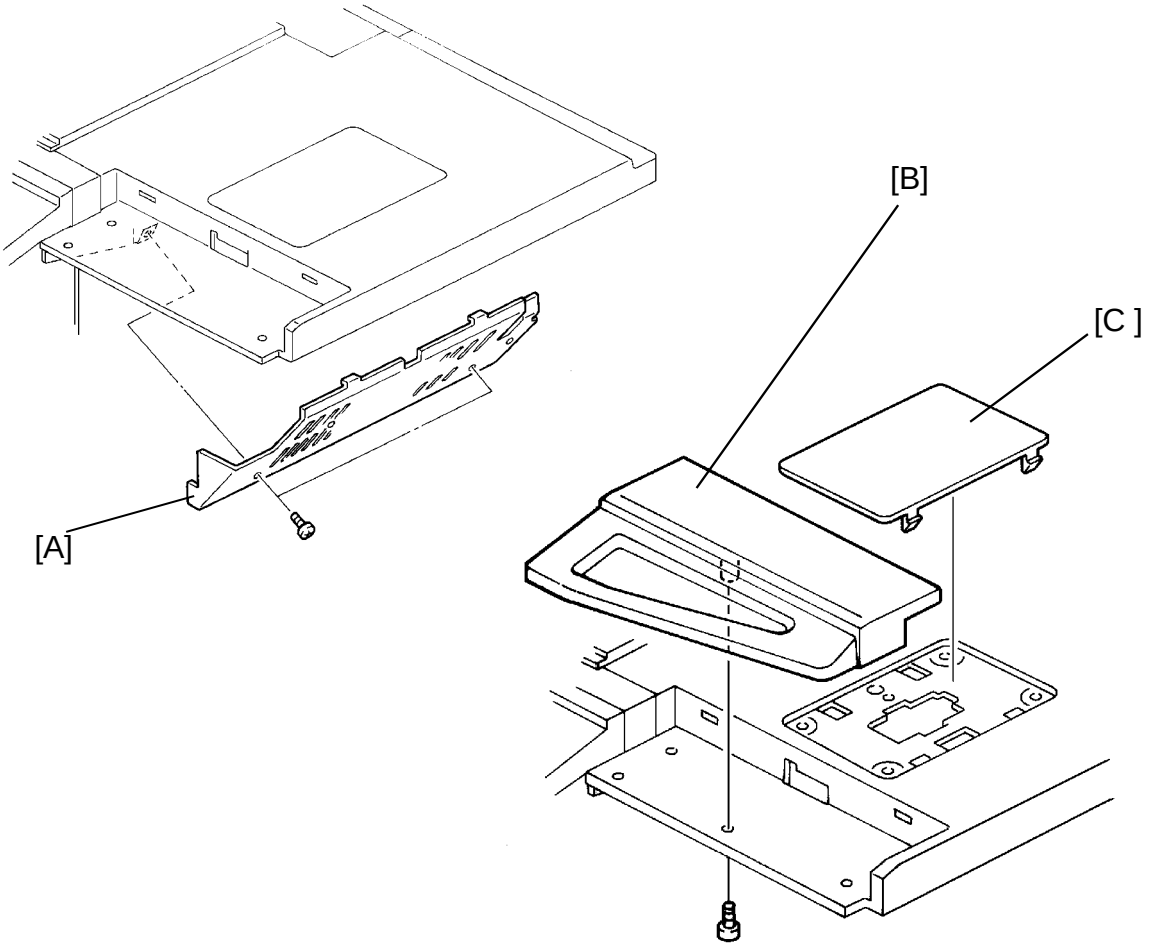

4. Install the lower cover [A] (2 truss screws).
5. Install the front cover [B] (1 screws).
6. Install the top cover [C].

NOTE: a) If installing the display editor, step 5 is not necessary.
b) If installing the film projector unit, step 6 is not necessary.

2.6 KEY COUNTER INSTALLATION

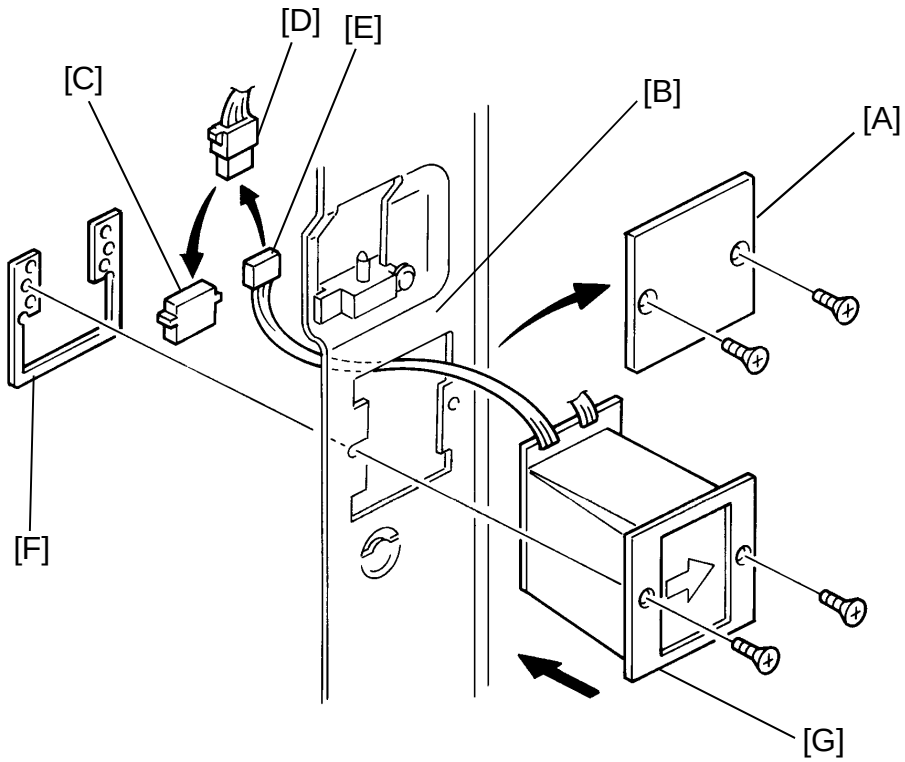

1. Remove the following parts. (Refer to Exterior And Inner Covers section.)
   - Upper rear cover
   - Right inner cover
   - Upper right cover
2. Remove the key counter cover [A] (2 screws) from the key counter holder bracket [B].
3. Disconnect the short-circuit connector [C] from the key counter connector [D].
4. Couple the connector [D] with the key counter connector [E].
5. Hold the fixing plate [F] on the inside of the key counter holder bracket and insert the key counter holder [G].
6. Align the holes in the fixing plate with the mounting holes of the key counter holder and secure the key counter holder (2 screws).

   NOTE: The fixing plate has three different hole sizes. Use the holes that match those on the key counter holder that you are installing.
7. Reinstall all the covers and check the key counter operation.

2.7 UPPER AND LOWER HEATER INSTALLATION (OPTIONS)

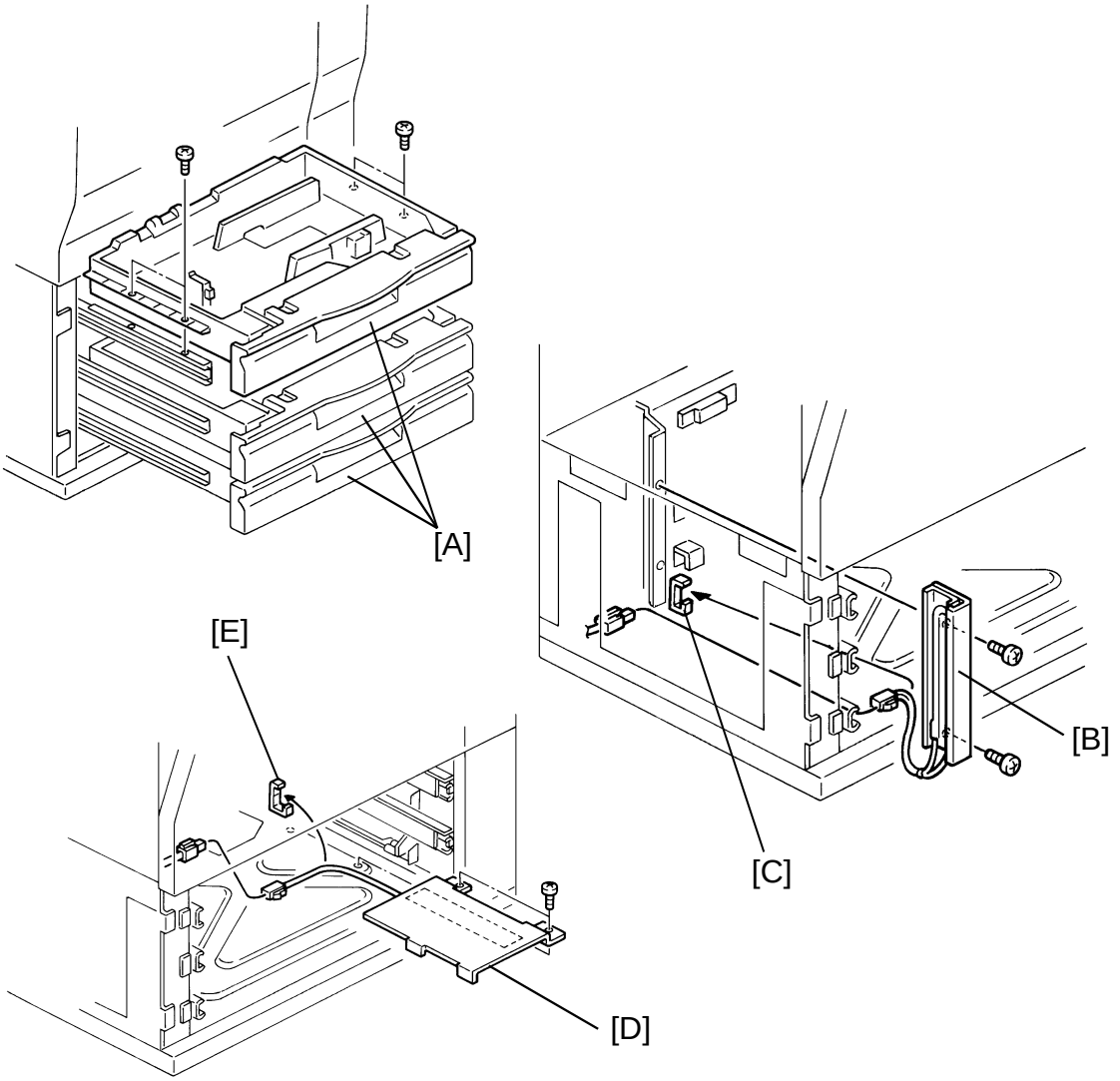

NOTE: Both heaters are available as service parts.

1. Assemble the heater to the bracket (2 M4 x 10 screws).
2. Pull out and remove all the paper feed trays [A] (4 screws each).
3. Install the upper tray heater assembly [B] (2 M4 x 8 screws).
4. Mount the harness to the clamp [C] and connect as shown.
5. Install the lower tray heater assembly [D] (2 M4 x 8 screws).
6. Mount the harness to the clamp [E] and connect as shown.
7. Reinstall the paper feed trays [A].

SECTION 4

SERVICE TABLES

1. SERVICE REMARKS

1.1 GENERAL CAUTION

Do not turn off the main switch intentionally while any of the electrical component is active.
Doing so might cause damage to the units such as transfer belt, transfer roller, development, etc. when they are pulled in or out from the copier.

1.2 DRUM

The organic photoconductor (OPC) drum is comparatively more sensitive to light and ammonia gas than a selenium drum. Follow the cautions below when handling an OPC drum.

1. Never expose the drum to direct sunlight.
2. Never expose the drum to direct light of more than 1,000 Lux for more than a minute.
3. Never touch the drum surface with bare hands. When the drum surface is touched with a finger or becomes dirty, wipe with a dry cloth or clean with wet cotton. Wipe with a dry cloth after cleaning with wet cotton.
4. Never use alcohol to clean the drum; alcohol dissolves the drum surface.
5. Store the drum in a cool, dry place away from heat.
6. Take care not to scratch the drum as the drum layer is thin and is easily damaged.
7. Never expose the drum to corrosive gases such as ammonia gas.
8. Always keep the drum in the protective sheet when keeping the drum unit, or the drum itself, out of the copier. Doing so avoids exposing it to bright light or direct sunlight. This will protect the drum from light fatigue.
9. Before pulling out the drum unit, place a sheet of paper under the drum to catch any spilt toner.
10. Dispose of used drums according to local regulations.
11. When removing the drum from the drum unit, release the pressure of the drum cleaning blade by moving the knob.

12. When installing a **new** drum to the drum unit, the following must be performed.
    a) Remove the protective sheet after securing the new drum to the drum unit.
    b) Apply setting powder to the entire surface. Manually apply the cleaning blade pressure to the drum and rotate it counterclockwise 3 times.
    c) Apply pressure of the drum cleaning blade by moving the knob.

13. When installing the drum unit, the following procedures must be performed in the order written.
    1) Tighten the drum knob.
    2) Secure only half way the 2 screws fixing the drum unit.
    3) Tighten the 2 screws fixing the drum stay.
    4) Tighten the drum stay knob.
    5) Fully tighten the 2 screws fixing the drum unit.

14. Process Control Self Check (SP Test Mode P-6, No 210) must be performed when a new drum is installed.

1.3 TRANSFER BELT UNIT

1. Replace the transfer belt at every PM cycle (40K scan) to avoid bad effects on the OPC drum.
2. Never touch the transfer belt surface with bare hands. When the transfer belt surface is touched with a finger or becomes dirty, wipe off the toner with dry cloth then clean the surface with alcohol.
3. Always make the transfer belt unit stand by using the stands at the rear side when keeping the unit out of the copier.
4. Take care not to scratch the transfer belt as the surface is easily damaged.
5. Before installing the new transfer belt, clean all the rollers and shafts with alcohol to prevent belt slipping.

6. When reinstalling, the following should be performed to avoid damage to the transfer belt.
   a) Confirm that the securing screw shaft is screwed down to the marked line.
   b) Manually turn the rollers and check that the new transfer belt is not running over any of the rollers.
   c) Always insert the transfer belt unit before inserting the transfer belt cleaning unit.
   d) Confirm that the belt bias roller is in the release position.

7. Belt Cleaning (SP Test Mode P-6, No. 208) must be performed when a new transfer belt is installed.

1.4 SCANNER UNIT

1. When installing the exposure glass, make sure that the white reference plate is facing down.
2. Clean the exposure glass with alcohol or glass cleaner to reduce the amount of static electricity on the glass surface.
3. Use cotton pad with water or a blower brush to clean the mirrors and lens.
4. Do not bend or crease the exposure lamp flat cable.
5. Do not disassemble the lens unit. Doing so will throw the lens and the copy image out of focus.
6. Do not turn any of the CCD positioning screws. Doing so will throw out the position of the CCD and the RGB signal's grey balance.

1.5 LASER UNIT

1. Do not loosen the screws securing the LD drive board to the laser diode casing. Doing so would throw the LD unit out of adjustment.
2. Do not turn the volume on the LD unit as they are adjusted in the factory.
3. The polygon mirror and Fθ lenses are very sensitive to dust. Never open the optical housing unit.
4. Do not touch the polygon mirror's reflecting surface with bare hands.

1.6 CHARGE CORONA

1. Clean the charge corona wire with a dry cloth. Do not use sandpaper or a solvent.
2. Clean the charge corona casing with wet cotton and dry cloth.
3. Clean the end blocks with a blower brush first to remove toner and paper dust. Then clean it with dry cloth if any toner still remains on it.
4. Do not touch the corona wires with oily bare hands. oil stains may cause uneven image density on copies.
5. Make sure that there is no foreign material (iron filings, etc.) on the casing.
6. When installing new corona wires, do not bend or scratch the wire surface to avoid any uneven charge. Also be sure that the corona wires are correctly positioned in the grooves of the end blocks.
7. Clean the charge grid plate with a blower brush, water, then with a dry cloth. When doing so, be careful not to damage the grids by letting them catch fibers.
8. Do not touch the charge grid plate with oily bare hands. Also, do not bend the charge grid plate or make any dent on it. Doing so may cause uneven charge.
9. After servicing the corona unit, perform the process control self check.

1.7 DEVELOPMENT

1. Be careful not to nick or scratch the development rollers.
2. Place the development units on a sheet of paper after removing it from the copier.
3. Never disassemble the development roller assembly. The position of the doctor plate is set with a special tool and instrument at factory to ensure the proper gap between the doctor blade and the development roller.
4. Clean the drive gears after removing used developer.
5. Dispose of used developer according to local regulations.
6. When removing or installing the development unit, be careful not to damage the drum surface by the entrance seal on the development unit.
7. Never load different types of developer and toner into the development unit. Doing so will cause poor copy image and toner scattering.

8. After collecting the black developer, make sure to shift back the magnet release lever to ensure proper developer flow in the unit.
9. To maintain good color copy quality, the developer replacement should be performed for all colors at the same time so that all the developers have similar characteristics.
10. When installing new developer, the following should be performed to avoid damage to the copier.
    a) The new developer needs more than 1 minute to get evenly distributed in the development unit. Do not stop the distributing procedure within 1 minute.
    b) When performing the developer initial setting, make sure that the charge corona, PCC and the ID sensor board are set correctly. If it is not, proper initial setting can not be performed.
    c) When performing the developer initial setting, make sure that the toner tank is **not** set. If the toner tank is set, toner will be supplied during the developer initial setting and the machine can not figure out the proper toner concentration of the new developer.
    d) After taking 30 full color copies, wait 5 minutes to ensure that no residual voltage remains on the OPC drum. The Process Control Self Check (SP Test Mode P-6, no. 210) will not be performed properly unless there is no residual voltage remaining on the OPC drum.
11. When using the vacuum cleaner to clean the development unit casing, always ground the casing with your fingers to avoid damaging the toner density sensor from static electricity.

1.8 DRUM CLEANING

1. When installing a new cleaning blade, apply setting powder to the entire surface of the drum. Manually apply the cleaning blade pressure to the drum and rotate it counterclockwise 3 times.
2. Do not touch the cleaning brush with oily bare hands.
3. Clean the PCC wire with dry cloth. Do not use sandpaper or a solvent.
4. Clean the PCC casing with damp or dry cloth.
5. Clean the PCC end blocks with dry cloth.

1.9 TRANSFER BELT CLEANING

1. Do not touch the lubricant brush with oily bare hands.
2. When installing a new cleaning blade, apply setting powder along the edge of the blade.
3. The lubricant bar should be replaced if damaged or worn (holes, dents, or less than 0.5 mm overlap of the brush over the bar).
4. The lubricant brush and the lubricant bar should be replaced as a set.
5. When inserting the unit, both the solenoid's plungers must be in (no contact position with the transfer belt). If it is not, the transfer belt will be damaged.

1.10 FUSING UNIT

1. When replacing the hot roller at every 40K scans, lubricate the inner and outer surface of the heat isolating bushings with Barrierta L55/2.
2. The fusing drive gears should be lubricated with Mobil Temp. 1 or 78 every 80K scans.
3. After installing the upper fusing thermistor, make sure that it's in contact with the hot roller and movable.
4. After installing the lower fusing thermistor, make sure that it is in contact with the pressure roller.
5. Be careful not to damage the edges of the hot roller strippers or their tension springs.
6. Do not touch the fusing lamps and rollers with bare hands.
7. Make sure that the fusing lamps are positioned correctly and that they do not touch the inner surface of the rollers.
8. After replacing the oil blade and oil supply pad, prime the entire length of the blade with silicon oil.
9. Do not touch the screws for the pressure springs. These are adjusted at the factory to maintain the proper nip band width.

1.11 PAPER FEED

1. Do not touch the surface of the pick-up, feed, and separation rollers.
2. The paper size detector bracket installed in the 1st paper feed tray must be positioned correctly to align with the actual paper size to avoid paper misfeeds.

1.12 TRANSFER ROLLER UNIT

1. When inserting the transfer roller unit, make sure that the unit's drive gear does not damage the transfer belt located above the unit.

1.13 FILTER

1. All the dust filters and ozone filters should be replaced at every PM cycle (40K scans).
2. When inserting the new development filter, the side with the net should face towards the ozone filter.

1.14 USED TONER

1. The used toner tank should be emptied at every PM cycle, but we recommend confirming the amount of used toner in the tank at every EM.
2. When reinstalling the used toner tank, make sure that the toner overflow sensor connector is inserted firmly.
3. Dispose of used toner according to local regulations. Never throw into an open flame, for toner dust may ignite when exposed to open flame.

2. SERVICE PROGRAM MODE

2.1 SERVICE PROGRAM MODE OPERATION

The service program (SP) mode is used to check electrical data, change modes, and adjust values.

2.1.1 Service Program Access Procedure

1. Press the clear modes key.
2. Enter "107".
3. Press the clear/stop key for more than 3 seconds until the service program index menu appears on the touch panel display.

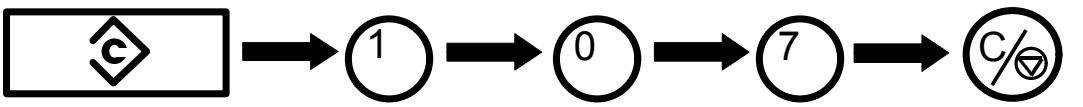

4. Touch a number [A] on the display to access the desired function.
   This copier has 7 service program modes
   Only 5 service program modes are visible on the touch panel display at one time.
   Use the down key [B] or the up key [C] to see other service program mode menus.

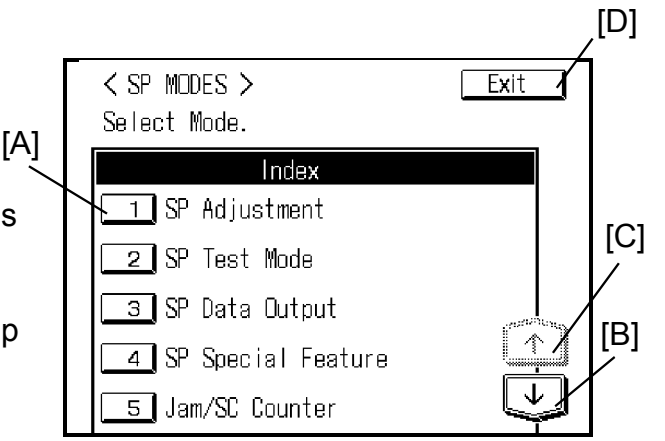

2.1.2 To Exit SP Mode

1. Touch the Exit key [D].

2.1.3 To Return to the Index Menu

1. Return to the index menu by touching Index [A] on the display.

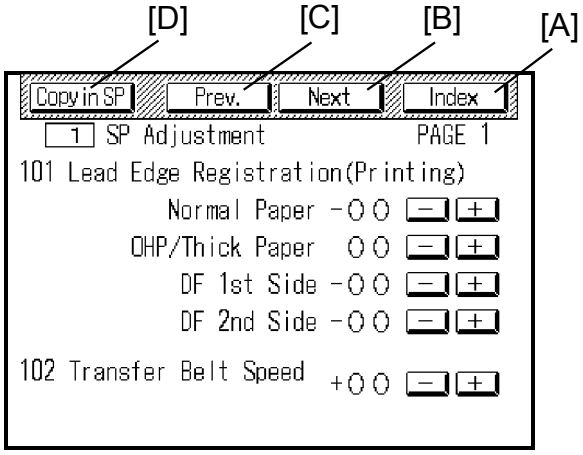

2.1.4 Change the Menu Screen

1. To move to the next page, touch Next [B].
2. To move to the previous page, touch Prev. [C].

2.1.5 Access to "Copy in SP" Mode

1. Touch Copy in SP [D] to access "Copy in SP" mode. LCD displays as shown at right.
2. Select the appropriate copy mode and make trial copies.
3. Return to the SP mode by pressing SP mode [E].

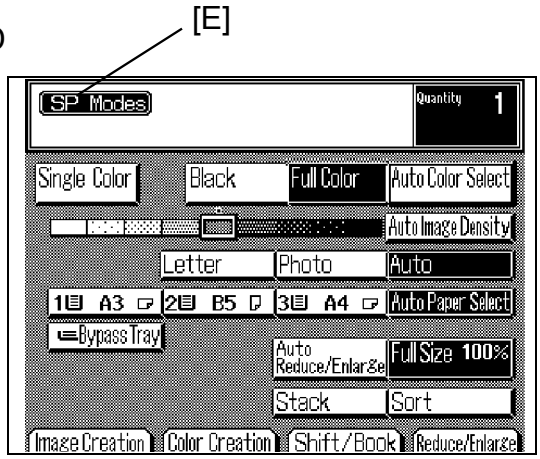

Service Tables

2.1.6 To Input Data

If there are [+] and [−] keys [A] on the display as shown, touch the [+] key or [−] key to change data. In this case, the default data is 00.

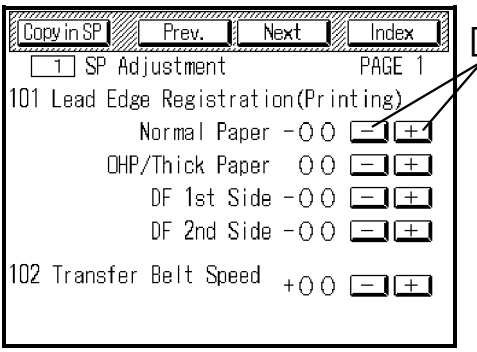

If there are key with number in it as shown:

1) Touch the key [B], its color will change.
2) Input the data by using number keys.
3) Touch the enter key [C].

NOTE: If you forget to touch the enter key, the previous data remains.

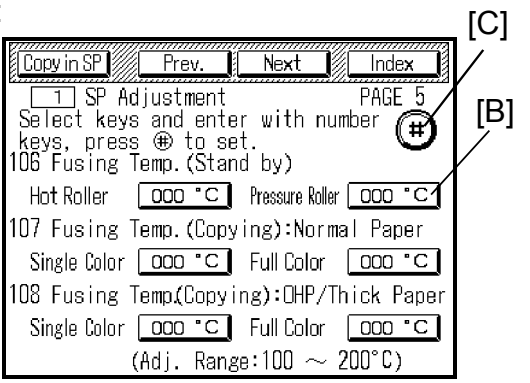

2.1.7 To Clear The Counter

1. Touch the clear key [D].
2. If you are sure to clear, touch the [Yes] [E] .
   If you want to cancel to clear, touch [No] [F].

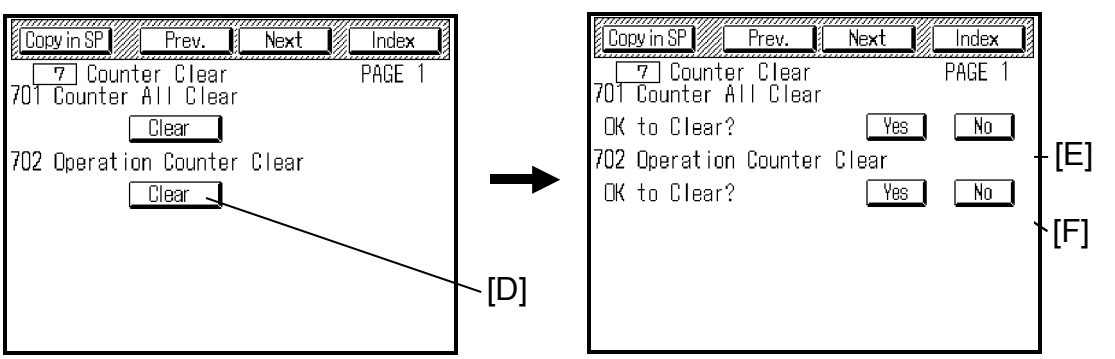

2.2 SERVICE PROGRAM MODE TABLE

2.2.1 SP ADJUSTMENT

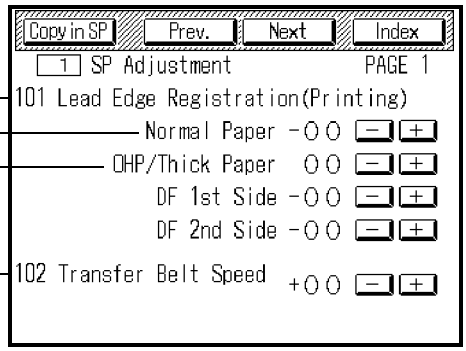

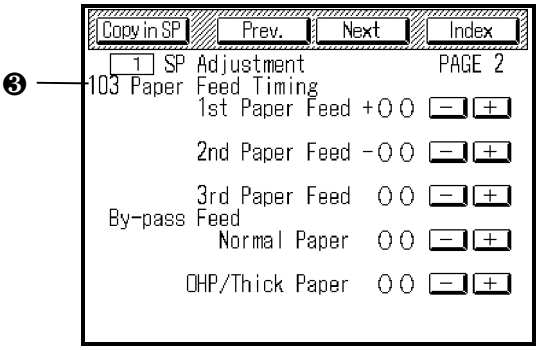

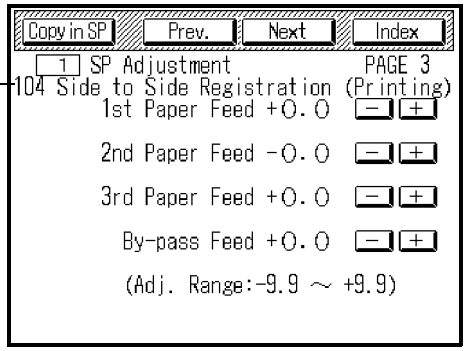

NOTE: Do not change the SP data for tinted table.

Item	Function	Note
❶	Shifts the vertical image position by changing the ON timing of the registration clutch. (0.5 mm/step) ① For normal paper mode (transfer belt speed: 180 mm/sec) ② For OHP/Thick paper mode (transfer belt speed: 90 mm/sec)	Evaluate the width of the blank area at the leading edge of the test pattern image (Use trimming area mode in test mode page 3) Adjustment standard: 0± 2 mm (2 ± 2 mm in Trimming area mode <SP #205>) See section 5 for the detail.
❷	Changes the transfer belt rotation speed. (0.19%/step)	Default: 2 Do not change the data in the field
❸	Changes the paper feed clutch on period for each paper feed stations to adjust paper buckle at registration roller. (0.1 mm/step)	For by-pass feed, there are adjustments for normal paper mode and for OHP/thick paper mode. Adjustable range: –9.9 ~ 9.9 mm
❹	Adjust the horizontal image position by changing the main scanning start position for each paper feed section. (0.1 mm/step)	Adjustable range: –9.9 ~ 9.9 mm

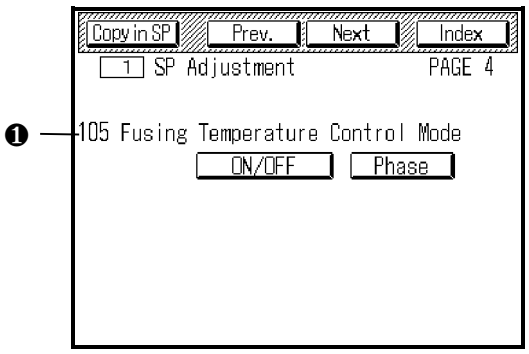

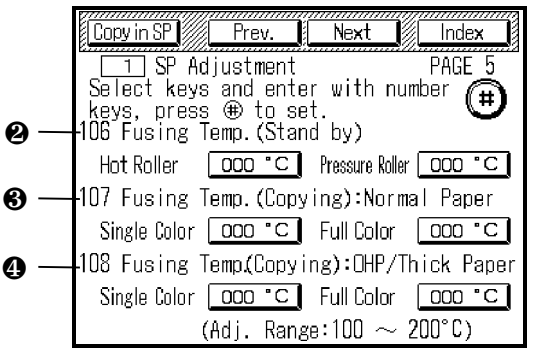

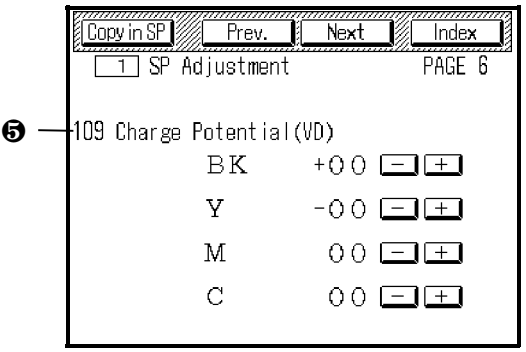

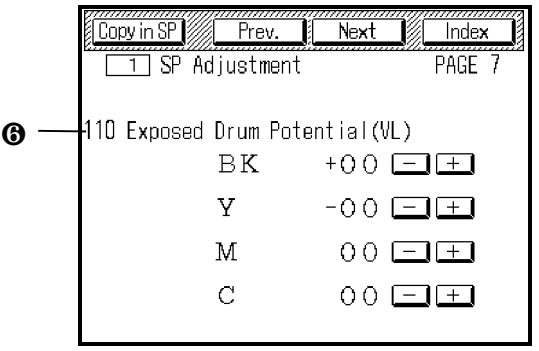

Item	Function	Note
❶	Selects the fusing temperature control mode	Default: ON/OFF control
❷	Adjust the target temperature of the hot roller and the pressure roller during stand by.	Default: hot roller: 170°C/pressure roller: 120°C Adjustable range: 100°C~ 200°C
❸	Adjust the target temperature of the hot roller during copying in normal paper mode	Default: single color mode: 150°C full color mode: 160°C Adjustable range: 100°C~ 200°C
❹	Adjust the target temperature of the hot roller during copying in OHP/Thick paper mode	Default: single color mode: 160°C full color mode: 160°C Adjustable range: 100°C~ 200°C
❺	Factory use only	Default: 0 Do not change the data in the field
❻	Factory use only	Default: 0 Do not change the data in the field

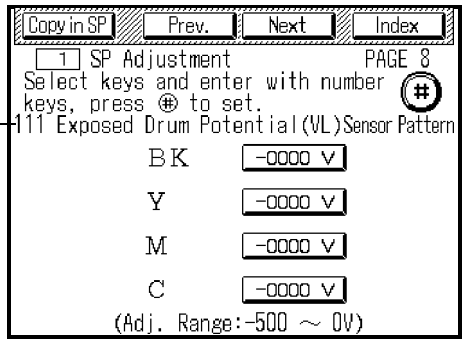

❶

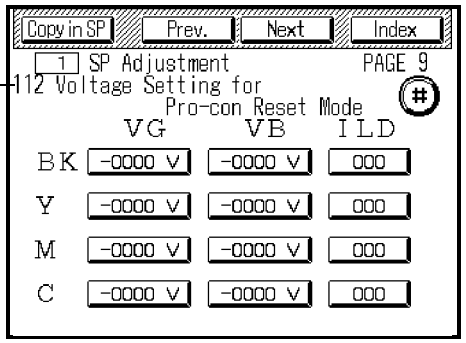

❷

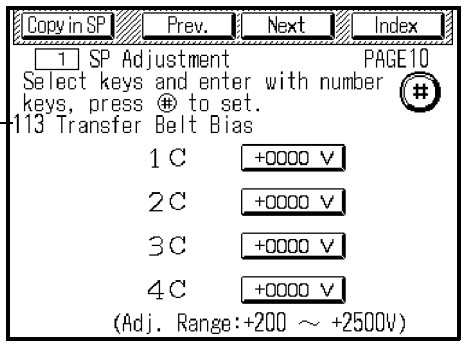

❸

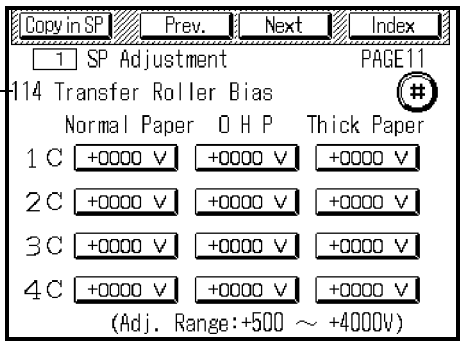

❹

Service Tables

Item	Function	Note
❶	Factory use only	Do not change the data in the field Default: Bk: 450 V Y: 450 V M: 450 V C: 450 V
❷	Factory use only	Do not change the data in the field Default: VG: 600 V VB: 420 V ILD: 128
❸	Adjusts the transfer belt bias voltage for each transfer process. Touch the selected item, enter the data by using number keys, then touch the enter key.	Default: 1C: 1410 2C: 1490 3C: 1575 4C: 1660 Adjustable range: 200~2500 V
❹	Adjusts the transfer roller bias voltage for each transfer process 1C~4C and paper modes (Normal, OHP, Thick).	Adjustable range: 500~4000 V Default: Normal OHP Thick 1C: 940 1325 940 2C 1515 2095 1515 3C 1710 2530 1660 4C 1230 2045 1230

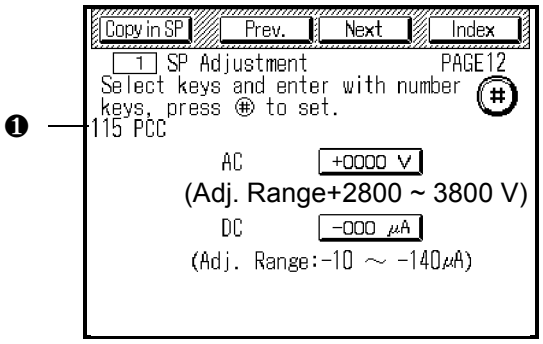

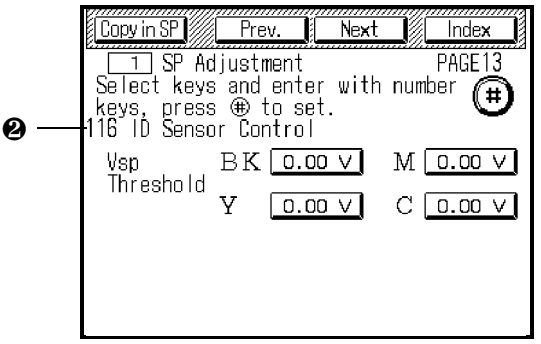

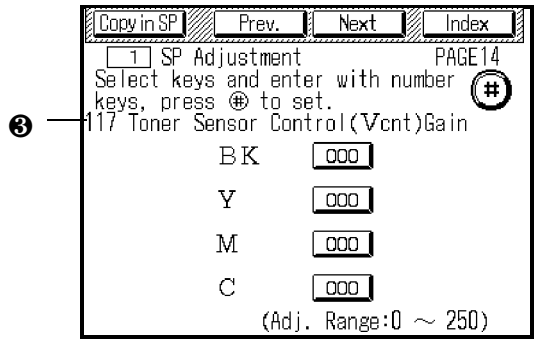

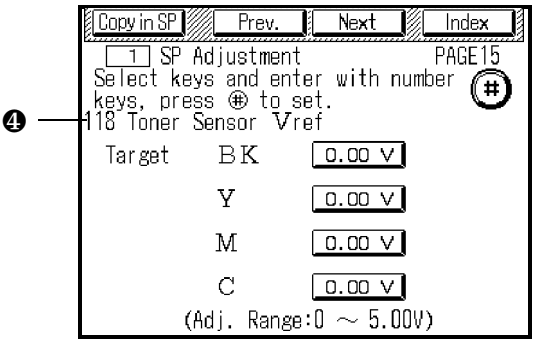

Item	Function	Note
❶	Selects the PCC ac (V) and dc (uA) output.	Default: AC: 3500 V DC: –33 μA Adjustable range: AC: 2800 ~ 3800 V DC: –10 ~ –140 μA
❷	Factory use only	Default: Bk: 0.7 Y: 1.8 M: 1.8 C:1.8 Do not change the data in the field.
❸	Manually change the TD sensor gain data (VCNT Gain)	Default: 180 (Bk, Y, M, C) Do not change the data in the field.
❹	Manually change the target voltage of the TD sensor output (VREF) during the developer initial setting.	Default:2.5V (Bk, Y, M, C) Adjustable range: 0 ~ 5.0 V Do not change the data in the field.

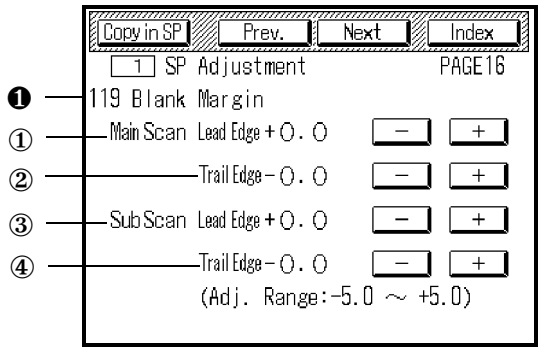

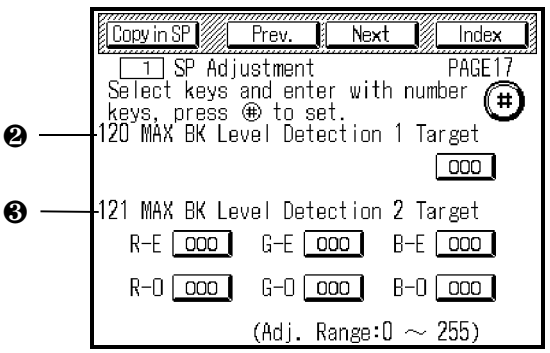

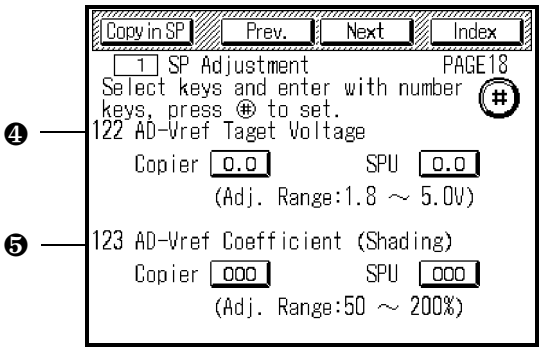

Item	Function	Note
❶	Adjusts the width of the blank margin at the edges of the copy paper. ① Adjusts the blank margin at the right edge of the copy paper ② Adjusts the blank margin at the left edge of the copy paper ③ Adjusts the blank margin at the leading edge of the copy paper ④ Adjusts the blank margin at the trailing edge of the copy paper	Adjustable range: right edge: -5 ~5 mm left edge: -5 ~5 mm lead edge: -5 ~5 mm trailing edge: -5 ~5 mm
❷	Adjusts the black level target (DA1) for the AGC.	Default:8 Do not change the data in the field.
❸	Adjusts the black level target (DA2) for the AGC.	Default:4 (R-E, G-E, B-E, R-O, G-O, B-O) Do not change the data in the field.
❹	Selects the AD-VREF target voltage to desire the exposure lamp voltage in the AGC.	Standard data: 2.5 ~ 2.8 Do not change the data in the field.
❺	Selects the AD-VREF coefficient so that white shading data won't overflow.	Default data: Copier 110 SPU: ??? Do not change the data in the field.

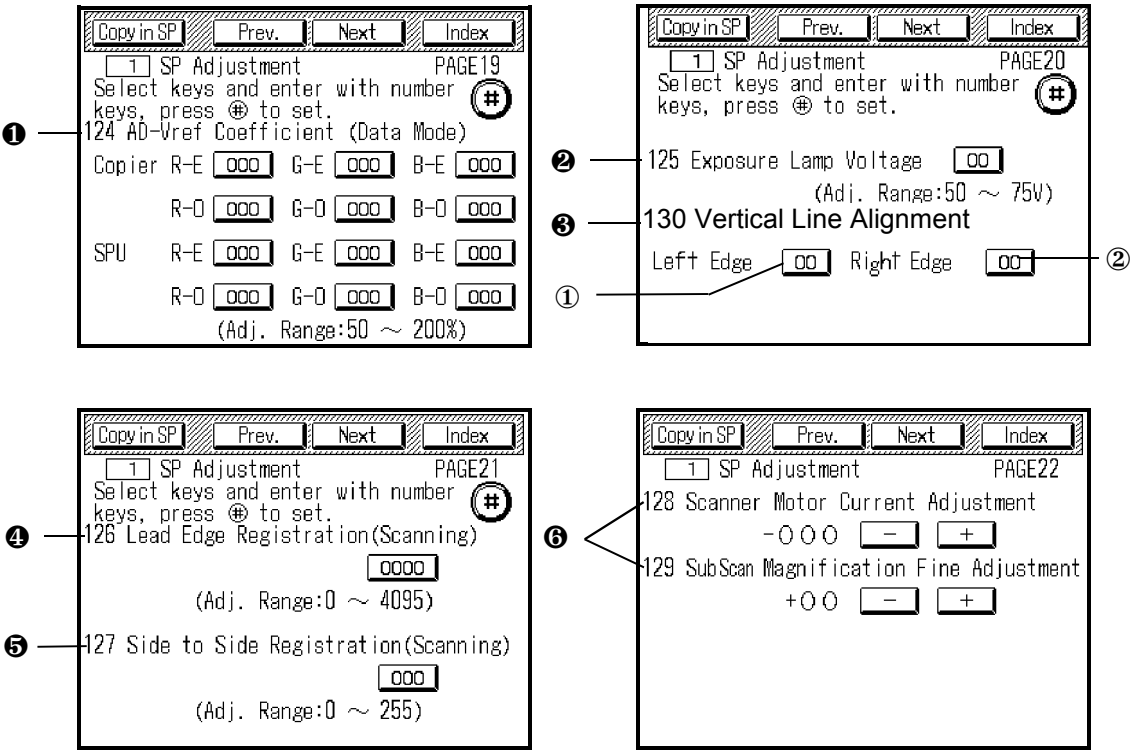

Item	Function	Note
❶	Factory use only (Gray balance adjustment)	Do not change the data in the field.
❷	Adjusts the exposure lamp input voltage during the adjustment in the factory. This does not influence the exposure lamp input voltage during the copying.	Default: 60 V Adjustable range: 50~75 V Do not change the data in the field.
❸	Adjust the YMCBk vertical line alignment at the sides of copies caused by the CCD board positioned not perpendiculanrly to the light axis.	① If the image alignment at the left side is incorrect, change this data. ② If the image alignment at the right side is incorrect, change this data. (See section 5 for the detail)
❹	Adjusts the vertical registration for the scanned image by adjusting the laser exposure start timing.	Default: 48 Adjustable range: 0~4095 Do not change the data in the field.
❺	Adjusts the horizontal registration for the scanned image by adjusting the laser exposure start timing.	Default: 128 Adjustable range: 0~255 Do not change the data in the field.
❻	Adjust the scanner motor speed by changing the scanner motor input current	Motor current adjustment Default: 100 Fine adjustment Default: 0 Do not change the data in the field.

2.2.2 SP Test Mode

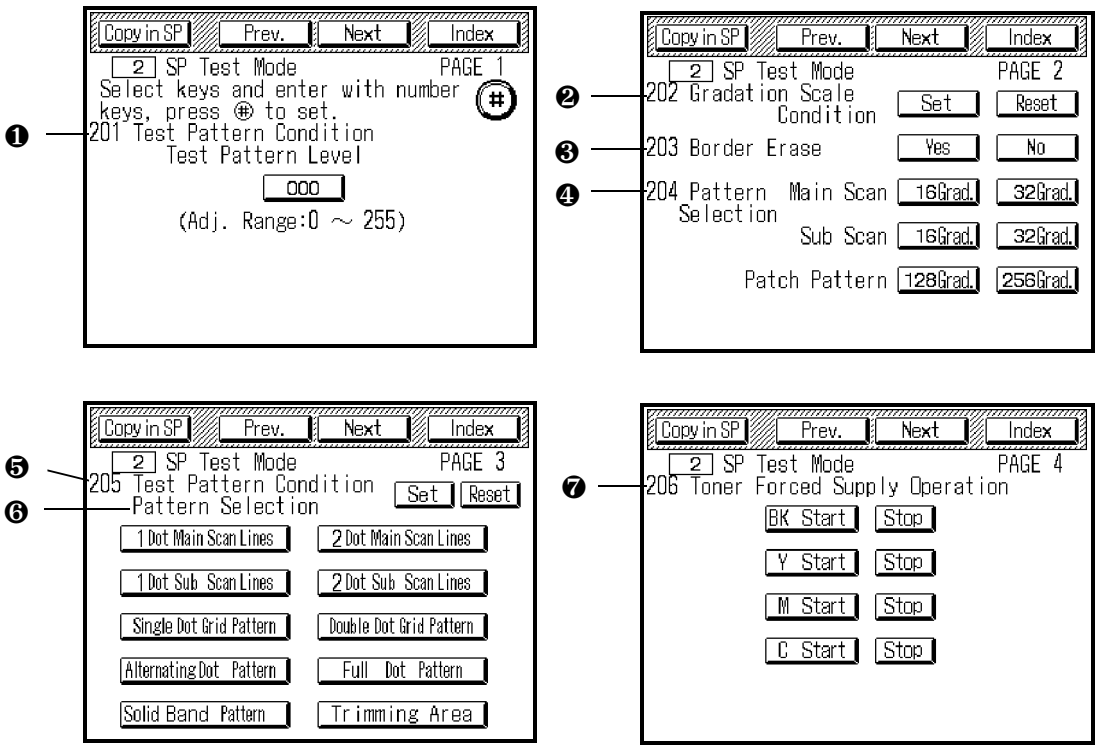

Item	Function	Note
❶	Adjusts the laser power for the test pattern density in 256 grades.	Default: 255 This function effects the items❺, ❻.
❷	Enables the gray scale printing.	Default: Reset
❸	Enable to create the white margin between the different density gray scales.	Default: No
❹	Selects the kind of gray scales.	Access the Copy in SP and press the start key to print the gray scales.
❺	Enables the test pattern printing.	Default: Reset If both test pattern (#205) and gradation scale (#202) are enabled, only the gradation pattern is printed.
❻	Selects the kind of test patterns.	Access the Copy in SP and press the start key to print the test pattern.
❼	Factory use only	Do not use in the field.

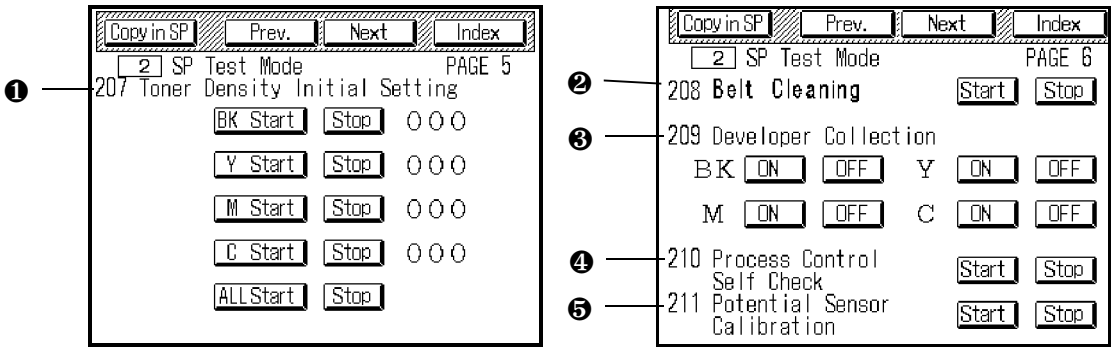

Item	Function	Note
❶	Starts and stops the toner density sensor initial setting. Indicates the gain data of each color TD sensor. Both toner supply reference data of TD sensor and TD sensor gain data are set automatically by using new developer.	With new developer, do not make any copy before performing the developer initial setting. Perform this mode without the toner tank set. This mode is required when new developer is set or the TD sensor is replaced. This mode automatically stops after completing.
❷	Perform the transfer belt cleaning mode.	This mode automatically stops after about 15 seconds.
❸	Starts and stops the developer collection.	Bk or color development drive motor rotates and the selected color sleeve motor rotates forward and reverse alternatively.
❹	Starts and stops the process control self check.	Perform this mode when the following parts are replaced (or cleaned) Drum potential sensor/OPC drum/ charge corona wire, charge corona grid, and casing/lamps around the OPC drum/developer/RAM etc. This mode should be performed with a drum not used for more than 5 minutes. This mode automatically stops after completing.
❺	Starts and stops the drum potential sensor calibration.	This mode automatically stops after completing.

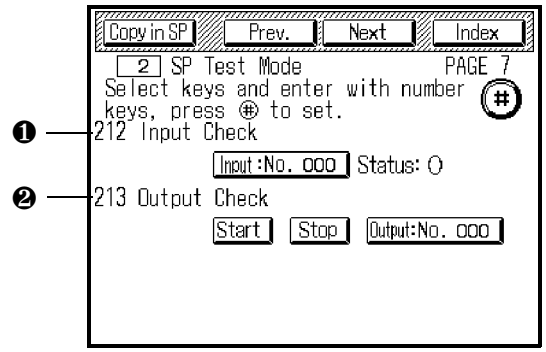

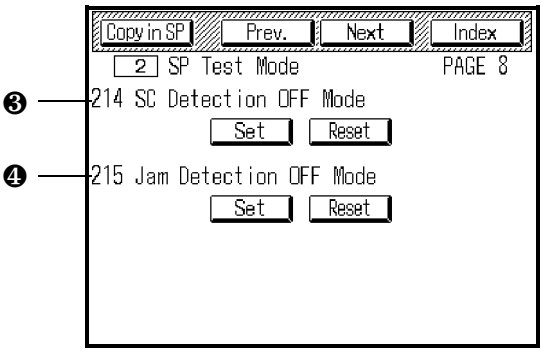

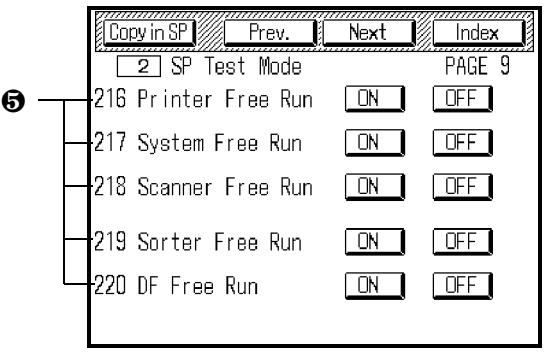

Item	Function	Note
❶	Use to check if the sensors or switches are correctly activated and de-activated.	Status 0 --- de-activated Status 1 --- activated
❷	Use to check if the motor, solenoid, clutch etc. are correctly activated and de-activated.	Access this mode as follows: 1. Touch the output mode key. 2. Enter the electrical component number by using the number keys on the operation panel. 3. Touch the enter key. Touch the start key to activate and touch the stop key to de- activate the electrical component.
❸	Disables self diagnostic function.	Default: Reset (enable)
❹	Disables jam detection (ON check).	Default: Reset (enable)
❺	Starts each free run mode.	Paper is not fed in free run modes. When using the system free run, close the platen cover or place white sheets of paper on the exposure glass to avoid toner scattering inside the machine.

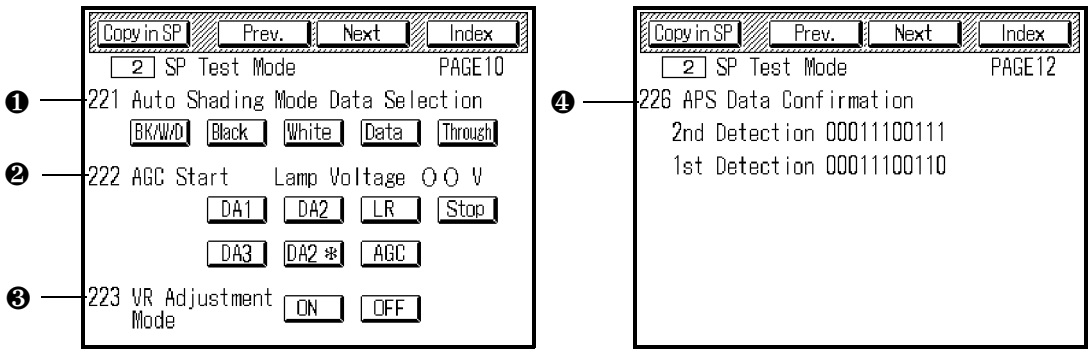

NOTE: Page 11 and page 13 is not used

Item	Function	Note
❶	Separately perform the shading compensation sequence	Factory use only
❷	Separately perform the auto gain control sequence	Factory use only
❸	Turn on the exposure lamp.	Factory use only
❹	Use to check if the original size sensors are correctly activated or de-activated at the 1st and 2nd detection.	Status 0 --- de-activated Status 1 --- activated

2.2.3 SP Data Output

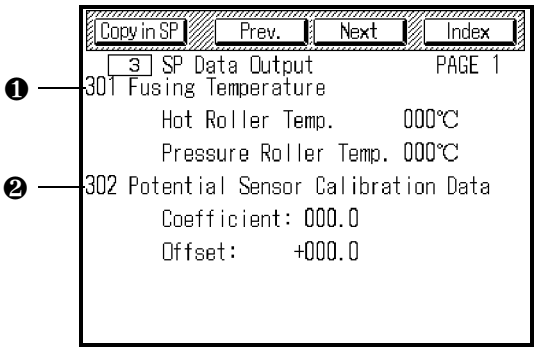

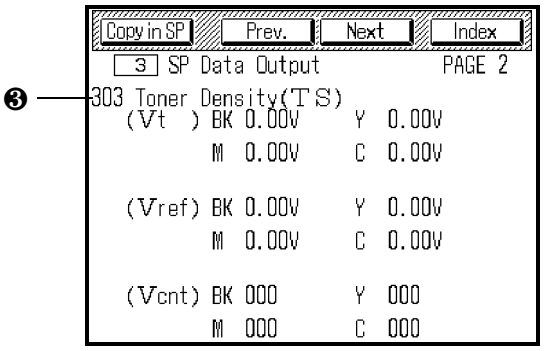

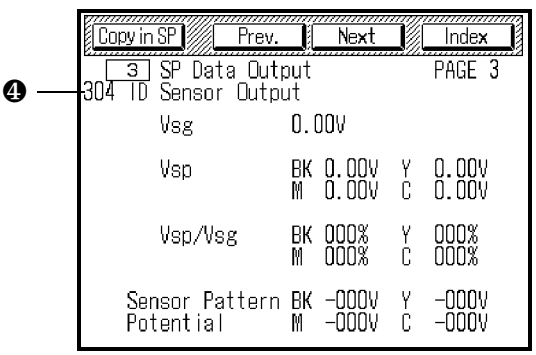

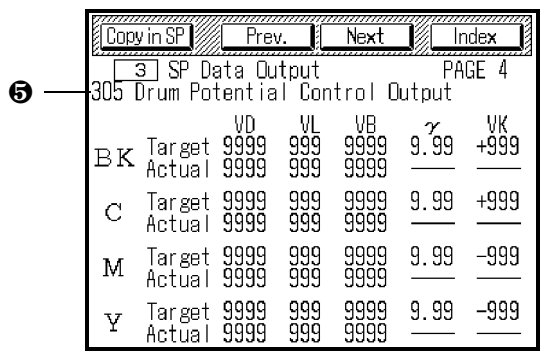

Item	Function	Note
❶	Indicates the hot roller/pressure roller temperature based on the thermistors output.	
❷	Indicates the potential sensor calibration data	standard data: 230 ± 20
❸	Indicates data (VT, VREF, VCNT) relate to each color toner density sensor	
❹	Not used.	
❺	Indicate the target and actual data relate to process control.	VD: charge potential VL: exposed drum potential VB: development bias γ: development gamma VK: development reference data

Service Tables

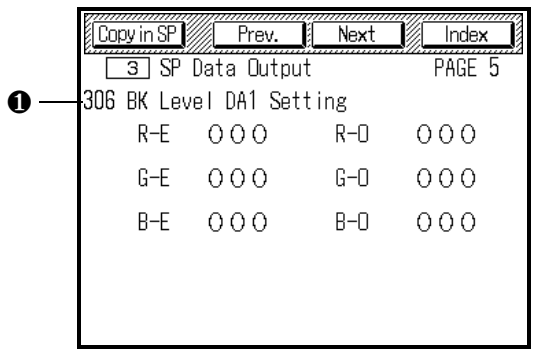

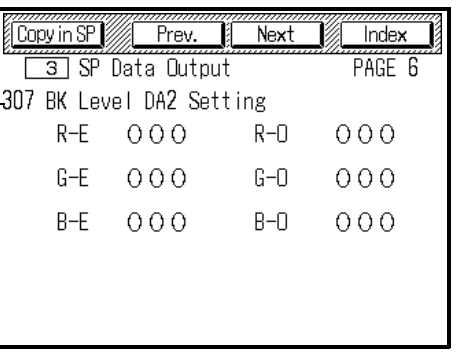

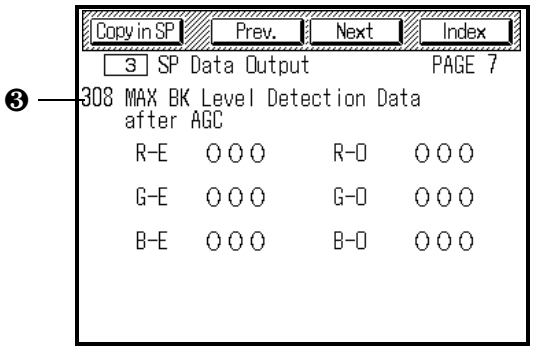

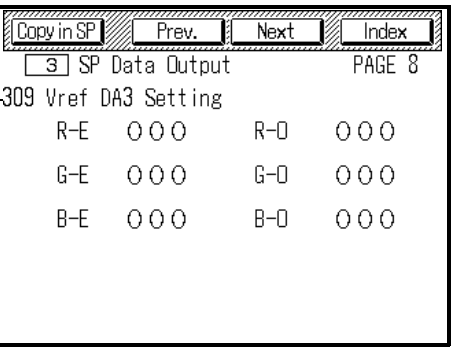

Item	Function	Note
❶	Displays DA1 settings.	Factory use only
❷	Displays DA2 settings.	Factory use only
❸	Displays DA2* settings.	Factory use only
❹	Displays DA3 settings.	Factory use only

2.2.4 SP SPECIAL FEATURES

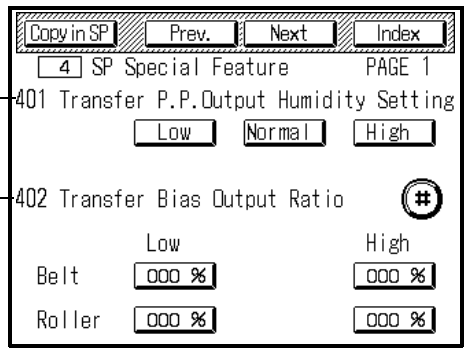

Item	Function	Note
❶	Select the output voltage for the transfer belt bias and the transfer roller bias according to the humidity condition. (Refer to the table below for the actual outputs.)	Default: Normal This function is effective under the following conditions: 1. Humidity sensor is not working well: • Output is 0. • Temperature output is for over 49°C or below 2°C. • Humidity output is for over 98% or below 2%. 2. Humidity sensor connector is disconnected.
❷	Changes the output voltage for the transfer roller bias according to the entered output ratios. (Refer to the table below for the actual outputs.)	Default: 100% for all settings This functions according to the actual humidity or to the setting for SP401.

Conditions	SP401 setting		Low	Normal	High
	SP402 setting	Belt	Low: A%	High: B%	
		Roller	Low: C%	High: D%	
	Actual humidity		Less than 4.3 g/m^3	4.3 ~11.3 g\m^3	More than 11.3 g/m^3
Results	Transfer belt bias	1C	(Output for less than 4.3 g/m^3) x (A%)	(Output for 4.3 ~ 11.3 g/m^3) x (B%)	(Output for more than 11.3 g/m^3) x (B%)
		2C ~ 4C	Default output		
	Transfer roller bias	1C ~ 4C	(Output for less than 4.3 g/m^3) x (C%)	Output for 4.3 ~ 11.3 g/m^3	(Output for more than 11.3 g/m3) x (D%)

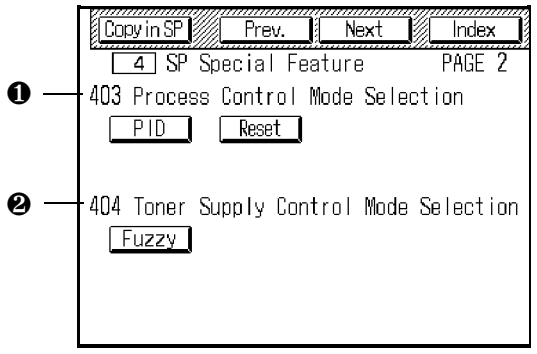

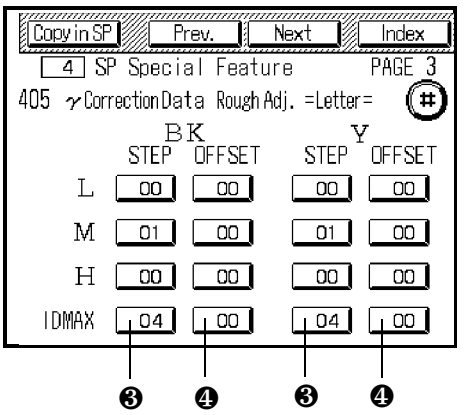

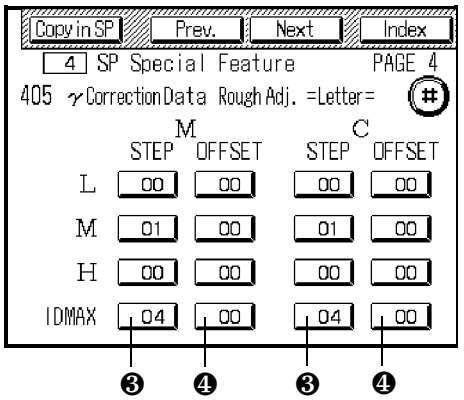

NOTE: Page 1 is not used.

Item	Function	Note
❶	Factory use only	"PID" setting must be selected. Default: Reset
❷	Selects toner supply mode.	Default: Fuzzy (No choice other than fuzzy for this mode.)
❸	Factory use only	Do not change the STEP data in the field
❹	Adjusts image density for each color in letter mode. (Letter mode rough adjustment.)	See section 5, color balance adjustment.

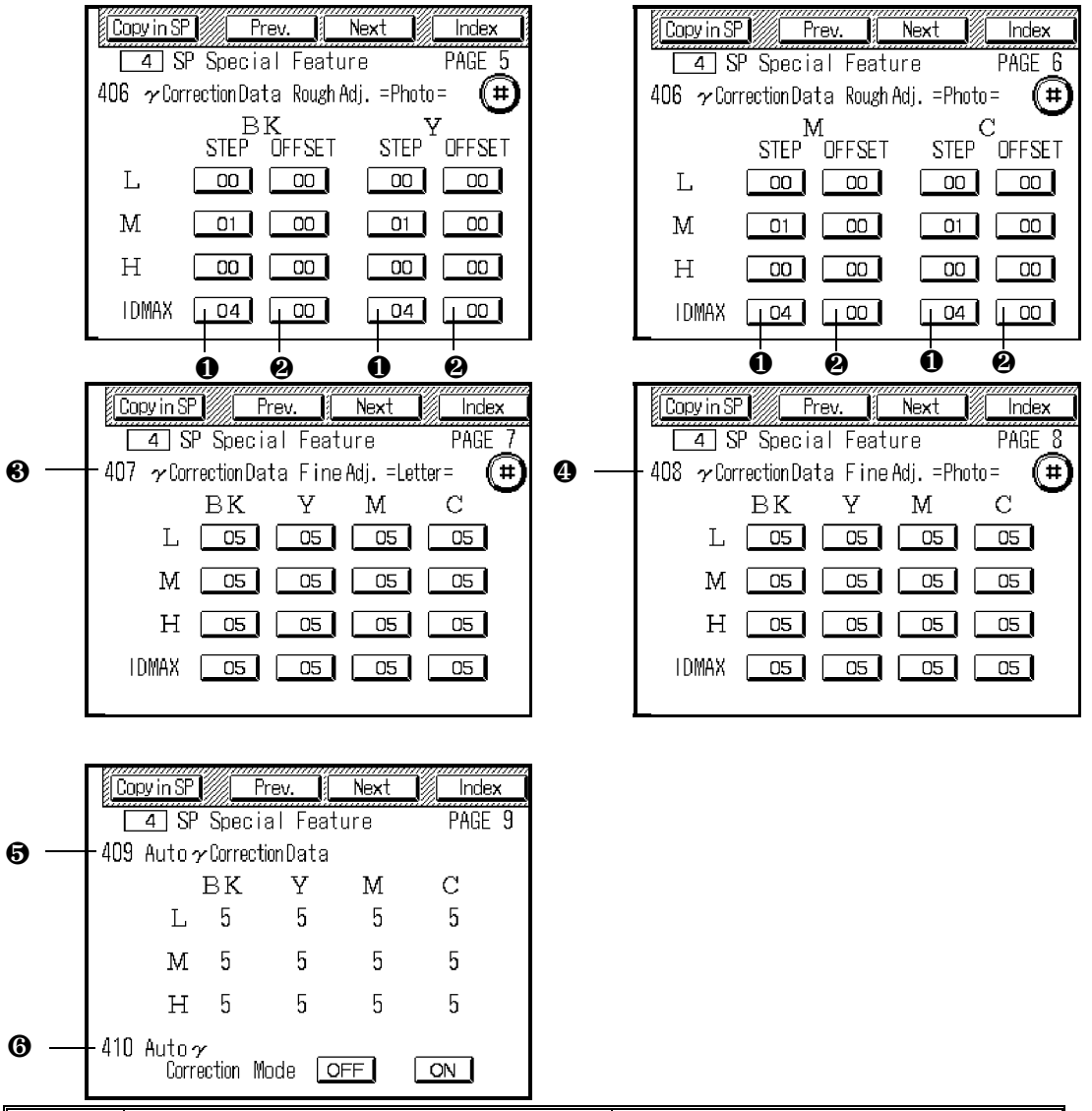

Item	Function	Note
❶	Factory use only	Do not change the STEP data in the field
❷	Adjusts image density for each color in photo mode (Photo mode rough adjustment)	See section 5, color balance adjustment.
❸	Adjusts each color image density (Letter mode fine adjustment)	Do not change the data in the field
❹	Adjusts each color image density (Photo mode fine adjustment)	Do not change the data in the field
❺	Indicates the correction data decided in auto γ correction	Indication only
❻	Enable or disable the auto γ correction mode.	Default: ON

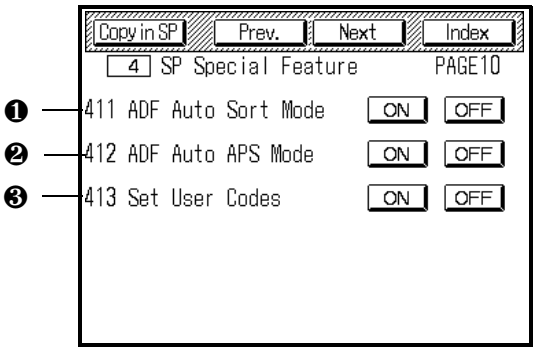

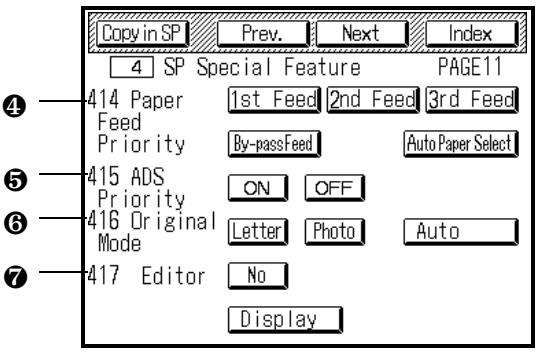

Item	Function	Note
❶	Enables automatic sort mode when 2 or more is entered in the copy counter and more than one originals are set on the DJF feed tray.	Default: OFF
❷	Enables automatic APS mode when original is set on the DJF feed tray.	Default: OFF This function is effective when paper feed priority (SP414) is not set to APS.
❸	Enables user code mode.	Default: OFF The Key counter shorting connector should be disconnected to enable user code mode.
❹	Selects the default feed station	Default: Auto Paper Selection
❺	Enables ADS mode selection as a default mode	Default: ON
❻	Selects the default original mode	Default: Auto
❼	Enables the display editor operation.	Default: No When the display editor is installed, select "Display".

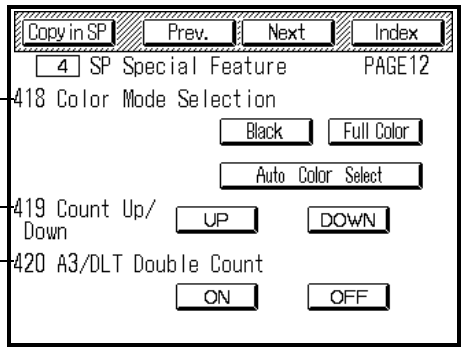

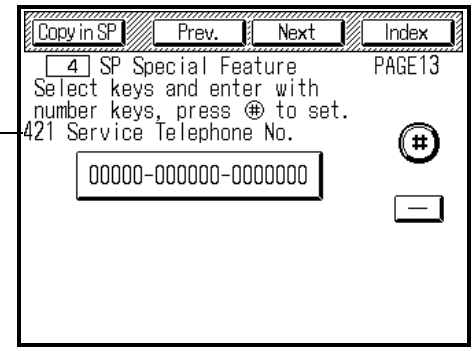

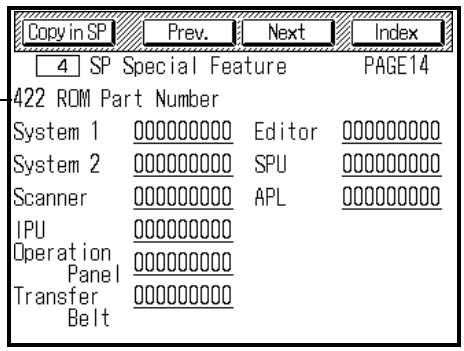

Item	Function	Note
❶	Selects the default copy mode.	Default:Full Color
❷	Selects copy count up or down.	Default:UP
❸	Counts twice when an A3 or 11"x17" copy is made.	Defaults:OFF
❹	Enters the service center telephone number. This telephone number is indicated on the LCD when service call condition occurs or PM is required.	Entering procedure: 1. Touch [000000000000000] key. 2. Enter numbers by pressing the number keys. (touch [—] to enter the hyphen). 3. Touch (#).
❺	Indicates the ROM reference number with suffix, on each PCB.	System 1: Main control IC522 System 2: Main control IC509 Scanner : Reference number for the combination of IC127/128 and IC134 on the scanner control board IPU : Reference number for the combination of IC303 and IC309 on the IPU board Operation Panel: IC101 Transfer Belt : Transfer belt motor drive IC609 Editor : Reference number of editor ROM

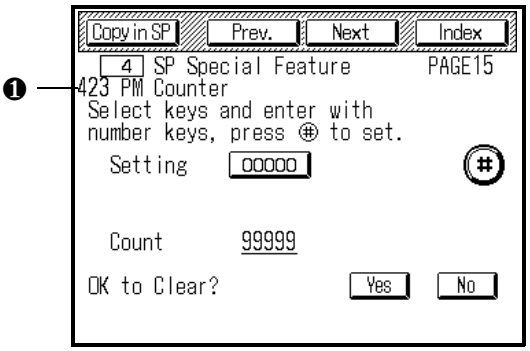

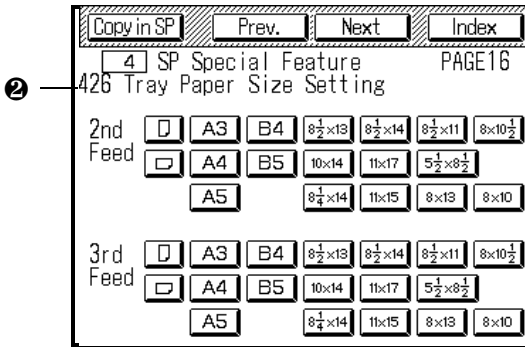

Item	Function	Note
❶	Selects the PM alarm interval after counter clear.	If you do not use PM alarm, set "0". Default: 0
❷	Selects the paper size and direction of each paper feed station.	Refer to section 3 for details of paper size change procedure.

2.2.5 JAM / SC COUNTER

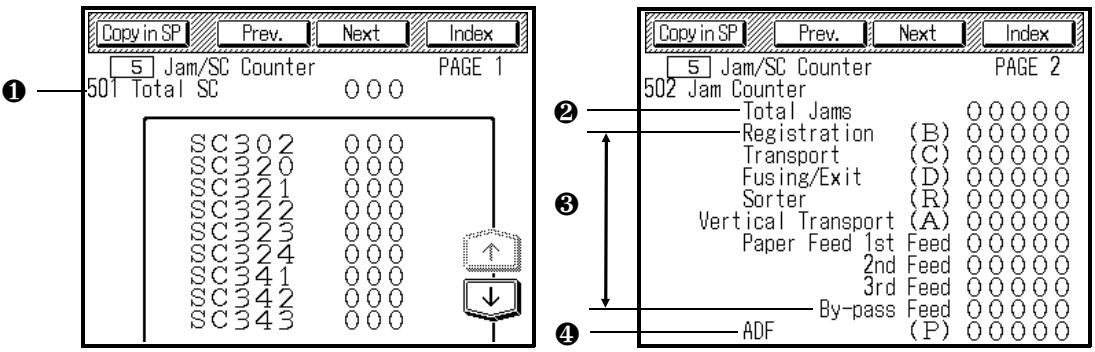

Item	Function	Note
❶	Indicates the total number of service calls for each SC codes. Press ↑ to scroll up. Press ↓ to scroll down.	See section 6 for details of each SC codes. The counters for SCs that have not occurred even once are not displayed.
❷	Indicates the total number of jams in the copier and all peripherals.	
❸	Indicates the total number of jams at each location.	
❹	Indicates the total number of jams in the DJF.	

Service Tables

2.2.6 Operation Counter

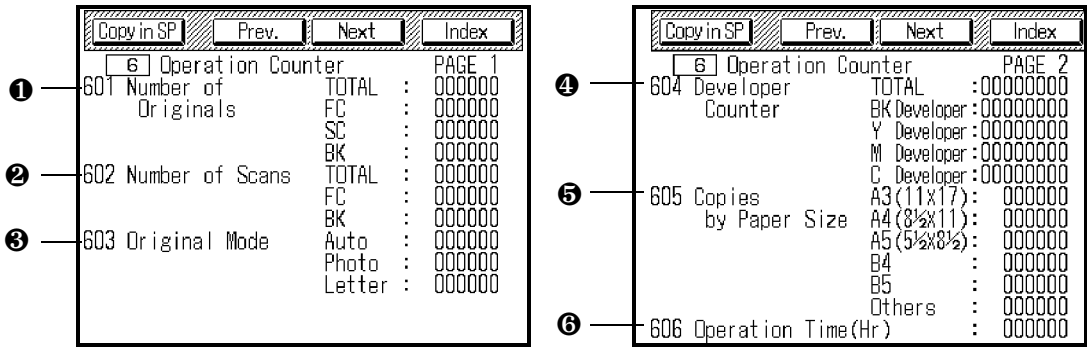

Item	Function	Note
❶	Indicates the total number of originals used for each color modes.	
❷	Indicates the total number of scans broken down by the copy modes.	
❸	Indicates the total number of copies broken down by the original modes.	
❹	Indicates the total number of scans since the last PM for each color developer.	
❺	Indicates the total number of copies broken down by the paper size.	
❻	Indicates the total operation time.	

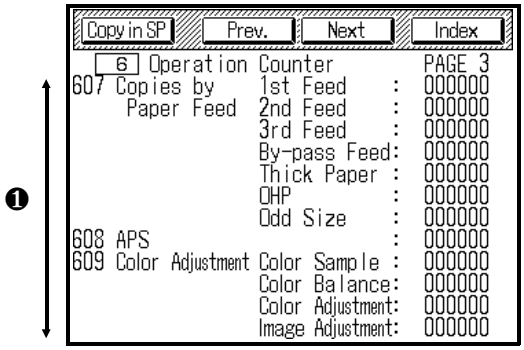

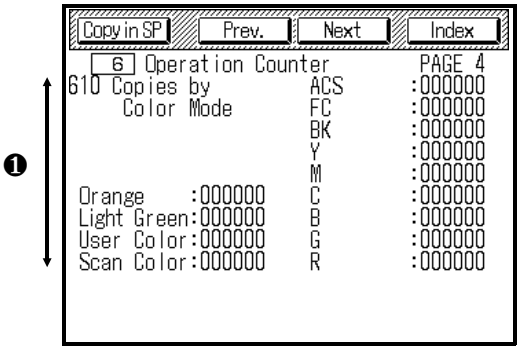

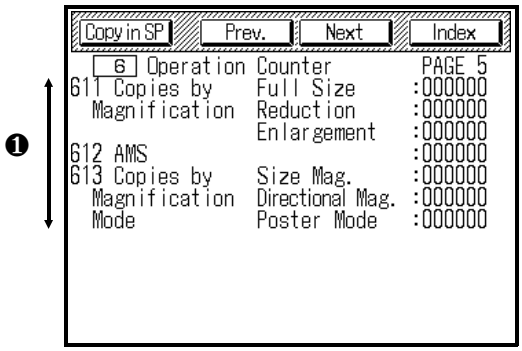

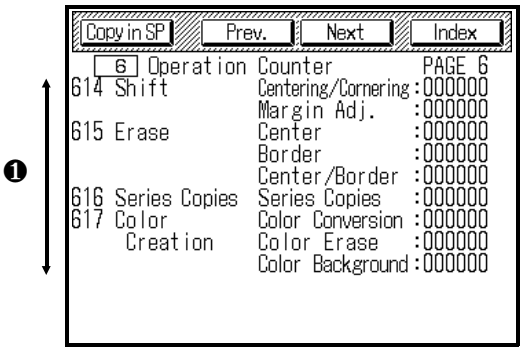

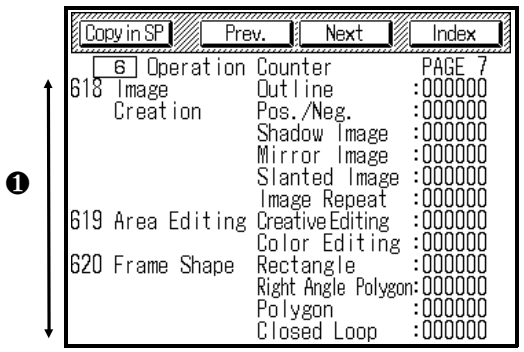

Item	Function	Note
❶	Indicates the total number of copies broken down by the copy modes.	

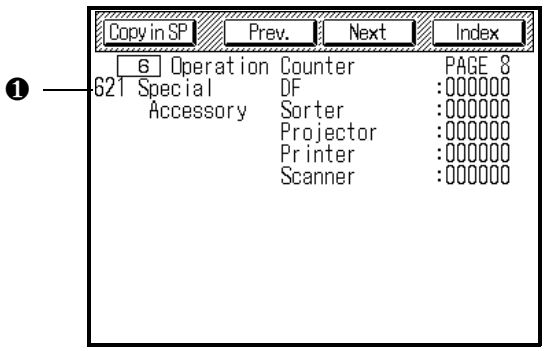

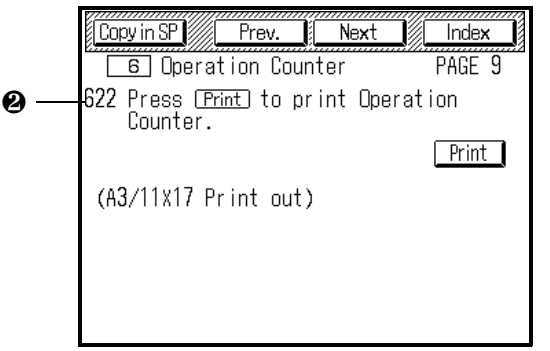

2.2.7 Counter Clear

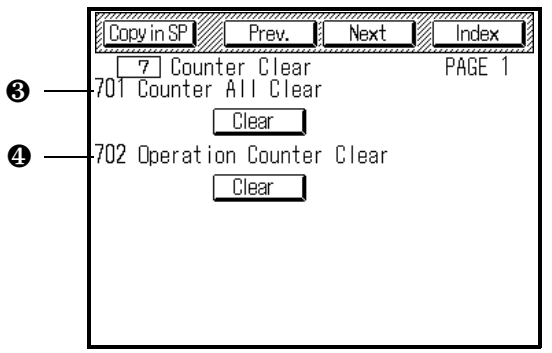

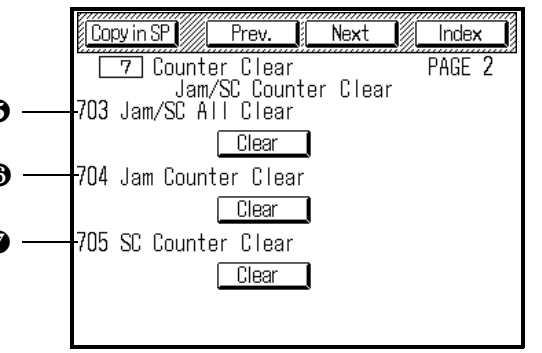

Item	Function	Note
❶	Indicates the total number of copies for each peripheral.	
❷	Prints all operation counters on the A3/11" x 17" paper.	A3/11" x 17" paper must be loaded in the copier.
❸	Clears all counters	Procedure: 1. Touch the clear key 2. The display asks Yes or No, if you are sure to clear, touch Yes, if you do not want to clear, touch No.
❹	Clears all operation counters	
❺	Clears all jam and SC counters	
❻	Clears all jam counters	
❼	Clears all SC counters	

2.3 SENSOR/SWITCH/SIGNAL DATA CHECK (INPUT MODE)

– How to check the sensor/switch/signal –

1. Enter SP mode as follows:
   1) Press the mode clear key.
   2) Enter "107"
   3) Press the clear/stop key for more than 3 seconds.

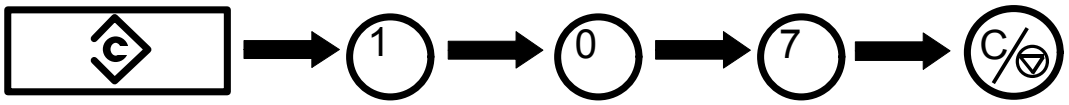

2. Touch [2] [A] on the display to access SP test mode.

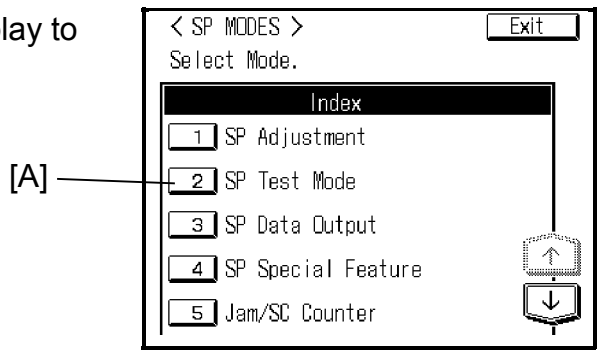

3. Touch [Next] [B] on the display six times.

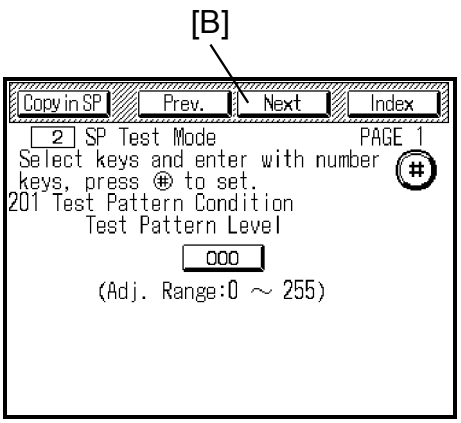

4. 1) Touch [Input No. 000] [C].
   2) Enter the input sensor/switch/signal number by using the number keys (Refer to the table in the following pages).
   3) Press the Enter key [D].

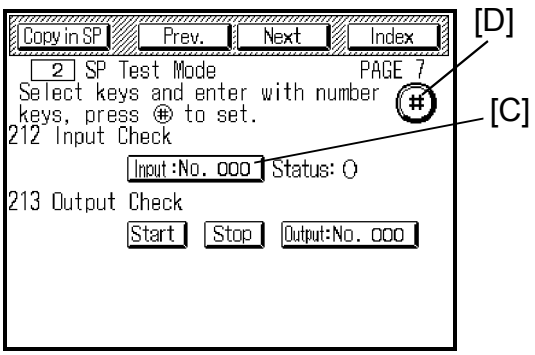

Service Tables

2.3.1 Input Check Mode Table

Input No.	Sensor/Switch/Signal	Status	
		0	1
1	Charge corona leak detection	Not detected	Detected
2	PCC leak detection	Not detected	Detected
3	Development bias leak detection	Not detected	Detected
4	Bk-Development drive motor lock detection	Not monitoring	Monitoring (Motor rotating)
5	Color-Development drive motor lock detection	Not monitoring	Monitoring (Motor rotating)
6	Drum motor lock detection	Not monitoring	Monitoring (Motor rotating)
7	Transport motor lock detection	Not monitoring	Monitoring (Motor rotating)
8	Cleaning motor lock detection	Not monitoring	Monitoring (Motor rotating)
9	Polygon motor lock detection	Not monitoring	Monitoring (Motor rotating)
10	Bk-Sleeve motor abnormal detection	Not monitoring	Monitoring (Motor rotating)
11	Y-Sleeve motor abnormal detection	Not monitoring	Monitoring (Motor rotating)
12	M-Sleeve motor abnormal detection	Not monitoring	Monitoring (Motor rotating)
13	C-Sleeve motor abnormal detection	Not monitoring	Monitoring (Motor rotating)
14	Paper feed motor lock detection	Not monitoring	Monitoring (Motor rotating)
15	Paper discharge leak detection	Not detected	Detected
16	By-pass feed table sensor	Closed	Open
17	Front door safety switches	Closed	Open
18	LD power supply OFF detection	Not detected	Detected
19	Vertical transport set switches	Closed	Open
20	Toner overflow sensor	Not full	Full
21	Registration guide set sensor	Set	Not set
22	Oil end sensor	Not end	End
23	By-pass paper end sensor	Paper detected	Paper not detected
24	1st paper end sensor	Paper detected	Paper not detected
25	2nd paper end sensor	Paper detected	Paper not detected

Input No.	Sensor/Switch/Signal	Status	
		0	1
26	3rd paper end sensor	Paper detected	Paper not detected
27	Transfer belt position sensor	Release	Touch
28	Transfer roller position sensor	Release	Touch
29	1st lift sensor	Not lifted	Lifted
30	2nd lift sensor	Not lifted	Lifted
31	3rd lift sensor	Not lifted	Lifted
32	1st paper feed sensor	Paper not detected	Paper detected
33	2nd paper feed sensor	Paper not detected	Paper detected
34	3rd paper feed sensor	Paper not detected	Paper detected
35	Registration sensor	Paper not detected	Paper detected
36	Transport sensor	Paper not detected	Paper detected
37	Exit sensor	Paper not detected	Paper detected
38	1st paper size switch-1	Actuated	Not actuated
39	1st paper size switch-2	Actuated	Not actuated
40	1st paper size switch-3	Actuated	Not actuated
41	1st paper size switch-4	Actuated	Not actuated
42	1st paper size switch-5	Actuated	Not actuated
43	By-pass paper size-1	Grounded (Low)	Not grounded (High)
44	By-pass paper size-2	Grounded (Low)	Not grounded (High)
45	By-pass paper size-3	Grounded (Low)	Not grounded (High)
46	By-pass paper size-4	Grounded (Low)	Not grounded (High)
47	2nd tray set switch	Not set	Set
48	3rd tray set switch	Not set	Set
49	By-pass length sensor	Paper not detected	Paper detected
50	Sorter connection detection	Not connected	Connected

2.4 ELECTRICAL COMPONENT CHECK (OUTPUT MODE)

CAUTION: The motors keep turning in this mode regardless of the upper or lower limit sensor signal. Do not keep the electrical component on for a long time to prevent mechanical or electrical damage.

– How to check the sensor/switch/signal –

1. Enter SP mode as follows:
   1) Press the mode clear key.
   2) Enter "107".
   3) Press the clear/stop key for more than 3 seconds.

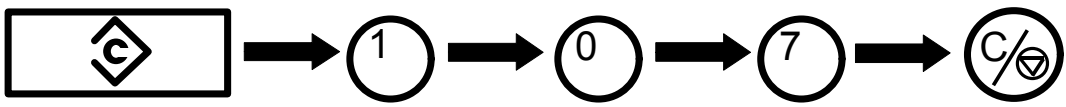

2. Touch [2] [A] on the display to access SP Test mode.

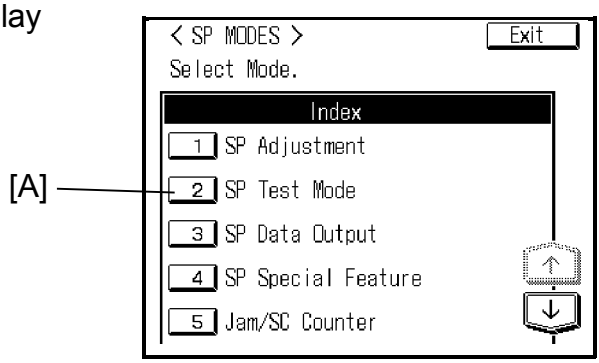

3. Touch Next [A] on the display six times.

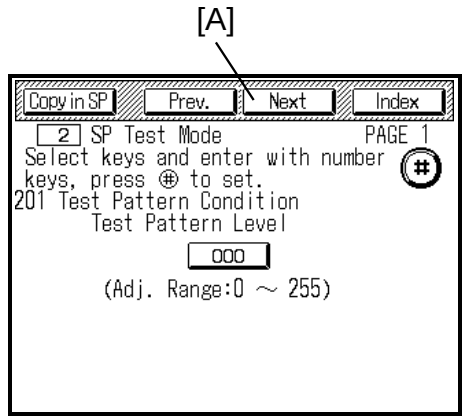

4. 1) Touch Output No. 000 [B].

2) Enter the electrical component number by using the number keys on the operation panel. (Refer to the table in the following pages.)

3) Press the Enter key [C].

4) Press Start [D] to activate and press Stop [E] to de-activate the electrical component.

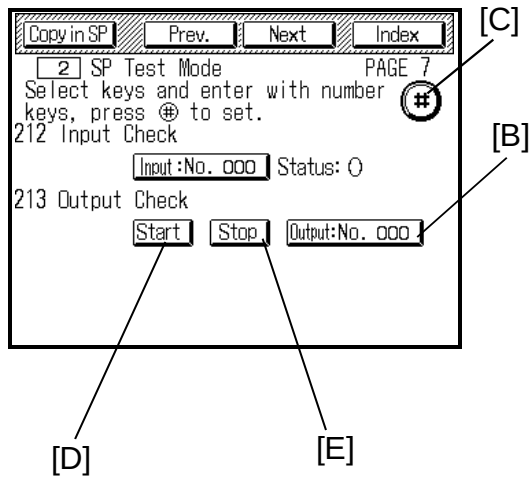

NOTE: If you select and start another output mode without touching Stop , the two output modes function simultaneously.
After completing, stop all test modes now functioning.

Service Tables

2.4.1 Output Check Mode Table

Output No.	Electrical Component
1	Charge corona with grid - Bk
2	Charge corona with grid - C
3	Charge corona with grid - M
4	Charge corona with grid - Y
5	Development bias - Bk
6	Development bias - C
7	Development bias - M
8	Development bias - Y
9	Transfer belt bias - 1C
10	Transfer belt bias - 2C
11	Transfer belt bias - 3C
12	Transfer belt bias - 4C
13	PCC
14	Drum cleaning bias (BR)
15	Transfer roller bias - Normal paper - 1C
16	Transfer roller bias - Normal paper - 2C
17	Transfer roller bias - Normal paper - 3C
18	Transfer roller bias - Normal paper - 4C
19	Transfer roller bias - OHP - 1C
20	Transfer roller bias - OHP - 2C
21	Transfer roller bias - OHP - 3C
22	Transfer roller bias - OHP - 4C
23	Transfer roller bias - Thick Paper - 1C
24	Transfer roller bias - Thick Paper - 2C
25	Transfer roller bias - Thick Paper - 3C
26	Transfer roller bias - Thick Paper - 4C
27	Discharge plate bias
28	Transfer belt motor (180mm/sec)
29	Transfer belt motor (90mm/sec)
30	Bk-Development drive motor
31	Color development drive motor
32	Drum motor - Forward
33	Drum motor - Reverse
34	Cleaning motor
35	Polygon motor
36	Bk-Sleeve motor - Forward

Output No.	Electrical Component
37	Bk-Sleeve motor - Reverse
38	Y-Sleeve motor - Forward
39	Y-Sleeve motor - Reverse
40	M-Sleeve motor - Forward
41	M-Sleeve motor - Reverse
42	C-Sleeve motor - Forward
43	C-Sleeve motor - Reverse
44	Y-Toner supply motor - Forward
45	Y-Toner supply motor - Reverse
46	M-Toner supply motor - Forward
47	M-Toner supply motor - Reverse
48	C-Toner supply motor - Forward
49	C-Toner supply motor - Reverse
50	B- Toner supply motor - Forward
51	Bk-Toner supply motor - Reverse
52	1st lift motor - Forward
53	1st lift motor - Reverse
54	2nd lift motor - Forward
55	2nd lift motor - Reverse
56	3rd lift motor - Forward
57	3rd lift motor - Reverse
58	Paper feed motor
59	Transport motor (180mm/sec)
60	Transport motor (90mm/sec)
61	Transport fans
62	Development exhaust fan - Low
63	Development exhaust fan - High
64	Fusing exhaust fan - Low
65	Fusing exhaust fan - High
66	Charge inlet fan
67	LD cooling fan
68	Polygon motor cooling fan - Low
69	Polygon motor cooling fan - High
70	Cleaning blade solenoid - Touch
71	Cleaning blade solenoid - Release
72	Lubricant brush solenoid - Touch
73	Lubricant brush solenoid - Release
74	Not used

Output No.	Electrical Component
75	By-pass pick-up solenoid
76	1st pick-up solenoid
77	2nd pick-up solenoid
78	3rd pick-up solenoid
79	1st separation roller solenoid
80	2nd separation roller solenoid
81	3rd separation roller solenoid
82	Fusing heater - Hot roller
83	Fusing heater - Pressure roller
84	Anti-condensation heater relay (on noise filter board)
85	Main power relay
86	Potential sensor calibration relay (on H.V.S. Board – B)
87	Transport motor relay
88	Transfer belt position clutch
89	Transfer roller position clutch
90	Registration clutch
91	By-pass feed clutch
92	1st Feed clutch
93	2nd Feed clutch
94	3rd Feed clutch
95	Lubricant brush position clutch
96	Not used
97	Quenching lamp
98	Cleaning entrance seal solenoid - Touch
99	Cleaning entrance seal solenoid - Release

2.5 SP MODES AFTER REPLACEMENT AND CLEANING

The following table shows the necessary SP modes, procedures and priority order when the listed items are replaced or cleaned:

NOTE1: When starting the necessary procedures, make sure the developer for all colors are replaced.

NOTE2: Make sure of the following items concerning the process control self check.

- Confirm that the PID key is selected in SP Special Feature P-2, No. 403 before performing the process control self check.
- The process control self check must be performed when there is no residual voltage on the OPC drum. (Wait at least 5 minutes after the last copy job.)
- Confirm that the difference between 'Target' and 'Actual' of gamma (γ) in SP Data Output P-4, No. 305 does not exceed 5 for each developer. If any of the difference exceeds 5, wait 5 minutes and perform the process control self check again.

●: Replaced ○: Cleaned

No.	SP Mode No.	Items Description	Develop-er	TD Sensor	OPC Drum	Drum Potent-ial Sensor	Charge Corona • wire • grid • casing	Trans-fer Belt
1	2-5, 207	Toner Density Initial Setting (without toner tank) **NOTE1**	●	●				
2	3-2, 303	$V_T/V_{REF}/V_{CONT}$ Confirmation	●	●				
3	—	30 copies with the toner tank	●	●				
4	2-6, 210	Process Control Self Check **NOTE2**	●	●	●	●	● ○	
5	2-6, 208	Belt Cleaning Mode						●
6	4-3 ~ 6, 405, 406	Color Balance Adjustment	●	●	●	●	● ○	●

2.6 MEMORY ALL CLEAR PROCEDURE

CAUTION: Memory all clear procedure clears all the correction data for process control and software counters, and returns all the modes to the default settings.
Normally, this mode should not be performed.

This procedure is required only when the copier malfunctions due to damaged RAM or when replacing the RAM board for any reason.

NOTE: Before performing the following procedures, locate the factory set data sheet under the operation panel and compare with the current settings of the machine if possible. If some adjustments were performed, write down the latest settings to make the adjustment procedure easier later on.

- Print out the "Copy Counters" by using the user tools access procedure 2, and make a record of the user copy counter before performing the memory all clear procedure.
- Print out the "Operation Counter" (Operation Counter P-9, No. 622) if necessary.

1. Confirm that the main switch is **ON**.
2. Turn the DIP - switch 501 No.4 of the main control board ON and OFF.
3. Turn the main switch OFF and ON.
4. Perform the point accuracy adjustment for the touch pannel LCD. (See section 5, Others section.)
5. Enter all the settings listed on the factory set data sheet.
6. Replace all developer. (See section 5, Development section.)
7. Check copy quality and paper path and do the necessary adjustments.
8. When the "Memory All Clear" procedure does not succeed, replace the RAM board and contact your service key person for special steps to be followed.

3. USER TOOLS MENU

Customers can change the copier's default settings using the following user tools.

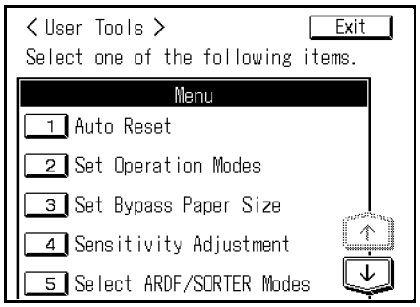

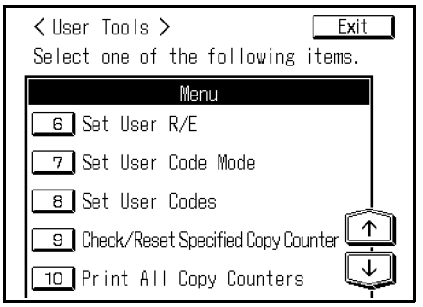

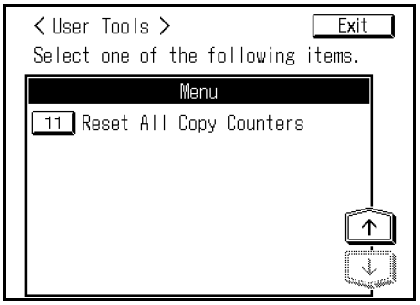

Service Tables

3.1 USER TOOLS ACCESS PROCDURE 1

1. Press the Clear Modes/Stand by key.
2. Press the Clear/Stop key more than 3 seconds until the User Tool Menu appears on the touch panel display.

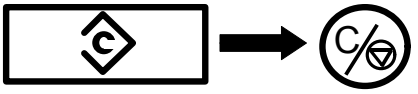

NOTE: User tools 7, 8, 9, 10, and 11 are not displayed when using this access procedure. Refer to User Tools Access Procedure 2 for these numbers.

3. Select the menu number you want to use by touching the touch panel display.

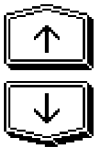

This copier has 11 user tools. 5 user tools are displayed on the touch panel display at one time. Use these keys to see other user tools.

Exit Use to exit from the user tool menu.

Menu Use to return to the user tool menu.

- Refer to the operating instructions for the contents and functions of user tools.

3.2 USER TOOLS ACCESS PROCEDURE 2

This access procedure is for a key operator, allowing to access all the user tools which includes No. 7, 8, 9, 10, and 11 for the user code mode.

1. Press the Clear Modes/Stand by key.
2. Enter "993".
3. Press the Clear/Stop key more than 3 seconds until the User Tool Menu appears on the touch panel display.

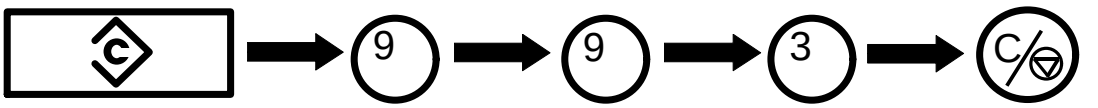

4. TEST POINTS / DIP SWITCHES / LED'S

4.1 MAIN CONTROL BOARD

4.1.1 Test Points

Number	Label	Function	Stand-by (V)	Note
TP501	(FUSE.L)	Pressure roller thermistor output	2.0 ~ 2.1	Main switch on: about 5 V If keeping 0 V or 5 V: NG
TP502	(FUSE.H)	Fusing thermistor output	1.0 ~ 1.1	
TP503	(PSN)	ID sensor output	0 ~ 0.1	About 5 V in stand-by: NG
TP504	(VLT)	Drum potential sensor output	0 ~ 0.3	When copying: 0 ~ 5 V 5 V in stand-by: NG
TP505	(D.TH)	Temperature sensor output (on the humidity sensor)	2.0 ~ 4.0	If keeping 0 V or 5 V: NG
TP506	—	Not used		
TP507	(TS1)(M)	M-TD sensor output	1.5 ~ 3.5	If keeping 0 V or 5 V: NG
TP508	(TS2)(Y)	Y-TD sensor output		
TP509	(TS3)(Bk)	Bk-TD sensor output		
TP510	(TS4)(C)	C-TD sensor output		
TP511	(+ 5V)	+5 V	4.9 ~ 5.3	
TP512	(GND)	Ground		
TP513	(+24 V)	+24 V	24 ± 1	
TP514	(VCA + 12 V)	+12 V	+12 ± 1	
TP515	(VCB –12 V)	–12	–12 ± 1	
TP516	—	Humidity sensor output	1.0 ~ 4.0	If keeping 0 V or 5 V: NG

4.1.2 DIP Switches

DPS501-1, -2, -3: Not used

DPS501-4: RAM clear
(Refer to the Memory All Clean procedure in section 4, 2.6)

4.1.3 LED

LED 502: It turns ON and OFF by counting the program loops run by the main CPU.
If the machine does not become ready with keeping this LED OFF, the main control board might be defective.

4.2 IPU BOARD

4.2.1 DIP Switches

SW300-1: Selects the accuracy level of synchronizing the video signal clock (18.6 MHz) with the laser synchronizing signal.
OFF: 1/15 clock ON: 1/4 clock (**MUST BE ON**)

SW300-2: Designer's use only (**MUST BE OFF**, otherwise entire background appears dirty.)

SW300-3, -4, -5:
Used by designers for monitoring signals. (NORMALLY OFF)

4.2.2 LED's

LED300 ~ 307: IPU-CPU monitor
If all the LED's blink together, the Main-CPU and the IPU-CPU have a communication error. → SC code appears.

LED308: Laser synchronizing signal monitor

LED309: Monitor for the combination of SW300-3, 4, 5.

5. PREVENTIVE MAINTENANCE SCHEDULE

5.1 PM TABLE

NOTE: The numbers mentioned for PM intervals indicate the number of *scans*.

Symbol key: **C:** Clean **R:** Replace **L:** Lubricate **I**: Inspect

ITEM	EM	40K	80K	120K	160K	200K	NOTE
OPTICS							
Platen Cover Sheet	C	C	C	C	C	C	Replace if necessary.
Exposure Glass	C	C	C	C	C	C	Alcohol or glass cleaner
Mirrors, Reflectors		C	C	C	C	C	Cotton pad with water, or blower brush
Lens, Correction Filter		C	C	C	C	C	Blower brush
Exposure Lamp				R			
Scanner Guide Rails		C	C	C	C	C	Dry cloth
Original Size Sensors			C		C		Blower brush
Optics Cooling Fan Filter		R	R	R	R	R	(**NOTE 1**)
PAPER FEED (Main Body)							
Registration Rollers		C	C	C	C	C	Alcohol
Relay Roller (Drive)		C	C	C	C	C	Alcohol
By-pass Pick-up Roller	C	C	C	C	C	R	Water
By-pass Paper Feed Roller	C	C	C	C	C	R	Water
By-pass Separation Roller	C	C	C	C	C	R	Water
By-pass Feed Pad			C		C		Alcohol or water
Paper Feed Guide Plate			C		C		Alcohol or water
Registration Sensor		C	C	C	C	C	Blower brush
PAPER FEED (Paper Supply Unit)							
Paper Guide Plate, Vertical Transport Plate			C		C		Alcohol or water
Pick-up Rollers	C	C	C	C	C	R	Water
Paper Feed Rollers	C	C	C	C	C	R	Water
Separation Rollers	C	C	C	C	C	R	Water
Vertical Transport Rollers			C		C		Alcohol
Vertical Transport Plate			C		C		Alcohol or water
Tray Bottom Plate Pad		C	C	C	C	C	Alcohol or water

ITEM	EM	40K	80K	120K	160K	200K	NOTE
DEVELOPMENT							
Developer (Y/M/C/Bk)			R		R		Y/M/C/Bk should be replaced all together.
Sleeve Roller Side Seals		C	C	C	C	C	Replace if damaged or wavy.
Development Unit Casing		C	C	C	C	C	Dry Cloth or vacuum cleaner (**CAUTION 1**)
Development Drive Gears		C	C	C	C	C	Blower Brush or vacuum cleaner
Toner Supply Receptacles, Toner Supply Joints		C	C	C	C	C	Dry Cloth or vacuum cleaner
Toner Tank Cover, Toner Bottle Guides		C	C	C	C	C	Dry Cloth or vacuum cleaner
Development Duct Lower Filter		C	C	C	C	C	Blower brush or vacuum cleaner Replace if necessary. (**NOTE 1**)
Development Filter		R	R	R	R	R	(**NOTE 1**)
Development Ozone Filter		R	R	R	R	R	(**NOTE 1**)
Development Exhaust Fan Filters		R	R	R	R	R	(**NOTE 1**)
AROUND THE DRUM							
Charge Corona Wire	C	C	R	C	R	C	Clean with dry cloth.
Charge Corona Grid	C	C	R	C	R	C	Blower brush, water, then dry cloth (**CAUTION 2**)
Charge corona casing	C	C	C	C	C	C	Wet cotton and dry cloth
Charge corona end blocks	C	C	C	C	C	C	Dry cloth
Quenching Lamp	C	C	C	C	C	C	Dry cloth
Drum Potential Sensor		C	C	C	C	C	Blower brush and dry cloth
ID Sensor		C	C	C	C	C	Dry cloth
Charge Inlet Fan Filter		R	R	R	R	R	(**NOTE 1**)
DRUM CLEANING							
Cleaning Blade		R	R	R	R	R	Dust with setting powder after replacement or cleaning.
Cleaning Brush		I	R	I	R	I	Inspect if the brush functions properly.

ITEM	EM	40K	80K	120K	160K	200K	NOTE
Bias Roller Blade		C	R	C	R	C	Dust with setting powder after replacement or cleaning.
Cleaning Bias Roller			C		C		Dry cloth or Alcohol Dust with setting powder.
Cleaning Side Seals, Casing		C	C	C	C	C	Dry Cloth
Cleaning Entrance Seal	I	C	C	C	C	C	Blower brush and dry cloth Replace if it is wavy.
PCC Wire	C	C	R	C	R	C	Dry cloth
PCC Casing	C	C	C	C	C	C	Water and dry cloth
PCC End Blocks	C	C	C	C	C	C	Dry cloth
TRANSFER BELT / TRANSFER ROLLER							
Transfer Belt		R	R	R	R	R	Perform SP208 (Belt Cleaning) after replacement.
Transfer Belt Unit Rollers		C	C	C	C	C	Alcohol
Transfer Belt Release Cams		L	L	L	L	L	Silicone Grease G40M (**NOTE 2**)
Belt Bias Roller Shaft		L	L	L	L	L	Silicone Grease G40M (**NOTE 2**)
Transfer Roller	I	I	I	I	I	I	Replace if the surface is damaged.
Transfer Roller Shaft		L	L	L	L	L	Silicone Grease G40M (**NOTE 3**)
Transfer Roller Blade			R		R		
Toner Catch Pan		C	C	C	C	C	
Transfer Roller Entrance Seal		C	C	C	C	C	Dry Cloth
Paper Discharge Plate		R	R	R	R	R	
TRANSFER BELT CLEANING							
Cleaning Blade		R	R	R	R	R	Dust with setting powder after replacement.
Cleaning Entrance Seal	I	C	C	C	C	C	Replace if damaged or wavy.
Cleaning Side Seals		C	C	C	C	C	
Toner Catch Seals		C	C	C	C	C	
Cleaning Unit Casing		C	C	C	C	C	Dry cloth

ITEM	EM	40K	80K	120K	160K	200K	NOTE
Lubricant Brush		I	I	R	I	I	Replace with the lubricant bar.
Lubricant Bar		I	I	R	I	I	Replace if damaged or worn (holes, dents, or, less than 0.5 mm overlap of the brush over the bar).
Lubricant Brush Guide Rollers		C	C	C	C	C	Dry cloth (**NOTE 4**)
Lubricant Brush Bracket		C	C	C	C	C	Remove the brush and clean with dry cloth. (**NOTE 4**)
Lubricant Brush Entrance Seal		C	C	C	C	C	(**NOTE 4**)
FUSING UNIT							
Hot Roller		R	R	R	R	R	(**NOTE 5**)
Heat Isolating Bushing		L	L	L	L	L	Barrierta L55/2 (**NOTE 5**)
Hot Roller Ball Bearing		C	C	C	R	C	Clean with dry cloth. (**NOTE 5**)
Pressure Roller, Pressure Roller Ball Bearing					R		Barrierta L55/2 (**NOTE6**)
Oil Blade		C	R	C	R	C	Suitable solvent Apply silicone oil on the edge after cleaning or replacement.
Oil Supply Pad		R	R	R	R	R	
Oil Sump					C		Dry cloth and alcohol
Hot Roller Stripper		C	C	C	C	C	Suitable solvent Apply silicone oil on the top after cleaning.
Fusing Thermistor, Pressure Roller Thermistor		C	C	C	C	C	Suitable solvent Apply silicone oil on the surface after cleaning.
Oil Tank		I	C/L	I	C/L	C/L	Add silicone oil after removing paper dust with a pipette.
Fusing Drive Gears			L		L		Mobil Temp. 1 or 78 (**NOTE 5**)
Cleaning Roller, Cleaning Roller Scraper		C	C	C	C	C	Suitable solvent

ITEM	EM	40K	80K	120K	160K	200K	NOTE
OTHERS							
Transport Belts		C	C	C	C	C	Alcohol
Toner Collection Bottle	I	C	C	C	C	C	Clean at EM if necessary.
Fusing Exhaust Ozone Filter		R	R	R	R	R	(**NOTE 1**)
Inner Cooling Fan Filter		R	R	R	R	R	(**NOTE 1**)
OPTIONAL EQUIPMENTS							
DUAL JOB FEEDER (A376) (Number of Originals)							
Transport Belt	C	C	C	R	C	C	Belt cleaner Replace if necessary.
Pick-up Roller	C	C	C	C	C	C	Alcohol Replace if necessary.
Feed Roller	C	C	C	R	C	C	Alcohol Replace if necessary.
Separation Belts	C	C	C	R	C	C	Alcohol Replace if necessary.
SORTER (A511) (Number of Copies)							
Transfer Rollers	C	C	C	C	C	C	Alcohol
Exit Rollers	C	C	C	C	C	C	Alcohol
Gears and Bushings	(L)	(L)	(L)	(L)	(L)	(L)	Lubricate if noisy.

CAUTION 1: When cleaning the development unit with a vacuum cleaner, always ground the casing with your fingers to avoid damaging the toner density sensor with static electricity.

CAUTION 2: When cleaning and drying the charge corona grid with cloth, be careful not to damage the grids by letting them catch fibers.

NOTE 1: Filters

The location of the filters which should be cleaned or replaced at PM is shown to the right.

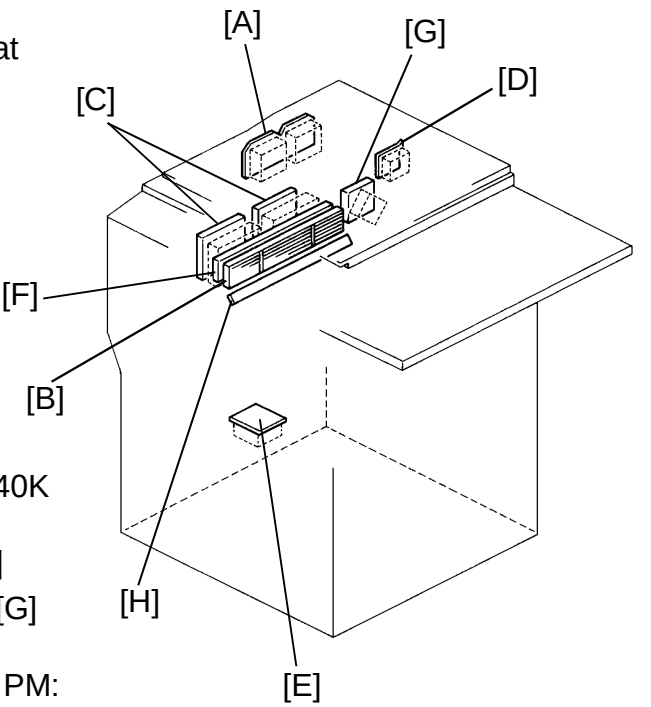

1) Dust filters to be replaced at 40K PM:
   - Optics cooling fan filter [A]
   - Development filter [B]
   - Development exhaust fan filters [C]
   - Charge inlet fan filter [D]
   - Inner cooling fan filter [E]
2) Ozone filters to be replaced at 40K PM:
   - Development ozone filter [F]
   - Fusing exhaust ozone filter [G]

3) Dust filter to be cleaned at 40K PM:
   - Development duct lower filter [H]

NOTE 2: Transfer Belt Unit

The following parts should be lubricated with silicone grease G40M every 40K scans:
- Transfer belt release cams [I]
- Belt bias roller shaft [J] (only at the end)

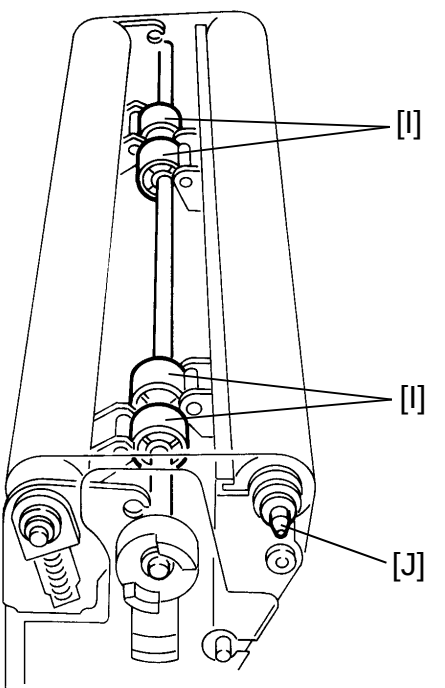

NOTE 3: Transfer Roller Unit

The end of the transfer roller shaft [A] should be lubricated with silicone grease G40M every 40 K scans.

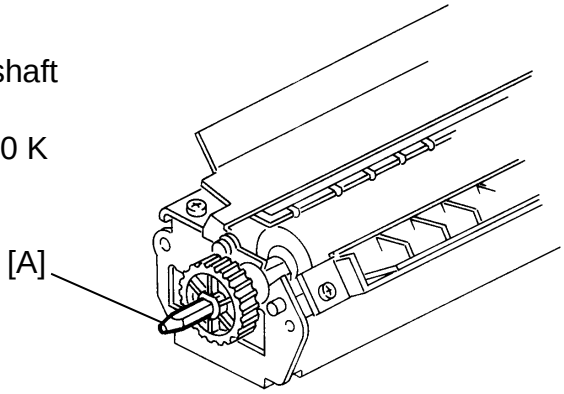

NOTE 4: Lubricant Brush U

The following parts should cleaned every 40K scans:

- Lubricant brush guide rollers [B]
- Lubricant brush bracket [C]
- lubricant brush entrance seal [D]

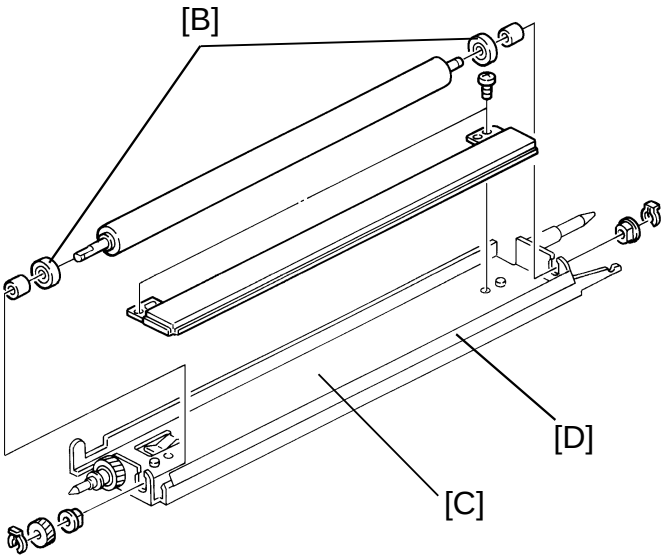

NOTE 5: Fusing Unit 1

When replacing the hot roller [E] every 40K scans, lubricate the inner and outer surface of the heat isolating bushings [F] with Barrierta L55/2.

The ball bearings [G] for the hot roller should be cleaned with dry cloth every 40K scans and sh be replaced every 160K The fusing drive gears [I should be lubricated witl Mobil Temp. 1 or 78 every 80K scans.

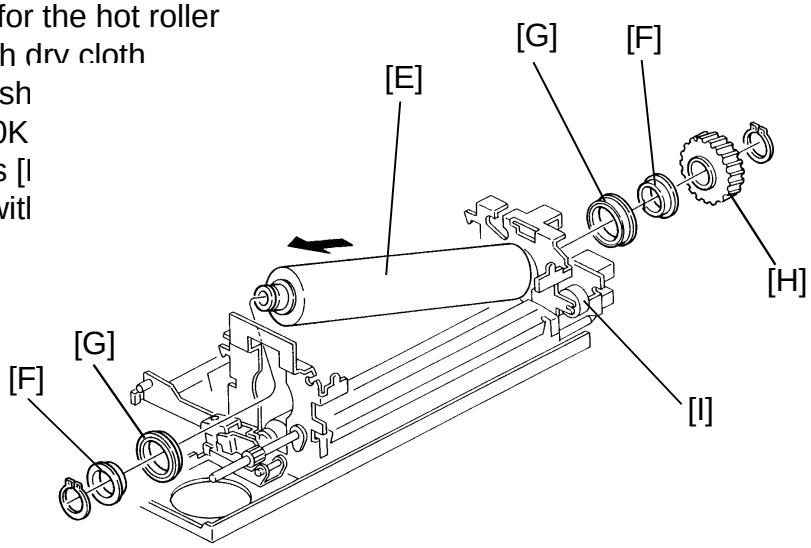

Service Tables

NOTE: 6 Fusing Unit 2

When replacing the pressure roller [A] and its ball bearings [B] scans, lubricate the rolle and inner surface of the bearings with Barrierta L

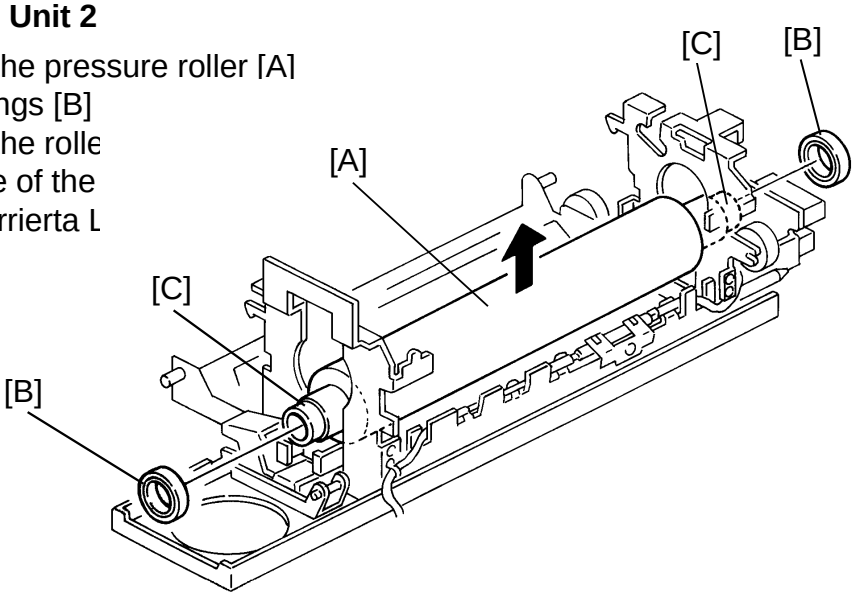

5.2 REGULAR PM PROCEDURE

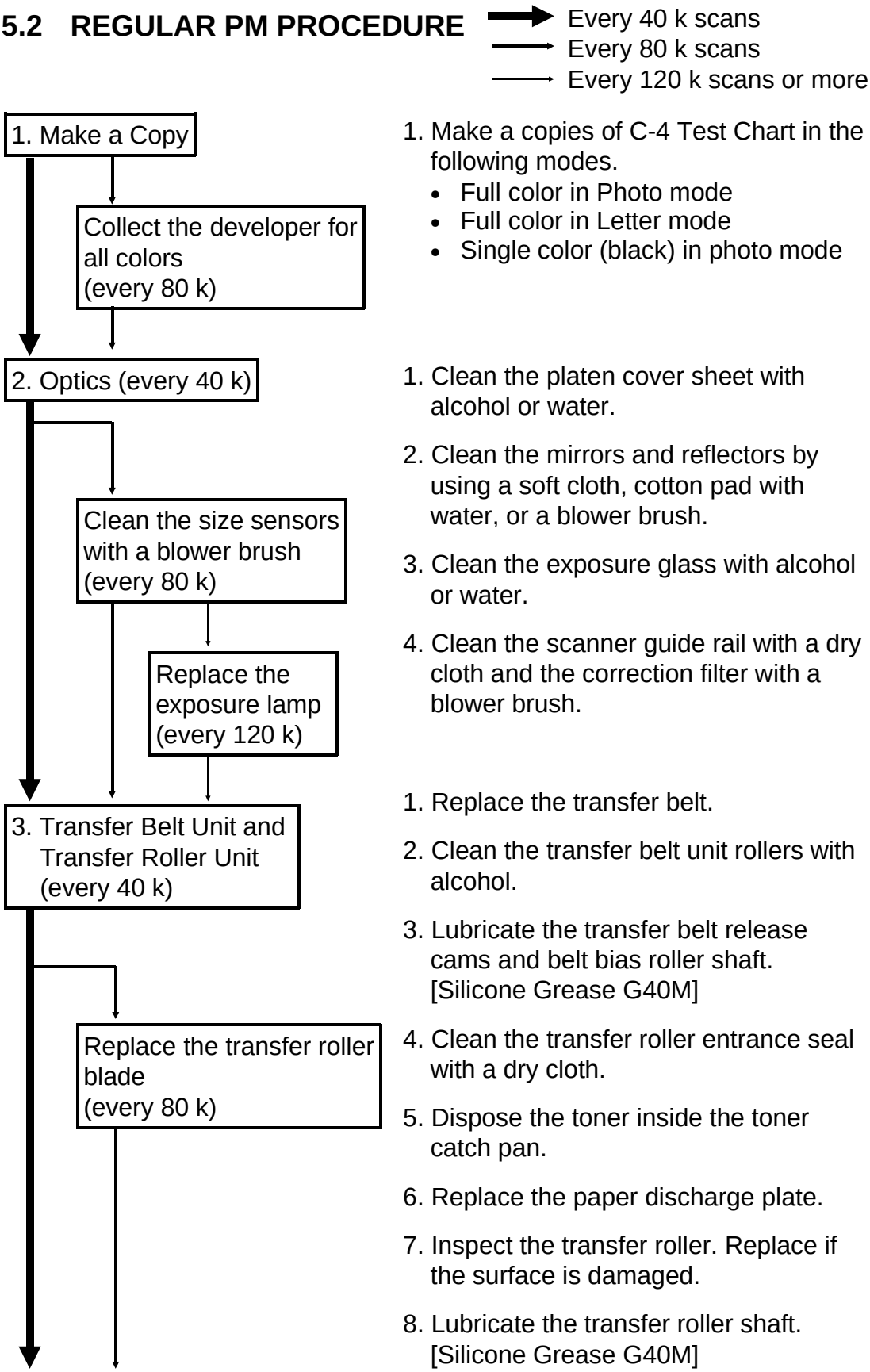

1. Make a copies of C-4 Test Chart in the following modes.
   - Full color in Photo mode
   - Full color in Letter mode
   - Single color (black) in photo mode

1. Clean the platen cover sheet with alcohol or water.
2. Clean the mirrors and reflectors by using a soft cloth, cotton pad with water, or a blower brush.
3. Clean the exposure glass with alcohol or water.
4. Clean the scanner guide rail with a dry cloth and the correction filter with a blower brush.

1. Replace the transfer belt.
2. Clean the transfer belt unit rollers with alcohol.
3. Lubricate the transfer belt release cams and belt bias roller shaft. [Silicone Grease G40M]
4. Clean the transfer roller entrance seal with a dry cloth.
5. Dispose the toner inside the toner catch pan.
6. Replace the paper discharge plate.
7. Inspect the transfer roller. Replace if the surface is damaged.
8. Lubricate the transfer roller shaft. [Silicone Grease G40M]

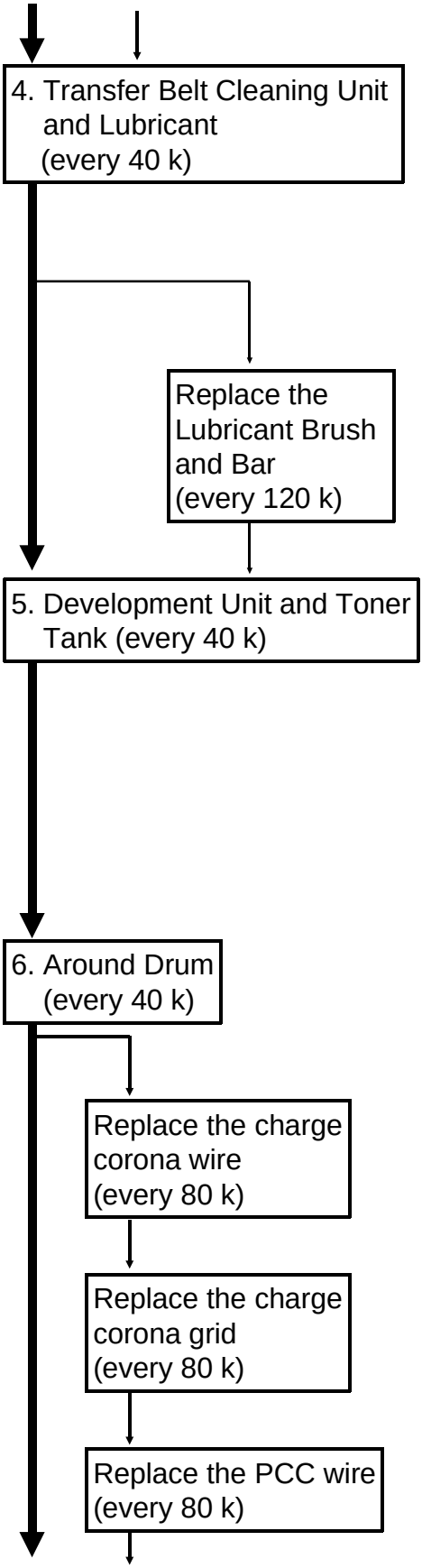

1. Replace the cleaning blade.
2. Clean the entrance seal. Replace if damaged or wavy.
3. Clean the side seals and toner catch seals.
4. Clean the unit's casing with a dry cloth.
5. Inspect the lubricant brush and bar.
6. Clean the lubricant brush guide rollers, lubricant brush bracket and lubricant brush entrance seal with a dry cloth.

1. Clean the casings, drive gears, toner supply receptacles, toner supply joints and toner bottle guides with a vacuum cleaner or dry cloth.
2. Clean the sleeve side seals with dry cloth. Replace if damaged or wavy.
3. Clean the development duct lower filter with a blower brush or vacuum cleaner.

1. Clean the charge corona wire, grid, casing, and end blocks.
2. Clean the quenching lamp and ID sensor.
3. Clean the PCC wire, casing and end blocks.

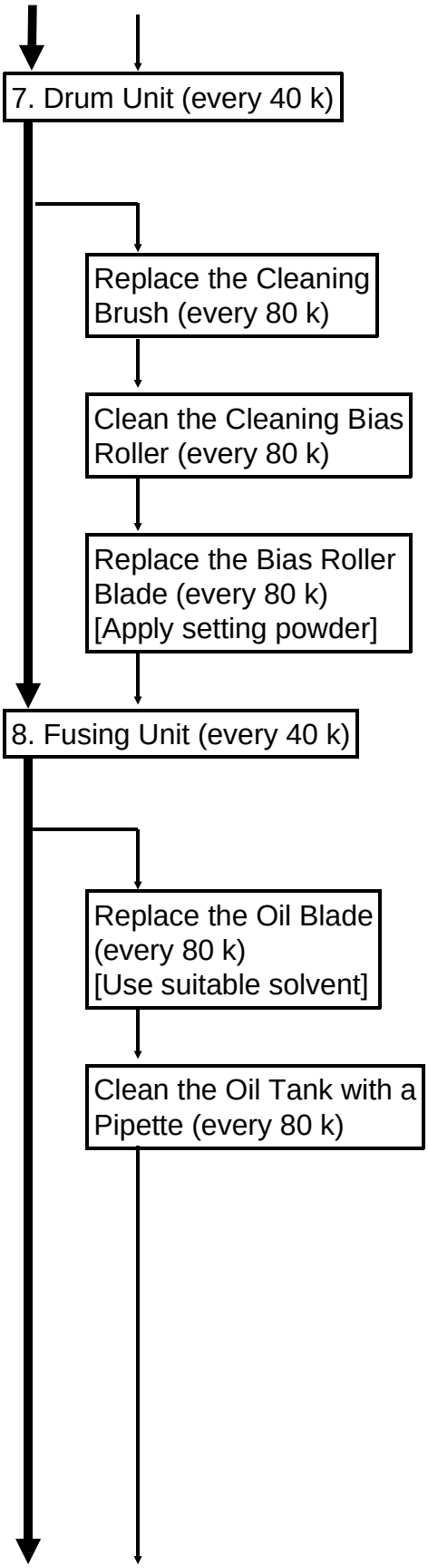

1. Remove the used drum and replace the cleaning blade. [Apply setting powder]
2. Inspect if the cleaning brush functions properly.
3. Clean the bias roller blade.
4. Clean the cleaning side seals, casing and entrance seal.
5. Install a new drum. [Apply setting powder]

1. Replace the oil supply pad.
2. Clean the fusing thermistor. [Apply silicone oil on surface]
3. Clean the oil blade. [Use suitable solvent]
4. Replace the hot roller.
5. Lubricate the heat isolating busings. [Barrierta L55/2]
6. Clean the hot roller ball bearings.
7. Clean the hot roller stripper. [Apply silicone oil on surface]
8. Clean the pressure roller thermistor. [Apply silicone oil on surface]
9. Clean the hot roller cleaning roller and scraper. [Use suitable solvent]
10. Inspect the amount of silicone oil in the tank. Add oil if necessary.

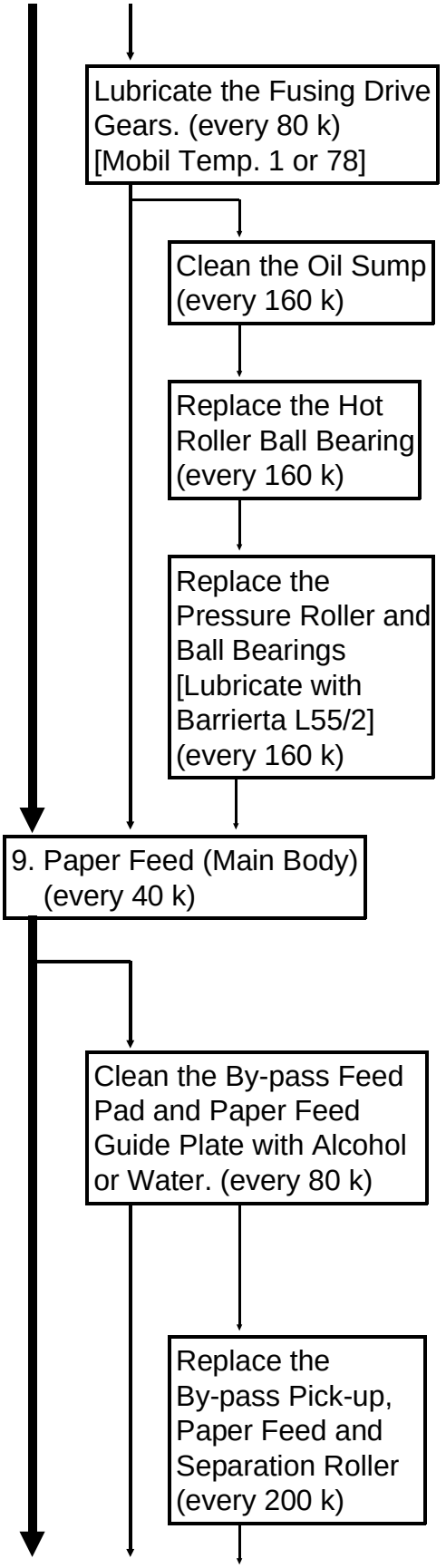

1. Clean the registration rollers and relay rollers with alcohol.
2. Clean the by-pass pick-up, paper feed and separation roller with water.
3. Clean the registration sensor with a blower brush.

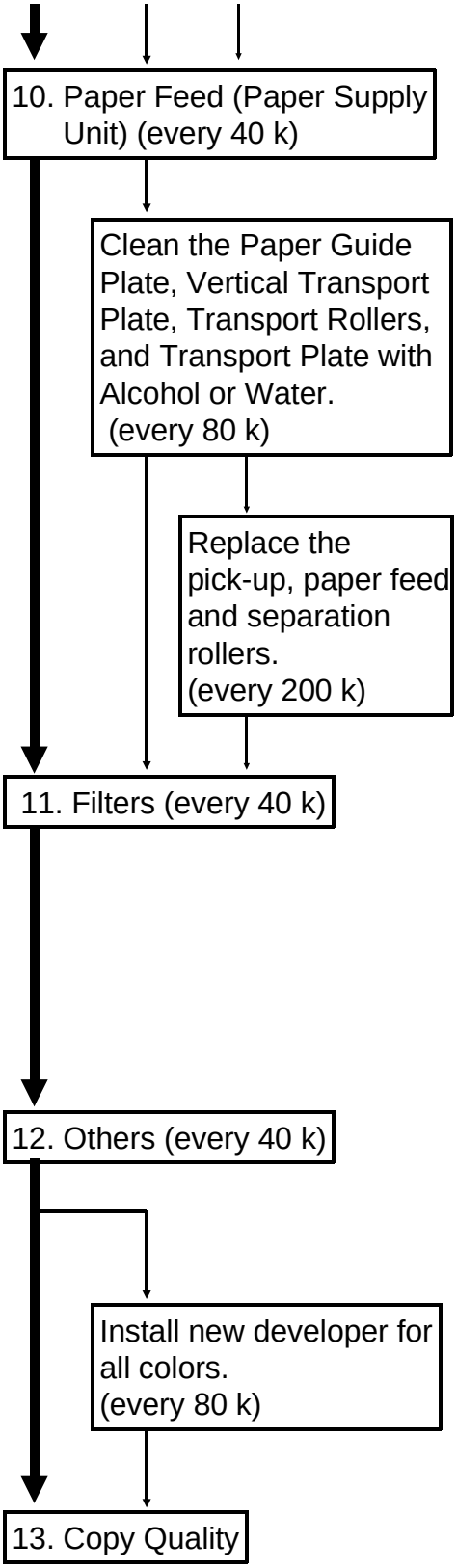

1. Clean the pick-up, paper feed and separation rollers with water.
2. Clean the tray bottom plate pad with alcohol or water.

1. Replace the following filters.
   - Optics cooling fan filter.
   - Development filter.
   - Development ozone filter.
   - Inner cooling fan filter.
   - Optics cooling fan filters.
   - Charge inlet fan filter.
   - Fusing exhaust ozone filter.

1. Clean the transport belts with alcohol.
2. Dispose the used toner in the toner collection bottle.

- Perform SP2-5, No. 207 (Toner Density Initial Setting) and other procedures.

NOTE: The process control self check will be performed whenever the machine is turned on while the hot roller temperature is below 100°C.

SECTION 5

REPLACEMENT AND ADJUSTMENT

1. COLOR BALANCE ADJUSTMENT

NOTE: a) Check the color balance at every call, or after replacing the OPC drum, or the developer.

b) Always adjust the color balance using only the "OFF SET" keys. Do not change the factory settings in the "STEP" keys.

c) Entering a larger setting for "OFF SET" will make the copy image darker.

d) The "OFF SET" setting for each ID level must be within the range defined below. (Entering a greater number is the same as entering the maximum number in the range.)

OFF SET SETTING

H L	0 ~ 20
M	0 ~ 30
ID MAX	0 ~ 10

e) For more detailed information concerning the access of SP modes, refer to section 4 (Service Program Mode Operation).

1. Take a full color copy using the C-4 test chart in letter mode [A].

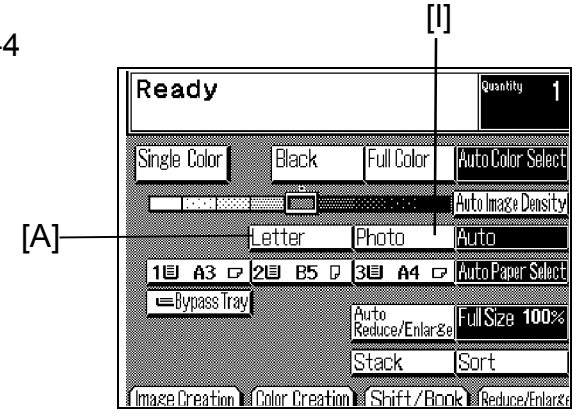

2. Enter the SP mode and open SP Special Feature P-3, No. 405 (γ Correction Data Rough Adj. "Letter") [B].

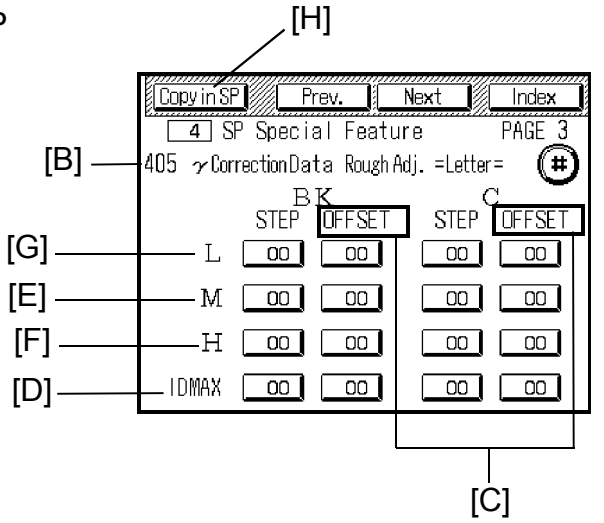

3. Checking the copy image, adjust the "OFF SET" [C] settings for each image density (ID) by referring to the following table.

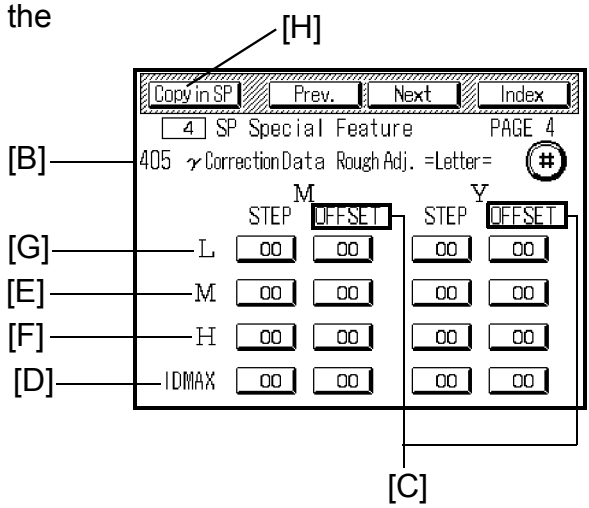

— STANDARD COPY QUALITY IN LETTER MODE —

Step No.	Key to Adjust	Level to Refer on the C-4 Chart	Adjustment Standard
1	ID MAX [D] for each color	1 2 3 4 5 6 7 8 9 10 ↑ 10th level of the color scale	Adjust the ID of the 10th level to the same value as the C-4 test chart.
2	MIDDLE ID [E] for each color	1 2 3 4 5 6 7 8 9 10 ↑ 5th level of the color scale	Adjust the ID of the 5th level to the same value as the C-4 test chart.
3	HIGH ID [F] for each color	1 2 3 4 5 6 7 8 9 10 ↑ 8th level of the color scale	Adjust the ID of the 8th level to the same value as the C-4 test chart.
4	LOW ID [G] for each color	1 2 3 4 5 6 7 8 9 10 ↑ 2nd and 3rd level of the color scale	Adjust the ID so that the 2nd level is not visible, and the 3rd level is the same value as the C-4 test chart.

NOTE: If the customer tends to use the "3 COLOR" mode in the user tools frequently, perform the following color balance adjustment.

1) Enter the User Tools.
2) Open Sensitivity Adjustment "Color Mode" and select "3C".
3) Exit the User Tools and take a full color copy in the letter mode.
4) Adjust the black scale level 3 to 5 (LOW ID) by combining cyan, magenta, and yellow ID's to an acceptable shade of grey.

4. Touch the Copy in SP key [H] and select the photo mode [I].

5. Take a single color copy (black) and a full color copy using the C-4 test chart.

6. Touch the SP Modes key and open P-5, No. 406 (γ Correction Data Rough Adj. "Photo") [J].

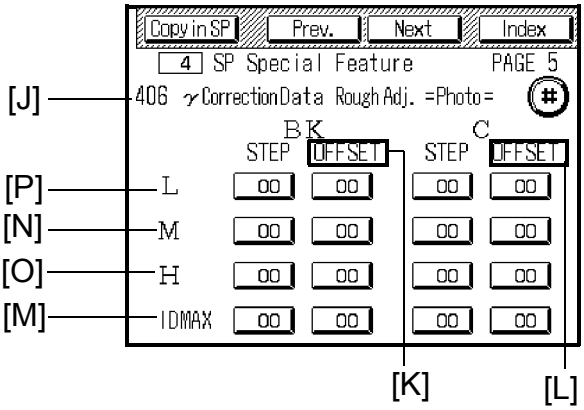

7. Checking the copy image of the single color copy (black), adjust the "OFF SET" [K] settings for the black image density (ID) by performing the following table step number 1 to 4.

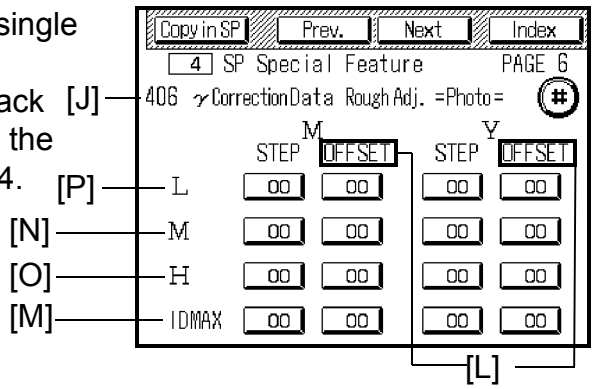

8. Checking the copy image of the full color copy, adjust the "OFF SET" [L] settings for the Cyan, Magenta, and Yellow ID by performing the following table (all steps).

— STANDARD COPY QUALITY PHOTO MODE —

Step No.	Key to Adjust	Level to Refer on the C-4 Chart	Adjustment Standard
1	ID MAX [M] for each color	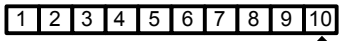 10th level of the color scale	Adjust the ID of the 10th level to the same value as the C-4 test chart.
2	MIDDLE ID [N] for each color	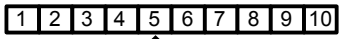 5th level of the color scale	Adjust the ID of the 5th level to the same value as the C-4 test chart.
3	HIGH ID [O] for each color	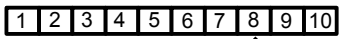 8th level of the color scale	Adjust the ID of the 8th level to the same value as the C-4 test chart.
4	LOW ID [P] for each color	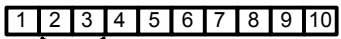 2nd and 3rd level of the color scale	Adjust the ID so that the 2nd level is slightly (just) visible and the 3rd level is the same as the C-4 test chart.
5	Low ID [P] of Y, M, C	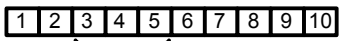 3rd, 4th, and 5th level of the black scale	The levels should be an acceptable shade of grey.

2. COPY IMAGE ADJUSTMENT - PRINTING/SCANNING

NOTE: a) When performing this adjustment, always bring the "Factory Set Data" sheet with you.

b) Always perform this adjustment after replacing the following parts.

- Scanner Wire
- Optical Housing Unit
- Lens Unit
- Polygon Motor
- LD Unit
- Scanner Motor
- etc.

c) For more detailed information concerning the access of SP modes, refer to section 4 (Service Program Mode Operation).

d) The following procedures must be performed when 3 Side Full Image (User Tools No.2) is "OFF".

2.1 PRINTING

Registration Adjustment Standard Copy Image (Blank Margins = O)

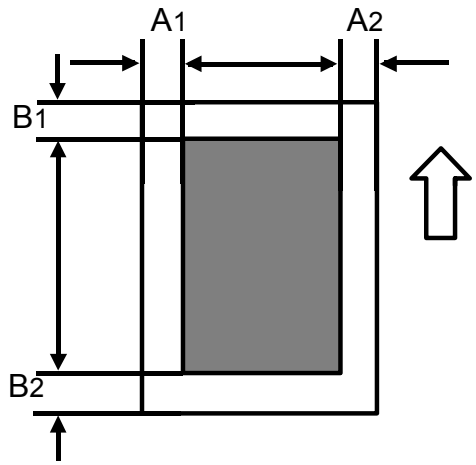

$A_1 = A_2$

B_1 : 2 ± 2 (mm), $0.08" \pm 0.08"$

B_2 : No Standard

(Registration + Blank Margin) Adjustment Standard Copy Image

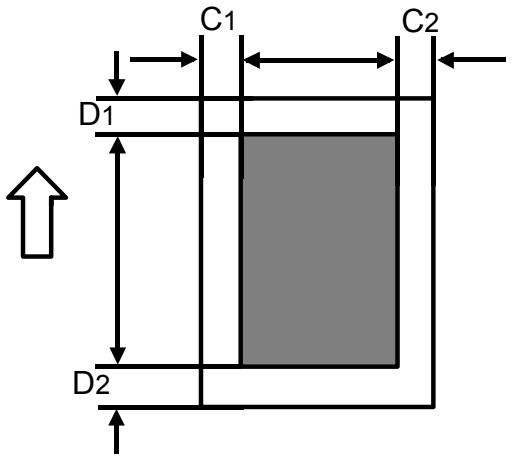

C_1 : 2 ± 2 (mm), $0.08" \pm 0.08"$

C_2 : 2 ± 2 (mm), $0.08" \pm 0.08"$

$C_1 + C_2$: 4 (mm), 0.16" or less

D_1 : 5 ± 2 (mm), $0.2" \pm 0.08"$

D_2 : 2 ± 2 (mm), $0.08" \pm 0.08"$

Replacement Adjustment

– 3rd Paper Tray (Normal Paper) –

1. Take a single color copy (black) of the C-4 test chart using A3 or 11" x 17" paper from the 3rd paper tray.
2. By comparing the copy image to the C-4 test chart, determine whether the registration or the blank margin is out of standard (causing the faulty copy image).

(Example)

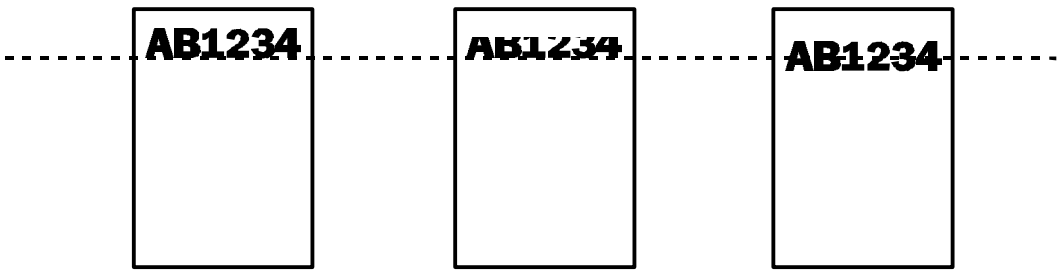

- Original -
- Faulty Lead Edge Blank Margin
- Faulty Lead Edge Registration

If the registration is within standard, go to step 11 and adjust the blank margin.

2.1.1 Registration Adjustment

3. Enter the SP mode and open SP Adjustment P-16, No. 119 (Blank Margin) [A].
4. Make a note of current settings and enter "O" for all the settings in the page [B] for now.
5. Open SP Test Mode P-3, No. 205 (Test Pattern Condition) [C].
6. Touch the Trimming Area key [D] and touch the Set key [E].
7. Touch the Copy in SP key [F] and confirm that the single color (black) mode and the 3rd paper tray is selected.
8. Press the start key and print out the trimming area test pattern.
9. Open SP Adjustment P-1, No. 101 (Lead Edge Registration "Printing") [G] and adjust the lead edge registration (B1) to meet the standard copy image by changing the setting [H].

   NOTE: Copy image will shift up when entering greater setting. (0.5 mm/bit)

10. Open SP Adjustment P-3, No. 104 (Side to Side Registration "Printing") [I] and adjust the side-to-side registration to meet the standard copy image (A1 = A2) by changing the setting [J].

    NOTE: Copy image will shift to the left when entering a greater setting. (0.1 mm/bit)

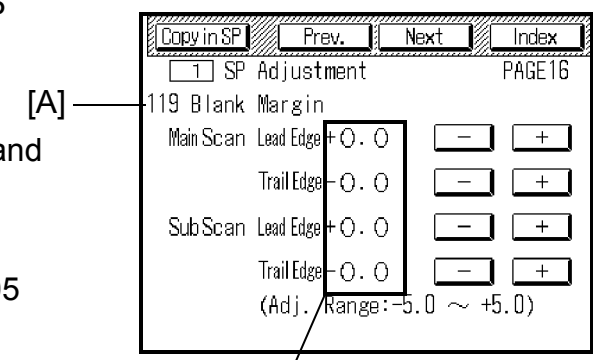

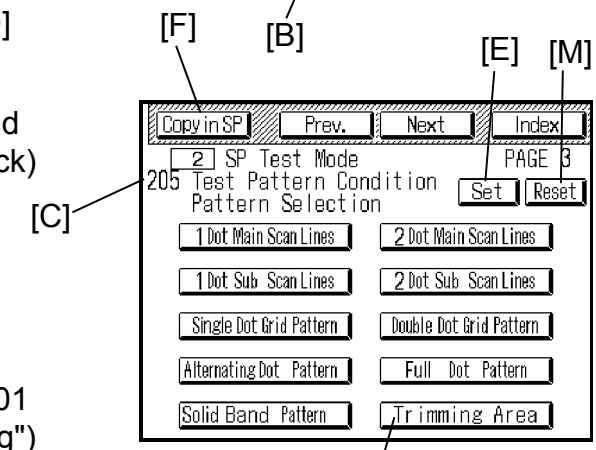

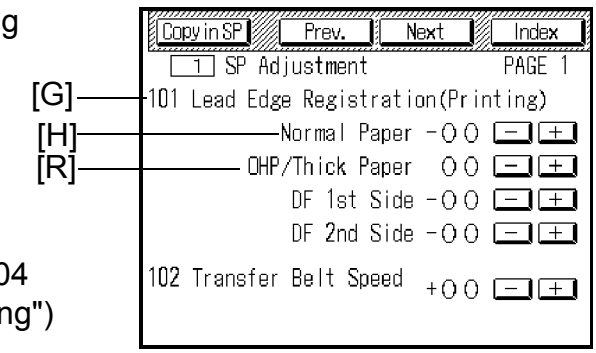

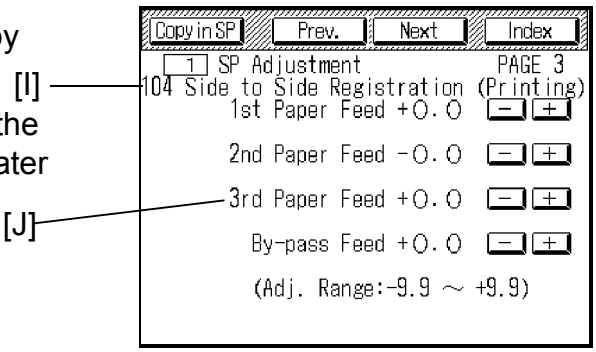

Replacement Adjustment

2.1.2 Blank Margin Adjustment

11. Open SP Adjustment P-16, No. 119 (Blank Margin) [K] and change the settings [L] from "O" to the factory set data or the previous settings.
12. Open SP Test Mode P-3, No. 205 (Test Pattern Condition) [M].
13. Touch the Trimming Area key [N] and touch the Set key [O].
14. Touch the Copy in SP key [P] and confirm that the single color (black) mode and the 3rd paper tray is selected.
15. Press the start key and print out the trimming area test pattern.
16. Adjust the blank margin of the 4 edges [L] to meet the registration plus blank margin adjustment standard copy image (C_1, C_2, C_1 + C_2, and D_1).

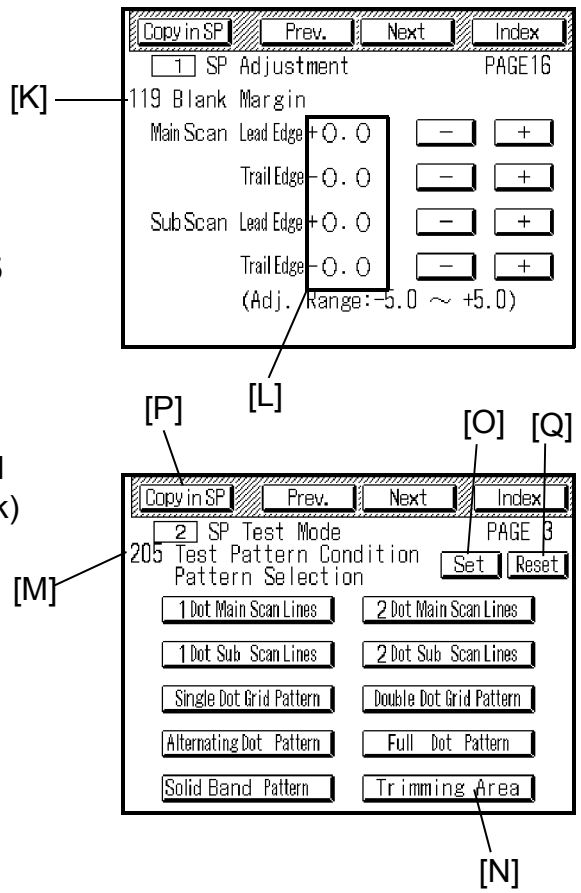

NOTE: The blank margin on the copy will increase when entering a greater setting.

17. Open SP Test Mode P-3, No. 205 [M] and touch the Reset key [Q].

– 1st, 2nd Paper Tray and By-pass Feed Table (Normal Paper) –

1. Perform the same procedures as the 3rd paper tray adjustments, but skip step 9.

   NOTE:
   - The lead Edge Registration "Printing" [G] setting is the same for all the paper feed units.
   - Select the desired paper feed unit in step 10.

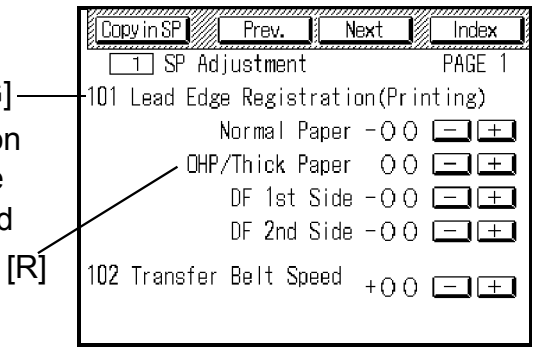

– By-pass Feed Table (OHP/Thick Paper) –

1. Perform the same procedures as the 3rd paper tray adjustments except in step 9, select the OHP/Thick Paper key [R], and in step 10, select the By-pass Feed [S].

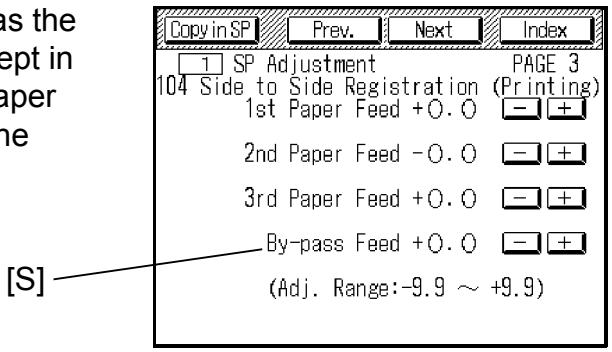

Replacement Adjustment

2.2 SCANNING

NOTE: Perform or check the "Registration plus Blank Margin Adjustment" (Printing) before the following scanning lead edge and side-to- side registration adjustments.

1. Enter the SP mode and open SP Adjustment P-21, No. 126 and 127 (Lead Edge Registration, Side to Side Registration - Scanning) [A].

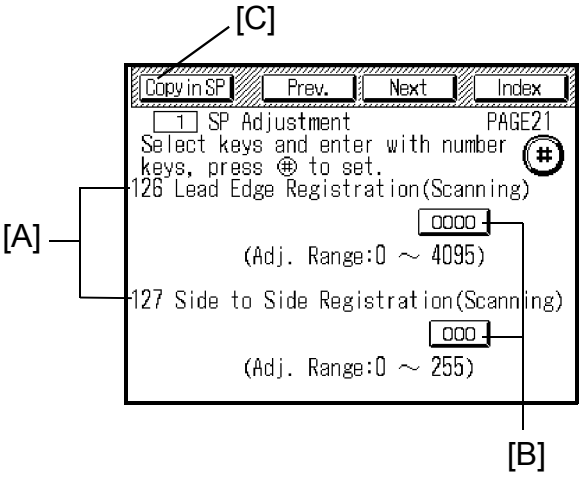

2. Confirm that the both scanning registrations [B] are set at their factory settings. (Refer to the Factory Set Data Sheet of the machine.)

   NOTE: Normally the settings entered at the factory meets the standard copy image.

3. Touch the Copy in SP key [C] and take a full color copy of the C4 chart in photo mode.

Perform steps 4. to 6 for both sides of the test chart.

4. Check the vertical lines on the side of the test chart copy. Verify that the yellow and cyan lines overlap the black line. If they do not, continue with step 5, otherwise exit SP mode.

5. Touch the SP modes key and open SP Adjustment P-20, No. 130 (Vertical Line Alignment) [D]. Read the present setting and locate the setting on the graph (see next page).

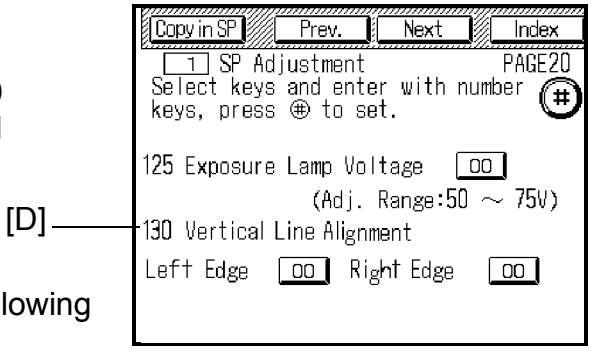

6. Change the setting according to the graph on the next page by following these rules:

Case 1: Yellow line at left, cyan line at right of the black line.
Referring to the graph, choose one of the settings left of the present one.

- If only one of the two lines is visible, choose a setting on the middle line of the graph.
- If both lines are visible, but the cyan line is further from the black line, choose a setting on the top line.
- If both lines are visible, but the yellow line is further from the black line, choose a setting on the bottom line.

Case 2: Yellow line at right, cyan line at left of the black line.
Referring to the graph, choose one of the settings right of the present one.

- If only one of the two lines is visible, choose a setting on the middle line of the graph.
- If both lines are visible, but the cyan line is further from the black line, choose a setting on the top line.
- If both lines are visible, but the yellow line is further from the black line, choose a setting on the bottom line.

Vertical alignment settings (Default=55)

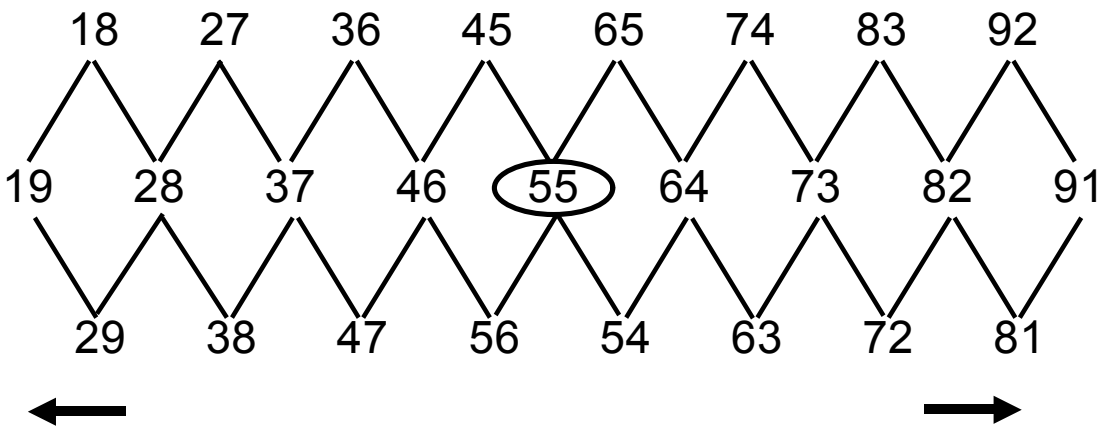

3. EXTERIOR AND INNER COVERS

3.1 EXTERIOR COVER REMOVAL

3.1.1 Front Door

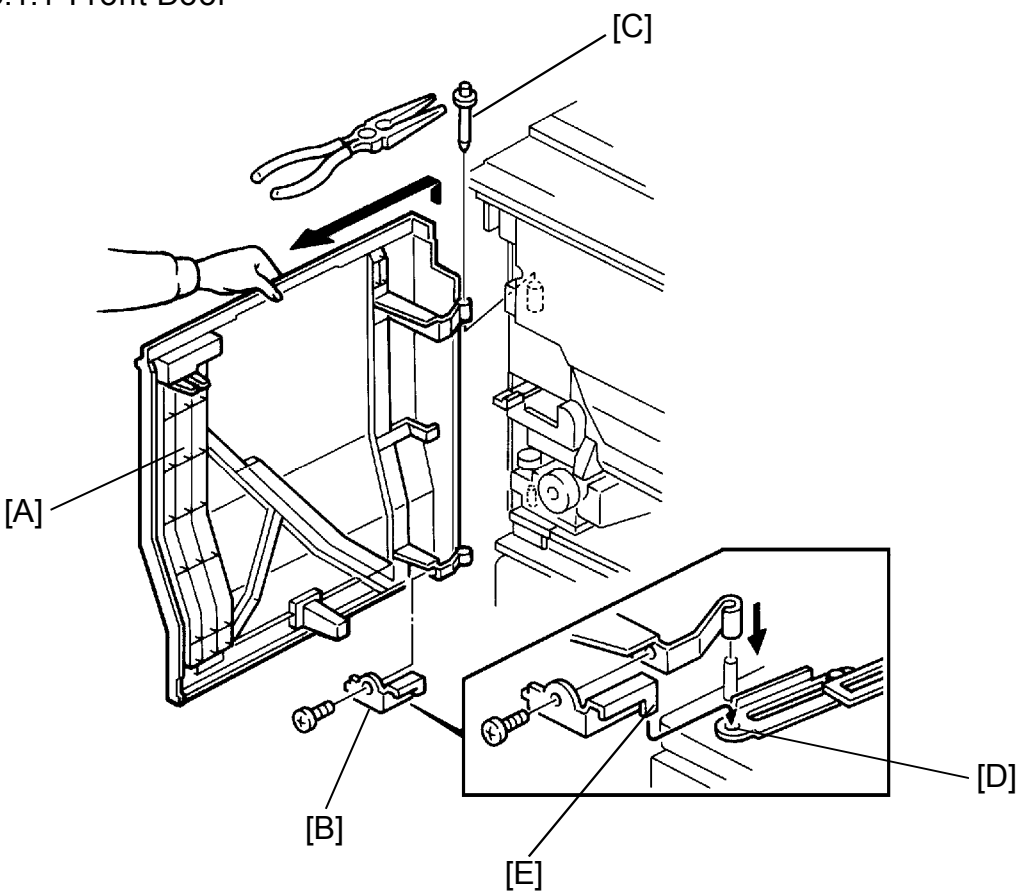

1. Open the front door [A].
2. Remove the fusing gear release bracket [B] (1 screw).
3. Pull out the pin [C].
4. Lift up and remove the front door [A].

NOTE: When re-installing, make sure that the gear release arm hole [D] meets the gear release bracket's pin [E].

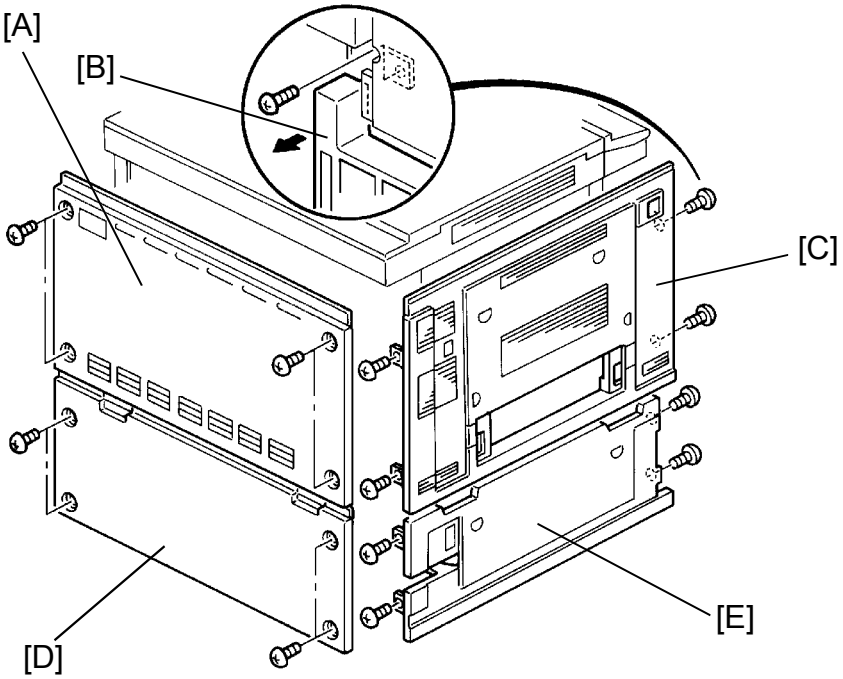

3.1.2 Upper Rear Cover

1. Remove the upper rear cover [A] (4 screws).

3.1.3 Upper Left Cover

1. Open the front door and remove the total counter cover [B] (1 screw). (See Inner Cover Removal section.)
2. Remove the upper rear cover [A].
3. Remove the exit tray or the sorter. (See Sorter Section.)
4. Remove the left cover [C] (4 screws).

3.1.4 Lower Rear Cover

1. Remove the lower rear cover [D] (4 screws).

3.1.5 Lower Left Cover

1. Remove the lower rear cover [D].
2. Pull out all paper trays.
3. Remove the lower left cover[E] (4 screws).

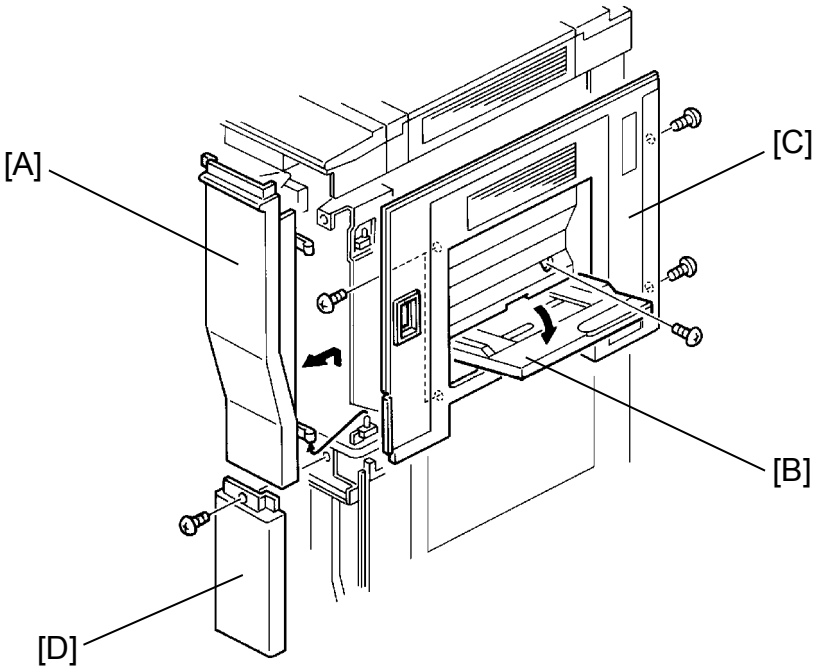

3.1.6 Right Front Door

1. Open the front door and the right front door [A].
2. Remove the right inner cover (3 screws). (See Inner Cover Removal section.)
3. Remove the right front door [A].

3.1.7 Upper Right Cover

1. Remove the right front door [A].
2. Remove the upper rear cover.
3. Push open the by-pass feed table [B].
4. Remove the upper right cover [C] (5 screws).

3.1.8 Lower Front Cover

1. Open both doors.
2. Remove the lower front cover [D] (1 screw).

3.1.9 Top Cover

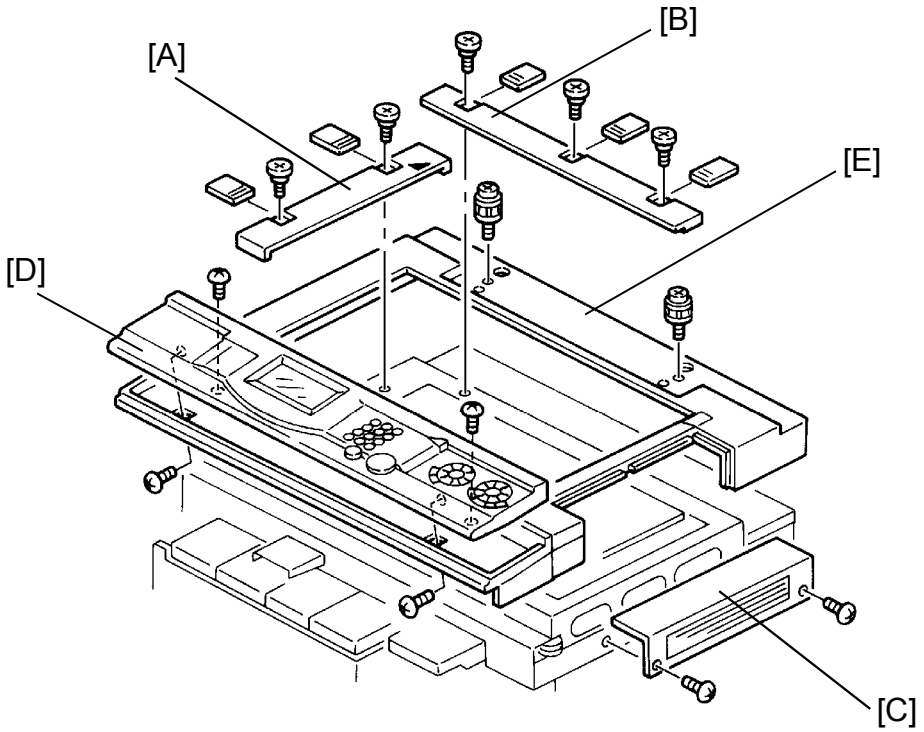

1. Remove the platen cover or the DJF (if installed).
2. Remove the left original scale [A] (2 screws) and the rear scale [B] (3 screws).
3. Remove the top right cover [C] (2 screws).
4. Remove the operation panel [D]. (See Operation Panel Removal Section.)
5. Remove the top cover [E] (4 screws).

3.2 INNER COVER REMOVAL

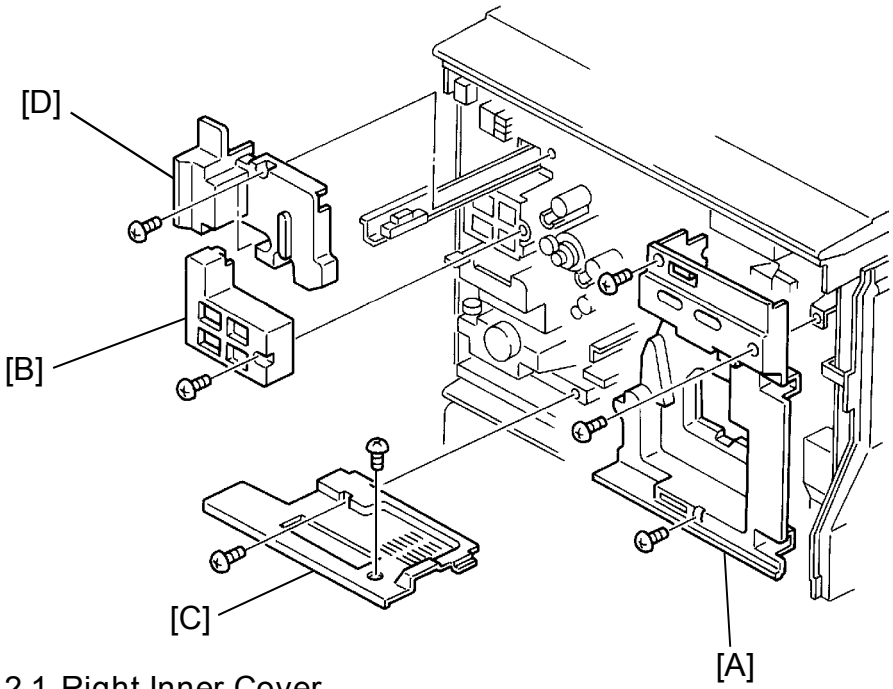

3.2.1 Right Inner Cover

1. Open the front doors.
2. Remove the right inner cover [A] (3 screws).

3.2.2 Total Counter Cover

1. Open the front doors.
2. Remove the total counter cover [B] (1 screw).

3.2.3 Lower Left Inner Cover

1. Open the front doors.
2. Remove the toner hopper unit. (See Development Unit Removal Section.)
3. Remove the lower left inner cover [C] (2 screws).

3.2.4 Upper Left Inner Cover

1. Remove the front door.
2. Remove the total counter cover [B].
3. Remove the upper left inner cover [D] (2 screws).

4. SCANNER UNIT

4.1 EXPOSURE GLASS REMOVAL

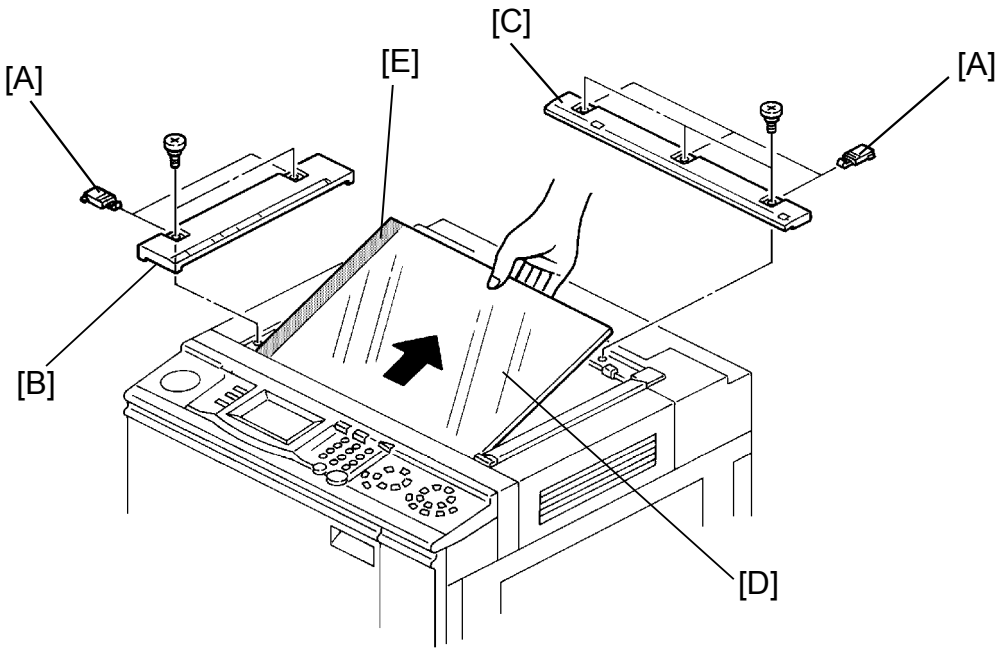

1. Remove all screw covers [A] (5 pcs) from the left and rear scales.
2. Remove the left scale [B] (2 shoulder screws) and the rear scale [C] (3 shoulder screws).
3. Grasp the rear side of the exposure glass [D] and lift up slightly. Remove the exposure glass [D] by sliding it to the rear side as shown in the figure.

NOTE: When reinstalling the exposure glass, make sure of the following:

a) The white reference plate [E] must be facing down.

b) Position the white plate at the left.

4.2 EXPOSURE LAMP REPLACEMENT

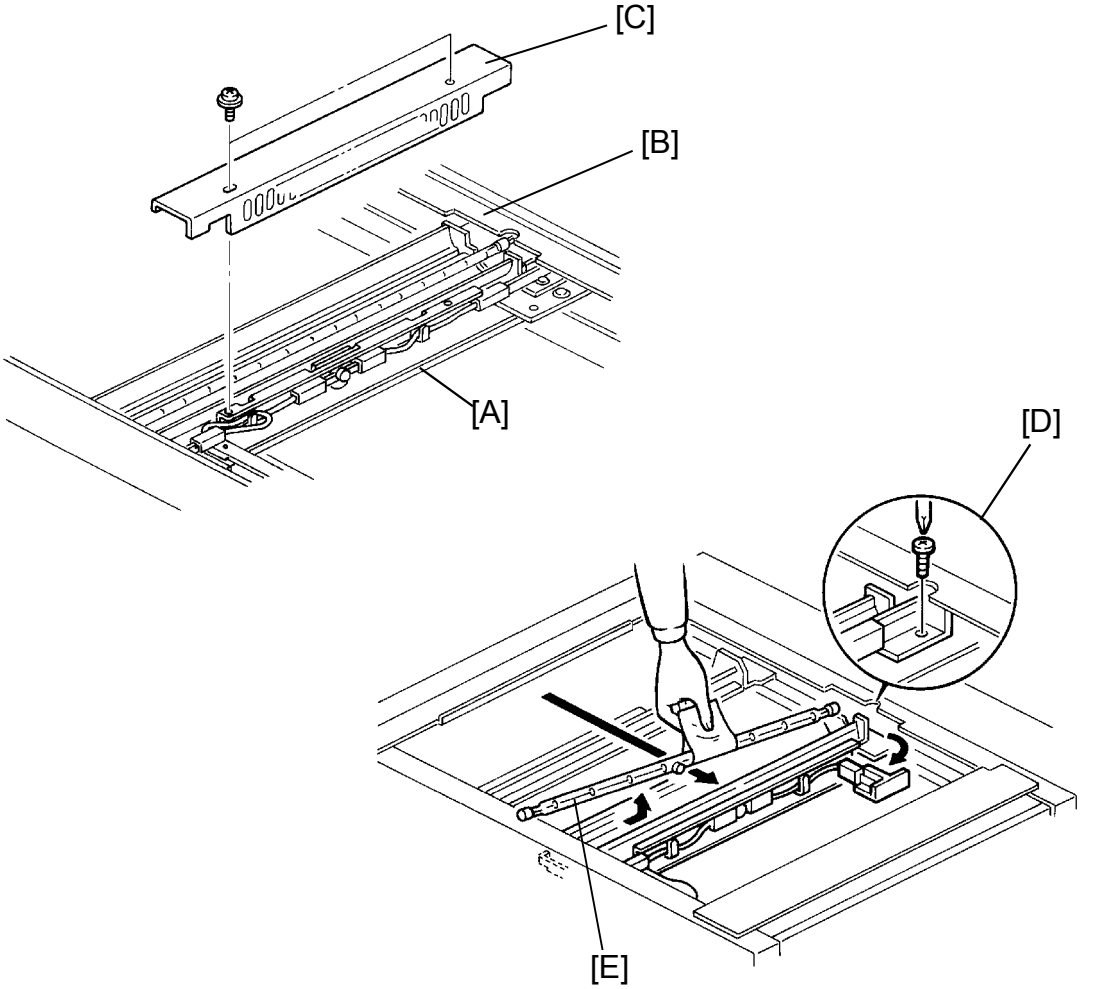

NOTE: Do not touch the reflectors or the new exposure lamp with your bare hands. Oil marks from fingers on the lamp or reflectors will be affected by heat from the lamp and will cause discoloration.

1. Turn off the main switch and unplug the machine.
2. Remove the exposure glass. (See Exposure Glass Removal.)
3. Move the first scanner [A] to the cutout position at the front and rear frames [B]. (See illustration.)
4. Remove the reflector cover [C] (2 screws).
5. Remove the rear terminal assembly [D] (1 screw) and remove the exposure lamp [E] as illustrated.
6. Install a new lamp in the opposite way.

4.3 OPTICS THERMOSWITCH REPLACEMENT

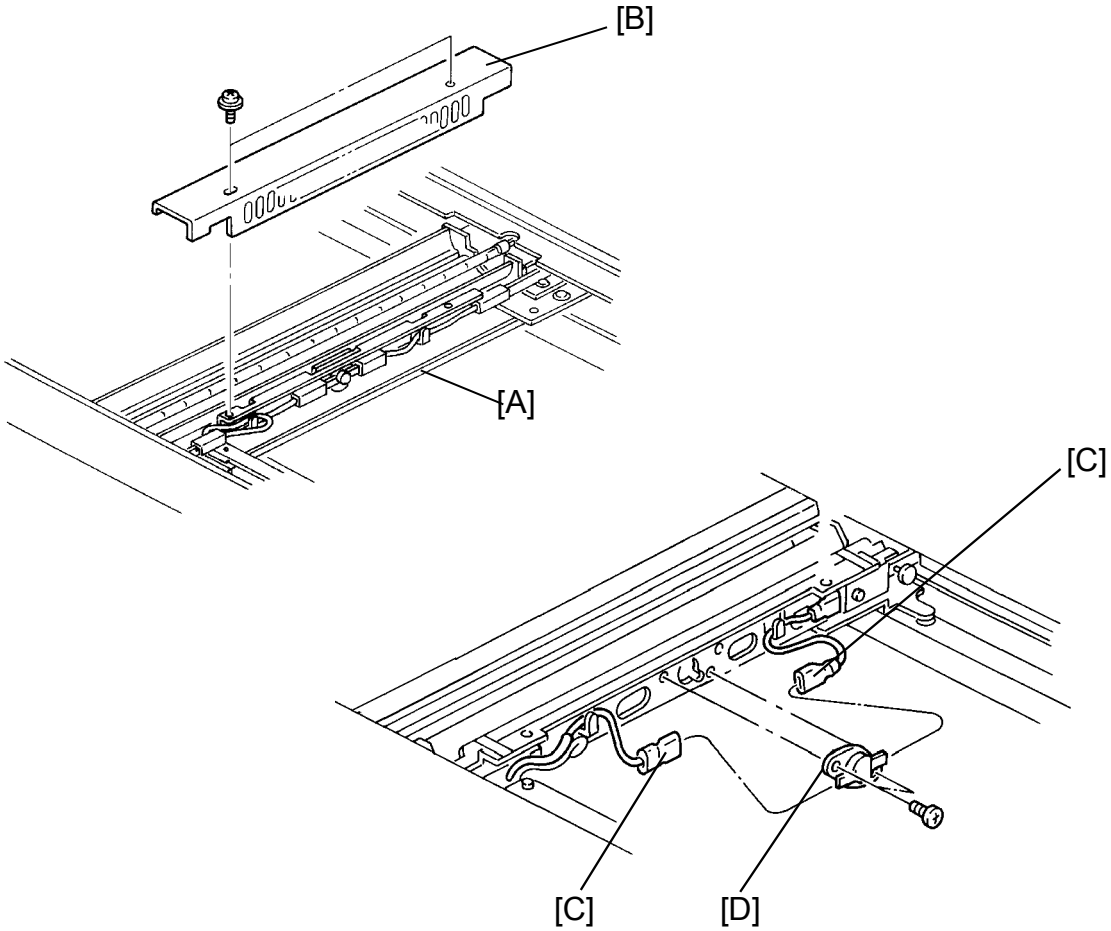

1. Turn off the main switch and unplug the machine.
2. Remove the exposure glass. (See Exposure Glass Removal.)
3. Slide the 1st scanner [A] to the cutout position and remove the reflector cover [B] (2 screws).
4. Remove the exposure lamp leads [C] from the terminals on both sides of the thermoswitch [D].

   NOTE: Do not pull the harness. Pull off the lamp leads by using the connector housing.
5. Replace the thermoswitch [D] (2 screws).

4.4 SCANNER CONTROL BOARD REPLACEMENT

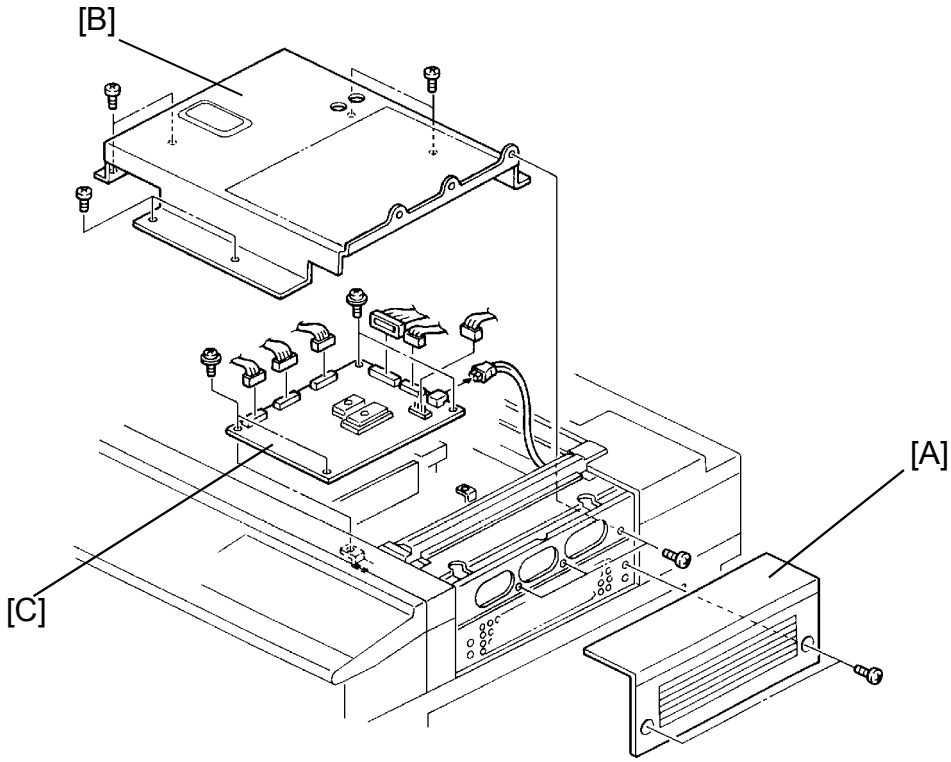

1. Turn off the main switch and unplug the machine.
2. Remove the exposure glass. (See Exposure Glass Removal.)
3. Remove the top right cover [A] (2 screws).
4. Remove the lens cover [B] (9 screws).
5. Disconnect all the connectors from the scanner control board [C].
6. Replace the scanner control board [C] (4 screws, 1 fiber cable).

4.5 LENS UNIT (CCD BOARD) REPLACEMENT

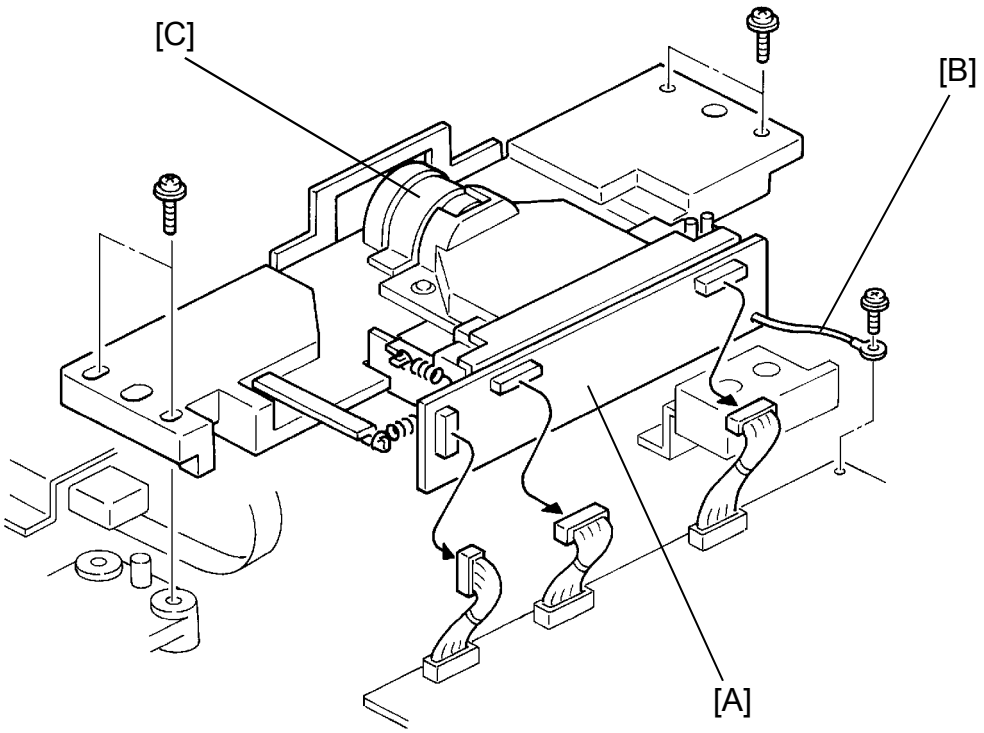

NOTE: Make sure to remove the screws indicated.

1. Perform steps 1 to 4 of the scanner control board replacement section.
2. Disconnect the 3 connectors from the CCD board [A].
3. Free the ground wire [B] of the CCD board (1 screw).
4. Remove the lens unit [C] (4 screws).

4.6 ORIGINAL LENGTH SENSOR (1) REPLACEMENT

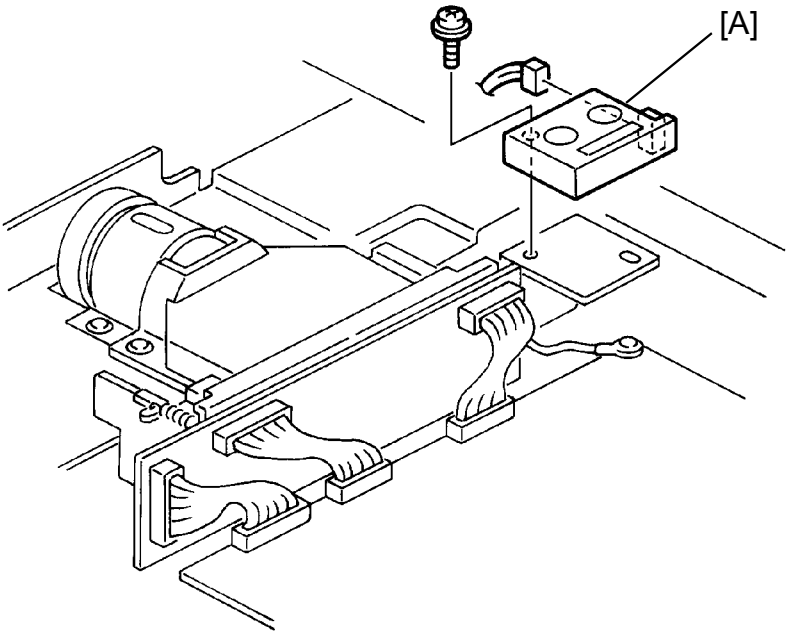

1. Perform steps 1 to 4 of the scanner control board replacement section.
2. Replace the original length sensor 1 [A] (1 screw, 1 connector).

4.7 ORIGINAL WIDTH SENSOR AND ORIGINAL LENGTH SENSOR (2) REPLACEMENT

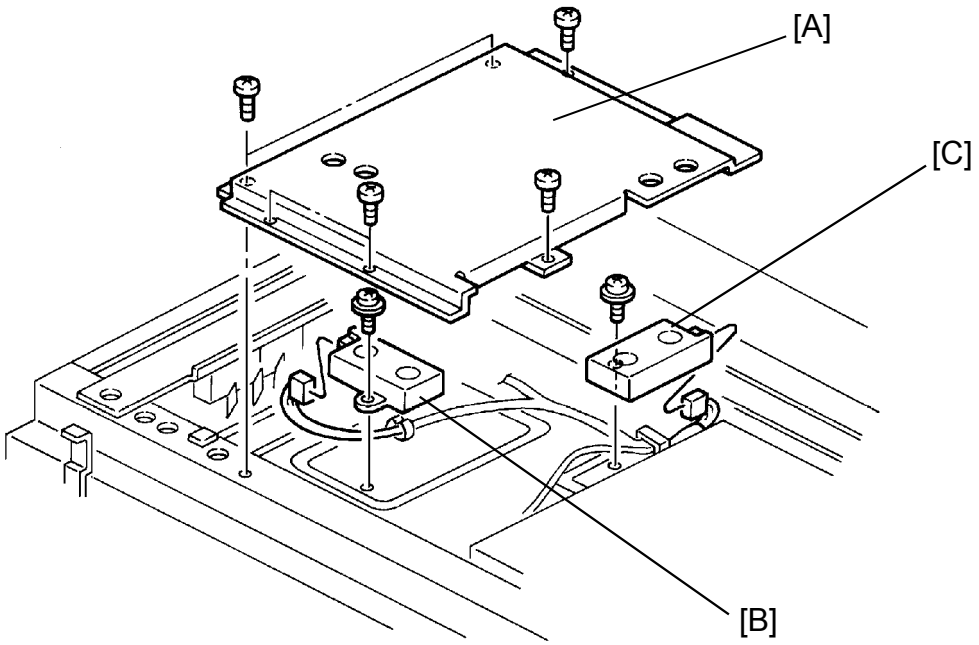

1. Turn off the main switch and unplug the machine.
2. Remove the exposure glass. (See Exposure Glass Removal.)
3. Remove the APS sensor cover [A] (7 screws).
4. Replace the original width sensor [B] or the original length sensor (2) [C] (1 screw, 1 connector each).

4.8 SCANNER MOTOR REPLACEMENT

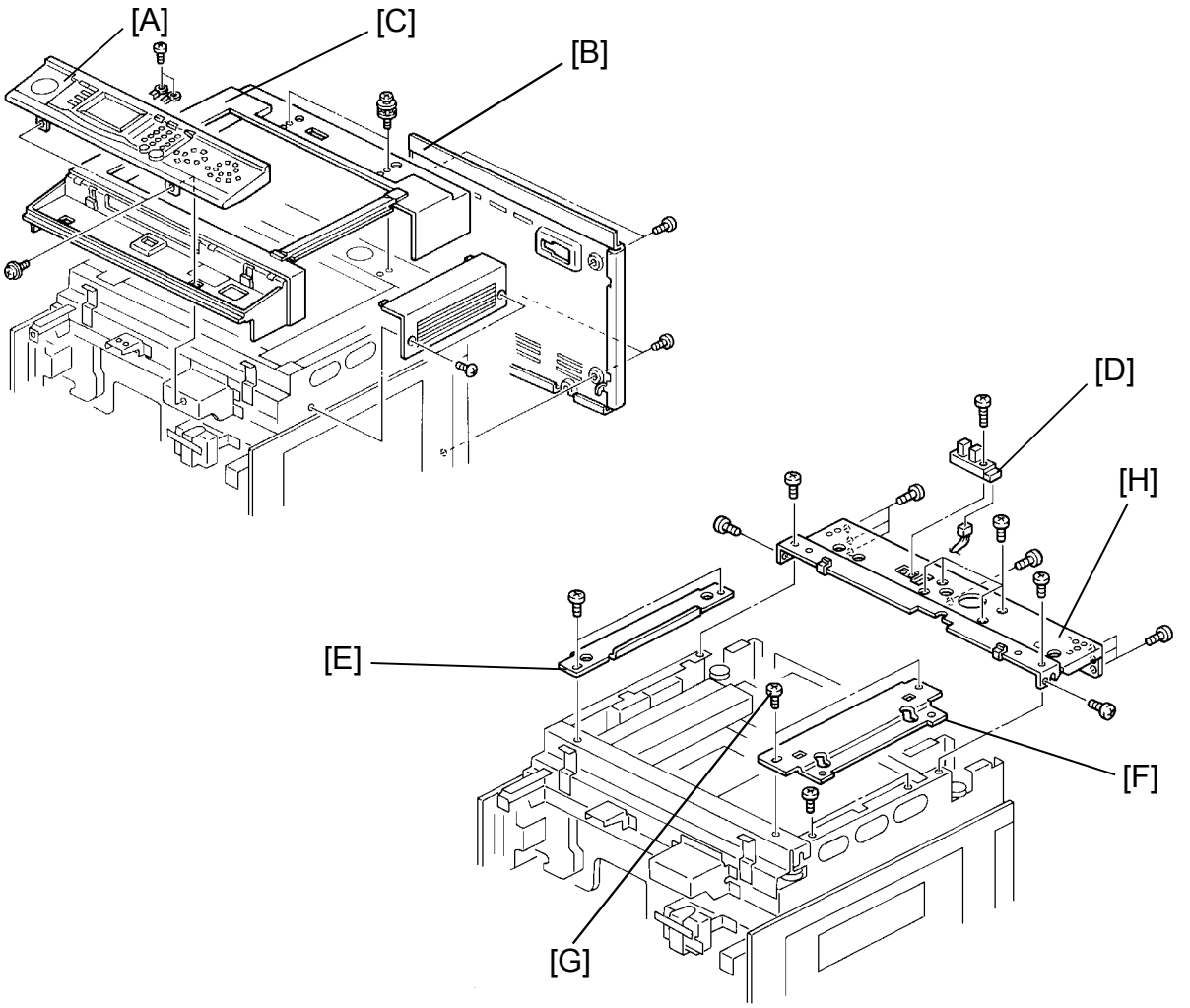

1. Turn off the main switch and unplug the machine.
2. Remove the exposure glass. (See Exposure Glass Removal.)
3. Remove the following parts. (See Exterior and Inner Covers Removal Section.)
   - Operation panel [A]
   - Upper rear cover [B]
   - Top cover [C]
4. Remove the platen cover position sensor [D] (1 screw and 1 connector).
5. Remove the left scale bracket [E] (2 M3 x 5 screws) and the right stay bracket [F] (4 screws).

   NOTE: Screws [G] are M3 x 5 screws.

6. Remove the rear frame [H] (15 screws).

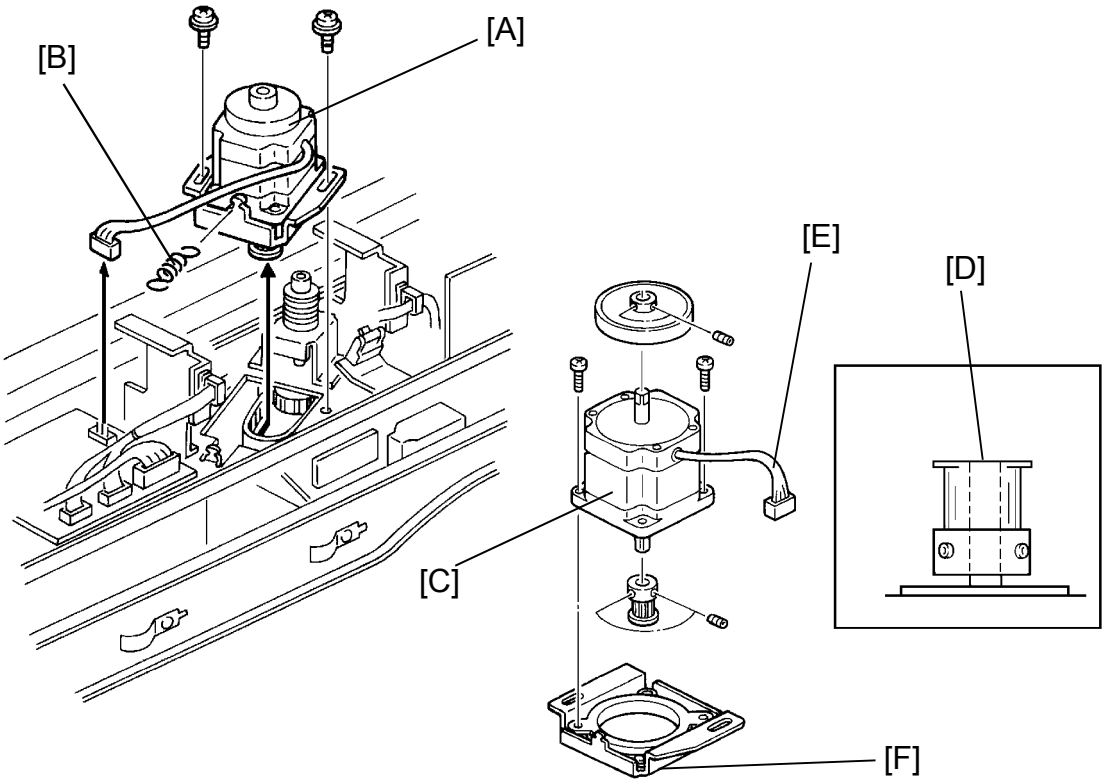

7. Remove the scanner motor ass'y [A] (2 M4x8 with washer screws, 1 spring [B], 1 connector and 1 screw securing the grounding wire).

8. Disassemble the scanner motor assembly as shown in the figure and replace the scanner motor [C].

NOTE: When reinstalling, make sure of the following.

a) The motor pulley and the shaft must be aligned as shown [D].

b) Check the direction of the motor harness [E] when securing the motor [C] to the motor bracket [F].

c) The scanner motor belt runs over the pulley.

d) Hook the spring first, then secure the motor to the frame.

4.9 SCANNER DRIVE BELT REPLACEMENT

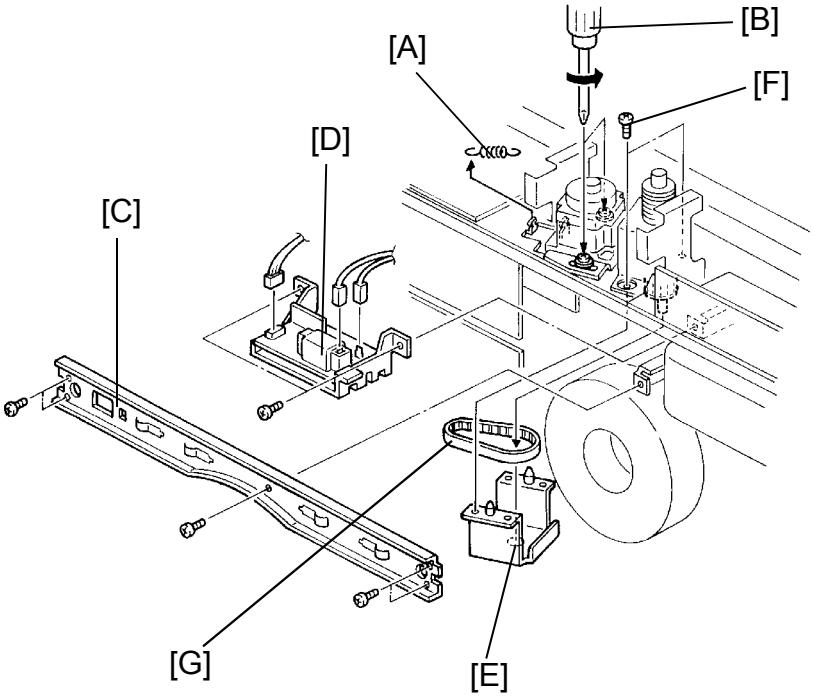

1. Perform steps 1 to 6 of the scanner motor replacement section.
2. Remove the spring [A].
3. Loosen the 2 M4x8 screws securing the scanner motor assembly [B].
4. Remove the supporting bracket [C] (5 screws and 2 connectors).
5. Remove the CG power pack [D] (2 screws and 3 connectors).
6. Lift up the scanner unit. (See Optical Housing Unit Replacement Section.)
7. Remove the wire pulley under bracket [E] by unscrewing the 2 screws [F].
8. Replace the scanner drive belt [G].

4.10 SCANNER HOME POSITION SENSOR/SCANNER MOTOR DRIVE BOARD/LAMP REGULATOR BOARD/SCANNER UNIT LIFT SENSOR REPLACEMENT

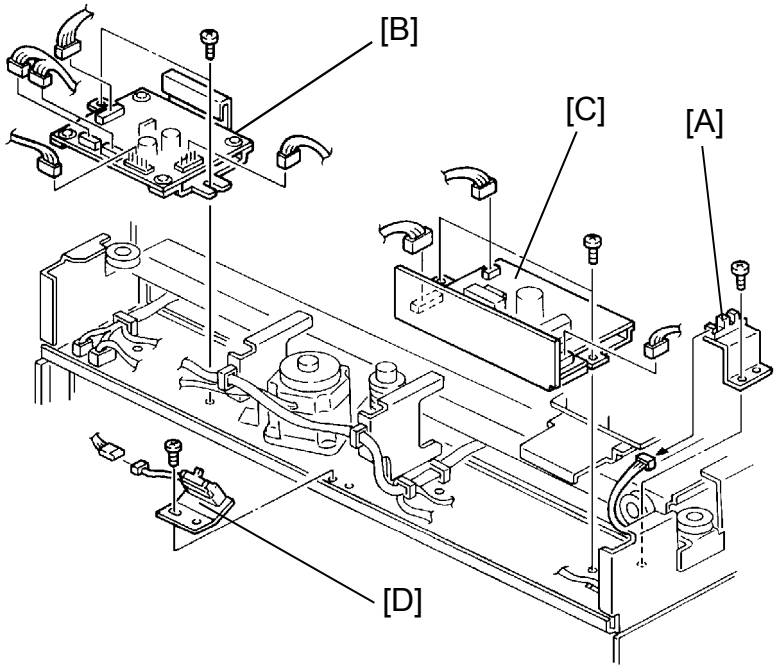

1. Perform steps 1 to 6 of the scanner motor replacement section.

-Scanner Home Position Sensor-

- Remove the Scanner home position sensor [A] with the bracket on (1 screw and 1 connector).
- Replace the sensor [A] (1 screw).

-Scanner Motor Drive Board-

- Replace the scanner motor drive board assembly [B] (2 screws and 5 connectors).

-Lamp Regulator Board-

- Replace the lamp regulator board assembly [C] (2 screws and 3 connectors).

-Scanner Unit Lift Sensor-

- Remove the scanner unit lift sensor [D] with the bracket on (1 screw and 1 connector).
- Replace the sensor.

4.11 SCANNER WIRE REPLACEMENT

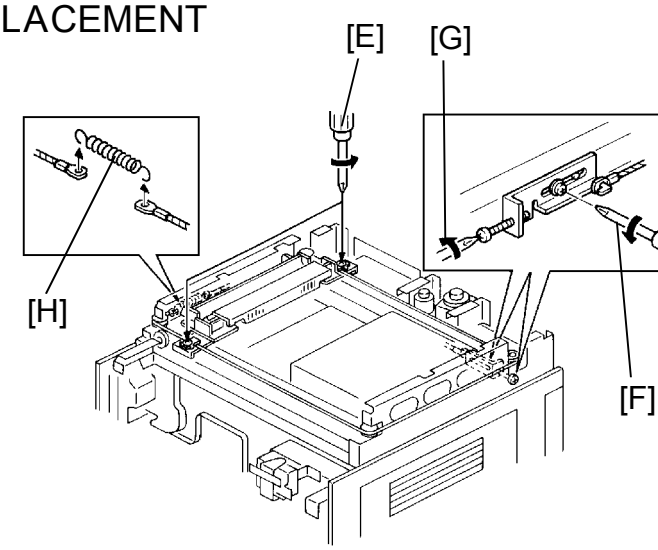

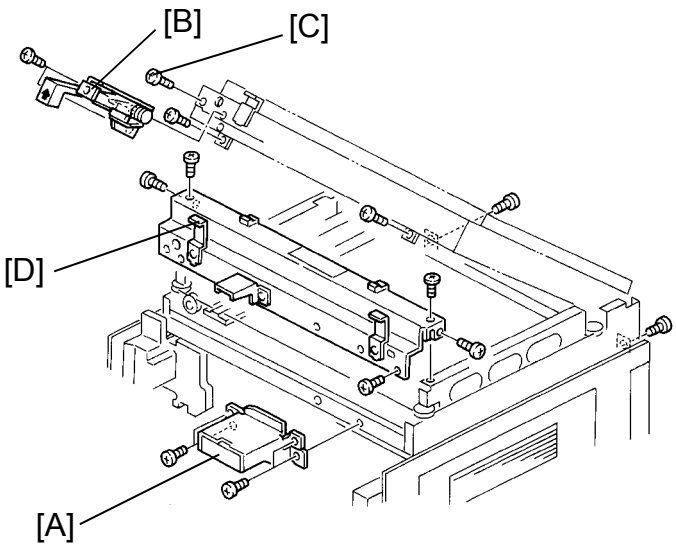

-Removal-

1. Perform steps 1 to 6 of the scanner motor replacement section.
2. Remove the right operation panel supporting bracket [A] (4 screws).
3. Lift up the Scanner Unit (See Optical Housing Unit Replacement Section) and remove the left operation panel supporting bracket [B].
4. Remove the screw [C].
5. Lower the scanner unit and remove the front scanner frame [D] (5 screws).
6. Loosen the front and rear brackets [E] securing the wire to the 1st scanner as shown in the figure.
7. Loosen the bracket fixing screw [F] and the adjusting screws [G].
8. Remove the tension spring [H] located at the left side and remove the scanner wires.

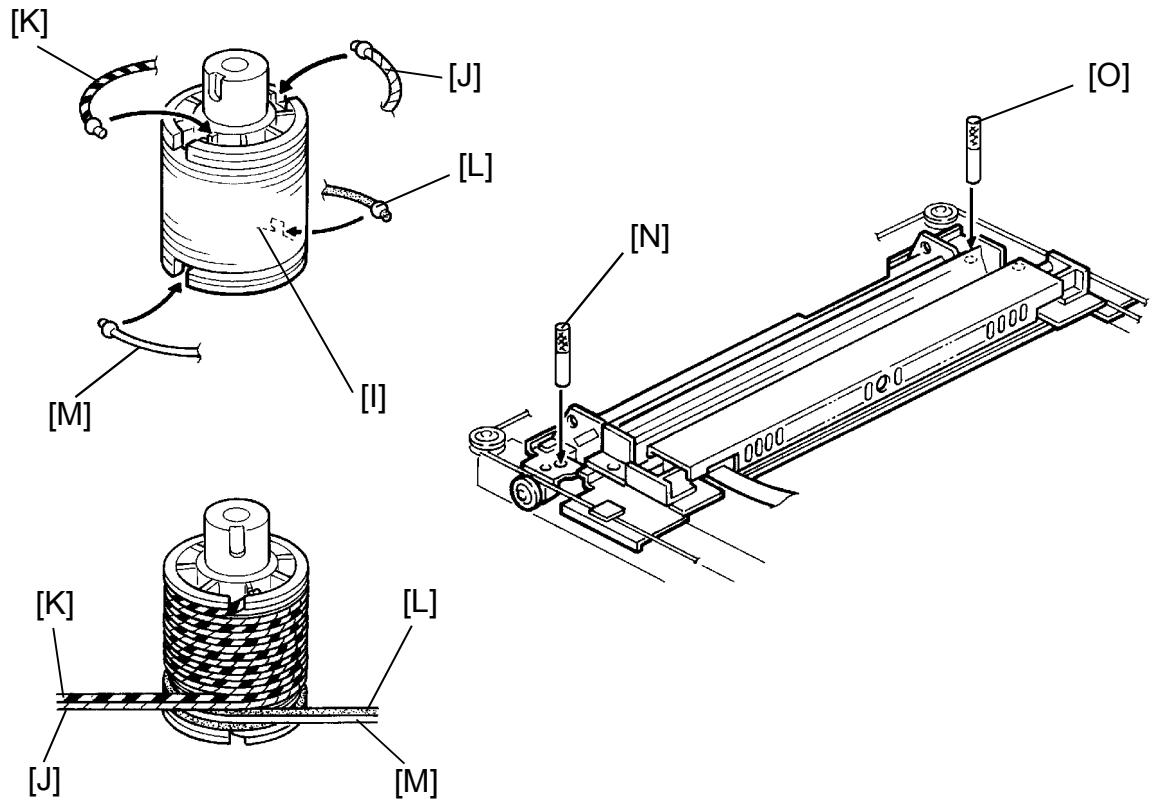

-Installation-

8. Remove the scanner drive pulley [I] (2 Allen screws).

9. Install the 4 scanner wires on the pulley by using the U shaped hole as a reference (See illustration):
   - Black wire, 6 1/2 turns [J]
   - Red wire, 6 turns [K]
   - Steal blue wire, 1 1/2 turns [L]
   - Clear gray wire, 1 turn [M]
   - Secure with a scanner wire clamp or tape.

10. Fix the pulley on the shaft and make sure of the following:
    a) No gap between the pulley and the flat washer.
    b) The wire crossing face the front of the machine.
11. Secure the second scanner with the 2 pins [N,O] by using the holes located furthest to the left.

12. Secure the wires over the pulley in the following order, clear gray-black-steel blue- red, as shown in the figure. From the scanner wire pulley, run each wire in the order prescribed below.

a) Clear gray wire to:
(1) the lower groove of WP1 to
(2) the lower groove of WP2 through
(3) the front clamp CL2 to
(4) the inner groove of WP3 to
(5) the anchor point AP2.

b) Black wire to:
(1) the lower groove of WP 7 to
(2) the lower groove of WP 5 to
(3) the outer groove of WP3 over
(4) WP4 and hook to tension spring and
(5) hook the spring to the frame clamp (for now) [A].

c) Steel blue wire to:
(1) the upper groove of WP1 through
(2) the rear clamp CL 1 to
(3) the inner groove of WP 8 to
(4) the anchor point AP1.

d) Red Wire to:
(1) the upper groove of WP7 to
(2) the outer groove of WP8 over
(3) WP6 and
(4) the hook to tension spring [B].

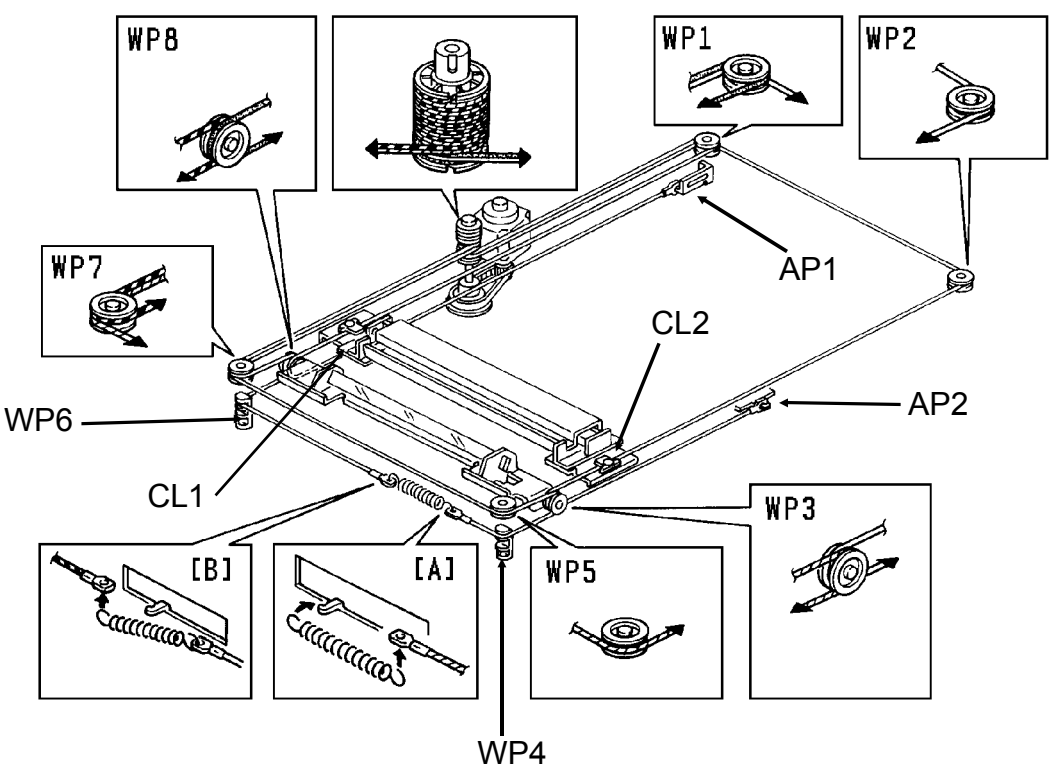

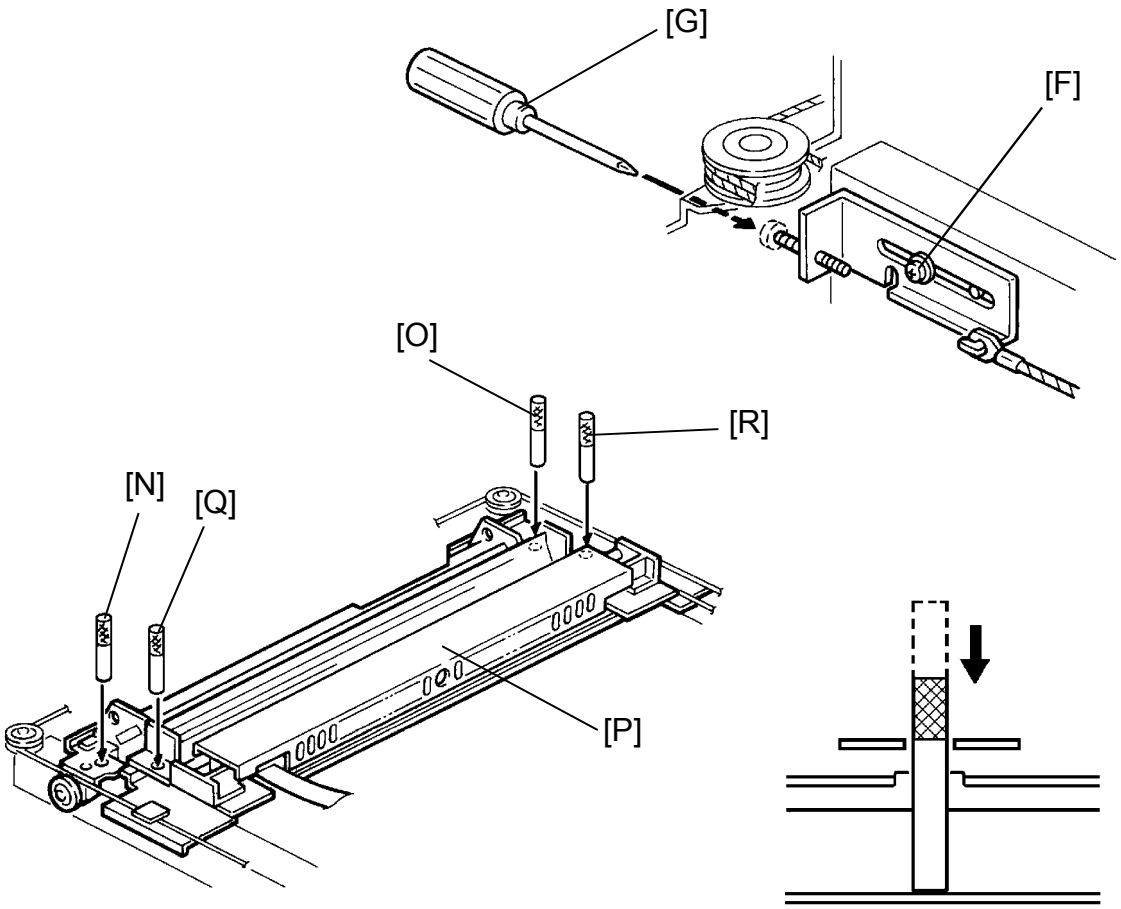

-Scanner Adjustment-

13. Pull out the rear positioning pin [O] and insert it again, making sure the pin does not pass through the rail completely.
14. Adjust the position of the 2nd scanner with the adjusting screw [G] until the rear pin falls into the hole in the rail.
15. Check that the front pin [N] falls into the hole without being forced.
16. Secure the bracket fixing screw [F] and remove the pins.
17. Manually position the first scanner [P] to the position over its pin holes, and install the positioning pins [Q, R].
18. Clamp the front and rear clamps [CL1, CL2] securing the wire to the first scanner (for now).
19. Remove the positioning pins [Q, R].

20. Connect the operation panel to the copier and by using the switch actuator, turn on the main switch.
21. Enter the SP mode and select the SP Test Mode [S].

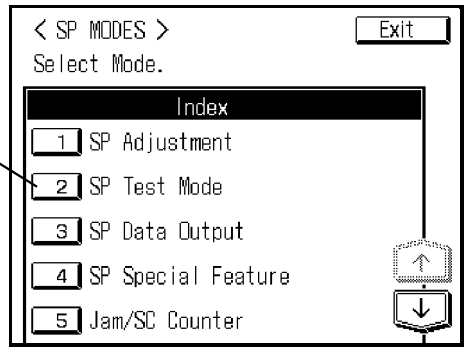

22. Turn to page 9 [T] and perform No. 218 scanner free run [U] for about 5 minutes to condition the wires.
23. Turn off the main switch and loosen the clamps [CL1, CL2].
24. Manually move the 1st scanner [P] to the position over its pin holes and install the positioning pins [Q, R].

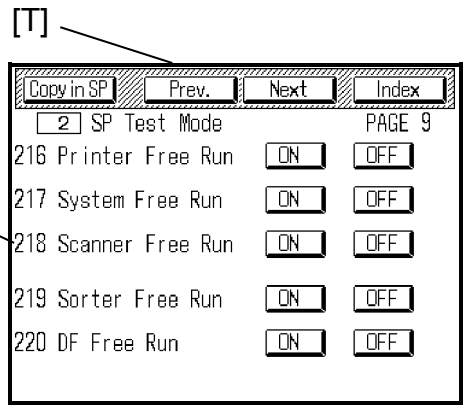

25. Secure the clamps [CL1, CL2].
26. Remove the positioning pins and reinstall the unit.

5. LASER UNIT

5.1 WARNING

WARNING: Turn off the main switch and unplug the machine before attempting any of the procedures in this section. Laser beams can seriously damage your eyes.

– CAUTION DECAL –

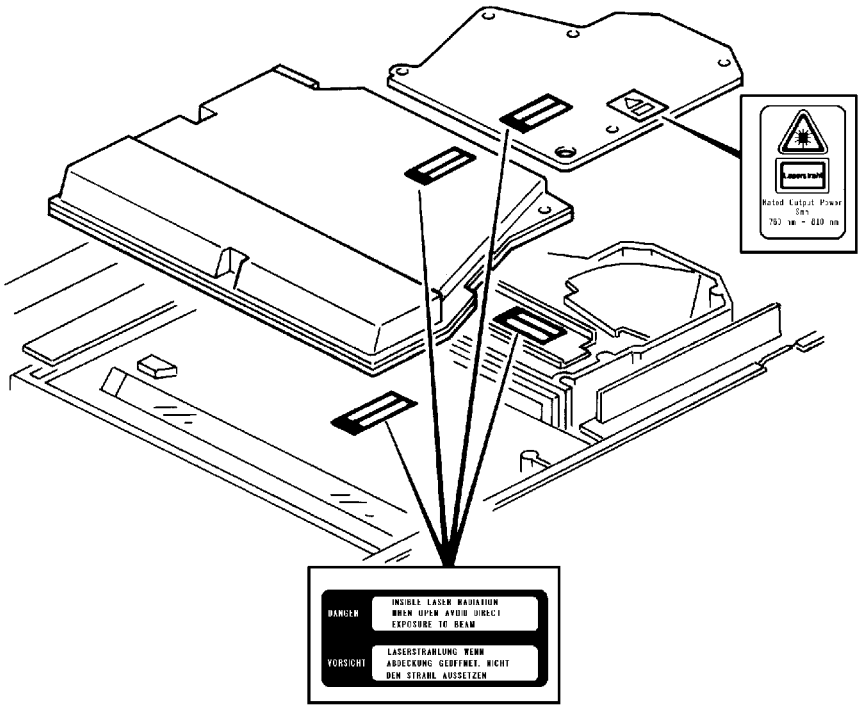

Five caution decals are located in the laser unit, as shown.

5.2 OPTICAL HOUSING UNIT REPLACEMENT

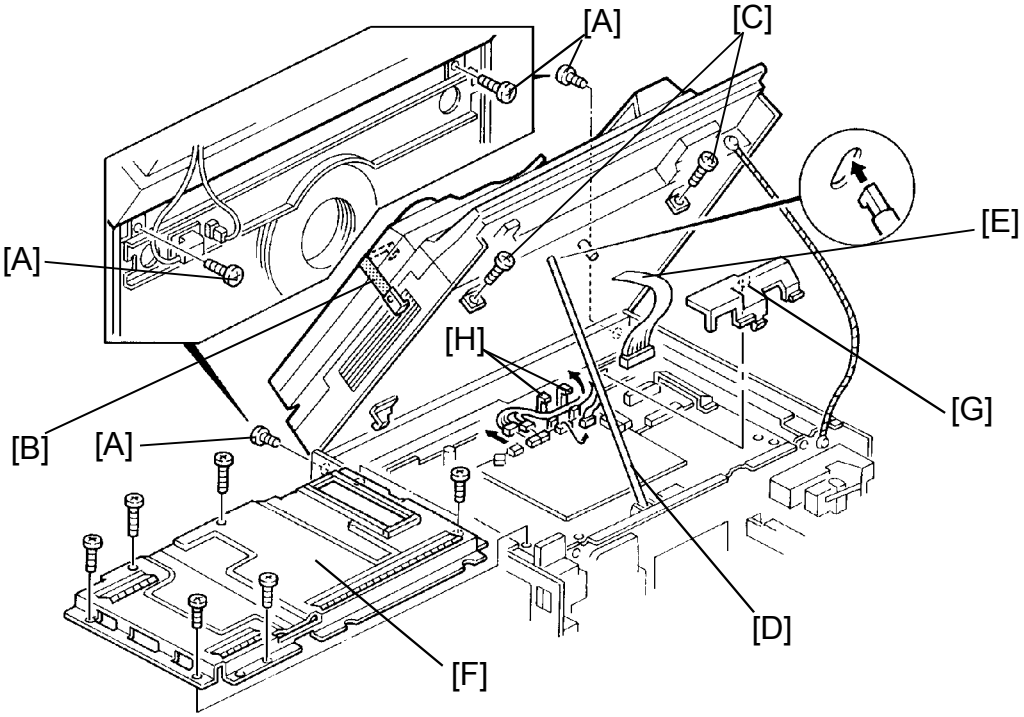

CAUTION: The polygon mirror is very sensitive to dust. Never open the optical housing.

1. Turn off the main switch and unplug the machine.
2. Remove the upper rear cover and remove the two fixing screws [A] at the rear of the scanner unit.
3. If the DJF is equipped on the copier, secure the DJF to the scanner unit with the DJF fixing belt [B] as shown.
4. Open the front doors and remove the toner tank unit (2 screws).
5. Remove the right inner cover (3 screws).
6. Remove the two fixing screws [C] at the front of the scanner unit.
7. Open the scanner unit and set the scanner support bar [D] as shown.
8. Disconnect the shielded flat cable [E] and remove the IPU board cover [F] (2 long and 5 short screws).
9. Remove the harness cover [G] from the right rear corner.
10. Open the harness clamps [H] and disconnect all the connectors on the IPU board. Make the IPU harnesses loose at the right rear corner so that the IPU board bracket can be raised freely.

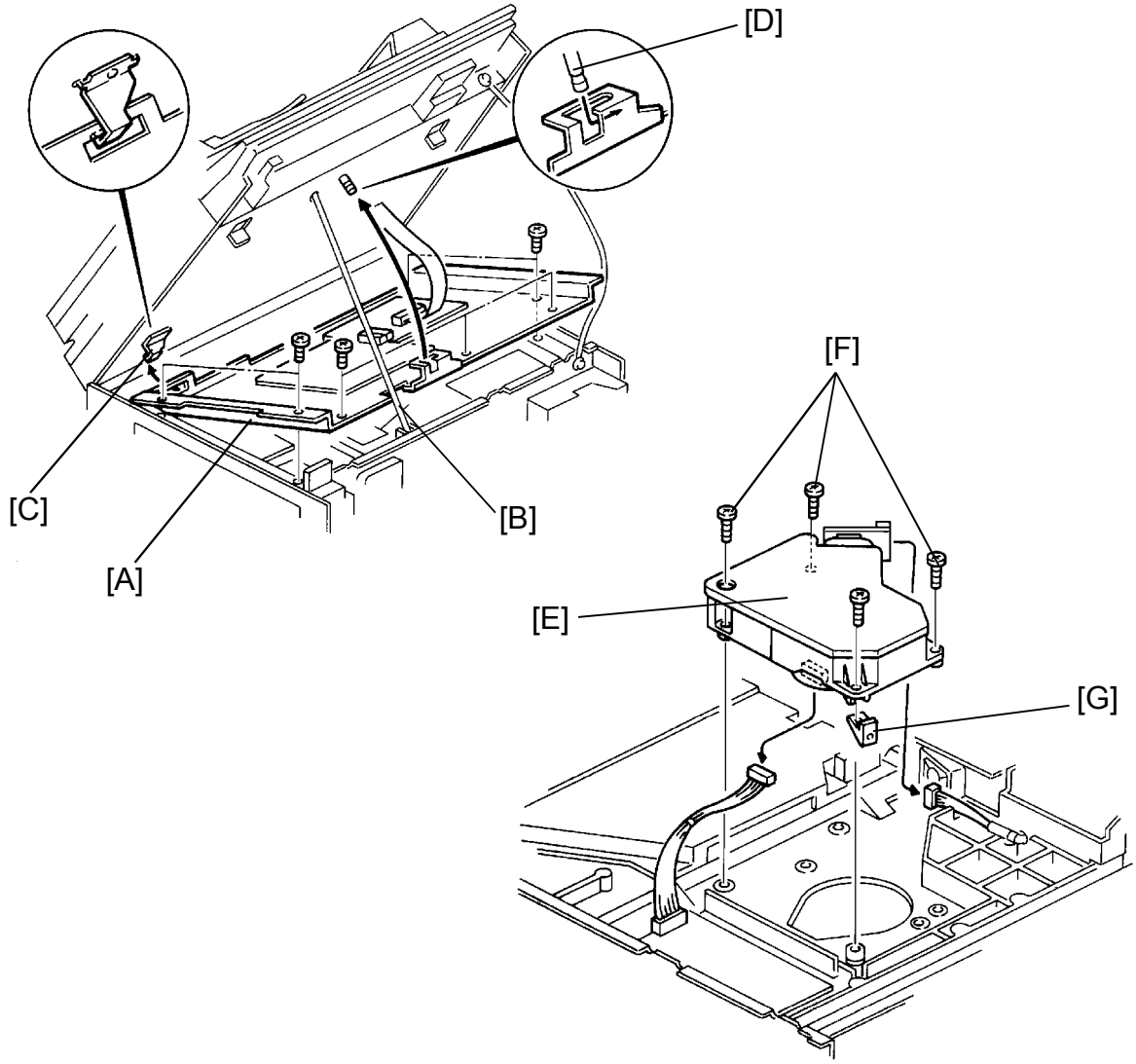

11. Remove the IPU board bracket [A] (7 screws) and hang it underneath the scanner unit, as shown.

    NOTE: Raise the front side along the scanner support bar [B], hang the bracket on the two rear hooks [C], and set the front side on the pin [D] by shifting the whole bracket to the left.

12. Replace the optical housing unit [E] (4 screws, 2 connectors).

13. Reassemble all the parts according to the above steps in reverse.

    NOTE: When fixing the optical housing unit, secure the three screws [F] without the wedge first. Insert the wedge [G] and secure the screw when the wedge is stopped lightly.

5.3 LD UNIT AND POLYGON MOTOR REPLACEMENT

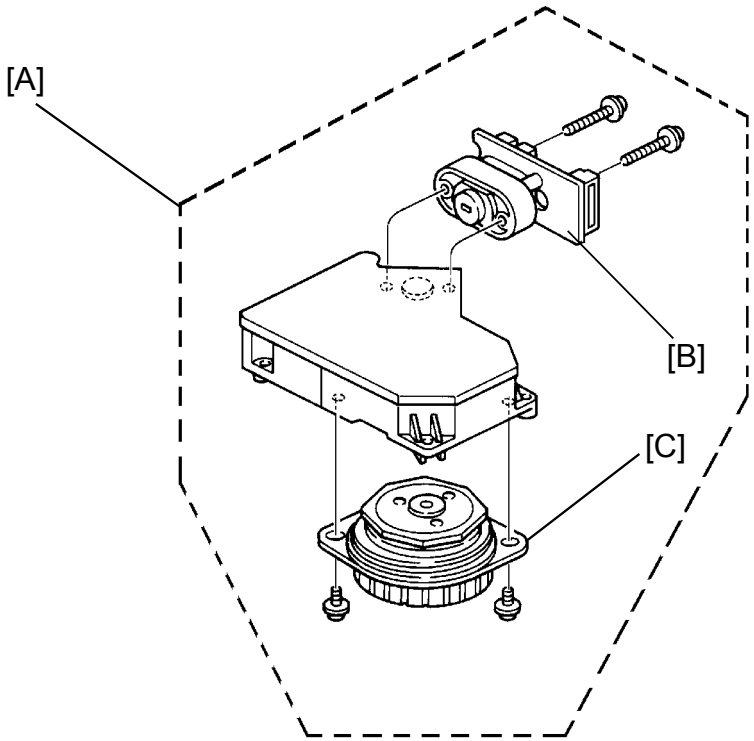

CAUTION: a) Do not loosen the screws securing the LD drive board to the laser diode casing. Doing so would throw the LD unit out of adjustment.
b) Do not adjust the VR's on the LD unit as they are adjusted at the factory.
c) Never touch the polygon mirror reflecting surface with bare hands.

1. Turn off the main switch and unplug the machine.
2. Remove the optical housing unit [A]. (See the optical housing unit replacement procedure.)

– LD unit –

3. Remove the LD unit [B] from the optical housing unit (2 screws).

NOTE: When replacing the LD unit, make sure that the white connector socket is located at the right (front view).

– Polygon motor –

3. Remove the polygon motor [C] from the optical housing unit (2 screws).

NOTE: When replacing the polygon motor, make sure that the connector is located at the front.

5.4 LASER SYNCHRONIZING DETECTOR BOARD REPLACEMENT

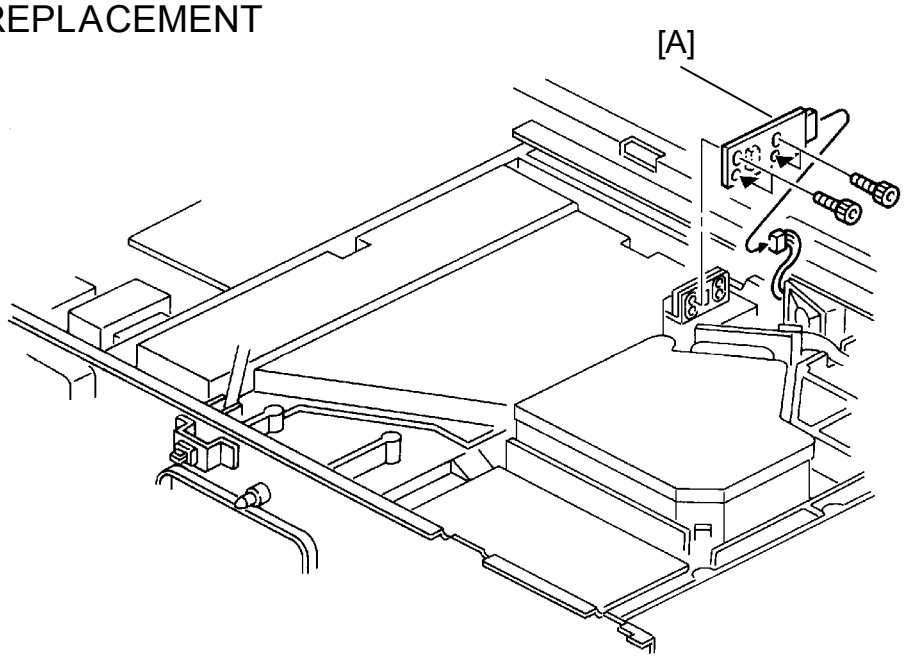

NOTE: Never touch the surface of the laser synchronizing detector eye.

1. Open the scanner unit and hang the IPU board bracket underneath the scanner unit. (Follow steps 1 to 11 of the optical housing unit replacement procedure.)
2. Remove the laser synchronizing detector board [A] (2 Allen screws, 1 connector).
3. Replace the new laser synchronizing detector board.

   NOTE: There are two holes on the board for each screw. Use the lower holes to secure the board.
4. Place the IPU board bracket in position and connect all the connectors to the IPU board.
5. Plug in the machine.
6. Actuate the door switch, turn on the main switch and confirm that LED308 on the IPU board changes the light intensity from strong to faint for a few seconds.

   NOTE: If LED308 keeps a strong intensity, turn off the main switch and unplug the machine. Then adjust the position of the laser synchronizing detector board by using the upper holes.
7. Turn off the main switch and unplug the machine. Then reassemble the machine.

5.5 POLYGON MOTOR DRIVE BOARD REPLACEMENT

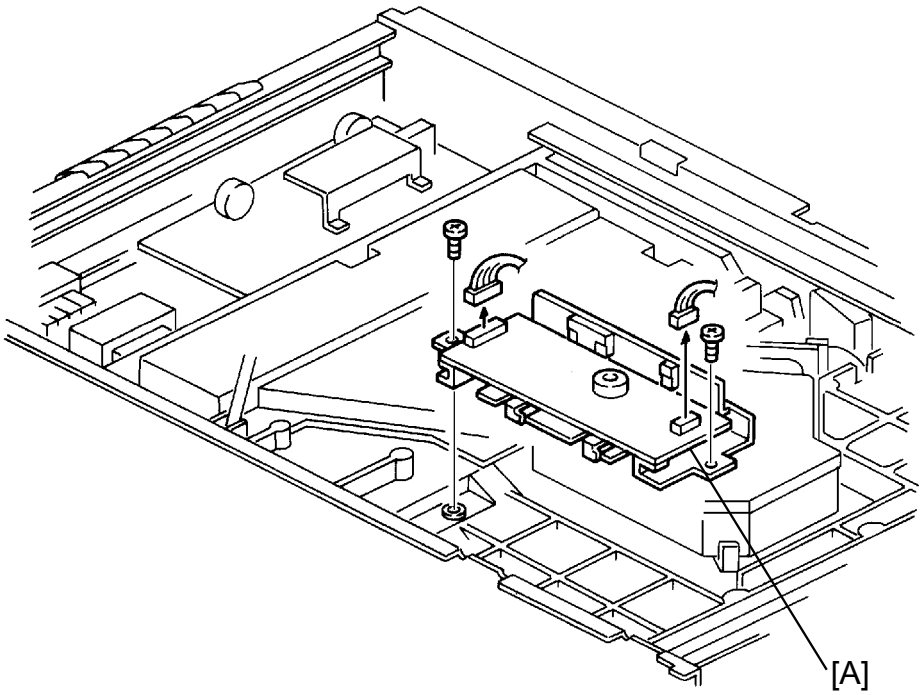

1. Open the scanner unit and hang the IPU board bracket underneath the scanner unit. (Follow steps 1 to 11 of the optical housing unit replacement procedure.)
2. Replace the polygon motor drive board [A] (2 screws, 2 connectors).

6. PAPER FEED SECTION

6.1 PICK-UP/PAPER FEED/SEPARATION ROLLER REPLACEMENT

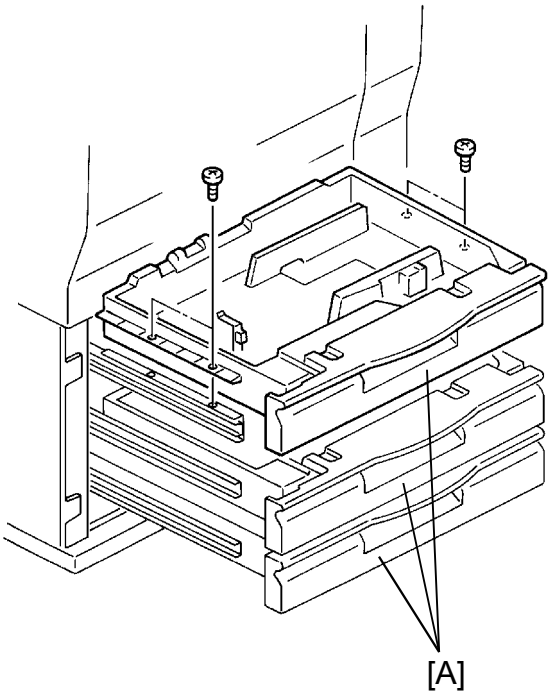

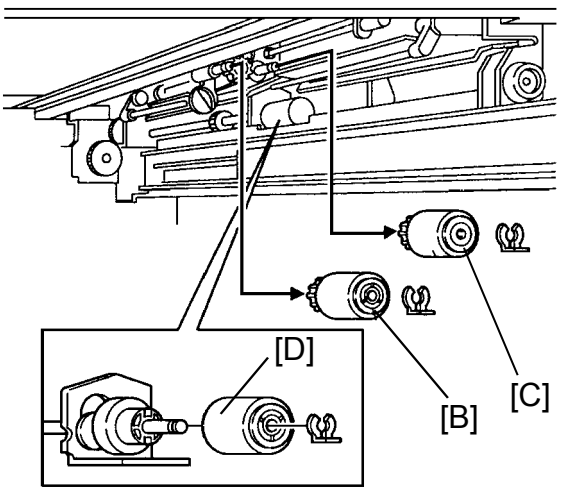

NOTE: Do not touch the rubber surface of the new rollers with oily bare hands.

1. Turn off the main switch and unplug the machine.
2. Remove the 3 paper trays [A] (4 screws each).
3. Replace the pick-up roller [B], the paper feed roller [C] and the separation roller [D] from each paper feed station (1 snap-ring each).

6.2 PAPER FEED CLUTCH, PICK-UP AND SEPARATION ROLLER SOLENOID REPLACEMENT (1ST, 2ND AND 3RD FEED UNIT)

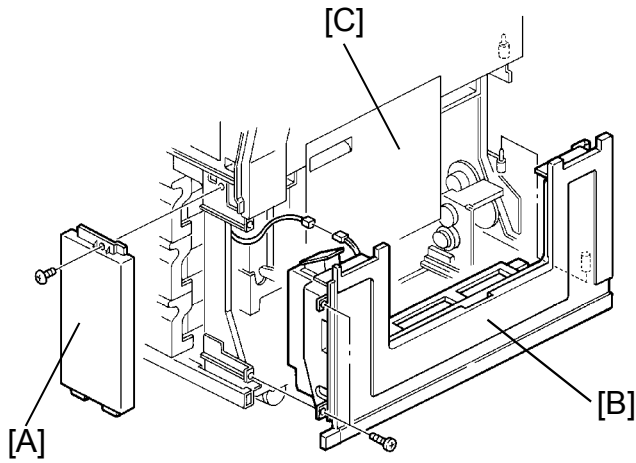

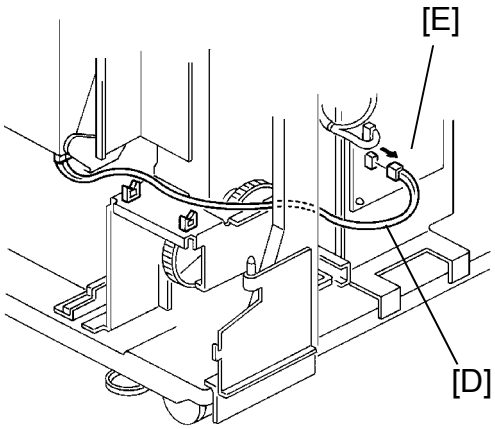

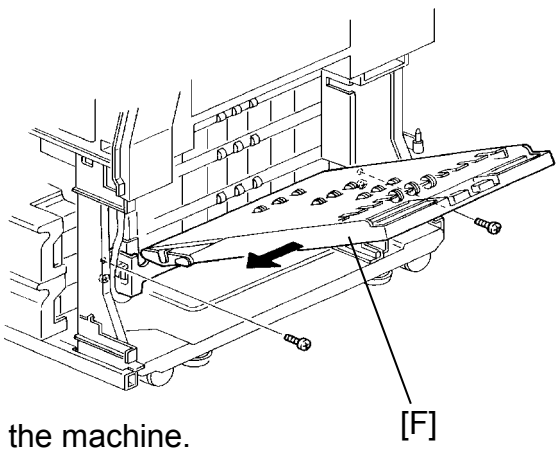

1. Turn off the main switch and unplug the machine.
2. Remove the following covers.
   - Upper rear cover
   - Lower rear cover
   - Lower front cover [A]
3. Pull out all paper trays.
4. Remove the used toner tank with the lower right cover [B] on (2 screws and 2 connectors).
5. Open the paper feed door [C].
6. Disconnect the 3P connector [D] from the paper feed control board [E].
7. Remove the vertical guide plate [F] (2 screws) by sliding to the left.

   NOTE: Clear all the harness when removing the vertical guide plate.

–1st Feed Unit–

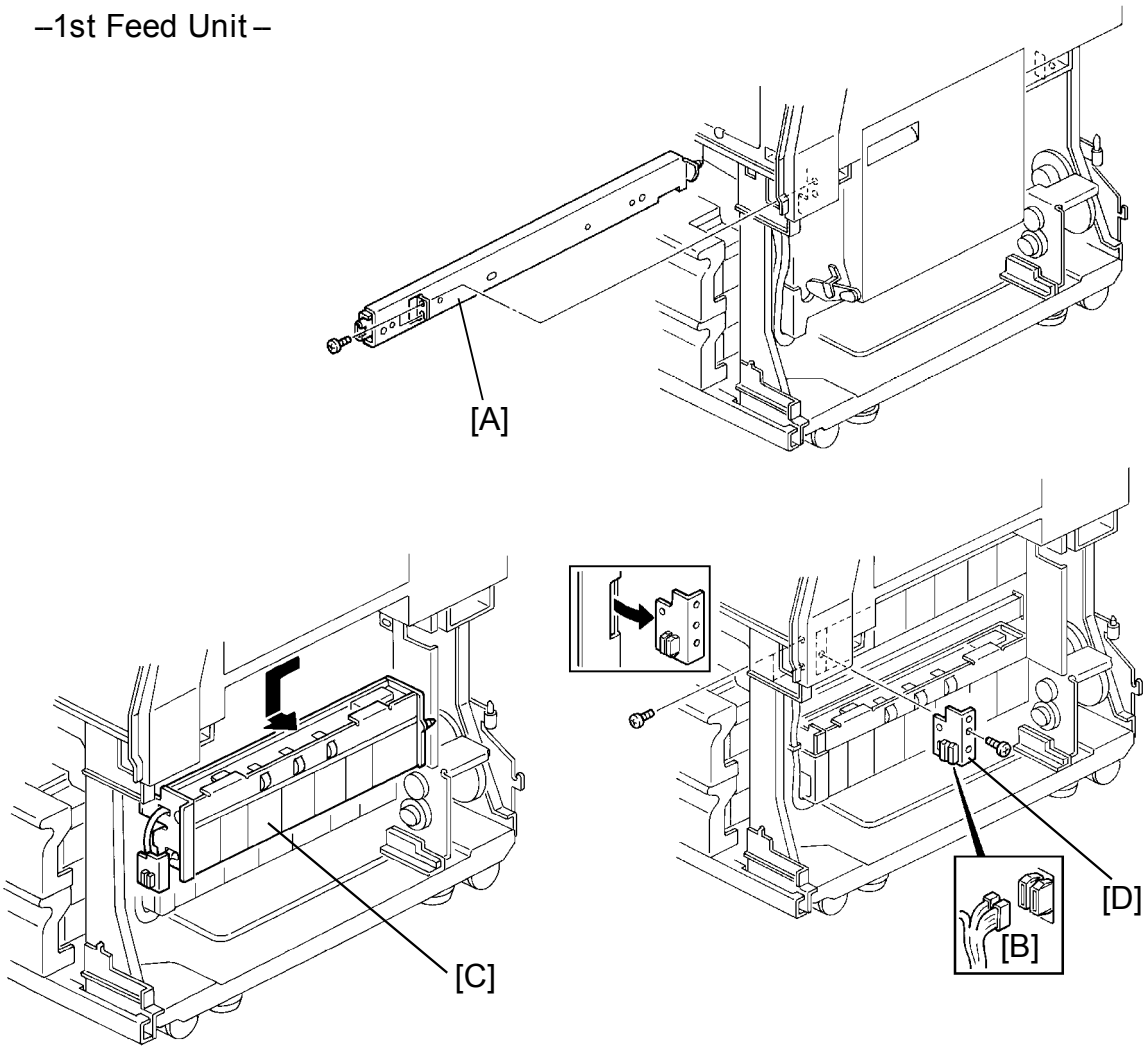

- Remove the 1st paper tray (4 screws).
- Remove the 1st paper feed tray right rail [A] (2 screws).
- Disconnect the connectors [B].
- Remove the 2nd paper feed unit. (See next page.)
  NOTE: Before removing 1st feed unit, 2nd feed unit must be removed.
- While supporting the 1st paper feed unit [C], remove the bracket [D] (3 screws).
- Remove the 1st paper feed unit [C] by sliding it to the left.

–2nd Feed Unit –

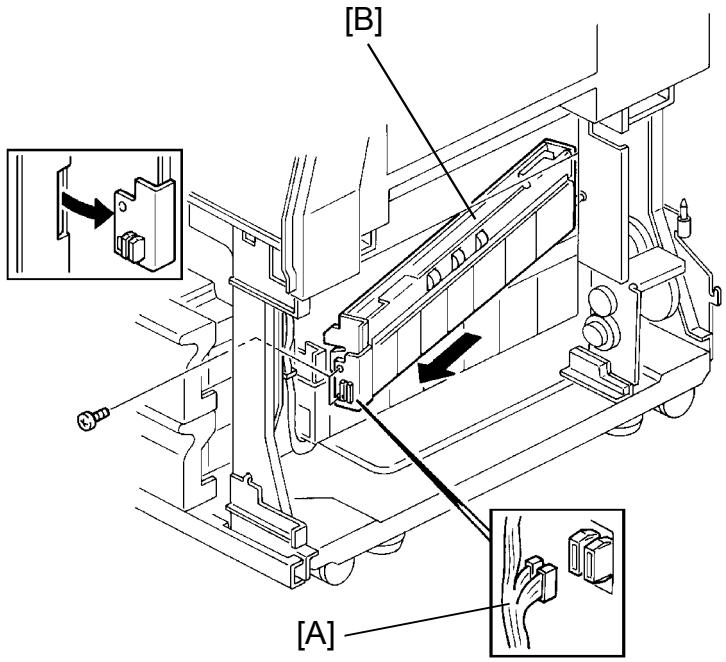

- Disconnect the connectors [A].
- Remove the 2nd paper feed unit [B] (2 screws) by sliding it to the left.

–3rd Feed Unit –

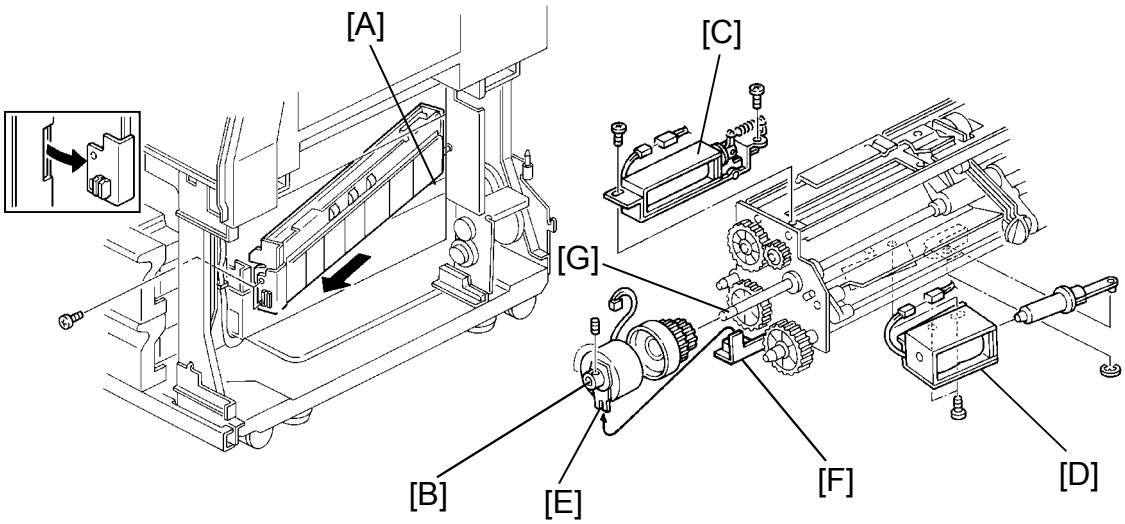

- Remove the 3rd paper feed unit [A] (2 screws and 2 connectors) by sliding it to the left.

8. Replace the tray feed clutch [B] (1 Allen screw and 1 connector).

9. Replace the pick-up solenoid assembly [C] (2 screws and 1 connector) or the separation roller solenoid assembly [D] (2 screws and 1 E-ring).

NOTE: When re-installing the tray feed clutch, set the stopper [E] of the clutch on the edge of the bracket [F] then fully push in the clutch on the feed roller shaft [G] and secure the Allen screw.

6.3 PAPER FEED MOTOR REPLACEMENT

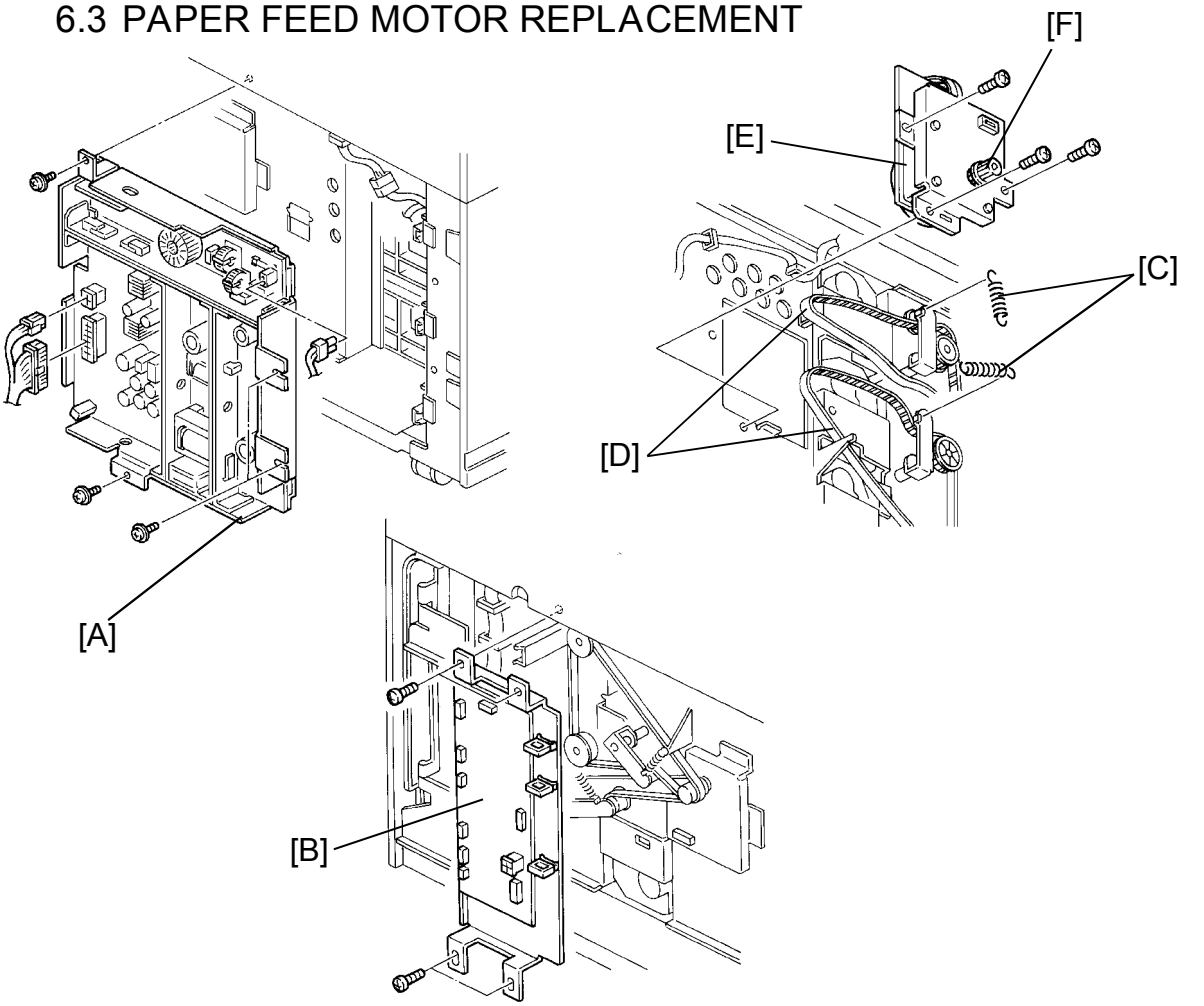

1. Turn off the main switch and unplug the machine.
2. Remove the upper and lower rear cover.
3. Disconnect all connectors and remove the DC power supply unit [A] (4 screws)
4. Disconnect all connectors and remove the paper feed control board [B] (4 screws).
5. Remove the 2 belt tension springs [C], and move the belts [D] out of the way.
6. Remove the paper feed motor unit [E] (3 screws and 1 connector).
7. Remove the motor pulley [F] (1 Allen screw).
8. Replace the paper feed motor (3 screws).

NOTE: When reinstalling, make sure that the motor shaft and the pulley are aligned.

6.4 TRAY LIFT MOTOR (1ST, 2ND, AND 3RD) REPLACEMENT

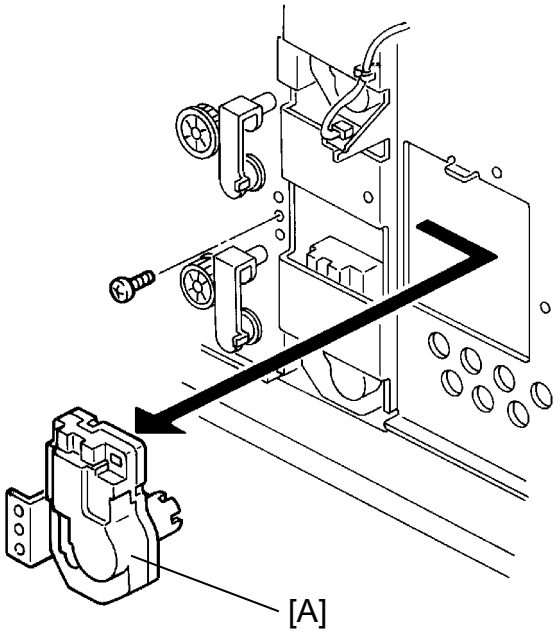

1. Perform steps 1 to 5 of the Paper Feed Motor Replacement Section.

–1st and 3rd Tray Lift Motor –

- Free the harness from the clamps and replace the motor [A] (1 screw, 1 connector).

–2nd Tray Lift Motor –

- Remove the Paper Feed Motor Unit. (See Paper Lift Motor Replacement Section.)
- Free the harness from the clamp and replace the motor [A] (1 screws and 1 connector).

6.5 BY-PASS FEED TABLE

6.5.1 Pick-up, Paper Feed And Separation Roller Replacement

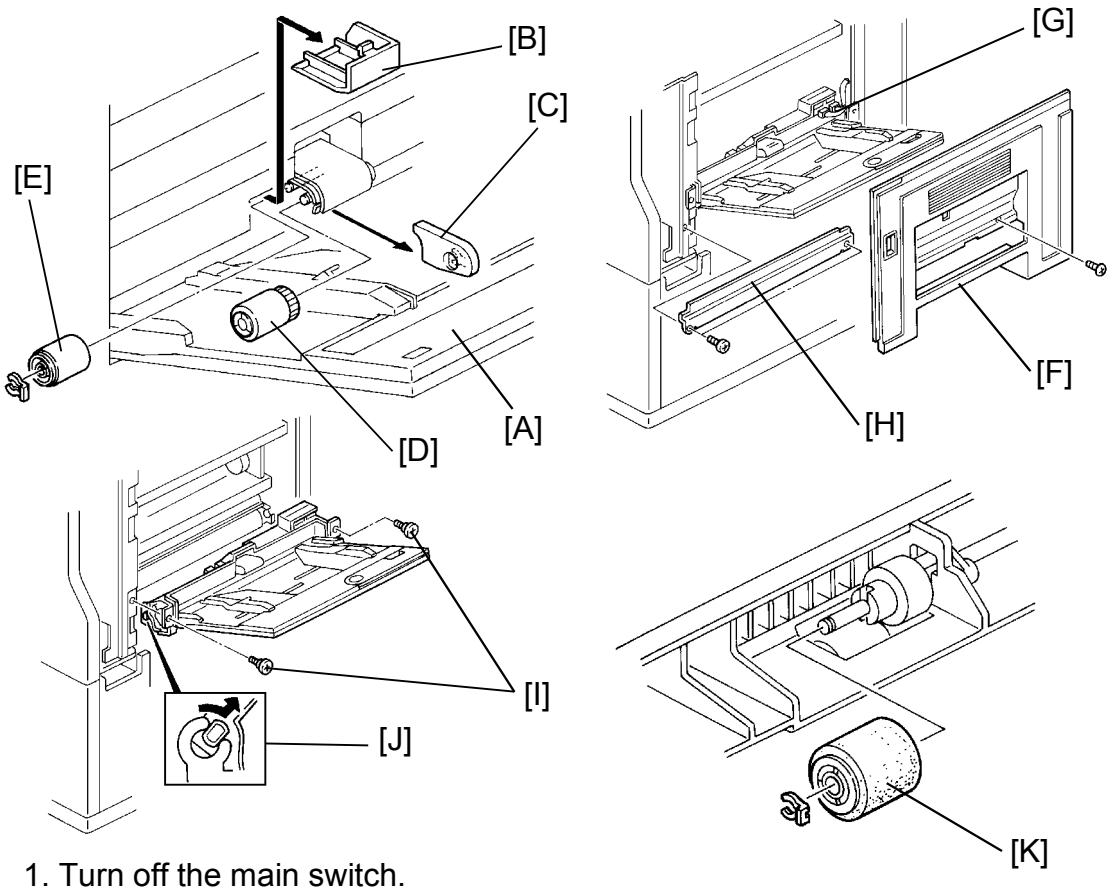

1. Turn off the main switch.
2. Open the by-pass feed table [A].
3. Snap off the housing cover [B] and the roller cover [C].
4. Replace the pick-up [D] and paper feed [E] (1 snap-ring) roller.
5. Remove the copier upper right cover [F]. (See Upper Right Cover Removal section.)
6. Disconnect the 2 connectors [G].
7. Open the right door and remove the vertical transport stay [H] (2 screws).
8. Remove the 2 step screws [I] securing the by-pass feed table.
9. Pull out the by-pass feed table by gently pressing down on the by-pass feed table until both of the tables pins meet the stay's openings as illustrated [J].
10. Replace the separation roller [K] (1 snap-ring).

6.6 BY-PASS PAPER WIDTH SENSOR AND BY-PASS PAPER LENGTH SENSOR REPLACEMENT

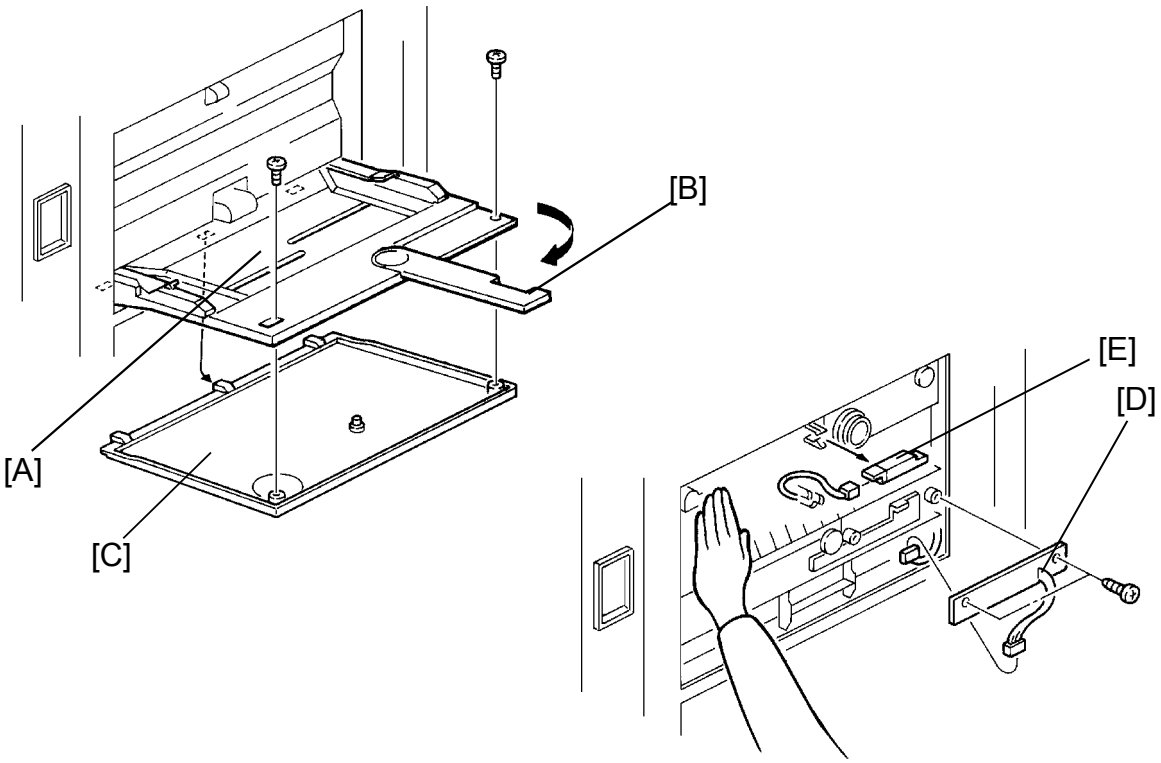

1. Turn off the main switch.
2. Open the by-pass feed table [A] and extend the paper supporting lever [B].
3. Remove the by-pass feed table outer cover [C] (2 screws).
4. Close the by-pass feed table.
5. Replace the width sensor [D] (2nd screws and 1 connector) or the length sensor [E] (1 connector).

6.7 BY-PASS FEED CLUTCH AND BY-PASS PICK-UP SOLENOID

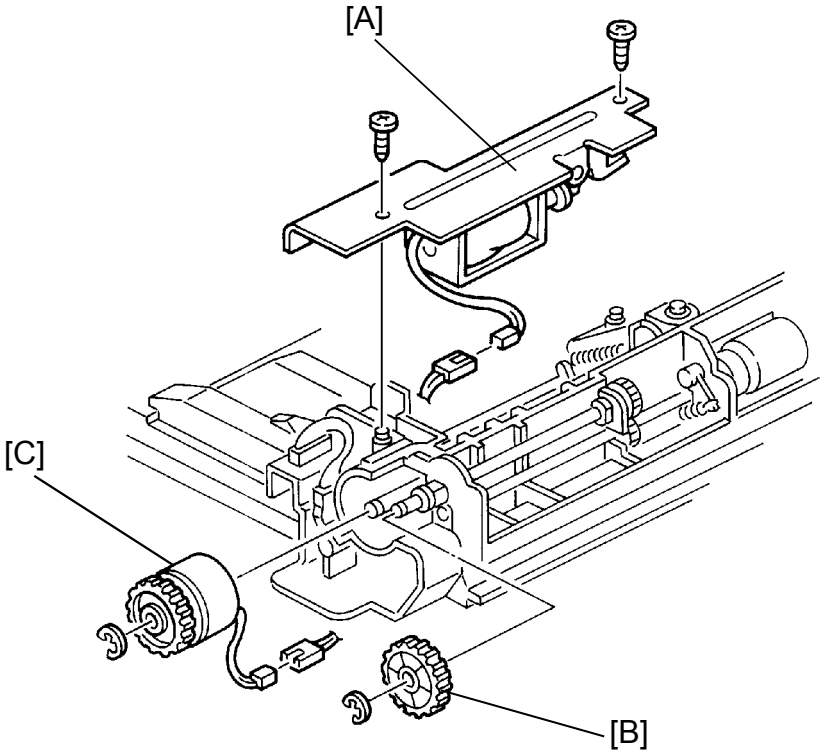

1. Turn off the main switch and unplug the machine.
2. Remove the by-pass feed table. (See Pick-up, Paper Feed and Reverse Roller Replacement section.)
3. Replace the by-pass pick-up solenoid assembly [A] (2 screws and 1 connector).
4. Remove the idle gear [B] (1E-ring).
5. Replace the by-pass feed clutch [C] (1 connector).

6.8 REGISTRATION SENSOR REPLACEMENT

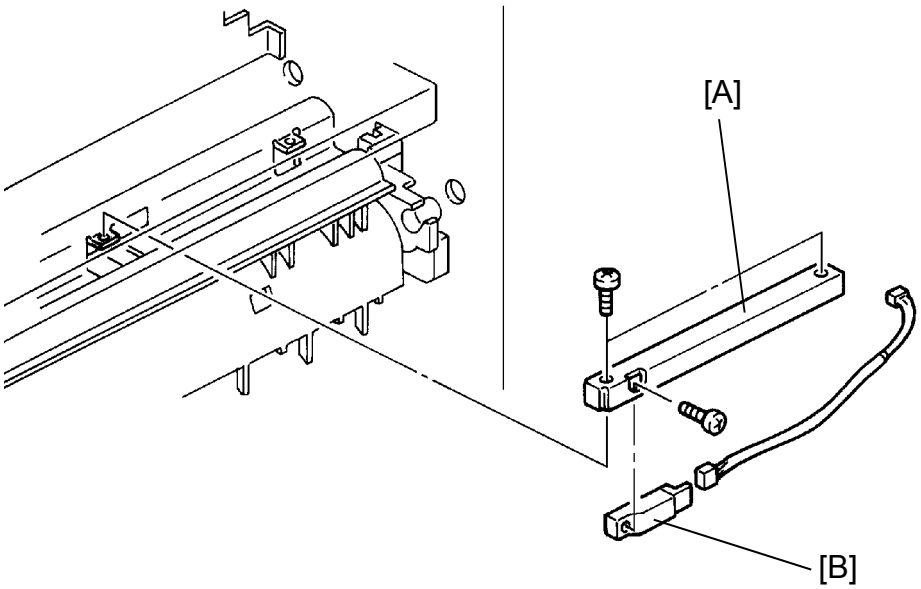

1. Turn off the main switch.
2. Remove the by-pass feed table. (See Pick-up, Paper Feed and Reverse Roller Replacement section.)
3. Remove the registration sensor bracket [A] (2 screws) using a small screw driver.
4. Replace the sensor [B] (1 screw).

6.9 REGISTRATION CLUTCH REPLACEMENT

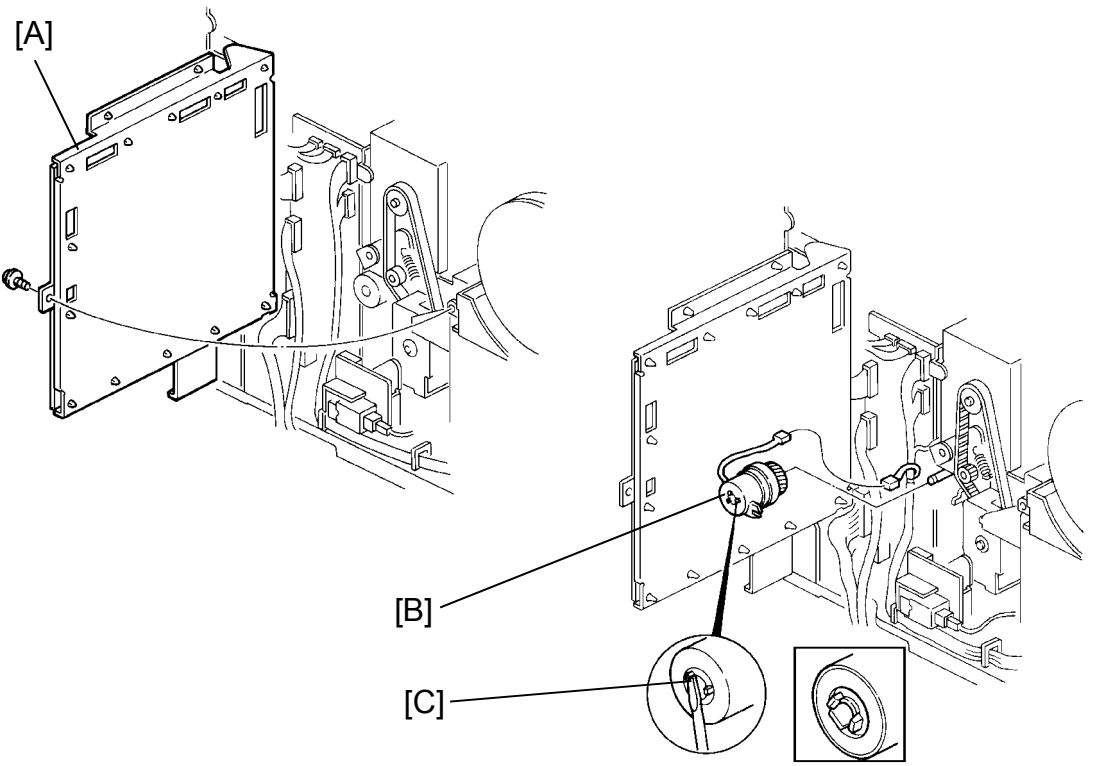

1. Turn off the main switch.
2. Remove the upper rear cover (4 screws) and swing open the main board [A] (1 screw).
3. Replace the registration clutch [B] by releasing the nail lock [C] (1 connector).

   NOTE: When reinstalling, make sure that the clutch is firmly locked and the stopper on the bracket fits to the slot on the clutch.

6.10 1ST PAPER TRAY PAPER SIZE SWITCH, 2ND AND 3RD TRAY SET SWITCH REPLACEMENT

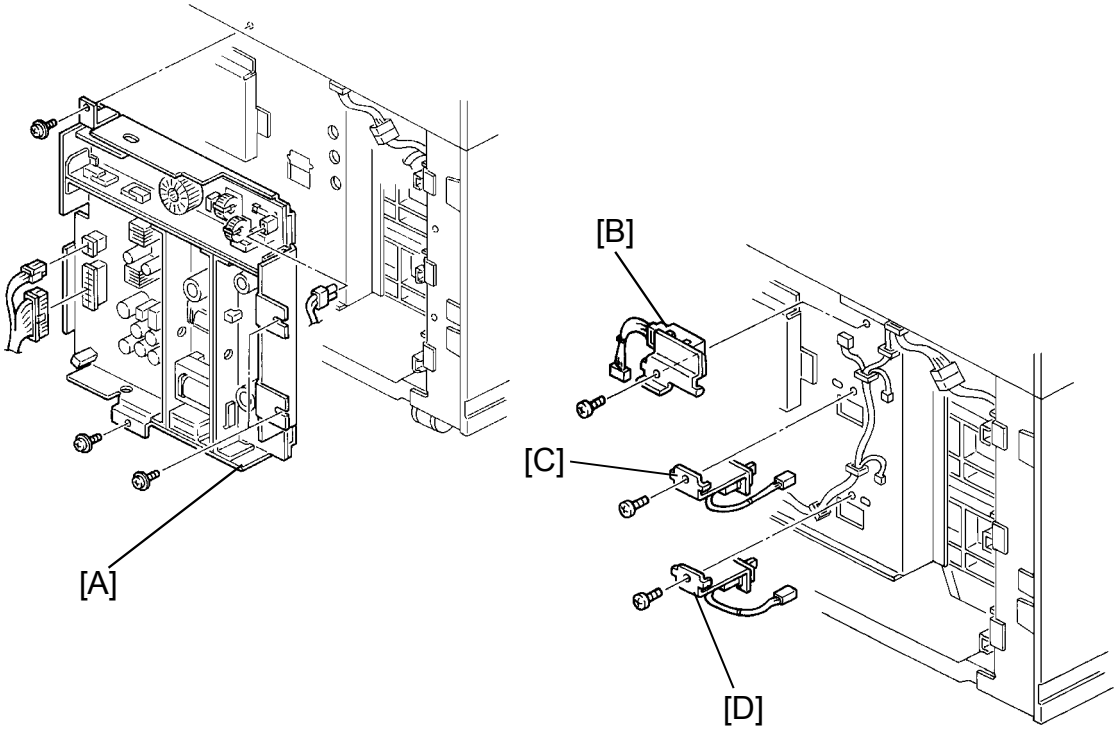

1. Turn off the main switch and unplug the machine.
2. Remove the lower rear cover (4 screws).
3. Remove the DC power supply unit [A] (4 screws and 3 connectors).
4. Remove each switch (1st paper size switch [B], 2nd tray set switch [C], 3rd tray set switch [D]) with the bracket on (1 screw each).
5. Replace the switch.

6.11 REGISTRATION BUCKLE ADJUSTMENT

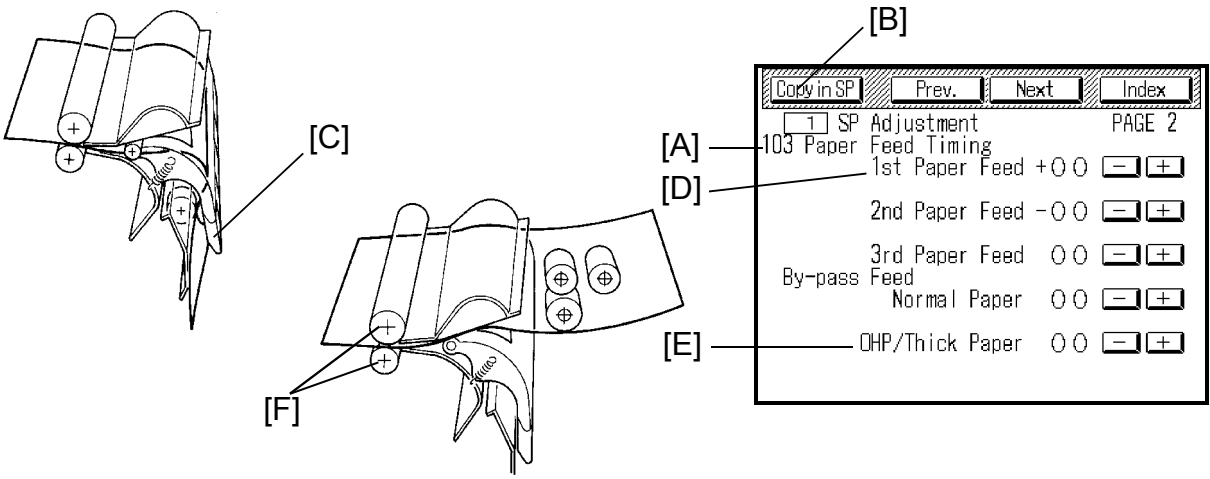

NOTE: The following adjustments are normally not needed.
Adjust only when the RAM board was replaced or after memory all clear procedure.

1. In all paper trays, load the paper the customer normally uses.
2. Remove the right inner cover (3 screws) and turn on the front safety switch using the accessory switch actuator.
3. Enter SP mode and open SP Adjustment P-2, No. 103 (Paper Feed Timing) [A].
4. Touch Copy in SP key [B] and select the 1st paper feed tray.
5. Make a few copies and confirm that the upper guide plate [C] is lifted up about 7 ~ 8 mm by the paper's buckle.
6. If out of specification, adjust the setting for the 1st paper feed [D]. Then press "Copy in SP" and confirm the results by making copies. (Entering a higher number will increase the paper's buckle.)
7. Adjust the 2nd and 3rd paper feed trays in the same manner.
8. Set A3 or DLT thick paper (104 ~ 157g/m^2 or 29 ~ 42 lb) on the by-pass feed table.
9. Select the by-pass feed "Thick Paper" and make a few copies. Adjust the setting for OHP/Thick Paper [E] to the point where paper is being fed but there is no buckle on the paper. (Enter a smaller number to reduce the buckle. Enter a higher number when paper does not feed through the registration rollers [F].)
10. At step No.9 condition, enter +5 bits and confirm the paper buckle.

7. DRUM UNIT

7.1 DRUM UNIT REMOVAL AND OPC DRUM REPLACEMENT

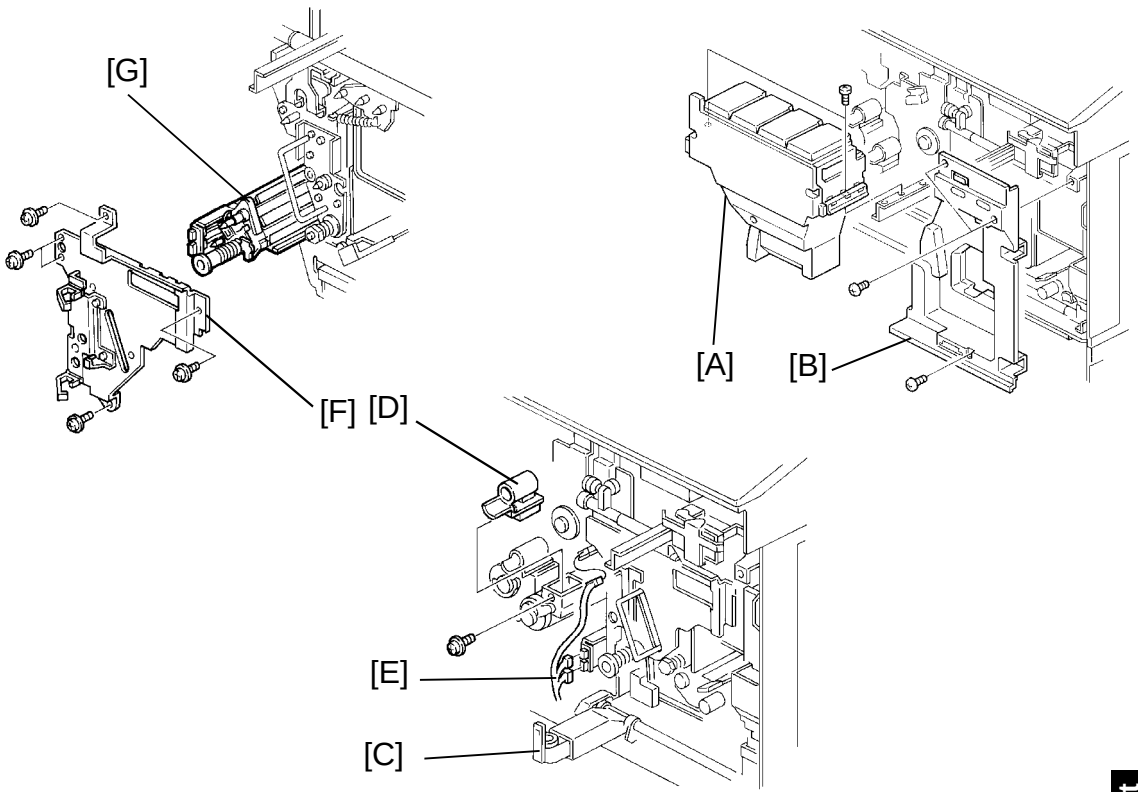

Before performing this procedure, place old newspapers on the floor to keep the customer site clean.

1. Turn off the main switch and unplug the machine.
2. Open the front doors and remove the toner tank [A] (2 screws).

   NOTE: Push the guide rails back in.

3. Remove the right inner cover [B] (3 screws).
4. Lower the toner collection duct [C] (1 hook).
5. Remove the yellow toner supply receptacle [D] (1 screw).
6. Disconnect the three connectors [E] and free them from the three harness clamps.
7. Remove the transfer belt stay [F] (5 screws).
8. Pull and remove the belt cleaning unit [G] out.

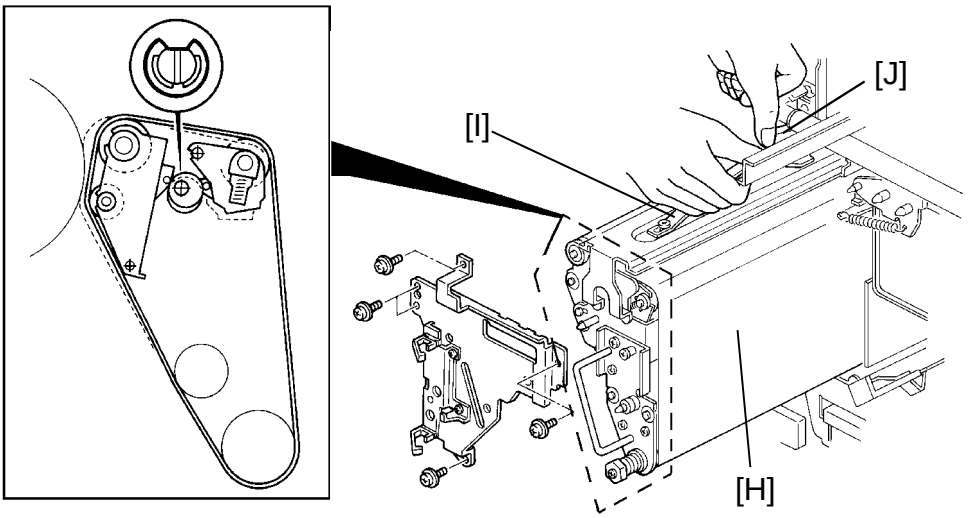

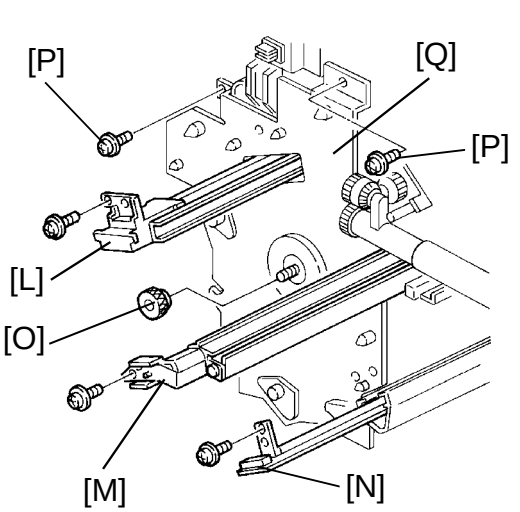

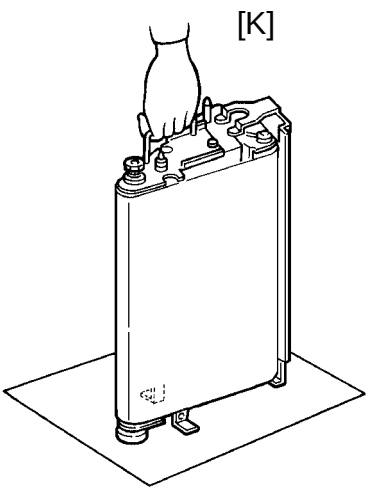

9. Confirm that the belt bias roller is in the release position and carefully pull and remove the transfer belt unit [H]. (While holding the handle[I], release the lever [J].)

   NOTE: There are stands at the rear side of the transfer belt unit. After pulling out the unit out of the machine, make the transfer belt unit stand as shown [K].
   Do not touch the transfer belt surface with your oily bare hands.

10. Remove the charge corona unit [L] (1 screw), PCC [M] (1 screw) and ID sensor board [N] (1 screw).

11. Remove the knob [O] and the two screws [P] and slightly (2 ~ 3 cm, 1 inch) pull out all the development units then remove the drum stay [Q].

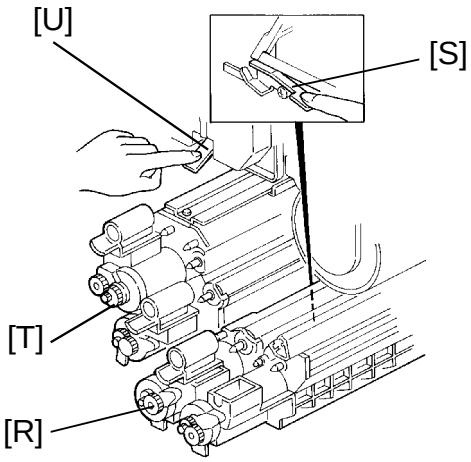

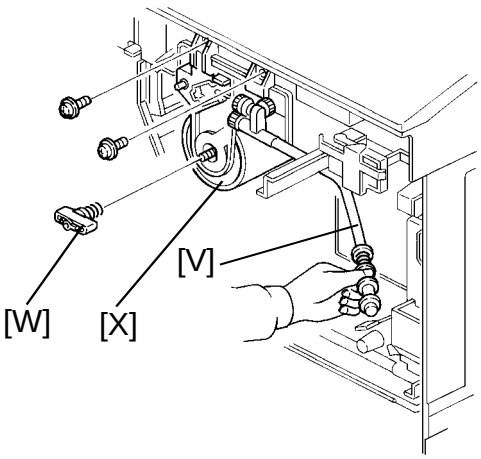

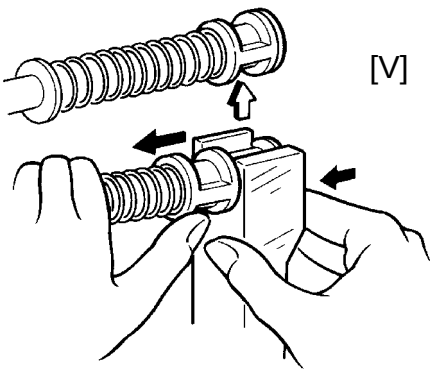

12. Remove the magenta/yellow development unit [R] (1 release lever [S]) and remove the black/cyan development unit [T] (1 release lever [U]).
13. Disconnect the drum's toner collection pipe [V] as shown.
14. Remove the knob screw [W] (counterclockwise) and pull out the quenching lamp.
15. Remove the drum unit [X] (2 screws).

NOTE: Let the unit rest on its casing. Never flip it clockwise, to avoid toner spills.

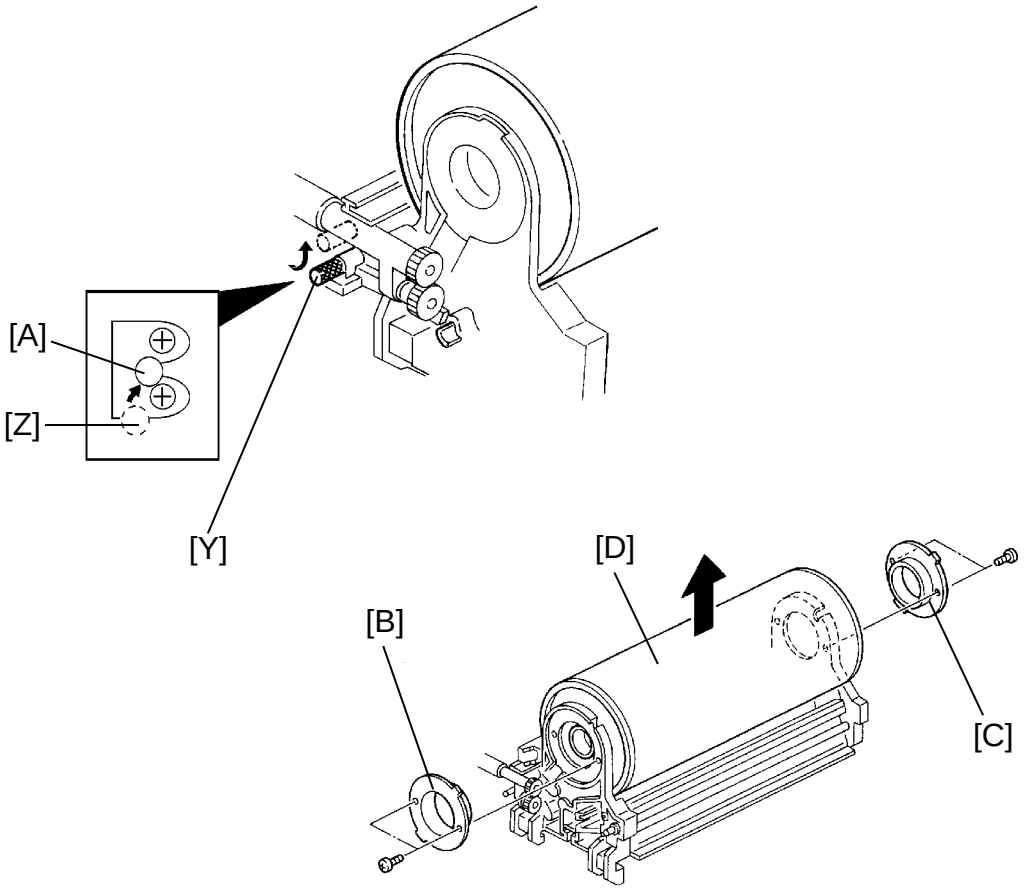

16. Loosen then move the knob [Y] from [Z] to [A].
    - [Z] position = Pressure being applied
    - [A] position = No pressure applied

17. Tighten the knob [Y] at the position [A].

18. Remove the front [B] and rear [C] drum supports (2 screws each).

19. Remove the drum [D].

7.2 INSTALLING A NEW DRUM

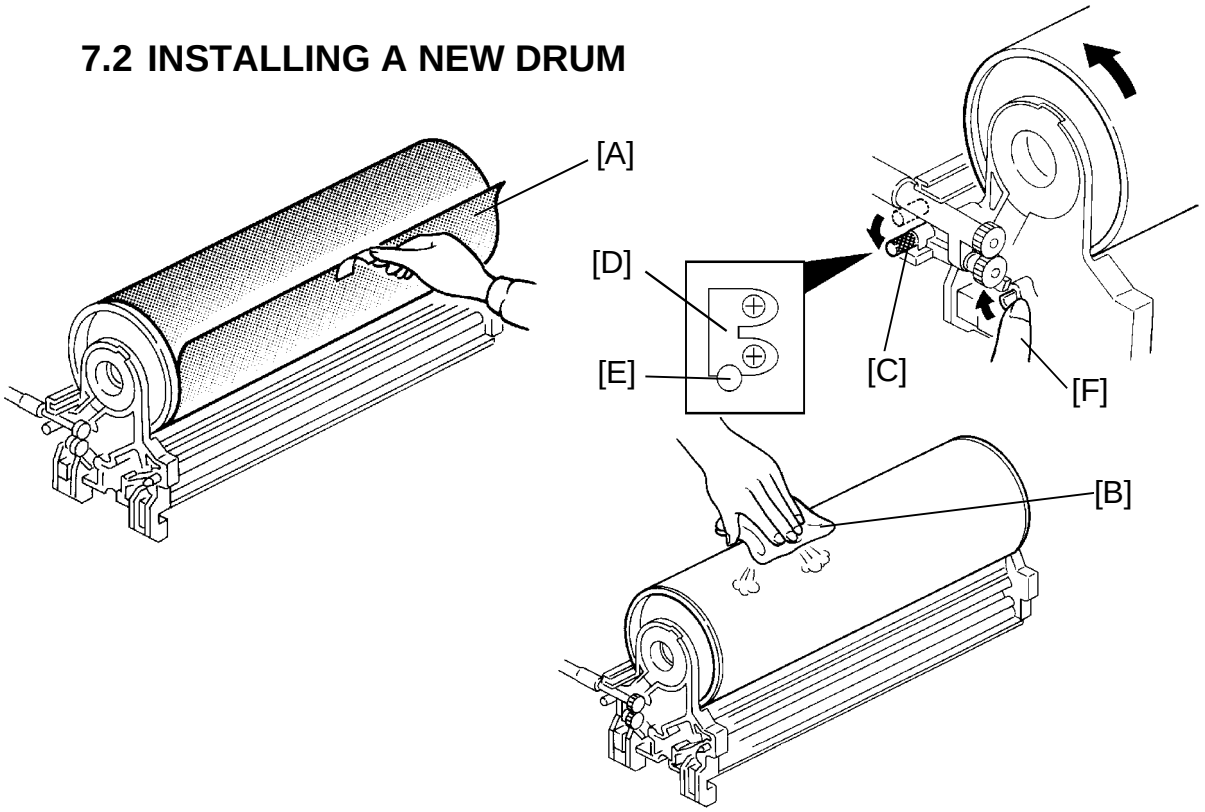

NOTE: 1) If you are re-installing an old drum and an old blade, you don't need to perform steps 4 and 7. If you replace either the blade or the drum, or both, you must apply setting powder.
2) Hold only the edge of the OPC drum to rotate it (within 1 cm, 0.4" from the end).

1. Install the new drum with the protective sheet still on it.
2. Reinstall the front and rear drum supports (2 screws each).
3. Remove the OPC drum protective sheet [A].
4. Apply setting powder [B] to the entire surface of the drum.
5. Loosen then move the knob [C] from [D] to [E].
   - [D] position = No pressure being applied
   - [E] position = Pressure being applied
6. Tighten the knob [C] at the lower position [E].
7. While pressing up the latch [F] to apply the cleaning blade pressure, rotate the OPC drum counterclockwise 3 times to ensure the setting powder is evenly applied, as shown.

   NOTE: Hold only the edge of the OPC drum to rotate it (within 1 cm, 0.4" from the end).

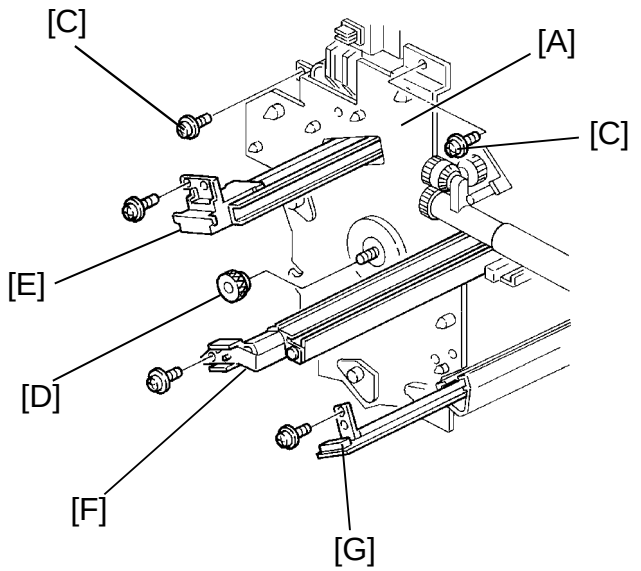

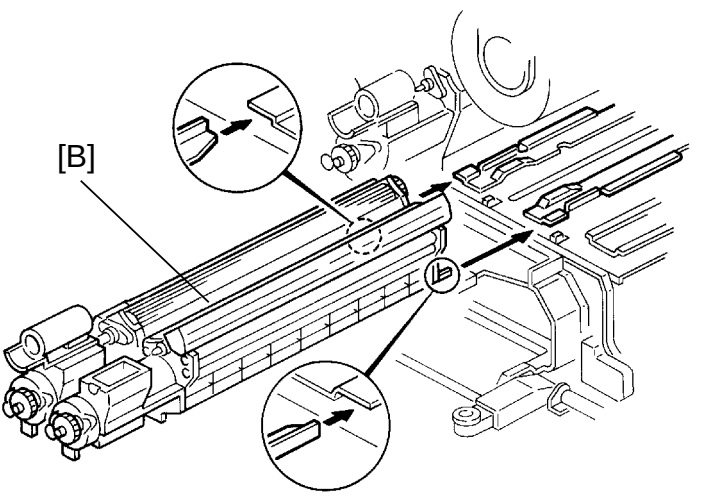

8. Reinstall the following units or parts in the machine as follows.
   1) Slide in the drum unit and secure it to the shaft with the knob screw.
   2) Set the drum stay [A] in position and secure the drum unit (2 screws).
   3) Remove the drum stay [A] and reinstall the quenching lamp, toner collection tube and development units.

   NOTE: When reinstalling the magenta/yellow development unit [B], make sure that the bottom plate fits the rails as shown.

   4) Set the drum stay by securing the 2 screws [C] then the knob [D].
   5) Reinstall the charge corona unit [E], PCC [F], and the ID sensor board [G] (1 screw each).

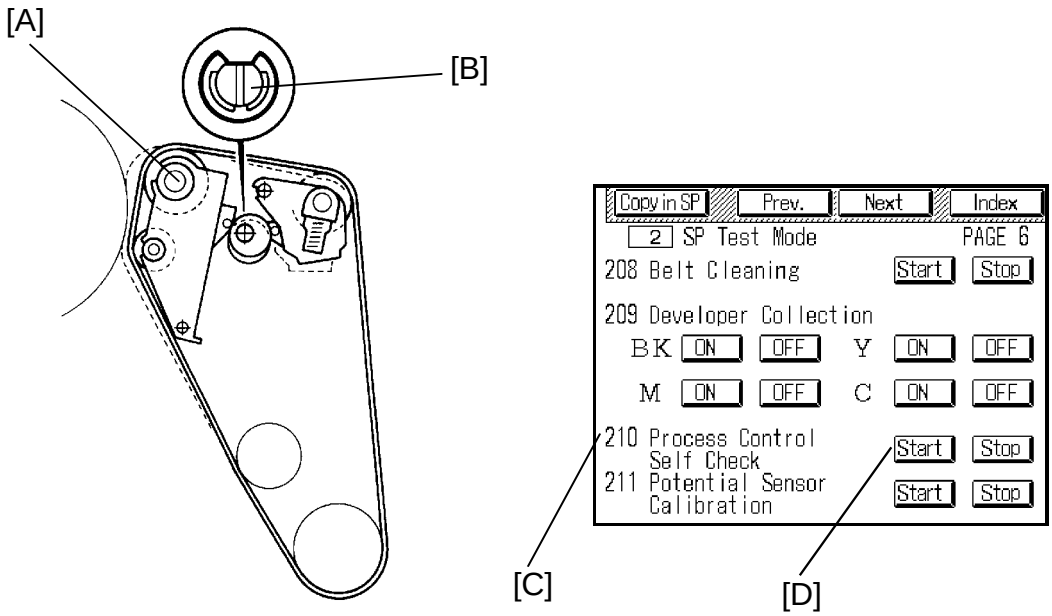

9. Confirm the belt bias roller [A] is in the release position (most inner position) as shown. If not, turn the shaft [B] with a flat head screw drive until the belt bias roller comes in the release position.

   NOTE: If the belt bias roller is not in the release position, it might touch the OPC drum and damage it.

10. Re-install the following units or parts in the following order.
    1) Transfer belt unit
    2) Transfer belt cleaning unit
    3) Transfer belt stay (5 screws)
    4) Three connectors (6P white, 3P red, 3P white)
    5) Toner collection duct (1 hook)

11. Turn on the main switch and perform the "Press Control Self Check" as follows.
    1) Open SP Test Mode P-6, No. 210 (Process Control Self Check) [C].
    2) Touch the Start key [D]. After the self check is completed, the machine stops automatically.
12. Check and adjust the color balance.

7.3 CLEANING BLADE REPLACEMENT

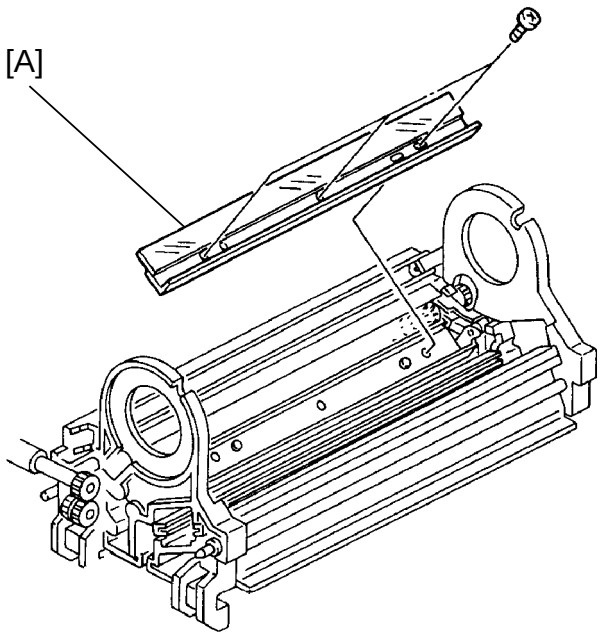

CAUTION: After replacing the cleaning blade, you must apply setting powder, as mentioned in Installing A New Drum.

1. Remove the drum (See Drum Removal).
2. Remove the cleaning blade [A] (3 screws).
3. Install a new cleaning blade.
4. Install the drum. (See Installing A New Drum.)

7.4 CLEANING BRUSH REPLACEMENT

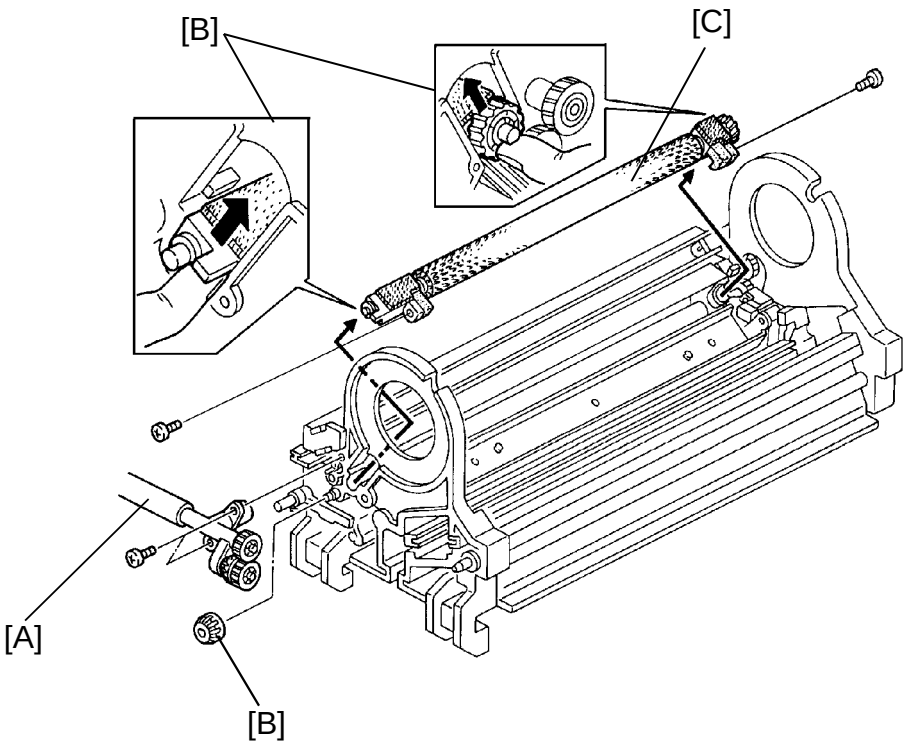

1. Remove the Cleaning Blade. (See Cleaning Blade and Quenching Lamp Replacement.)
2. Remove the toner collection pipe assembly [A] (2 screws).
3. Remove the gear [B].
4. Remove the cleaning brush assembly [C] (2 screws).

   NOTE: You may need to force it a bit. Do not break off the projection.
5. Remove the E-rings, remove the pads, and reinstall the pads on the new brush.

NOTE: When reinstalling, make sure of the following.

a) Reinstall the gear [B]

b) The 2 screws securing the cleaning brush are located as listed below.

long screw (gold) ⟶ front side
short screw (black) ⟶ rear side

7.5 BIAS ROLLER BLADE REPLACEMENT

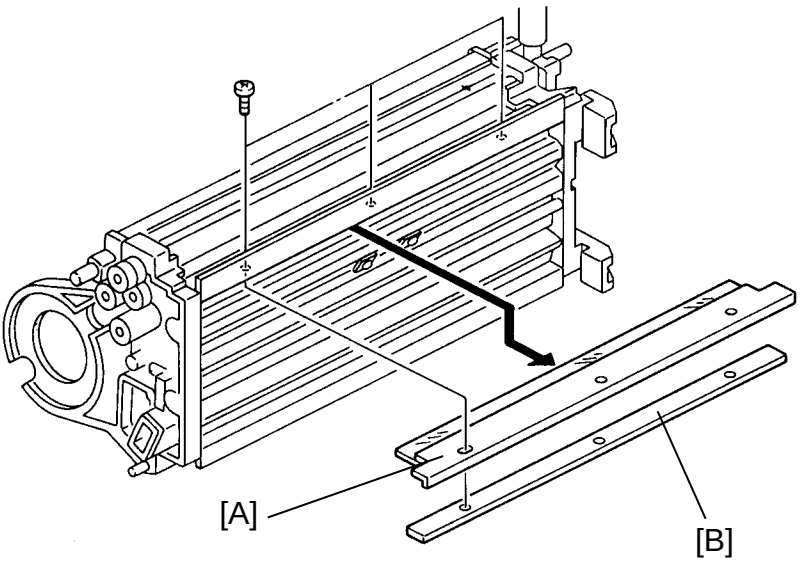

1. Remove the drum. (See Drum Removal.)
2. Remove the bias blade [A] and support bracket [B] (3 screws) and replace the blade.

NOTE: Apply setting powder along the edge of the new bias roller blade.

7.6 CHARGE WIRE REPLACEMENT

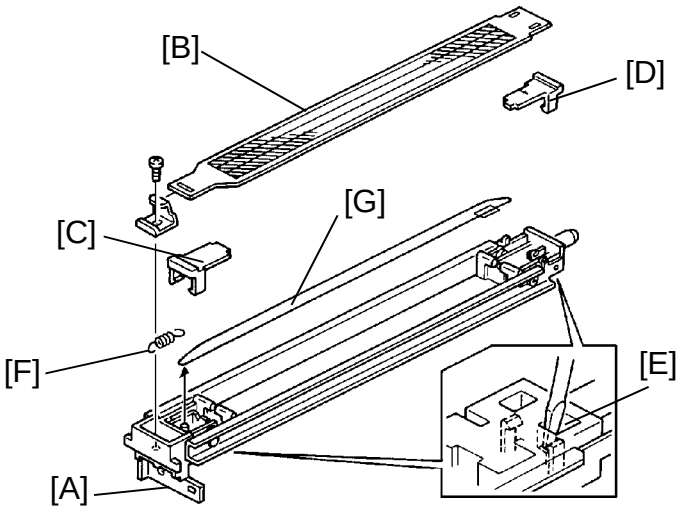

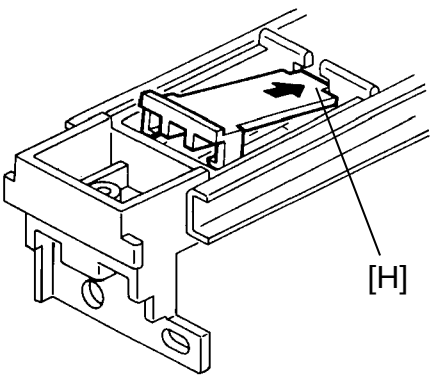

1. Take out the change corona unit [A]. (See Drum Unit Removal Section.)
2. Remove the grid plate [B] (1 screw).
3. Remove the front end block cover [C] and the rear end block cover [D] by using a small screw driver from the rear of the unit as in [E].
4. Remove the terminal spring [F] and then remove the charge corona wire [G].

   NOTE: When re-installing the end block covers, insert the tip [H] then push down on the cover.
5. If the grid plate, casing, or the charge wire were replaced or cleaned, perform the "Process Control Self Check" (SP Test Mode P-6, No. 210).

7.7 PRE-CLEANING CORONA WIRE REPLACEMENT

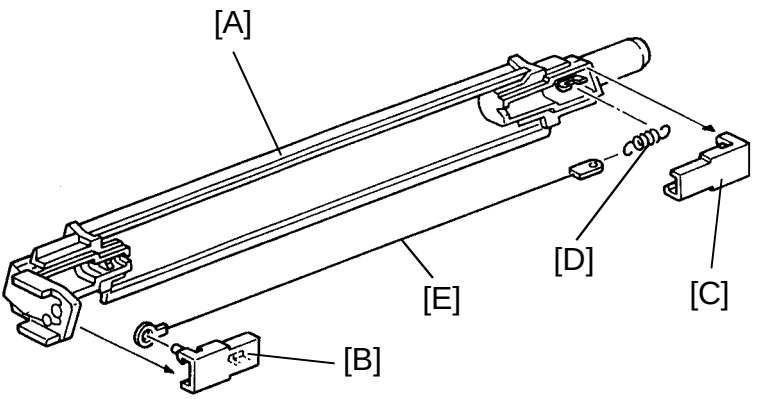

1. Take out the PCC unit [A]. (See Drum Unit Removal Section.)
2. Remove the front [B] and rear [C] end block covers.
3. Remove the terminal spring [D] and then remove the PCC wire [E].

7.8 DRUM MOTOR REPLACEMENT

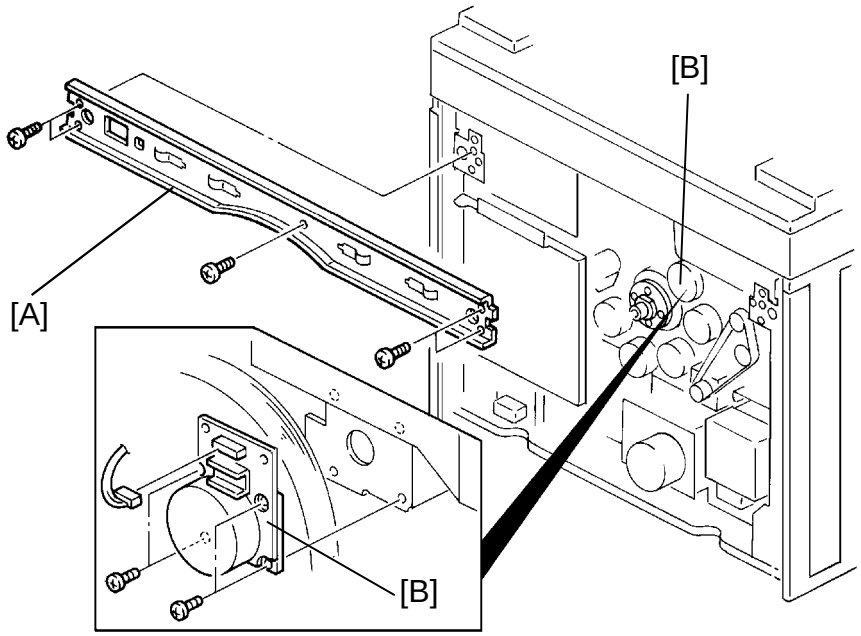

1. Remove the upper rear cover (4 screws).
2. Remove the supporting frame [A] (5 screws, 2 connectors).
3. Replace the drum motor [B] (4 screws, 1 connector).

7.9 USED TONER TANK REMOVAL

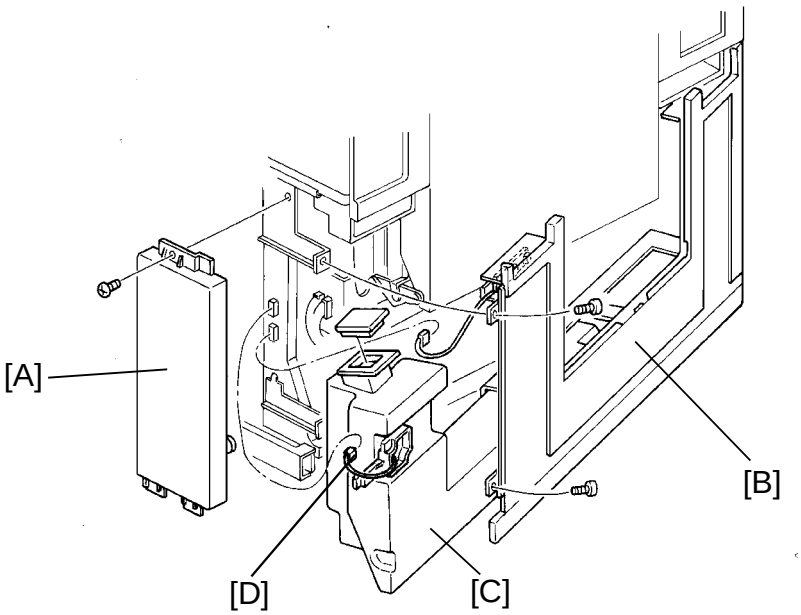

1. Remove the lower front cover [A] (1 screw).
2. Swing open the lower right cover [B] (2 screws) along with the used toner tank [C].
3. Pull out the used toner tank [C] (2 connectors).

NOTE: When re-installing the used toner tank, make sure that the toner overflow sensor connector [D] is inserted firmly.

8. DEVELOPMENT SECTION

8.1 DEVELOPER COLLECTION

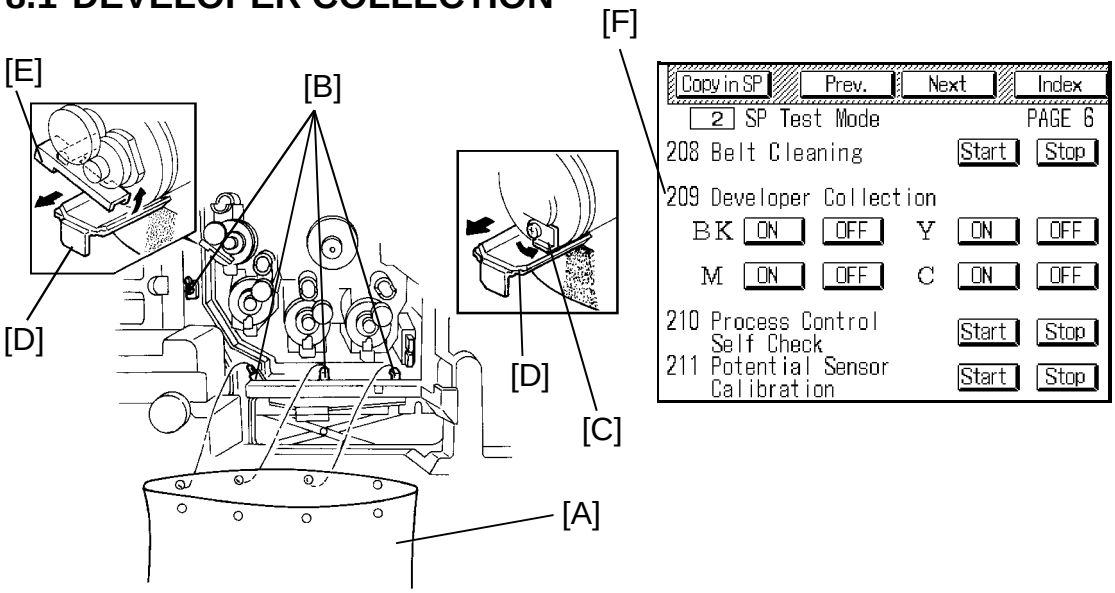

NOTE:
- The machine must be at the "READY" condition to perform the developer collection.
- To maintain good color copy quality, the developer replacement should be performed for all colors at the same time so that all the developers have similar characteristics.
- For more detailed information concerning the access of SP modes, refer to section 4 (Service Program Mode Operation).
- Before performing this procedure, place old newspapers on the floor to keep the customer site clean.
- Collect 2 developers per bag (black and cyan, magenta and yellow).

1. Open the front door and remove the toner tank unit (2 screws).
2. Place the developer collection bag [A] to the hooks [B] on the copiers frame.
3. Turn on the front safety switch using the accessory switch actuator. Wait until the machine is at the 'READY' condition.
4. Swing the Stopper bracket [C] then pull the collection cover [D] of the desired development unit. Developer will fall into the bag.

   NOTE: For black developer, shift the lever [E] instead of the stopper bracket [C].
5. Enter SP mode and open SP Test Mode P-6, No. 209 (Developer Collection) [F].

6. Press "ON" for the desired developer to be collected.

   NOTE: Support the developer bag [A] while performing this procedure.

7. Wait until the developer is collected completely (about 2 to 3 minutes) and press "OFF".

8. Perform the same procedures for the other developers.

9. Reinstall the collection cover [B].

   NOTE: For black developer, make sure to shift back the lever.

8.2 DEVELOPER INSTALLATION

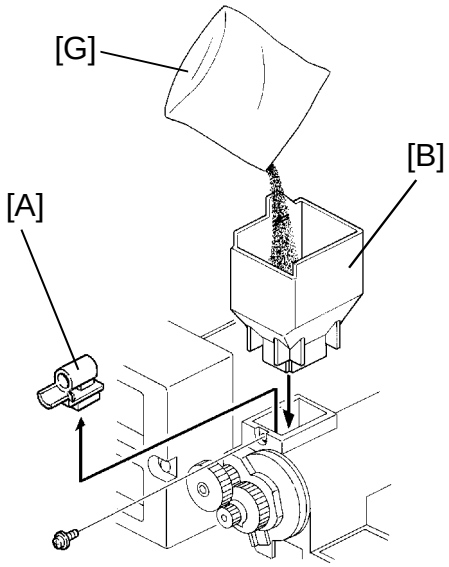

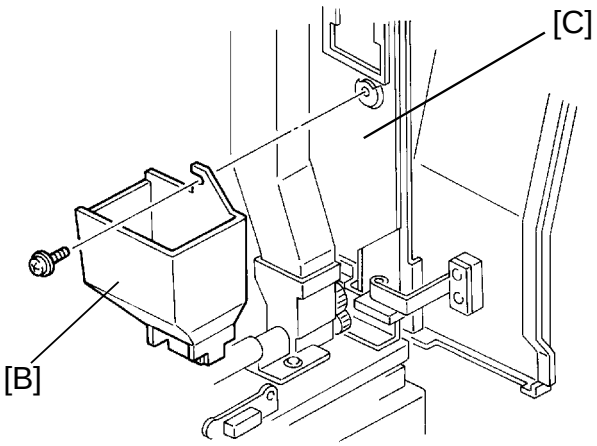

1. From the Developer Collection section procedure step number 9 condition, remove all the toner supply receptacles [A] (1 screw).
2. Remove the right inner cover. (See Right Inner Cover Removal section.)
3. Remove the developer supply funnel [B] from the bracket [C] (1 screw).
4. Clean the inner surface of the developer supply funnel.
5. Set the developer supply funnel on the black development section.
6. Enter SP mode and open SP Test Mode P-7, No. 213 (Output Check).
7. Touch the key [D] to enter the output mode.
8. Enter "30" by using the number keys then touch the enter key [E], to select test mode #30 "black development drive motor ON".
9. Touch the start key [F].
10. Shake a pack of black developer [G] 20 times
    then pour them in.

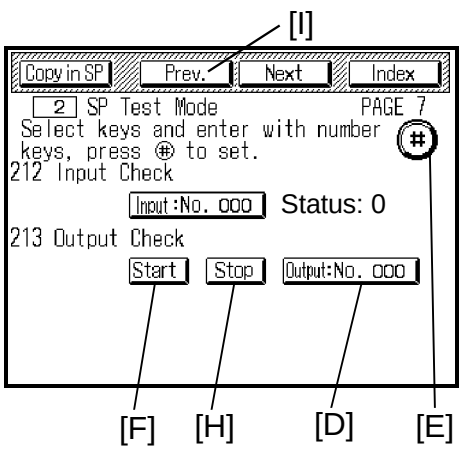

11. One minute after pouring the developer, touch the Stop key [H].

NOTE: Do not touch the stop key within 1 minute, otherwise the developer will not be evenly distributed in the unit.

Replacement Adjustment

12. Remove the developer supply funnel, then reinstall the toner supply receptacle.

13. Install the cyan, magenta and yellow developer in the same manner as black developer installation (Step #4 to #12).

    NOTE: To select the "color development drive motor ON" mode, enter "31" for color instead of 30 for black (refer to Step #8).

14. Return the developer supply funnel to the original position.

15. Touch the Previous key [J] to open page 5.

16. Perform the Toner Density Initial Setting with new developer as follows.
    1) Confirm that the main charge corona, PCC, ID sensor boards are set correctly (1 screw each).

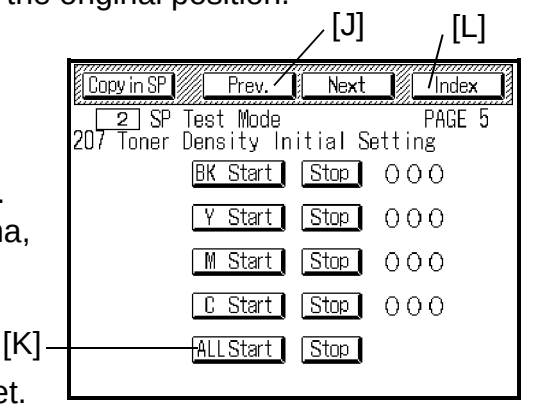

    2) Confirm that the toner tank is not set.

    NOTE: If the toner tank is set, toner is supplied during the developer initial setting and the machine cannot figure out the proper toner concentration of the new developer.

    3) Touch the All Start key [K] to start the developer initial setting.
    After the process is completed, the machine stops automatically.

17. Touch the Index key [L].

18. Open SP Data Output P-2, No 303 (Toner Density) [M].
19. Confirm whether if the VT has the same values as Vref for all colors (Bk, Y, M, C). If not, touch the Index key [N] then return to the test mode page 5 to perform the developer initial setting (step 16) again.
20. Set the toner tank (2 screws) and close the front doors.
21. Touch the Copy in SP key [O] and place the C-4 test chart on the exposure glass.
22. Take 30 full color copies using A3 or 11" x 17" size paper.
23. Wait 5 minutes to ensure that no residual voltage remains on the OPC drum.

    NOTE: The process control self check (step 29) must be performed when there is no residual voltage on the OPC drum.

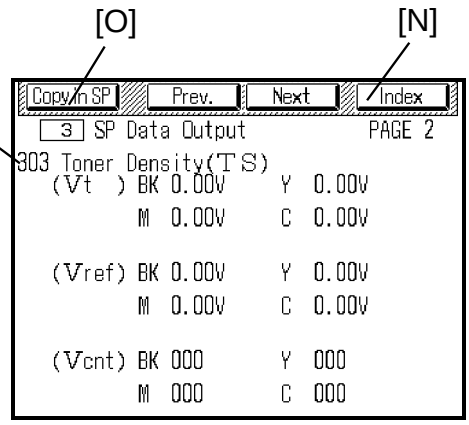

24. Touch the SP Modes key [P] to enter the SP mode.
25. Touch the Index key [N].

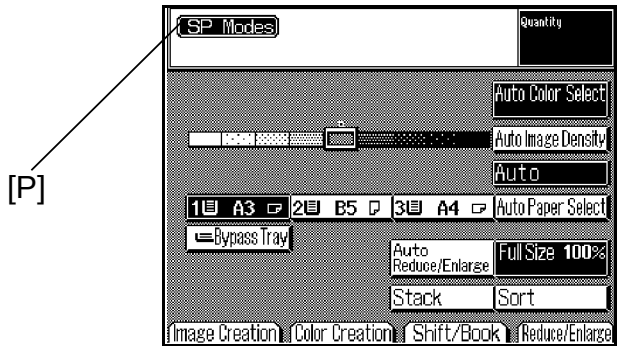

26. Open SP Special Feature P-2, No. 403. (Process Control Mode selection) [Q].
27. Confirm that the PID key [R] is selected for the Process Control Mode Selection. If not, touch the PID key.
28. Touch the Index key [S].

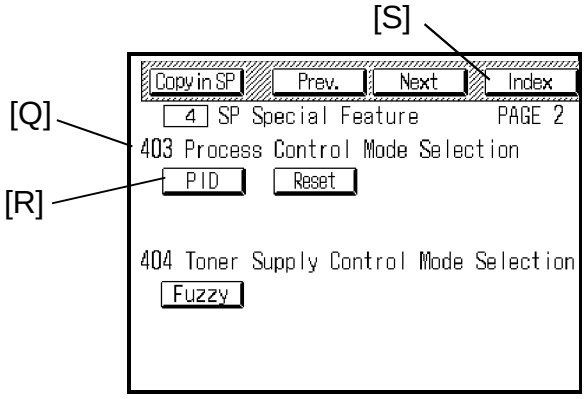

Replacement Adjustment

29. Open SP Test Mode P-6, No. 210 (Process Control Self Check) [T].
30. Touch the Process Control Self Check Start key [U]. After the process is completed, the machine stops automatically.
31. Touch the Index key [V].

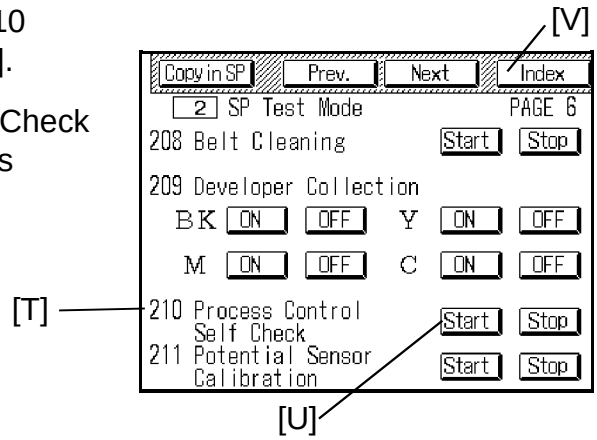

32. Open SP Data Output P-4, No. 305 (Drum Potential Control Output) [W].
33. Check the V_D and V_L [X] for each developer. If any of the output data is 6 or more, wait 5 minutes and go back to step 27 and perform the process control self check again.
34. Touch the Index key [Y] and exit the SP modes.

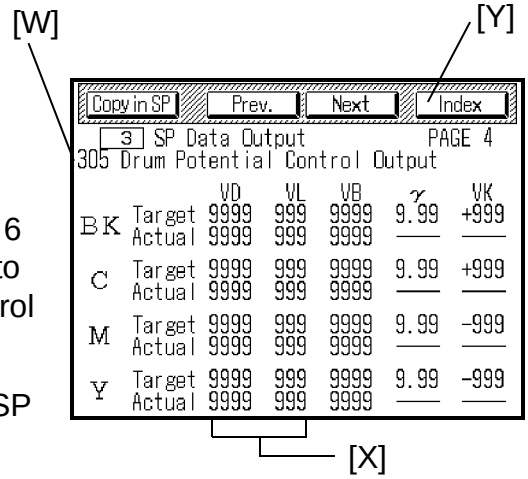

35. Turn off the main switch and place the accessory switch actuator to it's original position.
36. Reinstall all parts.
37. Check the copy image and adjust the color balance if necessary.

8.3 TONER DENSITY SENSOR REPLACEMENT

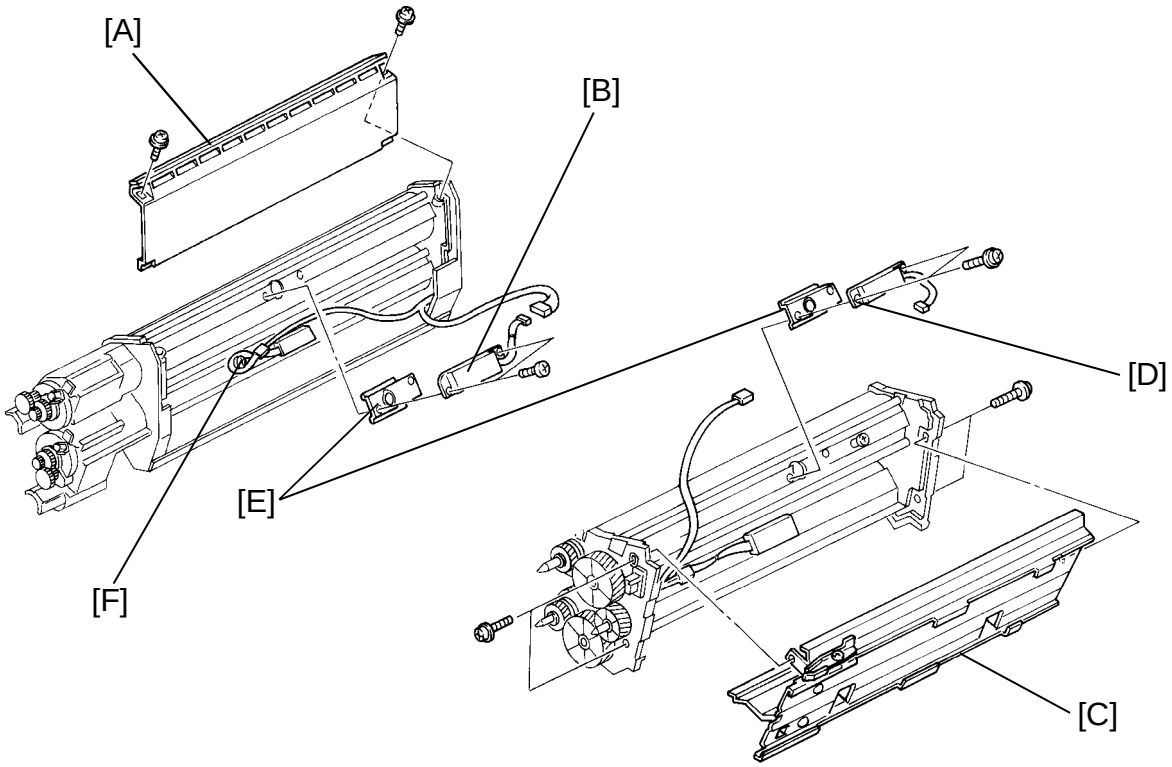

NOTE: When replacing the toner density sensor (any color), developer for all colors must be replaced so that all have similar characteristics.

1. Collect the developer. (See Developer Collection section.)
2. Remove both development units. (See Installation Procedure section.)

-Black and Cyan-

3. Remove the black and cyan development unit cover [A] (2 screws).
4. Replace the desired toner density sensor [B] (2 screws and 1 connector).

-Magenta and Yellow-

3. Remove the magenta and yellow development unit base [C] (4 screws).
4. Replace the desired toner density sensor [D] (2 screws and 1 connector).

NOTE: When reinstalling, make sure of the following.

- The spacer [E] is secured firmly to prevent developer from spilling out.
- Mount the harness over the stepping screw [F].

5. Install new developer. (See Developer Installation section.)

8.4 DEVELOPMENT ROLLER ASSEMBLY REPLACEMENT

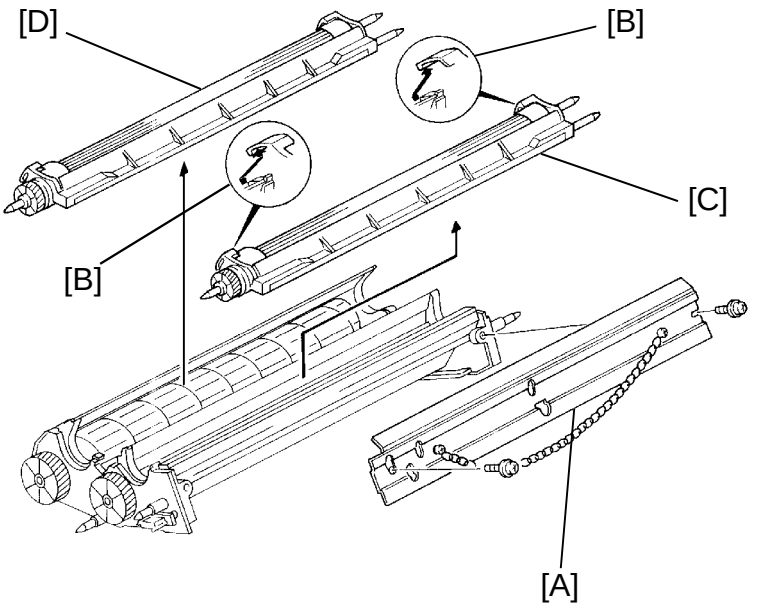

CAUTION: Never disassemble the development roller assembly. The unit is adjusted with special tools and instruments at the factory to ensure the proper doctor gap.

1. Collect the developer. (See Developer Collection section.)
2. Remove both development units. (See Installation Procedure section.)

-Black and Cyan-

3. If replacing the black development roller assembly, remove the black and cyan development unit guide rail [A] (2 screws).
4. Lift the latches on both sides over the pegs [B] and pull the black development roller assembly [C] or the cyan development roller assembly [D] out.

-Magenta and Yellow-

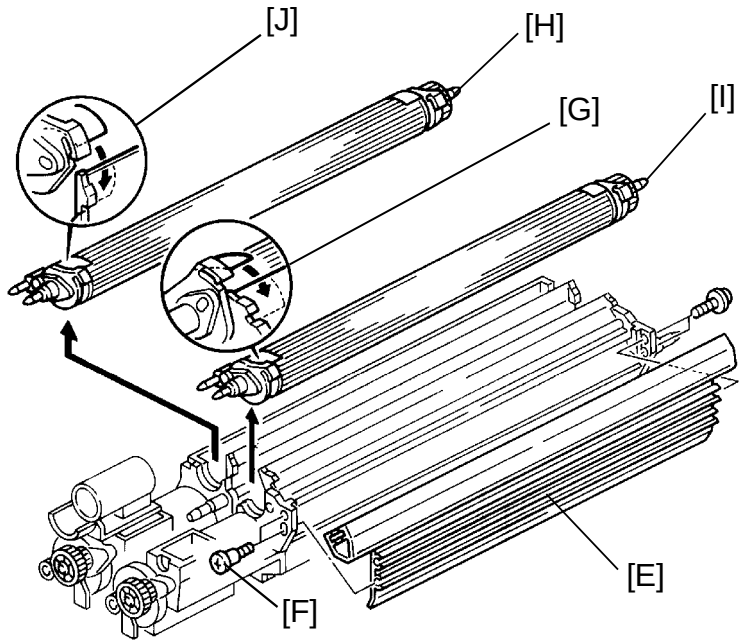

3. If replacing the yellow development roller assembly, remove the magenta and yellow development unit left cover [E] (2 stepping screws [F] and 2 screws).
4. Lift the latches on both sides over the pegs [G] and pull the magenta [H] or yellow [I] development roller assembly out.

NOTE: When reinstalling, make sure to tuck all the inlet seals inside the casing as shown [J].

5. Install new developer. (See Developer Installation section.)

8.5 DUAL MIXING ROLLER REPLACEMENT (FOR ALL COLORS)

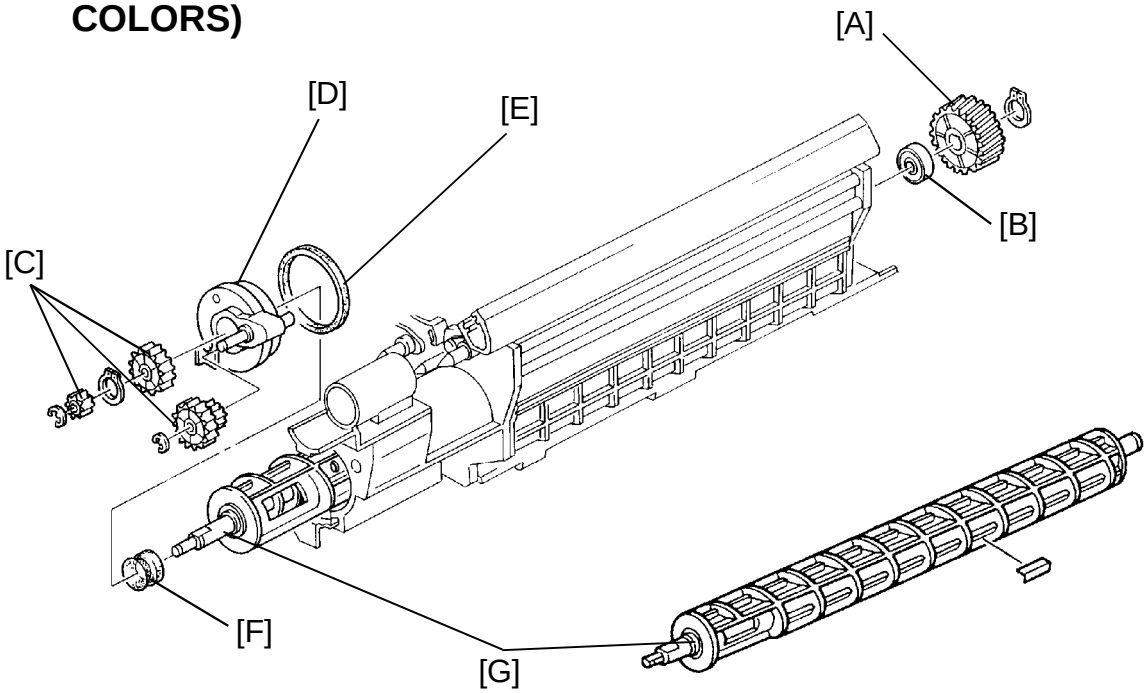

1. Collect the developer. (See Developer Collection section.)
2. Remove the desired development unit. (See Installation procedure section.)
3. Remove the gear - 40z [A] and bearing [B] at the rear of the unit (1 C-ring).
4. Remove the 3 gears [C] (2 E-rings and 1 C-ring) then the flange [D] and the seal [E].
5. Pull out the dual mixing roller and remove the rubber ring [F].
6. Replace the dual mixing roller [G].

NOTE: When reinstalling, make sure that the rubber ring [F] and the flange seal [E] are secured firmly to prevent developer from spilling out.

7. Install new developer. (See Developer Installation section.)

8.6 BLACK SLEEVE MOTOR REPLACEMENT

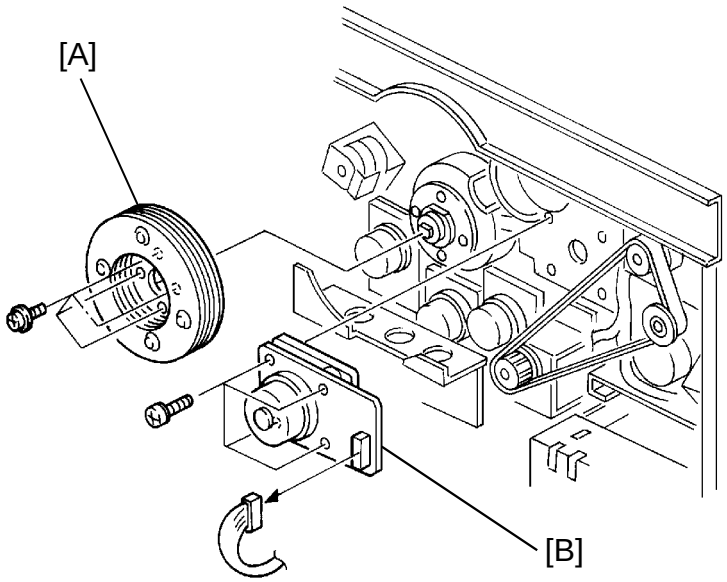

1. Turn off the main switch and unplug the machine.
2. Remove the upper rear cover and the fly wheel [A] (4 screws).
3. Replace the black sleeve motor [B] (4 screws and 1 connector).

8.7 COLOR SLEEVE MOTOR REPLACEMENT

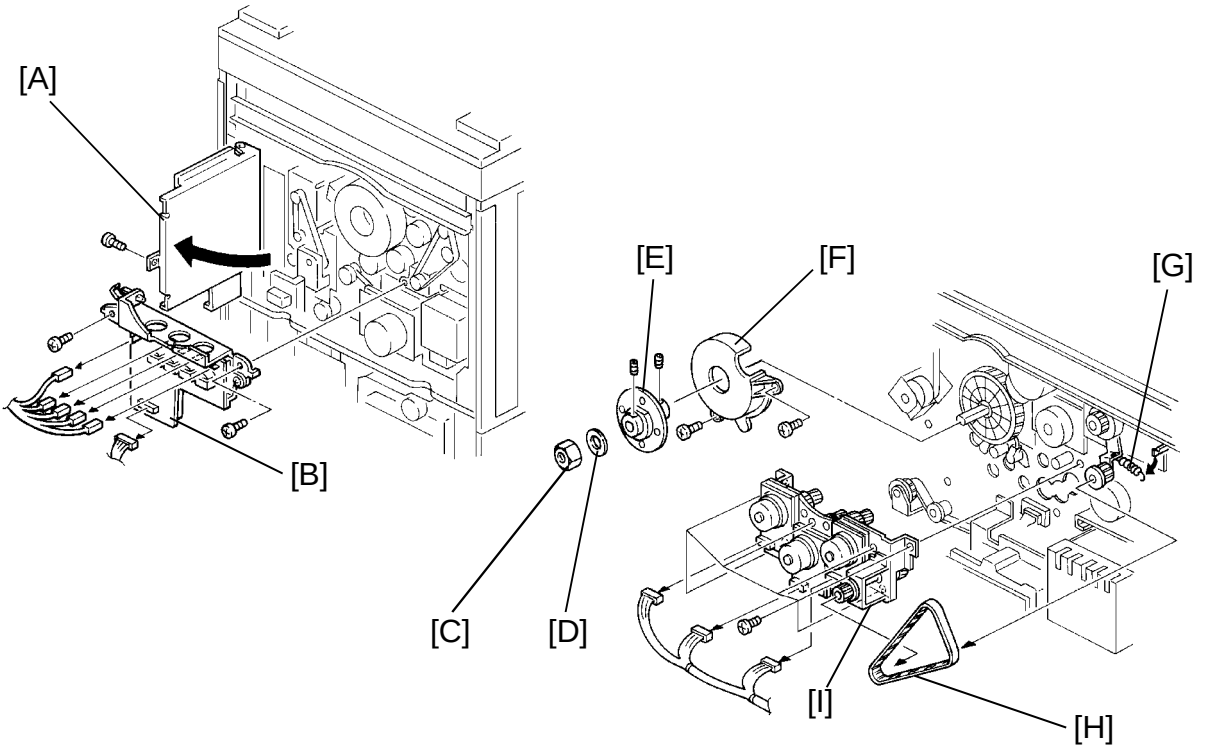

1. Turn off the main switch and unplug the machine.
2. Remove the upper rear cover and swing open the main board [A] (1 screw).
3. Remove the fly wheel (4 screws). (See Black Sleeve Motor Replacement.)
4. Remove the development bias high voltage supply board [B] (2 screws and 6 connectors).
5. Remove the nut [C] on the shaft with the spacer [D].
6. Remove the fly wheel supporting bracket [E] (2 Allen screws).
7. Remove the drum drive gear cover [F] (2 screws).
8. Remove the tension spring [G] and free the timing belt [H].
9. Remove the color sleeve motor bracket [I] (6 screws and 3 connectors).
10. Replace the desired sleeve motor.

NOTE: • Each color sleeve motor can be removed from the copier simply by unscrewing 4 screws.
However we recommend removing the bracket assembly so you can verify that the sleeve gears are not worn or chipped.

- When reinstalling, make sure of the followings.
  Set the fly wheel supporting bracket [E] on the shaft without securing the 2 Allen screws. Place the spacer [D] and tighten the nut [C], then secure the fly wheel supporting bracket [E], with Allen screws.
  Grasp the fly wheel supporting bracket [E] gently and confirm that the drum shaft doesn't move in the front to back direction. (No play on the shaft.) If there's movement, repeat the reinstallation procedure again and tighten the nut [C] more strongly.
  After reinstallation take a full color copy.
  If the copy image is mis-aligned, go back to the reinstallation procedure and tighten the nut [C] a little more loosely.

8.8 BLACK DEVELOPMENT DRIVE MOTOR REPLACEMENT

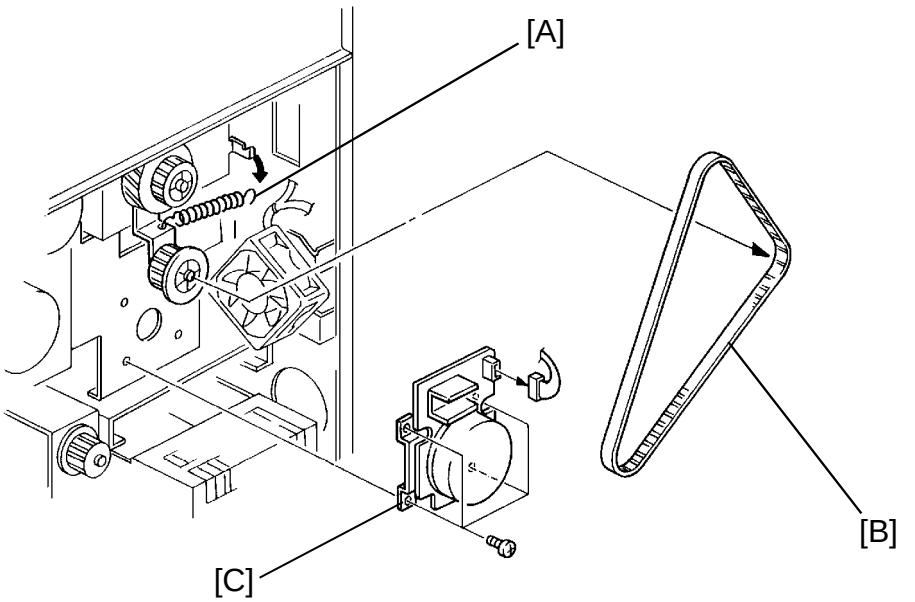

1. Turn off the main switch and unplug the machine.
2. Remove the upper rear cover (4 screws).
3. Remove the tension spring [A] and free the timing belt [B].
4. Replace the black development drive motor [C] (4 screws and 1 connector).

8.9 COLOR DEVELOPMENT DRIVE MOTOR REPLACEMENT

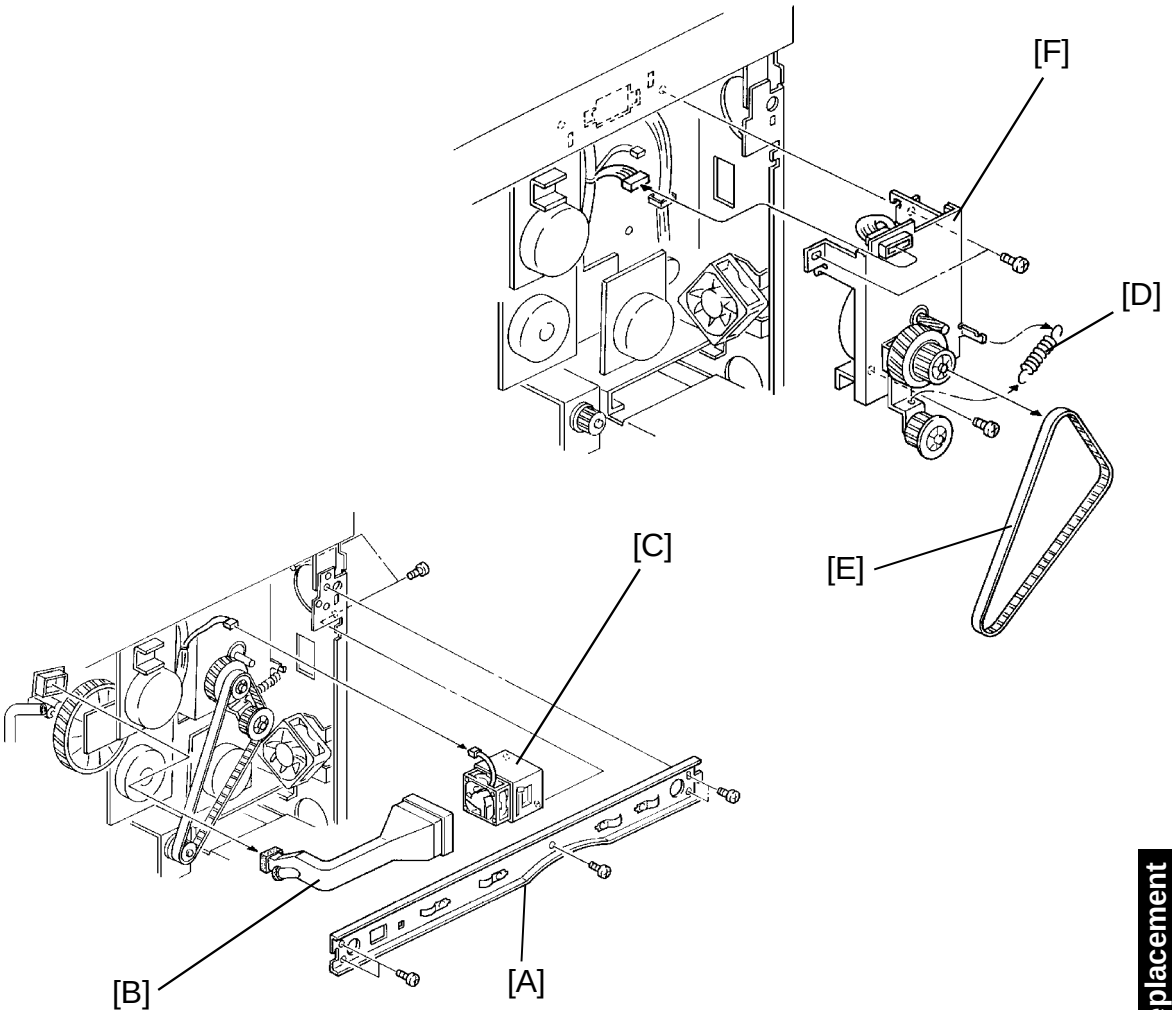

1. Turn off the main switch and unplug the machine.
2. Remove the upper rear cover (4 screws).
3. Remove the supporting frame [A] (5 screws and 2 connectors).
4. Remove the exhaust duct [B].
5. Remove the upper left cover. (See Upper Left Cover Removal.)
6. Remove the charge inlet fan [C] (2 screws and 1 connector).
7. Remove the tension spring [D] and free the timing belt [E].
8. Remove the color development drive motor bracket [F] (3 screws and 1 connector).
9. Replace the motor.

9. TRANSFER BELT SECTION

9.1 TRANSFER BELT REPLACEMENT

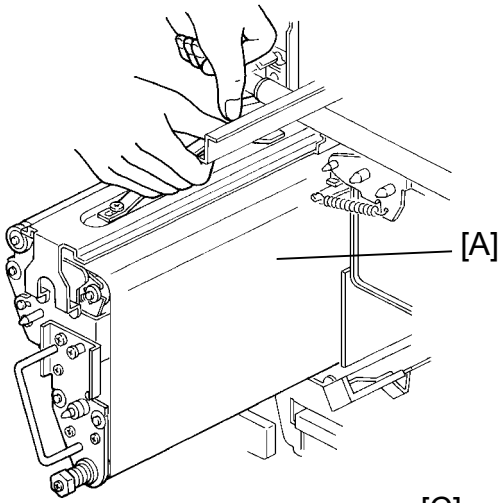

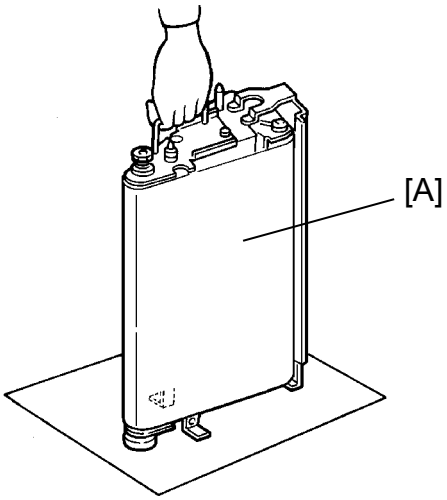

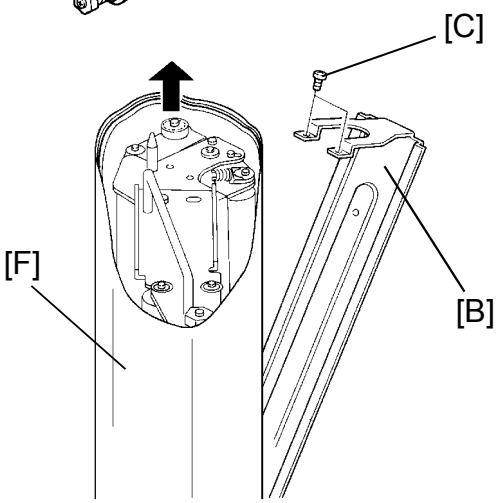

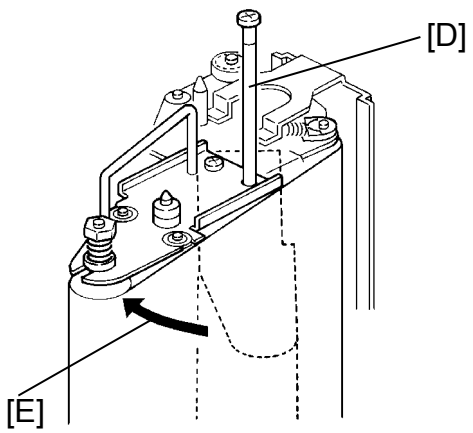

1. Remove the following parts and pull out the transfer belt unit [A]. (Refer to section 3 Installation).
   - Toner tank
   - Right inner cover
   - Yellow toner supply receptacle
   - Transfer belt Cleaning unit
   - Transfer belt stay
2. Make the transfer belt unit [A] stand as shown.
3. Move the handle bracket [B] out of the way by unscrewing the 2 screws [C].
4. Unscrew the securing screw shaft [D].
5. Release the tension of the transfer belt by folding the unit [E].
6. Remove the transfer belt [F] and clean all the rollers.

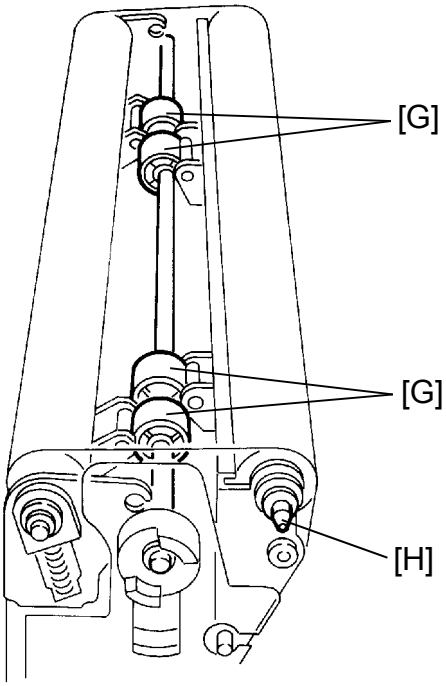

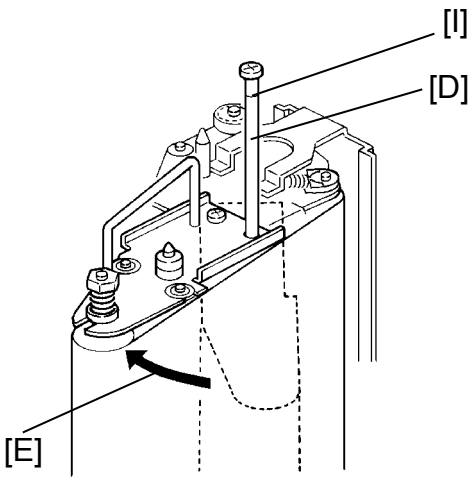

NOTE: Make sure of the following points.

- The transfer belt release cams [G], belt bias roller shaft [H] (only at the end) should be lubricated with silicone grease G40M every 40 k scans.
- Never touch the new transfer belt surface with your oily bare hands.
- Screw in the securing screw shaft down to the marked line [I].
- Manually turn the rollers and check that the transfer belt does not run over any of the rollers.
- Install the transfer belt unit, then the transfer belt cleaning unit.
- Confirm that the belt bias roller is in the release position.

7. Perform the belt cleaning mode by using SP TEST MODE P-6, No. 208. This mode will automatically stops after about 15 seconds.

8. Check the copy image and adjust the color balance if necessary.

9.2 TRANSFER BELT POSITION CLUTCH AND TRANSFER BELT POSITION SENSOR REPLACEMENT

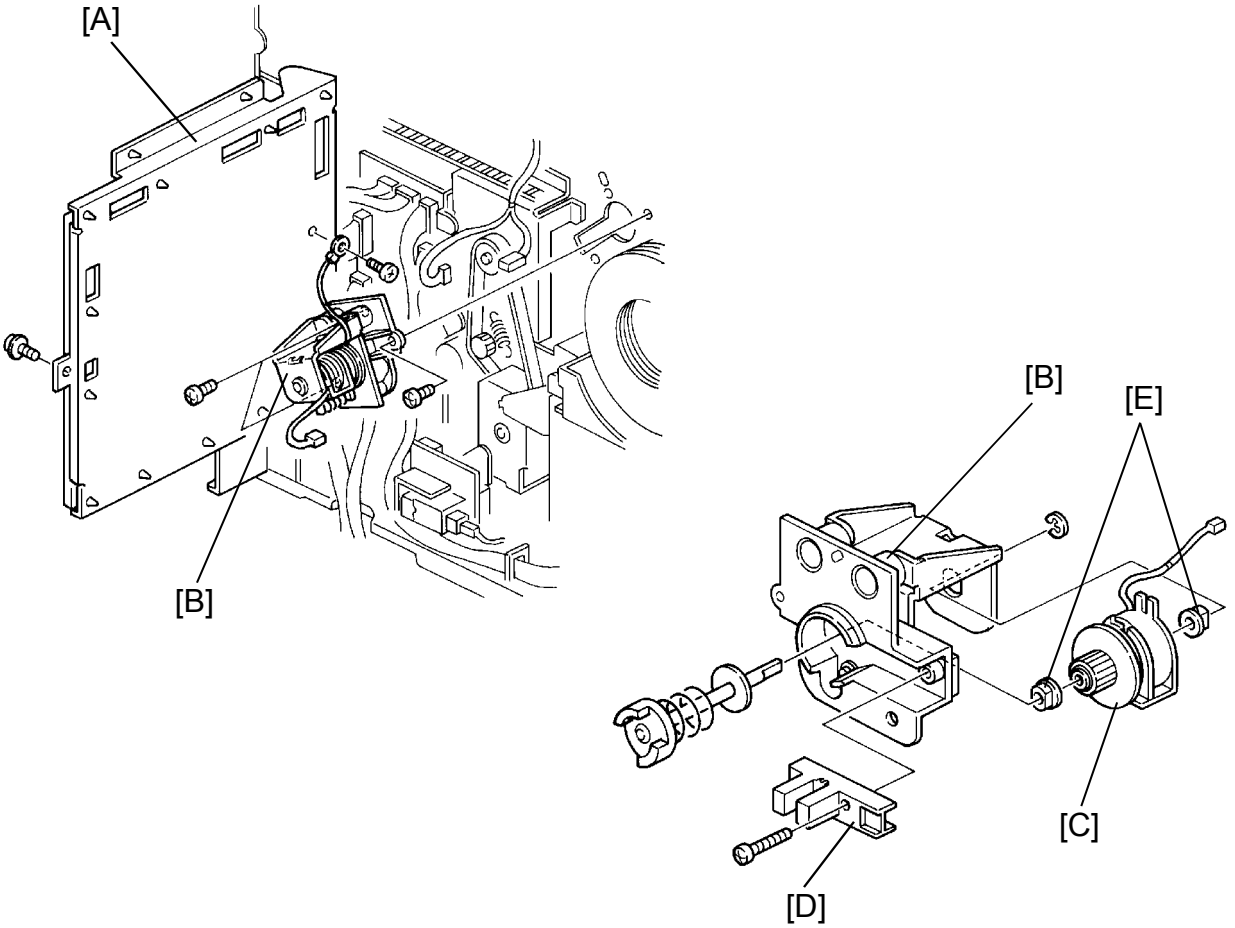

1. Turn off the main switch and unplug the machine.
2. Remove the upper rear cover (4 screws).
3. Swing open the main board [A] (1 screw).
4. Remove the transfer belt position clutch bracket [B] (3 screws, 1 grounding screw and 2 connectors).
5. Replace the transfer belt position clutch [C] (1 E-ring) or the transfer belt position sensor [D] (1 screw)

NOTE: When installing the new clutch [C], make sure to place the bushings [E] from inside of the bracket [B] as illustrated.

10. TRANSFER ROLLER UNIT

10.1 TRANSFER ROLLER UNIT REMOVAL

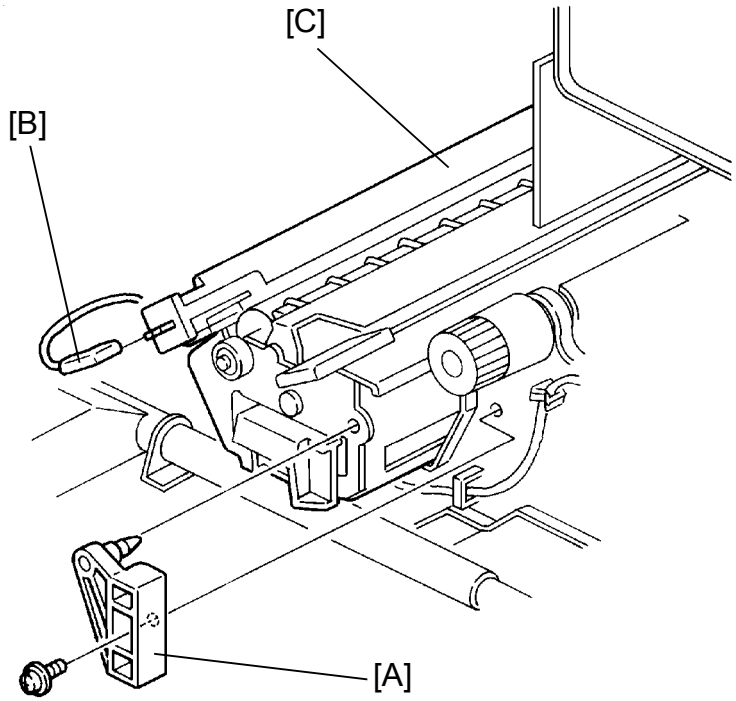

1. Turn off the main switch and unplug the machine.
2. Open the front doors and remove the right inner cover (3 screws).
3. Lower the toner collection duct (1 hook).
4. Remove the transfer roller unit positioning bracket [A] (1 screw).
5. Disconnect the paper discharge plate connector [B] and slide out the transfer roller unit [C].

NOTE: When reinstalling, make sure that the unit's gear does not damage the transfer belt located above.

10.2 TRANSFER ROLLER BLADE REPLACEMENT

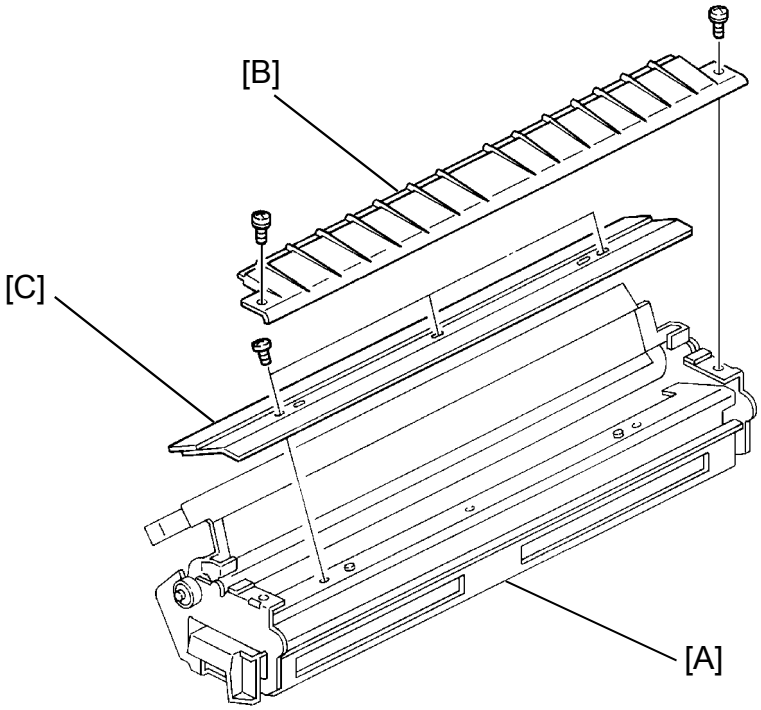

1. Remove the transfer roller unit [A]. (Refer to the Transfer Roller Unit Removal section.)
2. Remove the transfer roller guide plate [B] (2 screws).
3. Replace the transfer roller blade [C] (3 screws).

10.3 PAPER DISCHARGE PLATE REPLACEMENT

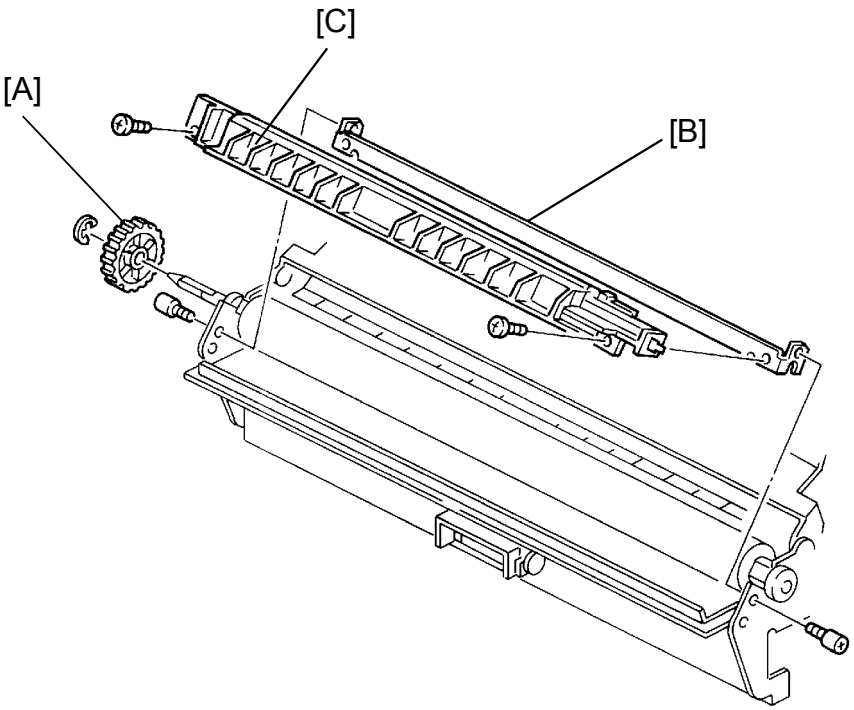

1. Remove the transfer roller unit. (Refer to the Transfer Roller Unit Removal section.)
2. Remove the transfer roller drive gear [A] (1 E-ring).
3. Remove the paper discharge plate with the bracket on [B] (2 positioning screws).
4. Remove and replace the paper discharge plate [C] (2 screws).

10.4 TRANSFER ROLLER REPLACEMENT

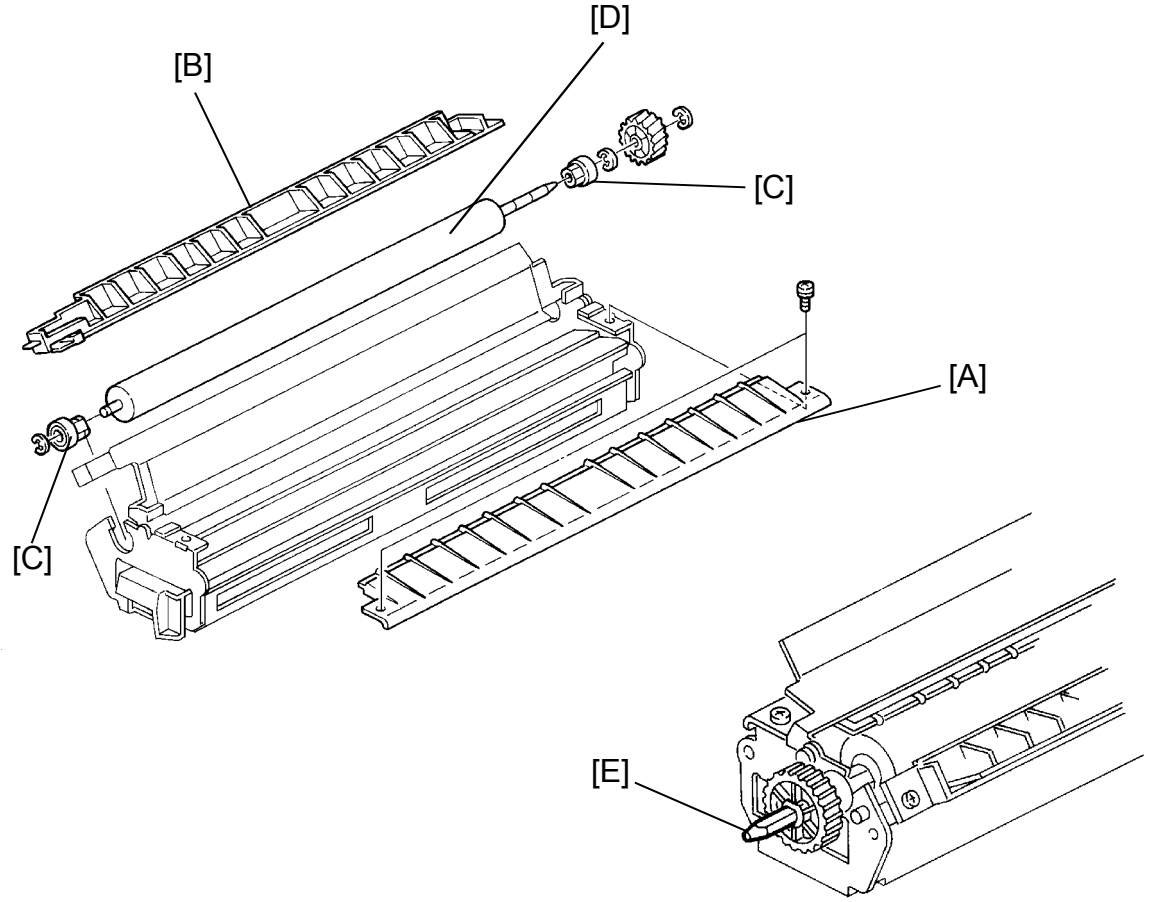

1. Remove the transfer roller unit. (Refer to the Transfer Roller Unit Removal section.)
2. Remove the transfer roller guide plate [A] (2 screws).
3. Remove the paper discharge plate with the bracket on [B]. (Refer to the Paper Discharge Plate Replacement section.)
4. Remove the bushings [C] (1 E-ring each).
5. Replace the transfer roller [D].

NOTE: The end of the transfer roller shaft [E] should be lubricated with silicone grease G40M every 40 k scans.

11. TRANSFER BELT CLEANING UNIT

11.1 TRANSFER BELT CLEANING BLADE REPLACEMENT

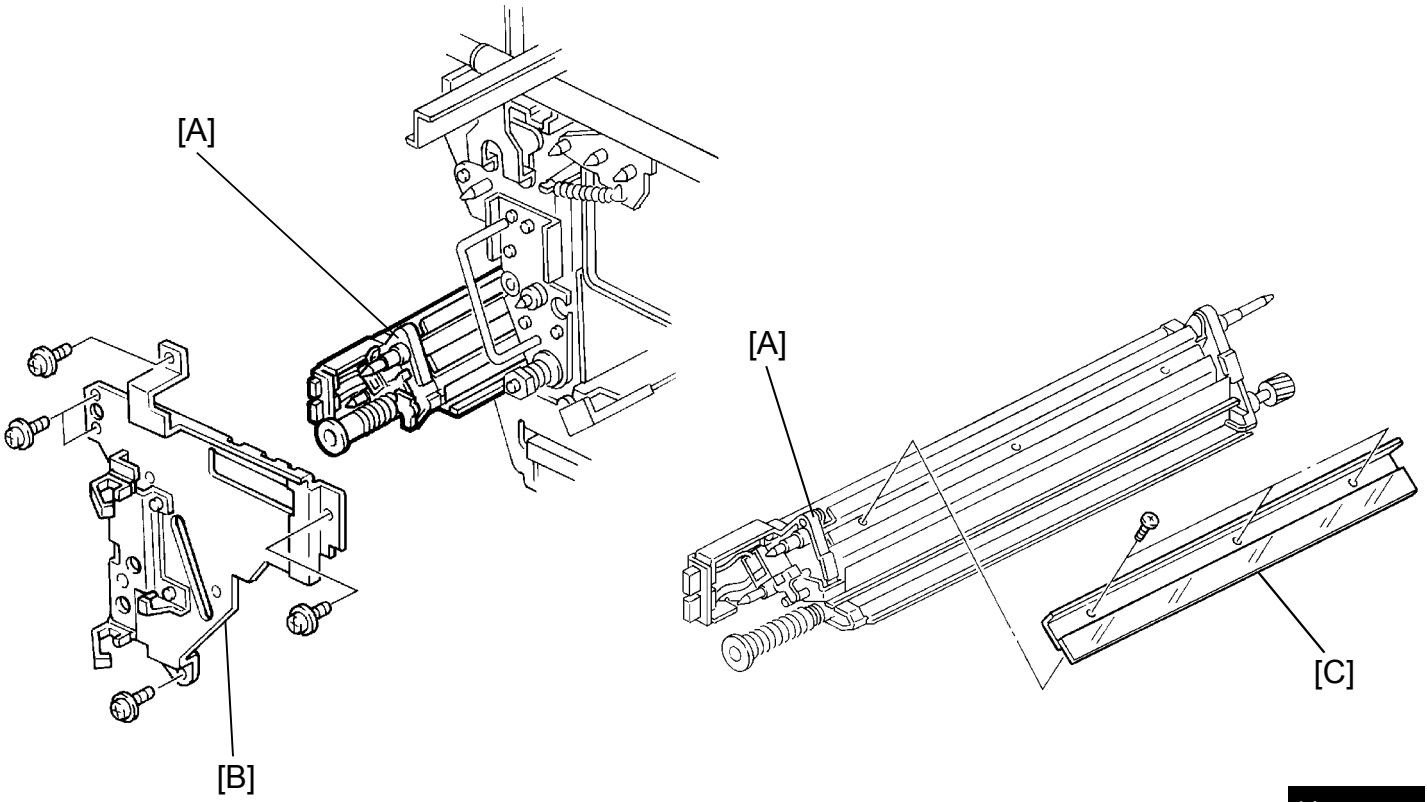

1. Remove the following parts and slide out the transfer belt cleaning unit [A]. (Refer to section 3 Installation.)
   - Toner tank
   - Right inner cover
   - Yellow toner supply receptacle
   - Transfer belt stay [B].

2. Replace the Cleaning blade [C] (3 screws).

NOTE: When reinstalling a new blade, make sure of the following:

- Do not touch the rubber part of the new cleaning blade with your bare hands.
- Dust with setting powder after replacement.
- The cleaning blade solenoid and the entrance seal solenoid's plungers must be in (no contact position with the transfer belt).

11.2 CLEANING BLADE SOLENOID REPLACEMENT

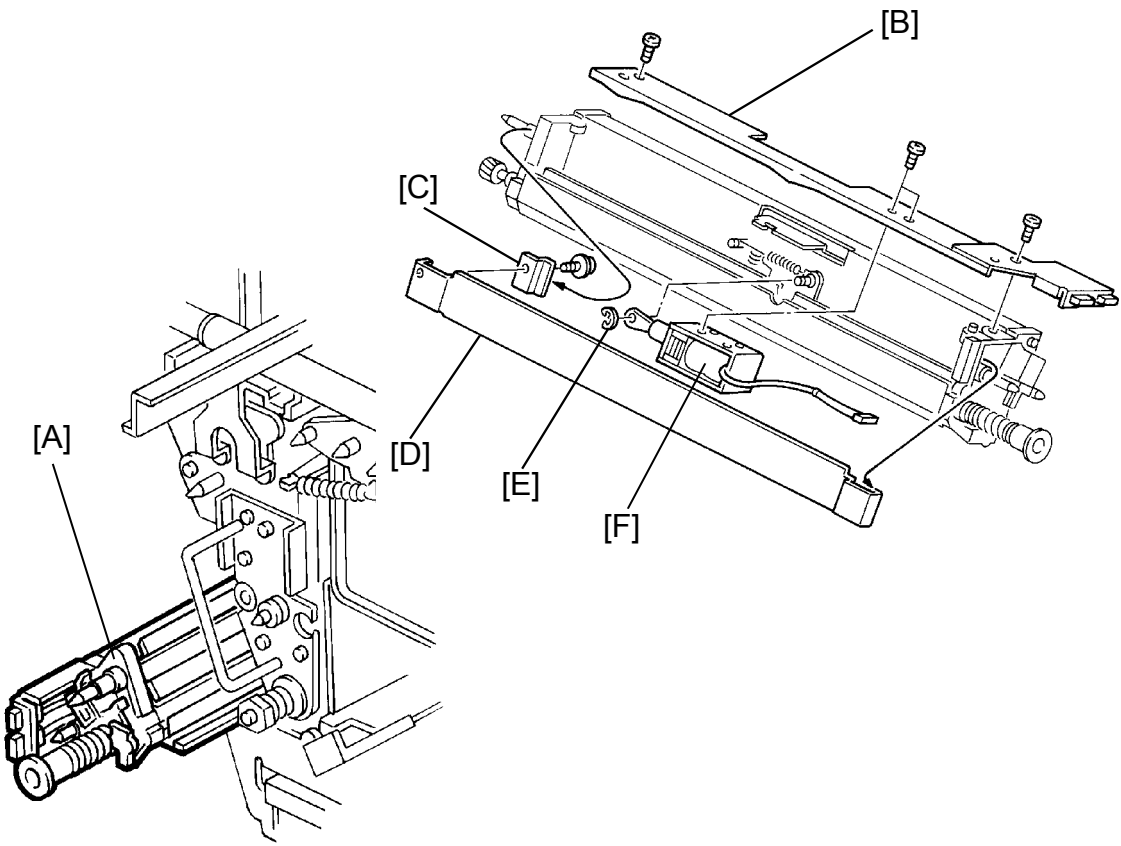

1. Remove the belt cleaning unit [A]. (Refer to the Transfer Belt Cleaning Blade Replacement section.)
2. Disconnect the blade solenoid connector and the entrance seal solenoid connector.
3. Remove the blade solenoid bracket [B] (2 screws).
4. Remove the base plate securing bracket [C] (1 screw) and remove the base plate [D].
5. Remove the blade solenoid plunger E-ring [E].
6. Replace the blade solenoid [F] (2 screws).

NOTE: When reinstalling make sure of the following:

- Set the arm hole of the solenoid plunger to the pin first, then screw the solenoid bracket.
- The cleaning blade solenoid's plunger must be in (no contact position with the transfer belt).

11.3 TRANSFER BELT CLEANING ENTRANCE SEAL SOLENOID REPLACEMENT

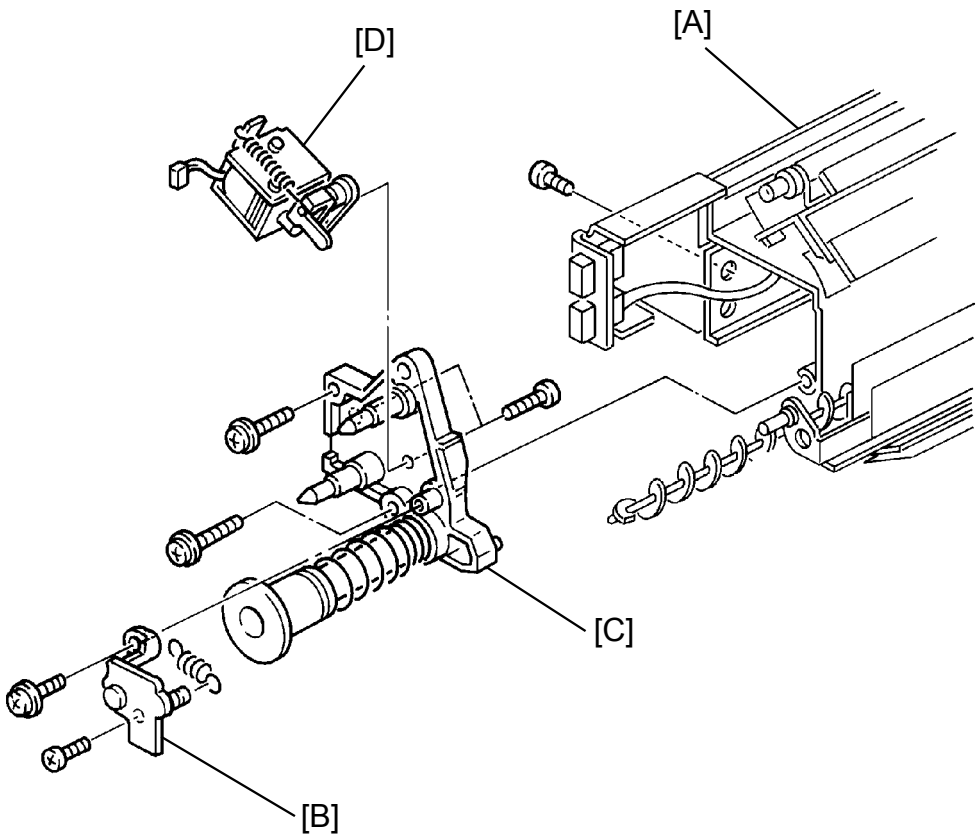

1. Pull out the transfer belt cleaning unit [A] and remove the cleaning blade solenoid bracket. (Refer to the Cleaning Blade Solenoid Replacement section.)
2. Remove the entrance seal front supporting bracket [B] (2 screws and 1 spring).
3. Remove the Cleaning Unit front frame [C] (2 screws).
4. Replace the transfer belt cleaning entrance seal solenoid [D] (2 screws).

NOTE: When reinstalling the unit, make sure that the entrance seal solenoid's plunger and the blade solenoid's plunger are at their in position (no contact with the transfer belt).

12. LUBRICANT UNIT

12.1 LUBRICANT BRUSH AND LUBRICANT BAR REPLACEMENT

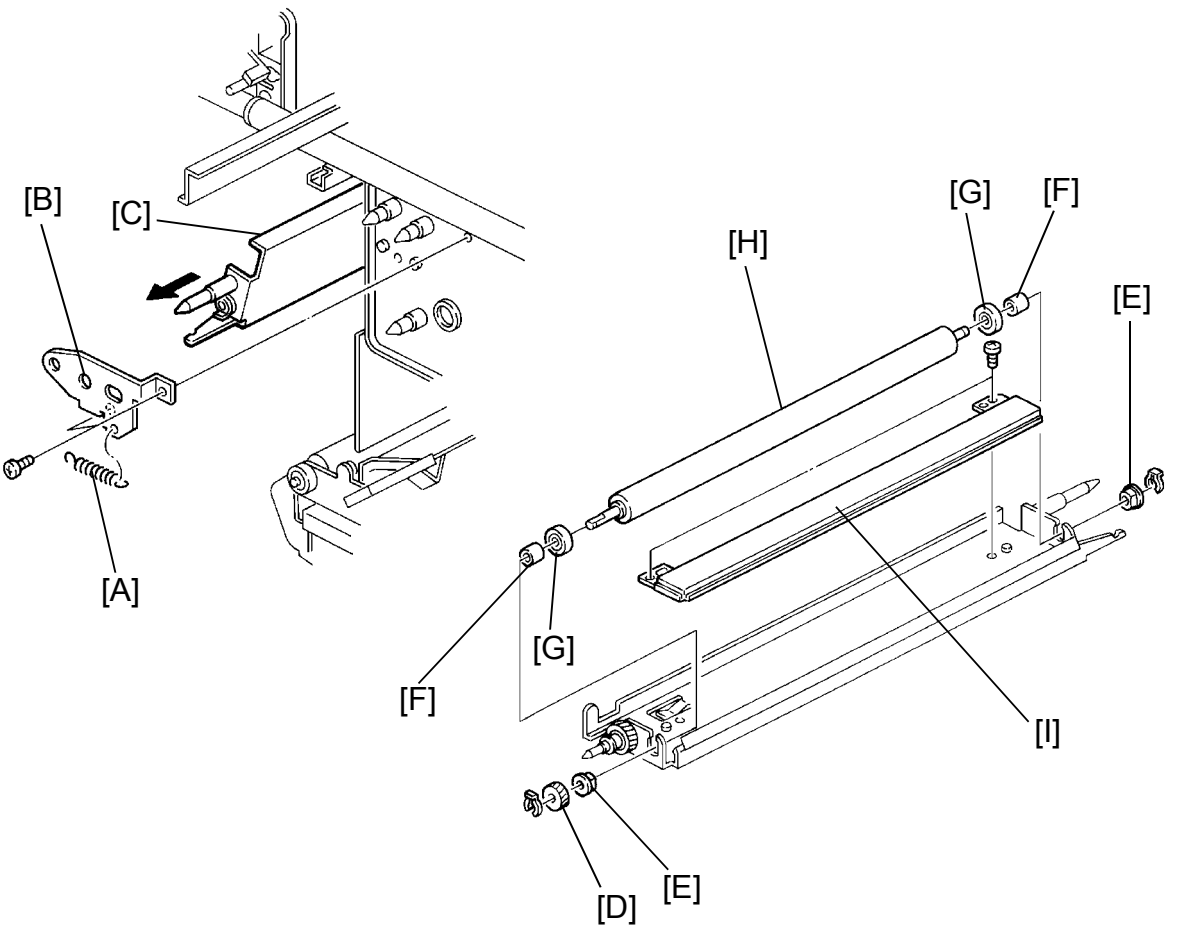

NOTE:
- When replacing the lubricant brush, replace the lubricant bar as well.
- Do not touch the lubricant brush with oily bare hands.

1. Remove the transfer belt unit. (Refer to Transfer Belt Replacement section.)
2. Remove the lubricant brush spring [A].
3. Remove the lubricant unit stay [B] (2 screws) and pull out the lubricant unit [C].
4. Remove the drive gear [D] (1 snap-ring), bushings [E] (1 snap-ring), spacers [F] and guide rollers [G].
5. Replace the lubricant brush [H] and the lubricant bar [I] (2 screws).

12.2 LUBRICANT BRUSH CLUTCH REPLACEMENT

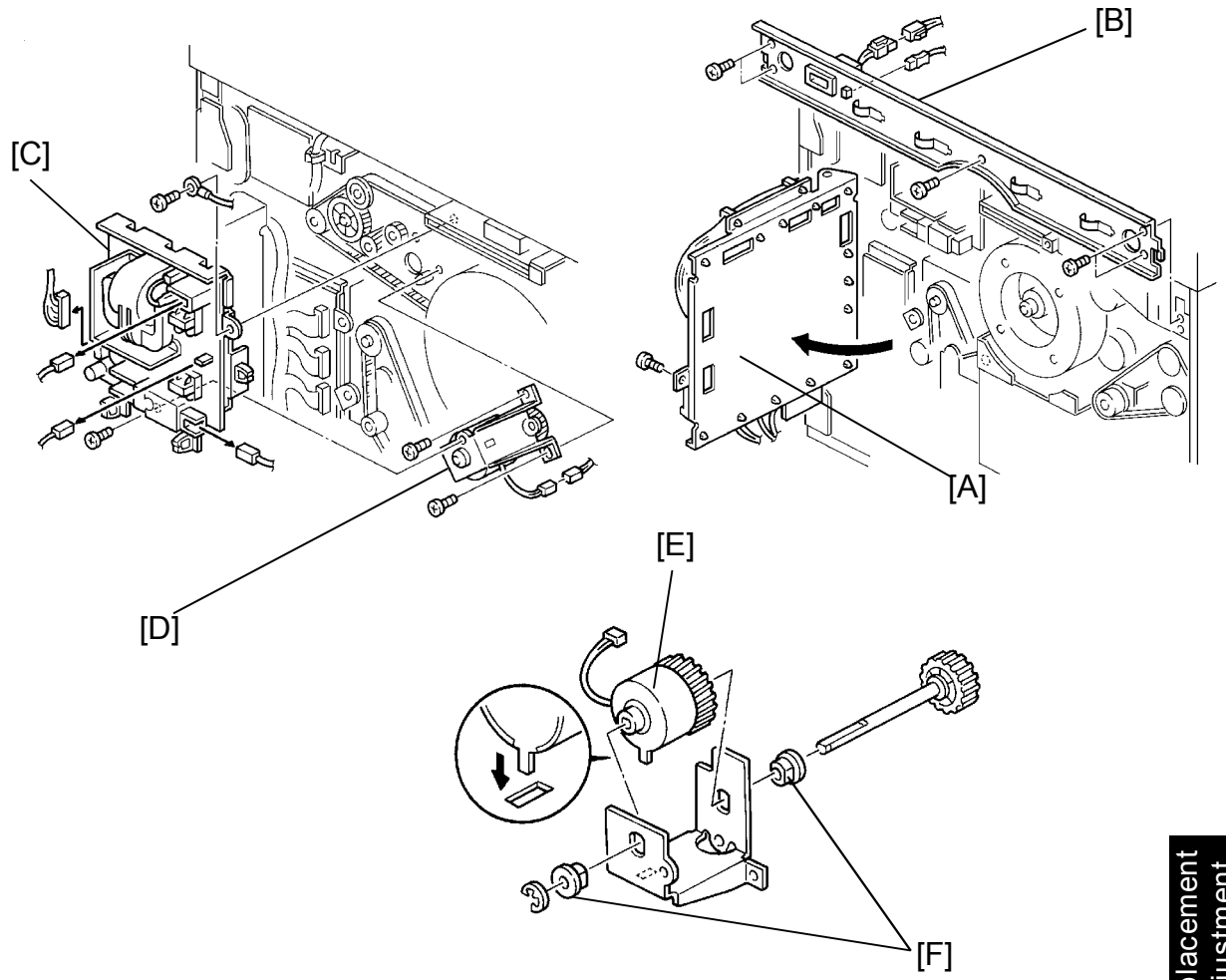

1. Turn off the main switch and unplug the machine.
2. Remove the upper rear cover and swing open the main board [A] (1 screw).
3. Remove the rear supporting frame [B] (5 screws and 2 connectors).
4. Remove the T1/PCC/BR high voltage supply board [C] (2 screws and 4 connectors).
5. Remove the lubricant brush clutch bracket [D] (3 screws and 1 connector).
6. Replace the clutch [E] (1 E-ring).

   NOTE: When installing the new clutch [E], make sure to place the bushings [F] from the outside of the bracket [D] as illustrated.

13. FUSING UNIT

13.1 FUSING UNIT REMOVAL

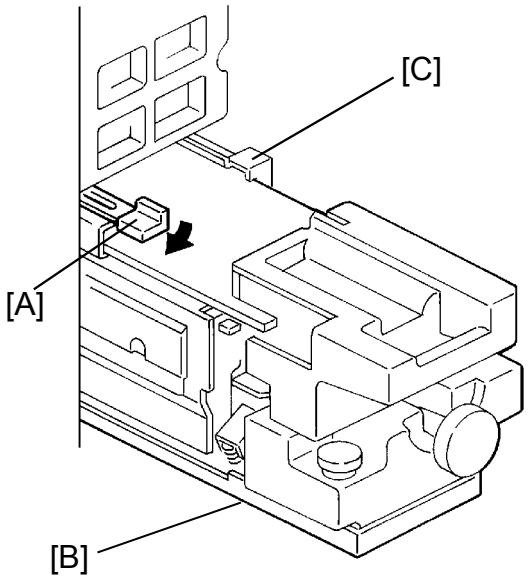

1. Turn off the main switch and unplug the machine.
2. Open the front door and while pressing the lock lever [A], pull the fusing unit [B] half way out.
3. Remove the lock plate [C] (1 screw).
4. While pressing the lock lever [A], remove the fusing unit all the way out.

CAUTION: The fusing unit is very heavy. Before pulling the fusing unit off the rails, support from underneath with your hand.

13.2 CLEANING ROLLER AND SCRAPER REPLACEMENT

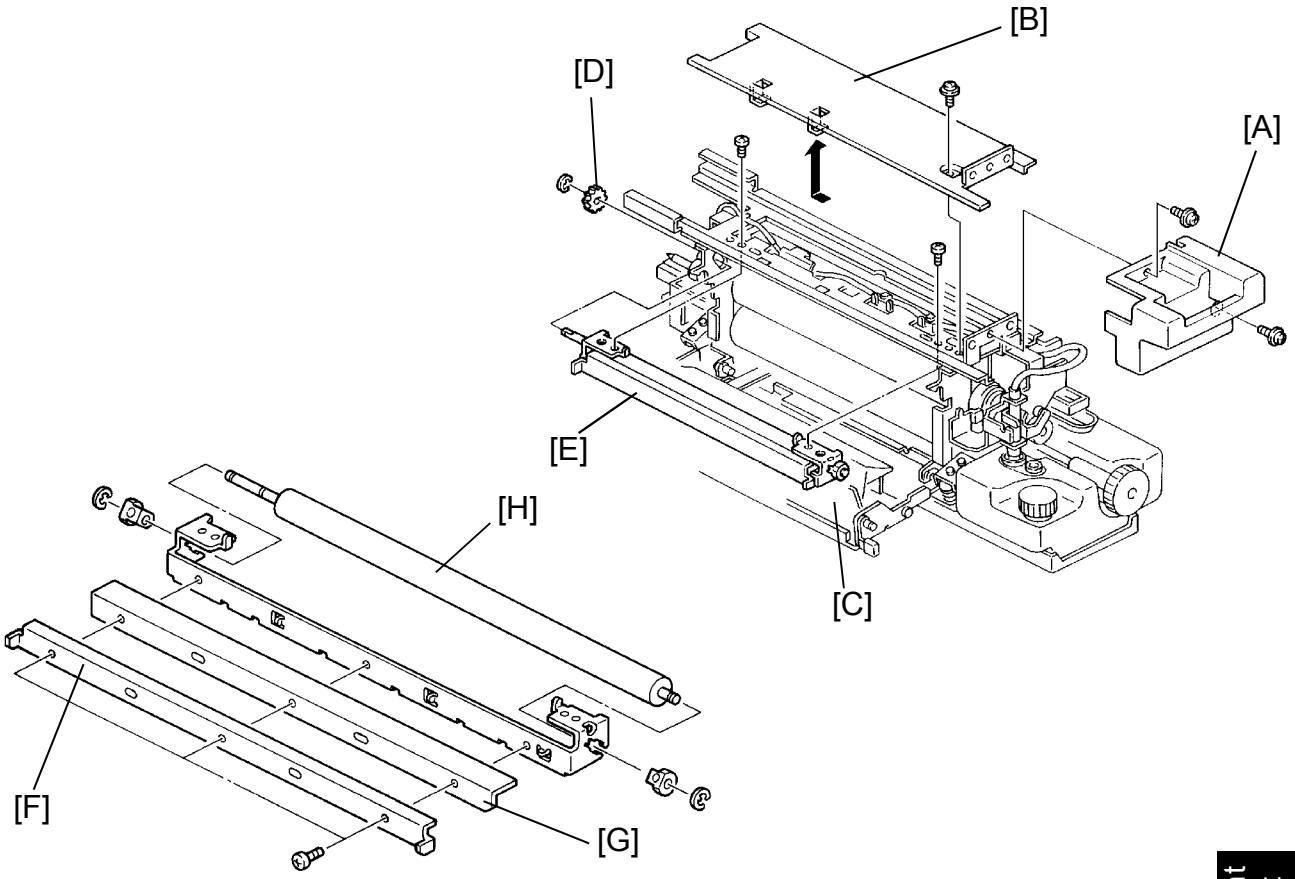

NOTE: If replacing only the cleaning roller scraper [G], perform only steps 4, 7 and 8.

1. Remove the fusing unit from the machine (see Fusing Unit Removal).
2. Remove the handle cover [A] (2 screws).
3. Remove the top cover [B] (1 screw).
4. Press the lock tabs and open the exit cover [C].
5. Remove the cleaning roller gear [D] (1 E-ring).
6. Remove the cleaning unit [E] (2 screws).
7. Remove the cleaning blade bracket [F] (3 screws).
8. Remove the cleaning roller scraper [G].
9. Remove the cleaning roller [H] (2 E-rings).

13.3 OIL SUPPLY PAD REPLACEMENT

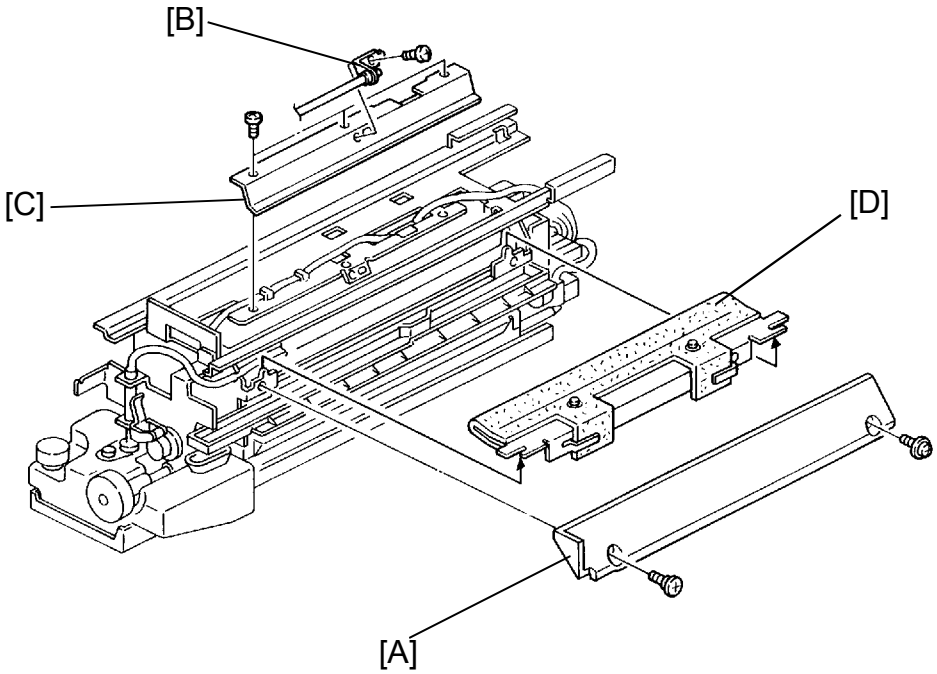

1. Remove the fusing unit from the machine (see Fusing Unit Removal).
2. Remove the handle cover (2 screws).
3. Remove the top cover (1 screw).
4. Remove the entrance cover [A] (1 screw and 1 step screw).
5. Remove the oil tube bracket [B] (1 screw).
6. Remove the pressure plate [C] (3 screws).
7. Replace the oil supply pad [D].

13.4 FUSING THERMISTOR REPLACEMENT

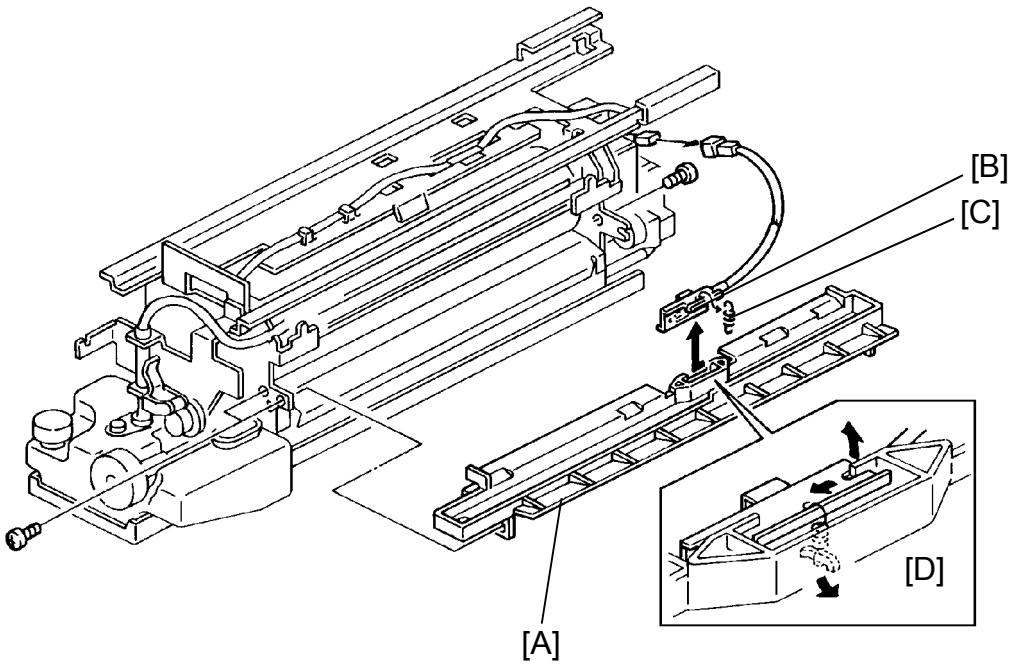

1. Remove the oil supply pad (see Oil Supply Pad Replacement).
2. Remove the oil sump [A] with the fusing thermistor [B] (3 screws and 1 connector).
3. Remove the spring [C] and pull off the fusing thermistor [B].

CAUTION: After installing the thermistor, make sure that it's movable as shown [D].

13.5 OIL BLADE REPLACEMENT

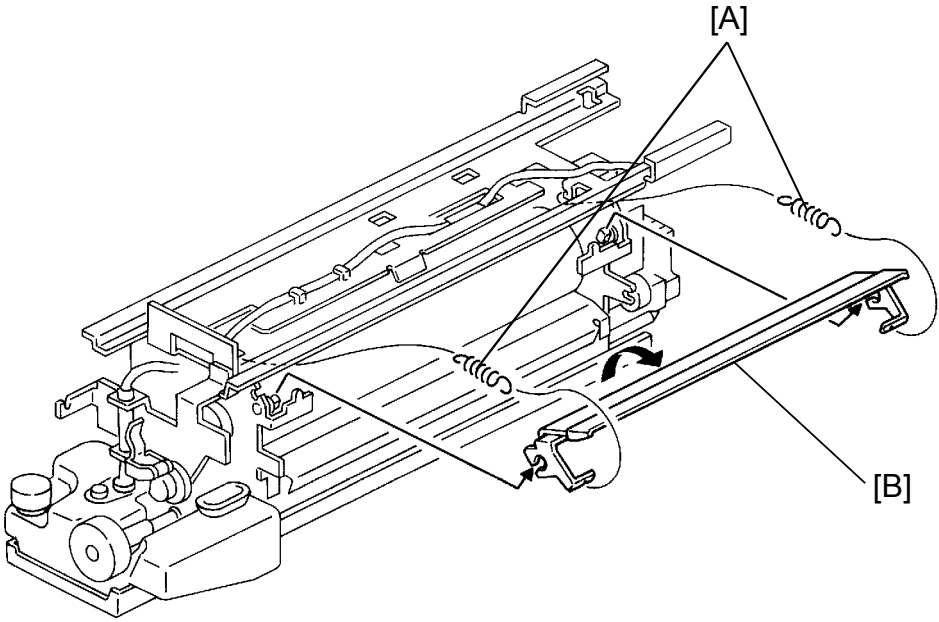

1. Remove the oil supply pad (see Oil Supply Pad Replacement).
2. Remove the oil sump (3 screws and 1 connector).
3. Remove the two oil blade springs [A].
4. Flip the oil blade [B] up and remove it.

CAUTION: When installing a new blade, apply silicon oil gently over the entire length of the blade, and turn the fusing knob clockwise to distribute the oil over the surface of the roller. This will prevent the blade from flipping.

13.6 FUSING LAMP AND FUSING THERMOFUSE REPLACEMENT

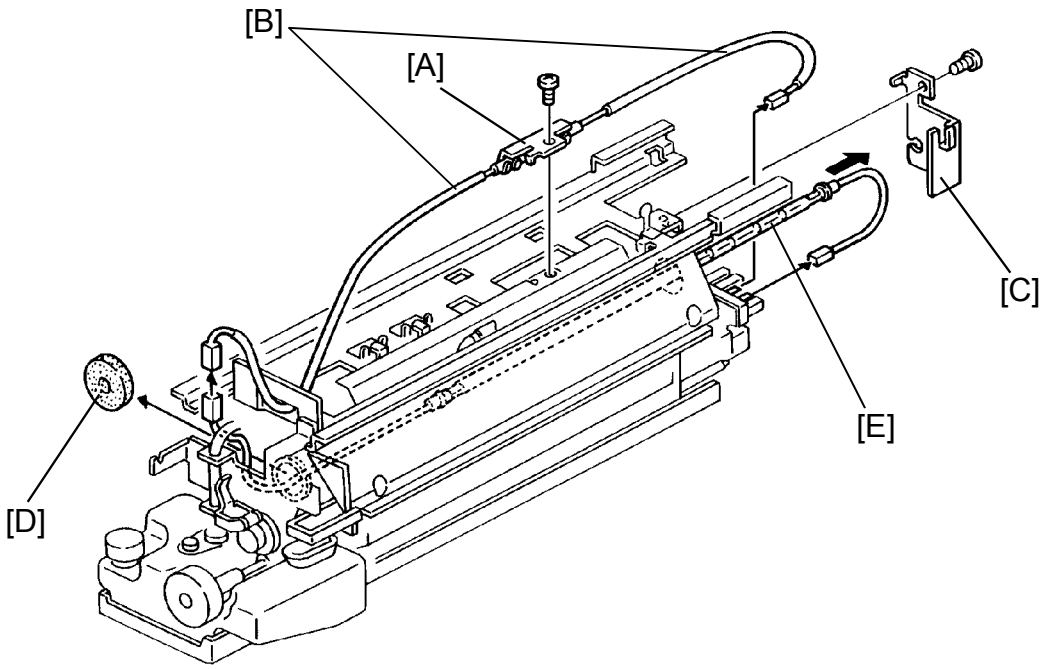

NOTE: If replacing only the fusing lamp, skip steps 4 and 5.

1. Remove the fusing unit from the machine (see Fusing Unit Removal).
2. Remove the handle cover (2 screws).
3. Remove the top cover (1 screw).
4. Remove the fusing thermofuse [A] and harness [B] (1 screw and 2 connectors).
5. Remove the bracket from the thermofuse.
6. Remove the rear fusing lamp bracket [C] (1 screw, 1 connector).
7. Remove the pad [D] from the front end.
8. Pull the fusing lamp [E] out from the rear (1 connector).

NOTE: When reinstalling the fusing lamp, make sure that both ends are properly fixed in the brackets and the pad [D] is placed in between the front fusing lamp bracket and the ball bearing.

13.7 HOT ROLLER REPLACEMENT

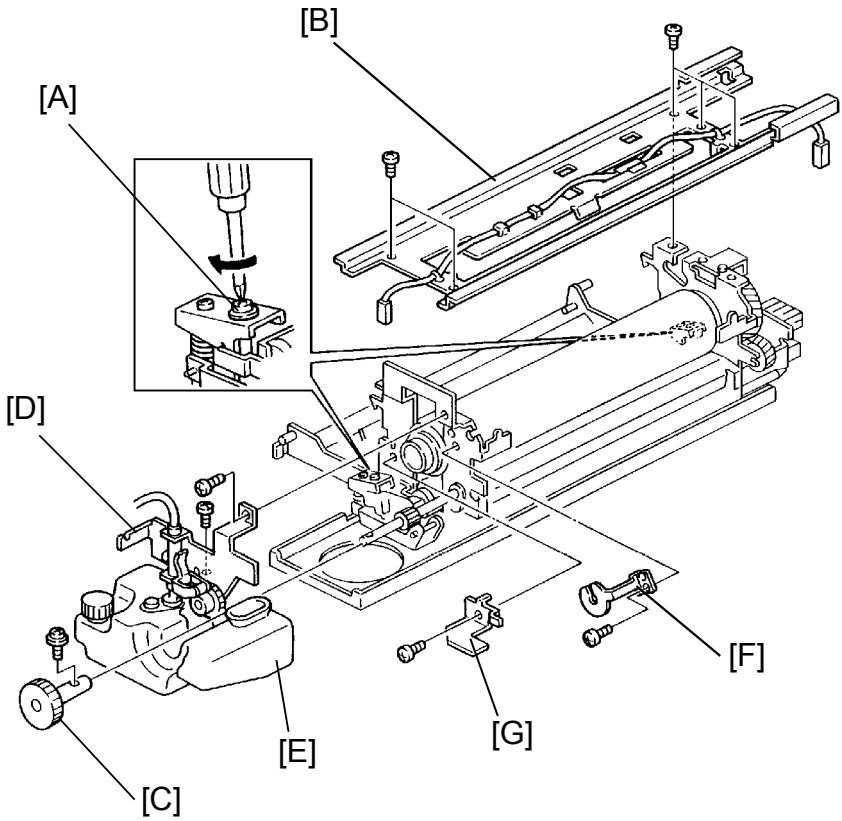

1. Remove the oil blade (see Hot Roller Blade Replacement).
2. Press the two lock tabs and open the fusing exit cover.
3. Screw the pressure release screws [A] all the way in (one screw on each side).

   NOTE: Do not touch the screws for the springs. These are adjusted at the factory to maintain the proper nip band width.
4. Remove the upper frame [B] (5 screws and 4 connectors).
5. Remove the fusing unit knob [C] (1 screw).
6. Remove the oil pump [D] (2 screws and 1 clamp).
7. Remove the oil tank [E].
8. Remove the front fusing lamp bracket [F] (1 screw) and the hot roller brackets [G] (1 screw each).

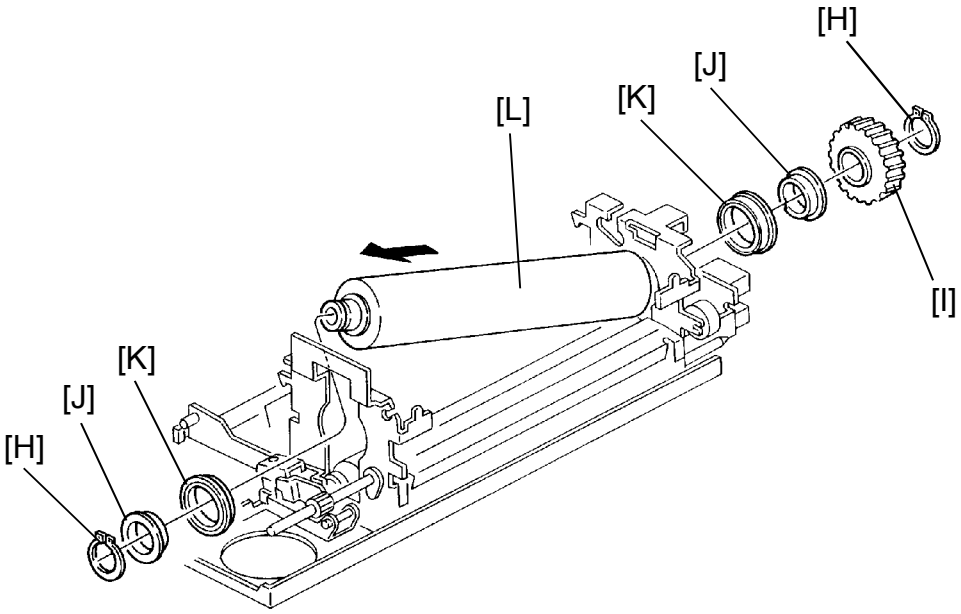

9. Remove the fusing lamp (see Fusing Lamp and Upper Thermofuse Replacement).
10. Remove the front and rear C-rings [H].
11. Remove the hot roller gear [I], hear isolating bushings [J] and ball bearings [K] (1 screw).
12. Remove the hot roller [L].

NOTE:
- When replacing the hot roller at a PM cycle , lubricate the inner and out surface of the heat isolating bushings [J] with Barrierta L55/2.
- Clean the ball bearings [K] with a dry cloth.
- There should be some play at the rear of the hot roller gear [I].

13.8 PRESSURE ROLLER LAMP REPLACEMENT

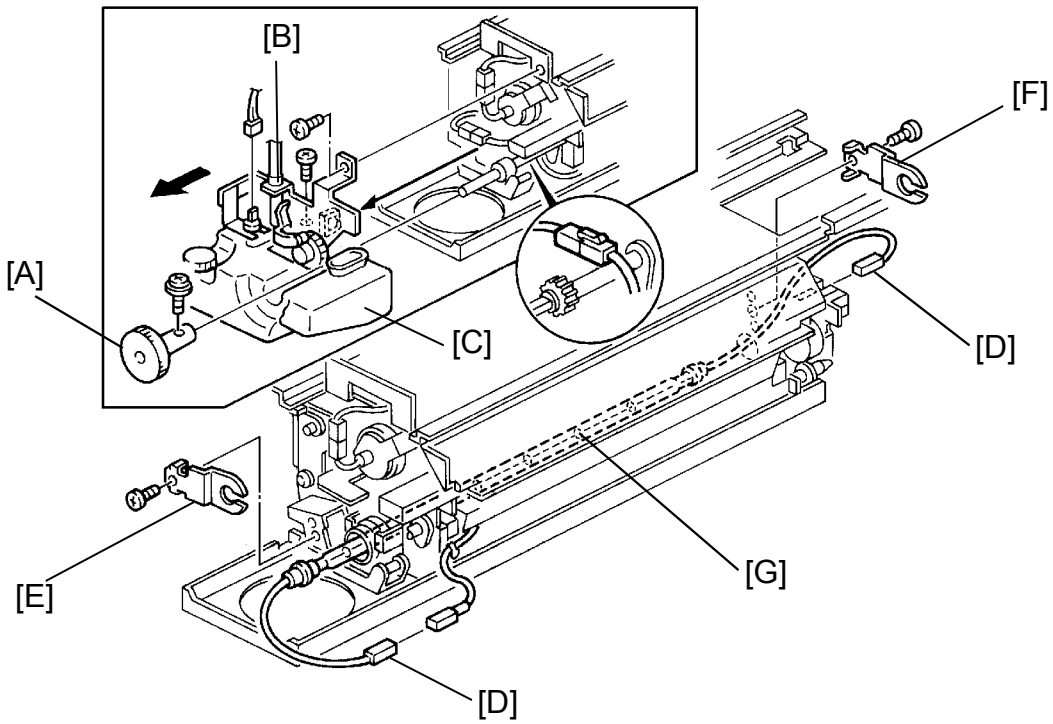

1. Remove the fusing unit from the machine. (See Fusing Unit Removal.)
2. Remove the handle cover (2 screws).
3. Remove the top cover (1 screw).
4. Remove the fusing unit knob[A] (1 screw).
5. Remove the oil pump assembly [B] (2 screws and 1 clamp) with the oil tank [C] (1 connector).
6. Uncouple the connectors [D] on each side of the lamp.
7. Remove the front lamp bracket [E] (1 screw).
8. Remove the rear lamp bracket [F] (1 screw).
9. Slide out the pressure roller lamp [G] from the front.

13.9 PRESSURE ROLLER REPLACEMENT

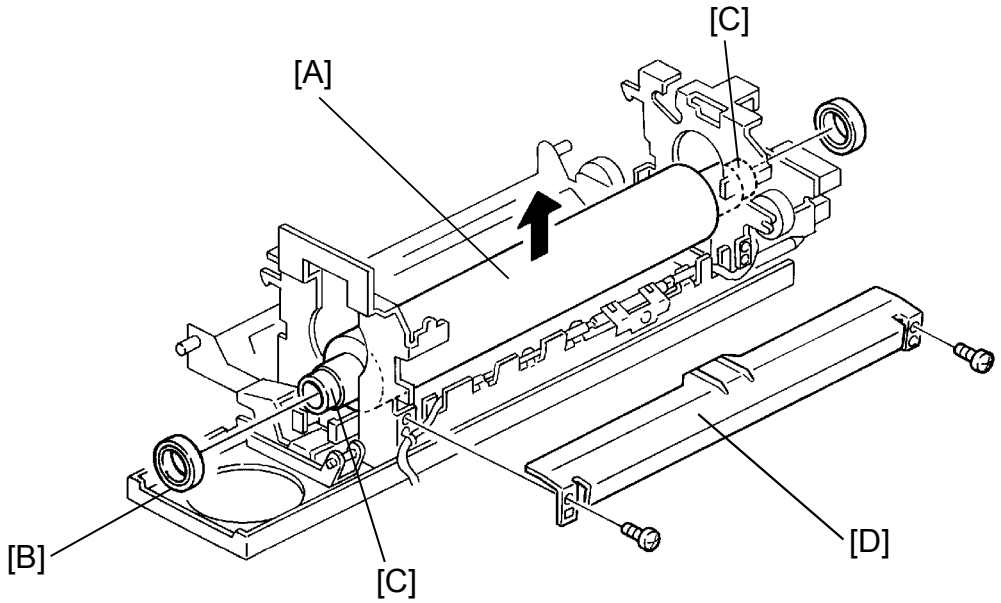

NOTE: When replacing the pressure roller [A] and its ball bearings [B], lubricate the roller shaft [C] and inner surface of the ball bearings with Barrierta L55/2.

1. Remove the hot roller (see Hot Roller Replacement).
2. Remove the pressure roller lamp (see Pressure Roller Lamp Removal).
3. Remove the fusing unit entrance guide plate [D] (2 screws).
4. Lift the pressure roller [A] from the front side and pull off the front bearing [B].
5. Remove the pressure roller.

13.10 PRESSURE ROLLER THERMISTOR REPLACEMENT

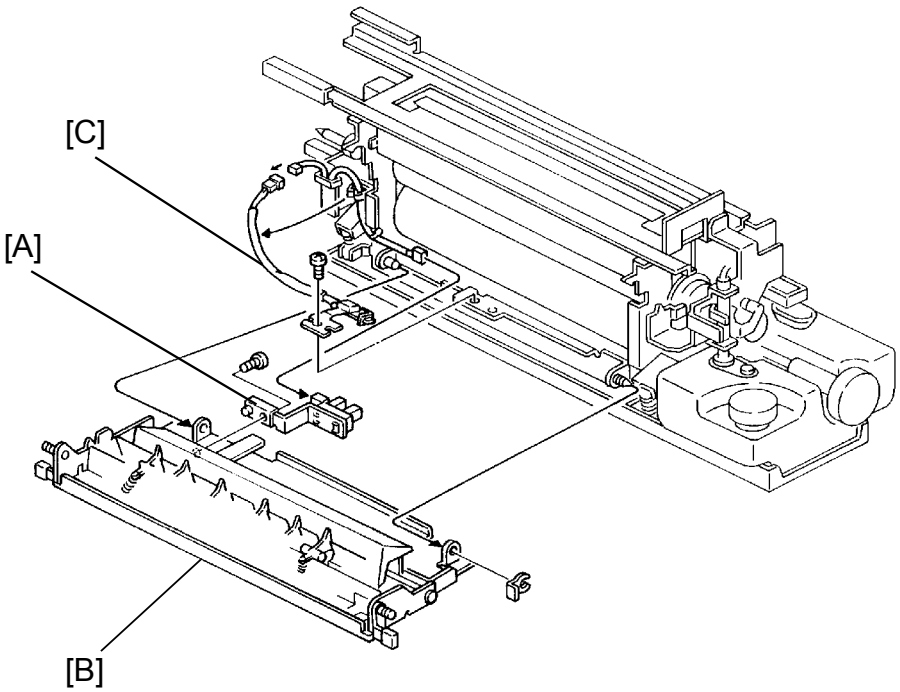

1. Remove the fusing unit from the machine (see Fusing Unit Removal).
2. Press the two lock tabs and open the fusing exit cover.
3. Disconnect the exit sensor connector [A] and free the harness from the clamps.
4. Remove the exit cover [B] (1 snap ring).
5. Remove the pressure roller thermistor [C] (1 screw and 1 connector).

CAUTION: When reinstalling the thermistor make sure the thermistor is in contact with the pressure roller.

13.11 TRANSPORT MOTOR REPLACEMENT

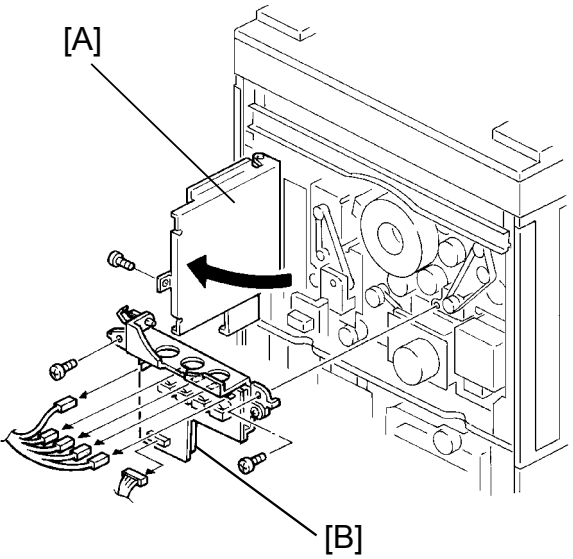

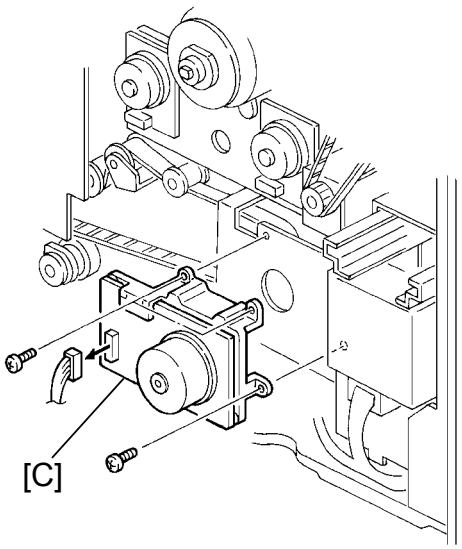

1. Turn off the main switch and unplug the machine.
2. Remove the upper rear cover and swing open the main board [A] (1 screw).
3. Remove the high voltage supply board-B [B] (2 screws).
4. Remove the transport motor assembly [C] (3 screws and 1 connector).
5. Remove the gear (1 Allen screw) and replace the motor.

13.12 FUSING PRESSURE (NIP BAND WIDTH) CONFIRMATION

NOTE: Normally this adjustment is not needed in the field. (The standard factory settings is shown on the table below.)
Perform the following procedures only when the problem is thought to be caused by the faulty nip band width.

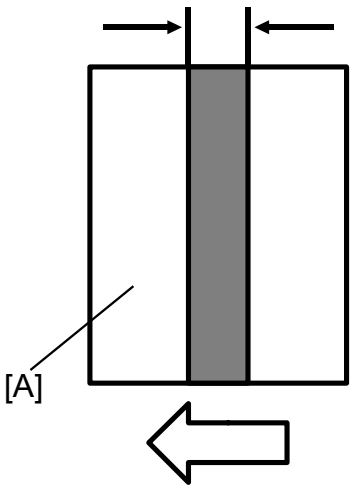

LOCATION	STANDARD
Center	10.0 mm (Confirmation reference)
Both Edge	10.5 ± 0.5 mm

1. After warming up, turn off the main switch and pull out the fusing unit.
2. Pass an OHP sheet sideways [A] through the rollers to about the center position.
3. Wait 30 seconds, then remove the OHP sheet.
4. Measure the center area and both edges of the nip width.
5. If out of standard, adjust the pressure by using the spring screws located at both edges of the fusing unit. (Turning the screws clockwise will increase the nip band width.)

   Confirm that the nip band width is within specification.

14. OTHERS

14.1 MAIN CONTROL BOARD REPLACEMENT

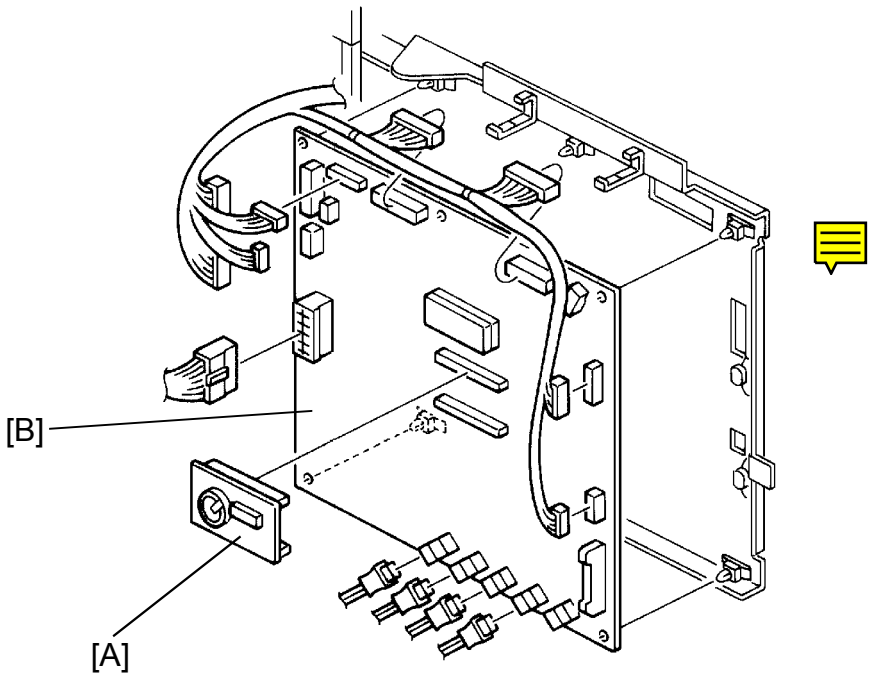

CAUTION: The RAM board on the main control board has a lithium battery which can explode if replaced incorrectly. Replace the battery only with an identical one. The manufacturer recommends replacing the entire RAM board. Do not recharge or burn this battery. Used batteries must be handled in accordance with local regulations.

1. Turn off the main switch and unplug the machine.
2. Remove the upper rear cover (4 screws).
3. Remove the RAM board [A].
4. Disconnect all the connectors from the main control board [B].
5. Replace the main control board [B] (5 locking supports).
6. Install the RAM board [A] on the new main control board.
7. Reinstall the upper rear cover and turn on the main switch.
8. Check the machine operation and copy quality.

14.2 DEVELOPMENT FILTER AND DEVELOPMENT OZONE FILTER REPLACEMENT

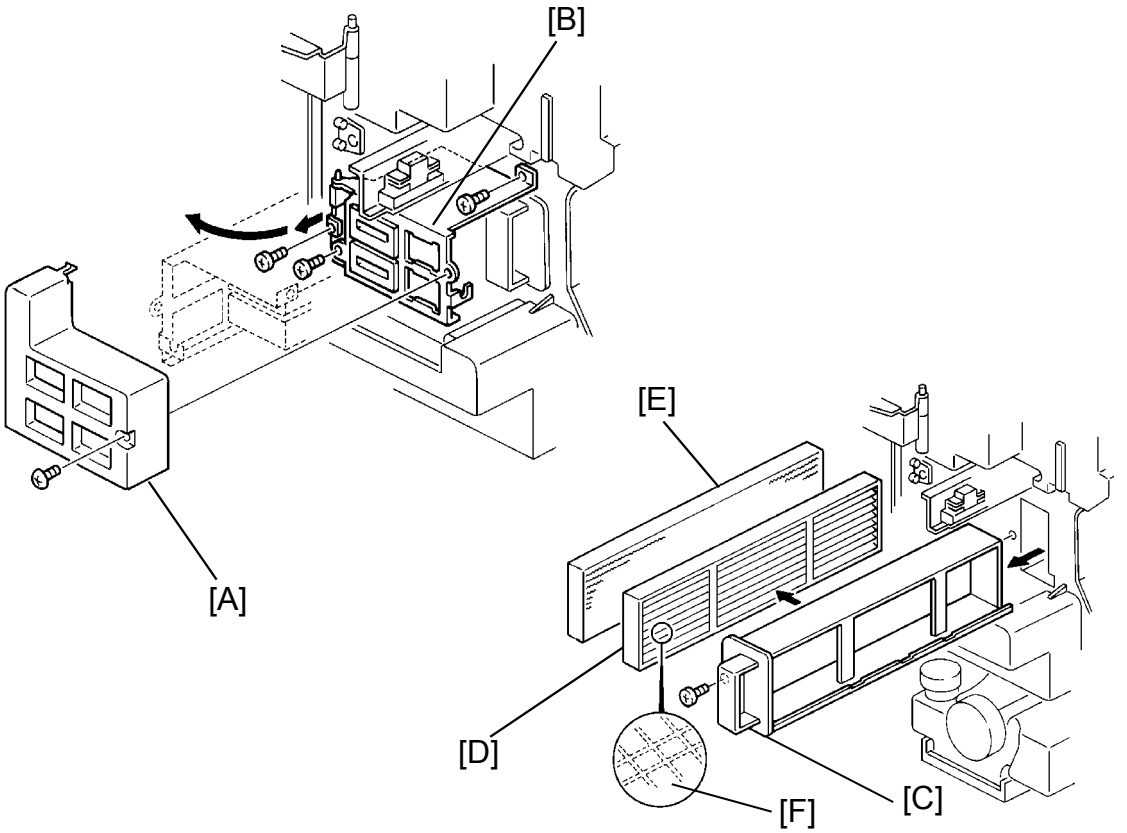

1. Turn off the main switch and unplug the machine.
2. Open the front doors and remove the toner tank (2 screws).
3. Remove the total counter cover [A] (1 screw).
4. Pull and swing out the total counter bracket [B] as shown (3 screws).
5. Slide out the filter holder [C] (1 screw).
6. Remove the filters [D, E] and clean the filter holder [C].
7. Install the new development filter [D] and development ozone filter [E].

   NOTE: Install the new development filter [D] with the net facing towards the ozone filter [E] as shown [F].

14.3 FILTER REPLACEMENT (DEVELOPMENT EXHAUST, CHARGE INLET FAN, FUSING EXHAUST OZONE, OPTICS COOLING FAN AND INNER COOLING FAN)

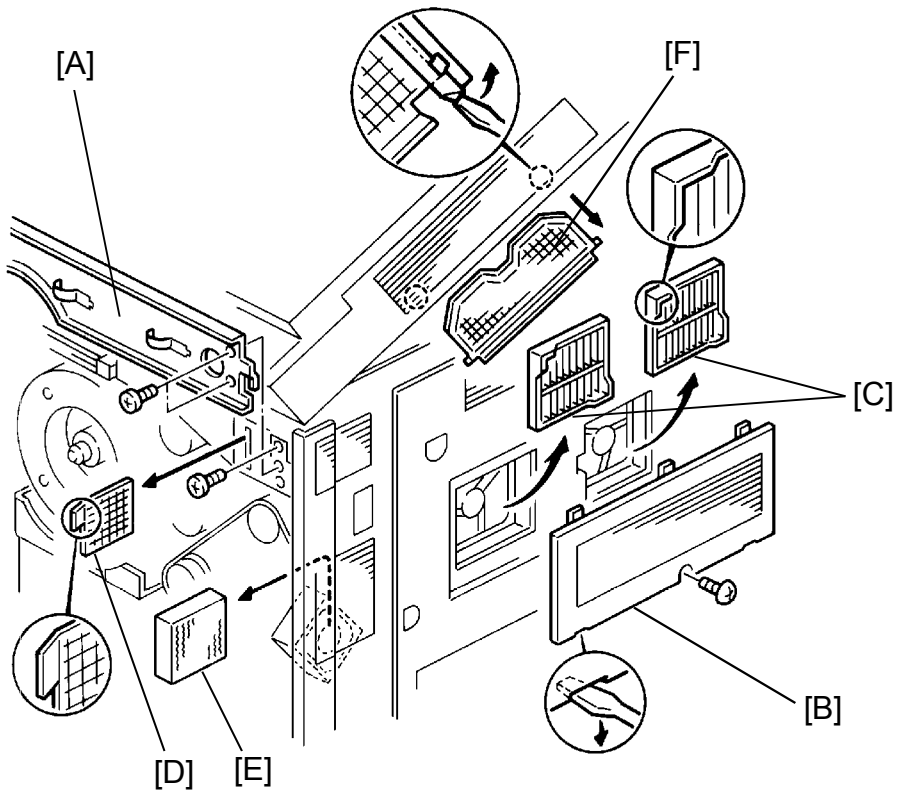

1. Lift up the scanner unit. (Refer to the Optical Housing unit Replacement section step 1 to 7.)
2. Remove the rear supporting frame [A] (5 screws and 2 connectors).
3. Remove the exhaust filter cover [B] (1 screw).
4. Replace the development exhaust filters [C], charge inlet fan filter [D], fusing exhaust ozone filter [E], and the optics cooling fan filter [F] as shown.

NOTE: The inner cooling fan filter is located under the lower left inner cover. For replacement, refer to the Inner Cover Removal section.

14.4 TONER TANK AGITATOR REPLACEMENT

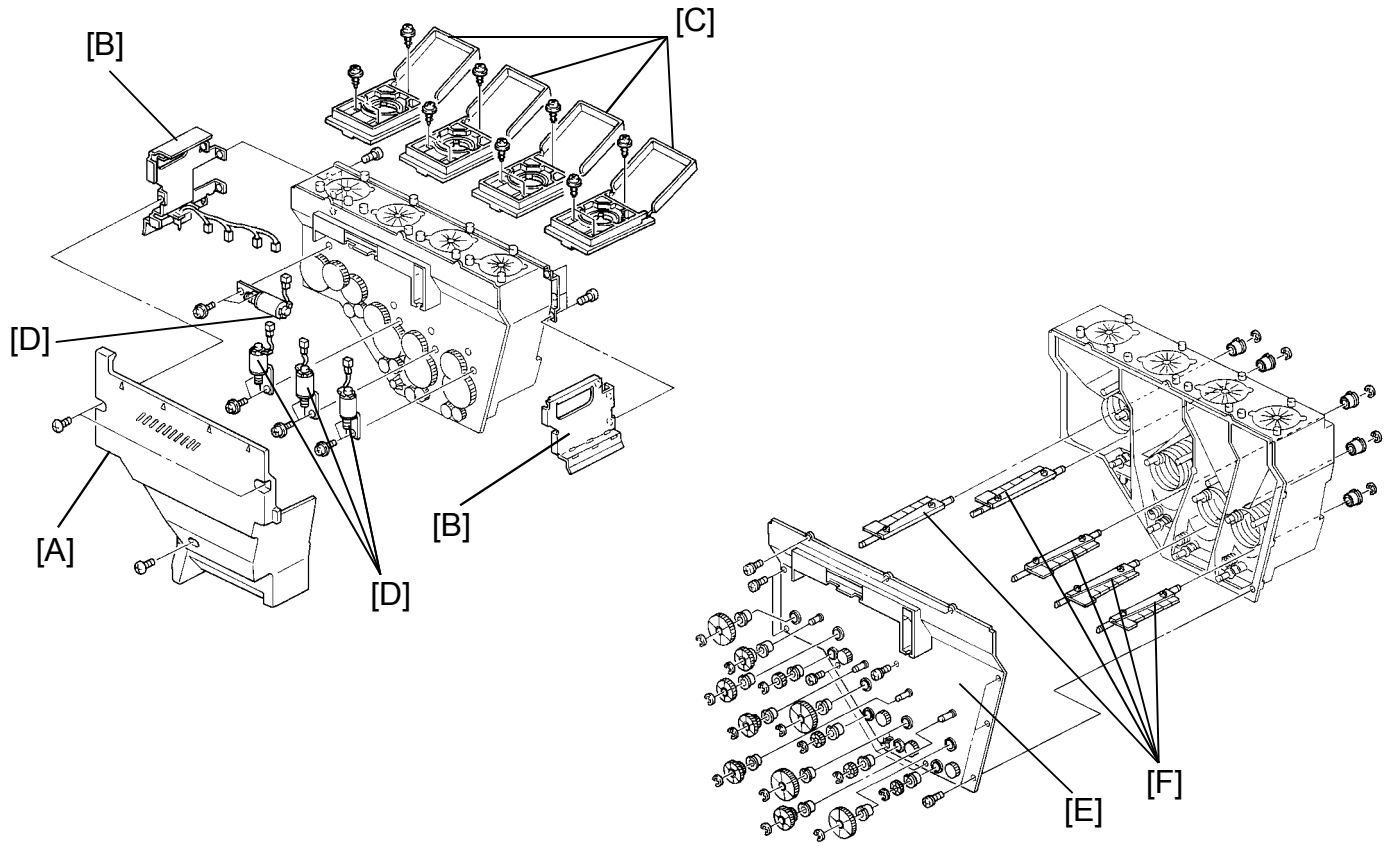

This procedure is very messy. Always work on newspapers or anything large enough to catch all the toner that will spill out. Take care to keep the customers site clean.

1. Open the front doors and remove the toner tank unit (2 screws).
2. Remove the toner tank outer cover [A] (3 screws).
3. Remove both handle brackets [B] (4 screws each).
4. Remove all the toner tank covers [C] (3 screws each).
5. Dispose all the toner in the toner tank.
6. Remove all the toner supply motor [D] (2 screws each).
7. Remove all the gears on the toner tank front cover [E] as shown.
8. Remove the toner tank front cover [E].
9. Replace the agitators [F] (1 E-ring).

14.5 PAPER TRANSPORT BELT REPLACEMENT

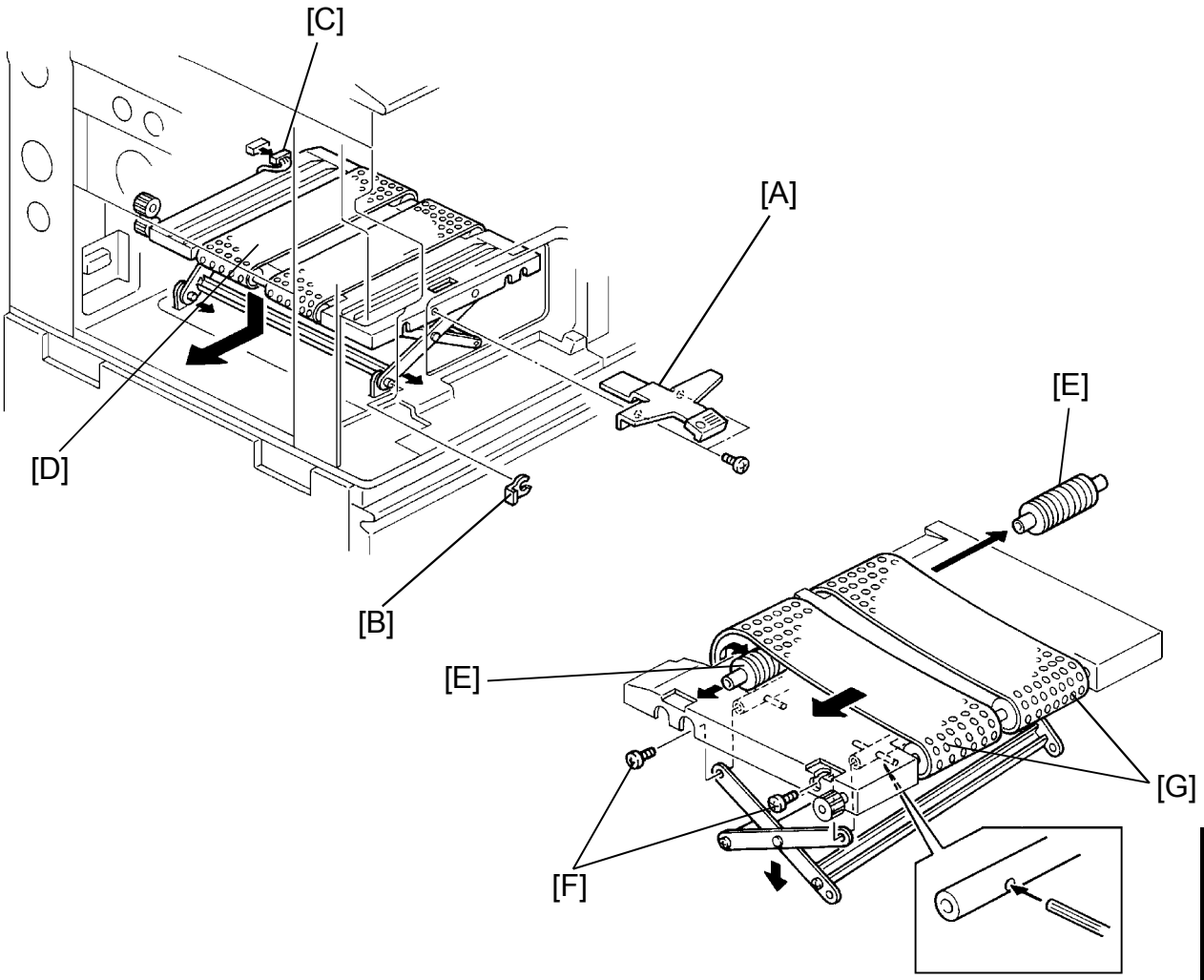

1. Remove the upper left cover. (Refer the Exterior section.)
2. Remove the fusing unit. (Refer the Fusing Unit section.)
3. Remove the paper transport belt lever [A] (2 screws).
4. Remove the snap ring [B] and connector [C].
5. Slide out the paper transport belt unit [D] as shown.
6. Remove the 2 transport belt rollers [E] (transfer belt side) as shown.
7. Unscrew the 2 securing screws [F] (rear side).
8. Replace the transport belts [G].
9. Reinstall the unit.

14.6 POINT ACCURACY ADJUSTMENT

When the touch panel sensing mechanism is not working properly, adjust it as follows:

1. Press the Interrupt key.
2. Press the Clear/Stop key for more than 3 seconds.

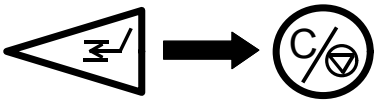

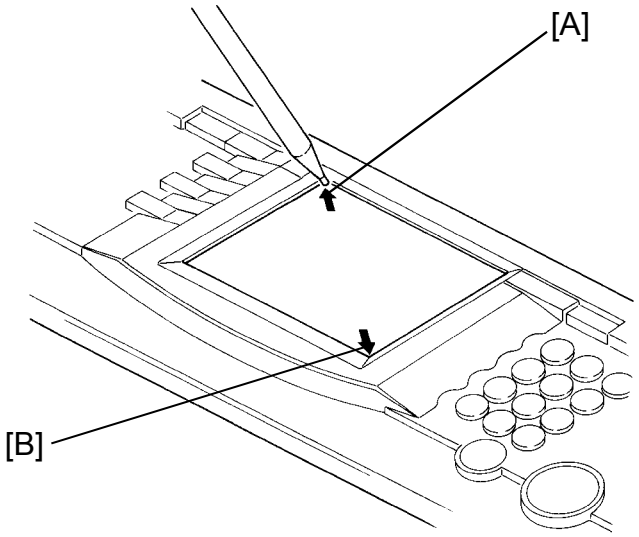

3. The graphic sensing adjustment screen will appear. Touch the upper left corner [A] then the lower right corner [B] of the panel using a pointed tool.
4. Touch a few spots on the LCD touch panel, and confirm that the marker on the screen appears exactly at the same location as the pointed tip. If it is not, press the Clear/Stop key and repeat this procedure.
5. Press the Enter key to save the setting.
6. Press the Interrupt key to cancel the interrupt mode.

SECTION 6

TROUBLESHOOTING

1. SERVICE CALL CONDITIONS

1.1 SUMMARY

There are 4 levels of service call conditions.

Level	Definition	Display
A	The SC can only be reset by service representative (see note in the next page) to prevent the machine from being damaged. The copier cannot be operated at all.	SC display will not be canceled. 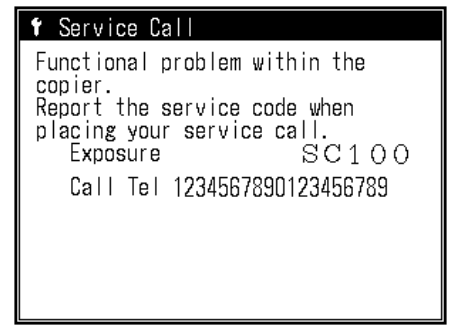
B	The SC can be reset by turning main switch off and on if the SC is caused by misdetection.	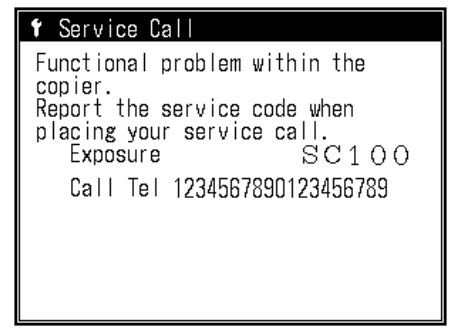
C	The copier can be operated as usual except for the unit related to the service call.	If the related function is selected, this display appears. 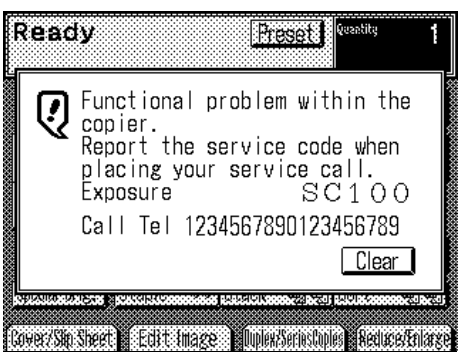
D	Only the SC counter is incremented. The copier can be operated as usual.	SC will not be displayed.

NOTE: 1) If the problem is related to electrical circuit boards, first disconnect then reconnect the connectors before replacing the PCBs.

2) If the problem is related to motor lock, first check the mechanical load before replacing motors or sensors.

3) To reset the SC of "Level: A", enter SP mode then turn off and on the main switch.

4) When an SC condition of "Level A or B" occurs while in SP mode, the display does not indicate the SC number. You can recognize the SC condition because in this condition no key input is possible. If this occurs, confirm the SC number by turning off and on the main switch and make test copies.

1.2 SCANNING

SC107: Lamp regulator malfunction

- Definition - [B]

Detects lamp regulator malfunctions by monitoring the signal for both the exposure lamp on and off conditions.

<Possible causes>

- Lamp regulator defective
- Exposure lamp open
- Optics thermoswitch open
- Scanner control board defective or poor connection

SC120: Scanner HP sensor abnormal - Stays off

- Definition - [B]

The scanner home position sensor does not detect the on condition during scanner initialization.

<Possible causes>

- Scanner HP sensor defective
- Scanner motor defective or poor connection
- Scanner drive board defective or poor connection
- Scanner control board defective or poor connection
- Loose Allen screw on scanner drive pulleys
- DC power supply board defective (FU803)

SC121: Scanner HP sensor abnormal - Stays on

- Definition - [B]

The scanner home position sensor does not detect the off condition during scanner initialization.

<Possible causes>

- Scanner HP sensor defective
- Scanner motor defective or poor connection
- Scanner drive board defective or poor connection
- Scanner control board defective or poor connection
- Loose Allen screw on scanner drive pulleys
- DC power supply board defective (FU803)

SC130: Scanner start abnormal

- Definition - [B]

Scanner start signal is detected before the scanner returns to the home position.

<Possible causes>

- Scanner control board defective

SC170: Scanner DA1 abnormal

- Definition - [B]

When performing the AGC, DA1 is not set in the proper range.

<Possible causes>

- Poor connection between CCD board and scanner control board
- Scanner control board defective
- CCD board defective

SC171: Scanner DA2 abnormal

- Definition - [B]

When performing the AGC, DA2 is not set in the proper range.

<Possible causes>

- Poor connection between CCD board scanner control board
- Scanner control board defective
- CCD board defective

SC172: Scanner DA3 abnormal

- Definition - [B]

When performing the AGC, DA3 is not set in the proper range.

<Possible causes>

- Dirty white plate, reflectors,mirrors, or lens
- White plate on the exposure glass is not properly positioned
- Exposure lamp deteriorated
- Scanner or mirrors are not properly positioned
- Scanner control board defective
- CCD board defective

SC173: Lamp regulator adjustment error

- Definition - [B]

When performing the AGC with the lamp voltage at 72 V, the CCD output does not exceed 1 V.

<Possible causes>

[If exposure lamp lights during AGC]

- White plate on the exposure glass is not properly positioned
- Dirty white plate, reflectors, mirrors, or lens
- Poor connection between lamp regulator and scanner drive board (CN105) or between scanner control board and scanner drive board (CN101)
- Exposure lamp deteriorated
- CCD board defective
- Scanner or mirrors are not properly positioned
- Lamp regulator defective or poor connection (CN3)
- Scanner control board defective or poor connection (CN106)

[If exposure lamp does not light during AGC]

- Poor connection between lamp regulator and scanner drive board (CN105) or between scanner control board and scanner drive board (CN101)
- No AC input to lamp regulator (CN1) → AC drive board or main power relay defective
- Lamp regulator defective or poor connection (CN3)
- Scanner control board defective or poor connection (CN106)

SC174: Scanner DA2* abnormal

- Definition - [B]

When performing the AGC, DA2* is not set in the proper range.

<Possible causes>

- Poor connection between CCD board and scanner control board
- Scanner control board defective
- CCD board defective

SC191: Bar code scanning error

- Definition - [B]

The bar code for the machine identification number cannot be detected when the AGC is performed after the main switch is turned on.

<Possible causes>

- The bar code label is dirty.
- Scanner mirrors are not in position

SC192: Bar code number is different

- Definition - [B]

Bar code number is not identical to the machine identification number stored in memory.

<Possible causes>

- Wrong machine identification number in memory
- Machine identification number is not entered in the new (replaced) RAM board
- RAM board defective
- Main control board defective

1.3 PRINTING

SC302: See AROUND THE DRUM

SC320: Polygon motor lock

- Definition - [B]

Polygon motor lock signal is detected for more than 3 seconds.

<Possible causes>

- Polygon motor defective
- Polygon motor drive board defective
- Scanner control board defective

SC321: Transfer belt start signal error

- Definition - [B]

Transfer belt start signal is not detected within 500 msec. relative to the programmed timing.

<Possible causes>

- IPU board defective
- DIP SW300-1 on the IPU board is not ON

SC322: Laser synchronizing signal error

- Definition - [B]

The intervals between laser synchronizing signals become over 1.2 times the normal one.

<Possible causes>

- Laser synchronizing detector board defective
- Scanner control board defective
- Laser synchronizing detector board is not properly positioned
- LD unit defective

SC323: LD drive current over

- Definition - [B]

The LD drive board applies more than 100 mA to the LD for over 2.3 msec.

<Possible causes>

- LD unit defective

1.4 DEVELOPMENT

SC341: Bk-development motor lock

- Definition - [B]

Bk-development motor lock signal is detected for more than 3 seconds.

<Possible causes>

- Bk-development motor defective or poor connection
- Too much load on the Bk-development section
- Interface board 1 defective or poor connection (CN708)
- Main control board defective

SC342: Bk-sleeve motor lock

- Definition - [B]

Bk-sleeve motor lock signal is detected for more than 3 seconds.

<Possible causes>

- Bk-sleeve motor defective or poor connection
- Too much load on the Bk-sleeve roller
- Interface board 1 defective or poor connection (CN708)
- Main control board defective

SC343: Y-sleeve motor lock

- Definition - [B]

Y-sleeve motor lock signal is detected for more than 3 seconds.

<Possible causes>

- Y-sleeve motor defective or poor connection
- Too much load on the Y-sleeve roller
- Interface board 2 defective or poor connection (CN806)
- Main control board defective

SC344: M-sleeve motor lock

- Definition - [B]

M-sleeve motor lock signal is detected for more than 3 seconds.

<Possible causes>

- M-sleeve motor defective or poor connection
- Too much load on the M-sleeve roller
- Interface board 2 defective or poor connection (CN806)
- Main control board defective

SC345: C-sleeve motor lock

- Definition - [B]

C-sleeve motor lock signal is detected for more than 3 seconds.

<Possible causes>

- C-sleeve motor defective or poor connection
- Too much load on the C-sleeve roller
- Interface board 2 defective or poor connection (CN806)
- Main control board defective

SC346: Color-development motor lock

- Definition - [B]

Color-development motor lock signal is detected for more than 3 seconds.

<Possible causes>

- Color-development motor defective or poor connection
- Too much load on one of the C/M/Y-development sections
- Interface board 1 defective or poor connection (CN708)
- Main control board defective
- DC power supply board defective (FU805)

SC350: Bk-TD sensor initial setting error

SC351: Y-TD sensor initial setting error

SC352: M-TD sensor initial setting error

SC353: C-TD sensor initial setting error

- Definition - [B]

TD sensor output (Vt) does not reach a value between 2.4 and 2.6 V when performing the toner density initial setting.

<Possible causes>

- TD sensor defective
- Main control board defective
- Developer not distributed evenly

SC354: Bk-TD sensor gain adjustment error

SC355: Y-TD sensor gain adjustment error

SC356: M-TD sensor gain adjustment error

SC357: C-TD sensor gain adjustment error

- Definition - [B]

When adjusting TD sensor gain during the toner density initial setting, Vcnt (output voltage) does not reach a value between 7 and 11 V.

<Possible causes>

- Main control board defective

SC360: Development bias leak

- Definition - [B]

Development bias leak signal is detected for more than 3 seconds.

<Possible causes>

- Sleeve roller receptacle damaged
- High voltage supply board - B defective

SC370: Bk-TD sensor upper detection abnormal

SC371: Y-TD sensor upper detection abnormal

SC372: M-TD sensor upper detection abnormal

SC373: C-TD sensor upper detection abnormal

- Definition - [B]

TD sensor output (Vt) exceeds 4.5 V during copy cycles.

<Possible causes>

- TD sensor defective
- Main control board defective
- Too much toner in the development unit (accident)

SC374: Bk-TD sensor lower detection abnormal

SC375: Y-TD sensor lower detection abnormal

SC376: M-TD sensor lower detection abnormal

SC377: C-TD sensor lower detection abnormal

- Definition - [B]

TD sensor output (Vt) becomes lower than 0.5 V during copy cycles.

<Possible causes>

- TD sensor defective
- Main control board defective
- Toner supply system defective

1.5 AROUND THE DRUM

SC302: Charge current leak

- Definition - [B]

Charge current leak signal is detected for more than 3 seconds.

<Possible causes>

- Charge corona end block damaged
- Charge corona receptacle damaged
- High voltage supply board - C/G defective

SC380: Drum potential sensor calibration error

- Definition - [D]

When performing the process control self-check, the drum potential sensor is not calibrated properly. The previous data is used in this case. If there is no previous data, the default is used.

<Possible causes>

- Drum potential sensor defective
- Interface board 1 defective
- Main control board defective
- High voltage supply board - B defective

SC381: Charge potential abnormal

- Definition - [D]

When performing the process control self-check, the charge potential of the drum is not in the proper range.

<Possible causes>

- High voltage supply board- C/G defective
- Main control board defective

SC382: V_D adjustment error

- Definition - [D]

When performing the process control self-check, V_D does not come within 5 V of the target after 30 trials. The previous data for V_G, V_B, I_{LD} is used in this case. If there is no previous data, the default is used.

<Possible causes>

- High voltage supply board - C/G defective
- Main control board defective

SC383: V_L adjustment error

- Definition - [D]

When performing the process control self-check, V_L does not come within 5 V of the target after 30 trials. The previous data for V_G, V_B, I_{LD} is used in this case. If there is no previous data, the default is used.

<Possible causes>

- LD drive board defective
- IPU board defective

SC384: LD exposure abnormal

- Definition - [D]

When performing the process control self-check, the potential of the 10 gradation patterns does not come within the target range.

<Possible causes>

- LD drive board defective
- IPU board defective

SC390: ID sensor adjustment error

- Definition - [D]

When performing the process control self-check, Vsg adjustment does not result in 4.0 ± 0.2 V.

<Possible causes>

- ID sensor defective
- Main control board defective
- ID sensor too dirty

SC422: PCC leak

- Definition - [B]

PCC leak signal is detected for more than 3 seconds.

<Possible causes>

- PCC end block damaged
- High voltage supply board - T1/PCC/BR defective

SC440: Drum motor lock

- Definition - [B]

Drum motor lock signal is detected for more than 3 seconds.

<Possible causes>

- Too much load on the drum drive mechanism
- Drum motor defective or poor connection
- Interface board 1 defective or poor connection (CN708)
- Main control board defective

1.6 TRANSFER BELT / ROLLER

SC405: Transfer belt position abnormal

- Definition - [B]

The transfer belt is positioned to touch the drum in the following conditions:
Belt and drum cleaning completed after the main switch is turned on
Belt and drum cleaning completed after clearing paper jam
Copy job completed

<Possible causes>

- Transfer belt position sensor defective
- Transfer belt position clutch defective
- Interface board 1 defective
- Main control board defective

SC406: Transfer roller position abnormal

- Definition - [B]

The transfer roller is positioned to touch the transfer belt in the following conditions:
Belt and drum cleaning completed after the main switch is turned on
Belt and drum cleaning completed after clearing paper jam
Copy job completed

<Possible causes>

- Transfer roller position sensor defective
- Transfer roller position clutch defective
- Interface board 2 defective
- Main control board defective

SC411: Paper discharge leak

- Definition - [B]
  Paper discharge leak signal is detected for more than 3 seconds.

<Possible causes>

- Paper discharge plate is touching conductive foreign object.
- High voltage supply board - D defective

SC420: Cleaning motor lock

- Definition - [B]
  Cleaning motor lock signal is detected for more than 3 seconds.

<Possible causes>

- Too much load on the lubricant brush or transfer belt release mechanism.
- Cleaning motor defective or poor connection
- Interface board 1 defective or poor connection (CN710)
- Main control board defective

SC422: See AROUND THE DRUM

SC440: See AROUND THE DRUM

1.7 PAPER FEED

SC500: Transport motor lock

- Definition - [B]

Transport motor lock signal is detected for more than 3 seconds.

<Possible causes>

- Too much load on the transport unit, fusing unit, transfer roller unit, or transfer belt cleaning unit
- Transport motor defective or poor connection
- Interface board 2 defective or poor connection (CN806)
- Main control board defective

SC502: 1st tray lift motor abnormal

SC503: 2nd tray lift motor abnormal

SC504: 3rd tray lift motor abnormal

- Definition - [C]

Lift sensor is not activated within 10 seconds after the lift motor starts turning. SC message for level C is displayed when this condition is detected twice.

<Possible causes>

- Lift sensor defective
- Tray lift motor defective or poor connection
- Paper feed interface board defective or poor connection (CN906)
- Main control board defective

SC510: Paper feed motor abnormal

- Definition - [B]

Paper feed motor lock signal is detected for more than 3 seconds.

<Possible causes>

- Too much load on the paper feed mechanism
- Paper feed motor defective or poor connection
- Paper feed interface board defective or poor connection (CN910)
- Main control board defective

1.8 FUSING

SC541: Fusing thermistor open

- Definition - [A]

The output of the fusing thermistor goes to 5 V, corresponding to 0°C.

<Possible causes>

- Fusing thermistor open
- Fusing unit not set
- Main control board defective

SC542: Fusing warm-up error

- Definition - [A]

Fusing temperature does not reach the ready temperature within 12 minutes after the main switch is turned on.

<Possible causes>

- Fusing thermistor not in position
- Fusing lamp open
- Fusing thermistor defective
- Main control board defective

SC543: Fusing overheat

- Definition - [A]

Fusing temperature of over 200°C is detected 5 times (5 seconds).

<Possible causes>

- Fusing thermistor defective
- AC drive board defective (triac)
- Main control board defective

SC544: Fusing low temperature abnormal

- Definition - [A]

Fusing temperature of below 90°C is detected 6 times (6 seconds) after warm-up is completed.

<Possible causes>

- Fusing thermistor defective
- AC drive board defective
- Main control board defective
- Fusing thermistor not in position
- Fusing lamp open

SC545: Fusing ready temperature abnormal

- Definition - [A]

Fusing temperature goes below the ready temperature (10°C below the control temperature) after warm-up is completed, and it does not reach the ready temperature within 6 minutes.

<Possible causes>

- Fusing thermistor defective
- AC drive board defective
- Main control board defective

SC547: Fusing temperature does not increase

- Definition - [A]

During warm-up, the fusing temperature does not increase when compared to the temperature 1 minute before.

<Possible causes>

- Fusing thermistor defective
- AC drive board defective
- Main control board defective

SC551: Pressure roller thermistor open

- Definition - [A]

The output of the pressure roller thermistor goes to 5 V, corresponding to 0°C.

<Possible causes>

- Pressure roller thermistor open
- Main control board defective
- Fusing unit not set

SC552: Pressure roller warm-up error

- Definition - [A]

Pressure roller temperature does not reach the ready temperature within 12 minutes after the main switch is turned on.

<Possible causes>

- Pressure roller thermistor not in position
- Pressure roller lamp open
- Pressure roller thermistor defective
- Main control board defective

SC553: Pressure roller overheat

- Definition - [A]
  Pressure roller temperature of over 180°C is detected 5 times.

<Possible causes>
- Pressure roller thermistor defective
- AC drive board defective (triac)
- Main control board defective

SC554: Pressure roller low temperature abnormal

- Definition - [A]
  Pressure roller temperature of below 70°C is detected 6 times after warm-up is completed.

<Possible causes>
- Pressure roller thermistor defective
- AC drive board defective
- Main control board defective
- Pressure roller thermistor not in position
- Pressure roller lamp open

SC555: Pressure roller ready temperature abnormal

- Definition - [A]
  Pressure roller temperature goes below the ready temperature (10°C below the control temperature) after warm-up is completed, and does not reach the ready temperature within 6 minutes.

<Possible causes>
- Pressure roller thermistor defective
- AC drive board defective
- Main control board defective

SC557: Pressure roller temperature does not increase

- Definition - [A]
  During warm-up, pressure roller temperature does not increase when compared to the temperature 1 minute before.

<Possible causes>
- Pressure roller thermistor defective
- AC drive board defective
- Main control board defective

SC558: Zero cross signal abnormal

- Definition - [A]

Zero cross signals are not detected within a certain period.

<Possible causes>

- Main control board defective

1.9 COMMUNICATION

SC600: Communication error between main control and operation panel boards

- Definition - [B]

Main CPU cannot communicate with the operation panel CPU properly.

<Possible causes>

- Poor connection between the main control board and operation panel board
- Main board defective
- Operation panel defective

SC601: Communication error between main control and scanner control boards

- Definition - [B]

Main CPU cannot communicate with the scanner control CPU properly.

<Possible causes>

- Poor connection between the main control board and scanner control board (optical fiber cable)
- Optical fiber cable defective
- Main control board defective
- Scanner control board defective
- DC power supply board defective (No dc 5V input to scanner control board)

SC602: Communication error between main control and transfer belt motor drive boards

- Definition - [B]

Main CPU does not receive the response signal from the transfer belt drive board after 3 trials.

<Possible causes>

- Poor connection between the main control board and transfer belt drive board
- Main control board defective
- Transfer belt drive board defective

SC603: Communication error within main control boards

- Definition - [B]

CPUs in the main control board cannot communicate properly with each other.

<Possible causes>

- Main control board defective

SC604: Serial signal error in main control board

- Definition - [B]

Writing and reading serial signals for the DPRAM produces discrepancies.

<Possible causes>

- Main control board defective

SC605: Communication error between main control and IPU boards

- Definition - [B]

Main CPU cannot communicate with the IPU CPU properly.

<Possible causes>

- Poor connection between the main control board and IPU board
- Main control board defective
- IPU board defective

SC622: Communication error between main control board and display editor

- Definition - [C]

Main CPU cannot start communication with the editor CPU properly.

<Possible causes>

- Poor connection between the main control board and the display editor
- Main control board defective
- Option interface board defective (FU301)
- Display editor board defective

SC623: Communication error between main control board and projector unit

- Definition - [B]

Main CPU cannot start communication with the projector unit properly.

<Possible causes>

- Poor connection between the main control board and Projector unit
- Main control board defective
- Option interface board defective
- Projector control board defective

1.10 OPTIONAL EQUIPMENTS

SC700: DJF feed-in motor abnormal

SC701: DJF belt drive motor abnormal

SC702: DJF feed out motor abnormal

- Definition - [D]

Encoder pulse is not detected by the DJF main board under each motor on condition. The first time, just an original jam occurs. The second time, an SC is displayed.

<Possible causes>

- DJF feed-in motor defective
- DJF belt drive motor defective
- DJF feed out motor defective

SC730: Sorter motor abnormal

- Definition - [B]

Encoder pulse is not detected by the sorter control board for 200 msec. after the sorter motor starts. A paper jam indication is displayed the first time. An SC is displayed for the second time.

<Possible causes>

- Sorter motor defective

SC770: Display editor abnormal

- Definition - [C]

The display editor sends an abnormal signal to the main control board.

<Possible causes>

- Display editor defective

SC790: Projector lamp does not turn on

- Definition - [C]

Projector lamp does not turn on 100 msec. after 10 V (or more) is applied to the lamp.

<Possible causes>

- Projector lamp open
- Thermofuse blown

SC791: Projector lamp does not turn off

- Definition - [C]
  Projector lamp stays on when it should turn off.

<Possible causes>
- Projector lamp regulator defective

SC792: Projector lamp overheat

- Definition - [C]
  Projector control board detects the lamp overheat condition through the thermistor.

<Possible causes>
- Projector lamp regulator defective
- Thermistor defective

1.11 OTHERS

SC900: Bk-total counter not on

- Definition - [B]
  Bk-total counter does not turn on.

<Possible causes>
- Bk-total counter defective
- DC power supply board defective (FU802, FU804)

SC901: Bk-total counter not off

- Definition - [B]
  Bk-total counter does not turn off.

<Possible causes>
- Bk-total counter defective

SC902: FC-total counter does not turn on

SC903: FC-total counter does not turn off

- Definition - [B]
  FC-total counter does not turn on or off.

<Possible causes>
- FC-total counter defective

2. BLOWN FUSE CONDITIONS

Fuse	Rating		Symptom (Main Switch: ON)
	115V	220 – 240V	
DC Power Supply Board			
FU801	15A/125V	5A/250V	No response
FU802	6.3A/125V	6.3A/250V	SC900 (Bk-total counter not on)
FU803	6.3A/125V	6.3A/250V	SC121 (Scanner HP sensor abnormal - stays on) or SC120 (Scanner HP sensor abnormal - stays off)
FU804	6.3A/125V	6.3A/250V	SC900 (Bk-total counter not on)
FU805	6.3A/125V	6.3A/250V	SC346 (Color - development motor lock)
FU806	6.3A/125V	6.3A/250V	No response
FU807	6.3A/125V	6.3A/250V	The LCD lights instantly and turns off. No other response
FU808	5A/125V	5A/250V	The LCD lights instantly and turns off. No other response
Option Interface Board			
FU301 (5V)	3.15A/250V		The display editor screen stays on. SC622 (Communication error between main control board and display editor) appears when the Area editing key is pressed.
FU302 (24V)	3.15A/250V		When the display editor is used, the LCD screen is dim (not bright enough). No other abnormal condition.

COPIER ELECTRICAL COMPONENTS

*: P = Printer
S = Scanner

Symbol	Name	Index No.	P to P	
Printed Circuit Boards				
PCB 1	DC power supply	18	P*	C3
PCB 2	Lamp regulator	1	S*	K11
PCB 3	AC drive	9	P	A10
PCB 4	High voltage supply - C/G	10	P	D15 – D16
PCB 5	High voltage supply - B	23	P	G5
PCB 6	High voltage supply - T1/Pcc/BR	11	P	C15 – C16
PCB 7	High voltage supply - T2	15	P	H5
PCB 8	High voltage supply - D	20	P	JK13
PCB 9	Main control	14	P	F10
PCB10	Interface 1	19	P	K14
PCB11	Interface 2	16	P	L6 – L7
PCB12	Transfer belt motor drive	13	P	L10
PCB13	Paper feed interface	17	P	D3
PCB14	Noise filter	21	P	A3
PCB15	ID sensor	120	P	G12 – G13
PCB16	Operation panel	22	P	C5
PCB17	Polygon motor drive	7	P	G15 –G16
PCB18	CCD	8	S	E6 – E7
PCB19	Scanner control	6	S	G3 – G4
PCB20	Scanner drive	3	S	IJ6 – IJ7
PCB21	IPU board	2	S	I13
PCB22	IPU interface	4	S	D12 – D13
PCB23	Option interface	12	S	I10
PCB24	LD drive	5	S	G16
PCB25	Laser synchronizing detector	62	S	I16
PCB26	Paper width detecting	121	P	KL8
Motors				
M 1	Bk - Development drive	42	P	J15 – J16
M 2	C - Sleeve	28	P	D5
M 3	M - Sleeve	32	P	E5
M 4	Y - Sleeve	31	P	F5
M 5	Drum	25	P	J15 – J16
M 6	Bk - Sleeve	27	P	I15 – I16
M 7	Transport	41	P	F5
M 8	Color - Development drive	24	P	K15 – K16
M 9	Cleaning	29	P	B13
M10	Scanner	26	S	H8

Symbol	Name	Index No.	P to P	
M11	Transfer belt	30	P	K12
M12	Paper feed	36	P	K1
M13	Polygon	43	P	G16
M14	Bk - Toner supply	40	P	G16
M15	C - Toner supply	39	P	H16
M16	M - Toner supply	38	P	H16
M17	Y - Toner supply	37	P	H16
M18	1st tray lift	33	P	I1
M19	2nd tray lift	34	P	I1
M20	3rd tray lift	35	P	I1
Fan Motors				
FM 1	Fusing exhaust	45	P	DE13
FM 2	Charge inlet	44	P	E13
FM 3	Inner cooling	53	P	G13
FM 4	IPU cooling	48	P	H13
FM 5	Polygon motor cooling	49	P	H13
FM6/7	Transport	51/50	P	J4 – J5
FM8/9	Development exhaust	54/55	P	E13
FM10	Optics exhaust	47	S	H6
FM11	LD cooling	46	P	I15 – I16
FM12/13	Optics cooling	56/57	S	I8
FM14	DC power supply cooling	52	P	D3
Sensors				
S 1	By-pass feed table	69	P	EF15
S 2	Oil end	86	P	A13
S 3	Exit	91	P	B13
S 4	Transfer belt position	63	P	D13
S 5	Humidity	84	P	G12
S 6	Drum potential	118	P	H13
S 7	M - Toner density	89	P	E8
S 8	Y - Toner density	88	P	F8
S 9	Bk - Toner density	92	P	FG8 – FG9
S10	C - Toner density	90	P	G8 – G9
S11	Transport	87	P	F7 – F8
S12	Registration	70	P	F7 – F8
S13	Registration guide set	66	P	FG7 – FG8
S14	Transfer roller position	68	P	G7 – G8
S15	By-pass paper end	67	P	K8
S16	By-pass length	65	P	K8
S17	Toner overflow	82	P	K1

Symbol	Name	Index No.	P to P	
S18	1st lift	72	P	E1
S19	2nd lift	73	P	E1
S20	3rd lift	76	P	H1
S21	1st paper end	85	P	E1
S22	2nd paper end	83	P	F1
S23	3rd paper end	80	P	H1
S24	1st paper feed	78	P	F1
S25	2nd paper feed	81	P	FG1
S26	3rd paper feed	79	P	G1
S27	Original length - 1	61	S	I8
S28	Original length - 2	59	S	J8
S29	Original width	98	S	J8
S30	Scanner unit lift	60	S	K8
S31	Platen cover position	58	S	K8
S32	Scanner HP	99	S	JK8
Switches				
SW1/2/3/4	Front door safety	94/95/96/97	P	B15
SW5/6	Vertical transport set	74/75	P	KL1
SW 7	Main	93	P	B6
SW 8	2nd tray set	71	P	H1
SW 9	3rd tray set	77	P	HI1
SW10	1st paper size	64	P	J1
Magnetic Clutches				
MC1	Lubricant brush	101	P	H15 – H16
MC2	Transfer belt position	100	P	I15 – I16
MC3	By-pass feed	104	P	K8
MC4	Registration	103	P	I4 – I5
MC5	Transfer roller position	102	P	I4 – I5
MC6	1st feed	106	P	F1
MC7	2nd feed	107	P	G1
MC8	3rd feed	108	P	G1
Solenoids				
SOL 1	Cleaning entrance seal	115	P	AB15
SOL 2	Lubricant brush	117	P	F15
SOL 3	Cleaning blade	116	P	F15
SOL 4	By-pass pick-up	105	P	K8
SOL 5	1st pick-up	114	P	E1
SOL 6	2nd pick-up	112	P	F1
SOL 7	3rd pick-up	110	P	H1
SOL 8	1st separation roller	113	P	F1

Symbol	Name	Index No.	P to P	
SOL 9	2nd separation roller	111	P	G1
SOL10	3rd separation roller	109	P	G1
Lamps				
L1	Fusing	135	P	A14
L2	Pressure roller	134	P	A14
L3	Exposure	122	S	K9 – K10
L4	Quenching	119	P	G15 – G16
Heaters				
H1	Lower tray (option)	129	P	A4 – A5
H2	Upper tray (option)	127	P	A4 – A5
H3	Transfer belt	128	P	B4 – B5
H4	Optics anti-condensation	140	S	K12
H5	Drum	124	P	B10
Thermistors				
TH1	Fusing	126	P	A14
TH2	Pressure roller	133	P	A14
Thermofuses				
TF1	Fusing	125	P	A14
TF2	Pressure roller	132	P	A14
Thermoswitch				
TS1	Optics	123	S	K10
Counters				
CO1	Black total	136	P	D15
CO2	Full color total	137	P	DE15
Others				
CB1	Circuit breaker	130	P	A1
RA1	Main power relay	138	P	AB7
NF1	Noise filter	131	P	A2
CC1	Choke coil	139	P	B9

[PCB'S-1]

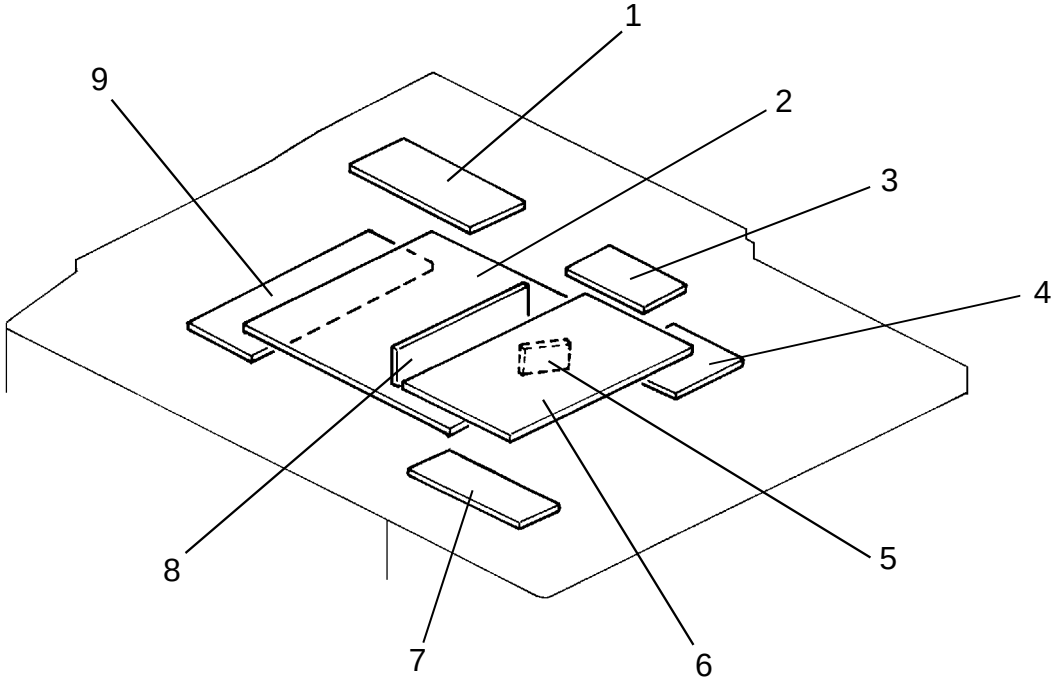

[PCB'S-2]

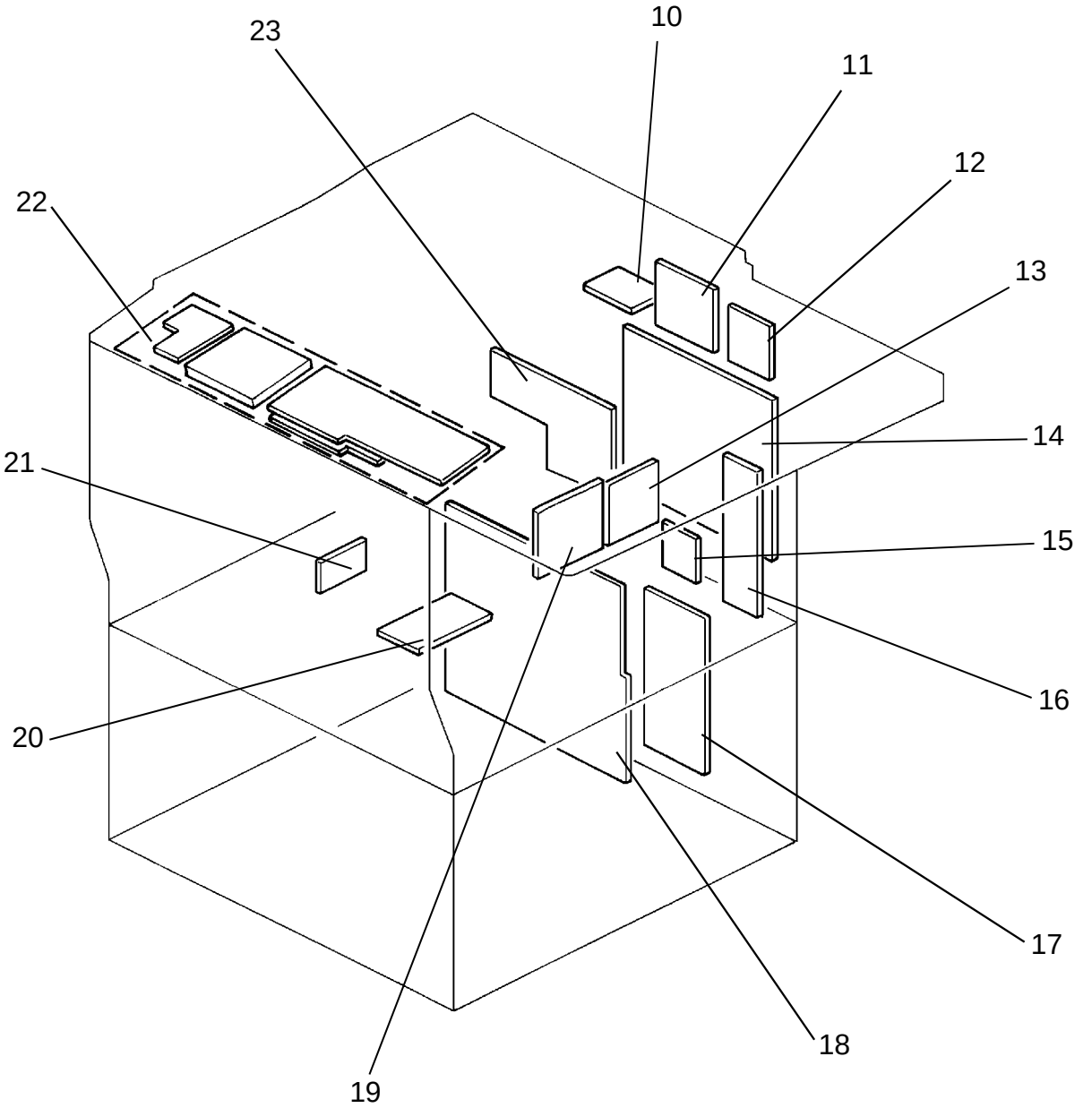

[MOTORS]

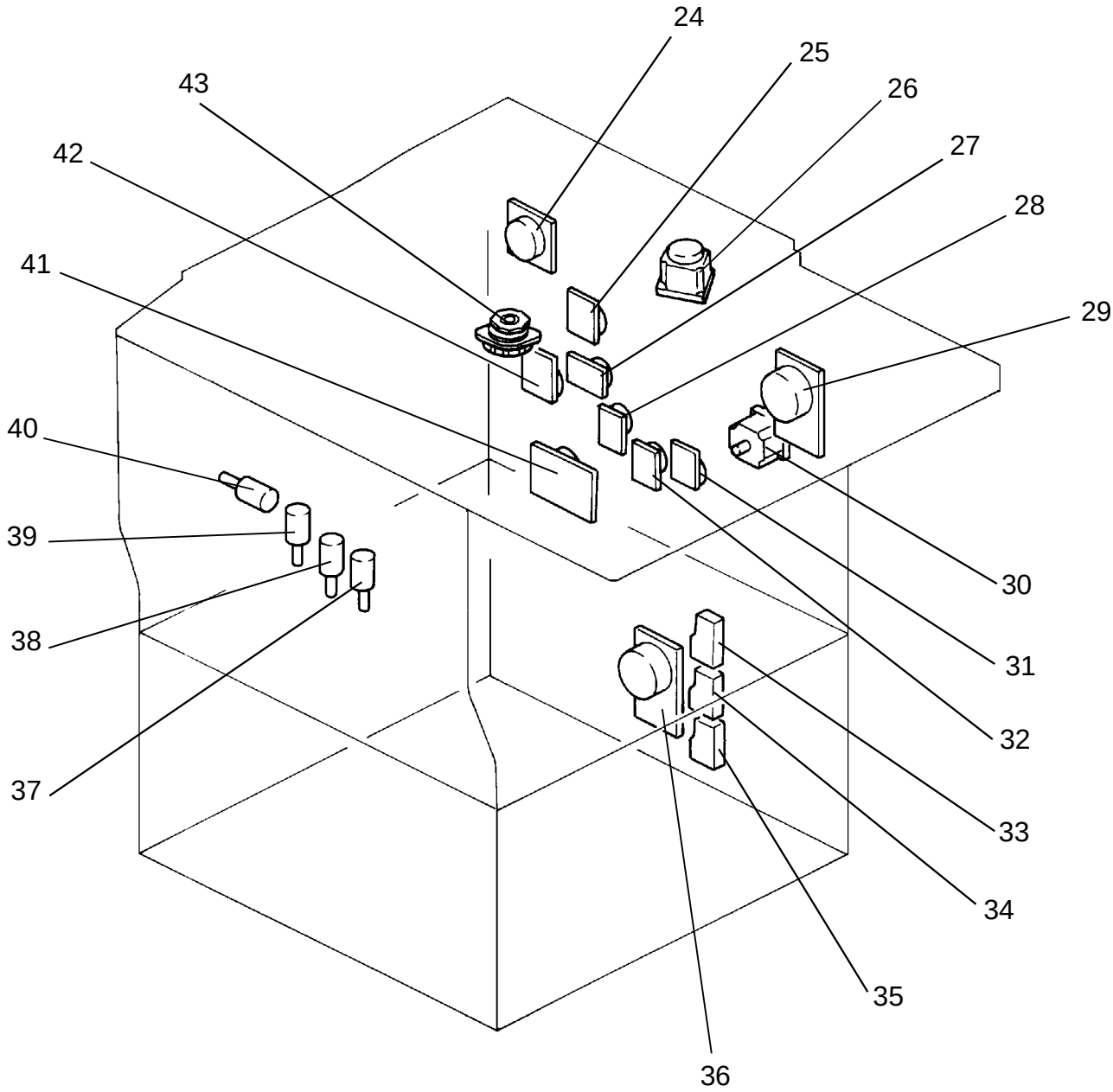

[FANS]

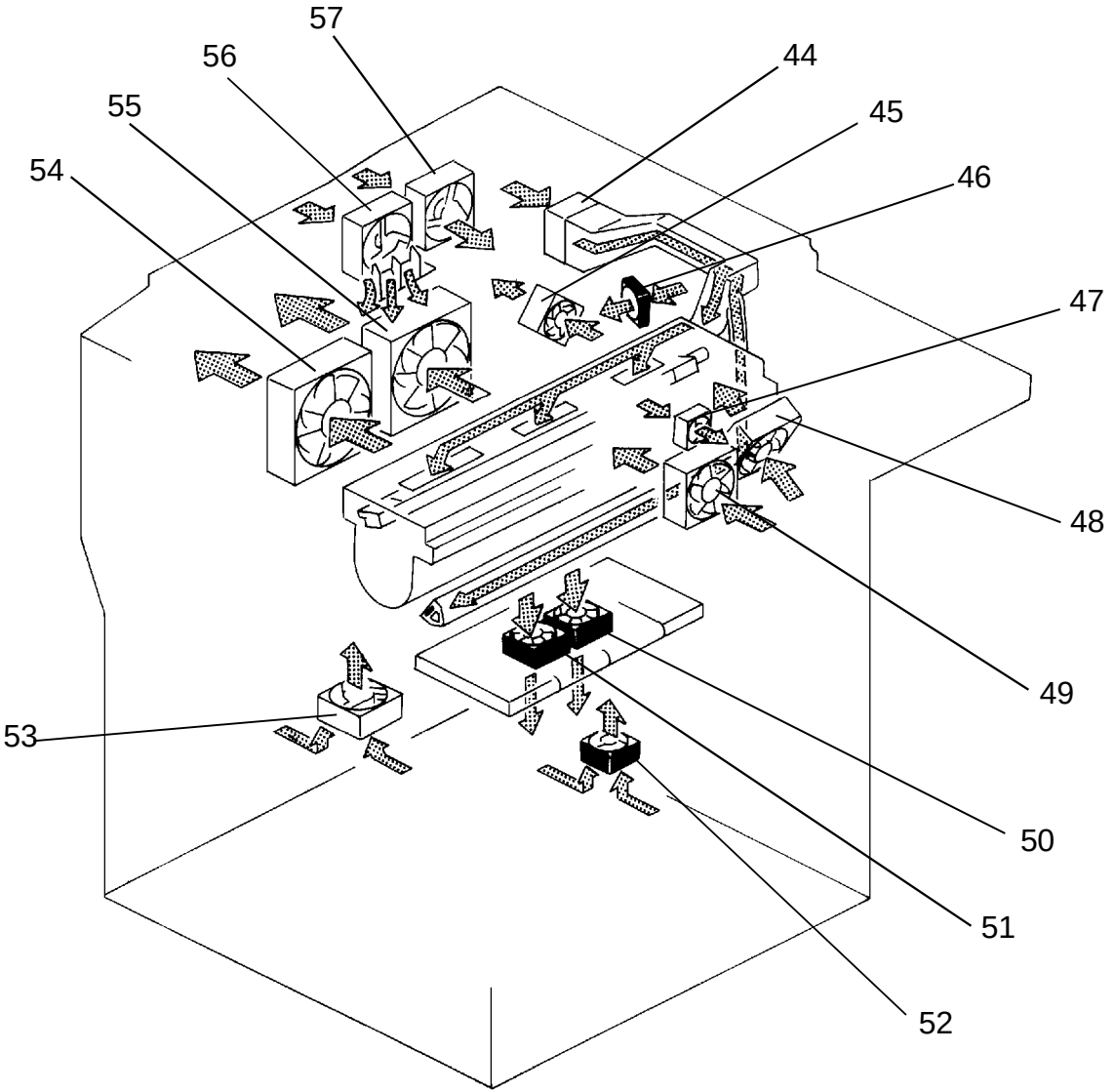

[SENSORS & SWITCHES]

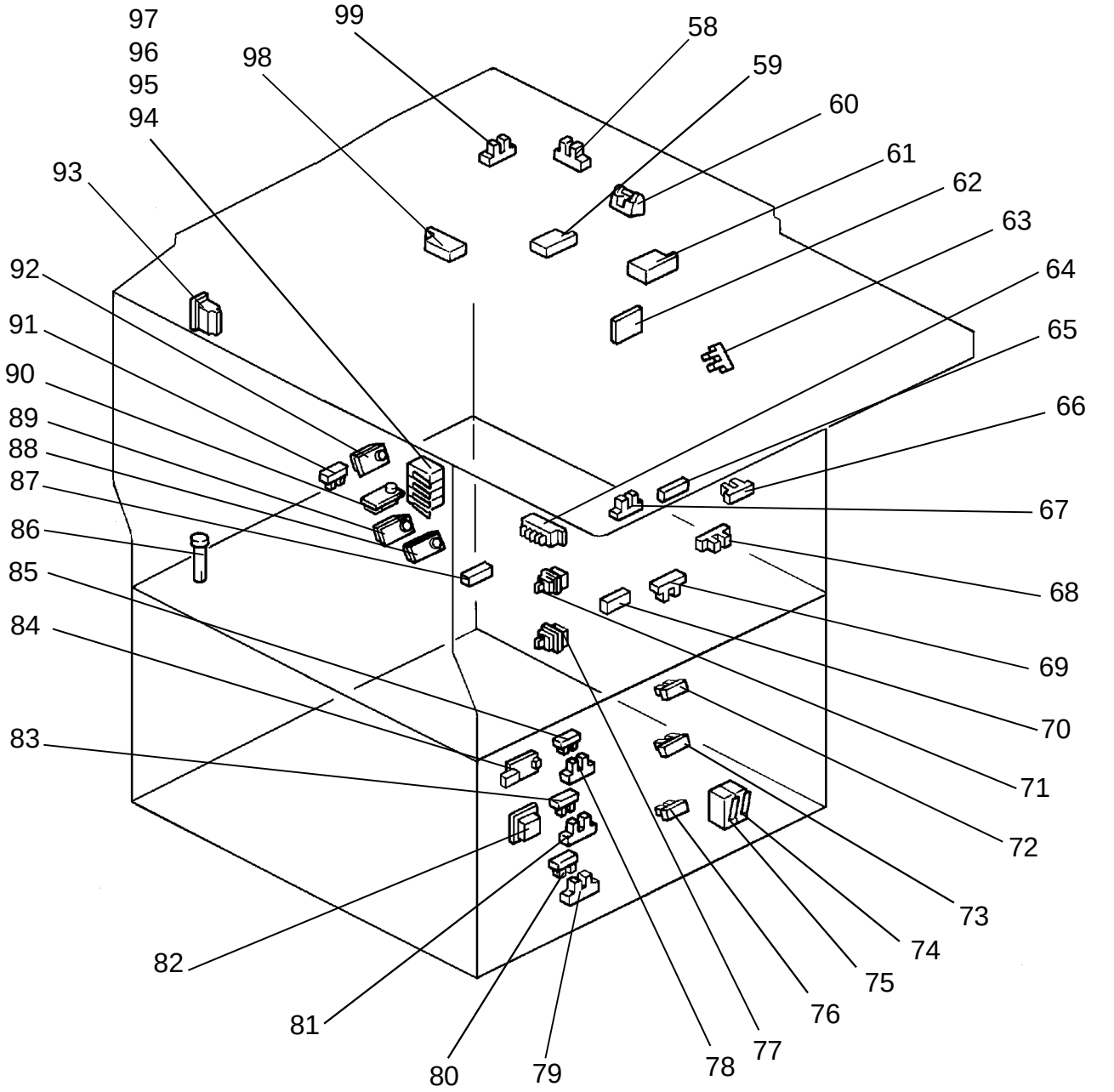

[CLUTHES & SOLENOIDS]

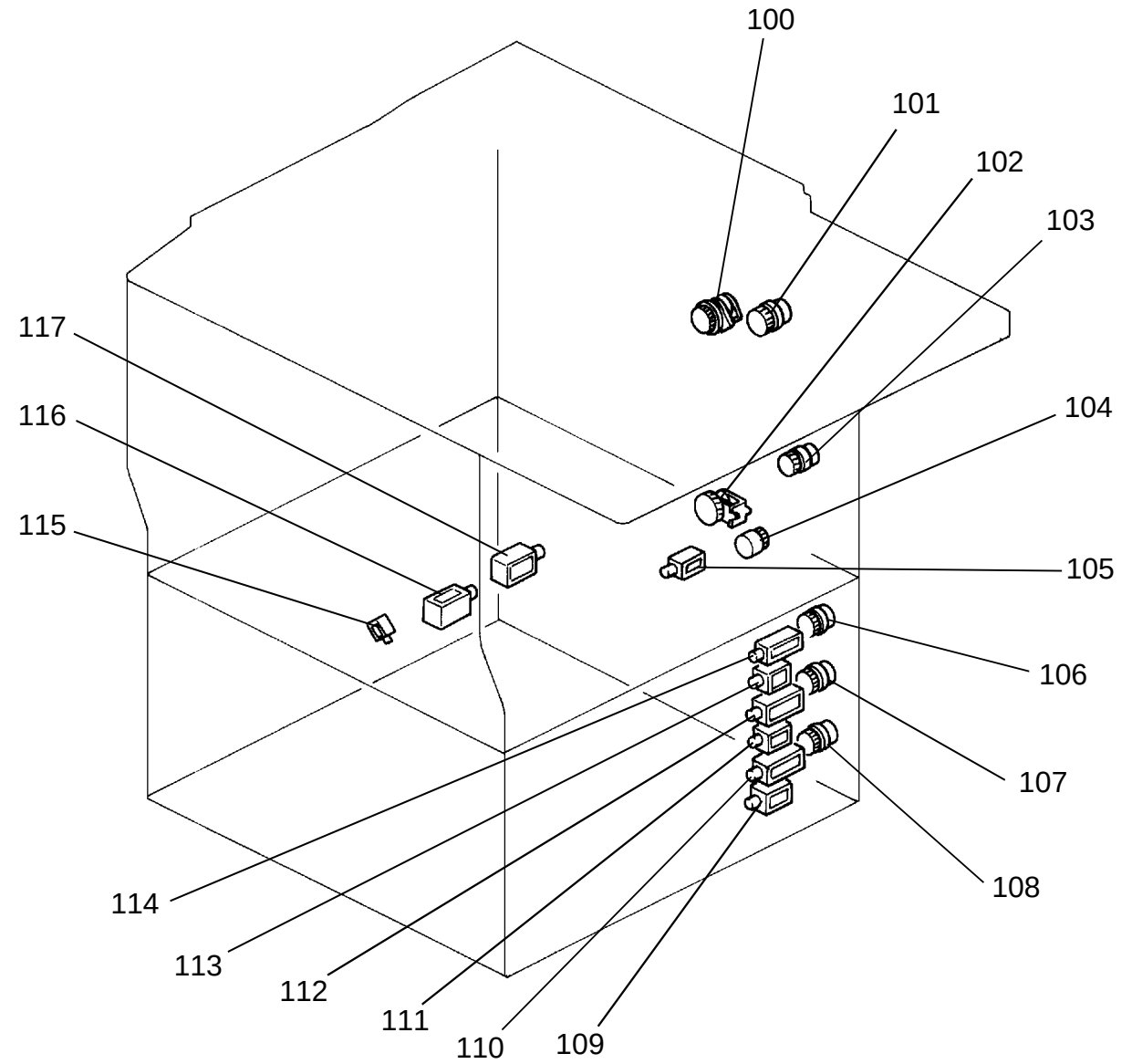

[OTHERS-1]

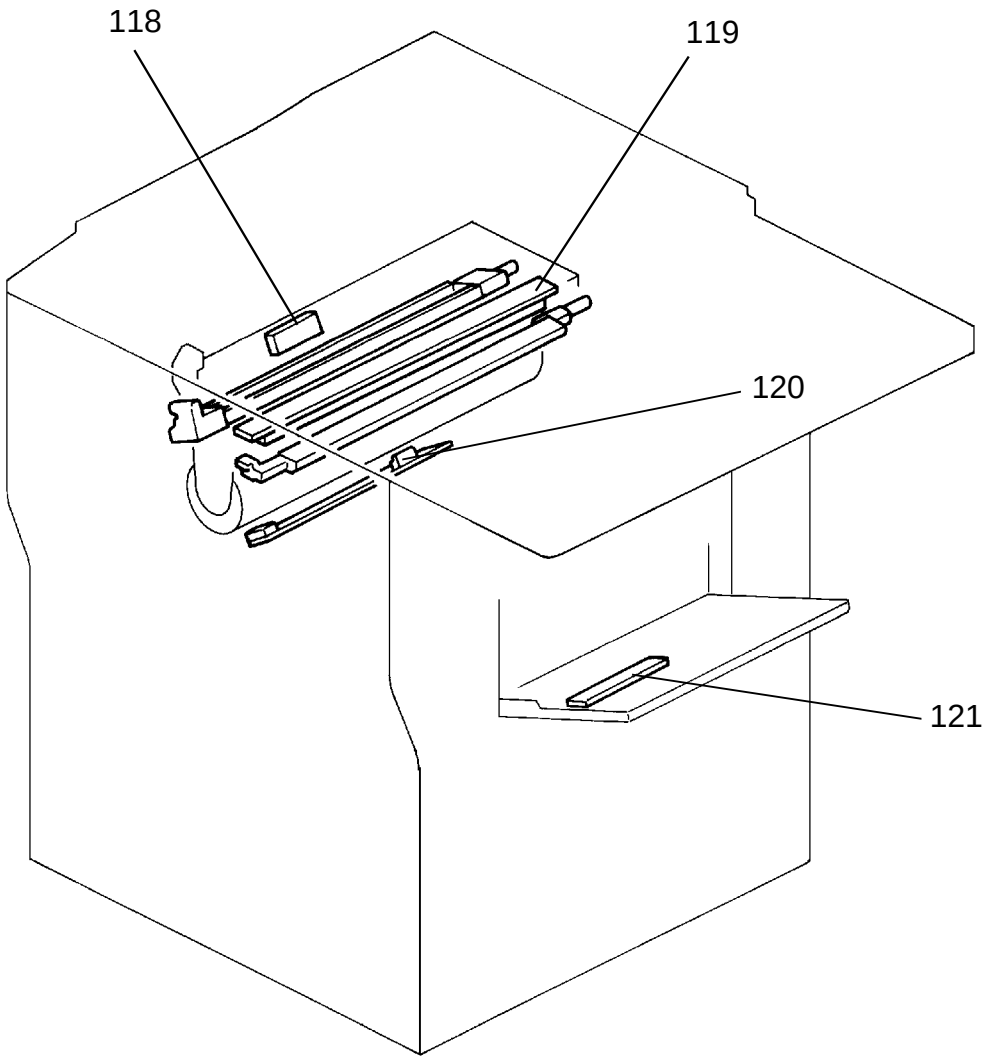

[OTHERS-2]

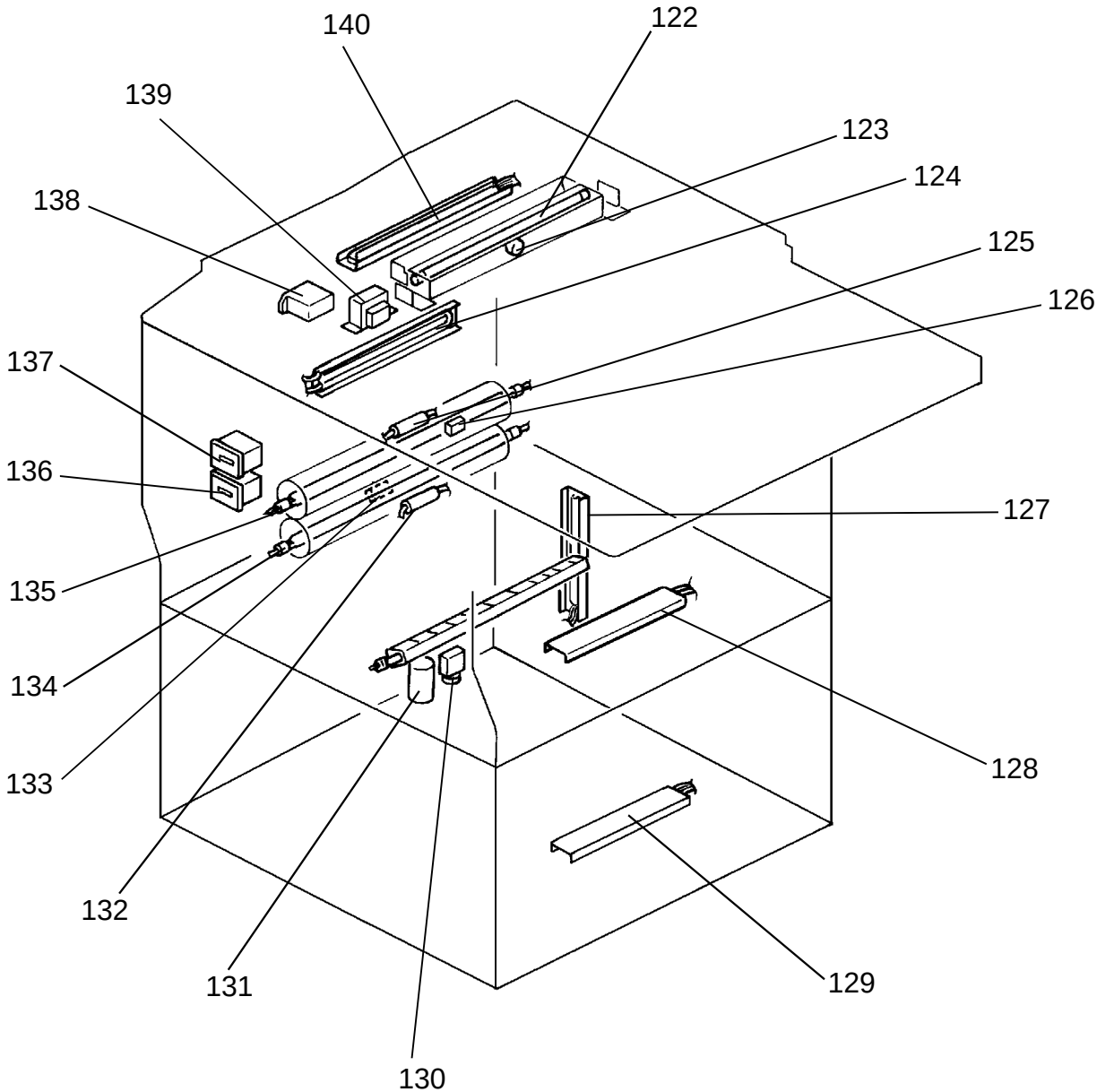
140
122
139
123
138
124
125
126
137
136
127
135
134
133
128
132
131
129
130

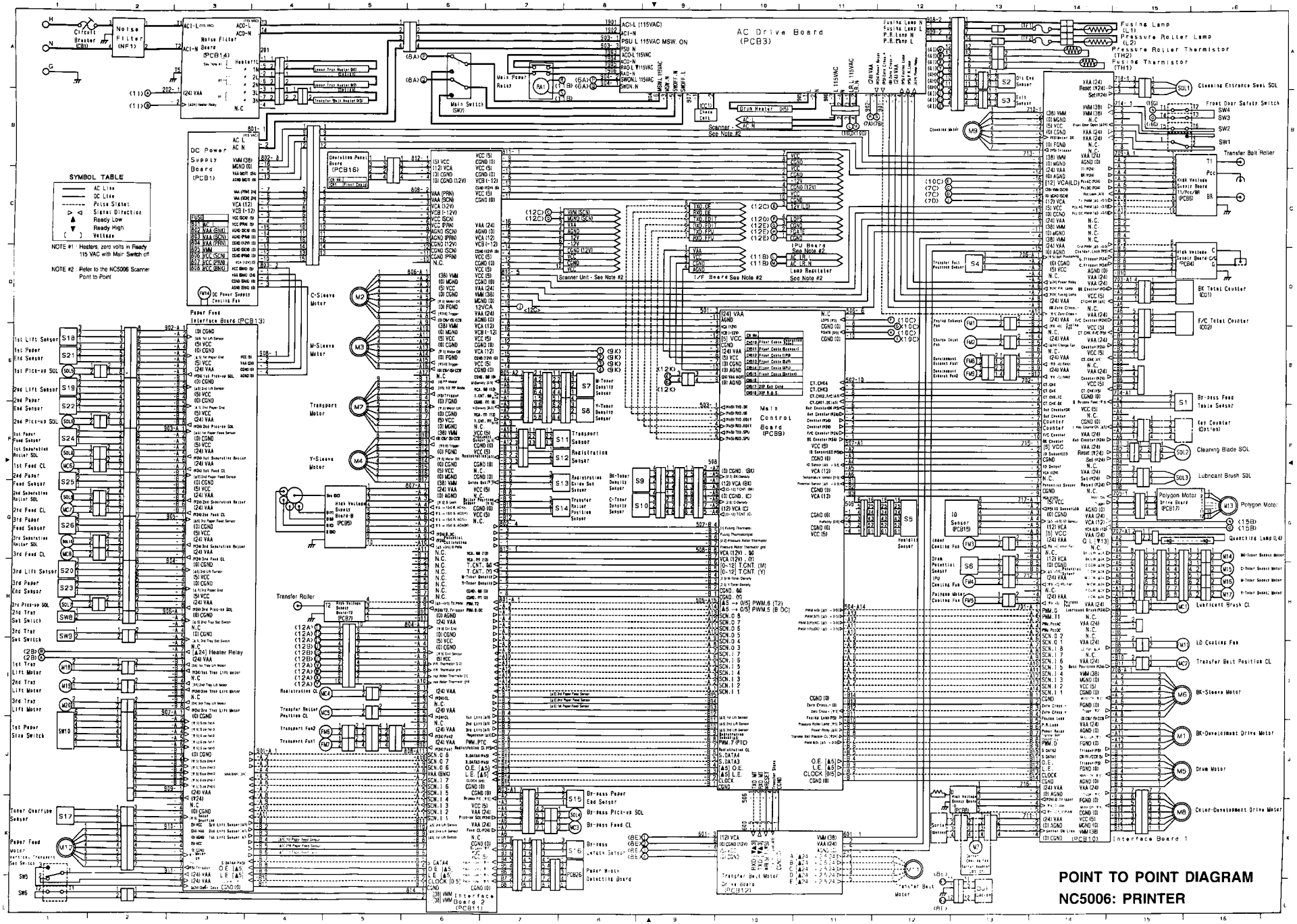

POINT TO POINT DIAGRAM
NC5006: PRINTER

LETD - 206
NC 5006 (FRONT)

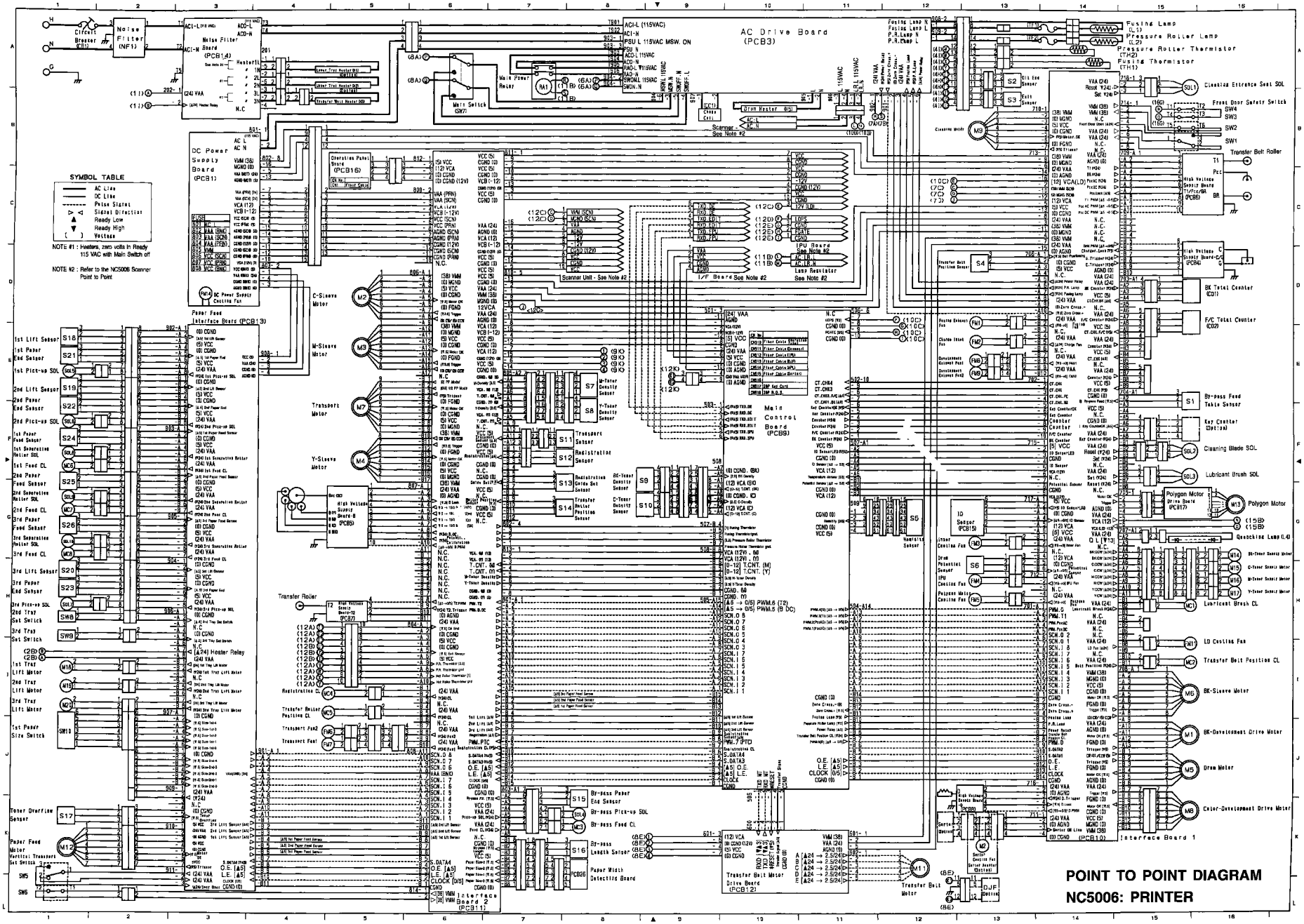
AC Drive Board (PCB3)
DC Power Supply Board (PCB1)
Noise Filter Board (PCB1,4)
Noise Filter (NF1)
Circuit Breaker (CB1)
Main Power Relay
Main Switch SW7
Operation Panel Board (PCB16)
Scanner Unit - See Note #2
I/F Board See Note #2
Lamp Regulator See Note #2
Fusing Lamp (CL1)
Pressure Roller Lamp (CL2)
Pressure Roller Thermistor (TH2)
Fusing Thermistor (TH1)
Cleaning Entrance Seal SOL
Front Door Safety Switch
Transfer Belt Roller
BK Toner Counter (CO1)
F/C Total Counter (CO2)
By-pass Feed Table Sensor
Key Counter (Option)
Cleaning Blade SOL
Lubricant Brush SOL
Polygon Motor
Quenching Lamp (L4)
LD Cooling Fan
Transfer Belt Position CL
BK-Sleeve Motor
BK-Development Drive Motor
Drum Motor
Color-Development Drive Motor
Interface Board 1
Main Control Board (PCB9)
Interface Board 2 (PCB11)
Paper Feed Interface Board (PCB13)
Transfer Belt Motor Drive Board (PCB12)
Paper Width Detecting Board
Transfer Belt Motor
C-Sleeve Motor
M-Sleeve Motor
Transport Motor
Y-Sleeve Motor
Paper Feed Motor
Vertical Transport Set Switch
Toner Overflow Sensor
Transfer Roller
Registration CL
Transfer Roller Position CL
Transport Fan2
Transport Fan
Heater Relay
Heaterfk
Transfer Belt Heater (HB1)
Drum Heater (HB2)
Transfer Belt Heater (HB3)
Transfer Belt Heater (HB4)
SYMBOL TABLE
AC Line
DC Line
Pulse Signal
Signal Direction
Ready Low
Ready High
Voltage
NOTE #1 : Heaters, zero volts in Ready
115 VAC with Main Switch off
NOTE #2 : Refer to the NC5006 Scanner Point to Point
POINT TO POINT DIAGRAM
NC5006: PRINTER

IMPORTANT SAFETY NOTICES

PREVENTION OF PHYSICAL INJURY

1. Before disassembling or assembling parts of the copier and peripherals, make sure that the copier power cord is unplugged.
2. The wall outlet should be near the copier and easily accessible.
3. Note that some components of the copier and the paper tray unit are supplied with electrical voltage even if the main switch is turned off.
4. If any adjustment or operation check has to be made with exterior covers off or open while the main switch is turned on, keep hands away from electrified or mechanically driven components.
5. If the hot roller temperature is low when the main switch is turned on, the copier starts process control self check automatically. Keep hands away from the mechanical and the electrical components to avoid any injury.
6. If the start key is pressed before the copier completes the warm-up period (Start key starts blinking red and green alternatively), keep hands away from the mechanical and the electrical components as the copier starts making copies as soon as the warm-up period is completed.
7. The inside and the metal parts of the fusing unit become extremely hot while the copier is operating. Be careful to avoid touching those components with your bare hands.

HEALTH SAFETY CONDITIONS

1. Never operate the copier without the ozone filters installed.
2. Always replace the ozone filters with the specified ones at the specified intervals.
3. Toner and developer are non-toxic, but if you get either of them in your eyes by accident, it may cause temporary eye discomfort. Try to remove with eye drops or flush with water as first aid. If unsuccessful, get medical attention.

OBSERVANCE OF ELECTRICAL SAFETY STANDARDS

1. The copier and its peripherals must be installed and maintained by a customer service representative who has completed the training course on those models.
2. The RAM board on the main control board has a lithium battery which can explode if replaced incorrectly. Replace the battery only with an identical one. The manufacturer recommends replacing the entire RAM board. Do not recharge or burn this battery. Used batteries must be handled in accordance with local regulations.

© 1993 By Ricoh Company Ltd. All rights reserved

SAFETY AND ECOLOGICAL NOTES FOR DISPOSAL

1. Do not incinerate the toner bottle or the used toner. Toner dust may ignite suddenly when exposed to open flame.
2. Dispose of used toner, developer, and organic photoconductor according to local regulations. (These are non-toxic supplies.)
3. Dispose of replaced parts in accordance with local regulations.
4. When keeping used lithium batteries in order to dispose of them later, do not put more than 100 batteries per sealed box. Storing larger numbers or not sealing them apart may lead to chemical reactions and heat build-up.

LASER SAFETY

The Center for Devices and Radiological Health (CDRH) prohibits the repair of laser-based optical units in the field. The optical housing unit can only be repaired in a factory or at a location with the requisite equipment. The laser subsystem is replaceable in the field by a qualified Customer Engineer. The laser chassis is not repairable in the field. Customer engineers are therefore directed to return all chassis and laser subsystems to the factory or service depot when replacement of the optical subsystem is required.

WARNING:
Use of controls, or adjustment, or performance of procedures other than those specified in this manual may result in hazardous radiation exposure.

WARNING FOR LASER UNIT

WARNING: Turn off the main switch before attempting any of the procedures in the Laser Unit section. Laser beams can seriously damage your eyes.

CAUTION MARKING:

