AZALEA (A166)

PARTS CATALOG

First Edition June 1996

Ricoh Company,LTD.

PARTS CATALOG

INTRODUCTION

This chapter instructs you the numbers and names of parts on this machine.

INDEX to PARTS CATALOG

AZALEA	**(A166)**
DF61	**(A548)**
PS280/PS290	**(A550/A549)**
ST10	**(A555)**
SPU3	**(A718)**
Holder Type B	**(A579)**

AZALEA (A166)

PARTS CATALOG

INTRODUCTION

This chapter instructs you the numbers and names of parts on this machine.

INDEX to PARTS CATALOG

LOCATION OF UNIT 4
1.EXTERIOR (A166) 10
2.EXTERIOR 2 (A166) 12
3.PLATEN COVER (A166) 14
4.OPTICS SECTION 1 (A166) 16
5.OPTICS SECTION 2 (A166) 18
6.OPTICS SECTION 3 (A166) 20
7.OPTICS SECTION 4 (A166) 22
8.LD UNIT (A166) 24
9.BY-PASS FEED SECTION (A166) 26
10.PAPER FEEED SECTION 1 (A166) 28
11.PAPER FEEED SECTION 2 (A166) 30
12.PAPER REGISTRATION (A166) 32
13.PAPER TRAY SECTION (A166) 34
14.TONNER HOPPER (A166) 36
15.DEVELOPMENT UNIT (A1466) 38
16.TRANSFER BELT UNIT 1 (A166) 40
17.TRANSFER BELT UNIT 2 (A166) 42
18.DRUM SECTION (A166) 44
19.DRUM CLEANING (A166) 46
20.TRANSFER BELT CLEANING (A166) 48
21.TRANSPORT UNIT (A166) 50
22.FUSING UNIT 1 (A166) 52
23.FUSING UNIT 2 (A166) 54
24.FUSING UNIT 3 (A166) 56
25.PAPER EXIT SECTION (A166) 58
26.SWEEPER (A166) 60
27.DRIVE SECTION 1 (A166) 62
28.DRIVE SECTION 2 (A166) 64
29.ELECTRICAL SECTION 1 (A166) 66
30.ELECTRICAL SECTION 2 (A166) 68
31.ELECTRICAL SECTION 3 (A166) 70
32.ELECTRICAL SECTION 4 (A166) 72
33.FRAME SECTION 1 (A166) 74
34.FRAME SECTION 2 (A166) 76
35.FRAME SECTION 3 (A166) 78
36.SCANER MOTOR CONTROL BOARD (A166) 80
37.SYSTEM CONTROL BOARD (A166) 82
38.IPU BOARD (A166) 86
39.PRINTER MAIN BOARD (A166) 92

PARTS CATALOG

INTRODUCTION

This chapter instructs you the numbers and names of parts on this machine.

INDEX to PARTS CATALOG

40.MEMORY BOARD (A166) 96
41.I/O CONTROL BOARD 1 (A166) 98
42.I/O CONTROL BOARD 2 (A166) 100
43.DECAL AND DOCUMENT (A166) 102
44.SPECIAL TOOLS (A166) 106
PARTS INDEX 109

LOCATION OF UNIT

1. EXTERIOR (A166)

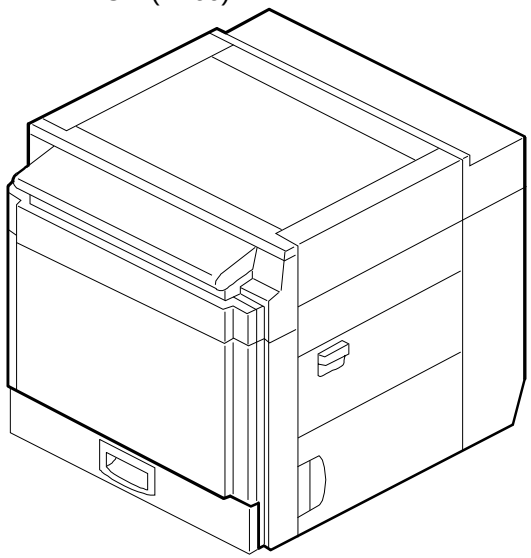

See Page 10

2. EXTERIOR 2 (A166)

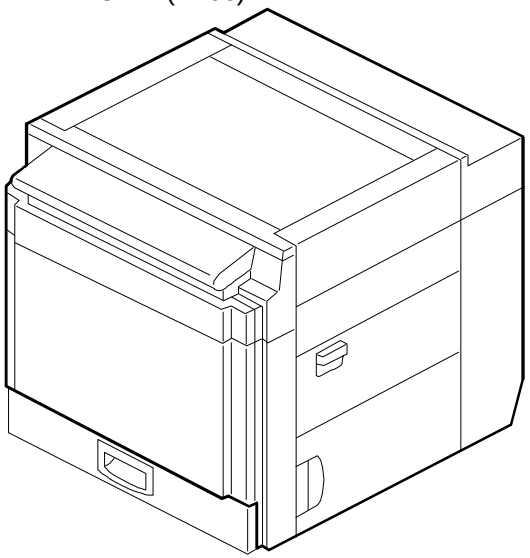

See Page 12

3. PLATEN COVER (A166)

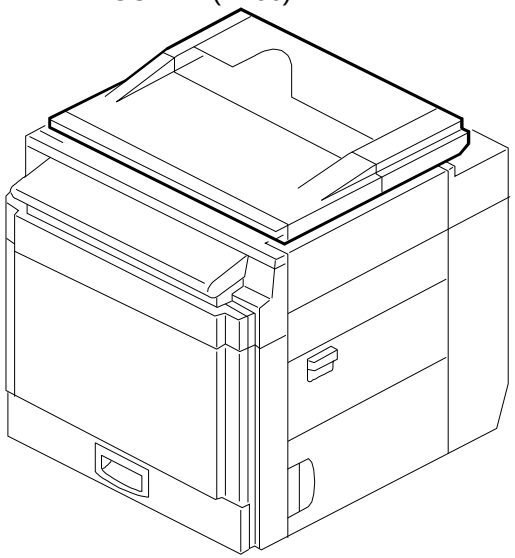

See Page 14

4. OPTICS SECTION 1 (A166)

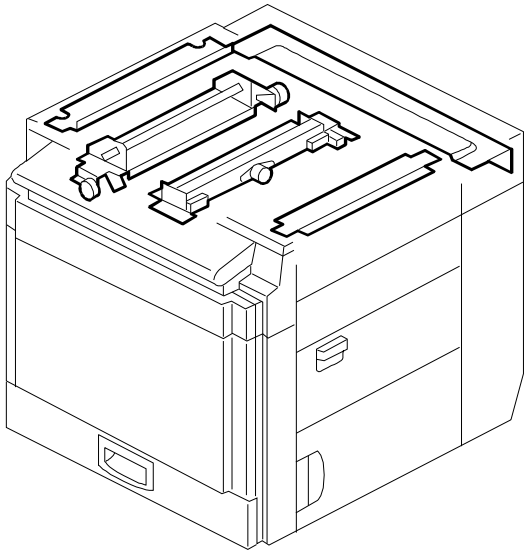

See Page 16

5. OPTICS SECTION 2 (A166)

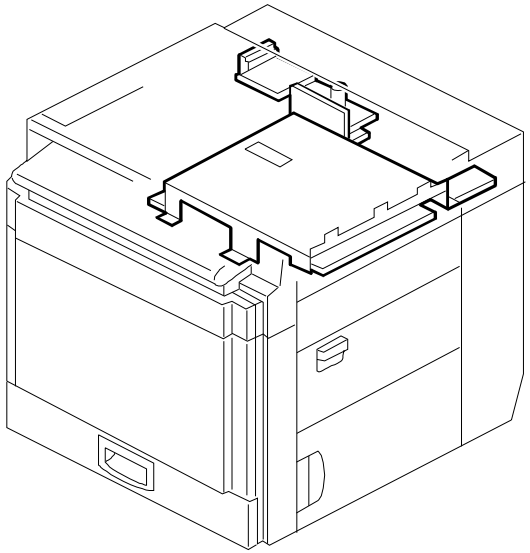

See Page 18

6. OPTICS SECTION 3 (A166)

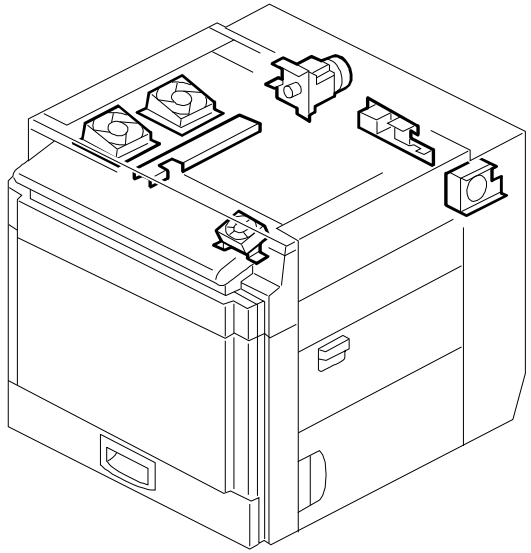

See Page 20

LOCATION OF UNIT

7. OPTICS SECTION 4 (A166)

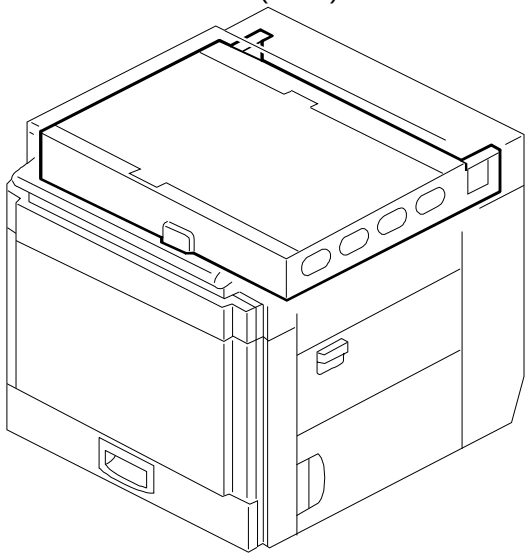

See Page 22

8. LD UNIT (A166)

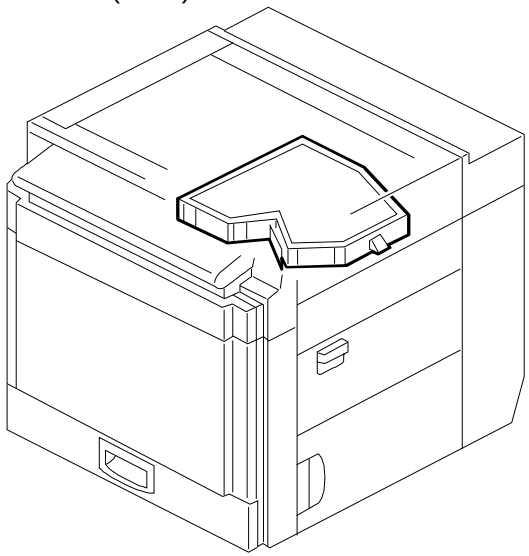

See Page 24

9. BY-PASS FEED SECTION (A166)

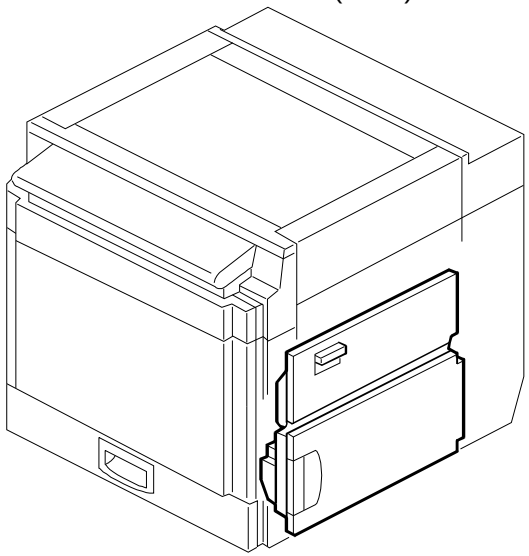

See Page 26

10. PAPER FEEED SECTION 1 (A166)

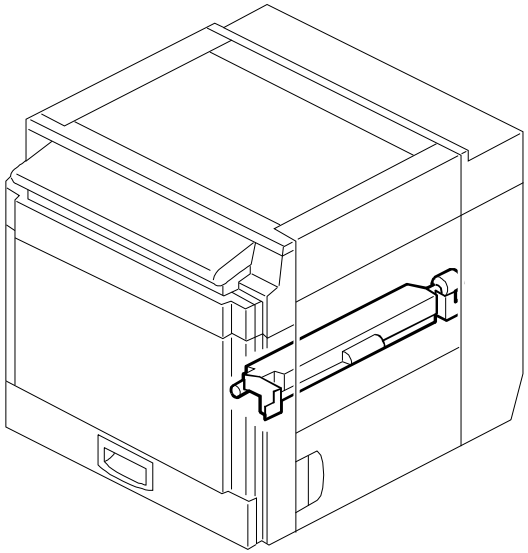

See Page 28

11. PAPER FEEED SECTION 2 (A166)

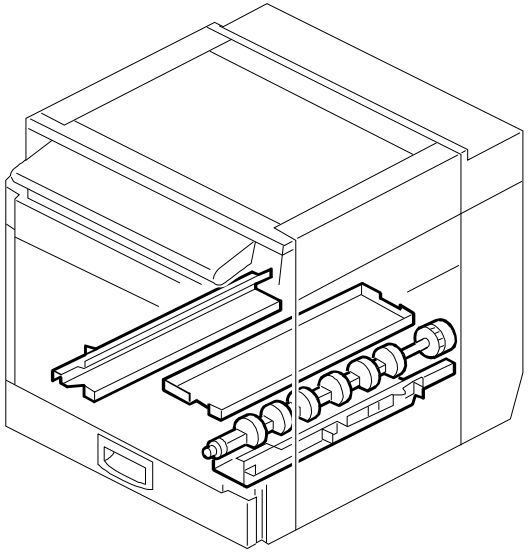

See Page 30

12. PAPER REGISTRATION (A166)

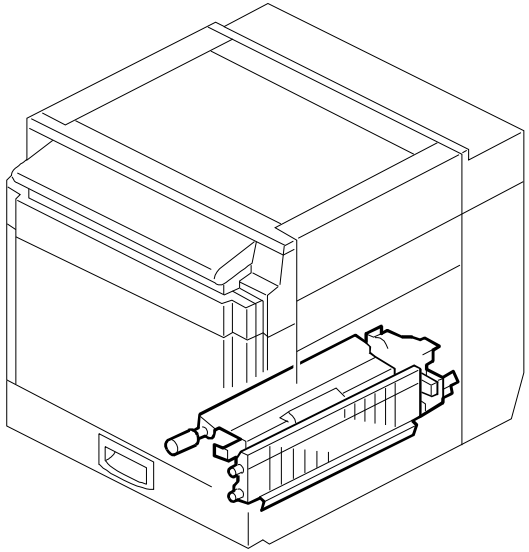

See Page 32

LOCATION OF UNIT

13. PAPER TRAY SECTION (A166)

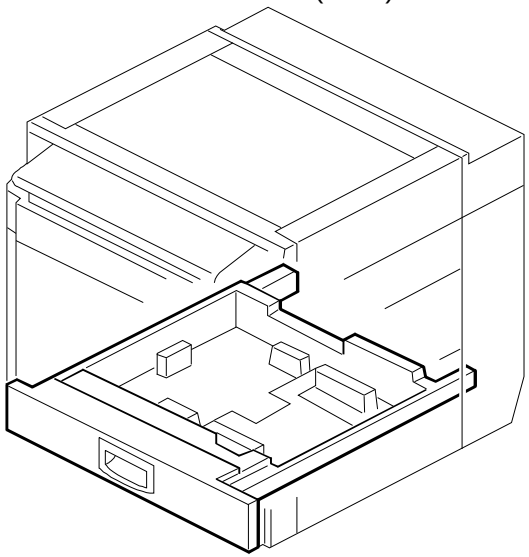

See Page 34

14. TONNER HOPPER (A166)

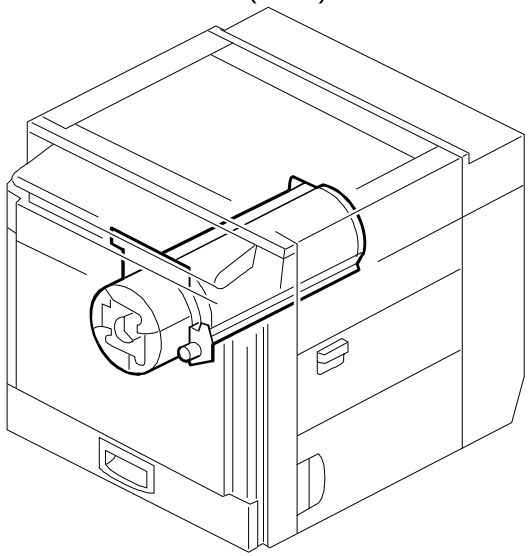

See Page 36

15. DEVELOPMENT UNIT (A1466)

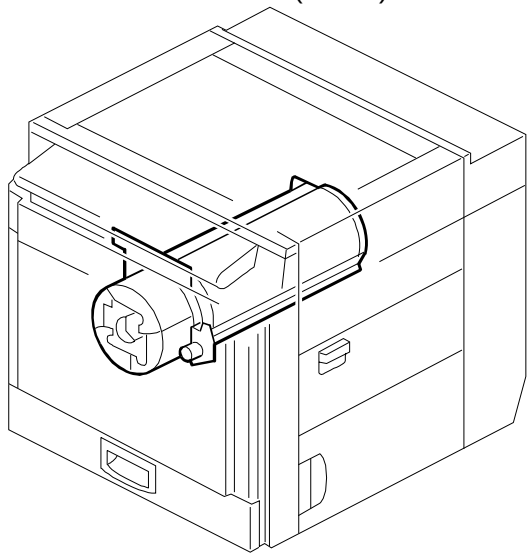

See Page 38

16. TRANSFER BELT UNIT 1 (A166)

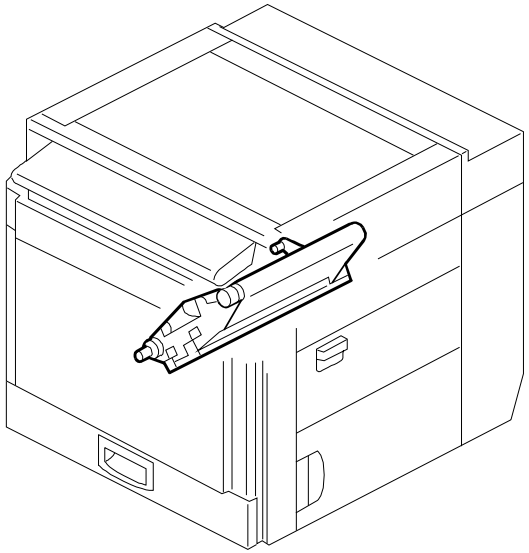

See Page 40

17. TRANSFER BELT UNIT 2 (A166)

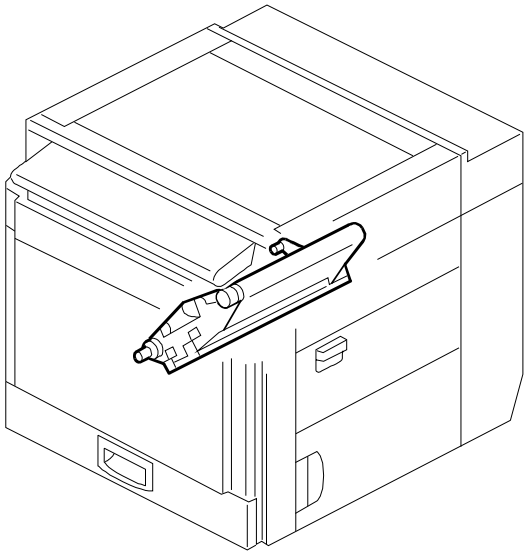

See Page 42

18. DRUM SECTION (A166)

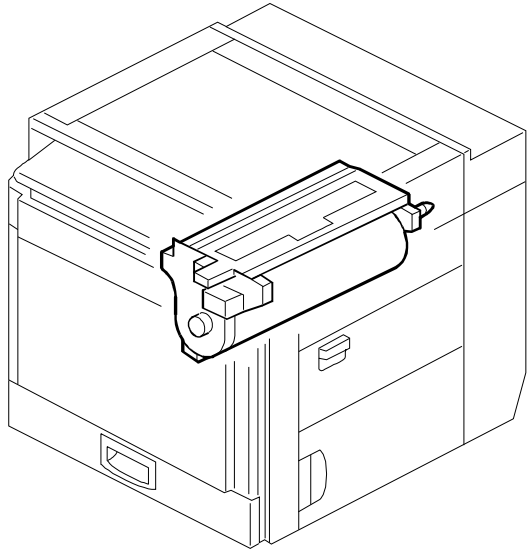

See Page 44

LOCATION OF UNIT

19. DRUM CLEANING (A166)

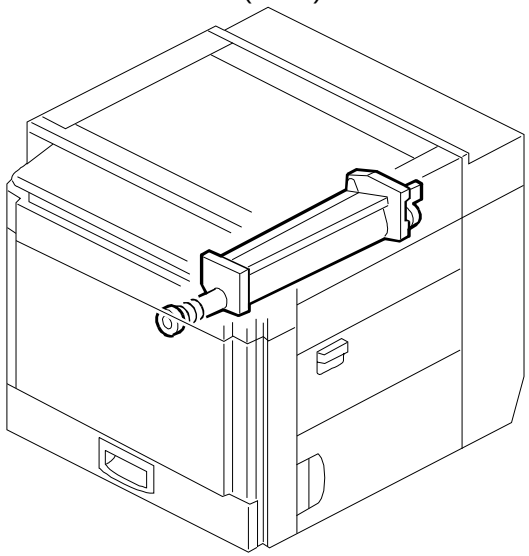

See Page 46

20. TRANSFER BELT CLEANING (A166)

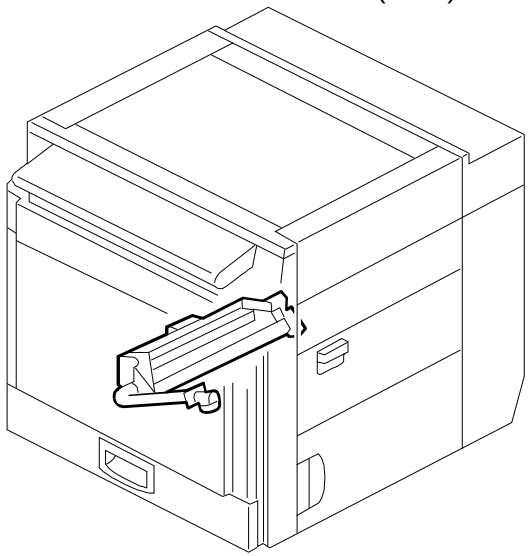

See Page 48

21. TRANSPORT UNIT (A166)

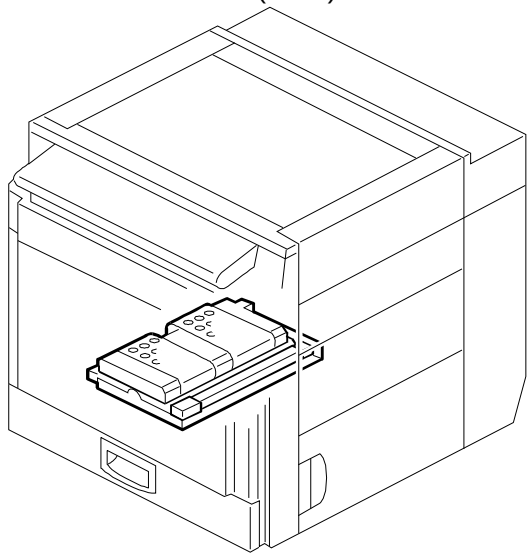

See Page 50

22. FUSING UNIT 1 (A166)

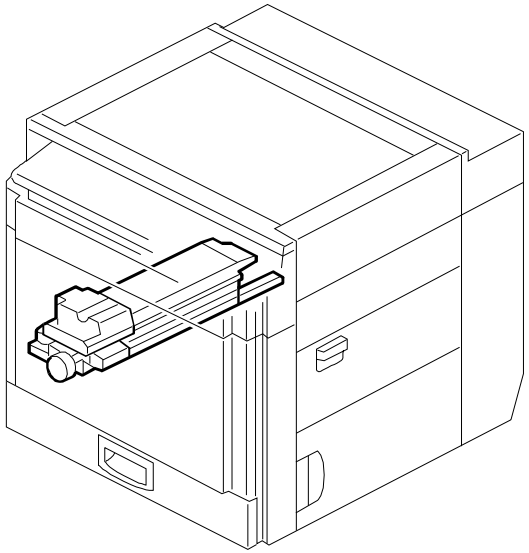

See Page 52

23. FUSING UNIT 2 (A166)

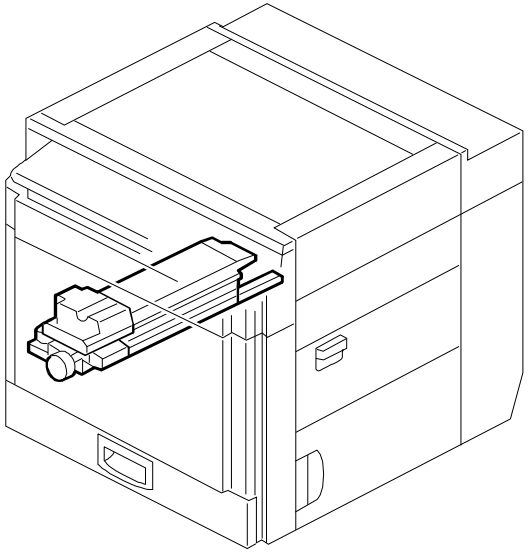

See Page 54

24. FUSING UNIT 3 (A166)

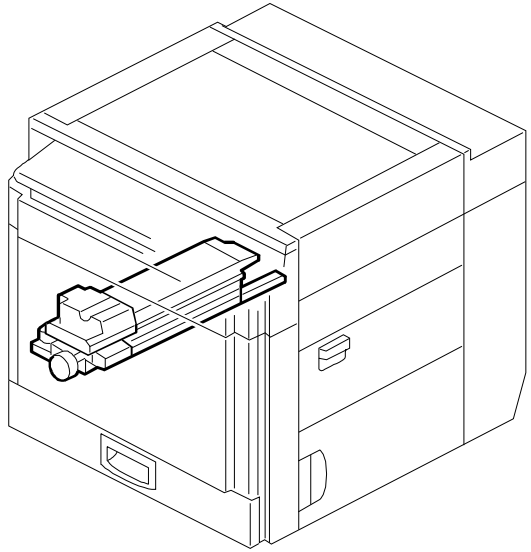

See Page 56

LOCATION OF UNIT

25. PAPER EXIT SECTION (A166)

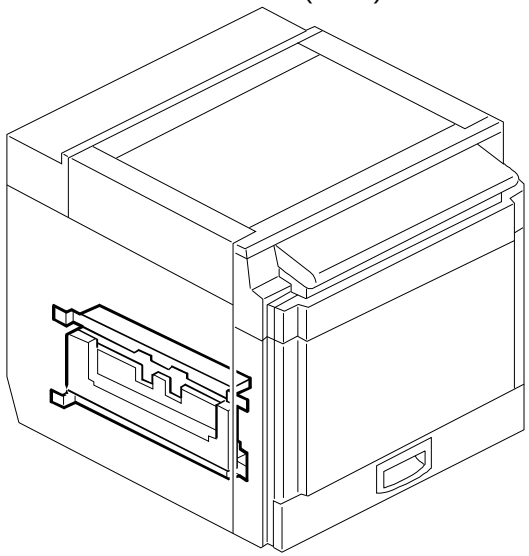

See Page 58

26. SWEEPER (A166)

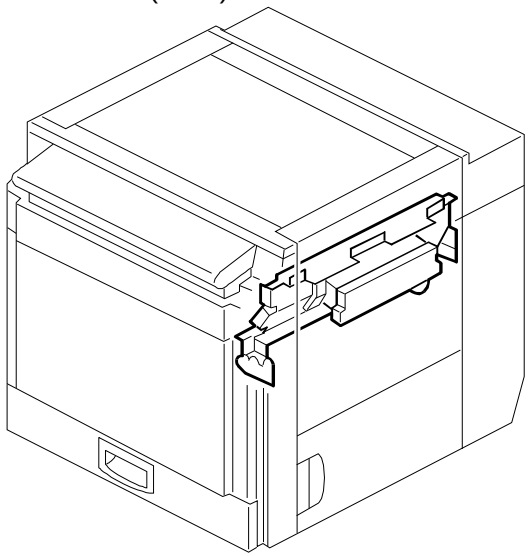

See Page 60

27. DRIVE SECTION 1 (A166)

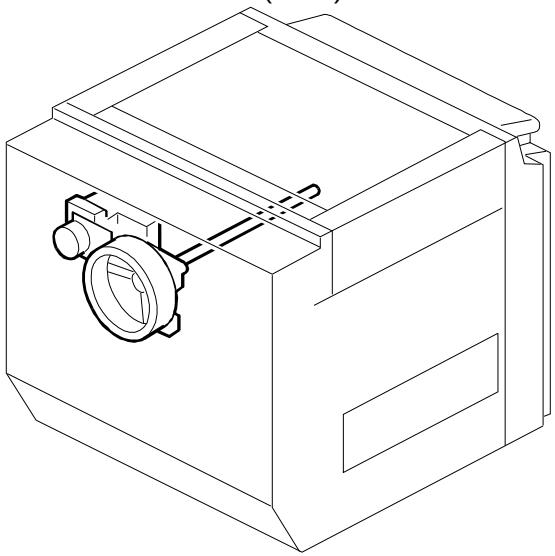

See Page 62

28. DRIVE SECTION 2 (A166)

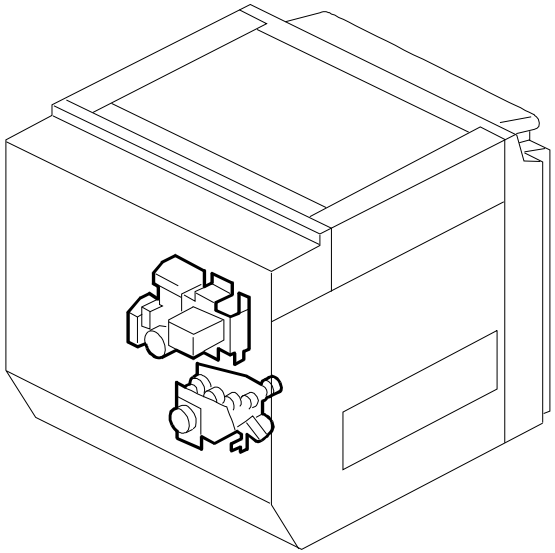

See Page 64

29. ELECTRICAL SECTION 1 (A166)

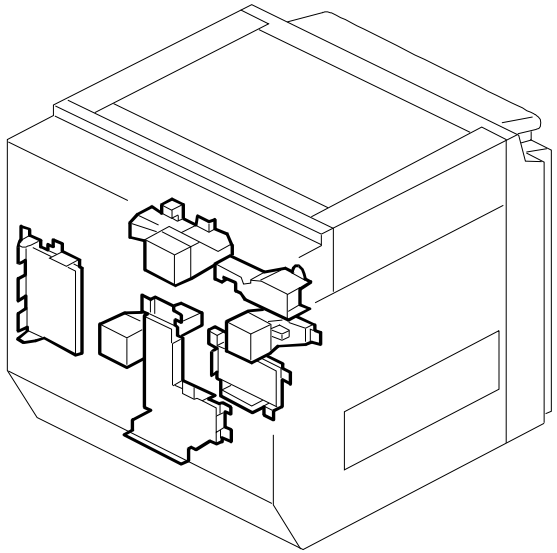

See Page 66

30. ELECTRICAL SECTION 2 (A166)

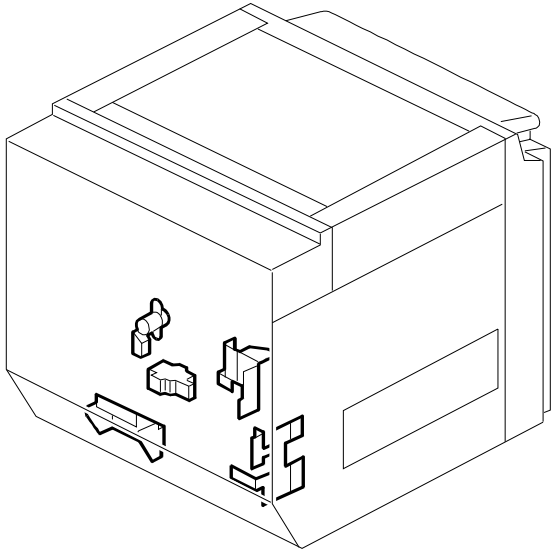

See Page 68

LOCATION OF UNIT

31. ELECTRICAL SECTION 3 (A166)

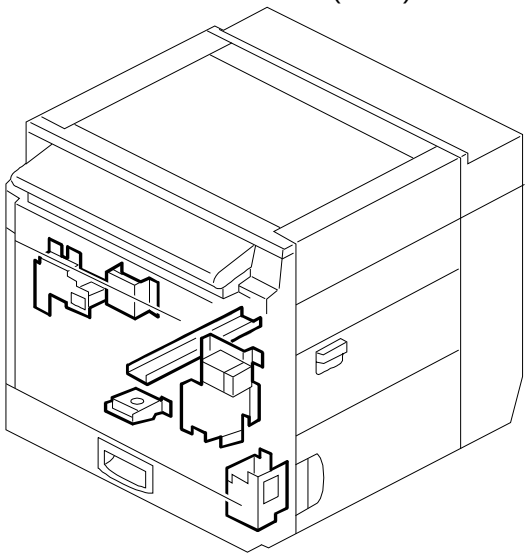

See Page 70

32. ELECTRICAL SECTION 4 (A166)

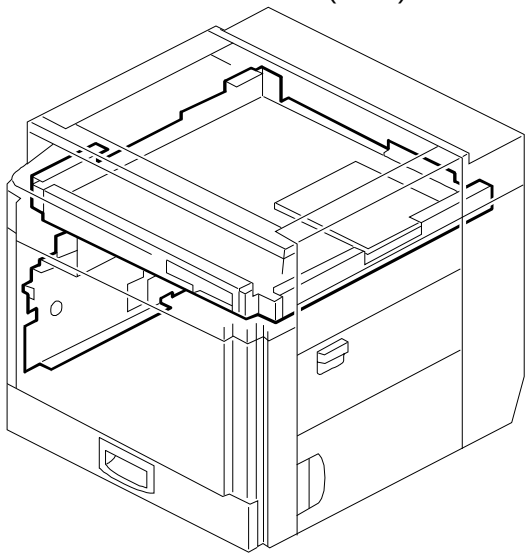

See Page 72

33. FRAME SECTION 1 (A166)

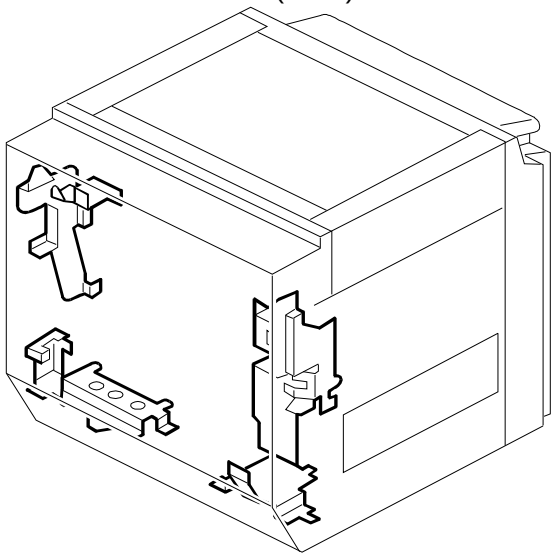

See Page 74

34. FRAME SECTION 2 (A166)

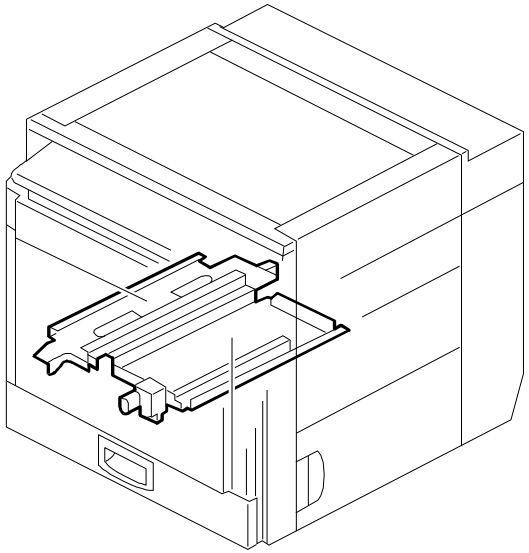

See Page 76

35. FRAME SECTION 3 (A166)

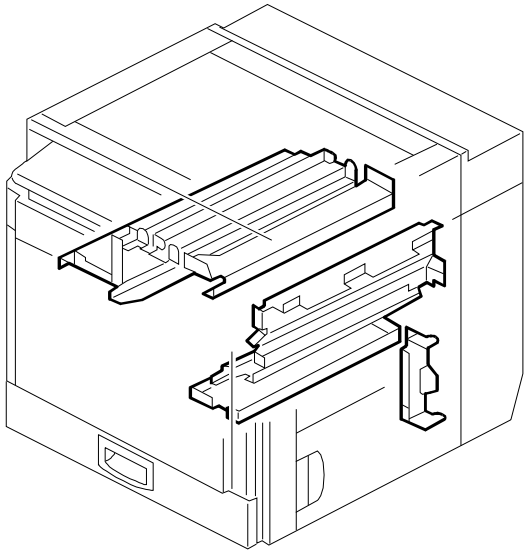

See Page 78

1. EXTERIOR (A166)

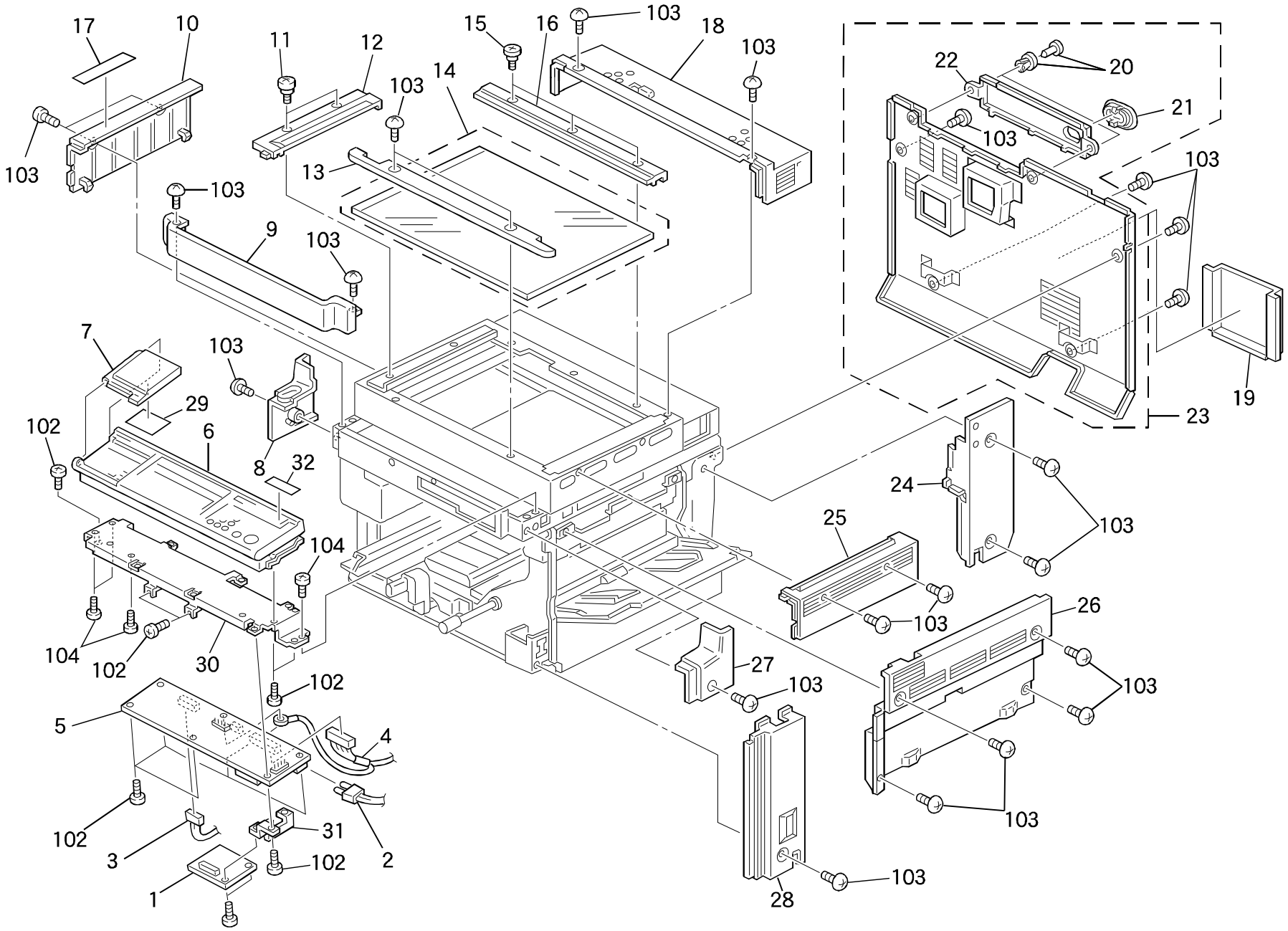

1. EXTERIOR (A166)

Index No.	Part No.	Description	Q ty Per Assembly
1	A166 5253	Memory Board	1
2	AW03 0070	Optical Fiber - 75 1000mm	1
3	A166 5645	DC Harness SCU	1
4	A166 5695	SCSI Harness	1
5	A187 5268	SCU Board (115V)	1
5	A187 5258	SCU Board (NRG)(230V)	1
5	A187 5251	SCU Board (RIC/INF)(230V)	1
6	A166 1474	Operation Panel Ass y (LT)	1
6	A166 1475	Operation Panel Ass y (A4)	1
7	A166 1525	Key Top Cover	1
8	A166 1382	Left Cover - System Control	1
9	A166 1380	Front Cover - System Control	1
10	A166 1828	Scanner Left Cover	1
11	AA14 3454	Stepped Screw - M3	2
12	A134 1921	Scale - Left - Printing (A4)	1
12	A133 7156	Left Scale (LT)	1
13	A166 1826	Scanner Front Cover	1
14	A134 1924	Exposure Glass	1
15	AA14 3219	Stepped Screw	3
16	A134 1922	Rear Scale (A4)	1
16	A133 7157	Rear Scale (LT)	1
17	A166 1837	Decal - Caution	1
18	A166 1829	Scanner Rear Cover	1
19	A153 1357	Operating Instruction Holder	1
20	A166 1319	Rivet	2
21	A166 1346	Left Cover Cap	1
22	A166 1366	Switch Cover	1
23	A166 1306	Rear Cover Ass y	1
24	A166 1301	Right Rear Cover	1
25	A166 1827	Scasnner Right Cover	1
26	A166 1291	Right Middle Cover	1
27	A166 1381	Right Cover - System Control	1
28	A166 1271	Front Right Cover	1
29	A187 1528	Operation Decal (LT)	1
29	A187 1529	Operation Decal (A4)	1

Index No.	Part No.	Description	Q ty Per Assembly
30	A166 5880	Operation Panel Bracket - SCU	1
31	A166 5874	Bracket - NV SCU	1
32	C225 2866	Decal - Key Top Cover (REX)	1
32	A153 6409	Decal - Keytop Cover (NRG)	1
32	C225 2867	Decal - Cover - Panel (NSA)	1
101	0434 0060B	Philips Tapping Screw - M4x6	
102	0443 0060B	Hexagon Tapping Screw - M3x6	
103	0802 5094	Tapping Truss Head Screw - M4x8	
104	0452 3008B	Tapping Screw - M3x8	

2. EXTERIOR 2 (A166)

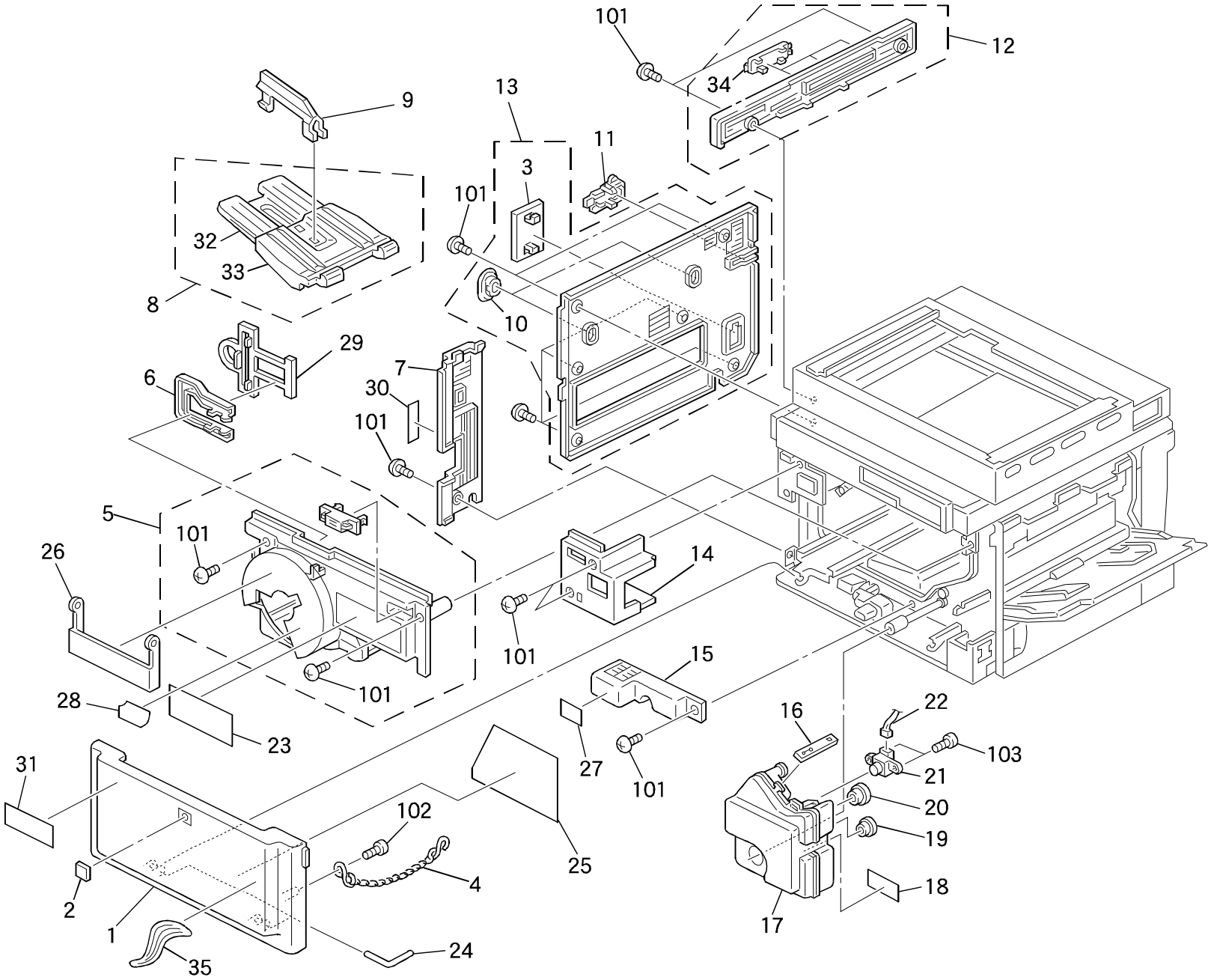

2. EXTERIOR 2 (A166)

Index No.	Part No.	Description	Q ty Per Assembly
1	A166 1231	Front Cover (RIC)	1
1	A166 6712	Front Cover (NRG)	1
1	A166 6713	Cover - Front - BF (INF)	1
1	A166 6714	Cover - Front - BF (SVN)	1
2	A166 1378	Decal - Emblem (RIC)	1
2	A153 6423	Support Cover (INF)	1
2	A166 6730	Emblem (SVN)	1
3	A166 1349	Cap - DFUnit	1
4	A166 6118	Transfer Belt Unit Release Knob	1
5	A166 1332	Upper Inner Cover	1
6	A166 3218	Development Unit Handle	1
7	A166 1266	Front Left Cover	1
8	A153 4461	Copy Tray Ass y	1
9	AF04 3077	Copy Tray Guide	1
10	A166 1346	Left Cover Cap	2
11	A166 1361	Power Cord Cap	1
12	A166 1379	IC Card Cap	1
13	A166 1281	Left Cover	1
14	A166 1326	Inner Cover - Safety Switch	1
15	A166 1341	Transport Inner Cover	1
16	A166 6531	Collection Bottle Band	1
17	A166 6523	Disposed Toner Tank	1
18	AA00 0059	Caution Decal - English	1
19	5442 3664	Toner Collection Bottle Cap - Small	1
20	A007 3785	Toner Collection Bottle Cap	1
21	AW23 0009	Toner End Sensor	1
22	A166 5658	Toner Collection Relay Harness	1
23	A166 1372	Decal - Adding Toner	1
24	A166 1363	Hinge Pin	2
25	A166 1374	Decal - Operation	1
26	A166 1335	Cover - Toner Cartrige Black	1
27	AA00 0195	Decal - High Temperature	1
28	A166 1369	Decal - Toner Cartoridge	1
29	A166 3219	Grip Support Plate	1
30	AA00 1373	Decal - Main Switch	1

Index No.	Part No.	Description	Q ty Per Assembly
31	C225 2867	Decal - Cover - Panel (NSA)	1
31	A166 6751	Model Name Plate - GES	1
31	A166 6752	Model Name Plate - NSA	1
31	A166 6753	Model Name Plate - REX	1
31	A166 6754	Model Name Plate - SVN	1
31	A153 6406	Model Name Plate (NRG)	1
32	AF04 3076	Copy Tray Slide	1
33	AF04 3069	Copy Tray	1
34	A166 1386	IC Card Cap	3
35	A166 1376	Color Decal (RIC)	1
101	0802 5094	Tapping Truss Head Screw - M4x8	
102	0452 4008B	Tapping Bind Screw - M4x8	
103	0452 3010B	Tapping Bind Screw - M3x10	

3. PLATEN COVER (A166)

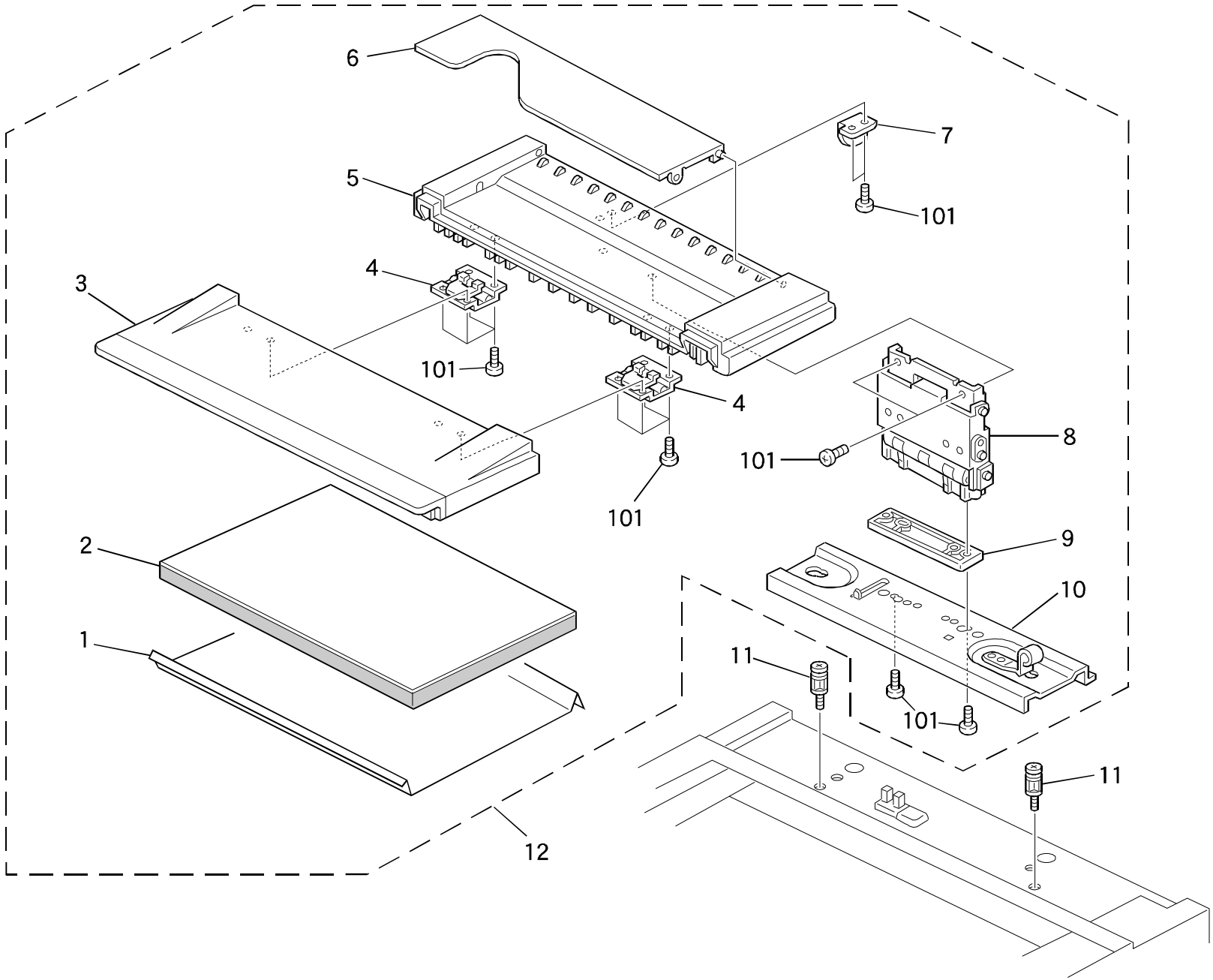

3. PLATEN COVER (A166)

Index No.	Part No.	Description	Q ty Per Assembly
1	5448 2804	Platen Cover Sheet	1
2	AA16 2053	Platen Cover Pad	1
3	A134 1394	Front Platen Cover	1
4	A053 1957	Flex Hinge - Platen Cover	2
5	A134 1395	Rear Platen Cover	1
6	A134 1396	Original Holder	1
7	A100 1324	Positioning Sensor Shutter	1
8	A100 1310	Platen Cover Hinge Ass y	1
9	A100 1325	Hinge Spacer	1
10	A153 1380	Platen Cover Bracket	1
11	AA14 8447	Guide Pin - Platen Cover	2
12	A134 1392	Platen Cover Ass y	1

Index No.	Part No.	Description	Q ty Per Assembly
101	0414 0142W	Tapping Screw - M4x14	

4. OPTICS SECTION 1 (A166)

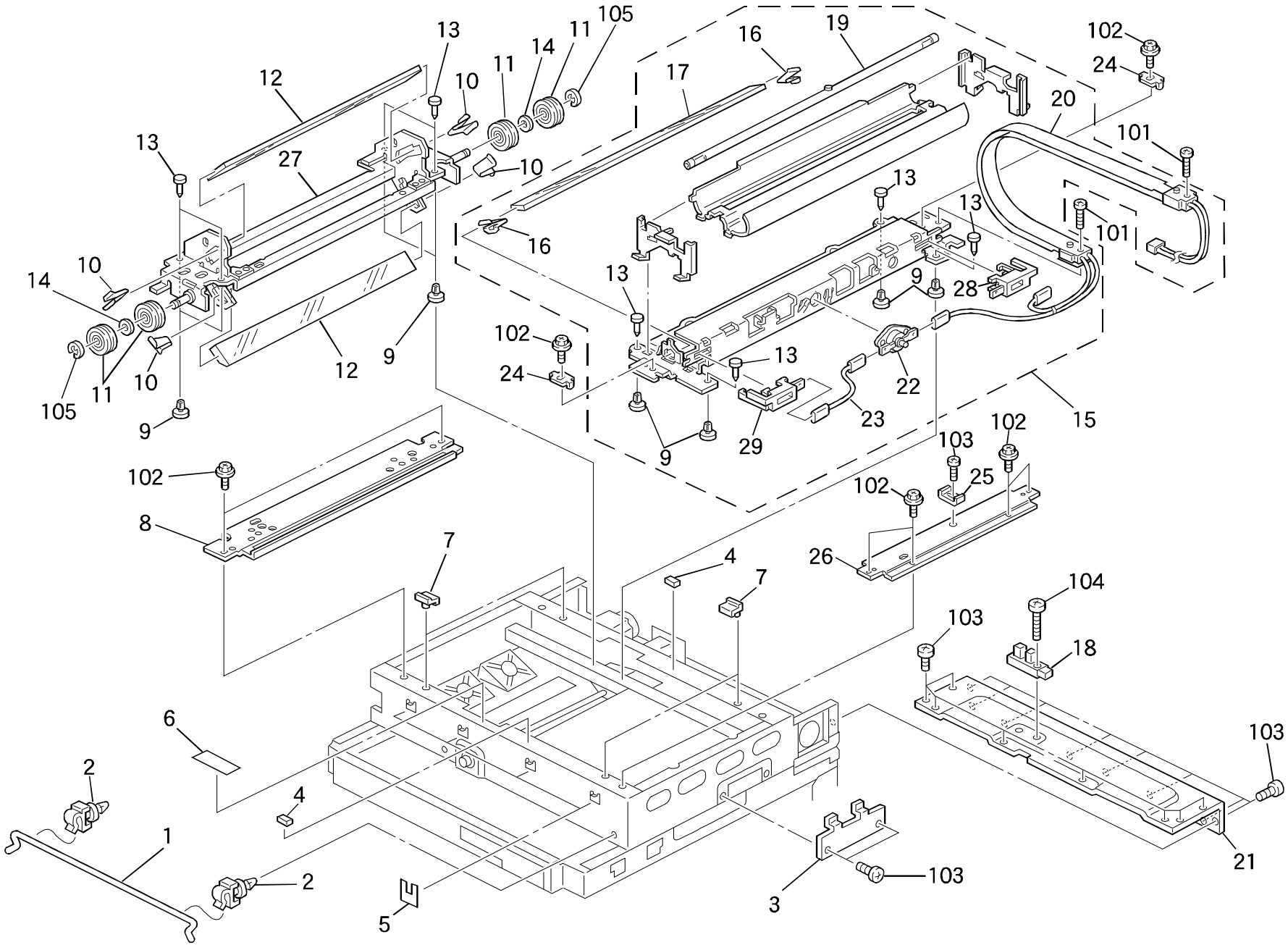

4. OPTICS SECTION 1 (A166)

Index No.	Part No.	Description	Q ty Per Assembly
1	A166 5974	Scanner Release Rod	1
2	A166 1910	Rod Holder	2
3	A166 1677	Right Support Cover	1
4	A028 7277	Entrance Gate Cushion	2
5	AA15 0657	Seal	4
6	AA15 0636	Seal - 90x29.5x0.2	1
7	A134 1926	Exposure Glass Stopper	4
8	A166 1812	Left Scale Bracket	1
9	A069 1883	Shoe - Scanner	8
10	A134 1791	Spring Plate - 2nd Mirror	4
11	AB03 2717	Pulley - 26Z	4
12	A166 1742	2nd Mirror Ass y	2
13	A096 1873	Scanner Shoe Pin	8
14	AA13 2174	Spacer - M8	2
15	A166 1728	1st Scanner Unit	1
16	A134 1776	Spring Plate - 1st Mirror	2
17	A166 1737	1st Mirror	1
18	AW02 0022	Photointerruptor	1
19	**AX52 0029**	**Exposure Lamp - 75V 160W**	**1**
20	A166 5135	Exposure Lamp Harness	1
21	A166 1685	Platen Cover Bracket	1
22	AW11 0017	Thermostat - 140 C - AC120V 15A	1
23	A134 5370	Relay Harness - Scanner Lamp	1
24	A134 1726	Wire Stopper Plate	2
25	A134 1933	Right Stopper - Exposure Glass	1
26	A134 1932	Stay - Scanner Upper Right	1
27	A134 1782	2nd Scanner Ass y	1
28	A134 1773	Rear Terminal	1
29	A134 1771	Front Terminal	1

Index No.	Part No.	Description	Q ty Per Assembly
101	0313 0140B	Philips Pan Head Screw - M3x14	
102	0443 0060B	Hexagon Tapping Screw - M3x6	
103	0434 0060B	Philips Tapping Screw - M4x6	
104	0314 0120B	Philips Pan Head Screw - M4x12	
105	0720 0060E	Retaining Ring - M6	

5. OPTICS SECTION 2 (A166)

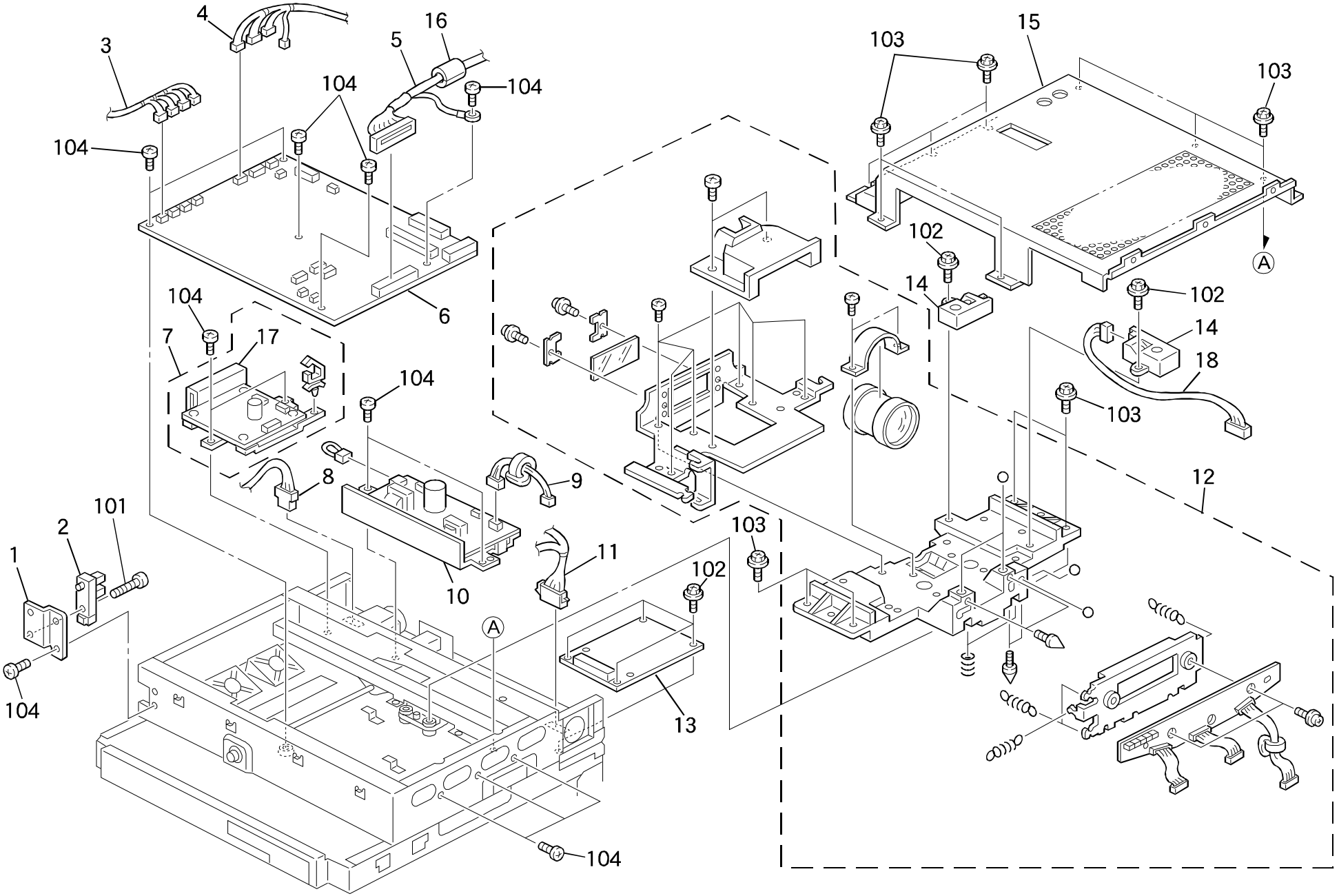

5. OPTICS SECTION 2 (A166)

Index No.	Part No.	Description	Q ty Per Assembly
1	A134 1962	Bracket Home Sensor	1
2	AW02 0072	Photointerruptor	1
3	A166 5100	Front Scanner Harness	1
4	A166 5110	Rear Scanner Harness	1
5	A166 5131	Scanner Scsi Harness	1
6	A187 5090	Scanner IPU Board	1
7	A166 1777	Scanner Motor Control Board	1
8	A166 5126	Scanner AC Harness	1
9	A134 5372	Harness - Scanner Lamp	1
10	AZ23 0051	Lamp Regulator (115V)	1
10	AZ23 0063	Lamp Regulator - 230V	1
11	A166 5120	Scanner DC Harness	1
12	A166 1752	CCD Drive Board	1
13	A166 5080	IDU Board	1
14	AW01 0072	Original Sensor	2
15	A166 1775	Inner Cover IPU	1
16	1607 0672	Ferrite Core	1
17	A166 1778	Motor Control Board Bracket	1
18	A166 5115	Original Sensor Harness	1

Index No.	Part No.	Description	Q ty Per Assembly
101	0314 0120B	Philips Pan Head Screw - M4x12	
102	0443 0060B	Hexagon Tapping Screw - M3x6	
103	0951 4010B	Philips Screw With Washer - M4x10	
104	0434 0060B	Philips Tapping Screw - M4x6	

6. OPTICS SECTION 3 (A166)

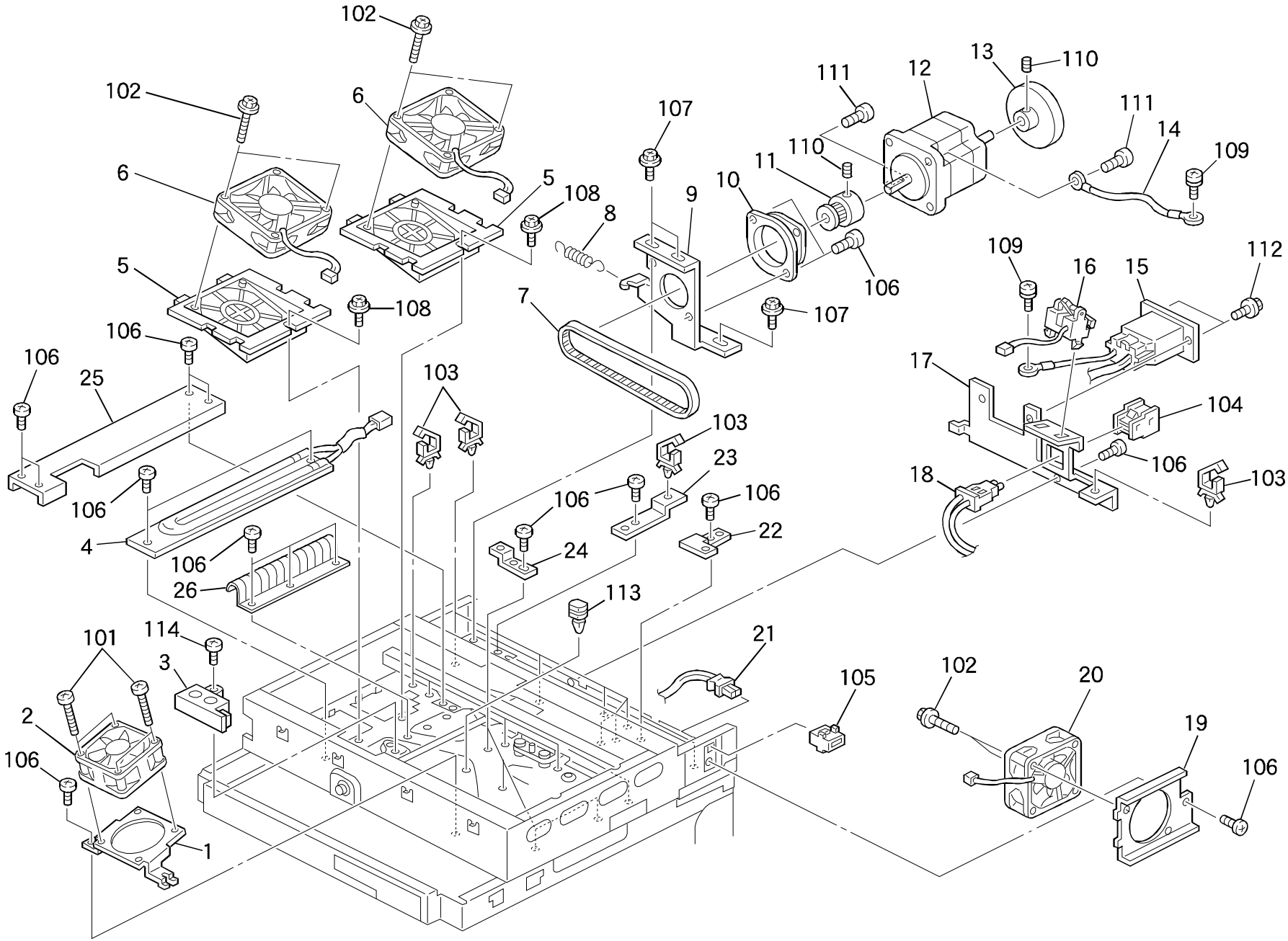

6. OPTICS SECTION 3 (A166)

Index No.	Part No.	Description	Q ty Per Assembly
1	A166 1791	Board Bracket	1
2	AX64 0066	Fan Motor - DC24V 0.04A	1
3	AW01 0040	Original Sensor	1
4	AX40 0063	Anticondensation Heater - 120V9W	1
5	A166 1802	Fan Caseing	2
6	AX64 0067	Fan Motor - DC24V 0.13A	2
7	AA04 3460	Timing Belt - S2M 290	1
8	AA06 0221	Gripper Solenoid Spring	1
9	A166 1715	Motor Bracket	1
10	A134 1724	Cushion - Stepper Motor	1
11	AB03 0459	Timing Pulley -22z	1
12	AX06 0124	Motor - DC24V 53W	1
13	A134 1728	Fly Wheel	1
14	A069 5352	Ground Wire - Scanner	1
15	A166 5120	Scanner DC Harness	1
16	AW02 0084	Photointerruptor	1
17	A166 1796	Connector Bracket	1
18	AW03 0039	Optical Fiber - 75 700mm	1
19	A166 1786	Fan Motor Bracket	1
20	AX64 0065	Fan Motor - DC24V 0.8A	1
21	AW03 0032	Optical Fiber	1
22	A166 1672	BRU Board Bracket	1
23	A166 1678	Scanner Clamp Bracket	1
24	A166 1671	IPU Board Bracket	1
25	A166 1699	Scanner Rail Stay	1
26	A166 1667	Spring Plate	1

Index No.	Part No.	Description	Q ty Per Assembly
101	0314 0250B	Philips Pan Head Screw - M4x25	
102	0450 4035B	Philips Tapping Screw - M4x35	
103	1105 0291	Wire Saddle	
104	1102 4052	Optional Connector	
105	1102 5981	Fiber Connector	
106	0434 0060B	Philips Tapping Screw - M4x6	
107	0951 4006B	Philips Screw With Washer - M4x6	
108	0451 4008B	Philips Tapping Screw - M4x8	
109	0801 0149	Philips Pan Head Screw - M4x6	
110	0575 0050E	Hexagon Headless Set Screw - M5x5	
111	0314 0100B	Philips Pan Head Screw - M4x10	
112	0443 0060B	Hexagon Tapping Screw - M3x6	
113	1105 0246	Spacer	
114	0353 0080B	Screw - M3X8	

7. OPTICS SECTION 4 (A166)

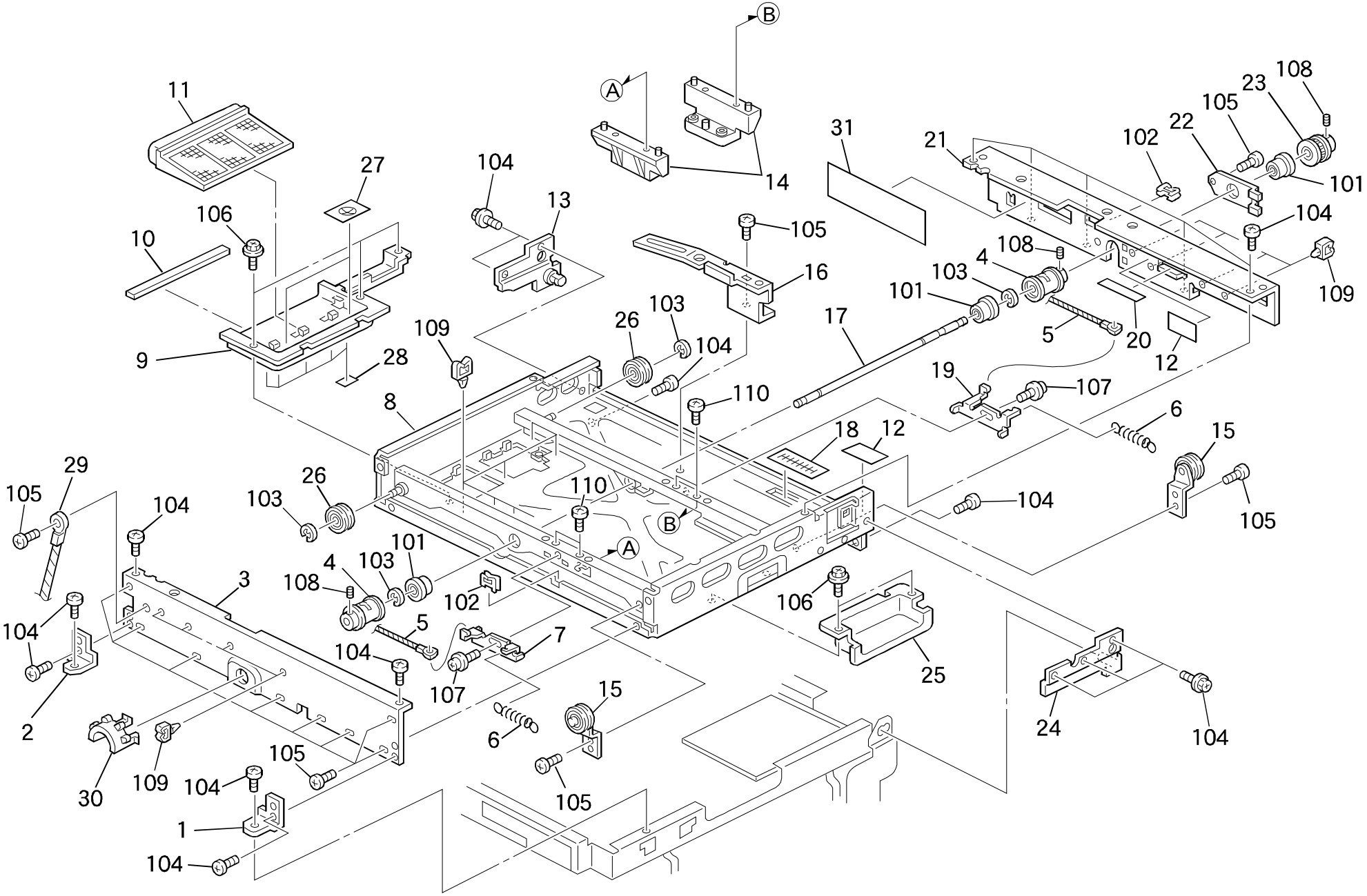

7. OPTICS SECTION 4 (A166)

Index No.	Part No.	Description	Q ty Per Assembly
1	A166 1697	Right Scanner Guide	1
2	A166 1696	Left Scanner Guide	1
3	A166 1694	Front Frame	1
4	AB03 2718	Drive Pulley	2
5	AA05 0085	Scanner Wire	2
6	AA06 0221	Gripper Solenoid Spring	2
7	A134 1677	Front Tension Bracket	1
8	A166 1657	Scanner Frame	1
9	A166 1664	Left Grip	1
10	AA15 3022	Seal	1
11	**A166 1674**	**Dust Filter 80**	**1**
12	AA15 0661	Seal	2
13	A166 1902	Scanner Left Hinge	1
14	A166 1683	Lens Holder	2
15	A134 1698	Idle Pulley	2
16	A166 1773	Flat Cable Guide	1
17	AA14 0547	Drive Shaft	1
18	AA15 0656	SCSI Entrance Seal	1
19	A134 1678	Rear Tension Bracket	1
20	A134 1680	Guide - Flexible Harness	1
21	A166 1689	Rear Frame	1
22	A134 1722	Bracket - Drive Shaft	1
23	AB00 0021	Timing Pulley - 63Z	1
24	A166 1905	Scanner Right Hinge	1
25	A166 1669	Right Grip	1
26	AB03 2717	Pulley - 26Z	2
27	AA15 0662	Seal	2
28	AA15 0663	Seal	5
29	AA05 1026	Scanner Stopper Wire	1
30	A166 1698	Pulley Cover	1
31	AA15 0660	Seal	1

Index No.	Part No.	Description	Q ty Per Assembly
101	0805 3368	Ball Bearing - 8 X 16 X 5mm	
102	1105 0328	Harness Clamp - ES-0505	
103	0720 0060B	Retaining Ring - M6	
104	0414 0080B	Binding Self-tapping Screw - M4x8	
105	0434 0060B	Philips Tapping Screw - M4x6	
106	0451 4008B	Philips Tapping Screw - M4x8	
107	0951 4006B	Philips Screw With Washer - M4x6	
108	0575 0050E	Hexagon Headless Set Screw - M5x5	
109	1105 0199	Clamp	
110	0434 0102B	Tapping Screw - M4x8	

8. LD UNIT (A166)

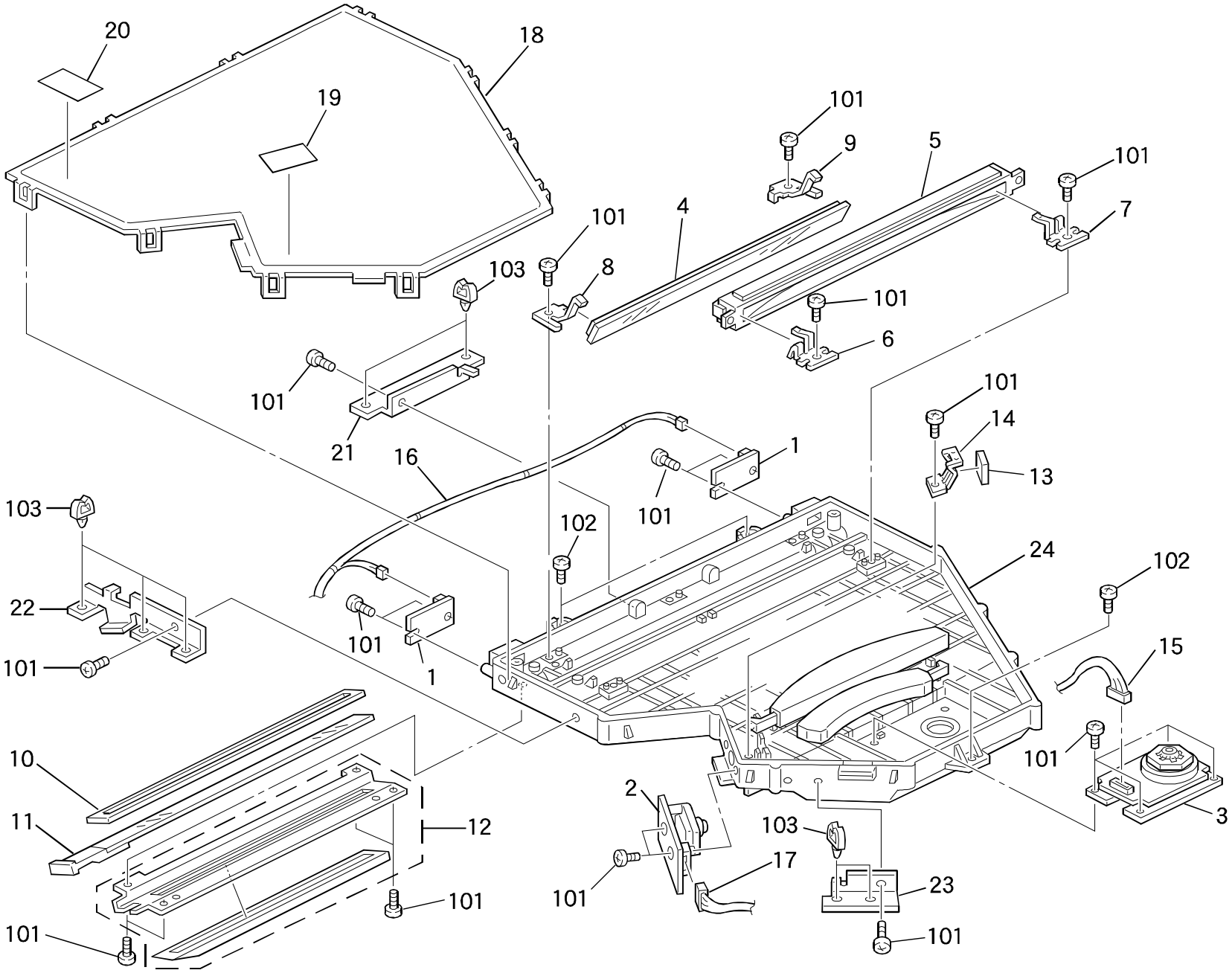

8. LD UNIT (A166)

Index No.	Part No.	Description	Q ty Per Assembly
*	A187 2052	LD Unit (115V)	1
*	A187 2051	LD Unit (230V)	1
1	A134 5190	LSD Board	2
2	A187 2092	LD Unit	1
3	A166 5390	Polygon Motor	1
4	A166 2081	Mirror Ass y	1
5	A166 2078	Lens - Blt	1
6	A166 2076	Front Lens Holder	1
7	A166 2077	Rear Lens Holder	1
8	A166 2083	Front Mirror Holder	1
9	A166 2084	Rear Mirror Holder	1
10	AA15 2360	Seal	1
11	A166 2062	Shielding Glass	1
12	A166 2066	Shielding Glass Guide	1
13	AC02 0074	Cylindrical Lens	1
14	A100 2056	Plate - Cylindrical Lens	1
15	A166 5655	Polygon Harness	1
16	A187 5653	Synchronizing Harness	1
17	A187 5654	LD Control Harness	1
18	A166 2106	LD Unit Cover	1
19	AA00 0600	Decal - LD	1
20	AA00 0602	Decal LD Cover	1
21	A166 2112	Left Harness Bracket	1
22	A166 2114	Front Harness Bracket	1
23	A166 2116	Right Harness Bracket	1
24	A166 2055	Optical Housing	1
25	A187 5701	Grounding Wire - 55	1

Index No.	Part No.	Description	Q ty Per Assembly
101	0353 0060W	Philips Pan Head Screw - M3x6	
102	0414 0080B	Binding Self-tapping Screw - M4x8	
103	1105 0234	Clamp	

9. BY-PASS FEED SECTION (A166)

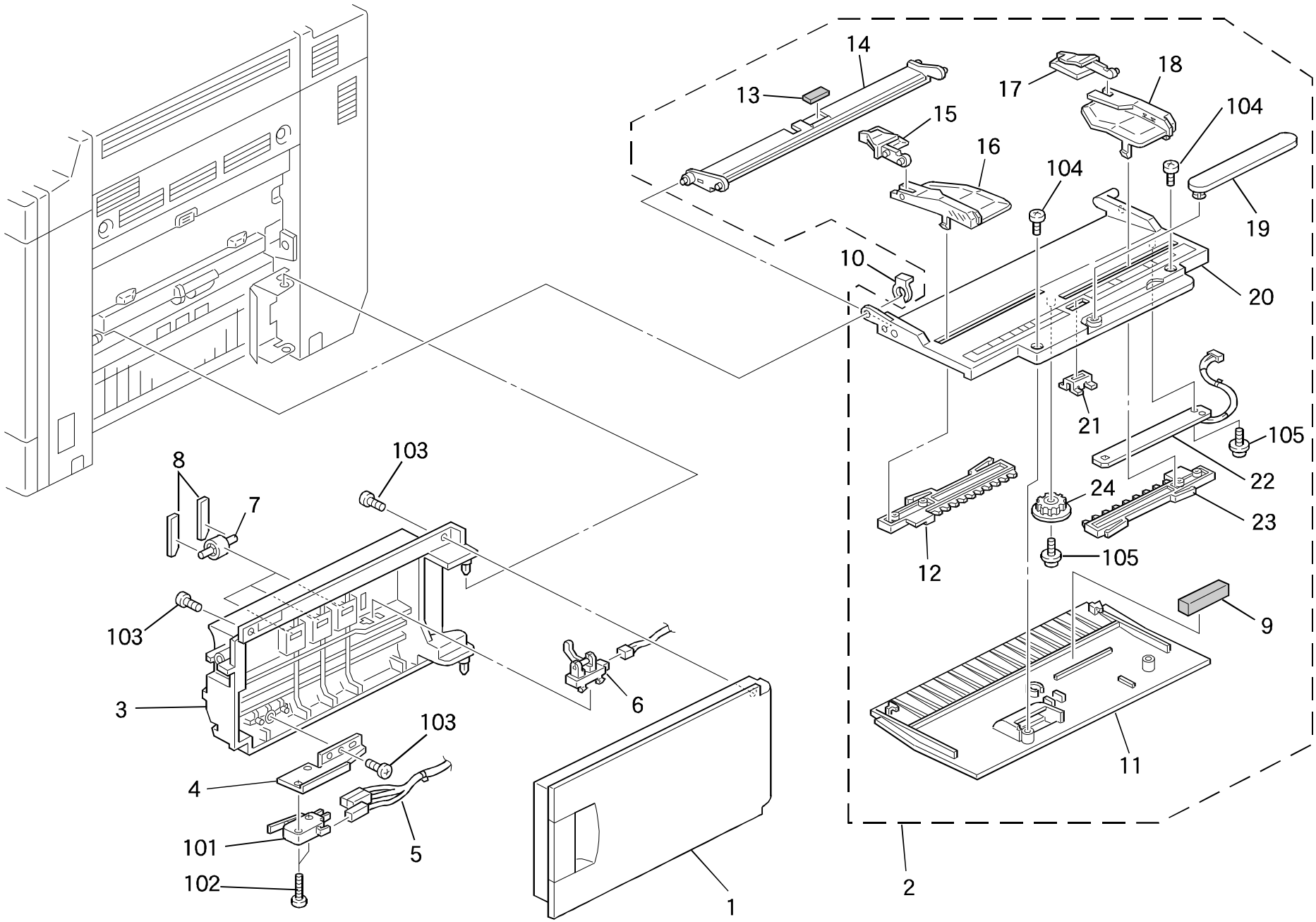

9. BY-PASS FEED SECTION (A166)

Index No.	Part No.	Description	Q ty Per Assembly
1	A166 2696	Vertical Transport Cover	1
2	A134 2692	By-pass Feed Table Ass y	1
3	A166 2682	Vertical Transport Guide	1
4	A134 2587	Switch Bracket	1
5	A166 5652	Vertical Transfer Harness	1
6	AW02 0069	Photointerruptor	1
7	AF02 2079	Vertical Driven Roller	3
8	A166 2690	Spring Plate	9
9	AA15 1998	Cushion - 10x30x5	1
10	5215 2621	Snap Ring - M6	1
11	A134 2746	By-pass Feed Cover	1
12	A134 2707	Front Fence Rack	1
13	5447 2927	Friction Pad - B	1
14	A134 2741	By-pass Feed Entrance Guide	1
15	A134 2721	Front Paper Guide	1
16	A134 2711	Front Side Fence	1
17	A134 2726	Rear Paper Guide	1
18	A134 2716	Rear Side Fence	1
19	A134 2701	By-pass Feed Guide	1
20	A134 2697	By-pass Feed Table	1
21	A134 2705	Magnet Catch Plate	1
22	A134 5282	Paper Size Sensor Board	1
23	A134 2706	Rear Fence Rack	1
24	G011 3305	Gear - 16T	1

Index No.	Part No.	Description	Q ty Per Assembly
101	1204 2356	Micro Switch - AM51612A531	
102	0313 0140B	Philips Pan Head Screw - M3x14	
103	0452 4010B	Tapping Bind Screw - M4x10	
104	0414 0082F	Philips Truss Head Screw - M4x8	
105	0965 3006B	Tapping Screw With Flat Washer M3x6	

10. PAPER FEEED SECTION 1 (A166)

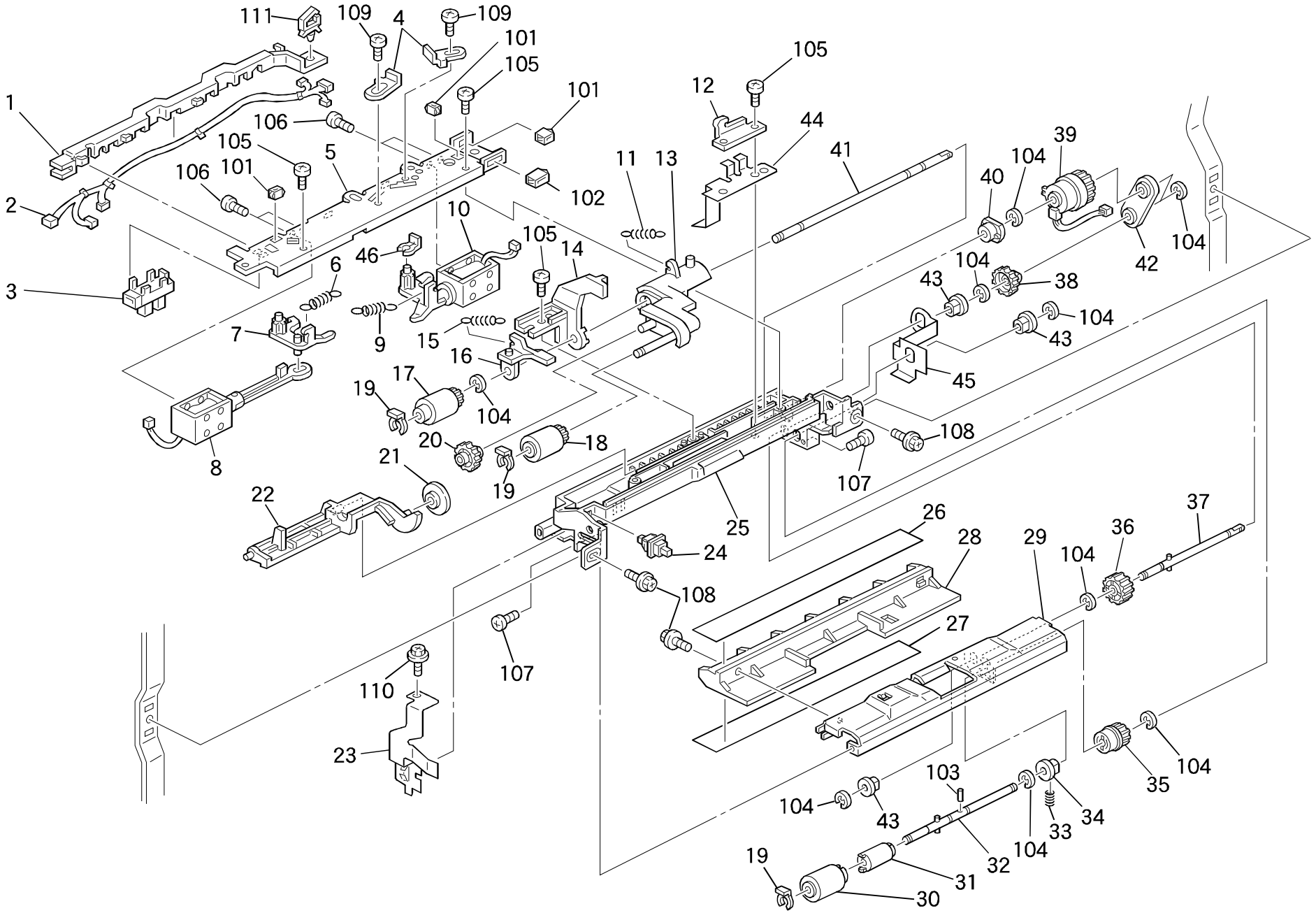

10. PAPER FEEED SECTION 1 (A166)

Index No.	Part No.	Description	Q ty Per Assembly
1	A166 2843	Harness Guide	1
2	A166 5651	By-pass Feed Harness	1
3	AW02 0075	Photointerrupter	1
4	A166 2841	Release Bracket	2
5	A166 2803	By-pass Feed Cover	1
6	AA06 0625	Spring	1
7	A166 2839	Pressure Lever	1
8	A166 2831	DC Solenoid - Pressure	1
9	AA06 0624	Spring	1
10	A166 2819	DC Solenoid - Pick-up	1
11	AA06 0622	Spring	1
12	A166 2778	Spring Bracket	1
13	A166 2768	Pick-up Arm	1
14	A166 2766	Paper Feed Support Plate	1
15	AA06 0623	Spring	1
16	A166 2776	Pressure Arm	1
17	**AF03 1025**	**Feed Roller**	**1**
18	**AF03 0024**	**Pick-up Roller**	**1**
19	5447 2681	Snap Ring	3
20	AB01 1343	Idle Gear - 23z	1
21	A134 2661	Feeler Roller	1
22	A166 2847	Paper End Feeler	1
23	A166 2845	Spring Plate	1
24	AW50 0012	Push Switch	1
25	A134 2659	By-pass Feed Housing	1
26	A166 2855	Upper Guide Plate	1
27	A166 2856	Lower Guide Plate	1
28	A166 2853	Middle Guide Plate	1
29	A134 2663	Separation Guide	1
30	**AF03 2025**	**Separation Roller**	**1**
31	**A134 2674**	**Torque Limitter - 400fg**	**1**
32	A134 2668	Separation Driven Shaft	1
33	AA06 3499	Pressure Spring	1
34	AA08 0037	Bushing - 6 mm	1
35	AB01 1344	Gear - 16Z	1

Index No.	Part No.	Description	Q ty Per Assembly
36	AB01 1345	Gear - 20Z	1
37	A166 2783	Separation Shaft	1
38	AB01 1346	Gear - 27Z	1
39	AX20 0101	Magnetic Clutch - 2.5Kgf 35z	1
40	AA08 3010	Clutch Roller - 6x14x10	1
41	AA14 0602	Feed Shaft	1
42	A166 2849	Drive Support Plate	1
43	5053 0447	Bushing - 6mm	3
44	A166 2779	Groundimng Plate	1
45	A166 2785	Grounding Plate	1
46	AA10 0010	Snap Ring - Pick Up Sol	1
101	1102 5144	Connector - 2p	
102	1102 5195	Connector - 5p	
103	0622 0100E	Spring Pin - 2x10mm	
104	0720 0040B	Retaining Ring - M4	
105	0802 5237	Binding Self-tapping Screw - M4x10	
106	0313 0040B	Philips Pan Head Screw - M3x4	
107	0414 0080B	Binding Self-tapping Screw - M4x8	
108	0451 4008B	Philips Tapping Screw - M4x8	
109	0414 0060B	Tapping Screw - M4x6	
110	0434 0060B	Philips Tapping Screw - M4x6	
111	1105 0310	Wire Clamp	

11. PAPER FEEED SECTION 2 (A166)

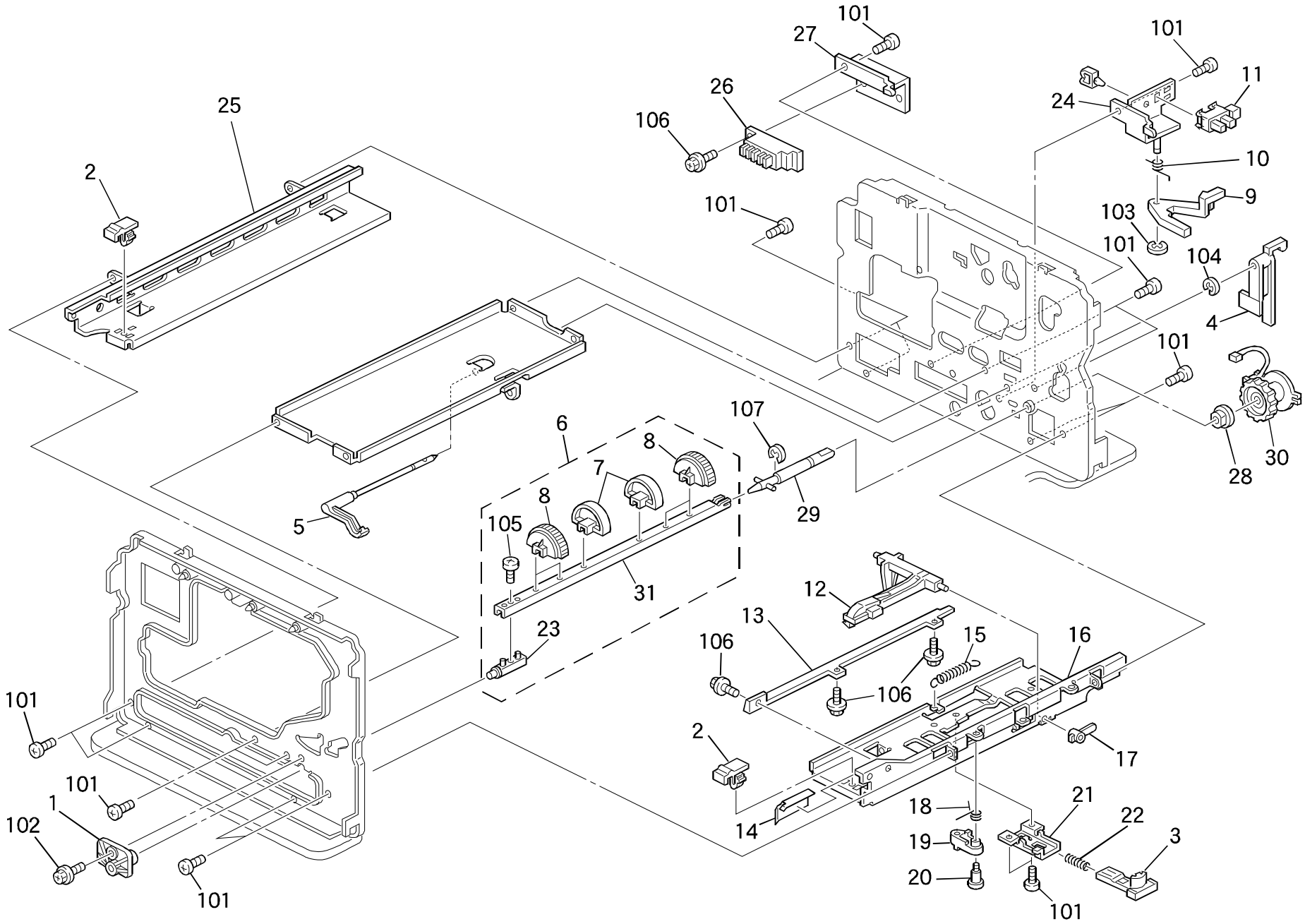

11. PAPER FEEED SECTION 2 (A166)

Index No.	Part No.	Description	Q ty Per Assembly
1	AA08 0189	Feed Roller Bushing - Front	1
2	A157 2782	Paper Tray Holder	2
3	A157 2794	Lock Arm Stopper	1
4	A157 2804	Shield Plate - Paper End Sensor	1
5	A157 2802	Paper End Sensor F	1
6	A157 2775	Feed Roller Shaft	1
7	A157 2770	Feed Roller	2
8	**AF03 1027**	**Paper Feed Roller**	**4**
9	A048 2863	Release Arm - Paper End	1
10	AA06 6104	Spring	1
11	AW02 0075	Photointerrupter	1
12	A157 2788	Lift Arm	1
13	A157 2781	Tray Positioning Rail	1
14	AA15 0383	Right Rail Sheet	1
15	AA06 0640	Spring	1
16	A157 2785	Right Rail	1
17	AA08 0190	Lift Arm Bushing	1
18	AA06 6249	Spring	1
19	A157 2786	Lift Arm Stopper	1
20	AA14 3445	Stud - M4	1
21	A157 2795	Stopper Bracket	1
22	AA06 3205	Spring	1
23	A157 2773	Feed Roller Holder	1
24	A157 2800	Paper End Sensor Bracket	1
25	A157 2783	Left Rail	1
26	AW50 0010	Push Switch	1
27	A134 2941	Bracket - Paper Sizesensor	1
28	AA08 2047	Bushing - 8x16x7	1
29	A166 2641	Paper Feed Shaft Ass y	1
30	AX20 0124	Magnetic Clutch	1
31	A157 2772	Paper Stripper Shaft	1

Index No.	Part No.	Description	Q ty Per Assembly
101	0434 0060B	Philips Tapping Screw - M4x6	
102	0414 0080B	Binding Self-tapping Screw - M4x8	
103	0720 0025E	Retaining Ring - M2.5	
104	0720 0060E	Retaining Ring - M6	
105	0413 0082B	Tapping Screw - M3x8	
106	0443 0060B	Hexagon Tapping Screw - M3x6	
107	0720 0030B	Retaining Ring - M3	

12. PAPER REGISTRATION (A166)

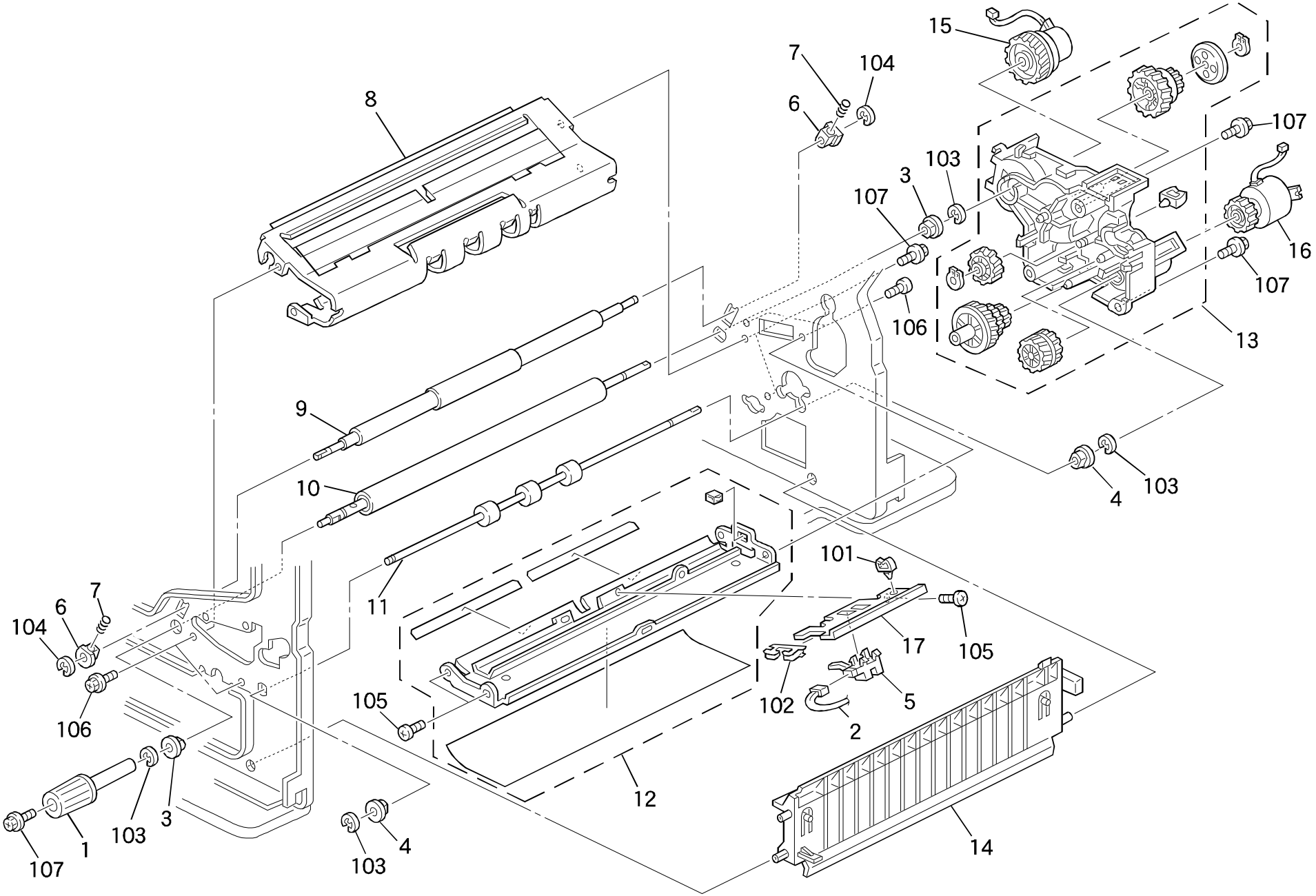

12. PAPER REGISTRATION (A166)

Index No.	Part No.	Description	Q ty Per Assembly
1	AG05 0079	Registration Knob	1
2	A166 5649	Regist Sensor Harness	1
3	AA08 2021	Bushing - 8x12x10mm	2
4	AA08 2047	Bushing - 8x16x7	2
5	AW02 0068	Photointerruptor	1
6	AA08 0037	Bushing - 6 mm	2
7	AA06 3291	Spring	2
8	A166 2570	Lower Guide Plate	1
9	AF02 1055	Upper Registration Roller	1
10	AF02 0356	Lower Registration Roller	1
11	AF02 0357	Transfer Roller	1
12	A166 2596	Upper Guide Plate	1
13	A166 2629	Drive Unit	1
14	A166 2716	Paper Feed Guide Plate	1
15	AX20 0122	Magnetic Clutch - 0.049n.M35z	1
16	AX20 0123	Magnetic Clutch - 0.98n M25z	1
17	A166 2617	Registration Sensor Bracket	1

Index No.	Part No.	Description	Q ty Per Assembly
101	1105 0199	Clamp	
102	1105 0243	Wire Saddle	
103	0720 0060B	Retaining Ring - M6	
104	0720 0040B	Retaining Ring - M4	
105	0434 0060B	Philips Tapping Screw - M4x6	
106	0451 4008B	Philips Tapping Screw - M4x8	
107	0443 0060B	Hexagon Tapping Screw - M3x6	

13. PAPER TRAY SECTION (A166)

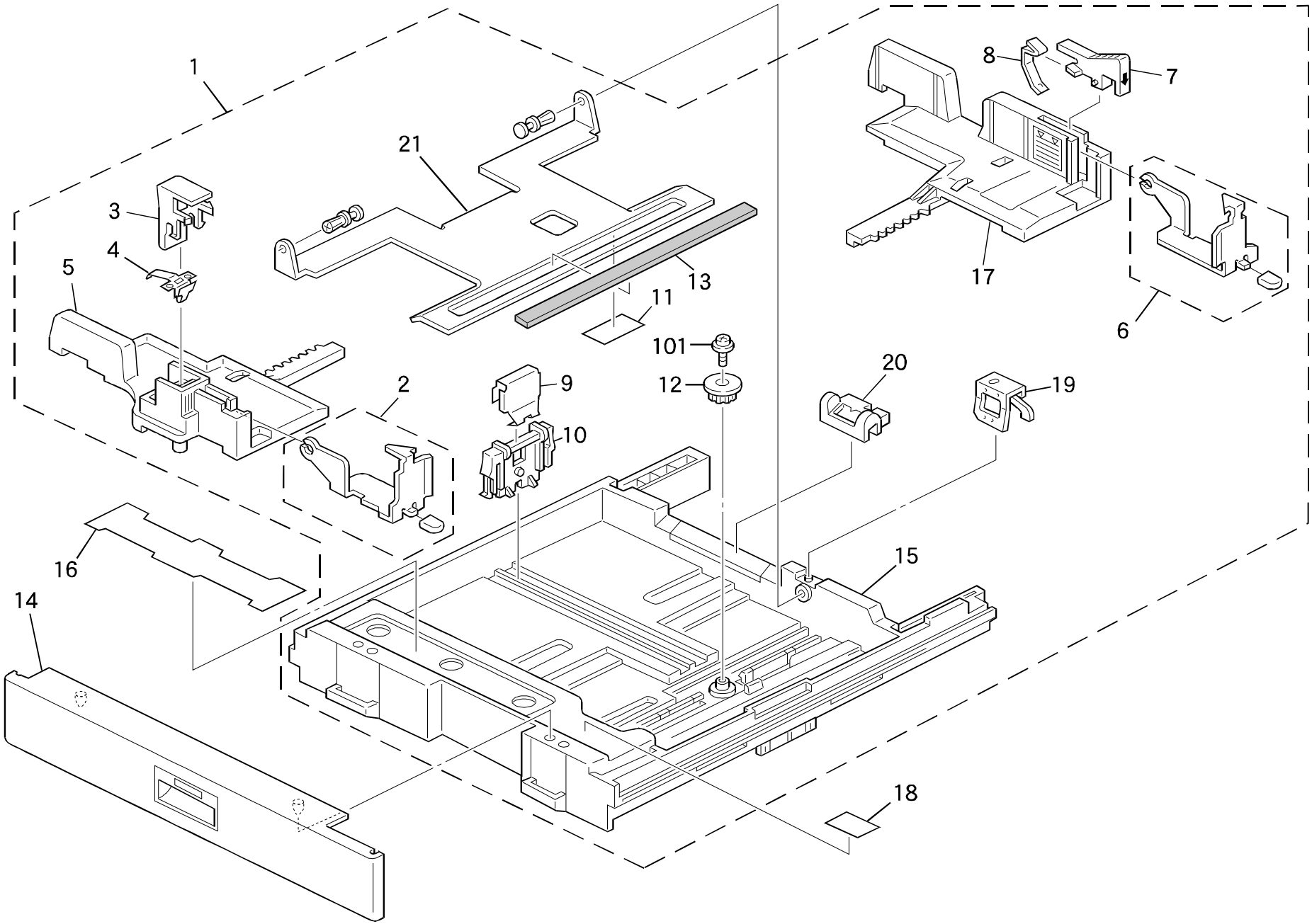

13. PAPER TRAY SECTION (A166)

Index No.	Part No.	Description	Q ty Per Assembly
1	A166 2870	Paper Tray Ass y	1
2	A166 2877	Front Paper Stripper	1
3	A157 2766	Front Stopper Lever	1
4	A157 2767	Front Stopper Spring	1
5	AF01 6072	Front Side Fence	1
6	A166 2884	Rear Paper Stripper	1
7	A157 2768	Raer Stopper Lever	1
8	A157 2769	Rear Stopper Spring	1
9	A157 2762	End Fence Spring	1
10	AF01 7015	Paper End Fence	1
11	A157 2806	Bottom Tray Sheet	1
12	AB01 3868	Gear - 16Z	1
13	**AF01 3004**	**Bottom Plate Pad**	**1**
14	A134 2956	Paper Feed Front Cover	1
15	AF01 0069	Paper Tray Frame	1
16	A157 2758	Decal - Paper Setting	1
17	AF01 6073	Rear Side Fence	1
18	A157 2805	Decal - Paper Set	1
19	A157 2765	Bottom Plate Spring	1
20	AF01 5027	Paper Size Slider	1
21	AF01 1039	Tray Bottom Plate	1

Index No.	Part No.	Description	Q ty Per Assembly
101	0434 0060B	Philips Tapping Screw - M4x6	

14. TONNER HOPPER (A166)

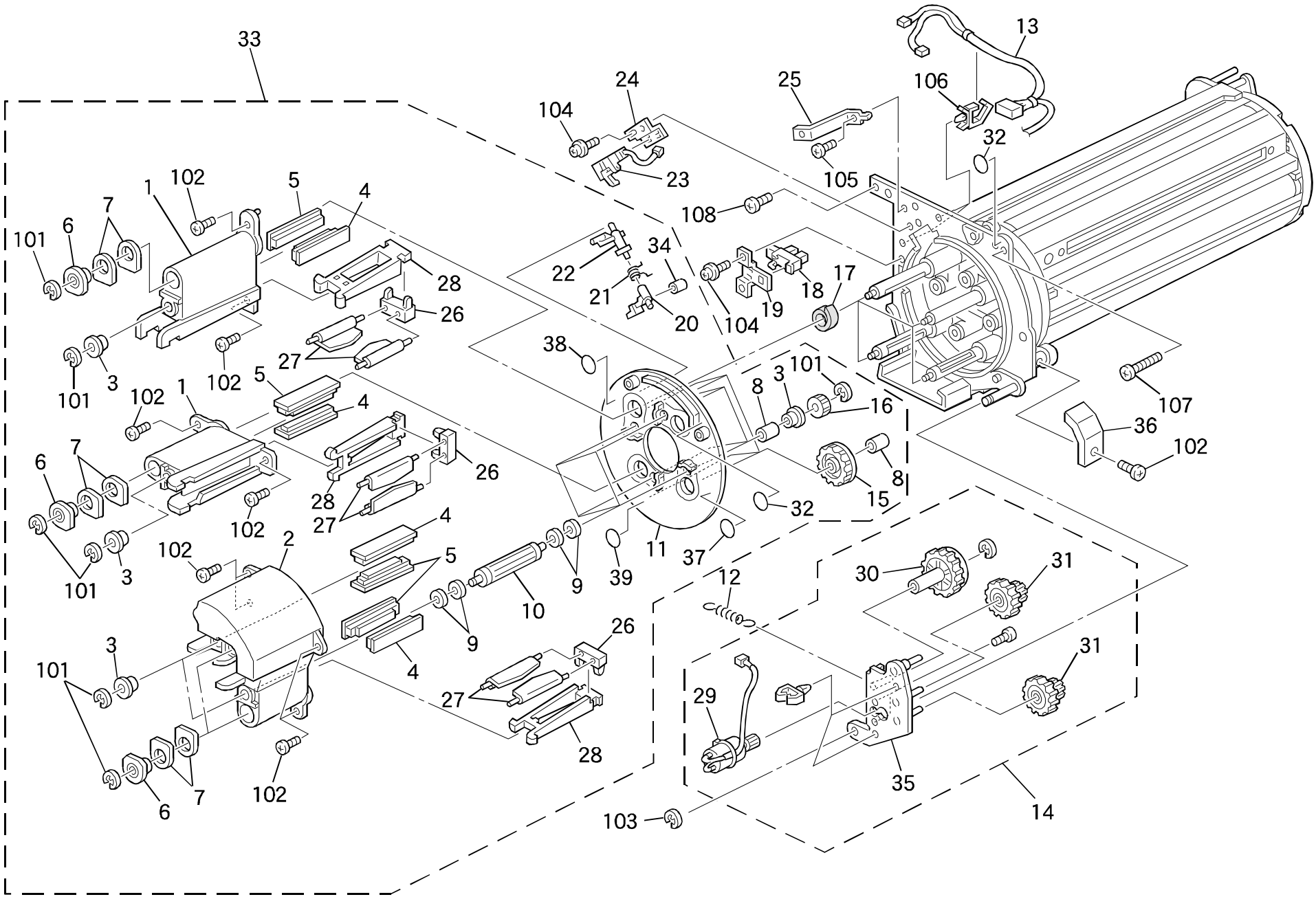

14. TONNER HOPPER (A166)

Index No.	Part No.	Description	Q ty Per Assembly
*	A166 3013	Development Unit (RIC)	1
*	A166 3014	Development Unit (NRG/INF/SVN) (RIC-ASIA)	1
1	A166 3322	Collection Coil Cover	2
2	A166 3312	Black Toner Hopper Ass y	1
3	AA08 0205	Bushing - 6mm	3
4	A166 3325	Toner Supply Roller Pad	4
5	A166 3323	Entrance Pad - Toner Supply Roller	4
6	AA08 0207	Bushing - 6mm	3
7	AA15 3020	Seal	6
8	AA13 2192	Collar	8
9	AA15 1242	Rear Seal - Toner Supply Shaft	16
10	A166 3330	Toner Supply Roller	4
11	A166 3301	Toner Supply Side Plate	1
12	AA06 0282	Pressure Spring	1
13	A166 5647	Development Harness	1
14	A166 3224	Gear Head	1
15	AB01 1366	Gear - 42z	4
16	H085 1521	Drive Gear - ADF Feed : Z17	4
17	AA15 3006	Seal	4
18	AW02 0021	Photointerruptor - 175487-3	1
19	A166 3217	H.P. Sensor Bracket	1
20	A166 3307	Positioning Sensor Link - Black 2	1
21	AA06 6552	Spring	1
22	A166 3306	Positioning Sensor Link - Black 1	1
23	AW02 0083	Photointerruptor	1
24	A166 3222	Sensor Bracket	1
25	A166 1339	Bracket - Upper Inner Cover	1
26	A166 3336	Small Shutter Bracket	3
27	A166 3332	Shutter Cover-toner Collection Coil	6
28	A166 3334	Large Shutter Bracket	3
29	A166 3232	Toner Supply Motor	1
30	AB01 1369	Gear - 56Z	1
31	AB01 7407	Gear - 12Z/41Z	2
32	A049 2194	Seal	2

Index No.	Part No.	Description	Q ty Per Assembly
33	A166 3036	Toner Supply Unit (RIC)	1
33	A166 3037	Toner Supply Unit (NRG/INF/SVN)(RIC-ASIA)	1
34	A166 3308	Link Holder	1
35	A166 3225	Gear Release Bracket	1
36	A166 3193	Stopper Dev Unit	1
37	A166 3285	Seal - Cyan	1
38	A166 3286	Seal - Yellow	1
39	A166 3287	Seal - Magenta	1
101	0720 0040B	Retaining Ring - M4	
102	0452 4008B	Tapping Bind Screw - M4x8	
103	0720 0060B	Retaining Ring - M6	
104	0952 4006B	Screw - Small Round - M4x6	
105	0434 0060B	Philips Tapping Screw - M4x6	
106	1105 0310	Wire Clamp	
107	0952 4025B	Screw - M4X25	
108	0952 4006B	Screw - Small Round - M4x6	

15. DEVELOPMENT UNIT (A1466)

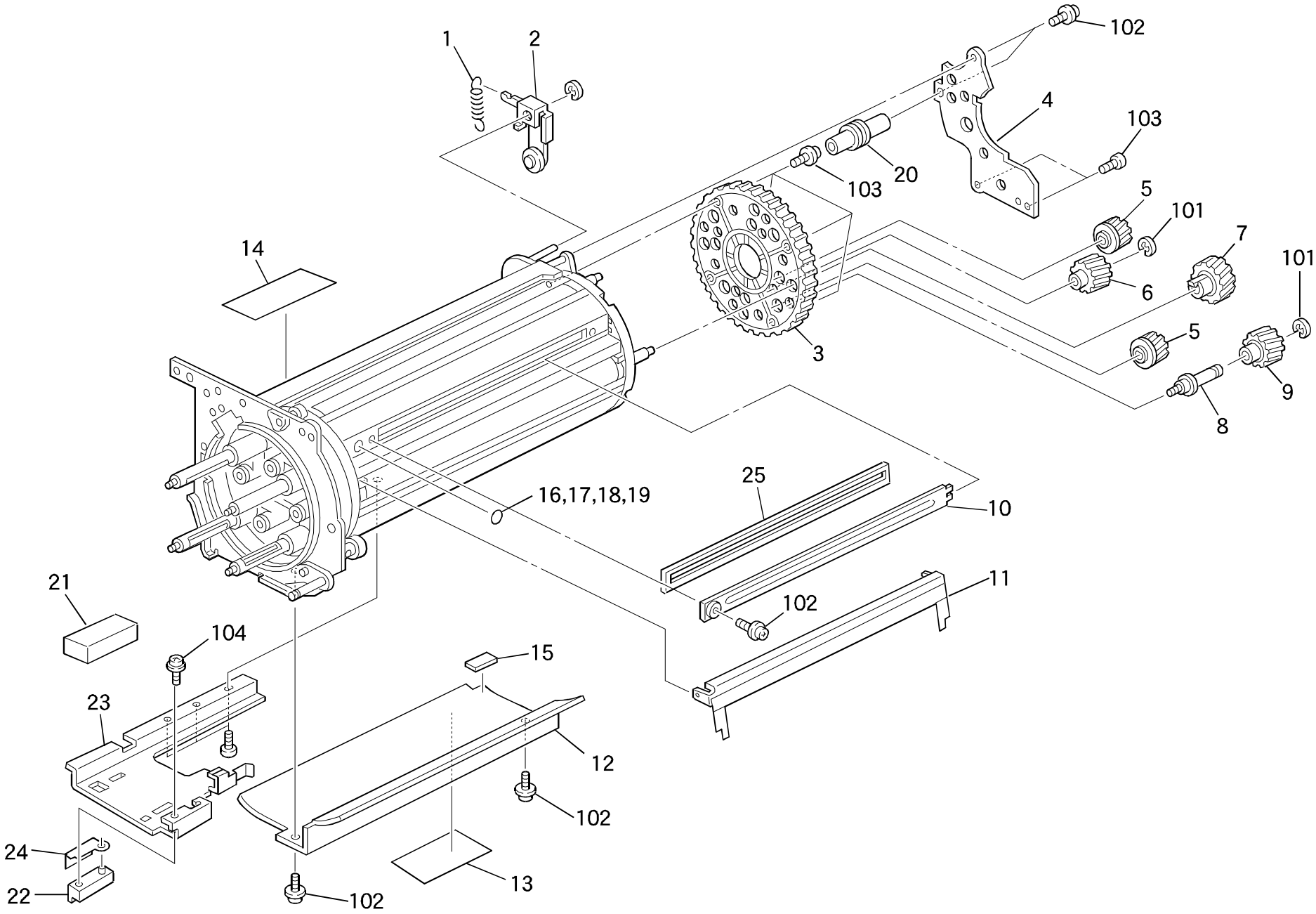

15. DEVELOPMENT UNIT (A1466)

Index No.	Part No.	Description	Q ty Per Assembly
1	AA06 0320	Release Spring	1
2	A166 3270	Positioning Roller	1
3	AB01 3947	Gear	1
4	A166 3280	Rear Support Plate - Development	1
5	AB01 3948	Gear	2
6	A166 3170	Idle Gear	1
7	A166 3190	Development Gear	1
8	AA14 3726	Stepped Screw	1
9	AB01 3949	Gear	1
10	A166 3134	Toner Bottle Cap	1
11	A166 3160	Entrance Guide	1
12	A166 3201	Toner Collection Plate	1
13	A166 3295	Collection Plate Seal	1
14	A166 3209	Decal - Development	1
15	A166 3298	Collection Plate Magnet	1
16	A049 2194	Seal	1
17	A049 2195	Seal	1
18	A049 3945	Seal - Black	1
19	A049 3946	Seal - Blue	1
20	A166 3290	Rear Support Plate	1
21	A166 3199	Development Fixing Plate	1
22	AW01 0046	Photosensor - Ee-spy415	1
23	A166 3205	Development Unit Grip	1
24	A166 3235	Optical Sensor Cover	1
25	A166 3133	Sealding Seal	1

Index No.	Part No.	Description	Q ty Per Assembly
101	0720 0040B	Retaining Ring - M4	
102	0952 4006B	Screw - Small Round - M4x6	
103	0451 4008B	Philips Tapping Screw - M4x8	
104	0952 3012B	Screw - M5X12	

16. TRANSFER BELT UNIT 1 (A166)

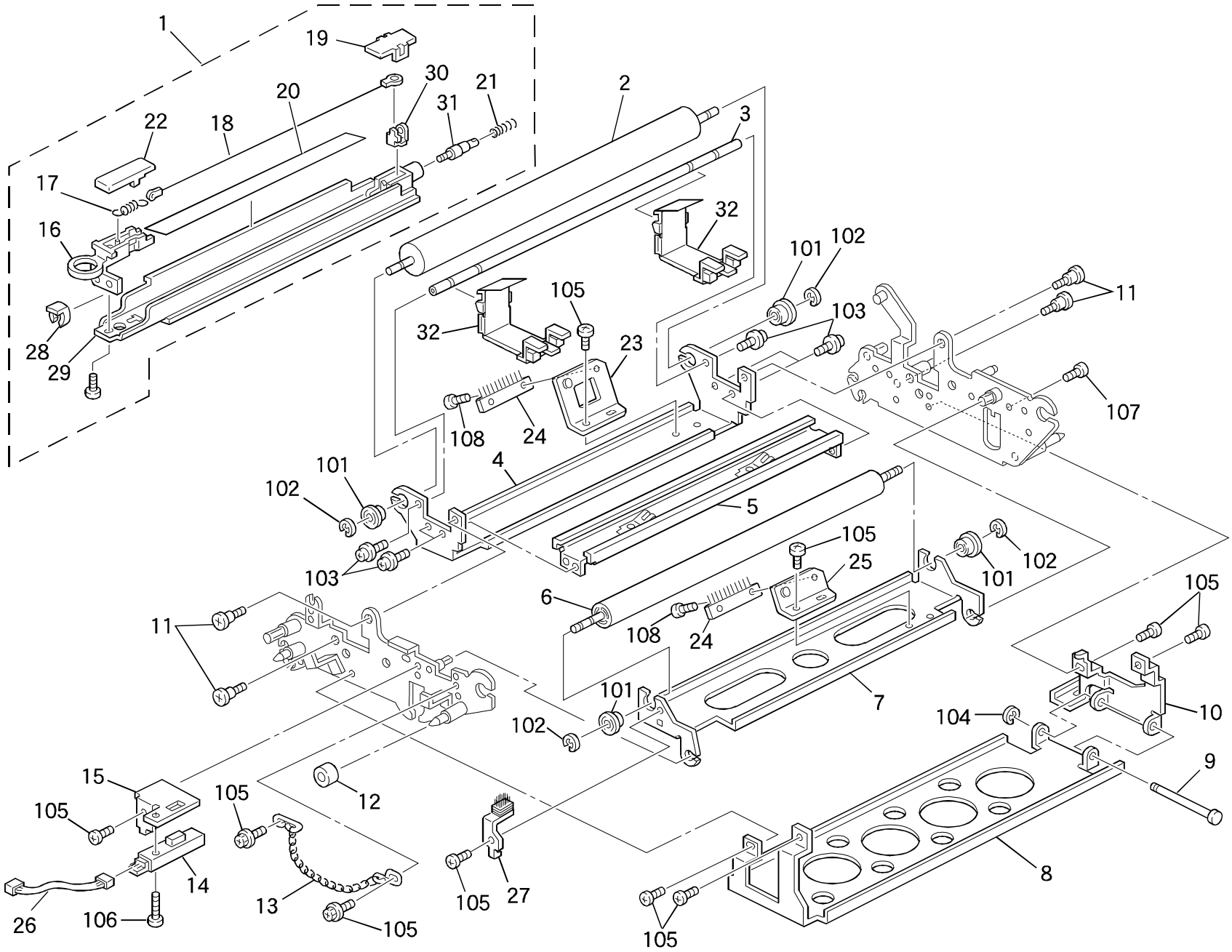

16. TRANSFER BELT UNIT 1 (A166)

Index No.	Part No.	Description	Q ty Per Assembly
*	A166 6002	Transfer Belt Unit	1
1	A166 6115	Belt Cleaning Unit Grip	1
2	A166 6056	Belt Support Roller	1
3	A166 6129	Side Stay	1
4	A166 6068	Cleaning Side Plate	1
5	A166 6087	Transfer Corona Unit Bracket	1
6	A166 6059	Pressure Roller	1
7	A166 6078	Swing Roller Bracket	1
8	A166 6100	Front Rail - Transfer Belt Unit	1
9	A166 6106	Frame Shaft	1
10	A166 6105	Rear Rail - Transfer Belt Unit	1
11	AA14 3074	Stepped Screw - M4x5	4
12	A166 6103	Cushion - Positioning Pin	1
13	A166 6119	Transfer Belt Unit Grip	1
14	A166 5421	Transfer Belt Sensor	1
15	A166 6093	Positioning Sensor Bracket	1
16	A166 6097	Front End Block - Main Corona	1
17	AA06 0251	Spring	1
18	**A166 9515**	**Main Corona Wire (10pcs/set)**	**1**
19	AD02 2328	T/S Corona Rear Cap	1
20	AA17 0019	Seal	1
21	AA06 3143	Spring	1
22	AD02 2263	Front Cover - Main Corona	1
23	A166 6167	Antistatic Brush Holder	1
24	AA12 0079	Antistatic Brush	2
25	A166 6168	Antistatic Brush Holder	1
26	A166 5638	Transfer Belt Position Harness	1
27	A166 6131	Inner Belt Cleaner	1
28	A166 6121	Snap Ring	1
29	A166 6102	Charge Corona Unit	1
30	A166 6110	Rear Corona Wire Terminal	1
31	A166 6111	Spring Pin	1
32	A166 6180	Arm	2

Index No.	Part No.	Description	Q ty Per Assembly
101	0805 3482	Ball Bearing - 8x14x3.5	
102	0720 0060B	Retaining Ring - M6	
103	0952 4006B	Screw - Small Round - M4x6	
104	0720 0030B	Retaining Ring - M3	
105	0434 0060B	Philips Tapping Screw - M4x6	
106	0313 0100B	Philips Pan Head Screw - M3x10	
107	0315 0100B	Philips Pan Head Screw - M5x10	
108	0353 0080B	Screw - M3X8	

17. TRANSFER BELT UNIT 2 (A166)

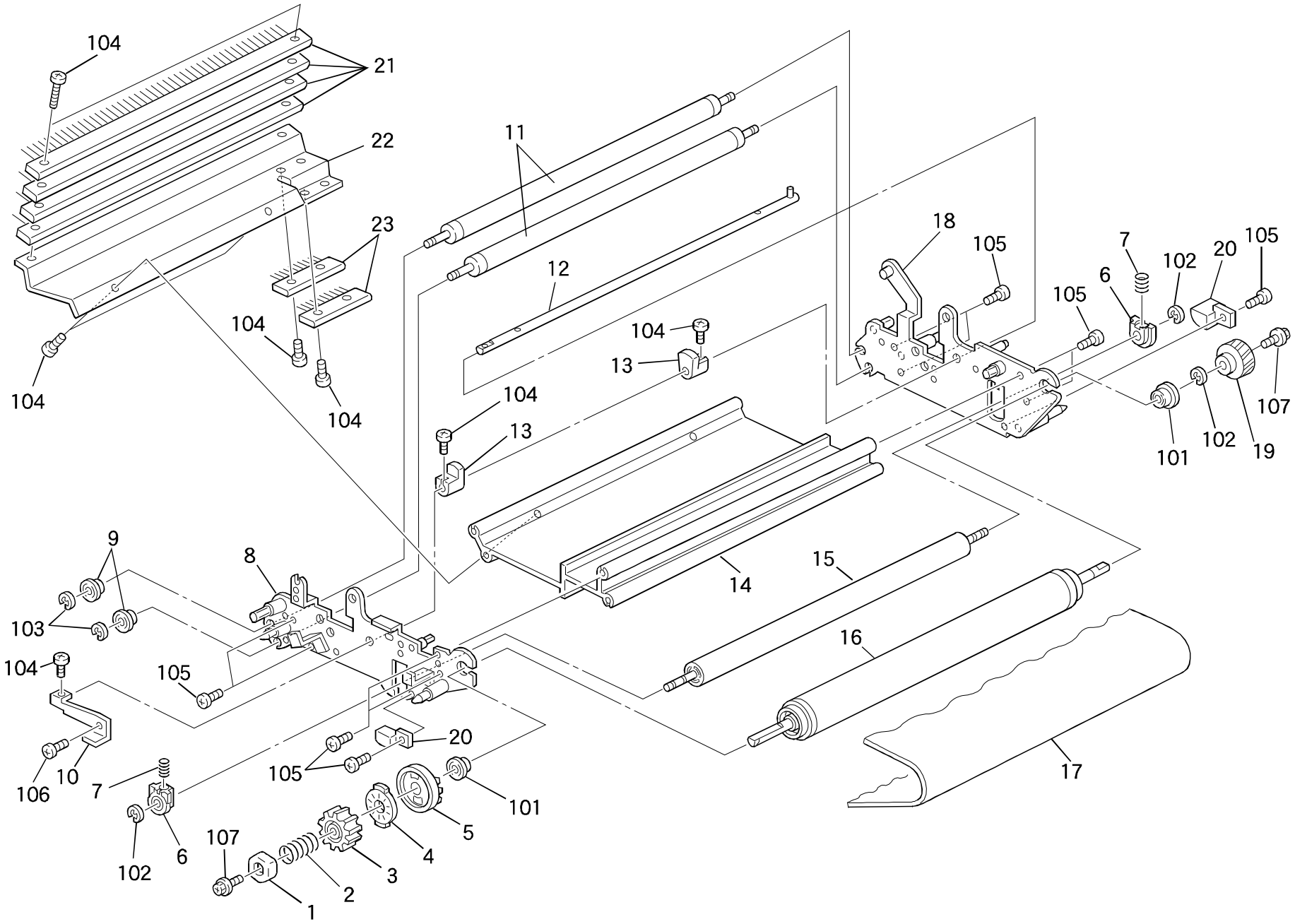

17. TRANSFER BELT UNIT 2 (A166)

Index No.	Part No.	Description	Q ty Per Assembly
1	A109 6087	Spring Holder Cover - Transfer	1
2	AA06 3546	Spring	1
3	A166 6127	Bracke Disk	1
4	A166 6126	Brake Pad	1
5	A166 6128	Pad Holder	1
6	AA08 4044	Bearing Holder	2
7	AA06 3369	Spring	2
8	A166 6073	Front Side Plate - Transfer	1
9	A053 2132	Bushing - 6x10x3	2
10	A166 6084	Lifting Cam Lever	1
11	A166 6062	Transfer Roller	2
12	A166 6080	Lifting Cam Shaft	1
13	A166 6082	Lifting Cam	2
14	A166 6085	Side Plate	1
15	A166 6059	Pressure Roller	1
16	A166 6052	Transfer Belt Drive Roller	1
17	**A166 6050**	**Transfer Belt**	**1**
18	A166 6075	Rear Side Plate - Transfer	1
19	AB01 3981	Gear - 30Z	1
20	A166 6143	Roller Stopper	1
21	AA12 0080	Antistatic Brush	4
22	A166 6166	Antistatic Brush Holder	1
23	AA12 0079	Antistatic Brush	2

Index No.	Part No.	Description	Q ty Per Assembly
101	0805 3482	Ball Bearing - 8x14x3.5	
102	0720 0060B	Retaining Ring - M6	
103	0720 0040B	Retaining Ring - M4	
104	0353 0080B	Screw - M3X8	
105	0314 0080B	Philips Pan Head Screw - M4x8	
106	0434 0060B	Philips Tapping Screw - M4x6	
107	0451 4008B	Philips Tapping Screw - M4x8	

18. DRUM SECTION (A166)

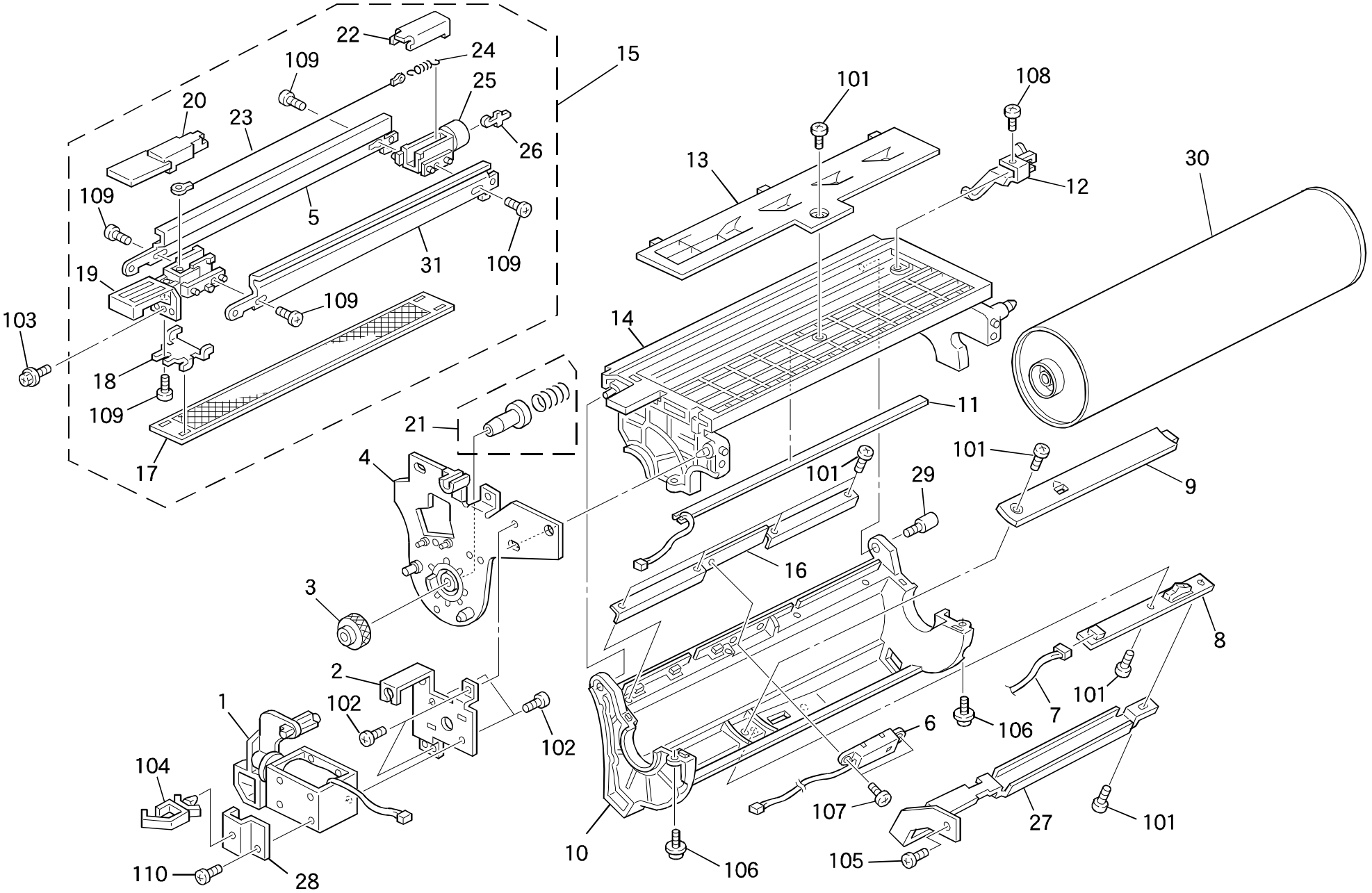

18. DRUM SECTION (A166)

Index No.	Part No.	Description	Q ty Per Assembly
1	A166 3339	DC Solenoid	1
2	A166 3340	Solenoid Bracket	1
3	A109 2287	Drum Flange Knob	1
4	A166 2321	Drum Support Plate	1
5	AD03 3123	Left Caseing - Charge Corona	1
6	AW33 0005	Drum Potencial Sensor	1
7	A166 5648	Density Sensor Harness	1
8	A166 5400	ID Sensor Board	1
9	A166 2308	Density Sensor Cover	1
10	A166 2307	Optical Lower Frame	1
11	A166 5405	Quenching Lamp	1
12	A166 2305	Grid Wire	1
13	A166 2304	Upper Cover - Drum Unit	1
14	A166 2303	Drum Unit Upper Frame	1
15	AD00 4081	Charge Corona Unit	1
16	A166 2319	Density Sensor Bracket	1
17	**A049 2272**	**Charge Grid - 85T**	**1**
18	A166 2331	Front Fixing Plate	1
19	AD02 2325	Front End Block - Charge Corona	1
20	AD02 2326	Front End Block Cover - Charge	1
21	A166 2327	Knob Screw	1
22	AD02 2266	Rear Cover - Charge Corona	1
23	**A166 9516**	**Charge Corona Wire (10pcs/set)**	**1**
24	5442 2108	Corona Wire Spring	1
25	AD02 2265	Rear End Block - Charge Corona	1
26	5442 2110	Plug - Corona Unit	1
27	A166 2311	Shielding Plate - Density Sensor	1
28	A166 3348	Harness Clamp Bracket	1
29	5409 1855	Mounting Pin	1
30	**A166 9510**	**OPC Drum**	**1**
31	AD03 3124	Right Caseing - Charge Corona	1

Index No.	Part No.	Description	Q ty Per Assembly
101	0452 3008B	Tapping Screw - M3x8	
102	0434 0060B	Philips Tapping Screw - M4x6	
103	0451 4008B	Philips Tapping Screw - M4x8	
104	1105 0291	Wire Saddle	
105	0801 0149	Philips Pan Head Screw - M4x6	
106	0353 0060W	Philips Pan Head Screw - M3x6	
107	0433 0062B	Tapping Screw - M3 X 6 mm	
108	0951 3006W	Philips Screw With Flat Washer-M3x6	
109	0413 0062W	Tapping Screw - M3x6	
110	0443 0050B	Philips Pan Head Screw - M3x6	

19. DRUM CLEANING (A166)

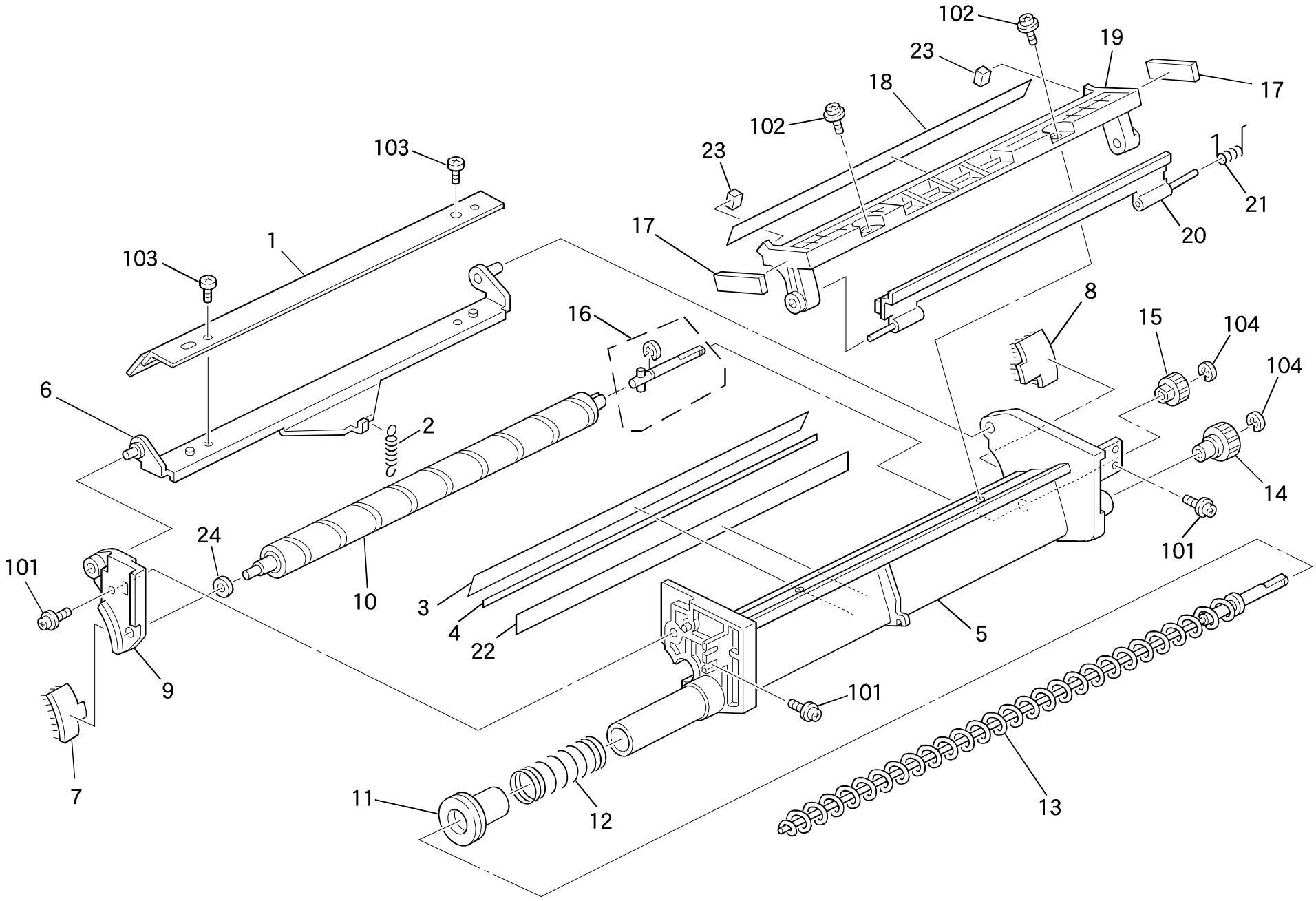

19. DRUM CLEANING (A166)

Index No.	Part No.	Description	Q ty Per Assembly
*	A166 3511	Drum Cleaning Unit	1
1	**A166 3576**	**Drum Cleaning Blade**	**1**
2	AA06 0632	Spring - Blade	1
3	AD04 7016	Cleaning Entrance Seal	1
4	A166 3591	Entrance Seal	1
5	A166 3511	Drum Cleaning Unit	1
6	A166 3571	Cleaning Blade Holder	1
7	AA15 2256	Seal	1
8	AA15 2255	Seal	1
9	A166 3556	Brush Roller Holder	1
10	**AD04 2031**	**Cleaning Brush Roller**	**1**
11	A166 3581	Toner Collection Pipe	1
12	AA06 3283	Spring	1
13	AD04 3043	Toner Collection Coil - Transfer	1
14	AB01 3966	Gear - 20Z	1
15	AB01 3965	Gear - 16Z	1
16	A166 3566	Brush Roller Drive Shaft	1
17	A166 3593	Cleaning Cover Seal	2
18	A166 3586	Cleaning Seal	1
19	A166 3554	Cleaning Unit Cover	1
20	**A166 3596**	**Lubricant Plate**	**1**
21	A166 3599	Lubricant Spring	1
22	A166 3592	Toner Collection Plate Seal	1
23	A166 3587	Cleaning Blade Seal	2
24	H072 2220	Spacer - M6x10	1

Index No.	Part No.	Description	Q ty Per Assembly
101	0951 3006W	Philips Screw With Flat Washer-M3x6	
102	0452 3008B	Tapping Screw - M3x8	
103	0434 0060B	Philips Tapping Screw - M4x6	
104	0720 0040B	Retaining Ring - M4	

20. TRANSFER BELT CLEANING (A166)

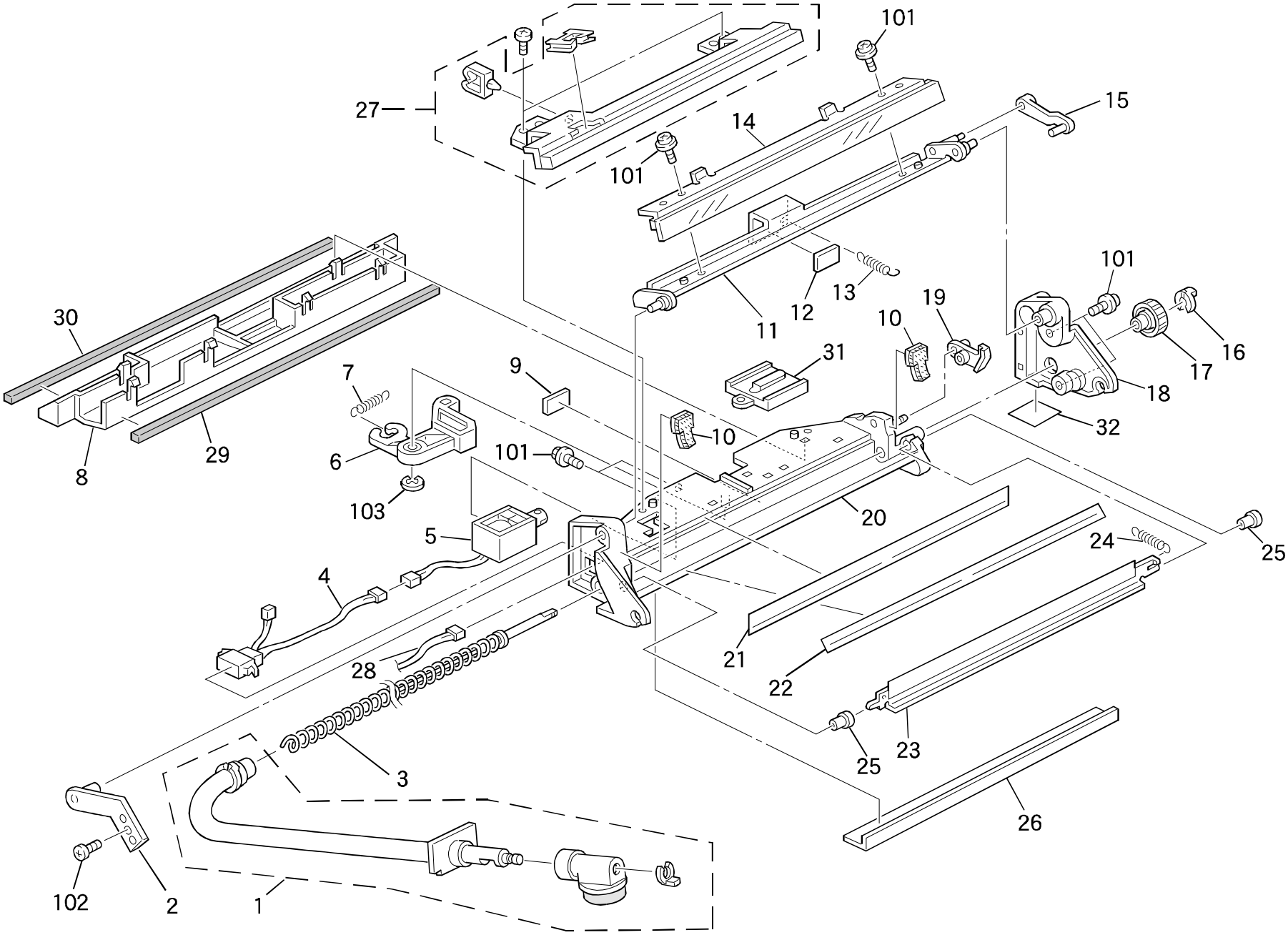

20. TRANSFER BELT CLEANING (A166)

Index No.	Part No.	Description	Q ty Per Assembly
1	A166 6381	Toner Collection Pipe	1
2	A166 6393	Belt Cleaning Holder	1
3	A166 6371	Toner Collection Coil	1
4	A166 5657	Cleaning Relay Harness	1
5	AX12 0043	DC Solenoid	1
6	A166 6336	Release Plate	1
7	AA06 0628	Spring	1
8	A166 6366	Solenoid Cover	1
9	A109 6348	Lever Cushion	1
10	A166 6357	Blade Seal	2
11	A166 6322	Blade Support Plate	1
12	A166 6325	Lever Cushion	1
13	AA06 0627	Spring	1
14	**A166 6331**	**Cleaning Blade - Transfer Belt**	**1**
15	A166 6348	Link Plate - Seal Lever	1
16	AA10 0009	Ring Stopper	1
17	AB01 3978	Gear	1
18	A166 6361	Belt Cleaning Side Plate	1
19	A166 6347	Entrance Seal Lever	1
20	A166 6353	Belt Cleaning Caseing	1
21	A166 6359	Belt Cleaning Seal	1
22	A166 6358	Toner Collection Seal	1
23	A166 6341	Entrance Seal	1
24	AA06 0629	Spring	1
25	A109 6369	Entrance Seal Collar	1
26	A166 6363	Toner Collection Plate	2
27	A166 6161	LED Array	1
28	A166 5641	Belt Cleaning Harness	1
29	A166 6368	Cover Front Seal	1
30	A166 6367	Cover Seal	1
31	A166 6388	Blade Release Wedge	1
32	A166 6362	Seal	1

Index No.	Part No.	Description	Q ty Per Assembly
101	0952 4006B	Screw - Small Round - M4x6	
102	0434 0060B	Philips Tapping Screw - M4x6	
103	0720 0030B	Retaining Ring - M3	

21. TRANSPORT UNIT (A166)

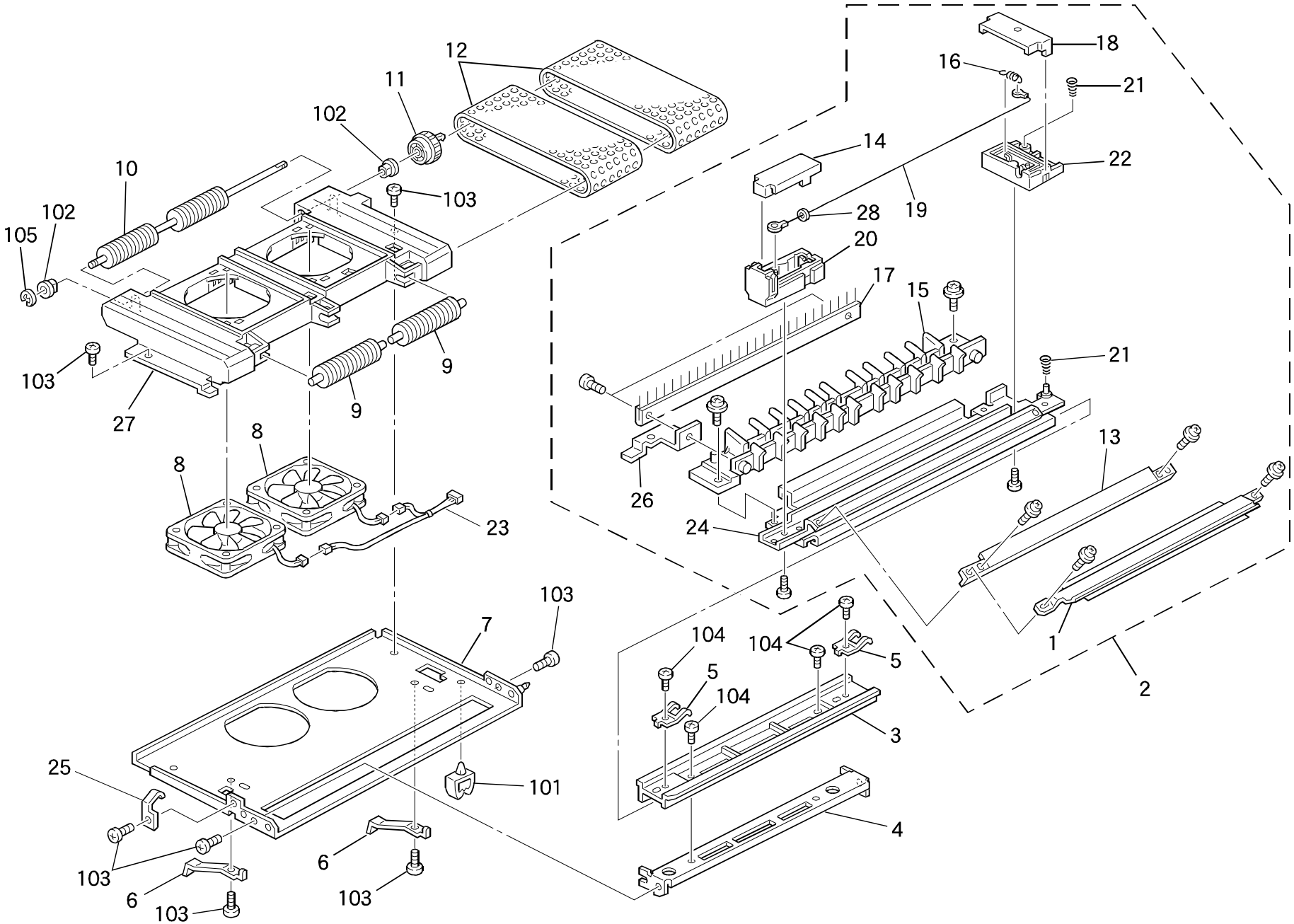

21. TRANSPORT UNIT (A166)

Index No.	Part No.	Description	Q ty Per Assembly
1	A166 6213	Upper Guide Plate	1
2	A166 6200	Transfer Corona Unit	1
3	A166 3942	Transfer Tank Rail	1
4	A166 6123	Transfer Tank Stay	1
5	A166 6216	Spring Plate	2
6	A166 4455	Spring Plate	2
7	A166 3940	Transfer Tank Frame	1
8	AX64 0068	Fan Motor - DC24V 0.09A	2
9	AF02 2070	Right Transport Roller	2
10	AF02 2069	Left Transport Roller	1
11	AB01 3982	Gear - 30Z	1
12	AA04 0025	Transfer Belt	2
13	A166 6210	Lower Guide Plate	1
14	AD02 2323	Front End Block Cover - Transfer	1
15	A166 6245	Antistatic Brush Holder	1
16	5442 2108	Corona Wire Spring	1
17	AA12 0068	Antistatic Brush	1
18	AD02 2324	Rear End Block Cover - Transfer	1
19	**A166 9514**	**Transfer Corona Wire - (10pcs/set)**	**1**
20	AD02 2321	Front End Block - Transfer Corona	1
21	AA06 3036	Terminal Spring	2
22	AD02 2322	Rerar End Block - Transfer Corona	1
23	A166 5650	Transfer Harness	1
24	A166 6230	T/S Corona Caseing	1
25	A166 6247	Grounding Plate	1
26	A166 6246	Grounding Plate - Antistatic Brush	1
27	A166 3910	Transfer Tank	1
28	A030 6231	Corona Wire Ring	1

Index No.	Part No.	Description	Q ty Per Assembly
101	1105 0199	Clamp	
102	5053 0447	Bushing - 6mm	
103	0414 0080W	Tapping Screw - M4x8	
104	0434 0060B	Philips Tapping Screw - M4x6	
105	0720 0040B	Retaining Ring - M4	

22. FUSING UNIT 1 (A166)

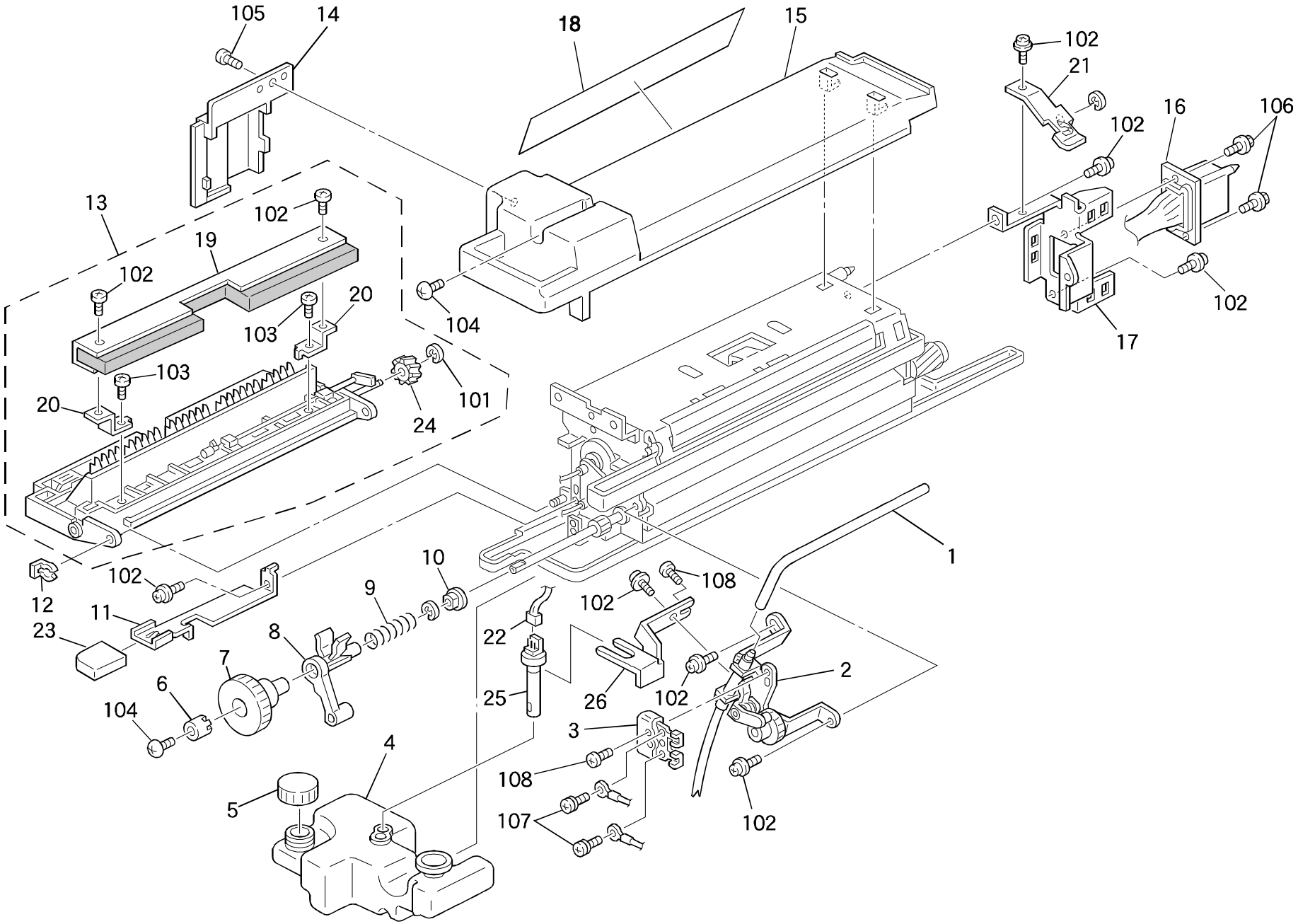

22. FUSING UNIT 1 (A166)

Index No.	Part No.	Description	Q ty Per Assembly
*	A166 4022	Fusing Unit (115V)	1
*	A166 4032	Fusing Unit (230V)	1
1	AA18 0054	Oil Supply Tube	1
2	A166 4014	Oil Supply Unit	1
3	AA11 3021	Heater Terminal	1
4	AA03 1009	Oil Tank	1
5	AA03 6007	Oil Tank Cap	1
6	A166 4290	Knob Joint	1
7	AG05 0080	Fusing Knob	1
8	A166 4297	Drive Release Slyder	1
9	AA06 3536	Spring	1
10	AA08 0166	Bushing - 8mm	1
11	A166 4284	Fusing Unit Lever	1
12	5206 2686	Snap Ring	1
13	A166 4350	Fusing And Paper Exit Unit	1
14	A166 4203	Fusing Left Cover	1
15	A166 4199	Fusing Unit Cover	1
16	A166 5656	Fusing Unit Harness	1
17	A166 4092	Connector Bracket	1
18	AA00 0194	Decal - High Temperature	1
19	**A166 4267**	**Oil Cleaning Felt**	**1**
20	A166 4270	Felt bracket	2
21	A166 4098	Thermistor Harness Bracket	1
22	A166 5721	Relay Harness - Oil End Sensor	1
23	A166 4287	Lever Knob	1
24	AB01 3976	Gear - 15Z	1
25	5209 5320	Oil End Sensor	1
26	A166 4089	Oil End Sensor Bracket	1

Index No.	Part No.	Description	Q ty Per Assembly
101	0720 0040B	Retaining Ring - M4	
102	0952 4006B	Screw - Small Round - M4x6	
103	0452 4008B	Tapping Bind Screw - M4x8	
104	0344 0080F	Philips Truss Head Screw - M4x8	
105	0452 4010B	Tapping Bind Screw - M4x10	
106	0443 0080W	Hexagon Head Tapping Screw - M3x8	
107	0950 3005M	Philips Screw With Lock Washer M3x5	
108	0314 0100B	Philips Pan Head Screw - M4x10	

23. FUSING UNIT 2 (A166)

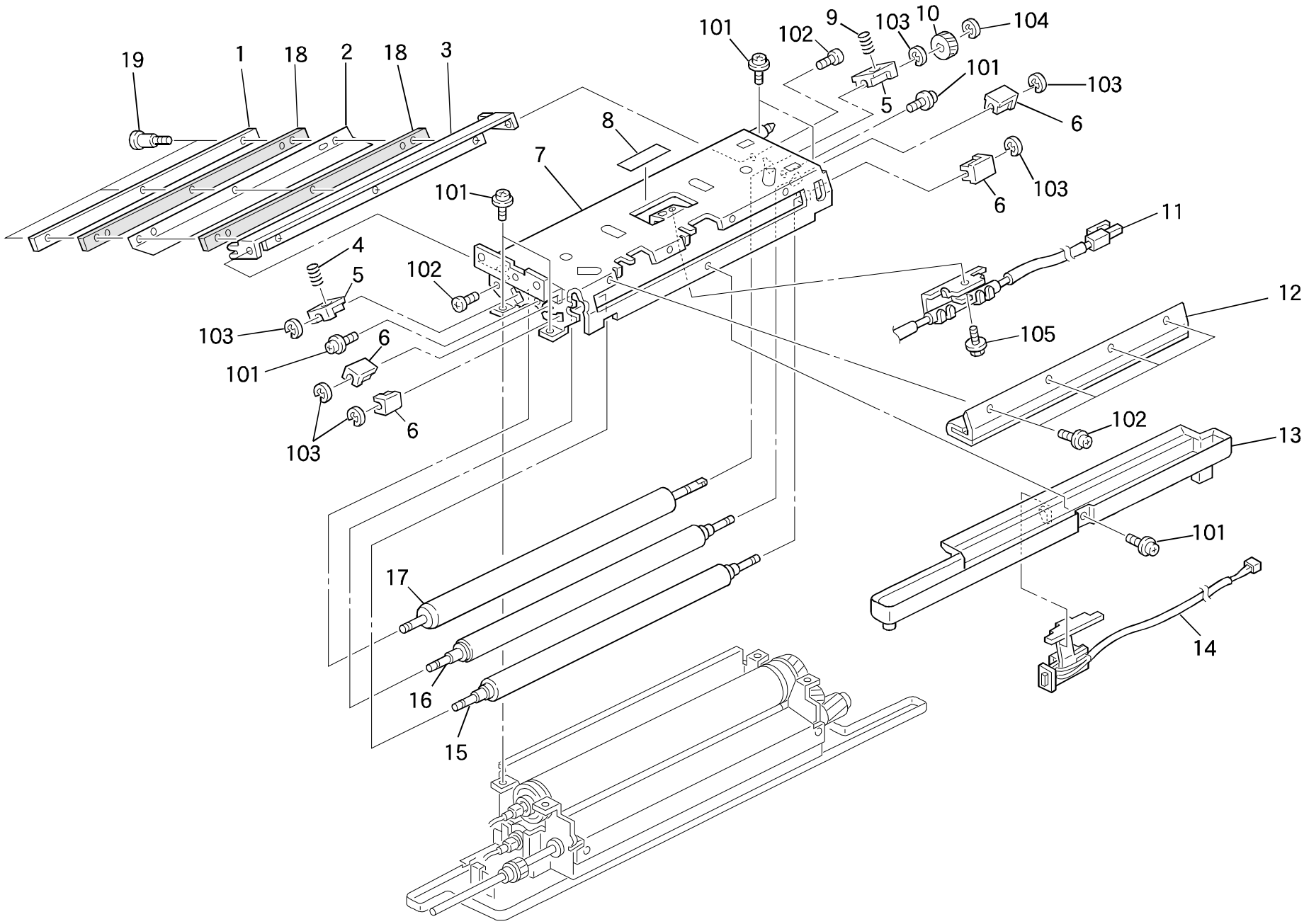

23. FUSING UNIT 2 (A166)

Index No.	Part No.	Description	Q ty Per Assembly
1	A166 4122	Scraper Holder	1
2	A166 4123	Fusing Roller Scraper	1
3	A166 4121	Scraper Bracket	1
4	AA06 3284	Spring	1
5	AE03 1021	Bushing - 6mm	2
6	AE03 1022	Bushing - 4mm	4
7	A166 4070	Upper Fusing Stay	1
8	AA00 0178	Decal - Thermofuse	1
9	AA06 3285	Spring	1
10	AB01 3977	Gear - 16Z	1
11	A166 5415	Thermo Fuse	1
12	**A166 4102**	**Oil Supply Pad**	**1**
13	A166 4100	Oil Sump	1
14	A166 5410	Thermistor - Fusing Roller	1
15	AE04 0012	Oil Supply Roller	1
16	AE04 0011	Oil Toff Roller	1
17	A166 4120	Fusing Cleaning Roller	1
18	A166 4124	Cushion	2
19	G012 4617	Stepped Screw - M3	3



Index No.	Part No.	Description	Q ty Per Assembly
101	0951 4008B	Philips Screw With Washer - M4x8	
102	0952 4006B	Screw - Small Round - M4x6	
103	0720 0025E	Retaining Ring - M2.5	
104	0720 0040B	Retaining Ring - M4	
105	0353 0060W	Philips Pan Head Screw - M3x6	



24. FUSING UNIT 3 (A166)

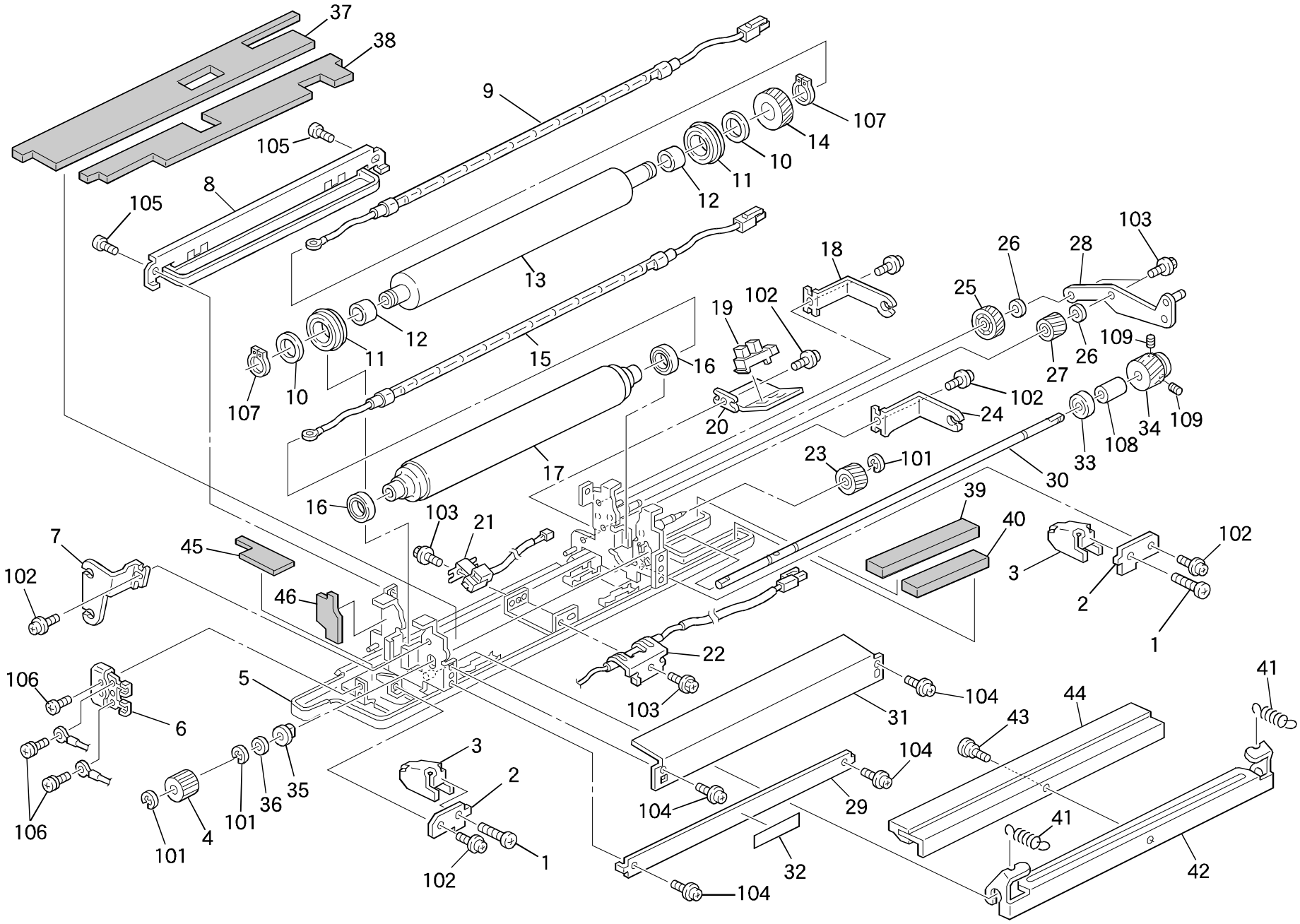

24. FUSING UNIT 3 (A166)

Index No.	Part No.	Description	Q ty Per Assembly
1	A166 4080	Adjuating Screw	2
2	A166 4081	Adjusting Plate	2
3	A166 4082	Pressure Roller Lever	2
4	AB01 3983	Gear - 16Z	1
5	A166 4055	Lower Fusing Frame	1
6	AA11 3021	Heater Terminal	1
7	A166 4095	Front Heater Holder	1
8	A166 4125	Oil Pan	1
9	AX44 0091	Fusing Lamp - 120V 670W	1
9	AX44 0092	Fusing Lamp - 230V 670W	1
10	A030 4064	Spacer - Hot Roller	2
11	**AE03 0007**	**Ball Bearing-25x47x12mm**	**2**
12	AE03 2007	Bushing - 20x25x12mm	2
13	**AE01 0013**	**Hot Roller**	**1**
14	AB01 3969	Gear - 45Z	1
15	AX43 0032	Fusing Lamp - 120V 400W	1
15	AX43 0033	Fusing Lamp - 230V 400W	1
16	**AE03 0019**	**Ball Bearing - 7x20x32**	**2**
17	**AE02 0057**	**Pressure Roller**	**1**
18	A166 4087	Rear Heater Holder	1
19	AW02 0021	Photointerruptor - 175487-3	1
20	A166 4115	Exit Sensor Bracket	1
21	A166 5409	Thermistor - Pressure Roller	1
22	A166 5415	Thermo Fuse	1
23	AB01 3971	Gear - 22Z	1
24	A166 4097	Pressure Roller Heater Holder	1
25	AB01 3975	Gear - 20Z	1
26	H072 2220	Spacer - M6x10	2
27	AB01 3973	Gear - 15Z	1
28	A166 4164	Support Plate	1
29	A166 4111	Shielding Plate	1
30	AA14 0592	Fusing Drive Shaft	1
31	A166 4110	Fusing Entrance Guide	1
32	AA00 0178	Decal - Thermofuse	1
33	0805 3104	Ball Bearing - 8x22x7mm	1

Index No.	Part No.	Description	Q ty Per Assembly
34	AB01 3970	Gear - 22Z	1
35	5053 0223	Bushing - 8mm	1
36	AA13 2013	Spacer - 8.2	1
37	**A166 4261**	**Left Oil Pan Pad**	**1**
38	**A166 4262**	**Right Oil Pan Pad**	**1**
39	**A166 4265**	**Rear Left Oil Pan Pad**	**1**
40	**A166 4264**	**Rear Right Oil Pan Pad**	**1**
41	AA06 0673	Pressure Spring	2
42	A166 4132	Cleaning Blade Bracket	1
43	AA14 3258	Stepped Screw - M4x7	1
44	**AE04 1003**	**Oil Cleaning Blade**	**1**
45	**A166 4263**	**Bottom Front Oil Pan Pad**	**1**
46	**A166 4266**	**Front Oil Pan Pad**	**1**
101	0720 0060B	Retaining Ring - M6	
102	0952 4006B	Screw - Small Round - M4x6	
103	0443 0060B	Hexagon Tapping Screw - M3x6	
104	0952 4006B	Screw - Small Round - M4x6	
105	0314 0060B	Philips Pan Head Screw - M4x6	
106	0314 0100B	Philips Pan Head Screw - M4x10	
107	0725 0200E	Retaining Ring C - M20	
108	0734 0806D	Philips Truss Head Screw - M4x5	
109	0574 0050B	Hexagonal Headless Screw - M4x5	

25. PAPER EXIT SECTION (A166)

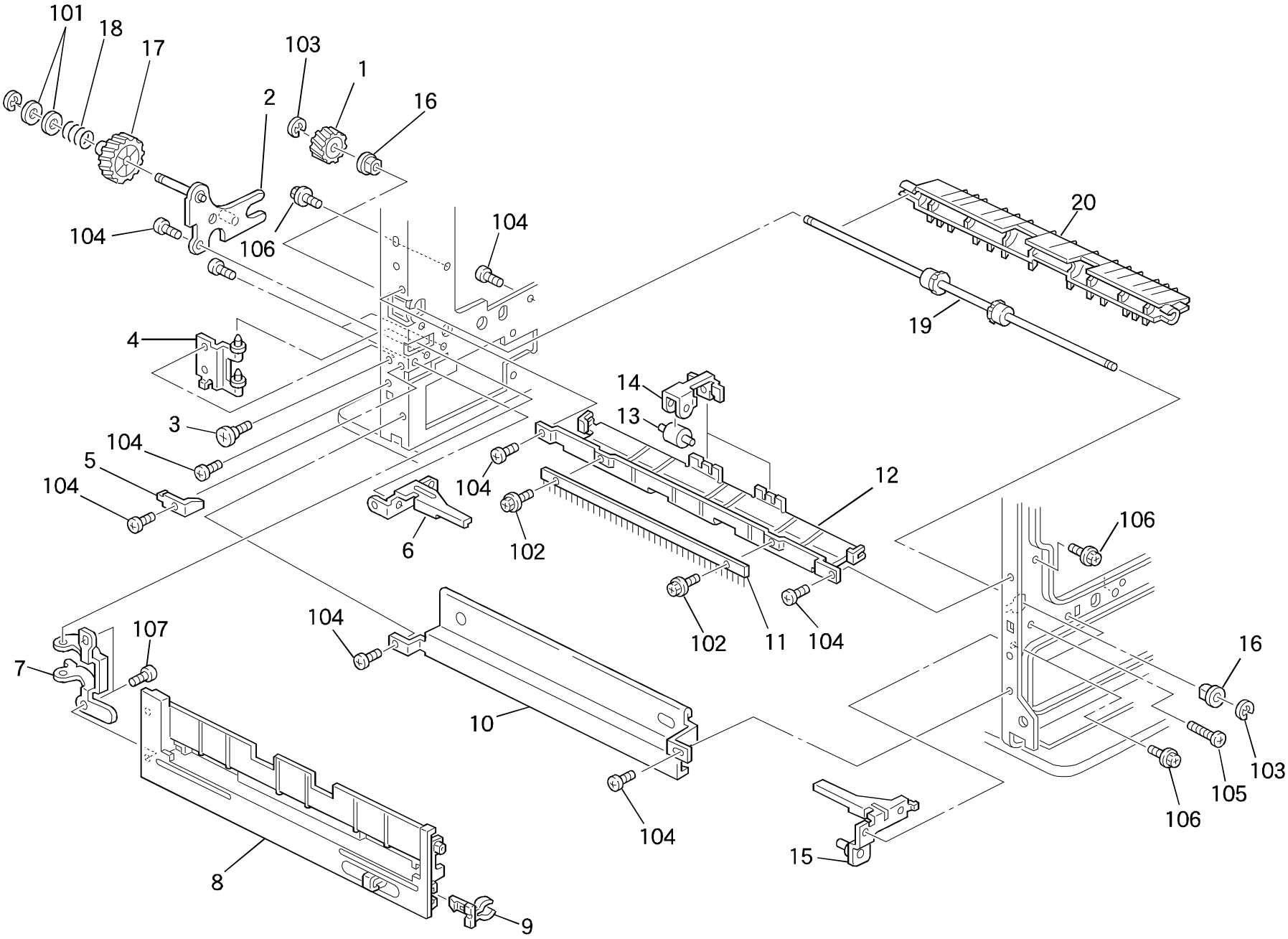

25. PAPER EXIT SECTION (A166)

Index No.	Part No.	Description	Q ty Per Assembly
1	AB01 3967	Gear - 18Z	1
2	A166 4474	Drive Unit Bracket	1
3	5413 1882	Stepped Screw	1
4	A166 4461	Hinge Bracket	1
5	A166 4480	Paper Exit Arm Holder	1
6	A166 4494	Rear Holder - Copy Tray	1
7	A166 4498	Exit Cover Arm	1
8	A166 4492	Exit Cover	1
9	A166 4496	Exit Cover Pawl	1
10	A166 4482	Shielding Plate	1
11	AA12 0067	Anti Static Brush	1
12	A166 4464	Paper Exit Guide	1
13	A166 4017	Driven Roller	2
14	A166 4466	Spring Plate	2
15	A166 4493	Front Holder - Copy Tray	1
16	AA08 2058	Bushing - 6x10x9mm	2
17	AB01 3801	Gear - 30Z	1
18	AA06 3505	Spring	1
19	AF04 0554	Paper Exit Roller	1
20	AF02 5026	Paper Exit Pawl	1

Index No.	Part No.	Description	Q ty Per Assembly
101	0807 4123	Spacer - 6x13x1	
102	0443 0060B	Hexagon Tapping Screw - M3x6	
103	0720 0040B	Retaining Ring - M4	
104	0434 0060B	Philips Tapping Screw - M4x6	
105	0434 0200B	Tapping Screw - M4x20	
106	0451 4008B	Philips Tapping Screw - M4x8	
107	0452 4008B	Tapping Bind Screw - M4x8	

26. SWEEPER (A166)

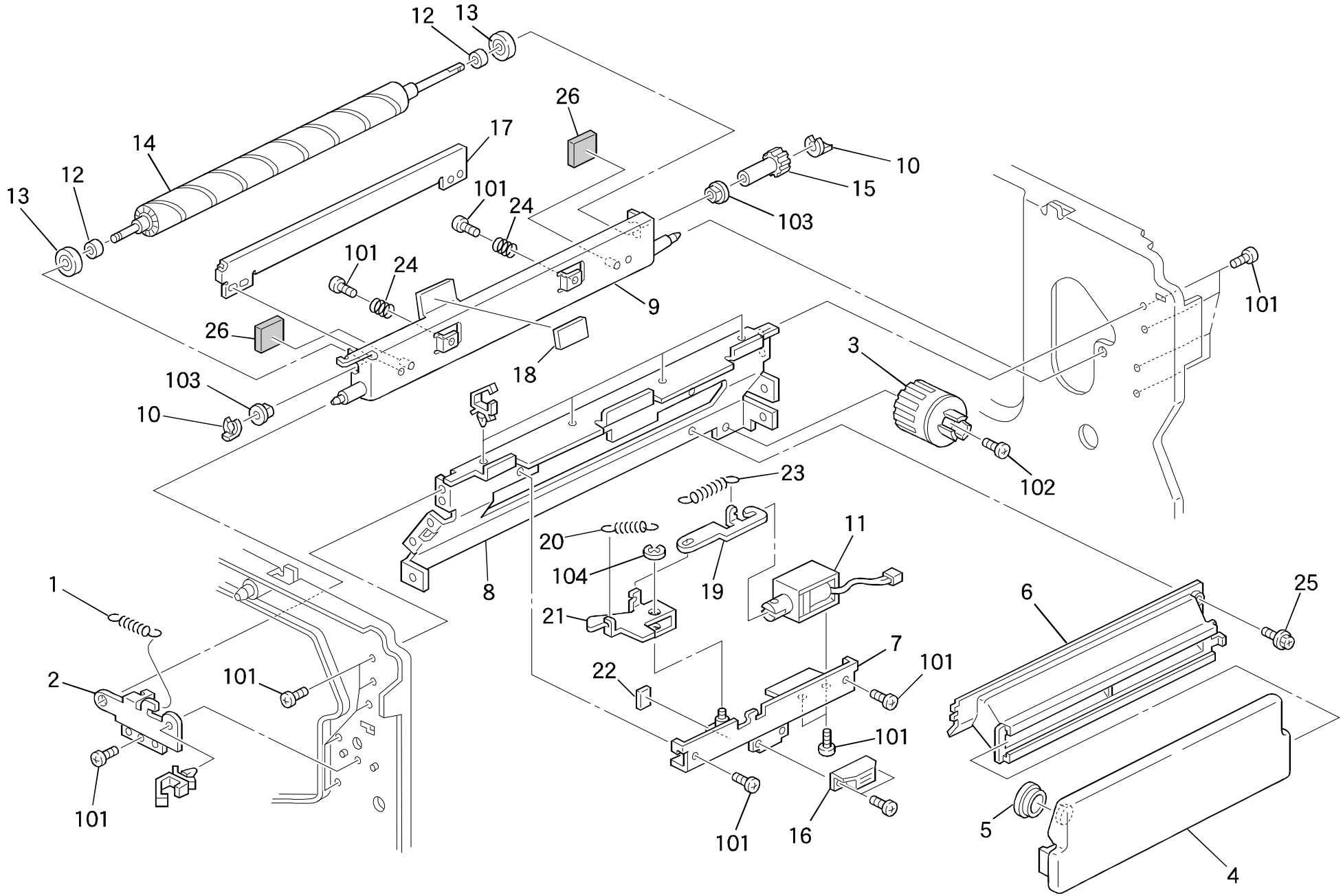

26. SWEEPER (A166)

Index No.	Part No.	Description	Q ty Per Assembly
1	AA06 0631	Spring - Release - Scraper	1
2	A166 6436	Lubricant Support Plate	1
3	A166 3184	Collection Knob	1
4	A166 3198	Toner Collection Bottle	1
5	5442 3664	Toner Collection Bottle Cap - Small	1
6	A166 3195	Toner Collection Guide	1
7	A166 6462	Lubricant Pressure Bracket	1
8	A166 1078	Right Stay	1
9	A166 6422	Lubricant Holder	1
10	AA10 0009	Ring Stopper	2
11	AX12 0043	DC Solenoid	1
12	A166 6150	Bushing	2
13	A109 6425	Brush Roller Spacer	2
14	**A166 6431**	**Lubricant Brush**	**1**
15	AB01 3979	Gear	1
16	AG07 0004	Magnetic Catch	1
17	**A109 6430**	**Lubricant Bar**	**1**
18	A166 6425	Lever Guide Sheet	1
19	A166 6472	Link Solenoid	1
20	AA06 0630	Spring	1
21	A166 6473	Pressure Plate	1
22	A109 6348	Lever Cushion	1
23	A109 6415	Lever Spring	1
24	A166 6427	Spring	2
25	AA14 3025	Stepped Screw - M3	1
26	A166 6428	Spacer - Lubricant Bar	2

Index No.	Part No.	Description	Q ty Per Assembly
101	0434 0060B	Philips Tapping Screw - M4x6	
102	0453 4010B	Tapping Bind Screw - M4x10	
103	0805 3385	Bushing - 6mm	
104	0720 0030B	Retaining Ring - M3	

27. DRIVE SECTION 1 (A166)

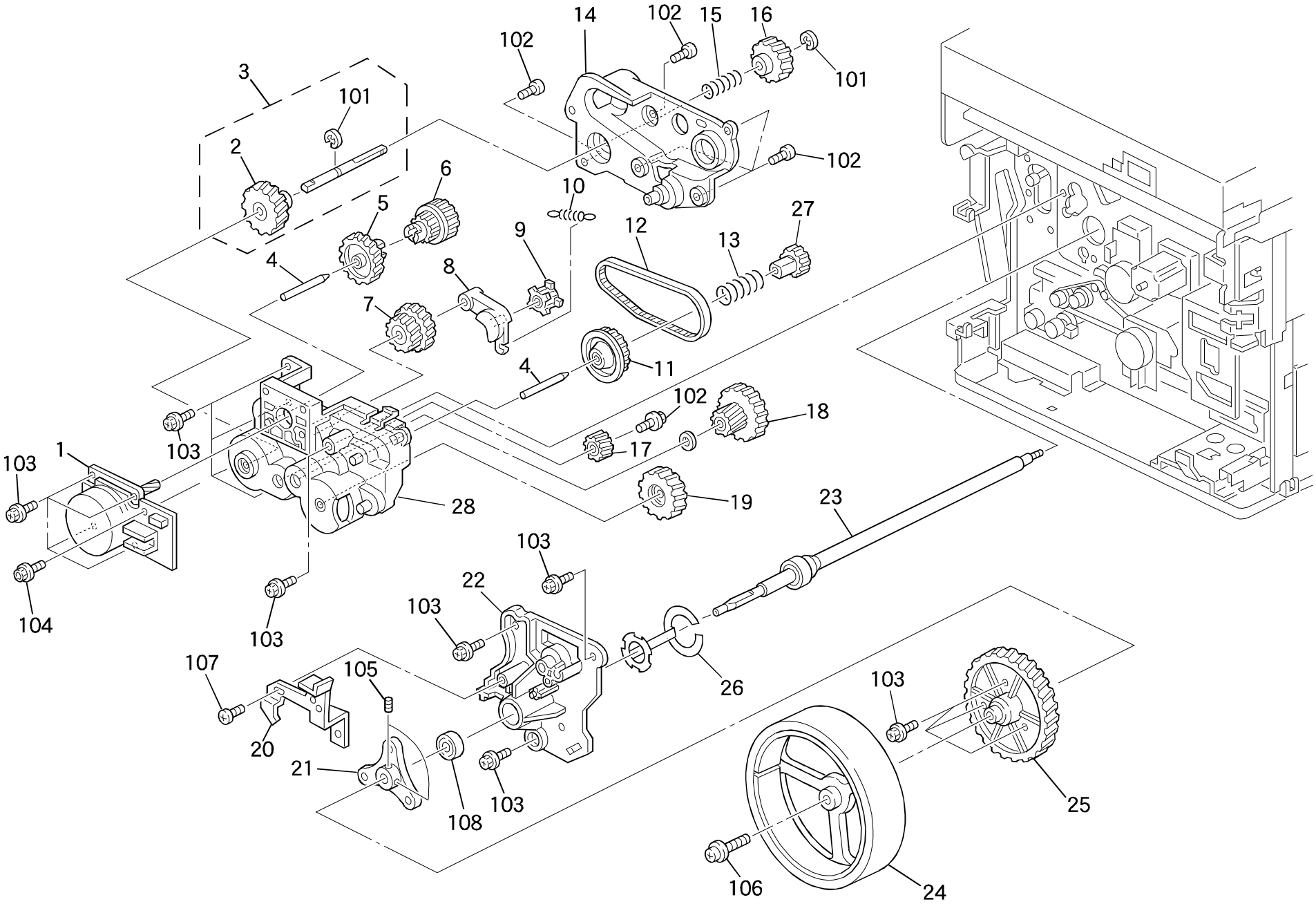

27. DRIVE SECTION 1 (A166)

Index No.	Part No.	Description	Q ty Per Assembly
1	AX05 0093	Motor - DC24V 9W	1
2	AB01 3961	Gear - 40Z	1
3	A166 2385	Drive Shaft - Transfer Unit	1
4	AA14 5253	Shaft - 4x46	2
5	AB01 0200	Gear - 27Z	1
6	AB01 7403	Gear - 25Z/24Z	1
7	AB01 7402	Gear - 31Z/72Z	1
8	A166 2361	Tightner Arm	1
9	AB03 0388	Pulley - 16Z	1
10	AA06 0634	Spring - Tightener	1
11	AB03 0526	Pulley - 45Z	1
12	A166 2364	Timing Belt - B40S3M318	1
13	AA06 3535	Spring	1
14	A166 2355	Drum Drive Support Plate	1
15	AA06 3534	Spring	1
16	AB01 3960	Gear - 30Z	1
17	AB01 3962	Gear - 20Z	1
18	AB01 7401	Gear - 20Z/60Z	1
19	AB01 3958	Gear - 40Z	1
20	A166 2266	Grounding Wire	1
21	AA13 4099	Bushing	1
22	A166 2261	Drum Shaft Holder	1
23	AD01 5016	Drum Shaft Ass y	1
24	A166 2401	Fly Wheel - 200	1
25	AB01 3957	Gear - 80Z	1
26	A166 2296	Drum Joint Shaft	1
27	AB01 3980	Gear - 17Z	1
28	A166 2350	Drum Drive Housing	1

Index No.	Part No.	Description	Q ty Per Assembly
101	0720 0060B	Retaining Ring - M6	
102	0452 4010B	Tapping Bind Screw - M4x10	
103	0451 4008B	Philips Tapping Screw - M4x8	
104	0443 0060B	Hexagon Tapping Screw - M3x6	
105	0574 0060E	Hexagon Headless Set Screw - M4x6	
106	0951 5014W	Philips Screw W/h Flat Washer-M5x14	
107	0452 3008B	Tapping Screw - M3x8	
108	0805 3491	Bearing - 10X26X9	

28. DRIVE SECTION 2 (A166)

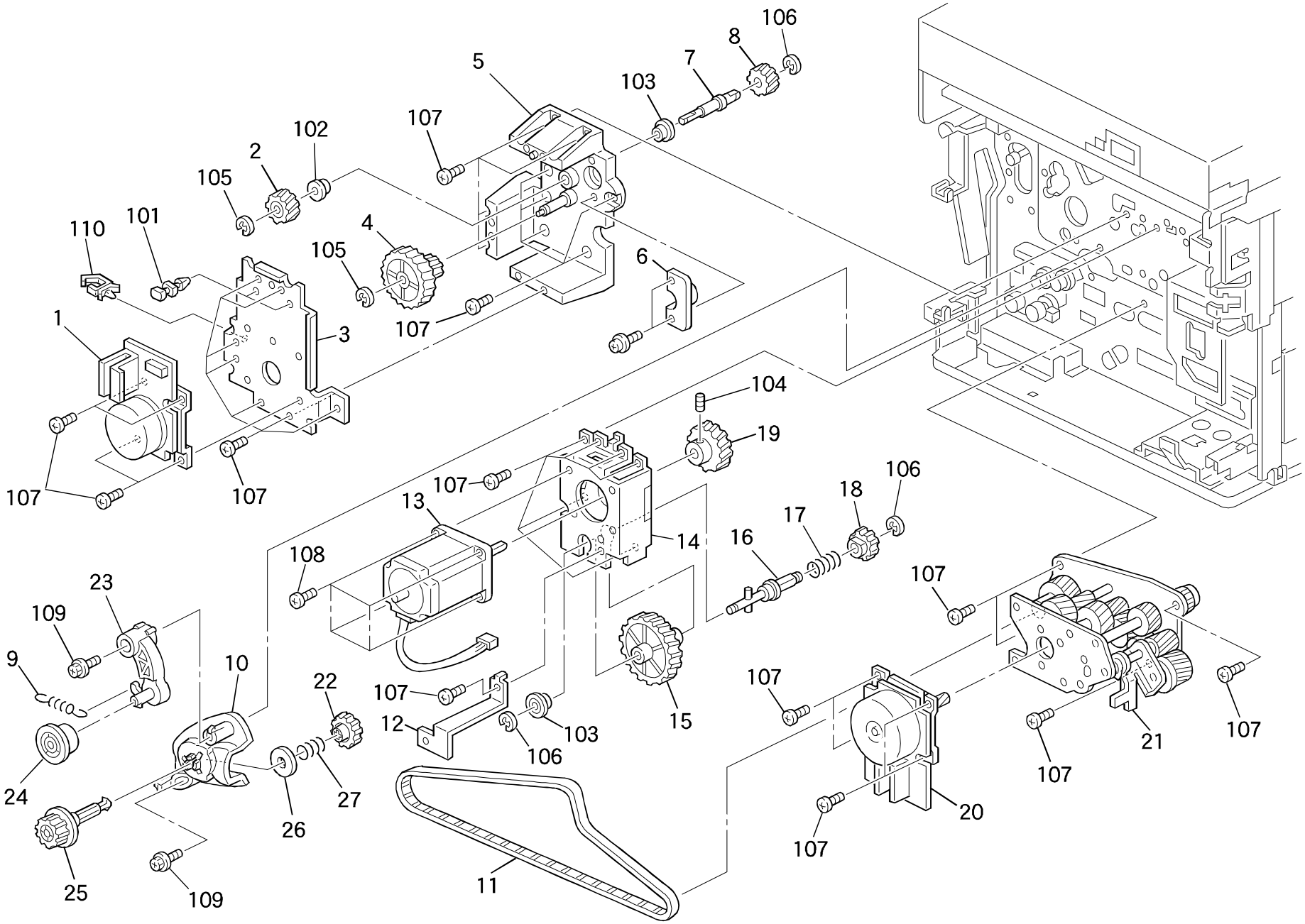

28. DRIVE SECTION 2 (A166)

Index No.	Part No.	Description	Q ty Per Assembly
1	AX06 0116	Motor - DC24V 20W	1
2	AB01 3953	Gear	1
3	A166 3374	Development Drive Bracket	1
4	AB01 7387	Gear - 14Z/96Z	1
5	A166 3372	Drive Support Plate - Development	1
6	A166 3412	Spacer	1
7	AA14 5249	Development Drive Shaft	1
8	AB01 3952	Gear	1
9	AA06 0633	Tension Spring - Tightener	1
10	A166 1121	Support Plate	1
11	A166 1131	Timing Belt - BS3M549	1
12	A166 5935	Upper Holder - I/O Control Board 2	1
13	AX06 0117	Motor - DC24V 4A	1
14	A166 3390	Development Revolvere Bracket	1
15	AB01 3955	Gear	1
16	A166 3391	Hopper Drive Shaft	1
17	C400 2671	Gear Spring	1
18	AB01 3954	Gear	1
19	AB01 3956	Gear	1
20	AX06 0131	Motor - DC24V 38W	1
21	A187 1101	Drive Unit - Main	1
22	AB01 3959	Gear - 20Z	1
23	A166 1126	Tightner Arm	1
24	AB03 0276	Tightener Pulley	1
25	AB03 0525	Pulley - 24Z	1
26	A166 1124	Thrust Ring	1
27	AA06 3533	Spring	1

Index No.	Part No.	Description	Q ty Per Assembly
101	1105 0421	Card Spacer - Mps-06-0	
102	0805 3482	Ball Bearing - 8x14x3.5	
103	0805 3497	Bushing - 8x12x3.5mm	
104	0575 0080E	Hexagon Headless Set Screw - M5x8	
105	0720 0040B	Retaining Ring - M4	
106	0720 0060B	Retaining Ring - M6	
107	0434 0060B	Philips Tapping Screw - M4x6	
108	0453 4010B	Tapping Bind Screw - M4x10	
109	0451 4008B	Philips Tapping Screw - M4x8	
110	1105 0310	Wire Clamp	

29. ELECTRICAL SECTION 1 (A166)

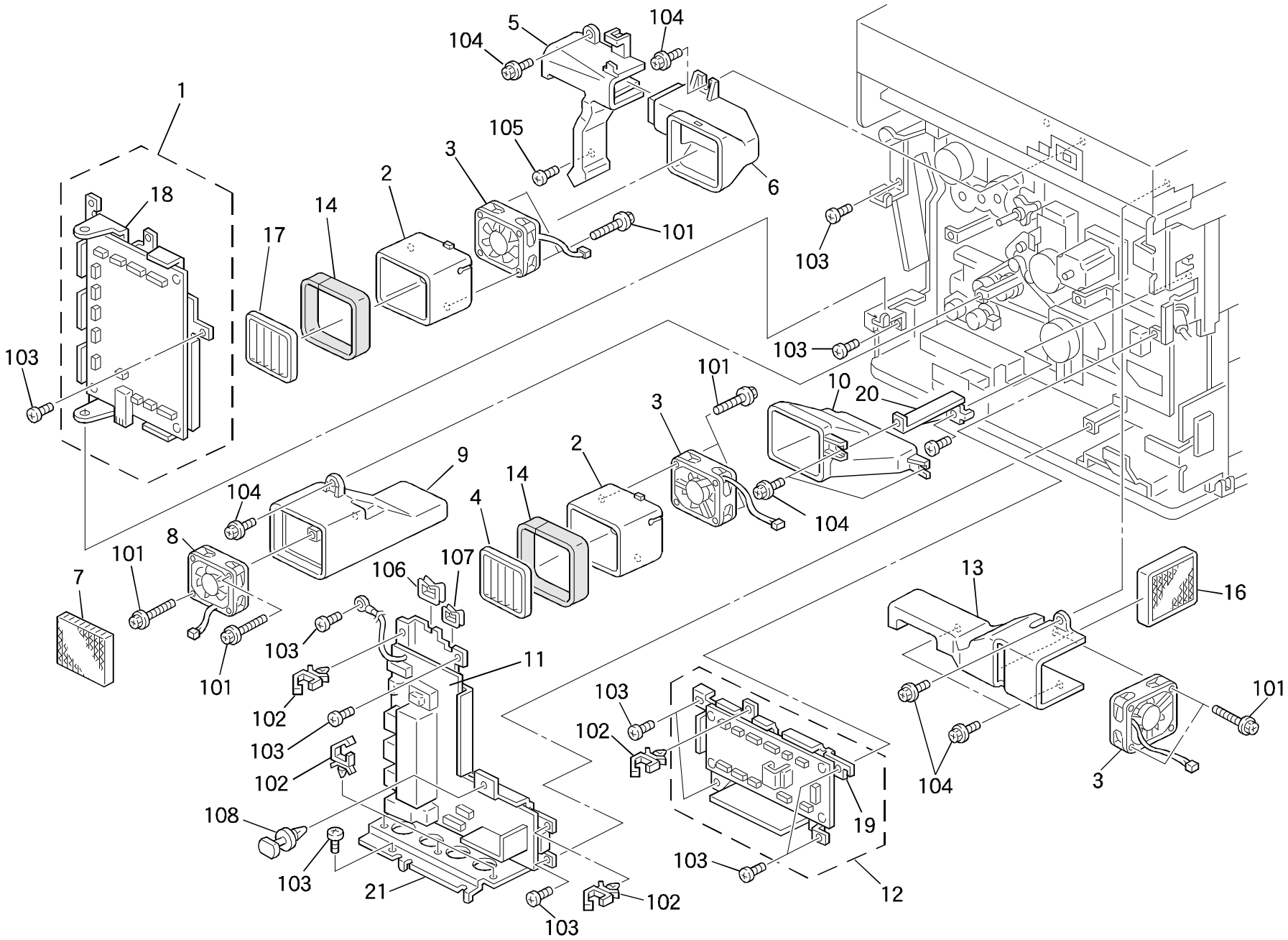

29. ELECTRICAL SECTION 1 (A166)

Index No.	Part No.	Description	Q ty Per Assembly
1	A187 5368	I/O Control Board 1	1
2	A166 1175	Outer Duct - Charge Unit	2
3	AX64 0071	Fan Motor - DC24V 0.17A	3
4	**AA01 2092**	**Dust Filter**	**1**
5	A166 2281	Duct - Charge Corona	1
6	A166 1174	Inner Duct - Charge Unit	1
7	**AA01 0089**	**Ozone Filter**	**1**
8	AX64 0070	Fan Motor - DC24V 0.14A	1
9	A166 1176	Inner Duct - Tranfer	1
10	A166 1183	Inner Duct - Fusing	1
11	AZ32 0082	Power Pack	1
12	A187 5369	I/O Control Board 2	1
13	A166 1173	OPC Duct	1
14	AA15 3023	Seal	2
15	A166 5927	Gounding Plate	1
16	**AA01 0093**	**Ozone Filter**	**1**
17	**AA01 2098**	**Dust Filter**	**1**
18	A187 5921	Bracket - I/O Control Board 1	1
19	A166 5931	Bracket - I/O Control Board 2	1
20	A166 1172	Duct Bracket - Fusing	1
21	A166 5938	Power Pack Bracket	1

Index No.	Part No.	Description	Q ty Per Assembly
101	0450 4035B	Philips Tapping Screw - M4x35	
102	1105 0310	Wire Clamp	
103	0434 0060B	Philips Tapping Screw - M4x6	
104	0451 4008B	Philips Tapping Screw - M4x8	
105	0453 4010B	Tapping Bind Screw - M4x10	
106	1105 0243	Wire Saddle	
107	1105 0328	Harness Clamp - ES-0505	
108	1105 0399	Card Spacer - Mps-10-0	

30. ELECTRICAL SECTION 2 (A166)

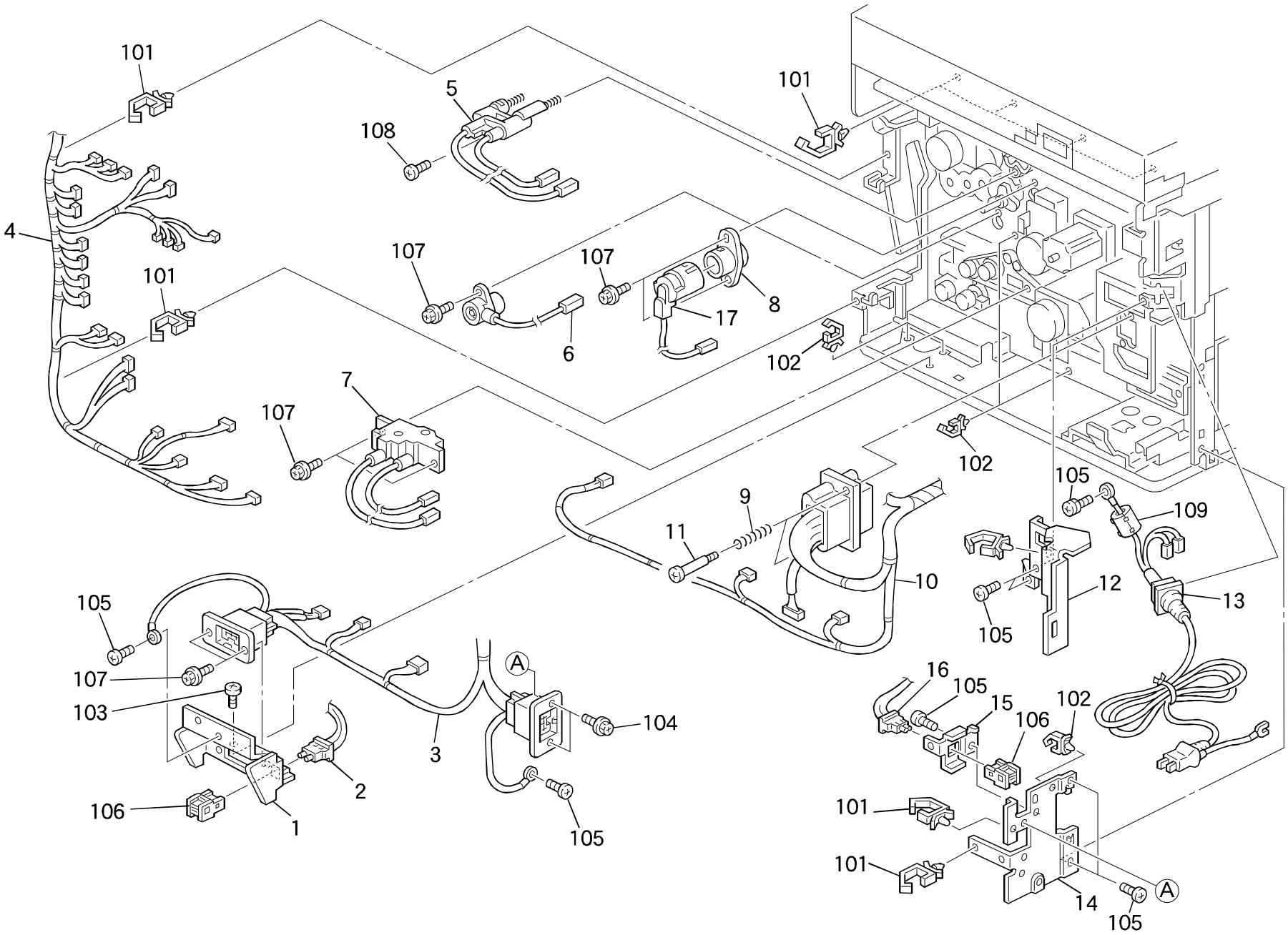

30. ELECTRICAL SECTION 2 (A166)

Index No.	Part No.	Description	Q ty Per Assembly
1	A166 5961	Connector Bracket - Cassette Bank	1
2	AW03 0039	Optical Fiber - 75 700mm	1
3	A166 5611	Rear Left DC Harness	1
4	A166 5632	Rear Right DC Harness	1
5	A166 2271	Receptacle - Chgarge Corona	1
6	AD02 1117	Transfer Corona Receptacle - Belt	1
7	AD02 1116	Transfer Corona Receptacle	1
8	A166 3363	Bias Terminal	1
9	AA06 3068	Spring Connector	2
10	A166 5631	AC Harness	1
11	5446 5832	Connector Guide Pin	2
12	A166 5952	Power Cord Cover	1
13	A166 5560	Power Supply Cord - 120V	1
13	A166 5561	Power Supply Cord - 230V	1
14	A166 5955	Sorter Connector Bracket	1
15	A166 5956	Optical Fiber Bracket	1
16	AW03 0069	Optical Fiber - 75 1200mm	1
17	A166 3400	Development Bias Terminal	1

Index No.	Part No.	Description	Q ty Per Assembly
101	1105 0316	Clamp	
102	1105 0310	Wire Clamp	
103	0434 0060B	Philips Tapping Screw - M4x6	
104	0443 0060B	Hexagon Tapping Screw - M3x6	
105	0801 0149	Philips Pan Head Screw - M4x6	
106	1102 4052	Optional Connector	
107	0451 4008B	Philips Tapping Screw - M4x8	
108	0452 3008B	Tapping Screw - M3x8	
109	1607 0317	Ferrite Core - ESD-R-19	

31. ELECTRICAL SECTION 3 (A166)

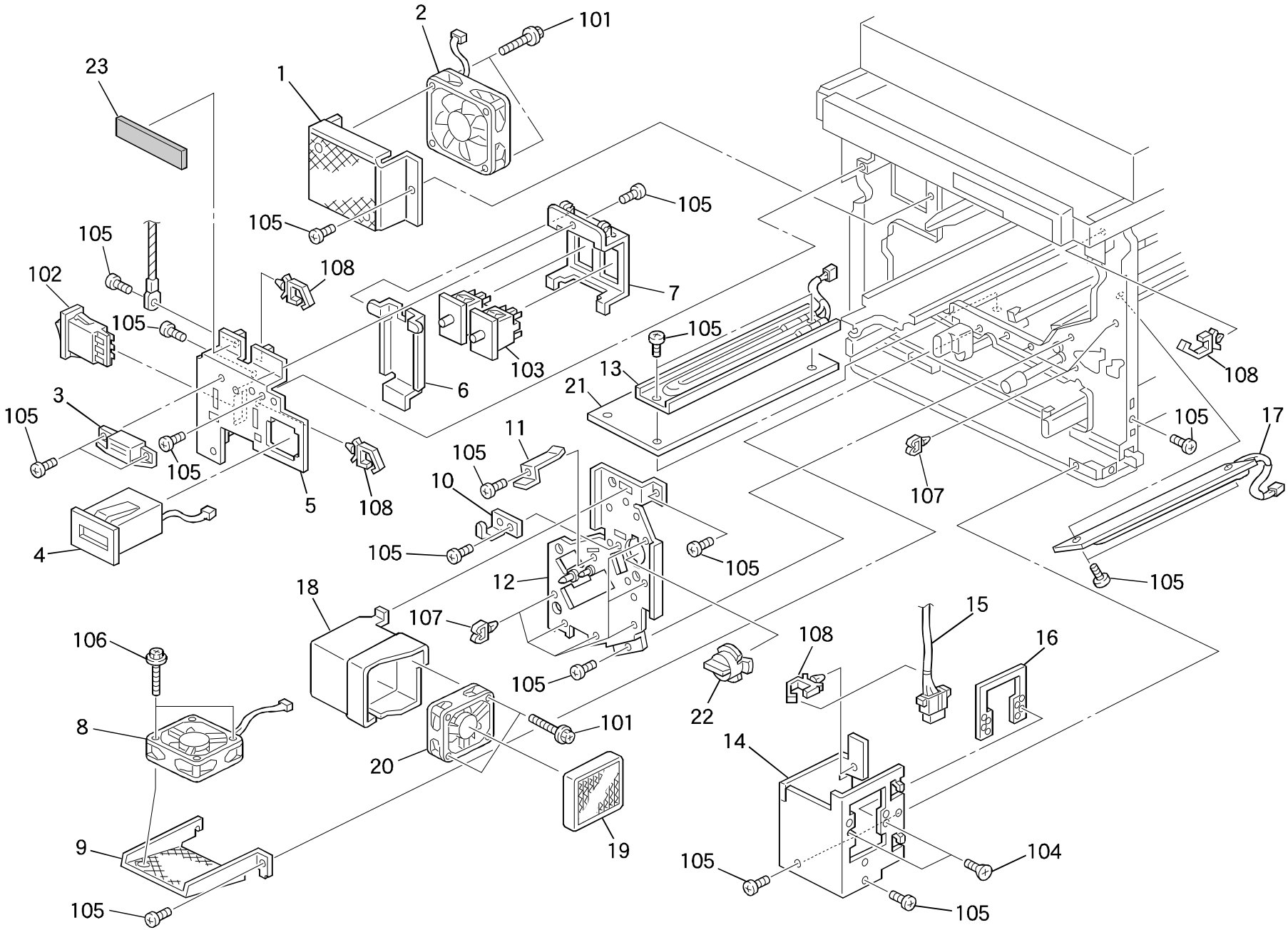

31. ELECTRICAL SECTION 3 (A166)

Index No.	Part No.	Description	Q ty Per Assembly
1	A166 1182	Power Unit Duct	1
2	AX64 0065	Fan Motor - DC24V .08A	1
3	AG07 0004	Magnetic Catch	1
4	A166 9099	Main Counter	1
5	A166 5941	Switch Bracket	1
6	A166 5943	Safety Switch Release Lever	1
7	A166 5942	Safety Switch Bracket	1
8	AX64 0065	Fan Motor - DC24V .08A	1
9	A166 1178	Fan Motor Bracket	1
10	A166 6535	Collection Bottle Holder	1
11	A166 6142	Stopper Bracket	1
12	A166 6070	Transfer Unit Guide Plate	1
13	AX40 0021	Anti-condensation Heater-115V 18W	1
13	AX40 0022	Anti-condensation Heater - 240V 18W	1
14	A166 5967	Key Counter Bracket	1
15	A166 5659	Key Counter Harness	1
16	5420 1515	Plate - Key Counter	1
17	AX40 0063	Anticondensation Heater - 120V9W	1
17	AX40 0064	Anti Condensation Heater - 230V9W	1
18	A166 1181	Front Right Duct	1
19	**AA01 0092**	**Ozone Filter**	**1**
20	AX64 0065	Fan Motor - DC24V .08A	1
21	A187 4625	Heat Sink	1
22	A166 6120	Transfer Belt Unit Cap	1
23	AA15 3030	Seal	1

Index No.	Part No.	Description	Q ty Per Assembly
101	0450 4035B	Philips Tapping Screw - M4x35	
102	1204 1545	Main Switch	
103	1204 2437	Interlock Switch	
104	0323 0080B	Philips Sunk Screw - M3x8	
105	0434 0060B	Philips Tapping Screw - M4x6	
106	0451 4030B	Philips Tapping Screw - M4x30	
107	1105 0199	Clamp	
108	1105 0291	Wire Saddle	

32. ELECTRICAL SECTION 4 (A166)

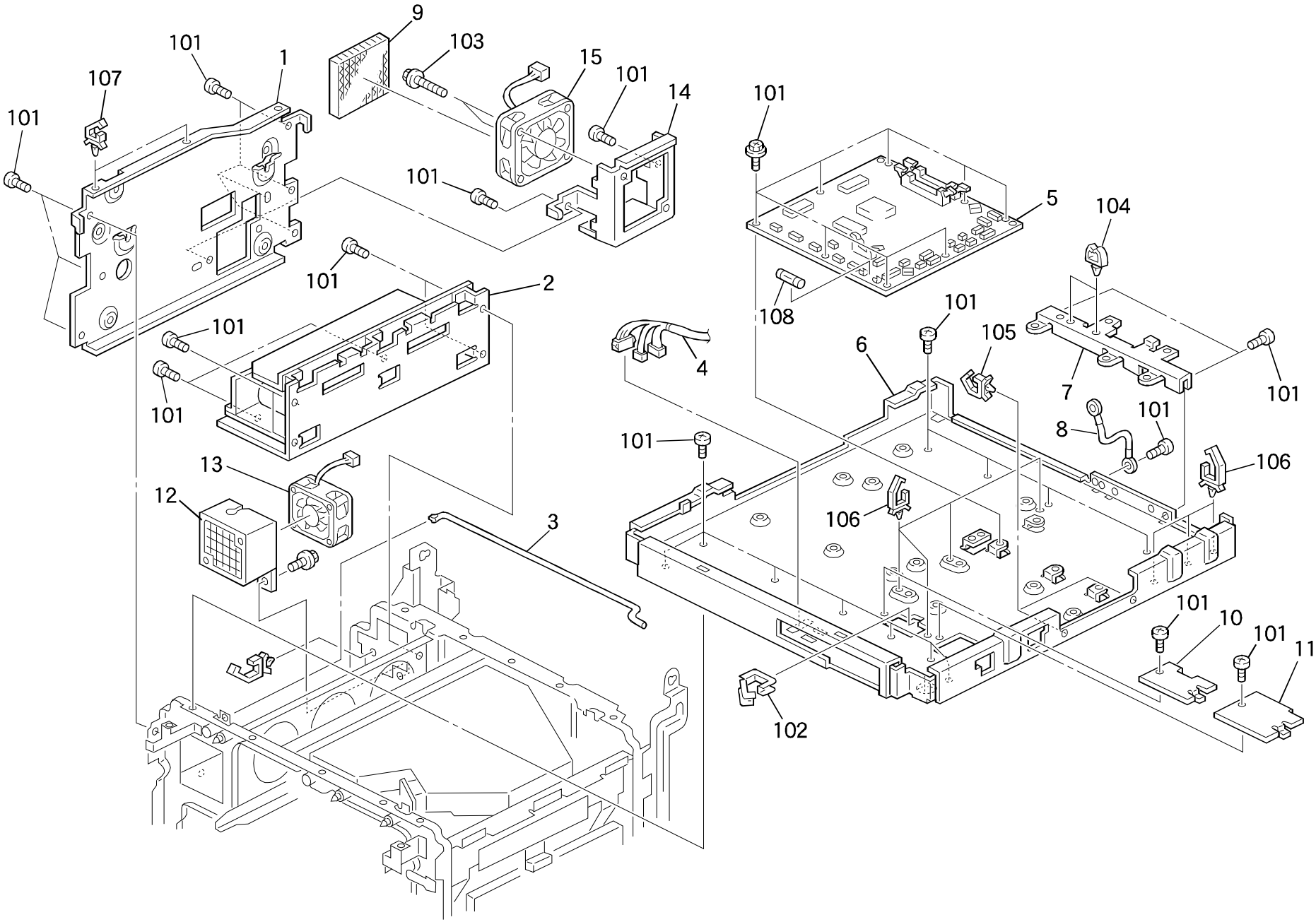

32. ELECTRICAL SECTION 4 (A166)

Index No.	Part No.	Description	Q ty Per Assembly
1	A166 1083	Sorter Stay	1
2	AZ24 0030	DC Power Supply Unit - 115V	1
2	AZ24 0035	DC Power Supply Unit - 230V	1
3	A166 5891	SCU Release Rod	1
4	A166 5646	Front DC Harness	1
5	A187 5362	Printer Main Control Board	1
6	A166 5870	SCU Base	1
7	A166 5881	Board Bracket	1
8	A166 5722	Grounding Harness	1
9	**AA01 0095**	**Ozone Filter**	**1**
10	A166 5877	LD Cover - Synchronizing	1
11	A166 5879	SCU Fan Cover	1
12	A166 5976	Fan Motor Bracket	1
13	AX64 0074	Fan Motor - DC24V 0.08A	1
14	A166 5979	Exit Fan Motor Bracket	1
15	AX64 0066	Fan Motor - DC24V 0.04A	1



Index No.	Part No.	Description	Q ty Per Assembly
101	0443 0060B	Hexagon Tapping Screw - M3x6	
102	1105 0334	Edge - 17	
103	0451 4030B	Philips Tapping Screw - M4x30	
104	1105 0199	Clamp	
105	1105 0291	Wire Saddle	
106	1105 0316	Clamp	
107	1105 0310	Wire Clamp	
108	1107 0745	Fuse - 1A 250V	

33. FRAME SECTION 1 (A166)

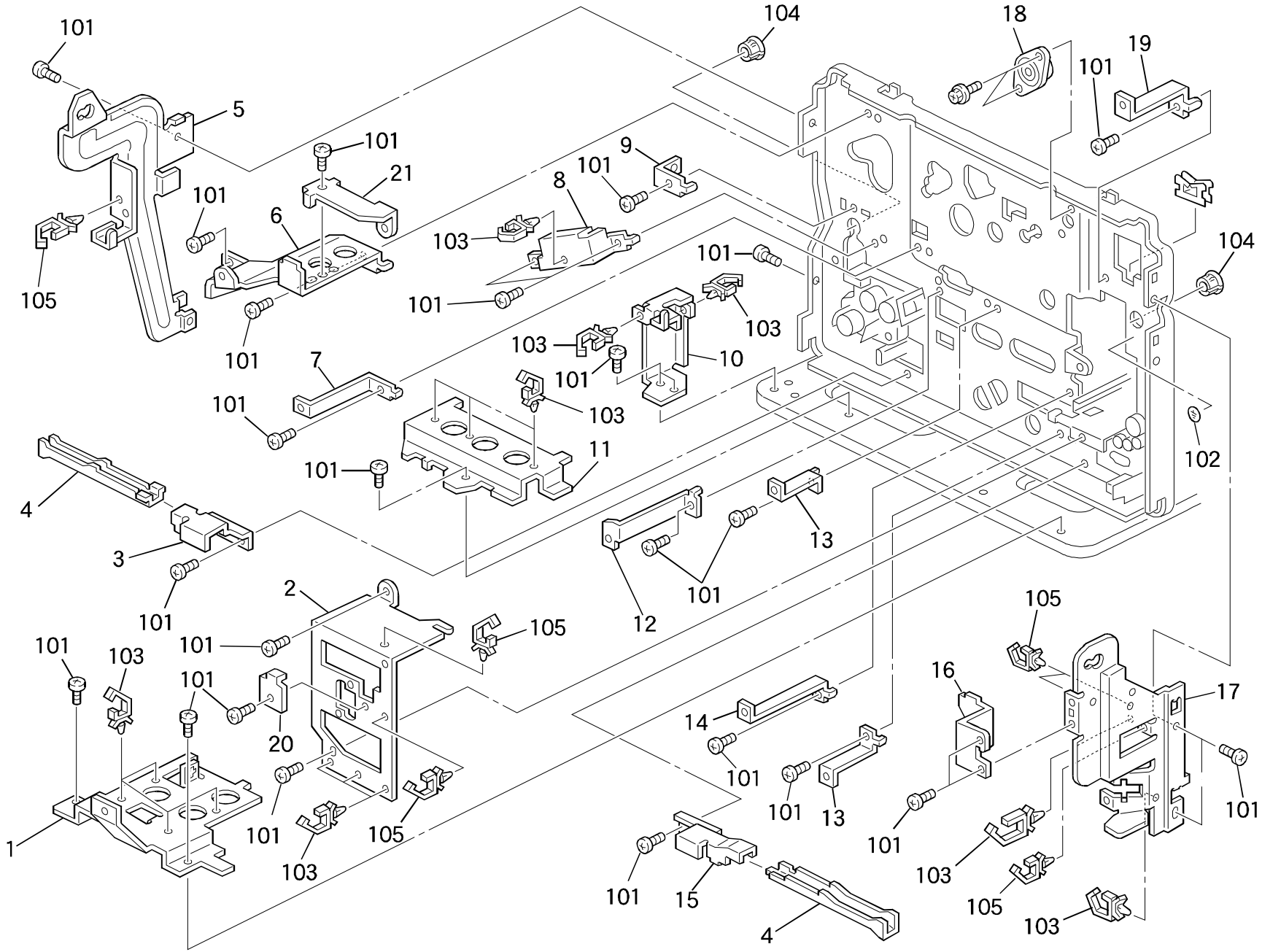

33. FRAME SECTION 1 (A166)

Index No.	Part No.	Description	Q ty Per Assembly
1	A166 5957	Left Grip Cover	1
2	A166 4148	Connector Bracket - Fusing	1
3	A134 1072	Right Bracket - Grip Plate	1
4	A134 1071	Left Grip Plate	2
5	A166 5924	SCU Right Release Arm	1
6	A166 5971	Right Hinge Bracket	1
7	A166 5926	Holder - I/O Control Board 1	1
8	A166 5959	Rear Right Harness Guide	1
9	A166 1357	Right Middle Cover Bracket	1
10	A166 5925	Hinge - I/O Control Board 1	1
11	A166 5958	Right Grip Cover	1
12	A166 1177	Duct Bracket - Transfer	1
13	A166 5939	Power Pack Holder	2
14	A166 5937	Lower Holder - I/O Control Board 2	1
15	A134 1073	Left Bracket - Grip Plate	1
16	A166 5970	Left Hinge Bracket	1
17	A166 5951	Left Release Arm - Scanner	1
18	A166 3420	Rear Release Holder	1
19	A166 5935	Upper Holder - I/O Control Board 2	1
20	A166 4094	Stopper (230V)	1
21	A166 5973	Grounding Plate	1

Index No.	Part No.	Description	Q ty Per Assembly
101	0434 0060B	Philips Tapping Screw - M4x6	
102	1005 0335	Earth Mark	
103	1105 0310	Wire Clamp	
104	1106 0458	Bushing - 9.9mm	
105	1105 0292	Wire Saddle	

34. FRAME SECTION 2 (A166)

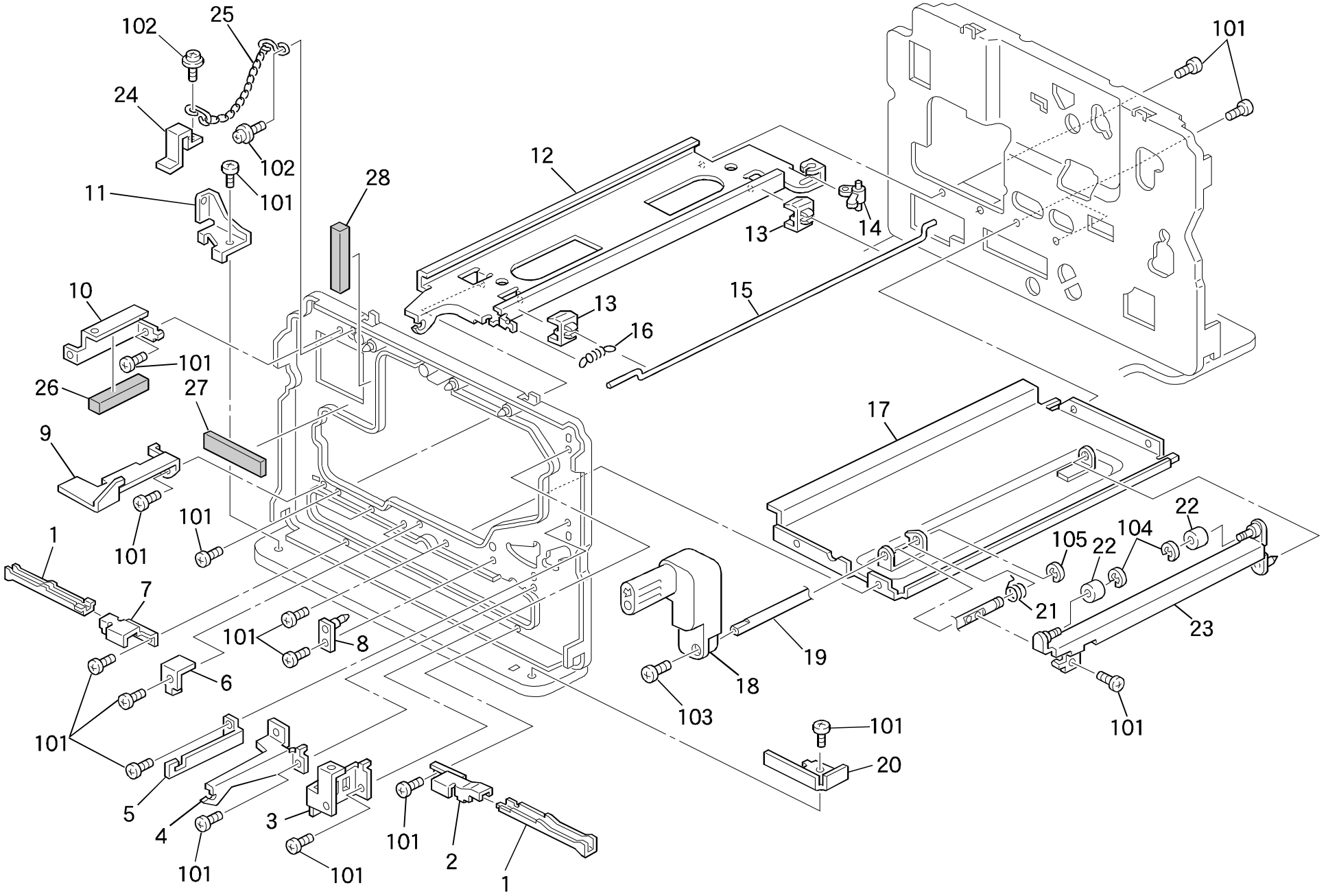

34. FRAME SECTION 2 (A166)

Index No.	Part No.	Description	Q ty Per Assembly
1	A134 1071	Left Grip Plate	2
2	A134 1073	Left Bracket - Grip Plate	1
3	A166 5962	Connector Bracket - Cleaner	1
4	A166 1354	Cover Hinge - Front Right	1
5	A166 1353	Front Stopper Bracket	1
6	A166 3926	Positioning Plate	1
7	A134 1072	Right Bracket - Grip Plate	1
8	A166 3935	Positioning Shaft Support Plate	1
9	A166 4285	Fusing Unit Lever	1
10	A166 5946	Switch Bracket	1
11	A166 1355	Front Right Lower Bracket	1
12	A166 4280	Fusing Unit Rail	1
13	A166 4296	Rod Holder	2
14	A166 4295	Drive Release Link	1
15	A166 4292	Drive Release Rod	1
16	AA06 0635	Spring - Release	1
17	A166 1091	Lower Transfer Stay	1
18	A166 3925	Transport Misfeed Knob	1
19	A166 3928	Front Positiioning Shaft	1
20	A166 5968	Key Counter Fixing Bracket	1
21	AA06 6272	Spring	1
22	A069 2704	Guide Roller - 6x12x7.5	2
23	A166 3920	Release Plate - Transfer Tank	1
24	A166 3194	Stopper Chain	1
25	A166 6118	Transfer Belt Unit Release Knob	1
26	AA15 3029	Seal	1
27	AA15 3027	Seal	1
28	AA15 3028	Seal	1

Index No.	Part No.	Description	Q ty Per Assembly
101	0434 0060B	Philips Tapping Screw - M4x6	
102	0952 4006B	Screw - Small Round - M4x6	
103	0453 4010B	Tapping Bind Screw - M4x10	
104	0720 0040B	Retaining Ring - M4	
105	0720 0060B	Retaining Ring - M6	

35. FRAME SECTION 3 (A166)

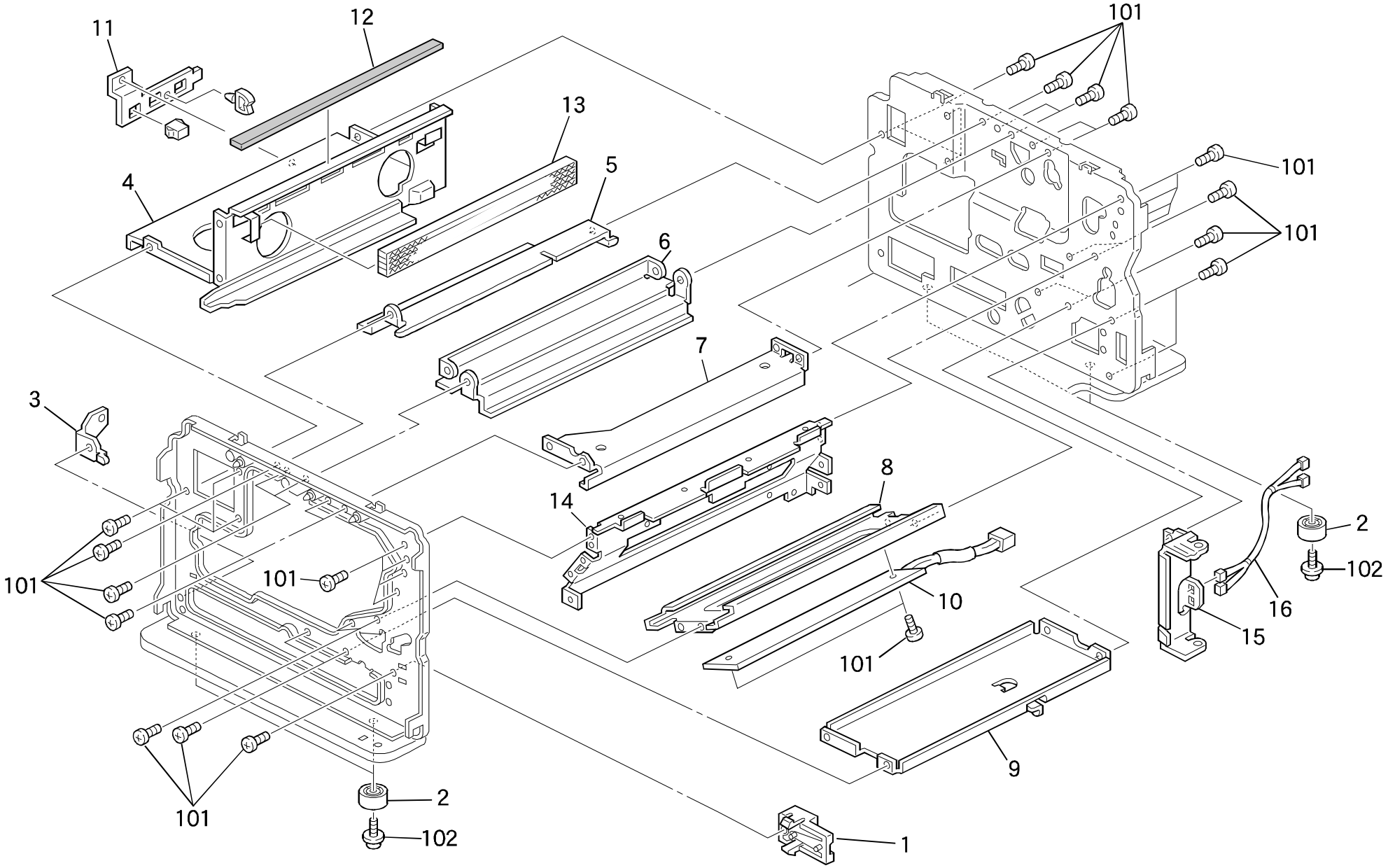

35. FRAME SECTION 3 (A166)

Index No.	Part No.	Description	Q ty Per Assembly
1	A166 2712	Lock Holder	1
2	AH01 0007	Rubber Foot	4
3	A166 1356	Front Left Lower Bracket	1
4	A166 1084	DC Drive Stay	1
5	A166 1082	Upper Development Rail	1
6	A166 1077	Left Stay	1
7	A166 2250	Drum Rail	1
8	A166 6101	Paper Tray Rail	1
9	A157 1087	Middle Stay	1
10	AX40 0063	Anticondensation Heater - 120V9W	1
10	AX40 0064	Anti Condensation Heater - 230V9W	1
11	A166 5982	Exit Fan Harness Guide	1
12	AA15 3025	Seal	1
13	**AA01 0094**	**Ozone Filter**	**1**
14	A166 1078	Right Stay	1
15	A166 2694	Hinge Bracket	1
16	A166 5635	Relay Harness - Optical Transport	1

Index No.	Part No.	Description	Q ty Per Assembly
101	0434 0060B	Philips Tapping Screw - M4x6	
102	0960 4010B	Philips Flange Screw - M4 X 10	

36. SCANER MOTOR CONTROL BOARD (A166)

CAPACITOR

SYMBOL NO.	INDEX NO.
C106	116
C107	116
C108	116
C109	116
C110	116
C111	116
C112	116
C113	116
C114	116
C115	116

SYMBOL NO.	INDEX NO.
C116	117
C117	118
C118	117
C119	117
C120	117
C121	117
C122	117
C123	113
C124	115
C125	114

SYMBOL NO.	INDEX NO.
C127	114

CONNECTOR

SYMBOL NO.	INDEX NO.
CN610	104
CN611	102
CN612	103

DIODE

SYMBOL NO.	INDEX NO.
D101	105

IC

SYMBOL NO.	INDEX NO.
IC101	109
IC102	108
IC103	107
IC104	106
IC105	106

L

SYMBOL NO.	INDEX NO.
L101	112
L102	112
L103	112

RAY

SYMBOL NO.	INDEX NO.
RAY101	111
RAY102	111

RASISTOR

SYMBOL NO.	INDEX NO.
R101	110
R102	110
R103	119
R104	119
R105	119
R106	119
R107	119
R108	119
R109	119
R110	119

SYMBOL NO.	INDEX NO.
R111	119
R112	119
R113	121
R114	122
R115	122
R116	120
R117	120

TP

SYMBOL NO.	INDEX NO.
TP103	101

36. SCANER MOTOR CONTROL BOARD (A166)

Index No.	Part No.	Description	Q ty Per Assembly
*	A166 1777	Scanner Motor Control Board	1
1	A109 5159	Heat Sink	1
2	A166 1778	Motor Control Board Bracket	1

Index No.	Part No.	Description	Q ty Per Assembly
101	1101 0328	Connector Pin Contact	
102	1102 1119	Pin Connector - 5p	
103	1102 4212	Ct Header - 15p	
104	1102 5304	Connector - 5p	
105	1402 1205	IC - RL102F	
106	1407 1970	TTLIC - SN74LS07N	
107	1407 4235	IC - SLA5011 LF802	
108	1407 4236	IC - SLA5012 LF802	
109	1408 1013	IC - Si - 7501	
110	1600 1669	Resistor - 1.0 P 5% 5W	
111	1601 7508	Resistor Array - 4.7 KP	
112	1602 7077	Capacitor - 270PF 10% 50V	
113	1604 1387	Capacitor - 220 ηF 50V	
114	1604 1993	Capacitor - 100ηF 25V	
115	1604 2166	Capacitor - 100ηF 50V 20%	
116	1605 0258	Capacitor - 15P	
117	1605 0636	Capacitor - 0.1ηF	
118	1606 1135	Capacitor - 470PF 50V	
119	1630 3101	Resistor - 100P - 1/10W	
120	1630 3102	Resistor - 1KP 1/10W 5%	
121	1630 3103	Resistor - 10KP 1/10W 5%	
122	1630 3202	Resistor - 2KP -1/10W	

37. SYSTEM CONTROL BOARD (A166)

CAPACITOR

SYMBOL NO.	INDEX NO.
C1	162
C2	162
C3	138
C4	139
-----	-----
C6	161
C7	162
-----	-----
C9	168
C10	162

SYMBOL NO.	INDEX NO.
-----	-----
C12	140
-----	-----
-----	-----
-----	-----
-----	-----
-----	-----
C18	163
C19	163
C20	163

SYMBOL NO.	INDEX NO.
C21	163
C22	163
C23	163
C24	163
C25	163
C26	163
C27	163
C28	163
C29	163
C30	163

SYMBOL NO.	INDEX NO.
C31	163
C32	163
C33	163
C34	163
C35	163
C36	163
C37	163
C38	163
C39	163
C40	163

SYMBOL NO.	INDEX NO.
C41	163
C43	140
C49	140
C50	140
C52	140
C62	140
C63	140
C64	140
C66	140
-----	-----

SYMBOL NO.	INDEX NO.
-----	-----
-----	-----
-----	-----
-----	-----
C75	140
C76	142
C77	140
C78	142
C79	140
C80	140

SYMBOL NO.	INDEX NO.
C81	165
C82	165
C83	165
C84	165
C85	165
C86	165
C87	165
C88	165
C89	165
C90	164

CAPACITOR

SYMBOL NO.	INDEX NO.
C91	165
C92	140
-----	-----
C94	140
-----	-----
C96	140
-----	-----
C98	140
C99	140
C100	140

SYMBOL NO.	INDEX NO.
C101	140
C102	140
C103	140
C104	140
C105	140
C106	140
-----	-----
C108	140
C109	140
-----	-----

SYMBOL NO.	INDEX NO.
C111	163
C112	163
C113	163
C114	140
C115	140
C116	140
C117	140
C118	140
C119	141
C120	140

SYMBOL NO.	INDEX NO.
C121	140
C122	140
C123	140
C124	141
C125	163
C126	163
C127	140
C128	140
C129	140
C130	140

SYMBOL NO.	INDEX NO.
C131	140
C132	140
C133	140
C134	140
C135	140
C136	140
C137	140
-----	-----
C139	140
C140	140

SYMBOL NO.	INDEX NO.
C141	140
C142	140
C143	140
C144	140
C145	140
C146	140

CONNECTOR

SYMBOL NO.	INDEX NO.
CN351	107
CN352	103
CN353	2
CN354	106
CN355	104
CN358	3
CN359	102
CN360	108
CN361	105

37. SYSTEM CONTROL BOARD (A166)

DA

SYMBOL NO.	INDEX NO.
DA1	117

DIODE

SYMBOL NO.	INDEX NO.
D5	116
D6	116

F

SYMBOL NO.	INDEX NO.
F1	111
F1	167

IC

SYMBOL NO.	INDEX NO.
IC5	128
IC6	4
IC16	1
IC17	8
IC18	131
IC19	129
IC20	7
IC22	124
IC23	124
IC24	127

SYMBOL NO.	INDEX NO.
IC26	123
IC27	119
IC28	119
IC29	119
IC30	123
IC31	122
IC32	120
IC34	121
IC35	130
IC36	166

SYMBOL NO.	INDEX NO.
IC37	166
IC38	166
IC39	166
IC40	5
IC40	6
(SOCKET)	109
IC41	-----
(SOCKET)	109
IC42	125
IC43	126

SYMBOL NO.	INDEX NO.
IC44	118

JP

SYMBOL NO.	INDEX NO.
JP3	158
JP6	158
JP11	158
JP15	158
JP18	158
JP19	158
JP20	158

RESISTOR

SYMBOL NO.	INDEX NO.
R1	154
R6	153
R7	153
R8	153
R9	153
R10	153
R11	153
R12	153
R13	153
-----	-----

SYMBOL NO.	INDEX NO.
-----	-----
R22	147
R23	147
R24	147
R25	147
R26	147
R27	147
R28	147
R29	147
R30	147

SYMBOL NO.	INDEX NO.
R31	155
R32	147
R33	147
R34	147
R35	147
R36	147
R37	155
R38	155
R39	147
-----	-----

SYMBOL NO.	INDEX NO.
-----	-----
-----	-----
-----	-----
R44	150
R45	147
R46	147
R47	147
R48	147
R49	144
R50	147

SYMBOL NO.	INDEX NO.
R51	147
R52	147
R53	147
R54	147
R55	147
R56	147
R57	147
R58	155
R59	157
R60	157

SYMBOL NO.	INDEX NO.
R61	156
R62	155
R63	155
R64	155
-----	-----
R66	148
R67	148
R68	155
R69	155
R70	148

37. SYSTEM CONTROL BOARD (A166)

RESISTOR

SYMBOL NO.	INDEX NO.	SYMBOL NO.	INDEX NO.	SYMBOL NO.	INDEX NO.	SYMBOL NO.	INDEX NO.	SYMBOL NO.	INDEX NO.	SYMBOL NO.	INDEX NO.	SYMBOL NO.	INDEX NO.
R71	148	R81	144	-----	-----	R101	147	R111	147	R121	159	R131	145
R72	143	R82	144	-----	-----	R102	147	R112	147	R122	160	R132	152
R73	149	R83	144	-----	-----	R103	147	R113	147	R123	151	R133	152
R74	144	R84	144	-----	-----	R104	147	R114	155	R124	155	R134	155
R75	144	R85	156	R95	147	R105	147	R115	149	R125	145	R135	147
R76	144	R86	156	R96	147	R106	155	R116	152	R126	147	R136	147
R77	144	R87	156	R97	147	R107	147	R117	144	R127	145	R137	155
R78	144	R88	156	R98	147	R108	147	R118	152	R128	152	R138	155
R79	144	-----	-----	R99	147	R109	147	R119	155	R129	152	R139	155
R80	144	-----	-----	R100	147	R110	147	R120	155	R130	145	R140	155

RESISTOR

SYMBOL NO.	INDEX NO.	SYMBOL NO.	INDEX NO.	SYMBOL NO.	INDEX NO.	SYMBOL NO.	INDEX NO.	SYMBOL NO.	INDEX NO.	SYMBOL NO.	INDEX NO.	SYMBOL NO.	INDEX NO.
R141	155	R151	144	R161	144	R171	152	R181	152	R191	155	R201	155
R142	155	R152	144	R162	144	R172	152	R182	155	R192	155	R202	155
R143	155	R153	144	R163	144	R173	152	R183	155	R193	155	R203	155
R144	155	R154	144	R164	144	R174	152	R184	155	R194	155	R204	155
R145	147	R155	144	R165	152	-----	-----	R185	155	R195	155	R205	155
R146	147	R156	144	R166	152	-----	-----	R186	155	R196	155	R206	146
R147	155	R157	144	R167	149	R177	152	R187	155	R197	155	R207	155
R148	147	R158	144	R168	152	R178	152	R188	155	R198	155	R208	155
R149	144	R159	144	R169	152	R179	152	R189	155	R199	151	R209	151
R150	144	R160	144	-----	-----	R180	152	R190	155	R200	151	R210	155

37. SYSTEM CONTROL BOARD (A166)

RESISTOR

SYMBOL NO.	INDEX NO.
R211	155
R212	146
-----	-----
R214	155
R215	155
R216	155
R217	155
R218	155
R219	155
R220	155

SYMBOL NO.	INDEX NO.
R221	155
R222	155
-----	-----
R224	152
R225	152
R226	152
R227	152
R228	152
R229	152
R230	152

SYMBOL NO.	INDEX NO.
R231	152
R232	152
R233	144
R234	147
R235	147
R236	143
R237	150
R238	152
R239	152
R240	153

SW

SYMBOL NO.	INDEX NO.
SW1	114
SW3	113
SW4	112

TB

SYMBOL NO.	INDEX NO.
TB1	101
(SOCKET)	110

XTL

SYMBOL NO.	INDEX NO.
XTL1	135
XTL2	134
XTL3	136
XTL4	137
XTL5	133
XTL6	132

ZD

SYMBOL NO.	INDEX NO.
ZD2	115

37. SYSTEM CONTROL BOARD (A166)

Index No.	Part No.	Description	Q ty Per Assembly
*	A187 5268	SCU Board (115V)	1
*	A187 5258	SCU Board (NRG)(230V)	1
*	A187 5251	SCU Board (RIC/INF)(230V)	1
1	A166 5270	IC - UPD65641-AZ	1
2	A166 5273	Connector - LMSA-9204B2-20204B-T	1
3	A166 5274	Connector - LMSA-9204B2-20204B-T	1
4	A166 5277	IC - ACC2036	1
5	A187 5275	IC - SYSTEM CONTROL	1
6	1905 0025	UVEPROM 4M X16 120NS	1
7	A166 5286	IC - M38802M2-V105	1
8	A700 5106	IC - PI	1



Index No.	Part No.	Description	Q ty Per Assembly
101	1102 3597	Pin Header - 4p	
102	1102 4203	Ct Header - 4p	
103	1102 5306	Connector - 7p	
104	1102 5375	Connector - 50p	
105	1102 5718	Optical Fiber Connector	
106	1102 6295	Connector - 2p	
107	1102 7127	Connector - 100p	
108	1102 7196	Connector - 50p	
109	1104 0612	Connector - 40p	
110	1104 0683	Socket - IMSA-9206H-GF	
111	1107 0747	Fuse - 1.6A 250V	
112	1204 1228	Switch	
113	1204 1543	Dip Switch	
114	1204 2152	Dip Switch	
115	1402 0688	Diode	
116	1402 0804	Silicon Diode - 45V - 0.3A	
117	1402 1271	Diode - EA20QC04-F	
118	1407 2187	TTLIC - SN74LS07NS	
119	1407 2879	CMOS ACT373	
120	1407 3257	Cmosic - TC74HC14AF	
121	1407 3722	IC - TC74ACT04F	
122	1407 3723	IC - TC74ACT08F	
123	1407 3728	IC - TC74ACT244F	
124	1407 3729	IC - TC74ACT245F	
125	1407 3852	IC - MB89371AH	
126	1407 3987	IC - TC74ACT32F	
127	1407 4114	IC - SN751177	
128	1407 4248	IC - NG80386SX-20	
129	1407 4347	IC - SYM53CF96-2-100QPF	
130	1408 0611	IC - 3771	
131	1408 1202	IC - BH9590FP-Y	
132	1503 0418	Crystal Oscilator - 4.9152Mhz	
133	1503 0638	Oscllator - EX0-8f 40.000Mhz	
134	1503 0639	Oscllator - EX0-8f 32.000 Mhz	
135	1503 0640	Oscllator - MSD-49 16.0Mhz	

Index No.	Part No.	Description	Q ty Per Assembly
136	1503 0641	Oscllator - SMD-49 14.31818Mhz	
137	1503 0642	Oscllator - MSD-49 9.8304Mhz	
138	1604 2601	Condensor - 47ηF 20% 25V	
139	1604 4365	Condensor - 470ηF 16V 20%	
140	1605 0632	Condensor - 0.1ηF +80% -20%	
141	1605 0853	Condensor - 1ηF +80/20% 16V	
142	1606 1131	Capacitor - 10PF 5%	
143	1630 1121	Resistor - 120P 5% 1/8W	
144	1630 3100	Resistor - 10 P 5% 1/10W	
145	1630 3101	Resistor - 100P - 1/10W	
146	1630 3102	Resistor - 1KP 1/10W 5%	
147	1630 3103	Resistor - 10KP 1/10W 5%	
148	1630 3154	Resistor - 150K 0HM 5% 1/10W	
149	1630 3205	Resistor - 2M P 5% 1/10W	
150	1630 3222	Resistor - 2.2KP 1/10W 5%	
151	1630 3301	Resistor - 300 P 5% 1/10W	
152	1630 3330	Resistor - 33 P 5% 1/10W	
153	1630 3391	Resistor - 390P 1/10W 5%	
154	1630 3471	Resistor - 470P - 1/10W	
155	1630 3472	Resistor - 4.7KP 1/10W 5%	
156	1630 3473	Resistor - 47KP 1/10W 5%	
157	1630 3752	Resistor - 7.5K P 5% 1/10W	
158	1633 0000	Resistor - 0P 1/10W:Jamper CHIP	
159	1633 3901	Resistor - 3.9 P 1% 1/10W	
160	1633 9101	Resistor - 9.1K P 1/10W	
161	1644 1100	Capacitor - 10ηF 20% 16V	
162	1644 1470	Capacitor - 47ηF 20% 16V	
163	1660 3220	Capacitor - 122PF 5% 50V	
164	1660 3331	Capacitor - 330PF 5% 50V	
165	1660 3471	Capacitor - 470PF 50V	
166	1901 0030	IC - DRAM 4M 256KX16 80NS G5	
167	1104 0307	Fuse Holder	
168	1644 5229	Capacitor - 2.2ηF 20% 50V	

Index No.	Part No.	Description	Q ty Per Assembly

38. IPU BOARD (A166)

CAPACITOR

SYMBOL NO.	INDEX NO.	SYMBOL NO.	INDEX NO.	SYMBOL NO.	INDEX NO.	SYMBOL NO.	INDEX NO.	SYMBOL NO.	INDEX NO.	SYMBOL NO.	INDEX NO.	SYMBOL NO.	INDEX NO.
C1	200	C11	201	C21	206	C31	207	C41	207	C51	212	C61	212
C2	200	C12	207	C22	206	C32	206	C42	206	C52	212	C62	212
C3	162	C13	206	C23	207	C33	207	C43	207	C53	211	C63	212
C4	203	C14	206	C24	207	C34	206	C44	204	-----	-----	C64	212
C5	203	C15	206	C25	206	C35	207	C45	200	-----	-----	C65	212
C6	201	C16	200	C26	206	C36	207	C46	202	C56	212	C66	212
C7	201	C17	206	C27	207	C37	206	C47	200	C57	212	-----	-----
C8	201	C18	206	C28	207	C38	207	C48	204	C58	212	C68	212
C9	201	C19	207	C29	206	C39	206	C49	161	C59	212	C69	212
C10	201	C20	207	C30	207	C40	207	C50	212	C60	212	C70	212

CAPACITOR

SYMBOL NO.	INDEX NO.	SYMBOL NO.	INDEX NO.	SYMBOL NO.	INDEX NO.	SYMBOL NO.	INDEX NO.	SYMBOL NO.	INDEX NO.	SYMBOL NO.	INDEX NO.	SYMBOL NO.	INDEX NO.
C71	212	C81	212	C91	212	C101	211	C111	212	C121	212	C131	212
C72	212	C82	209	C92	212	C102	212	C112	212	C122	212	C132	212
C73	212	C83	209	C93	212	C103	163	C113	212	C123	212	C133	212
C74	212	C84	212	C94	212	C104	212	C114	212	C124	212	C134	212
C75	212	C85	212	C95	212	C105	212	C115	212	C125	212	C135	212
C76	212	C86	212	C96	212	C106	212	C116	212	C126	212	C136	212
C77	212	C87	212	C97	212	C107	212	C117	212	C127	212	C137	208
C78	212	C88	212	C98	212	C108	212	C118	212	C128	212	C138	212
C79	212	C89	211	C99	212	C109	212	C119	212	C129	212	C139	212
C80	212	C90	212	C100	212	C110	212	C120	212	C130	212	C140	211

38. IPU BOARD (A166)

CAPACITOR

SYMBOL NO.	INDEX NO.	SYMBOL NO.	INDEX NO.	SYMBOL NO.	INDEX NO.	SYMBOL NO.	INDEX NO.	SYMBOL NO.	INDEX NO.	SYMBOL NO.	INDEX NO.	SYMBOL NO.	INDEX NO.
C141	212	C151	208	C161	212	C171	208	C181	211	C191	212	C201	212
C142	211	C152	212	C162	212	C172	208	C182	208	C192	212	C202	212
C143	212	C153	212	C163	212	C173	208	C183	211	C193	212	C203	212
C144	208	C154	211	C164	208	C174	211	C184	212	C194	212	C204	212
C145	212	C155	212	C165	208	C175	208	-----	-----	C195	212	C205	212
C146	212	C156	211	C166	208	C176	211	-----	-----	C196	212	C206	212
C147	211	C157	212	C167	211	C177	212	-----	-----	C197	212	C207	212
C148	212	C158	211	C168	208	C178	208	-----	-----	C198	212	C208	212
C149	211	C159	212	C169	211	C179	208	-----	-----	C199	212	C209	211
C150	212	C160	212	C170	212	C180	208	C190	212	C200	212	C210	211

CAPACITOR

SYMBOL NO.	INDEX NO.	SYMBOL NO.	INDEX NO.	SYMBOL NO.	INDEX NO.	SYMBOL NO.	INDEX NO.	SYMBOL NO.	INDEX NO.	SYMBOL NO.	INDEX NO.	SYMBOL NO.	INDEX NO.
C211	211	C221	212	C231	212	C241	211	C251	212	C261	211	C271	212
C212	212	C222	212	C232	212	C242	212	C252	212	C262	211	C272	212
C213	212	C223	212	C233	212	C243	212	C253	212	C263	211	C273	212
C214	212	C224	212	C234	212	C244	212	C254	212	C264	211	C274	212
C215	212	C225	212	C235	212	C245	212	C255	211	C265	211	C275	204
C216	212	C226	212	C236	212	C246	212	C256	211	C266	211	C276	212
C217	212	C227	211	C237	212	C247	212	C257	211	C267	211	C277	212
C218	212	C228	212	C238	211	C248	212	C258	211	C268	212	C278	212
C219	212	C229	212	C239	210	C249	212	C259	211	C269	212	C279	212
C220	212	C230	212	C240	210	C250	212	C260	211	C270	212	C280	212

CAPACITOR

SYMBOL NO.	INDEX NO.
C901	164
C902	164
C903	205

CONNECTOR

SYMBOL NO.	INDEX NO.
CN401	118
CN402	114
CN403	116
CN404	119
CN410	117
CN420	105
CN421	106
CN422	104
CN423	107
CN424	110

SYMBOL NO.	INDEX NO.
CN425	106
CN426	111
CN427	103
CN428	103
CN431	115
CN432	112
CN440	109
CN441	113
CN442	108

DA

SYMBOL NO.	INDEX NO.
DA1	125
DA2	125
DA3	125
DA4	125
DA5	125
DA6	125
DA7	125
DA8	125
DA9	125
DA10	125

SYMBOL NO.	INDEX NO.
DA11	125
DA12	125
DA13	125

DL

SYMBOL NO.	INDEX NO.
DL1	17

FIL

SYMBOL NO.	INDEX NO.
FIL1	160

IC

SYMBOL NO.	INDEX NO.
IC1	143
IC2	148
IC3	3
IC4	3
IC5	18
IC6	13
IC7	148
IC8	2
IC9	11
IC10	3

IC

SYMBOL NO.	INDEX NO.
IC11	4
IC12	143
IC13	143
IC14	148
IC15	143
IC16	143
IC17	152
IC18	144
IC19	144
IC20	144

SYMBOL NO.	INDEX NO.
IC21	148
IC22	12
IC23	143
IC24	142
IC25	1
IC26	1
IC27	1
IC28	148
IC29	143
IC30	148

SYMBOL NO.	INDEX NO.
IC31	148
IC32	148
IC33	143
IC34	9
IC35	143
IC36	10
IC37	214
IC38	143
IC39	143
IC40	11

SYMBOL NO.	INDEX NO.
IC41	3
IC42	213
IC43	213
IC44	11
IC45	11
IC46	3
IC47	3
IC48	14
IC49	5
IC50	145

SYMBOL NO.	INDEX NO.
IC51	146
IC52	153
IC53	7
(SOCKET)	120
IC54	132
IC55	132
IC56	134
IC57	131
IC58	132
IC59	136
IC60	132

SYMBOL NO.	INDEX NO.
IC61	137
-----	-----
IC63	139
IC64	139
IC65	137
IC66	136
IC67	136
IC68	136
IC69	136
IC70	139

SYMBOL NO.	INDEX NO.
IC71	151
IC72	139
IC73	133
IC74	140
IC75	133
IC76	141
IC77	141
IC78	141
-----	-----
IC80	139

38. IPU BOARD (A166)

IC

SYMBOL NO.	INDEX NO.
IC81	150
-----	-----
IC83	131
IC84	130
IC85	131
IC86	134
IC87	133
IC88	133
IC89	138
IC90	128

SYMBOL NO.	INDEX NO.
IC91	130
IC92	130
IC93	150
IC94	129
IC95	147
IC96	15
IC901	149
(IC901)	101

JP

SYMBOL NO.	INDEX NO.
JP1	187
JP2	187
JP4	187
JP5	187
JP6	187
JP7	187
JP8	187
JP9	187

LED

SYMBOL NO.	INDEX NO.
LED1	127
LED5	127

Q

SYMBOL NO.	INDEX NO.
Q1	123
Q2	123
Q3	123
Q4	123
Q5	123
Q6	123
Q7	123
Q8	123
Q9	123
Q10	123

SYMBOL NO.	INDEX NO.
Q11	122
Q12	123
Q13	124

L

SYMBOL NO.	INDEX NO.
L1	167
L2	167
L3	167
L16	165
L17	166
L18	166

RESISTOR

SYMBOL NO.	INDEX NO.
R7	181
R11	181
R13	178
R14	182
R15	172
R16	172
-----	-----
R18	182
R19	172
R20	172

SYMBOL NO.	INDEX NO.
R21	172
R22	172
R23	172
R24	172
R25	172
R26	172
R27	172
R28	172
R29	172
R30	172

SYMBOL NO.	INDEX NO.
R31	172
R32	172
R33	182
R34	182
R35	182
R36	182
R37	182
R38	182
R39	182
R40	182

SYMBOL NO.	INDEX NO.
R41	182
R42	182
R43	182
-----	-----
-----	-----
-----	-----
-----	-----
-----	-----
-----	-----
-----	-----

SYMBOL NO.	INDEX NO.
R51	174
R52	174
R53	174
R54	174
-----	-----
-----	-----
R57	174
R58	174
R59	174
R60	174

SYMBOL NO.	INDEX NO.
R61	174
R62	174
R63	174
R64	174
R65	174
R66	174
R67	174
R68	174
R69	176
R70	169

SYMBOL NO.	INDEX NO.
R71	182
R72	182
R73	182
R74	182
R75	182
R76	182
-----	-----
R78	174
R79	174
R80	174

RESISTOR

SYMBOL NO.	INDEX NO.	SYMBOL NO.	INDEX NO.	SYMBOL NO.	INDEX NO.	SYMBOL NO.	INDEX NO.	SYMBOL NO.	INDEX NO.	SYMBOL NO.	INDEX NO.	SYMBOL NO.	INDEX NO.
R81	174	-----	-----	R121	182	-----	-----	R141	180	R151	181	R161	173
R82	174	-----	-----	R122	182	R132	181	R142	180	R152	175	R162	170
R83	174	-----	-----	R123	182	R133	181	R143	172	R153	174	R163	173
R84	174	-----	-----	-----	-----	-----	-----	R144	172	R154	178	R164	170
R85	174	R115	169	-----	-----	R135	180	R145	178	R155	170	R165	173
R86	172	R116	176	R126	174	R136	180	R146	178	R156	176	R166	170
R87	174	R117	172	R127	174	R137	182	R147	178	R157	170	R167	173
R88	172	R118	178	R128	174	R138	182	R148	178	R158	170	R168	170
R89	174	R119	182	R129	174	R139	180	R149	178	R159	173	R169	173
R90	174	R120	182	R130	174	R140	180	R150	178	R160	170	R170	180

RESISTOR

SYMBOL NO.	INDEX NO.	SYMBOL NO.	INDEX NO.	SYMBOL NO.	INDEX NO.	SYMBOL NO.	INDEX NO.	SYMBOL NO.	INDEX NO.	SYMBOL NO.	INDEX NO.	SYMBOL NO.	INDEX NO.
R171	180	R181	170	R191	184	R201	170	R211	170	R221	192	R231	197
R172	178	R182	184	R192	176	R202	171	R212	180	R222	184	R232	171
R173	178	R183	173	R193	173	R203	197	R213	182	R223	170	R233	179
R174	172	R184	170	R194	176	R204	171	R214	176	R224	180	R234	170
R175	172	R185	173	R195	194	R205	179	R215	170	R225	170	R235	192
R176	172	R186	170	R196	196	R206	170	R216	171	R226	180	R236	184
R177	172	R187	173	R197	170	R207	192	R217	197	R227	182	R237	170
R178	173	R188	170	R198	184	R208	184	R218	171	R228	176	R238	180
R179	170	R189	173	R199	182	R209	170	R219	179	R229	170	R239	170
R180	173	R190	170	R200	176	R210	180	R220	170	R230	171	R240	180

38. IPU BOARD (A166)

RESISTOR

SYMBOL NO.	INDEX NO.
R241	182
R242	179
R243	171
-----	-----
R245	182
R246	171
R247	179
R248	172
R249	172
R250	172

SYMBOL NO.	INDEX NO.
R251	172
R252	193
R253	172
R254	172
R255	179
R256	171
-----	-----
R258	182
R259	171
R260	179

SYMBOL NO.	INDEX NO.
R261	172
R262	172
R263	172
R264	172
R265	193
R266	172
R267	172
R268	179
R269	171
-----	-----

SYMBOL NO.	INDEX NO.
R271	182
R272	171
R273	179
R274	172
R275	172
R276	172
R277	172
R278	193
R279	172
R280	172

SYMBOL NO.	INDEX NO.
R281	180
R282	171
R283	197
R284	180
R285	197
R286	180
R287	197
R288	172
R289	171
R290	172

SYMBOL NO.	INDEX NO.
R291	168
R292	168
R293	168
R294	171
R295	170
R296	184
R297	191
R298	198
R299	182
R300	182

SYMBOL NO.	INDEX NO.
R301	182
R302	182
R303	182
R304	182
R305	183
R306	183
R307	183
R308	183
R309	183
R310	183

RESISTOR

SYMBOL NO.	INDEX NO.
R311	183
R312	183
R313	178
R314	178
R315	178
R316	178
R317	178
R318	178
R319	178
R320	178

SYMBOL NO.	INDEX NO.
R321	171
R322	171
R323	171
R324	171
R325	171
R326	171
R327	171
R328	171
R329	171
R330	171

SYMBOL NO.	INDEX NO.
R331	178
R332	178
R333	178
R334	178
R335	178
R336	178
R337	178
R338	178
R339	171
R340	171

SYMBOL NO.	INDEX NO.
R341	171
R342	171
R343	171
R344	178
R345	178
R346	182
R347	177
R348	178
R349	178
R350	178

SYMBOL NO.	INDEX NO.
R351	178
R352	178
R353	178
R354	178
R355	171
R356	189
R357	189
R358	178
R359	171
R360	199

SYMBOL NO.	INDEX NO.
R361	170
R362	182
R363	177
R364	182
R365	178
R366	177
R367	178
R368	182
R369	177
R370	182

SYMBOL NO.	INDEX NO.
R371	177
R372	182
R373	177
R374	182
R375	177
R376	182
R377	177
R378	190
R379	195
R380	172

RESISTOR

SYMBOL NO.	INDEX NO.
R381	172
R382	172
R383	172
R384	172
R385	172
R386	172
R387	172
R388	172
R389	181
R390	172

SYMBOL NO.	INDEX NO.
R391	172
R392	172
R393	172
R394	172
R395	172
R396	172
R397	172
R398	172
R399	172
R400	172

SYMBOL NO.	INDEX NO.
R401	172
R402	172
R403	172
R404	172
R405	172
R406	181
R407	174
R408	174
R409	174
R410	174

SYMBOL NO.	INDEX NO.
R411	174
R412	174
R413	174
R414	172
R415	172
R416	172
R417	172
R418	172
R419	172
R420	172

SYMBOL NO.	INDEX NO.
R421	172
R422	172
R423	172
R424	172
R425	172
R426	172
R427	172
R428	172
R429	172
R430	172

SYMBOL NO.	INDEX NO.
R431	172
R432	172
R433	172
R434	172
R435	172
R436	172
R437	172
R438	172
R439	172
R440	172

SYMBOL NO.	INDEX NO.
R441	172
R442	172
R443	172
R444	172
R445	172
R446	172
R447	174
R448	174
R449	183
R450	183

RESISTOR

SYMBOL NO.	INDEX NO.
R451	183
R452	183
R453	183
R454	183
R455	183
R456	183
R457	172
R458	172
R459	171
R460	171

SYMBOL NO.	INDEX NO.
R461	171
R462	184
R463	184
R464	184
R465	184
R466	184
R467	184
R468	184
R469	184
R470	184

SYMBOL NO.	INDEX NO.
R471	184
R472	184
R473	184
R474	184
R475	184
R476	184
R477	184
R478	178
R479	183
R480	183

SYMBOL NO.	INDEX NO.
R481	174
R482	174
R483	174
R484	172
R485	172
R486	184
R487	184
R488	184
R489	184
R490	184

SYMBOL NO.	INDEX NO.
R491	184
R492	184
R493	184
R494	184
R495	184
R496	184
R497	184
R498	184
R499	184
R500	184

SYMBOL NO.	INDEX NO.
R501	184
R502	172
R503	178
R504	177
R505	172
R506	158
R507	158
R508	184
R509	184
R510	184

SYMBOL NO.	INDEX NO.
R511	184
R512	184
R513	184
R514	184
R515	184
R516	184
R517	184
R518	184
R519	184
R520	184

38. IPU BOARD (A166)

RESISTOR

SYMBOL NO.	INDEX NO.
R521	184
R522	184
R523	184
R524	171
R525	171
R526	181
R527	188
R528	194
R529	178
R530	172

SYMBOL NO.	INDEX NO.
R531	172
R901	157

SW

SYMBOL NO.	INDEX NO.
SW1	121

TP

SYMBOL NO.	INDEX NO.
TP7	102
TP8	102
TP10	102
TP11	102
TP13	102
TP14	102
TP19	102
TP26	102

VR

SYMBOL NO.	INDEX NO.
VR1	159
VR2	159
VR3	159

XTL

SYMBOL NO.	INDEX NO.
XTL1	154
XTL2	155
XTL3	156

ZD

SYMBOL NO.	INDEX NO.
ZD1	126
ZD2	126

38. IPU BOARD (A166)

Index No.	Part No.	Description	Q ty Per Assembly
*	A187 5090	Scanner IPU Board	1
1	A100 5406	IC - Analog Processing	1
2	A109 5222	IC - RF5C221	1
3	A134 5209	LSI - MSM518222-30JS-1	1
4	A134 5210	IC - D308102	1
5	A166 5078	IC - HD6437034C33F	1
6	1407 4645	MCU HD6437034F20	1
7	A187 5067	IC - Scanner	1
8	1905 0025	UVEPROM 4M X16 120NS	1
9	A166 5071	IC - HG51B206FD	1
10	A166 5072	IC - TC26SC600AF	1
11	A166 5073	IC - IPU MPD65622GK-Y71	1
12	A166 5074	IC - MPD65656GD-020	1
13	A166 5076	IC - MPD65656GD-020	1
14	A166 5077	IC - SH HG62G051R14F	1
15	A166 5150	PLD IPU	1
16	1407 4595	PLD EPM7032LC44-15	1
17	A399 6749	Delay Line - AT-30	1
18	A134 5211	IC - D352101	1
101	1005 0952	Heat Synk	
102	1101 0429	Test Pin	
103	1102 4201	Connector - 2p	
104	1102 4202	Connector - 3p	
105	1102 4203	Ct Header - 4p	
106	1102 4204	Ct Header - 5p	
107	1102 4208	Connector - 9p	
108	1102 4210	Connector - 11p	
109	1102 4211	Ct Header - 12p	
110	1102 4212	Ct Header - 15p	
111	1102 4620	Ct Header - 3p	
112	1102 5003	Fiber Connector - DC1002 - 2p	
113	1102 5007	Ct Header - 14p	

Index No.	Part No.	Description	Q ty Per Assembly
114	1102 5181	Connector - 50p	
115	1102 5718	Optical Fiber Connector	
116	1102 6579	Receptacle Connector	
117	1102 6593	Connector - 9p	
118	1102 7151	Connector - 40p	
119	1102 7152	Plug - PHEC120P-S110	
120	1104 0376	IC Socket - 40p - DICF-40CS-E	
121	1204 2221	Dip Switch - 8p	
122	1400 0382	Transistor - 2SA1037KR	
123	1400 0398	Transistor - 2SC2412K	
124	1400 0646	Transistor - 2SC3377Q	
125	1402 1142	Diode Array - DAN217	
126	1402 1323	Diode - UDZ5.6B	
127	1403 0403	Diode - TLR223	
128	1407 1880	TTLIC - SN74LS04NS	
129	1407 2052	TTLIC - SN74LS74ANS	
130	1407 2142	TTLIC - 74F240SJ	
131	1407 2143	TTLIC - 74F244SJ	
132	1407 2144	TTLIC - 74F245SJ	
133	1407 2187	TTLIC - SN74LS07NS	
134	1407 2218	TTLIC - SN74LS06NS	
135	1407 2231	IC - TD62308AF	
136	1407 2378	TTL - SN74ALS245ANS	
137	1407 2561	TTLIC 74F157ASJ	
138	1407 2816	TTL - SN74ALS374ANS	
139	1407 3008	TTL - SN74ALS244CNS	
140	1407 3197	IC - SN74ALS240ANS	
141	1407 3381	Cmos - IC - TC74HC4066AF	
142	1407 4023	IC - M62353GP	
143	1407 4092	IC - M66253FP	
144	1407 4109	IC - CXD1175AM	
145	1407 4189	IC - Upd42280gu - 60	
146	1407 4347	IC - SYM53CF96-2-100QPF	
147	1407 4415	IC - TC7WU04F	
148	1407 4657	IC - RS5ηF1050	

Index No.	Part No.	Description	Q ty Per Assembly
149	1408 0306	IC - 78012AP	
150	1408 0595	IC - NJM2904M	
151	1408 0611	IC - 3771	
152	1408 1082	IC - M62354FP	
153	1408 1126	IC - BH9590FP-Y	
154	1503 0635	Oscllator - AT-49 17.9Mhz	
155	1503 0636	Oscllator - AT-51 19.6608Mhz	
156	1503 0637	Oscllator - 1341-B1 25Mhz	
157	1600 1381	Resistor - 56 P 5% 2W	
158	1600 1508	Resistor - 15 P 5% 2W	
159	1601 8145	Variable Resistor - 5K P 0.5W	
160	1602 0918	Filter - 270pf - Emi	
161	1604 1818	Capacitor - S891C475M	
162	1604 4392	Condensor - 100ηF 50V	
163	1605 0435	Capacitor - 0.47ηF +80% -20% 16V	
164	1605 0604	Capacitor - 0.1ηF 50V	
165	1607 0280	Inductor - Blm41	
166	1607 0449	Ferrite Core - BLM21B05SPB	
167	1607 0494	IC - LALO4NA220K	
168	1630 1331	Resistor - 330 P 5%B1/4W	
169	1630 2121	Resistor - 120 P 5% 1/8W	
170	1630 3101	Resistor - 100P - 1/10W	
171	1630 3102	Resistor - 1KP 1/10W 5%	
172	1630 3103	Resistor - 10KP 1/10W 5%	
173	1630 3152	Resistor - 1.5kP - 1/10W	
174	1630 3220	Resistor - 22 P 5% 1/10W	
175	1630 3221	Resistor - 220 P 5% 1/10W	
176	1630 3222	Resistor - 2.2KP 1/10W 5%	
177	1630 3223	Resistor - 22kP - 1/10W	
178	1630 3330	Resistor - 33 P 5% 1/10W	
179	1630 3332	Resistor - 3.3KP 1/10W 5%	
180	1630 3470	Resistor - 47P 1/10W 5%	
181	1630 3471	Resistor - 470P - 1/10W	

Index No.	Part No.	Description	Q ty Per Assembly
182	1630 3472	Resistor - 4.7KP 1/10W 5%	
183	1630 3473	Resistor - 47KP 1/10W 5%	
184	1630 3681	Resistor - 680 P 5% 1/10W	
185	1630 3821	Resistor - 820 P 5% 1/10W	
186	1630 4103	Resistor - 10KP 5% 1/16W	
187	1633 0000	Resistor - 0P 1/10W:Jamper CHIP	
188	1633 1002	Resistor - 10K P 1% 1/10W	
189	1633 1202	Resistor - 12K P 1% 1/10W	
190	1633 2402	Resistor - 24K P 1% 1/10W	
191	1633 2701	Resistor - 2.7K P 1% 1/10W	
192	1633 3602	Resistor - 36K P 1% 1/10W	
193	1633 3901	Resistor - 3.9 P 1% 1/10W	
194	1633 4700	Registor - 470 P - 1% - 1/10w	
195	1633 5102	Resistor - 51K P 1% 1/10W	
196	1633 6800	Resistor - 680 P 1% 1/10W	
197	1633 7501	Resistor - 7.5K P 1% 1/10W	
198	1633 8201	Resistob - 8.2k P 1% 1/10w	
199	1633 9102	Resistor - 91K P 1% 1/10W	
200	1640 0101	Capacitor - 100ηF 10V	
201	1640 2470	Capacitor - 47ηF 20% 25V	
202	1642 0470	Capacitor - 47ηF 20% 10V	
203	1642 2101	Capacitor - 100 P 20% 25V	
204	1642 2470	Capacitor - 47ηF 20% 25V	
205	1643 5339	Capacitor - 3.3ηF 20% 50V	
206	1644 0100	Capacitor - 10ηF 20% 10V	
207	1644 2479	Capacitor - 4.7ηF 20% 25V	
208	1660 3101	Capacitor - 100PF 50V	
209	1660 3120	Capacitor - 12PF 5% 50V	
210	1660 3150	Capacitor - 15PF 50V	
211	1660 7103	Capacitor - 10000PF 50V	
212	1660 9104	C - 0.1ηF 25V	
213	1902 0006	IC - SRAM 256KX8 70NS G1	
214	1904 0002	IC - SRAM 64KX8 20NS	

39. PRINTER MAIN BOARD (A166)

CAPACITOR

SYMBOL NO.	INDEX NO.	SYMBOL NO.	INDEX NO.	SYMBOL NO.	INDEX NO.	SYMBOL NO.	INDEX NO.	SYMBOL NO.	INDEX NO.	SYMBOL NO.	INDEX NO.	SYMBOL NO.	INDEX NO.
C201	206	C211	211	C221	168	-----	-----	C241	168	C251	208	C261	168
C202	206	C212	205	C222	168	C232	207	C242	210	C252	169	C262	169
C203	210	C213	205	C223	168	C233	206	C243	168	C253	169	C263	167
C204	210	C214	168	C224	168	C234	212	C244	168	C254	168	C264	168
C205	207	C215	168	C225	168	C235	169	C245	168	C255	168	C265	169
C206	207	C216	168	C226	169	C236	168	C246	209	C256	168	C266	168
C207	166	C217	168	C227	168	C237	205	C247	166	C257	169	C267	169
C208	206	C218	168	C228	168	C238	168	C248	168	C258	168	C268	167
C209	210	C219	168	C229	168	C239	208	C249	168	C259	169	C269	169
C210	211	C220	168	C230	207	C240	168	C250	168	C260	208	C270	169

CAPACITOR

SYMBOL NO.	INDEX NO.	SYMBOL NO.	INDEX NO.	SYMBOL NO.	INDEX NO.	SYMBOL NO.	INDEX NO.	SYMBOL NO.	INDEX NO.	SYMBOL NO.	INDEX NO.	SYMBOL NO.	INDEX NO.
C271	168	C281	168	C291	168	C301	168	C311	168	C321	168	C331	168
C272	169	C282	168	C292	168	C302	168	C312	168	C322	168	C332	166
C273	169	C283	168	C293	168	C303	168	C313	168	C323	168	C333	168
C274	169	C284	167	C294	168	C304	168	C314	168	C324	166	C334	169
C275	168	C285	168	-----	-----	C305	168	C315	170	C325	166	C335	168
C276	168	C286	168	-----	-----	C306	168	C316	170	C326	166	C336	168
C277	168	C287	168	C297	168	C307	168	C317	168	C327	166	C337	168
C278	168	C288	168	C298	169	C308	168	C318	166	C328	166	C338	168
C279	168	C289	168	C299	168	C309	169	C319	168	C329	166	C339	169
C280	168	C290	168	C300	169	C310	169	C320	168	C330	169	C340	169

39. PRINTER MAIN BOARD (A166)

CAPACITOR

SYMBOL NO.	INDEX NO.
C341	169
C342	169
C343	169
C344	169
C345	169
C346	169
C347	168
C348	168
C349	169
C350	168

SYMBOL NO.	INDEX NO.
C351	169
C352	169
C353	166
C354	168
C355	168
C356	168
C357	169
C358	168
C359	166
C360	166

SYMBOL NO.	INDEX NO.
C361	169
C362	169
C363	169
-----	-----
-----	-----
-----	-----
-----	-----
C368	168
C369	168
C370	168

SYMBOL NO.	INDEX NO.
C371	168
C372	168
C373	168
C374	166
C375	166
C376	169
C377	168
C378	168
C379	168
C380	168

SYMBOL NO.	INDEX NO.
C381	168
C382	168
C383	168
C384	196

CONNECTOR

SYMBOL NO.	INDEX NO.
CN201	113
CN202	115
CN203	102
CN204	118
CN205	103
CN206	119
CN207	122
CN208	110
CN209	109
CN210	107

SYMBOL NO.	INDEX NO.
CN211	117
CN212	111
CN213	116
CN214	114
CN215	104
CN216	112
CN217	103
-----	-----
CN219	120
CN220	120

CONNECTOR

SYMBOL NO.	INDEX NO.
CN221	121
CN222	121
-----	-----
CN224	108
CN225	106
CN226	101
CN227	123
CN228	121

DA

SYMBOL NO.	INDEX NO.
DA201	134
DA202	134
DA203	134
DA204	134
DA205	134
DA206	134
DA207	134
DA208	134

DIODE

SYMBOL NO.	INDEX NO.
D201	133
D202	133
D203	131
D204	135
D205	135
D206	133

DPS

SYMBOL NO.	INDEX NO.
DPS201	128

F

SYMBOL NO.	INDEX NO.
F201	124
F201	127

FL

SYMBOL NO.	INDEX NO.
FL201	172
FL202	172
FL203	171
FL204	171
FL205	171
FL206	172
FL207	174
FL208	171
FL209	171
FL210	171

SYMBOL NO.	INDEX NO.
FL211	172
FL212	173
FL213	173
FL214	171
FL215	171
FL216	171
FL217	171
FL218	171
FL219	196
FL221	171

IC

SYMBOL NO.	INDEX NO.
IC201	156
IC202	156
-----	-----
IC204	147
IC205	163
IC206	159
IC207	139
IC208	140
IC209	140
IC210	161

SYMBOL NO.	INDEX NO.
IC211	148
IC212	147
IC213	147
IC214	147
IC215	147
IC216	158
IC217	148
IC218	142
IC219	160
IC220	1

SYMBOL NO.	INDEX NO.
IC221	155
IC222	2
IC223	152
IC224	142
IC225	153
IC226	147
IC227	157
IC228	162
IC229	4
IC230	213

SYMBOL NO.	INDEX NO.
IC231	143
IC232	213
IC233	213
IC234	154
IC235	144
IC236	149
IC237	3
(SOCKET)	126
IC238	5
(SOCKET)	125
IC240	141

SYMBOL NO.	INDEX NO.
IC241	150
IC242	141
IC243	150
IC244	150
IC245	146
IC246	147
IC247	143
IC248	146
IC249	145
IC250	145

SYMBOL NO.	INDEX NO.
IC251	215
IC252	151
IC253	147
IC254	151
IC255	140
IC256	143
IC257	161
IC258	147

JP

SYMBOL NO.	INDEX NO.
JP201	105
JP202	105

LED

SYMBOL NO.	INDEX NO.
LED201	136
LED202	137
LED203	137

OSC

SYMBOL NO.	INDEX NO.
OSC201	165
OSC202	164

PC

SYMBOL NO.	INDEX NO.
PC201	138

Q

SYMBOL NO.	INDEX NO.
Q201	132
Q202	132
Q203	129

RESISTOR

SYMBOL NO.	INDEX NO.
R201	185
R202	182
R203	178
R204	182
R205	193
R206	183
R207	183
R208	193
R209	193
R210	193

SYMBOL NO.	INDEX NO.
R211	193
R212	193
R213	193
R214	193
R215	182
R216	193
R217	193
R218	182
R219	182
R220	182

SYMBOL NO.	INDEX NO.
R221	182
R222	182
R223	182
R224	177
R225	193
R226	198
R227	198
R228	197
R229	197
R230	182

39. PRINTER MAIN BOARD (A166)

RESISTOR

SYMBOL NO.	INDEX NO.	SYMBOL NO.	INDEX NO.	SYMBOL NO.	INDEX NO.	SYMBOL NO.	INDEX NO.	SYMBOL NO.	INDEX NO.	SYMBOL NO.	INDEX NO.	SYMBOL NO.	INDEX NO.
R231	182	R241	176	R251	186	R261	193	R271	183	R281	183	R291	183
R232	194	R242	176	R252	186	R262	193	R272	183	R282	183	R292	183
R233	175	R243	176	R253	186	R263	193	R273	183	R283	183	R293	183
R234	193	R244	183	R254	186	R264	193	R274	183	R284	183	R294	183
R235	182	R245	183	R255	186	R265	189	R275	183	R285	183	R295	183
R236	176	R246	186	-----	-----	R266	193	R276	183	R286	183	R296	183
R237	176	R247	186	R257	192	R267	188	R277	201	R287	183	R297	183
R238	176	R248	186	R258	182	R268	183	R278	193	R288	183	R298	183
R239	176	R249	186	R259	192	R269	183	R279	189	R289	183	R299	183
R240	176	R250	186	R260	193	R270	183	R280	183	R290	183	R300	183

RESISTOR

SYMBOL NO.	INDEX NO.	SYMBOL NO.	INDEX NO.	SYMBOL NO.	INDEX NO.	SYMBOL NO.	INDEX NO.	SYMBOL NO.	INDEX NO.	SYMBOL NO.	INDEX NO.	SYMBOL NO.	INDEX NO.
R301	183	R311	183	-----	-----	R331	193	R341	183	R351	183	R361	183
R302	183	R312	183	-----	-----	R332	193	R342	183	R352	183	R362	183
R303	183	R313	183	-----	-----	R333	193	R343	183	R353	183	R363	183
R304	183	R314	187	-----	-----	R334	193	R344	183	R354	183	R364	183
R305	183	R315	177	R325	191	R335	201	R345	186	R355	183	R365	193
R306	183	R316	186	R326	191	R336	189	R346	186	R356	183	R366	183
R307	183	-----	-----	-----	-----	R337	183	R347	183	R357	183	R367	183
R308	183	-----	-----	R328	191	R338	183	R348	183	R358	183	R368	183
R309	183	-----	-----	R329	193	R339	183	R349	183	R359	183	R369	183
R310	183	-----	-----	R330	193	R340	183	R350	183	R360	183	R370	183

RESISTOR

SYMBOL NO.	INDEX NO.
R371	183
R372	193
R373	193
R374	193
R375	193
R376	193
R377	183
R378	183
R379	183
R380	183

SYMBOL NO.	INDEX NO.
R381	196
R382	193
R383	183
R384	196
R385	193
R386	193
R387	186
R388	186
R389	186
R390	183

SYMBOL NO.	INDEX NO.
R391	192
R392	192
R393	183
R394	183
R395	183
R396	183
R397	183
R398	183
R399	183
R400	183

SYMBOL NO.	INDEX NO.
R401	186
R402	183
R403	186
R404	186
R405	183
R406	186
R407	186
R408	183
R409	183
R410	192

SYMBOL NO.	INDEX NO.
R411	186
R412	183
R413	186
R414	186
R415	180
R416	189
R417	183
R418	183
R419	183
R420	183

SYMBOL NO.	INDEX NO.
R421	183
R422	183
R423	183
R424	183
R425	183
R426	183
R427	193
R428	186
R429	193
R430	189

SYMBOL NO.	INDEX NO.
R431	186
R432	186
R433	186
R434	186
-----	-----
R436	183
-----	-----
-----	-----
R439	187
R440	182

RESISTOR

SYMBOL NO.	INDEX NO.
R441	193
R442	193
R443	202
R444	198
R445	181
R446	183
R447	183
R448	184
R449	184
R450	183

SYMBOL NO.	INDEX NO.
R451	182
R452	193
R453	182
R454	182
R455	193
R456	198
R457	190
R458	198
R459	190
R460	182

SYMBOL NO.	INDEX NO.
R461	198
R462	198
R463	195
R464	182
R465	183
R466	204
R467	198
R468	193
R469	179
R470	193

SYMBOL NO.	INDEX NO.
R471	182
R472	182
R473	193
R474	193
R475	182
R476	187
R477	177
R478	182
R479	182
R480	183

SYMBOL NO.	INDEX NO.
R481	183
R482	183
R483	183
R484	183
R485	183
R486	183
R487	183
R488	183
R489	183
R490	183

SYMBOL NO.	INDEX NO.
R491	183
R492	183
R493	183
R494	189
R495	189
R496	189
R497	189
R498	189
R499	189
R500	189

SYMBOL NO.	INDEX NO.
R501	182
R502	182
R503	193
R504	182
R505	182
R506	189
R507	182
R508	182
R509	189
R510	199

39. PRINTER MAIN BOARD (A166)

Index No.	Part No.	Description	Q ty Per Assembly
*	A187 5362	Printer Main Control Board	1
1	A166 5077	IC - SH HG62G051R14F	1
2	A166 5359	IC - PRINTER 1	1
3	A166 5356	IC - PRINTER 3	1
4	A166 5355	IC - 5GU040-013	1
5	A187 5441	IC - PRINTER 2	1
101	1102 0903	Connector - 4p	
102	1102 0905	Connector - 5p	
103	1102 0911	Connector - 8p	
104	1102 0917	Pin Housing - 11p	
105	1102 2184	Connector - FCC-2A - Mep	
106	1102 4202	Connector - 3p	
107	1102 4203	Ct Header - 4p	
108	1102 4204	Ct Header - 5p	
109	1102 4205	Ct Header- 6p	
110	1102 4207	Connector - 8p	
111	1102 4208	Connector - 9p	
112	1102 4210	Connector - 11p	

Index No.	Part No.	Description	Q ty Per Assembly
113	1102 4522	Connector - 20p	
114	1102 4628	Connector - 11p	
115	1102 4635	Connector - 6p	
116	1102 4640	Connector - 11p	
117	1102 4645	Ct Connector - 4p	
118	1102 4652	Connector - 11p	
119	1102 5306	Connector - 7p	
120	1102 5375	Connector - 50p	
121	1102 5718	Optical Fiber Connector	
122	1102 6597	Connector - 13p	
123	1103 0428	Connector - 20p	
124	1104 0307	Fuse Holder	
125	1104 0376	IC Socket - 40p - DICF-40CS-E	
126	1104 0589	Dip Socket : 32p	
127	1107 0745	Fuse - 1A 250V	
128	1204 1324	Dip Switch	
129	1401 0296	Transistor - 2SA1162Y	
130	1401 0694	Zener Diode - RD6.8FB	
131	1401 0696	Diode - VO6C	
132	1401 1034	IC - 2SK366GR	
133	1402 0477	Silicon Diode - 1SS187	
134	1402 1008	IC - HN2D01F	
135	1402 1270	Diode - EC11FS2	
136	1403 0416	LED - Red - TLR123	
137	1403 0499	LED - Yellow	
138	1403 0723	Photocoupler - Opic - PC900V	
139	1407 1596	TTLIC - SN74LS14NS	
140	1407 1597	TTLIC - SN74LS10NS	
141	1407 1600	TTLIC - SN74LS244NS	
142	1407 1878	IC - TC4053BF	
143	1407 1880	TTLIC - SN74LS04NS	
144	1407 2081	TTLIC - SN74LS08NS	
145	1407 2143	TTLIC - 74F244SJ	
146	1407 2144	TTLIC - 74F245SJ	
147	1407 2187	TTLIC - SN74LS07NS	

Index No.	Part No.	Description	Q ty Per Assembly
148	1407 2231	IC - TD62308AF	
149	1407 2247	TTL - SN74LS164NS	
150	1407 2378	TTL - SN74ALS245ANS	
151	1407 2561	TTLIC 74F157ASJ	
152	1407 4137	IC - MM1035XF	
153	1407 4189	IC - Upd42280gu - 60	
154	1407 4347	IC - SYM53CF96-2-100QPF	
155	1407 4536	IC - ICS1574	
156	1407 4554	IC - SN74HC02NS	
157	1407 4599	IC - MB89255AH-PF-G-BND	
158	1408 0595	IC - NJM2904M	
159	1408 0759	Opeamp - NJM3403AM	
160	1408 0875	Transistor-array - TD62382AF	
161	1408 0920	Opeamp - NJM2902E	
162	1408 1082	IC - M62354FP	
163	1408 1163	Regurator - 20v	
164	1503 0637	Oscllator - 1341-B1 25Mhz	
165	1503 0700	Oscllator - HC-49/U-S 19.90656Mhz	
166	1605 0192	Capacitor - 470PF 50V	
167	1605 0407	Condensor - 1000pf 20% 50V	
168	1605 0408	Condensor - 0.01ηF 20% 50V	
169	1605 0636	Capacitor - 0.1ηF	
170	1605 0684	Capacitor - 16PF	
171	1607 0477	Coil - BLM21A121SPB	
172	1607 0815	Blm41p600spb	
173	1607 0819	Nfa81r00c221	
174	1607 0820	Nfa81r10c223	
175	1630 1101	Resistor - 100 P 1/4W 5%	
176	1630 1151	Resistor - 150 P 5% 1/4W	
177	1630 2121	Resistor - 120 P 5% 1/8W	
178	1630 2271	Resistor - 270P - 1/8W	
179	1630 2471	Resistor - 470P 1/8W 5%	
180	1630 3100	Resistor - 10 P 5% 1/10W	
181	1630 3101	Resistor - 100P - 1/10W	

Index No.	Part No.	Description	Q ty Per Assembly
182	1630 3102	Resistor - 1KP 1/10W 5%	
183	1630 3103	Resistor - 10KP 1/10W 5%	
184	1630 3104	Resistor - 100K P 1/10W 5%	
185	1630 3123	Resistor - 12K P 5% 1/10W	
186	1630 3220	Resistor - 22 P 5% 1/10W	
187	1630 3222	Resistor - 2.2KP 1/10W 5%	
188	1630 3273	Resistor - 27kP - 1/10W	
189	1630 3330	Resistor - 33 P 5% 1/10W	
190	1630 3333	Resistor - 33K P 5% 1/10W	
191	1630 3391	Resistor - 390P 1/10W 5%	
192	1630 3471	Resistor - 470P - 1/10W	
193	1630 3472	Resistor - 4.7KP 1/10W 5%	
194	1630 3473	Resistor - 47KP 1/10W 5%	
195	1630 3512	Resistor - 5.10kP - 1/10W	
196	1633 0000	Resistor - 0P 1/10W:Jamper CHIP	
197	1633 1001	Resistor - 1K P 1% 1/10W	
198	1633 1002	Resistor - 10K P 1% 1/10W	
199	1633 1003	Resistor - 100K P 1% 1/10W	
200	1633 1403	Resistor - 140K P 1% 1/10W	
201	1633 1500	Resistor - 150 P 1% 1/10W	
202	1633 2002	Resistor - 20K P 1% 1/10W	
203	1633 5231	Resistor - 5.23K P 1% 1/10W	
204	1633 8062	Resistor - 80.6K P 1% 1/10W	
205	1640 5100	Capacitor - 10ηF 20% 50V	
206	1640 5101	Capacitor - 100ηF 20% 50V	
207	1640 5109	Capacitor - 1ηF - 20% - 50V	
208	1640 5220	Capacitor - 22ηF 20% 50V	
209	1640 5229	Capacitor - 2.2ηF 20% 50V	
210	1640 5470	Capacitor - 47ηF 20% 50V	
211	1640 5478	Capacitor - 0.47ηF 20% 50V	
212	1640 5479	Capacitor - 4.7ηF 20% 50V	
213	1902 0006	IC - SRAM 256KX8 70NS G1	
215	1407 4150	EEPROM NM93C46M8	

40. MEMORY BOARD (A166)

BAT

SYMBOL NO.	INDEX NO.
BAT1	102

CAPACITOR

SYMBOL NO.	INDEX NO.
C1	119
C2	112
C3	111
C4	111
C5	110
C6	109

CONNECTOR

SYMBOL NO.	INDEX NO.
CN381	101

DA

SYMBOL NO.	INDEX NO.
DA1	107
DA2	105

IC

SYMBOL NO.	INDEX NO.
IC1	108
IC2	120

JP

SYMBOL NO.	INDEX NO.
JP1	118
JP2	118
JP3	118

Q

SYMBOL NO.	INDEX NO.
Q1	103
Q2	104
Q3	103

RESISTOR

SYMBOL NO.	INDEX NO.
R1	115
R2	113
R3	117
R4	115
R5	113
R6	114
R7	117
R8	116
R9	113
R10	113

SYMBOL NO.	INDEX NO.
R11	113

ZD

SYMBOL NO.	INDEX NO.
ZD1	106

40. MEMORY BOARD (A166)

Index No.	Part No.	Description	Q ty Per Assembly
*	A166 5253	Memory Board	1

Index No.	Part No.	Description	Q ty Per Assembly
101	1102 7195	Connector - 50p	
102	1206 0041	Lithium Cell - Br2330	
103	1401 0296	Transistor - 2SA1162Y	
104	1401 0298	Transistor - 2SC2712Y	
105	1401 0826	D 1SS181 85V 100MA	
106	1402 0682	Zener Diode - RD3.6M	
107	1402 1043	Diode - MA713	
108	1407 4542	IC - RTC-6583	
109	1605 0410	Capacitor - 4700PF 20% 50V	
110	1605 0632	Capacitor - 0.1[F +80 -20%	
111	1605 0636	Capacitor - 0.1ηF	
112	1606 1135	Capacitor - 470PF 50V	
113	1630 3103	Resistor - 10KP 1/10W 5%	
114	1630 3112	Resistor - 1.1K P 5% 1/10W	
115	1630 3152	Resistor - 1.5kP - 1/10W	
116	1630 3202	Resistor - 2KP -1/10W	
117	1630 3472	Resistor - 4.7KP 1/10W 5%	
118	1633 0000	Resistor - 0P 1/10W:Jamper CHIP	
119	1644 1100	Capacitor - 10ηF 20% 16V	
120	1902 0013	IC - SRAM 256KX8 100NS G4	

41. I/O CONTROL BOARD 1 (A166)

CAPACITOR

SYMBOL NO.	INDEX NO.
C251	142
C252	142
C253	142
C254	142
C255	142
C256	128
C257	128
C258	128
C259	126
C260	128

SYMBOL NO.	INDEX NO.
C261	127
C262	128
C263	128
C264	126
C265	126
C266	128
C267	126
C268	128
C269	126
C270	128

SYMBOL NO.	INDEX NO.
C271	126
C272	128
C273	126
C274	126
C275	127
C276	127
C277	127
C278	127
C279	127
C280	127

SYMBOL NO.	INDEX NO.
C281	125
C282	125

CHS

SYMBOL NO.	INDEX NO.
CHS251	3

CONNECTOR

SYMBOL NO.	INDEX NO.
CN251	113
CN252	110
CN253	107
CN254	103
CN255	102
CN256	114
CN257	112
CN258	108
CN259	111
CN260	109

SYMBOL NO.	INDEX NO.
CN261	105
CN262	106
CN265	104

DIODE

SYMBOL NO.	INDEX NO.
D251	115

DA

SYMBOL NO.	INDEX NO.
DA251	117

FIB

SYMBOL NO.	INDEX NO.
FIB251	129
FIB252	129
FIB253	129

IC

SYMBOL NO.	INDEX NO.
IC251	2
IC252	116
IC253	120
IC254	119
IC255	119
IC256	122
IC257	122
IC258	118
IC259	120
IC260	118

SYMBOL NO.	INDEX NO.
IC261	118
IC262	121
IC263	123

NF

SYMBOL NO.	INDEX NO.
NF251	124

RESISTOR

SYMBOL NO.	INDEX NO.
-----	-----
-----	-----
R253	136
R254	130
R255	136
R256	130
R257	136
R258	130
R259	136
R260	130

RESISTOR

SYMBOL NO.	INDEX NO.
R261	136
R262	130
R263	136
R264	136
R265	130
R266	136
R267	130
R268	136
R269	130
R270	136

SYMBOL NO.	INDEX NO.
R271	136
R272	136
R273	131
R274	136
R275	131
R276	136
R277	131
R278	136
R279	136
R280	136

SYMBOL NO.	INDEX NO.
R291	140
R292	139
R293	141
R294	138
R295	134
R296	131
R297	130
R298	137
R299	133
R300	132

SYMBOL NO.	INDEX NO.
R301	135
R302	135

TP

SYMBOL NO.	INDEX NO.
TP251	101
TP252	101
TP253	101
TP254	101
TP255	101
TP256	101
TP257	101
TP258	101
TP259	101
TP260	101

SYMBOL NO.	INDEX NO.
TP261	101
TP262	101
TP263	101

41. I/O CONTROL BOARD 1 (A166)

Index No.	Part No.	Description	Q ty Per Assembly
*	A187 5368	I/O Control Board 1	1
1	A028 3146	Paper Feed Guide Spacer	1
2	AW14 0005	Humidity Sensor - CHS-YS-1	1
3	AW14 0006	Thermo Sensor - LM35DZ	1
4	A187 5921	Bracket - I/O Control Board 1	1
101	1101 0328	Connector Pin Contact	
102	1102 0907	Connector - 6p	
103	1102 0911	Connector - 8p	
104	1102 1567	Connector - 2p	
105	1102 4203	Ct Header - 4p	
106	1102 4205	Ct Header- 6p	
107	1102 4207	Connector - 8p	
108	1102 4208	Connector - 9p	
109	1102 4210	Connector - 11p	
110	1102 4497	Connector - 13p	
111	1102 4621	Ct Header - 4p	
112	1102 4623	Ct Connector - 6p	
113	1102 4628	Connector - 11p	
114	1102 6592	Connector - 8p	
115	1401 0611	Diode - IS1588	
116	1401 0986	Transistor - UPA1552H	
117	1402 0492	Diode-array - DICA20	
118	1407 2231	IC - TD62308AF	
119	1407 2566	TTLIC - SN74LS166ANS	
120	1407 3257	Cmosic - TC74HC14AF	
121	1407 3522	IC - TD62304AF	
122	1407 4147	IC - M66320FP	
123	1408 0595	IC - NJM2904M	
124	1602 7032	Filter - Emi - 2200pf	
125	1605 0283	Capacitor - 1ηF	
126	1605 0636	Capacitor - 0.1ηF	
127	1606 1139	Capacitor - 0.01ηF 20%	
128	1606 1537	Capacitor - 1000PF 50V	
129	1607 0814	Blm41p800spb	
130	1630 2100	Resistor - 10P 1/8W 5%	
131	1630 2101	Resistor - 100P 1/8W	
132	1630 2102	Resistor - 1K P 1/8W 5%	
133	1630 2103	Resistor - 10K P 1/8W	
134	1630 2104	Resistor - 100K P 1/8W 5%	
135	1630 2241	Resistor - 240P	
136	1630 2472	Resistor - 4.7K P 1/8W 5%	
137	1630 2473	Resistor - 47KP 1/8W 5%	
138	1632 1003	Resistor - 100K P 1% 1/8W	
139	1632 1203	Resistor - 120K P 1% 1/8W	
140	1632 1503	Resistor - 150K P 1% 1/8W	
141	1632 3002	Resistor - 30K P 1% 1/8W	
142	1640 5101	Capacitor - 100ηF 20% 50V	
143	0443 0060B	Hexagon Tapping Screw - M3x6	

42. I/O CONTROL BOARD 2 (A166)

CAPACITOR

SYMBOL NO.	INDEX NO.
C301	139
C302	139
C303	139
C304	139
C305	127
C306	127
C307	127
C308	128
C309	125
C310	128

SYMBOL NO.	INDEX NO.
C311	128
C312	128
C313	128
C314	128
C315	125
C316	128
C317	127
C318	128
C319	125
C320	128

SYMBOL NO.	INDEX NO.
C321	124
C322	126
C323	127
C324	127
C325	126
C326	124
C327	125
C328	125
C329	125
C330	126

SYMBOL NO.	INDEX NO.
C331	125

CONNECTOR

SYMBOL NO.	INDEX NO.
CN301	110
CN302	106
CN303	104
CN304	109
CN305	108
CN306	111
CN307	102
CN308	105
CN309	103
CN310	106

SYMBOL NO.	INDEX NO.
CN311	112
CN312	107

DIODE

SYMBOL NO.	INDEX NO.
D301	113

FIB

SYMBOL NO.	INDEX NO.
FIB301	129
FIB302	129

HB

SYMBOL NO.	INDEX NO.
HB301	122

IC

SYMBOL NO.	INDEX NO.
IC301	118
IC302	114
IC303	117
IC304	119
IC305	115
IC306	116
IC307	115
IC308	116

NF

SYMBOL NO.	INDEX NO.
NF301	123
NF302	123

RESISTOR

SYMBOL NO.	INDEX NO.
R301	120
R302	120
R303	121
-----	-----
-----	-----
R306	133
R307	132
R308	135
R309	130
R310	135

SYMBOL NO.	INDEX NO.
R311	130
R312	135
R313	130
R314	135
R315	130
R316	135
R317	130
R318	130
R319	135
R320	135

SYMBOL NO.	INDEX NO.
R321	130
R322	135
R323	130
R324	135
R325	130
R326	135
R327	131
R328	135
R329	131
R330	135

RESISTOR

SYMBOL NO.	INDEX NO.
R331	135
R332	135
R333	131
R334	135
R335	135
R336	130
R337	136
R338	134
R339	138
R340	136

SYMBOL NO.	INDEX NO.
R341	134
R342	137
R343	130
R344	135
R345	130
R346	135

TP

SYMBOL NO.	INDEX NO.
TP301	101
TP302	101
TP303	101
TP304	101
TP305	101
TP306	101
TP307	101
TP308	101
TP309	101
TP310	101

SYMBOL NO.	INDEX NO.
TP311	101
TP312	101
TP313	101
TP314	101

42. I/O CONTROL BOARD 2 (A166)

Index No.	Part No.	Description	Q ty Per Assembly
*	A187 5369	I/O Control Board 2	1
1	A028 3146	Paper Feed Guide Spacer	1
2	A069 5168	Heat Sink - Motor Board	1
3	A166 5931	Bracket - I/O Control Board 2	1
101	1101 0328	Connector Pin Contact	
102	1102 0907	Connector - 6p	
103	1102 0909	Connector - 7p	
104	1102 0911	Connector - 8p	
105	1102 4201	Connector - 2p	
106	1102 4205	Ct Header- 6p	
107	1102 4206	Connector - 7p	
108	1102 4208	Connector - 9p	
109	1102 4209	Ct Header - 10p	
110	1102 4210	Connector - 11p	
111	1102 6594	Connector - 10p	
112	1103 1768	Connector - 2p	
113	1401 0611	Diode - IS1588	
114	1407 2231	IC - TD62308AF	
115	1407 2566	TTLIC - SN74LS166ANS	
116	1407 3257	Cmosic - TC74HC14AF	
117	1407 3522	IC - TD62304AF	
118	1407 3708	IC - SLA7026M	
119	1407 4147	IC - M66320FP	
120	1601 5267	Resistor - 0.68 P 5% 3W	
121	1601 5298	Resistor - 130 P 5% 3W	
122	1602 0934	RC Array - CR01-R	
123	1602 7032	Filter - Emi - 2200pf	
124	1605 0249	Capacitor - 2200pf 10%	
125	1605 0636	Capacitor - 0.1ηF	
126	1606 1135	Capacitor - 470PF 50V	
127	1606 1139	Capacitor - 0.01ηF 20%	
128	1606 1537	Capacitor - 1000PF 50V	
129	1607 0814	Blm41p800spb	
130	1630 2100	Resistor - 10P 1/8W 5%	
131	1630 2101	Resistor - 100P 1/8W	
132	1630 2102	Resistor - 1K P 1/8W 5%	
133	1630 2103	Resistor - 10K P 1/8W	
134	1630 2242	Resistor - 2.4KP 1/8W	
135	1630 2472	Resistor - 4.7K P 1/8W 5%	
136	1630 2473	Resistor - 47KP 1/8W 5%	
137	1632 1100	Resistor - 110 P 1% 1/8W	
138	1632 3000	Resistor - 300P 1% 1/8W	
139	1640 5101	Capacitor - 100ηF 20% 50V	

43. DECAL AND DOCUMENT (A166)

1

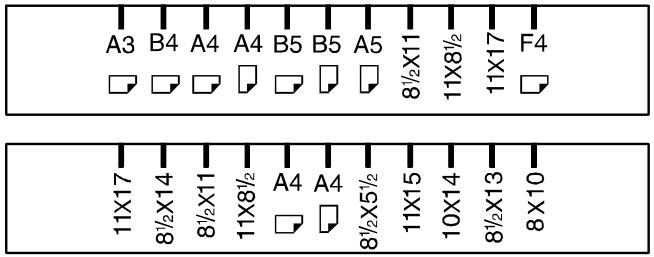

3



4

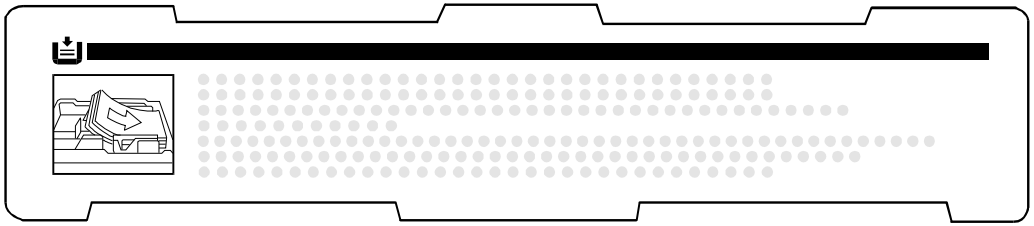

5

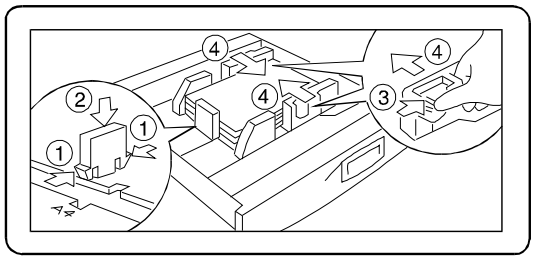

6

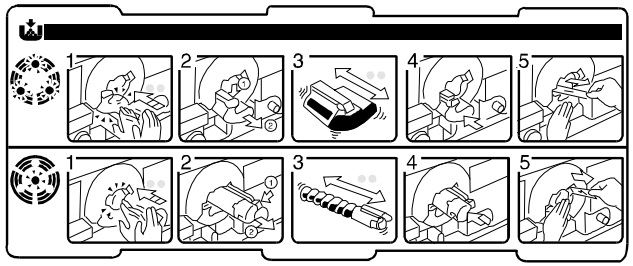

7

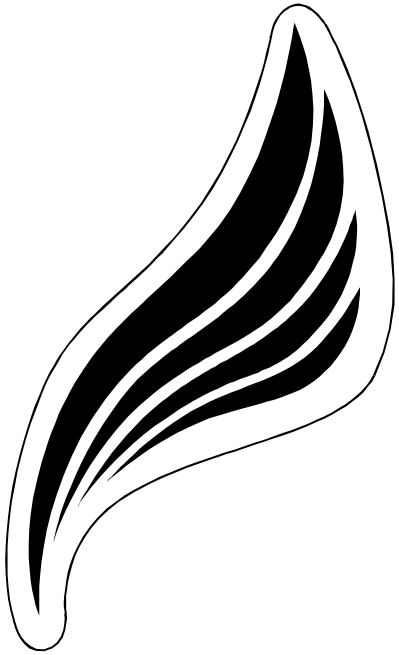

8

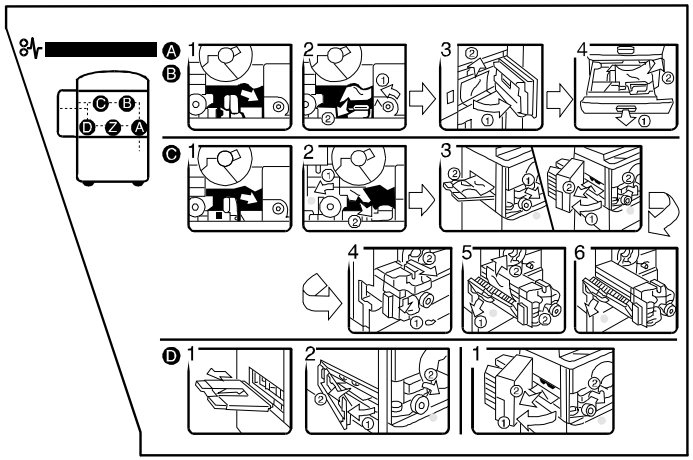

43. DECAL AND DOCUMENT (A166)

9



10

Copving to be Prohibited

Do not make copies of anyting which is prohibited from copying by law. The following items are normally prohibited from copying by national law.Other items may be prohibited by local law.

- Money
- Stamps
- Bonds
- Stocks
- Bank drafts
- Checks
- Passports
- Driver's licenses

>PS<

11



12

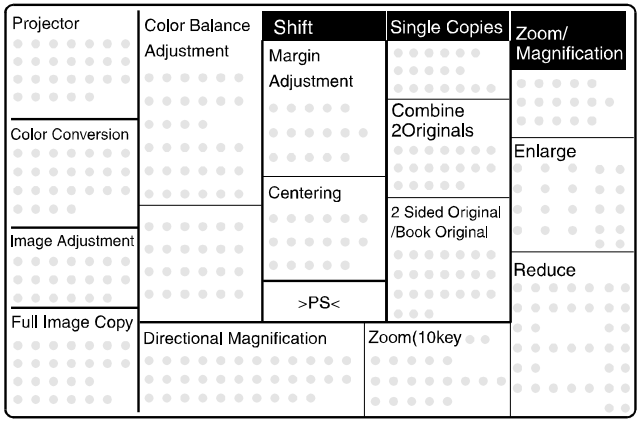

14

WARNING

- Do not incinerate waste toner.
- Toner dust mey cause flashback when exposed to open flame.

15



16

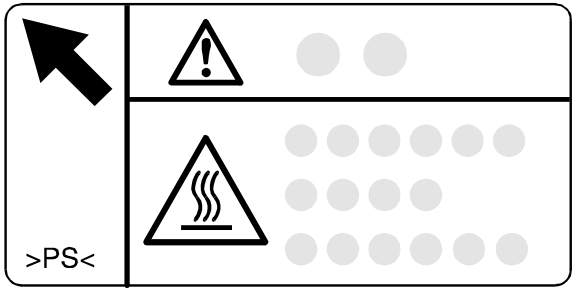

43. DECAL AND DOCUMENT (A166)

17

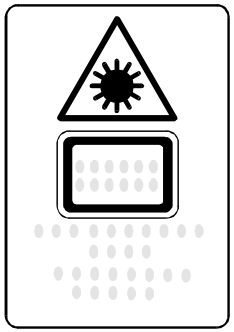

18

CAUTION

INVISIBLE LASER RADIATION
WHEN OPEN AVOID
EXPOSURE TO BEAM

VORSICKT

UNSICHTBARE LASERSTRAHLUNG.
WENN ABDECKUNG GEOFFNET.
NICHT DEM STRAHL AUSSETZEN

19

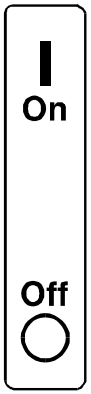

20

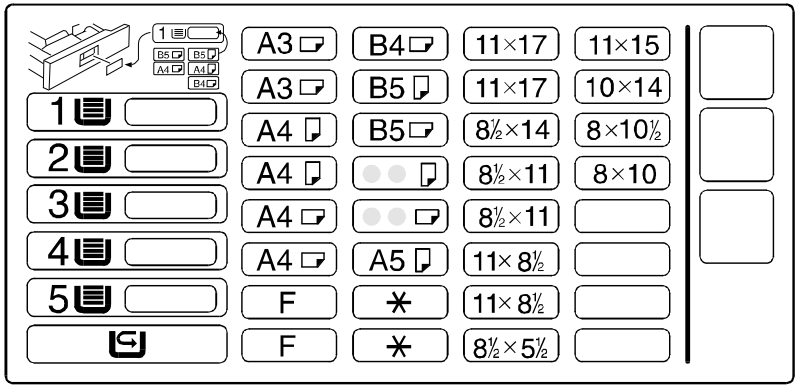

21

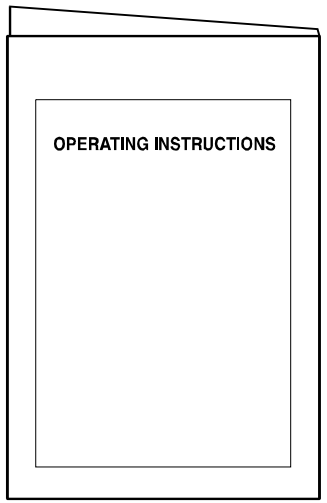

- -



43. DECAL AND DOCUMENT (A166)

Index No.	Part No.	Description	Q ty Per Assembly
1	A153 2995	Decal Paper Size - LT/DLT	1
1	A153 2996	Decal Paper Size - A4/A3	1
3	A153 6409	Decal - Keytop Cover (NRG)	1
3	C225 2866	Decal - Key Top Cover (REX)	1
3	C225 2867	Decal - Cover - Panel (NSA)	1
4	A157 2758	Decal - Paper Setting	1
5	A157 2805	Decal - Paper Set	1
6	A166 1372	Decal - Adding Toner	1
7	A166 1376	Color Decal	1
8	A166 1374	Decal - Operation	1
9	A166 1378	Decal - Emblem (RIC)	1
9	A166 6730	Emblem (SVN)	1
10	A166 1837	Decal - Caution	1
11	A166 3209	Decal - Development	1
12	A187 1528	Operation Decal (LT)	1
12	A187 1529	Operation Decal (A4)	1
14	AA00 0059	Caution Decal - English	1
15	AA00 0178	Decal - Thermofuse	2
16	AA00 0195	Decal - High Temperature	1
17	AA00 0600	Decal - LD	1
18	AA00 0602	Decal LD Cover	1
19	AA00 1373	Decal - Main Switch	1
20	AA00 2209	Decal - Paper Size	1
21	A187 8607	Operating Instructions - English LT (RIC)	1
21	A187 8650	Operating Instructions - English LT (SVN)	1
21	A187 8690	Operating Instructions - English A4 (NRG)	1
21	A187 8697	Operating Instructions - English LT (NRG)	1
22	A166 1369	Decal - Toner Cartridge	1

Index No.	Part No.	Description	Q ty Per Assembly

44. SPECIAL TOOLS (A166)

, ’2’, ,	2	3	4	5
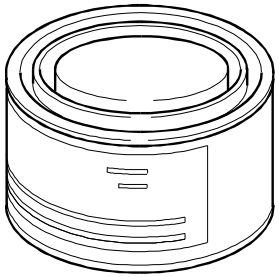	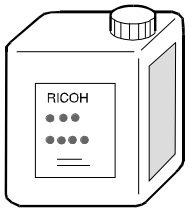	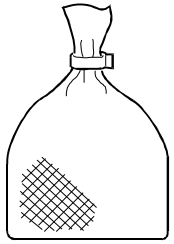	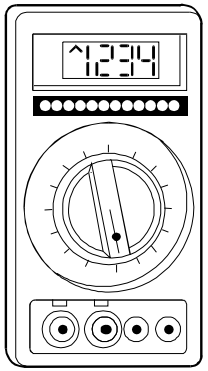	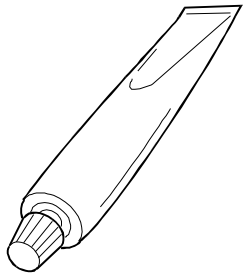
6	**8**	**9**	**, +**	**, -**
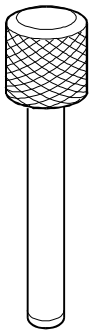	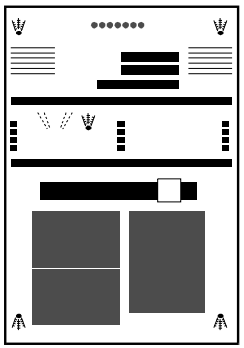	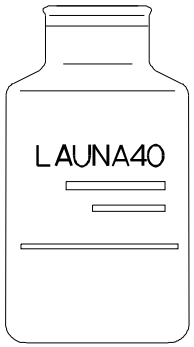	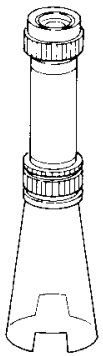	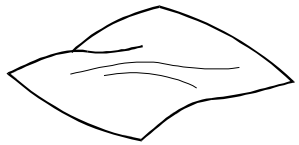

44. SPECIAL TOOLS (A166)

Index No.	Part No.	Description	Q ty Per Assembly
1	5203 9501	Silicone Grease G-501	1
2	5420 9550	Silicone Oil	1
3	5442 9101	Setting Powder	1
4	5420 9507	Digital Multimeter - Beckman	1
5	A008 9502	Silicone Grease G40M	1
6	A006 9104	Adjusting Scanner Pin (4pcs/set)	1
7	A028 9300	Grease Barrierta JFE 55/2	1
8	A092 9503	C4 Test Chart (3pcs/set)	1
9	5442 9103	Lawna Oil 40	1
10	C401 9503	20X Magnification Scope	1
11	5447 9078	Heat Resisting Grease - MT-78	1
12	A012 9111	Optical Cloth	1

Index No.	Part No.	Description	Q ty Per Assembly

PARTS INDEX

PM Parts Index

Section Name	Part No.	Description in Service Manual	Description in Parts Catalog	Q ty Per Assembly	Page and Index No
OPTICS SECTION 1 (A166)	AX52 0029	Halogen Lamp	Exposure Lamp - 75V 160W	1	17- 19
OPTICS SECTION 4 (A166)	A166 1674	Dust Filter	Dust Filter 80	1	23- 11
PAPER FEEED SECTION 1 (A166)	A134 2674	Torque Limiter	Torque Limitter - 400fg	1	29- 31
	AF03 0024	By-pass Pick-up Roller	Pick-up Roller	1	29- 18
	AF03 1025	By-pass Feed Roller	Feed Roller	1	29- 17
	AF03 2025	By-pass Separation Roller	Separation Roller	1	29- 30
PAPER FEEED SECTION 2 (A166)	AF03 1027	Feed Roller	Paper Feed Roller	4	31- 8
PAPER TRAY SECTION (A166)	AF01 3004	Tray Friction Pad	Bottom Plate Pad	1	35- 13
TRANSFER BELT UNIT 1 (A166)	A166 9515	Belt Transfer Corona Wire	Main Corona Wire (10pcs/set)	1	41- 18
TRANSFER BELT UNIT 2 (A166)	A166 6050	Transfer Belt	Transfer Belt	1	43- 17
DRUM SECTION (A166)	A049 2272	Grid	Charge Grid - 85T	1	45- 17
	A166 9510	Drum	OPC Drum	1	45- 30
TRANSFER BELT UNIT 1 (A166)	A166 9516	Charge Corona Wire	Charge Corona Wire (10pcs/set)	1	45- 23
DRUM CLEANING (A166)	A166 3576	Cleaning Blade	Drum Cleaning Blade	1	47- 1
	A166 3596	Lubricant Bar	Lubricant Plate	1	47- 20
	AD04 2031	Cleaning Brush	Cleaning Brush Roller	1	47- 10
TRANSFER BELT CLEANING (A166)	A166 6331	Cleaning Blade	Cleaning Blade - Transfer Belt	1	49- 14
TRANSPORT UNIT (A166)	A166 9514	Paper Transfer Corona Wire	Transfer Corona Wire - (10pcs/set)	1	51- 19
FUSING UNIT 1 (A166)	A166 4267	Exit Door Oil Pan Pad Ass y	Oil Cleaning Felt	1	53- 19
FUSING UNIT 2 (A166)	A166 4102	Oil Supply Pad	Oil Supply Pad	1	55- 12
FUSING UNIT 3 (A166)	A166 4261	Left Oil Pan Pad	Cleaning Felt - 1	1	57- 37
	A166 4262	Right Oil Pan Pad	Cleaning Felt - 2	1	57- 38
	A166 4263	Bottom Front Oil Pan Pad	Cleaning Felt - 3	1	57- 45
	A166 4264	Rear Right Oil Pan Pad	Cleaning Felt - 4	3	57- 40
	A166 4265	Rear Left Oil Pan Pad	Cleaning Felt - 5	1	57- 39
	A166 4266	Front Oil Pan Pad	Cleaning Felt - 6	1	57- 46

PM Parts Index

Section Name	Part No.	Description in Service Manual	Description in Parts Catalog	Q ty Per Assembly	Page and Index No
FUSING UNIT 3 (A166)	AE01 0013	Hot Roller	Hot Roller	1	57- 13
	AE02 0057	Pressure Roller	Pressure Roller	1	57- 17
	AE03 0007	Hot Roller Shaft Bearings	Ball Bearing-25x47x12mm	2	57- 11
	AE03 0019	Pressure Roller Shaft Bearings	Ball Bearing - 7x20x32	2	57- 16
	AE04 1003	Pressure Roller Cleaning Blade	Oil Cleaning Blade	1	57- 44
SWEEPER (A166)	A109 6430	Lubricant Bar	Lubricant Bar	1	61- 17
	A166 6431	Lubricant Brush	Lubricant Brush	1	61- 14
ELECTRICAL SECTION 1 (A166)	AA01 0089	Rear Ozone Filter	Ozone Filter	1	67- 7
	AA01 0093	Exhost Ozone Filter	Ozone Filter	1	67- 16
	AA01 2092	Dust Filter (Fusing Unit)	Dust Filter	1	67- 4
	AA01 2098	Dust Filter	Dust Filter	1	67- 17
ELECTRICAL SECTION 3 (A166)	AA01 0092	Front Ozone Filter	Ozone Filter	1	71- 19
ELECTRICAL SECTION 4 (A166)	AA01 0095	Paper Exit Ozone Filter	Ozone Filter	1	73- 9
FRAME SECTION 3 (A166)	AA01 0094	Power Supply Ozone Filter	Ozone Filter	1	79- 13

Parts Index

Part No.	Description	Page and Index No.
A166 1077	Left Stay	79- 6
A166 1078	Right Stay	61- 8
A166 1078	Right Stay	79- 14
A166 1082	Upper Development Rail	79- 5
A166 1083	Sorter Stay	73- 1
A166 1084	DC Drive Stay	79- 4
A166 1091	Lower Transfer Stay	77- 17
A166 1121	Support Plate	65- 10
A166 1124	Thrust Ring	65- 26
A166 1126	Tightner Arm	65- 23
A166 1131	Timing Belt - BS3M549	65- 11
A166 1172	Duct Bracket - Fusing	67- 20
A166 1173	OPC Duct	67- 13
A166 1174	Inner Duct - Charge Unit	67- 6
A166 1175	Outer Duct - Charge Unit	67- 2
A166 1176	Inner Duct - Tranfer	67- 9
A166 1177	Duct Bracket - Transfer	75- 12
A166 1178	Fan Motor Bracket	71- 9
A166 1181	Front Right Duct	71- 18
A166 1182	Power Unit Duct	71- 1
A166 1183	Inner Duct - Fusing	67- 10
A166 1231	Front Cover (RIC)	13- 1
A166 1266	Front Left Cover	13- 7
A166 1271	Front Right Cover	11- 28
A166 1281	Left Cover	13- 13
A166 1291	Right Middle Cover	11- 26
A166 1301	Right Rear Cover	11- 24
A166 1306	Rear Cover Ass y	11- 23
A166 1319	Rivet	11- 20
A166 1326	Inner Cover - Safety Switch	13- 14
A166 1332	Upper Inner Cover	13- 5
A166 1335	Cover - Toner Cartrige Black	13- 26
A166 1339	Bracket - Upper Inner Cover	37- 25
A166 1341	Transport Inner Cover	13- 15
A166 1346	Left Cover Cap	11- 21
A166 1346	Left Cover Cap	13- 10
A166 1349	Cap - DFUnit	13- 3
A166 1353	Front Stopper Bracket	77- 5
A166 1354	Cover Hinge - Front Right	77- 4
A166 1355	Front Right Lower Bracket	77- 11
A166 1356	Front Left Lower Bracket	79- 3
A166 1357	Right Middle Cover Bracket	75- 9
A166 1361	Power Cord Cap	13- 11
A166 1363	Hinge Pin	13- 24
A166 1366	Switch Cover	11- 22
A166 1369	Decal - Toner Cartoridge	13- 28
A166 1369	Decal - Toner Cartridge	105- 22
A166 1372	Decal - Adding Toner	13- 23
A166 1372	Decal - Adding Toner	105- 6
A166 1374	Decal - Operation	13- 25
A166 1374	Decal - Operation	105- 8
A166 1376	Color Decal (RIC)	13- 35
A166 1376	Color Decal	105- 7
A166 1378	Decal - Emblem (RIC)	13- 2
A166 1378	Decal - Emblem (RIC)	105- 9
A166 1379	IC Card Cap	13- 12
A166 1380	Front Cover - System Control	11- 9
A166 1381	Right Cover - System Control	11- 27
A166 1382	Left Cover - System Control	11- 8
A166 1386	IC Card Cap	13- 34
A166 1474	Operation Panel Ass y (LT)	11- 6
A166 1475	Operation Panel Ass y (A4)	11- 6
A166 1525	Key Top Cover	11- 7
A166 1657	Scanner Frame	23- 8
A166 1664	Left Grip	23- 9
A166 1667	Spring Plate	21- 26
A166 1669	Right Grip	23- 25
A166 1671	IPU Board Bracket	21- 24
A166 1672	BRU Board Bracket	21- 22
A166 1674	Dust Filter 80	23- 11

Part No.	Description	Page and Index No.
A166 1677	Right Support Cover	17- 3
A166 1678	Scanner Clamp Bracket	21- 23
A166 1683	Lens Holder	23- 14
A166 1685	Platen Cover Bracket	17- 21
A166 1689	Rear Frame	23- 21
A166 1694	Front Frame	23- 3
A166 1696	Left Scanner Guide	23- 2
A166 1697	Right Scanner Guide	23- 1
A166 1698	Pulley Cover	23- 30
A166 1699	Scanner Rail Stay	21- 25
A166 1715	Motor Bracket	21- 9
A166 1728	1st Scanner Unit	17- 15
A166 1737	1st Mirror	17- 17
A166 1742	2nd Mirror Ass y	17- 12
A166 1752	CCD Drive Board	19- 12
A166 1773	Flat Cable Guide	23- 16
A166 1775	Inner Cover IPU	19- 15
A166 1777	Scanner Motor Control Board	19- 7
A166 1777	Scanner Motor Control Board	81- *
A166 1778	Motor Control Board Bracket	19- 17
A166 1778	Motor Control Board Bracket	81- 2
A166 1786	Fan Motor Bracket	21- 19
A166 1791	Board Bracket	21- 1
A166 1796	Connector Bracket	21- 17
A166 1802	Fan Caseing	21- 5
A166 1812	Left Scale Bracket	17- 8
A166 1826	Scanner Front Cover	11- 13
A166 1827	Scasnner Right Cover	11- 25
A166 1828	Scanner Left Cover	11- 10
A166 1829	Scanner Rear Cover	11- 18
A166 1837	Decal - Caution	11- 17
A166 1837	Decal - Caution	105- 10
A166 1902	Scanner Left Hinge	23- 13
A166 1905	Scanner Right Hinge	23- 24
A166 1910	Rod Holder	17- 2

Part No.	Description	Page and Index No
A166 2055	Optical Housing	25- 24
A166 2062	Shielding Glass	25- 11
A166 2066	Shielding Glass Guide	25- 12
A166 2076	Front Lens Holder	25- 6
A166 2077	Rear Lens Holder	25- 7
A166 2078	Lens - Blt	25- 5
A166 2081	Mirror Ass y	25- 4
A166 2083	Front Mirror Holder	25- 8
A166 2084	Rear Mirror Holder	25- 9
A166 2106	LD Unit Cover	25- 18
A166 2112	Left Harness Bracket	25- 21
A166 2114	Front Harness Bracket	25- 22
A166 2116	Right Harness Bracket	25- 23
A166 2250	Drum Rail	79- 7
A166 2261	Drum Shaft Holder	63- 22
A166 2266	Grounding Wire	63- 20
A166 2271	Receptacle - Chgarge Corona	69- 5
A166 2281	Duct - Charge Corona	67- 5
A166 2296	Drum Joint Shaft	63- 26
A166 2303	Drum Unit Upper Frame	45- 14
A166 2304	Upper Cover - Drum Unit	45- 13
A166 2305	Grid Wire	45- 12
A166 2307	Optical Lower Frame	45- 10
A166 2308	Density Sensor Cover	45- 9
A166 2311	Shielding Plate - Density Sensor	45- 27
A166 2319	Density Sensor Bracket	45- 16
A166 2321	Drum Support Plate	45- 4
A166 2327	Knob Screw	45- 21
A166 2331	Front Fixing Plate	45- 18
A166 2350	Drum Drive Housing	63- 28
A166 2355	Drum Drive Support Plate	63- 14
A166 2361	Tightner Arm	63- 8
A166 2364	Timing Belt - B40S3M318	63- 12
A166 2385	Drive Shaft - Transfer Unit	63- 3
A166 2401	Fly Wheel - 200	63- 24

Part No.	Description	Page and Index No.
A166 2570	Lower Guide Plate	33- 8
A166 2596	Upper Guide Plate	33- 12
A166 2617	Registration Sensor Bracket	33- 17
A166 2629	Drive Unit	33- 13
A166 2641	Paper Feed Shaft Ass y	31- 29
A166 2682	Vertical Transport Guide	27- 3
A166 2690	Spring Plate	27- 8
A166 2694	Hinge Bracket	79- 15
A166 2696	Vertical Transport Cover	27- 1
A166 2712	Lock Holder	79- 1
A166 2716	Paper Feed Guide Plate	33- 14
A166 2766	Paper Feed Support Plate	29- 14
A166 2768	Pick-up Arm	29- 13
A166 2776	Pressure Arm	29- 16
A166 2778	Spring Bracket	29- 12
A166 2779	Groundimng Plate	29- 44
A166 2783	Separation Shaft	29- 37
A166 2785	Grounding Plate	29- 45
A166 2803	By-pass Feed Cover	29- 5
A166 2819	DC Solenoid - Pick-up	29- 10
A166 2831	DC Solenoid - Pressure	29- 8
A166 2839	Pressure Lever	29- 7
A166 2841	Release Bracket	29- 4
A166 2843	Harness Guide	29- 1
A166 2845	Spring Plate	29- 23
A166 2847	Paper End Feeler	29- 22
A166 2849	Drive Support Plate	29- 42
A166 2853	Middle Guide Plate	29- 28
A166 2855	Upper Guide Plate	29- 26
A166 2856	Lower Guide Plate	29- 27
A166 2870	Paper Tray Ass y	35- 1
A166 2877	Front Paper Stripper	35- 2
A166 2884	Rear Paper Stripper	35- 6
A166 3013	Development Unit (RIC)	37- *
A166 3014	Development Unit (NRG/INF/SVN) (RIC-ASIA)	37- *

Part No.	Description	Page and Index No
A166 3036	Toner Supply Unit (RIC)	37- 33
A166 3037	Toner Supply Unit (NRG/INF/SVN)(RIC-ASIA)	37- 33
A166 3133	Sealding Seal	39- 25
A166 3134	Toner Bottle Cap	39- 10
A166 3160	Entrance Guide	39- 11
A166 3170	Idle Gear	39- 6
A166 3184	Collection Knob	61- 3
A166 3190	Development Gear	39- 7
A166 3193	Stopper Dev Unit	37- 36
A166 3194	Stopper Chain	77- 24
A166 3195	Toner Collection Guide	61- 6
A166 3198	Toner Collection Bottle	61- 4
A166 3199	Development Fixing Plate	39- 21
A166 3201	Toner Collection Plate	39- 12
A166 3205	Development Unit Grip	39- 23
A166 3209	Decal - Development	39- 14
A166 3209	Decal - Development	105- 11
A166 3217	H.P. Sensor Bracket	37- 19
A166 3218	Development Unit Handle	13- 6
A166 3219	Grip Support Plate	13- 29
A166 3222	Sensor Bracket	37- 24
A166 3224	Gear Head	37- 14
A166 3225	Gear Release Bracket	37- 35
A166 3232	Toner Supply Motor	37- 29
A166 3235	Optical Sensor Cover	39- 24
A166 3270	Positioning Roller	39- 2
A166 3280	Rear Support Plate - Development	39- 4
A166 3285	Seal - Cyan	37- 37
A166 3286	Seal - Yellow	37- 38
A166 3287	Seal - Magenta	37- 39
A166 3290	Rear Support Plate	39- 20
A166 3295	Collection Plate Seal	39- 13
A166 3298	Collection Plate Magnet	39- 15
A166 3301	Toner Supply Side Plate	37- 11
A166 3306	Positioning Sensor Link - Black 1	37- 22

Part No.	Description	Page and Index No.
A166 3307	Positioning Sensor Link - Black 2	37- 20
A166 3308	Link Holder	37- 34
A166 3312	Black Toner Hopper Ass y	37- 2
A166 3322	Collection Coil Cover	37- 1
A166 3323	Entrance Pad - Toner Supply Roller	37- 5
A166 3325	Toner Supply Roller Pad	37- 4
A166 3330	Toner Supply Roller	37- 10
A166 3332	Shutter Cover-toner Collection Coil	37- 27
A166 3334	Large Shutter Bracket	37- 28
A166 3336	Small Shutter Bracket	37- 26
A166 3339	DC Solenoid	45- 1
A166 3340	Solenoid Bracket	45- 2
A166 3348	Harness Clamp Bracket	45- 28
A166 3363	Bias Terminal	69- 8
A166 3372	Drive Support Plate - Development	65- 5
A166 3374	Development Drive Bracket	65- 3
A166 3390	Development Revolvere Bracket	65- 14
A166 3391	Hopper Drive Shaft	65- 16
A166 3400	Development Bias Terminal	69- 17
A166 3412	Spacer	65- 6
A166 3420	Rear Release Holder	75- 18
A166 3511	Drum Cleaning Unit	47- *
A166 3511	Drum Cleaning Unit	47- 5
A166 3554	Cleaning Unit Cover	47- 19
A166 3556	Brush Roller Holder	47- 9
A166 3566	Brush Roller Drive Shaft	47- 16
A166 3571	Cleaning Blade Holder	47- 6
A166 3576	Drum Cleaning Blade	47- 1
A166 3581	Toner Collection Pipe	47- 11
A166 3586	Cleaning Seal	47- 18
A166 3587	Cleaning Blade Seal	47- 23
A166 3591	Entrance Seal	47- 4
A166 3592	Toner Collection Plate Seal	47- 22
A166 3593	Cleaning Cover Seal	47- 17
A166 3596	Lubricant Plate	47- 20

Part No.	Description	Page and Index No
A166 3599	Lubricant Spring	47- 21
A166 3910	Transfer Tank	51- 27
A166 3920	Release Plate - Transfer Tank	77- 23
A166 3925	Transport Misfeed Knob	77- 18
A166 3926	Positioning Plate	77- 6
A166 3928	Front Positiioning Shaft	77- 19
A166 3935	Positioning Shaft Support Plate	77- 8
A166 3940	Transfer Tank Frame	51- 7
A166 3942	Transfer Tank Rail	51- 3
A166 4014	Oil Supply Unit	53- 2
A166 4017	Driven Roller	59- 13
A166 4022	Fusing Unit (115V)	53- *
A166 4032	Fusing Unit (230V)	53- *
A166 4055	Lower Fusing Frame	57- 5
A166 4070	Upper Fusing Stay	55- 7
A166 4080	Adjuating Screw	57- 1
A166 4081	Adjusting Plate	57- 2
A166 4082	Pressure Roller Lever	57- 3
A166 4087	Rear Heater Holder	57- 18
A166 4089	Oil End Sensor Bracket	53- 26
A166 4092	Connector Bracket	53- 17
A166 4094	Stopper (230V)	75- 20
A166 4095	Front Heater Holder	57- 7
A166 4097	Pressure Roller Heater Holder	57- 24
A166 4098	Thermistor Harness Bracket	53- 21
A166 4100	Oil Sump	55- 13
A166 4102	Oil Supply Pad	55- 12
A166 4110	Fusing Entrance Guide	57- 31
A166 4111	Shielding Plate	57- 29
A166 4115	Exit Sensor Bracket	57- 20
A166 4120	Fusing Cleaning Roller	55- 17
A166 4121	Scraper Bracket	55- 3
A166 4122	Scraper Holder	55- 1
A166 4123	Fusing Roller Scraper	55- 2
A166 4124	Cushion	55- 18

Part No.	Description	Page and Index No.
A166 4125	Oil Pan	57- 8
A166 4132	Cleaning Blade Bracket	57- 42
A166 4148	Connector Bracket - Fusing	75- 2
A166 4164	Support Plate	57- 28
A166 4199	Fusing Unit Cover	53- 15
A166 4203	Fusing Left Cover	53- 14
A166 4261	Left Oil Pan Pad	57- 37
A166 4262	Right Oil Pan Pad	57- 38
A166 4263	Bottom Front Oil Pan Pad	57- 45
A166 4264	Rear Right Oil Pan Pad	57- 40
A166 4265	Rear Left Oil Pan Pad	57- 39
A166 4266	Front Oil Pan Pad	57- 46
A166 4267	Oil Cleaning Felt	53- 19
A166 4270	Felt bracket	53- 20
A166 4280	Fusing Unit Rail	77- 12
A166 4284	Fusing Unit Lever	53- 11
A166 4285	Fusing Unit Lever	77- 9
A166 4287	Lever Knob	53- 23
A166 4290	Knob Joint	53- 6
A166 4292	Drive Release Rod	77- 15
A166 4295	Drive Release Link	77- 14
A166 4296	Rod Holder	77- 13
A166 4297	Drive Release Slyder	53- 8
A166 4350	Fusing And Paper Exit Unit	53- 13
A166 4455	Spring Plate	51- 6
A166 4461	Hinge Bracket	59- 4
A166 4464	Paper Exit Guide	59- 12
A166 4466	Spring Plate	59- 14
A166 4474	Drive Unit Bracket	59- 2
A166 4480	Paper Exit Arm Holder	59- 5
A166 4482	Shielding Plate	59- 10
A166 4492	Exit Cover	59- 8
A166 4493	Front Holder - Copy Tray	59- 15
A166 4494	Rear Holder - Copy Tray	59- 6
A166 4496	Exit Cover Pawl	59- 9

Part No.	Description	Page and Index No
A166 4498	Exit Cover Arm	59- 7
A166 5071	IC - HG51B206FD	91- 9
A166 5072	IC - TC26SC600AF	91- 10
A166 5073	IC - IPU MPD65622GK-Y71	91- 11
A166 5074	IC - MPD65656GD-020	91- 12
A166 5076	IC - MPD65656GD-020	91- 13
A166 5077	IC - SH HG62G051R14F	91- 14
A166 5077	IC - SH HG62G051R14F	95- 1
A166 5078	IC - HD6437034C33F	91- 5
A166 5080	IDU Board	19- 13
A166 5100	Front Scanner Harness	19- 3
A166 5110	Rear Scanner Harness	19- 4
A166 5115	Original Sensor Harness	19- 18
A166 5120	Scanner DC Harness	19- 11
A166 5120	Scanner DC Harness	21- 15
A166 5126	Scanner AC Harness	19- 8
A166 5131	Scanner Scsi Harness	19- 5
A166 5135	Exposure Lamp Harness	17- 20
A166 5150	PLD IPU	91- 15
A166 5253	Memory Board	11- 1
A166 5253	Memory Board	97- *
A166 5270	IC - UPD65641-AZ	85- 1
A166 5273	Connector - LMSA-9204B2-20204B-T	85- 2
A166 5274	Connector - LMSA-9204B2-20204B-T	85- 3
A166 5277	IC - ACC2036	85- 4
A166 5286	IC - M38802M2-V105	85- 7
A166 5355	IC - 5GU040-013	95- 4
A166 5356	IC - PRINTER 3	95- 3
A166 5359	IC - PRINTER 1	95- 2
A166 5390	Polygon Motor	25- 3
A166 5400	ID Sensor Board	45- 8
A166 5405	Quenching Lamp	45- 11
A166 5409	Thermistor - Pressure Roller	57- 21
A166 5410	Thermistor - Fusing Roller	55- 14
A166 5415	Thermo Fuse	55- 11

Part No.	Description	Page and Index No.
A166 5415	Thermo Fuse	57- 22
A166 5421	Transfer Belt Sensor	41- 14
A166 5560	Power Supply Cord - 120V	69- 13
A166 5561	Power Supply Cord - 230V	69- 13
A166 5611	Rear Left DC Harness	69- 3
A166 5631	AC Harness	69- 10
A166 5632	Rear Right DC Harness	69- 4
A166 5635	Relay Harness - Vertical Transport	79- 16
A166 5638	Transfer Belt Position Harness	41- 26
A166 5641	Belt Cleaning Harness	49- 28
A166 5645	DC Harness SCU	11- 3
A166 5646	Front DC Harness	73- 4
A166 5647	Development Harness	37- 13
A166 5648	Density Sensor Harness	45- 7
A166 5649	Regist Sensor Harness	33- 2
A166 5650	Transfer Harness	51- 23
A166 5651	By-pass Feed Harness	29- 2
A166 5652	Vertical Transfer Harness	27- 5
A166 5655	Polygon Harness	25- 15
A166 5656	Fusing Unit Harness	53- 16
A166 5657	Cleaning Relay Harness	49- 4
A166 5658	Toner Collection Relay Harness	13- 22
A166 5659	Key Counter Harness	71- 15
A166 5695	SCSI Harness	11- 4
A166 5721	Relay Harness - Oil End Sensor	53- 22
A166 5722	Grounding Harness	73- 8
A166 5870	SCU Base	73- 6
A166 5874	Bracket - NV SCU	11- 31
A166 5877	LD Cover - Synchronizing	73- 10
A166 5879	SCU Fan Cover	73- 11
A166 5880	Operation Panel Bracket - SCU	11- 30
A166 5881	Board Bracket	73- 7
A166 5891	SCU Release Rod	73- 3
A166 5924	SCU Right Release Arm	75- 5
A166 5925	Hinge - I/O Control Board 1	75- 10

Part No.	Description	Page and Index No
A166 5926	Holder - I/O Control Board 1	75- 7
A166 5927	Gounding Plate	67- 15
A166 5931	Bracket - I/O Control Board 2	67- 19
A166 5931	Bracket - I/O Control Board 2	101- 3
A166 5935	Upper Holder - I/O Control Board 2	65- 12
A166 5935	Upper Holder - I/O Control Board 2	75- 19
A166 5937	Lower Holder - I/O Control Board 2	75- 14
A166 5938	Power Pack Bracket	67- 21
A166 5939	Power Pack Holder	75- 13
A166 5941	Switch Bracket	71- 5
A166 5942	Safety Switch Bracket	71- 7
A166 5943	Safety Switch Release Lever	71- 6
A166 5946	Switch Bracket	77- 10
A166 5951	Left Release Arm - Scanner	75- 17
A166 5952	Power Cord Cover	69- 12
A166 5955	Sorter Connector Bracket	69- 14
A166 5956	Optical Fiber Bracket	69- 15
A166 5957	Left Grip Cover	75- 1
A166 5958	Right Grip Cover	75- 11
A166 5959	Rear Right Harness Guide	75- 8
A166 5961	Connector Bracket - Cassette Bank	69- 1
A166 5962	Connector Bracket - Cleaner	77- 3
A166 5967	Key Counter Bracket	71- 14
A166 5968	Key Counter Fixing Bracket	77- 20
A166 5970	Left Hinge Bracket	75- 16
A166 5971	Right Hinge Bracket	75- 6
A166 5973	Grounding Plate	75- 21
A166 5974	Scanner Release Rod	17- 1
A166 5976	Fan Motor Bracket	73- 12
A166 5979	Exit Fan Motor Bracket	73- 14
A166 5982	Exit Fan Harness Guide	79- 11
A166 6002	Transfer Belt Unit	41- *
A166 6050	Transfer Belt	43- 17
A166 6052	Transfer Belt Drive Roller	43- 16
A166 6056	Belt Support Roller	41- 2

Part No.	Description	Page and Index No.
A166 6059	Pressure Roller	41- 6
A166 6059	Pressure Roller	43- 15
A166 6062	Transfer Roller	43- 11
A166 6068	Cleaning Side Plate	41- 4
A166 6070	Transfer Unit Guide Plate	71- 12
A166 6073	Front Side Plate - Transfer	43- 8
A166 6075	Rear Side Plate - Transfer	43- 18
A166 6078	Swing Roller Bracket	41- 7
A166 6080	Lifting Cam Shaft	43- 12
A166 6082	Lifting Cam	43- 13
A166 6084	Lifting Cam Lever	43- 10
A166 6085	Side Plate	43- 14
A166 6087	Transfer Corona Unit Bracket	41- 5
A166 6093	Positioning Sensor Bracket	41- 15
A166 6097	Front End Block - Main Corona	41- 16
A166 6100	Front Rail - Transfer Belt Unit	41- 8
A166 6101	Paper Tray Rail	79- 8
A166 6102	Charge Corona Unit	41- 29
A166 6103	Cushion - Positioning Pin	41- 12
A166 6105	Rear Rail - Transfer Belt Unit	41- 10
A166 6106	Frame Shaft	41- 9
A166 6110	Rear Corona Wire Terminal	41- 30
A166 6111	Spring Pin	41- 31
A166 6115	Belt Cleaning Unit Grip	41- 1
A166 6118	Transfer Belt Unit Release Knob	13- 4
A166 6118	Transfer Belt Unit Release Knob	77- 25
A166 6119	Transfer Belt Unit Grip	41- 13
A166 6120	Transfer Belt Unit Cap	71- 22
A166 6121	Snap Ring	41- 28
A166 6123	Transfer Tank Stay	51- 4
A166 6126	Brake Pad	43- 4
A166 6127	Bracke Disk	43- 3
A166 6128	Pad Holder	43- 5
A166 6129	Side Stay	41- 3
A166 6131	Inner Belt Cleaner	41- 27

Part No.	Description	Page and Index No
A166 6142	Stopper Bracket	71- 11
A166 6143	Roller Stopper	43- 20
A166 6150	Bushing	61- 12
A166 6161	LED Array	49- 27
A166 6166	Antistatic Brush Holder	43- 22
A166 6167	Antistatic Brush Holder	41- 23
A166 6168	Antistatic Brush Holder	41- 25
A166 6180	Arm	41- 32
A166 6200	Transfer Corona Unit	51- 2
A166 6210	Lower Guide Plate	51- 13
A166 6213	Upper Guide Plate	51- 1
A166 6216	Spring Plate	51- 5
A166 6230	T/S Corona Caseing	51- 24
A166 6245	Antistatic Brush Holder	51- 15
A166 6246	Grounding Plate - Antistatic Brush	51- 26
A166 6247	Grounding Plate	51- 25
A166 6322	Blade Support Plate	49- 11
A166 6325	Lever Cushion	49- 12
A166 6331	Cleaning Blade - Transfer Belt	49- 14
A166 6336	Release Plate	49- 6
A166 6341	Entrance Seal	49- 23
A166 6347	Entrance Seal Lever	49- 19
A166 6348	Link Plate - Seal Lever	49- 15
A166 6353	Belt Cleaning Caseing	49- 20
A166 6357	Blade Seal	49- 10
A166 6358	Toner Collection Seal	49- 22
A166 6359	Belt Cleaning Seal	49- 21
A166 6361	Belt Cleaning Side Plate	49- 18
A166 6362	Seal	49- 32
A166 6363	Toner Collection Plate	49- 26
A166 6366	Solenoid Cover	49- 8
A166 6367	Cover Seal	49- 30
A166 6368	Cover Front Seal	49- 29
A166 6371	Toner Collection Coil	49- 3
A166 6381	Toner Collection Pipe	49- 1

Part No.	Description	Page and Index No.
A166 6388	Blade Release Wedge	49- 31
A166 6393	Belt Cleaning Holder	49- 2
A166 6422	Lubricant Holder	61- 9
A166 6425	Lever Guide Sheet	61- 18
A166 6427	Spring	61- 24
A166 6428	Spacer - Lubricant Bar	61- 26
A166 6431	Lubricant Brush	61- 14
A166 6436	Lubricant Support Plate	61- 2
A166 6462	Lubricant Pressure Bracket	61- 7
A166 6472	Link Solenoid	61- 19
A166 6473	Pressure Plate	61- 21
A166 6523	Disposed Toner Tank	13- 17
A166 6531	Collection Bottle Band	13- 16
A166 6535	Collection Bottle Holder	71- 10
A166 6712	Front Cover (NRG)	13- 1
A166 6713	Cover - Front - BF (INF)	13- 1
A166 6714	Cover - Front - BF (SVN)	13- 1
A166 6730	Emblem (SVN)	13- 2
A166 6730	Emblem (SVN)	105- 9
A166 6751	Model Name Plate - GES	13- 31
A166 6752	Model Name Plate - NSA	13- 31
A166 6753	Model Name Plate - REX	13- 31
A166 6754	Model Name Plate - SVN	13- 31
A166 9099	Main Counter	71- 4
A166 9510	OPC Drum	45- 30
A166 9514	Transfer Corona Wire - (10pcs/set)	51- 19
A166 9515	Main Corona Wire (10pcs/set)	41- 18
A166 9516	Charge Corona Wire (10pcs/set)	45- 23

Part No.	Description	Page and Index No
AA00 0059	Caution Decal - English	13- 18
AA00 0059	Caution Decal - English	105- 14
AA00 0178	Decal - Thermofuse	55- 8
AA00 0178	Decal - Thermofuse	57- 32
AA00 0178	Decal - Thermofuse	105- 15
AA00 0194	Decal - High Temperature	53- 18
AA00 0195	Decal - High Temperature	13- 27
AA00 0195	Decal - High Temperature	105- 16
AA00 0600	Decal - LD	25- 19
AA00 0600	Decal - LD	105- 17
AA00 0602	Decal LD Cover	25- 20
AA00 0602	Decal LD Cover	105- 18
AA00 1373	Decal - Main Switch	13- 30
AA00 1373	Decal - Main Switch	105- 19
AA00 2209	Decal - Paper Size	105- 20
AA01 0089	Ozone Filter	67- 7
AA01 0092	Ozone Filter	71- 19
AA01 0093	Ozone Filter	67- 16
AA01 0094	Ozone Filter	79- 13
AA01 0095	Ozone Filter	73- 9
AA01 2092	Dust Filter	67- 4
AA01 2098	Dust Filter	67- 17
AA03 1009	Oil Tank	53- 4
AA03 6007	Oil Tank Cap	53- 5
AA04 0025	Transfer Belt	51- 12
AA04 3460	Timing Belt - S2M 290	21- 7
AA05 0085	Scanner Wire	23- 5
AA05 1026	Scanner Stopper Wire	23- 29
AA06 0221	Gripper Solenoid Spring	21- 8
AA06 0221	Gripper Solenoid Spring	23- 6
AA06 0251	Spring	41- 17
AA06 0282	Pressure Spring	37- 12
AA06 0320	Release Spring	39- 1
AA06 0622	Spring	29- 11
AA06 0623	Spring	29- 15

Part No.	Description	Page and Index No.
AA06 0624	Spring	29- 9
AA06 0625	Spring	29- 6
AA06 0627	Spring	49- 13
AA06 0628	Spring	49- 7
AA06 0629	Spring	49- 24
AA06 0630	Spring	61- 20
AA06 0631	Spring - Release - Scraper	61- 1
AA06 0632	Spring - Blade	47- 2
AA06 0633	Tension Spring - Tightener	65- 9
AA06 0634	Spring - Tightener	63- 10
AA06 0635	Spring - Release	77- 16
AA06 0640	Spring	31- 15
AA06 0673	Pressure Spring	57- 41
AA06 3036	Terminal Spring	51- 21
AA06 3068	Spring Connector	69- 9
AA06 3143	Spring	41- 21
AA06 3205	Spring	31- 22
AA06 3283	Spring	47- 12
AA06 3284	Spring	55- 4
AA06 3285	Spring	55- 9
AA06 3291	Spring	33- 7
AA06 3369	Spring	43- 7
AA06 3499	Pressure Spring	29- 33
AA06 3505	Spring	59- 18
AA06 3533	Spring	65- 27
AA06 3534	Spring	63- 15
AA06 3535	Spring	63- 13
AA06 3536	Spring	53- 9
AA06 3546	Spring	43- 2
AA06 6104	Spring	31- 10
AA06 6249	Spring	31- 18
AA06 6272	Spring	77- 21
AA06 6552	Spring	37- 21
AA08 0037	Bushing - 6 mm	29- 34
AA08 0037	Bushing - 6 mm	33- 6

Part No.	Description	Page and Index No
AA08 0166	Bushing - 8mm	53- 10
AA08 0189	Feed Roller Bushing - Front	31- 1
AA08 0190	Lift Arm Bushing	31- 17
AA08 0205	Bushing - 6mm	37- 3
AA08 0207	Bushing - 6mm	37- 6
AA08 2021	Bushing - 8x12x10mm	33- 3
AA08 2047	Bushing - 8x16x7	31- 28
AA08 2047	Bushing - 8x16x7	33- 4
AA08 2058	Bushing - 6x10x9mm	59- 16
AA08 3010	Clutch Roller - 6x14x10	29- 40
AA08 4044	Bearing Holder	43- 6
AA10 0009	Ring Stopper	49- 16
AA10 0009	Ring Stopper	61- 10
AA10 0010	Snap Ring - Pick Up Sol	29- 46
AA11 3021	Heater Terminal	53- 3
AA11 3021	Heater Terminal	57- 6
AA12 0067	Anti Static Brush	59- 11
AA12 0068	Antistatic Brush	51- 17
AA12 0079	Antistatic Brush	41- 24
AA12 0079	Antistatic Brush	43- 23
AA12 0080	Antistatic Brush	43- 21
AA13 2013	Spacer - 8.2	57- 36
AA13 2174	Spacer - M8	17- 14
AA13 2192	Collar	37- 8
AA13 4099	Bushing	63- 21
AA14 0547	Drive Shaft	23- 17
AA14 0592	Fusing Drive Shaft	57- 30
AA14 0602	Feed Shaft	29- 41
AA14 3025	Stepped Screw - M3	61- 25
AA14 3074	Stepped Screw - M4x5	41- 11
AA14 3219	Stepped Screw	11- 15
AA14 3258	Stepped Screw - M4x7	57- 43
AA14 3445	Stud - M4	31- 20
AA14 3454	Stepped Screw - M3	11- 11
AA14 3726	Stepped Screw	39- 8

Part No.	Description	Page and Index No.
AA14 5249	Development Drive Shaft	65- 7
AA14 5253	Shaft - 4x46	63- 4
AA14 8447	Guide Pin - Platen Cover	15- 11
AA15 0383	Right Rail Sheet	31- 14
AA15 0636	Seal - 90x29.5x0.2	17- 6
AA15 0656	SCSI Entrance Seal	23- 18
AA15 0657	Seal	17- 5
AA15 0660	Seal	23- 31
AA15 0661	Seal	23- 12
AA15 0662	Seal	23- 27
AA15 0663	Seal	23- 28
AA15 1242	Rear Seal - Toner Supply Shaft	37- 9
AA15 1998	Cushion - 10x30x5	27- 9
AA15 2255	Seal	47- 8
AA15 2256	Seal	47- 7
AA15 2360	Seal	25- 10
AA15 3006	Seal	37- 17
AA15 3020	Seal	37- 7
AA15 3022	Seal	23- 10
AA15 3023	Seal	67- 14
AA15 3025	Seal	79- 12
AA15 3027	Seal	77- 27
AA15 3028	Seal	77- 28
AA15 3029	Seal	77- 26
AA15 3030	Seal	71- 23
AA16 2053	Platen Cover Pad	15- 2
AA17 0019	Seal	41- 20
AA18 0054	Oil Supply Tube	53- 1
AB00 0021	Timing Pulley - 63Z	23- 23
AB01 0200	Gear - 27Z	63- 5
AB01 1343	Idle Gear - 23z	29- 20
AB01 1344	Gear - 16Z	29- 35
AB01 1345	Gear - 20Z	29- 36
AB01 1346	Gear - 27Z	29- 38
AB01 1366	Gear - 42z	37- 15

Part No.	Description	Page and Index No
AB01 1369	Gear - 56Z	37- 30
AB01 3801	Gear - 30Z	59- 17
AB01 3868	Gear - 16Z	35- 12
AB01 3947	Gear	39- 3
AB01 3948	Gear	39- 5
AB01 3949	Gear	39- 9
AB01 3952	Gear	65- 8
AB01 3953	Gear	65- 2
AB01 3954	Gear	65- 18
AB01 3955	Gear	65- 15
AB01 3956	Gear	65- 19
AB01 3957	Gear - 80Z	63- 25
AB01 3958	Gear - 40Z	63- 19
AB01 3959	Gear - 20Z	65- 22
AB01 3960	Gear - 30Z	63- 16
AB01 3961	Gear - 40Z	63- 2
AB01 3962	Gear - 20Z	63- 17
AB01 3965	Gear - 16Z	47- 15
AB01 3966	Gear - 20Z	47- 14
AB01 3967	Gear - 18Z	59- 1
AB01 3969	Gear - 45Z	57- 14
AB01 3970	Gear - 22Z	57- 34
AB01 3971	Gear - 22Z	57- 23
AB01 3973	Gear - 15Z	57- 27
AB01 3975	Gear - 20Z	57- 25
AB01 3976	Gear - 15Z	53- 24
AB01 3977	Gear - 16Z	55- 10
AB01 3978	Gear	49- 17
AB01 3979	Gear	61- 15
AB01 3980	Gear - 17Z	63- 27
AB01 3981	Gear - 30Z	43- 19
AB01 3982	Gear - 30Z	51- 11
AB01 3983	Gear - 16Z	57- 4
AB01 7387	Gear - 14Z/96Z	65- 4
AB01 7401	Gear - 20Z/60Z	63- 18

Part No.	Description	Page and Index No.
AB01 7402	Gear - 31Z/72Z	63- 7
AB01 7403	Gear - 25Z/24Z	63- 6
AB01 7407	Gear - 12Z/41Z	37- 31
AB03 0276	Tightener Pulley	65- 24
AB03 0388	Pulley - 16Z	63- 9
AB03 0459	Timing Pulley -22z	21- 11
AB03 0525	Pulley - 24Z	65- 25
AB03 0526	Pulley - 45Z	63- 11
AB03 2717	Pulley - 26Z	17- 11
AB03 2717	Pulley - 26Z	23- 26
AB03 2718	Drive Pulley	23- 4
AC02 0074	Cylindrical Lens	25- 13
AD00 4081	Charge Corona Unit	45- 15
AD01 5016	Drum Shaft Ass y	63- 23
AD02 1116	Transfer Corona Receptacle	69- 7
AD02 1117	Transfer Corona Receptacle - Belt	69- 6
AD02 2263	Front Cover - Main Corona	41- 22
AD02 2265	Rear End Block - Charge Corona	45- 25
AD02 2266	Rear Cover - Charge Corona	45- 22
AD02 2321	Front End Block - Transfer Corona	51- 20
AD02 2322	Rerar End Block - Transfer Corona	51- 22
AD02 2323	Front End Block Cover - Transfer	51- 14
AD02 2324	Rear End Block Cover - Transfer	51- 18
AD02 2325	Front End Block - Charge Corona	45- 19
AD02 2326	Front End Block Cover - Charge	45- 20
AD02 2328	T/S Corona Rear Cap	41- 19
AD03 3123	Left Caseing - Charge Corona	45- 5
AD03 3124	Right Caseing - Charge Corona	45- 31
AD04 2031	Cleaning Brush Roller	47- 10
AD04 3043	Toner Collection Coil - Transfer	47- 13
AD04 7016	Cleaning Entrance Seal	47- 3
AE01 0013	Hot Roller	57- 13
AE02 0057	Pressure Roller	57- 17
AE03 0007	Ball Bearing-25x47x12mm	57- 11
AE03 0019	Ball Bearing - 7x20x32	57- 16

Part No.	Description	Page and Index No
AE03 1021	Bushing - 6mm	55- 5
AE03 1022	Bushing - 4mm	55- 6
AE03 2007	Bushing - 20x25x12mm	57- 12
AE04 0011	Oil Toff Roller	55- 16
AE04 0012	Oil Supply Roller	55- 15
AE04 1003	Oil Cleaning Blade	57- 44
AF01 0069	Paper Tray Frame	35- 15
AF01 1039	Tray Bottom Plate	35- 21
AF01 3004	Bottom Plate Pad	35- 13
AF01 5027	Paper Size Slider	35- 20
AF01 6072	Front Side Fence	35- 5
AF01 6073	Rear Side Fence	35- 17
AF01 7015	Paper End Fence	35- 10
AF02 0356	Lower Registration Roller	33- 10
AF02 0357	Transfer Roller	33- 11
AF02 1055	Upper Registration Roller	33- 9
AF02 2069	Left Transport Roller	51- 10
AF02 2070	Right Transport Roller	51- 9
AF02 2079	Vertical Driven Roller	27- 7
AF02 5026	Paper Exit Pawl	59- 20
AF03 0024	Pick-up Roller	29- 18
AF03 1025	Feed Roller	29- 17
AF03 1027	Paper Feed Roller	31- 8
AF03 2025	Separation Roller	29- 30
AF04 0554	Paper Exit Roller	59- 19
AF04 3069	Copy Tray	13- 33
AF04 3076	Copy Tray Slide	13- 32
AF04 3077	Copy Tray Guide	13- 9
AG05 0079	Registration Knob	33- 1
AG05 0080	Fusing Knob	53- 7
AG07 0004	Magnetic Catch	61- 16
AG07 0004	Magnetic Catch	71- 3
AH01 0007	Rubber Foot	79- 2
AW01 0040	Original Sensor	21- 3
AW01 0046	Photosensor - Ee-spy415	39- 22

Part No.	Description	Page and Index No.
AW01 0072	Original Sensor	19- 14
AW02 0021	Photointerruptor - 175487-3	37- 18
AW02 0021	Photointerruptor - 175487-3	57- 19
AW02 0022	Photointerruptor	17- 18
AW02 0068	Photointerruptor	33- 5
AW02 0069	Photointerruptor	27- 6
AW02 0072	Photointerruptor	19- 2
AW02 0075	Photointerrupter	29- 3
AW02 0075	Photointerrupter	31- 11
AW02 0083	Photointerruptor	37- 23
AW02 0084	Photointerruptor	21- 16
AW03 0032	Optical Fiber	21- 21
AW03 0039	Optical Fiber - 75 700mm	21- 18
AW03 0039	Optical Fiber - 75 700mm	69- 2
AW03 0069	Optical Fiber - 75 1200mm	69- 16
AW03 0070	Optical Fiber - 75 1000mm	11- 2
AW11 0017	Thermostat - 140 C - AC120V 15A	17- 22
AW14 0005	Humidity Sensor - CHS-YS-1	99- 2
AW14 0006	Thermo Sensor - LM35DZ	99- 3
AW23 0009	Toner End Sensor	13- 21
AW33 0005	Drum Potencial Sensor	45- 6
AW50 0010	Push Switch	31- 26
AW50 0012	Push Switch	29- 24
AX05 0093	Motor - DC24V 9W	63- 1
AX06 0116	Motor - DC24V 20W	65- 1
AX06 0117	Motor - DC24V 4A	65- 13
AX06 0124	Motor - DC24V 53W	21- 12
AX06 0131	Motor - DC24V 38W	65- 20
AX12 0043	DC Solenoid	49- 5
AX12 0043	DC Solenoid	61- 11
AX20 0101	Magnetic Clutch - 2.5Kgf 35z	29- 39
AX20 0122	Magnetic Clutch - 0.049n.M35z	33- 15
AX20 0123	Magnetic Clutch - 0.98n M25z	33- 16
AX20 0124	Magnetic Clutch	31- 30
AX40 0021	Anti-condensation Heater-115V 18W	71- 13

Part No.	Description	Page and Index No
AX40 0022	Anti-condensation Heater - 240V 18W	71- 13
AX40 0063	Anticondensation Heater - 120V9W	21- 4
AX40 0063	Anticondensation Heater - 120V9W	71- 17
AX40 0063	Anticondensation Heater - 120V9W	79- 10
AX40 0064	Anti Condensation Heater - 230V9W	71- 17
AX40 0064	Anti Condensation Heater - 230V9W	79- 10
AX43 0032	Fusing Lamp - 120V 400W	57- 15
AX43 0033	Fusing Lamp - 230V 400W	57- 15
AX44 0091	Fusing Lamp - 120V 670W	57- 9
AX44 0092	Fusing Lamp - 230V 670W	57- 9
AX52 0029	Exposure Lamp - 75V 160W	17- 19
AX64 0065	Fan Motor - DC24V 0.8A	21- 20
AX64 0065	Fan Motor - DC24V .08A	71- 2
AX64 0065	Fan Motor - DC24V .08A	71- 8
AX64 0065	Fan Motor - DC24V .08A	71- 20
AX64 0066	Fan Motor - DC24V 0.04A	21- 2
AX64 0066	Fan Motor - DC24V 0.04A	73- 15
AX64 0067	Fan Motor - DC24V 0.13A	21- 6
AX64 0068	Fan Motor - DC24V 0.09A	51- 8
AX64 0070	Fan Motor - DC24V 0.14A	67- 8
AX64 0071	Fan Motor - DC24V 0.17A	67- 3
AX64 0074	Fan Motor - DC24V 0.08A	73- 13
AZ23 0051	Lamp Regulator (115V)	19- 10
AZ23 0063	Lamp Regulator - 230V	19- 10
AZ24 0030	DC Power Supply Unit - 115V	73- 2
AZ24 0035	DC Power Supply Unit - 230V	73- 2
AZ32 0082	Power Pack	67- 11
C225 2866	Decal - Key Top Cover (REX)	11- 32
C225 2866	Decal - Key Top Cover (REX)	105- 3
C225 2867	Decal - Cover - Panel (NSA)	11- 32
C225 2867	Decal - Cover - Panel (NSA)	13- 31
C225 2867	Decal - Cover - Panel (NSA)	105- 3
C400 2671	Gear Spring	65- 17
C401 9503	20X Magnification Scope	107- 10
G011 3305	Gear - 16T	27- 24

Part No.	Description	Page and Index No.
G012 4617	Stepped Screw - M3	55- 19
H072 2220	Spacer - M6x10	47- 24
H072 2220	Spacer - M6x10	57- 26
H085 1521	Drive Gear - ADF Feed : Z17	37- 16

Part No.	Description	Page and Index No
A006 9104	Adjusting Scanner Pin (4pcs/set)	107- 6
A007 3785	Toner Collection Bottle Cap	13- 20
A008 9502	Silicone Grease G40M	107- 5
A012 9111	Optical Cloth	107- 12
A028 3146	Paper Feed Guide Spacer	99- 1
A028 3146	Paper Feed Guide Spacer	101- 1
A028 7277	Entrance Gate Cushion	17- 4
A028 9300	Grease Barrierta JFE 55/2	107- 7
A030 4064	Spacer - Hot Roller	57- 10
A030 6231	Corona Wire Ring	51- 28
A048 2863	Release Arm - Paper End	31- 9
A049 2194	Seal	37- 32
A049 2194	Seal	39- 16
A049 2195	Seal	39- 17
A049 2272	Charge Grid - 85T	45- 17
A049 3945	Seal - Black	39- 18
A049 3946	Seal - Blue	39- 19
A053 1957	Flex Hinge - Platen Cover	15- 4
A053 2132	Bushing - 6x10x3	43- 9
A069 1883	Shoe - Scanner	17- 9
A069 2704	Guide Roller - 6x12x7.5	77- 22
A069 5168	Heat Sink - Motor Board	101- 2
A069 5352	Ground Wire - Scanner	21- 14
A092 9503	C4 Test Chart (3pcs/set)	107- 8
A096 1873	Scanner Shoe Pin	17- 13
A100 1310	Platen Cover Hinge Ass y	15- 8
A100 1324	Positioning Sensor Shutter	15- 7
A100 1325	Hinge Spacer	15- 9
A100 2056	Plate - Cylindrical Lens	25- 14
A100 5406	IC - Analog Processing	91- 1
A109 2287	Drum Flange Knob	45- 3
A109 5159	Heat Sink	81- 1
A109 5222	IC - RF5C221	91- 2
A109 6087	Spring Holder Cover - Transfer	43- 1
A109 6348	Lever Cushion	49- 9

Part No.	Description	Page and Index No.
A109 6348	Lever Cushion	61- 22
A109 6369	Entrance Seal Collar	49- 25
A109 6415	Lever Spring	61- 23
A109 6425	Brush Roller Spacer	61- 13
A109 6430	Lubricant Bar	61- 17
A133 7156	Left Scale (LT)	11- 12
A133 7157	Rear Scale (LT)	11- 16
A134 1071	Left Grip Plate	75- 4
A134 1071	Left Grip Plate	77- 1
A134 1072	Right Bracket - Grip Plate	75- 3
A134 1072	Right Bracket - Grip Plate	77- 7
A134 1073	Left Bracket - Grip Plate	75- 15
A134 1073	Left Bracket - Grip Plate	77- 2
A134 1392	Platen Cover Ass y	15- 12
A134 1394	Front Platen Cover	15- 3
A134 1395	Rear Platen Cover	15- 5
A134 1396	Original Holder	15- 6
A134 1677	Front Tension Bracket	23- 7
A134 1678	Rear Tension Bracket	23- 19
A134 1680	Guide - Flexible Harness	23- 20
A134 1698	Idle Pulley	23- 15
A134 1722	Bracket - Drive Shaft	23- 22
A134 1724	Cushion - Stepper Motor	21- 10
A134 1726	Wire Stopper Plate	17- 24
A134 1728	Fly Wheel	21- 13
A134 1771	Front Terminal	17- 29
A134 1773	Rear Terminal	17- 28
A134 1776	Spring Plate - 1st Mirror	17- 16
A134 1782	2nd Scanner Ass y	17- 27
A134 1791	Spring Plate - 2nd Mirror	17- 10
A134 1921	Scale - Left - Printing (A4)	11- 12
A134 1922	Rear Scale (A4)	11- 16
A134 1924	Exposure Glass	11- 14
A134 1926	Exposure Glass Stopper	17- 7
A134 1932	Stay - Scanner Upper Right	17- 26

Part No.	Description	Page and Index No
A134 1933	Right Stopper - Exposure Glass	17- 25
A134 1962	Bracket Home Sensor	19- 1
A134 2587	Switch Bracket	27- 4
A134 2659	By-pass Feed Housing	29- 25
A134 2661	Feeler Roller	29- 21
A134 2663	Separation Guide	29- 29
A134 2668	Separation Driven Shaft	29- 32
A134 2674	Torque Limitter - 400fg	29- 31
A134 2692	By-pass Feed Table Ass y	27- 2
A134 2697	By-pass Feed Table	27- 20
A134 2701	By-pass Feed Guide	27- 19
A134 2705	Magnet Catch Plate	27- 21
A134 2706	Rear Fence Rack	27- 23
A134 2707	Front Fence Rack	27- 12
A134 2711	Front Side Fence	27- 16
A134 2716	Rear Side Fence	27- 18
A134 2721	Front Paper Guide	27- 15
A134 2726	Rear Paper Guide	27- 17
A134 2741	By-pass Feed Entrance Guide	27- 14
A134 2746	By-pass Feed Cover	27- 11
A134 2941	Bracket - Paper Sizesensor	31- 27
A134 2956	Paper Feed Front Cover	35- 14
A134 5190	LSD Board	25- 1
A134 5209	LSI - MSM518222-30JS-1	91- 3
A134 5210	IC - D308102	91- 4
A134 5211	IC - D352101	91- 18
A134 5282	Paper Size Sensor Board	27- 22
A134 5370	Relay Harness - Scanner Lamp	17- 23
A134 5372	Harness - Scanner Lamp	19- 9
A153 1357	Operating Instruction Holder	11- 19
A153 1380	Platen Cover Bracket	15- 10
A153 2995	Decal Paper Size - LT/DLT	105- 1
A153 2996	Decal Paper Size - A4/A3	105- 1
A153 4461	Copy Tray Ass y	13- 8
A153 6406	Model Name Plate (NRG)	13- 31

Part No.	Description	Page and Index No.
A153 6409	Decal - Keytop Cover (NRG)	11- 32
A153 6409	Decal - Keytop Cover (NRG)	105- 3
A153 6423	Support Cover (INF)	13- 2
A157 1087	Middle Stay	79- 9
A157 2758	Decal - Paper Setting	35- 16
A157 2758	Decal - Paper Setting	105- 4
A157 2762	End Fence Spring	35- 9
A157 2765	Bottom Plate Spring	35- 19
A157 2766	Front Stopper Lever	35- 3
A157 2767	Front Stopper Spring	35- 4
A157 2768	Raer Stopper Lever	35- 7
A157 2769	Rear Stopper Spring	35- 8
A157 2770	Feed Roller	31- 7
A157 2772	Paper Stripper Shaft	31- 31
A157 2773	Feed Roller Holder	31- 23
A157 2775	Feed Roller Shaft	31- 6
A157 2781	Tray Positioning Rail	31- 13
A157 2782	Paper Tray Holder	31- 2
A157 2783	Left Rail	31- 25
A157 2785	Right Rail	31- 16
A157 2786	Lift Arm Stopper	31- 19
A157 2788	Lift Arm	31- 12
A157 2794	Lock Arm Stopper	31- 3
A157 2795	Stopper Bracket	31- 21
A157 2800	Paper End Sensor Bracket	31- 24
A157 2802	Paper End Sensor F	31- 5
A157 2804	Shield Plate - Paper End Sensor	31- 4
A157 2805	Decal - Paper Set	35- 18
A157 2805	Decal - Paper Set	105- 5
A157 2806	Bottom Tray Sheet	35- 11
A187 1101	Drive Unit - Main	65- 21
A187 1528	Operation Decal (LT)	11- 29
A187 1528	Operation Decal (LT)	105- 12
A187 1529	Operation Decal (A4)	11- 29
A187 1529	Operation Decal (A4)	105- 12

Part No.	Description	Page and Index No
A187 2051	LD Unit (230V)	25- 0
A187 2052	LD Unit (115V)	25- 0
A187 2092	LD Unit	25- 2
A187 4625	Heat Sink	71- 21
A187 5067	IC - Scanner	91- 7
A187 5090	Scanner IPU Board	19- 6
A187 5090	Scanner IPU Board	91- 0
A187 5251	SCU Board (RIC/INF)(230V)	11- 5
A187 5251	SCU Board (RIC/INF)(230V)	85- 0
A187 5258	SCU Board (NRG)(230V)	11- 5
A187 5258	SCU Board (NRG)(230V)	85- 0
A187 5268	SCU Board (115V)	11- 5
A187 5268	SCU Board (115V)	85- 0
A187 5275	IC - SYSTEM CONTROL	85- 5
A187 5362	Printer Main Control Board	73- 5
A187 5362	Printer Main Control Board	95- 0
A187 5368	I/O Control Board 1	67- 1
A187 5368	I/O Control Board 1	99- 0
A187 5369	I/O Control Board 2	67- 12
A187 5369	I/O Control Board 2	101- 0
A187 5441	IC - PRINTER 2	95- 5
A187 5653	Synchronizing Harness	25- 16
A187 5654	LD Control Harness	25- 17
A187 5701	Grounding Wire - 55	25- 25
A187 5921	Bracket - I/O Control Board 1	67- 18
A187 5921	Bracket - I/O Control Board 1	99- 4
A187 8607	Operating Instructions - English LT (RIC)	105- 21
A187 8650	Operating Instructions - English LT (SVN)	105- 21
A187 8690	Operating Instructions - English A4 (NRG)	105- 21
A187 8697	Operating Instructions - English LT (NRG)	105- 21
A399 6749	Delay Line - AT-30	91- 17
A700 5106	IC - PI	85- 8
5053 0223	Bushing - 8mm	57- 35
5053 0447	Bushing - 6mm	29- 43
5053 0447	Bushing - 6mm	51-102

Part No.	Description	Page and Index No.
5203 9501	Silicone Grease G-501	107- 1
5206 2686	Snap Ring	53- 12
5209 5320	Oil End Sensor	53- 25
5215 2621	Snap Ring - M6	27- 10
5409 1855	Mounting Pin	45- 29
5413 1882	Stepped Screw	59- 3
5420 1515	Plate - Key Counter	71- 16
5420 9507	Digital Multimeter - Beckman	107- 4
5420 9550	Silicone Oil	107- 2
5442 2108	Corona Wire Spring	45- 24
5442 2108	Corona Wire Spring	51- 16
5442 2110	Plug - Corona Unit	45- 26
5442 3664	Toner Collection Bottle Cap - Small	13- 19
5442 3664	Toner Collection Bottle Cap - Small	61- 5
5442 9101	Setting Powder	107- 3
5442 9103	Lawna Oil 40	107- 9
5446 5832	Connector Guide Pin	69- 11
5447 2681	Snap Ring	29- 19
5447 2927	Friction Pad - B	27- 13
5447 9078	Heat Resisting Grease - MT-78	107- 11
5448 2804	Platen Cover Sheet	15- 1

Part No.	Description	Page and Index No
0313 0040B	Philips Pan Head Screw - M3x4	29-106
0313 0100B	Philips Pan Head Screw - M3x10	41-106
0313 0140B	Philips Pan Head Screw - M3x14	17-101
0313 0140B	Philips Pan Head Screw - M3x14	27-102
0314 0060B	Philips Pan Head Screw - M4x6	57-105
0314 0080B	Philips Pan Head Screw - M4x8	43-105
0314 0100B	Philips Pan Head Screw - M4x10	21-111
0314 0100B	Philips Pan Head Screw - M4x10	53-108
0314 0100B	Philips Pan Head Screw - M4x10	57-106
0314 0120B	Philips Pan Head Screw - M4x12	17-104
0314 0120B	Philips Pan Head Screw - M4x12	19-101
0314 0250B	Philips Pan Head Screw - M4x25	21-101
0315 0100B	Philips Pan Head Screw - M5x10	41-107
0323 0080B	Philips Sunk Screw - M3x8	71-104
0344 0080F	Philips Truss Head Screw - M4x8	53-104
0353 0060W	Philips Pan Head Screw - M3x6	25-101
0353 0060W	Philips Pan Head Screw - M3x6	45-106
0353 0060W	Philips Pan Head Screw - M3x6	55-105
0353 0080B	Screw - M3X8	21-114
0353 0080B	Screw - M3X8	41-108
0353 0080B	Screw - M3X8	43-104
0413 0062W	Tapping Screw - M3x6	45-109
0413 0082B	Tapping Screw - M3x8	31-105
0414 0060B	Tapping Screw - M4x6	29-109
0414 0080B	Binding Self-tapping Screw - M4x8	23-104
0414 0080B	Binding Self-tapping Screw - M4x8	25-102
0414 0080B	Binding Self-tapping Screw - M4x8	29-107
0414 0080B	Binding Self-tapping Screw - M4x8	31-102
0414 0080W	Tapping Screw - M4x8	51-103
0414 0082F	Philips Truss Head Screw - M4x8	27-104
0414 0142W	Tapping Screw - M4x14	15-101
0433 0062B	Tapping Screw - M3 X 6 mm	45-107
0434 0060B	Philips Tapping Screw - M4x6	11-101
0434 0060B	Philips Tapping Screw - M4x6	17-103
0434 0060B	Philips Tapping Screw - M4x6	19-104

Part No.	Description	Page and Index No.
0434 0060B	Philips Tapping Screw - M4x6	21-106
0434 0060B	Philips Tapping Screw - M4x6	23-105
0434 0060B	Philips Tapping Screw - M4x6	29-110
0434 0060B	Philips Tapping Screw - M4x6	31-101
0434 0060B	Philips Tapping Screw - M4x6	33-105
0434 0060B	Philips Tapping Screw - M4x6	35-101
0434 0060B	Philips Tapping Screw - M4x6	37-105
0434 0060B	Philips Tapping Screw - M4x6	41-105
0434 0060B	Philips Tapping Screw - M4x6	43-106
0434 0060B	Philips Tapping Screw - M4x6	45-102
0434 0060B	Philips Tapping Screw - M4x6	47-103
0434 0060B	Philips Tapping Screw - M4x6	49-102
0434 0060B	Philips Tapping Screw - M4x6	51-104
0434 0060B	Philips Tapping Screw - M4x6	59-104
0434 0060B	Philips Tapping Screw - M4x6	61-101
0434 0060B	Philips Tapping Screw - M4x6	65-107
0434 0060B	Philips Tapping Screw - M4x6	67-103
0434 0060B	Philips Tapping Screw - M4x6	69-103
0434 0060B	Philips Tapping Screw - M4x6	71-105
0434 0060B	Philips Tapping Screw - M4x6	75-101
0434 0060B	Philips Tapping Screw - M4x6	77-101
0434 0060B	Philips Tapping Screw - M4x6	79-101
0434 0102B	Tapping Screw - M4x8	23-110
0434 0200B	Tapping Screw - M4x20	59-105
0443 0050B	Philips Pan Head Screw - M3x6	45-110
0443 0060B	Hexagon Tapping Screw - M3x6	11-102
0443 0060B	Hexagon Tapping Screw - M3x6	17-102
0443 0060B	Hexagon Tapping Screw - M3x6	19-102
0443 0060B	Hexagon Tapping Screw - M3x6	21-112
0443 0060B	Hexagon Tapping Screw - M3x6	31-106
0443 0060B	Hexagon Tapping Screw - M3x6	33-107
0443 0060B	Hexagon Tapping Screw - M3x6	57-103
0443 0060B	Hexagon Tapping Screw - M3x6	59-102
0443 0060B	Hexagon Tapping Screw - M3x6	63-104
0443 0060B	Hexagon Tapping Screw - M3x6	69-104

Part No.	Description	Page and Index No
0443 0060B	Hexagon Tapping Screw - M3x6	73-101
0443 0060B	Hexagon Tapping Screw - M3x6	99-143
0443 0080W	Hexagon Head Tapping Screw - M3x8	53-106
0450 4035B	Philips Tapping Screw - M4x35	21-102
0450 4035B	Philips Tapping Screw - M4x35	67-101
0450 4035B	Philips Tapping Screw - M4x35	71-101
0451 4008B	Philips Tapping Screw - M4x8	21-108
0451 4008B	Philips Tapping Screw - M4x8	23-106
0451 4008B	Philips Tapping Screw - M4x8	29-108
0451 4008B	Philips Tapping Screw - M4x8	33-106
0451 4008B	Philips Tapping Screw - M4x8	39-103
0451 4008B	Philips Tapping Screw - M4x8	43-107
0451 4008B	Philips Tapping Screw - M4x8	45-103
0451 4008B	Philips Tapping Screw - M4x8	59-106
0451 4008B	Philips Tapping Screw - M4x8	63-103
0451 4008B	Philips Tapping Screw - M4x8	65-109
0451 4008B	Philips Tapping Screw - M4x8	67-104
0451 4008B	Philips Tapping Screw - M4x8	69-107
0451 4030B	Philips Tapping Screw - M4x30	71-106
0451 4030B	Philips Tapping Screw - M4x30	73-103
0452 3008B	Tapping Screw - M3x8	11-104
0452 3008B	Tapping Screw - M3x8	45-101
0452 3008B	Tapping Screw - M3x8	47-102
0452 3008B	Tapping Screw - M3x8	63-107
0452 3008B	Tapping Screw - M3x8	69-108
0452 3010B	Tapping Bind Screw - M3x10	13-103
0452 4008B	Tapping Bind Screw - M4x8	13-102
0452 4008B	Tapping Bind Screw - M4x8	37-102
0452 4008B	Tapping Bind Screw - M4x8	53-103
0452 4008B	Tapping Bind Screw - M4x8	59-107
0452 4010B	Tapping Bind Screw - M4x10	27-103
0452 4010B	Tapping Bind Screw - M4x10	53-105
0452 4010B	Tapping Bind Screw - M4x10	63-102
0453 4010B	Tapping Bind Screw - M4x10	61-102
0453 4010B	Tapping Bind Screw - M4x10	65-108

Part No.	Description	Page and Index No.
0453 4010B	Tapping Bind Screw - M4x10	67-105
0453 4010B	Tapping Bind Screw - M4x10	77-103
0574 0050B	Hexagonal Headless Screw - M4x5	57-109
0574 0060E	Hexagon Headless Set Screw - M4x6	63-105
0575 0050E	Hexagon Headless Set Screw - M5x5	21-110
0575 0050E	Hexagon Headless Set Screw - M5x5	23-108
0575 0080E	Hexagon Headless Set Screw - M5x8	65-104
0622 0100E	Spring Pin - 2x10mm	29-103
0720 0025E	Retaining Ring - M2.5	31-103
0720 0025E	Retaining Ring - M2.5	55-103
0720 0030B	Retaining Ring - M3	31-107
0720 0030B	Retaining Ring - M3	41-104
0720 0030B	Retaining Ring - M3	49-103
0720 0030B	Retaining Ring - M3	61-104
0720 0040B	Retaining Ring - M4	29-104
0720 0040B	Retaining Ring - M4	33-104
0720 0040B	Retaining Ring - M4	37-101
0720 0040B	Retaining Ring - M4	39-101
0720 0040B	Retaining Ring - M4	43-103
0720 0040B	Retaining Ring - M4	47-104
0720 0040B	Retaining Ring - M4	51-105
0720 0040B	Retaining Ring - M4	53-101
0720 0040B	Retaining Ring - M4	55-104
0720 0040B	Retaining Ring - M4	59-103
0720 0040B	Retaining Ring - M4	65-105
0720 0040B	Retaining Ring - M4	77-104
0720 0060B	Retaining Ring - M6	23-103
0720 0060B	Retaining Ring - M6	33-103
0720 0060B	Retaining Ring - M6	37-103
0720 0060B	Retaining Ring - M6	41-102
0720 0060B	Retaining Ring - M6	43-102
0720 0060B	Retaining Ring - M6	57-101
0720 0060B	Retaining Ring - M6	63-101
0720 0060B	Retaining Ring - M6	65-106
0720 0060B	Retaining Ring - M6	77-105

Part No.	Description	Page and Index No
0720 0060E	Retaining Ring - M6	17-105
0720 0060E	Retaining Ring - M6	31-104
0725 0200E	Retaining Ring C - M20	57-107
0734 0806D	Philips Truss Head Screw - M4x5	57-108
0801 0149	Philips Pan Head Screw - M4x6	21-109
0801 0149	Philips Pan Head Screw - M4x6	45-105
0801 0149	Philips Pan Head Screw - M4x6	69-105
0802 5094	Tapping Truss Head Screw - M4x8	11-103
0802 5094	Tapping Truss Head Screw - M4x8	13-101
0802 5237	Binding Self-tapping Screw - M4x10	29-105
0805 3104	Ball Bearing - 8x22x7mm	57- 33
0805 3368	Ball Bearing - 8 X 16 X 5mm	23-101
0805 3385	Bushing - 6mm	61-103
0805 3482	Ball Bearing - 8x14x3.5	41-101
0805 3482	Ball Bearing - 8x14x3.5	43-101
0805 3482	Ball Bearing - 8x14x3.5	65-102
0805 3491	Bearing - 10X26X9	63-108
0805 3497	Bushing - 8x12x3.5mm	65-103
0807 4123	Spacer - 6x13x1	59-101
0950 3005M	Philips Screw With Lock Washer M3x5	53-107
0951 3006W	Philips Screw With Flat Washer-M3x6	45-108
0951 3006W	Philips Screw With Flat Washer-M3x6	47-101
0951 4006B	Philips Screw With Washer - M4x6	21-107
0951 4006B	Philips Screw With Washer - M4x6	23-107
0951 4008B	Philips Screw With Washer - M4x8	55-101
0951 4010B	Philips Screw With Washer - M4x10	19-103
0951 5014W	Philips Screw W/h Flat Washer-M5x14	63-106
0952 3012B	Screw - M5X12	39-104
0952 4006B	Screw - Small Round - M4x6	37-104
0952 4006B	Screw - Small Round - M4x6	37-108
0952 4006B	Screw - Small Round - M4x6	39-102
0952 4006B	Screw - Small Round - M4x6	41-103
0952 4006B	Screw - Small Round - M4x6	49-101
0952 4006B	Screw - Small Round - M4x6	53-102
0952 4006B	Screw - Small Round - M4x6	55-102

Part No.	Description	Page and Index No.
0952 4006B	Screw - Small Round - M4x6	57-102
0952 4006B	Screw - Small Round - M4x6	57-104
0952 4006B	Screw - Small Round - M4x6	77-102
0952 4025B	Screw - M4X25	37-107
0960 4010B	Philips Flange Screw - M4 X 10	79-102
0965 3006B	Tapping Screw With Flat Washer M3x6	27-105
1005 0335	Earth Mark	75-102
1005 0952	Heat Synk	91-101
1101 0328	Connector Pin Contact	81-101
1101 0328	Connector Pin Contact	99-101
1101 0328	Connector Pin Contact	101-101
1101 0429	Test Pin	91-102
1102 0903	Connector - 4p	95-101
1102 0905	Connector - 5p	95-102
1102 0907	Connector - 6p	99-102
1102 0907	Connector - 6p	101-102
1102 0909	Connector - 7p	101-103
1102 0911	Connector - 8p	95-103
1102 0911	Connector - 8p	99-103
1102 0911	Connector - 8p	101-104
1102 0917	Pin Housing - 11p	95-104
1102 1119	Pin Connector - 5p	81-102
1102 1567	Connector - 2p	99-104
1102 2184	Connector - FCC-2A - Mep	95-105
1102 3597	Pin Header - 4p	85-101
1102 4052	Optional Connector	21-104
1102 4052	Optional Connector	69-106
1102 4201	Connector - 2p	91-103
1102 4201	Connector - 2p	101-105
1102 4202	Connector - 3p	91-104
1102 4202	Connector - 3p	95-106
1102 4203	Ct Header - 4p	85-102
1102 4203	Ct Header - 4p	91-105
1102 4203	Ct Header - 4p	95-107
1102 4203	Ct Header - 4p	99-105

Part No.	Description	Page and Index No
1102 4204	Ct Header - 5p	91-106
1102 4204	Ct Header - 5p	95-108
1102 4205	Ct Header- 6p	95-109
1102 4205	Ct Header- 6p	99-106
1102 4205	Ct Header- 6p	101-106
1102 4206	Connector - 7p	101-107
1102 4207	Connector - 8p	95-110
1102 4207	Connector - 8p	99-107
1102 4208	Connector - 9p	91-107
1102 4208	Connector - 9p	95-111
1102 4208	Connector - 9p	99-108
1102 4208	Connector - 9p	101-108
1102 4209	Ct Header - 10p	101-109
1102 4210	Connector - 11p	91-108
1102 4210	Connector - 11p	95-112
1102 4210	Connector - 11p	99-109
1102 4210	Connector - 11p	101-110
1102 4211	Ct Header - 12p	91-109
1102 4212	Ct Header - 15p	81-103
1102 4212	Ct Header - 15p	91-110
1102 4497	Connector - 13p	99-110
1102 4522	Connector - 20p	95-113
1102 4620	Ct Header - 3p	91-111
1102 4621	Ct Header - 4p	99-111
1102 4623	Ct Connector - 6p	99-112
1102 4628	Connector - 11p	95-114
1102 4628	Connector - 11p	99-113
1102 4635	Connector - 6p	95-115
1102 4640	Connector - 11p	95-116
1102 4645	Ct Connector - 4p	95-117
1102 4652	Connector - 11p	95-118
1102 5003	Fiber Connector - DC1002 - 2p	91-112
1102 5007	Ct Header - 14p	91-113
1102 5144	Connector - 2p	29-101
1102 5181	Connector - 50p	91-114

Part No.	Description	Page and Index No.
1102 5195	Connector - 5p	29-102
1102 5304	Connector - 5p	81-104
1102 5306	Connector - 7p	85-103
1102 5306	Connector - 7p	95-119
1102 5375	Connector - 50p	85-104
1102 5375	Connector - 50p	95-120
1102 5718	Optical Fiber Connector	85-105
1102 5718	Optical Fiber Connector	91-115
1102 5718	Optical Fiber Connector	95-121
1102 5981	Fiber Connector	21-105
1102 6295	Connector - 2p	85-106
1102 6579	Receptacle Connector	91-116
1102 6592	Connector - 8p	99-114
1102 6593	Connector - 9p	91-117
1102 6594	Connector - 10p	101-111
1102 6597	Connector - 13p	95-122
1102 7127	Connector - 100p	85-107
1102 7151	Connector - 40p	91-118
1102 7152	Plug - PHEC120P-S110	91-119
1102 7195	Connector - 50p	97-101
1102 7196	Connector - 50p	85-108
1103 0428	Connector - 20p	95-123
1103 1768	Connector - 2p	101-112
1104 0307	Fuse Holder	85-167
1104 0307	Fuse Holder	95-124
1104 0376	IC Socket - 40p - DICF-40CS-E	91-120
1104 0376	IC Socket - 40p - DICF-40CS-E	95-125
1104 0589	Dip Socket : 32p	95-126
1104 0612	Connector - 40p	85-109
1104 0683	Socket - IMSA-9206H-GF	85-110
1105 0199	Clamp	23-109
1105 0199	Clamp	33-101
1105 0199	Clamp	51-101
1105 0199	Clamp	71-107
1105 0199	Clamp	73-104

Part No.	Description	Page and Index No
1105 0234	Clamp	25-103
1105 0243	Wire Saddle	33-102
1105 0243	Wire Saddle	67-106
1105 0246	Spacer	21-113
1105 0291	Wire Saddle	21-103
1105 0291	Wire Saddle	45-104
1105 0291	Wire Saddle	71-108
1105 0291	Wire Saddle	73-105
1105 0292	Wire Saddle	75-105
1105 0310	Wire Clamp	29-111
1105 0310	Wire Clamp	37-106
1105 0310	Wire Clamp	65-110
1105 0310	Wire Clamp	67-102
1105 0310	Wire Clamp	69-102
1105 0310	Wire Clamp	73-107
1105 0310	Wire Clamp	75-103
1105 0316	Clamp	69-101
1105 0316	Clamp	73-106
1105 0328	Harness Clamp - ES-0505	23-102
1105 0328	Harness Clamp - ES-0505	67-107
1105 0334	Edge - 17	73-102
1105 0399	Card Spacer - Mps-10-0	67-108
1105 0421	Card Spacer - Mps-06-0	65-101
1106 0458	Bushing - 9.9mm	75-104
1107 0745	Fuse - 1A 250V	73-108
1107 0745	Fuse - 1A 250V	95-127
1107 0747	Fuse - 1.6A 250V	85-111
1204 1228	Switch	85-112
1204 1324	Dip Switch	95-128
1204 1543	Dip Switch	85-113
1204 1545	Main Switch	71-102
1204 2152	Dip Switch	85-114
1204 2221	Dip Switch - 8p	91-121
1204 2356	Micro Switch - AM51612A531	27-101
1204 2437	Interlock Switch	71-103

Part No.	Description	Page and Index No.
1206 0041	Lithium Cell - Br2330	97-102
1400 0382	Transistor - 2SA1037KR	91-122
1400 0398	Transistor - 2SC2412K	91-123
1400 0646	Transistor - 2SC3377Q	91-124
1401 0296	Transistor - 2SA1162Y	95-129
1401 0296	Transistor - 2SA1162Y	97-103
1401 0298	Transistor - 2SC2712Y	97-104
1401 0611	Diode - IS1588	99-115
1401 0611	Diode - IS1588	101-113
1401 0694	Zener Diode - RD6.8FB	95-130
1401 0696	Diode - VO6C	95-131
1401 0826	D 1SS181 85V 100MA	97-105
1401 0986	Transistor - UPA1552H	99-116
1401 1034	IC - 2SK366GR	95-132
1402 0477	Silicon Diode - 1SS187	95-133
1402 0492	Diode-array - DICA20	99-117
1402 0682	Zener Diode - RD3.6M	97-106
1402 0688	Diode	85-115
1402 0804	Silicon Diode - 45V - 0.3A	85-116
1402 1008	IC - HN2D01F	95-134
1402 1043	Diode - MA713	97-107
1402 1142	Diode Array - DAN217	91-125
1402 1205	IC - RL102F	81-105
1402 1270	Diode - EC11FS2	95-135
1402 1271	Diode - EA20QC04-F	85-117
1402 1323	Diode - UDZ5.6B	91-126
1403 0403	Diode - TLR223	91-127
1403 0416	LED - Red - TLR123	95-136
1403 0499	LED - Yellow	95-137
1403 0723	Photocoupler - Opic - PC900V	95-138
1407 1596	TTLIC - SN74LS14NS	95-139
1407 1597	TTLIC - SN74LS10NS	95-140
1407 1600	TTLIC - SN74LS244NS	95-141
1407 1878	IC - TC4053BF	95-142
1407 1880	TTLIC - SN74LS04NS	91-128

Part No.	Description	Page and Index No
1407 1880	TTLIC - SN74LS04NS	95-143
1407 1970	TTLIC - SN74LS07N	81-106
1407 2052	TTLIC - SN74LS74ANS	91-129
1407 2081	TTLIC - SN74LS08NS	95-144
1407 2142	TTLIC - 74F240SJ	91-130
1407 2143	TTLIC - 74F244SJ	91-131
1407 2143	TTLIC - 74F244SJ	95-145
1407 2144	TTLIC - 74F245SJ	91-132
1407 2144	TTLIC - 74F245SJ	95-146
1407 2187	TTLIC - SN74LS07NS	85-118
1407 2187	TTLIC - SN74LS07NS	91-133
1407 2187	TTLIC - SN74LS07NS	95-147
1407 2218	TTLIC - SN74LS06NS	91-134
1407 2231	IC - TD62308AF	91-135
1407 2231	IC - TD62308AF	95-148
1407 2231	IC - TD62308AF	99-118
1407 2231	IC - TD62308AF	101-114
1407 2247	TTL - SN74LS164NS	95-149
1407 2378	TTL - SN74ALS245ANS	91-136
1407 2378	TTL - SN74ALS245ANS	95-150
1407 2561	TTLIC 74F157ASJ	91-137
1407 2561	TTLIC 74F157ASJ	95-151
1407 2566	TTLIC - SN74LS166ANS	99-119
1407 2566	TTLIC - SN74LS166ANS	101-115
1407 2816	TTL - SN74ALS374ANS	91-138
1407 2879	CMOS ACT373	85-119
1407 3008	TTL - SN74ALS244CNS	91-139
1407 3197	IC - SN74ALS240ANS	91-140
1407 3257	Cmosic - TC74HC14AF	85-120
1407 3257	Cmosic - TC74HC14AF	99-120
1407 3257	Cmosic - TC74HC14AF	101-116
1407 3381	Cmos - IC - TC74HC4066AF	91-141
1407 3522	IC - TD62304AF	99-121
1407 3522	IC - TD62304AF	101-117
1407 3708	IC - SLA7026M	101-118

Part No.	Description	Page and Index No.
1407 3722	IC - TC74ACT04F	85-121
1407 3723	IC - TC74ACT08F	85-122
1407 3728	IC - TC74ACT244F	85-123
1407 3729	IC - TC74ACT245F	85-124
1407 3852	IC - MB89371AH	85-125
1407 3987	IC - TC74ACT32F	85-126
1407 4023	IC - M62353GP	91-142
1407 4092	IC - M66253FP	91-143
1407 4109	IC - CXD1175AM	91-144
1407 4114	IC - SN751177	85-127
1407 4137	IC - MM1035XF	95-152
1407 4147	IC - M66320FP	99-122
1407 4147	IC - M66320FP	101-119
1407 4150	EEPROM NM93C46M8	95-215
1407 4189	IC - Upd42280gu - 60	91-145
1407 4189	IC - Upd42280gu - 60	95-153
1407 4235	IC - SLA5011 LF802	81-107
1407 4236	IC - SLA5012 LF802	81-108
1407 4248	IC - NG80386SX-20	85-128
1407 4347	IC - SYM53CF96-2-100QPF	85-129
1407 4347	IC - SYM53CF96-2-100QPF	91-146
1407 4347	IC - SYM53CF96-2-100QPF	95-154
1407 4415	IC - TC7WU04F	91-147
1407 4536	IC - ICS1574	95-155
1407 4542	IC - RTC-6583	97-108
1407 4554	IC - SN74HC02NS	95-156
1407 4595	PLD EPM7032LC44-15	91- 16
1407 4599	IC - MB89255AH-PF-G-BND	95-157
1407 4645	MCU HD6437034F20	91- 6
1407 4657	IC - RS5ηF1050	91-148
1408 0306	IC - 78012AP	91-149
1408 0595	IC - NJM2904M	91-150
1408 0595	IC - NJM2904M	95-158
1408 0595	IC - NJM2904M	99-123
1408 0611	IC - 3771	85-130

Part No.	Description	Page and Index No
1408 0611	IC - 3771	91-151
1408 0759	Opeamp - NJM3403AM	95-159
1408 0875	Transistor-array - TD62382AF	95-160
1408 0920	Opeamp - NJM2902E	95-161
1408 1013	IC - Si - 7501	81-109
1408 1082	IC - M62354FP	91-152
1408 1082	IC - M62354FP	95-162
1408 1126	IC - BH9590FP-Y	91-153
1408 1163	Regurator - 20v	95-163
1408 1202	IC - BH9590FP-Y	85-131
1503 0418	Crystal Oscilator - 4.9152Mhz	85-132
1503 0635	Oscllator - AT-49 17.9Mhz	91-154
1503 0636	Oscllator - AT-51 19.6608Mhz	91-155
1503 0637	Oscllator - 1341-B1 25Mhz	91-156
1503 0637	Oscllator - 1341-B1 25Mhz	95-164
1503 0638	Oscllator - EX0-8f 40.000Mhz	85-133
1503 0639	Oscllator - EX0-8f 32.000 Mhz	85-134
1503 0640	Oscllator - MSD-49 16.0Mhz	85-135
1503 0641	Oscllator - SMD-49 14.31818Mhz	85-136
1503 0642	Oscllator - MSD-49 9.8304Mhz	85-137
1503 0700	Oscllator - HC-49/U-S 19.90656Mhz	95-165
1600 1381	Resistor - 56 P 5% 2W	91-157
1600 1508	Resistor - 15 P 5% 2W	91-158
1600 1669	Resistor - 1.0 P 5% 5W	81-110
1601 5267	Resistor - 0.68 P 5% 3W	101-120
1601 5298	Resistor - 130 P 5% 3W	101-121
1601 7508	Resistor Array - 4.7 KP	81-111
1601 8145	Variable Resistor - 5K P 0.5W	91-159
1602 0918	Filter - 270pf - Emi	91-160
1602 0934	RC Array - CR01-R	101-122
1602 7032	Filter - Emi - 2200pf	99-124
1602 7032	Filter - Emi - 2200pf	101-123
1602 7077	Capacitor - 270PF 10% 50V	81-112
1604 1387	Capacitor - 220 ηF 50V	81-113

Part No.	Description	Page and Index No.
1604 1818	Capacitor - S891C475M	91-161
1604 1993	Capacitor - 100ηF 25V	81-114
1604 2166	Capacitor - 100ηF 50V 20%	81-115
1604 2601	Condensor - 47ηF 20% 25V	85-138
1604 4365	Condensor - 470ηF 16V 20%	85-139
1604 4392	Condensor - 100ηF 50V	91-162
1605 0192	Capacitor - 470PF 50V	95-166
1605 0249	Capacitor - 2200pf 10%	101-124
1605 0258	Capacitor - 15P	81-116
1605 0283	Capacitor - 1ηF	99-125
1605 0407	Condensor - 1000pf 20% 50V	95-167
1605 0408	Condensor - 0.01ηF 20% 50V	95-168
1605 0410	Capacitor - 4700PF 20% 50V	97-109
1605 0435	Capacitor - 0.47ηF +80% -20% 16V	91-163
1605 0604	Capacitor - 0.1ηF 50V	91-164
1605 0632	Condensor - 0.1ηF +80% -20%	85-140
1605 0632	Capacitor - 0.1[F +80 -20%	97-110
1605 0636	Capacitor - 0.1ηF	81-117
1605 0636	Capacitor - 0.1ηF	95-169
1605 0636	Capacitor - 0.1ηF	97-111
1605 0636	Capacitor - 0.1ηF	99-126
1605 0636	Capacitor - 0.1ηF	101-125
1605 0684	Capacitor - 16PF	95-170
1605 0853	Condensor - 1ηF +80/20% 16V	85-141
1606 1131	Capacitor - 10PF 5%	85-142
1606 1135	Capacitor - 470PF 50V	81-118
1606 1135	Capacitor - 470PF 50V	97-112
1606 1135	Capacitor - 470PF 50V	101-126
1606 1139	Capacitor - 0.01ηF 20%	99-127
1606 1139	Capacitor - 0.01ηF 20%	101-127
1606 1537	Capacitor - 1000PF 50V	99-128
1606 1537	Capacitor - 1000PF 50V	101-128
1607 0280	Inductor - Blm41	91-165

Part No.	Description	Page and Index No
1607 0317	Ferrite Core - ESD-R-19	69-109
1607 0449	Ferrite Core - BLM21B05SPB	91-166
1607 0477	Coil - BLM21A121SPB	95-171
1607 0494	IC - LALO4NA220K	91-167
1607 0672	Ferrite Core	19- 16
1607 0814	Blm41p800spb	99-129
1607 0814	Blm41p800spb	101-129
1607 0815	Blm41p600spb	95-172
1607 0819	Nfa81r00c221	95-173
1607 0820	Nfa81r10c223	95-174
1630 1101	Resistor - 100 P 1/4W 5%	95-175
1630 1121	Resistor - 120P 5% 1/8W	85-143
1630 1151	Resistor - 150 P 5% 1/4W	95-176
1630 1331	Resistor - 330 P 5%B1/4W	91-168
1630 2100	Resistor - 10P 1/8W 5%	99-130
1630 2100	Resistor - 10P 1/8W 5%	101-130
1630 2101	Resistor - 100P 1/8W	99-131
1630 2101	Resistor - 100P 1/8W	101-131
1630 2102	Resistor - 1K P 1/8W 5%	99-132
1630 2102	Resistor - 1K P 1/8W 5%	101-132
1630 2103	Resistor - 10K P 1/8W	99-133
1630 2103	Resistor - 10K P 1/8W	101-133
1630 2104	Resistor - 100K P 1/8W 5%	99-134
1630 2121	Resistor - 120 P 5% 1/8W	91-169
1630 2121	Resistor - 120 P 5% 1/8W	95-177
1630 2241	Resistor - 240P	99-135
1630 2242	Resistor - 2.4KP 1/8W	101-134
1630 2271	Resistor - 270P - 1/8W	95-178
1630 2471	Resistor - 470P 1/8W 5%	95-179
1630 2472	Resistor - 4.7K P 1/8W 5%	99-136
1630 2472	Resistor - 4.7K P 1/8W 5%	101-135
1630 2473	Resistor - 47KP 1/8W 5%	99-137
1630 2473	Resistor - 47KP 1/8W 5%	101-136

Part No.	Description	Page and Index No.
1630 3100	Resistor - 10 P 5% 1/10W	85-144
1630 3100	Resistor - 10 P 5% 1/10W	95-180
1630 3101	Resistor - 100P - 1/10W	81-119
1630 3101	Resistor - 100P - 1/10W	85-145
1630 3101	Resistor - 100P - 1/10W	91-170
1630 3101	Resistor - 100P - 1/10W	95-181
1630 3102	Resistor - 1KP 1/10W 5%	81-120
1630 3102	Resistor - 1KP 1/10W 5%	85-146
1630 3102	Resistor - 1KP 1/10W 5%	91-171
1630 3102	Resistor - 1KP 1/10W 5%	95-182
1630 3103	Resistor - 10KP 1/10W 5%	81-121
1630 3103	Resistor - 10KP 1/10W 5%	85-147
1630 3103	Resistor - 10KP 1/10W 5%	91-172
1630 3103	Resistor - 10KP 1/10W 5%	95-183
1630 3103	Resistor - 10KP 1/10W 5%	97-113
1630 3104	Resistor - 100K P 1/10W 5%	95-184
1630 3112	Resistor - 1.1K P 5% 1/10W	97-114
1630 3123	Resistor - 12K P 5% 1/10W	95-185
1630 3152	Resistor - 1.5kP - 1/10W	91-173
1630 3152	Resistor - 1.5kP - 1/10W	97-115
1630 3154	Resistor - 150K 0HM 5% 1/10W	85-148
1630 3202	Resistor - 2KP -1/10W	81-122
1630 3202	Resistor - 2KP -1/10W	97-116
1630 3205	Resistor - 2M P 5% 1/10W	85-149
1630 3220	Resistor - 22 P 5% 1/10W	91-174
1630 3220	Resistor - 22 P 5% 1/10W	95-186
1630 3221	Resistor - 220 P 5% 1/10W	91-175
1630 3222	Resistor - 2.2KP 1/10W 5%	85-150
1630 3222	Resistor - 2.2KP 1/10W 5%	91-176
1630 3222	Resistor - 2.2KP 1/10W 5%	95-187
1630 3223	Resistor - 22kP - 1/10W	91-177
1630 3273	Resistor - 27kP - 1/10W	95-188

Part No.	Description	Page and Index No
1630 3301	Resistor - 300 P 5% 1/10W	85-151
1630 3330	Resistor - 33 P 5% 1/10W	85-152
1630 3330	Resistor - 33 P 5% 1/10W	91-178
1630 3330	Resistor - 33 P 5% 1/10W	95-189
1630 3332	Resistor - 3.3KP 1/10W 5%	91-179
1630 3333	Resistor - 33K P 5% 1/10W	95-190
1630 3391	Resistor - 390P 1/10W 5%	85-153
1630 3391	Resistor - 390P 1/10W 5%	95-191
1630 3470	Resistor - 47P 1/10W 5%	91-180
1630 3471	Resistor - 470P - 1/10W	85-154
1630 3471	Resistor - 470P - 1/10W	91-181
1630 3471	Resistor - 470P - 1/10W	95-192
1630 3472	Resistor - 4.7KP 1/10W 5%	85-155
1630 3472	Resistor - 4.7KP 1/10W 5%	91-182
1630 3472	Resistor - 4.7KP 1/10W 5%	95-193
1630 3472	Resistor - 4.7KP 1/10W 5%	97-117
1630 3473	Resistor - 47KP 1/10W 5%	85-156
1630 3473	Resistor - 47KP 1/10W 5%	91-183
1630 3473	Resistor - 47KP 1/10W 5%	95-194
1630 3512	Resistor - 5.10kP - 1/10W	95-195
1630 3681	Resistor - 680 P 5% 1/10W	91-184
1630 3752	Resistor - 7.5K P 5% 1/10W	85-157
1630 3821	Resistor - 820 P 5% 1/10W	91-185
1630 4103	Resistor - 10KP 5% 1/16W	91-186
1632 1003	Resistor - 100K P 1% 1/8W	99-138
1632 1100	Resistor - 110 P 1% 1/8W	101-137
1632 1203	Resistor - 120K P 1% 1/8W	99-139
1632 1503	Resistor - 150K P 1% 1/8W	99-140
1632 3000	Resistor - 300P 1% 1/8W	101-138
1632 3002	Resistor - 30K P 1% 1/8W	99-141
1633 0000	Resistor - 0P 1/10W:Jamper CHIP	85-158
1633 0000	Resistor - 0P 1/10W:Jamper CHIP	91-187

Part No.	Description	Page and Index No.
1633 0000	Resistor - 0P 1/10W:Jamper CHIP	95-196
1633 0000	Resistor - 0P 1/10W:Jamper CHIP	97-118
1633 1001	Resistor - 1K P 1% 1/10W	95-197
1633 1002	Resistor - 10K P 1% 1/10W	91-188
1633 1002	Resistor - 10K P 1% 1/10W	95-198
1633 1003	Resistor - 100K P 1% 1/10W	95-199
1633 1202	Resistor - 12K P 1% 1/10W	91-189
1633 1403	Resistor - 140K P 1% 1/10W	95-200
1633 1500	Resistor - 150 P 1% 1/10W	95-201
1633 2002	Resistor - 20K P 1% 1/10W	95-202
1633 2402	Resistor - 24K P 1% 1/10W	91-190
1633 2701	Resistor - 2.7K P 1% 1/10W	91-191
1633 3602	Resistor - 36K P 1% 1/10W	91-192
1633 3901	Resistor - 3.9 P 1% 1/10W	85-159
1633 3901	Resistor - 3.9 P 1% 1/10W	91-193
1633 4700	Registor - 470 P - 1% - 1/10w	91-194
1633 5102	Resistor - 51K P 1% 1/10W	91-195
1633 5231	Resistor - 5.23K P 1% 1/10W	95-203
1633 6800	Resistor - 680 P 1% 1/10W	91-196
1633 7501	Resistor - 7.5K P 1% 1/10W	91-197
1633 8062	Resistor - 80.6K P 1% 1/10W	95-204
1633 8201	Resistob - 8.2k P 1% 1/10w	91-198
1633 9101	Resistor - 9.1K P 1/10W	85-160
1633 9102	Resistor - 91K P 1% 1/10W	91-199
1640 0101	Capacitor - 100ηF 10V	91-200
1640 2470	Capacitor - 47ηF 20% 25V	91-201
1640 5100	Capacitor - 10ηF 20% 50V	95-205
1640 5101	Capacitor - 100ηF 20% 50V	95-206
1640 5101	Capacitor - 100ηF 20% 50V	99-142
1640 5101	Capacitor - 100ηF 20% 50V	101-139
1640 5109	Capacitor - 1ηF - 20% - 50V	95-207
1640 5220	Capacitor - 22ηF 20% 50V	95-208

Part No.	Description	Page and Index No
1640 5229	Capacitor - 2.2ηF 20% 50V	95-209
1640 5470	Capacitor - 47ηF 20% 50V	95-210
1640 5478	Capacitor - 0.47ηF 20% 50V	95-211
1640 5479	Capacitor - 4.7ηF 20% 50V	95-212
1642 0470	Capacitor - 47ηF 20% 10V	91-202
1642 2101	Capacitor - 100 P 20% 25V	91-203
1642 2470	Capacitor - 47ηF 20% 25V	91-204
1643 5339	Capacitor - 3.3ηF 20% 50V	91-205
1644 0100	Capacitor - 10ηF 20% 10V	91-206
1644 1100	Capacitor - 10ηF 20% 16V	85-161
1644 1100	Capacitor - 10ηF 20% 16V	97-119
1644 1470	Capacitor - 47ηF 20% 16V	85-162
1644 2479	Capacitor - 4.7ηF 20% 25V	91-207
1644 5229	Capacitor - 2.2ηF 20% 50V	85-168
1660 3101	Capacitor - 100PF 50V	91-208
1660 3120	Capacitor - 12PF 5% 50V	91-209
1660 3150	Capacitor - 15PF 50V	91-210
1660 3220	Capacitor - 122PF 5% 50V	85-163
1660 3331	Capacitor - 330PF 5% 50V	85-164
1660 3471	Capacitor - 470PF 50V	85-165
1660 7103	Capacitor - 10000PF 50V	91-211
1660 9104	C - 0.1ηF 25V	91-212
1901 0030	IC - DRAM 4M 256KX16 80NS G5	85-166
1902 0006	IC - SRAM 256KX8 70NS G1	91-213
1902 0006	IC - SRAM 256KX8 70NS G1	95-213
1902 0013	IC - SRAM 256KX8 100NS G4	97-120
1904 0002	IC - SRAM 64KX8 20NS	91-214
1905 0025	UVEPROM 4M X16 120NS	85- 6
1905 0025	UVEPROM 4M X16 120NS	91- 8