RICOH	**Technical Bulletin**	**No. RTB-001**
SUBJECT: Service Manual Correction		DATE: Sept. 15, '96 PAGE: 1 of 4
PREPARED BY: N. Kaiya CHECKED BY: T. Inoue		FROM: 1st Field Information Dept. QAC
CLASSIFICATION: ☐ Action Required ☐ Troubleshooting ☐ Retrofit Information ■ Revision of service manual ☐ Information only ☐ Other		MODEL: Azalea

Please add the following between step 3 on page 3-7 and step 4 on page 3-8.

Language ROM Installation Procedure

NOTE:

The following procedure given by sub-steps numbered (1) through (6) are required **only for A166-26,27, A187-26,27 and A189-26,27 copiers**.

This procedure should be done **between steps 3 and 4** of the copier installation procedure.

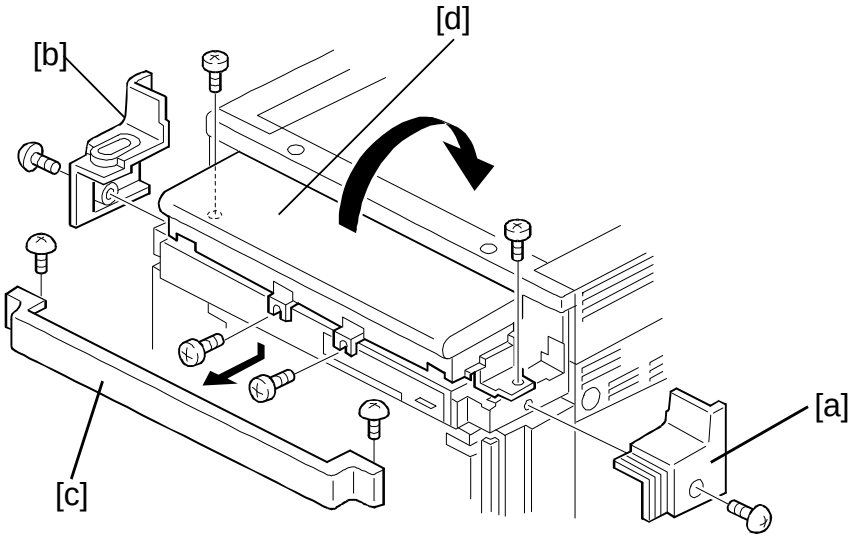

A166I597.wmf

(1) Remove the right upper bracket [a] (1 screw).

(2) Remove the left upper bracket [b] (1 screw).

(3) Remove the front upper cover [c] (2 screws).

(4) Remove the operation panel [d] (4 screws).

(5) **-For A166-26,27, A187-26,27 copiers-**
Turn the operation panel [a] upside-down and install the required language ROM [b] into the socket numbered IC40 on the SCU board.

-For A189-26, 27 copiers-
Turn the operation panel [c] upside-down and install the requred language ROMs [d] into the sockets numbered IC6, 7, 8 and 9 on the SCU board in accordance with the IC-number label on each IC.

-A166-26, 27, A187-26, 27 copiers-

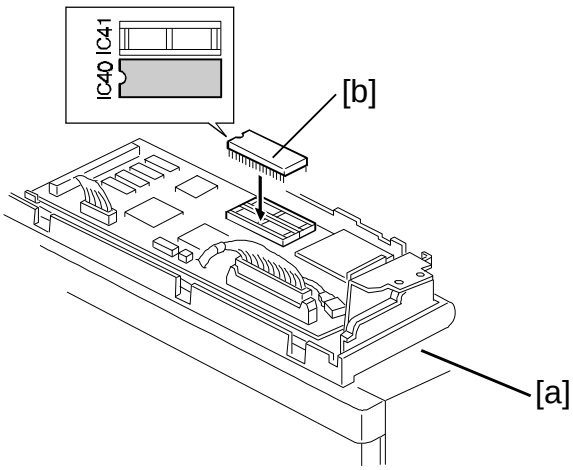

A166I598.wmf

-A189-26, 27 copiers-

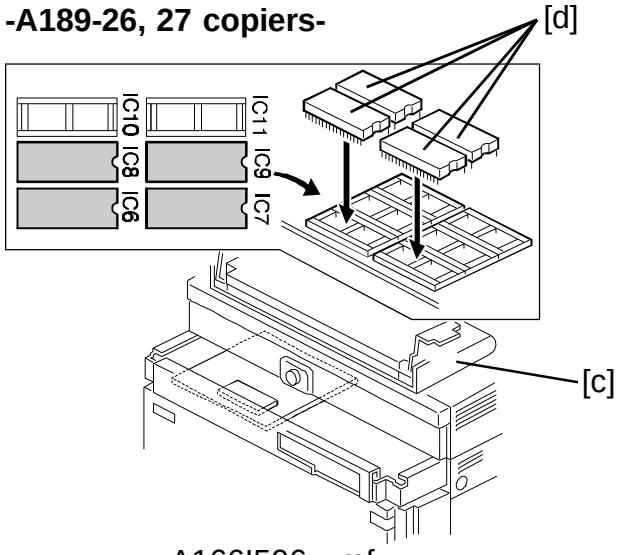

A166I596.wmf

(6) Reinstall the following parts.

- Operation panel
- Front upper cover
- Left upper cover
- Right upper cover

Please add the following procedure after step 79 on page 3-33.

80. **A189 copier only:**
(1) Enter SP mode.
(2) Enter SP 5-9-1 and input the following setting in accordance with the language which should be displayed on the operation panel.

1: English (NA)	2: English (EU)	3: German (EU)
4: French (EU)	5: French (NA)	6: Italian (EU)
7: Spanish (EU)	8: Danish (EU)	9: Norwegian (EU)
10: Swedish (EU)	11: Dutch (EU)	12: Portuguese (EU)
13: Czech (EU)	14: Spanish (NA)	15: Portuguese (NA)

NOTE: 1) When the setting is NA, original size detection is set to LT/DLT version.

2) When the setting is EU, original size detection is set to A4/A3 version.

Please add the following information to appendix 2-30.

1st	2nd	3rd	Display	Function	Default, x Uni ( ): For Europe	Setting / Range	Comments	Report
5	9	1	Language Setting **(A189 copier only)**	Selects the language used on the operation panel display (except for SP mode guidance)	1	1: English (NA) 2: English (EU) 3: German (EU) 4: French (EU) 5: French (NA) 6: Italian (EU) 7: Spanish (EU) 8: Danish (EU) 9: Norwegian (EU) 10: Swedish (EU) 11: Dutch (EU) 12: Portuguese (EU) 13: Czech (EU) 14: Spanish (NA) 15: Portuguese (NA)	1. When the setting is NA, original size detection is set to LT/DLT version 2. When the setting is EU, original size detection is set to A4/A3 version.	O

Please replace page 3-50 with the following.

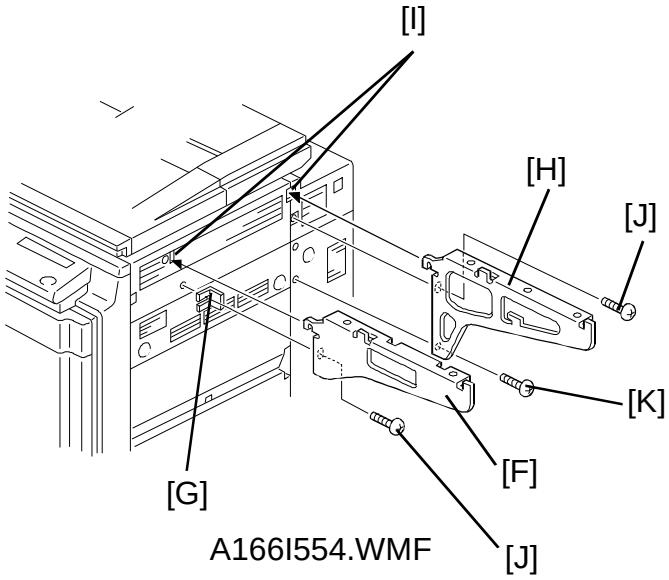

A166I554.WMF

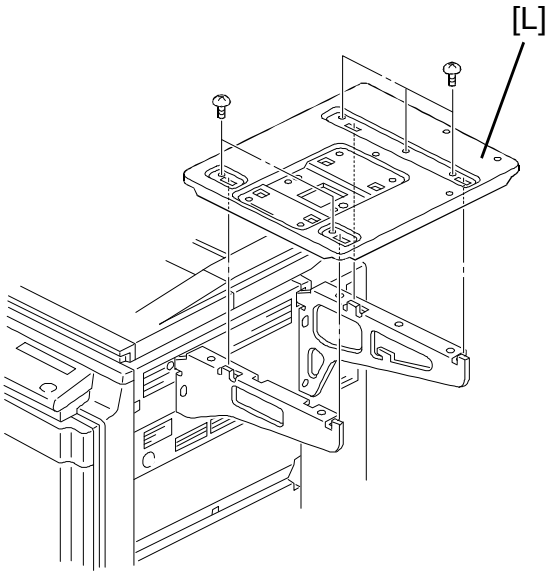

A166I555.WMF

5. Reinstall the following outer covers:
   (1) Upper right cover
   (2) Upper rear cover

6. Mount the two cantilevers [F] and [G] in the openings [I].

7. Fasten the cantilever [F] ([J]: 1 M4 x 13 screw and 1 spacer [G]).

8. Fasten the cantilever [H] ([J]: M4 x 13 screw, [K]: M4 x 8 screw).

9. Place the table [L] on the cantilevers. Then fasten it with five M4 x 8 screws.

RICOH **T**echnical **B**ulletin

Model: Azalea	Date: 28-Feb-97	No: 002	1/5
Subject: ROM Modification for Scanner / Printer Function		Prepared by: N. Kaiya	
From: QAC 1st Field Information Dept.		Checked by: T. Inoue	

Classification:			
	☐ Troubleshooting	☐ Part information	☐ Action required
	☐ Mechanical	☐ Electrical	☐ Service manual revision
	☐ Paper path	☐ Transmit/receive	☐ Retrofit information
	☒ Other ( )		

This RTB explains the necessary ROM modification to be made to the Printer Main Control Board and SCU to enable scanner and printer functions.

Printer Main Control Board ROM

1. For the machines produced before the cut-in serial number listed in the following Tables 1 and 2, please update with the ROM (P/N A6245092) in the Interface Kit Type D.
2. This printer main control board ROM will be used in the Azalea production from the serial numbers listed in Tables 1 and 2. It is not necessary to change the printer main control board ROM for the machines produced after these serial numbers.

NOTE:

The modification history of the printer main control ROM is as follows:

Basic Model (A166);

A1875441 -x/o A1895441 -x/o- A1895445 -x/o- A62445092

Auto Duplex Models (A187 and A189);

A1895445 -x/o- A6245092

Table 1: Printer Main Control ROM cut in serial numbers for Azalea Basic Models

MODEL NAME	V/ Hz	DESTINATION	CODE	SERIAL NUMBER
Nashua C503 Gestetner 2703	115V/ 60Hz	USA, CANADA	A166 - 10	From first mass production
Savin SDC103	120V/ 60Hz	USA, CANADA	A166 - 15	4A16120001
Aficio Color 2003	120V/ 60Hz	USA, CANADA	A166 - 17	A3966110050
Nashuatec C503 Gestetner 2703 Rex Rotary CC8403	220- 240V50Hz	EUROPE, etc.	A166 - 22	A156120001
Infotec 7212Z	220- 240V50Hz	EUROPE, etc.	A166 - 26	3J11260001
Aficio Color 2003	220- 240V50Hz	EUROPE, etc.	A166 - 27	A3966120080
Aficio Color 2003	220- 240V50Hz, 60Hz	Asia, Middle East	A166 - 29	A3966120294
Lanier 5603 DC	120/60Hz	USA	A166 - 55	From first mass production

Table 2: Printer Main Control ROM cut in serial numbers for Azalea Auto Duplex Models

MODEL NAME	V/ Hz	DESTINATION	CODE	SERIAL NUMBER
Nashua C503d Gestetner 2703d	120V/ 60Hz	USA, CANADA	A187 - 10	From first mass production
Savin SDC103A	120V/ 60Hz	USA, CANADA	A187 - 15	4A26120001
Aficio Color 2103	120V/ 60Hz	USA, CANADA	A187 - 17	A3976120001
Nashuatec C503d Gestetner 2703d Rex Rotary CC8403D	220- 240V50Hz	EUROPE, etc.	A187 - 22	A176120001
Infotec 7212DZ	220- 240V50Hz	EUROPE, etc.	A187 - 26	3J21260001
Aficio Color 2103	220- 240V50Hz	EUROPE, etc.	A187 - 27	A3976120055
Aficio Color 2103	220- 240V50Hz, 60Hz	Asia, Middle East	A187 - 29	A3976120075
Lanier 5603DC	120V / 60Hz	USA	A187 - 55	From first mass production
Nashua C503de Gestetner 2703de	120V/ 60Hz	USA, CANADA	A189 - 10	From first mass production
Savin SDC103E	120V/ 60Hz	USA, CANADA	A189 - 15	4A36120001
Aficio Color 2230	120V/ 60Hz	USA, CANADA	A189 - 17	A3996120001
Nashuatec C503d Gestetner 2703d Rex Rotary CC8403D	220- 240V50Hz	EUROPE, etc.	A189 - 22	A197010001
Infotec 7212EZ	220- 240V50Hz	EUROPE, etc.	A189 - 26	3J30170001
Aficio Color 2203	220- 240V50Hz	EUROPE, etc.	A189 - 27	A3996120120
Aficio Color 2203	220- 240V50Hz, 60Hz	Asia, Middle East	A189 - 29	A3996120229
Lanier 5603DC	120V / 60Hz	USA	A189 - 55	From first mass production

SCU ROM

The following SCU ROMs originally equipped with the machine must be updated as shown in Tables 3 and 4.

Table 3: SCU ROM Modification for Azalea Basic Models

MODEL NAME	CODE	P/N of SCU ROM	
		In the machine	Replace with
Savin SDC103	A166 - 15	A1875285	A1875295
Aficio Color 2003	A166 - 17	A1875285	A1875295
Nashuatec C503 Gestetner 2703 Rex Rotary CC8403	A166 - 22	A1875275	A6355202
Aficio Color 2003	A166 - 27	A1875275	A6355202

Table 4: SCU ROM Modification for Azalea Auto Duplex Models

		P/N of the SCU ROM	
MODEL NAME	CODE	In the machine	Replace with
Savin SDC103A	A187 - 15	A1875285	A1875295
Aficio Color 2103	A187 - 17	A1875285	A1875295
Nashuatec C503d Gestetner 2703d Rex Rotary CC8403D	A187 - 22	A1875275	A6355202
Aficio Color 2103	A187 - 29	A1875275	A6355202
Savin SDC103E	A189 - 15	A1895291 or A1635121 A1895292 or A1635122 A1895293 or A1635123 A1895294 or A1635124	A1895301 A1895302 A1895303 A1895304
Aficio Color 2203	A189 - 17	A1895291 or A1635121 A1895292 or A1635122 A1895293 or A1635123 A1895294 or A1635124	A1895301 A1895302 A1895303 A1895304
Nashuatec C503de Gestetner 2703de Rex Rotary CC8403D	A189 - 22	A1895281 A1895282 A1895283 A1895284	A6365202 A6365203 A6365204 A6365205
Aficio Color 2203	A189 - 29	A1895281 A1895282 A1895283 A1895284	A6365202 A6365203 A6365204 A6365205

The new SCU ROM is included in production machines from the serial numbers listed in Tables 5 and 6.

Table 5: SCU ROM cut in serial numbers for Azalea Basic Models

MODEL NAME	V/ Hz	DESTINATION	CODE	SERIAL NUMBER
Nashua C503 Gestetner 2703	115V/ 60Hz	USA, CANADA	A166 - 10	From first mass production
Savin SDC103	115V/ 60Hz	USA, CANADA	A166 - 15	4A16120001
Aficio Color 2003	115V/ 60Hz	USA, CANADA	A166 - 17	A3966110056
Nashuatec C503 Gestetner 2703 Rex Rotary CC8403	220- 240V50Hz	EUROPE, etc.	A166 - 22	A156120001
Aficio Color 2003	220- 240V50Hz	Asia, Middle East	A166 - 27	A3966120294
Lanier 5603 DC	120/60Hz	USA	A166 - 55	From first mass production

Table 6: SCU ROM cut in serial numbers for Azalea Auto Duplex Models

MODEL NAME	V/ Hz	DESTINATION	CODE	SERIAL NUMBER
Nashua C503d Gestetner 2703d	120V/ 60Hz	USA, CANADA	A187 - 10	From first mass production
Savin SDC103A	120V/ 60Hz	USA, CANADA	A187 - 15	4A26120001
Aficio Color 2103	120V/ 60Hz	USA, CANADA	A187 - 17	A3976120001
Nashuatec C503d Gestetner 2703d Rex Rotary CC8403D	220- 240V50Hz	EUROPE, etc.	A187 - 22	A176120001
Aficio Color 2103	220- 240V50Hz, 60Hz	Asia, Middle East	A187 - 29	A3976120075
Lanier 5603DC	120V/ 60Hz	USA	A187 - 55	From first mass production
Nashua C503de Gestetner 2703de	120V/ 60Hz	USA, CANADA	A189 - 10	From first mass production
Savin SDC103E	120V/ 60Hz	USA, CANADA	A189 - 15	4A37010001
Aficio Color 2203	120V/ 60Hz	USA, CANADA	A189 - 17	A3997010001
Nashuatec C503d Gestetner 2703d Rex Rotary CC8403D	220- 240V50Hz	EUROPE, etc.	A189 - 22	A197010005
Aficio Color 2203	220- 240V50Hz, 60Hz	Asia, Middle East	A189 - 29	3997010201
Lanier 5603DC	120V/ 60Hz	USA	A189 - 55	From first mass production

For the following models which do not have SCU ROMs installed during production, please use the Language Guidance Type N2 or the Language Guidance Type O2, as indicated in Table 7.

Table 7: Necessary Language Guidance Type

Model Name	Model Code	Guidance Type
Aficio Color 2003	A166-27	Guidance Type N2
Infotec 7212Z	A166-26	Guidance Type N2
Aficio Color 2103	A187-27	Guidance Type N2
Infotec 7212DZ	A187-26	Guidance Type N2
Aficio Color 2203	A189-27	Guidance Type O2
Infotec 7212EZ	A189-26	Guidance Type O2

Model: Azalea	Date: 15-Mar-97	No: 3
Subject: Paper Creasing in Duplex Mode	Prepared by: N. Kaiya T. Inoue	
From: QAC 1st Field Information Dept.	Checked by: T. Inoue	

Classification:			
	☒ Troubleshooting	☐ Part information	☐ Action required
	☐ Mechanical	☐ Electrical	☒ Service manual revision
	☐ Paper path	☐ Transmit/receive	☐ Retrofit information
	☐ Other ( )		

This RTB explains the countermeasure for paper creasing in duplex mode. The problem was found during our product test and so far it has not been reported from the field.

PROBLEM

Paper creasing on the back side of duplex copies. The problem is likely to occur under the following conditions.

- High humidity
- A3, DLT or A4 lengthwise, LT lengthwise
- When the face side has a large solid area with blank margins around it.

CAUSE

When copying the back side in duplex mode, the paper feeding speed over the pressure roller differs for solid image areas and blank areas. The difference of friction with the pressure roller may cause this symptom. (Friction : Image area > Blank area).

Therefore, if the face side copy has a large solid image with blank margins at both sides, the sides of the paper will feed slower than the middle part, causing the paper to crease in the middle of the trailing half.

COUNTERMEASURE

1. We have tested various combinations of nip band width and configurations of the hot roller and the pressure roller (concave). As a result, the following condition was found to be the optimum to counteract this problem.

	Old	New
Nip Band Width	6.5 ±0.5 mm	5.0 mm ~ 5.5 mm (front to rear deviation within 0.5 mm)
Hot Roller	No Change	
Pressure Roller Concave	+0.01 ±0.01 mm	+0.05 ±0.01 mm

2. Due to the change in nip band width, the following two changes are made.
   - The fusing lamp has been changed. The new lamp heats the front half more strongly, since fusing ability became inferior in this part.
   - The fusing and paper exit unit (P/N A1664350) has been changed because the change in nip band width slightly raised the paper path, and an OHP transparency might hit the tip of the paper exit guide. The part number of the fusing and paper exit unit is not changed since only a few old parts have been shipped.

3. In addition, countermeasures are added for the following two side effects which were found during our test.

   Blurred image

   This problem may appear when non-recommended paper copy is used for duplex full color copying. The blurred image is likely to occur when the difference of nip band width between the center and the sides becomes large. Because this difference of nip band width affects the slackness of the paper as it enters the nip band, if the paper is too slack, the paper touches the hot roller before entering the nip band. Therefore, the image will be rubbed, causing the blurred image.
   The paper entrance guide has been modified to lower the paper path, preventing the paper from touching the hot roller surface before entering the nip band.

   Scratched Image

   If the paper becomes too slack before entering the fusing unit, the paper will come into contact with the upper fusing entrance guide, causing a scratched image.
   Four spurs are added on the oil sump to prevent the paper from touching the upper fusing entrance guide.

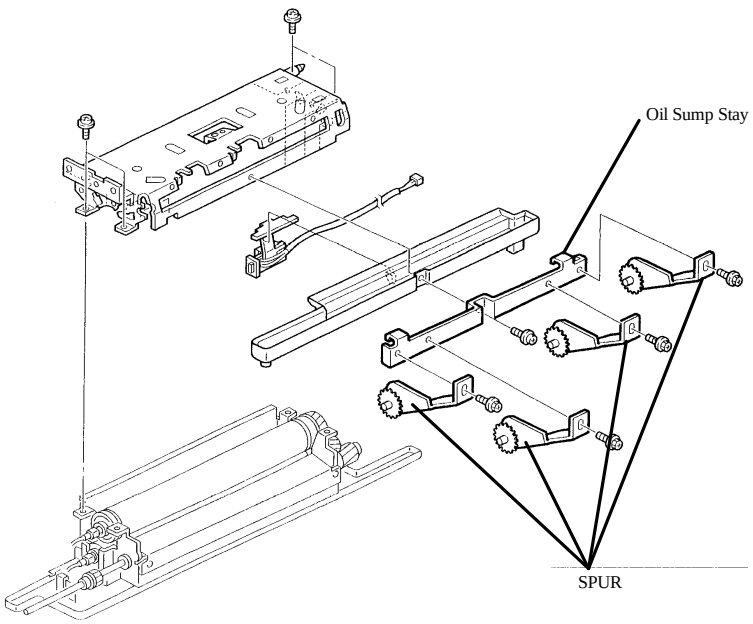

				Parts Catalog	
Old P/N	New P/N	Description	Quantity	Page	Index
A1664022	A1664034	Fusing Unit (115V)	1 - 1	53	*
A1664032	A1664043	Fusing Unit (220V)	1 - 1	53	*
AE020063	AE020064	Pressure Roller	1 - 1	57	17
AX430032	AX430041	Fusing Lamp - 120V 400W	1 - 1	57	15
AX430033	AX430042	Fusing Lamp - 230V 400W	1 - 1	57	15
A1664110	A1664112	Fusing Entrance Guide	1 - 1	57	31
	A1664363	Oil Sump Stay	1 - 1	55	20
	A1664364	Spur	1 - 4	55	21

Modification Cut-in

Auto Duplex Models (A187, A189) : From first production

Basic Model (A166) : From December ’96 production (refer to MB No.4 for the serial numbers)

Fusing Unit Rollers for the Basic Model

The hot roller and pressure roller for Azalea have been modified as follows.

Production month	unit Aug. ‘96		Sept. - Nov. ‘96		Dec. ’96 onwards
Hot Roller	AE010013	x/o	AE010015		AE010015
Pressure Roller	AE020057	x/x (x/o as a set)	AE020063	x/x	AE020064

We will provide two types of pressure roller for Azalea. They are P/N AE020063 and P/N AE020064.
(The pressure roller P/N AE020057 is discontinued.) Please use these rollers as follows:

1. For machines produced in August ’96 and before, please use AE020063, but please make sure that you use the hot roller AE010015 at the same time.
2. For machines produced from September to November ’96, please use AE020063.
3. For machines produced in Dec. ’96 and onward, please use AE020064.

The old and new machines can be distinguished by the spur assembly attached to the fusing unit. The old and new pressure rollers can be distinguished by the lot number on the flange of the roller. The first two digits of the lot number represents the last two digits of the part number (63 or 64). In addition, we will add white paint to the front end of the AE020064 pressure roller for easier recognition.

Troubleshooting Information

The problem of duplex paper creasing or image blurring may occur in the field with the unit before the modification, but it may also appear due to incorrect pressure roller type or nip band adjustment. Please follow the troubleshooting procedure given below if these problems are found in the field.

Paper creasing in duplex mode

1. Check if the correct pressure roller is used. If P/N AE020063 is used in the new fusing unit, it may cause creasing.
2. Instruct the customer to copy the original with less solid areas first.
3. Widen the nip band width within the adjustment range. Note that the adjustment ranges are different between the old and the new units (see page 1 of this RTB).
4. Replace the fusing unit with a new type if it is an old type.

Blurred Image

1. Check if the correct pressure roller is used. If P/N AE020064 is used in the old fusing unit, it is likely to cause image blurring.
2. Narrow the nip band within the adjustment range. Note that the adjustment ranges are different between the old and the new fusing unit (see page 1 of this RTB).
3. If the machine was manufactured in or before September '96, replace the hot roller and pressure roller as follows:
   Hot Roller AE010013 → AE010015
   Pressure Roller AE020057 → AE020063
4. Replace the fusing unit with a new type if it is an old type.

Additional Information about Spurs

1. To do the fusing unit maintenance, the spurs need to be removed in many cases. The spurs can be removed as an assembly by one screw at the center and two hooks on the sides. Be careful not to damage the tips of the spurs.

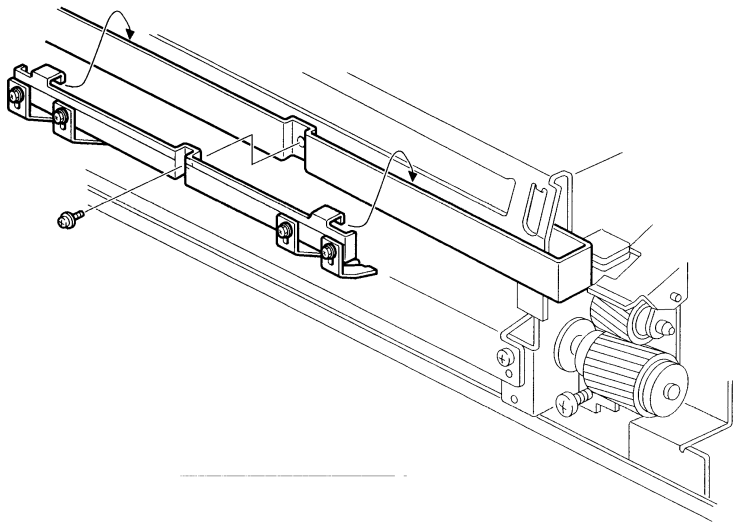

2. If the spurs are removed from the oil sump stay, it is necessary to align the edge of the spur bracket with the line on the oil sump stay when reinstalling them.

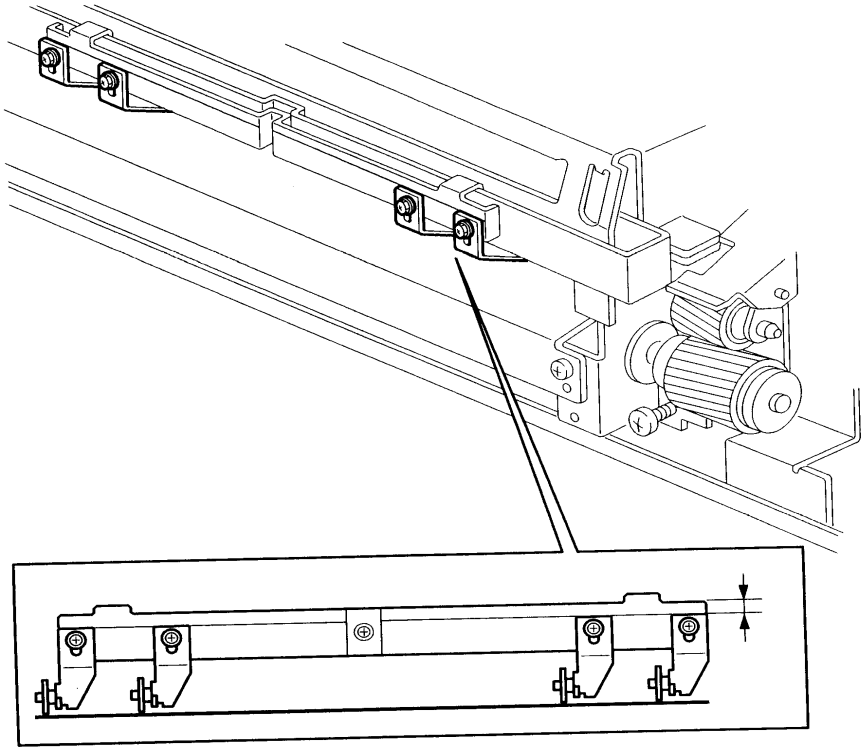

3. The spurs and oil sump stay have been improved so that the position of the spur bracket on the oil sump stay is fixed by a boss on the oil sump stay and a hole in the spur bracket. This modification has been made from the December ’96 production for the basic model (A166) and the January ’97 production for the auto duplex (A187) and the edit (A189) models. The part numbers of the spur and oil sump stay are not changed since old parts are not shipped as service parts.

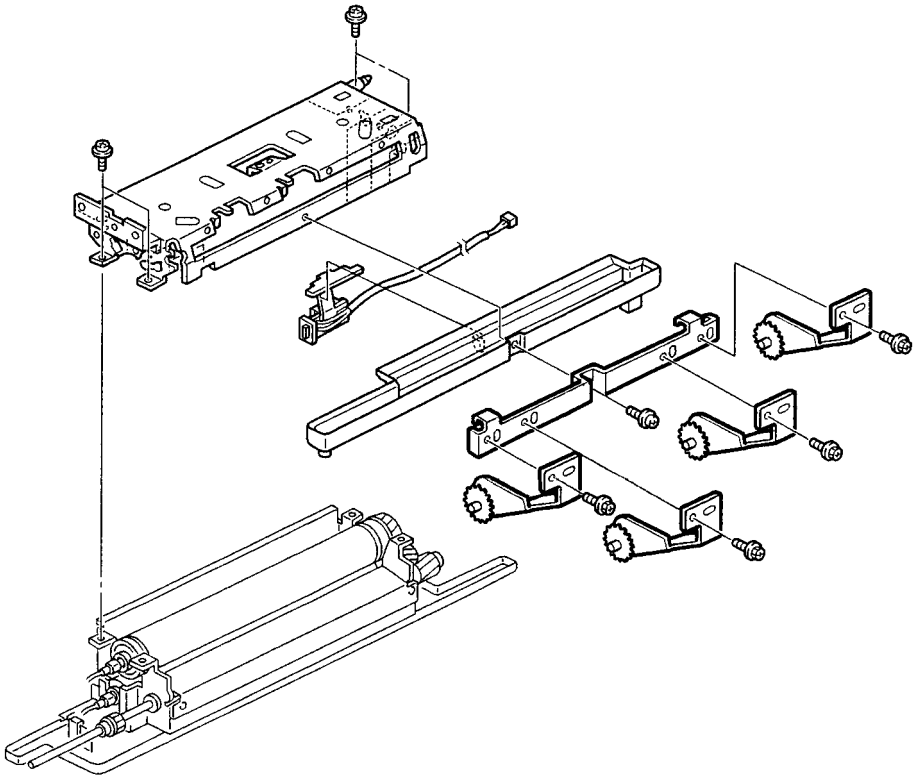

Model: Azalea	Date: 31-Mar-97	No: 4
Subject: Service Manual Correction	Prepared by: Y.Sasaki	
From: QAC 1st Field Information Dept.	Checked by: T. Inoue	

Classification:

- ☐ Troubleshooting
- ☒ Part information
- ☐ Action required
- ☐ Mechanical
- ☐ Electrical
- ☒ Service manual revision
- ☐ Paper path
- ☐ Transmit/receive
- ☐ Retrofit information
- ☐ Other ( )

When you replace the main control board, please make sure the dip switches are set as follows.

When replacing on an A187/A189 Copier, please be sure to turn the No. 2 switch (DP201) **ON** because on the service part, this switch is OFF for the A166 copier initially.

Otherwise, the auto x function will not work on the A187/A189 copiers.

Main Control Board (PCB6)

DPS201 No.	Function	Setting for A166	Setting for A187/A189	Service Parts
1	Not used	OFF	OFF	OFF
2	**Duplex set**	**OFF**	**ON**	**OFF**

The part number of the main control board is **A1895363** as of March 24,1997.

Please correct the point-to-point diagram in your service manual for the main control board as well.

Model: Azalea	Date: 30-Apr-97	No: 5
Subject: Self Diagnostic Code of SCU	Prepared by: N.Kaiya	
From: QAC 1st Field Information Dept.	Checked by: T. Inoue T. Inoue	

Classification:			
	☒ Troubleshooting	☐ Part information	☐ Action required
	☐ Mechanical	☐ Electrical	☒ Service manual revision
	☐ Paper path	☐ Transmit/receive	☐ Retrofit information
	☐ Other ( )		

When turning on the main switch, the machine may display one of the following self diagnostic codes.

E1: Timer Initialization Error
E2: Memory Check Error

These self diagnostic codes are displayed when the CPU detects an abnormal condition during the hardware check routine, which is the first routine the SCU performs right after the main power switch is turned on.

Troubleshooting

When E1 or E2 is displayed, turn the main switch off and on to check if the same code will be displayed. If yes, replace the SCU.