CS250 (A322)

PARTS CATALOG

INTRODUCTION

This chapter instructs you the numbers and names of parts on this machine.

INDEX to PARTS CATALOG

1.EXTERIOR (A322) 2
2.TRANSPORT SECTION 1 (A322)..... 4
3.TRANSPORT SECTION 2 (A322)..... 6
4.ELECTRICAL SECTION (A322)..... 8
5.MAIN CONTROL BOARD (A322) 10
6.MAIN HARNESS (A322) 12
7.DECAL AND DOCUMENT (A322) 14
PARTS INDEX 17

1. EXTERIOR (A322)

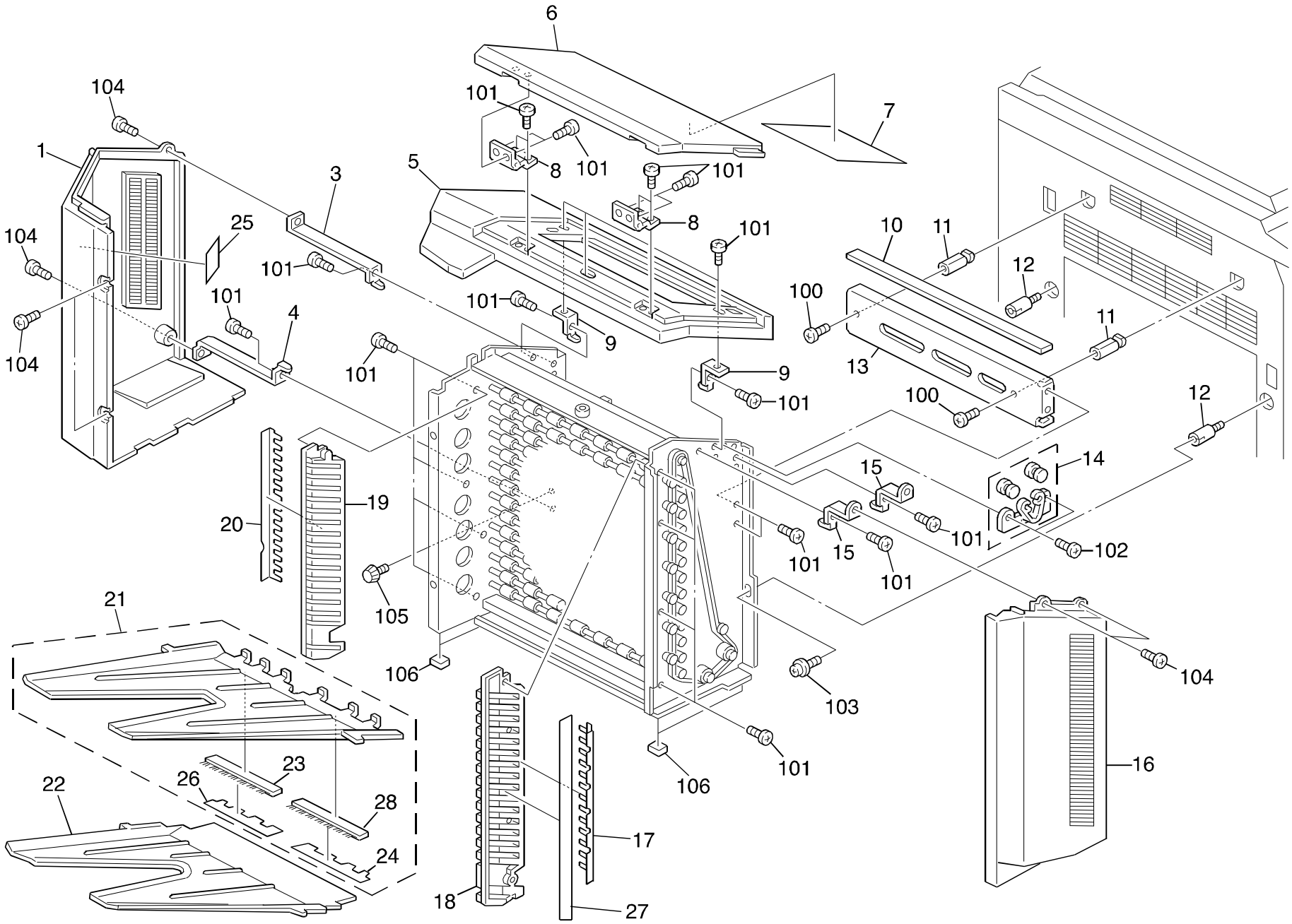

1. EXTERIOR (A322)

Index No.	Part No.	Description	Q ty Per Assembly
1	A611 6211	Rear Cover	1
3	5895 6103	Rear Cover Mounting Bracket	1
4	A455 6251	Rear Cover Bracket	1
5	A611 6311	Upper Cover	1
6	A611 6411	Door Cover	1
7	A322 7140	Decal - Misfeed Removal	1
8	6769 6142	Hinge - Jam Clearance Cover	2
9	6769 6136	Bracket - Top Cover	2
10	6769 1128	Mounting Stay Magnet	1
11	AA14 8017	Stud - 28mm	2
12	6769 1127	Lower Mounting Stud	2
13	A322 1411	Mounting Stay	1
14	5409 1238	Rotary Catch	1
15	5895 6101	Front Cover Mounting Bracket	2
16	A611 6111	Front Cover	1
17	5895 6151	Front Grounding Plate	1
18	A455 3110	Bin Holder	1
19	5895 6171	Rear Bin Holder	1
20	5895 6152	Rear Grounding Plate	1
21	A438 3411	Bin	15
22	6769 2522	Interrupt Bin	1
23	6769 2525	Antistatic Brush	16
24	A438 3412	Front Mylar Seal - Sorter Bin	16
25	A322 7100	Decal - Dip Switch	1
26	A438 3413	Rear Mylar Seal - Sorter Bin	16
27	A455 7211	Decal - Bin Number	1
28	6769 2519	Antistatic Brush	16

Index No.	Part No.	Description	Q ty Per Assembly
100	0314 0080B	Philips Pan Head Screw - M4x8	
101	0314 0060B	Philips Pan Head Screw - M4x6	
102	0313 0060B	Philips Pan Head Screw - M3x6	
103	0951 4006B	Philips Screw With Washer - M4x6	
104	0344 0080F	Philips Truss Head Screw - M4x8	
105	0803 0017	Knob Screw - M4x6.5	
106	0805 5009	Cushion	

2. TRANSPORT SECTION 1 (A322)

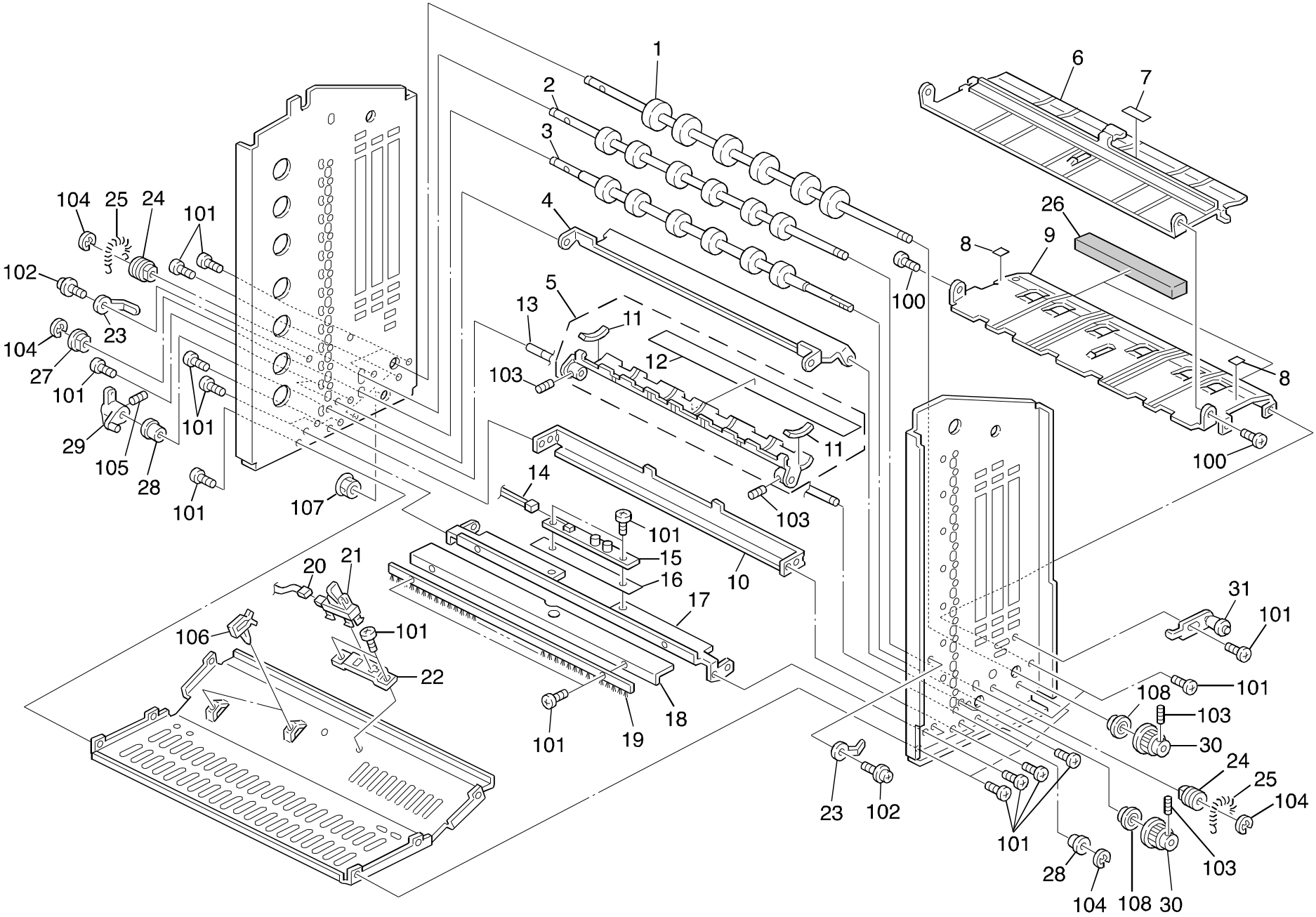

2. TRANSPORT SECTION 1 (A322)

Index No.	Part No.	Description	Q ty Per Assembly
1	AF02 3004	Transport Roller	1
2	A438 2811	Upper Turn Feed Roller	1
3	A438 2812	Lower Turn Feed Roller	1
4	6769 2261	Lower Turn Guide	1
5	A455 2711	Turn Guide	1
6	A322 2211	Upper Entrance Guide	1
7	A438 7102	Guide Plate Decal - 2	1
8	5917 1216	Rubber 8x10	2
9	A322 2111	Lower Entrance Guide	1
10	5895 2524	Interrupt Bin Bracket	1
11	6769 2286	Cushion - Turn Gate	2
12	A455 2721	Guide Plate	1
13	6769 2284	Shaft - Turn Gate	1
14	A322 5310	LED Sensor Harness	1
15	5910 5630	Jam Sensor Board - LED	1
16	5840 2416	Bushing - Pinch Roller	30
16	6769 2314	Mylar - Jam Sensor	1
17	6769 2312	Lower Support Bracket	1
18	5895 5821	Lower Sensor Cover	1
19	6769 2272	Antistatic Brush	1
20	A322 5320	Sensor Harness	1
21	AW02 0013	Inlet Sensor	1
22	A322 4615	Entrance Sensor Bracket	1
23	5895 6155	Grounding Plate Angle	2
24	5304 1608	Bushing - 6mm	2
25	5895 2141	Spring - Turn Feed Roller	2
26	A322 5500	Sponge	2
27	5053 0447	Bushing - 6mm	16
29	6769 3131	Lever - Bin Gate	15
30	AB03 0029	Pulley - 20T	2
31	6769 4161	Tightner - Timing Belt	1

Index No.	Part No.	Description	Q ty Per Assembly
100	0314 0080B	Philips Pan Head Screw - M4x8	
101	0314 0060B	Philips Pan Head Screw - M4x6	
102	0951 4006B	Philips Screw With Washer - M4x6	
103	0574 0040E	Hexagon Headless Set Screw - M4x4	
104	0720 0040B	Retaining Ring - M4	
105	0573 0050W	Hexagon Headless Set Screw - M3x5	
106	1105 0196	Harness Clamp	
107	1106 0193	Bushing - 7.9mm	
108	0741 3506	Ball Bearing - 6x12x4 mm	

3. TRANSPORT SECTION 2 (A322)

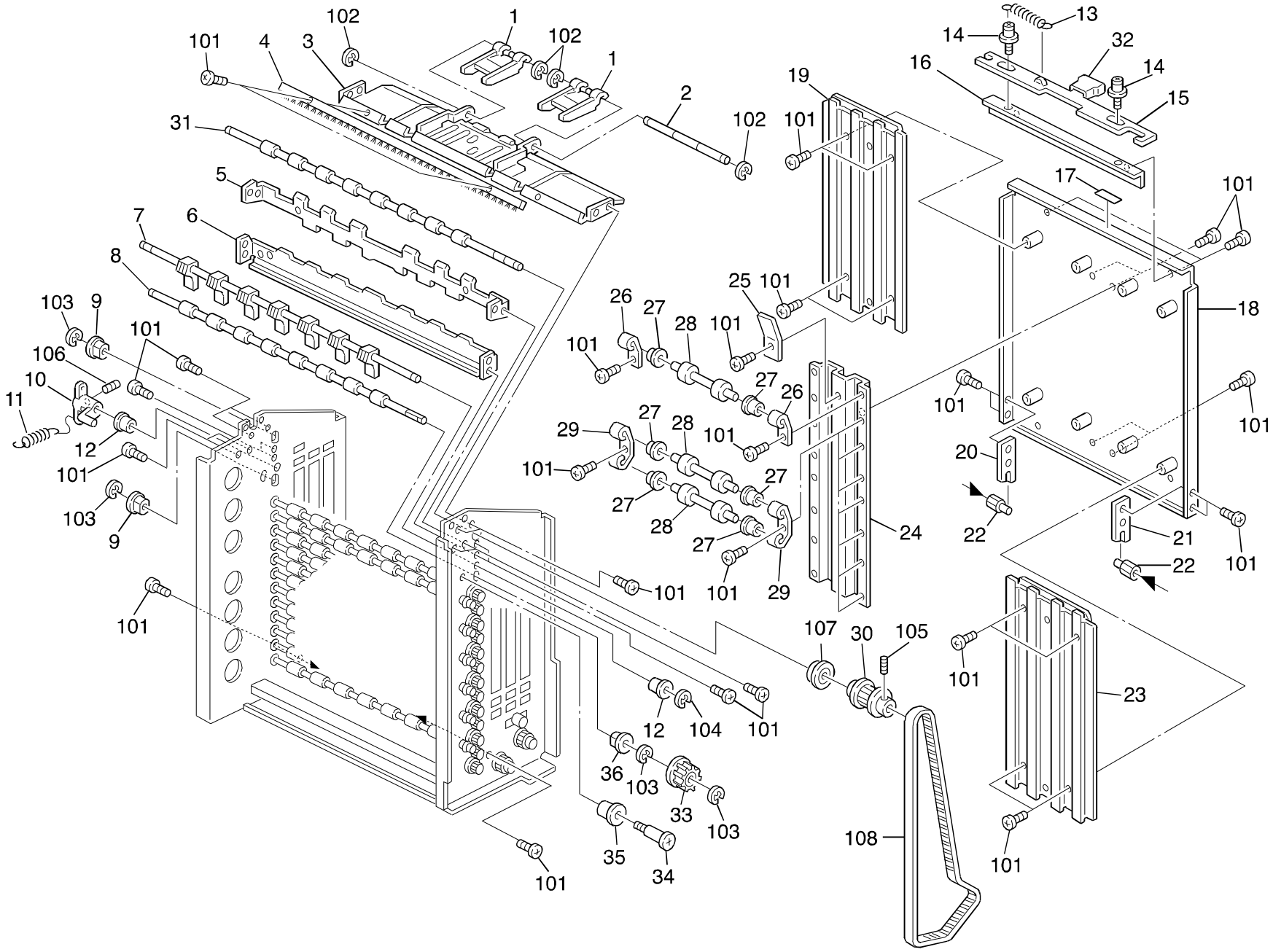

3. TRANSPORT SECTION 2 (A322)

Index No.	Part No.	Description	Q ty Per Assembly
1	6769 2257	Guide Plate	2
2	5895 2256	Turn Guide Shaft	1
3	6769 2252	Upper Turn Guide	1
4	6769 2272	Antistatic Brush	1
5	A322 2511	Bin Support Bracket	1
6	A322 2255	Gate Pawl Guide	1
7	6769 3111	Bin Gate	14
8	A438 2821	Lower Exit Roller	14
9	5053 0447	Bushing - 6mm	16
10	6769 3131	Lever - Bin Gate	15
11	6769 3132	Spring - Bin Gate	14
12	5840 2416	Bushing - Pinch Roller	30
13	6769 3613	Spring - Latch	1
14	6769 3612	Stud - Latch	2
15	A411 2531	Knob Cap	1
16	6769 3614	Angle - Latch	1
17	A438 7101	Guide Plate Decal - 1	1
18	A322 3251	Driven Roller Bracket	1
19	A455 2611	Front Driven Guide Plate	1
20	5895 3262	Rear Hinge Plate	1
21	5895 3261	Front Hinge Plate	1
22	5895 3263	Paper Transport Hinge Shaft	2
23	A455 2651	Rear Driven Guide Plate	1
24	5895 3221	Driven Roller Bracket	1
25	5895 3238	Driven Guide Plate - Upper	1
26	A455 2821	Spring Plate - Upper Driven Roller	2
27	AA08 0040	Bushing - 4mm	30
28	5895 3211	Exit Driven Roller	8
29	A455 2811	Spring Plate - Lower Driven Roller	14
30	A455 4111	Pulley - 17T	1
31	A438 2825	Exit Roller	1
32	6769 3611	Latch - Transport Bracket	1
33	AB03 0030	Pulley - 17Z	14
34	6769 4168	Stud - Tension Pulley	7
35	6769 4166	Tension Pulley - Timing Belt	8

Index No.	Part No.	Description	Q ty Per Assembly
36	5424 4142	Bushing - Cleaning Roller	14
101	0314 0060B	Philips Pan Head Screw - M4x6	
102	0720 0025B	Retaining Ring - M2.5	
103	0720 0040B	Retaining Ring - M4	
104	0720 0030B	Retaining Ring - M3	
105	0574 0040E	Hexagon Headless Set Screw - M4x4	
106	0573 0050W	Hexagon Headless Set Screw - M3x5	
107	0741 3506	Ball Bearing - 6x12x4 mm	
108	0806 5019	Timing Belt - 1005XL	

4. ELECTRICAL SECTION (A322)

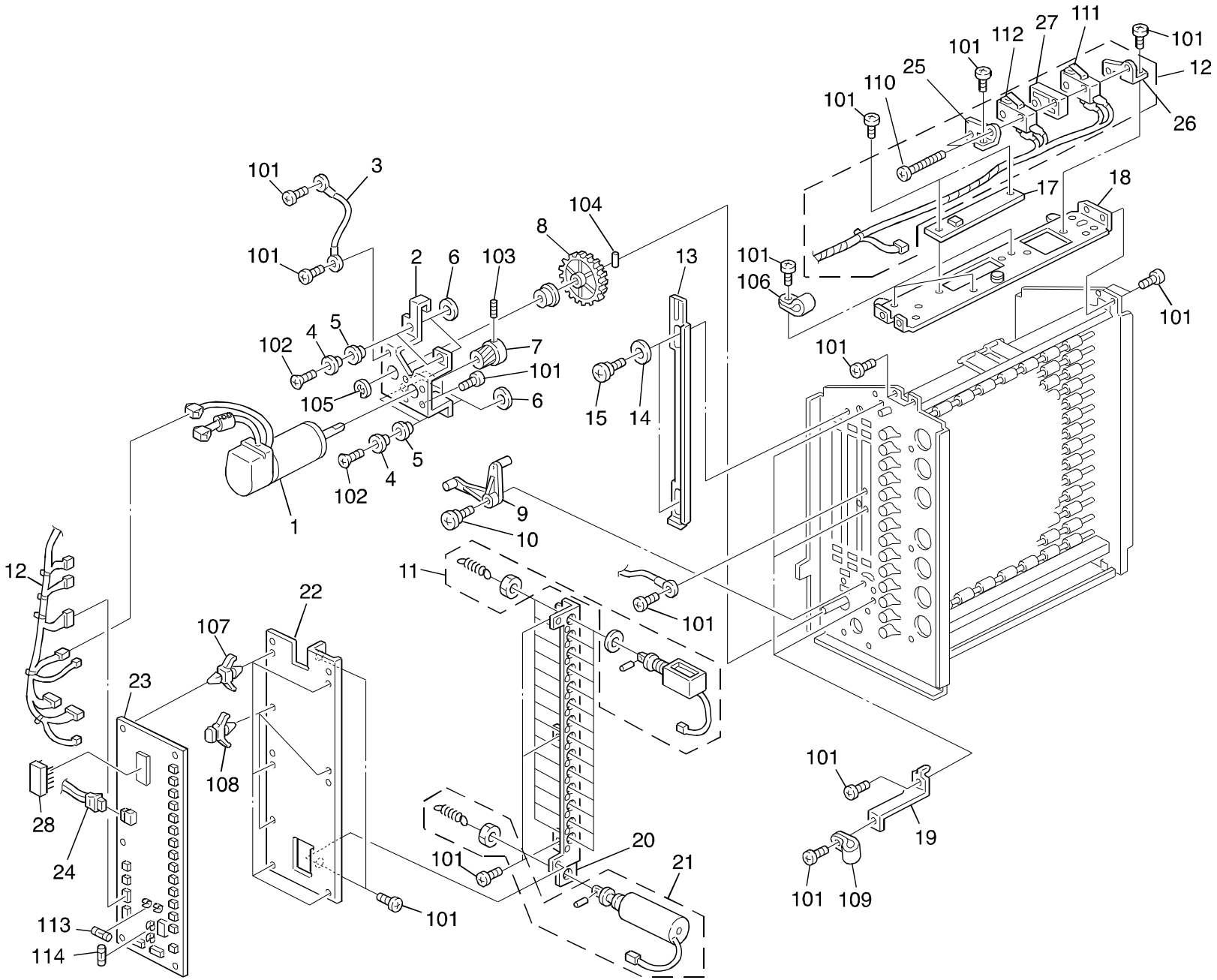

4. ELECTRICAL SECTION (A322)

Index No.	Part No.	Description	Q ty Per Assembly
1	A322 5250	Main Motor - 24V 19W	1
2	A322 4110	Motor Bracket	1
3	A377 5465	Grounding Harness	1
4	5936 2319	Collar - Vibration Damper	4
5	5936 2321	Rubber Bushing - Vibration Damper	4
6	5936 2320	Rubber Ring - Vibration Damper	4
7	AB01 1032	Gear - 17T	1
8	AB01 1031	Gear - 64T	1
9	5895 2163	Arm - Transport Guide Plate	1
10	5408 2035	Stepped Screw - M4	1
11	A322 5210	DC Solenoid	16
12	A322 5300	Main Harness	1
13	5895 2161	Lever - Transport Guide Plate	1
14	5895 2165	Washer - 6x12	2
15	5418 1813	Stepped Screw - M5 (R.FR)	2
17	A455 5430	Upper Sensor Board	1
18	A322 1131	Upper Sensor Bracket	1
19	6769 5655	Angle - Cord Clamp (70)	3
20	A455 3511	Solenoid Bracket	1
21	6769 3150	Turn Gate Solenoid	1
22	A455 4511	Main Control Board Bracket	1
23	A322 5100	Main Control Board	1
24	AW03 0016	Optical Fiber	1
25	6769 5632	Rear Bracket - Sorter Cover Switch	1
26	6769 5631	Bracket - Front Safety	1
27	A455 4531	Spacer	1
28	A322 5103	IC - D27256	1

Index No.	Part No.	Description	Q ty Per Assembly
101	0314 0060B	Philips Pan Head Screw - M4x6	
102	0313 0060B	Philips Pan Head Screw - M3x6	
103	0574 0040E	Hexagon Headless Set Screw - M4x4	
104	0632 0140E	Parallel Pin - M2x14	
105	0720 0040B	Retaining Ring - M4	
106	1105 0005	Nylon Clamp - 3n	
107	1105 0192	Locking Support	
108	1106 0394	Locking Support	
109	1105 0009	Nylon Clamp - 5n	
110	0313 0350W	Philips Pan Head Screw - M3x35	
111	1204 1211	Microswitch	
112	1204 1321	Micro Switch	
113	1107 0750	Fuse (Glass Case) - 3.15A - 250V	
114	1107 0745	Fuse - 1A 250V	

5. MAIN CONTROL BOARD (A322)

CAPACITOR

SYMBOL NO.	INDEX NO.
C100	141
C101	141
C102	141
C103	141
C104	141
C105	141
C106	141
C107	141
C108	141
C109	137

SYMBOL NO.	INDEX NO.
C110	141
C111	141
C112	141
C113	141
C114	141
C115	141
C116	141
C117	141
C118	141
C119	142

SYMBOL NO.	INDEX NO.
C120	141
C121	141
C122	137
C123	138
C124	141
C125	141
C126	136
C127	141
C128	139
C129	140

CONNECTOR

SYMBOL NO.	INDEX NO.
CN100	106
CN101	106
CN102	106
CN103	106
CN104	106
CN105	106
CN106	106
CN107	106
CN108	106
CN109	106

SYMBOL NO.	INDEX NO.
CN110	106
CN111	106
CN112	106
CN113	106
CN114	102
CN120	105
CN130	103
CN140	104
CN150	107
CN160	109

SYMBOL NO.	INDEX NO.
CN165	108
CN170	106

DIODE

SYMBOL NO.	INDEX NO.
D100	117
D101	117
D102	117
D103	117
D104	117
D105	117
D106	117
D107	117
D108	117
D109	117

DIODE

SYMBOL NO.	INDEX NO.
D110	117
D111	117
D112	117
D113	117
D114	117
D115	117

DPS

SYMBOL NO.	INDEX NO.
DPS100	114

FUSE

SYMBOL NO.	INDEX NO.
FU100	113
[SOCKET]	110
FU101	112
[SOCKET]	110

IC

SYMBOL NO.	INDEX NO.
IC100	1
[SOCKET]	111
IC101	121
IC102	122
IC103	120
IC104	123
IC105	123
IC106	125
IC107	126
IC108	124
IC109	127

LED

SYMBOL NO.	INDEX NO.
LED100	119
LED101	119
LED102	119

NF

SYMBOL NO.	INDEX NO.
NF100	135

OSC

SYMBOL NO.	INDEX NO.
OSC100	128

PC

SYMBOL NO.	INDEX NO.
PC100	118

Q

SYMBOL NO.	INDEX NO.
Q100	115
Q101	116

RESISTOR

SYMBOL NO.	INDEX NO.
R100	153
R101	153
R102	153
R103	153
R104	153
R105	151
R106	153
R107	152
R108	145
R109	143

SYMBOL NO.	INDEX NO.
R110	148
R111	149
R112	149
R113	146
R114	146
R115	152
R116	150
R117	143
R118	152
R119	149

SYMBOL NO.	INDEX NO.
R120	150
R121	147
R122	143
R123	150
R124	129
R125	154
R126	155
R127	144
R128	150
R129	152

SYMBOL NO.	INDEX NO.
R130	152
R131	149
R132	143
-----	---
R134	146

RAY

SYMBOL NO.	INDEX NO.
RAY100	131
RAY101	131
RAY102	131
RAY103	131
RAY104	131
RAY105	130
RAY106	132

TP

SYMBOL NO.	INDEX NO.
TP100	101
TP101	101
TP102	101

VR

SYMBOL NO.	INDEX NO.
VR100	134
VR101	133

5. MAIN CONTROL BOARD (A322)

Index No.	Part No.	Description	Q ty Per Assembly
*	A322 5100	Main Control Board	1
1	A322 5103	IC - D27256	1
101	1101 0328	Connector Pin Contact	
102	1102 1055	Connector - 2p	
103	1102 5003	Fiber Connector - DC1002 - 2p	
104	1103 0441	Connector - 4p	
105	1103 0725	Connector - 3p	
106	1103 1768	Connector - 2p	
107	1103 1769	Connector - 3p	
108	1103 1770	Connector - 4p	
109	1103 1771	Connector - 5p	
110	1104 0307	Fuse Holder	
111	1104 0588	Dip Socket - 28p	
112	1107 0750	Fuse (Glass Case) - 3.15A - 250V	
113	1107 0745	Fuse - 1A 250V	
114	1204 1422	Dip Switch - 51D-0401	
115	1400 0284	Transistor - 2SD789D	
116	1401 0200	Transistor - 2SD633	
117	1402 0110	Silicon Diode - 200V - 1.7A(R.M.S)	
118	1403 0238	IC - TLP521	
119	1403 0558	LED - SEL2110RTP3	
120	1407 0975	IC - HD7407P	
121	1407 1026	IC - SN74LS373N	
122	1407 2235	IC - UPD7810HCW	
123	1407 2635	TTL - TD62384AP	
124	1408 0200	IC - TA75339P	
125	1408 0408	IC - PST518A	
126	1408 0521	IC - M51971L	
127	1408 0538	IC - SI8301L	
128	1503 0416	Oscillator - CST10.0MT	
129	1600 1209	Resistor - 220P 1W 5%	
130	1601 7352	Resistor Array - 4.7K P	
131	1601 7374	Resistor Array - 4.7K P	
132	1601 7380	Resistor - 47K P	
133	1601 8139	Variable Resistor - 50K P 0.5W	
134	1601 8148	Variable Resistor - 20K P 0.5W	
135	1602 0953	Coil - 800uh 2.5a	
136	1604 1357	Capacitor - 470ηF, 10V	
137	1604 1378	Capacitor - 1ηF 50V	
138	1604 1380	Capacitor - 3.3ηF 50V	
139	1604 1389	Capacitor - 470ηF 50V	
140	1606 0658	Capacitor - 0.1ηF 50V	
141	1606 0998	Ceramic Capacitor - 0.01ηF 50V	
142	1606 1348	Capacitor - 0.022ηF 50V	
143	1611 4102	Resistor - 1K P 1/4T 5%	
144	1611 4103	Resistor - 10K P 1/4T 5%	
145	1611 4151	Resistor - 150 P 1/4W 5%	
146	1611 4152	Resistor - 1.5K P 1/4T 5%	
147	1611 4181	Resistor - 180 P 1/4T 5%	
148	1611 4202	Resistor - 2K P 1/4T 5%	
149	1611 4223	Resistor - 22K P 1/4T 5%	
150	1611 4332	Resistor - 3.3K P 1/4T 5%	
151	1611 4470	Resistor - 47 P 1/4T 5%	
152	1611 4472	Resistor - 4.7K P 1/4W 5%	
153	1611 4473	Resistor - 47K P 1/4T 5%	
154	1611 4563	Resistor - 56K P 1/4T 5%	
155	1611 4913	Resistor - 91KP 1/4T 5%	

6. MAIN HARNESS (A322)

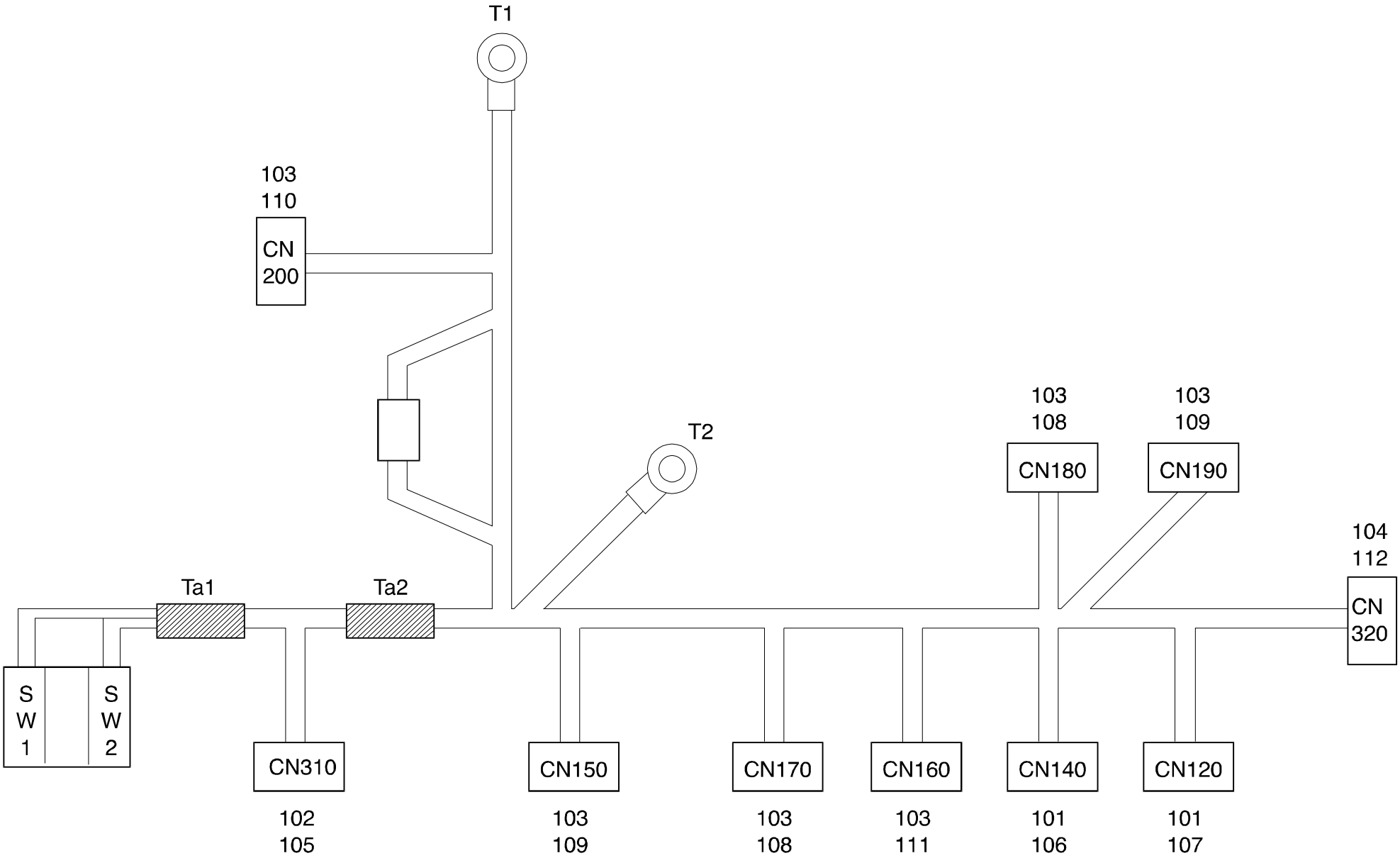

6. MAIN HARNESS (A322)

Index No.	Part No.	Description	Q ty Per Assembly
*	A322 5300	Main Harness	1

Index No.	Part No.	Description	Q ty Per Assembly
101	1100 1247	Terminal	
102	1100 1274	Fastening Receptacle	
103	1100 1329	Contact	
104	1100 1330	Socket Contact	
105	1102 1794	Connector - 4p	
106	1102 1831	Connector - 4p	
107	1102 1878	Connector - 3p	
108	1102 1982	Socket Housing - 2P	
109	1102 1983	Connector - 3p	
110	1102 1984	Connector - 4p	
111	1102 1985	Connector - 5p	
112	1102 2024	Pin Housing - 2p	
113	1607 0116	Ferrite Core	

7. DECAL AND DOCUMENT (A322)

1	2	3	4
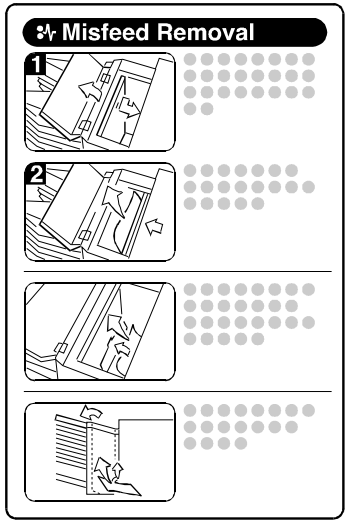	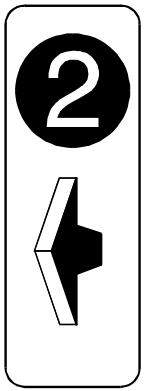	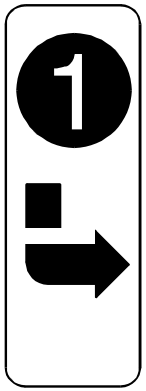	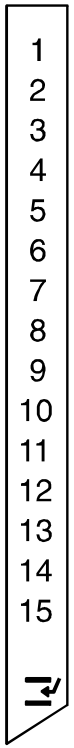

7. DECAL AND DOCUMENT (A322)

Index No.	Part No.	Description	Q ty Per Assembly
1	A322 7140	Decal - Misfeed Removal	1
2	A438 7102	Guide Plate Decal - 2	1
3	A438 7101	Guide Plate Decal - 1	1
4	A455 7211	Decal - Bin Number	1

Index No.	Part No.	Description	Q ty Per Assembly

PARTS INDEX

Part No.	Description	Page and Index No.
A322 1131	Upper Sensor Bracket	9- 18
A322 1411	Mounting Stay	3- 13
A322 2111	Lower Entrance Guide	5- 9
A322 2211	Upper Entrance Guide	5- 6
A322 2255	Gate Pawl Guide	7- 6
A322 2511	Bin Support Bracket	7- 5
A322 3251	Driven Roller Bracket	7- 18
A322 4110	Motor Bracket	9- 2
A322 4615	Entrance Sensor Bracket	5- 22
A322 5100	Main Control Board	9- 23
A322 5100	Main Control Board	11- *
A322 5103	IC - D27256	9- 28
A322 5103	IC - D27256	11- 1
A322 5210	DC Solenoid	9- 11
A322 5250	Main Motor - 24V 19W	9- 1
A322 5300	Main Harness	9- 12
A322 5300	Main Harness	13- *
A322 5310	LED Sensor Harness	5- 14
A322 5320	Sensor Harness	5- 20
A322 5500	Sponge	5- 26
A322 7100	Decal - Dip Switch	3- 25
A322 7140	Decal - Misfeed Removal	3- 7
A322 7140	Decal - Misfeed Removal	15- 1

Part No.	Description	Page and Index No
AA08 0040	Bushing - 4mm	7- 27
AA14 8017	Stud - 28mm	3- 11
AB01 1031	Gear - 64T	9- 8
AB01 1032	Gear - 17T	9- 7
AB03 0029	Pulley - 20T	5- 30
AB03 0030	Pulley - 17Z	7- 33
AF02 3004	Transport Roller	5- 1
AW02 0013	Inlet Sensor	5- 21
AW03 0016	Optical Fiber	9- 24

Part No.	Description	Page and Index No.
A377 5465	Grounding Harness	9- 3
A411 2531	Knob Cap	7- 15
A438 2811	Upper Turn Feed Roller	5- 2
A438 2812	Lower Turn Feed Roller	5- 3
A438 2821	Lower Exit Roller	7- 8
A438 2825	Exit Roller	7- 31
A438 3411	Bin	3- 21
A438 3412	Front Mylar Seal - Sorter Bin	3- 24
A438 3413	Rear Mylar Seal - Sorter Bin	3- 26
A438 7101	Guide Plate Decal - 1	7- 17
A438 7101	Guide Plate Decal - 1	15- 3
A438 7102	Guide Plate Decal - 2	5- 7
A438 7102	Guide Plate Decal - 2	15- 2
A455 2611	Front Driven Guide Plate	7- 19
A455 2651	Rear Driven Guide Plate	7- 23
A455 2711	Turn Guide	5- 5
A455 2721	Guide Plate	5- 12
A455 2811	Spring Plate - Lower Driven Roller	7- 29
A455 2821	Spring Plate - Upper Driven Roller	7- 26
A455 3110	Bin Holder	3- 18
A455 3511	Solenoid Bracket	9- 20
A455 4111	Pulley - 17T	7- 30
A455 4511	Main Control Board Bracket	9- 22
A455 4531	Spacer	9- 27
A455 5430	Upper Sensor Board	9- 17
A455 6251	Rear Cover Bracket	3- 4
A455 7211	Decal - Bin Number	3- 27
A455 7211	Decal - Bin Number	15- 4
A611 6111	Front Cover	3- 16
A611 6211	Rear Cover	3- 1
A611 6311	Upper Cover	3- 5
A611 6411	Door Cover	3- 6
5053 0447	Bushing - 6mm	5- 27
5053 0447	Bushing - 6mm	7- 9
5304 1608	Bushing - 6mm	5- 24

Part No.	Description	Page and Index No
5408 2035	Stepped Screw - M4	9- 10
5409 1238	Rotary Catch	3- 14
5418 1813	Stepped Screw - M5 (R.FR)	9- 15
5424 4142	Bushing - Cleaning Roller	7- 36
5840 2416	Bushing - Pinch Roller	5- 16
5840 2416	Bushing - Pinch Roller	7- 12
5895 2141	Spring - Turn Feed Roller	5- 25
5895 2161	Lever - Transport Guide Plate	9- 13
5895 2163	Arm - Transport Guide Plate	9- 9
5895 2165	Washer - 6x12	9- 14
5895 2256	Turn Guide Shaft	7- 2
5895 2524	Interrupt Bin Bracket	5- 10
5895 3211	Exit Driven Roller	7- 28
5895 3221	Driven Roller Bracket	7- 24
5895 3238	Driven Guide Plate - Upper	7- 25
5895 3261	Front Hinge Plate	7- 21
5895 3262	Rear Hinge Plate	7- 20
5895 3263	Paper Transport Hinge Shaft	7- 22
5895 5821	Lower Sensor Cover	5- 18
5895 6101	Front Cover Mounting Bracket	3- 15
5895 6103	Rear Cover Mounting Bracket	3- 3
5895 6151	Front Grounding Plate	3- 17
5895 6152	Rear Grounding Plate	3- 20
5895 6155	Grounding Plate Angle	5- 23
5895 6171	Rear Bin Holder	3- 19
5910 5630	Jam Sensor Board - LED	5- 15
5917 1216	Rubber 8x10	5- 8
5936 2319	Collar - Vibration Damper	9- 4
5936 2320	Rubber Ring - Vibration Damper	9- 6
5936 2321	Rubber Bushing - Vibration Damper	9- 5
6769 1127	Lower Mounting Stud	3- 12
6769 1128	Mounting Stay Magnet	3- 10
6769 2252	Upper Turn Guide	7- 3
6769 2257	Guide Plate	7- 1
6769 2261	Lower Turn Guide	5- 4

Part No.	Description	Page and Index No.
6769 2272	Antistatic Brush	5- 19
6769 2272	Antistatic Brush	7- 4
6769 2284	Shaft - Turn Gate	5- 13
6769 2286	Cushion - Turn Gate	5- 11
6769 2312	Lower Support Bracket	5- 17
6769 2314	Mylar - Jam Sensor	5- 16
6769 2519	Antistatic Brush	3- 28
6769 2522	Interrupt Bin	3- 22
6769 2525	Antistatic Brush	3- 23
6769 3111	Bin Gate	7- 7
6769 3131	Lever - Bin Gate	5- 29
6769 3131	Lever - Bin Gate	7- 10
6769 3132	Spring - Bin Gate	7- 11
6769 3150	Turn Gate Solenoid	9- 21
6769 3611	Latch - Transport Bracket	7- 32
6769 3612	Stud - Latch	7- 14
6769 3613	Spring - Latch	7- 13
6769 3614	Angle - Latch	7- 16
6769 4161	Tightner - Timing Belt	5- 31
6769 4166	Tension Pulley - Timing Belt	7- 35
6769 4168	Stud - Tension Pulley	7- 34
6769 5631	Bracket - Front Safety	9- 26
6769 5632	Rear Bracket - Sorter Cover Switch	9- 25
6769 5655	Angle - Cord Clamp (70)	9- 19
6769 6136	Bracket - Top Cover	3- 9
6769 6142	Hinge - Jam Clearance Cover	3- 8

Part No.	Description	Page and Index No
0313 0060B	Philips Pan Head Screw - M3x6	3-102
0313 0060B	Philips Pan Head Screw - M3x6	9-102
0313 0350W	Philips Pan Head Screw - M3x35	9-110
0314 0060B	Philips Pan Head Screw - M4x6	3-101
0314 0060B	Philips Pan Head Screw - M4x6	5-101
0314 0060B	Philips Pan Head Screw - M4x6	7-101
0314 0060B	Philips Pan Head Screw - M4x6	9-101
0314 0080B	Philips Pan Head Screw - M4x8	3-100
0314 0080B	Philips Pan Head Screw - M4x8	5-100
0344 0080F	Philips Truss Head Screw - M4x8	3-104
0573 0050W	Hexagon Headless Set Screw - M3x5	5-105
0573 0050W	Hexagon Headless Set Screw - M3x5	7-106
0574 0040E	Hexagon Headless Set Screw - M4x4	5-103
0574 0040E	Hexagon Headless Set Screw - M4x4	7-105
0574 0040E	Hexagon Headless Set Screw - M4x4	9-103
0632 0140E	Parallel Pin - M2x14	9-104
0720 0025B	Retaining Ring - M2.5	7-102
0720 0030B	Retaining Ring - M3	7-104
0720 0040B	Retaining Ring - M4	5-104
0720 0040B	Retaining Ring - M4	7-103
0720 0040B	Retaining Ring - M4	9-105
0741 3506	Ball Bearing - 6x12x4 mm	5-108
0741 3506	Ball Bearing - 6x12x4 mm	7-107
0803 0017	Knob Screw - M4x6.5	3-105
0805 5009	Cushion	3-106
0806 5019	Timing Belt - 1005XL	7-108
0951 4006B	Philips Screw With Washer - M4x6	3-103
0951 4006B	Philips Screw With Washer - M4x6	5-102
1100 1247	Terminal	13-101
1100 1274	Fastening Receptacle	13-102
1100 1329	Contact	13-103
1100 1330	Socket Contact	13-104
1101 0328	Connector Pin Contact	11-101
1102 1055	Connector - 2p	11-102
1102 1794	Connector - 4p	13-105

Part No.	Description	Page and Index No.
1102 1831	Connector - 4p	13-106
1102 1878	Connector - 3p	13-107
1102 1982	Socket Housing - 2P	13-108
1102 1983	Connector - 3p	13-109
1102 1984	Connector - 4p	13-110
1102 1985	Connector - 5p	13-111
1102 2024	Pin Housing - 2p	13-112
1102 5003	Fiber Connector - DC1002 - 2p	11-103
1103 0441	Connector - 4p	11-104
1103 0725	Connector - 3p	11-105
1103 1768	Connector - 2p	11-106
1103 1769	Connector - 3p	11-107
1103 1770	Connector - 4p	11-108
1103 1771	Connector - 5p	11-109
1104 0307	Fuse Holder	11-110
1104 0588	Dip Socket - 28p	11-111
1105 0005	Nylon Clamp - 3n	9-106
1105 0009	Nylon Clamp - 5n	9-109
1105 0192	Locking Support	9-107
1105 0196	Harness Clamp	5-106
1106 0193	Bushing - 7.9mm	5-107
1106 0394	Locking Support	9-108
1107 0745	Fuse - 1A 250V	9-114
1107 0745	Fuse - 1A 250V	11-113
1107 0750	Fuse (Glass Case) - 3.15A - 250V	9-113
1107 0750	Fuse (Glass Case) - 3.15A - 250V	11-112
1204 1211	Microswitch	9-111
1204 1321	Micro Switch	9-112
1204 1422	Dip Switch - 51D-0401	11-114
1400 0284	Transistor - 2SD789D	11-115
1401 0200	Transistor - 2SD633	11-116
1402 0110	Silicon Diode - 200V - 1.7A(R.M.S)	11-117
1403 0238	IC - TLP521	11-118
1403 0558	LED - SEL2110RTP3	11-119
1407 0975	IC - HD7407P	11-120

Part No.	Description	Page and Index No
1407 1026	IC - SN74LS373N	11-121
1407 2235	IC - UPD7810HCW	11-122
1407 2635	TTL - TD62384AP	11-123
1408 0200	IC - TA75339P	11-124
1408 0408	IC - PST518A	11-125
1408 0521	IC - M51971L	11-126
1408 0538	IC - SI8301L	11-127
1503 0416	Oscillator - CST10.0MT	11-128
1600 1209	Resistor - 220P 1W 5%	11-129
1601 7352	Resistor Array - 4.7K P	11-130
1601 7374	Resistor Array - 4.7K P	11-131
1601 7380	Resistor - 47K P	11-132
1601 8139	Variable Resistor - 50K P 0.5W	11-133
1601 8148	Variable Resistor - 20K P 0.5W	11-134
1602 0953	Coil - 800uh 2.5a	11-135
1604 1357	Capacitor - 470ηF, 10V	11-136
1604 1378	Capacitor - 1ηF 50V	11-137
1604 1380	Capacitor - 3.3ηF 50V	11-138
1604 1389	Capacitor - 470ηF 50V	11-139
1606 0658	Capacitor - 0.1ηF 50V	11-140
1606 0998	Ceramic Capacitor - 0.01ηF 50V	11-141
1606 1348	Capacitor - 0.022ηF 50V	11-142
1607 0116	Ferrite Core	13-113
1611 4102	Resistor - 1K P 1/4T 5%	11-143
1611 4103	Resistor - 10K P 1/4T 5%	11-144
1611 4151	Resistor - 150 P 1/4W 5%	11-145
1611 4152	Resistor - 1.5K P 1/4T 5%	11-146
1611 4181	Resistor - 180 P 1/4T 5%	11-147
1611 4202	Resistor - 2K P 1/4T 5%	11-148
1611 4223	Resistor - 22K P 1/4T 5%	11-149
1611 4332	Resistor - 3.3K P 1/4T 5%	11-150
1611 4470	Resistor - 47 P 1/4T 5%	11-151
1611 4472	Resistor - 4.7K P 1/4W 5%	11-152

Part No.	Description	Page and Index No.
1611 4473	Resistor - 47K P 1/4T 5%	11-153
1611 4563	Resistor - 56K P 1/4T 5%	11-154
1611 4913	Resistor - 91KP 1/4T 5%	11-155

Part No.	Description	Page and Index No