DF62 (A610)

PARTS CATALOG

INTRODUCTION

This chapter instructs you the numbers and names of parts on this machine.

INDEX to PARTS CATALOG

LOCATION OF UNIT 2
1.EXTERIOR (A610) 4
2.ORIGINAL FEED SECTION 1 (A610) 6
3.ORIGINAL FEED SECTION 2 (A610) 8
4.ORIGINAL FEED SECTION 3 (A610) 10
5.TRANSPORT SECTION (A610) 12
6.INVERTER AND EXIT SECTION (A610) 14
7.ELECTRICAL SECTION (A610) 16
8.DECAL AND DOCUMENT (A610) 18
Pats Index 21

LOCATION OF UNIT

1. EXTERIOR (A610)

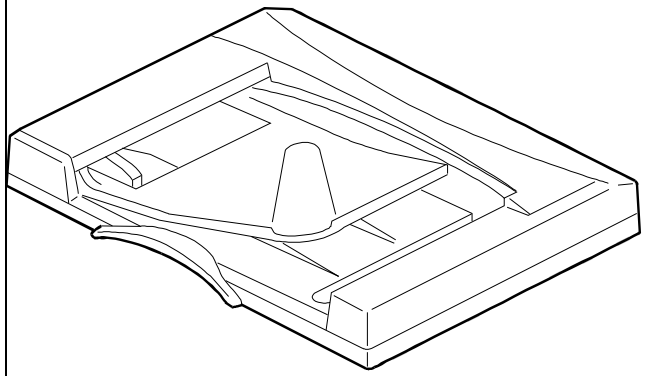

See Page 4

2. ORIGINAL FEED SECTION 1 (A610)

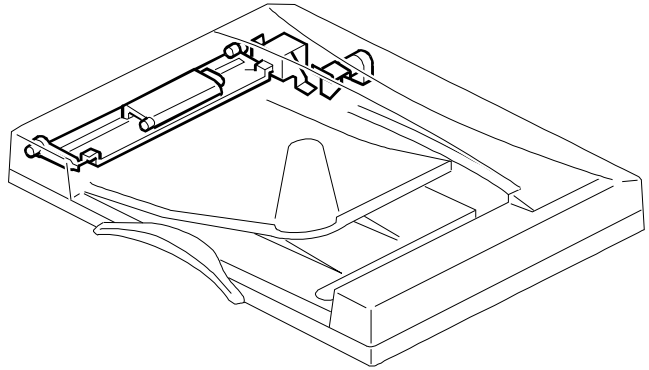

See Page 6

3. ORIGINAL FEED SECTION 2 (A610)

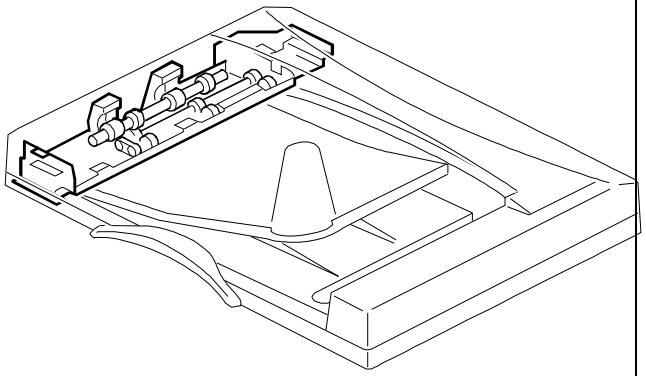

See Page 8

4. ORIGINAL FEED SECTION 3 (A610)

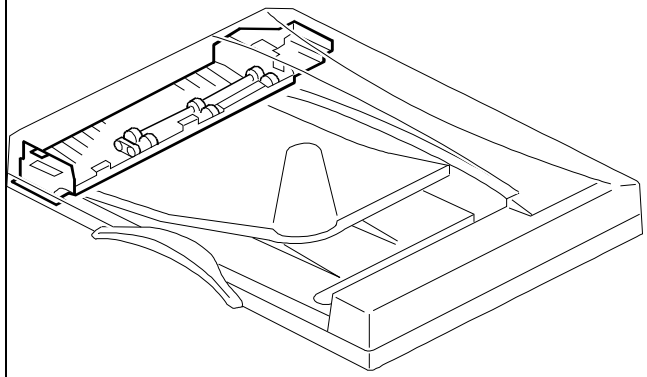

See Page 10

5. TRANSPORT SECTION (A610)

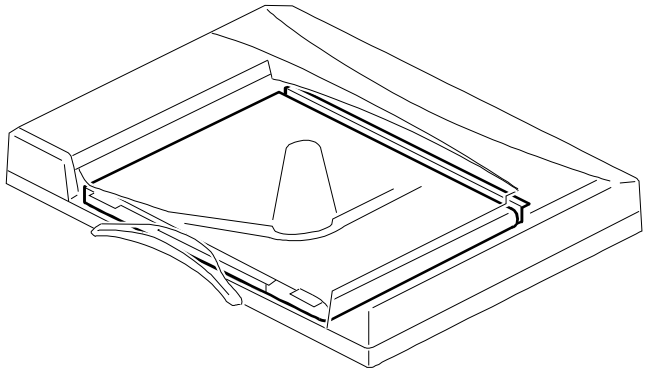

See Page 12

6. INVERTER AND EXIT SECTION (A610)

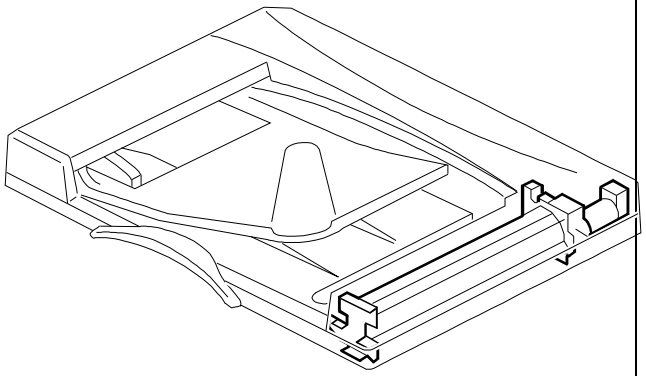

See Page 14

LOCATION OF UNIT

7. ELECTRICAL SECTION (A610)

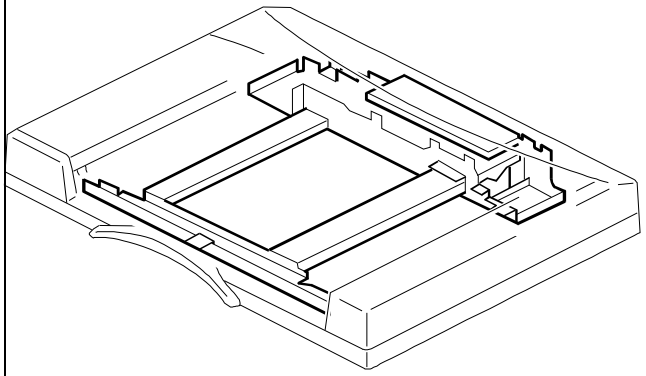

See Page 16

1. EXTERIOR (A610)

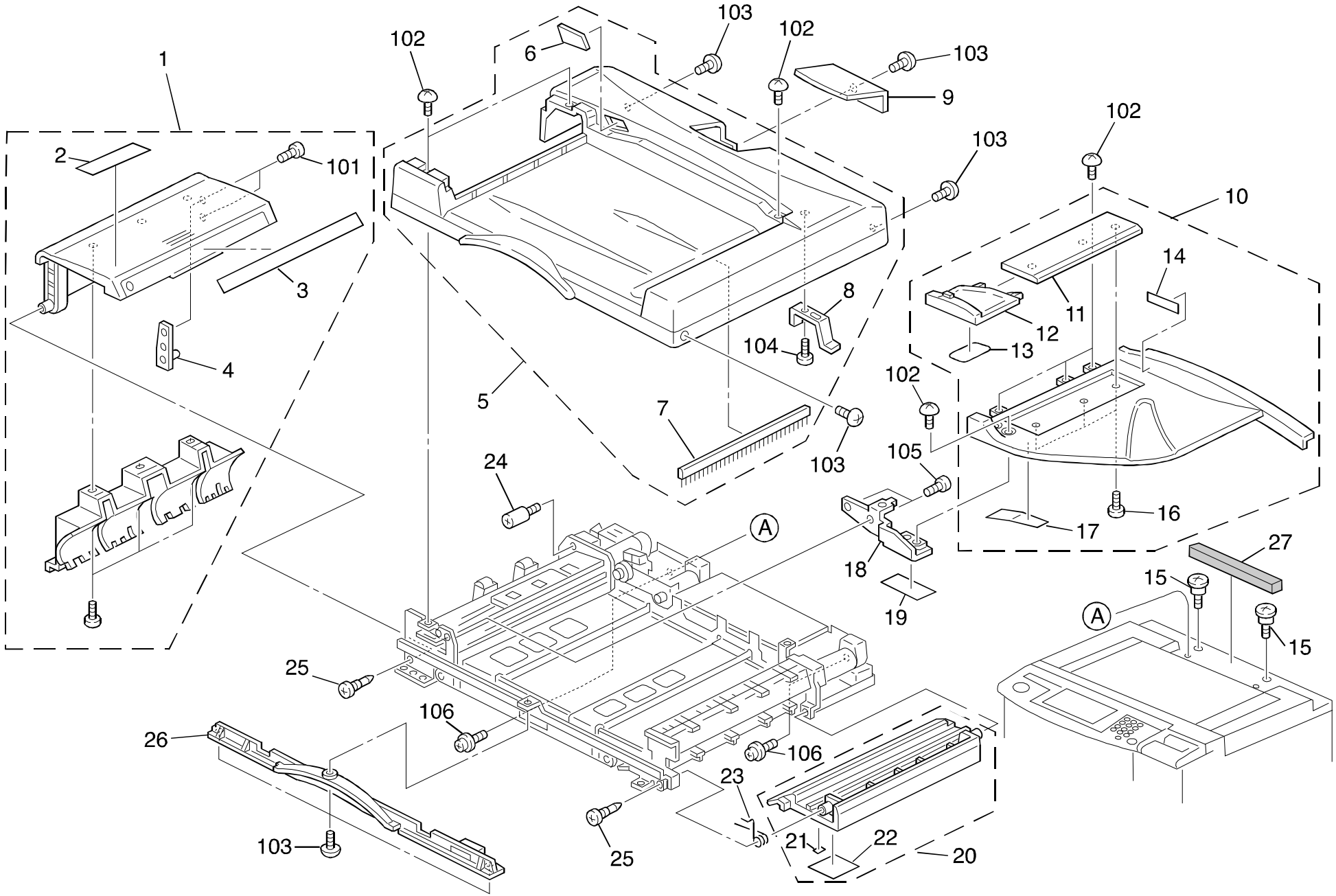

1. EXTERIOR (A610)

Index No.	Part No.	Description	Q ty Per Assembly
1	A610 4531	Left Cover	1
2	A610 6031	Decal - Original Misfeed	1
3	A610 6011	Decal - Original Size	1
4	A376 1902	Left Cover Bracket	1
5	A610 4511	Upper Cover	1
6	A548 1941	Display Panel	1
7	A376 3242	Antistatic Brush	1
8	A610 4527	Grounding Plate	1
9	A610 4591	Main Board Cover	1
10	A610 4551	Original Table	1
11	A565 2151	Side Fence Rail	1
12	A610 4581	Side Fence	1
13	A376 4599	Side Fence Pad	1
14	A548 1931	Decal - Original Table	1
15	A376 4911	Stepped Screw - Left Hinge	2
16	5875 2088	Shoulder Screw - M4	3
17	A610 4671	Original Mylar	1
18	A376 4125	Grip Bracket	1
19	A610 4672	Original Table Guard	1
20	A610 4601	Lower Feed-out Cover	1
21	A054 2977	Decal - Vertical Transport Guide	1
22	A610 6041	Decal - Original Exit	1
23	AA06 6278	Spring	1
24	A469 3350	Guide Stud	1
25	5446 2824	Screw - Duplex Guide Plate	2
26	A610 4621	Front Lower Cover	1
27	A548 6131	Cushion - 20x190x30	1

Index No.	Part No.	Description	Q ty Per Assembly
101	0353 0050B	Philips Truss Head Screw - M3x5	
102	0344 0080F	Philips Truss Head Screw - M4x8	
103	0344 0060F	Philips Truss Head Screw - M4x6	
104	0802 5237	Binding Self-tapping Screw - M4x10	
105	0314 0060B	Philips Pan Head Screw - M4x6	
106	0951 5010B	Philips Screw With Washer - M5x10	

2. ORIGINAL FEED SECTION 1 (A610)

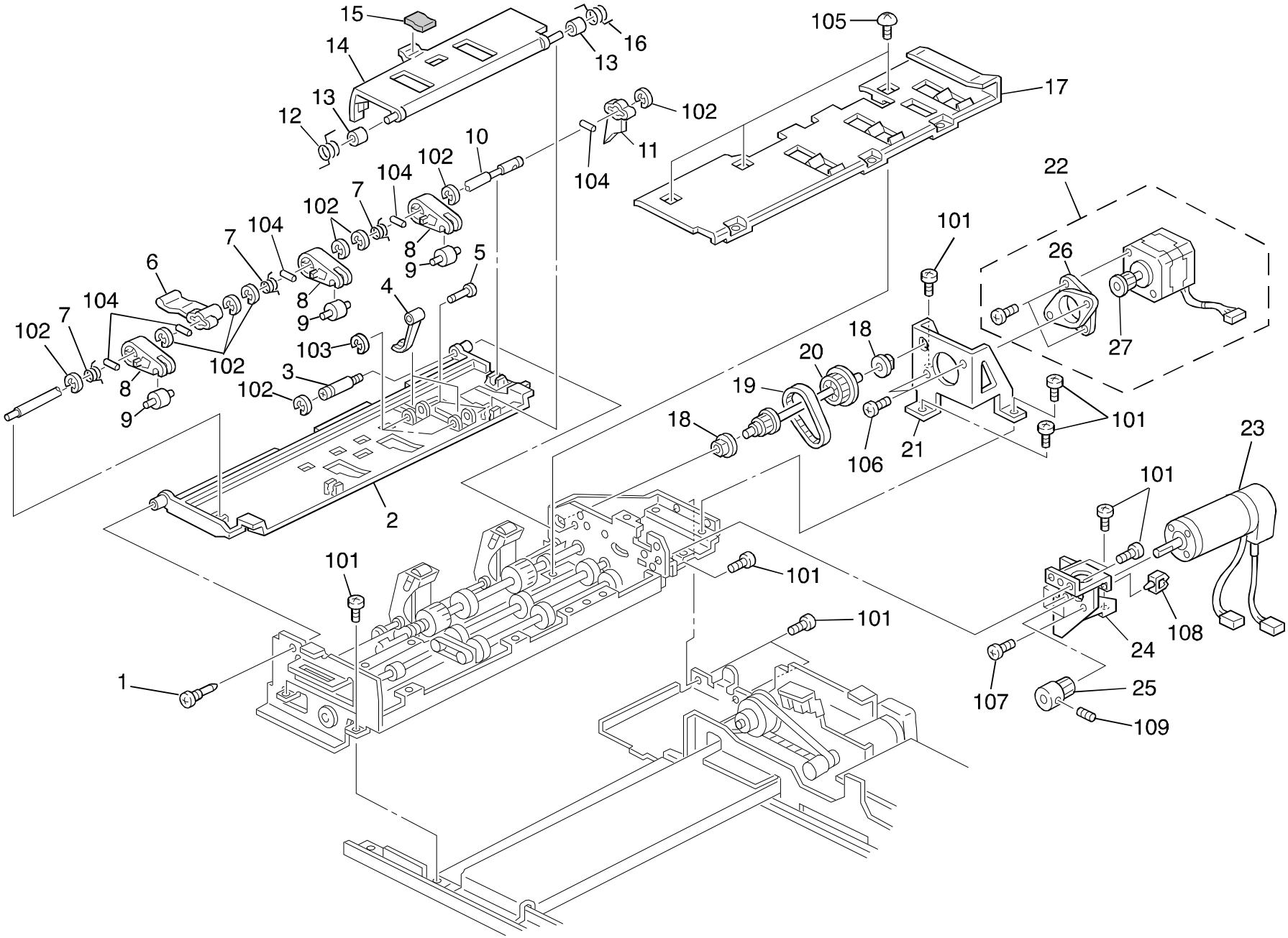

2. ORIGINAL FEED SECTION 1 (A610)

Index No.	Part No.	Description	Q ty Per Assembly
1	5446 2824	Screw - Duplex Guide Plate	1
2	A610 1251	Original Upper Guide	1
3	C217 5524	Stud - Front Release Lever	1
4	A610 1259	Original Sensor Filter	1
5	5894 2229	Solenoid Pin	1
6	A376 1355	Original Stopper Arm	1
7	A376 1335	Release Spring	3
8	A376 1347	Original Pressure Arm	3
9	A376 1343	Original Pressure Roller	3
10	A376 1331	Original Pressure Shaft	1
11	A376 1363	Front Lever - Original Stopper	1
12	A376 1264	Pressure Spring	1
13	A376 1257	Spacer - M4x6x6	2
14	A376 1255	Original Stopper	1
15	A376 3541	Solenoid Cushion	1
16	A376 1265	Pressure Spring	1
17	A376 1245	Entrance Original Guide	1
18	5053 0447	Bushing - 6mm	2
19	AA04 3250	Timing Belt - B40S2M122	1
20	A610 1525	Timing Pulley - 16Z/140Z	1
21	A610 1521	Motor Bracket	1
22	A610 1530	Separation Belt Drive Motor	1
23	AX06 0121	DC Motor - 27W	1
24	A610 1139	Original Feed Motor Bracket	1
25	A376 1615	Timing Pulley - 22Z	1
26	A548 2113	Motor Cushion	1
27	A548 2111	Timing Pulley - 20Z	1

Index No.	Part No.	Description	Q ty Per Assembly
101	0314 0060B	Philips Pan Head Screw - M4x6	
102	0720 0040B	Retaining Ring - M4	
103	0720 0030B	Retaining Ring - M3	
104	0632 0100	Parallel Pin - M2x10	
105	0344 0060F	Philips Truss Head Screw - M4x6	
106	0313 0050B	Philips Pan Head Screw - M3x5	
107	0313 0060B	Philips Pan Head Screw - M3x6	
108	1105 0199	Clamp	
109	0574 0050E	Hexagon Headless Set Screw - M4x5	

3. ORIGINAL FEED SECTION 2 (A610)

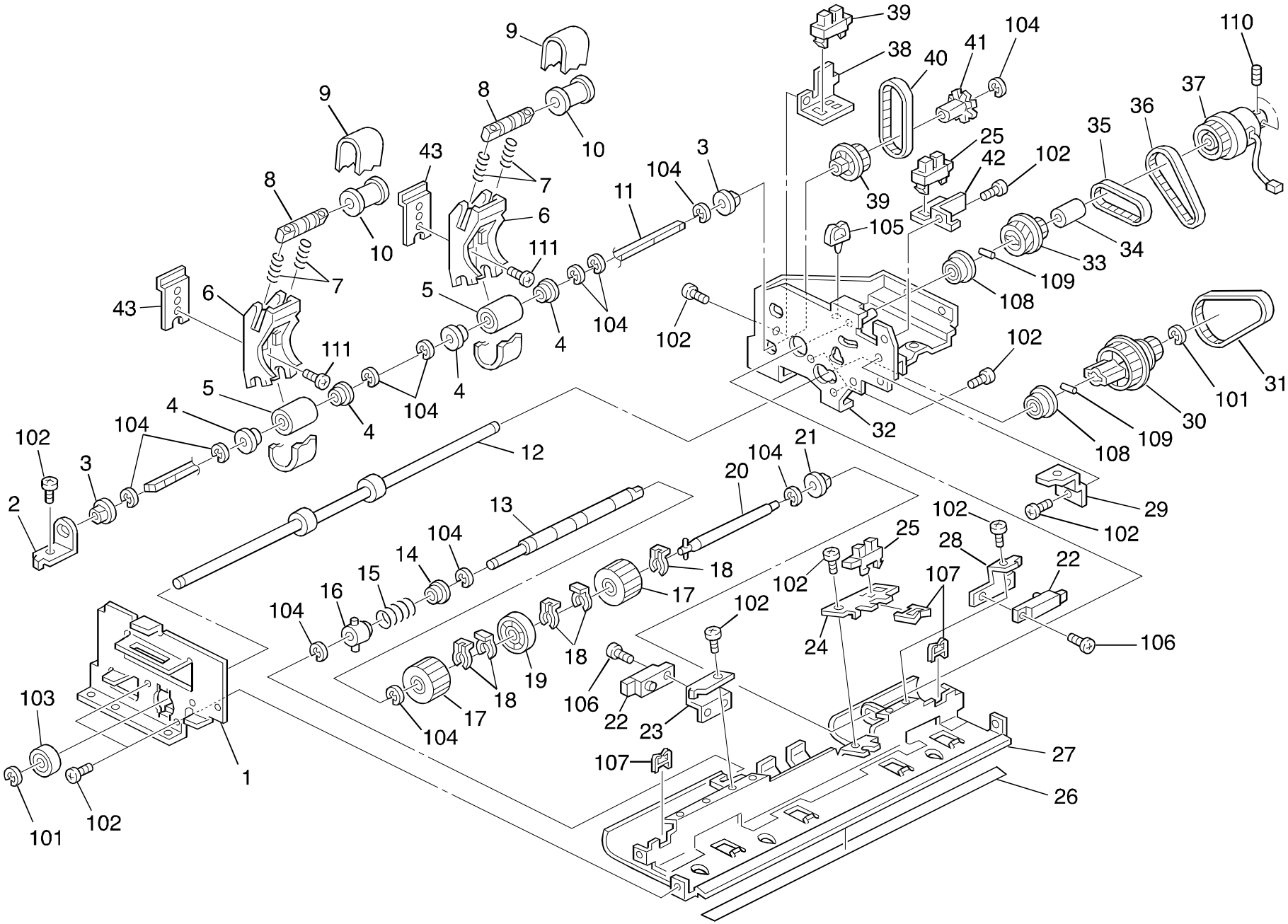

3. ORIGINAL FEED SECTION 2 (A610)

Index No.	Part No.	Description	Q ty Per Assembly
1	A610 1115	Front Side Plate	1
2	A610 1215	Belt Drive Shaft Holder	1
3	5053 0447	Bushing - 6mm	2
4	A548 1283	Bushing - 6x10x6.5mm	4
5	A610 1477	Separation Belt Roller	2
6	A610 1472	Separation Belt Arm	2
7	AA06 3386	Pressure Spring	4
8	A610 1483	Separation Belt Driven Shaft	2
9	**A610 1485**	**Separation Belt**	**2**
10	A610 1476	Separation Belt Driven Roller	2
11	A610 1480	Separation Belt Drive Shaft	1
12	A610 1545	Original Feed Roller	1
13	A376 1457	Feed Roller Driven Shaft	1
14	A376 1465	Feed Roller Bushing	1
15	A376 1467	Feed Roller Pressure Spring	1
16	A376 1461	Feed Roller Bushing	1
17	**A376 1445**	**Feed Roller**	**2**
18	5215 2621	Snap Ring - M6	5
19	A376 1447	Middle Feed Roller	1
20	A376 1415	Feed Roller Drive Shaft	1
21	5053 0223	Bushing - 8mm	1
22	AW01 0066	Photosensor - PS-R50D1-B	2
23	A376 1197	Left Bracket - Paper Size Sensor	1
24	A610 1195	Original Feed Sensor Bracket	1
25	AW02 0021	Photointerruptor - 175487-3	2
26	A610 1190	Paper Guide Sheet	1
27	A610 1160	Middle Stay	1
28	A376 1193	Registration Sensor Bracket	1
29	A610 1137	Magnetic Bracket	1
30	A376 1549	Timing Pulley - 60Z/20Z	1
31	A376 1623	Timing Belt - B60S2M186	1
32	A610 1121	Rear Side Plate	1
33	A376 1419	Timing Pulley - 22Z/23Z	1
34	A610 1432	Spacer - 8x12x17	1
35	A376 1423	Timing Belt - B60S2M126	1

Index No.	Part No.	Description	Q ty Per Assembly
36	A376 1553	Timing Belt - B60S3M144	1
37	AX20 0127	Magnetic Clutch	1
38	A610 1495	Sensor Bracket	1
39	A610 1491	Timing Pulley - T24S3M	1
40	AA04 3251	Timing Belt - B40S3M141	1
41	A610 1492	Encorder	1
42	A610 1134	Sensor Cover Bracket	1
43	A610 1475	Adjusting Plate	2
101	0720 0060B	Retaining Ring - M6	
102	0314 0060B	Philips Pan Head Screw - M4x6	
103	0740 3008	Ball Bearing - 8x22x7	
104	0720 0040B	Retaining Ring - M4	
105	1105 0199	Clamp	
106	0313 0100B	Philips Pan Head Screw - M3x10	
107	1105 0328	Harness Clamp - ES-0505	
108	0742 3808	Ball Bearing - 8x16x5	
109	0632 0120	Parallel Pin - M2x12	
110	0574 0050E	Hexagon Headless Set Screw - M4x5	
111	0313 0050B	Philips Pan Head Screw - M3x5	

4. ORIGINAL FEED SECTION 3 (A610)

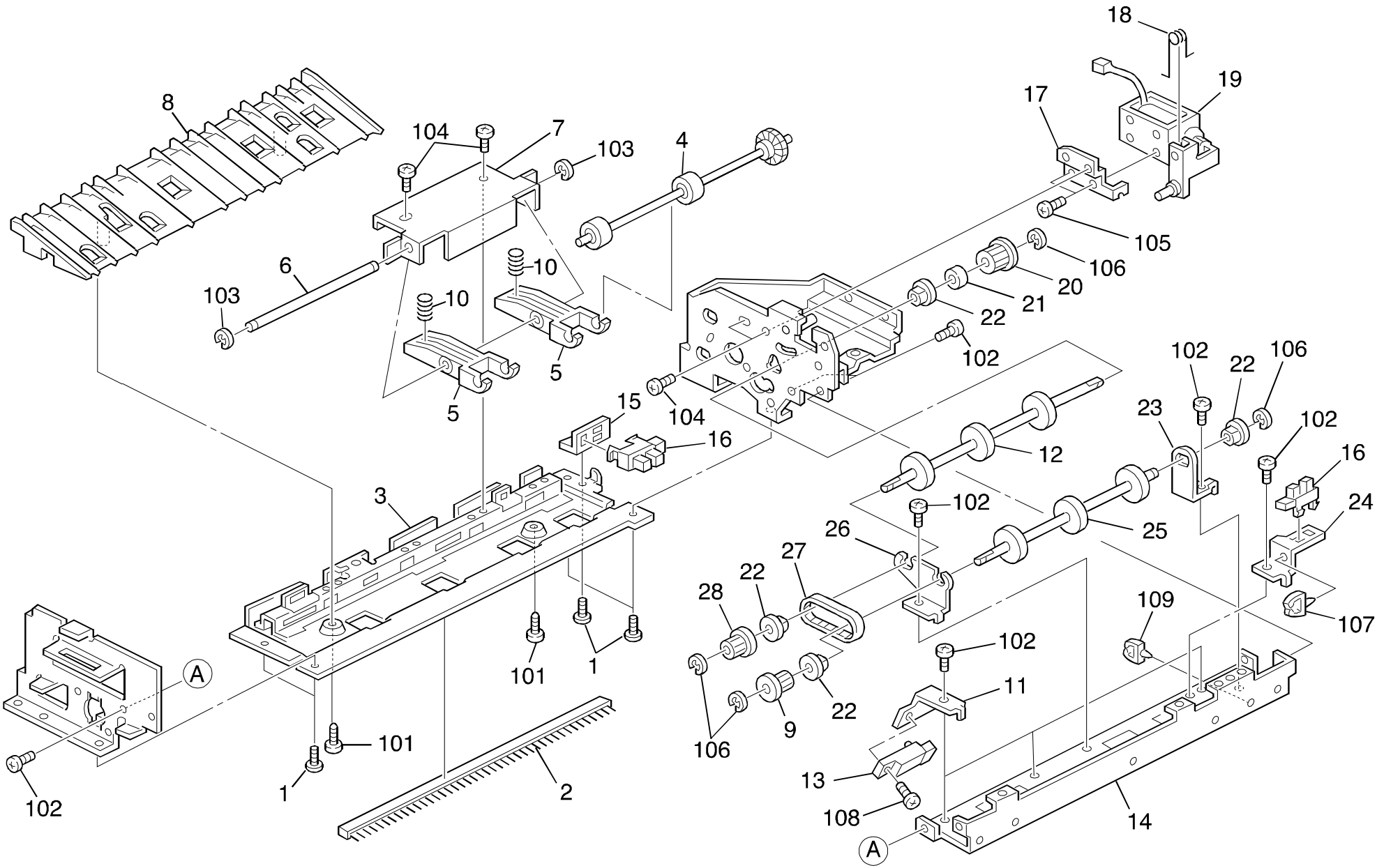

4. ORIGINAL FEED SECTION 3 (A610)

Index No.	Part No.	Description	Q ty Per Assembly
1	5875 2088	Shoulder Screw - M4	4
2	AA12 0032	Antistatic Brush	1
3	A610 1235	Original Feed Base	1
4	A610 1561	Idle Roller	1
5	A610 1565	Pressure Arm	2
6	A610 1221	Arm Shaft	1
7	A610 1220	Idle Roller Bracket	1
8	A610 1211	Lower Original Guide	1
9	A376 1292	Front Timing Pulley	1
10	A376 1567	Arm Pressure Spring	2
11	A610 1142	Original Sensor Right Bracket	1
12	A610 1311	Original Feed Roller - Rear	1
13	AW01 0066	Photosensor - PS-R50D1-B	1
14	A376 1141	Upper Paper Feed Stay	1
15	A610 1597	Sensor Bracket	1
16	AW02 0021	Photointerruptor - 175487-3	2
17	A376 1385	Stopper Solenoid Bracket	1
18	A376 1382	Release Spring	1
19	A610 1384	Original Stopper Solenoid	1
20	A376 1291	Rear Timing Pulley	1
21	A376 1295	Spacer - M6x10x5	1
22	5053 0447	Bushing - 6mm	4
23	A376 1149	Pick-up Relay Roller Bracket	1
24	A610 1147	Original Sensor Bracket	1
25	A610 1283	Original Feed Roller - Front	1
26	A376 1145	Front Bracket - Pick-up Roller	1
27	A376 1319	Timing Belt - B60S2M98	1
28	A610 1315	Timing Pulley - 20Z	1

Index No.	Part No.	Description	Q ty Per Assembly
101	0802 5237	Binding Self-tapping Screw - M4x10	
102	0314 0060B	Philips Pan Head Screw - M4x6	
103	0720 0030B	Retaining Ring - M3	
104	0720 0060B	Retaining Ring - M6	
105	0313 0050B	Philips Pan Head Screw - M3x5	
106	0720 0040B	Retaining Ring - M4	
107	1105 0199	Clamp	
108	0313 0100B	Philips Pan Head Screw - M3x10	
109	1105 0229	Clamp	

5. TRANSPORT SECTION (A610)

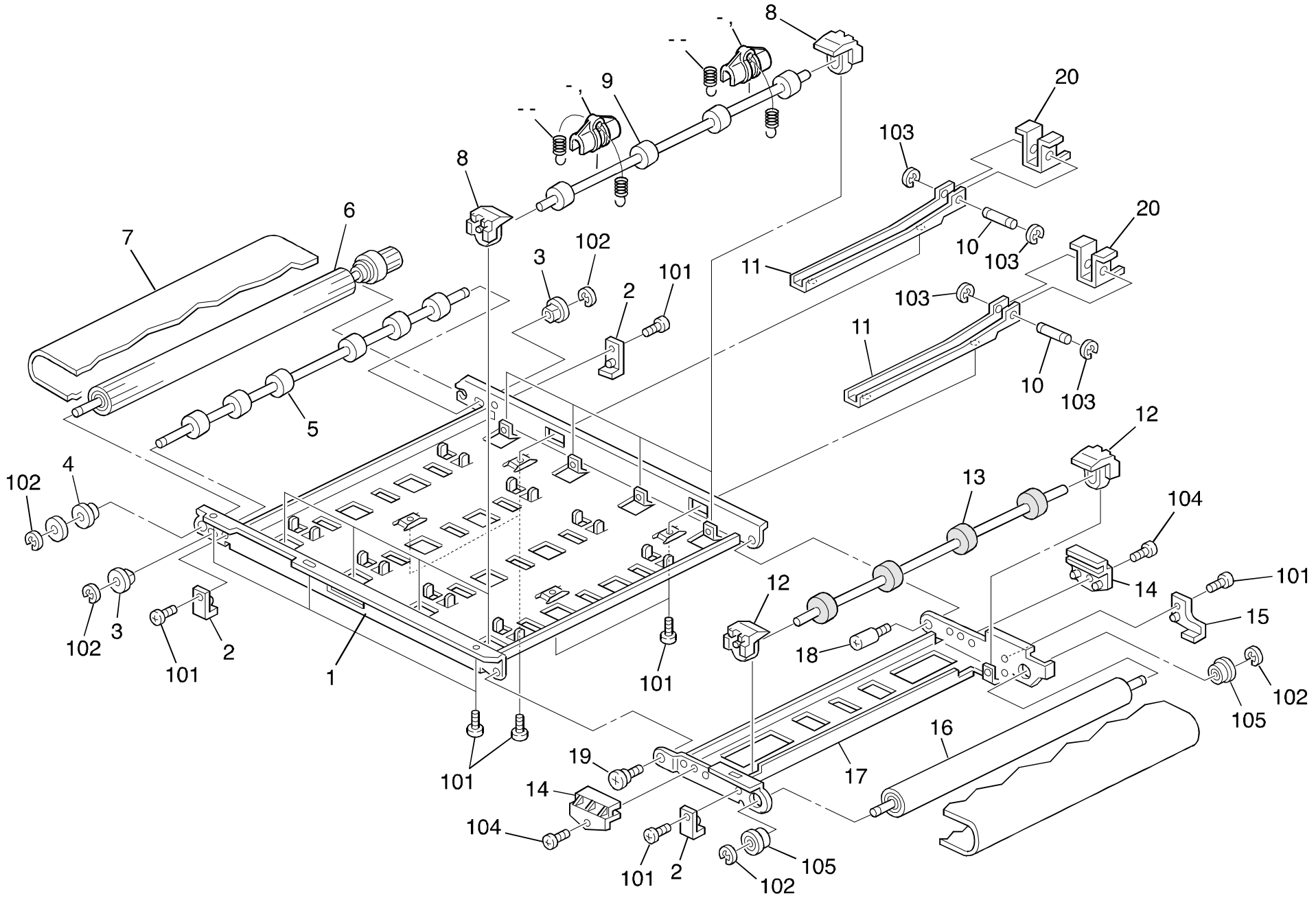

5. TRANSPORT SECTION (A610)

Index No.	Part No.	Description	Q ty Per Assembly
1	A610 2111	Transfer Unit	1
2	A376 2155	Transport Unit Upper Stopper	3
3	5053 0447	Bushing - 6mm	2
4	A422 1078	Bushing - 6x12x4mm	1
5	A610 2121	Transfer Belt Driven Roller	1
6	A610 2141	Belt Drive Roller	1
7	**A376 2196**	**Transport Belt**	**1**
8	A610 2136	Bushing	8
9	A610 2131	Belt Pressure Roller	4
10	A610 2213	Hinge Shaft	2
11	A610 2214	Hinge Arm	2
12	A610 2137	Pressure Roller Bushing	2
13	A610 2161	Belt Pressure Roller - 24	1
14	A610 2181	Transfer Belt Guide	2
15	A376 2157	Transport Unit Rear Stopper	1
16	A376 2132	Belt Driven Roller	1
17	A610 2151	Transport Stay	1
18	A469 3350	Guide Stud	1
19	AA14 3062	Shoulder Screw - M4	1
20	A610 2212	Transport Hinge Bracket	2
21	A610 2132	Pressure Bushing	2
22	A610 2133	Tension Spring	2

Index No.	Part No.	Description	Q ty Per Assembly
101	0314 0060B	Philips Pan Head Screw - M4x6	
102	0720 0040B	Retaining Ring - M4	
103	0720 0030B	Retaining Ring - M3	
104	0354 0060B	Screw - M4x6	
105	0741 3506	Ball Bearing - 6x12x4 mm	

6. INVERTER AND EXIT SECTION (A610)

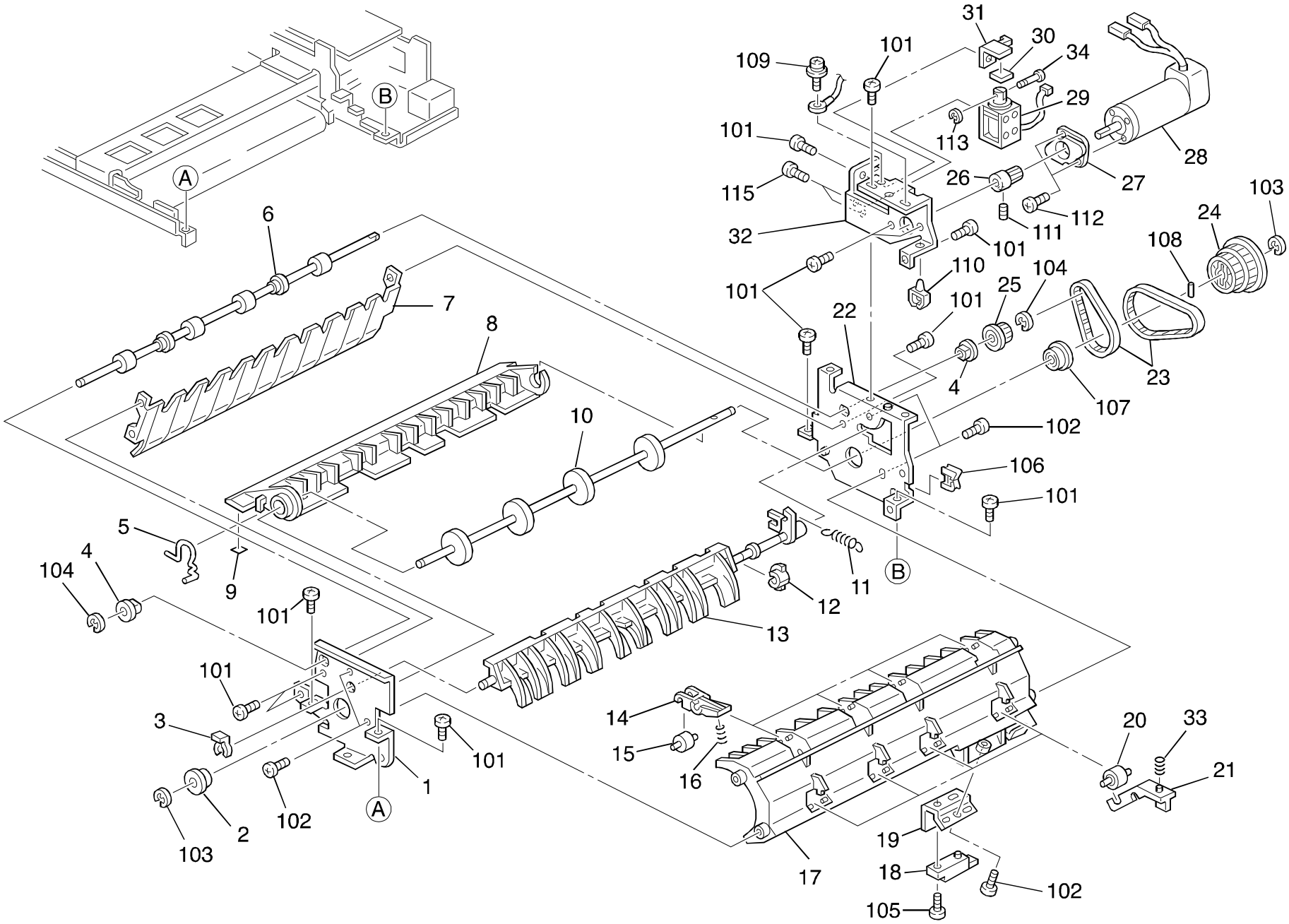

6. INVERTER AND EXIT SECTION (A610)

Index No.	Part No.	Description	Q ty Per Assembly
1	A610 3111	Front Side Plate	1
2	5420 4860	Bushing - 8mm	1
3	5447 2681	Snap Ring	1
4	5053 0447	Bushing - 6mm	2
5	A376 3537	Inverter Guide Spring	1
6	A610 3126	Original Exit Roller	1
7	A376 3145	Inverter Guide Plate	1
8	A376 3137	Inverter Guide	1
9	A054 2977	Decal - Vertical Transport Guide	1
10	A376 3125	Inverter Roller	1
11	A376 3612	Inverter Lever Spring	1
12	A376 3172	Inverter Pawl Bushing	1
13	A610 3141	Invertor Pawl	1
14	A610 3218	Feed-out Driven Roller Arm	4
15	A610 3215	Feed-out Driven Roller	4
16	AA06 3389	Pressure Spring	4
17	A610 3148	Upper Feed-out Guide	1
18	AW01 0066	Photosensor - PS-R50D1-B	1
19	A610 3161	Sensor Bracket	1
20	A376 3153	Lower Driven Roller	4
21	A610 3155	Feed-out Driven Roller Holder	4
22	A610 3121	Rear Side Plate	1
23	AA04 3254	Timing Belt - B40S2M152	2
24	A376 3515	Timing Pulley - 48Z/22Z	1
25	A376 3516	Timing Pulley - 21Z	1
26	A610 3532	Timing Pulley - 18Z	1
27	A610 3535	Motor Cushion	1
28	AX06 0082	Belt Drive Motor - DC19W	1
29	AX11 0056	DC Solenoid - 24V	1
30	A376 3541	Solenoid Cushion	1
31	A376 3531	Solenoid Stopper	1
32	A610 3512	Feed-out Motor Bracket	1
33	A376 3611	Feed-out Roller Spring	4
34	5894 2229	Solenoid Pin	1

Index No.	Part No.	Description	Q ty Per Assembly
101	0314 0060B	Philips Pan Head Screw - M4x6	
102	0802 5237	Binding Self-tapping Screw - M4x10	
103	0720 0060B	Retaining Ring - M6	
104	0720 0040B	Retaining Ring - M4	
105	0313 0100B	Philips Pan Head Screw - M3x10	
106	1105 0328	Harness Clamp - ES-0505	
107	0742 3808	Ball Bearing - 8x16x5	
108	0633 0160E	Pin - 3x16mm	
109	0951 3004B	Philps Screw With Flat Washer -M3x4	
110	1105 0199	Clamp	
111	0574 0050E	Hexagon Headless Set Screw - M4x5	
112	0313 0060B	Philips Pan Head Screw - M3x6	
113	0720 0030B	Retaining Ring - M3	

7. ELECTRICAL SECTION (A610)

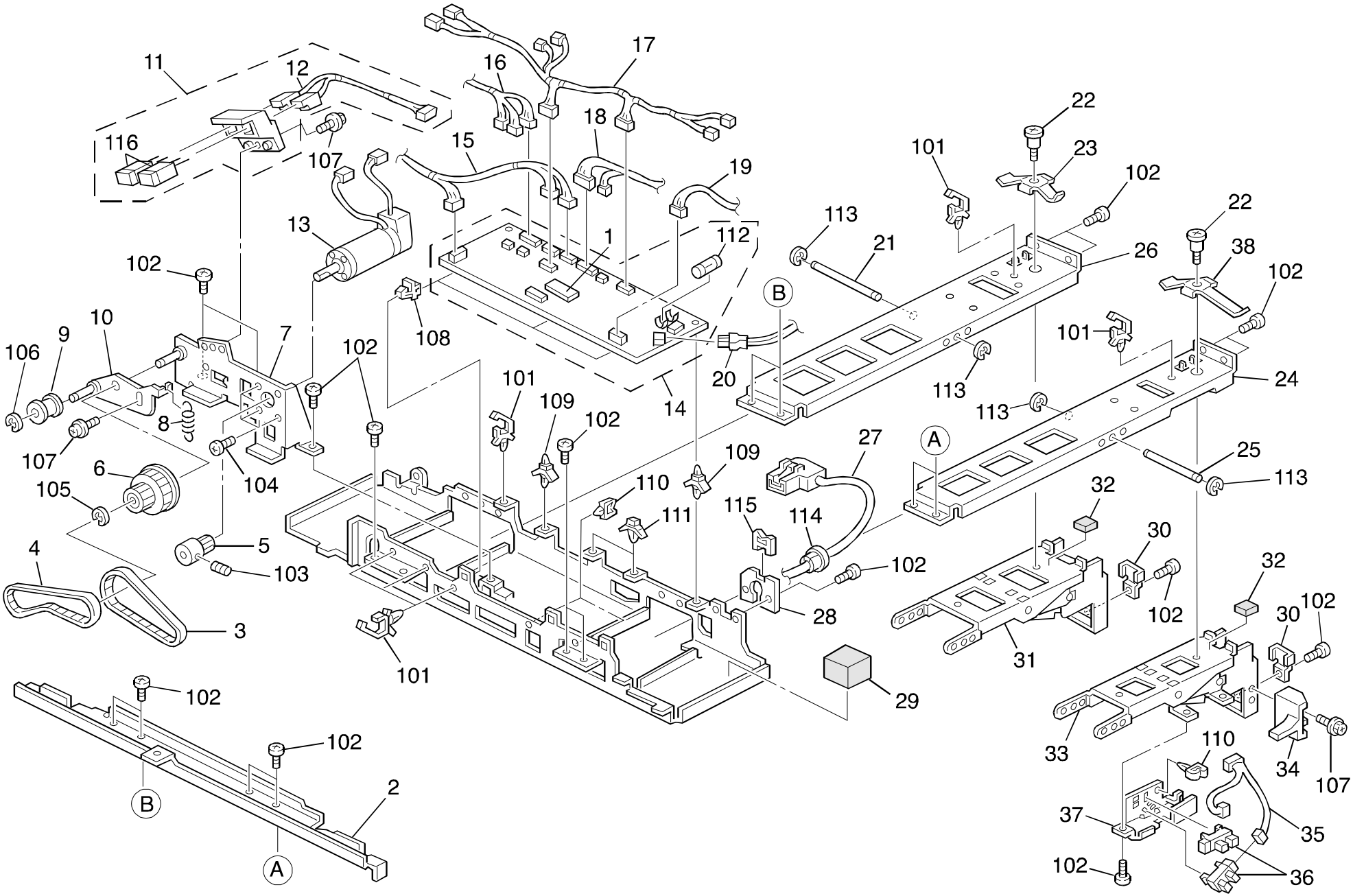

7. ELECTRICAL SECTION (A610)

Index No.	Part No.	Description	Q ty Per Assembly
1	A610 5820	IC - UVEPROM 256KX8 120NS	1
2	A610 4179	Front Stay	1
3	AA04 3253	Timing Belt - B60S2M278	1
4	AA04 3252	Timing Belt - B60S3M225	1
5	A376 1615	Timing Pulley - 22Z	1
6	A376 2524	Timing Pulley - 60Z/20Z	1
7	A610 2511	Transfer Motor Bracket	1
8	AA06 0590	Pressure Spring	1
9	A351 3459	Idler	1
10	A610 2530	Transport Tension Bracket	1
11	A610 2550	LED Harness	1
12	A376 5757	LED Harness	1
13	AX06 0121	DC Motor - 27W	1
14	A610 5500	Main Control Board	1
15	A610 5710	Original Feed Harness	1
16	A610 5705	Separation Solenoid Harness	1
17	A610 5700	Motor Harness	1
18	A610 5715	Invertor Harness	1
19	A610 5770	Separation Motor Harness	1
20	AW03 0032	Optical Fiber	1
21	A610 4113	Left Stay Shaft	1
22	AA14 3039	Spring Holder	2
23	A548 1135	Spring Plate	1
24	A610 4112	Right Stay	1
25	A610 4114	Right Stay Shaft	1
26	A610 4111	Left Stay	1
27	A376 5755	Interface Harness	1
28	A610 4191	Harness Holder	1
29	A610 4175	Motor Cushion	1
30	A610 4250	Hinge Stopper	2
31	A610 4140	Left Hinge	1
32	A351 4281	Anti-vibration Cushion	2
33	A610 4160	Right Hinge	1
34	A548 1531	Safety Switch Feeler	1
35	A610 5785	Lift-up Harness	1

Index No.	Part No.	Description	Q ty Per Assembly
36	AW02 0021	Photointerruptor - 175487-3	2
37	A548 1541	Safety Switch Bracket	1
38	A610 4155	Spring Plate	1
101	1105 0310	Wire Clamp	
102	0314 0060B	Philips Pan Head Screw - M4x6	
103	0574 0050E	Hexagon Headless Set Screw - M4x5	
104	0313 0060B	Philips Pan Head Screw - M3x6	
105	0720 0060B	Retaining Ring - M6	
106	0720 0040B	Retaining Ring - M4	
107	0951 4008B	Philips Screw With Washer - M4x8	
108	1106 0383	Supportor - P.C.B	
109	1105 0326	Locking Support	
110	1105 0199	Clamp	
111	1105 0159	PCB Stud	
112	1107 0459	Fuse - 5A 250V	
112	1107 0404	Fuse - 0.3A 250V	
113	0720 0030B	Retaining Ring - M3	
114	1106 0289	Bushing - SR-5N-1	
115	1105 0328	Harness Clamp - ES-0505	
116	1403 0493	LED - Green	

8. DECAL AND DOCUMENT (A610)

1

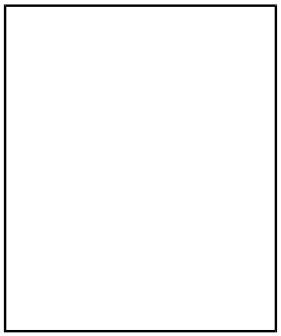

2

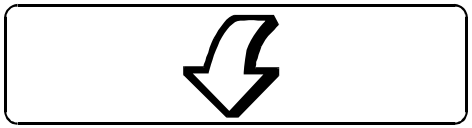

3

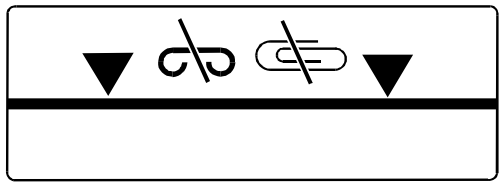

4



5

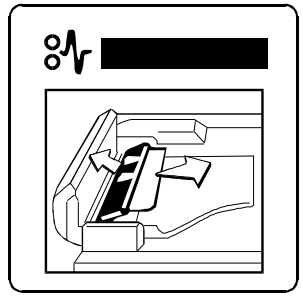

6

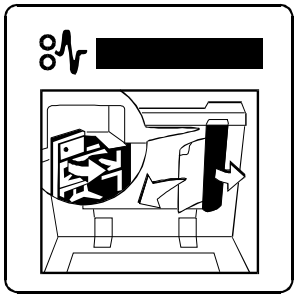

8. DECAL AND DOCUMENT (A610)

Index No.	Part No.	Description	Q ty Per Assembly
1	A054 2977	Decal - Vertical Transport Guide	1
2	A376 6051	Decal - Paper Feed Guide	1
3	A548 1931	Decal - Original Table	1
4	A610 6011	Decal - Original Size	1
5	A610 6031	Decal - Original Misfeed	1
6	A610 6041	Decal - Original Exit	1

Index No.	Part No.	Description	Q ty Per Assembly

PARTS INDEX

PM Parts Index

Section Name	Part No.	Description in Service Manual	Description in Parts Catalog	Q ty Per Assembly	Page and Index No
ORIGINAL FEED SECTION 2 (A610)	A376 1445	Feed Roller	Feed Roller	2	9- 17
	A610 1485	Separation Belt	Separation Belt	2	9- 9
TRANSPORT SECTION (A610)	A376 2196	Transport Belt	Transport Belt	1	13- 7

Parts Index

Part No.	Description	Page and Index No.
A610 1115	Front Side Plate	9- 1
A610 1121	Rear Side Plate	9- 32
A610 1134	Sensor Cover Bracket	9- 42
A610 1137	Magnetic Bracket	9- 29
A610 1139	Original Feed Motor Bracket	7- 24
A610 1142	Original Sensor Right Bracket	11- 11
A610 1147	Original Sensor Bracket	11- 24
A610 1160	Middle Stay	9- 27
A610 1190	Paper Guide Sheet	9- 26
A610 1195	Original Feed Sensor Bracket	9- 24
A610 1211	Lower Original Guide	11- 8
A610 1215	Belt Drive Shaft Holder	9- 2
A610 1220	Idle Roller Bracket	11- 7
A610 1221	Arm Shaft	11- 6
A610 1235	Original Feed Base	11- 3
A610 1251	Original Upper Guide	7- 2
A610 1259	Original Sensor Filter	7- 4
A610 1283	Original Feed Roller - Front	11- 25
A610 1311	Original Feed Roller - Rear	11- 12
A610 1315	Timing Pulley - 20Z	11- 28
A610 1384	Original Stopper Solenoid	11- 19
A610 1432	Spacer - 8x12x17	9- 34
A610 1472	Separation Belt Arm	9- 6
A610 1475	Adjusting Plate	9- 43
A610 1476	Separation Belt Driven Roller	9- 10
A610 1477	Separation Belt Roller	9- 5
A610 1480	Separation Belt Drive Shaft	9- 11
A610 1483	Separation Belt Driven Shaft	9- 8
A610 1485	Separation Belt	9- 9
A610 1491	Timing Pulley - T24S3M	9- 39
A610 1492	Encorder	9- 41
A610 1495	Sensor Bracket	9- 38
A610 1521	Motor Bracket	7- 21
A610 1525	Timing Pulley - 16Z/140Z	7- 20
A610 1530	Separation Belt Drive Motor	7- 22

Part No.	Description	Page and Index No
A610 1545	Original Feed Roller	9- 12
A610 1561	Idle Roller	11- 4
A610 1565	Pressure Arm	11- 5
A610 1597	Sensor Bracket	11- 15
A610 2111	Transfer Unit	13- 1
A610 2121	Transfer Belt Driven Roller	13- 5
A610 2131	Belt Pressure Roller	13- 9
A610 2132	Pressure Bushing	13- 21
A610 2133	Tension Spring	13- 22
A610 2136	Bushing	13- 8
A610 2137	Pressure Roller Bushing	13- 12
A610 2141	Belt Drive Roller	13- 6
A610 2151	Transport Stay	13- 17
A610 2161	Belt Pressure Roller - 24	13- 13
A610 2181	Transfer Belt Guide	13- 14
A610 2212	Transport Hinge Bracket	13- 20
A610 2213	Hinge Shaft	13- 10
A610 2214	Hinge Arm	13- 11
A610 2511	Transfer Motor Bracket	17- 7
A610 2530	Transport Tension Bracket	17- 10
A610 2550	LED Harness	17- 11
A610 3111	Front Side Plate	15- 1
A610 3121	Rear Side Plate	15- 22
A610 3126	Original Exit Roller	15- 6
A610 3141	Invertor Pawl	15- 13
A610 3148	Upper Feed-out Guide	15- 17
A610 3155	Feed-out Driven Roller Holder	15- 21
A610 3161	Sensor Bracket	15- 19
A610 3215	Feed-out Driven Roller	15- 15
A610 3218	Feed-out Driven Roller Arm	15- 14
A610 3512	Feed-out Motor Bracket	15- 32
A610 3532	Timing Pulley - 18Z	15- 26
A610 3535	Motor Cushion	15- 27
A610 4111	Left Stay	17- 26
A610 4112	Right Stay	17- 24

Part No.	Description	Page and Index No.
A610 4113	Left Stay Shaft	17- 21
A610 4114	Right Stay Shaft	17- 25
A610 4140	Left Hinge	17- 31
A610 4155	Spring Plate	17- 38
A610 4160	Right Hinge	17- 33
A610 4175	Motor Cushion	17- 29
A610 4179	Front Stay	17- 2
A610 4191	Harness Holder	17- 28
A610 4250	Hinge Stopper	17- 30
A610 4511	Upper Cover	5- 5
A610 4527	Grounding Plate	5- 8
A610 4531	Left Cover	5- 1
A610 4551	Original Table	5- 10
A610 4581	Side Fence	5- 12
A610 4591	Main Board Cover	5- 9
A610 4601	Lower Feed-out Cover	5- 20
A610 4621	Front Lower Cover	5- 26
A610 4671	Original Mylar	5- 17
A610 4672	Original Table Guard	5- 19
A610 5500	Main Control Board	17- 14
A610 5700	Motor Harness	17- 17
A610 5705	Separation Solenoid Harness	17- 16
A610 5710	Original Feed Harness	17- 15
A610 5715	Invertor Harness	17- 18
A610 5770	Separation Motor Harness	17- 19
A610 5785	Lift-up Harness	17- 35
A610 5820	IC - UVEPROM 256KX8 120NS	17- 1
A610 6011	Decal - Original Size	5- 3
A610 6011	Decal - Original Size	19- 4
A610 6031	Decal - Original Misfeed	5- 2
A610 6031	Decal - Original Misfeed	19- 5
A610 6041	Decal - Original Exit	5- 22
A610 6041	Decal - Original Exit	19- 6

Part No.	Description	Page and Index No
AA04 3250	Timing Belt - B40S2M122	7- 19
AA04 3251	Timing Belt - B40S3M141	9- 40
AA04 3252	Timing Belt - B60S3M225	17- 4
AA04 3253	Timing Belt - B60S2M278	17- 3
AA04 3254	Timing Belt - B40S2M152	15- 23
AA06 0590	Pressure Spring	17- 8
AA06 3386	Pressure Spring	9- 7
AA06 3389	Pressure Spring	15- 16
AA06 6278	Spring	5- 23
AA12 0032	Antistatic Brush	11- 2
AA14 3039	Spring Holder	17- 22
AA14 3062	Shoulder Screw - M4	13- 19
AW01 0066	Photosensor - PS-R50D1-B	9- 22
AW01 0066	Photosensor - PS-R50D1-B	11- 13
AW01 0066	Photosensor - PS-R50D1-B	15- 18
AW02 0021	Photointerruptor - 175487-3	9- 25
AW02 0021	Photointerruptor - 175487-3	11- 16
AW02 0021	Photointerruptor - 175487-3	17- 36
AW03 0032	Optical Fiber	17- 20
AX06 0082	Belt Drive Motor - DC19W	15- 28
AX06 0121	DC Motor - 27W	7- 23
AX06 0121	DC Motor - 27W	17- 13
AX11 0056	DC Solenoid - 24V	15- 29
AX20 0127	Magnetic Clutch	9- 37
C217 5524	Stud - Front Release Lever	7- 3

Part No.	Description	Page and Index No.
A054 2977	Decal - Vertical Transport Guide	5- 21
A054 2977	Decal - Vertical Transport Guide	15- 9
A054 2977	Decal - Vertical Transport Guide	19- 1
A351 3459	Idler	17- 9
A351 4281	Anti-vibration Cushion	17- 32
A376 1141	Upper Paper Feed Stay	11- 14
A376 1145	Front Bracket - Pick-up Roller	11- 26
A376 1149	Pick-up Relay Roller Bracket	11- 23
A376 1193	Registration Sensor Bracket	9- 28
A376 1197	Left Bracket - Paper Size Sensor	9- 23
A376 1245	Entrance Original Guide	7- 17
A376 1255	Original Stopper	7- 14
A376 1257	Spacer - M4x6x6	7- 13
A376 1264	Pressure Spring	7- 12
A376 1265	Pressure Spring	7- 16
A376 1291	Rear Timing Pulley	11- 20
A376 1292	Front Timing Pulley	11- 9
A376 1295	Spacer - M6x10x5	11- 21
A376 1319	Timing Belt - B60S2M98	11- 27
A376 1331	Original Pressure Shaft	7- 10
A376 1335	Release Spring	7- 7
A376 1343	Original Pressure Roller	7- 9
A376 1347	Original Pressure Arm	7- 8
A376 1355	Original Stopper Arm	7- 6
A376 1363	Front Lever - Original Stopper	7- 11
A376 1382	Release Spring	11- 18
A376 1385	Stopper Solenoid Bracket	11- 17
A376 1415	Feed Roller Drive Shaft	9- 20
A376 1419	Timing Pulley - 22Z/23Z	9- 33
A376 1423	Timing Belt - B60S2M126	9- 35
A376 1445	Feed Roller	9- 17
A376 1447	Middle Feed Roller	9- 19
A376 1457	Feed Roller Driven Shaft	9- 13
A376 1461	Feed Roller Bushing	9- 16
A376 1465	Feed Roller Bushing	9- 14

Part No.	Description	Page and Index No
A376 1467	Feed Roller Pressure Spring	9- 15
A376 1549	Timing Pulley - 60Z/20Z	9- 30
A376 1553	Timing Belt - B60S3M144	9- 36
A376 1567	Arm Pressure Spring	11- 10
A376 1615	Timing Pulley - 22Z	7- 25
A376 1615	Timing Pulley - 22Z	17- 5
A376 1623	Timing Belt - B60S2M186	9- 31
A376 1902	Left Cover Bracket	5- 4
A376 2132	Belt Driven Roller	13- 16
A376 2155	Transport Unit Upper Stopper	13- 2
A376 2157	Transport Unit Rear Stopper	13- 15
A376 2196	Transport Belt	13- 7
A376 2524	Timing Pulley - 60Z/20Z	17- 6
A376 3125	Inverter Roller	15- 10
A376 3137	Inverter Guide	15- 8
A376 3145	Inverter Guide Plate	15- 7
A376 3153	Lower Driven Roller	15- 20
A376 3172	Inverter Pawl Bushing	15- 12
A376 3242	Antistatic Brush	5- 7
A376 3515	Timing Pulley - 48Z/22Z	15- 24
A376 3516	Timing Pulley - 21Z	15- 25
A376 3531	Solenoid Stopper	15- 31
A376 3537	Inverter Guide Spring	15- 5
A376 3541	Solenoid Cushion	7- 15
A376 3541	Solenoid Cushion	15- 30
A376 3611	Feed-out Roller Spring	15- 33
A376 3612	Inverter Lever Spring	15- 11
A376 4125	Grip Bracket	5- 18
A376 4599	Side Fence Pad	5- 13
A376 4911	Stepped Screw - Left Hinge	5- 15
A376 5755	Interface Harness	17- 27
A376 5757	LED Harness	17- 12
A376 6051	Decal - Paper Feed Guide	19- 2
A422 1078	Bushing - 6x12x4mm	13- 4
A469 3350	Guide Stud	5- 24

Part No.	Description	Page and Index No.
A469 3350	Guide Stud	13- 18
A548 1135	Spring Plate	17- 23
A548 1283	Bushing - 6x10x6.5mm	9- 4
A548 1531	Safety Switch Feeler	17- 34
A548 1541	Safety Switch Bracket	17- 37
A548 1931	Decal - Original Table	5- 14
A548 1931	Decal - Original Table	19- 3
A548 1941	Display Panel	5- 6
A548 2111	Timing Pulley - 20Z	7- 27
A548 2113	Motor Cushion	7- 26
A548 6131	Cushion - 20x190x30	5- 27
A565 2151	Side Fence Rail	5- 11
5053 0223	Bushing - 8mm	9- 21
5053 0447	Bushing - 6mm	7- 18
5053 0447	Bushing - 6mm	9- 3
5053 0447	Bushing - 6mm	11- 22
5053 0447	Bushing - 6mm	13- 3
5053 0447	Bushing - 6mm	15- 4
5215 2621	Snap Ring - M6	9- 18
5420 4860	Bushing - 8mm	15- 2
5446 2824	Screw - Duplex Guide Plate	5- 25
5446 2824	Screw - Duplex Guide Plate	7- 1
5447 2681	Snap Ring	15- 3
5875 2088	Shoulder Screw - M4	5- 16
5875 2088	Shoulder Screw - M4	11- 1
5894 2229	Solenoid Pin	7- 5
5894 2229	Solenoid Pin	15- 34

Part No.	Description	Page and Index No
0313 0050B	Philips Pan Head Screw - M3x5	7-106
0313 0050B	Philips Pan Head Screw - M3x5	9-111
0313 0050B	Philips Pan Head Screw - M3x5	11-105
0313 0060B	Philips Pan Head Screw - M3x6	7-107
0313 0060B	Philips Pan Head Screw - M3x6	15-112
0313 0060B	Philips Pan Head Screw - M3x6	17-104
0313 0100B	Philips Pan Head Screw - M3x10	9-106
0313 0100B	Philips Pan Head Screw - M3x10	11-108
0313 0100B	Philips Pan Head Screw - M3x10	15-105
0314 0060B	Philips Pan Head Screw - M4x6	5-105
0314 0060B	Philips Pan Head Screw - M4x6	7-101
0314 0060B	Philips Pan Head Screw - M4x6	9-102
0314 0060B	Philips Pan Head Screw - M4x6	11-102
0314 0060B	Philips Pan Head Screw - M4x6	13-101
0314 0060B	Philips Pan Head Screw - M4x6	15-101
0314 0060B	Philips Pan Head Screw - M4x6	17-102
0344 0060F	Philips Truss Head Screw - M4x6	5-103
0344 0060F	Philips Truss Head Screw - M4x6	7-105
0344 0080F	Philips Truss Head Screw - M4x8	5-102
0353 0050B	Philips Truss Head Screw - M3x5	5-101
0354 0060B	Screw - M4x6	13-104
0574 0050E	Hexagon Headless Set Screw - M4x5	7-109
0574 0050E	Hexagon Headless Set Screw - M4x5	9-110
0574 0050E	Hexagon Headless Set Screw - M4x5	15-111
0574 0050E	Hexagon Headless Set Screw - M4x5	17-103
0632 0100	Parallel Pin - M2x10	7-104
0632 0120	Parallel Pin - M2x12	9-109
0633 0160E	Pin - 3x16mm	15-108
0720 0030B	Retaining Ring - M3	7-103
0720 0030B	Retaining Ring - M3	11-103
0720 0030B	Retaining Ring - M3	13-103
0720 0030B	Retaining Ring - M3	15-113
0720 0030B	Retaining Ring - M3	17-113
0720 0040B	Retaining Ring - M4	7-102
0720 0040B	Retaining Ring - M4	9-104

Part No.	Description	Page and Index No.
0720 0040B	Retaining Ring - M4	11-106
0720 0040B	Retaining Ring - M4	13-102
0720 0040B	Retaining Ring - M4	15-104
0720 0040B	Retaining Ring - M4	17-106
0720 0060B	Retaining Ring - M6	9-101
0720 0060B	Retaining Ring - M6	11-104
0720 0060B	Retaining Ring - M6	15-103
0720 0060B	Retaining Ring - M6	17-105
0740 3008	Ball Bearing - 8x22x7	9-103
0741 3506	Ball Bearing - 6x12x4 mm	13-105
0742 3808	Ball Bearing - 8x16x5	9-108
0742 3808	Ball Bearing - 8x16x5	15-107
0802 5237	Binding Self-tapping Screw - M4x10	5-104
0802 5237	Binding Self-tapping Screw - M4x10	11-101
0802 5237	Binding Self-tapping Screw - M4x10	15-102
0951 3004B	Philps Screw With Flat Washer -M3x4	15-109
0951 4008B	Philips Screw With Washer - M4x8	17-107
0951 5010B	Philips Screw With Washer - M5x10	5-106
1105 0159	PCB Stud	17-111
1105 0199	Clamp	7-108
1105 0199	Clamp	9-105
1105 0199	Clamp	11-107
1105 0199	Clamp	15-110
1105 0199	Clamp	17-110
1105 0229	Clamp	11-109
1105 0310	Wire Clamp	17-101
1105 0326	Locking Support	17-109
1105 0328	Harness Clamp - ES-0505	9-107
1105 0328	Harness Clamp - ES-0505	15-106
1105 0328	Harness Clamp - ES-0505	17-115
1106 0289	Bushing - SR-5N-1	17-114
1106 0383	Supportor - P.C.B	17-108
1107 0404	Fuse - 0.3A 250V	17-112
1107 0459	Fuse - 5A 250V	17-112
1403 0493	LED - Green	17-116

Part No.	Description	Page and Index No