Holder Type C (A702)

PARTS CATALOG

INTRODUCTION

This chapter instructs you the numbers and names of parts on this machine.

INDEX to PARTS CATALOG

1.Holder Type C (A702)..... 2
Parts Index 5

1. Holder Type C (A702)

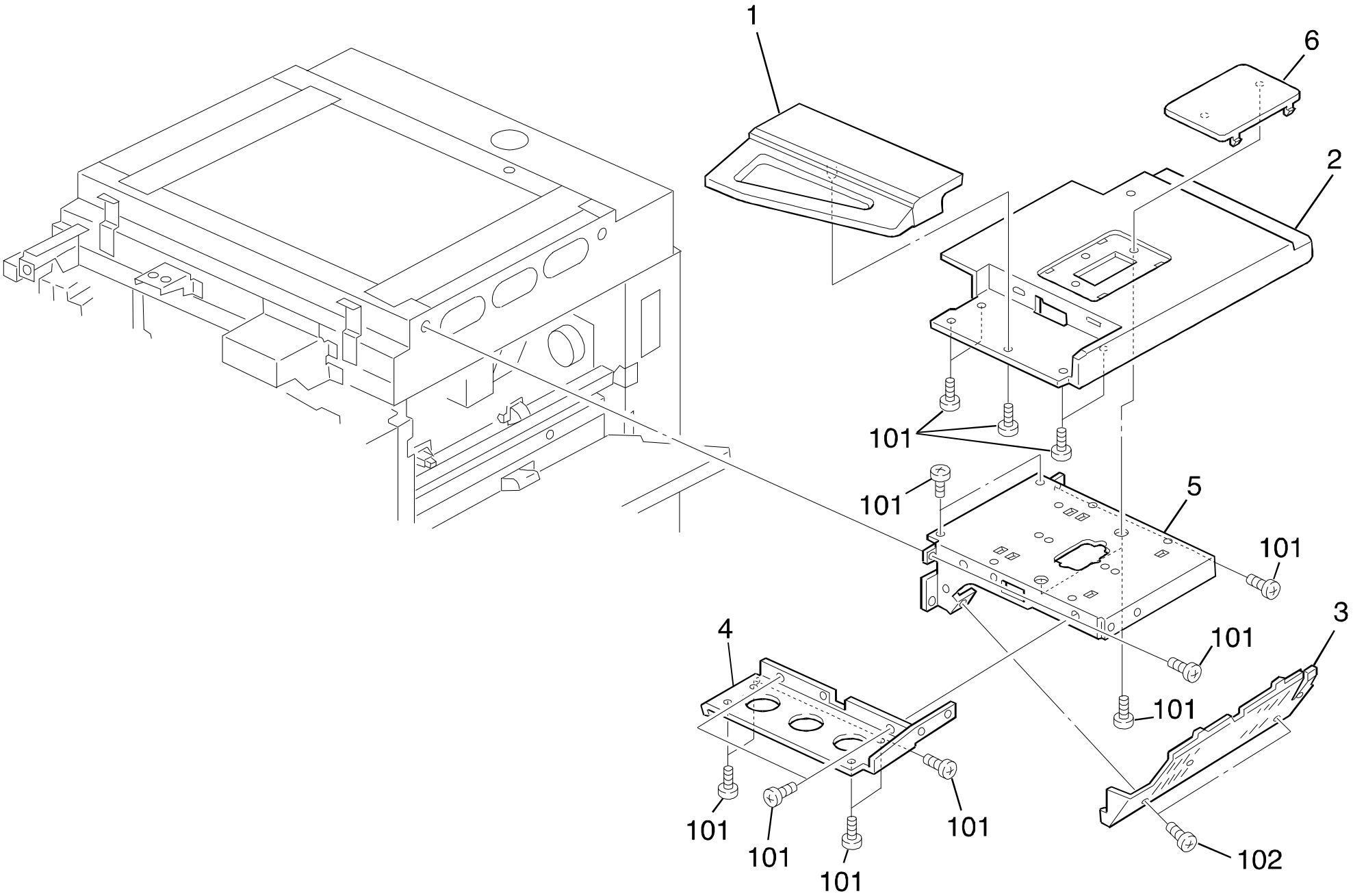

1. Holder Type C (A702)

Index No.	Part No.	Description	Q ty Per Assembly
1	A702 1333	Front Cover	1
2	A702 1315	Holder Cover	1
3	A702 1321	Lower Cover	1
4	A702 1116	Editor Bracket	1
5	A702 1112	Holder Base Bracket	1
6	A702 1316	Cover Plate	1

Index No.	Part No.	Description	Q ty Per Assembly
101	0344 0060F	Philips Truss Head Screw - M4x6	
102	0314 0060B	Philips Pan Head Screw - M4x6	

PARTS INDEX

Part No.	Description	Page and Index No.
A702 1112	Holder Base Bracket	3- 5
A702 1116	Editor Bracket	3- 4
A702 1315	Holder Cover	3- 2
A702 1316	Cover Plate	3- 6
A702 1321	Lower Cover	3- 3
A702 1333	Front Cover	3- 1

Part No.	Description	Page and Index No
0314 0060B	Philips Pan Head Screw - M4x6	3-102
0344 0060F	Philips Truss Head Screw - M4x6	3-101