LILY (A172/A199)

PARTS CATALOG

First Edition June 1996

Ricoh Company,LTD.

PARTS CATALOG

INTRODUCTION

This chapter instructs you the numbers and names of parts on this machine.

INDEX to PARTS CATALOG

Lily (Copier)	**(A172/A199)**
DF62	**(A610)**
CS250	**(A322)**
Sorter Adapter Type J	**(A527)**
SPU3	**(A718)**
Holder Type C	**(A702)**

Lily (Copier) (A172/A199)

PARTS CATALOG

INTRODUCTION

This chapter instructs you the numbers and names of parts on this machine.

INDEX to PARTS CATALOG

Location of Unit 3
1.Exterior 1 (A172/A199) 12
2.Exterior 2 (A172/A199) 14
3.Operation Panel (A172/A199) 16
4.Optics Section 1 (A172/A199) 18
5.Optics Section 2 (A172/A199) 20
6.Optics Section 3 (A172/A199) 22
7.Optics Section 4 (A172/A199) 24
8.Printer Section 1 (A172/A199) 26
9.Printer Section 2 (A172/A199) 28
10.1st And 2nd Paper Feed Tray (A172/A199) 30
11.3rd Paper Feed Tray (A172/A199) 32
12.Paper Supply Unit 1 (A172/A199) 34
13.Paper Supply Unit 2 (A172/A199) 36
14.Paper Supply Unit 3 (A172/A199) 38
15.Paper Feed Section 1 (A172/A199) 40
16.Paper Feed Section 2 (A172/A199) 42
17.By-pass Feed Table (A172/A199) 44
18.Paper Registration (A172/A199) 46
19.Around The Drum (A172/A199) 48
20.Drum Unit 1 (A172/A199) 50
21.Drum Unit 2 (A172/A199) 52
22.Toner Tank Unit 1 (A172/A199) 54
23.Toner Tank Unit 2 (A172/A199) 56
24.Development Unit - Black (A172/A199) 58
25.Development Unit - Cyan (A172/A199) 60
26.Development Unit - Magenta (A172/A199) 62
27.Development Unit - Yellow (A172/A199) 64
28.Transfer Belt Unit 1 (A172/A199) 66
29.Transfer Belt Unit 2 (A172/A199) 68
30.Transfer Roller Unit (A172/A199) 70
31.Transport Unit (A172/A199) 72
32.Belt Cleaning Unit (A172/A199) 74
33.Toner Collection Section (A172/A199) 76
34.Fusing Unit 1 (A172/A199) 78
35.Fusing Unit 2 (A172/A199) 80
36.Fusing Unit 3 (A172/A199) 82
37.Fusing Unit 4 (A172/A199) 84

38.Drive Section 1 (A172/A199) 86
39.Drive Section 2 (A172/A199) 88
40.Drive Section 3 (A172/A199) 90
41.Drive Section 4 (A172/A199) 92
42.Electrical Section 1 (A172/A199) 94
43.Electrical Section 2 (A172/A199) 96
44.Electrical Section 3 (A172/A199) 98
45.Electrical Section 4 (A172/A199) 100
46.Frame Section 1 (A172/A199) 102
47.Frame Section 2 (A172/A199) 104
48.Frame Section 3 (A172/A199) 106
49.Frame Section 4 (A172/A199) 108
50.Main Control Board (A172/A199) 110
51.IPU Board (A172/A199) 116
52.AC Main Harness (A172/A199) 122
53.Decal And Document (A172/A199) 124
54.Special Tools (A172/A199) 128
Parts Index 137

Location of Unit

1. Exterior 1 (A172/A199)

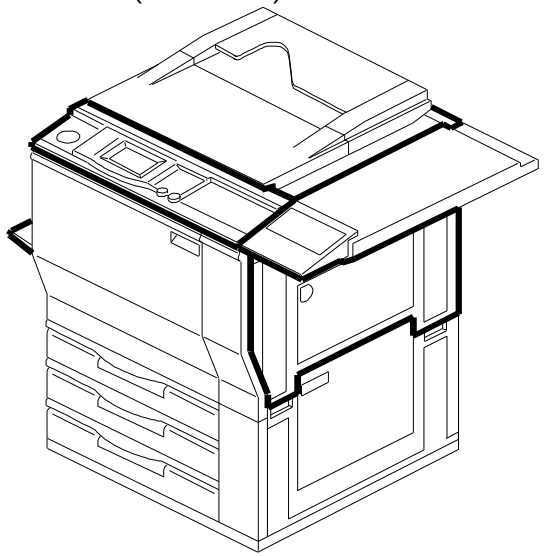

See Page 12

2. Exterior 2 (A172/A199)

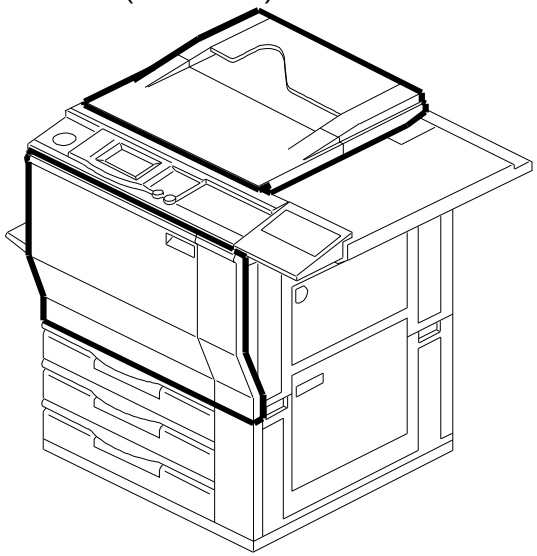

See Page 14

3. Operation Panel (A172/A199)

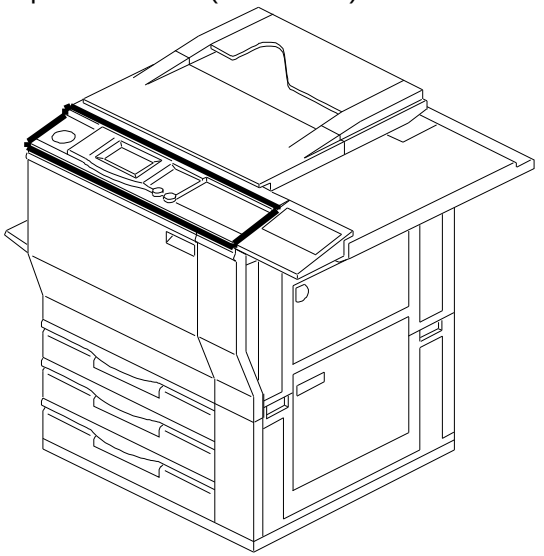

See Page 16

4. Optics Section 1 (A172/A199)

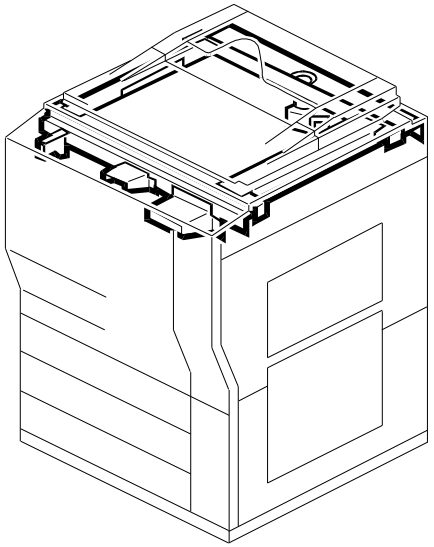

See Page 18

5. Optics Section 2 (A172/A199)

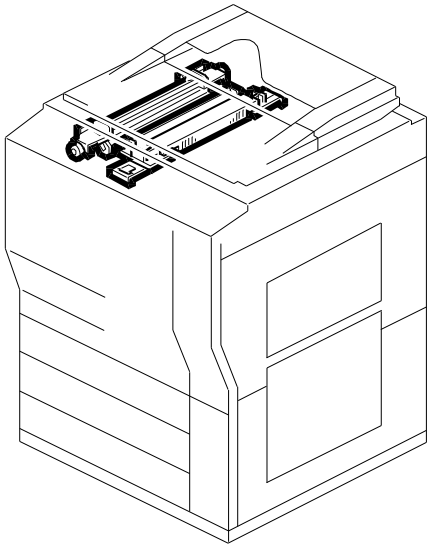

See Page 20

6. Optics Section 3 (A172/A199)

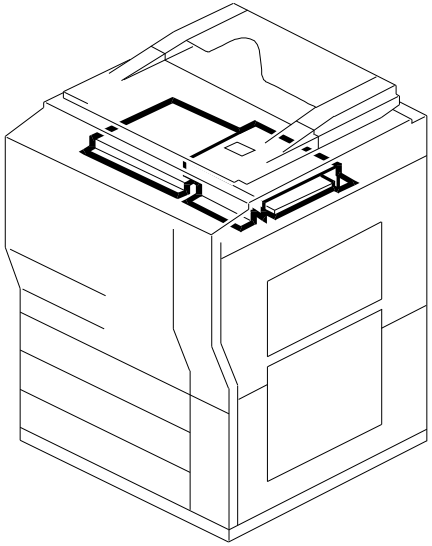

See Page 22

Location of Unit

7. Optics Section 4 (A172/A199)

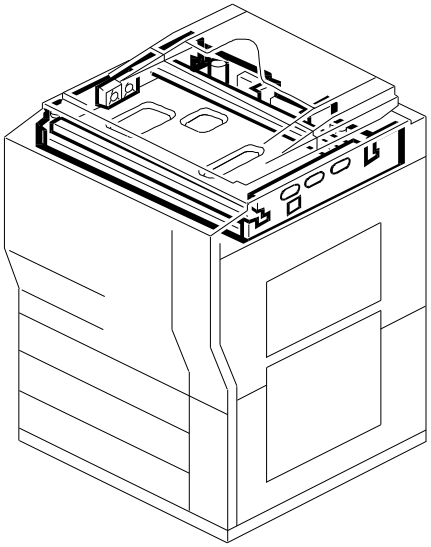

See Page 24

8. Printer Section 1 (A172/A199)

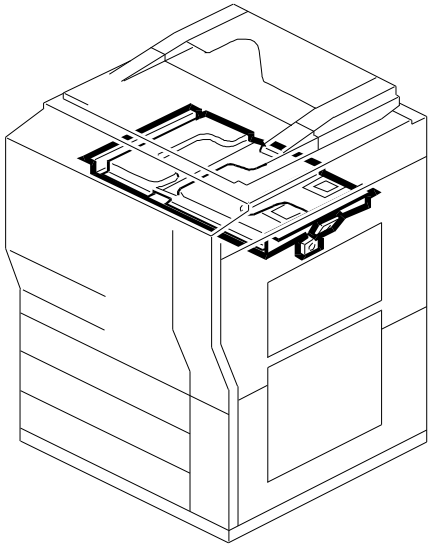

See Page 26

9. Printer Section 2 (A172/A199)

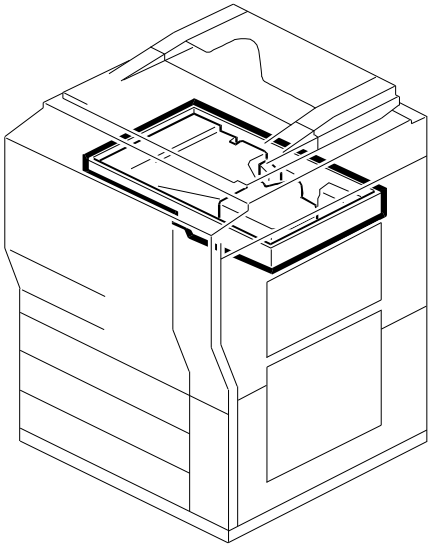

See Page 28

10. 1st And 2nd Paper Feed Tray (A172/A199)

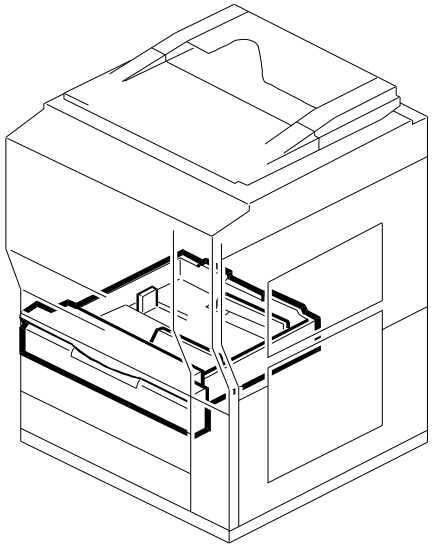

See Page 30

11. 3rd Paper Feed Tray (A172/A199)

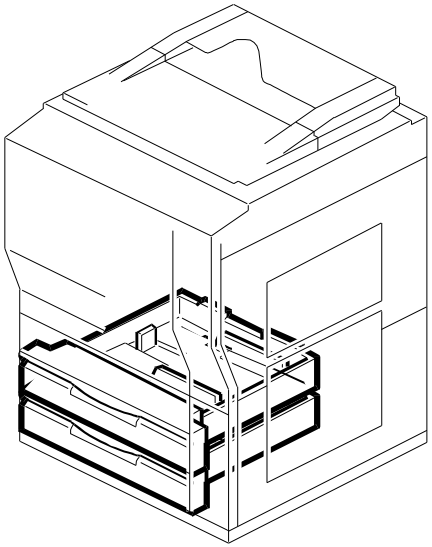

See Page 32

12. Paper Supply Unit 1 (A172/A199)

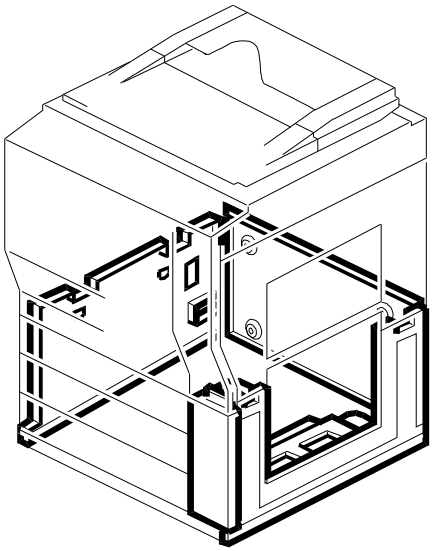

See Page 34

Location of Unit

13. Paper Supply Unit 2 (A172/A199)

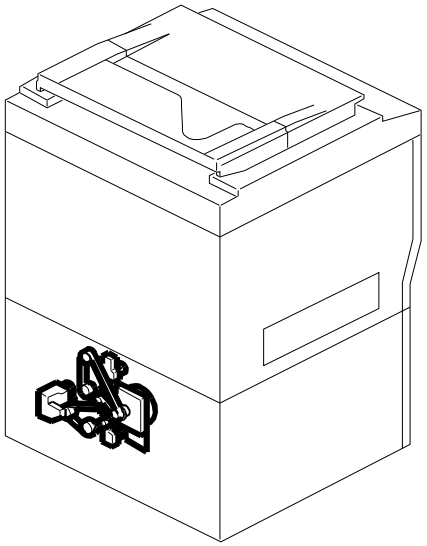

See Page 36

14. Paper Supply Unit 3 (A172/A199)

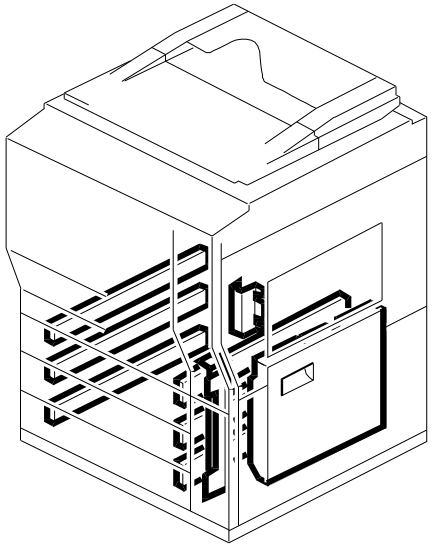

See Page 38

15. Paper Feed Section 1 (A172/A199)

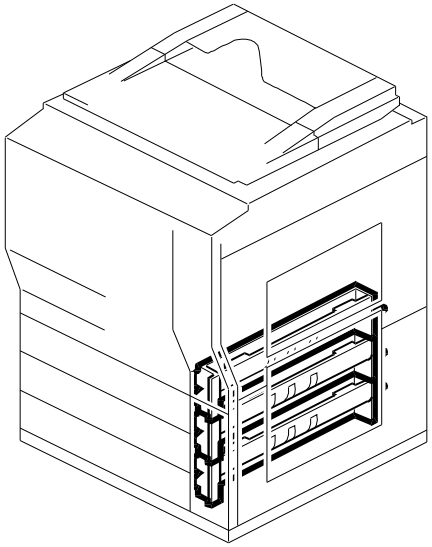

See Page 40

16. Paper Feed Section 2 (A172/A199)

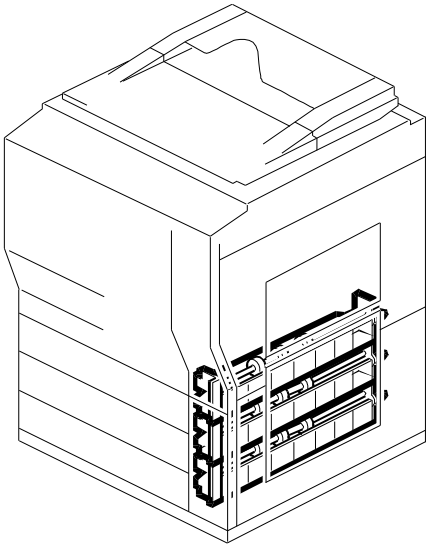

See Page 42

17. By-pass Feed Table (A172/A199)

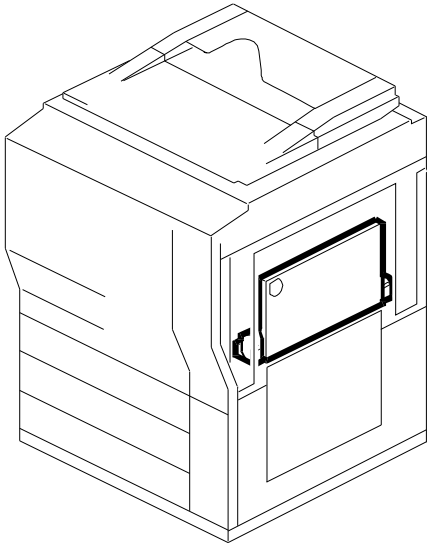

See Page 44

18. Paper Registration (A172/A199)

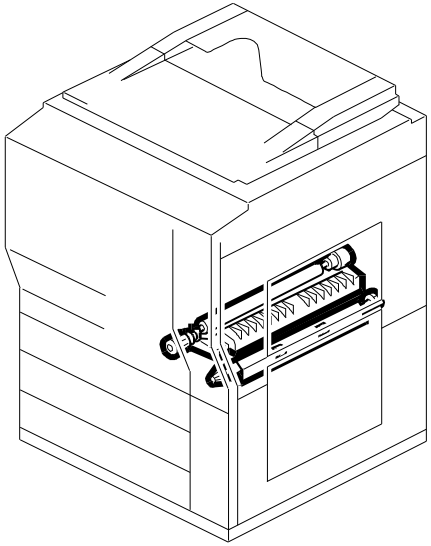

See Page 46

Location of Unit

19. Around The Drum (A172/A199)

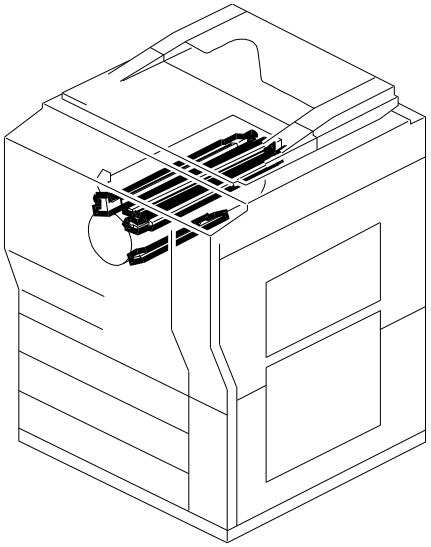

See Page 48

20. Drum Unit 1 (A172/A199)

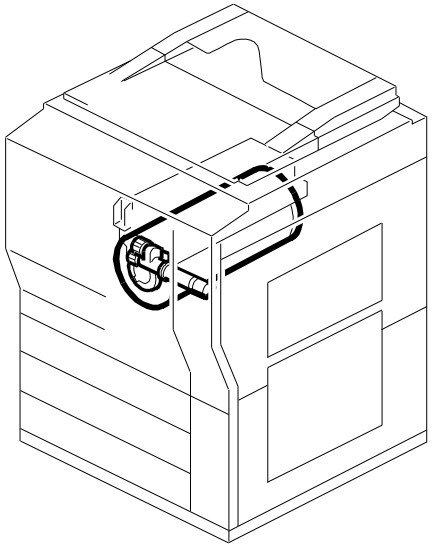

See Page 50

21. Drum Unit 2 (A172/A199)

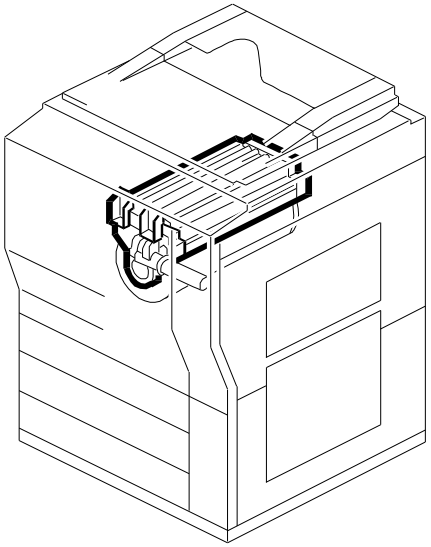

See Page 52

22. Toner Tank Unit 1 (A172/A199)

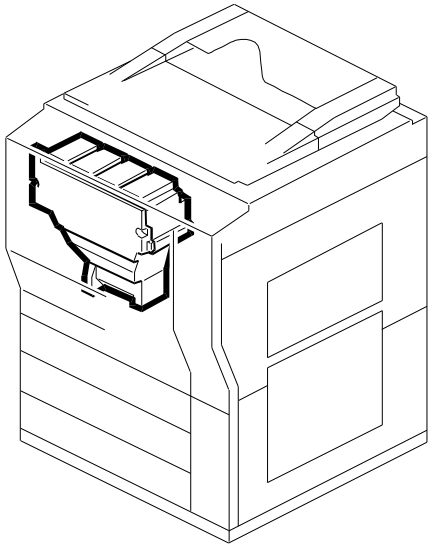

See Page 54

23. Toner Tank Unit 2 (A172/A199)

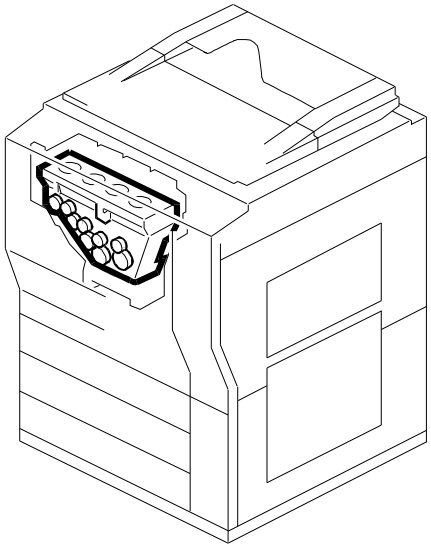

See Page 56

24. Development Unit - Black (A172/A199)

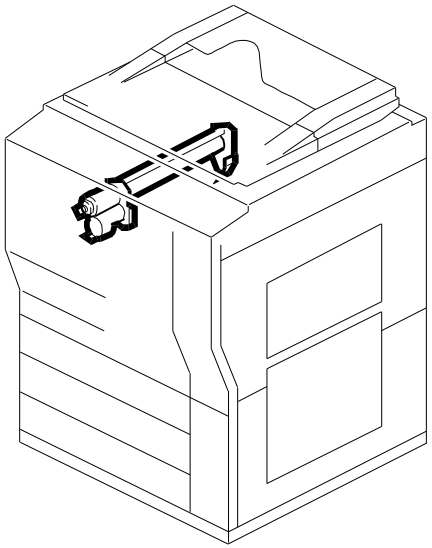

See Page 58

Location of Unit

25. Development Unit - Cyan (A172/A199)

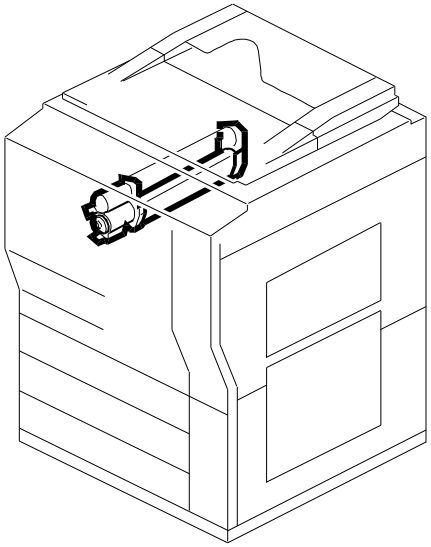

See Page 60

26. Development Unit - Magenta (A172/A199)

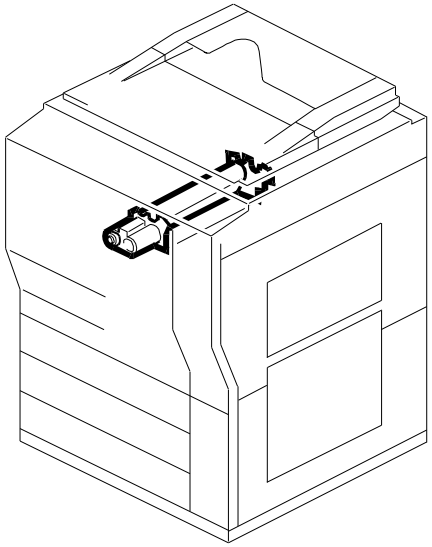

See Page 62

27. Development Unit - Yellow (A172/A199)

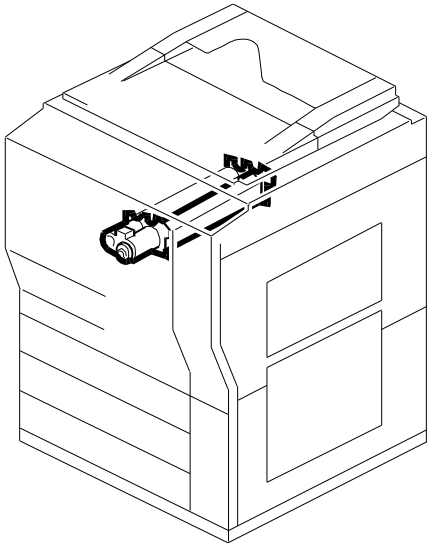

See Page 64

28. Transfer Belt Unit 1 (A172/A199)

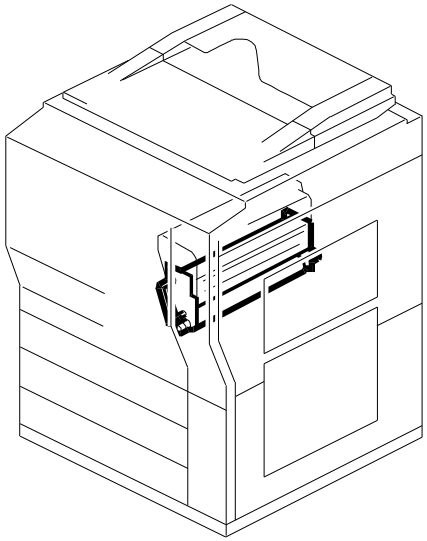

See Page 66

29. Transfer Belt Unit 2 (A172/A199)

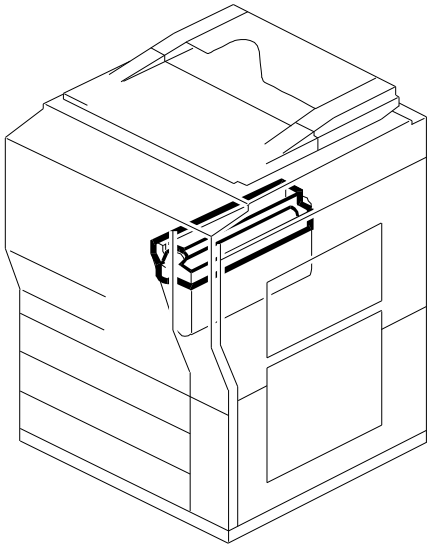

See Page 68

30. Transfer Roller Unit (A172/A199)

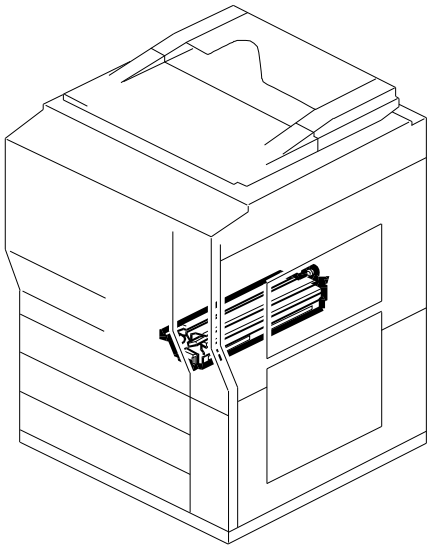

See Page 70

Location of Unit

31. Transport Unit (A172/A199)

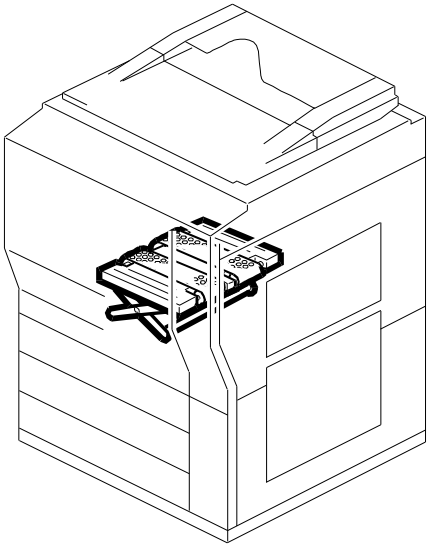

See Page 72

32. Belt Cleaning Unit (A172/A199)

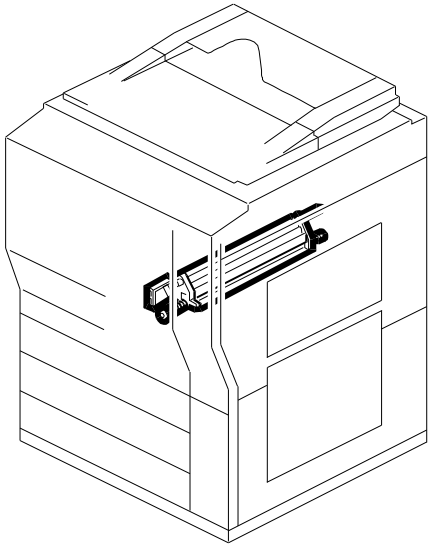

See Page 74

33. Toner Collection Section (A172/A199)

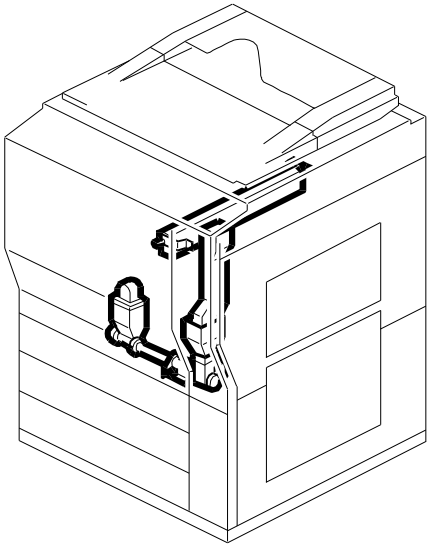

See Page 76

34. Fusing Unit 1 (A172/A199)

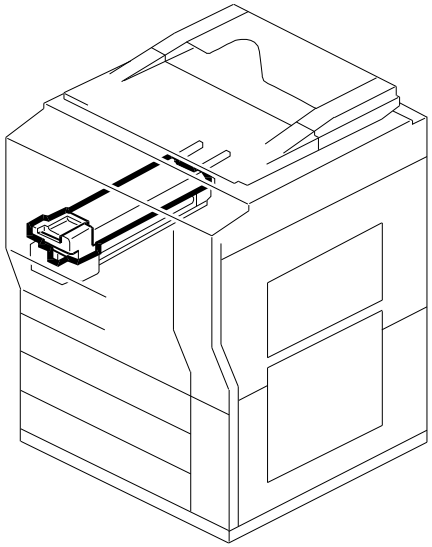

See Page 78

35. Fusing Unit 2 (A172/A199)

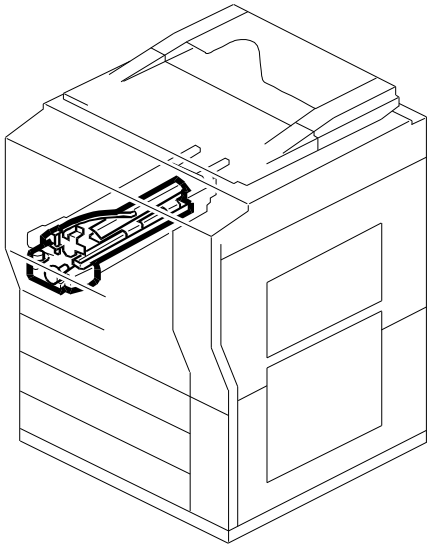

See Page 80

36. Fusing Unit 3 (A172/A199)

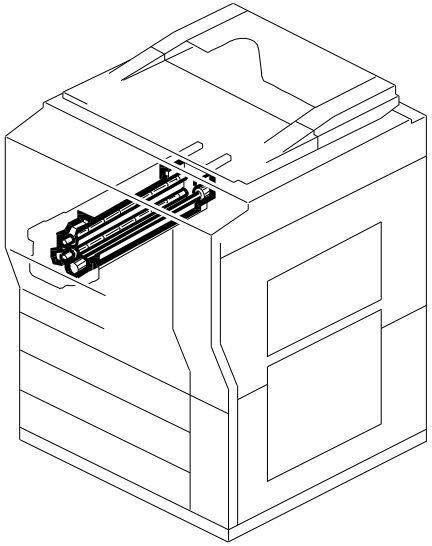

See Page 82

Location of Unit

37. Fusing Unit 4 (A172/A199)

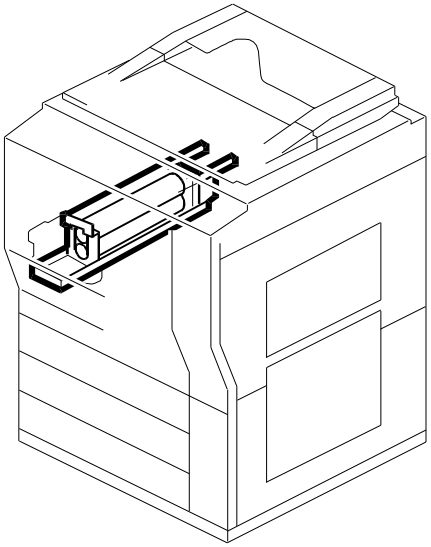

See Page 84

38. Drive Section 1 (A172/A199)

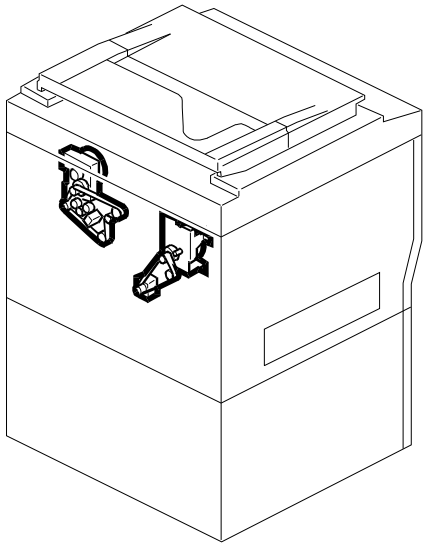

See Page 86

39. Drive Section 2 (A172/A199)

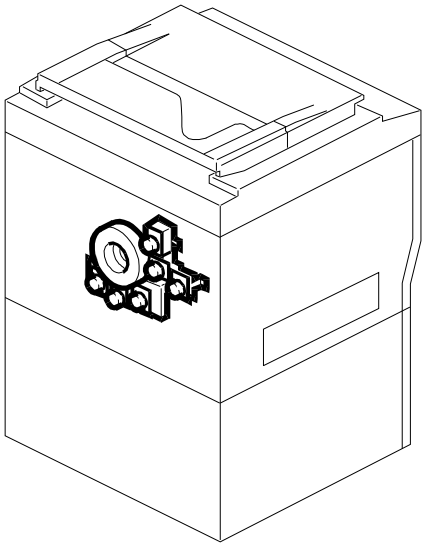

See Page 88

40. Drive Section 3 (A172/A199)

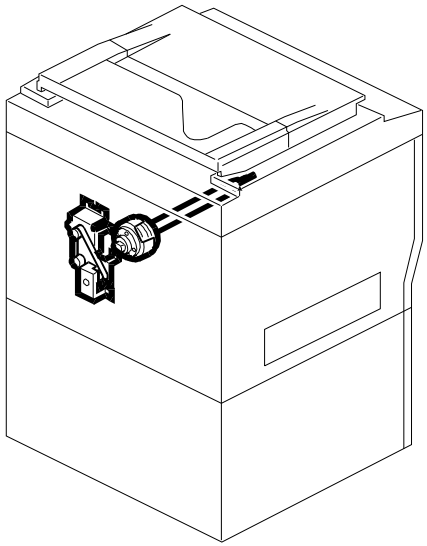

See Page 90

41. Drive Section 4 (A172/A199)

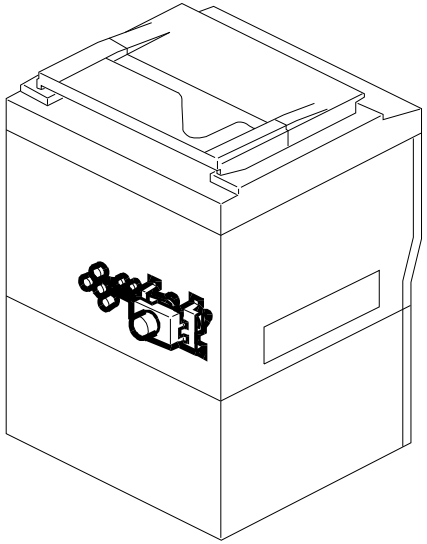

See Page 92

42. Electrical Section 1 (A172/A199)

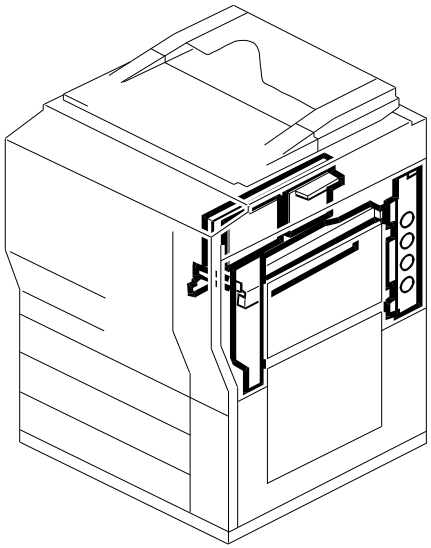

See Page 94

Location of Unit

43. Electrical Section 2 (A172/A199)

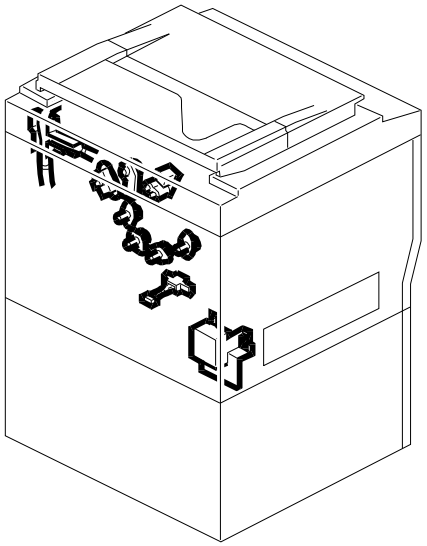

See Page 96

44. Electrical Section 3 (A172/A199)

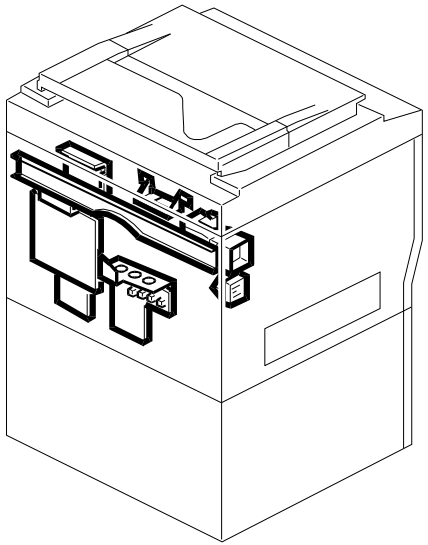

See Page 98

45. Electrical Section 4 (A172/A199)

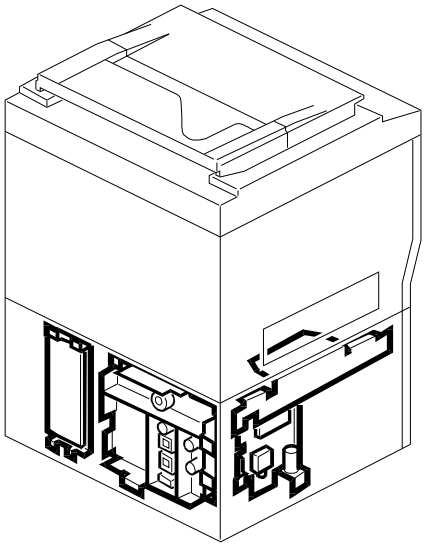

See Page100

46. Frame Section 1 (A172/A199)

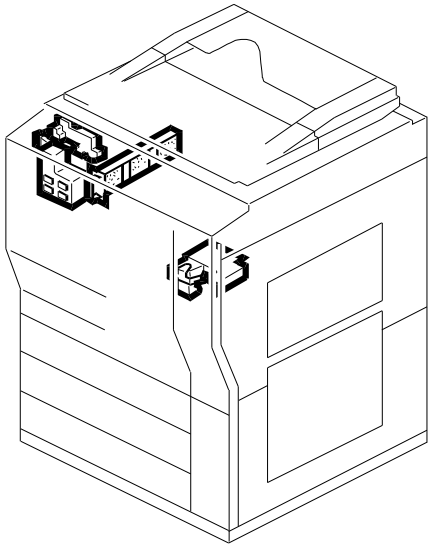

See Page102

47. Frame Section 2 (A172/A199)

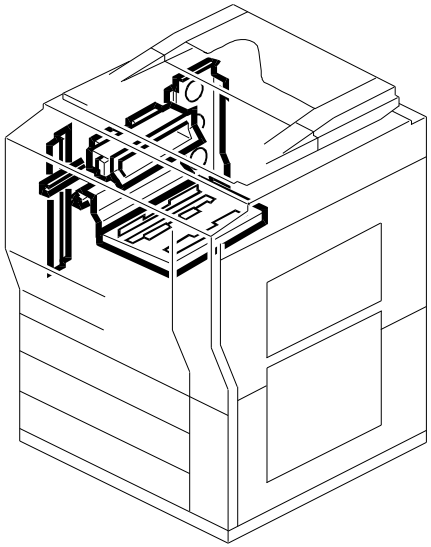

See Page104

48. Frame Section 3 (A172/A199)

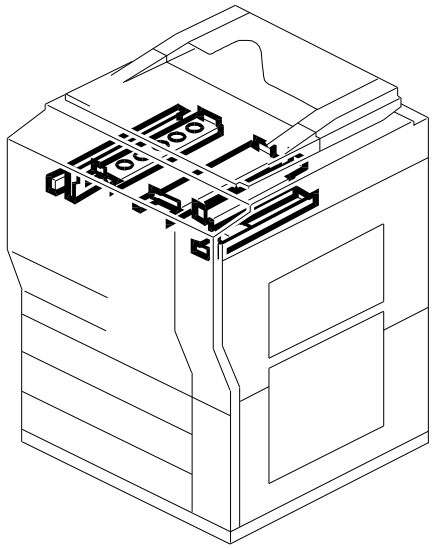

See Page106

Location of Unit

49. Frame Section 4 (A172/A199) 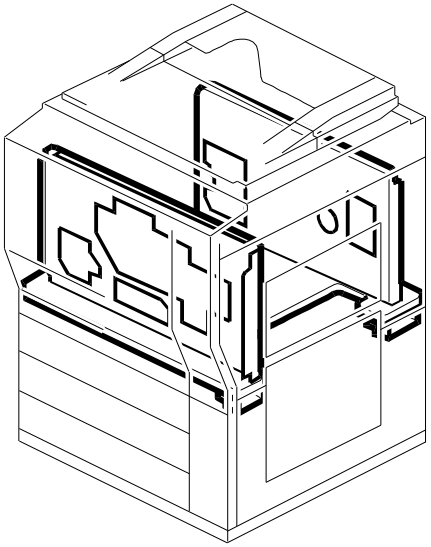 See Page108		

1. Exterior 1 (A172/A199)

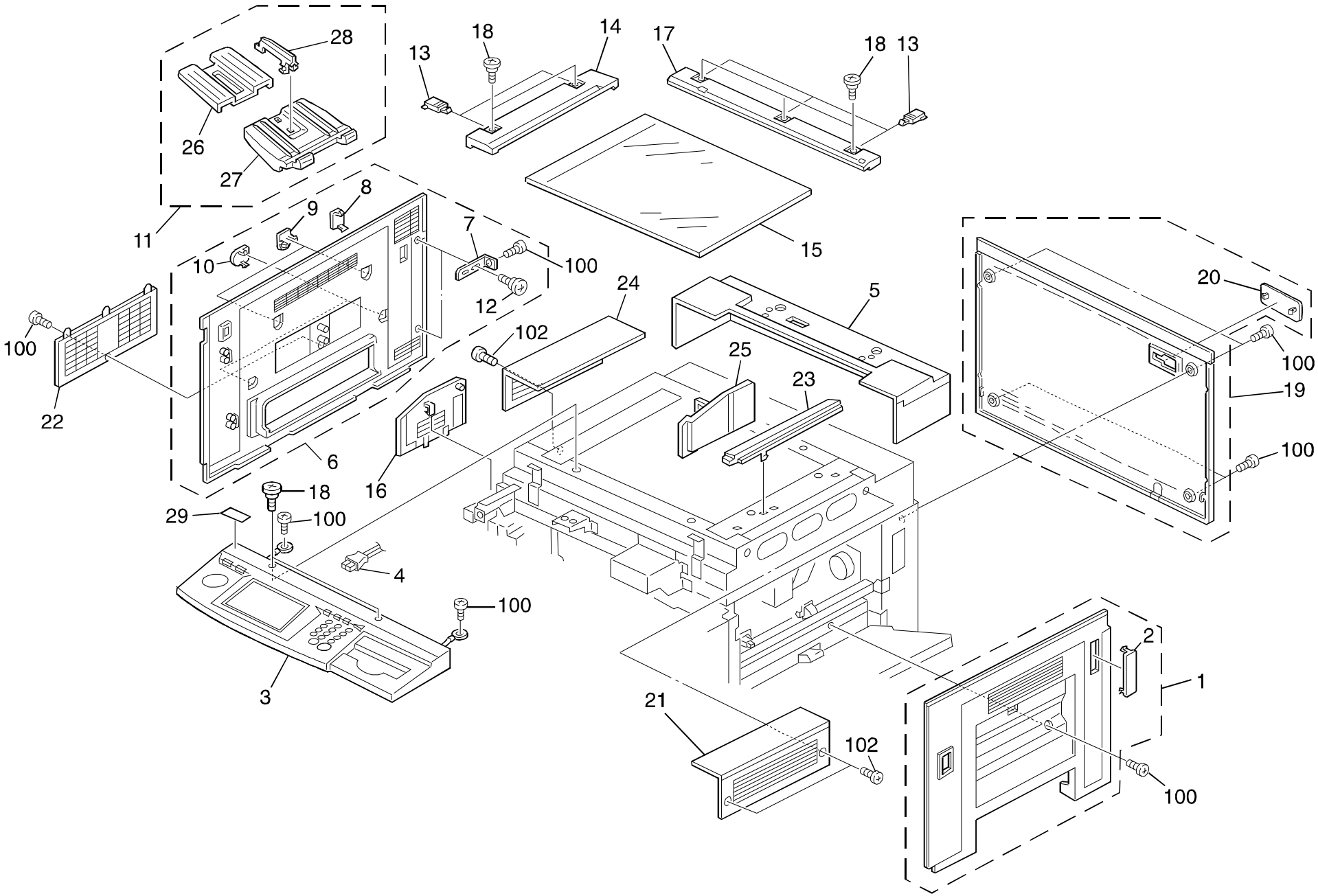

1. Exterior 1 (A172/A199)

Index No.	Part No.	Description	Q ty Per Assembly
1	A172 1270	Right Cover Ass y	1
2	A172 1272	Right Cover Cap	1
3	A172 7301	Operation Panel Ass y - LT (A172)	1
3	A172 7302	Operation Panel Ass y - A4 (A172)(RIC/INF)	1
3	A172 7303	Operation Panel Ass y - A4 (A172)(NRG)	1
3	A199 7301	Operation Panel Ass y - LT (A199)	1
3	A199 7302	Operation Panel Ass y - A4 (A199)(RIC/INF)	1
3	A199 7303	Operation Panel Ass y - A4 (A199)(NRG)	1
4	AW03 0034	Optics Fiber Cable - 1400mm	1
5	A172 1260	Rear Upper Cover	1
6	A172 1275	Left Cover Ass y	1
7	A109 1276	Left Cover Bracket	2
8	A172 1280	Sorter Cap - Large	1
9	A172 1279	Sorter Cap - Small	2
10	A134 1328	Small Cap	2
11	AF04 3090	Copy Tray Ass y	1
12	A109 4775	Stepped Screw - M5	2
13	A172 1964	Scale Cap	5
14	A172 1900	Left Scale - A4	1
14	AC04 2153	Left Scale - LT	1
15	A109 1911	Exposure Glass Ass y	1
16	A172 1264	Front Left Upper Cover	1
17	A172 1901	Rear Scale - A4	1
17	A172 7821	Rear Scale - LT	1
18	AA14 0065	Stepped Screw - M3x6	7
19	A172 1300	Rear Cover Ass y (115V)	1
19	A172 1303	Rear Cover Ass y (230V)	1
20	A166 1349	Cap - DF Unit	1
21	A172 1266	Right Upper Cover	1
22	A172 1277	Dust Filter Cover	1
23	A172 1265	Original Exit Guide	1
24	A172 1262	Left Upper Cover	1
25	A172 1263	Front Right Upper Cover	1
26	AF04 3076	Copy Tray Slide	1
27	AF04 3091	Copy Tray	1
28	AF04 3092	Copy Tray Guide	1
29	C225 2866	Decal - Key Top Cover (REX)	1
29	C225 2867	Decal - Cover - Panel - Nashua	1
29	A153 6409	Decal - Keytop Cover (GES)	1
100	0344 0060F	Philips Truss Head Screw - M4x6	
101	0314 0060B	Philips Pan Head Screw - M4x6	
102	0344 0080F	Philips Truss Head Screw - M4x8	

2. Exterior 2 (A172/A199)

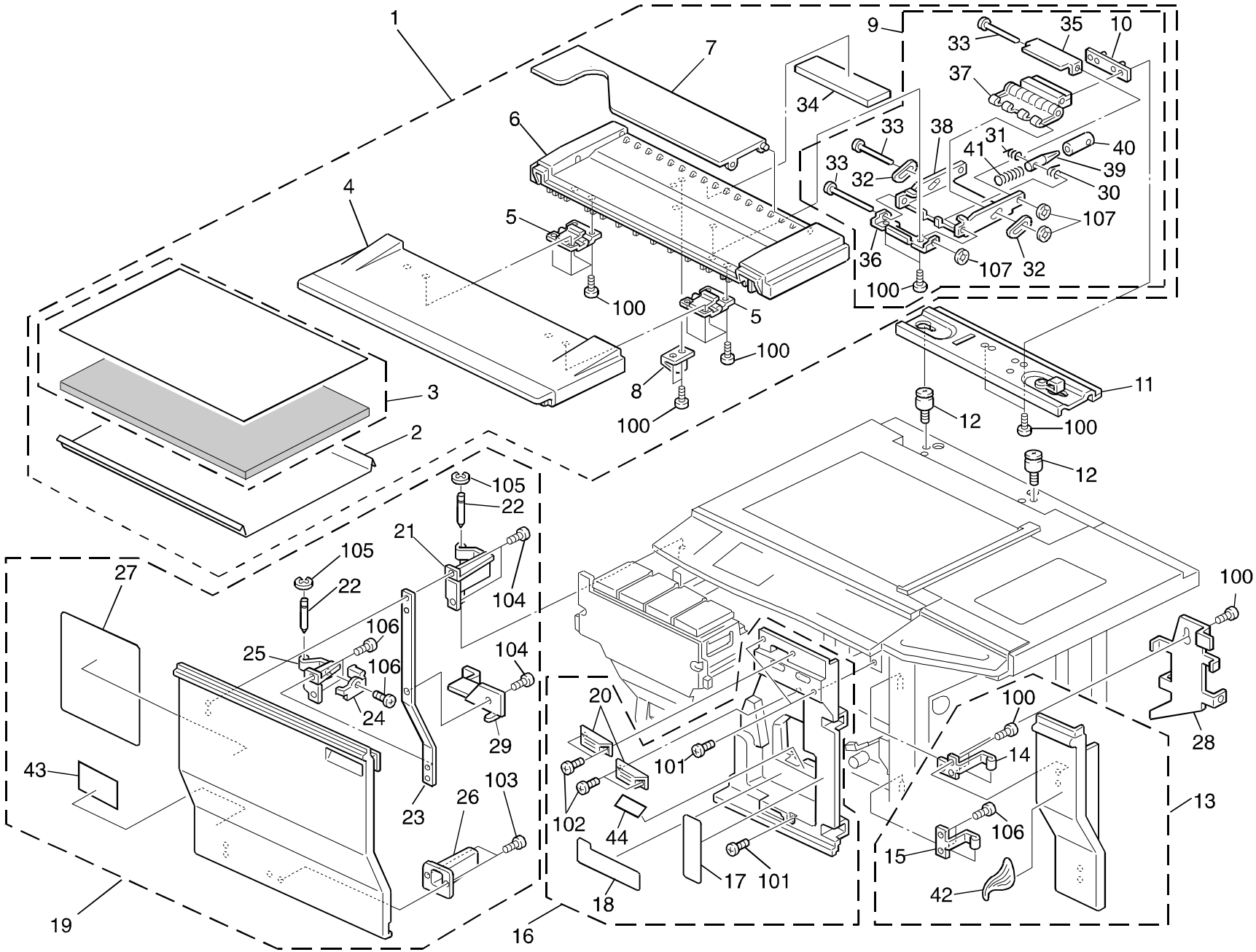

2. Exterior 2 (A172/A199)

Index No.	Part No.	Description	Q ty Per Assembly
1	A134 1393	Platen Cover Ass y	1
2	A406 9505	Platen Cover Sheet - 10 Sheet/1 Set	1
3	AA16 2053	Platen Cover Pad	1
4	A134 1394	Front Platen Cover	1
5	A053 1957	Flex Hinge - Platen Cover	2
6	A134 1395	Rear Platen Cover	1
7	A134 1396	Original Holder	1
8	A100 1324	Positioning Sensor Shutter	1
9	A100 1310	Platen Cover Hinge Ass y	1
10	A100 1325	Hinge Spacer	1
11	A153 1380	Platen Cover Bracket	1
12	5215 1667	Platen Cover Stud	2
13	A172 1340	Right Door Ass y (A172/A199)(SVN/INF/NRG)	1
13	A172 7100	Door - Right - Ric - Edit (A172-RIC)	1
13	A199 7100	Door - Right - Ric - Basic (A199-RIC)	1
14	A109 1290	Right Upper Door Hinge	1
15	A109 1291	Right Lower Door Hinge	1
16	A109 1374	Right Inner Cover	1
17	A109 1553	Decal - Misfeed Removal B	1
18	A109 1552	Decal - Misfeed Removal A	1
19	A172 1290	Left Door Ass y (A172/A199)(RIC)	1
19	A172 7115	Left Door Ass y (A172/A199)(NRG)	1
19	A172 7105	Door - Left - Savin - Edit (A172-SVN)	1
19	A199 7105	Door - Left - Savin - Basic (A199-SVN)	1
19	A172 7120	Door - Left - Inf - Edit (A172-INF)	1
19	A199 7120	Door - Left - Inf - Basic (A199-INF)	1
20	AG07 0004	Magnetic Catch	2
21	A109 1307	Left Upper Door Hinge	1
22	AA14 5180	Pin - Hinge	2
23	A109 1306	Left Door Hinge Plate	1
24	A109 4776	Hinge Support Plate	1
25	A109 1308	Left Lower Door Hinge	1
26	A172 1294	Left Door Stopper	1
27	A109 1554	Decal - Misfeed Removal D	1
28	A109 1135	Safety Switch Actuator	1

Index No.	Part No.	Description	Q ty Per Assembly
29	A109 1310	Fusing Lever Stopper	1
30	5215 2843	Left Spring - Platen Cover	1
31	5215 2842	Right Spring - Platen Cover	1
32	5215 2844	Slide Supporter	2
33	5215 2840	Pin - 4x115mm	3
34	5215 2838	Rubber Magnet	1
35	5215 2845	Plate - Magnet	1
36	5215 2846	Platen Base	1
37	5215 2847	Base Holder	1
38	A069 1972	Arm Holder	1
39	5215 2837	Shaft 7x40mm	1
40	5215 2836	Sleeve - 8x34mm	1
41	A100 1311	Balancer Spring	1
42	A172 1591	Decal - Color (SVN/INF/NRG)	1
42	A172 1595	Decal - Color (RIC)	1
43	A172 6703	Decal - Operation	1
44	AA00 1377	Decal - Positioning Display - B2	1
45	A172 6704	Model Name Plate - Ges - 2606E	1
45	A172 6705	Model Name Plate - Nashua - C606E	1
45	A172 6706	Model Name Plate - Rex - CC8606E	1
45	A199 6704	Model Name Plate - Ges - 2606	1
45	A199 6705	Model Name Plate - Nashua - C606	1
45	A199 6706	Model Name Plate - Rex - CC8606	1
100	0414 0142W	Tapping Screw - M4x14	
101	0344 0060F	Philips Truss Head Screw - M4x6	
102	0434 0102W	Tapping Screw - M4x10	
103	0344 0080F	Philips Truss Head Screw - M4x8	
104	0354 0100W	Philips Pan Head Screw - M4x10	
105	0720 0030E	Retaining Ring - M3	
106	0314 0050W	Philips Pan Head Screw - M4x5	
107	0805 0083	Retaing Ring - M4	

3. Operation Panel (A172/A199)

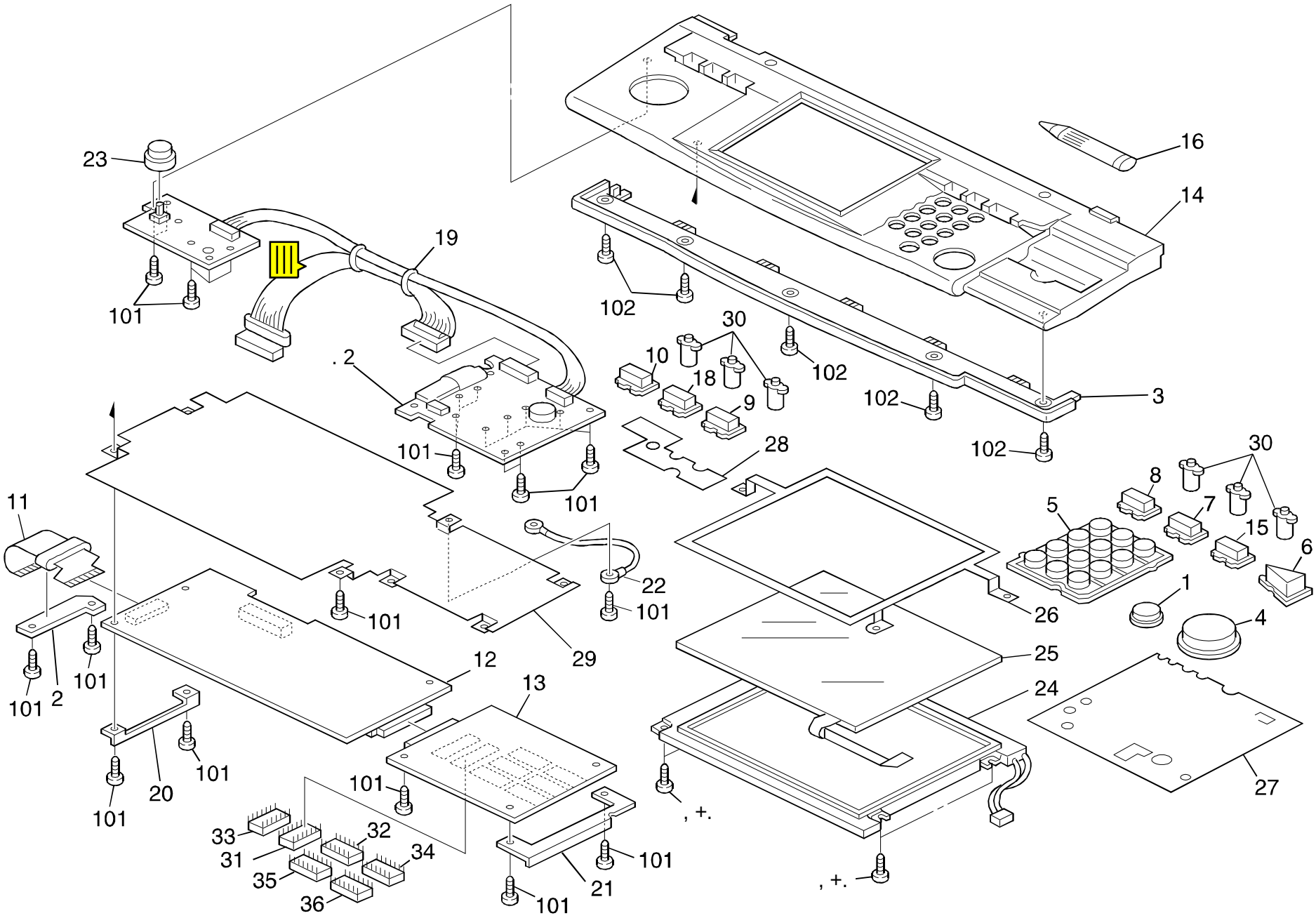

3. Operation Panel (A172/A199)

Index No.	Part No.	Description	Q ty Per Assembly
*	A172 7301	Operation Panel Ass y - LT (A172)	1
*	A172 7302	Operation Panel Ass y - A4 (A172)(RIC/INF)	1
*	A172 7303	Operation Panel Ass y - A4 (A172)(NRG)	1
*	A199 7301	Operation Panel Ass y - LT (A199)	1
*	A199 7302	Operation Panel Ass y - A4 (A199)(RIC/INF)	1
*	A199 7303	Operation Panel Ass y - A4 (A199)(NRG)	1
1	A126 1526	Key Top - Clear/stop	1
2	A172 7348	Support Bracket	1
3	A172 1480	Operation Panel Lower Cover	1
4	A172 1483	Key-top Start	1
5	A172 1485	Key-top 10 Keys	1
6	A172 1486	Key-top Interrupt	1
7	A172 1488	Key-top Memory Call	1
8	A172 1489	Key-top Program	1
9	A172 1490	Key-top Color Adjust	1
10	A172 1492	Key-top Option	1
11	A172 1503	LCD Harness (A172)	1
11	A172 1533	LCD Harness (A199)	1
12	A172 1554	Operation Panel Board - Color (A172)	1
12	A172 1557	Operation Panel Board - Mono (A199)	1
13	A172 7400	Rom Board - Color (A172)	1
13	A172 7401	Rom Board - Mono (A199)	1
14	A172 7320	Operation Panel Cover (115V)	1
14	A172 7338	Operation Panel Cover (230V)	1
15	A172 7340	Key-top Clear Mode	2
16	A172 1580	Editor Pen	1
17	A172 5392	Operation Panel Harness - IPU 1	1
18	A172 1491	Key-top Inishraise	1
19	A172 7380	SCU Harness	1
20	A172 1497	Left Guide Bracket	1
21	A172 1585	Right Guide Bracket	1
22	A172 1576	Grounding Wire	1
23	A172 1481	Dial Key	1
24	AX30 0004	LCD Display - Color	1
24	A166 5312	LCD Display - Mono	1



Index No.	Part No.	Description	Q ty Per Assembly
25	A172 1570	Touch Panel (Color)	1
25	A166 5314	Touch Panel (Mono)	1
26	A172 1472	Shealding Plate	1
27	A172 1471	Sheet OP-2	1
28	A172 1473	Sheet OP-1	1
29	A172 1496	Sheet	1
30	A172 1470	LED Lens	6
31	A172 7411	IC - UVEPROM 4M X8 120NS (IC1)(English)	1
32	A172 7413	IC - UVEPROM 4M X8 120NS (IC3)(English)	1
33	A172 7414	IC - UVEPROM 4M X8 120NS (IC4)(English)	1
34	A172 7416	IC - UVEPROM 4M X8 120NS (IC6)(English)	1
35	A172 7417	IC - UVEPROM 4M X8 120NS (IC7)(English)	1
36	A172 7418	IC - UVEPROM 4M X8 120NS (IC8)(English)	1
37	A172 1500	Operation Key Board - Color	1
37	A172 1530	Operation Key Board - Mono	1
101	0801 1252	P-tight - M3x6	
102	0802 5146	Tapping Screw - M3x8	
103	0802 5182	Tapping Screw - M3x8	



4. Optics Section 1 (A172/A199)

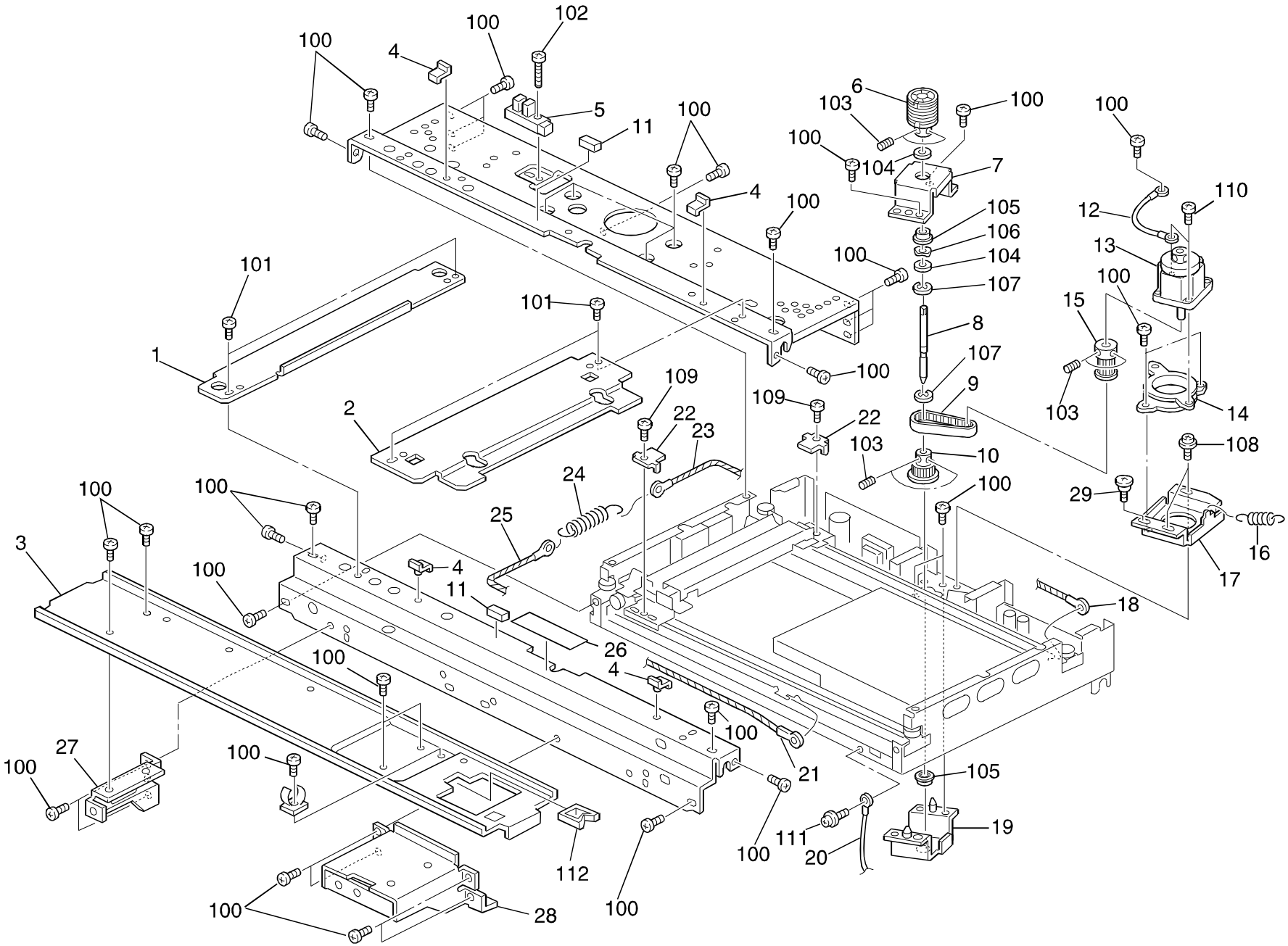

4. Optics Section 1 (A172/A199)

Index No.	Part No.	Description	Q ty Per Assembly
1	A109 1879	Scale Bracket	1
2	A109 1886	Right Stay	1
3	A172 1132	Lower Cover - Operation Panel	1
4	A069 1882	Exposure Glass Holder	4
5	AW02 0067	Photointerruptor - EE-SX4119-P15	1
6	A048 1870	Scanner Motor Pulley	1
7	A109 1833	Upper Cover - Scanner Drive	1
8	AA14 0526	Drive Shaft	1
9	AA04 3360	Timing Belt - 200	1
10	AB03 0453	Timing Pulley - 48Z	1
11	5215 1924	Cushion	2
12	A069 5352	Ground Wire - Scanner	1
13	A109 1842	Scanner Drive Stepping Motor - DC24V	1
14	A134 1724	Cushion - Stepper Motor	1
15	AB03 0452	Timing Pulley - 24Z	1
16	H081 2118	Pressure Spring	1
17	A109 1832	Scanner Drive Bracket	1
18	AA05 0082	Scanner Drive Wier - Rear Right	1
19	A109 1835	Lower Cover - Scanner Drive	1
20	AA05 1019	Wire Stopper	1
21	AA05 0081	Scanner Drive Wire - Front Right	1
22	5361 2080	Plate : Wire Clamp	2
23	AA05 0080	Scanner Drive Wire - Rear Left	1
24	AA06 0083	Tension Wire Spring	1
25	AA05 0079	Scanner Drive Wire - Front Left	1
26	AA15 0266	Seal - 0.1x29x100	1
27	A172 1129	Operation Panel Left Bracket	1
28	A109 1124	Right Bracket - Operation Panel	1
29	5894 2540	Arm Screw	1

Index No.	Part No.	Description	Q ty Per Assembly
100	0434 0060B	Philips Tapping Screw - M4x6	
101	0313 0050B	Philips Pan Head Screw - M3x5	
102	0314 0120B	Philips Pan Head Screw - M4x12	
103	0574 0060E	Hexagon Headless Set Screw - M4x6	
104	0807 4076	Washer - 8.2x6.1x0.3mm	
105	0805 3145	Ball Bearing - 6x12x4mm	
106	0807 4047	Wave Washer - 6mm	
107	0720 0040B	Retaining Ring - M4	
108	0951 4008B	Philips Screw With Washer - M4x8	
109	0314 0080B	Philips Pan Head Screw - M4x8	
110	0344 0060F	Philips Truss Head Screw - M4x6	
111	0951 4006B	Philips Screw With Washer - M4x6	
112	1105 0310	Wire Clamp	

5. Optics Section 2 (A172/A199)

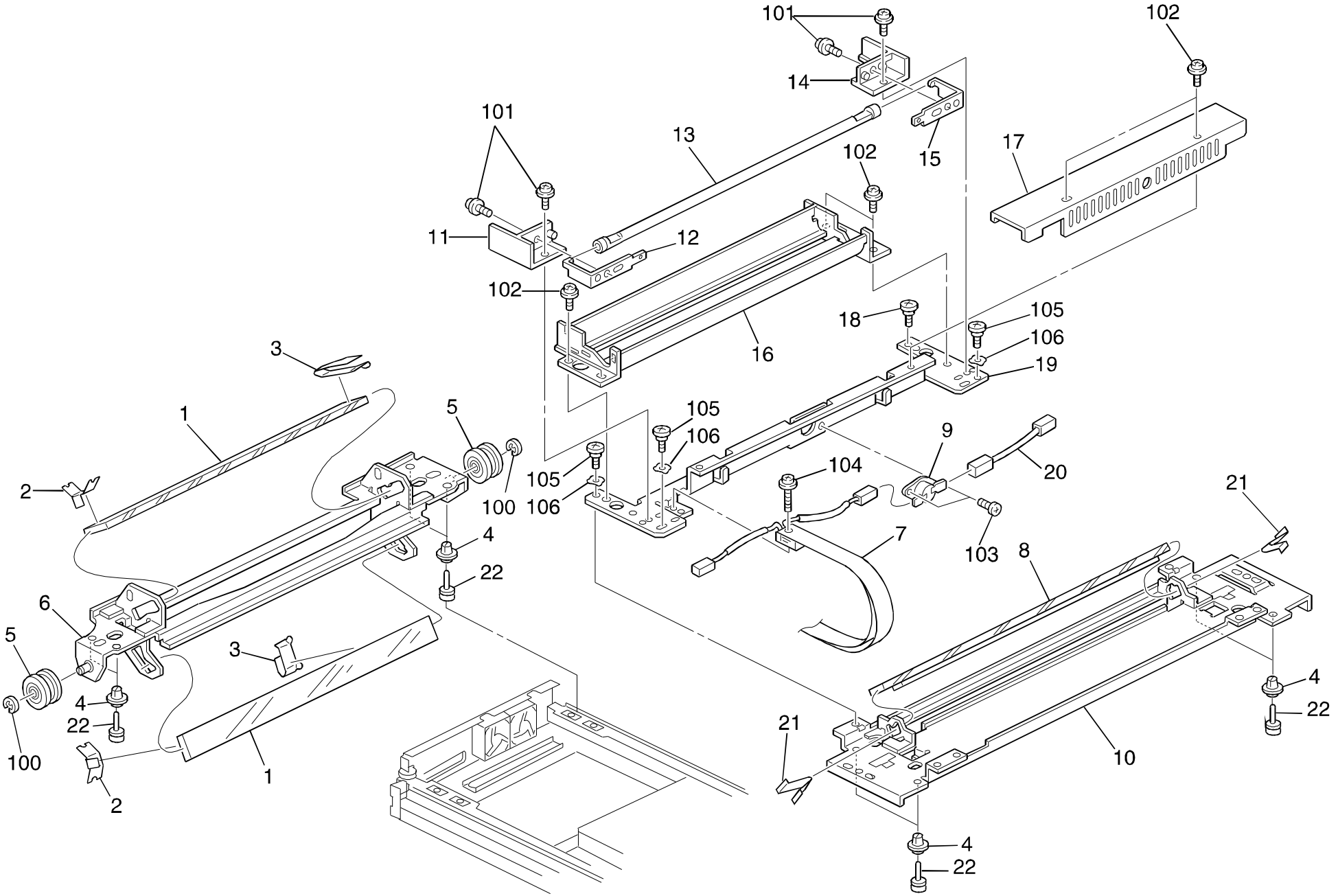

5. Optics Section 2 (A172/A199)

Index No.	Part No.	Description	Q ty Per Assembly
1	A109 1922	Second Mirror Ass y	2
2	A006 1721	Front Spring Plate	2
3	AC03 5051	Spring Plate - 2nd Mirror	2
4	A069 1883	Shoe - Scanner	8
5	AB03 2041	Pulley - 26Z	2
6	A109 1741	2nd Scanner Ass y	1
7	A109 5378	Exposure Lamp Harness (115V)	1
7	A109 5380	Exposure Lamp Harness - 220V	1
8	A109 1924	1st Mirror	1
9	AW11 0017	Thermostat - 140 C - AC120V 15A	1
10	A109 1731	1st Scanner Ass y	1
11	A109 1715	Front Terminal Holder	1
12	A109 1717	Front Terminal - Exposure Lamp	1
13	**AX52 0030**	**Exposuer Lamp - 75V 200W**	**1**
14	A109 1711	Rear Terminal Holder	1
15	A109 1713	Rear Terminal - Exposure Lamp	1
16	A172 1700	Reflector Ass y	1
17	A109 1707	Reflector Cover	1
18	AA14 3025	Stepped Screw - M3	1
19	A109 1708	Reflector Bracket	1
20	A109 5377	Exposure Lamp Relay Harness	1
21	A048 1721	Spring Plate A	2
22	A096 1873	Scanner Shoe Pin	8

Index No.	Part No.	Description	Q ty Per Assembly
100	0720 0050B	Retaining Ring - M5	
101	0952 3008B	Screw - M3x8	
102	0951 3006B	Philips Screw With Flat Washer - M3x6	
103	0313 0060B	Philips Pan Head Screw - M3x6	
104	0952 3012B	Screw - M5x12	
105	AA14 3025	Stepped Screw - M3	
106	0807 3109	Spring Washer - M4	

6. Optics Section 3 (A172/A199)

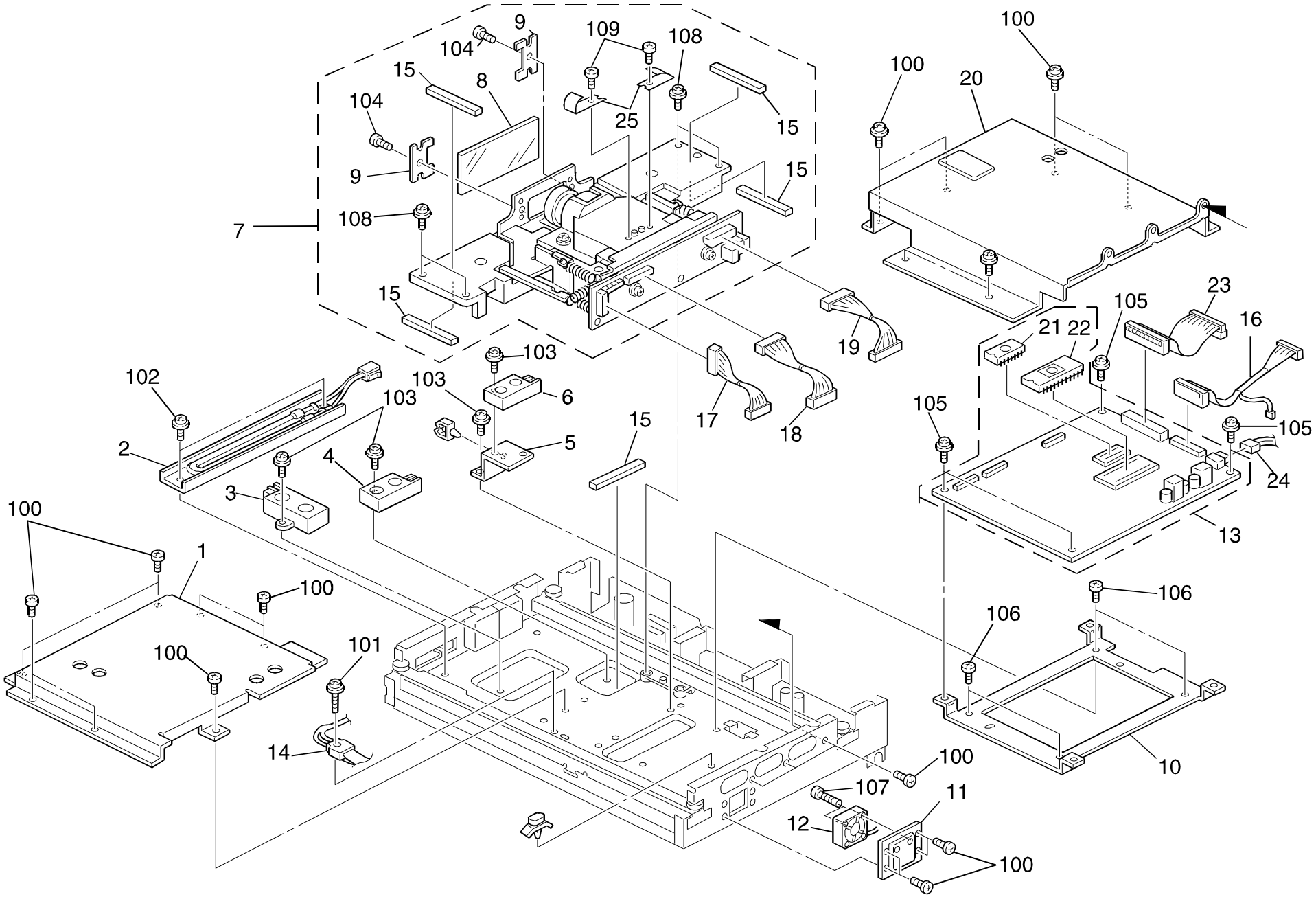

6. Optics Section 3 (A172/A199)

Index No.	Part No.	Description	Q ty Per Assembly
1	A109 1806	Original Sensor Cover	1
2	AX40 0052	Anti-condensation Heater - 115V 18W	1
2	AX40 0053	Anti-condensation Heater - 240V 18W	1
3	AW01 0034	Original Width Sensor	1
4	AW01 0037	Original Length Sensor	1
5	A109 1882	Original Sensor Bracket	1
6	AW01 0033	Original Sensor Ass y - H=3-50	1
7	A172 1636	Lens Holder Unit	1
8	AA01 1044	Optical Filter	1
9	A109 1789	Spring Plate	2
10	A172 1853	Scanner Control Board Bracket	1
11	A109 1884	Optics Exhaust Bracket	1
12	AX64 0045	Cooling Fan Motor - DC24V 2.40W	1
13	A172 5291	Scanner Control Board	1
14	A109 5378	Exposure Lamp Harness	1
15	A109 1785	Spacer - 9.5x9.5x7.2	5
16	A109 5341	Scanner Interface Harness	1
17	A109 5336	CCD Harness -	1
18	A109 5335	CCD Harness - 1	1
19	A109 5344	CCDHarness 3 - EXP	1
20	A109 1805	Scanner Control Board Cover	1
21	A172 5146	IC - UVEPROM 512K X8 120NS	1
22	A172 5145	IC - UPD78P312ACW	1
23	A109 5338	IPU Harness	1
24	AW03 0035	Optics Fiber Cable - 900mm	1
25	A109 1782	CCD Grounding Plate	2

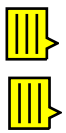

Index No.	Part No.	Description	Q ty Per Assembly
100	0434 0060B	Philips Tapping Screw - M4x6	
101	0952 3012B	Screw - M5x12	
102	0957 4008B	Philips Screw W/F Washer - M4x8	
103	0951 3008B	Philips Screw With Flat Washer - M3x8	
104	0313 0050B	Philips Pan Head Screw - M3x5	
105	0951 3006B	Philips Screw With Flat Washer - M3x6	
106	0433 0050B	Tapping Screw - M3x5	
107	0951 4030B	Screw - M4x30	
108	0951 4010B	Philips Screw With Washer - M4x10	
109	0413 0062W	Tapping Screw - M3x6	

7. Optics Section 4 (A172/A199)

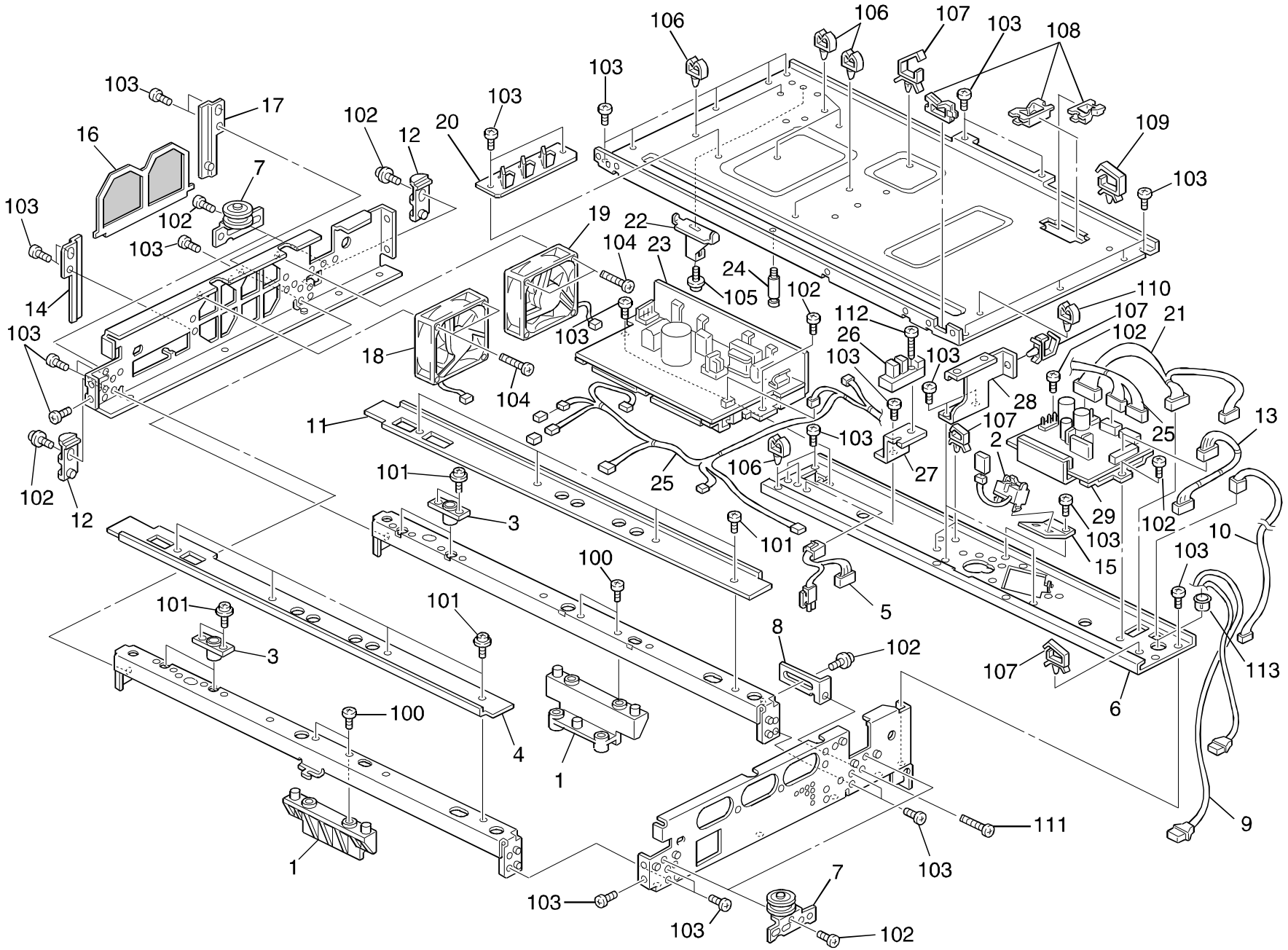

7. Optics Section 4 (A172/A199)

Index No.	Part No.	Description	Q ty Per Assembly
1	A012 1752	Lens Bracket Block	2
2	AW02 0065	Photointerruptor	1
3	A109 1867	Pin Guide	4
4	A109 1869	Front Slide Rail	1
5	A109 5376	Scanner AC Harness	1
6	A109 1831	Scanner Drive Board Bracket	1
7	A060 1822	Scanner Wire Pulley	4
8	A109 1818	Wire Adjuster	1
9	AW03 0034	Optics Fiber Cable - 1400mm	1
10	A172 5339	Operation Panel Harness - DC	1
11	A109 1868	Rear Slide Rail	1
12	A060 1824	Scanner Wire Pulley	2
13	A109 5341	Scanner Interface Harness	1
14	A109 1844	Dust Filter Front Guide	1
15	A060 1812	Sensor Bracket	1
16	**AA01 2094**	**Dust Filter - EFA-15N**	**1**
17	A109 1845	Dust Filter Rear Guide	1
18	AX64 0048	Dev. Exhaust Fan Motor - DC24V 2.88W	1
19	AX64 0047	Dev. Exhaust Fan Motor - DC24V 3.36W	1
20	A109 1854	Scanner Louver	1
21	A109 5340	Scanner DC Harness	1
22	A109 5711	IPU Uni[illegible]sition Plate	1
23	AZ23 0037	Lamp Regulator Board (115V)	1
23	AZ23 0047	Lamp Regulator - 230V	1
24	AA14 3419	Support Stud	1
25	A109 5342	Scanner Drive Harness	1
26	AW02 0061	Photointerruptor - EE - SX4019-P1	1
27	A109 1881	H.P Sensor Bracket	1
28	A109 1885	Support Plate	1
29	A172 5151	Scanner Control Board	1

Index No.	Part No.	Description	Q ty Per Assembly
100	0314 0080B	Philips Pan Head Screw - M4x8	
101	0951 3006B	Philips Screw With Flat Washer - M3x6	
102	0951 4008B	Philips Screw With Washer - M4x8	
103	0434 0060B	Philips Tapping Screw - M4x6	
104	0314 0300B	Philips Pan Head Screw - M4x30	
105	0313 0060B	Philips Pan Head Screw - M3x6	
106	1105 0199	Clamp	
107	1105 0310	Wire Clamp	
108	1105 0113	Edge - P108	
109	1105 0292	Wire Saddle	
110	1105 0193	Nylon Stud	
111	0314 0200B	Philips Pan Head Screw - M4x20	
112	0314 0120B	Philips Pan Head Screw - M4x12	
113	1106 0310	Bushing	

8. Printer Section 1 (A172/A199)

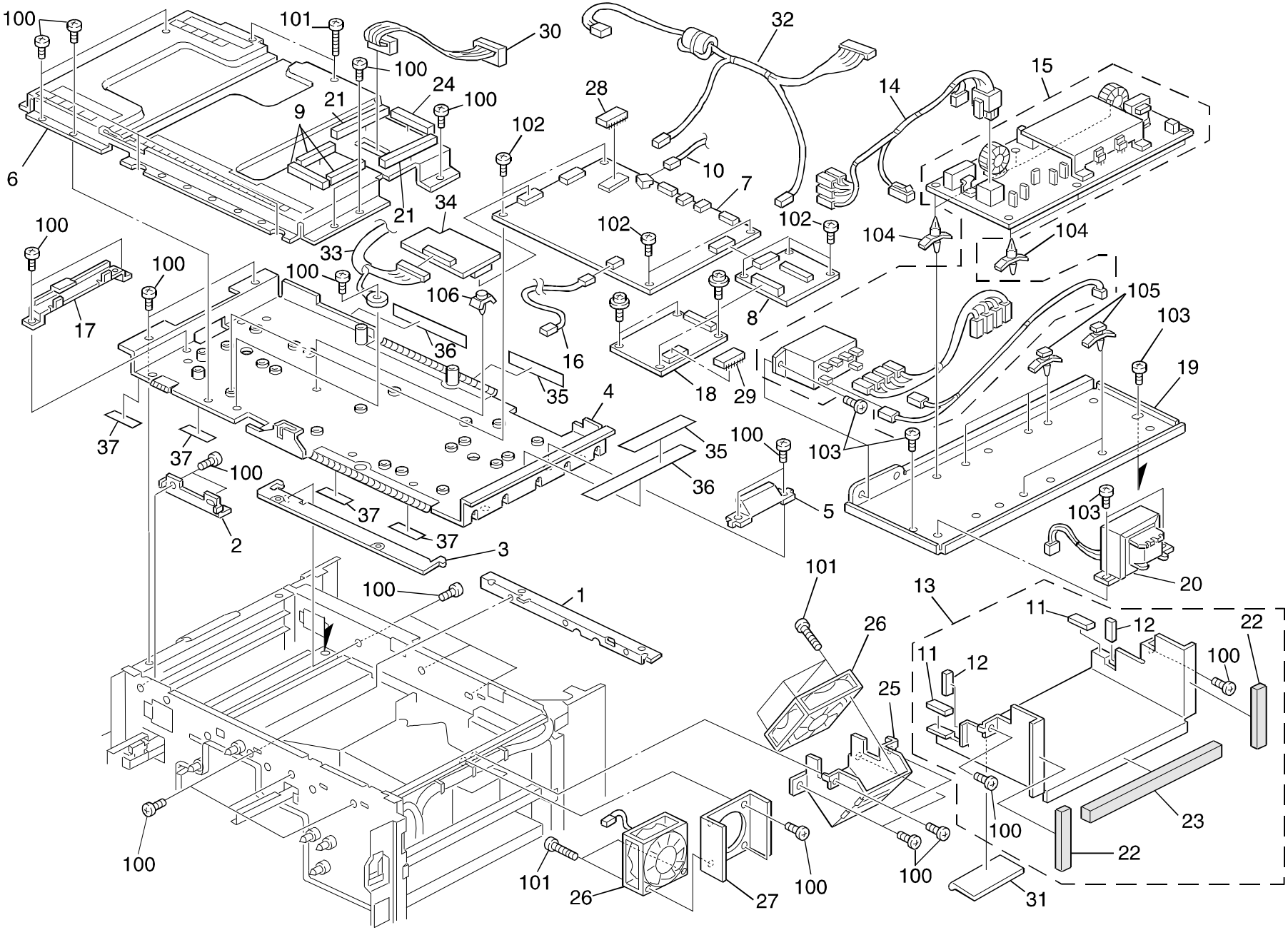

8. Printer Section 1 (A172/A199)

Index No.	Part No.	Description	Q ty Per Assembly
1	A109 5722	Front Guide Plate - IPU	1
2	A109 5724	IPU Fixing Bracket	1
3	A109 5723	Rear Guide Plate - IPU	1
4	A172 5701	IPU Base Plate	1
5	A109 5705	IPU Cooling Fan Louver	1
6	A172 5707	IPU Cover	1
7	A172 5242	IPU Board	1
8	A109 5236	IPU Interface Board	1
9	A109 5731	IPU Cover Seal	3
10	AW03 0029	Fiber Cable - 800	1
11	AA15 1866	Seal - 3x7x30	2
12	AA15 1867	Seal - 3x7x23.5	2
13	A109 2080	Optics Cooling Fan Duct	1
14	A109 5373	Front AC Harness	1
15	A172 5471	AC Drive Board - 115V	1
15	A172 5671	AC Drive Board - 230V	1
16	A172 5393	Operation Panel Harness - IPU 2	1
17	A172 5736	Harness Guide	1
18	A166 5080	IDU Board	1
19	A109 5745	AC Drive Board Bracket	1
20	AZ02 0006	Coil - 4.6mm 5A	1
21	A109 5720	Seal - 9.5x9.5x125	2
22	AA15 1868	Seal - 3x7x64	2
23	AA15 1869	Seal - 3x7x17.3	1
24	A109 5721	Seal - 9.5x9.5x66	1
25	A109 5729	IPU Cooling Fan Bracket	1
26	AX64 0041	Cooling Fan Motor - DC24 7.64W	2
27	A109 5730	Polygon Motor Fan Bracket	1
28	A172 5207	IC - UVEPROM 4M X16 120NS	1
29	A166 5084	IC - UVEPLROM 1M X16 120NS	1
30	A109 5338	IPU Harness	1
31	AA15 1870	Seal - 3x20x76	1
32	A109 5309	IPU Board Relay Harness	1
33	A172 5326	IPU Harness	1
34	A172 5217	DE I/F Board	1
35	A109 5733	Gasket - 210	1
36	A109 5732	Gasket - 340	1
37	A109 5734	Gasket - 85	1
100	0434 0080B	Philips Tapping Screw - M4x8	
101	0314 0300B	Philips Pan Head Screw - M4x30	
102	0314 0080M	Philips Pan Head Screw - M4x8	
103	0354 0060B	Screw - M4X6	
104	1105 0193	Nylon Stud	
105	1105 0409	Spacer	
106	1105 0246	Spacer	

9. Printer Section 2 (A172/A199)

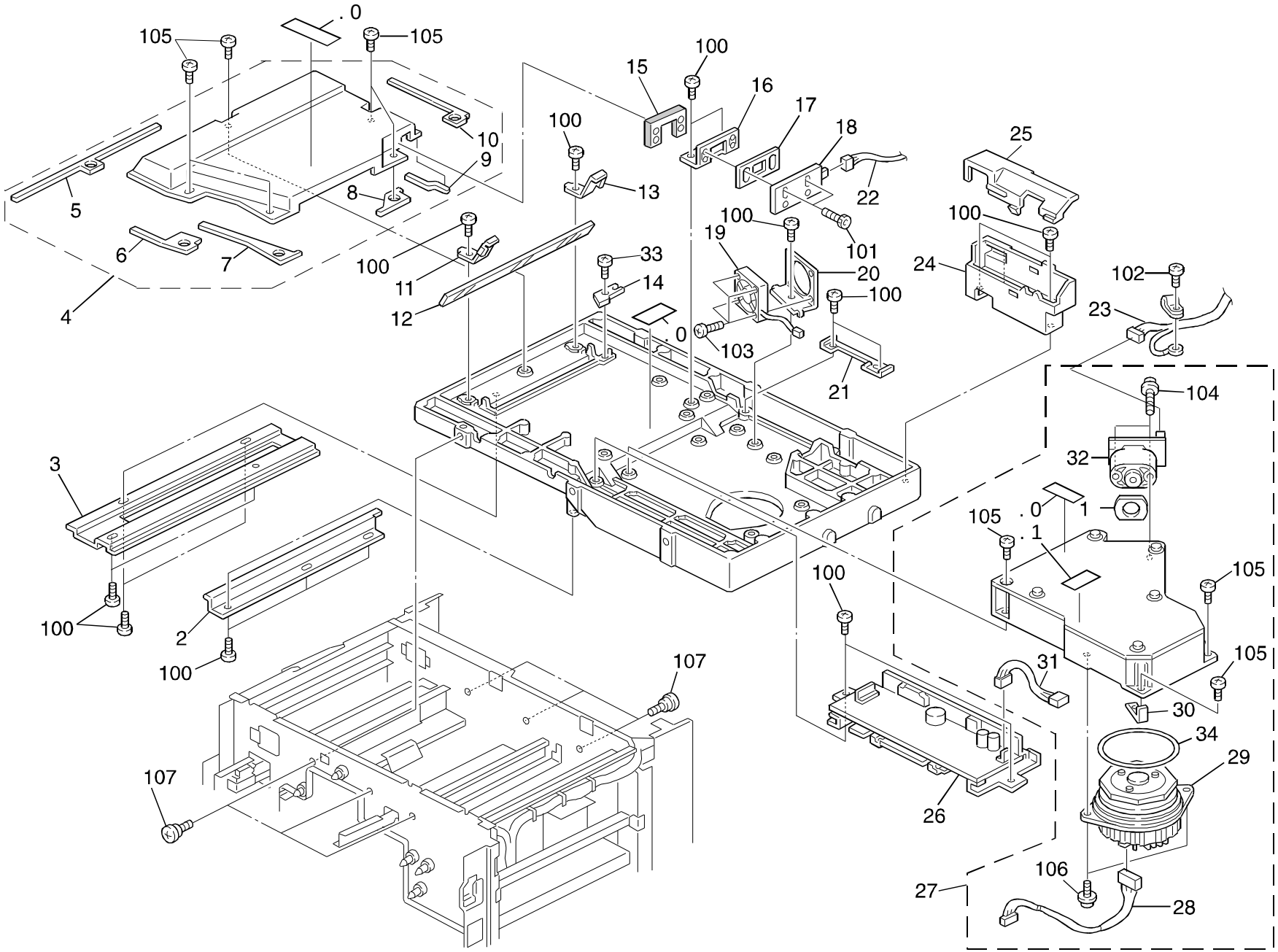

9. Printer Section 2 (A172/A199)

Index No.	Part No.	Description	Q ty Per Assembly
1	AA15 2094	Seal - 22x38x2	1
2	A109 2066	Right Rail	1
3	A109 2065	Left Rail	1
4	A109 2136	Mirror Cover	1
5	AA15 1855	Mirror Seal 5	1
6	AA15 1852	Mirror Seal 2	1
7	AA15 1854	Mirror Seal 4	1
8	AA15 1853	Mirror Seal 3	1
9	AA15 1856	Mirror Seal 6	1
10	AA15 1851	Mirror Seal 1	1
11	AC03 5021	Front Spring Plate	1
12	A109 2132	Drum Mirror Ass y	1
13	AC03 5020	Rear Spring Plate	1
14	A109 2069	Mirror - Synchronizing	1
15	AA15 0347	Shielding Sheet - 21.5x41	1
16	A109 2128	Diode Bracket	1
17	AA15 1858	Seal - 5x18x40	1
18	A109 5171	Laser Synchronizing Detector Board	1
19	AX64 0045	Cooling Fan Motor - DC24V 2.40W	1
20	A109 2072	LD Cooling Fan Bracket	1
21	A109 2070	Synchronizing Harness Bracket	1
22	A109 5333	Synchronizing Detector Harness	1
23	A109 5332	LD Unit Harness	1
24	A109 5718	IPU Lower Harness Cover	1
25	A109 5719	IPU Upper Harness Cover	1
26	AY10 0002	Polyg0n Motor Board	1
27	A109 2159	Optical Housing Unit	1
28	A060 5547	Polygon Motor Harness	1
29	AX06 0094	Polygon Motor - DC24V, 24W	1
30	A037 2113	0ptical Housing Spacer	1
31	A109 5312	Relay Harness - Polygon Motor	1
32	A109 2160	LD Unit	1
33	5203 2679	Pinion Tightening Screw - M4x5	1
34	AA15 2061	O-ring 83	1
35	AA00 0602	Caution Decal - LD Unit Cover	3
36	AA00 0445	Caution Decal - LD Unit	1
100	0354 0060B	Screw - M4X6	
101	0593 0060E	Bolt - M3x6	
102	0953 4008M	Screw - M4x8	
103	0951 3014B	Philips Screw With Washer - M3x14	
104	0951 3020B	Philips Screw With Flat Washer - M3x8	
105	0354 0100B	Screw - M4x10	
106	0960 4008B	Philips Flange Screw - M4x8	
107	0803 0020	Positioning Pin	

10. 1st And 2nd Paper Feed Tray (A172/A199)

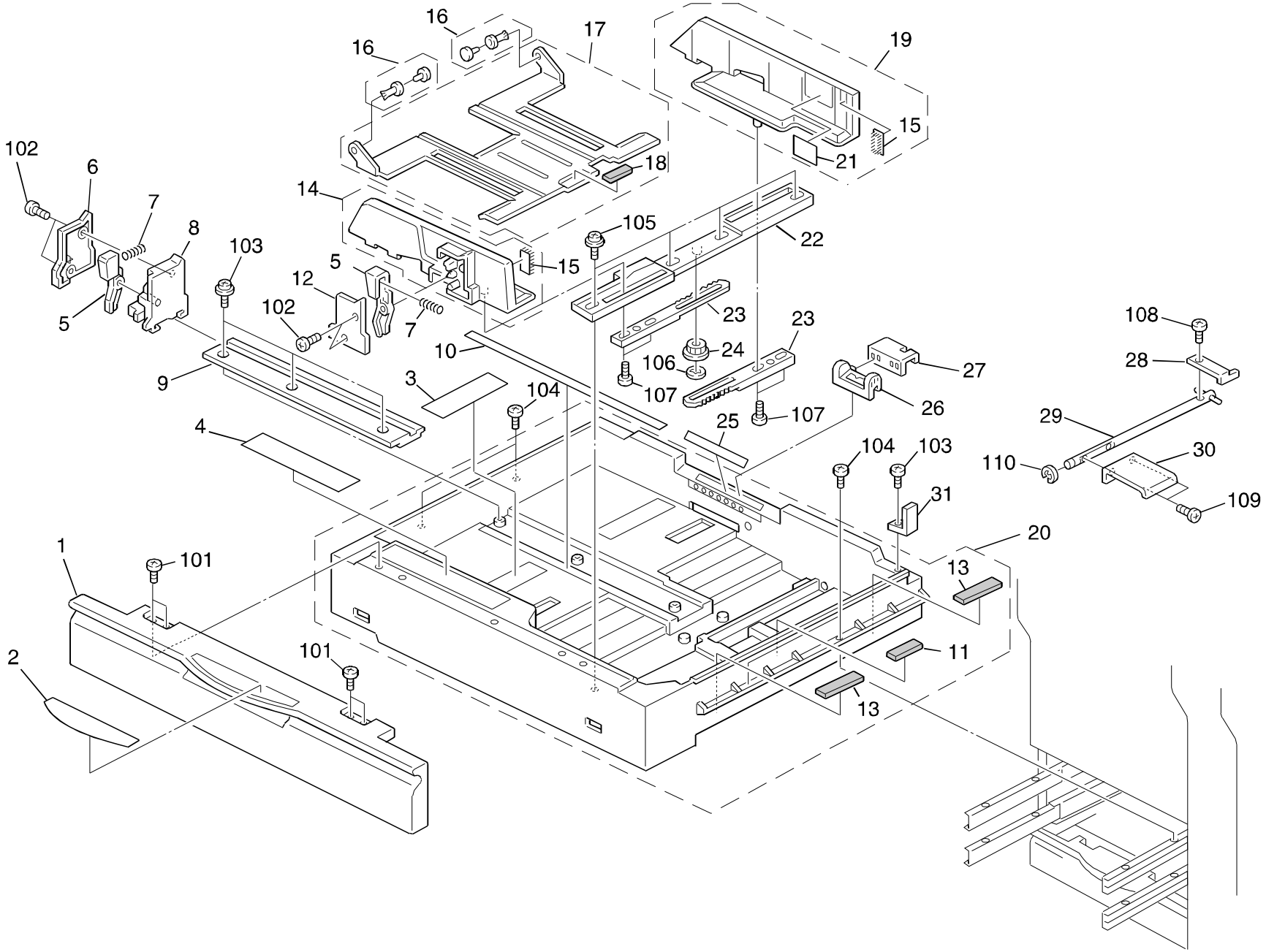

10. 1st And 2nd Paper Feed Tray (A172/A199)

Index No.	Part No.	Description	Q ty Per Assembly
1	A172 2829	Paper Tray Cover	1
2	AA00 0174	Decal - Tray Cover 1st	1
2	AA00 0175	Decal - Paper Tray Cover No2	1
3	AA00 2177	Decal - Side Fence - LT	1
3	AA00 2176	Decal - Side Fence - A4	1
4	AA00 0134	Decal - Universal Tray	1
5	A096 6537	Stopper Lever	2
6	A096 6563	End Fence Cover	1
7	AA06 6551	Stopper Spring - 24mm	2
8	A096 6562	End Fence	1
9	A096 6564	End Fence Plate	1
10	AA00 2179	Decal - End Fence LT	1
10	AA00 2178	Decal - End Fence - A4	1
11	AA15 1804	Lever Cushion	1
12	A096 6536	Side Fence Cover	1
13	AA15 1805	Bottom Plate Cushion	2
14	A096 6534	Front Side Fence	1
15	A096 6553	Side Fence Pad	2
16	A048 2838	Nylon Rivet	2
17	A096 6556	Tray Bottom Plate	1
18	AF01 3002	Bottom Plate Pad	1
19	A096 6541	Rear Side Fence	1
20	A096 6520	Paper Tray	1
21	AA00 2010	Decal - Paper Level	1
22	A096 6545	Side Fence Plate - LT	1
22	A096 6544	Side Fence Plate - A4	1
23	A096 6539	Side Fence Gear	1
24	AB01 3492	Gear - 16Z	1
25	AA00 2181	Decal - LT	1
25	AA00 2184	Decal - A4	1
26	A096 6577	Size Sensor Slider	1
27	A096 6578	Size Sensor Plate	1
28	A096 6527	Paper Guide Feeler	1
29	A096 6524	Lift Shaft	1
30	A096 6526	Lift Lever	1

Index No.	Part No.	Description	Q ty Per Assembly
31	A176 6695	Misfeed Removal Guide	1
101	0414 0082F	Philips Truss Head Screw - M4x8	
102	0413 0082B	Tapping Screw - M3x8	
103	0965 4008B	Tapping Screw - M4x8	
104	0354 0050F	Philips Pan Head Bind Screw - M4x5	
105	0951 3008B	Philips Screw With Flat Washer - M3x8	
106	0805 0073	Retaining Ring - M5	
107	0434 0082F	Tapping Screw - M3x10	
108	0313 0060B	Philips Pan Head Screw - M3x6	
109	0314 0080B	Philips Pan Head Screw - M4x8	
110	0720 0060B	Retaining Ring - M6	

11. 3rd Paper Feed Tray (A172/A199)

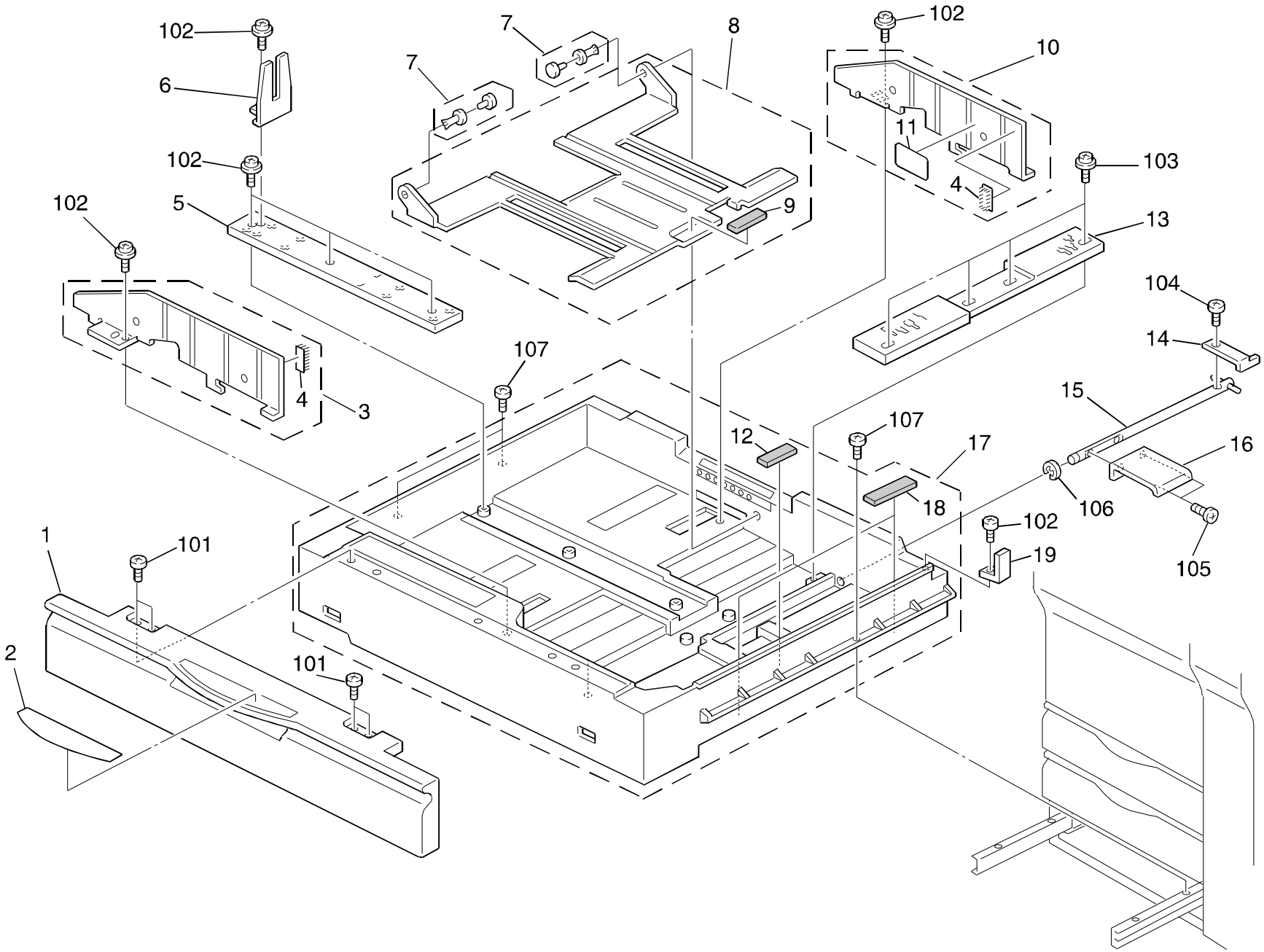

11. 3rd Paper Feed Tray (A172/A199)

Index No.	Part No.	Description	Q ty Per Assembly
1	A172 2829	Paper Tray Cover	1
2	AA00 0176	Decal - Paper Tray Cover No3	1
3	A096 6549	Front Side Fence	1
4	A029 7904	Pad - Cff	2
5	A096 6568	Position Plate - End Fence	1
6	AF01 7010	End Fence	1
7	A048 2838	Nylon Rivet	2
8	A096 6556	Tray Bottom Plate	1
9	AF01 3002	Bottom Plate Pad	1
10	A096 6550	Rear Side Fence	1
11	AA00 2010	Decal - Paper Level	1
12	AA15 1804	Lever Cushion	1
13	A096 6551	Position Plate - Side Fence	1
14	A096 6527	Paper Guide Feeler	1
15	A096 6524	Lift Shaft	1
16	A096 6526	Lift Lever	1
17	A096 6520	Paper Tray	1
18	AA15 1805	Bottom Plate Cushion	2
19	A176 6695	Misfeed Removal Guide	1

Index No.	Part No.	Description	Q ty Per Assembly
101	0414 0082F	Philips Truss Head Screw - M4x8	
102	0965 4008B	Tapping Screw - M4x8	
103	0952 3008B	Screw - M3x8	
104	0313 0060B	Philips Pan Head Screw - M3x6	
105	0314 0080B	Philips Pan Head Screw - M4x8	
106	0720 0060B	Retaining Ring - M6	
107	0354 0050F	Philips Pan Head Bind Screw - M4x5	

12. Paper Supply Unit 1 (A172/A199)

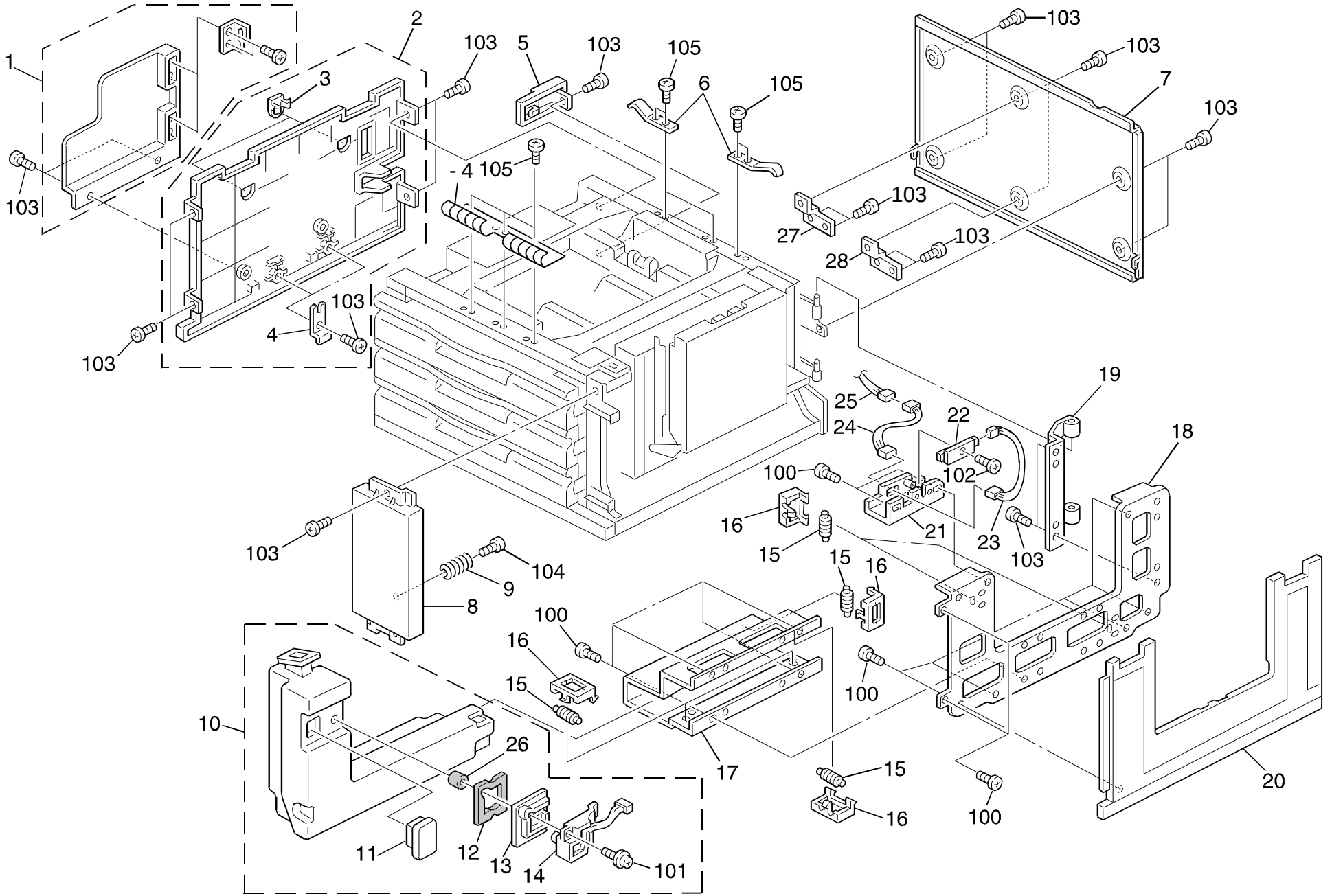

12. Paper Supply Unit 1 (A172/A199)

Index No.	Part No.	Description	Q ty Per Assembly
1	A172 1330	Operation Instructions Holder	1
2	A172 1315	Left Lower Cover Ass y - LCT	1
3	A172 1279	Large Cap - Sorter	2
4	A513 1338	Left Cover Bracket	2
5	A172 1317	Left Lower Rear Cover - LT	1
6	A027 1673	Spring Plate	4
7	A172 1305	LCT Rear Cover	1
8	A172 1326	Front Right Lower Cover - LCT	1
9	AA06 3492	Spring	1
10	A513 6600	Toner Collection Bottle	1
11	AA03 6013	Toner Collection Cap	1
12	A007 3763	Adhesive Tape - Sensor Holder	1
13	A007 3762	Sensor Holder	1
14	A513 5403	Toner Overflow Sensor	1
15	A060 3826	Toner Collection Bottle Roller	6
16	A060 3827	Roller Holder	6
17	A513 6643	Collection Bottle Guide Plate	1
18	A513 6642	Right Side Plate	1
19	A513 6644	Right Lower Hinge - Tray Unit	1
20	A172 1321	Right Lower Cover - LCT	1
21	A513 6152	Humidity Sensor Holder	1
22	A109 5196	Humidity Sensor	1
23	A109 5362	Humidity Sensor Harness	1
24	A513 5364	Relay Harness - Humidity Sensor	1
25	A513 5351	Front Harness - Paper Feed Unit	1
26	A513 6603	Seal - Toner Overflow Sensor	1
27	A513 1180	Upper Stay - Rear Cover	1
28	A513 1181	Lower Stay - Rear Cover	1
29	A513 1185	Grounding Plate	1

Index No.	Part No.	Description	Q ty Per Assembly
100	0354 0060B	Screw - M4X6	
101	0965 3006W	Tapping Screw With Flat Washer - M3x6	
102	0353 0050B	Philips Truss Head Screw - M3x5	
103	0344 0060F	Philips Truss Head Screw - M4x6	
104	0414 0082B	Binding Self Tapping Screw - M4x8	
105	0433 0060B	Philips Tapping Screw - M3x6	

13. Paper Supply Unit 2 (A172/A199)

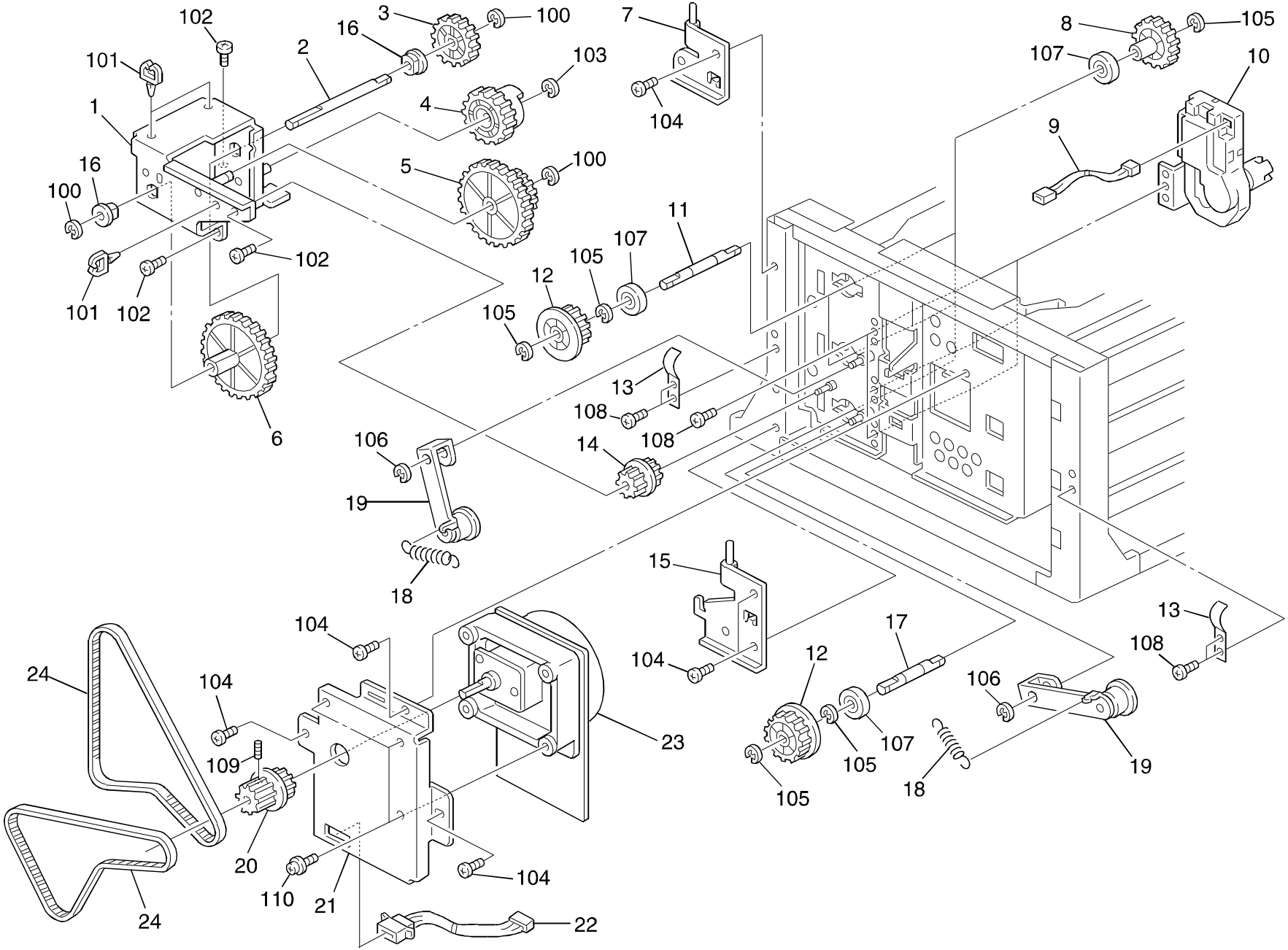

13. Paper Supply Unit 2 (A172/A199)

Index No.	Part No.	Description	Q ty Per Assembly
1	A513 6622	Tray Unit Gear Holder	1
2	AA14 8403	Shaft	1
3	AB01 3856	Gear - 31Z	1
4	AB01 7325	Gear - 35Z	1
5	AB01 7324	Gear - 26Z/70Z	1
6	AB01 3855	Gear - 68Z	1
7	A513 1173	Upper Hinge - Paper Feed Unit	1
8	AB01 3781	Gear - 30Z	3
9	A513 5353	Relay Harness - Lift Motor	3
10	A513 2840	Paper Lift Motor - DC24V 3.6W	3
11	AA14 5223	Drive Shaft	2
12	AB03 0456	Timing Pulley - 30Z	3
13	A027 1673	Spring Plate	2
14	AB03 3058	Timing Pulley - 22Z	1
15	A513 1175	Lower Hinge - Paper Feed Unit	1
16	5053 0447	Bushing - 6mm	2
17	AA14 5224	Drive Shaft	1
18	AA06 0560	Release Spring	2
19	A513 2820	Belt Tightner	2
20	AB03 0449	Roller Drive Pulley	1
21	A513 2846	Paper Feed Motor Bracket	1
22	A513 5358	Relay Harness - Paper Feed Motor	1
23	AX06 0087	Papaer Feed Motor - DC22W	1
24	AA04 3239	Timing Belt - P3M6 486MM	2

Index No.	Part No.	Description	Q ty Per Assembly
100	0720 0040B	Retaining Ring - M4	
101	1105 0199	Clamp	
102	0434 0080B	Philips Tapping Screw - M4x8	
103	0720 0050E	Retaining Ring - M5	
104	0964 4008B	Tapping Screw With Flat Washer - M4x8	
105	0720 0060B	Retaining Ring - M6	
106	0720 0040B	Retaining Ring - M4	
107	0740 3008	Ball Bearing - 8x22x7	
108	0433 0060B	Philips Tapping Screw - M3x6	
109	0574 0060B	Hexagon Headless Set Screw - M4	
110	0951 4008B	Philips Screw With Washer - M4x8	

14. Paper Supply Unit 3 (A172/A199)

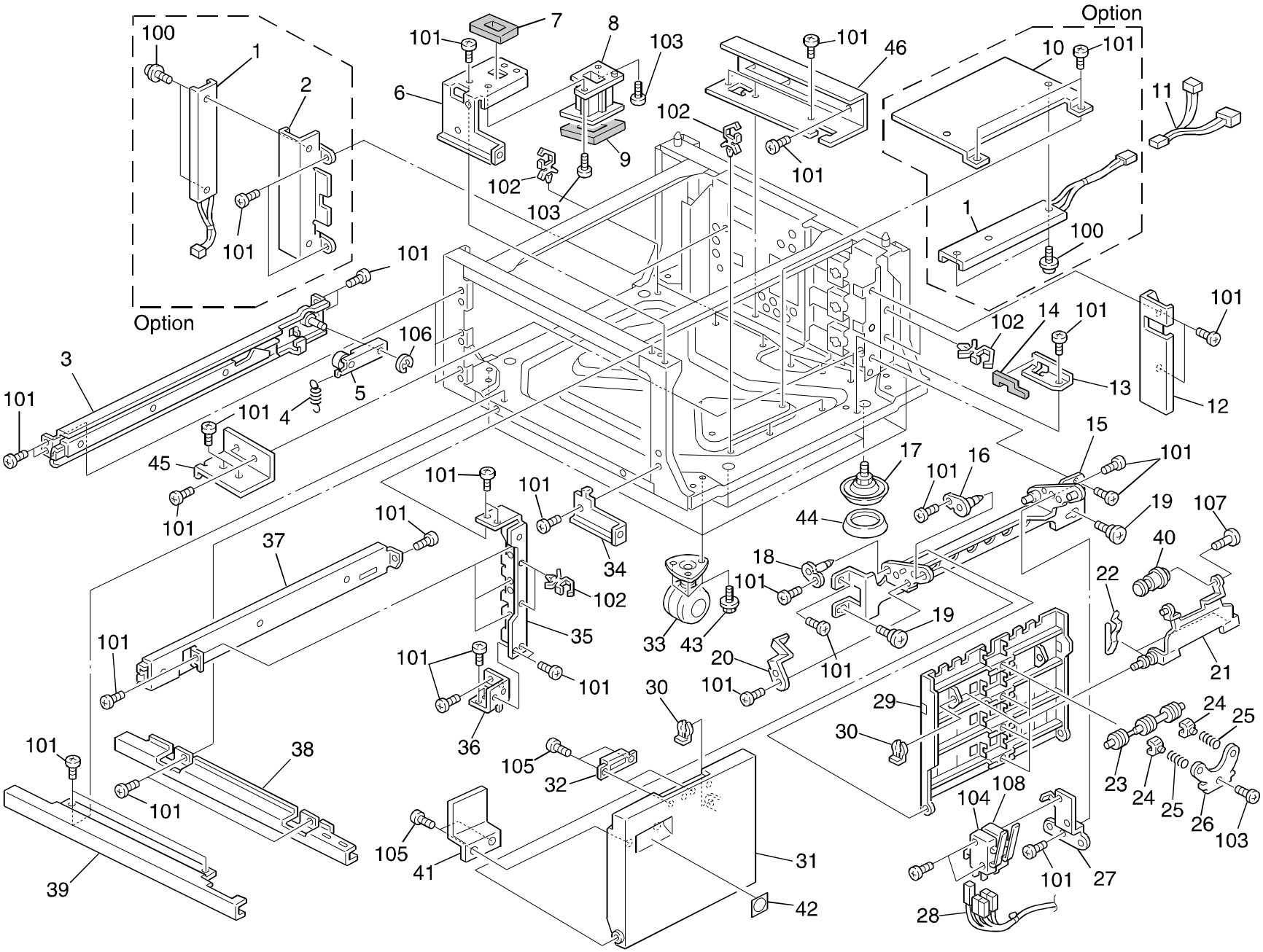

14. Paper Supply Unit 3 (A172/A199)

Index No.	Part No.	Description	Q ty Per Assembly
1	AX40 0052	Anti-condensation Heater - 115V 18W	2
1	AX40 0053	Anti-condensation Heater - 240V 18W	2
2	A513 2870	Upper Heater Bracket	1
3	A513 2861	Left Rail - Paper Tray	3
4	AA06 0534	Tray Lock Spring - 19mm	3
5	A096 6266	Tray Lock Arm	3
6	A513 6612	Joint Case Bracket	1
7	A513 6614	Upper Shielding Seal	1
8	A513 6613	Collection Joint Case	1
9	A513 6615	Lower Shielding Seal	1
10	A096 6100	Lower Heat Sink	1
11	A172 5383	Heater Harness - LCT	1
12	A513 2809	Rear Cover - Vertical Transport	1
13	A513 6652	Collection Bottle Stopper	1
14	A513 6653	Collection Bottle Cushion	1
15	A513 2760	Vertical Transport Guide Bracket	1
16	A513 2785	Guide Plate Rear Holder	1
17	5424 1064	Screw Stand	4
18	A513 2775	Guide Plate Front Holder	1
19	AA14 3074	Stepped Screw - M4x5	2
20	A513 2776	Guide Plate Stopper	1
21	A513 2782	Cover Release Plate	1
22	A513 2783	Spring Plate	2
23	AF02 0295	Vertical Driven Roller	4
24	AA08 0156	Bushing - M4	8
25	AA06 3487	Spring - 10mm	8
26	A513 2762	Pressure Plate	4
27	A513 2771	Switch Bracket - Vertical Transport	1
28	a513 5366	Relay Harness - Paper Tray Door SW.	1
29	A513 2752	Vertical Transport Guide	1
30	5447 2681	Snap Ring	5
31	A172 2780	Vertical Transport Cover	1
32	AG07 0004	Magnetic Catch	2
33	5415 1053	Caster	4
34	A513 6661	Cover Support Plate	1

Index No.	Part No.	Description	Q ty Per Assembly
35	A513 2801	Front Side Frame	1
36	A513 1036	Lower Front Right Bracket	1
37	A513 2850	Right Rail - Paper Tray	3
38	A513 1177	Lower Cover Bracket	1
39	A172 1327	Lower Cover - LCT	1
40	AA14 7674	Pin - 6x12.7	1
41	A513 2786	Support Cover	1
42	AA00 1346	Decal - Misfeed Removal A	1
43	5301 1662	Hexagon Bolt	12
44	AH01 3008	Leveling Foot Guide	4
45	A513 1034	Lower Rear Right Bracket	1
46	A513 1035	Lower Rear Left Bracket	1
100	0950 4010B	Sem,s Screw M4x10	
101	0434 0080B	Philips Tapping Screw - M4x8	
102	1105 0310	Wire Clamp	
103	0314 0060B	Philips Pan Head Screw - M4x6	
104	1204 2356	Micro Switch - AM51612A531	
105	0434 0082F	Tapping Screw - M3x10	
106	0720 0040B	Retaining Ring - M4	
107	0353 0050B	Philips Truss Head Screw - M3x5	
108	1204 2376	Microswitch : V-162-3C25	

15. Paper Feed Section 1 (A172/A199)

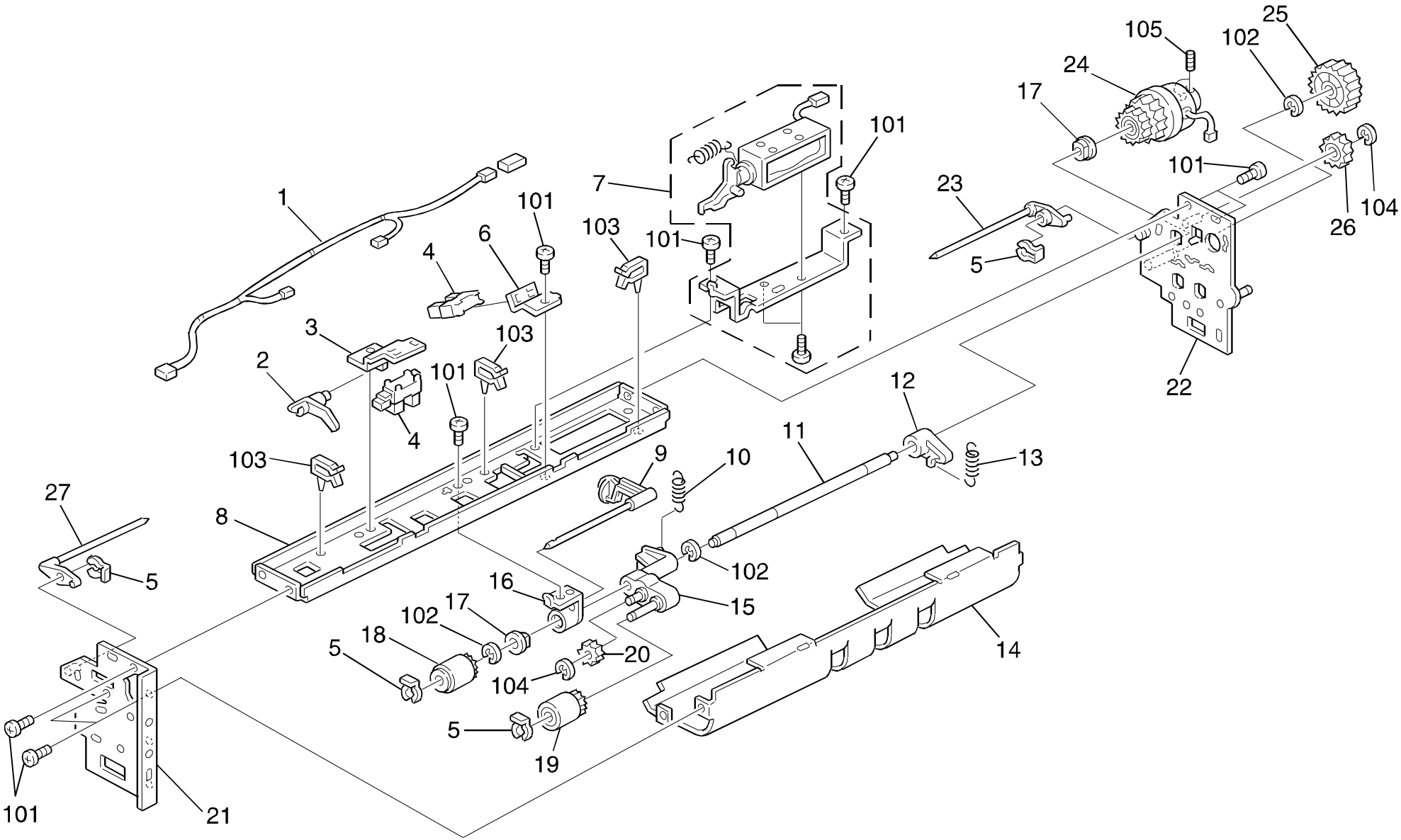

15. Paper Feed Section 1 (A172/A199)

Index No.	Part No.	Description	Q ty Per Assembly
1	A096 5411	Upper Feed Unit Harness	3
2	A096 6344	Paper End Actuater	3
3	A096 6345	End Sensor Bracket	3
4	AW02 0056	Photointerruptor - EE-SX4235A-P1	6
5	5447 2681	Snap Ring	12
6	A096 6358	Photointerrupter Bracket	3
7	A096 6355	Pick-up Solenoid	3
8	A096 6346	Paper Feed Stay	3
9	A096 6362	Paper End Feeler	3
10	AA06 0523	Pick-up Pressure Sping	3
11	AA14 0498	Feed Roller Shaft	3
12	A096 6353	Feed Roller Lever	3
13	AA06 0522	Stopper Spring	3
14	A096 6337	Paper Feed Guide	3
15	A096 6351	Pick-up Arm	3
16	A096 6352	Feed Roller Bracket	3
17	AA08 2070	Bushing - 8x16x7	6
18	**AF03 1022**	**Paper Feed Roller**	**3**
19	**AF03 0020**	**Pick-up Roller**	**3**
20	5447 2706	Gear - 15T	3
21	A096 6335	Front Side Plate	3
22	A096 6330	Rear Side Plate	3
23	A096 6360	Paper Flattener	3
24	AX21 0037	Magnetic Clutch	3
25	AB01 3775	Gear - 33Z	3
26	AB01 3774	Gear - 18Z	3
27	A096 6363	Front Paper Flattener	3

Index No.	Part No.	Description	Q ty Per Assembly
101	0434 0060B	Philips Tapping Screw - M4x6	
102	0720 0060B	Retaining Ring - M6	
103	1105 0087	Clamp	
104	0720 0040B	Retaining Ring - M4	
105	0573 0040B	Hexagon Headless Set Screw - M3x4	

16. Paper Feed Section 2 (A172/A199)

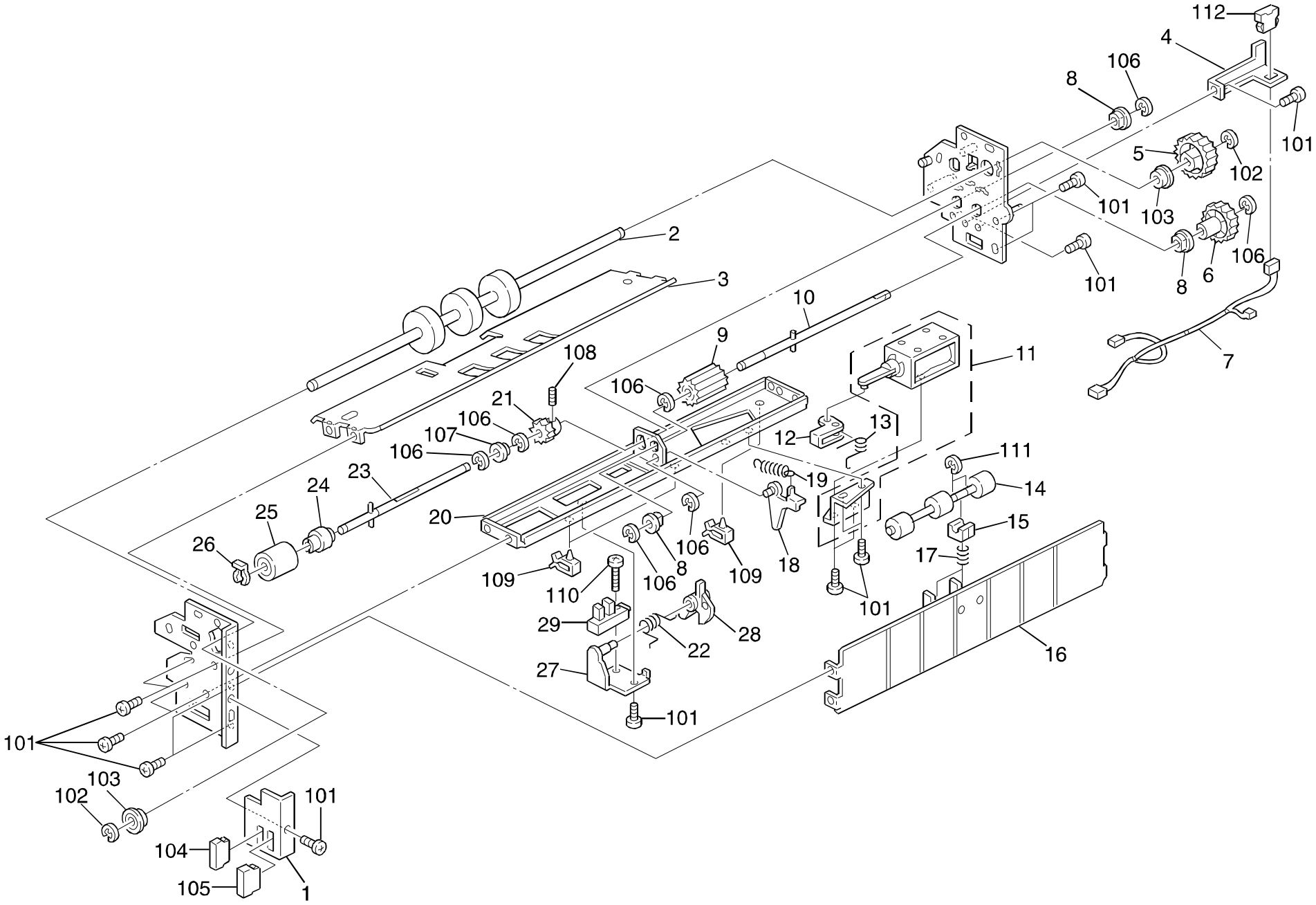

16. Paper Feed Section 2 (A172/A199)

Index No.	Part No.	Description	Q ty Per Assembly
1	A096 6375	Unit Fixing Plate	3
2	AF02 0289	Grip Drive Roller	3
3	A096 6338	Separation Guide	3
4	A096 6366	Clutch Stopper Arm	3
5	AB01 3777	Gear - 32Z	3
6	AB01 3776	Gear - 30Z	3
7	A096 5412	Lower Feed Unit Harness	3
8	AA08 2046	Bushing - 6x12x6	9
9	AB01 3773	Gear - 18Z	3
10	A096 6306	Separation Drive Shaft	3
11	A096 6315	Release Solenoid	3
12	A096 6311	Release Lever	3
13	AA06 6553	Spring - Pressure Release - Reverse	3
14	AF02 0280	Driven Roller	3
15	AA08 0156	Bushing - M4	6
16	A096 6369	Vertical Transport Guide	3
17	AA06 3487	Spring - 10mm	6
18	A096 6308	Separation Pressure Lever	3
19	AA06 0520	Lever Spring - 24.4mm	3
20	A096 6303	Separation Roller Stay	3
21	AB01 3729	Gear - 18Z	3
22	AA06 6189	Feed Sensor Spring	3
23	A096 6307	Separation Driver Shaft	3
24	A097 6000	Separation Torque Limitter	3
25	**AF03 2023**	**Separation Roller**	**3**
26	5447 2681	Snap Ring	3
27	A096 6321	Position Sensor Bracket	3
28	A096 6322	Position Sensor Feeler	3
29	AW02 0061	Photointerruptor - FE - SX4019-P1	3

Index No.	Part No.	Description	Q ty Per Assembly
101	0434 0060B	Philips Tapping Screw - M4x6	
102	0720 0060B	Retaining Ring - M6	
103	0742 3808	Ball Bearing - 8x16x5	
104	1102 6265	Connector - Red 8p	
105	1102 6250	Connector - 7p	
106	0720 0040B	Retaining Ring - M4	
107	0805 3145	Ball Bearing - 6x12x4mm	
108	0574 0040E	Hexagon Headless Set Screw - M4x4	
109	1105 0087	Clamp	
110	0314 0120B	Philips Pan Head Screw - M4x12	
111	0720 0030B	Retaining Ring - M3	
112	1102 6245	Connector - 2p	

17. By-pass Feed Table (A172/A199)

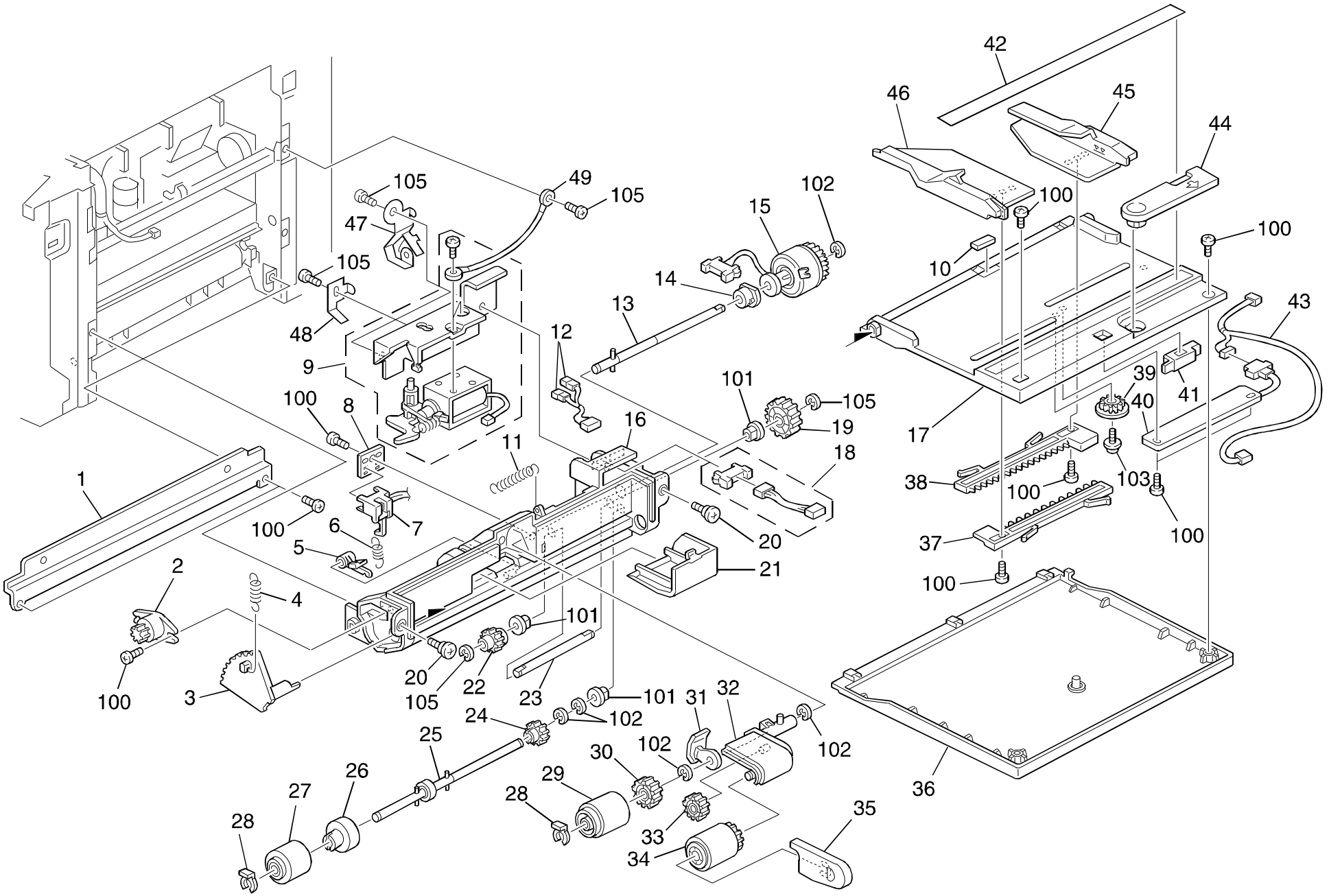

17. By-pass Feed Table (A172/A199)

Index No.	Part No.	Description	Q ty Per Assembly
1	A109 2721	Upper Stay Vertical Transport	1
2	A109 2691	Oil Damper - GF.CM	1
3	A109 2693	By-pass Feed Shaft	1
4	AA06 2272	Release Spring	1
5	A109 2653	Pressure Arm - By-pass	1
6	AA06 2283	Spring	1
7	AW02 0066	Photointerruptor	1
8	A109 2642	Paper End Sensor Bracket	1
9	A109 2680	By-pass Pick-up Solenoid	1
10	5447 2927	Friction Pad - B	1
11	AA06 2271	Release Spring	1
12	A109 5322	By-pass Feed Harness - 1	1
13	A109 2665	Feed Roller Shaft - By-pass	1
14	AA08 3003	Bushing - 6x18x5mm	1
15	AX20 0096	Magnetic Clutch	1
16	A172 2670	By-pass Feed Housing	1
17	A172 2621	By-pass Feed Table	1
18	A109 5361	By-pass Feed Harness - 3	1
19	AB01 3846	Gear - 28Z	1
20	AA14 3074	Stepped Screw - M4x5	2
21	A172 2675	Housing Cover	1
22	5447 2683	Gear - 18T	1
23	AA14 0522	Drive Shaft	1
24	5447 2684	Gear - 18T	1
25	A109 2652	Separation Roller Shaft - By-pass	1
26	A097 6000	Separation Torque Limitter	1
27	**AF03 2021**	**Separation Roller**	**1**
28	5447 2681	Snap Ring	2
29	**AF03 1023**	**Paper Feed Roller**	**1**
30	5353 3710	Gear - 18Z	1
31	A109 2666	Pick-up Arm Holder	1
32	A172 2661	Pick-up Arm - By-pass Feed	1
33	5447 2706	Gear - 15T	1
34	**AF03 0021**	**Pick-up Roller**	**1**
35	A172 2662	Pick-up Roller Cover - By-pass Feed	1

Index No.	Part No.	Description	Q ty Per Assembly
36	A172 2630	By-pass Feed Cover	1
37	AB01 3866	Front Side Fence Rack	1
38	A109 2638	Rear Side Fence Rack	1
39	G011 3305	Gear - 16T	1
40	A109 5538	Bypass Feed Table Sensor - 115V	1
40	A172 5126	Bypass Feed Table Sensor - 230V	1
41	A010 5700	Sensor	1
42	AA00 2217	Decal - Bypass Feed - A4	1
42	aa00 2230	Decal - Paper Size - LT	1
43	A109 5323	By-pass Feed Harness - 2	1
44	A172 2627	Paper Support Arm	1
45	A172 2635	Rear Side Fence - By-pass Feed	1
46	A172 2633	Front Side Fence - By-pass Feed	1
47	A109 2658	Ground Plate - Separation Roller	1
48	A109 2659	Ground Plate - Feed Roller Shaft	1
49	A109 5394	Ground Wire	1
100	0413 0082B	Tapping Screw - M3x8	
101	0805 3366	Bushing - 6mm	
102	0720 0040B	Retaining Ring - M4	
103	0965 3006B	Tapping Screw With Flat Washer - M3x6	
104	0414 0082B	Binding Self Tapping Screw - M4x8	
105	0720 0040E	Retaining Ring - M4	

18. Paper Registration (A172/A199)

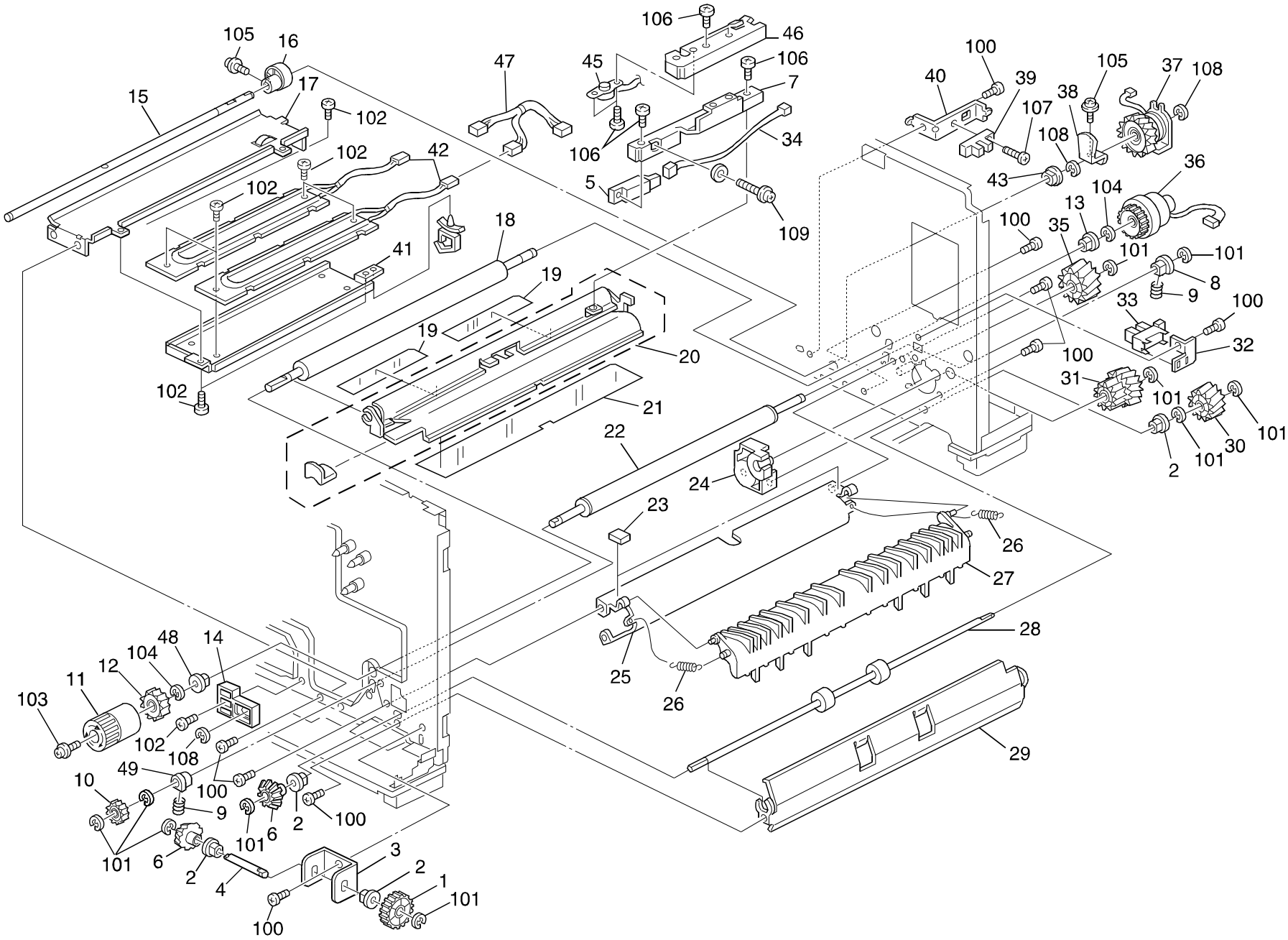

18. Paper Registration (A172/A199)

Index No.	Part No.	Description	Q ty Per Assembly
1	AB01 3852	Gear - 21Z	1
2	5053 0447	Bushing - 6mm	4
3	A109 6502	Drive Gear Bracket	1
4	AA14 8402	Drive Shaft	1
5	A010 5700	Sensor	1
6	AB01 6001	Gear - 14Z	2
7	A172 2594	Registration Sensor Holder	1
8	AA08 0037	Bushing - 6 mm	1
9	5442 2754	Spring - Registration Roller	2
10	5447 3922	Gear - 16T	1
11	AG05 0069	Registration Knob	1
12	AB01 3601	Gear - 20Z	1
13	AA08 2021	Bushing - 8x12x10mm	1
14	A109 6285	Transfer Cam Positioning Plate	1
15	AA14 5217	Cam Shaft	1
16	A109 6097	Release Cam	1
17	A109 6286	Paper Transfer Unit Rail	1
18	AF02 0311	Upper Registration Roller	1
19	A109 2588	Upper Guide - Registration	2
20	A109 2582	Upper Guide Plate - Registration	1
21	A109 2589	Large Guide - Registration	1
22	AF02 1049	Lower Registration Roller	1
23	AG07 0008	Magnet Catch	2
24	A109 2610	Gear Holder	1
25	A109 2575	Lower Guide Plate - Registration	1
26	AA06 2288	Spring	2
27	A109 2571	Registration Guide Plate	1
28	AF02 0312	Relay Roller	1
29	A109 2574	Relay Guide Plate	1
30	AB01 3844	Gear - 30Z	1
31	AB01 7322	Gear - 34Z/41Z	1
32	A109 2711	Sensor Bracket - Registration Guide	1
33	AW02 0056	Photointerruptor - EE-SX4235A-P1	1
34	A109 5311	Sensor Relay Harness	1
35	AB01 3843	Gear - 35Z	1

Index No.	Part No.	Description	Q ty Per Assembly
36	AX21 0040	Magnetic Clutch	1
37	AX21 0041	Spring Clutch	1
38	A109 6298	Sensor Feeler - Transfer Roller	1
39	AW02 0062	Photointerruptor - EE-SX4019-P15	1
40	A109 4714	Position Sensor Bracket	1
41	A172 6284	Anti-condensation Heater Cover	1
42	AX40 0074	Anti-condensation Heater - 115V 18W	2
42	AX40 0075	Anticondensation Heater - 230V 18W	2
43	AA08 0166	Bushing - 8mm	1
44	AA08 2058	Bushing - 6x10x9mm	2
45	A172 5414	Thermofuse - 28 c 120V 3.0A	1
46	A172 2595	Thermofuse Holder	1
47	A172 5389	Heater Harness	1
48	AA08 2068	Bushing - 8mm	1
49	AA08 0211	Bushing - 6mm	1
100	0434 0080B	Philips Tapping Screw - M4x8	
101	0720 0040B	Retaining Ring - M4	
102	0354 0060B	Screw - M4X6	
103	0951 4008B	Philips Screw With Washer - M4x8	
104	0720 0060B	Retaining Ring - M6	
105	0951 3006B	Philips Screw With Flat Washer - M3x6	
106	0314 0060B	Philips Pan Head Screw - M4x6	
107	0354 0100B	Screw - M4x10	
108	0720 0050B	Retaining Ring - M5	
109	0313 0100B	Philips Pan Head Screw - M3x10	

19. Around The Drum (A172/A199)

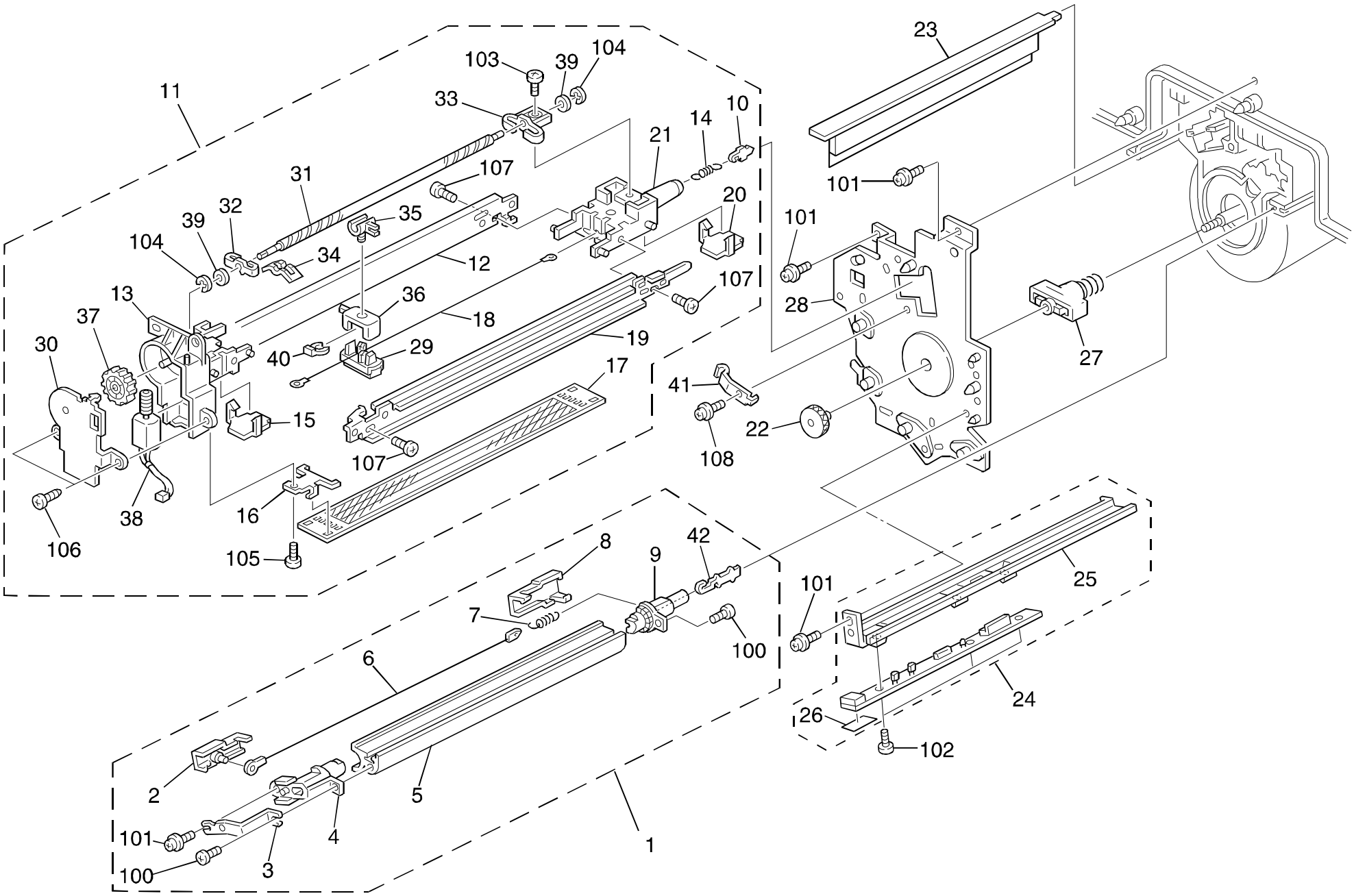

19. Around The Drum (A172/A199)

Index No.	Part No.	Description	Q ty Per Assembly
1	AD00 4071	Pre - Cleaning Corona Unit	1
2	AD02 2293	Front End Block Cover - Pre Cleaning	1
3	A109 2369	Grounding Plate - Pre Cleaning	1
4	AD02 2291	Front End Block - Pre Cleaning	1
5	AD02 3086	Corona Casing - Pre Cleaning	1
6	**AD02 0056**	**PCC Wire**	**1**
7	5442 2108	Corona Wire Spring	1
8	AD02 2294	Rear End Block Cover - Pre Cleaning	1
9	AD02 2292	Rear End Block	1
10	A172 7611	Positioning Pin	1
11	AD00 4087	Charge Corona Unit	1
12	A172 7615	Left Caseing - Charge Corona	1
13	AD02 2281	Front End Block	1
14	5442 2108	Corona Wire Spring	1
15	AD02 2340	Front Cover - Charge Corona	1
16	A172 7610	Grid Fixing Plate	1
17	**AD02 0069**	**Charge Corona Grid**	**1**
18	**AD02 0070**	**Charge Corona Wire**	**1**
19	A172 7616	Right Caseing - Charge Corona	1
20	AD02 2341	Rear Cover - Charge Corona	1
21	AD02 2282	Rear End Block	1
22	A109 2287	Drum Flange Knob	1
23	A109 2381	Quenching Lamp	1
24	A109 5192	ID Sensor Board	1
25	A109 2371	ID Sensor Stay	1
26	AA15 0360	Seal - 13x20	1
27	A109 2291	Knob Screw	1
28	A109 1132	Drum Flange Cover	1
29	**A172 7642**	**Charge Wire/Grid Cleaner**	**1**
30	A172 7651	Cleaner Motor Cover	1
31	A172 7630	Screw Shaft	1
32	A172 7631	Front Bushing	1
33	A172 7632	Rear Bushing	1
34	A172 7633	Spring Plate	1
35	A172 7640	Wire Cleaner Slider	1
36	A172 7641	Wire Cleaner Holder	1
37	AB01 0094	Cleaning Drive Gear	1
38	AX04 0074	DC Motor - 3.46W 5V	1
39	A096 3863	Spacer - 4x6x1	2
40	A172 7650	Slider Ring	1
41	A172 7664	Spring Plate	1
42	AD02 4025	Corona Wire Terminal	1
100	0433 0060B	Philips Tapping Screw - M3x6	
101	0314 0080B	Philips Pan Head Screw - M4x8	
102	0313 0060B	Philips Pan Head Screw - M3x6	
103	0972 4006A	Philips Polycarbonate Screw - M4x6	
104	0720 0025	Retaining Ring - 2.5	
105	0452 3010B	Tapping Bind Screw - M3x10	
106	0452 3008B	Tapping Screw - M3x8	
107	0452 3006B	Tapping Screw - M3x6	
108	0951 4006B	Philips Screw With Washer - M4x6	

20. Drum Unit 1 (A172/A199)

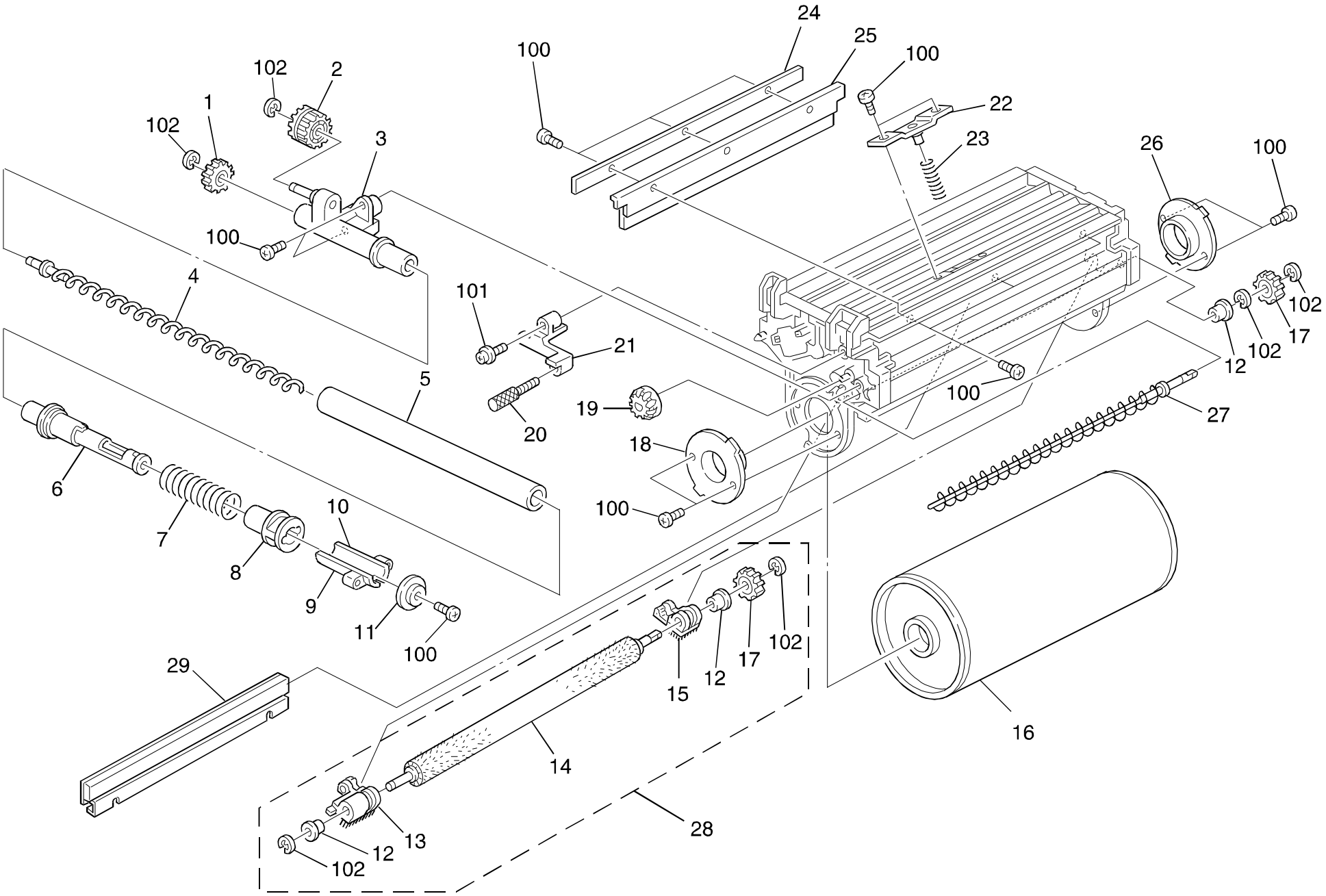

20. Drum Unit 1 (A172/A199)

Index No.	Part No.	Description	Q ty Per Assembly
1	A109 3635	Gear - 18Z	1
2	A109 3631	Gear - 18Z/20Z	1
3	A109 3629	Toner Collection Joint	1
4	A109 3632	Toner Collection Auger	1
5	A109 3645	Toner Collection Tube	1
6	A109 3637	Toner Collection Pipe	1
7	A109 3642	Pressure Spring	1
8	A109 3643	Joint Shutter - Toner Collection	1
9	A109 3639	Right Shutter - Toner Collection	1
10	A109 3641	Left Shutter - Toner Collection	1
11	A109 3644	Shutter Stopper	1
12	A109 3615	Bushing - Cleaning Brush	3
13	A109 3605	Front Side Holder - Cleaning Brush	1
14	**A172 3601**	**Cleaning Brush**	**1**
15	A109 3610	Rear Side Holder - Cleaning Brush	1
16	A172 9510	OPC Drum	1
17	A109 3616	Gear - 16Z	2
18	A109 3652	Front Drum Flange	1
19	A109 3651	Gear - 20Z	1
20	A109 3650	Knob Screw	1
21	A109 3601	Blade Stopper Lever	1
22	A109 3574	Pressure Plate - Cleaning Brush	1
23	A172 3577	Pressure Spring - Cleaning Brush	1
24	A109 3626	Blade Holder - Bias Roller	1
25	**A109 3623**	**Bias Roller Blade**	**1**
26	A109 3653	Rear Drum Flange	1
27	A109 3618	Toner Collection Coil	1
28	A172 3604	Cleaning Brush Ass y	1
29	**A172 3602**	**Lubricant Bar**	**1**

Index No.	Part No.	Description	Q ty Per Assembly
100	0314 0060B	Philips Pan Head Screw - M4x6	
101	0951 4006B	Philips Screw With Washer - M4x6	
102	0720 0040B	Retaining Ring - M4	

21. Drum Unit 2 (A172/A199)

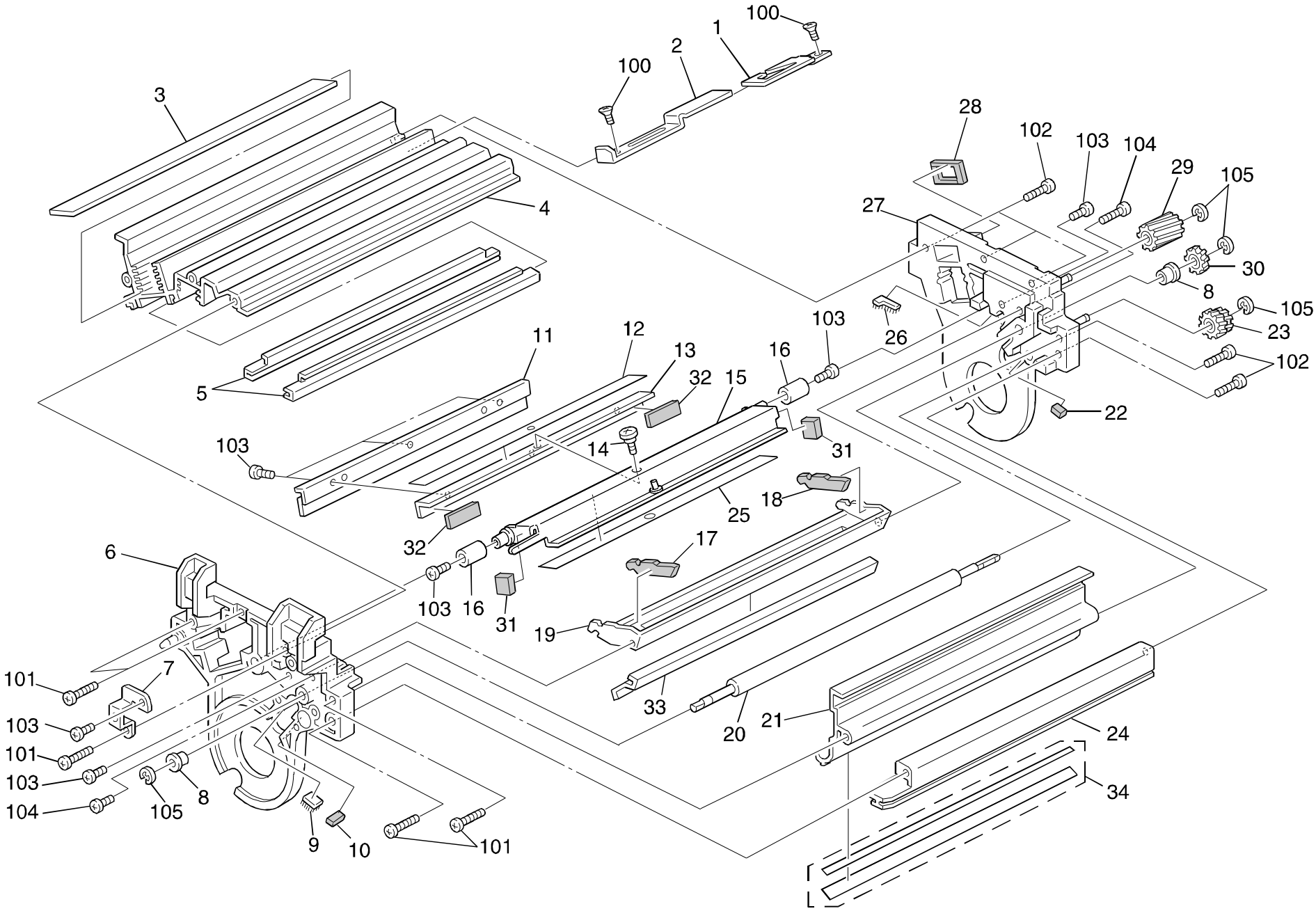

21. Drum Unit 2 (A172/A199)

Index No.	Part No.	Description	Q ty Per Assembly
*	A172 3560	Cleaning Unit	1
1	A109 3570	Lower Louver	1
2	A109 3571	Middle Louver	1
3	A109 3572	Upper Louver	1
4	A109 3569	Charge Corona Housing	1
5	A109 3573	Guide Rail - Charge Corona	2
6	A109 3553	Front Side Plate - Drum	1
7	A109 3558	Drum Grounding Plate	1
8	A109 3615	Bushing - Cleaning Brush	2
9	A109 3557	Seal - 5x14x14	1
10	A109 3556	Seal - 4x5x10	1
11	**A172 3598**	**Cleaning Blade**	**1**
12	A109 3596	Seal - 16x323	1
13	A109 3595	Cleaning Blade Holder	1
14	A109 3597	Stepped Screw - M4	1
15	A109 3589	Drum Cleaning Bracket	1
16	A109 3648	Spacer - 6x8x14	2
17	A109 3585	Front Side Seal-cleaning Brush Cove	1
18	A109 3586	Rear Seal - Cleaning Brush Cover	1
19	A109 3584	Cleaning Brush Cover	1
20	A109 3617	Cleaning Brush Bias Roller	1
21	A109 3579	Right Side Stay - Drum Cleaning	1
22	A109 3565	Seal - 3x4x5	1
23	A109 3647	Gear - 16/17Z	1
24	A109 3582	Pre-cleaning Corona Rail	1
25	A109 3593	Seal - 21x323	1
26	A109 3566	Seal - 5x10x14	1
27	A109 3560	Rear Side Plate - Drum	1
28	A109 3567	Duct Seal - 3x22x27	1
29	A109 3646	Gear - 16Z	1
30	A109 3616	Gear - 16Z	1
31	A109 3659	Seal - 3x9x9	2
32	A109 3660	Seal - 3x8x18	2
33	A109 3661	Cover Bracket - Cleaning Brush	1
34	A109 9501	Drum Cleaning Entrance Seal	1

Index No.	Part No.	Description	Q ty Per Assembly
100	0972 4006A	Philips Polycarbonate Screw - M4x6	
101	0314 0200B	Philips Pan Head Screw - M4x20	
102	0314 0160B	Philips Pan Head Screw - M4x16	
103	0313 0060B	Philips Pan Head Screw - M3x6	
104	0313 0120B	Philips Pan Head Screw - M3x12	
105	0720 0040B	Retaining Ring - M4	

22. Toner Tank Unit 1 (A172/A199)

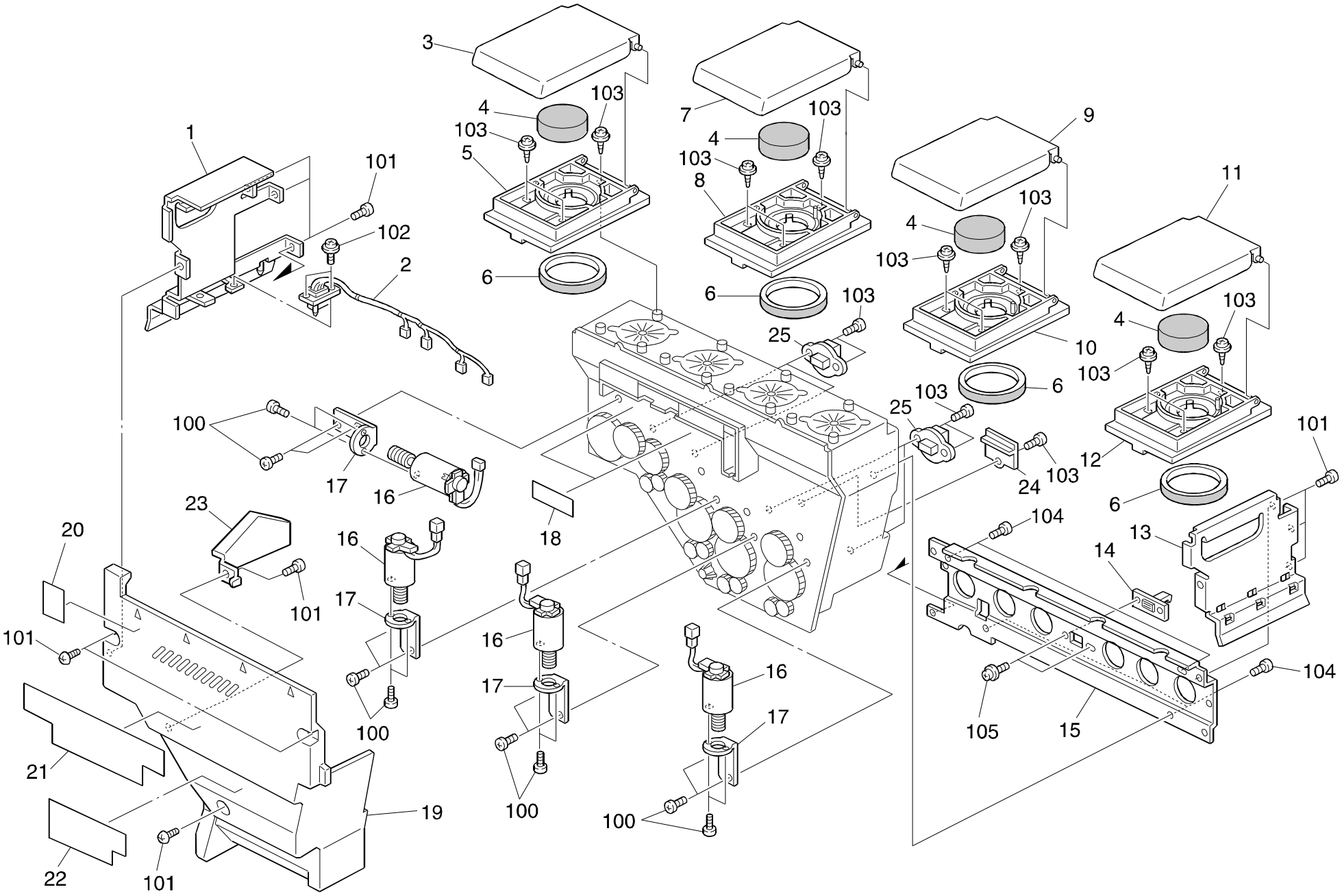

22. Toner Tank Unit 1 (A172/A199)

Index No.	Part No.	Description	Q ty Per Assembly
1	A172 3420	Left Side Plate - Hopper	1
2	A172 5306	Hopper Harness	1
3	A109 3406	Top Cover Bottle - Black	1
4	AA15 1875	Seal - 20x40	4
5	A109 3401	Toner Bottle Guide - Black	1
6	AA15 1829	Seal - 72	4
7	A109 3407	Top Cover Bottle - Cyan	1
8	A109 3404	Toner Bottle Guide - Cyan	1
9	A109 3408	Top Cover Bottle - Magenta	1
10	A109 3402	Toner Bottle Guide - Magenta	1
11	A109 3409	Top Cover Bottle - Yellow	1
12	A109 3403	Toner Bottle Guide - Yellow	1
13	A109 3428	Right Side Plate - Toner Tank	1
14	A172 3475	Tank Unit Stopper	1
15	A109 3427	Rear Side Plate - Toner Tank	1
16	A109 5401	Toner Supply Motor - DC24V 4.5W	4
17	A109 3395	Toner Supply Motor Bracket	4
18	AA15 0351	Sheet - 25x57	2
19	A109 3410	Toner Tank Cover	1
20	A072 1383	Decal - Ading Toner	1
21	A172 1590	Decal - Toner Supply	1
22	A109 1551	Decal - Misfeed Removal C	1
23	A109 3112	Development Support Cam	1
24	A172 3462	Harness Calmp	4
25	AW23 0009	Toner End Sensor	4





Index No.	Part No.	Description	Q ty Per Assembly
100	0951 3006B	Philips Screw With Flat Washer - M3x6	
101	0314 0060B	Philips Pan Head Screw - M4x6	
102	0952 3008B	Screw - M3x8	
103	0414 0082B	Binding Self Tapping Screw - M4x8	
104	0314 0080B	Philips Pan Head Screw - M4x8	
105	0951 3005B	Philips Screw With Flat Washer - M3x5	

23. Toner Tank Unit 2 (A172/A199)

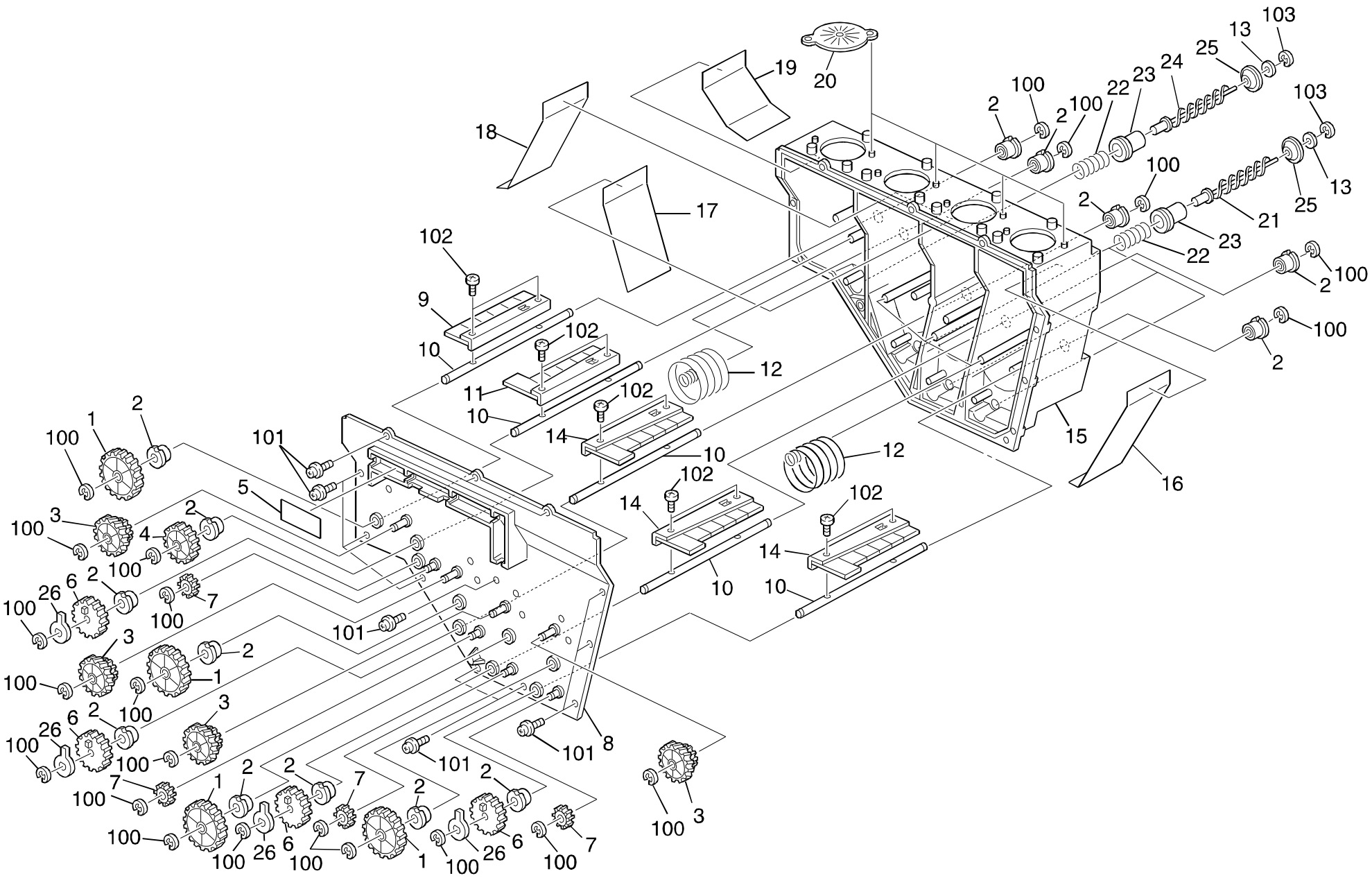

23. Toner Tank Unit 2 (A172/A199)

Index No.	Part No.	Description	Q ty Per Assembly
1	AB01 3810	Gear - 52Z	4
2	5447 3200	Bushing - 6mm	14
3	AB01 7306	Gear - 18Z/40Z	4
4	AB01 3811	Gear - 40Z	1
5	AA15 0351	Sheet - 25x57	1
6	AB01 3989	Idle Gear - 18Z	4
7	5205 2612	Gear - 19T	4
8	A109 3355	Front Casing - Toner Tank	1
9	AD03 9045	Large Agitator - BK	1
10	AA14 0510	Drive Shaft	5
11	A172 3468	Black Agitator	1
12	A172 3472	Spring	4
13	A109 3393	Spacer - Toner Supply Coil	2
14	A172 3464	Agitator	3
15	A172 3352	Toner Hopper Caseing	1
16	A109 3383	Toner Vibrating Mylar - Yellow	1
17	A109 3382	Toner Vibrating Mylar - Magenta	1
18	A109 3381	Toner Vibrating Mylar - Cyan	1
19	A109 3380	Toner Vibrating Mylar - Black	1
20	AA15 0343	Toner Entrance Seal	4
21	AD03 7052	Toner Supply Coil - Color	3
22	AA06 3361	Spring	4
23	A109 3390	Toner Supply Cap	4
24	AD03 7054	Toner Supply Coil - Black	1
25	AA15 2232	Packing - 18	4
26	A172 3473	Tonner Supply Roller Joint	4

Index No.	Part No.	Description	Q ty Per Assembly
100	0720 0040B	Retaining Ring - M4	
101	0951 3008B	Philips Screw With Flat Washer - M3x8	
102	0313 0080B	Philips Pan Head Screw - M3x8	
103	0720 0030E	Retaining Ring - M3	

24. Development Unit - Black (A172/A199)

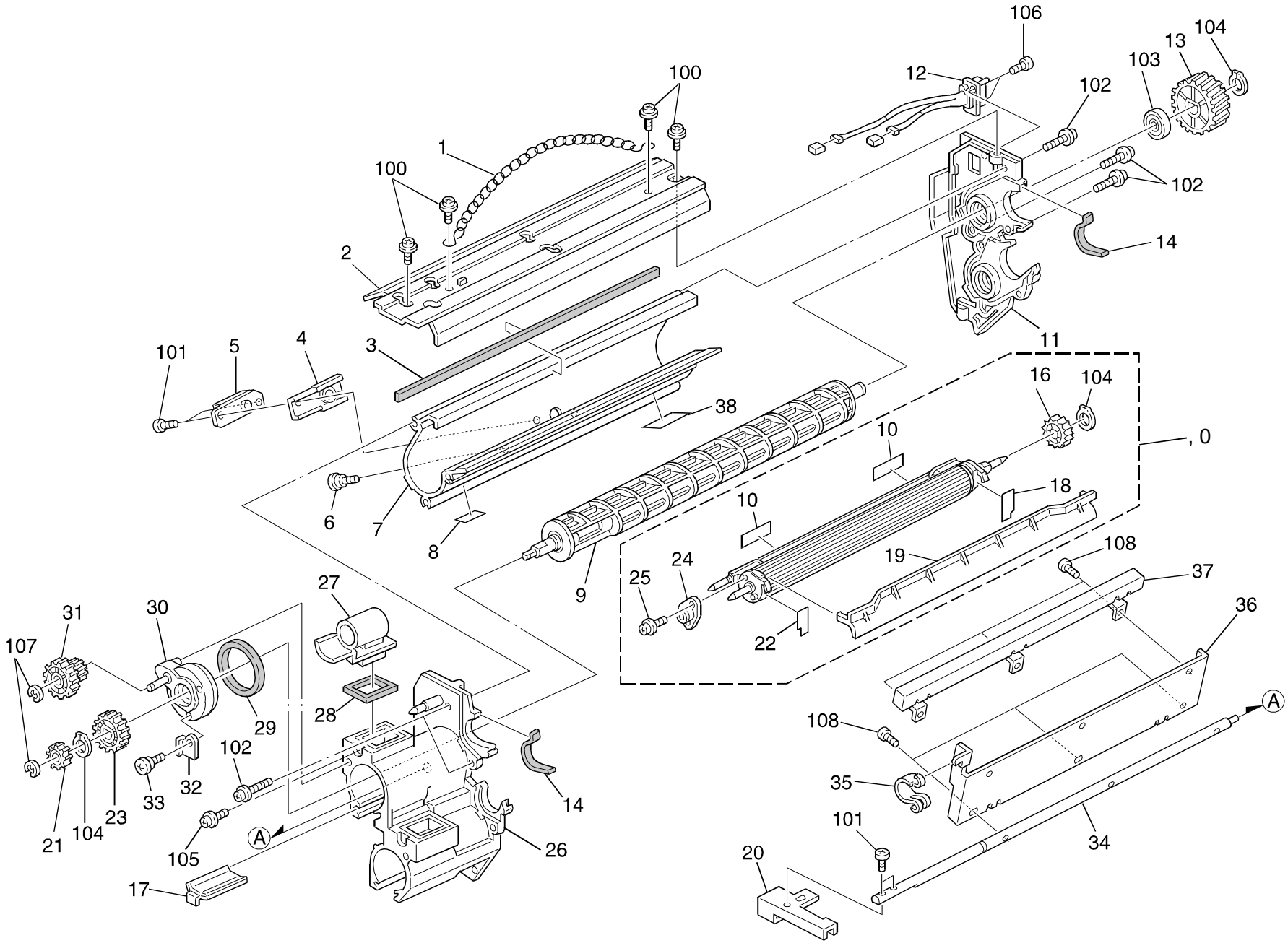

24. Development Unit - Black (A172/A199)

Index No.	Part No.	Description	Q ty Per Assembly
*	AD00 1040	Development Unit -B/C	1
1	5205 1336	Front Cover Chain	1
2	A109 3089	Development Unit Guide - Black	1
3	AA15 1849	Seal - 5x8x342	1
4	A109 3065	Spacer - Toner Density Sensor	1
5	AW23 0007	Toner Density Sensor	1
6	6803 2273	Stepped Screw - M4	1
7	A109 3059	Development Casing - Black	1
8	A109 3096	Black Development Seal	1
9	A109 3066	Mixing Paddle Roller - B/C	1
10	A109 3086	Development Casing Seal	2
11	A109 3054	Rear Side Plate - B/C	1
12	A109 5305	Development Unit Harness	1
13	AB01 3814	Gear - 40Z	1
14	AA15 1842	Seal - 1x5x55.5	2
15	A172 3073	Development Sleeve - 1st	1
16	AB01 1342	Gear - 30Z	1
17	A109 3102	Toner Collection Cover	1
18	AA15 2320	Seal - 16x36	1
19	A109 3082	Development Sleeve Cover	1
20	A109 3108	Development Support Lever	1
21	AB01 1149	Gear - 14Z	1
22	AA15 2319	Seal - 16x36	1
23	AB01 1148	Gear - 28Z	1
24	A109 3085	Positioning Adjuster	1
25	5403 6246	Stepped Screw - Cleaning	1
26	A109 3051	Front Side Plate - B/C	1
27	A109 3100	Toner Supply Receptacle	1
28	AA15 1846	Seal - 2x27x36	1
29	AA15 1847	Seal - 4x47	1
30	A109 3068	Paddle Flange	1
31	AB01 7330	Gear - 20Z/34Z	1
32	A109 3070	Paddle Flange Stopper	1
33	AA14 3358	Stepped Screw - M4x3	1
34	A109 3107	Development Support Shaft	1

Index No.	Part No.	Description	Q ty Per Assembly
35	A109 3109	Lock - Spring	1
36	A109 3106	Development Support Plate	1
37	A109 3111	Spring Plate	1
38	A109 3064	Black Development Seal - Rear	1
100	0354 0060B	Screw - M4X6	
101	0313 0060B	Philips Pan Head Screw - M3x6	
102	0952 4014B	Screw - M4x14	
103	0805 3449	Ball Bearing - M12x24x6	
104	0725 0120E	Retaining Ring C - M12	
105	0952 4010B	Screw - M4x10	
106	0413 0102B	Tapping Screw - M3x10	
107	0720 0040B	Retaining Ring - M4	
108	0313 0040B	Philips Pan Head Screw - M3x4	

25. Development Unit - Cyan (A172/A199)

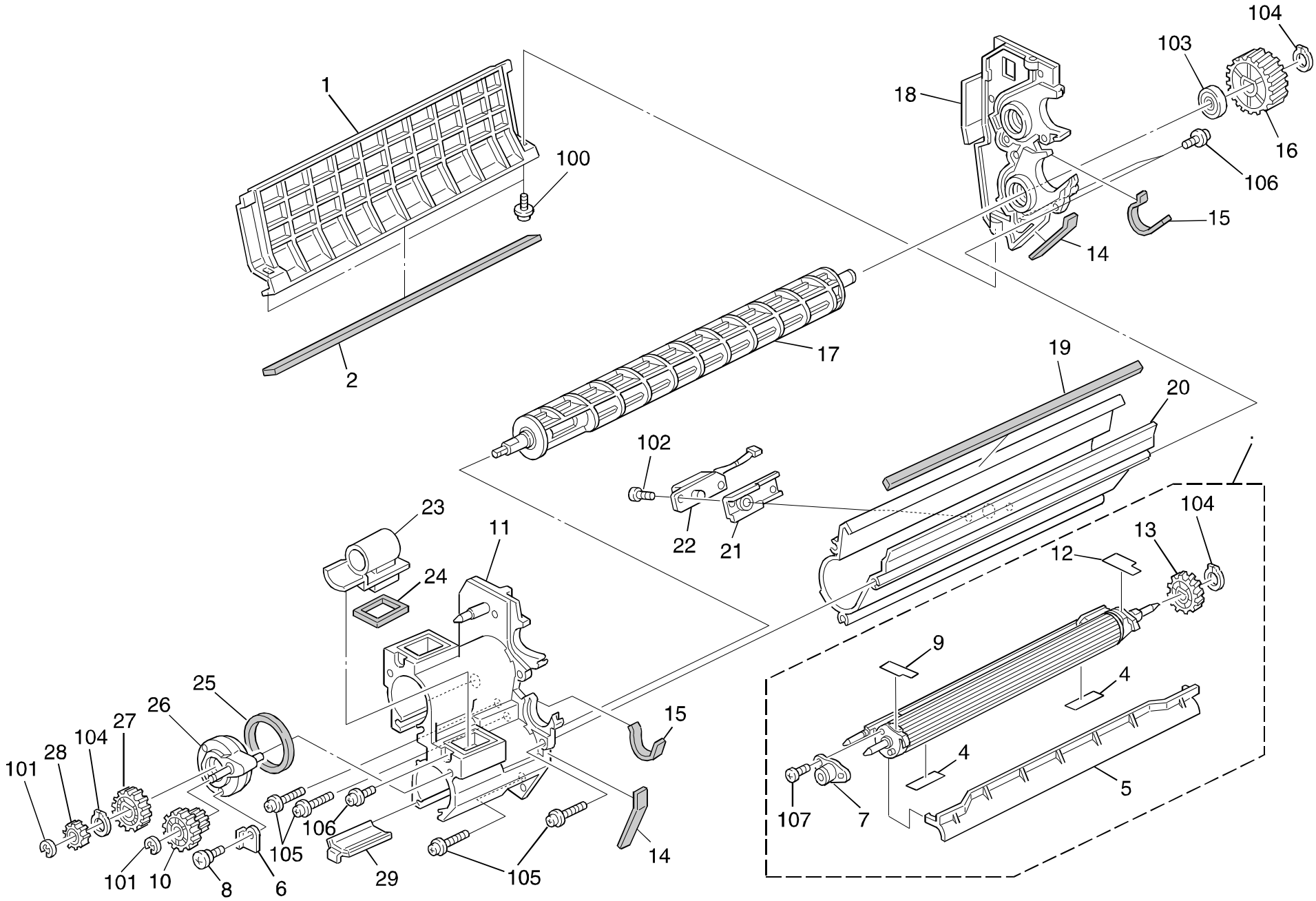

25. Development Unit - Cyan (A172/A199)

Index No.	Part No.	Description	Q ty Per Assembly
1	A109 3095	Development Unit Cover - B/C	1
2	AA15 1845	Seal - 4x8x333.5	1
3	A172 3074	Development Sleeve Ass y - Cyan	1
4	A109 3086	Development Casing Seal	2
5	A109 3082	Development Sleeve Cover	1
6	A109 3070	Paddle Flange Stopper	1
7	A109 3085	Positioning Adjuster	1
8	AA14 3285	Shoulder Screw - M4	1
9	AA15 2319	Seal - 16x36	1
10	AB01 7330	Gear - 20Z/34Z	1
11	A109 3051	Front Side Plate - B/C	1
12	AA15 2320	Seal - 16x36	1
13	AB01 1342	Gear - 30Z	1
14	AA15 1843	Seal - 4x7x59.5	2
15	AA15 1842	Seal - 1x5x55.5	2
16	AB01 3814	Gear - 40Z	1
17	A109 3066	Mixing Paddle Roller - B/C	1
18	A109 3054	Rear Side Plate - B/C	1
19	AA15 1849	Seal - 5x8x342	1
20	A109 3062	Development Casing - Cyan	1
21	A109 3065	Spacer - Toner Density Sensor	1
22	AW23 0007	Toner Density Sensor	1
23	A109 3100	Toner Supply Receptacle	1
24	AA15 1846	Seal - 2x27x36	1
25	AA15 1847	Seal - 4x47	1
26	A109 3068	Paddle Flange	1
27	AB01 1148	Gear - 28Z	1
28	AB01 1149	Gear - 14Z	1
29	A109 3102	Toner Collection Cover	1

Index No.	Part No.	Description	Q ty Per Assembly
100	0354 0060B	Screw - M4X6	
101	0720 0040B	Retaining Ring - M4	
102	0313 0060B	Philips Pan Head Screw - M3x6	
103	0805 3449	Ball Bearing - M12x24x6	
104	0725 0120E	Retaining Ring C - M12	
105	0952 4014B	Screw - M4x14	
106	0952 4010B	Screw - M4x10	
107	0313 0040B	Philips Pan Head Screw - M3x4	

26. Development Unit - Magenta (A172/A199)

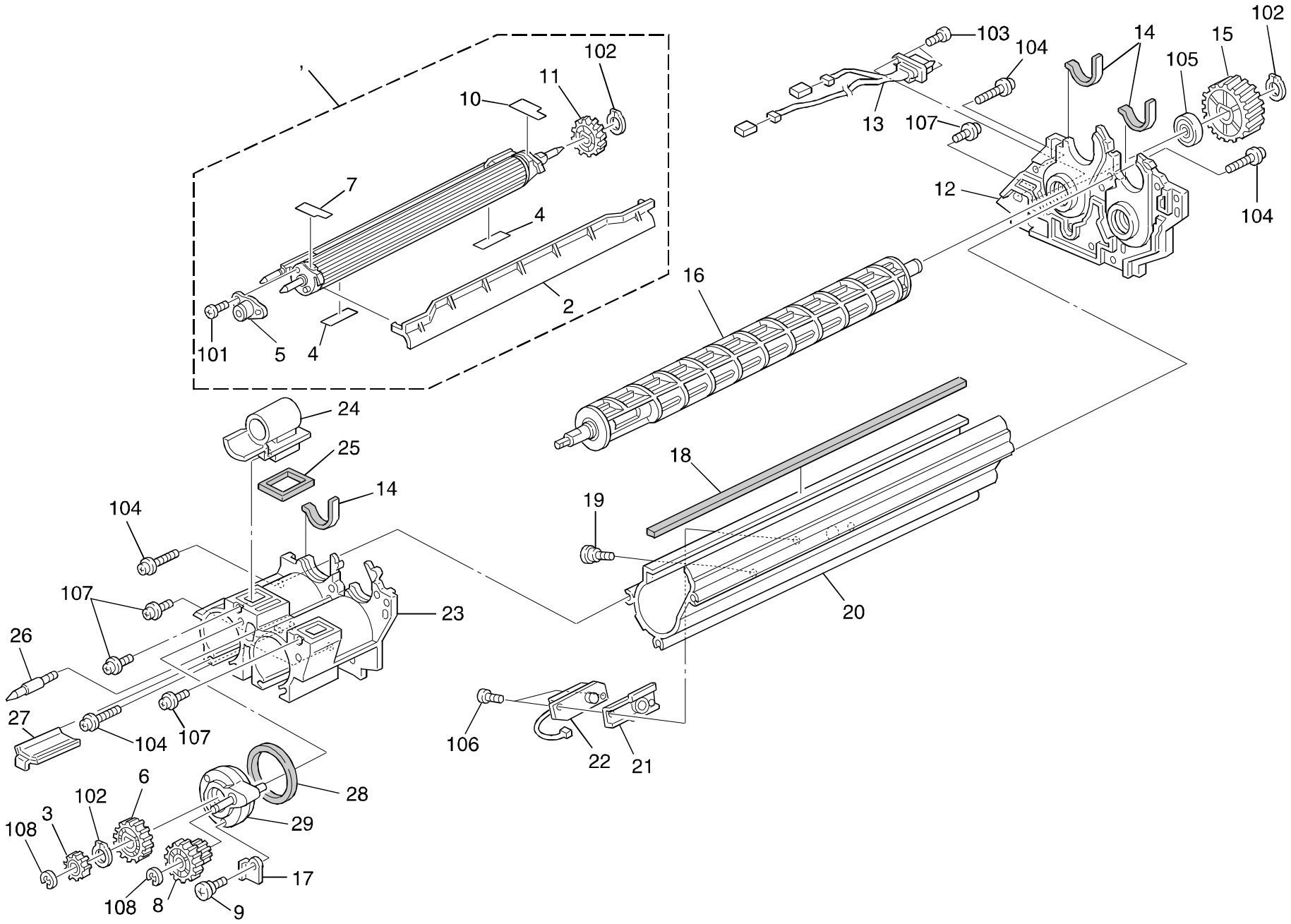

26. Development Unit - Magenta (A172/A199)

Index No.	Part No.	Description	Q ty Per Assembly
*	AD00 1041	Development Unit - M/Y	1
1	A172 3214	Development Sleeve - M/Y	1
2	A109 3082	Development Sleeve Cover	1
3	AB01 1149	Gear - 14Z	1
4	A109 3086	Development Casing Seal	2
5	A109 3085	Positioning Adjuster	1
6	AB01 1148	Gear - 28Z	1
7	AA15 2319	Seal - 16x36	1
8	AB01 7330	Gear - 20Z/34Z	1
9	AA14 3285	Shoulder Screw - M4	1
10	AA15 2320	Seal - 16x36	1
11	AB01 1342	Gear - 30Z	1
12	A109 3204	Rear Side Plate - C/Y	1
13	A109 5305	Development Unit Harness	1
14	AA15 1842	Seal - 1x5x55.5	3
15	AB01 3814	Gear - 40Z	1
16	A109 3067	Mixing Paddle Roller - M/Y	1
17	A109 3070	Paddle Flange Stopper	1
18	AA15 1849	Seal - 5x8x342	1
19	6803 2273	Stepped Screw - M4	1
20	A109 3209	Development Casing - Magenta	1
21	A109 3065	Spacer - Toner Density Sensor	1
22	AW23 0007	Toner Density Sensor	1
23	A109 3201	Front Side Plate - C/Y	1
24	A109 3100	Toner Supply Receptacle	1
25	AA15 1846	Seal - 2x27x36	1
26	AA14 3418	Positioning Pin	1
27	A109 3102	Toner Collection Cover	1
28	AA15 1847	Seal - 4x47	1
29	A109 3068	Paddle Flange	1

Index No.	Part No.	Description	Q ty Per Assembly
101	0313 0040B	Philips Pan Head Screw - M3x4	
102	0725 0120E	Retaining Ring C - M12	
103	0413 0102B	Tapping Screw - M3x10	
104	0952 4014B	Screw - M4x14	
105	0805 3449	Ball Bearing - M12x24x6	
106	0313 0060B	Philips Pan Head Screw - M3x6	
107	0952 4010B	Screw - M4x10	
108	0720 0040B	Retaining Ring - M4	

27. Development Unit - Yellow (A172/A199)

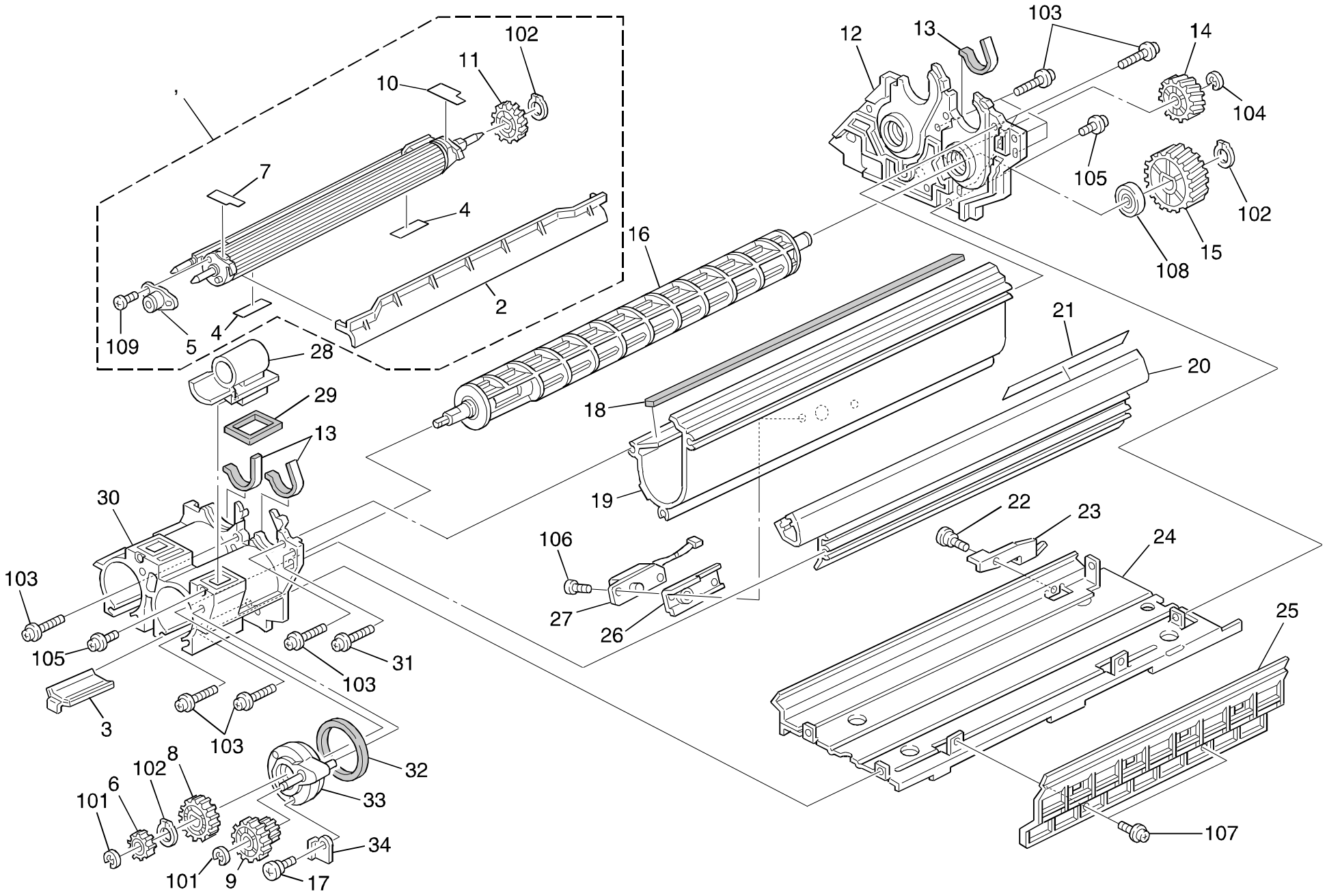

27. Development Unit - Yellow (A172/A199)

Index No.	Part No.	Description	Q ty Per Assembly
1	A172 3214	Development Sleeve - M/Y	1
2	A109 3082	Development Sleeve Cover	1
3	A109 3102	Toner Collection Cover	1
4	A109 3086	Development Casing Seal	2
5	A109 3085	Positioning Adjuster	1
6	AB01 1149	Gear - 14Z	1
7	AA15 2319	Seal - 16x36	1
8	AB01 1148	Gear - 28Z	1
9	AB01 7330	Gear - 20Z/34Z	1
10	AA15 2320	Seal - 16x36	1
11	AB01 1342	Gear - 30Z	1
12	A109 3204	Rear Side Plate - C/Y	1
13	AA15 1842	Seal - 1x5x55.5	3
14	AB01 3815	Gear - 30Z	1
15	AB01 3814	Gear - 40Z	1
16	A109 3067	Mixing Paddle Roller - M/Y	1
17	AA14 3285	Shoulder Screw - M4	1
18	AA15 1849	Seal - 5x8x342	1
19	A109 3212	Development Casing - Yellow	1
20	A109 3226	ID Sensor Rail	1
21	AA15 0345	Seal - 19.5x170	1
22	AA14 3358	Stepped Screw - M4x3	1
23	A109 3219	Development Unit Stopper - M/Y	1
24	A109 3216	Base Plate - M/Y	1
25	A109 3222	Development Unit Cover - M/Y	1
26	A109 3065	Spacer - Toner Density Sensor	1
27	AW23 0007	Toner Density Sensor	1
28	A109 3100	Toner Supply Receptacle	1
29	AA15 1846	Seal - 2x27x36	1
30	A109 3201	Front Side Plate - C/Y	1
31	5350 1754	Stud - M5x4	2
32	AA15 1847	Seal - 4x47	1
33	A109 3068	Paddle Flange	1
34	A109 3070	Paddle Flange Stopper	1

Index No.	Part No.	Description	Q ty Per Assembly
101	0720 0040B	Retaining Ring - M4	
102	0725 0120E	Retaining Ring C - M12	
103	0952 4014B	Screw - M4x14	
104	0720 0060B	Retaining Ring - M6	
105	0952 4010B	Screw - M4x10	
106	0313 0060B	Philips Pan Head Screw - M3x6	
107	0354 0060B	Screw - M4X6	
108	0805 3449	Ball Bearing - M12x24x6	
109	0313 0040B	Philips Pan Head Screw - M3x4	

28. Transfer Belt Unit 1 (A172/A199)

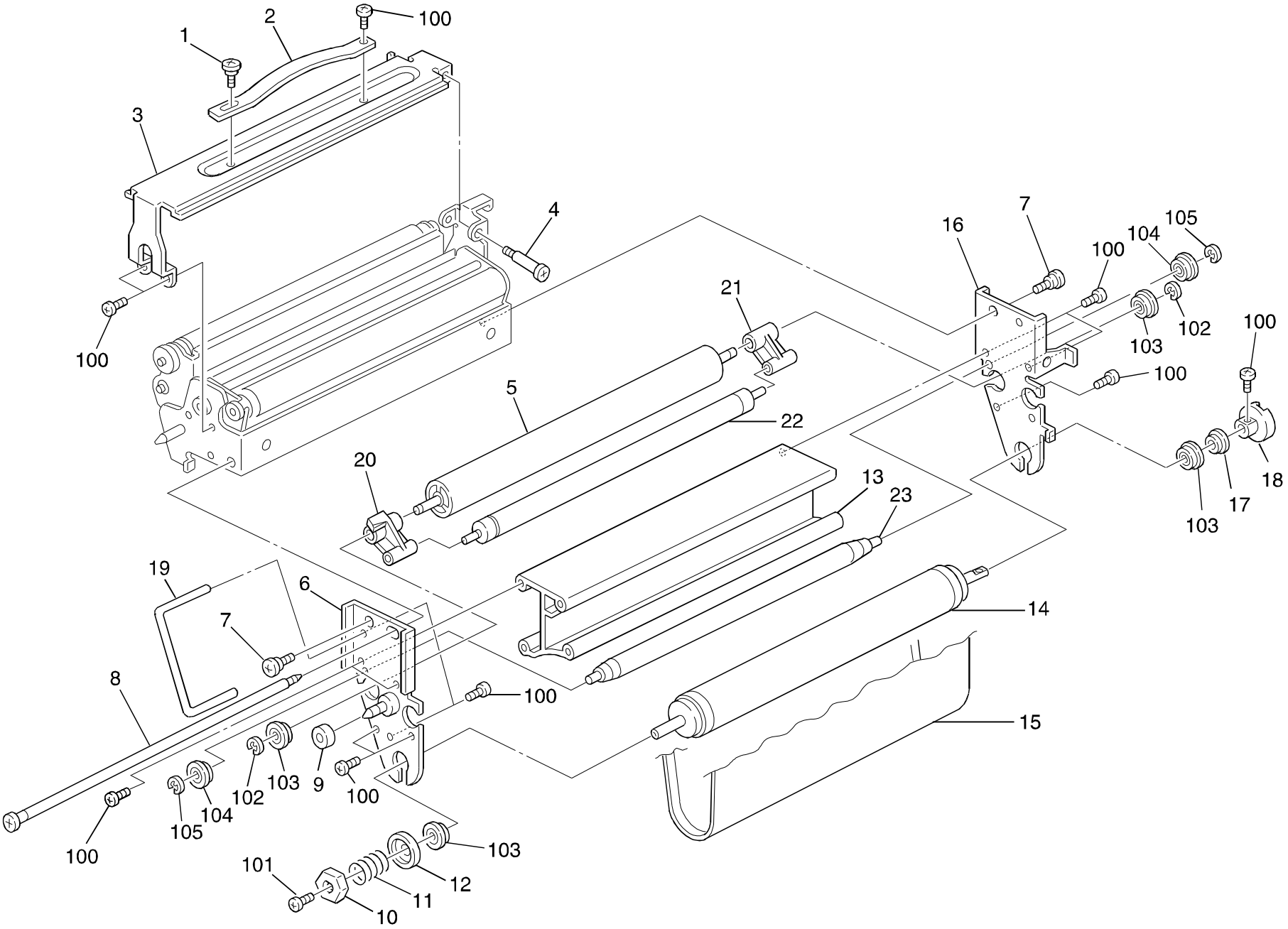

28. Transfer Belt Unit 1 (A172/A199)

Index No.	Part No.	Description	Q ty Per Assembly
*	A172 6000	Transfer Belt Unit	1
1	5919 2201	Shoulder Screw - M4	1
2	AG05 1106	Transfer Belt Unit Band	1
3	A109 6124	Transfer Unit Grip Plate	1
4	AA14 3709	Stepped Screw - M4	1
5	A109 6069	Belt Cleaning Roller	1
6	A172 6055	Belt Unit - Front Bracket	1
7	C201 5125	Shoulder Screw - M4	2
8	A109 6126	Transfer Unit Position Shaft	1
9	AA16 1097	Cushion - 6.5x14	1
10	A109 6087	Spring Holder Cover - Transfer	1
11	AA06 3493	Pressure Spring	1
12	A109 6089	Spring Holder - Transfer	1
13	A109 6060	Transfer Unit Stay	1
14	A109 6063	Belt Drive Roller	1
15	**A109 6130**	**Transfer Belt**	**1**
16	A172 6058	Belt Unit - Rear Bracket	1
17	AA13 2167	Spacer	1
18	A109 6082	Transfer Roller Joint	1
19	AG05 1100	Transfer Belt Unit Handle	1
20	A109 6155	Cleaning Roller Front Bracket	1
21	A109 6156	Cleaning Roller Rear Bracket	1
22	A172 6062	Belt Driven Roller	1
23	A172 6157	Belt Support Roller	1

Index No.	Part No.	Description	Q ty Per Assembly
100	0354 0060B	Screw - M4X6	
101	0951 4008B	Philips Screw With Washer - M4x8	
102	0720 0060B	Retaining Ring - M6	
103	0805 3482	Ball Bearing - 8x14x3.5	
104	0805 3449	Ball Bearing - M12x24x6	
105	0720 0040B	Retaining Ring - M4	

29. Transfer Belt Unit 2 (A172/A199)

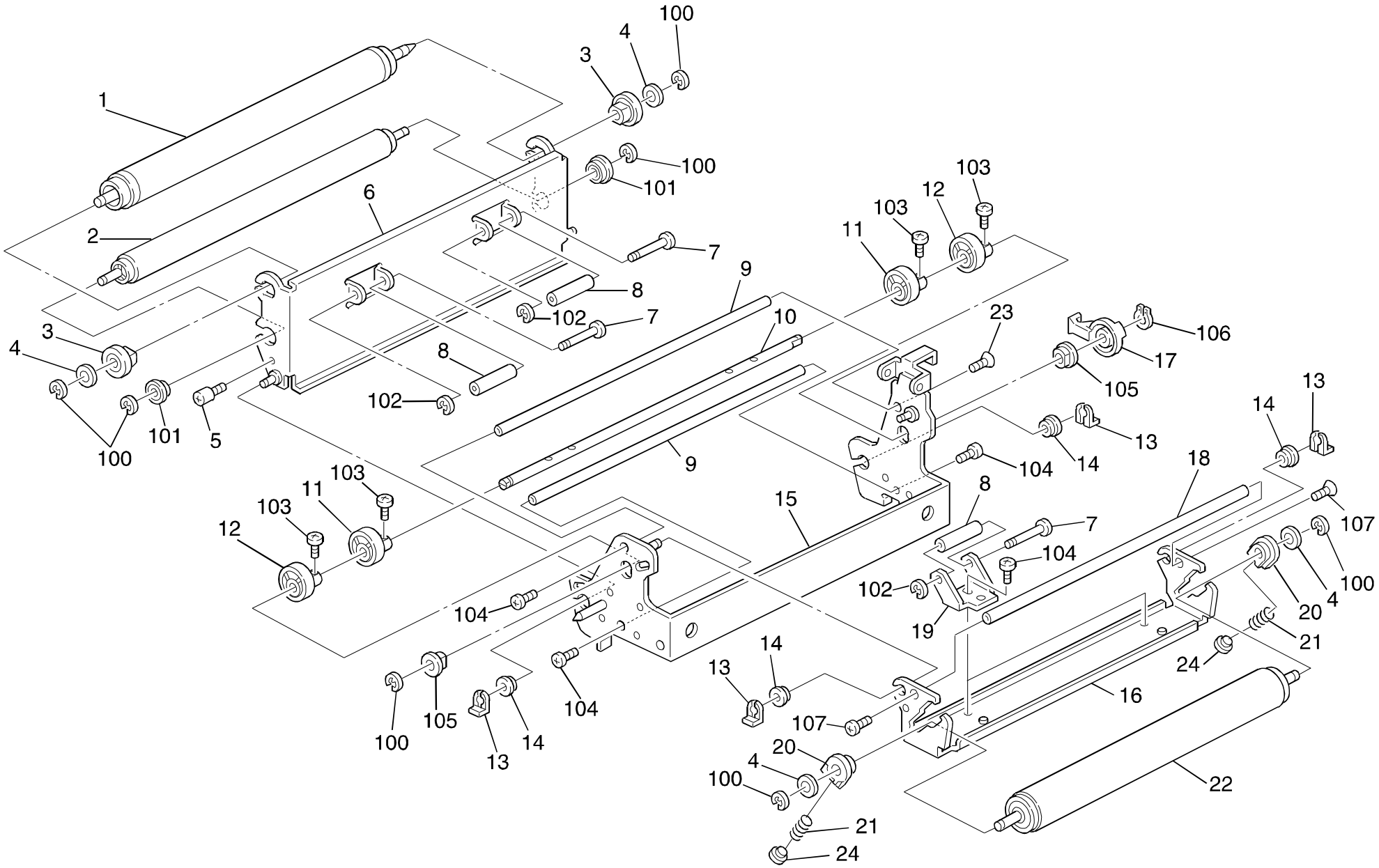

29. Transfer Belt Unit 2 (A172/A199)

Index No.	Part No.	Description	Q ty Per Assembly
1	A109 6105	Belt Bias Roller	1
2	A109 6110	Transfer Idle Roller	1
3	AA08 4045	Bearing Holder	2
4	AA13 2172	Spacer	4
5	5409 1855	Mounting Pin	1
6	A109 6101	Bias Roller Bracket	1
7	AA14 8391	Pin - 4x36	4
8	AA13 2166	Roller	4
9	AA14 1081	Support Stay	2
10	A109 6096	Cam Shaft	1
11	A109 6097	Release Cam	2
12	A109 6098	Tention Cam	2
13	5206 2686	Snap Ring	4
14	AA08 1003	Bushing - 5x7x3.8mm	4
15	A109 6091	Transfer Unit Frame	1
16	A109 6121	Tension Roller Bracket	1
17	A109 6099	Cam Lever	1
18	AA14 1082	Support Stay	1
19	A109 6122	Tension Support Roller Holder	2
20	AA08 4044	Bearing Holder	2
21	AA06 3491	Pressure Spring	2
22	A109 6118	Belt Tension Roller	1
23	5875 2088	Shoulder Screw - M4	1
24	A109 6117	Base - Spring	2

Index No.	Part No.	Description	Q ty Per Assembly
100	0720 0060B	Retaining Ring - M6	
101	0805 3482	Ball Bearing - 8x14x3.5	
102	0720 0030B	Retaining Ring - M3	
103	0951 3006B	Philips Screw With Flat Washer - M3x6	
104	0354 0060B	Screw - M4X6	
105	0805 3366	Bushing - 6mm	
106	0727 0080E	Retaining Ring - M8	
107	0324 0060B	Philips Sunken Head Screw - M4x6	

30. Transfer Roller Unit (A172/A199)

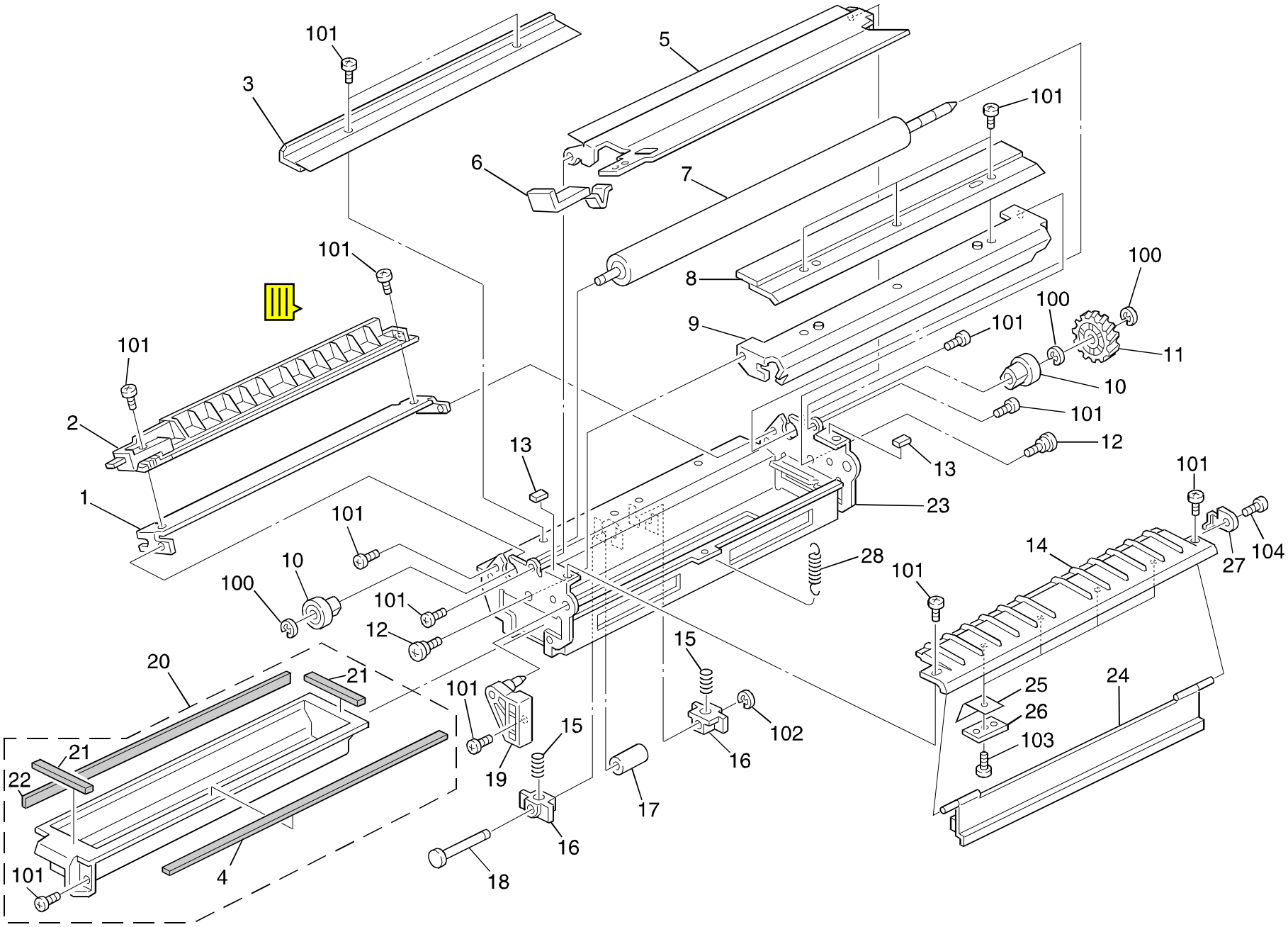

30. Transfer Roller Unit (A172/A199)

Index No.	Part No.	Description	Q ty Per Assembly
1	A172 6256	Support Plate - Separation Corona	1
2	**A172 6251**	**Paper Discharge Plate**	**1**
3	A109 6243	Entrance Seal Ass y - Transfer	1
4	AA15 1821	Seal - 5.5x356	1
5	A109 6248	Upper Guide Plate - Transfer	1
6	A109 6247	Transfer Guide Plate Knob	1
7	A172 6200	Transfer Roller	1
8	**AD04 1037**	**Cleaning Blade**	**1**
9	A172 6222	Blade Holder	1
10	AA08 0162	Bushing - 8mm	2
11	AB01 3847	Gear - 30Z	1
12	AA14 3738	Stepped Screw	2
13	AA02 0018	Magnet	2
14	A172 6235	Lower Guide Plate - Transfer	1
15	AA06 3353	Pressure Spring	2
16	AA08 0163	Bushing - 8mm	2
17	A109 6258	Roller	1
18	AA14 5216	Pin - 6x54.9	1
19	A109 6270	Right Positioning Plate	1
20	A109 6260	Toner Catch Pan	1
21	AA15 1822	Seal - 3x4x47	2
22	AA15 1860	Seal - 2x5.5x347.8	1
23	A172 6215	Transfer Belt Roller Bracket	1
24	**A172 6269**	**Roller Lubricant Bar**	**1**
25	A172 6267	Spring Plate	4
26	A172 6260	Spring Plate Support	4
27	A172 6266	Lubricant Bar Stopper	1
28	AA06 0653	Tension Spring	1

Index No.	Part No.	Description	Q ty Per Assembly
100	0720 0060B	Retaining Ring - M6	
101	0354 0060B	Screw - M4X6	
102	0720 0040B	Retaining Ring - M4	
103	0353 0050B	Philips Truss Head Screw - M3x5	
104	0951 3006B	Philips Screw With Flat Washer - M3x6	

31. Transport Unit (A172/A199)

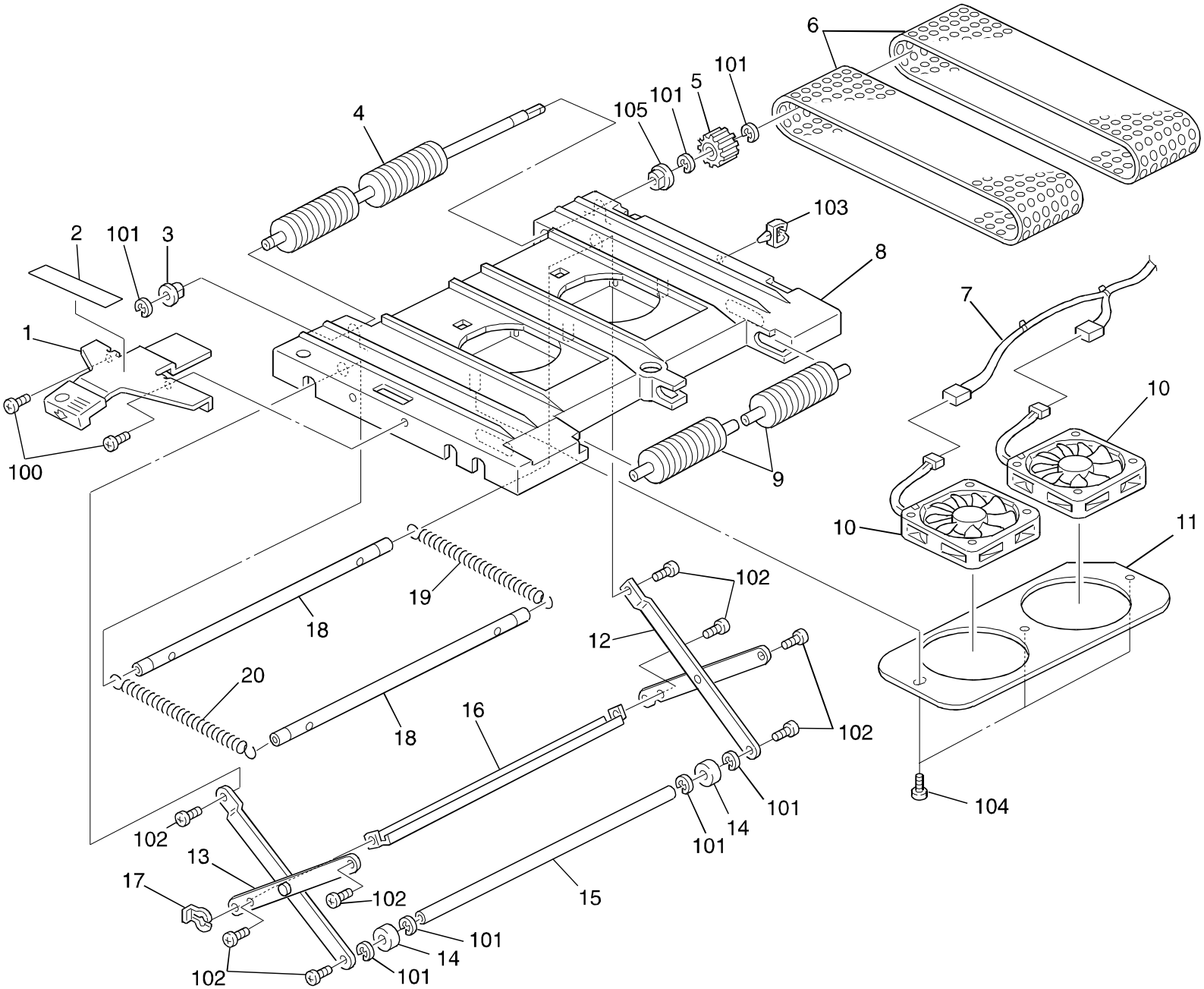

31. Transport Unit (A172/A199)

Index No.	Part No.	Description	Q ty Per Assembly
1	AG05 1098	Transport Lever	1
2	AA00 0539	Decal - High Temperature	1
3	5053 0447	Bushing - 6mm	1
4	AF02 2091	Left Transport Roller	1
5	AB01 3835	Gear - 20Z	1
6	AA04 0023	Transfer Belt	2
7	A109 5310	Relay Harness - Transport Fan	1
8	A172 3855	Transport Tank	1
9	AF02 2070	Right Transport Roller	2
10	AX64 0042	Transport Fan Motor - DC24V 3.12W	2
11	A109 3859	Transport Fan Bracket	1
12	A109 3853	Rear Lift Arm - Transport	1
13	A109 3852	Front Lift Arm - Transport	1
14	A109 3857	Support Roller - Lift Arm	2
15	AA14 0517	Drive Shaft	1
16	A109 3858	Lift Arm Stay	1
17	5447 2681	Snap Ring	1
18	AA14 0518	Drive Shaft	2
19	AA06 2268	Spring	1
20	AA06 2267	Spring	1

Index No.	Part No.	Description	Q ty Per Assembly
100	0434 0080B	Philips Tapping Screw - M4x8	
101	0720 0040B	Retaining Ring - M4	
102	0314 0060B	Philips Pan Head Screw - M4x6	
103	1105 0199	Clamp	
104	0414 0082B	Binding Self Tapping Screw - M4x8	
105	0805 3366	Bushing - 6mm	

32. Belt Cleaning Unit (A172/A199)

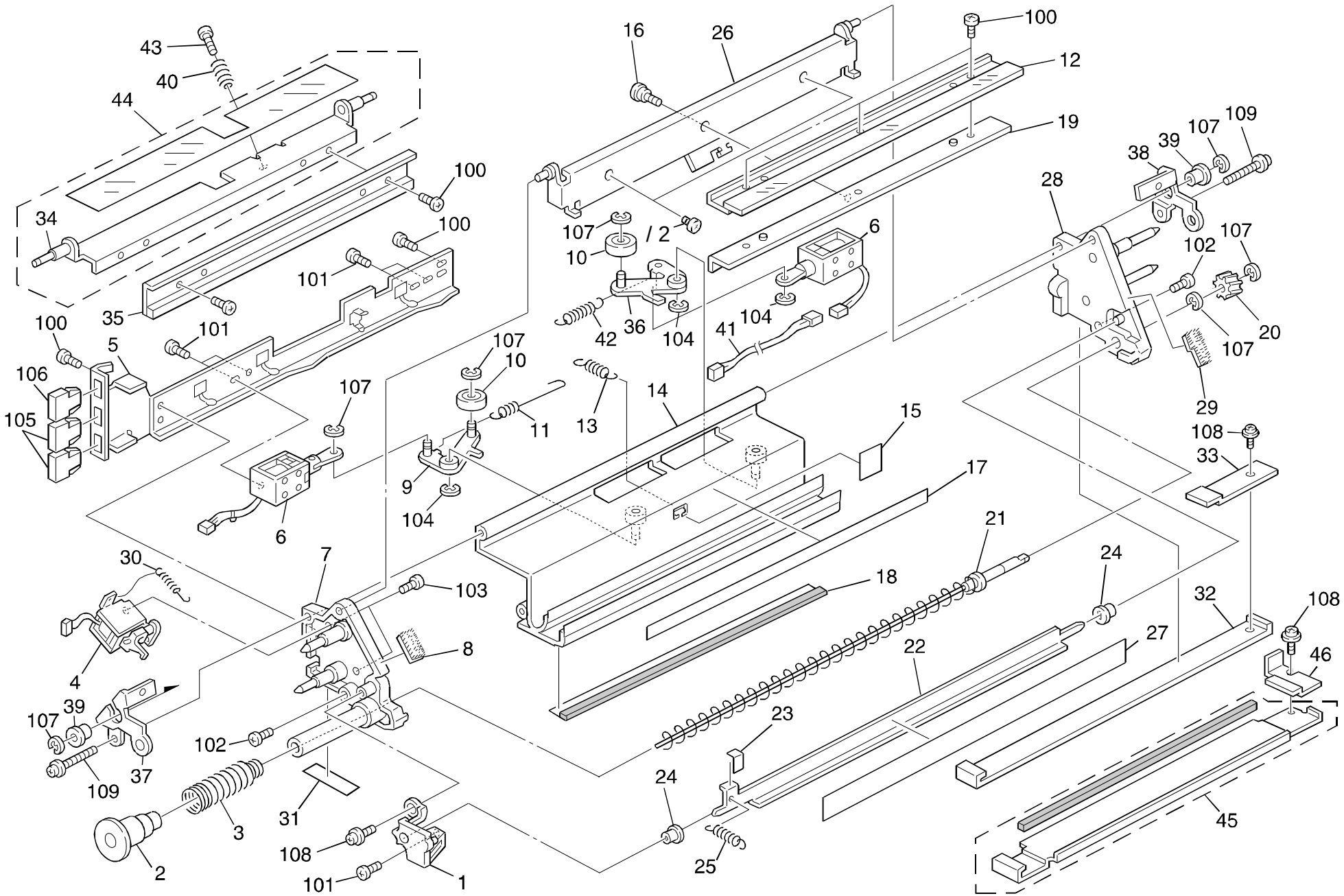

32. Belt Cleaning Unit (A172/A199)

Index No.	Part No.	Description	Q ty Per Assembly
*	A172 6360	Belt Cleaning Unit	1
1	A109 6367	Front Holder - Entrance Seal	1
2	A109 6310	Toner Collection Cap	1
3	A109 6311	Toner Collection Spring	1
4	A109 6354	Cleaning Entrance Seal Solenoid	2
5	A172 6318	Cleaning Left Stay	1
6	A109 6344	Cleaning Blade Solenoid	1
7	A109 6305	Front Side Plate - Belt Cleaning	1
8	A109 6309	Front - Seal-10x20	1
9	A109 6338	Cleaning Blade Lever	1
10	A109 6342	Cleaning Blade Roller	2
11	A109 6350	Cleaning Blade Lever Spring	1
12	**A172 6308**	**Cleaning Blade**	**1**
13	A109 6349	Cleaning Blade Spring	1
14	A172 6352	Belt Cleaning Case	1
15	A109 6351	Spring Stopper Seal	1
16	AA14 3733	Stepped Screw M4	1
17	A109 9502	Seal - Cleaning Blade	1
18	A109 9504	Entrance Seal - Belt Cleaning Unit	1
19	A172 6301	Cleaning Blade Bracket	1
20	AB01 3848	Gear - 12Z	1
21	A109 6317	Toner Collection Auger	1
22	A109 6370	Entrance Seal Bracket	1
23	A109 6372	Entrance Seal Bracket Sheet	1
24	A109 6369	Entrance Seal Collar	2
25	A109 6352	Entrance Seal Spring	1
26	A172 6354	Cleaning Blade Bracket	1
27	A109 9503	Entrance Seal - Belt Cleaning	1
28	A109 6314	Rear Side Plate - Belt Cleaning	1
29	A109 6316	Rear Seal - 10x30	1
30	A109 6360	Release Spring	1
31	A109 6377	Front Side Plate Cushion	1
32	A109 6373	Base Plate - Belt Cleaning	1
33	A172 6301	Cleaning Blade Bracket	1
34	A172 6303	Lubricant Bar Bracket	1

Index No.	Part No.	Description	Q ty Per Assembly
35	**A172 6305**	**Lubricant Bar**	**1**
36	A172 6310	Lubricant Lever	1
37	A172 6312	Front Bracket - PTL	1
38	A172 6313	Rear Bracket - PTL	1
39	A172 6314	Bushing	2
40	A172 6315	Spring	1
41	A172 5388	Belt Cleaning Harness	1
42	A172 6316	Lever Spring	1
43	5875 2088	Shoulder Screw - M4	1
44	A172 6356	Lubricant Bar Bracket	1
45	A109 6373	Base Plate -belt Cleaning	1
46	A109 6375	Base Plate Bracket	1
47	A172 6330	Philips Pan Head Screw - M4	2
100	0314 0080B	Philips Pan Head Screw - M4x8	
101	0313 0060B	Philips Pan Head Screw - M3x6	
102	0952 4014B	Screw - M4x14	
103	0324 0080B	Philips Sunken Head Screw - M4x8	
104	0720 0030B	Retaining Ring - M3	
105	1102 6246	Connector - 3p	
106	1102 6260	Connector - Red 3p	
107	0720 0040B	Retaining Ring - M4	
108	0951 3006B	Philips Screw With Flat Washer - M3x6	
109	0313 0100B	Philips Pan Head Screw - M3x10	

33. Toner Collection Section (A172/A199)

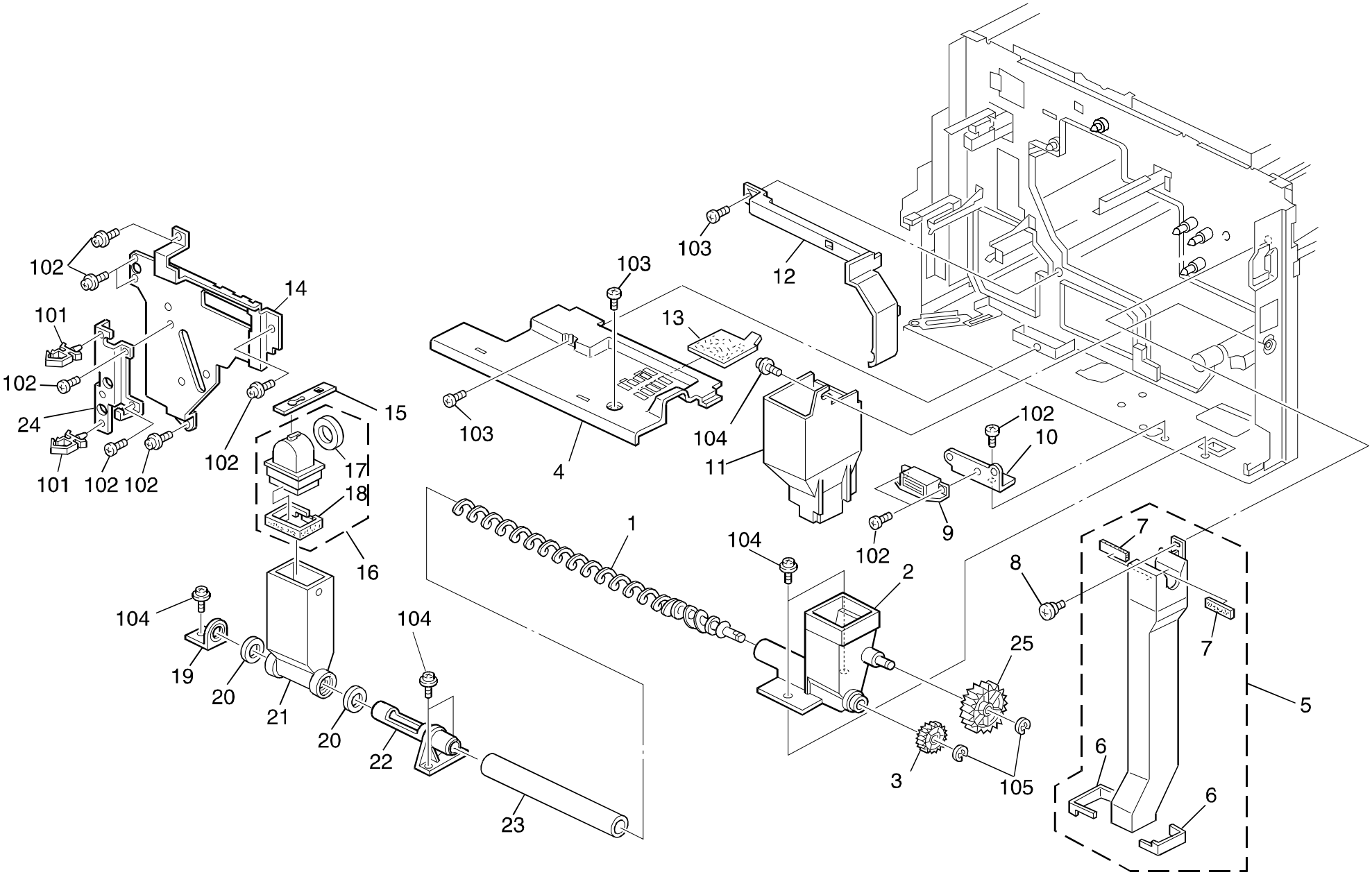

33. Toner Collection Section (A172/A199)

Index No.	Part No.	Description	Q ty Per Assembly
1	A109 6531	Lower Collection Coil	1
2	A109 6551	Joint Duct - Collection Bottle	1
3	AB01 3853	Gear - 18Z	1
4	A109 1384	Lower Inner Cover	1
5	A109 6561	Toner Collection Duct	1
6	A109 6564	Lower Seal - 8x13x7	2
7	A109 6563	Upper Seal - 3x10x36	2
8	5413 2298	Screw - M4	1
9	AG07 0004	Magnetic Catch	1
10	A109 1366	Magnet Catch Bracket	1
11	A109 3335	Developer Supply Funnel	1
12	A109 1397	Inner Cover - Transfer Unit	1
13	**AA01 2068**	**Inner Cooling Fan Filter**	**1**
14	A109 6140	Transfer Unit Cover Plate	1
15	A109 6541	Joint Fixing Band	1
16	A109 6523	Lower Collection Joint	1
17	A109 6547	Seal - 18mm	1
18	A109 6548	Small Duct Upper Seal	1
19	A109 6545	Collection Pipe Support Plate	1
20	A109 6546	Seal - 12mm	2
21	A109 6543	Toner Collection Duct	1
22	A109 6544	Collection Pipe - Transfer Belt	1
23	A109 6555	Lower Collection Tube	1
24	A109 1136	Flange Bracket	1
25	AB01 3854	Gear - 36Z	1

Index No.	Part No.	Description	Q ty Per Assembly
101	1105 0310	Wire Clamp	
102	0354 0060B	Screw - M4X6	
103	0344 0060F	Philips Truss Head Screw - M4x6	
104	0964 4008B	Tapping Screw With Flat Washer - M4x8	
105	0720 0040B	Retaining Ring - M4	

34. Fusing Unit 1 (A172/A199)

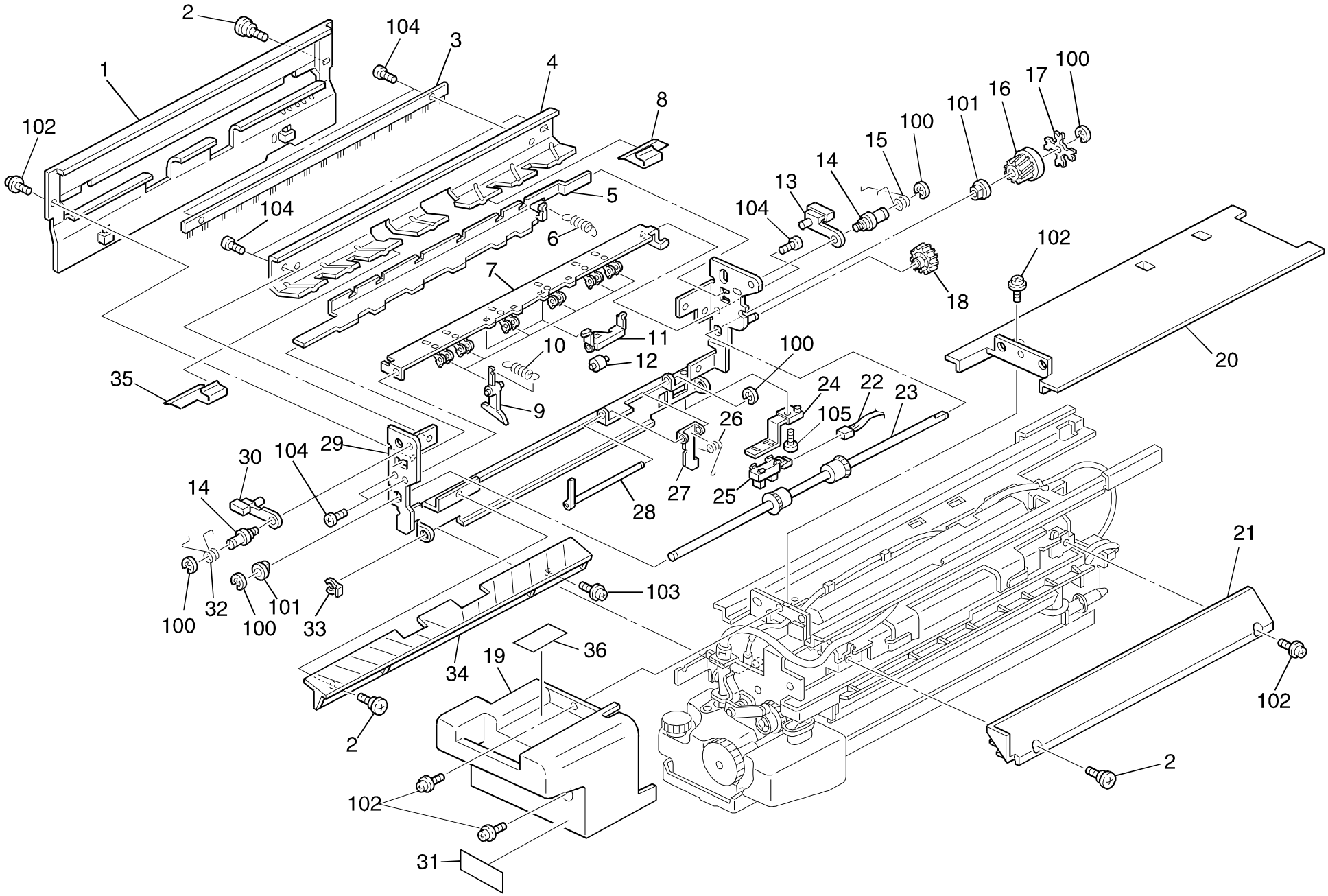

34. Fusing Unit 1 (A172/A199)

Index No.	Part No.	Description	Q ty Per Assembly
*	A172 7702	Fusing Unit - 115V	1
*	A172 7703	Fusing Unit - 230V	1
1	A172 4217	Paper Exit Cover	1
2	5840 1632	Stepped Screw	3
3	5215 4497	Exit Antistatic Brush	1
4	A109 4208	Upper Exit Guide Plate	1
5	A109 4204	Slider - Hot Roller Stripper	1
6	AA06 0189	Spring - Stripper Pawl Plate	1
7	A109 4201	Hot Roller Stripper Bracket	1
8	A109 4207	Exit Roller Guide	1
9	AE04 4016	Hot Roller Stripper	6
10	5208 6136	Spring - Hot Roller Stripper	6
11	A109 4212	Exit Roller Holder	2
12	AF04 0031	Upper Exit Roller	2
13	AG05 1105	Rear Release Lever - Exit	1
14	5215 4444	Pin	2
15	AA06 6063	Spring - Rear Release Lever	1
16	AB01 3320	Gear - 19Z	1
17	5442 4495	Slip Clutch	1
18	AB01 3819	Gear - 22Z	1
19	A109 4250	Front Fusing Cover	1
20	A109 4251	Upper Fusing Cover	1
21	A109 4253	Fusing Cover - Right	1
22	A109 5324	Exit Unit Relay Harness	1
23	AF02 0310	Exit Roller	1
24	A109 4210	Exit Sensor Bracket	1
25	AW02 0056	Photointerruptor - EE-SX4235A-P1	1
26	AA06 6226	Spring	1
27	A109 4215	Exit Sensor Feeler	1
28	AA11 1020	Sensor Feeler	1
29	A109 4205	Paper Exit Frame	1
30	AG05 1104	Front Release Lever - Exit	1
31	AA00 0339	Decal - Silicone Oil	1
32	AA06 6062	Spring - Front Release Lever	1
33	5447 2681	Snap Ring	1
34	A109 4209	Lower Exit Guide Plate	1
35	A109 4213	Exit Roller Front Guide	1
36	A172 6707	Decal - Warning	1
100	0720 0040E	Retaining Ring - M4	
101	0805 3366	Bushing - 6mm	
102	0951 4008B	Philips Screw With Washer - M4x8	
103	0951 4006B	Philips Screw With Washer - M4x6	
104	0314 0060B	Philips Pan Head Screw - M4x6	
105	0952 4014B	Screw - M4x14	

35. Fusing Unit 2 (A172/A199)

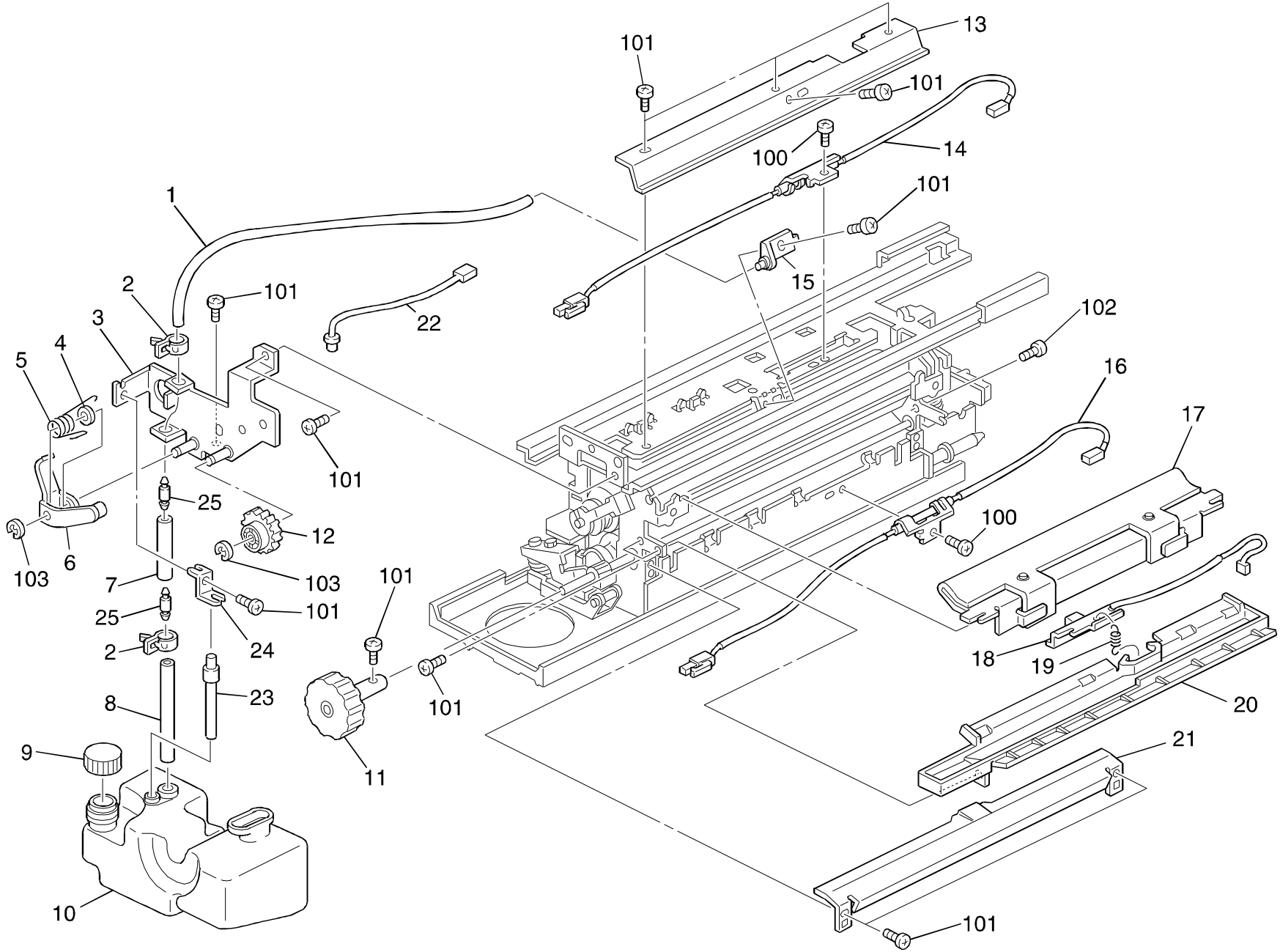

35. Fusing Unit 2 (A172/A199)

Index No.	Part No.	Description	Q ty Per Assembly
1	AA18 0008	Oil Tube - 320mm	1
2	5447 4241	Tube Clamp	2
3	A109 4230	Oil Supply Bracket	1
4	AA13 2025	Spacer - 1x8x12	1
5	AA06 6079	Spring - Oil Pump Lever	1
6	A030 4133	Oil Pump Lever	1
7	AA18 0035	Sleeve - Oil Pump	1
8	AA18 0009	Oil Tube - 120mm	1
9	AA03 6007	Oil Tank Cap	1
10	AA03 1008	Oil Tank	1
11	AG05 0070	Fusing Knob	1
12	AB01 7038	Gear - 32T	1
13	A109 4161	Spring Plate - Oil Supply Pad	1
14	A109 5406	Fusing Thermofuse - 150 C 15A	1
15	A109 4162	Oil Supply Bracket	1
16	A109 5408	Pressure Roller Thermofuse - 150 C 15A	1
17	**AE04 5015**	**Oil Supply Pad**	**1**
18	AW10 0023	Fusing Thermistor	1
19	AA06 0340	Spring - Thermistor	1
20	A072 4115	Upper Entrance Guide Plate	1
21	A109 4167	Lower Entrance Guide Plate	1
22	A109 5327	Relay Harness - Oil End Sensor	1
23	5209 5320	Oil End Sensor	1
24	5215 4411	Spring Plate	1
25	5415 4310	Valve - Oil Pump	2

Index No.	Part No.	Description	Q ty Per Assembly
100	0313 0060B	Philips Pan Head Screw - M3x6	
101	0314 0060B	Philips Pan Head Screw - M4x6	
102	0414 0082B	Binding Self Tapping Screw - M4x8	
103	0720 0060B	Retaining Ring - M6	

36. Fusing Unit 3 (A172/A199)

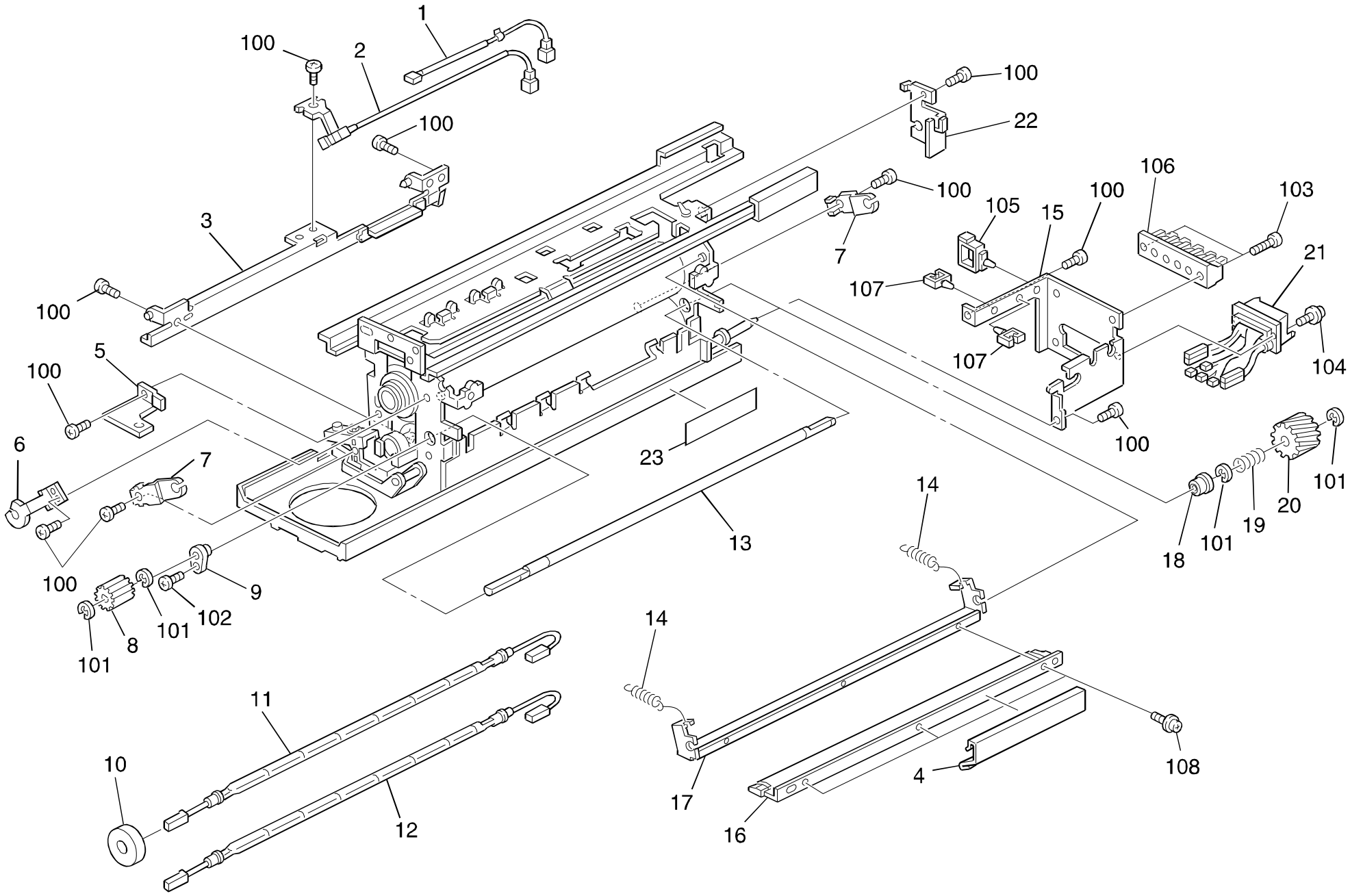

36. Fusing Unit 3 (A172/A199)

Index No.	Part No.	Description	Q ty Per Assembly
1	A109 5324	Exit Unit Relay Harness	1
2	A172 5406	Pressure Roller Thermistor	1
3	A109 4182	Left Lower Stay - Fusing	1
4	A109 4153	Oil Guide	1
5	A109 4110	Oil Supply Stopper	1
6	A109 4107	Fusing Lamp Holder - Front	1
7	A109 4072	Pressure Roller Lamp Holder	2
8	AB01 3363	Gear - 16Z	1
9	AE03 1005	Bushing	1
10	AA15 2233	Gasket - 10x36	1
11	AX44 0073	Fusing Lamp - 115V 650W	1
11	AX44 0074	Heater - 230V - 700W - 100%	1
12	AX43 0016	Pressure Roller Lamp - 115V 400W	1
12	AX43 0017	Pressure Roller Lamp - 230V 400W	1
13	AA14 0512	Drive Shaft	1
14	AA06 2275	Release Spring	2
15	A109 4141	Fusing Harness Bracket	1
16	**AE04 1002**	**Oil Blade**	**1**
17	5215 4116	Oil Blade Holder	1
18	AE03 0013	Ball Bearing - 8x15.6x4mm	1
19	AA06 3097	Spring - Fusing Drive	1
20	AB01 3817	Gear - 30Z	1
21	A109 5304	Fusing Unit Harness	1
22	A109 4137	Fusing Lamp Holder - Rear	1
23	5203 4165	Fusing Thermofuse Decal	1

Index No.	Part No.	Description	Q ty Per Assembly
100	0314 0060B	Philips Pan Head Screw - M4x6	
101	0720 0060B	Retaining Ring - M6	
102	0314 0080B	Philips Pan Head Screw - M4x8	
103	0952 4014B	Screw - M4x14	
104	0952 3008B	Screw - M3x8	
105	1105 0292	Wire Saddle	
106	1101 0474	Connector - 4p	
107	1105 0230	Clamp	
108	0951 4008B	Philips Screw With Washer - M4x8	

37. Fusing Unit 4 (A172/A199)

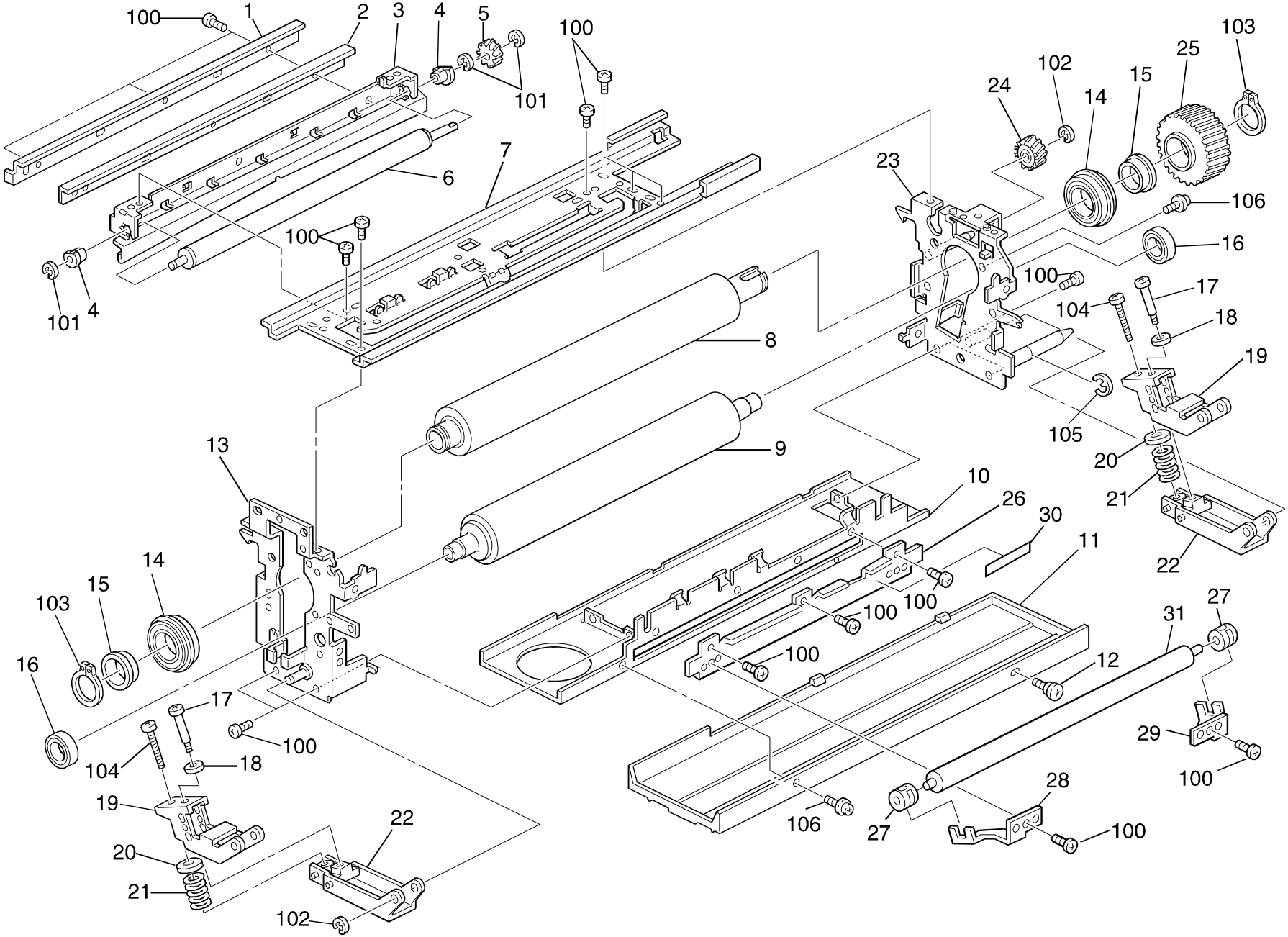

37. Fusing Unit 4 (A172/A199)

Index No.	Part No.	Description	Q ty Per Assembly
1	A109 4192	Blade Bracket	1
2	A109 4194	Cleaning Roller Scraper	1
3	A109 4190	Cleaning Roller Bracket	1
4	AE03 1013	Bushing - 6mm	2
5	AB01 3820	Gear - 17Z	1
6	AE04 2022	Fusing Cleaning Roller	1
7	A109 4159	Upper Fusing Rail	1
8	**AE01 0012**	**Hot Roller**	**1**
9	**AE02 0056**	**Pressure Roller**	**1**
10	A109 4180	Right Lower Stay - Fusing	1
11	A109 4169	Oil Pan	1
12	5840 1632	Stepped Screw	1
13	A109 4100	Front Side Plate - Fusing	1
14	**AE03 0015**	**Ball Bearing - 35x47x7**	**2**
15	AE03 2017	Bushing - 30x40x14.5	2
16	**AE03 0019**	**Ball Bearing - 7x20x32**	**2**
17	AA14 3707	Stepped Screw - M5	2
18	AA13 2094	Spacer - Mounting Arm	2
19	A109 4063	Upper Pressure Lever	2
20	A030 4145	Pressure Spring Holder	2
21	AA06 3355	Pressure Spring	2
22	A109 4064	Lower Pressure Lever	2
23	A109 4130	Rear Side Plate - Fusing	1
24	AB01 3318	Gear - 17Z	1
25	AB01 3818	Gear - 61Z	1
26	A172 4171	Right Stay - Fusing	1
27	AE03 1020	Bushing - 6x12x8	2
28	A172 4172	Front Spring Plate	1
29	A172 4173	Rear Spring Plate	1
30	5203 4165	Fusing Thermofuse Decal	1
31	AE04 2021	Cleaning Roller	1

Index No.	Part No.	Description	Q ty Per Assembly
100	0314 0060B	Philips Pan Head Screw - M4x6	
101	0720 0040E	Retaining Ring - M4	
102	0720 0060B	Retaining Ring - M6	
103	0725 0300E	Retaining Ring C - M30	
104	0585 0161B	Hexagon Bolt - M5x16	
105	0720 0080B	Retaining Ring - M8	
106	0951 4008B	Philips Screw With Washer - M4x8	

38. Drive Section 1 (A172/A199)

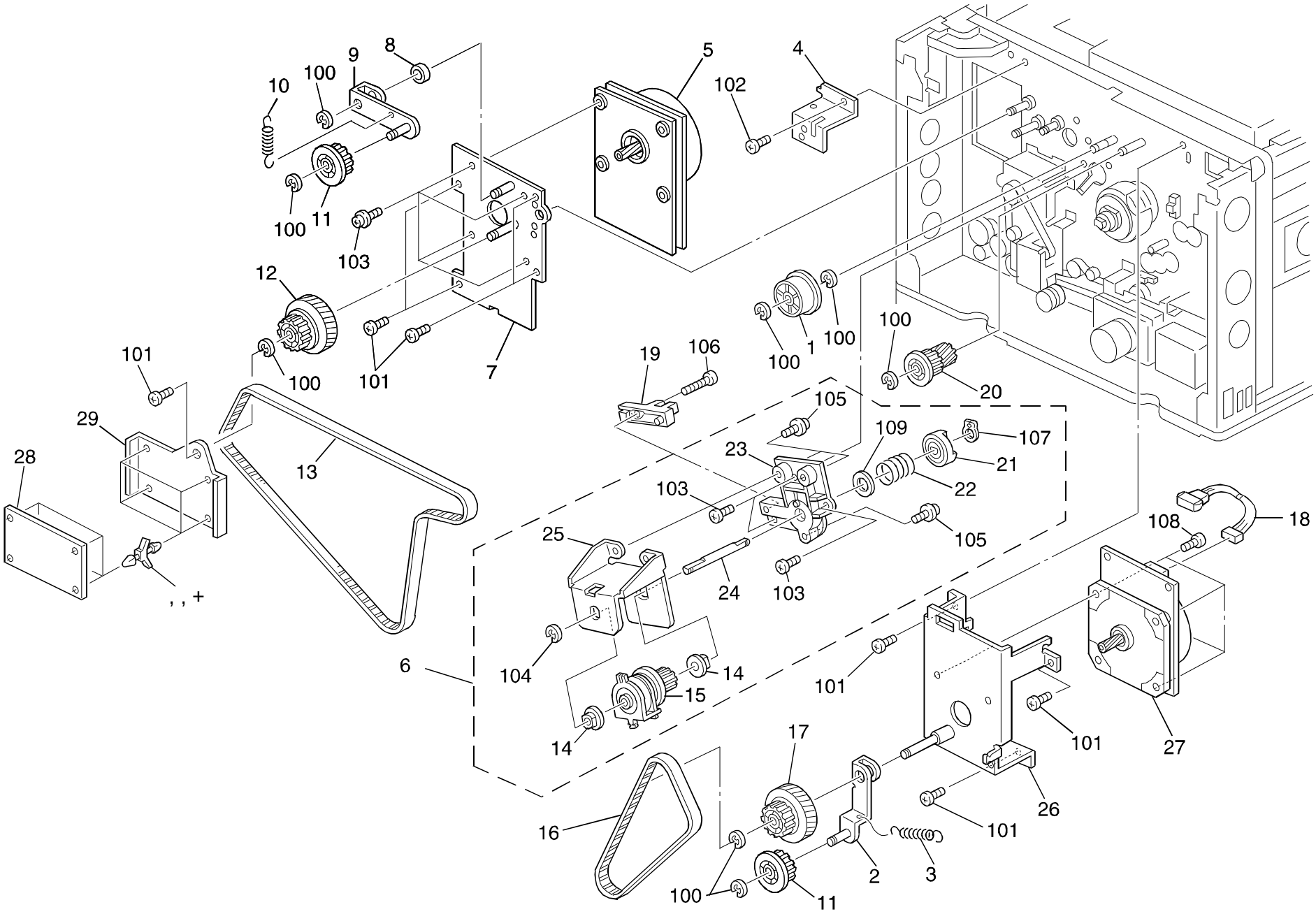

38. Drive Section 1 (A172/A199)

Index No.	Part No.	Description	Q ty Per Assembly
1	AB03 0442	Timing Pulley	1
2	A172 4754	Belt Tightener	1
3	AA06 0064	Tension Spring	1
4	A109 5762	Support Bracket - E	1
5	AX06 0093	Lubricant Brush Motor - DC36W	1
6	A109 4625	Spring Clutch Ass y	1
7	A109 4621	Lubricant Motor Bracket	1
8	AA13 2129	Spacer - 8x12x4.5	1
9	A109 4812	Tightener	1
10	5418 2859	Spring - Regist Roller (Front)	1
11	AB03 0266	Pulley - 28Z	2
12	AB01 7310	Gear - 26Z/89Z	1
13	AA04 3410	Timing Belt - 699 - S3MV	1
14	C105 2065	Ball Bearing	2
15	AX21 0055	Spring Clutch	1
16	AA04 3408	Timing Belt - 453 - S3MV	1
17	AB01 7309	Gear - 28Z/62Z	1
18	A109 5316	Relay Harness - Development Motor	1
19	AW02 0062	Photointerruptor - EE-SX4019-P15	1
20	AB01 7312	Gear - 19Z/26Z	1
21	A109 4630	Joint Clutch	1
22	AA06 3358	Pressure Spring	1
23	A109 4628	Clutch Holder	1
24	AA14 5248	Clutch Shaft	1
25	A109 4627	Clutch Holder Bracket	1
26	A109 4762	Drive Motor Bracket	1
27	AX06 0085	Color Development Drive - DC26W	1
28	A199 5113	Charge Wire Cleanermotor Driveboard	1
29	A172 5744	Bracket-cleaner Motor Drive Board	1

Index No.	Part No.	Description	Q ty Per Assembly
100	0720 0060B	Retaining Ring - M6	
101	0354 0060B	Screw - M4X6	
102	0434 0080B	Philips Tapping Screw - M4x8	
103	0951 4008B	Philips Screw With Washer - M4x8	
104	0720 0040B	Retaining Ring - M4	
105	0951 4006B	Philips Screw With Washer - M4x6	
106	0314 0160B	Philips Pan Head Screw - M4x16	
107	0727 0080E	Retaining Ring - M8	
108	0950 4008B	Philips Screw With Spring Washer - M4x8	
109	0807 7049	Spacer - 12.3x18x0.2T	
110	1105 0192	Locking Support	

39. Drive Section 2 (A172/A199)

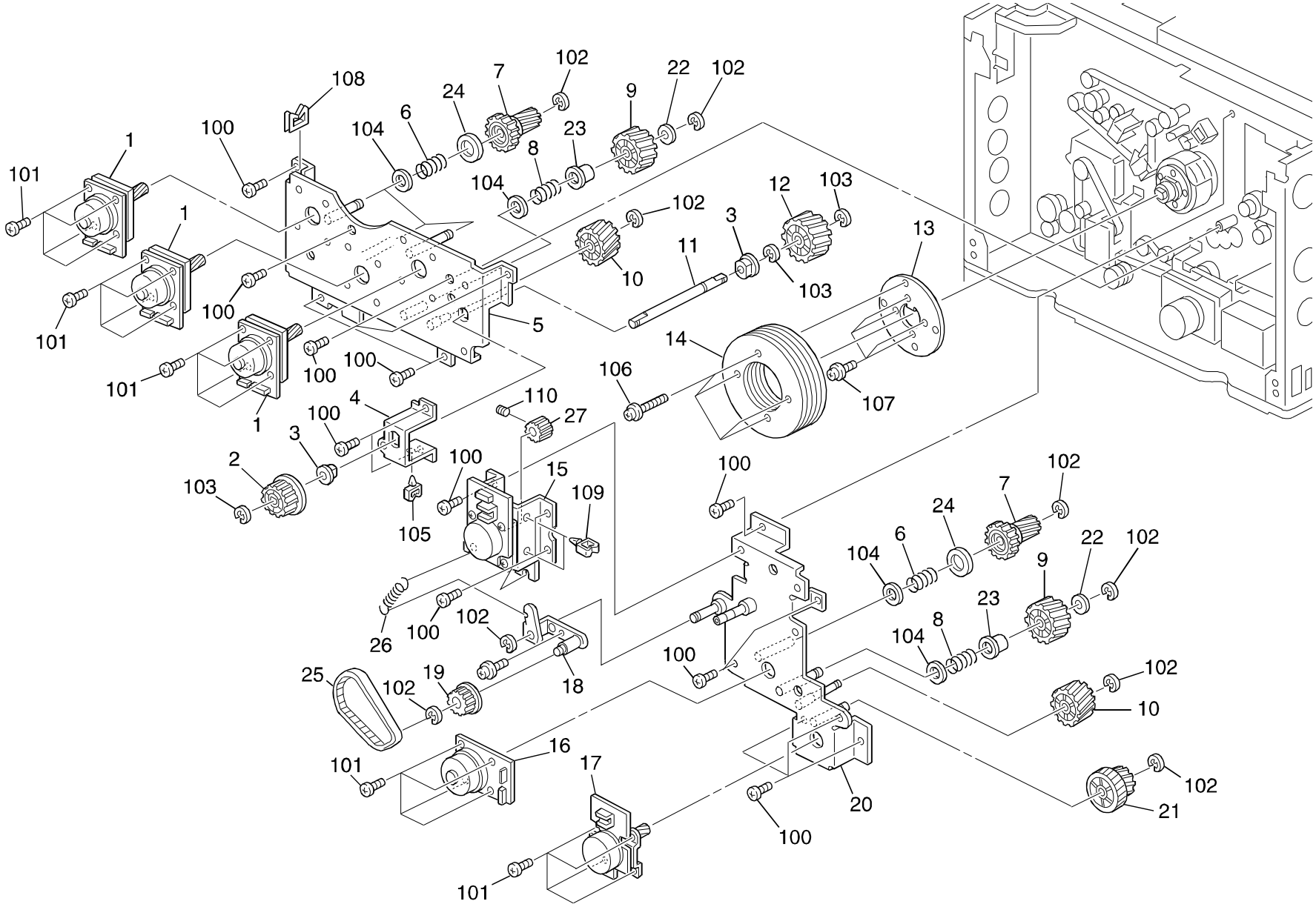

39. Drive Section 2 (A172/A199)

Index No.	Part No.	Description	Q ty Per Assembly
1	AX05 0067	Color Sleeve Motor - DC9.3W	3
2	AB03 0440	Timing Pulley - 28Z	1
3	5053 0223	Bushing - 8mm	2
4	A109 4723	Support Plate	1
5	A109 4725	Sleeve Motor Bracket	1
6	AA06 3357	Pressure Spring	4
7	AB01 7307	Gear - 20Z/50Z	4
8	AA06 3356	Pressure Spring	2
9	AB01 3864	Gear - 30Z	2
10	AB01 3865	Gear - 26Z	2
11	AA14 0515	Drive Shaft	1
12	AB01 3823	Gear - 31Z	1
13	A109 4652	Fly Wheel - 190	1
14	A109 4651	Fly Wheel - 195	1
15	AX05 0094	Drum Drive Motor - DC6.5W	1
16	AX05 0070	Black Sleeve Motor - DC9.3W	1
17	AX05 0066	Black Dev.drive Motor - DC7.2W	1
18	A172 4663	Tightener Bracket	1
19	AB03 0317	Gate Tightener	1
20	A172 4742	Motor Bracket	1
21	AB01 7308	Gear - 25Z/56Z	1
22	AA13 2133	Spacer	2
23	A109 4727	Collar - 10x17x18mm	2
24	AA13 2094	Spacer - Mounting Arm	4
25	AA04 3407	Timing Belt - 448 S2MV	1
26	AA06 0042	Spring - Release Cleaning Blade	1
27	AB03 0528	Timing Pulley - 28Z	1

Index No.	Part No.	Description	Q ty Per Assembly
100	0354 0060B	Screw - M4X6	
101	0950 3010B	Philips Screw With Spring Washer - M3x10	
102	0720 0040E	Retaining Ring - M4	
103	0720 0060E	Retaining Ring - M6	
104	0807 7049	Spacer - 12.3 X 18mm X 0.2t	
105	1105 0231	Clamp	
106	0951 5040B	Screw - M5x40	
107	0951 4008B	Philips Screw With Washer - M4x8	
108	1105 0349	Edge Saddle	
109	1105 0310	Wire Clamp	
110	0575 0050E	Hexagon Headless Set Screw - M5x5	

40. Drive Section 3 (A172/A199)

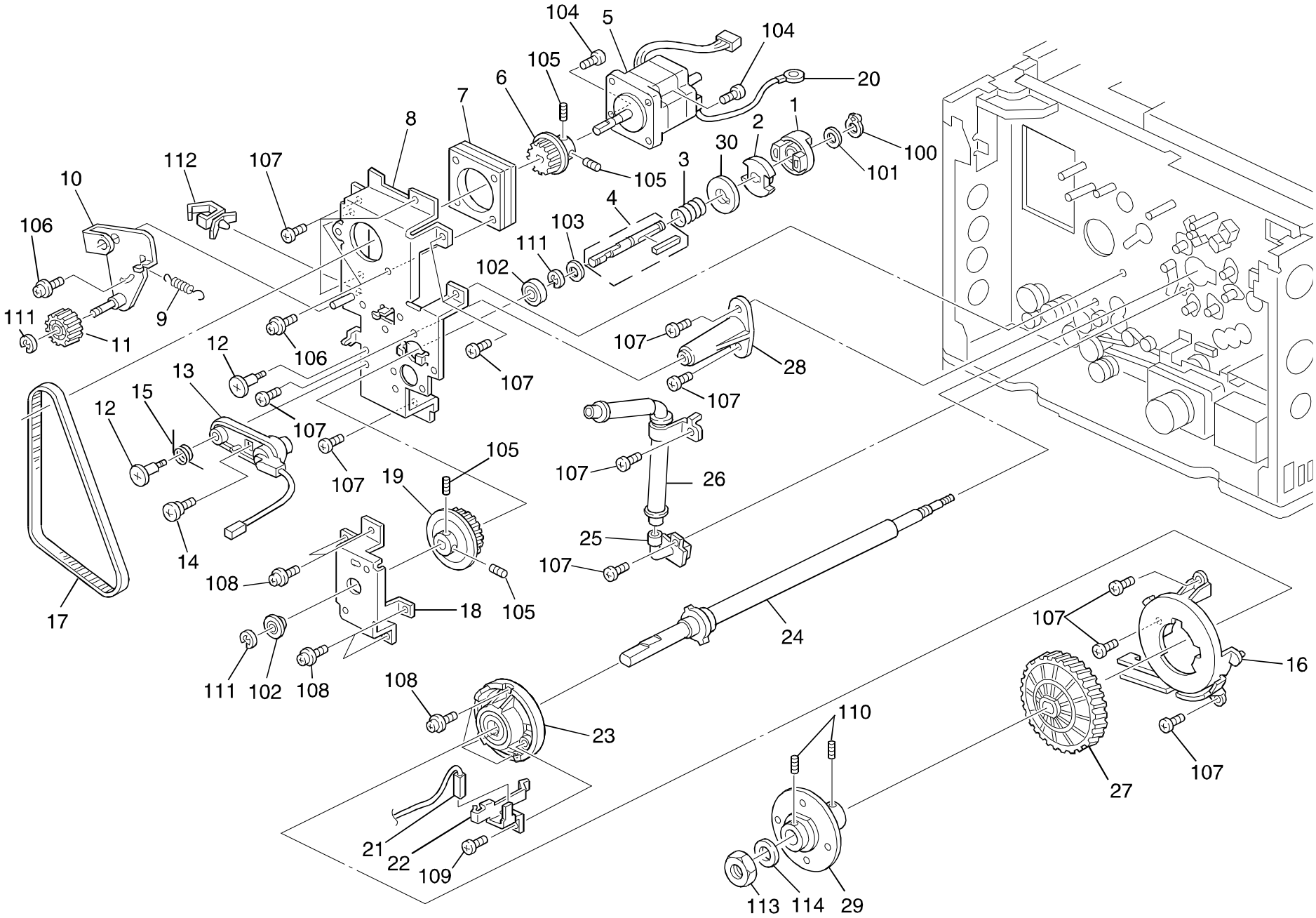

40. Drive Section 3 (A172/A199)

Index No.	Part No.	Description	Q ty Per Assembly
1	A109 4674	Front Joint - Transfer Belt	1
2	A109 4675	Rear Joint - Transfer Belt	1
3	AA06 3359	Pressure Spring	1
4	A109 4679	Transfer Belt Drive Shaft	1
5	AX06 0088	Transport Belt Motor - DC24V 2A	1
6	AB03 0444	Timing Pulley - 66Z	1
7	A109 4670	Motor Cushion	1
8	A109 4671	Transfer Belt Motor Bracket	1
9	5432 3265	Spring Lock Lever	1
10	A109 4676	Belt Tightner	1
11	AB03 0445	Timing Pulley - 44Z	1
12	AA14 3708	Stepped Screw - M4	2
13	AD02 1095	Transfer Roller Receptacle	1
14	5919 2201	Shoulder Screw - M4	1
15	AA06 6231	Receptacle Spring	1
16	A109 1132	Drum Flange Cover	1
17	AA04 3234	Timing Belt - 200 TN15 10.0	1
18	A109 4673	Pulley Cover	1
19	AB03 0443	Timing Pulley - 88Z	1
20	A100 5378	Grounding Wire	1
21	A109 5390	Drum Bias Cable	1
22	A109 4655	Drum Shaft Terminal	1
23	A109 4653	Drum Shaft Holder	1
24	A172 2270	Drum Drive Shaft	1
25	A109 2380	ID Sensor Duct	1
26	A109 2385	Duct Tube Ass y	1
27	AB03 0527	Timing Pulley - 112Z	1
28	A109 6150	Positioning Screw	1
29	A109 4650	Fly-wheel Support Plate	1
30	A172 4680	Spacer	1

Index No.	Part No.	Description	Q ty Per Assembly
100	0725 0120E	Retaining Ring C - M12	
101	0807 7049	Spacer - 12.3 X 18mm X 0.2t	
102	0741 3808	Ball Bearing - 8x16x5mm	
103	0807 5053	Washer	
104	0354 0100B	Screw - M4x10	
105	0574 0060E	Hexagon Headless Set Screw - M4x6	
106	0951 4006B	Philips Screw With Washer - M4x6	
107	0354 0060B	Screw - M4X6	
108	0951 4008B	Philips Screw With Washer - M4x8	
109	0414 0082B	Binding Self Tapping Screw - M4x8	
110	0575 0050E	Hexagon Headless Set Screw - M5x5	
111	0720 0060E	Retaining Ring - M6	
112	1105 0310	Wire Clamp	
113	0710 0100B	Hexagonal Nut - M10	
114	0701 0100B	Flat Washer - 10	

41. Drive Section 4 (A172/A199)

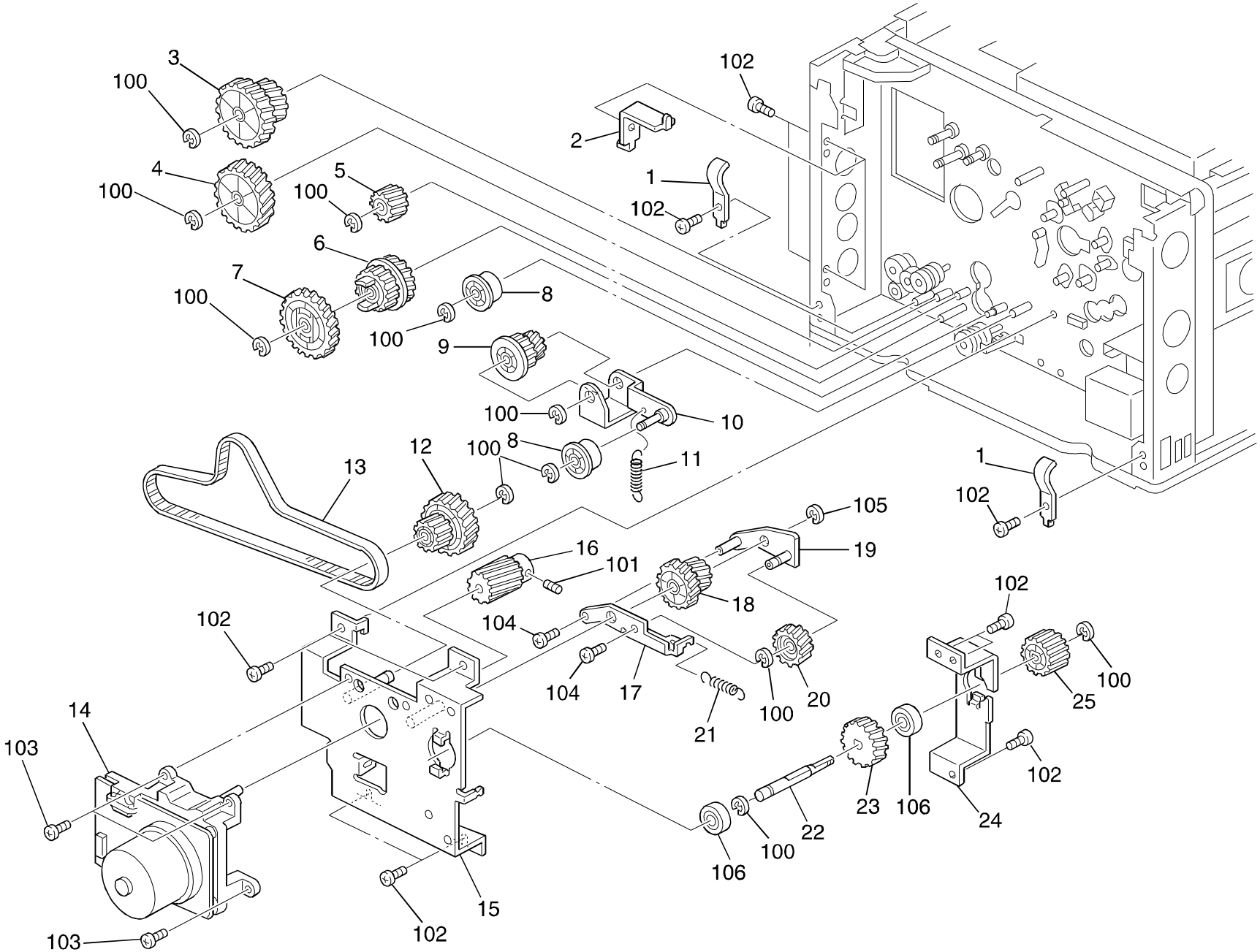

41. Drive Section 4 (A172/A199)

Index No.	Part No.	Description	Q ty Per Assembly
1	A033 7558	Grounding Plate	2
2	A109 5751	Main Control Board Hinge	2
3	AB01 7320	Gear - 29Z/44Z	1
4	AB01 3837	Gear - 42Z	1
5	AB01 3838	Gear - 17Z	1
6	AB01 7318	Gear - 29Z/33Z	1
7	AB01 3836	Gear - 46Z	1
8	AB03 0446	Timing Pulley	2
9	AB01 7321	Gear - 20Z/30Z	1
10	A109 4712	Belt Tightner	1
11	AA06 0559	Release Spring	1
12	AB01 7316	Gear - 20Z/43Z	1
13	AA04 3409	Timing Belt - 600 - S3MV	1
14	AX06 0104	Motor - 36W	1
15	A109 4692	Transport Motor Bracket	1
16	AB01 3870	Gear - 22Z	1
17	A109 4697	Idle Gear Bracket - Rear	1
18	AB01 7396	Gear - 20Z/30Z	1
19	A109 4695	Idle Gear Bracket - Front	1
20	AB01 3832	Gear - 28Z	1
21	5447 2743	Lever Spring	1
22	AA14 5220	Drive Shaft	1
23	AB01 3834	Gear - 30Z	1
24	A109 4694	Fusing Drive Gear Bracket	1
25	AB01 3835	Gear - 20Z	1

Index No.	Part No.	Description	Q ty Per Assembly
100	0720 0060B	Retaining Ring - M6	
101	0575 0050E	Hexagon Headless Set Screw - M5x5	
102	0354 0060B	Screw - M4X6	
103	0354 0100B	Screw - M4x10	
104	0314 0060B	Philips Pan Head Screw - M4x6	
105	0720 0040E	Retaining Ring - M4	
106	0740 3008	Ball Bearing - 8x22x7	

42. Electrical Section 1 (A172/A199)

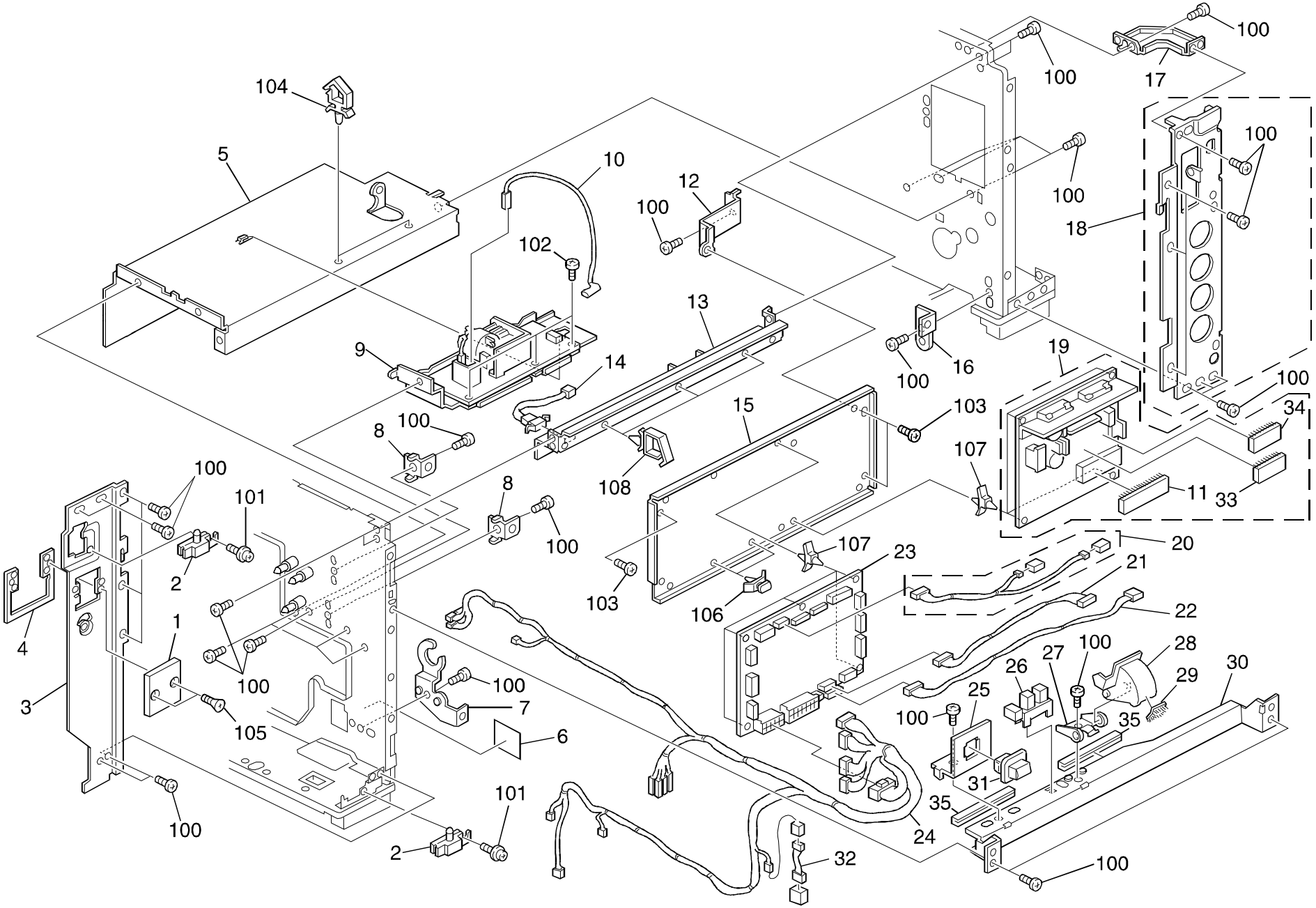

42. Electrical Section 1 (A172/A199)

Index No.	Part No.	Description	Q ty Per Assembly
1	A126 1351	Key Counter Cover	1
2	A060 1325	Right Hinge Pin	2
3	A109 1101	Front Right Frame	1
4	5420 1515	Plate - Key Counter	1
5	A109 1086	Upper Paper Feed Stay	1
6	AA17 4018	Sheet - 45x45	1
7	A109 2697	Front Holder - By-pass Feed Table	1
8	A109 5755	Front Holder - Interface 1	2
9	AZ31 0017	High Voltage Supply Board - D	1
10	A109 5391	High Voltage Harness	1
11	A172 5184	IC - UPD78P312ACW	1
12	A109 5758	Rear Holder - Interface 1	1
13	A109 1092	Right Upper Stay	1
14	A109 5312	Relay Harness - Polygon Motor	1
15	A109 5747	Interface Board 1 Bracket	1
16	A109 2722	Stay Angle	1
17	A109 1109	Frame Bracket - Rear Upper Right	1
18	A109 1107	Rear Right Frame	1
19	A172 5182	Transport Drive [illegible]rd	1
20	A109 5329	Polygon Motor R[illegible]y Harness	1
21	A109 5330	AC Power Pack Relay Harness	1
22	A109 5315	Relay Harness - Brush Motor	1
23	A172 5111	Relay Control Board	1
24	A199 5304	DC Main Harness	1
25	A109 2696	Latch Bracket - By-pass	1
26	AW02 0065	Photointerruptor	1
27	A109 2703	Sensor Feeler Holder	1
28	A109 2701	Sensor Feeler - By-pass Feed Table	1
29	AA15 2234	Seal - 6x10x11	1
30	A109 2707	Right Upper Stay	1
31	AG07 1007	Latch - By Pass [illegible]ed Table	1
32	A109 5317	Key Counter Re[illegible] Harness	1
33	A109 5156	IC - MB7111LM	1
34	A109 5155	IC - MB7111LM	1
35	5922 2642	Edging	2

Index No.	Part No.	Description	Q ty Per Assembly
100	0434 0080B	Philips Tapping Screw - M4x8	
101	0964 4008B	Tapping Screw With Flat Washer - M4x8	
102	0314 0060B	Philips Pan Head Screw - M4x6	
103	0354 0060B	Screw - M4X6	
104	1105 0292	Wire Saddle	
105	0323 0060B	Philips Sunk Screw - M3x6	
106	1105 0409	Spacer	
107	1105 0193	Nylon Stud	
108	1105 0413	Harness Clamp	

43. Electrical Section 2 (A172/A199)

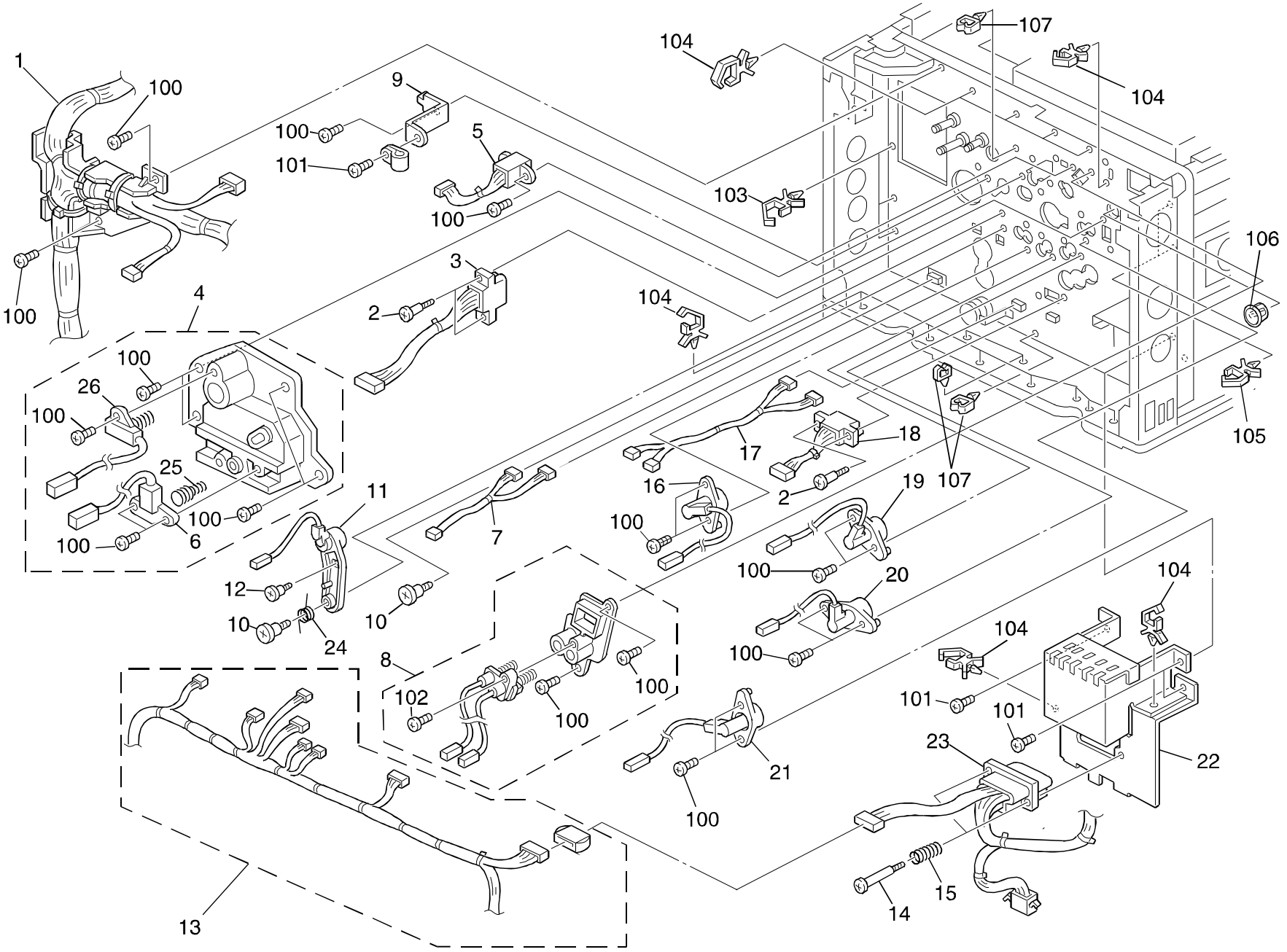

43. Electrical Section 2 (A172/A199)

Index No.	Part No.	Description	Q ty Per Assembly
1	A199 5307	DC Main Harness - Rear Upper	1
2	AA14 3301	Stepped Screw - M3x4	4
3	A109 5320	Development Relay Harness - 1	1
4	A172 3608	Cleaning Receptacle	1
5	A109 5318	Erase Lamp Relay Harness	1
6	A172 3606	Cleaning Bias Receptacle	1
7	A172 5386	Heater Harness - T/S Unit	1
8	A109 2300	Charge Corona Receptacle	1
9	A109 5798	Harness Clamp Plate	1
10	AA14 3708	Stepped Screw - M4	2
11	AD02 1103	Transfer Belt Receptacle	1
12	5919 2201	Shoulder Screw - M4	1
13	A199 5310	DC Main Harness - Rear Lower	1
14	5446 5832	Connector Guide Pin	2
15	AA06 3068	Spring Connector	2
16	A109 3315	Development Bias - Terminal - Y	1
17	A109 5314	Relay Harness - Transport Unit	1
18	A109 5321	Development Relay Harness - 2	1
19	A109 3314	Development Bias Retminal - M	1
20	A109 3313	Development Bias - Terminal - C	1
21	A109 3312	Development Bias Terminal - B	1
22	A109 1115	Fusing Connector Bracket	1
23	A109 5382	AC Main Harness	1
24	AA06 6227	Receptacle Spring	1
25	AA06 3026	Terminal - Spring	1
26	A109 2321	Pre Cleaning Corona Receptacle	1

Index No.	Part No.	Description	Q ty Per Assembly
100	0354 0060B	Screw - M4X6	
101	0434 0080B	Philips Tapping Screw - M4x8	
102	0433 0102B	Tapping Screw - M3x10	
103	1105 0316	Clamp	
104	1105 0413	Harness Clamp	
105	1105 0291	Wire Saddle	
106	1106 0459	Bushing - 20.2mm	
107	1105 0199	Clamp	

44. Electrical Section 3 (A172/A199)

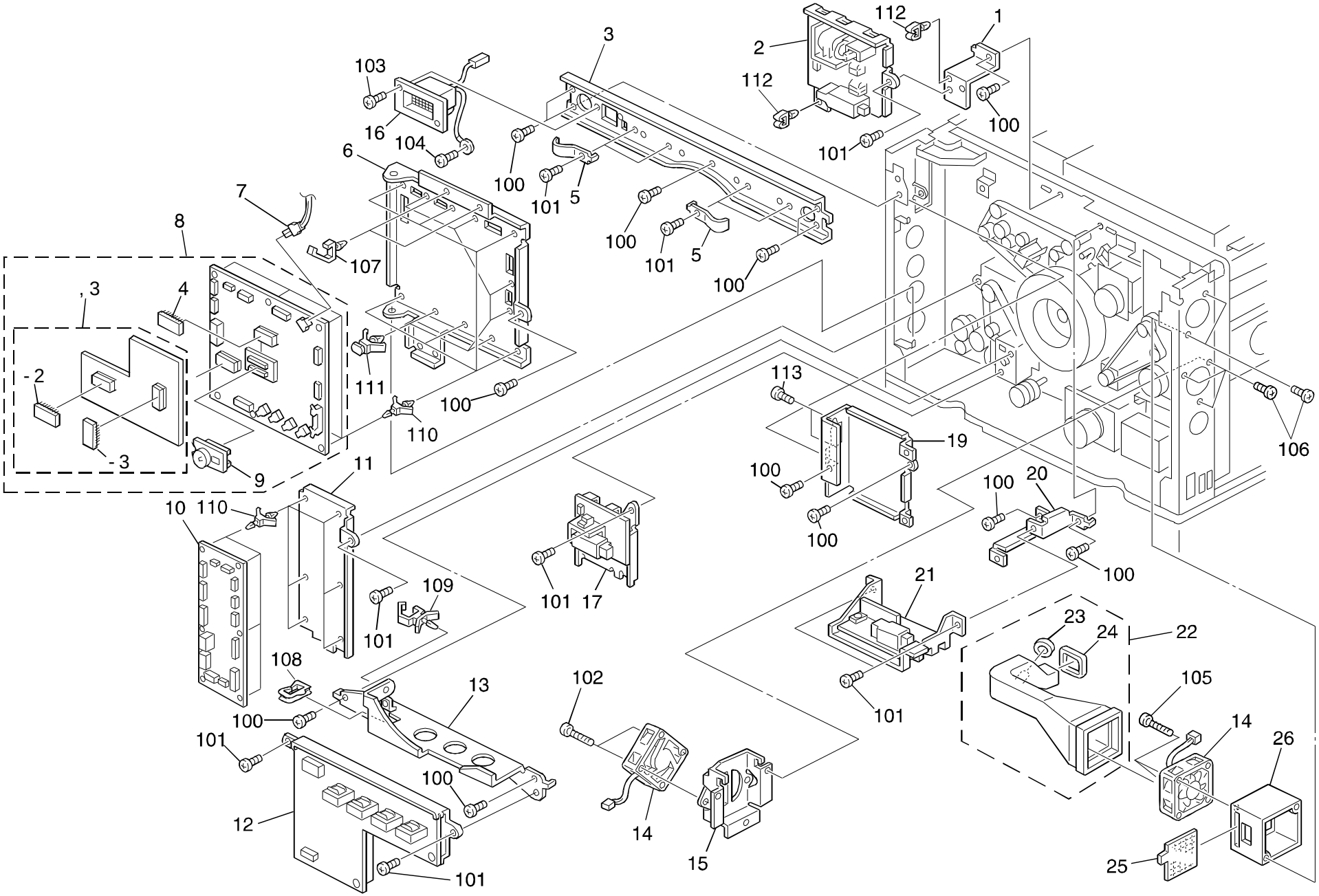

44. Electrical Section 3 (A172/A199)

Index No.	Part No.	Description	Q ty Per Assembly
1	A109 5761	Support Bracket - T	1
2	AZ32 0068	High Vol.supply Board - T1,PCC,BR	1
3	A109 1119	Rear Support Stay	1
4	A172 5129	IC - Main Control 30	1
5	A033 7558	Grounding Plate	4
6	A109 5741	Main Control Board Bracket	1
7	AW03 0036	Optics Fiber Cable - 1000mm	1
8	A172 5108	Main Control Board	1
9	A172 5121	NV RAM Board	1
10	A199 5119	2nd Relay Board	1
11	A172 5743	Interface Board 2 Bracket	1
12	AZ31 0016	High Voltage Supply Board - B	1
13	A109 5765	Board Bracket - B	1
14	AX64 0041	Cooling Fan Motor - DC24 7.64W	2
15	A109 5771	Fusing Exhaust Fan Bracket	1
16	A096 7636	DF Harness - 115V	1
16	A096 5404	DF Harness - 230V	1
17	AZ30 0038	High Voltage Supply Board - T2	1
18	A172 5123	ROM Board - Main	1
19	A172 5742	Board Brakcet	1
20	A172 5760	Power Pack Bracket	1
21	AZ30 0042	DC Power Pack - C.G	1
22	A109 2390	Charge Corona Duct - Large	1
23	AA15 1841	Duct Seal - 2x5x84.5	1
24	AA15 1840	Duct Seal - 2x5x34.5	1
25	**A109 2410**	**Filter Charge Inlet Fan**	**1**
26	A109 2403	Charge Corona Duct - Small	1
27	A172 5114	IC - Main Control 10	1
28	A172 5115	IC - Main Control 20	1

Index No.	Part No.	Description	Q ty Per Assembly
100	0434 0080B	Philips Tapping Screw - M4x8	
101	0354 0060B	Screw - M4X6	
102	0314 0300B	Philips Pan Head Screw - M4x30	
105	0413 0302B	Tapping Screw - M3x10	
106	0314 0120B	Philips Pan Head Screw - M4x12	
107	1105 0291	Wire Saddle	
108	1105 0349	Edge Saddle	
109	1105 0278	Harness Clamp	
110	1105 0193	Nylon Stud	
111	1105 0409	Spacer	
112	1105 0199	Clamp	
113	0802 5146	Tapping Screw - M3x8	
114	0353 0060F	Philips Truss Head Screw - M3x6	
115	0950 4008M	Screw - M4x8	

45. Electrical Section 4 (A172/A199)

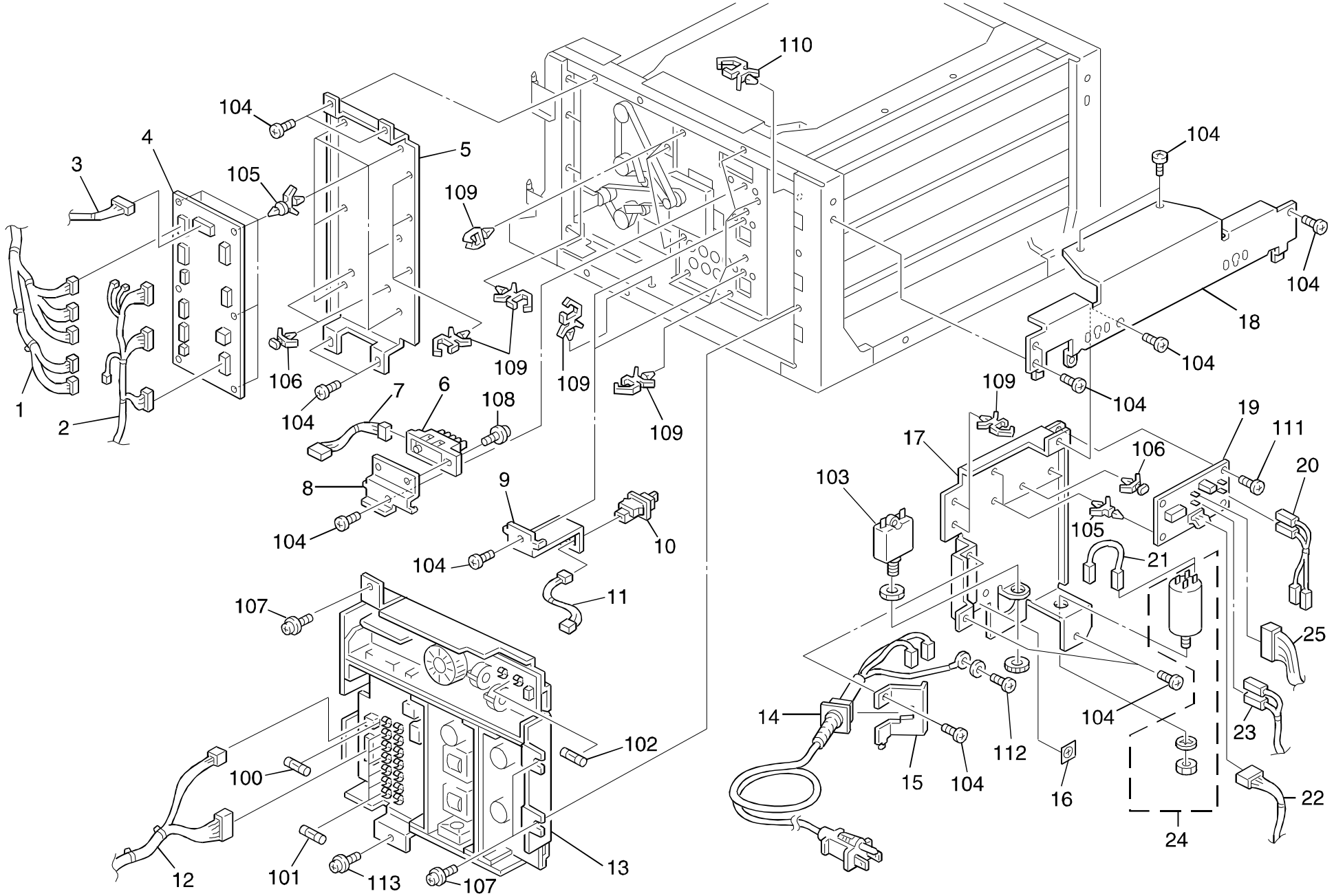

45. Electrical Section 4 (A172/A199)

Index No.	Part No.	Description	Q ty Per Assembly
1	A513 5351	Front Harness - Paper Feed Unit	1
2	A513 5350	Rear Harness - Paper Feed Unit	1
3	A109 5355	Relay Harness - Paper Tray Unit	1
4	A513 5121	Paper Feed Interface Board	1
5	A513 1172	Interface Board Bracket	1
6	AW50 0010	Push Switch	1
7	A513 5354	Relay Harness - Paper Size Sensor	1
8	A513 2832	Paper Size Sensor Bracket	1
9	A513 2836	Tray Set Sensor Bracket	2
10	AW50 0012	Push Switch	2
11	A513 5357	Relay Harness - Tray Set Sensor	2
12	A172 5356	DC Relay Harness	1
13	AZ24 0032	DC Power Supply Unit - 115V	1
13	AZ24 0037	DC Power Supply Unit - 230V	1
14	A085 5571	Power Supply Cord - 115V	1
14	A085 5671	Power Supply Cord - 230V	1
15	A513 1178	Power Supply Cord Bracket	1
16	AA00 1190	Decal - Ground	1
17	A513 1179	Noise Filter Bracket	1
18	A513 1033	Left Middle Frame	1
19	A172 5431	Noise Filter Board - 115V	1
19	A172 5631	Noise Filter Board - 230V	1
20	A513 5380	AC Harness - Noise Filter Board	1
21	A513 5381	Relay Harness	1
22	A172 5383	Heater Harness - LCT	1
23	A513 5384	AC Harness - Noise Filter Board	1
24	A513 5542	Noise Filter - 115V	1
24	A513 5642	Noise Filter - 220V	1
25	A172 5385	Heater Harness - Transfer	1

Index No.	Part No.	Description	Q ty Per Assembly
100	1107 0391	Fuse - 5A, 125V	
101	1107 0392	Fuse (Glass Case) - 6.3A - 125V	
102	1107 0629	Fuse (Ceramic Case) - 15A - 125V	
103	1107 0693	Circuit Breaker - 18A 250V (115V)	
103	1107 0473	Circuit Breaker - 250V 10A (230V)	
104	0434 0080B	Philips Tapping Screw - M4x8	
105	1105 0193	Nylon Stud	
106	1105 0409	Spacer	
107	0964 4008B	Tapping Screw With Flat Washer - M4x8	
108	0951 3008B	Philips Screw With Flat Washer - M3x8	
109	1105 0310	Wire Clamp	
110	1105 0413	Harness Clamp	
111	0314 0080M	Philips Pan Head Screw - M4x8	
112	0801 0142	Screw - Spring Washer - M5x8	
113	0954 4008B	Philips Screw - M4x8	

46. Frame Section 1 (A172/A199)

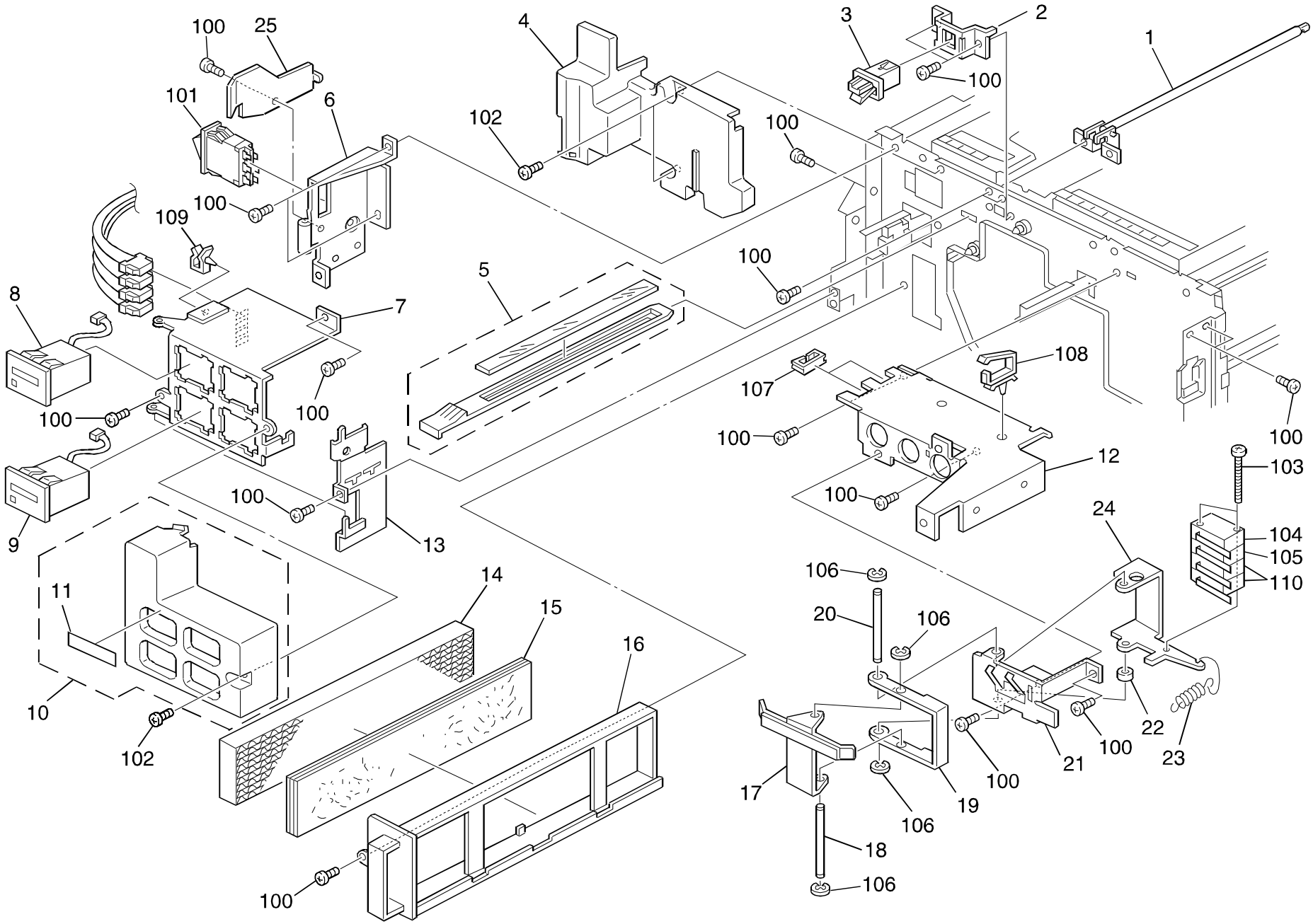

46. Frame Section 1 (A172/A199)

Index No.	Part No.	Description	Q ty Per Assembly
1	A109 5726	Scanner Stopper Rod	1
2	A172 3437	Latch Bracket-toner Tank	1
3	A172 3474	Latch	1
4	A109 1387	Inner Cover - Main Switch	1
5	A109 2077	Toner Shielding Grass	1
6	A109 1104	Front Upper Left Frame	1
7	A109 5781	Total Counter Bracket	1
8	AX31 0017	Black Total Counter	1
9	AX31 0019	Color Total Counter	1
10	A109 1393	Inner Cover - Total Counter	1
11	A109 1555	Decal - Total Counter	1
12	A109 1102	Front Upper Right Bracket	1
13	A109 5782	Counter Bracket Hinge	1
14	**AA01 0080**	**Ozone Filter**	**1**
15	**AA01 2084**	**Development Filter**	**1**
16	A109 3307	Filter Holder	1
17	A109 5786	Safety Switch Lever	1
18	AA14 5525	Pin - 4x66.2	1
19	A109 5792	Safety Switch Link	1
20	AA14 5526	Pin - 5x63	1
21	A109 5789	Safety Switch Bracket	1
22	C202 3102	Collar - 6.35x10x4mm	1
23	AA06 0308	Spring	1
24	A109 5794	Safety Switch Holder	1
25	A109 1311	Left Door Stopper	1

Index No.	Part No.	Description	Q ty Per Assembly
100	0434 0080B	Philips Tapping Screw - M4x8	
101	1204 1545	Main Switch	
102	0344 0060F	Philips Truss Head Screw - M4x6	
103	0801 1007	Philips Pan Head Screw - M10x7	
104	1204 2356	Micro Switch - AM51612A531	
105	1204 2376	Microswitch : V-162-3C25	
106	0720 0030B	Retaining Ring - M3	
107	1105 0349	Edge Saddle	
108	1105 0292	Wire Saddle	
109	1105 0200	Clamp	
110	1204 2355	Micro Switch - AM51632A531	

47. Frame Section 2 (A172/A199)

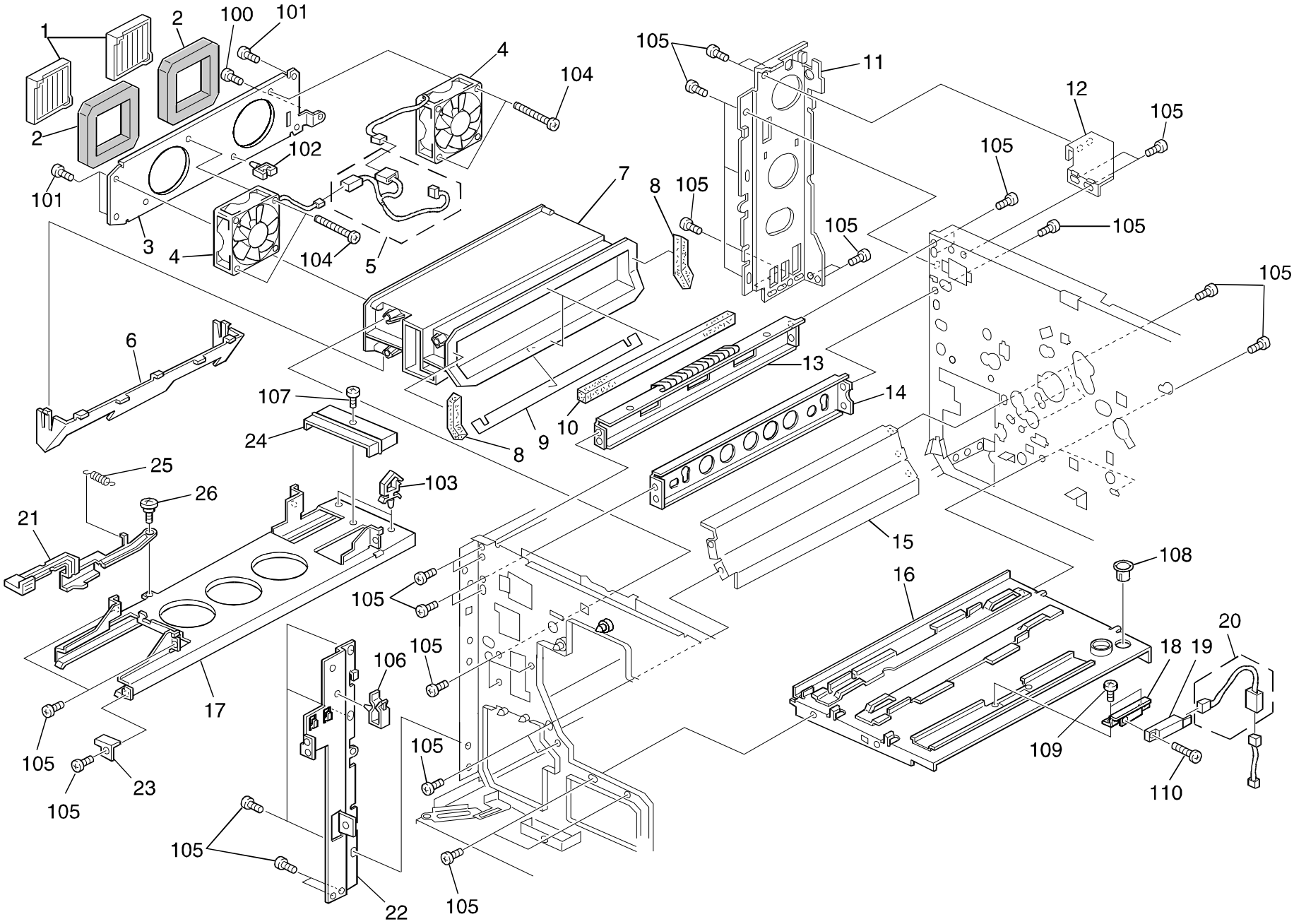

47. Frame Section 2 (A172/A199)

Index No.	Part No.	Description	Q ty Per Assembly
1	**AA01 2069**	**Development Exhaust Fan Filter**	**2**
2	AA15 1779	Seal - 99x105.5	2
3	A109 3302	Development Exhaust Fan Bracket	1
4	AX64 0043	Optics Cooling Fan Motor - DC24V 2.88W	2
5	A109 5319	Separation Corona Cable	1
6	A109 3303	Shielding Plate - Development Duct	1
7	A109 3301	Development Exhaust Fan Duct	1
8	AA15 1827	Seal - 12x12x97	2
9	AA01 2070	Development Dust Lower Filter	1
10	AA15 1828	Seal - 12x12x304	2
11	A109 1111	Rear Left Frame	1
12	A109 1113	Frame Bracket - Rear Upper Left	1
13	A109 1089	Left Upper Tray	1
14	A109 1096	Left Middle Stay	1
15	A109 3330	Lower Left Development Cover	1
16	A172 3325	Development Unit Base	1
17	A109 4270	Fusing Unit Rail	1
18	A172 3881	Transport Sensor Bracket	1
19	AW01 0069	Photo Sensor Ass y	1
20	A109 5313	Relay Harness - Transport Sensor	1
21	AG05 1099	Fusing Release Lever	1
22	A109 1105	Front Lower Left Frame	1
23	A109 4273	Fusing Unit Stopper	1
24	A109 4271	Heat Insulating Plate	1
25	AA06 0244	Spring	1
26	AA14 3733	Stepped Screw M4	1

Index No.	Part No.	Description	Q ty Per Assembly
100	0354 0060B	Screw - M4X6	
101	0414 0102B	Tapping Screw M4x10	
102	1105 0199	Clamp	
103	1105 0310	Wire Clamp	
104	0314 0300B	Philips Pan Head Screw - M4x30	
105	0434 0080B	Philips Tapping Screw - M4x8	
106	1105 0200	Clamp	
107	0314 0060B	Philips Pan Head Screw - M4x6	
108	1106 0193	Bushing - 7.9mm	
109	0314 0050B	Philips Pan Head Screw - M4x5	
110	0313 0100B	Philips Pan Head Screw - M3x10	

48. Frame Section 3 (A172/A199)

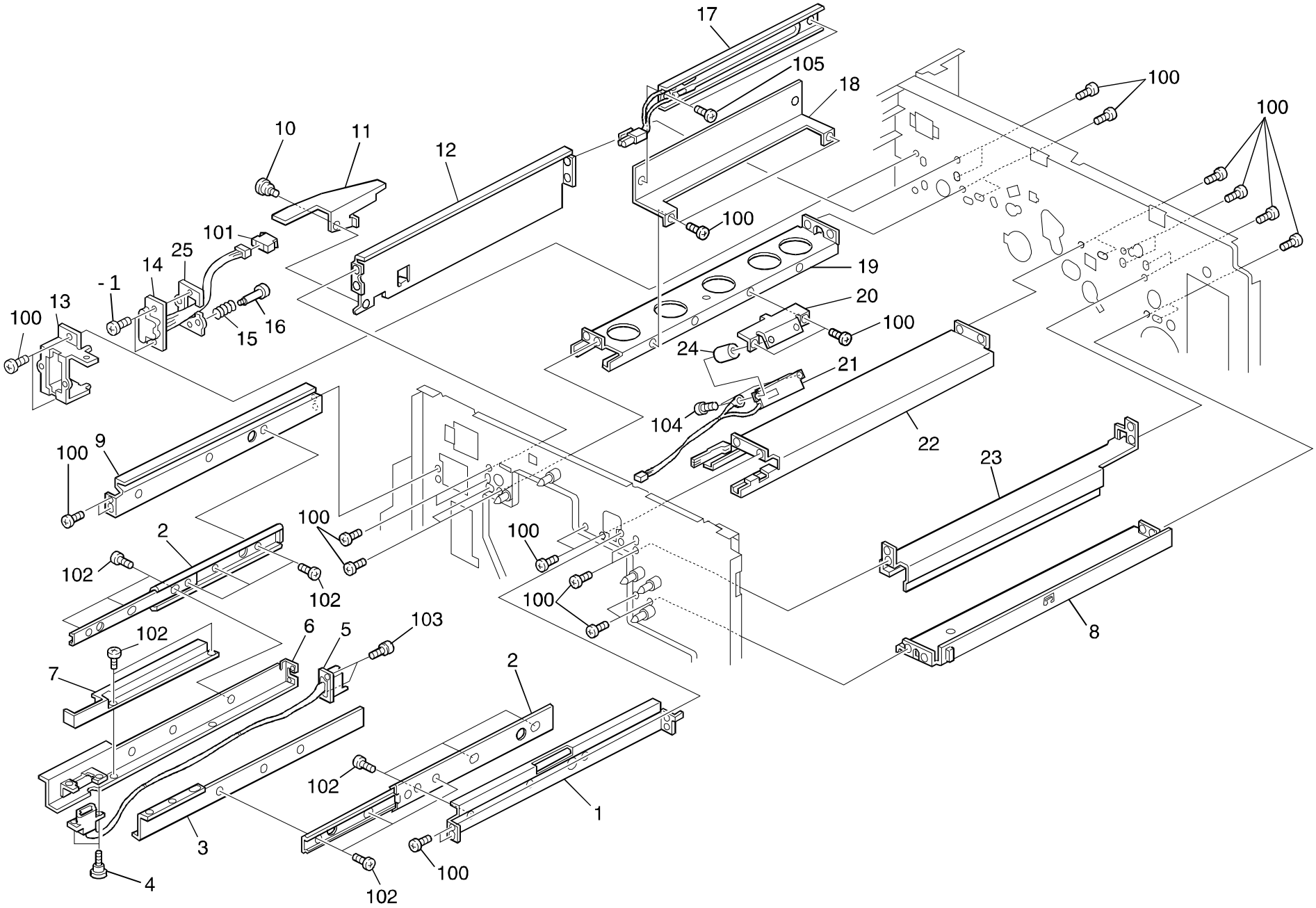

48. Frame Section 3 (A172/A199)

Index No.	Part No.	Description	Q ty Per Assembly
1	A109 3441	Right Slide Rail Stay	1
2	AA07 0022	Slide Rail	2
3	A109 3446	Right Stay - Toner Tank	1
4	AA14 3301	Stepped Screw - M3x4	2
5	A172 5307	Hopper Relay Harness - 1	1
6	A172 3455	Left Stay - Toner Hopper	1
7	A109 3459	Connector Cover - Hopper Harness	1
8	A109 6403	Solenoid Bracket	1
9	A109 3440	Left Slide Rail Stay	1
10	AA14 3358	Stepped Screw - M4x3	1
11	A109 3332	Development Unit Stopper - B.C	1
12	A109 1094	Left Side Stay	1
13	A172 3438	Connector Bracket	1
14	A172 5308	Hopper Relay Harness - 2	1
15	AA06 3068	Spring Connector	1
16	5446 5832	Connector Guide Pin	1
17	AX40 0057	Heater - 115V 9W	1
17	AX40 0058	Heater - 230V 9W	1
18	A109 2421	Drum Heater Bracket	1
19	A109 3322	Development Unit Rail	1
20	A109 2426	Drum Potential Sensor Bracket	1
21	AW33 0004	Drum Potential Sensor	1
22	A109 6131	Transfer Unit Rail	1
23	A109 6401	Lubricant Brush Roller Stay	1
24	AA13 2178	Spacer - Drum Potential Sensor	2
25	A172 3439	Connector Holder	1
26	AA14 3312	Stepped Screw - M3x10	1

Index No.	Part No.	Description	Q ty Per Assembly
100	0434 0080B	Philips Tapping Screw - M4x8	
101	1102 6265	Connector - Red 8p	
102	0314 0050B	Philips Pan Head Screw - M4x5	
103	0952 3008B	Screw - M3x8	
104	0313 0060B	Philips Pan Head Screw - M3x6	
105	0957 4008B	Philips Screw W/F Washer - M4x8	

49. Frame Section 4 (A172/A199)

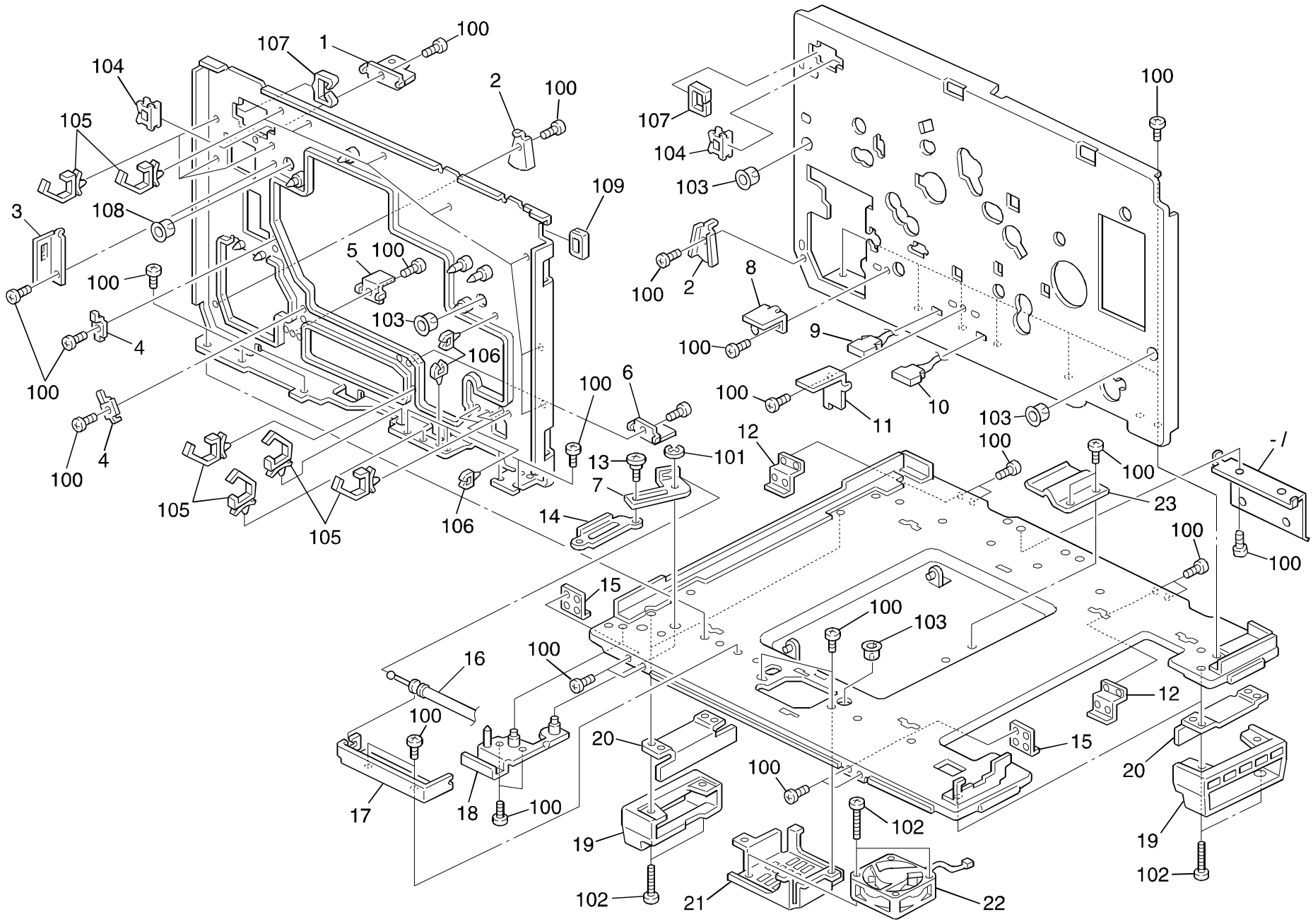

49. Frame Section 4 (A172/A199)

Index No.	Part No.	Description	Q ty Per Assembly
1	A109 5756	Front Holder - AC Drive	1
2	A109 4274	Copy Tray Holder	2
3	A109 2430	Connector Bracket	1
4	A030 3403	Bracket	2
5	A109 3872	Front Left Positioning Plate	1
6	A109 3871	Front Right Positioning Plate	1
7	A109 4771	Gear Release Arm	1
8	A109 3874	Rear Left Positioning Plate	1
9	A109 5310	Relay Harness - Transport Fan	1
10	A109 5313	Relay Harness - Transport Sensor	1
11	A109 3873	Rear Right Positioning Plate	1
12	A109 1032	Rear Fixing Plate	2
13	A109 4775	Stepped Screw - M5	1
14	A109 4772	Arm Bracket - Gear Release	1
15	A109 1031	Front Fixing Plate	2
16	A109 4774	Gear Release Wire	1
17	A109 4773	Wire Holder - Gear Release	1
18	A109 4910	Lower Left Hinge	1
19	A096 1094	Grip Base	4
20	A109 1057	Grip Plate	4
21	A109 1123	Inner Cooling Fan Bracket	1
22	AX64 0041	Cooling Fan Motor - DC24 7.64W	1
23	A172 3870	Spring Plate - Transport	1
24	A172 1151	Grounding Plate	1

Index No.	Part No.	Description	Q ty Per Assembly
100	0434 0080B	Philips Tapping Screw - M4x8	
101	0720 0040E	Retaining Ring - M4	
102	0314 0300B	Philips Pan Head Screw - M4x30	
103	1106 0193	Bushing - 7.9mm	
104	1105 0113	Edge - P108	
105	1105 0278	Harness Clamp	
106	1105 0199	Clamp	
107	1105 0352	Clamp	
108	1106 0430	Bushing - 13mm	
109	1105 0334	Edge - 17	

50. Main Control Board (A172/A199)

CAPACITOR

SYMBOL NO.	INDEX NO.	SYMBOL NO.	INDEX NO.	SYMBOL NO.	INDEX NO.	SYMBOL NO.	INDEX NO.	SYMBOL NO.	INDEX NO.	SYMBOL NO.	INDEX NO.	SYMBOL NO.	INDEX NO.
----	---	C511	178	C521	187	C531	187	C541	183	C551	187	----	---
C502	180	C512	179	C522	187	----	---	----	---	C552	187	----	---
C503	179	C513	181	C523	187	C533	178	C543	186	C553	187	C563	187
C504	180	C514	188	C524	187	C534	188	C544	188	C554	188	C564	187
C505	185	C515	187	C525	187	C535	187	C545	188	C555	187	C565	188
C506	185	C516	187	C526	187	C536	186	C546	187	C556	187	C566	187
C507	185	C517	187	C527	187	C537	188	C547	187	C557	187	C567	187
C508	185	C518	187	C528	187	C538	187	C548	188	C558	188	C568	187
C509	185	C519	187	C529	185	C539	188	C549	187	C559	187	C569	187
C510	185	C520	187	C530	187	C540	183	C550	188	C560	187	C570	188

CAPACITOR

SYMBOL NO.	INDEX NO.	SYMBOL NO.	INDEX NO.	SYMBOL NO.	INDEX NO.	SYMBOL NO.	INDEX NO.	SYMBOL NO.	INDEX NO.	SYMBOL NO.	INDEX NO.	SYMBOL NO.	INDEX NO.
C571	188	C581	188	C591	187	C601	187	C611	182	C621	188	C631	187
C572	187	C582	187	C592	187	C602	187	C612	187	C622	188	C632	187
C573	188	C583	187	C593	187	C603	188	C613	187	C623	188	C633	187
C574	188	C584	187	C594	187	C604	188	C614	187	C624	187	C634	187
C575	188	C585	187	C595	187	C605	188	C615	187	C625	187	C635	187
C576	187	C586	187	C596	187	C606	188	C616	187	C626	188	C636	187
C577	187	C587	187	C597	187	C607	188	C617	185	C627	188	C637	187
C578	187	C588	188	C598	187	C608	187	C618	187	----	---	C638	187
C579	187	C589	188	C599	187	C609	187	C619	185	C629	187	C639	188
C580	188	C590	187	C600	187	C610	182	C620	188	C630	187	C640	187

50. Main Control Board (A172/A199)

CAPACITOR

SYMBOL NO.	INDEX NO.
C641	187
C642	188
C643	187
C644	184
C645	184
C646	187
C647	188
C648	188
C649	188
C650	188

SYMBOL NO.	INDEX NO.
C651	185
C652	187
C653	187
C654	188
C700	187
C701	188

CONNECTOR

SYMBOL NO.	INDEX NO.
CN501	105
CN502	111
------	---
CN504	115
CN505	116
CN506	112
CN507	113
CN508	114
CN509	111
CN510	104

SYMBOL NO.	INDEX NO.
CN511	106
CN512	107
CN513	108
CN514	109
CN515	106
CN516	104
CN517	118
CN518	117

DIODE

SYMBOL NO.	INDEX NO.
D502	124
D504	124
D505	124
D506	124
D509	124

DPS

SYMBOL NO.	INDEX NO.
DPS501	121

FIB

SYMBOL NO.	INDEX NO.
FIB505	158
FIB506	158
FIB507	158
FIB508	158
FIB509	158
FIB510	158
FIB511	158
FIB512	158
FIB513	158
FIB514	158

FIB

SYMBOL NO.	INDEX NO.
FIB515	158
FIB516	158
FIB517	158

IC

SYMBOL NO.	INDEX NO.
IC501	153
IC502	151
IC503	151
IC504	148
IC505	152
IC506	135
IC507	141
IC508	190
IC509	4
[SOCKET]	119

SYMBOL NO.	INDEX NO.
IC511	147
IC512	135
IC513	134
IC514	131
IC515	128
IC516	140
IC517	139
IC518	141
IC519	127
IC520	189

SYMBOL NO.	INDEX NO.
IC521	135
IC522	5
[SOCKET]	120
IC523	6
[SOCKET]	110
IC524	145
IC525	145
IC526	142
IC527	142
IC528	131

SYMBOL NO.	INDEX NO.
IC529	127
IC530	132
IC531	142
IC532	128
IC533	128
IC534	128
IC535	138
IC536	149
IC537	1
IC538	149

SYMBOL NO.	INDEX NO.
IC539	145
IC540	142
IC541	135
IC542	135
IC543	143
IC544	138
IC545	136
IC546	136
------	---
IC548	150

SYMBOL NO.	INDEX NO.
IC549	137
IC550	131
IC551	127
IC552	128
IC553	138
IC554	129
IC555	133
IC556	130
IC557	130
IC558	144

50. Main Control Board (A172/A199)

IC

SYMBOL NO.	INDEX NO.
IC559	146
IC560	144

LED

SYMBOL NO.	INDEX NO.
LED502	126

NF

SYMBOL NO.	INDEX NO.
NF501	157

OSC

SYMBOL NO.	INDEX NO.
OSC501	156
OSC502	154
OSC503	155

Q

SYMBOL NO.	INDEX NO.
Q501	122
Q502	122
Q503	122
Q504	122
Q505	122
Q506	122
Q507	122
Q508	122
-----	---
Q510	123

RESISTOR

SYMBOL NO.	INDEX NO.
R501	162
R502	176
R503	175
R504	161
R505	171
R506	159
R507	162
R508	162
R509	171
R510	171

SYMBOL NO.	INDEX NO.
R511	162
R512	162
R513	162
R514	162
R515	162
R516	162
R517	173
R518	173
R519	172
R520	173

ESISTOR

SYMBOL NO.	INDEX NO.
R521	173
R522	173
R523	173
R524	173
R525	173
R526	173
R527	170
R528	162
-----	---
R530	162

SYMBOL NO.	INDEX NO.
R531	173
R532	173
R533	173
R534	170
R535	170
R536	170
R537	162
R538	162
R539	173
R540	170

SYMBOL NO.	INDEX NO.
R541	162
R542	162
R543	162
R544	162
R545	173
R546	173
R547	173
R548	173
R549	173
R550	173

SYMBOL NO.	INDEX NO.
R551	173
R552	173
R553	162
R554	162
R555	162
R556	162
R557	169
R558	173
R559	170
R560	162

SYMBOL NO.	INDEX NO.
-----	---
R562	173
R563	173
R564	173
R565	162
R566	162
R567	165
R568	170
R569	173
R570	175

SYMBOL NO.	INDEX NO.
R571	161
R572	176
R573	171
R574	173
R575	173
R576	173
R577	173
R578	173
R579	173
R580	175

SYMBOL NO.	INDEX NO.
R581	176
-----	---
R583	169
R584	173
R585	173
R586	173
R587	173
R588	173
R589	170
R590	170

50. Main Control Board (A172/A199)

RESISTOR

SYMBOL NO.	INDEX NO.
R591	170
R592	170
R593	170
R594	170
R595	170
R596	170
R597	162
R598	162
R599	173
R600	170

SYMBOL NO.	INDEX NO.
R601	170
R602	170
R603	170
R604	164
----	---
----	---
R607	171
R608	171
----	---
R610	169

SYMBOL NO.	INDEX NO.
----	---
R612	160
R613	160
R614	160
R615	160
R616	160
R617	160
R618	160
R619	160
R620	165

SYMBOL NO.	INDEX NO.
R621	169
R622	165
R623	165
R624	173
R625	173
R626	173
R627	170
R628	170
----	---
----	---

SYMBOL NO.	INDEX NO.
R631	161
R632	161
R633	161
R634	169
R635	165
R636	169
R637	165
R638	162
R639	162
R640	162

SYMBOL NO.	INDEX NO.
R641	162
R642	162
----	---
R644	170
R645	170
R646	173
R647	173
----	---
----	---
R650	169

SYMBOL NO.	INDEX NO.
R651	165
R652	162
R653	162
R654	162
R655	162
R656	173
R657	173
R658	173
R659	173
R660	173

RESISTOR

SYMBOL NO.	INDEX NO.
R661	168
R662	168
R663	173
---	---
R665	162
R666	173
R667	173
R668	173
R669	168
R670	162

SYMBOL NO.	INDEX NO.
R671	161
---	---
---	---
R674	161
R675	161
R676	162
R677	161
R678	177
R679	161
R680	161

SYMBOL NO.	INDEX NO.
R681	161
R682	166
R683	171
R684	161
R685	161
R686	163
R687	163
R688	162
R689	167
R690	173

SYMBOL NO.	INDEX NO.
R691	173
R692	161
R693	161
R694	162
R695	177
R696	174
R697	161
R698	161
R699	162
R700	174

SYMBOL NO.	INDEX NO.
R701	162
R702	162
R703	162
R704	162
R705	162
R706	162
R707	161
R708	173
R709	173
R710	170

SYMBOL NO.	INDEX NO.
R711	170
R712	161
R713	174
R714	173
R715	173
R800	173
R801	165
R802	173

SW

SYMBOL NO.	INDEX NO.
SW501	102
[SOCKET]	103

50. Main Control Board (A172/A199)

TP

SYMBOL NO.	INDEX NO.
TP501	101
TP502	101
TP503	101
TP504	101
TP505	101
TP507	101
TP508	101
TP509	101
TP510	101
TP511	101

SYMBOL NO.	INDEX NO.
TP512	101
TP513	101
TP514	101
TP515	101
TP516	101

ZD

SYMBOL NO.	INDEX NO.
ZD501	125

50. Main Control Board (A172/A199)

Index No.	Part No.	Description	Q ty Per Assembly
*	A172 5108	Main Control Board	1
1	A096 5129	IC - M37409M2-155FP	1
2	A172 5114	IC - Main Control 10	1
3	A172 5115	IC - Main Control 20	1
4	A172 5123	ROM Board - Main	1
5	A172 5129	IC - Main Control 30	1
6	A172 5121	NV RAM Board	1

Index No.	Part No.	Description	Q ty Per Assembly
101	1101 0328	Connector Pin Contact	
102	1101 0360	Connector - 3p	
103	1101 0395	IC Socket - 252	
104	1102 5003	Fiber Connector - DC1002 - 2p	
105	1102 5328	Connector - 12p	
106	1102 5340	Fiber Connector - 2p	
107	1102 5341	Fiber Connector	
108	1102 5342	Connector - 2p	
109	1102 5343	Fiber Connector - DC1002-5	
110	1102 6134	IC Socket	
111	1102 6299	Connector - 6p	
112	1102 6303	Connector - 10p	
113	1102 6395	Connector - 1p	
114	1102 6396	Connector - 1p	
115	1102 6402	Connector - 2p	
116	1102 6403	Connector - 30p	
117	1102 6408	Connector - 30p	
118	1103 3020	Connector - 20p	
119	1104 0451	IC Socket - 32P	
120	1104 0589	Dip Socket : 32p	
121	1204 1542	Dip Switch	
122	1400 0528	Transistor - DTB113EK	
123	1401 0296	Transistor - 2SA1162Y	
124	1402 0476	Diode - 1SS184	
125	1402 1152	Diode - RD7.5P	
126	1403 0558	LED - SEL2110RTP3	
127	1407 1309	IC - LS04	
128	1407 1311	IC - LS32	
129	1407 1596	TTLIC - SN74LS14NS	
130	1407 2052	TTLIC - SN74LS74ANS	
131	1407 2081	TTLIC - SN74LS08NS	
132	1407 2135	TTLIC - 74F74SJ	
133	1407 2137	IC -74F138SJ : TTL	
134	1407 2138	TTLIC - 74F139SJ	
135	1407 2187	TTLIC - SN74LS07NS	

Index No.	Part No.	Description	Q ty Per Assembly
136	1407 2231	IC - TD62308AF	
137	1407 2253	TTL - SN74LS393NS	
138	1407 2344	IC - TD62382F	
139	1407 2463	TTL - IC - SN74ALS08NS	
140	1407 2464	TTL - IC - SN74ALS74ANS	
141	1407 2588	TTLIC - SN74ALS04BNS	
142	1407 2817	TTL - SN74ALS32NS	
143	1407 3692	IC - RF5C86	
144	1407 3753	IC - TC4W53F	
145	1407 3852	IC - MB89371AH	
146	1407 4137	IC - MM1035XF	
147	1407 4143	MPU - MC68331CFC16	
148	1407 4144	MPU - H81532 - HB6435328RA00M	
149	1407 4146	LSI - MB89255AHPFS	
150	1407 4183	IC - UPD71051GU-10	
151	1408 0585	IC - AD7528JR	
152	1408 0595	IC - NJM2904M	
153	1408 0716	IC - NJM084M	
154	1503 0194	Crystal Oscillator - 32.768 Khz	
155	1503 0261	Oscillator - 9.8304MHz	
156	1503 0307	Oscillator - 20MHz	
157	1602 7029	Noise Filter - 22000pf	
158	1607 0477	Coil - BLM21A121SPB	
159	1630 1101	Resistor - 100 P 1/4W 5%	
160	1630 1151	Resistor - 150 P 5% 1/4W	
161	1630 2102	Resistor - 1K P 1/8W 5%	
162	1630 2103	Resistor - 10K P 1/8W	
163	1630 2104	Resistor - 100K P 1/8W 5%	
164	1630 2105	Resistor - 1M P 1/8W	
165	1630 2121	Resistor - 120 P 5% 1/8W	
166	1630 2123	Resistor - 12KP 1/8W 5%	
167	1630 2206	Resistor - 20M P 1/8W 5%	
168	1630 2220	Resistor - 22P 1/8W 5%	
169	1630 2222	Resistor - 2.2K P 1/8W	

Index No.	Part No.	Description	Q ty Per Assembly
170	1630 2223	Resistor - 22K P 1/8W 5%	
171	1630 2330	Resistor - 33P 1/8W 5%	
172	1630 2334	Resistor - 330KP	
173	1630 2472	Resistor - 4.7K P 1/8W 5%	
174	1630 2473	Resistor - 47KP 1/8W 5%	
175	1630 2511	Resistor - 510P 1/8W 5%	
176	1630 2821	Resistor - 820 P 1/8W 5%	
177	1632 5231	Resistor - 5.23K P 1%	
178	1640 5100	Capacitor - 10ηF 20% 50V	
179	1640 5101	Capacitor - 100ηF 20% 50V	
180	1640 5470	Capacitor - 47ηF 20% 50V	
181	1640 5478	Capacitor - 0.47ηF 20% 50V	
182	1660 1100	Capacitor - 10PF 50V	
183	1660 3101	Capacitor - 100PF 50V	
184	1660 3150	Capacitor - 15PF 50V	
185	1660 3471	Capacitor - 470PF 50V	
186	1660 5102	Capacitor - 1000PF 10% 50V	
187	1660 7103	Capacitor - 10000PF 50V	
188	1660 7104	Capacitor - 100000PF 50V	
189	1902 0006	IC - SRAM 256KX8 70NS G1	
190	1902 0021	IC - SRAM - 1M - X8 - 100NS/G4	

51. IPU Board (A172/A199)

AR

SYMBOL NO.	INDEX NO.
AR301	155
AR302	155
AR303	155
AR304	156
------	---
AR306	156
AR307	156
AR308	156
AR309	156
AR310	156

SYMBOL NO.	INDEX NO.
AR311	156
AR312	156
AR313	156
AR314	156
AR315	156
AR316	155
AR317	155
AR318	155
AR319	154
AR320	154

SYMBOL NO.	INDEX NO.
AR321	154
AR322	154
AR323	154
AR324	154
AR325	154
AR326	154
AR327	154
AR328	154
AR329	154
AR330	154

SYMBOL NO.	INDEX NO.
AR331	155

CAPACITOR

SYMBOL NO.	INDEX NO.
C301	188
C302	188
----	---
C304	189
C305	188
-----	---
-----	---
----	---
C309	188
-----	---

SYMBOL NO.	INDEX NO.
----	---
C312	188
C313	188
-----	---
-----	---
-----	---
C317	193
C318	193
C319	194
C320	194

SYMBOL NO.	INDEX NO.
C321	194
C322	194
C323	194
C324	194
C325	194
C326	194
C327	194
-----	---
-----	---
----	---

CAPACITOR

SYMBOL NO.	INDEX NO.
-----	---
-----	---
C333	192
----	---
C335	193
C336	193
C337	193
C338	193
C339	194
C340	194

SYMBOL NO.	INDEX NO.
C341	194
C342	194
C343	194
C344	194
C345	194
C346	194
C347	194
-----	---
-----	---
C350	193

SYMBOL NO.	INDEX NO.
C351	192
-----	---
-----	---
-----	---
C355	193
C356	193
C357	193
C358	193
C359	193
C360	194

SYMBOL NO.	INDEX NO.
C361	194
C362	194
C363	194
C364	194
C365	194
-----	---
C367	193
C368	193
C369	192
-----	---

SYMBOL NO.	INDEX NO.
C371	194
C372	194
C373	194
C374	194
C375	194
C376	194
C377	194
C378	194
C379	193
C380	193

SYMBOL NO.	INDEX NO.
-----	---
-----	---
C383	194
C384	194
C385	194
C386	194
C387	194
C388	194
C389	194
C390	194

SYMBOL NO.	INDEX NO.
C391	194
C392	194
C393	194
C394	194
C395	194
C396	194
C397	194
-----	---
C399	193
C400	193

51. IPU Board (A172/A199)

CAPACITOR

SYMBOL NO.	INDEX NO.	SYMBOL NO.	INDEX NO.	SYMBOL NO.	INDEX NO.	SYMBOL NO.	INDEX NO.	SYMBOL NO.	INDEX NO.	SYMBOL NO.	INDEX NO.	SYMBOL NO.	INDEX NO.
C401	194	----	---	----	---	----	---	----	---	C451	194	C461	192
C402	194	C412	192	----	---	C432	162	----	---	C452	194	C462	192
C403	194	----	---	----	---	C433	194	----	---	C453	194	C463	193
C404	194	----	---	C424	194	C434	192	----	---	C454	194	C464	194
C405	194	C415	192	C425	194	C435	194	----	---	C455	194	C465	193
C406	194	C416	193	C426	194	C436	194	C446	194	C456	194	C466	193
C407	194	C417	192	C427	194	C437	194	C447	194	C457	194	----	---
C408	194	C418	193	C428	194	C438	193	C448	191	C458	192	----	---
----	---	C419	194	C429	194	----	---	C449	161	C459	193	----	---
----	---	----	---	C430	194	----	---	C450	194	C460	192	C470	192

CAPACITOR

SYMBOL NO.	INDEX NO.	SYMBOL NO.	INDEX NO.	SYMBOL NO.	INDEX NO.	SYMBOL NO.	INDEX NO.	SYMBOL NO.	INDEX NO.	SYMBOL NO.	INDEX NO.	SYMBOL NO.	INDEX NO.
C471	192	C481	193	----	---	C501	194	C511	194	----	---	C531	194
----	---	C482	162	----	---	C502	194	C512	194	C522	194	C532	193
C473	194	----	---	C493	194	C503	194	----	---	C523	194	C533	193
C474	194	C484	193	C494	194	----	---	----	---	C524	193	C534	193
C475	194	----	---	C495	193	----	---	C515	193	C525	193	C535	194
C476	194	C486	193	C496	194	----	---	C516	193	C526	194	C536	193
C477	193	----	---	C497	193	----	---	C517	193	C527	194	C537	193
C478	193	----	---	C498	193	C508	194	C518	193	C528	194	C538	193
C479	193	C489	194	C499	194	C509	194	C519	194	C529	194	C539	193
C480	194	C490	194	C500	194	C510	194	----	---	C530	194	C540	193

51. IPU Board (A172/A199)

CAPACITOR

SYMBOL NO.	INDEX NO.	SYMBOL NO.	INDEX NO.	SYMBOL NO.	INDEX NO.	SYMBOL NO.	INDEX NO.	SYMBOL NO.	INDEX NO.	SYMBOL NO.	INDEX NO.	SYMBOL NO.	INDEX NO.
C541	193	C551	194	C561	190	C571	190	C581	190	C591	194	C601	161
C542	194	C552	193	C562	190	C572	190	C582	190	C592	194	C602	161
C543	194	C553	193	C563	190	C573	190	C583	190	C593	161	C603	161
C544	194	C554	190	C564	190	C574	190	C584	190	C594	161	C604	161
C545	193	C555	190	C565	190	C575	190	C585	190	C595	161	C605	161
C546	193	C556	190	C566	190	C576	190	C586	194	C596	190	C606	161
C547	193	C557	190	C567	190	C577	190	C587	190	C597	190	C607	161
C548	194	C558	190	C568	190	C578	190	C588	194	C598	194	C608	193
C549	194	C559	190	C569	190	C579	190	C589	190	C599	161	C609	190
C550	194	C560	190	C570	190	C580	190	C590	194	C600	161	C610	190

CAPACITOR

SYMBOL NO.	INDEX NO.	SYMBOL NO.	INDEX NO.
C611	194	C621	193
C612	194	C622	193
C613	190	C623	193
----	---	C624	193
C615	193	C625	193
C616	193	C626	193
C617	193	C627	193
C618	193	C628	193
C619	193	C629	194
C620	193	C630	194

CONNECTOR

SYMBOL NO.	INDEX NO.
CN301	102
CN302	106
CN303	101
CN304	105
CN305	104
CN306	103
CN308	107
CN309	104
CN310	108
CN311	108

FIL

SYMBOL NO.	INDEX NO.
FIL301	157
-----	---
FIL303	157
FIL304	160
FIL305	159
FIL306	157
FIL307	163
FIL308	163
FIL309	163
FIL310	158

IC

SYMBOL NO.	INDEX NO.	SYMBOL NO.	INDEX NO.	SYMBOL NO.	INDEX NO.
IC301	2	IC311	134	IC321	136
IC302	2	IC312	151	IC322	9
IC303	2	IC313	134	IC323	1
IC304	196	IC314	135	IC324	134
IC305	12	IC315	134	IC325	134
[SOCKET]	109				
IC306	196	IC316	134	IC326	133
IC307	2	IC317	134	IC327	134
IC308	4	-----	---	IC328	7
IC309	11	IC319	1	IC329	134
IC310	134	IC320	134	IC330	133

IC

SYMBOL NO.	INDEX NO.
IC331	134
IC332	134
IC333	135
IC334	134
IC335	8
IC336	6
IC337	146
IC338	6
IC339	146
IC340	6

SYMBOL NO.	INDEX NO.
IC341	146
-----	---
IC343	135
IC344	5
IC345	135
IC346	5
IC347	135
IC348	5
IC349	134
IC350	134

SYMBOL NO.	INDEX NO.
IC351	135
IC352	135
IC353	3
IC354	135
IC355	10
IC356	135
IC357	134
IC358	135
IC359	134
IC360	134

SYMBOL NO.	INDEX NO.
IC361	134
-----	---
IC363	134
IC364	135
-----	---
-----	---
-----	---
IC368	129
IC369	125
-----	---

SYMBOL NO.	INDEX NO.
IC371	132
-----	---
IC373	116
-----	---
IC375	141
IC376	127
IC377	141
IC378	125
-----	---
-----	---

SYMBOL NO.	INDEX NO.
-----	---
IC382	116
IC383	141
IC384	137
-----	---
IC386	139
IC387	115
IC388	140
-----	---
-----	---

SYMBOL NO.	INDEX NO.
IC391	124
IC392	137
-----	---
IC394	138
-----	---
IC396	131
IC397	119
-----	---
-----	---
IC400	119

IC

SYMBOL NO.	INDEX NO.
-----	---
IC402	119
IC403	142
IC404	141
IC405	142
IC406	120
IC407	150
IC408	123
IC409	142
IC410	123

SYMBOL NO.	INDEX NO.
IC411	122
IC412	122
-----	---
IC414	117
IC415	118
IC416	149
-----	---
-----	---
-----	---

SYMBOL NO.	INDEX NO.
IC421	120
IC422	120
IC423	137
IC424	137
IC425	137
IC426	116
IC427	116
IC428	116
IC429	13
IC430	134

SYMBOL NO.	INDEX NO.
IC431	134
IC432	144
IC433	115
-----	---
IC435	142
IC436	131
IC437	131
IC438	114
IC439	114
IC440	114

SYMBOL NO.	INDEX NO.
IC441	137
IC442	114
IC443	137
IC444	114
IC445	137
IC446	114
IC447	114
IC448	114
IC449	116
IC450	114

SYMBOL NO.	INDEX NO.
IC451	114
IC452	195
IC453	143
IC454	130
IC455	143
IC456	130
IC457	114
IC458	126
IC459	128
IC460	196

SYMBOL NO.	INDEX NO.
IC461	196
IC462	138
IC463	124
IC464	145
IC465	121
IC466	121
-----	---
IC468	132
IC469	126
-----	---

51. IPU Board (A172/A199)

JP

SYMBOL NO.	INDEX NO.
JP301	181
JP302	181
JP303	181
JP304	181
JP305	181
JP306	181
JP307	181
JP308	181
JP309	181
JP310	181

L

SYMBOL NO.	INDEX NO.
L302	164
L303	164

LED

SYMBOL NO.	INDEX NO.
LED308	113
LED309	113

Q

SYMBOL NO.	INDEX NO.
Q301	111

REG

SYMBOL NO.	INDEX NO.
REG301	147
REG303	148

RESISTOR

SYMBOL NO.	INDEX NO.
----	---
----	---
R303	180
R304	180
R305	186
R306	186
R307	186
R308	173
R309	173
R310	173

SYMBOL NO.	INDEX NO.
R311	176
R312	180
R313	180
R314	180
R315	180
R316	176
R317	186
R318	186
R319	186
R320	186

RESISTOR

SYMBOL NO.	INDEX NO.
R321	186
R322	177
R323	170
R324	168
R325	176
R326	187
R327	176
R328	173
R329	173
R330	176

SYMBOL NO.	INDEX NO.
R331	177
R332	173
R333	173
R334	173
R335	173
R336	173
R337	176
R338	176
R339	180
R340	180

SYMBOL NO.	INDEX NO.
R341	168
----	---
R343	168
R344	175
R345	173
R346	176
R347	176
R348	176
R349	176
R350	176

SYMBOL NO.	INDEX NO.
R351	168
R352	168
R353	176
R354	168
R358	176
R359	176
R362	175
R365	167
R366	169
R367	176

SYMBOL NO.	INDEX NO.
R376	180
R378	168
R379	168
R380	186
R381	186
R382	186
R383	186
R384	179
R385	179
R386	173

SYMBOL NO.	INDEX NO.
R391	180
R394	180
R400	176
R404	176
R405	184
R406	185
R407	171
R408	168
R409	179
R410	179

SYMBOL NO.	INDEX NO.
R411	165
R412	176
----	---
R414	176
----	---
R416	173
R417	173
R418	167
R419	167
R420	167

51. IPU Board (A172/A199)

RESISTOR

SYMBOL NO.	INDEX NO.
R424	180
R425	180
R426	180
R427	180
R428	179
R429	179
R430	172
R431	180
R432	180
R433	183

SYMBOL NO.	INDEX NO.
R434	182
R435	182
R445	168
R446	168
R447	168
R448	168
R449	168
R450	168
R451	166
R452	166

SYMBOL NO.	INDEX NO.
R453	166
R454	166
R455	166
R456	166
R457	166
R458	166
R459	176
----	---
----	---
----	---

SYMBOL NO.	INDEX NO.
----	---
----	---
----	---
R486	173
R487	178
R488	178
R489	174
R490	173
R491	176
R492	168

SYMBOL NO.	INDEX NO.
R493	176
R494	176
R495	168
----	---
R497	180
R498	168
R499	168
R500	168
R501	168
R502	167

SYMBOL NO.	INDEX NO.
R503	167
R504	176
R505	176
R506	176
R507	176
R508	176
R509	176
R510	176
R511	176
R512	176

SYMBOL NO.	INDEX NO.
R513	176
R514	176
R515	176
R516	176
R517	176
R518	176
R519	176
R520	176
R521	176
R522	176

RESISTOR

SYMBOL NO.	INDEX NO.
R523	176
R524	176
R525	176
R526	168
R527	176
R528	176
R529	176
R530	176
R531	176

SW

SYMBOL NO.	INDEX NO.
SW301	110

XTL

SYMBOL NO.	INDEX NO.
XTL301	152
XTL302	153

ZD

SYMBOL NO.	INDEX NO.
ZD301	112

51. IPU Board (A172/A199)

Index No.	Part No.	Description	Q ty Per Assembly
*	A172 5242	IPU Board	
1	A049 5102	IC - TC23SC080AF-501	
2	A109 5203	IC - 8K8BIT35NS	
3	A109 5222	IC - RF5C221	
4	A109 5227	IC - MB87872	
5	A134 5209	LSI - MSM518222-30JS-1	
6	A172 5220	IC - UPD93143GM-JEU	
7	A172 5221	IC - RF5C284	
8	A172 5224	IC - UPD65646GJ-169-3EN	
9	A172 5225	IC - RF5C285	
10	A172 5226	IC - UPD39181GD-LML	
11	A172 5229	IC - HG62G035R35F	
12	A172 5207	IC - UVEPROM 4M X16 120NS	
13	A172 5231	IC - DRAM 2M 8BIT	

Index No.	Part No.	Description	Q ty Per Assembly
101	1102 5003	Fiber Connector - DC1002 - 2p	
102	1102 5310	Connector - 5p	
103	1102 6296	Connector - 3p	
104	1102 6335	Connector - 4p	
105	1102 6398	Connector - 2p	
106	1102 6567	Connector - PHEC40P-R111	
107	1102 6570	Connector - PHEC60P-R111	
108	1102 7021	Connector - IMSA-9224B-40Z10-GF	
109	1104 0376	IC Socket - 40p - DICF-40CS-E	
110	1204 2156	Dip Switch - 51D-0501	
111	1401 0992	Transistor - 2SB1335	
112	1402 1172	Zener Diode - HZM6.8B	
113	1403 0313	Diode - TLR102A	
114	1407 1605	TTLIC - SN74LS157NS	
115	1407 1741	TTL - SN74LS32NS	
116	1407 1792	IC - SN74LS374NS	
117	1407 2127	TTL - IC74F00SJ	
118	1407 2128	TTL - IC74F02SJ	
119	1407 2137	IC -74F138SJ : TTL	
120	1407 2187	TTLIC - SN74LS07NS	
121	1407 2247	TTL - SN74LS164NS	
122	1407 2249	TTL - SN74LS174NS	
123	1407 2378	TTL - SN74ALS245ANS	
124	1407 2409	IC - SN74LS04M	
125	1407 2464	TTL - IC - SN74ALS74ANS	
126	1407 2588	TTLIC - SN74ALS04BNS	
127	1407 2817	TTL - SN74ALS32NS	
128	1407 3008	TTL - SN74ALS244CNS	
129	1407 3025	IC - SN74ALS02NS	
130	1407 3238	IC - SN74AS08NS	
131	1407 3350	IC - SN74LS74AM	
132	1407 3481	IC - SN74AS32NS	
133	1407 4090	IC - M66250FP	
134	1407 4091	IC - M66251AFP	
135	1407 4092	IC - M66253FP	

Index No.	Part No.	Description	Q ty Per Assembly
136	1407 4188	IC - HD6415108F10	
137	1407 4192	IC - SN74LS244M	
138	1407 4194	IC - SN74LS08M	
139	1407 4195	IC - HD74LS06FP	
140	1407 4196	IC - SN74LS151M	
141	1407 4198	IC - DM74ALS240ASJ	
142	1407 4199	IC - DM74ALS244ASJ	
143	1407 4275	TTL - IC - SN74AS240NS	
144	1407 4335	IC - M66236FP	
145	1407 4427	TTL - IC - SN74AS157NS	
146	1407 4491	SRAM - 256kbit-CY7C199-20VC	
147	1408 0425	IC - NJM79L05	
148	1408 1011	IC - M5237ML	
149	1408 1029	Operational Amplifier - AD847JR	
150	1408 1033	IC - NJM2103M	
151	1408 1048	IC - MB86022PF	
152	1503 0498	Oscillator - 19.6608MHz	
153	1503 0520	Oscillator - 37.1843MHz	
154	1601 1413	Resistor - RCB8C330J	
155	1601 2957	Resistor - RCE9A472J	
156	1601 4021	Resistor - RCE9A103J	
157	1602 0918	Filter - 270pf - EMI	
158	1602 7083	EMI Filter - TU10M	
159	1602 7085	Filter - TV50M	
160	1602 7096	Filter - TX14131NB	
161	1605 0283	Capacitor - 1ηF	
162	1605 0435	Capacitor - 0.47ηF +80% -20% 16V	
163	1607 0069	Fuse - Bl02RN2-R62-PB	
164	1607 0477	Coil - BLM21A121SPB	
165	1630 1121	Resistor - 120P 5% 1/8W	
166	1630 2361	Resistor - 360P	
167	1630 3102	Resistor - 1KP 1/10W 5%	
168	1630 3103	Resistor - 10KP 1/10W 5%	
169	1630 3152	Resistor - 1.5kP - 1/10W	

Index No.	Part No.	Description	Q ty Per Assembly
170	1630 3153	Resistor - 15K P 5% 1/10W	
171	1630 3221	Resistor - 220 P 5% 1/10W	
172	1630 3222	Resistor - 2.2KP 1/10W 5%	
173	1630 3330	Resistor - 33 P 5% 1/10W	
174	1630 3470	Resistor - 47P 1/10W 5%	
175	1630 3471	Resistor - 470P - 1/10W	
176	1630 3472	Resistor - 4.7KP 1/10W 5%	
177	1630 4100	Resistor - 10 P 5% 1/16W	
178	1630 4220	Resistor - 22 P 5% 1/16W	
179	1630 4330	Resistor - 33P 5% 1/8W	
180	1630 4472	Resistor - 4.7KP 5% 1/16W	
181	1633 0000	Resistor - 0P 1/10W:Jamper Chip	
182	1633 1601	Resistor - 1.6KP 1% 1/8W	
183	1633 1801	Resistor - 1.8KP 1% 1/8W	
184	1633 4301	Resistor - 4.3KP 1% 1/8W	
185	1633 5901	Resistor - 5.9K P 1% 1/10W	
186	1634 2209	Resistor - 22.0P 1% 1/8W	
187	1634 6801	Resistor - 6.8KP 1% 1/8W	
188	1642 0101	Capacitor - 100ηF 20% 50V	
189	1643 2100	Capacitor - 10ηF 20%	
190	1660 3471	Capacitor - 470PF 50V	
191	1660 5102	Capacitor - 1000PF 10% 50V	
192	1660 5103	Capacitor - 10000PF 10% 50V	
193	1660 7103	Capacitor - 10000PF 50V	
194	1660 9104	C - 0.1ηF 25V	
195	1901 0008	DRAM - 4M 1MX4 70NS G2	
196	1902 0006	IC - SRAM 256KX8 70NS G1	

52. AC Main Harness (A172/A199)

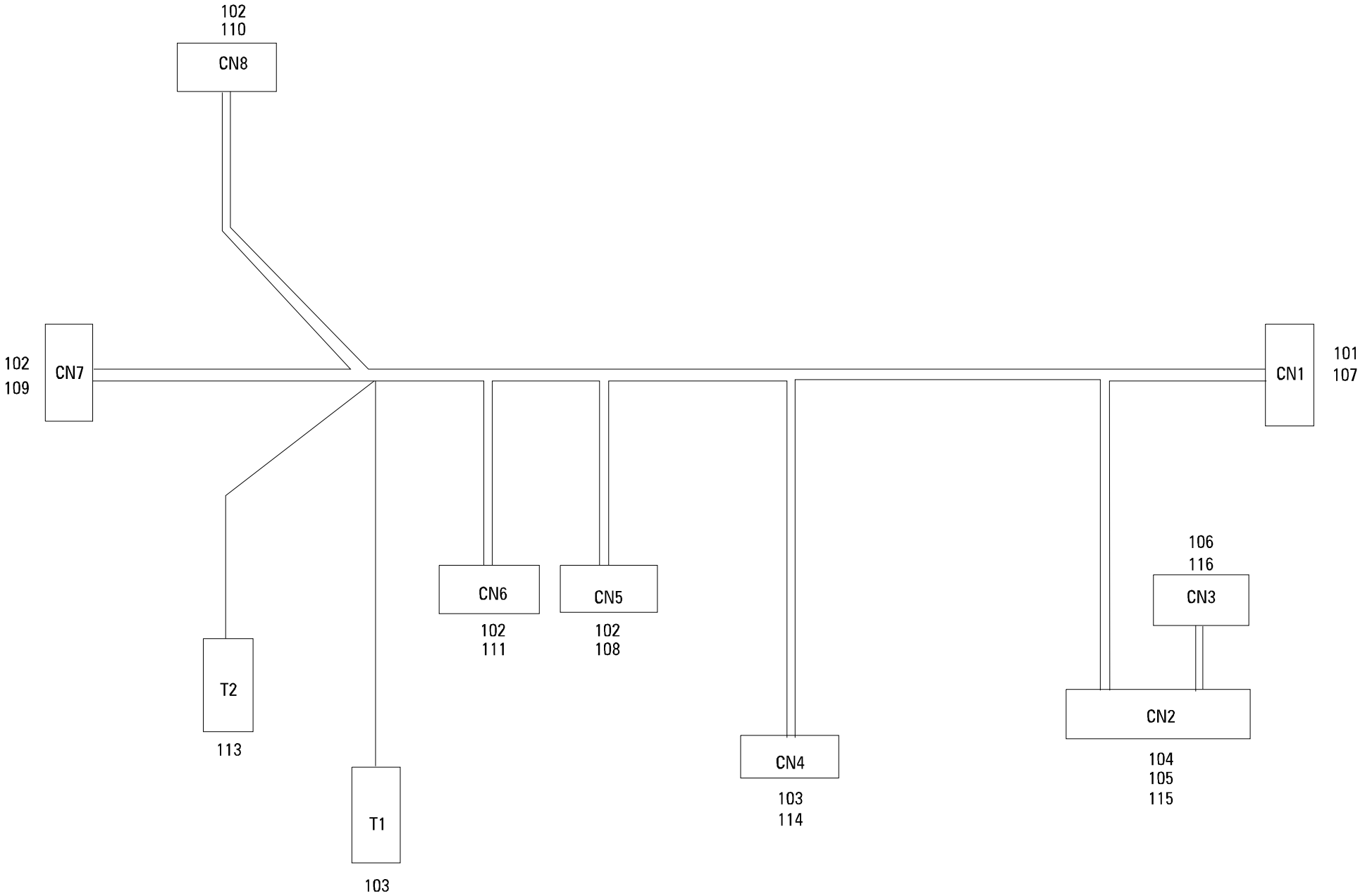

52. AC Main Harness (A172/A199)

Index No.	Part No.	Description	Q ty Per Assembly
*	A109 5382	AC Main Harness	1

Index No.	Part No.	Description	Q ty Per Assembly
101	1100 0863	Stud Pin	
102	1100 0864	Housing - AWG14-20	
103	1100 1241	Socket - MATE-N-LOCK	
104	1100 1339	Pin Contact	
105	1100 1344	Pin Contact	
106	1100 1669	Connector - 1p	
107	1102 0941	Connector - 4p	
108	1102 0946	Housing - 3p	
109	1102 0947	Housing - 3p	
110	1102 0948	Housing - 4p	
111	1102 1017	Housing - 2p Red	
112	1102 1171	Connector - 5p	
113	1102 1404	Connector - 1p	
114	1102 1517	Connector - 4p	
115	1102 5187	Connector - 14p	
116	1102 6213	Connector - 1p	

53. Decal And Document (A172/A199)

1

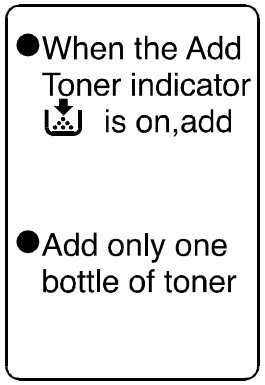

2



3

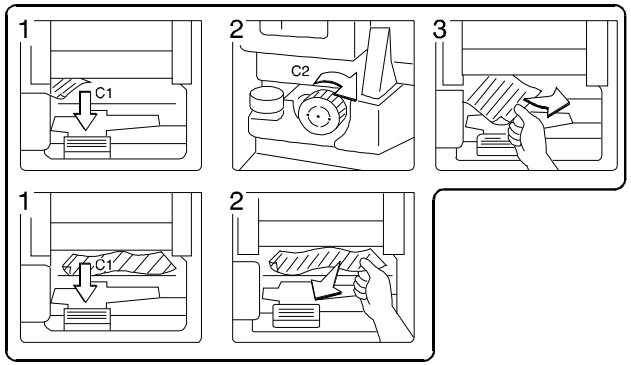

4

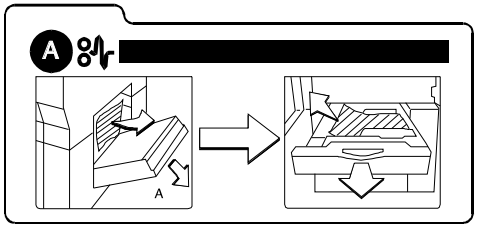

5

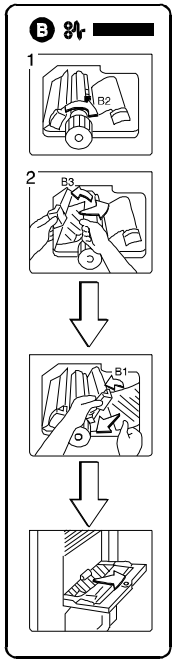

6

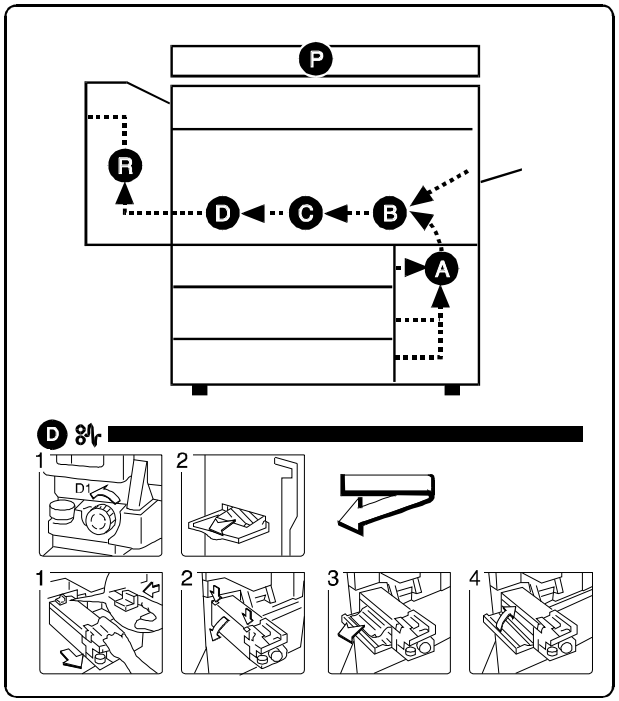

53. Decal And Document (A172/A199)

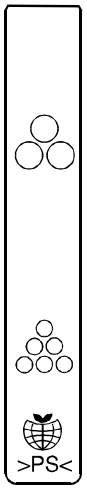

8

nashuatec

Gestetner

Rex•Rotary

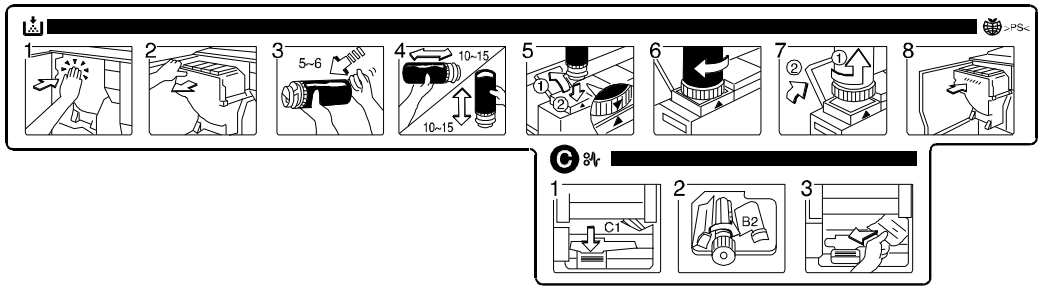

10



11

Copying to be Prohibited

Do not make copies of anything which is prohibited from copying by law.The following items are normally prohibited from copying by national law.Other items may be prohibited by local law.

- Money
- Stamps
- Bonds
- Stocks
- Bank drafts
- Checks
- Passports
- Driver's licenses

12

CAUTION

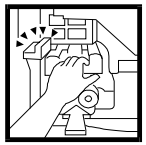

When sliding the fusing unit back in, make sure that it clicks into position.
If it does not, an error will be indicated.

Unnecssary to remove this seal for recycling >PS<

13

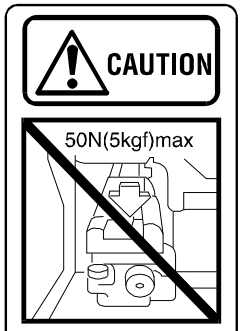

14

DANGER	NVISIBLE LASER RADIATION WHEN OPEN AVOID DIRECT EXPOSURE TO BEAM
VORSICHT	LASERSTRAHLUNG. WENN ABOECKUNG GEOFFNET.NICHT DEM STRAHL AUSSETZEN

15

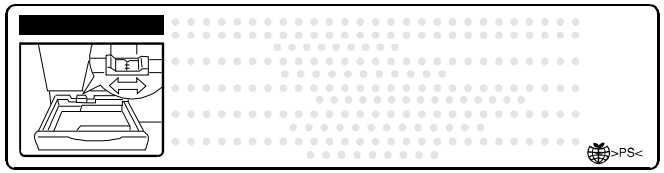

16



17



18



19

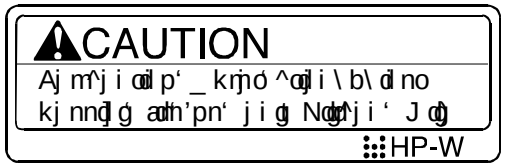

20

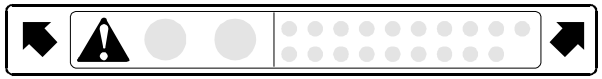

21

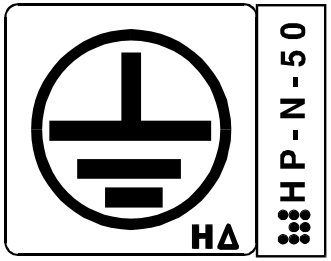

22



23

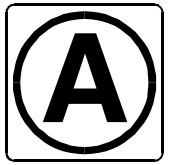

24

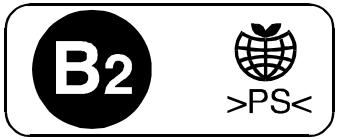

25

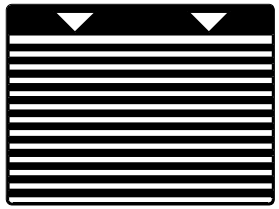

53. Decal And Document (A172/A199)

26

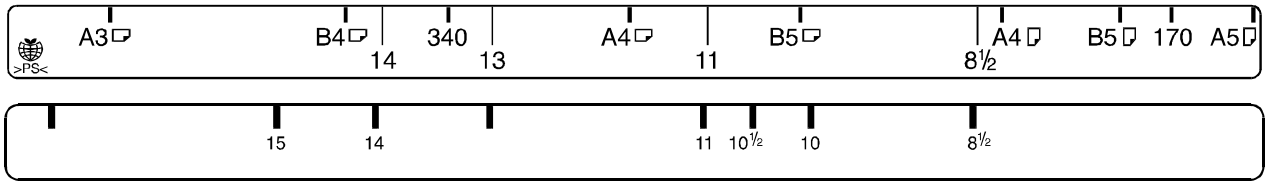

27

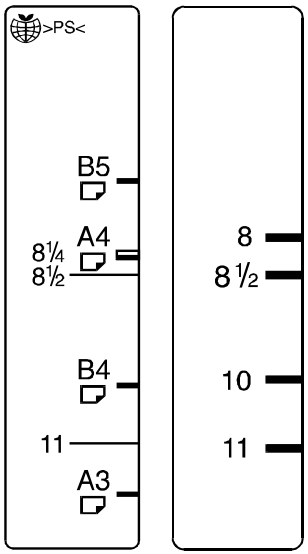

28

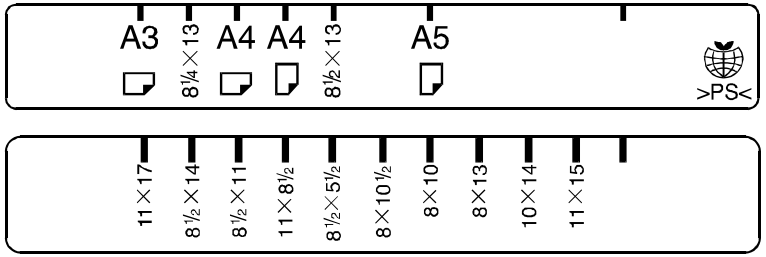

29



30

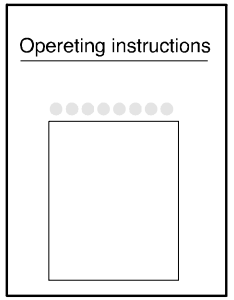

. ,

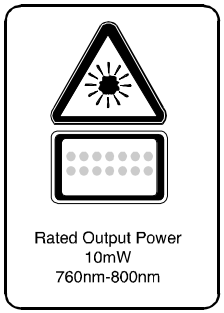

53. Decal And Document (A172/A199)

Index No.	Part No.	Description	Q ty Per Assembly
1	A072 1383	Decal - Adding Toner	1
2	5203 4165	Fusing Thermofuse Decal	1
3	A109 1551	Decal - Misfeed Removal C	1
4	A109 1552	Decal - Misfeed Removal A	1
5	A109 1553	Decal - Misfeed Removal B	1
6	A109 1554	Decal - Misfeed Removal D	1
7	A109 1555	Decal - Total Counter	1
8	A153 6409	Decal - Keytop Cover (GES)	1
8	C225 2866	Decal - Key Top Cover (REX)	1
8	C225 2867	Decal - Cover - Panel - Nashua	1
9	A172 1590	Decal - Toner Supply	1
10	A172 1591	Decal - Color	1
11	A172 6701	Decal - Warning - English	1
12	A172 6703	Decal - Operation	1
13	A172 6707	Decal - Warning	1
14	AA00 0602	Caution Decal - LD Unit Cover	3
15	AA00 0134	Decal - Universal Tray	1
16	AA00 0174	Decal - Tray Cover 1st	1
17	AA00 0175	Decal - Paper Tray Cover No2	1
18	AA00 0176	Decal - Paper Tray Cover No3	1
19	AA00 0339	Decal - Silicone Oil	1
20	AA00 0539	Decal - High Temperature	1
21	AA00 1190	Decal - Ground	1
22	AA00 1281	Decal - Lever	1
23	AA00 1346	Decal - Misfeed Removal A	1
24	AA00 1377	Decal - Positioning Display - B2	1
25	AA00 2010	Decal - Paper Level	1
26	AA00 2178	Decal - End Fence - A4	1
26	AA00 2179	Decal - End Fence LT	1
27	AA00 2176	Decal - Side Fence - A4	1
27	AA00 2177	Decal - Side Fence - LT	1
28	AA00 2181	Decal - LT	1
28	AA00 2184	Decal - A4	1
29	AA00 2217	Decal - Bypass Feed - A4	1
29	AA00 2230	Decal - Paper Size - LT	1

Index No.	Part No.	Description	Q ty Per Assembly
30	A172 8607	Operating Instructions - English LT	1
30	A172 8608	Operating Instruction - English A4	1
30	A172 8650	Operating Instructions - English	1
30	A172 8690	Opersting Instruction - English A4	1
30	A172 8697	Operating Instruction - English LT	1
31	AA00 0445	Caution Decal - LD Unit	1



54. Special Tools (A172/A199)

1

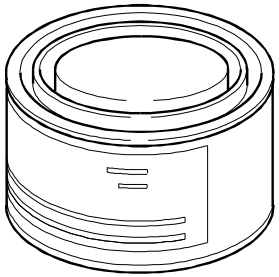

2

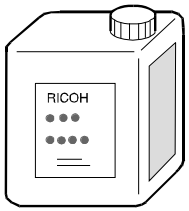

3

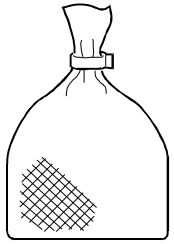

4

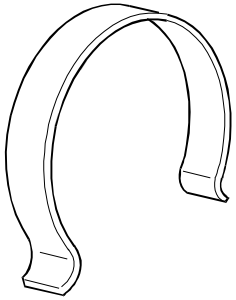

5

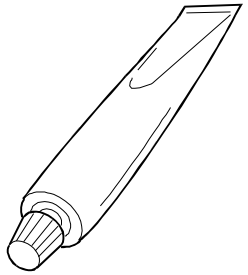

6



7

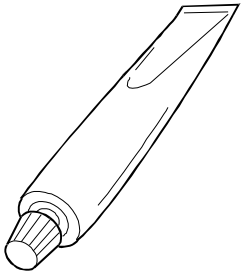

8

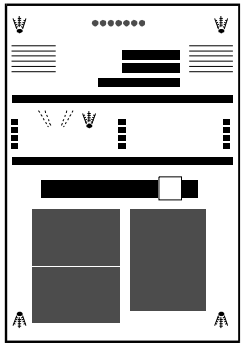

9

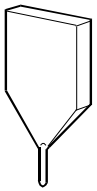

11

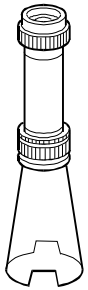

10

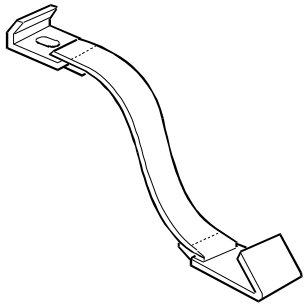

54. Special Tools (A172/A199)

Index No.	Part No.	Description	Q ty Per Assembly
1	5219 9300	Grease Mt - 1	1
2	5420 9550	Silicone Oil	1
3	5442 9101	Setting Powder	1
4	A006 9103	Omega Clamp	1
5	A008 9502	Silicone Grease - G40m	1
6	A012 9501	Scanner Positioning Pin - 4pcs/set	1
7	A028 9300	Grease Barrierta JFE 55/2	1
8	A092 9503	C4 Color Test Chart (3 Pcs/set)	1
9	5205 8730	Counter Set Key	1
10	A109 9001	DJF Fixing Band	1
11	C401 9503	20x Magnification Scope	1

Index No.	Part No.	Description	Q ty Per Assembly

PARTS INDEX

PM Parts Index

Section Name	Part No.	Description in Service Manual	Description in Parts Catalog	Q ty per Assembly	Page and Index No
Optics Section 2 (A172/A199)	AX52 0030	Exposure lamp	Exposuer Lamp - 75V 200W	1	21- 13
Optics Section 4 (A172/A199)	AA01 2094	Optics Cooling Fan Filter	Dust Filter - EFA-15N	1	25- 16
Paper Feed Section 1 (A172/A199)	AF03 0020	Pick-up Roller	Pick-up Roller	3	41- 19
	AF03 1022	By-pass Paper Feed Roller	Paper Feed Roller	3	41- 18
Paper Feed Section 2 (A172/A199)	AF03 2023	Separation Roller	Separation Roller	3	43- 25
By-pass Feed Table (A172/A199)	AF03 0021	By-pass Pick-up Roller	Pick-up Roller	1	45- 34
	AF03 1023	Paper Feed Roller	Paper Feed Roller	1	45- 29
	AF03 2021	By-pass Separation Roller	Separation Roller	1	45- 27
Around The Drum (A172/A199)	A172 7642	Corona Wire/Grid Cleaner	Charge Wire/Grid Cleaner	1	49- 29
	AD02 0056	PCC Wire	PCC Wire	1	49- 6
	AD02 0069	Charge Corona Grid	Charge Corona Grid	1	49- 17
	AD02 0070	Charge Corona Wire	Charge Corona Wire	1	49- 18
Drum Unit 1 (A172/A199)	A109 3623	Bias Roller Blade	Bias Roller Blade	1	51- 25
	A172 3601	Cleaning Brush	Cleaning Brush	1	51- 14
	A172 3602	Drum Lubricant Bar	Lubricant Bar	1	51- 29
Drum Unit 2 (A172/A199)	A172 3598	Cleaning Blade	Cleaning Blade	1	53- 11
Transfer Belt Unit 1 (A172/A199)	A109 6130	Transfer Belt	Transfer Belt	1	67- 15
Transfer Roller Unit (A172/A199)	A172 6251	Paper Discharge Plate	Paper Discharge Plate	1	71- 2
	A172 6269	Roller Lubricant Bar	Roller Lubricant Bar	1	71- 24
	AD04 1037	Transfer Roller Blade	Cleaning Blade	1	71- 8
Belt Cleaning Unit (A172/A199)	A172 6305	Belt Lubricant Bar	Lubricant Bar	1	75- 35
	A172 6308	Cleaning Blade	Cleaning Blade	1	75- 12
Toner Collection Section (A172/A199)	AA01 2068	Inner Cooling Fan Filer	Inner Cooling Fan Filter	1	77- 13
Fusing Unit 2 (A172/A199)	AE04 5015	Oil Supply Pad	Oil Supply Pad	1	81- 17
Fusing Unit 3 (A172/A199)	AE04 1002	Oil Blade	Oil Blade	1	83- 16
Fusing Unit 4 (A172/A199)	AE01 0012	Hot Roller	Hot Roller	1	85- 8
	AE02 0056	Pressure Roller	Pressure Roller	1	85- 9

PM Parts Index

Section Name	Part No.	Description in Service Manual	Description in Parts Catalog	Q ty per Assembly	Page and Index No
Fusing Unit 4 (A172/A199)	AE03 0015	Hot Roller Ball Bearing	Ball Bearing - 35x47x7	2	85- 14
	AE03 0019	Pressure Roller Ball Bearing	Ball Bearing - 7x20x32	2	85- 16
Electrical Section 3 (A172/A199)	A109 2410	Charge Inlet Fan Filter	Filter Charge Inlet Fan	1	99- 25
Frame Section 1 (A172/A199)	AA01 0080	Development Ozone Filter	Ozone Filter	1	103- 14
	AA01 2084	Development Filter	Development Filter	1	103- 15
Frame Section 2 (A172/A199)	AA01 2069	Development Exhaust Fan Filter	Development Exhaust Fan Filter	2	105- 1

Parts Index

Part No.	Description	Page and Index No.
A172 1129	Operation Panel Left Bracket	19- 27
A172 1132	Lower Cover - Operation Panel	19- 3
A172 1151	Grounding Plate	109- 24
A172 1260	Rear Upper Cover	13- 5
A172 1262	Left Upper Cover	13- 24
A172 1263	Front Right Upper Cover	13- 25
A172 1264	Front Left Upper Cover	13- 16
A172 1265	Original Exit Guide	13- 23
A172 1266	Right Upper Cover	13- 21
A172 1270	Right Cover Ass y	13- 1
A172 1272	Right Cover Cap	13- 2
A172 1275	Left Cover Ass y	13- 6
A172 1277	Dust Filter Cover	13- 22
A172 1279	Sorter Cap - Small	13- 9
A172 1279	Large Cap - Sorter	35- 3
A172 1280	Sorter Cap - Large	13- 8
A172 1290	Left Door Ass y (A172/A199)(RIC)	15- 19
A172 1294	Left Door Stopper	15- 26
A172 1300	Rear Cover Ass y (115V)	13- 19
A172 1303	Rear Cover Ass y (230V)	13- 19
A172 1305	LCT Rear Cover	35- 7
A172 1315	Left Lower Cover Ass y - LCT	35- 2
A172 1317	Left Lower Rear Cover - LT	35- 5
A172 1321	Right Lower Cover - LCT	35- 20
A172 1326	Front Right Lower Cover - LCT	35- 8
A172 1327	Lower Cover - LCT	39- 39
A172 1330	Operation Instructions Holder	35- 1
A172 1340	Right Door Ass y (A172/A199)(SVN/INF/NRG)	15- 13
A172 1470	LED Lens	17- 30
A172 1471	Sheet OP-2	17- 27
A172 1472	Shealding Plate	17- 26
A172 1473	Sheet OP-1	17- 28
A172 1480	Operation Panel Lower Cover	17- 3
A172 1481	Dial Key	17- 23
A172 1483	Key-top Start	17- 4

Part No.	Description	Page and Index No
A172 1485	Key-top 10 Keys	17- 5
A172 1486	Key-top Interrupt	17- 6
A172 1488	Key-top Memory Call	17- 7
A172 1489	Key-top Program	17- 8
A172 1490	Key-top Color Adjust	17- 9
A172 1491	Key-top Inishraise	17- 18
A172 1492	Key-top Option	17- 10
A172 1496	Sheet	17- 29
A172 1497	Left Guide Bracket	17- 20
A172 1500	Operation Key Board - Color	17- 37
A172 1503	LCD Harness (A172)	17- 11
A172 1530	Operation Key Board - Mono	17- 37
A172 1533	LCD Harness (A199)	17- 11
A172 1554	Operation Panel Board - Color (A172)	17- 12
A172 1557	Operation Panel Board - Mono (A199)	17- 12
A172 1570	Touch Panel (Color)	17- 25
A172 1576	Grounding Wire	17- 22
A172 1580	Editor Pen	17- 16
A172 1585	Right Guide Bracket	17- 21
A172 1590	Decal - Toner Supply	55- 21
A172 1590	Decal - Toner Supply	127- 9
A172 1591	Decal - Color (SVN/INF/NRG)	15- 42
A172 1591	Decal - Color	127- 10
A172 1595	Decal - Color (RIC)	15- 42
A172 1636	Lens Holder Unit	23- 7
A172 1700	Reflector Ass y	21- 16
A172 1853	Scanner Control Board Bracket	23- 10
A172 1900	Left Scale - A4	13- 14
A172 1901	Rear Scale - A4	13- 17
A172 1964	Scale Cap	13- 13
A172 2270	Drum Drive Shaft	91- 24
A172 2594	Registration Sensor Holder	47- 7
A172 2595	Thermofuse Holder	47- 46
A172 2621	By-pass Feed Table	45- 17
A172 2627	Paper Support Arm	45- 44

Part No.	Description	Page and Index No.
A172 2630	By-pass Feed Cover	45- 36
A172 2633	Front Side Fence - By-pass Feed	45- 46
A172 2635	Rear Side Fence - By-pass Feed	45- 45
A172 2661	Pick-up Arm - By-pass Feed	45- 32
A172 2662	Pick-up Roller Cover - By-pass Feed	45- 35
A172 2670	By-pass Feed Housing	45- 16
A172 2675	Housing Cover	45- 21
A172 2780	Vertical Transport Cover	39- 31
A172 2829	Paper Tray Cover	31- 1
A172 2829	Paper Tray Cover	33- 1
A172 3073	Development Sleeve - 1st	59- 15
A172 3074	Development Sleeve Ass y - Cyan	61- 3
A172 3214	Development Sleeve - M/Y	63- 1
A172 3214	Development Sleeve - M/Y	65- 1
A172 3325	Development Unit Base	105- 16
A172 3352	Toner Hopper Caseing	57- 15
A172 3420	Left Side Plate - Hopper	55- 1
A172 3437	Latch Bracket-toner Tank	103- 2
A172 3438	Connector Bracket	107- 13
A172 3439	Connector Holder	107- 25
A172 3455	Left Stay - Toner Hopper	107- 6
A172 3462	Harness Calmp	55- 24
A172 3464	Agitator	57- 14
A172 3468	Black Agitator	57- 11
A172 3472	Spring	57- 12
A172 3473	Tonner Supply Roller Joint	57- 26
A172 3474	Latch	103- 3
A172 3475	Tank Unit Stopper	55- 14
A172 3560	Cleaning Unit	53- *
A172 3577	Pressure Spring - Cleaning Brush	51- 23
A172 3598	Cleaning Blade	53- 11
A172 3601	Cleaning Brush	51- 14
A172 3602	Lubricant Bar	51- 29
A172 3604	Cleaning Brush Ass y	51- 28
A172 3606	Cleaning Bias Receptacle	97- 6

Part No.	Description	Page and Index No
A172 3608	Cleaning Receptacle	97- 4
A172 3855	Transport Tank	73- 8
A172 3870	Spring Plate - Transport	109- 23
A172 3881	Transport Sensor Bracket	105- 18
A172 4171	Right Stay - Fusing	85- 26
A172 4172	Front Spring Plate	85- 28
A172 4173	Rear Spring Plate	85- 29
A172 4217	Paper Exit Cover	79- 1
A172 4663	Tightener Bracket	89- 18
A172 4680	Spacer	91- 30
A172 4742	Motor Bracket	89- 20
A172 4754	Belt Tightener	87- 2
A172 5108	Main Control Board	99- 8
A172 5108	Main Control Board	115- *
A172 5111	Relay Control Board	95- 23
A172 5114	IC - Main Control 10	99- 27
A172 5114	IC - Main Control 10	115- 2
A172 5115	IC - Main Control 20	99- 28
A172 5115	IC - Main Control 20	115- 3
A172 5121	NV RAM Board	99- 9
A172 5121	NV RAM Board	115- 6
A172 5123	ROM Board - Main	99- 18
A172 5123	ROM Board - Main	115- 4
A172 5126	Bypass Feed Table Sensor - 230V	45- 40
A172 5129	IC - Main Control 30	99- 4
A172 5129	IC - Main Control 30	115- 5
A172 5145	IC - UPD78P312ACW	23- 22
A172 5146	IC - UVEPROM 512K X8 120NS	23- 21
A172 5151	Scanner Control Board	25- 29
A172 5182	Transport Drive Board	95- 19
A172 5184	IC - UPD78P312ACW	95- 11
A172 5207	IC - UVEPROM 4M X16 120NS	27- 28
A172 5207	IC - UVEPROM 4M X16 120NS	121- 12
A172 5217	DE I/F Board	27- 34
A172 5220	IC - UPD93143GM-JEU	121- 6

Part No.	Description	Page and Index No.
A172 5221	IC - RF5C284	121- 7
A172 5224	IC - UPD65646GJ-169-3EN	121- 8
A172 5225	IC - RF5C285	121- 9
A172 5226	IC - UPD39181GD-LML	121- 10
A172 5229	IC - HG62G035R35F	121- 11
A172 5231	IC - DRAM 2M 8BIT	121- 13
A172 5242	IPU Board	27- 7
A172 5242	IPU Board	121- *
A172 5291	Scanner Control Board	23- 13
A172 5306	Hopper Harness	55- 2
A172 5307	Hopper Relay Harness - 1	107- 5
A172 5308	Hopper Relay Harness - 2	107- 14
A172 5326	IPU Harness	27- 33
A172 5339	Operation Panel Harness - DC	25- 10
A172 5356	DC Relay Harness	101- 12
A172 5383	Heater Harness - LCT	39- 11
A172 5383	Heater Harness - LCT	101- 22
A172 5385	Heater Harness - Transfer	101- 25
A172 5386	Heater Harness - T/S Unit	97- 7
A172 5388	Belt Cleaning Harness	75- 41
A172 5389	Heater Harness	47- 47
A172 5392	Operation Panel Harness - IPU 1	17- 17
A172 5393	Operation Panel Harness - IPU 2	27- 16
A172 5406	Pressure Roller Thermistor	83- 2
A172 5414	Thermofuse - 28 c 120V 3.0A	47- 45
A172 5431	Noise Filter Board - 115V	101- 19
A172 5471	AC Drive Board - 115V	27- 15
A172 5631	Noise Filter Board - 230V	101- 19
A172 5671	AC Drive Board - 230V	27- 15
A172 5701	IPU Base Plate	27- 4
A172 5707	IPU Cover	27- 6
A172 5736	Harness Guide	27- 17
A172 5742	Board Brakcet	99- 19
A172 5743	Interface Board 2 Bracket	99- 11
A172 5744	Bracket-cleaner Motor Drive Board	87- 29

Part No.	Description	Page and Index No
A172 5760	Power Pack Bracket	99- 20
A172 6000	Transfer Belt Unit	67- *
A172 6055	Belt Unit - Front Bracket	67- 6
A172 6058	Belt Unit - Rear Bracket	67- 16
A172 6062	Belt Driven Roller	67- 22
A172 6157	Belt Support Roller	67- 23
A172 6200	Transfer Roller	71- 7
A172 6215	Transfer Belt Roller Bracket	71- 23
A172 6222	Blade Holder	71- 9
A172 6235	Lower Guide Plate - Transfer	71- 14
A172 6251	Paper Discharge Plate	71- 2
A172 6256	Support Plate - Separation Corona	71- 1
A172 6260	Spring Plate Support	71- 26
A172 6266	Lubricant Bar Stopper	71- 27
A172 6267	Spring Plate	71- 25
A172 6269	Roller Lubricant Bar	71- 24
A172 6284	Anti-condensation Heater Cover	47- 41
A172 6301	Cleaning Blade Bracket	75- 19
A172 6301	Cleaning Blade Bracket	75- 33
A172 6303	Lubricant Bar Bracket	75- 34
A172 6305	Lubricant Bar	75- 35
A172 6308	Cleaning Blade	75- 12
A172 6310	Lubricant Lever	75- 36
A172 6312	Front Bracket - PTL	75- 37
A172 6313	Rear Bracket - PTL	75- 38
A172 6314	Bushing	75- 39
A172 6315	Spring	75- 40
A172 6316	Lever Spring	75- 42
A172 6318	Cleaning Left Stay	75- 5
A172 6330	Philips Pan Head Screw - M4	75- 47
A172 6352	Belt Cleaning Case	75- 14
A172 6354	Cleaning Blade Bracket	75- 26
A172 6356	Lubricant Bar Bracket	75- 44
A172 6360	Belt Cleaning Unit	75- *
A172 6701	Decal - Warning - English	127- 11

Part No.	Description	Page and Index No.
A172 6703	Decal - Operation	15- 43
A172 6703	Decal - Operation	127- 12
A172 6704	Model Name Plate - Ges - 2606E	15- 45
A172 6705	Model Name Plate - Nashua - C606E	15- 45
A172 6706	Model Name Plate - Rex - CC8606E	15- 45
A172 6707	Decal - Warning	79- 36
A172 6707	Decal - Warning	127- 13
A172 7100	Door - Right - Ric - Edit (A172-RIC)	15- 13
A172 7105	Door - Left - Savin - Edit (A172-SVN)	15- 19
A172 7115	Left Door Ass y (A172/A199)(NRG)	15- 19
A172 7120	Door - Left - Inf - Edit (A172-INF)	15- 19
A172 7301	Operation Panel Ass y - LT (A172)	13- 3
A172 7301	Operation Panel Ass y - LT (A172)	17- *
A172 7302	Operation Panel Ass y - A4 (A172)(RIC/INF)	13- 3
A172 7302	Operation Panel Ass y - A4 (A172)(RIC/INF)	17- *
A172 7303	Operation Panel Ass y - A4 (A172)(NRG)	13- 3
A172 7303	Operation Panel Ass y - A4 (A172)(NRG)	17- *
A172 7320	Operation Panel Cover (115V)	17- 14
A172 7338	Operation Panel Cover (230V)	17- 14
A172 7340	Key-top Clear Mode	17- 15
A172 7348	Support Bracket	17- 2
A172 7380	SCU Harness	17- 19
A172 7400	Rom Board - Color (A172)	17- 13
A172 7401	Rom Board - Mono (A199)	17- 13
A172 7411	IC - UVEPROM 4M X8 120NS (IC1)(English)	17- 31
A172 7413	IC - UVEPROM 4M X8 120NS (IC3)(English)	17- 32
A172 7414	IC - UVEPROM 4M X8 120NS (IC4)(English)	17- 33
A172 7416	IC - UVEPROM 4M X8 120NS (IC6)(English)	17- 34
A172 7417	IC - UVEPROM 4M X8 120NS (IC7)(English)	17- 35
A172 7418	IC - UVEPROM 4M X8 120NS (IC8)(English)	17- 36
A172 7610	Grid Fixing Plate	49- 16
A172 7611	Positioning Pin	49- 10
A172 7615	Left Caseing - Charge Corona	49- 12
A172 7616	Right Caseing - Charge Corona	49- 19
A172 7630	Screw Shaft	49- 31

Part No.	Description	Page and Index No
A172 7631	Front Bushing	49- 32
A172 7632	Rear Bushing	49- 33
A172 7633	Spring Plate	49- 34
A172 7640	Wire Cleaner Slider	49- 35
A172 7641	Wire Cleaner Holder	49- 36
A172 7642	Charge Wire/Grid Cleaner	49- 29
A172 7650	Slider Ring	49- 40
A172 7651	Cleaner Motor Cover	49- 30
A172 7664	Spring Plate	49- 41
A172 7702	Fusing Unit - 115V	79- *
A172 7703	Fusing Unit - 230V	79- *
A172 7821	Rear Scale - LT	13- 17
A172 8607	Operating Instructions - English LT	127- 30
A172 8608	Operating Instruction - English A4	127- 30
A172 8650	Operating Instructions - English	127- 30
A172 8690	Opersting Instruction - English A4	127- 30
A172 8697	Operating Instruction - English LT	127- 30
A172 9510	OPC Drum	51- 16

Part No.	Description	Page and Index No.
AA00 0134	Decal - Universal Tray	31- 4
AA00 0134	Decal - Universal Tray	127- 15
AA00 0174	Decal - Tray Cover 1st	31- 2
AA00 0174	Decal - Tray Cover 1st	127- 16
AA00 0175	Decal - Paper Tray Cover No2	31- 2
AA00 0175	Decal - Paper Tray Cover No2	127- 17
AA00 0176	Decal - Paper Tray Cover No3	33- 2
AA00 0176	Decal - Paper Tray Cover No3	127- 18
AA00 0339	Decal - Silicone Oil	79- 31
AA00 0339	Decal - Silicone Oil	127- 19
AA00 0445	Caution Decal - LD Unit	29- 36
AA00 0445	Caution Decal - LD Unit	127- 31
AA00 0539	Decal - High Temperature	73- 2
AA00 0539	Decal - High Temperature	127- 20
AA00 0602	Caution Decal - LD Unit Cover	29- 35
AA00 0602	Caution Decal - LD Unit Cover	127- 14
AA00 1190	Decal - Ground	101- 16
AA00 1190	Decal - Ground	127- 21
AA00 1281	Decal - Lever	127- 22
AA00 1346	Decal - Misfeed Removal A	39- 42
AA00 1346	Decal - Misfeed Removal A	127- 23
AA00 1377	Decal - Positioning Display - B2	15- 44
AA00 1377	Decal - Positioning Display - B2	127- 24
AA00 2010	Decal - Paper Level	31- 21
AA00 2010	Decal - Paper Level	33- 11
AA00 2010	Decal - Paper Level	127- 25
AA00 2176	Decal - Side Fence - A4	31- 3
AA00 2176	Decal - Side Fence - A4	127- 27
AA00 2177	Decal - Side Fence - LT	31- 3
AA00 2177	Decal - Side Fence - LT	127- 27
AA00 2178	Decal - End Fence - A4	31- 10
AA00 2178	Decal - End Fence - A4	127- 26
AA00 2179	Decal - End Fence LT	31- 10
AA00 2179	Decal - End Fence LT	127- 26
AA00 2181	Decal - LT	31- 25

Part No.	Description	Page and Index No
AA00 2181	Decal - LT	127- 28
AA00 2184	Decal - A4	31- 25
AA00 2184	Decal - A4	127- 28
AA00 2217	Decal - Bypass Feed - A4	45- 42
AA00 2217	Decal - Bypass Feed - A4	127- 29
aa00 2230	Decal - Paper Size - LT	45- 42
AA00 2230	Decal - Paper Size - LT	127- 29
AA01 0080	Ozone Filter	103- 14
AA01 1044	Optical Filter	23- 8
AA01 2068	Inner Cooling Fan Filter	77- 13
AA01 2069	Development Exhaust Fan Filter	105- 1
AA01 2070	Development Dust Lower Filter	105- 9
AA01 2084	Development Filter	103- 15
AA01 2094	Dust Filter - EFA-15N	25- 16
AA02 0018	Magnet	71- 13
AA03 1008	Oil Tank	81- 10
AA03 6007	Oil Tank Cap	81- 9
AA03 6013	Toner Collection Cap	35- 11
AA04 0023	Transfer Belt	73- 6
AA04 3234	Timing Belt - 200 TN15 10.0	91- 17
AA04 3239	Timing Belt - P3M6 486MM	37- 24
AA04 3360	Timing Belt - 200	19- 9
AA04 3407	Timing Belt - 448 S2MV	89- 25
AA04 3408	Timing Belt - 453 - S3MV	87- 16
AA04 3409	Timing Belt - 600 - S3MV	93- 13
AA04 3410	Timing Belt - 699 - S3MV	87- 13
AA05 0079	Scanner Drive Wire - Front Left	19- 25
AA05 0080	Scanner Drive Wire - Rear Left	19- 23
AA05 0081	Scanner Drive Wire - Front Right	19- 21
AA05 0082	Scanner Drive Wier - Rear Right	19- 18
AA05 1019	Wire Stopper	19- 20
AA06 0042	Spring - Release Cleaning Blade	89- 26
AA06 0064	Tension Spring	87- 3
AA06 0083	Tension Wire Spring	19- 24
AA06 0189	Spring - Stripper Pawl Plate	79- 6

Part No.	Description	Page and Index No.
AA06 0244	Spring	105- 25
AA06 0308	Spring	103- 23
AA06 0340	Spring - Thermistor	81- 19
AA06 0520	Lever Spring - 24.4mm	43- 19
AA06 0522	Stopper Spring	41- 13
AA06 0523	Pick-up Pressure Sping	41- 10
AA06 0534	Tray Lock Spring - 19mm	39- 4
AA06 0559	Release Spring	93- 11
AA06 0560	Release Spring	37- 18
AA06 0653	Tension Spring	71- 28
AA06 2267	Spring	73- 20
AA06 2268	Spring	73- 19
AA06 2271	Release Spring	45- 11
AA06 2272	Release Spring	45- 4
AA06 2275	Release Spring	83- 14
AA06 2283	Spring	45- 6
AA06 2288	Spring	47- 26
AA06 3026	Terminal - Spring	97- 25
AA06 3068	Spring Connector	97- 15
AA06 3068	Spring Connector	107- 15
AA06 3097	Spring - Fusing Drive	83- 19
AA06 3353	Pressure Spring	71- 15
AA06 3355	Pressure Spring	85- 21
AA06 3356	Pressure Spring	89- 8
AA06 3357	Pressure Spring	89- 6
AA06 3358	Pressure Spring	87- 22
AA06 3359	Pressure Spring	91- 3
AA06 3361	Spring	57- 22
AA06 3487	Spring - 10mm	39- 25
AA06 3487	Spring - 10mm	43- 17
AA06 3491	Pressure Spring	69- 21
AA06 3492	Spring	35- 9
AA06 3493	Pressure Spring	67- 11
AA06 6062	Spring - Front Release Lever	79- 32
AA06 6063	Spring - Rear Release Lever	79- 15

Part No.	Description	Page and Index No
AA06 6079	Spring - Oil Pump Lever	81- 5
AA06 6189	Feed Sensor Spring	43- 22
AA06 6226	Spring	79- 26
AA06 6227	Receptacle Spring	97- 24
AA06 6231	Receptacle Spring	91- 15
AA06 6551	Stopper Spring - 24mm	31- 7
AA06 6553	Spring - Pressure Release - Reverse	43- 13
AA07 0022	Slide Rail	107- 2
AA08 0037	Bushing - 6 mm	47- 8
AA08 0156	Bushing - M4	39- 24
AA08 0156	Bushing - M4	43- 15
AA08 0162	Bushing - 8mm	71- 10
AA08 0163	Bushing - 8mm	71- 16
AA08 0166	Bushing - 8mm	47- 43
AA08 0211	Bushing - 6mm	47- 49
AA08 1003	Bushing - 5x7x3.8mm	69- 14
AA08 2021	Bushing - 8x12x10mm	47- 13
AA08 2046	Bushing - 6x12x6	43- 8
AA08 2058	Bushing - 6x10x9mm	47- 44
AA08 2068	Bushing - 8mm	47- 48
AA08 2070	Bushing - 8x16x7	41- 17
AA08 3003	Bushing - 6x18x5mm	45- 14
AA08 4044	Bearing Holder	69- 20
AA08 4045	Bearing Holder	69- 3
AA11 1020	Sensor Feeler	79- 28
AA13 2025	Spacer - 1x8x12	81- 4
AA13 2094	Spacer - Mounting Arm	85- 18
AA13 2094	Spacer - Mounting Arm	89- 24
AA13 2129	Spacer - 8x12x4.5	87- 8
AA13 2133	Spacer	89- 22
AA13 2166	Roller	69- 8
AA13 2167	Spacer	67- 17
AA13 2172	Spacer	69- 4
AA13 2178	Spacer - Drum Potential Sensor	107- 24
AA14 0065	Stepped Screw - M3x6	13- 18

Part No.	Description	Page and Index No.
AA14 0498	Feed Roller Shaft	41- 11
AA14 0510	Drive Shaft	57- 10
AA14 0512	Drive Shaft	83- 13
AA14 0515	Drive Shaft	89- 11
AA14 0517	Drive Shaft	73- 15
AA14 0518	Drive Shaft	73- 18
AA14 0522	Drive Shaft	45- 23
AA14 0526	Drive Shaft	19- 8
AA14 1081	Support Stay	69- 9
AA14 1082	Support Stay	69- 18
AA14 3025	Stepped Screw - M3	21- 18
AA14 3025	Stepped Screw - M3	21-105
AA14 3074	Stepped Screw - M4x5	39- 19
AA14 3074	Stepped Screw - M4x5	45- 20
AA14 3285	Shoulder Screw - M4	61- 8
AA14 3285	Shoulder Screw - M4	63- 9
AA14 3285	Shoulder Screw - M4	65- 17
AA14 3301	Stepped Screw - M3x4	97- 2
AA14 3301	Stepped Screw - M3x4	107- 4
AA14 3312	Stepped Screw - M3x10	107- 26
AA14 3358	Stepped Screw - M4x3	59- 33
AA14 3358	Stepped Screw - M4x3	65- 22
AA14 3358	Stepped Screw - M4x3	107- 10
AA14 3418	Positioning Pin	63- 26
AA14 3419	Support Stud	25- 24
AA14 3707	Stepped Screw - M5	85- 17
AA14 3708	Stepped Screw - M4	91- 12
AA14 3708	Stepped Screw - M4	97- 10
AA14 3709	Stepped Screw - M4	67- 4
AA14 3733	Stepped Screw M4	75- 16
AA14 3733	Stepped Screw M4	105- 26
AA14 3738	Stepped Screw	71- 12
AA14 5180	Pin - Hinge	15- 22
AA14 5216	Pin - 6x54.9	71- 18
AA14 5217	Cam Shaft	47- 15

Part No.	Description	Page and Index No
AA14 5220	Drive Shaft	93- 22
AA14 5223	Drive Shaft	37- 11
AA14 5224	Drive Shaft	37- 17
AA14 5248	Clutch Shaft	87- 24
AA14 5525	Pin - 4x66.2	103- 18
AA14 5526	Pin - 5x63	103- 20
AA14 7674	Pin - 6x12.7	39- 40
AA14 8391	Pin - 4x36	69- 7
AA14 8402	Drive Shaft	47- 4
AA14 8403	Shaft	37- 2
AA15 0266	Seal - 0.1x29x100	19- 26
AA15 0343	Toner Entrance Seal	57- 20
AA15 0345	Seal - 19.5x170	65- 21
AA15 0347	Shielding Sheet - 21.5x41	29- 15
AA15 0351	Sheet - 25x57	55- 18
AA15 0351	Sheet - 25x57	57- 5
AA15 0360	Seal - 13x20	49- 26
AA15 1779	Seal - 99x105.5	105- 2
AA15 1804	Lever Cushion	31- 11
AA15 1804	Lever Cushion	33- 12
AA15 1805	Bottom Plate Cushion	31- 13
AA15 1805	Bottom Plate Cushion	33- 18
AA15 1821	Seal - 5.5x356	71- 4
AA15 1822	Seal - 3x4x47	71- 21
AA15 1827	Seal - 12x12x97	105- 8
AA15 1828	Seal - 12x12x304	105- 10
AA15 1829	Seal - 72	55- 6
AA15 1840	Duct Seal - 2x5x34.5	99- 24
AA15 1841	Duct Seal - 2x5x84.5	99- 23
AA15 1842	Seal - 1x5x55.5	59- 14
AA15 1842	Seal - 1x5x55.5	61- 15
AA15 1842	Seal - 1x5x55.5	63- 14
AA15 1842	Seal - 1x5x55.5	65- 13
AA15 1843	Seal - 4x7x59.5	61- 14
AA15 1845	Seal - 4x8x333.5	61- 2

Part No.	Description	Page and Index No.
AA15 1846	Seal - 2x27x36	59- 28
AA15 1846	Seal - 2x27x36	61- 24
AA15 1846	Seal - 2x27x36	63- 25
AA15 1846	Seal - 2x27x36	65- 29
AA15 1847	Seal - 4x47	59- 29
AA15 1847	Seal - 4x47	61- 25
AA15 1847	Seal - 4x47	63- 28
AA15 1847	Seal - 4x47	65- 32
AA15 1849	Seal - 5x8x342	59- 3
AA15 1849	Seal - 5x8x342	61- 19
AA15 1849	Seal - 5x8x342	63- 18
AA15 1849	Seal - 5x8x342	65- 18
AA15 1851	Mirror Seal 1	29- 10
AA15 1852	Mirror Seal 2	29- 6
AA15 1853	Mirror Seal 3	29- 8
AA15 1854	Mirror Seal 4	29- 7
AA15 1855	Mirror Seal 5	29- 5
AA15 1856	Mirror Seal 6	29- 9
AA15 1858	Seal - 5x18x40	29- 17
AA15 1860	Seal - 2x5.5x347.8	71- 22
AA15 1866	Seal - 3x7x30	27- 11
AA15 1867	Seal - 3x7x23.5	27- 12
AA15 1868	Seal - 3x7x64	27- 22
AA15 1869	Seal - 3x7x17.3	27- 23
AA15 1870	Seal - 3x20x76	27- 31
AA15 1875	Seal - 20x40	55- 4
AA15 2061	O-ring 83	29- 34
AA15 2094	Seal - 22x38x2	29- 1
AA15 2232	Packing - 18	57- 25
AA15 2233	Gasket - 10x36	83- 10
AA15 2234	Seal - 6x10x11	95- 29
AA15 2319	Seal - 16x36	59- 22
AA15 2319	Seal - 16x36	61- 9
AA15 2319	Seal - 16x36	63- 7
AA15 2319	Seal - 16x36	65- 7

Part No.	Description	Page and Index No
AA15 2320	Seal - 16x36	59- 18
AA15 2320	Seal - 16x36	61- 12
AA15 2320	Seal - 16x36	63- 10
AA15 2320	Seal - 16x36	65- 10
AA16 1097	Cushion - 6.5x14	67- 9
AA16 2053	Platen Cover Pad	15- 3
AA17 4018	Sheet - 45x45	95- 6
AA18 0008	Oil Tube - 320mm	81- 1
AA18 0009	Oil Tube - 120mm	81- 8
AA18 0035	Sleeve - Oil Pump	81- 7
AB01 0094	Cleaning Drive Gear	49- 37
AB01 1148	Gear - 28Z	59- 23
AB01 1148	Gear - 28Z	61- 27
AB01 1148	Gear - 28Z	63- 6
AB01 1148	Gear - 28Z	65- 8
AB01 1149	Gear - 14Z	59- 21
AB01 1149	Gear - 14Z	61- 28
AB01 1149	Gear - 14Z	63- 3
AB01 1149	Gear - 14Z	65- 6
AB01 1342	Gear - 30Z	59- 16
AB01 1342	Gear - 30Z	61- 13
AB01 1342	Gear - 30Z	63- 11
AB01 1342	Gear - 30Z	65- 11
AB01 3318	Gear - 17Z	85- 24
AB01 3320	Gear - 19Z	79- 16
AB01 3363	Gear - 16Z	83- 8
AB01 3492	Gear - 16Z	31- 24
AB01 3601	Gear - 20Z	47- 12
AB01 3729	Gear - 18Z	43- 21
AB01 3773	Gear - 18Z	43- 9
AB01 3774	Gear - 18Z	41- 26
AB01 3775	Gear - 33Z	41- 25
AB01 3776	Gear - 30Z	43- 6
AB01 3777	Gear - 32Z	43- 5
AB01 3781	Gear - 30Z	37- 8

Part No.	Description	Page and Index No.
AB01 3810	Gear - 52Z	57- 1
AB01 3811	Gear - 40Z	57- 4
AB01 3814	Gear - 40Z	59- 13
AB01 3814	Gear - 40Z	61- 16
AB01 3814	Gear - 40Z	63- 15
AB01 3814	Gear - 40Z	65- 15
AB01 3815	Gear - 30Z	65- 14
AB01 3817	Gear - 30Z	83- 20
AB01 3818	Gear - 61Z	85- 25
AB01 3819	Gear - 22Z	79- 18
AB01 3820	Gear - 17Z	85- 5
AB01 3823	Gear - 31Z	89- 12
AB01 3832	Gear - 28Z	93- 20
AB01 3834	Gear - 30Z	93- 23
AB01 3835	Gear - 20Z	73- 5
AB01 3835	Gear - 20Z	93- 25
AB01 3836	Gear - 46Z	93- 7
AB01 3837	Gear - 42Z	93- 4
AB01 3838	Gear - 17Z	93- 5
AB01 3843	Gear - 35Z	47- 35
AB01 3844	Gear - 30Z	47- 30
AB01 3846	Gear - 28Z	45- 19
AB01 3847	Gear - 30Z	71- 11
AB01 3848	Gear - 12Z	75- 20
AB01 3852	Gear - 21Z	47- 1
AB01 3853	Gear - 18Z	77- 3
AB01 3854	Gear - 36Z	77- 25
AB01 3855	Gear - 68Z	37- 6
AB01 3856	Gear - 31Z	37- 3
AB01 3864	Gear - 30Z	89- 9
AB01 3865	Gear - 26Z	89- 10
AB01 3866	Front Side Fence Rack	45- 37
AB01 3870	Gear - 22Z	93- 16
AB01 3989	Idle Gear - 18Z	57- 6
AB01 6001	Gear - 14Z	47- 6

Part No.	Description	Page and Index No
AB01 7038	Gear - 32T	81- 12
AB01 7306	Gear - 18Z/40Z	57- 3
AB01 7307	Gear - 20Z/50Z	89- 7
AB01 7308	Gear - 25Z/56Z	89- 21
AB01 7309	Gear - 28Z/62Z	87- 17
AB01 7310	Gear - 26Z/89Z	87- 12
AB01 7312	Gear - 19Z/26Z	87- 20
AB01 7316	Gear - 20Z/43Z	93- 12
AB01 7318	Gear - 29Z/33Z	93- 6
AB01 7320	Gear - 29Z/44Z	93- 3
AB01 7321	Gear - 20Z/30Z	93- 9
AB01 7322	Gear - 34Z/41Z	47- 31
AB01 7324	Gear - 26Z/70Z	37- 5
AB01 7325	Gear - 35Z	37- 4
AB01 7330	Gear - 20Z/34Z	59- 31
AB01 7330	Gear - 20Z/34Z	61- 10
AB01 7330	Gear - 20Z/34Z	63- 8
AB01 7330	Gear - 20Z/34Z	65- 9
AB01 7396	Gear - 20Z/30Z	93- 18
AB03 0266	Pulley - 28Z	87- 11
AB03 0317	Gate Tightener	89- 19
AB03 0440	Timing Pulley - 28Z	89- 2
AB03 0442	Timing Pulley	87- 1
AB03 0443	Timing Pulley - 88Z	91- 19
AB03 0444	Timing Pulley - 66Z	91- 6
AB03 0445	Timing Pulley - 44Z	91- 11
AB03 0446	Timing Pulley	93- 8
AB03 0449	Roller Drive Pulley	37- 20
AB03 0452	Timing Pulley - 24Z	19- 15
AB03 0453	Timing Pulley - 48Z	19- 10
AB03 0456	Timing Pulley - 30Z	37- 12
AB03 0527	Timing Pulley - 112Z	91- 27
AB03 0528	Timing Pulley - 28Z	89- 27
AB03 2041	Pulley - 26Z	21- 5
AB03 3058	Timing Pulley - 22Z	37- 14

Part No.	Description	Page and Index No.
AC03 5020	Rear Spring Plate	29- 13
AC03 5021	Front Spring Plate	29- 11
AC03 5051	Spring Plate - 2nd Mirror	21- 3
AC04 2153	Left Scale - LT	13- 14
AD00 1040	Development Unit -B/C	59- 0
AD00 1041	Development Unit - M/Y	63- 0
AD00 4071	Pre - Cleaning Corona Unit	49- 1
AD00 4087	Charge Corona Unit	49- 11
AD02 0056	PCC Wire	49- 6
AD02 0069	Charge Corona Grid	49- 17
AD02 0070	Charge Corona Wire	49- 18
AD02 1095	Transfer Roller Receptacle	91- 13
AD02 1103	Transfer Belt Receptacle	97- 11
AD02 2281	Front End Block	49- 13
AD02 2282	Rear End Block	49- 21
AD02 2291	Front End Block - Pre Cleaning	49- 4
AD02 2292	Rear End Block	49- 9
AD02 2293	Front End Block Cover - Pre Cleaning	49- 2
AD02 2294	Rear End Block Cover - Pre Cleaning	49- 8
AD02 2340	Front Cover - Charge Corona	49- 15
AD02 2341	Rear Cover - Charge Corona	49- 20
AD02 3086	Corona Casing - Pre Cleaning	49- 5
AD02 4025	Corona Wire Terminal	49- 42
AD03 7052	Toner Supply Coil - Color	57- 21
AD03 7054	Toner Supply Coil - Black	57- 24
AD03 9045	Large Agitator - BK	57- 9
AD04 1037	Cleaning Blade	71- 8
AE01 0012	Hot Roller	85- 8
AE02 0056	Pressure Roller	85- 9
AE03 0013	Ball Bearing - 8x15.6x4mm	83- 18
AE03 0015	Ball Bearing - 35x47x7	85- 14
AE03 0019	Ball Bearing - 7x20x32	85- 16
AE03 1005	Bushing	83- 9
AE03 1013	Bushing - 6mm	85- 4
AE03 1020	Bushing - 6x12x8	85- 27

Part No.	Description	Page and Index No
AE03 2017	Bushing - 30x40x14.5	85- 15
AE04 1002	Oil Blade	83- 16
AE04 2021	Cleaning Roller	85- 31
AE04 2022	Fusing Cleaning Roller	85- 6
AE04 4016	Hot Roller Stripper	79- 9
AE04 5015	Oil Supply Pad	81- 17
AF01 3002	Bottom Plate Pad	31- 18
AF01 3002	Bottom Plate Pad	33- 9
AF01 7010	End Fence	33- 6
AF02 0280	Driven Roller	43- 14
AF02 0289	Grip Drive Roller	43- 2
AF02 0295	Vertical Driven Roller	39- 23
AF02 0310	Exit Roller	79- 23
AF02 0311	Upper Registration Roller	47- 18
AF02 0312	Relay Roller	47- 28
AF02 1049	Lower Registration Roller	47- 22
AF02 2070	Right Transport Roller	73- 9
AF02 2091	Left Transport Roller	73- 4
AF03 0020	Pick-up Roller	41- 19
AF03 0021	Pick-up Roller	45- 34
AF03 1022	Paper Feed Roller	41- 18
AF03 1023	Paper Feed Roller	45- 29
AF03 2021	Separation Roller	45- 27
AF03 2023	Separation Roller	43- 25
AF04 0031	Upper Exit Roller	79- 12
AF04 3076	Copy Tray Slide	13- 26
AF04 3090	Copy Tray Ass y	13- 11
AF04 3091	Copy Tray	13- 27
AF04 3092	Copy Tray Guide	13- 28
AG05 0069	Registration Knob	47- 11
AG05 0070	Fusing Knob	81- 11
AG05 1098	Transport Lever	73- 1
AG05 1099	Fusing Release Lever	105- 21
AG05 1100	Transfer Belt Unit Handle	67- 19
AG05 1104	Front Release Lever - Exit	79- 30

Part No.	Description	Page and Index No.
AG05 1105	Rear Release Lever - Exit	79- 13
AG05 1106	Transfer Belt Unit Band	67- 2
AG07 0004	Magnetic Catch	15- 20
AG07 0004	Magnetic Catch	39- 32
AG07 0004	Magnetic Catch	77- 9
AG07 0008	Magnet Catch	47- 23
AG07 1007	Latch - By Pass Feed Table	95- 31
AH01 3008	Leveling Foot Guide	39- 44
AW01 0033	Original Sensor Ass y - H=3-50	23- 6
AW01 0034	Original Width Sensor	23- 3
AW01 0037	Original Length Sensor	23- 4
AW01 0069	Photo Sensor Ass y	105- 19
AW02 0056	Photointerruptor - EE-SX4235A-P1	41- 4
AW02 0056	Photointerruptor - EE-SX4235A-P1	47- 33
AW02 0056	Photointerruptor - EE-SX4235A-P1	79- 25
AW02 0061	Photointerruptor - EE - SX4019-P1	25- 26
AW02 0061	Photointerruptor - EE - SX4019-P1	43- 29
AW02 0062	Photointerruptor - EE-SX4019-P15	47- 39
AW02 0062	Photointerruptor - EE-SX4019-P15	87- 19
AW02 0065	Photointerruptor	25- 2
AW02 0065	Photointerruptor	95- 26
AW02 0066	Photointerruptor	45- 7
AW02 0067	Photointerruptor - EE-SX4119-P15	19- 5
AW03 0029	Fiber Cable - 800	27- 10
AW03 0034	Optics Fiber Cable - 1400mm	13- 4
AW03 0034	Optics Fiber Cable - 1400mm	25- 9
AW03 0035	Optics Fiber Cable - 900mm	23- 24
AW03 0036	Optics Fiber Cable - 1000mm	99- 7
AW10 0023	Fusing Thermistor	81- 18
AW11 0017	Thermostat - 140 C - AC120V 15A	21- 9
AW23 0007	Toner Density Sensor	59- 5
AW23 0007	Toner Density Sensor	61- 22
AW23 0007	Toner Density Sensor	63- 22
AW23 0007	Toner Density Sensor	65- 27
AW23 0009	Toner End Sensor	55- 25

Part No.	Description	Page and Index No
AW33 0004	Drum Potential Sensor	107- 21
AW50 0010	Push Switch	101- 6
AW50 0012	Push Switch	101- 10
AX04 0074	DC Motor - 3.46W 5V	49- 38
AX05 0066	Black Dev.drive Motor - DC7.2W	89- 17
AX05 0067	Color Sleeve Motor - DC9.3W	89- 1
AX05 0070	Black Sleeve Motor - DC9.3W	89- 16
AX05 0094	Drum Drive Motor - DC6.5W	89- 15
AX06 0085	Color Development Drive - DC26W	87- 27
AX06 0087	Papaer Feed Motor - DC22W	37- 23
AX06 0088	Transport Belt Motor - DC24V 2A	91- 5
AX06 0093	Lubricant Brush Motor - DC36W	87- 5
AX06 0094	Polygon Motor - DC24V, 24W	29- 29
AX06 0104	Motor - 36W	93- 14
AX20 0096	Magnetic Clutch	45- 15
AX21 0037	Magnetic Clutch	41- 24
AX21 0040	Magnetic Clutch	47- 36
AX21 0041	Spring Clutch	47- 37
AX21 0055	Spring Clutch	87- 15
AX30 0004	LCD Display - Color	17- 24
AX31 0017	Black Total Counter	103- 8
AX31 0019	Color Total Counter	103- 9
AX40 0052	Anti-condensation Heater - 115V 18W	23- 2
AX40 0052	Anti-condensation Heater - 115V 18W	39- 1
AX40 0053	Anti-condensation Heater - 240V 18W	23- 2
AX40 0053	Anti-condensation Heater - 240V 18W	39- 1
AX40 0057	Heater - 115V 9W	107- 17
AX40 0058	Heater - 230V 9W	107- 17
AX40 0074	Anti-condensation Heater - 115V 18W	47- 42
AX40 0075	Anticondensation Heater - 230V 18W	47- 42
AX43 0016	Pressure Roller Lamp - 115V 400W	83- 12
AX43 0017	Pressure Roller Lamp - 230V 400W	83- 12
AX44 0073	Fusing Lamp - 115V 650W	83- 11
AX44 0074	Heater - 230V - 700W - 100%	83- 11
AX52 0030	Exposuer Lamp - 75V 200W	21- 13

Part No.	Description	Page and Index No.
AX64 0041	Cooling Fan Motor - DC24 7.64W	27- 26
AX64 0041	Cooling Fan Motor - DC24 7.64W	99- 14
AX64 0041	Cooling Fan Motor - DC24 7.64W	109- 22
AX64 0042	Transport Fan Motor - DC24V 3.12W	73- 10
AX64 0043	Optics Cooling Fan Motor - DC24V 2.88W	105- 4
AX64 0045	Cooling Fan Motor - DC24V 2.40W	23- 12
AX64 0045	Cooling Fan Motor - DC24V 2.40W	29- 19
AX64 0047	Dev. Exhaust Fan Motor - DC24V 3.36W	25- 19
AX64 0048	Dev. Exhaust Fan Motor - DC24V 2.88W	25- 18
AY10 0002	Polyg0n Motor Board	29- 26
AZ02 0006	Coil - 4.6mm 5A	27- 20
AZ23 0037	Lamp Regulator Board (115V)	25- 23
AZ23 0047	Lamp Regulator - 230V	25- 23
AZ24 0032	DC Power Supply Unit - 115V	101- 13
AZ24 0037	DC Power Supply Unit - 230V	101- 13
AZ30 0038	High Voltage Supply Board - T2	99- 17
AZ30 0042	DC Power Pack - C.G	99- 21
AZ31 0016	High Voltage Supply Board - B	99- 12
AZ31 0017	High Voltage Supply Board - D	95- 9
AZ32 0068	High Vol.supply Board - T1,PCC,BR	99- 2
C105 2065	Ball Bearing	87- 14
C201 5125	Shoulder Screw - M4	67- 7
C202 3102	Collar - 6.35x10x4mm	103- 22
C225 2866	Decal - Key Top Cover (REX)	13- 29
C225 2866	Decal - Key Top Cover (REX)	127- 8
C225 2867	Decal - Cover - Panel - Nashua	13- 29
C225 2867	Decal - Cover - Panel - Nashua	127- 8
C401 9503	20x Magnification Scope	129- 11
G011 3305	Gear - 16T	45- 39
H081 2118	Pressure Spring	19- 16

Part No.	Description	Page and Index No
A006 1721	Front Spring Plate	21- 2
A006 9103	Omega Clamp	129- 4
A007 3762	Sensor Holder	35- 13
A007 3763	Adhesive Tape - Sensor Holder	35- 12
A008 9502	Silicone Grease - G40m	129- 5
A010 5700	Sensor	45- 41
A010 5700	Sensor	47- 5
A012 1752	Lens Bracket Block	25- 1
A012 9501	Scanner Positioning Pin - 4pcs/set	129- 6
A027 1673	Spring Plate	35- 6
A027 1673	Spring Plate	37- 13
A028 9300	Grease Barrierta JFE 55/2	129- 7
A029 7904	Pad - Cff	33- 4
A030 3403	Bracket	109- 4
A030 4133	Oil Pump Lever	81- 6
A030 4145	Pressure Spring Holder	85- 20
A033 7558	Grounding Plate	93- 1
A033 7558	Grounding Plate	99- 5
A037 2113	0ptical Housing Spacer	29- 30
A048 1721	Spring Plate A	21- 21
A048 1870	Scanner Motor Pulley	19- 6
A048 2838	Nylon Rivet	31- 16
A048 2838	Nylon Rivet	33- 7
A049 5102	IC - TC23SC080AF-501	121- 1
A053 1957	Flex Hinge - Platen Cover	15- 5
A060 1325	Right Hinge Pin	95- 2
A060 1812	Sensor Bracket	25- 15
A060 1822	Scanner Wire Pulley	25- 7
A060 1824	Scanner Wire Pulley	25- 12
A060 3826	Toner Collection Bottle Roller	35- 15
A060 3827	Roller Holder	35- 16
A060 5547	Polygon Motor Harness	29- 28
A069 1882	Exposure Glass Holder	19- 4
A069 1883	Shoe - Scanner	21- 4
A069 1972	Arm Holder	15- 38

Part No.	Description	Page and Index No.
A069 5352	Ground Wire - Scanner	19- 12
A072 1383	Decal - Ading Toner	55- 20
A072 1383	Decal - Adding Toner	127- 1
A072 4115	Upper Entrance Guide Plate	81- 20
A085 5571	Power Supply Cord - 115V	101- 14
A085 5671	Power Supply Cord - 230V	101- 14
A092 9503	C4 Color Test Chart (3 Pcs/set)	129- 8
A096 1094	Grip Base	109- 19
A096 1873	Scanner Shoe Pin	21- 22
A096 3863	Spacer - 4x6x1	49- 39
A096 5129	IC - M37409M2-155FP	115- 1
A096 5404	DF Harness - 230V	99- 16
A096 5411	Upper Feed Unit Harness	41- 1
A096 5412	Lower Feed Unit Harness	43- 7
A096 6100	Lower Heat Sink	39- 10
A096 6266	Tray Lock Arm	39- 5
A096 6303	Separation Roller Stay	43- 20
A096 6306	Separation Drive Shaft	43- 10
A096 6307	Separation Driver Shaft	43- 23
A096 6308	Separation Pressure Lever	43- 18
A096 6311	Release Lever	43- 12
A096 6315	Release Solenoid	43- 11
A096 6321	Position Sensor Bracket	43- 27
A096 6322	Position Sensor Feeler	43- 28
A096 6330	Rear Side Plate	41- 22
A096 6335	Front Side Plate	41- 21
A096 6337	Paper Feed Guide	41- 14
A096 6338	Separation Guide	43- 3
A096 6344	Paper End Actuater	41- 2
A096 6345	End Sensor Bracket	41- 3
A096 6346	Paper Feed Stay	41- 8
A096 6351	Pick-up Arm	41- 15
A096 6352	Feed Roller Bracket	41- 16
A096 6353	Feed Roller Lever	41- 12
A096 6355	Pick-up Solenoid	41- 7

Part No.	Description	Page and Index No
A096 6358	Photointerrupter Bracket	41- 6
A096 6360	Paper Flattener	41- 23
A096 6362	Paper End Feeler	41- 9
A096 6363	Front Paper Flattener	41- 27
A096 6366	Clutch Stopper Arm	43- 4
A096 6369	Vertical Transport Guide	43- 16
A096 6375	Unit Fixing Plate	43- 1
A096 6520	Paper Tray	31- 20
A096 6520	Paper Tray	33- 17
A096 6524	Lift Shaft	31- 29
A096 6524	Lift Shaft	33- 15
A096 6526	Lift Lever	31- 30
A096 6526	Lift Lever	33- 16
A096 6527	Paper Guide Feeler	31- 28
A096 6527	Paper Guide Feeler	33- 14
A096 6534	Front Side Fence	31- 14
A096 6536	Side Fence Cover	31- 12
A096 6537	Stopper Lever	31- 5
A096 6539	Side Fence Gear	31- 23
A096 6541	Rear Side Fence	31- 19
A096 6544	Side Fence Plate - A4	31- 22
A096 6545	Side Fence Plate - LT	31- 22
A096 6549	Front Side Fence	33- 3
A096 6550	Rear Side Fence	33- 10
A096 6551	Position Plate - Side Fence	33- 13
A096 6553	Side Fence Pad	31- 15
A096 6556	Tray Bottom Plate	31- 17
A096 6556	Tray Bottom Plate	33- 8
A096 6562	End Fence	31- 8
A096 6563	End Fence Cover	31- 6
A096 6564	End Fence Plate	31- 9
A096 6568	Position Plate - End Fence	33- 5
A096 6577	Size Sensor Slider	31- 26
A096 6578	Size Sensor Plate	31- 27
A096 7636	DF Harness - 115V	99- 16

Part No.	Description	Page and Index No.
A097 6000	Separation Torque Limitter	43- 24
A097 6000	Separation Torque Limitter	45- 26
A100 1310	Platen Cover Hinge Ass y	15- 9
A100 1311	Balancer Spring	15- 41
A100 1324	Positioning Sensor Shutter	15- 8
A100 1325	Hinge Spacer	15- 10
A100 5378	Grounding Wire	91- 20
A109 1031	Front Fixing Plate	109- 15
A109 1032	Rear Fixing Plate	109- 12
A109 1057	Grip Plate	109- 20
A109 1086	Upper Paper Feed Stay	95- 5
A109 1089	Left Upper Tray	105- 13
A109 1092	Right Upper Stay	95- 13
A109 1094	Left Side Stay	107- 12
A109 1096	Left Middle Stay	105- 14
A109 1101	Front Right Frame	95- 3
A109 1102	Front Upper Right Bracket	103- 12
A109 1104	Front Upper Left Frame	103- 6
A109 1105	Front Lower Left Frame	105- 22
A109 1107	Rear Right Frame	95- 18
A109 1109	Frame Bracket - Rear Upper Right	95- 17
A109 1111	Rear Left Frame	105- 11
A109 1113	Frame Bracket - Rear Upper Left	105- 12
A109 1115	Fusing Connector Bracket	97- 22
A109 1119	Rear Support Stay	99- 3
A109 1123	Inner Cooling Fan Bracket	109- 21
A109 1124	Right Bracket - Operation Panel	19- 28
A109 1132	Drum Flange Cover	49- 28
A109 1132	Drum Flange Cover	91- 16
A109 1135	Safety Switch Actuator	15- 28
A109 1136	Flange Bracket	77- 24
A109 1276	Left Cover Bracket	13- 7
A109 1290	Right Upper Door Hinge	15- 14
A109 1291	Right Lower Door Hinge	15- 15
A109 1306	Left Door Hinge Plate	15- 23

Part No.	Description	Page and Index No
A109 1307	Left Upper Door Hinge	15- 21
A109 1308	Left Lower Door Hinge	15- 25
A109 1310	Fusing Lever Stopper	15- 29
A109 1311	Left Door Stopper	103- 25
A109 1366	Magnet Catch Bracket	77- 10
A109 1374	Right Inner Cover	15- 16
A109 1384	Lower Inner Cover	77- 4
A109 1387	Inner Cover - Main Switch	103- 4
A109 1393	Inner Cover - Total Counter	103- 10
A109 1397	Inner Cover - Transfer Unit	77- 12
A109 1551	Decal - Misfeed Removal C	55- 22
A109 1551	Decal - Misfeed Removal C	127- 3
A109 1552	Decal - Misfeed Removal A	15- 18
A109 1552	Decal - Misfeed Removal A	127- 4
A109 1553	Decal - Misfeed Removal B	15- 17
A109 1553	Decal - Misfeed Removal B	127- 5
A109 1554	Decal - Misfeed Removal D	15- 27
A109 1554	Decal - Misfeed Removal D	127- 6
A109 1555	Decal - Total Counter	103- 11
A109 1555	Decal - Total Counter	127- 7
A109 1707	Reflector Cover	21- 17
A109 1708	Reflector Bracket	21- 19
A109 1711	Rear Terminal Holder	21- 14
A109 1713	Rear Terminal - Exposure Lamp	21- 15
A109 1715	Front Terminal Holder	21- 11
A109 1717	Front Terminal - Exposure Lamp	21- 12
A109 1731	1st Scanner Ass y	21- 10
A109 1741	2nd Scanner Ass y	21- 6
A109 1782	CCD Grounding Plate	23- 25
A109 1785	Spacer - 9.5x9.5x72	23- 15
A109 1789	Spring Plate	23- 9
A109 1805	Scanner Control Board Cover	23- 20
A109 1806	Original Sensor Cover	23- 1
A109 1818	Wire Adjuster	25- 8
A109 1831	Scanner Drive Board Bracket	25- 6

Part No.	Description	Page and Index No.
A109 1832	Scanner Drive Bracket	19- 17
A109 1833	Upper Cover - Scanner Drive	19- 7
A109 1835	Lower Cover - Scanner Drive	19- 19
A109 1842	Scanner Drive Stepping Motor - DC24V	19- 13
A109 1844	Dust Filter Front Guide	25- 14
A109 1845	Dust Filter Rear Guide	25- 17
A109 1854	Scanner Louver	25- 20
A109 1867	Pin Guide	25- 3
A109 1868	Rear Slide Rail	25- 11
A109 1869	Front Slide Rail	25- 4
A109 1879	Scale Bracket	19- 1
A109 1881	H.P Sensor Bracket	25- 27
A109 1882	Original Sensor Bracket	23- 5
A109 1884	Optics Exhaust Bracket	23- 11
A109 1885	Support Plate	25- 28
A109 1886	Right Stay	19- 2
A109 1911	Exposure Glass Ass y	13- 15
A109 1922	Second Mirror Ass y	21- 1
A109 1924	1st Mirror	21- 8
A109 2065	Left Rail	29- 3
A109 2066	Right Rail	29- 2
A109 2069	Mirror - Synchronizing	29- 14
A109 2070	Synchronizing Harness Bracket	29- 21
A109 2072	LD Cooling Fan Bracket	29- 20
A109 2077	Toner Shielding Grass	103- 5
A109 2080	Optics Cooling Fan Duct	27- 13
A109 2128	Diode Bracket	29- 16
A109 2132	Drum Mirror Ass y	29- 12
A109 2136	Mirror Cover	29- 4
A109 2159	Optical Housing Unit	29- 27
A109 2160	LD Unit	29- 32
A109 2287	Drum Flange Knob	49- 22
A109 2291	Knob Screw	49- 27
A109 2300	Charge Corona Receptacle	97- 8
A109 2321	Pre Cleaning Corona Receptacle	97- 26

Part No.	Description	Page and Index No
A109 2369	Grounding Plate - Pre Cleaning	49- 3
A109 2371	ID Sensor Stay	49- 25
A109 2380	ID Sensor Duct	91- 25
A109 2381	Quenching Lamp	49- 23
A109 2385	Duct Tube Ass y	91- 26
A109 2390	Charge Corona Duct - Large	99- 22
A109 2403	Charge Corona Duct - Small	99- 26
A109 2410	Filter Charge Inlet Fan	99- 25
A109 2421	Drum Heater Bracket	107- 18
A109 2426	Drum Potential Sensor Bracket	107- 20
A109 2430	Connector Bracket	109- 3
A109 2571	Registration Guide Plate	47- 27
A109 2574	Relay Guide Plate	47- 29
A109 2575	Lower Guide Plate - Registration	47- 25
A109 2582	Upper Guide Plate - Registration	47- 20
A109 2588	Upper Guide - Registration	47- 19
A109 2589	Large Guide - Registration	47- 21
A109 2610	Gear Holder	47- 24
A109 2638	Rear Side Fence Rack	45- 38
A109 2642	Paper End Sensor Bracket	45- 8
A109 2652	Separation Roller Shaft - By-pass	45- 25
A109 2653	Pressure Arm - By-pass	45- 5
A109 2658	Ground Plate - Separation Roller	45- 47
A109 2659	Ground Plate - Feed Roller Shaft	45- 48
A109 2665	Feed Roller Shaft - By-pass	45- 13
A109 2666	Pick-up Arm Holder	45- 31
A109 2680	By-pass Pick-up Solenoid	45- 9
A109 2691	Oil Damper - GF.CM	45- 2
A109 2693	By-pass Feed Shaft	45- 3
A109 2696	Latch Bracket - By-pass	95- 25
A109 2697	Front Holder - By-pass Feed Table	95- 7
A109 2701	Sensor Feeler - By-pass Feed Table	95- 28
A109 2703	Sensor Feeler Holder	95- 27
A109 2707	Right Upper Stay	95- 30
A109 2711	Sensor Bracket - Registration Guide	47- 32

Part No.	Description	Page and Index No.
A109 2721	Upper Stay Vertical Transport	45- 1
A109 2722	Stay Angle	95- 16
A109 3051	Front Side Plate - B/C	59- 26
A109 3051	Front Side Plate - B/C	61- 11
A109 3054	Rear Side Plate - B/C	59- 11
A109 3054	Rear Side Plate - B/C	61- 18
A109 3059	Development Casing - Black	59- 7
A109 3062	Development Casing - Cyan	61- 20
A109 3064	Black Development Seal - Rear	59- 38
A109 3065	Spacer - Toner Density Sensor	59- 4
A109 3065	Spacer - Toner Density Sensor	61- 21
A109 3065	Spacer - Toner Density Sensor	63- 21
A109 3065	Spacer - Toner Density Sensor	65- 26
A109 3066	Mixing Paddle Roller - B/C	59- 9
A109 3066	Mixing Paddle Roller - B/C	61- 17
A109 3067	Mixing Paddle Roller - M/Y	63- 16
A109 3067	Mixing Paddle Roller - M/Y	65- 16
A109 3068	Paddle Flange	59- 30
A109 3068	Paddle Flange	61- 26
A109 3068	Paddle Flange	63- 29
A109 3068	Paddle Flange	65- 33
A109 3070	Paddle Flange Stopper	59- 32
A109 3070	Paddle Flange Stopper	61- 6
A109 3070	Paddle Flange Stopper	63- 17
A109 3070	Paddle Flange Stopper	65- 34
A109 3082	Development Sleeve Cover	59- 19
A109 3082	Development Sleeve Cover	61- 5
A109 3082	Development Sleeve Cover	63- 2
A109 3082	Development Sleeve Cover	65- 2
A109 3085	Positioning Adjuster	59- 24
A109 3085	Positioning Adjuster	61- 7
A109 3085	Positioning Adjuster	63- 5
A109 3085	Positioning Adjuster	65- 5
A109 3086	Development Casing Seal	59- 10
A109 3086	Development Casing Seal	61- 4

Part No.	Description	Page and Index No
A109 3086	Development Casing Seal	63- 4
A109 3086	Development Casing Seal	65- 4
A109 3089	Development Unit Guide - Black	59- 2
A109 3095	Development Unit Cover - B/C	61- 1
A109 3096	Black Development Seal	59- 8
A109 3100	Toner Supply Receptacle	59- 27
A109 3100	Toner Supply Receptacle	61- 23
A109 3100	Toner Supply Receptacle	63- 24
A109 3100	Toner Supply Receptacle	65- 28
A109 3102	Toner Collection Cover	59- 17
A109 3102	Toner Collection Cover	61- 29
A109 3102	Toner Collection Cover	63- 27
A109 3102	Toner Collection Cover	65- 3
A109 3106	Development Support Plate	59- 36
A109 3107	Development Support Shaft	59- 34
A109 3108	Development Support Lever	59- 20
A109 3109	Lock - Spring	59- 35
A109 3111	Spring Plate	59- 37
A109 3112	Development Support Cam	55- 23
A109 3201	Front Side Plate - C/Y	63- 23
A109 3201	Front Side Plate - C/Y	65- 30
A109 3204	Rear Side Plate - C/Y	63- 12
A109 3204	Rear Side Plate - C/Y	65- 12
A109 3209	Development Casing - Magenta	63- 20
A109 3212	Development Casing - Yellow	65- 19
A109 3216	Base Plate - M/Y	65- 24
A109 3219	Development Unit Stopper - M/Y	65- 23
A109 3222	Development Unit Cover - M/Y	65- 25
A109 3226	ID Sensor Rail	65- 20
A109 3301	Development Exhaust Fan Duct	105- 7
A109 3302	Development Exhaust Fan Bracket	105- 3
A109 3303	Shielding Plate - Development Duct	105- 6
A109 3307	Filter Holder	103- 16
A109 3312	Development Bias Terminal - B	97- 21
A109 3313	Development Bias - Terminal - C	97- 20

Part No.	Description	Page and Index No.
A109 3314	Development Bias Retminal - M	97- 19
A109 3315	Development Bias - Terminal - Y	97- 16
A109 3322	Development Unit Rail	107- 19
A109 3330	Lower Left Development Cover	105- 15
A109 3332	Development Unit Stopper - B.C	107- 11
A109 3335	Developer Supply Funnel	77- 11
A109 3355	Front Casing - Toner Tank	57- 8
A109 3380	Toner Vibrating Mylar - Black	57- 19
A109 3381	Toner Vibrating Mylar - Cyan	57- 18
A109 3382	Toner Vibrating Mylar - Magenta	57- 17
A109 3383	Toner Vibrating Mylar - Yellow	57- 16
A109 3390	Toner Supply Cap	57- 23
A109 3393	Spacer - Toner Supply Coil	57- 13
A109 3395	Toner Supply Motor Bracket	55- 17
A109 3401	Toner Bottle Guide - Black	55- 5
A109 3402	Toner Bottle Guide - Magenta	55- 10
A109 3403	Toner Bottle Guide - Yellow	55- 12
A109 3404	Toner Bottle Guide - Cyan	55- 8
A109 3406	Top Cover Bottle - Black	55- 3
A109 3407	Top Cover Bottle - Cyan	55- 7
A109 3408	Top Cover Bottle - Magenta	55- 9
A109 3409	Top Cover Bottle - Yellow	55- 11
A109 3410	Toner Tank Cover	55- 19
A109 3427	Rear Side Plate - Toner Tank	55- 15
A109 3428	Right Side Plate - Toner Tank	55- 13
A109 3440	Left Slide Rail Stay	107- 9
A109 3441	Right Slide Rail Stay	107- 1
A109 3446	Right Stay - Toner Tank	107- 3
A109 3459	Connector Cover - Hopper Harness	107- 7
A109 3553	Front Side Plate - Drum	53- 6
A109 3556	Seal - 4x5x10	53- 10
A109 3557	Seal - 5x14x14	53- 9
A109 3558	Drum Grounding Plate	53- 7
A109 3560	Rear Side Plate - Drum	53- 27
A109 3565	Seal - 3x4x5	53- 22

Part No.	Description	Page and Index No
A109 3566	Seal - 5x10x14	53- 26
A109 3567	Duct Seal - 3x22x27	53- 28
A109 3569	Charge Corona Housing	53- 4
A109 3570	Lower Louver	53- 1
A109 3571	Middle Louver	53- 2
A109 3572	Upper Louver	53- 3
A109 3573	Guide Rail - Charge Corona	53- 5
A109 3574	Pressure Plate - Cleaning Brush	51- 22
A109 3579	Right Side Stay - Drum Cleaning	53- 21
A109 3582	Pre-cleaning Corona Rail	53- 24
A109 3584	Cleaning Brush Cover	53- 19
A109 3585	Front Side Seal-cleaning Brush Cove	53- 17
A109 3586	Rear Seal - Cleaning Brush Cover	53- 18
A109 3589	Drum Cleaning Bracket	53- 15
A109 3593	Seal - 21x323	53- 25
A109 3595	Cleaning Blade Holder	53- 13
A109 3596	Seal - 16x323	53- 12
A109 3597	Stepped Screw - M4	53- 14
A109 3601	Blade Stopper Lever	51- 21
A109 3605	Front Side Holder - Cleaning Brush	51- 13
A109 3610	Rear Side Holder - Cleaning Brush	51- 15
A109 3615	Bushing - Cleaning Brush	51- 12
A109 3615	Bushing - Cleaning Brush	53- 8
A109 3616	Gear - 16Z	51- 17
A109 3616	Gear - 16Z	53- 30
A109 3617	Cleaning Brush Bias Roller	53- 20
A109 3618	Toner Collection Coil	51- 27
A109 3623	Bias Roller Blade	51- 25
A109 3626	Blade Holder - Bias Roller	51- 24
A109 3629	Toner Collection Joint	51- 3
A109 3631	Gear - 18Z/20Z	51- 2
A109 3632	Toner Collection Auger	51- 4
A109 3635	Gear - 18Z	51- 1
A109 3637	Toner Collection Pipe	51- 6
A109 3639	Right Shutter - Toner Collection	51- 9

Part No.	Description	Page and Index No.
A109 3641	Left Shutter - Toner Collection	51- 10
A109 3642	Pressure Spring	51- 7
A109 3643	Joint Shutter - Toner Collection	51- 8
A109 3644	Shutter Stopper	51- 11
A109 3645	Toner Collection Tube	51- 5
A109 3646	Gear - 16Z	53- 29
A109 3647	Gear - 16/17Z	53- 23
A109 3648	Spacer - 6x8x14	53- 16
A109 3650	Knob Screw	51- 20
A109 3651	Gear - 20Z	51- 19
A109 3652	Front Drum Flange	51- 18
A109 3653	Rear Drum Flange	51- 26
A109 3659	Seal - 3x9x9	53- 31
A109 3660	Seal - 3x8x18	53- 32
A109 3661	Cover Bracket - Cleaning Brush	53- 33
A109 3852	Front Lift Arm - Transport	73- 13
A109 3853	Rear Lift Arm - Transport	73- 12
A109 3857	Support Roller - Lift Arm	73- 14
A109 3858	Lift Arm Stay	73- 16
A109 3859	Transport Fan Bracket	73- 11
A109 3871	Front Right Positioning Plate	109- 6
A109 3872	Front Left Positioning Plate	109- 5
A109 3873	Rear Right Positioning Plate	109- 11
A109 3874	Rear Left Positioning Plate	109- 8
A109 4063	Upper Pressure Lever	85- 19
A109 4064	Lower Pressure Lever	85- 22
A109 4072	Pressure Roller Lamp Holder	83- 7
A109 4100	Front Side Plate - Fusing	85- 13
A109 4107	Fusing Lamp Holder - Front	83- 6
A109 4110	Oil Supply Stopper	83- 5
A109 4130	Rear Side Plate - Fusing	85- 23
A109 4137	Fusing Lamp Holder - Rear	83- 22
A109 4141	Fusing Harness Bracket	83- 15
A109 4153	Oil Guide	83- 4
A109 4159	Upper Fusing Rail	85- 7

Part No.	Description	Page and Index No
A109 4161	Spring Plate - Oil Supply Pad	81- 13
A109 4162	Oil Supply Bracket	81- 15
A109 4167	Lower Entrance Guide Plate	81- 21
A109 4169	Oil Pan	85- 11
A109 4180	Right Lower Stay - Fusing	85- 10
A109 4182	Left Lower Stay - Fusing	83- 3
A109 4190	Cleaning Roller Bracket	85- 3
A109 4192	Blade Bracket	85- 1
A109 4194	Cleaning Roller Scraper	85- 2
A109 4201	Hot Roller Stripper Bracket	79- 7
A109 4204	Slider - Hot Roller Stripper	79- 5
A109 4205	Paper Exit Frame	79- 29
A109 4207	Exit Roller Guide	79- 8
A109 4208	Upper Exit Guide Plate	79- 4
A109 4209	Lower Exit Guide Plate	79- 34
A109 4210	Exit Sensor Bracket	79- 24
A109 4212	Exit Roller Holder	79- 11
A109 4213	Exit Roller Front Guide	79- 35
A109 4215	Exit Sensor Feeler	79- 27
A109 4230	Oil Supply Bracket	81- 3
A109 4250	Front Fusing Cover	79- 19
A109 4251	Upper Fusing Cover	79- 20
A109 4253	Fusing Cover - Right	79- 21
A109 4270	Fusing Unit Rail	105- 17
A109 4271	Heat Insulating Plate	105- 24
A109 4273	Fusing Unit Stopper	105- 23
A109 4274	Copy Tray Holder	109- 2
A109 4621	Lubricant Motor Bracket	87- 7
A109 4625	Spring Clutch Ass y	87- 6
A109 4627	Clutch Holder Bracket	87- 25
A109 4628	Clutch Holder	87- 23
A109 4630	Joint Clutch	87- 21
A109 4650	Fly-wheel Support Plate	91- 29
A109 4651	Fly Wheel - 195	89- 14
A109 4652	Fly Wheel - 190	89- 13

Part No.	Description	Page and Index No.
A109 4653	Drum Shaft Holder	91- 23
A109 4655	Drum Shaft Terminal	91- 22
A109 4670	Motor Cushion	91- 7
A109 4671	Transfer Belt Motor Bracket	91- 8
A109 4673	Pulley Cover	91- 18
A109 4674	Front Joint - Transfer Belt	91- 1
A109 4675	Rear Joint - Transfer Belt	91- 2
A109 4676	Belt Tightner	91- 10
A109 4679	Transfer Belt Drive Shaft	91- 4
A109 4692	Transport Motor Bracket	93- 15
A109 4694	Fusing Drive Gear Bracket	93- 24
A109 4695	Idle Gear Bracket - Front	93- 19
A109 4697	Idle Gear Bracket - Rear	93- 17
A109 4712	Belt Tightner	93- 10
A109 4714	Position Sensor Bracket	47- 40
A109 4723	Support Plate	89- 4
A109 4725	Sleeve Motor Bracket	89- 5
A109 4727	Collar - 10x17x18mm	89- 23
A109 4762	Drive Motor Bracket	87- 26
A109 4771	Gear Release Arm	109- 7
A109 4772	Arm Bracket - Gear Release	109- 14
A109 4773	Wire Holder - Gear Release	109- 17
A109 4774	Gear Release Wire	109- 16
A109 4775	Stepped Screw - M5	13- 12
A109 4775	Stepped Screw - M5	109- 13
A109 4776	Hinge Support Plate	15- 24
A109 4812	Tightener	87- 9
A109 4910	Lower Left Hinge	109- 18
A109 5155	IC - MB7111LM	95- 34
A109 5156	IC - MB7111LM	95- 33
A109 5171	Laser Synchronizing Detector Board	29- 18
A109 5192	ID Sensor Board	49- 24
A109 5196	Humidity Sensor	35- 22
A109 5203	IC - 8K8BIT35NS	121- 2
A109 5222	IC - RF5C221	121- 3

Part No.	Description	Page and Index No
A109 5227	IC - MB87872	121- 4
A109 5236	IPU Interface Board	27- 8
A109 5304	Fusing Unit Harness	83- 21
A109 5305	Development Unit Harness	59- 12
A109 5305	Development Unit Harness	63- 13
A109 5309	IPU Board Relay Harness	27- 32
A109 5310	Relay Harness - Transport Fan	73- 7
A109 5310	Relay Harness - Transport Fan	109- 9
A109 5311	Sensor Relay Harness	47- 34
A109 5312	Relay Harness - Polygon Motor	29- 31
A109 5312	Relay Harness - Polygon Motor	95- 14
A109 5313	Relay Harness - Transport Sensor	105- 20
A109 5313	Relay Harness - Transport Sensor	109- 10
A109 5314	Relay Harness - Transport Unit	97- 17
A109 5315	Relay Harness - Brush Motor	95- 22
A109 5316	Relay Harness - Development Motor	87- 18
A109 5317	Key Counter Relay Harness	95- 32
A109 5318	Erase Lamp Relay Harness	97- 5
A109 5319	Separation Corona Cable	105- 5
A109 5320	Development Relay Harness - 1	97- 3
A109 5321	Development Relay Harness - 2	97- 18
A109 5322	By-pass Feed Harness - 1	45- 12
A109 5323	By-pass Feed Harness - 2	45- 43
A109 5324	Exit Unit Relay Harness	79- 22
A109 5324	Exit Unit Relay Harness	83- 1
A109 5327	Relay Harness - Oil End Sensor	81- 22
A109 5329	Polygon Motor Relay Harness	95- 20
A109 5330	AC Power Pack Relay Harness	95- 21
A109 5332	LD Unit Harness	29- 23
A109 5333	Synchronizing Detector Harness	29- 22
A109 5335	CCD Harness - 1	23- 18
A109 5336	CCD Harness - 2	23- 17
A109 5338	IPU Harness	23- 23
A109 5338	IPU Harness	27- 30
A109 5340	Scanner DC Harness	25- 21

Part No.	Description	Page and Index No.
A109 5341	Scanner Interface Harness	23- 16
A109 5341	Scanner Interface Harness	25- 13
A109 5342	Scanner Drive Harness	25- 25
A109 5344	CCDHarness 3 - EXP	23- 19
A109 5355	Relay Harness - Paper Tray Unit	101- 3
A109 5361	By-pass Feed Harness - 3	45- 18
A109 5362	Humidity Sensor Harness	35- 23
A109 5373	Front AC Harness	27- 14
A109 5376	Scanner AC Harness	25- 5
A109 5377	Exposure Lamp Relay Harness	21- 20
A109 5378	Exposure Lamp Harness (115V)	21- 7
A109 5378	Exposure Lamp Harness	23- 14
A109 5380	Exposure Lamp Harness - 220V	21- 7
A109 5382	AC Main Harness	97- 23
A109 5382	AC Main Harness	123- 0
A109 5390	Drum Bias Cable	91- 21
A109 5391	High Voltage Harness	95- 10
A109 5394	Ground Wire	45- 49
A109 5401	Toner Supply Motor - DC24V 4.5W	55- 16
A109 5406	Fusing Thermofuse - 150 C 15A	81- 14
A109 5408	Pressure Roller Thermofuse - 150 C 15A	81- 16
A109 5538	Bypass Feed Table Sensor - 115V	45- 40
A109 5705	IPU Cooling Fan Louver	27- 5
A109 5711	IPU Unit Position Plate	25- 22
A109 5718	IPU Lower Harness Cover	29- 24
A109 5719	IPU Upper Harness Cover	29- 25
A109 5720	Seal - 9.5x9.5x125	27- 21
A109 5721	Seal - 9.5x9.5x66	27- 24
A109 5722	Front Guide Plate - IPU	27- 1
A109 5723	Rear Guide Plate - IPU	27- 3
A109 5724	IPU Fixing Bracket	27- 2
A109 5726	Scanner Stopper Rod	103- 1
A109 5729	IPU Cooling Fan Bracket	27- 25
A109 5730	Polygon Motor Fan Bracket	27- 27
A109 5731	IPU Cover Seal	27- 9

Part No.	Description	Page and Index No
A109 5732	Gasket - 340	27- 36
A109 5733	Gasket - 210	27- 35
A109 5734	Gasket - 85	27- 37
A109 5741	Main Control Board Bracket	99- 6
A109 5745	AC Drive Board Bracket	27- 19
A109 5747	Interface Board 1 Bracket	95- 15
A109 5751	Main Control Board Hinge	93- 2
A109 5755	Front Holder - Interface 1	95- 8
A109 5756	Front Holder - AC Drive	109- 1
A109 5758	Rear Holder - Interface 1	95- 12
A109 5761	Support Bracket - T	99- 1
A109 5762	Support Bracket - E	87- 4
A109 5765	Board Bracket - B	99- 13
A109 5771	Fusing Exhaust Fan Bracket	99- 15
A109 5781	Total Counter Bracket	103- 7
A109 5782	Counter Bracket Hinge	103- 13
A109 5786	Safety Switch Lever	103- 17
A109 5789	Safety Switch Bracket	103- 21
A109 5792	Safety Switch Link	103- 19
A109 5794	Safety Switch Holder	103- 24
A109 5798	Harness Clamp Plate	97- 9
A109 6060	Transfer Unit Stay	67- 13
A109 6063	Belt Drive Roller	67- 14
A109 6069	Belt Cleaning Roller	67- 5
A109 6082	Transfer Roller Joint	67- 18
A109 6087	Spring Holder Cover - Transfer	67- 10
A109 6089	Spring Holder - Transfer	67- 12
A109 6091	Transfer Unit Frame	69- 15
A109 6096	Cam Shaft	69- 10
A109 6097	Release Cam	47- 16
A109 6097	Release Cam	69- 11
A109 6098	Tention Cam	69- 12
A109 6099	Cam Lever	69- 17
A109 6101	Bias Roller Bracket	69- 6
A109 6105	Belt Bias Roller	69- 1

Part No.	Description	Page and Index No.
A109 6110	Transfer Idle Roller	69- 2
A109 6117	Base - Spring	69- 24
A109 6118	Belt Tension Roller	69- 22
A109 6121	Tension Roller Bracket	69- 16
A109 6122	Tension Support Roller Holder	69- 19
A109 6124	Transfer Unit Grip Plate	67- 3
A109 6126	Transfer Unit Position Shaft	67- 8
A109 6130	Transfer Belt	67- 15
A109 6131	Transfer Unit Rail	107- 22
A109 6140	Transfer Unit Cover Plate	77- 14
A109 6150	Positioning Screw	91- 28
A109 6155	Cleaning Roller Front Bracket	67- 20
A109 6156	Cleaning Roller Rear Bracket	67- 21
A109 6243	Entrance Seal Ass y - Transfer	71- 3
A109 6247	Transfer Guide Plate Knob	71- 6
A109 6248	Upper Guide Plate - Transfer	71- 5
A109 6258	Roller	71- 17
A109 6260	Toner Catch Pan	71- 20
A109 6270	Right Positioning Plate	71- 19
A109 6285	Transfer Cam Positioning Plate	47- 14
A109 6286	Paper Transfer Unit Rail	47- 17
A109 6298	Sensor Feeler - Transfer Roller	47- 38
A109 6305	Front Side Plate - Belt Cleaning	75- 7
A109 6309	Front - Seal-10x20	75- 8
A109 6310	Toner Collection Cap	75- 2
A109 6311	Toner Collection Spring	75- 3
A109 6314	Rear Side Plate - Belt Cleaning	75- 28
A109 6316	Rear Seal - 10x30	75- 29
A109 6317	Toner Collection Auger	75- 21
A109 6338	Cleaning Blade Lever	75- 9
A109 6342	Cleaning Blade Roller	75- 10
A109 6344	Cleaning Blade Solenoid	75- 6
A109 6349	Cleaning Blade Spring	75- 13
A109 6350	Cleaning Blade Lever Spring	75- 11
A109 6351	Spring Stopper Seal	75- 15

Part No.	Description	Page and Index No
A109 6352	Entrance Seal Spring	75- 25
A109 6354	Cleaning Entrance Seal Solenoid	75- 4
A109 6360	Release Spring	75- 30
A109 6367	Front Holder - Entrance Seal	75- 1
A109 6369	Entrance Seal Collar	75- 24
A109 6370	Entrance Seal Bracket	75- 22
A109 6372	Entrance Seal Bracket Sheet	75- 23
A109 6373	Base Plate - Belt Cleaning	75- 32
A109 6373	Base Plate -belt Cleaning	75- 45
A109 6375	Base Plate Bracket	75- 46
A109 6377	Front Side Plate Cushion	75- 31
A109 6401	Lubricant Brush Roller Stay	107- 23
A109 6403	Solenoid Bracket	107- 8
A109 6502	Drive Gear Bracket	47- 3
A109 6523	Lower Collection Joint	77- 16
A109 6531	Lower Collection Coil	77- 1
A109 6541	Joint Fixing Band	77- 15
A109 6543	Toner Collection Duct	77- 21
A109 6544	Collection Pipe - Transfer Belt	77- 22
A109 6545	Collection Pipe Support Plate	77- 19
A109 6546	Seal - 12mm	77- 20
A109 6547	Seal - 18mm	77- 17
A109 6548	Small Duct Upper Seal	77- 18
A109 6551	Joint Duct - Collection Bottle	77- 2
A109 6555	Lower Collection Tube	77- 23
A109 6561	Toner Collection Duct	77- 5
A109 6563	Upper Seal - 3x10x36	77- 7
A109 6564	Lower Seal - 8x13x7	77- 6
A109 9001	DJF Fixing Band	129- 10
A109 9501	Drum Cleaning Entrance Seal	53- 34
A109 9502	Seal - Cleaning Blade	75- 17
A109 9503	Entrance Seal - Belt Cleaning	75- 27
A109 9504	Entrance Seal - Belt Cleaning Unit	75- 18
A126 1351	Key Counter Cover	95- 1
A126 1526	Key Top - Clear/stop	17- 1

Part No.	Description	Page and Index No.
A134 1328	Small Cap	13- 10
A134 1393	Platen Cover Ass y	15- 1
A134 1394	Front Platen Cover	15- 4
A134 1395	Rear Platen Cover	15- 6
A134 1396	Original Holder	15- 7
A134 1724	Cushion - Stepper Motor	19- 14
A134 5209	LSI - MSM518222-30JS-1	121- 5
A153 1380	Platen Cover Bracket	15- 11
A153 6409	Decal - Keytop Cover (GES)	13- 29
A153 6409	Decal - Keytop Cover (GES)	127- 8
A166 1349	Cap - DF Unit	13- 20
A166 5080	IDU Board	27- 18
A166 5084	IC - UVEPLROM 1M X16 120NS	27- 29
A166 5312	LCD Display - Mono	17- 24
A166 5314	Touch Panel (Mono)	17- 25
A176 6695	Misfeed Removal Guide	31- 31
A176 6695	Misfeed Removal Guide	33- 19
A199 5113	Charge Wire Cleanermotor Driveboard	87- 28
A199 5119	2nd Relay Board	99- 10
A199 5304	DC Main Harness	95- 24
A199 5307	DC Main Harness - Rear Upper	97- 1
A199 5310	DC Main Harness - Rear Lower	97- 13
A199 6704	Model Name Plate - Ges - 2606	15- 45
A199 6705	Model Name Plate - Nashua - C606	15- 45
A199 6706	Model Name Plate - Rex - CC8606	15- 45
A199 7100	Door - Right - Ric - Basic (A199-RIC)	15- 13
A199 7105	Door - Left - Savin - Basic (A199-SVN)	15- 19
A199 7120	Door - Left - Inf - Basic (A199-INF)	15- 19
A199 7301	Operation Panel Ass y - LT (A199)	13- 3
A199 7301	Operation Panel Ass y - LT (A199)	17- 0
A199 7302	Operation Panel Ass y - A4 (A199)(RIC/INF)	13- 3
A199 7302	Operation Panel Ass y - A4 (A199)(RIC/INF)	17- 0
A199 7303	Operation Panel Ass y - A4 (A199)(NRG)	13- 3
A199 7303	Operation Panel Ass y - A4 (A199)(NRG)	17- 0
A406 9505	Platen Cover Sheet - 10 Sheet/1 Set	15- 2

Part No.	Description	Page and Index No
A513 1033	Left Middle Frame	101- 18
A513 1034	Lower Rear Right Bracket	39- 45
A513 1035	Lower Rear Left Bracket	39- 46
A513 1036	Lower Front Right Bracket	39- 36
A513 1172	Interface Board Bracket	101- 5
A513 1173	Upper Hinge - Paper Feed Unit	37- 7
A513 1175	Lower Hinge - Paper Feed Unit	37- 15
A513 1177	Lower Cover Bracket	39- 38
A513 1178	Power Supply Cord Bracket	101- 15
A513 1179	Noise Filter Bracket	101- 17
A513 1180	Upper Stay - Rear Cover	35- 27
A513 1181	Lower Stay - Rear Cover	35- 28
A513 1185	Grounding Plate	35- 29
A513 1338	Left Cover Bracket	35- 4
A513 2752	Vertical Transport Guide	39- 29
A513 2760	Vertical Transport Guide Bracket	39- 15
A513 2762	Pressure Plate	39- 26
A513 2771	Switch Bracket - Vertical Transport	39- 27
A513 2775	Guide Plate Front Holder	39- 18
A513 2776	Guide Plate Stopper	39- 20
A513 2782	Cover Release Plate	39- 21
A513 2783	Spring Plate	39- 22
A513 2785	Guide Plate Rear Holder	39- 16
A513 2786	Support Cover	39- 41
A513 2801	Front Side Frame	39- 35
A513 2809	Rear Cover - Vertical Transport	39- 12
A513 2820	Belt Tightner	37- 19
A513 2832	Paper Size Sensor Bracket	101- 8
A513 2836	Tray Set Sensor Bracket	101- 9
A513 2840	Paper Lift Motor - DC24V 3.6W	37- 10
A513 2846	Paper Feed Motor Bracket	37- 21
A513 2850	Right Rail - Paper Tray	39- 37
A513 2861	Left Rail - Paper Tray	39- 3
A513 2870	Upper Heater Bracket	39- 2
A513 5121	Paper Feed Interface Board	101- 4

Part No.	Description	Page and Index No.
A513 5350	Rear Harness - Paper Feed Unit	101- 2
A513 5351	Front Harness - Paper Feed Unit	35- 25
A513 5351	Front Harness - Paper Feed Unit	101- 1
A513 5353	Relay Harness - Lift Motor	37- 9
A513 5354	Relay Harness - Paper Size Sensor	101- 7
A513 5357	Relay Harness - Tray Set Sensor	101- 11
A513 5358	Relay Harness - Paper Feed Motor	37- 22
A513 5364	Relay Harness - Humidity Sensor	35- 24
a513 5366	Relay Harness - Paper Tray Door SW.	39- 28
A513 5380	AC Harness - Noise Filter Board	101- 20
A513 5381	Relay Harness	101- 21
A513 5384	AC Harness - Noise Filter Board	101- 23
A513 5403	Toner Overflow Sensor	35- 14
A513 5542	Noise Filter - 115V	101- 24
A513 5642	Noise Filter - 220V	101- 24
A513 6152	Humidity Sensor Holder	35- 21
A513 6600	Toner Collection Bottle	35- 10
A513 6603	Seal - Toner Overflow Sensor	35- 26
A513 6612	Joint Case Bracket	39- 6
A513 6613	Collection Joint Case	39- 8
A513 6614	Upper Shielding Seal	39- 7
A513 6615	Lower Shielding Seal	39- 9
A513 6622	Tray Unit Gear Holder	37- 1
A513 6642	Right Side Plate	35- 18
A513 6643	Collection Bottle Guide Plate	35- 17
A513 6644	Right Lower Hinge - Tray Unit	35- 19
A513 6652	Collection Bottle Stopper	39- 13
A513 6653	Collection Bottle Cushion	39- 14
A513 6661	Cover Support Plate	39- 34
5053 0223	Bushing - 8mm	89- 3
5053 0447	Bushing - 6mm	37- 16
5053 0447	Bushing - 6mm	47- 2
5053 0447	Bushing - 6mm	73- 3
5203 2679	Pinion Tightening Screw - M4x5	29- 33
5203 4165	Fusing Thermofuse Decal	83- 23

Part No.	Description	Page and Index No
5203 4165	Fusing Thermofuse Decal	85- 30
5203 4165	Fusing Thermofuse Decal	127- 2
5205 1336	Front Cover Chain	59- 1
5205 2612	Gear - 19T	57- 7
5205 8730	Counter Set Key	129- 9
5206 2686	Snap Ring	69- 13
5208 6136	Spring - Hot Roller Stripper	79- 10
5209 5320	Oil End Sensor	81- 23
5215 1667	Platen Cover Stud	15- 12
5215 1924	Cushion	19- 11
5215 2836	Sleeve - 8x34mm	15- 40
5215 2837	Shaft 7x40mm	15- 39
5215 2838	Rubber Magnet	15- 34
5215 2840	Pin - 4x115mm	15- 33
5215 2842	Right Spring - Platen Cover	15- 31
5215 2843	Left Spring - Platen Cover	15- 30
5215 2844	Slide Supporter	15- 32
5215 2845	Plate - Magnet	15- 35
5215 2846	Platen Base	15- 36
5215 2847	Base Holder	15- 37
5215 4116	Oil Blade Holder	83- 17
5215 4411	Spring Plate	81- 24
5215 4444	Pin	79- 14
5215 4497	Exit Antistatic Brush	79- 3
5219 9300	Grease Mt - 1	129- 1
5301 1662	Hexagon Bolt	39- 43
5350 1754	Stud - M5x4	65- 31
5353 3710	Gear - 18Z	45- 30
5361 2080	Plate : Wire Clamp	19- 22
5403 6246	Stepped Screw - Cleaning	59- 25
5409 1855	Mounting Pin	69- 5
5413 2298	Screw - M4	77- 8
5415 1053	Caster	39- 33
5415 4310	Valve - Oil Pump	81- 25
5418 2859	Spring - Regist Roller (Front)	87- 10

Part No.	Description	Page and Index No.
5420 1515	Plate - Key Counter	95- 4
5420 9550	Silicone Oil	129- 2
5424 1064	Screw Stand	39- 17
5432 3265	Spring Lock Lever	91- 9
5442 2108	Corona Wire Spring	49- 7
5442 2108	Corona Wire Spring	49- 14
5442 2754	Spring - Registration Roller	47- 9
5442 4495	Slip Clutch	79- 17
5442 9101	Setting Powder	129- 3
5446 5832	Connector Guide Pin	97- 14
5446 5832	Connector Guide Pin	107- 16
5447 2681	Snap Ring	39- 30
5447 2681	Snap Ring	41- 5
5447 2681	Snap Ring	43- 26
5447 2681	Snap Ring	45- 28
5447 2681	Snap Ring	73- 17
5447 2681	Snap Ring	79- 33
5447 2683	Gear - 18T	45- 22
5447 2684	Gear - 18T	45- 24
5447 2706	Gear - 15T	41- 20
5447 2706	Gear - 15T	45- 33
5447 2743	Lever Spring	93- 21
5447 2927	Friction Pad - B	45- 10
5447 3200	Bushing - 6mm	57- 2
5447 3922	Gear - 16T	47- 10
5447 4241	Tube Clamp	81- 2
5840 1632	Stepped Screw	79- 2
5840 1632	Stepped Screw	85- 12
5875 2088	Shoulder Screw - M4	69- 23
5875 2088	Shoulder Screw - M4	75- 43
5894 2540	Arm Screw	19- 29
5919 2201	Shoulder Screw - M4	67- 1
5919 2201	Shoulder Screw - M4	91- 14
5919 2201	Shoulder Screw - M4	97- 12
5922 2642	Edging	95- 35

Part No.	Description	Page and Index No
6803 2273	Stepped Screw - M4	59- 6
6803 2273	Stepped Screw - M4	63- 19

Part No.	Description	Page and Index No.
0313 0040B	Philips Pan Head Screw - M3x4	59-108
0313 0040B	Philips Pan Head Screw - M3x4	61-107
0313 0040B	Philips Pan Head Screw - M3x4	63-101
0313 0040B	Philips Pan Head Screw - M3x4	65-109
0313 0050B	Philips Pan Head Screw - M3x5	19-101
0313 0050B	Philips Pan Head Screw - M3x5	23-104
0313 0060B	Philips Pan Head Screw - M3x6	21-103
0313 0060B	Philips Pan Head Screw - M3x6	25-105
0313 0060B	Philips Pan Head Screw - M3x6	31-108
0313 0060B	Philips Pan Head Screw - M3x6	33-104
0313 0060B	Philips Pan Head Screw - M3x6	49-102
0313 0060B	Philips Pan Head Screw - M3x6	53-103
0313 0060B	Philips Pan Head Screw - M3x6	59-101
0313 0060B	Philips Pan Head Screw - M3x6	61-102
0313 0060B	Philips Pan Head Screw - M3x6	63-106
0313 0060B	Philips Pan Head Screw - M3x6	65-106
0313 0060B	Philips Pan Head Screw - M3x6	75-101
0313 0060B	Philips Pan Head Screw - M3x6	81-100
0313 0060B	Philips Pan Head Screw - M3x6	107-104
0313 0080B	Philips Pan Head Screw - M3x8	57-102
0313 0100B	Philips Pan Head Screw - M3x10	47-109
0313 0100B	Philips Pan Head Screw - M3x10	75-109
0313 0100B	Philips Pan Head Screw - M3x10	105-110
0313 0120B	Philips Pan Head Screw - M3x12	53-104
0314 0050B	Philips Pan Head Screw - M4x5	105-109
0314 0050B	Philips Pan Head Screw - M4x5	107-102
0314 0050W	Philips Pan Head Screw - M4x5	15-106
0314 0060B	Philips Pan Head Screw - M4x6	13-101
0314 0060B	Philips Pan Head Screw - M4x6	39-103
0314 0060B	Philips Pan Head Screw - M4x6	47-106
0314 0060B	Philips Pan Head Screw - M4x6	51-100
0314 0060B	Philips Pan Head Screw - M4x6	55-101
0314 0060B	Philips Pan Head Screw - M4x6	73-102
0314 0060B	Philips Pan Head Screw - M4x6	79-104
0314 0060B	Philips Pan Head Screw - M4x6	81-101

Part No.	Description	Page and Index No
0314 0060B	Philips Pan Head Screw - M4x6	83-100
0314 0060B	Philips Pan Head Screw - M4x6	85-100
0314 0060B	Philips Pan Head Screw - M4x6	93-104
0314 0060B	Philips Pan Head Screw - M4x6	95-102
0314 0060B	Philips Pan Head Screw - M4x6	105-107
0314 0080B	Philips Pan Head Screw - M4x8	19-109
0314 0080B	Philips Pan Head Screw - M4x8	25-100
0314 0080B	Philips Pan Head Screw - M4x8	31-109
0314 0080B	Philips Pan Head Screw - M4x8	33-105
0314 0080B	Philips Pan Head Screw - M4x8	49-101
0314 0080B	Philips Pan Head Screw - M4x8	55-104
0314 0080B	Philips Pan Head Screw - M4x8	75-100
0314 0080B	Philips Pan Head Screw - M4x8	83-102
0314 0080M	Philips Pan Head Screw - M4x8	27-102
0314 0080M	Philips Pan Head Screw - M4x8	101-111
0314 0120B	Philips Pan Head Screw - M4x12	19-102
0314 0120B	Philips Pan Head Screw - M4x12	25-112
0314 0120B	Philips Pan Head Screw - M4x12	43-110
0314 0120B	Philips Pan Head Screw - M4x12	99-106
0314 0160B	Philips Pan Head Screw - M4x16	53-102
0314 0160B	Philips Pan Head Screw - M4x16	87-106
0314 0200B	Philips Pan Head Screw - M4x20	25-111
0314 0200B	Philips Pan Head Screw - M4x20	53-101
0314 0300B	Philips Pan Head Screw - M4x30	25-104
0314 0300B	Philips Pan Head Screw - M4x30	27-101
0314 0300B	Philips Pan Head Screw - M4x30	99-102
0314 0300B	Philips Pan Head Screw - M4x30	105-104
0314 0300B	Philips Pan Head Screw - M4x30	109-102
0323 0060B	Philips Sunk Screw - M3x6	95-105
0324 0060B	Philips Sunken Head Screw - M4x6	69-107
0324 0080B	Philips Sunken Head Screw - M4x8	75-103
0344 0060F	Philips Truss Head Screw - M4x6	13-100
0344 0060F	Philips Truss Head Screw - M4x6	15-101
0344 0060F	Philips Truss Head Screw - M4x6	19-110
0344 0060F	Philips Truss Head Screw - M4x6	35-103

Part No.	Description	Page and Index No.
0344 0060F	Philips Truss Head Screw - M4x6	77-103
0344 0060F	Philips Truss Head Screw - M4x6	103-102
0344 0080F	Philips Truss Head Screw - M4x8	13-102
0344 0080F	Philips Truss Head Screw - M4x8	15-103
0353 0050B	Philips Truss Head Screw - M3x5	35-102
0353 0050B	Philips Truss Head Screw - M3x5	39-107
0353 0050B	Philips Truss Head Screw - M3x5	71-103
0353 0060F	Philips Truss Head Screw - M3x6	99-114
0354 0050F	Philips Pan Head Bind Screw - M4x5	31-104
0354 0050F	Philips Pan Head Bind Screw - M4x5	33-107
0354 0060B	Screw - M4X6	27-103
0354 0060B	Screw - M4X6	29-100
0354 0060B	Screw - M4X6	35-100
0354 0060B	Screw - M4X6	47-102
0354 0060B	Screw - M4X6	59-100
0354 0060B	Screw - M4X6	61-100
0354 0060B	Screw - M4X6	65-107
0354 0060B	Screw - M4X6	67-100
0354 0060B	Screw - M4X6	69-104
0354 0060B	Screw - M4X6	71-101
0354 0060B	Screw - M4X6	77-102
0354 0060B	Screw - M4X6	87-101
0354 0060B	Screw - M4X6	89-100
0354 0060B	Screw - M4X6	91-107
0354 0060B	Screw - M4X6	93-102
0354 0060B	Screw - M4X6	95-103
0354 0060B	Screw - M4X6	97-100
0354 0060B	Screw - M4X6	99-101
0354 0060B	Screw - M4X6	105-100
0354 0100B	Screw - M4x10	29-105
0354 0100B	Screw - M4x10	47-107
0354 0100B	Screw - M4x10	91-104
0354 0100B	Screw - M4x10	93-103
0354 0100W	Philips Pan Head Screw - M4x10	15-104
0413 0062W	Tapping Screw - M3x6	23-109

Part No.	Description	Page and Index No
0413 0082B	Tapping Screw - M3x8	31-102
0413 0082B	Tapping Screw - M3x8	45-100
0413 0102B	Tapping Screw - M3x10	59-106
0413 0102B	Tapping Screw - M3x10	63-103
0413 0302B	Tapping Screw - M3x10	99-105
0414 0082B	Binding Self Tapping Screw - M4x8	35-104
0414 0082B	Binding Self Tapping Screw - M4x8	45-104
0414 0082B	Binding Self Tapping Screw - M4x8	55-103
0414 0082B	Binding Self Tapping Screw - M4x8	73-104
0414 0082B	Binding Self Tapping Screw - M4x8	81-102
0414 0082B	Binding Self Tapping Screw - M4x8	91-109
0414 0082F	Philips Truss Head Screw - M4x8	31-101
0414 0082F	Philips Truss Head Screw - M4x8	33-101
0414 0102B	Tapping Screw M4x10	105-101
0414 0142W	Tapping Screw - M4x14	15-100
0433 0050B	Tapping Screw - M3x5	23-106
0433 0060B	Philips Tapping Screw - M3x6	35-105
0433 0060B	Philips Tapping Screw - M3x6	37-108
0433 0060B	Philips Tapping Screw - M3x6	49-100
0433 0102B	Tapping Screw - M3x10	97-102
0434 0060B	Philips Tapping Screw - M4x6	19-100
0434 0060B	Philips Tapping Screw - M4x6	23-100
0434 0060B	Philips Tapping Screw - M4x6	25-103
0434 0060B	Philips Tapping Screw - M4x6	41-101
0434 0060B	Philips Tapping Screw - M4x6	43-101
0434 0080B	Philips Tapping Screw - M4x8	27-100
0434 0080B	Philips Tapping Screw - M4x8	37-102
0434 0080B	Philips Tapping Screw - M4x8	39-101
0434 0080B	Philips Tapping Screw - M4x8	47-100
0434 0080B	Philips Tapping Screw - M4x8	73-100
0434 0080B	Philips Tapping Screw - M4x8	87-102
0434 0080B	Philips Tapping Screw - M4x8	95-100
0434 0080B	Philips Tapping Screw - M4x8	97-101
0434 0080B	Philips Tapping Screw - M4x8	99-100
0434 0080B	Philips Tapping Screw - M4x8	101-104

Part No.	Description	Page and Index No.
0434 0080B	Philips Tapping Screw - M4x8	103-100
0434 0080B	Philips Tapping Screw - M4x8	105-105
0434 0080B	Philips Tapping Screw - M4x8	107-100
0434 0080B	Philips Tapping Screw - M4x8	109-100
0434 0082F	Tapping Screw - M3x10	31-107
0434 0082F	Tapping Screw - M3x10	39-105
0434 0102W	Tapping Screw - M4x10	15-102
0452 3006B	Tapping Screw - M3x6	49-107
0452 3008B	Tapping Screw - M3x8	49-106
0452 3010B	Tapping Bind Screw - M3x10	49-105
0573 0040B	Hexagon Headless Set Screw - M3x4	41-105
0574 0040E	Hexagon Headless Set Screw - M4x4	43-108
0574 0060B	Hexagon Headless Set Screw - M4	37-109
0574 0060E	Hexagon Headless Set Screw - M4x6	19-103
0574 0060E	Hexagon Headless Set Screw - M4x6	91-105
0575 0050E	Hexagon Headless Set Screw - M5x5	89-110
0575 0050E	Hexagon Headless Set Screw - M5x5	91-110
0575 0050E	Hexagon Headless Set Screw - M5x5	93-101
0585 0161B	Hexagon Bolt - M5x16	85-104
0593 0060E	Bolt - M3x6	29-101
0701 0100B	Flat Washer - 10	91-114
0710 0100B	Hexagonal Nut - M10	91-113
0720 0025	Retaining Ring - 2.5	49-104
0720 0030B	Retaining Ring - M3	43-111
0720 0030B	Retaining Ring - M3	69-102
0720 0030B	Retaining Ring - M3	75-104
0720 0030B	Retaining Ring - M3	103-106
0720 0030E	Retaining Ring - M3	15-105
0720 0030E	Retaining Ring - M3	57-103
0720 0040B	Retaining Ring - M4	19-107
0720 0040B	Retaining Ring - M4	37-100
0720 0040B	Retaining Ring - M4	37-106
0720 0040B	Retaining Ring - M4	39-106
0720 0040B	Retaining Ring - M4	41-104
0720 0040B	Retaining Ring - M4	43-106

Part No.	Description	Page and Index No
0720 0040B	Retaining Ring - M4	45-102
0720 0040B	Retaining Ring - M4	47-101
0720 0040B	Retaining Ring - M4	51-102
0720 0040B	Retaining Ring - M4	53-105
0720 0040B	Retaining Ring - M4	57-100
0720 0040B	Retaining Ring - M4	59-107
0720 0040B	Retaining Ring - M4	61-101
0720 0040B	Retaining Ring - M4	63-108
0720 0040B	Retaining Ring - M4	65-101
0720 0040B	Retaining Ring - M4	67-105
0720 0040B	Retaining Ring - M4	71-102
0720 0040B	Retaining Ring - M4	73-101
0720 0040B	Retaining Ring - M4	75-107
0720 0040B	Retaining Ring - M4	77-105
0720 0040B	Retaining Ring - M4	87-104
0720 0040E	Retaining Ring - M4	45-105
0720 0040E	Retaining Ring - M4	79-100
0720 0040E	Retaining Ring - M4	85-101
0720 0040E	Retaining Ring - M4	89-102
0720 0040E	Retaining Ring - M4	93-105
0720 0040E	Retaining Ring - M4	109-101
0720 0050B	Retaining Ring - M5	21-100
0720 0050B	Retaining Ring - M5	47-108
0720 0050E	Retaining Ring - M5	37-103
0720 0060B	Retaining Ring - M6	31-110
0720 0060B	Retaining Ring - M6	33-106
0720 0060B	Retaining Ring - M6	37-105
0720 0060B	Retaining Ring - M6	41-102
0720 0060B	Retaining Ring - M6	43-102
0720 0060B	Retaining Ring - M6	47-104
0720 0060B	Retaining Ring - M6	65-104
0720 0060B	Retaining Ring - M6	67-102
0720 0060B	Retaining Ring - M6	69-100
0720 0060B	Retaining Ring - M6	71-100
0720 0060B	Retaining Ring - M6	81-103

Part No.	Description	Page and Index No.
0720 0060B	Retaining Ring - M6	83-101
0720 0060B	Retaining Ring - M6	85-102
0720 0060B	Retaining Ring - M6	87-100
0720 0060B	Retaining Ring - M6	93-100
0720 0060E	Retaining Ring - M6	89-103
0720 0060E	Retaining Ring - M6	91-111
0720 0080B	Retaining Ring - M8	85-105
0725 0120E	Retaining Ring C - M12	59-104
0725 0120E	Retaining Ring C - M12	61-104
0725 0120E	Retaining Ring C - M12	63-102
0725 0120E	Retaining Ring C - M12	65-102
0725 0120E	Retaining Ring C - M12	91-100
0725 0300E	Retaining Ring C - M30	85-103
0727 0080E	Retaining Ring - M8	69-106
0727 0080E	Retaining Ring - M8	87-107
0740 3008	Ball Bearing - 8x22x7	37-107
0740 3008	Ball Bearing - 8x22x7	93-106
0741 3808	Ball Bearing - 8x16x5mm	91-102
0742 3808	Ball Bearing - 8x16x5	43-103
0801 0142	Screw - Spring Washer - M5x8	101-112
0801 1007	Philips Pan Head Screw - M10x7	103-103
0801 1252	P-tight - M3x6	17-101
0802 5146	Tapping Screw - M3x8	17-102
0802 5146	Tapping Screw - M3x8	99-113
0802 5182	Tapping Screw - M3x8	17-103
0803 0020	Positioning Pin	29-107
0805 0073	Retaining Ring - M5	31-106
0805 0083	Retaing Ring - M4	15-107
0805 3145	Ball Bearing - 6x12x4mm	19-105
0805 3145	Ball Bearing - 6x12x4mm	43-107
0805 3366	Bushing - 6mm	45-101
0805 3366	Bushing - 6mm	69-105
0805 3366	Bushing - 6mm	73-105
0805 3366	Bushing - 6mm	79-101
0805 3449	Ball Bearing - M12x24x6	59-103

Part No.	Description	Page and Index No
0805 3449	Ball Bearing - M12x24x6	61-103
0805 3449	Ball Bearing - M12x24x6	63-105
0805 3449	Ball Bearing - M12x24x6	65-108
0805 3449	Ball Bearing - M12x24x6	67-104
0805 3482	Ball Bearing - 8x14x3.5	67-103
0805 3482	Ball Bearing - 8x14x3.5	69-101
0807 3109	Spring Washer - M4	21-106
0807 4047	Wave Washer - 6mm	19-106
0807 4076	Washer - 8.2x6.1x0.3mm	19-104
0807 5053	Washer	91-103
0807 7049	Spacer - 12.3x18x0.2T	87-109
0807 7049	Spacer - 12.3 X 18mm X 0.2t	89-104
0807 7049	Spacer - 12.3 X 18mm X 0.2t	91-101
0950 3010B	Philips Screw With Spring Washer - M3x10	89-101
0950 4008B	Philips Screw With Spring Washer - M4x8	87-108
0950 4008M	Screw - M4x8	99-115
0950 4010B	Sem,s Screw M4x10	39-100
0951 3005B	Philips Screw With Flat Washer - M3x5	55-105
0951 3006B	Philips Screw With Flat Washer - M3x6	21-102
0951 3006B	Philips Screw With Flat Washer - M3x6	23-105
0951 3006B	Philips Screw With Flat Washer - M3x6	25-101
0951 3006B	Philips Screw With Flat Washer - M3x6	47-105
0951 3006B	Philips Screw With Flat Washer - M3x6	55-100
0951 3006B	Philips Screw With Flat Washer - M3x6	69-103
0951 3006B	Philips Screw With Flat Washer - M3x6	71-104
0951 3006B	Philips Screw With Flat Washer - M3x6	75-108
0951 3008B	Philips Screw With Flat Washer - M3x8	23-103
0951 3008B	Philips Screw With Flat Washer - M3x8	31-105
0951 3008B	Philips Screw With Flat Washer - M3x8	57-101
0951 3008B	Philips Screw With Flat Washer - M3x8	101-108
0951 3014B	Philips Screw With Washer - M3x14	29-103
0951 3020B	Philips Screw With Flat Washer - M3x8	29-104
0951 4006B	Philips Screw With Washer - M4x6	19-111
0951 4006B	Philips Screw With Washer - M4x6	49-108
0951 4006B	Philips Screw With Washer - M4x6	51-101

Part No.	Description	Page and Index No.
0951 4006B	Philips Screw With Washer - M4x6	79-103
0951 4006B	Philips Screw With Washer - M4x6	87-105
0951 4006B	Philips Screw With Washer - M4x6	91-106
0951 4008B	Philips Screw With Washer - M4x8	19-108
0951 4008B	Philips Screw With Washer - M4x8	25-102
0951 4008B	Philips Screw With Washer - M4x8	37-110
0951 4008B	Philips Screw With Washer - M4x8	47-103
0951 4008B	Philips Screw With Washer - M4x8	67-101
0951 4008B	Philips Screw With Washer - M4x8	79-102
0951 4008B	Philips Screw With Washer - M4x8	83-108
0951 4008B	Philips Screw With Washer - M4x8	85-106
0951 4008B	Philips Screw With Washer - M4x8	87-103
0951 4008B	Philips Screw With Washer - M4x8	89-107
0951 4008B	Philips Screw With Washer - M4x8	91-108
0951 4010B	Philips Screw With Washer - M4x10	23-108
0951 4030B	Screw - M4x30	23-107
0951 5040B	Screw - M5x40	89-106
0952 3008B	Screw - M3x8	21-101
0952 3008B	Screw - M3x8	33-103
0952 3008B	Screw - M3x8	55-102
0952 3008B	Screw - M3x8	83-104
0952 3008B	Screw - M3x8	107-103
0952 3012B	Screw - M5x12	21-104
0952 3012B	Screw - M5x12	23-101
0952 4010B	Screw - M4x10	59-105
0952 4010B	Screw - M4x10	61-106
0952 4010B	Screw - M4x10	63-107
0952 4010B	Screw - M4x10	65-105
0952 4014B	Screw - M4x14	59-102
0952 4014B	Screw - M4x14	61-105
0952 4014B	Screw - M4x14	63-104
0952 4014B	Screw - M4x14	65-103
0952 4014B	Screw - M4x14	75-102
0952 4014B	Screw - M4x14	79-105
0952 4014B	Screw - M4x14	83-103

Part No.	Description	Page and Index No
0953 4008M	Screw - M4x8	29-102
0954 4008B	Philips Screw - M4x8	101-113
0957 4008B	Philips Screw W/F Washer - M4x8	23-102
0957 4008B	Philips Screw W/F Washer - M4x8	107-105
0960 4008B	Philips Flange Screw - M4x8	29-106
0964 4008B	Tapping Screw With Flat Washer - M4x8	37-104
0964 4008B	Tapping Screw With Flat Washer - M4x8	77-104
0964 4008B	Tapping Screw With Flat Washer - M4x8	95-101
0964 4008B	Tapping Screw With Flat Washer - M4x8	101-107
0965 3006B	Tapping Screw With Flat Washer - M3x6	45-103
0965 3006W	Tapping Screw With Flat Washer - M3x6	35-101
0965 4008B	Tapping Screw - M4x8	31-103
0965 4008B	Tapping Screw - M4x8	33-102
0972 4006A	Philips Polycarbonate Screw - M4x6	49-103
0972 4006A	Philips Polycarbonate Screw - M4x6	53-100
1100 0863	Stud Pin	123-101
1100 0864	Housing - AWG14-20	123-102
1100 1241	Socket - MATE-N-LOCK	123-103
1100 1339	Pin Contact	123-104
1100 1344	Pin Contact	123-105
1100 1669	Connector - 1p	123-106
1101 0328	Connector Pin Contact	115-101
1101 0360	Connector - 3p	115-102
1101 0395	IC Socket - 252	115-103
1101 0474	Connector - 4p	83-106
1102 0941	Connector - 4p	123-107
1102 0946	Housing - 3p	123-108
1102 0947	Housing - 3p	123-109
1102 0948	Housing - 4p	123-110
1102 1017	Housing - 2p Red	123-111
1102 1171	Connector - 5p	123-112
1102 1404	Connector - 1p	123-113
1102 1517	Connector - 4p	123-114
1102 5003	Fiber Connector - DC1002 - 2p	115-104
1102 5003	Fiber Connector - DC1002 - 2p	121-101

Part No.	Description	Page and Index No.
1102 5187	Connector - 14p	123-115
1102 5310	Connector - 5p	121-102
1102 5328	Connector - 12p	115-105
1102 5340	Fiber Connector - 2p	115-106
1102 5341	Fiber Connector	115-107
1102 5342	Connector - 2p	115-108
1102 5343	Fiber Connector - DC1002-5	115-109
1102 6134	IC Socket	115-110
1102 6213	Connector - 1p	123-116
1102 6245	Connector - 2p	43-112
1102 6246	Connector - 3p	75-105
1102 6250	Connector - 7p	43-105
1102 6260	Connector - Red 3p	75-106
1102 6265	Connector - Red 8p	43-104
1102 6265	Connector - Red 8p	107-101
1102 6296	Connector - 3p	121-103
1102 6299	Connector - 6p	115-111
1102 6303	Connector - 10p	115-112
1102 6335	Connector - 4p	121-104
1102 6395	Connector - 1p	115-113
1102 6396	Connector - 1p	115-114
1102 6398	Connector - 2p	121-105
1102 6402	Connector - 2p	115-115
1102 6403	Connector - 30p	115-116
1102 6408	Connector - 30p	115-117
1102 6567	Connector - PHEC40P-R111	121-106
1102 6570	Connector - PHEC60P-R111	121-107
1102 7021	Connector - IMSA-9224B-40Z10-GF	121-108
1103 3020	Connector - 20p	115-118
1104 0376	IC Socket - 40p - DICF-40CS-E	121-109
1104 0451	IC Socket - 32P	115-119
1104 0589	Dip Socket : 32p	115-120
1105 0087	Clamp	41-103
1105 0087	Clamp	43-109
1105 0113	Edge - P108	25-108

Part No.	Description	Page and Index No
1105 0113	Edge - P108	109-104
1105 0192	Locking Support	87-110
1105 0193	Nylon Stud	25-110
1105 0193	Nylon Stud	27-104
1105 0193	Nylon Stud	95-107
1105 0193	Nylon Stud	99-110
1105 0193	Nylon Stud	101-105
1105 0199	Clamp	25-106
1105 0199	Clamp	37-101
1105 0199	Clamp	73-103
1105 0199	Clamp	97-107
1105 0199	Clamp	99-112
1105 0199	Clamp	105-102
1105 0199	Clamp	109-106
1105 0200	Clamp	103-109
1105 0200	Clamp	105-106
1105 0230	Clamp	83-107
1105 0231	Clamp	89-105
1105 0246	Spacer	27-106
1105 0278	Harness Clamp	99-109
1105 0278	Harness Clamp	109-105
1105 0291	Wire Saddle	97-105
1105 0291	Wire Saddle	99-107
1105 0292	Wire Saddle	25-109
1105 0292	Wire Saddle	83-105
1105 0292	Wire Saddle	95-104
1105 0292	Wire Saddle	103-108
1105 0310	Wire Clamp	19-112
1105 0310	Wire Clamp	25-107
1105 0310	Wire Clamp	39-102
1105 0310	Wire Clamp	77-101
1105 0310	Wire Clamp	89-109
1105 0310	Wire Clamp	91-112
1105 0310	Wire Clamp	101-109
1105 0310	Wire Clamp	105-103

Part No.	Description	Page and Index No.
1105 0316	Clamp	97-103
1105 0334	Edge - 17	109-109
1105 0349	Edge Saddle	89-108
1105 0349	Edge Saddle	99-108
1105 0349	Edge Saddle	103-107
1105 0352	Clamp	109-107
1105 0409	Spacer	27-105
1105 0409	Spacer	95-106
1105 0409	Spacer	99-111
1105 0409	Spacer	101-106
1105 0413	Harness Clamp	95-108
1105 0413	Harness Clamp	97-104
1105 0413	Harness Clamp	101-110
1106 0193	Bushing - 7.9mm	105-108
1106 0193	Bushing - 7.9mm	109-103
1106 0310	Bushing	25-113
1106 0430	Bushing - 13mm	109-108
1106 0459	Bushing - 20.2mm	97-106
1107 0391	Fuse - 5A, 125V	101-100
1107 0392	Fuse (Glass Case) - 6.3A - 125V	101-101
1107 0473	Circuit Breaker - 250V 10A (230V)	101-103
1107 0629	Fuse (Ceramic Case) - 15A - 125V	101-102
1107 0693	Circuit Breaker - 18A 250V (115V)	101-103
1204 1542	Dip Switch	115-121
1204 1545	Main Switch	103-101
1204 2156	Dip Switch - 51D-0501	121-110
1204 2355	Micro Switch - AM51632A531	103-110
1204 2356	Micro Switch - AM51612A531	39-104
1204 2356	Micro Switch - AM51612A531	103-104
1204 2376	Microswitch : V-162-3C25	39-108
1204 2376	Microswitch : V-162-3C25	103-105
1400 0528	Transistor - DTB113EK	115-122
1401 0296	Transistor - 2SA1162Y	115-123
1401 0992	Transistor - 2SB1335	121-111
1402 0476	Diode - 1SS184	115-124

Part No.	Description	Page and Index No
1402 1152	Diode - RD7.5P	115-125
1402 1172	Zener Diode - HZM6.8B	121-112
1403 0313	Diode - TLR102A	121-113
1403 0558	LED - SEL2110RTP3	115-126
1407 1309	IC - LS04	115-127
1407 1311	IC - LS32	115-128
1407 1596	TTLIC - SN74LS14NS	115-129
1407 1605	TTLIC - SN74LS157NS	121-114
1407 1741	TTL - SN74LS32NS	121-115
1407 1792	IC - SN74LS374NS	121-116
1407 2052	TTLIC - SN74LS74ANS	115-130
1407 2081	TTLIC - SN74LS08NS	115-131
1407 2127	TTL - IC74F00SJ	121-117
1407 2128	TTL - IC74F02SJ	121-118
1407 2135	TTLIC - 74F74SJ	115-132
1407 2137	IC -74F138SJ : TTL	115-133
1407 2137	IC -74F138SJ : TTL	121-119
1407 2138	TTLIC - 74F139SJ	115-134
1407 2187	TTLIC - SN74LS07NS	115-135
1407 2187	TTLIC - SN74LS07NS	121-120
1407 2231	IC - TD62308AF	115-136
1407 2247	TTL - SN74LS164NS	121-121
1407 2249	TTL - SN74LS174NS	121-122
1407 2253	TTL - SN74LS393NS	115-137
1407 2344	IC - TD62382F	115-138
1407 2378	TTL - SN74ALS245ANS	121-123
1407 2409	IC - SN74LS04M	121-124
1407 2463	TTL - IC - SN74ALS08NS	115-139
1407 2464	TTL - IC - SN74ALS74ANS	115-140
1407 2464	TTL - IC - SN74ALS74ANS	121-125
1407 2588	TTLIC - SN74ALS04BNS	115-141
1407 2588	TTLIC - SN74ALS04BNS	121-126
1407 2817	TTL - SN74ALS32NS	115-142
1407 2817	TTL - SN74ALS32NS	121-127
1407 3008	TTL - SN74ALS244CNS	121-128

Part No.	Description	Page and Index No.
1407 3025	IC - SN74ALS02NS	121-129
1407 3238	IC - SN74AS08NS	121-130
1407 3350	IC - SN74LS74AM	121-131
1407 3481	IC - SN74AS32NS	121-132
1407 3692	IC - RF5C86	115-143
1407 3753	IC - TC4W53F	115-144
1407 3852	IC - MB89371AH	115-145
1407 4090	IC - M66250FP	121-133
1407 4091	IC - M66251AFP	121-134
1407 4092	IC - M66253FP	121-135
1407 4137	IC - MM1035XF	115-146
1407 4143	MPU - MC68331CFC16	115-147
1407 4144	MPU - H81532 - HB6435328RA00M	115-148
1407 4146	LSI - MB89255AHPFS	115-149
1407 4183	IC - UPD71051GU-10	115-150
1407 4188	IC - HD6415108F10	121-136
1407 4192	IC - SN74LS244M	121-137
1407 4194	IC - SN74LS08M	121-138
1407 4195	IC - HD74LS06FP	121-139
1407 4196	IC - SN74LS151M	121-140
1407 4198	IC - DM74ALS240ASJ	121-141
1407 4199	IC - DM74ALS244ASJ	121-142
1407 4275	TTL - IC - SN74AS240NS	121-143
1407 4335	IC - M66236FP	121-144
1407 4427	TTL - IC - SN74AS157NS	121-145
1407 4491	SRAM - 256kbit-CY7C199-20VC	121-146
1408 0425	IC - NJM79L05	121-147
1408 0585	IC - AD7528JR	115-151
1408 0595	IC - NJM2904M	115-152
1408 0716	IC - NJM084M	115-153
1408 1011	IC - M5237ML	121-148
1408 1029	Operational Amplifier - AD847JR	121-149
1408 1033	IC - NJM2103M	121-150
1408 1048	IC - MB86022PF	121-151
1503 0194	Crystal Oscillator - 32.768 Khz	115-154

Part No.	Description	Page and Index No
1503 0261	Oscillator - 9.8304MHz	115-155
1503 0307	Oscillator - 20MHz	115-156
1503 0498	Oscillator - 19.6608MHz	121-152
1503 0520	Oscillator - 37.1843MHz	121-153
1601 1413	Resistor - RCB8C330J	121-154
1601 2957	Resistor - RCE9A472J	121-155
1601 4021	Resistor - RCE9A103J	121-156
1602 0918	Filter - 270pf - EMI	121-157
1602 7029	Noise Filter - 22000pf	115-157
1602 7083	EMI Filter - TU10M	121-158
1602 7085	Filter - TV50M	121-159
1602 7096	Filter - TX14131NB	121-160
1605 0283	Capacitor - 1ηF	121-161
1605 0435	Capacitor - 0.47ηF +80% -20% 16V	121-162
1607 0069	Fuse - Bl02RN2-R62-PB	121-163
1607 0477	Coil - BLM21A121SPB	115-158
1607 0477	Coil - BLM21A121SPB	121-164
1630 1101	Resistor - 100 P 1/4W 5%	115-159
1630 1121	Resistor - 120P 5% 1/8W	121-165
1630 1151	Resistor - 150 P 5% 1/4W	115-160
1630 2102	Resistor - 1K P 1/8W 5%	115-161
1630 2103	Resistor - 10K P 1/8W	115-162
1630 2104	Resistor - 100K P 1/8W 5%	115-163
1630 2105	Resistor - 1M P 1/8W	115-164
1630 2121	Resistor - 120 P 5% 1/8W	115-165
1630 2123	Resistor - 12KP 1/8W 5%	115-166
1630 2206	Resistor - 20M P 1/8W 5%	115-167
1630 2220	Resistor - 22P 1/8W 5%	115-168
1630 2222	Resistor - 2.2K P 1/8W	115-169
1630 2223	Resistor - 22K P 1/8W 5%	115-170
1630 2330	Resistor - 33P 1/8W 5%	115-171
1630 2334	Resistor - 330KP	115-172
1630 2361	Resistor - 360P	121-166
1630 2472	Resistor - 4.7K P 1/8W 5%	115-173

Part No.	Description	Page and Index No.
1630 2473	Resistor - 47KP 1/8W 5%	115-174
1630 2511	Resistor - 510P 1/8W 5%	115-175
1630 2821	Resistor - 820 P 1/8W 5%	115-176
1630 3102	Resistor - 1KP 1/10W 5%	121-167
1630 3103	Resistor - 10KP 1/10W 5%	121-168
1630 3152	Resistor - 1.5kP - 1/10W	121-169
1630 3153	Resistor - 15K P 5% 1/10W	121-170
1630 3221	Resistor - 220 P 5% 1/10W	121-171
1630 3222	Resistor - 2.2KP 1/10W 5%	121-172
1630 3330	Resistor - 33 P 5% 1/10W	121-173
1630 3470	Resistor - 47P 1/10W 5%	121-174
1630 3471	Resistor - 470P - 1/10W	121-175
1630 3472	Resistor - 4.7KP 1/10W 5%	121-176
1630 4100	Resistor - 10 P 5% 1/16W	121-177
1630 4220	Resistor - 22 P 5% 1/16W	121-178
1630 4330	Resistor - 33P 5% 1/8W	121-179
1630 4472	Resistor - 4.7KP 5% 1/16W	121-180
1632 5231	Resistor - 5.23K P 1%	115-177
1633 0000	Resistor - 0P 1/10W:Jamper Chip	121-181
1633 1601	Resistor - 1.6KP 1% 1/8W	121-182
1633 1801	Resistor - 1.8KP 1% 1/8W	121-183
1633 4301	Resistor - 4.3KP 1% 1/8W	121-184
1633 5901	Resistor - 5.9K P 1% 1/10W	121-185
1634 2209	Resistor - 22.0P 1% 1/8W	121-186
1634 6801	Resistor - 6.8KP 1% 1/8W	121-187
1640 5100	Capacitor - 10ηF 20% 50V	115-178
1640 5101	Capacitor - 100ηF 20% 50V	115-179
1640 5470	Capacitor - 47ηF 20% 50V	115-180
1640 5478	Capacitor - 0.47ηF 20% 50V	115-181
1642 0101	Capacitor - 100ηF 20% 50V	121-188
1643 2100	Capacitor - 10ηF 20%	121-189
1660 1100	Capacitor - 10PF 50V	115-182
1660 3101	Capacitor - 100PF 50V	115-183

Part No.	Description	Page and Index No
1660 3150	Capacitor - 15PF 50V	115-184
1660 3471	Capacitor - 470PF 50V	115-185
1660 3471	Capacitor - 470PF 50V	121-190
1660 5102	Capacitor - 1000PF 10% 50V	115-186
1660 5102	Capacitor - 1000PF 10% 50V	121-191
1660 5103	Capacitor - 10000PF 10% 50V	121-192
1660 7103	Capacitor - 10000PF 50V	115-187
1660 7103	Capacitor - 10000PF 50V	121-193
1660 7104	Capacitor - 100000PF 50V	115-188
1660 9104	C - 0.1ηF 25V	121-194
1901 0008	DRAM - 4M 1MX4 70NS G2	121-195
1902 0006	IC - SRAM 256KX8 70NS G1	115-189
1902 0006	IC - SRAM 256KX8 70NS G1	121-196
1902 0021	IC - SRAM - 1M - X8 - 100NS/G4	115-190