ISSUED ON: September 30, '96

Model	Lily	**Volt/Hz**	**Date of Modification**	**Serial Number**
Modified Article	Parts Catalog			
Reason for Modification	Parts Catalog Correction			

Please correct your parts catalog as follows.

Old P/N	New P/N	Description	Q'ty Used	Destination	Parts Catalog	
					Index No.	Page
A1091805	A1727874	Scanner Control Board Cover	1 → 1	-22, -26, -27 only	20	23
A1721636	A1727852	Lens Holder Unit	1 → 1	-22, -26, -27 only	7	23
A1095335	A1725635	CCD Harness 1	1 → 1	-22, -26, -27 only	18	23
A1725339	A1725639	Operation Panel Harness - DC	1 → 1	ALL	10	25
A1095309	A1725667	IPU Board Relay Harness	1 → 1	-22, -26, -27 only	32	27
A1091374	A1727070	Right Inner Cover	1 → 1	-22, -26, -27 only	16	15
A1726200	A1726201	Transfer Roller	1 → 1	ALL	7	71
A1093410	A1723409	Toner Tank Cover	1 → 1	-22, -26, -27 only	19	55
AD001040	AD001046	Development Unit - B/C	1 → 1	-22, -26, -27 only	*	59
AZ310017	AZ310019	High Voltage Supply Board - D	1 → 1	-22, -26, -27 only	9	95
A1095391	A1725695	High Voltage Harness	1 → 1	-22, -26, -27 only	10	95
A1095330	A1725630	AC Power Pack Relay Harness	1 → 1	-22, -26, -27 only	21	95

DETAILS OF MODIFICATION

Old P/N	New P/N	Description	Q'ty Used	Destination	Parts Catalog	
					Index No.	Page
A1723608	A1727680	Cleaning Receptacle	1 → 1	-22, -26, -27 only	4	97
A1995307	A1995607	DC Main Harness - Rear Upper	1 → 1	-22, -26, -27 only	1	97
A1092321	A1727681	Pre Cleaning Corona Receptacle	1 → 1	-22, -26, -27 only	26	97
A0965404	A1725604	DF Harness - 230V	1 → 1	-22, -26, -27 only	16	99
A0855671	A1725675	Power Supply Cord - 230V	1 → 1	22, -26, -27 only	14	101
A1725392	A1725692	Operation Panel Harness - IPU 1 (A172)	1 → 1	A172 only	17	17
	AA143741	Stepped Screw	0 → 2	ALL	29	71

DETAILS OF MODIFICATION

Please add the drawing of A1725692 Operation Panel Harness - IPU 1 to your parts catalog.

3. Operation Panel (A172/A199)

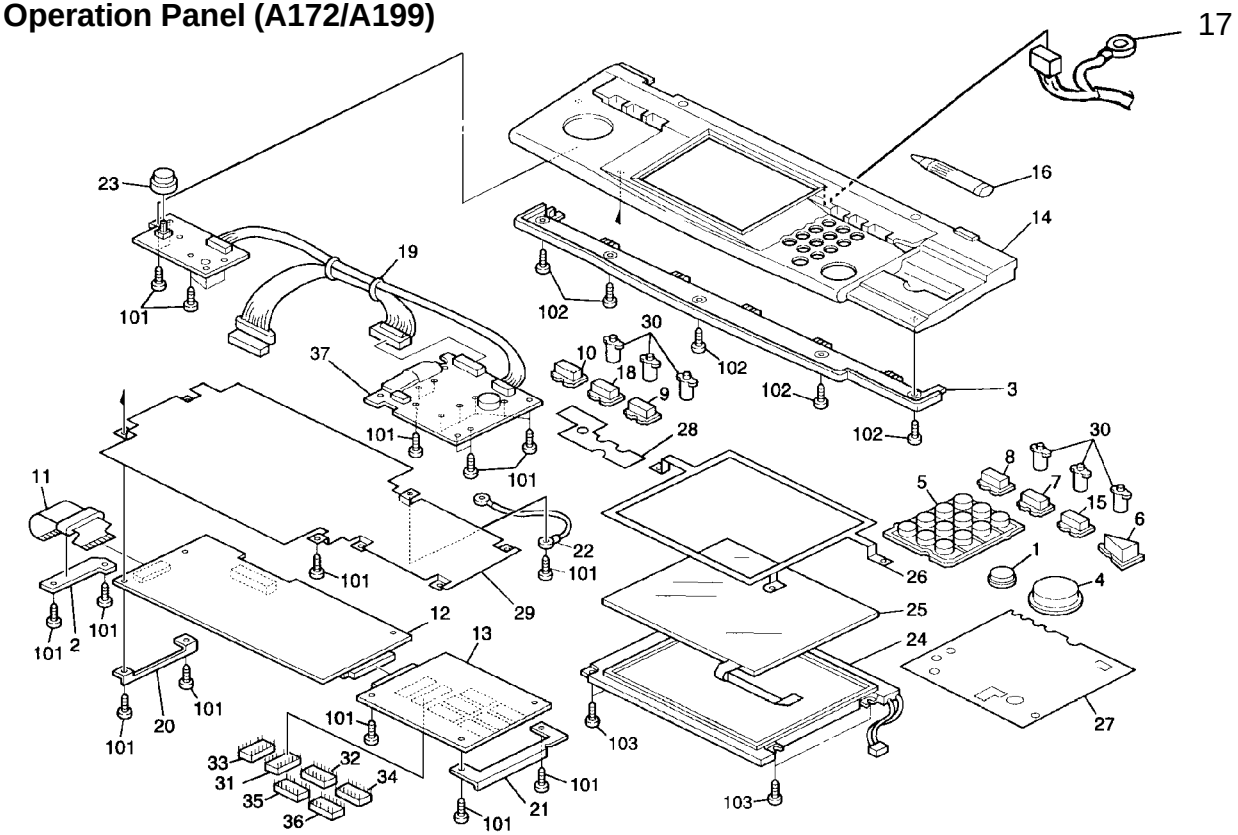

DETAILS OF MODIFICATION

Please correct the index numbers in your parts catalog as follows.

30. Transfer Roller Unit (A172/A199)

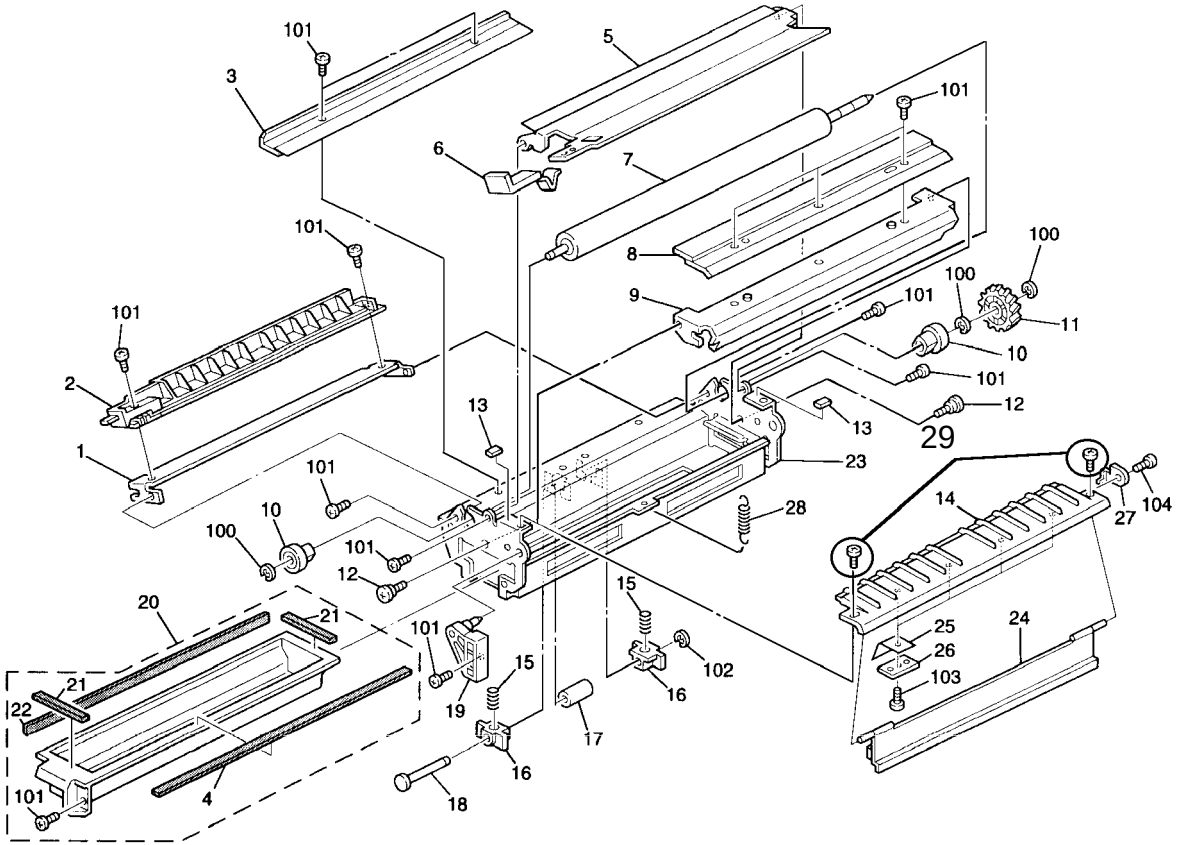

70

T. Inoue

M. Iwasa, Manager
Technical Support Department

MODEL NAME	V/Hz	DESTINATION	JAPAN PRODUCTION	
			CODE	SERIAL NUMBER
Nashuatec C606e Gestetner 2606e	115V/60Hz	USA, Canada	A172 -10	AB6
Savin SDC206E	115V/60Hz	USA, Canada	A172 -15	5A8
Aficio Color 5206	115V/60Hz	USA, Canada	A172 - 17	A712
Nashuatec C606e Gestetner 2606e Rex Rotary CC8606E	220-240V/50Hz	Europe, etc.	A172 - 22	AB7
Infotec 7316E	220-240V/50Hz	Europe, etc.	A172 - 26	3J8
Aficio Color 5206	220-240V/50Hz	Europe, etc.	A172-27	A712
Aficio Color 5206	220-240V/50Hz, 60Hz	Asia, Middle East	A172 -29	A712
Nashuatec C606 Gestetner 2606	115V/60Hz	USA, Canada	A199 -10	AB4
Savin SDC206	115V/60Hz	USA, Canada	A199 - 15	5A9
Aficio Color 5106	115V/60Hz	Europe, etc.	A199 - 17	A713
Nashuatec C606 Gestetner 2606 Rex Rotary CC8606	220-240V/50Hz	Europe, etc.	A199 - 22	AB5
Infotec 7316	220-240V/50Hz	Europe etc.	A199 - 26	3J7
Aficio Color 5106	220-240V/50Hz	Europe etc.	A199 - 27	A713
Aficio Color 5106	220-240V/50Hz, 60Hz	Asia, Middle East	A199 - 29	A713

ISSUED ON: October 31, '96

Model	Lily	**Volt/Hz**	**Date of Modification**	**Serial Number**
Modified Article	Screw Shaft	No serial number cut-in information.		
Reason for Modification	To facilitate manufacturing			

To facilitate manufacturing, the material of the screw shaft used in the charge corona unit has been changed.

Old P/N	New P/N	Description	Q'ty Used	Inter-change-ability	Parts Catalog	
					Index No.	Page
A172 7630	A172 7629	Screw Shaft	1 → 1	O/O	31	49

T. Inoue

T. Inoue, General Manager
1st Field Information Dept. QAC

RICOH

Modification Bulletin

Model: Lily	Date: 28-Feb-97	No: 003	1/2
Modified Article: Hot Roller Stripper		Prepared by: N. Kaiya	
From: QAC 1st Field Information Dept.		Checked by: T. Inoue T. Inoue	

Reason for Modification:

- ☐ Parts catalog correction
- ☐ Vendor change
- ☐ To meet standards ( )
- ☐ To facilitate assembly
- ☐ To improve reliability
- ☐ Part Standardization
- ☒ Other

Old part number	New part number	Description	Qty	Int	Page	Index
AE04 4016	AE04 4023	Hot Roller Stripper	6 - 6	X/O	79	9

To prevent the spring from coming off, the hook of the hot roller stripper has been extended.

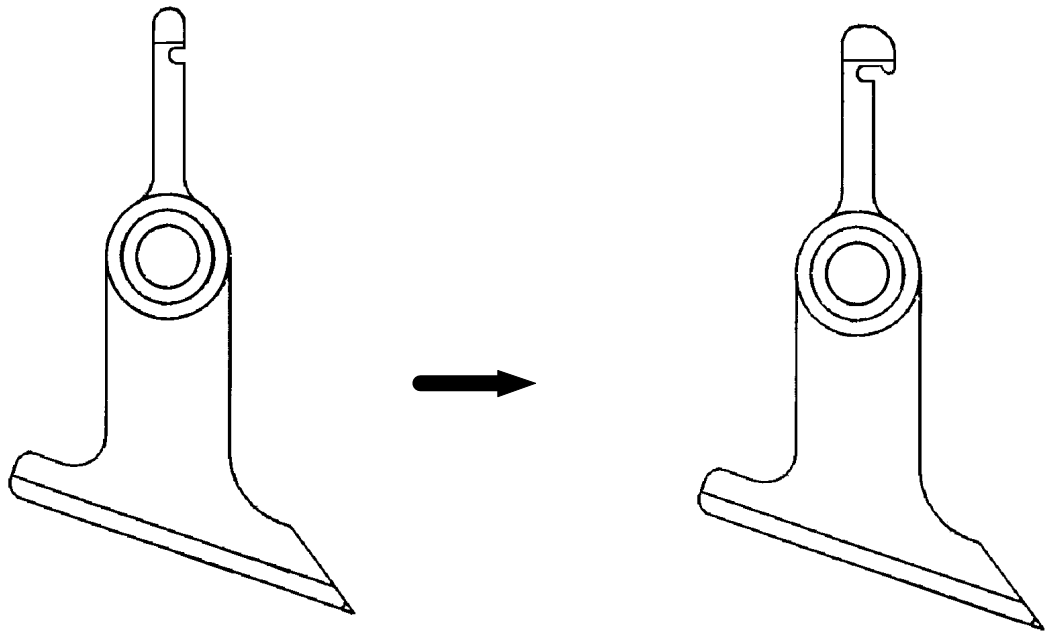

Old

New

MODEL NAME	V/ Hz	DESTINATION	CODE	SERIAL NUMBER
Nashuatec C606e Gestetner 2606e	115V/ 60Hz	USA, Canada	A172 - 10	AB67020001
Savin SDC206E	115V/ 60Hz	USA, Canada	A172 - 15	5A87010001
Aficio Color 5206	115V/ 60Hz	USA, Canada	A172 - 17	A7127010001
Nashuatec C606e Gestetner 2606e Rex Rotary CC8606E	220- 240V/ 50Hz	Europe, etc.	A172 - 22	AB77010001
Infotec 7316E	220- 240V/ 50Hz	Europe, etc.	A172 - 26	3J80170001
Aficio Color 5206	220- 240V/ 50Hz	Europe, etc.	A172 - 27	A7127010110
Aficio Color 5206	220- 240V/ 50Hz, 60Hz	Asia, Middle East	A172 - 29	A7127010184
Lanier 5606 DC	120V60Hz	USA	A172 - 55	L0067010091
Sharp AR-C862	120V60Hz	USA	A172 - 57	S16702XXXX
Sharp AR-C862	120V60Hz	Europe	A172 - 67	S167020001
Nashuatec C606 Gestetner 2606	115V/ 60Hz	USA, Canada	A199 - 10	AB4702XXXX
Savin SDC206	120V/ 60Hz	USA, Canada	A199 - 15	5A97010001
Aficio Color 5106	120V/ 60Hz	USA, Canada	A199 - 17	A7137020001
Nashuatec C606 Gestetner 2606 Rex Rotary CC8606	220- 240V/ 50Hz	Europe, etc.	A199 - 22	AB57010001
Infotec 7316	220- 240V/ 50Hz	Europe etc.	A199 - 26	3J70170001
Aficio Color 5106	220- 240V/ 50Hz	Europe etc.	A199 - 27	A7137010001
Aficio Color 5106	220- 240V/ 50Hz, 60Hz	Asia, Middle East	A199 - 29	A713702XXXX
Lanier 5606 DC	120V60Hz	USA	A199 - 55	L0077010001
Sharp AR-C861	120V60Hz	USA	A199 - 57	S16702XXXX
Sharp AR-C861	220- 240V/ 50Hz	Europe	A199 - 67	S167020023

RICOH

Modification **B**ulletin

Model: Lily	Date: 28-Feb-97	No: 004	1/1
Modified Article: Toner End Sensor		Prepared by: N. Kaiya	
From: QAC 1st Field Information Dept.		Checked by: T. Inoue T. Inoue	

Reason for Modification:

- ☐ Parts catalog correction
- ☐ Vendor change
- ☐ To meet standards ( )
- ☐ To facilitate assembly
- ☐ To improve reliability
- ☐ Part Standardization
- ☒ Other

Old part number	New part number	Description	Qty	Int	Page	Index
AW23 0009	AW23 0012	Toner End Sensor	4-4	X/O	55	25

MODEL NAME	V/ Hz	DESTINATION	CODE	SERIAL NUMBER
Nashuatec C606e Gestetner 2606e	115V/ 60Hz	USA, Canada	A172 - 10	AB67020001
Savin SDC206E	115V/ 60Hz	USA, Canada	A172 - 15	5A86100001
Aficio Color 5206	115V/ 60Hz	USA, Canada	A172 - 17	A7126100001
Nashuatec C606e Gestetner 2606e Rex Rotary CC8606E	220- 240V/ 50Hz	Europe, etc.	A172 - 22	AB76100001
Infotec 7316E	220- 240V/ 50Hz	Europe, etc.	A172 - 26	3J81060001
Aficio Color 5206	220- 240V/ 50Hz	Europe, etc.	A172 - 27	A7126100049
Aficio Color 5206	220- 240V/ 50Hz, 60Hz	Asia, Middle East	A172 - 29	A7126100105
Lanier 5606 DC	120V60Hz	USA	A172 - 55	L0066110001
Sharp AR-C862	120V60Hz	USA	A172 - 57	from first production
Sharp AR-C862	120V60Hz	Europe	A172 - 67	from first production
Nashuatec C606 Gestetner 2606	115V/ 60Hz	USA, Canada	A199 - 10	AB4611XXXX
Savin SDC206	120V/ 60Hz	USA, Canada	A199 - 15	5A96100001
Aficio Color 5106	120V/ 60Hz	USA, Canada	A199 - 17	A7136100001
Nashuatec C606 Gestetner 2606 Rex Rotary CC8606	220- 240V/ 50Hz	Europe, etc.	A199 - 22	AB56100001
Infotec 7316	220- 240V/ 50Hz	Europe etc.	A199 - 26	3J71060001
Aficio Color 5106	220- 240V/ 50Hz	Europe etc.	A199 - 27	A71376100077
Aficio Color 5106	220- 240V/ 50Hz, 60Hz	Asia, Middle East	A199 - 29	A71376100117
Lanier 5606 DC	120V60Hz	USA	A199 - 55	L0077010001
Sharp AR-C861	120V60Hz	USA	A199 - 57	S167030046
Sharp AR-C861	220- 240V/ 50Hz	Europe	A199 - 67	S167020023

The toner end sensor has been modified to prevent malfunctions. The reset time of the internal IC has become shorter

RICOH **M**odification **B**ulletin

Model: Lily	Date: 15-Mar-97	No: 5
Modified Article: Fusing Unit Side Plate	Prepared by: N. Kaiya	
From: QAC 1st Field Information Dept.	Checked by: T. Inoue T. Inoue	

Reason for Modification:

- ☐ Parts catalog correction
- ☐ Vendor change
- ☐ To meet standards ( )
- ☐ To facilitate assembly
- ☐ To improve reliability
- ☐ Part Standardization
- ☒ Other

Old part number	New part number	Description	Qty	Int		Page	Index
A1094100	A1724100	Front Side Plate - Fusing	1 - 1	X/X		85	13
A1094130	A1724130	Rear Side Plate - Fusing	1 - 1	X/X		85	23
A1724171	A1724174	Right Stay - Fusing	1 - 1	X/X	o/o as a set	85	26
A1094180	A1724181	Right Lower Stay - Fusing	1 - 1	X/X		85	10
	A1724194	Stay Thermofuse Lower	0 - 1	X/X		85	32
	03140060B	Philips Pan Head Screw M4 x 6	n - n+2	X/X		85	100

To implement the pressure roller cleaning blade and the pressure roller drive gear, front and rear side plates, right stay, and right lower stay have been modified.
Also, the stay thermofuse lower has been newly added.

The new and old parts are not interchangeable individually. Please replace them as a set. For further information on the pressure roller cleaning blade and the pressure roller drive gear, another MB will be issued.

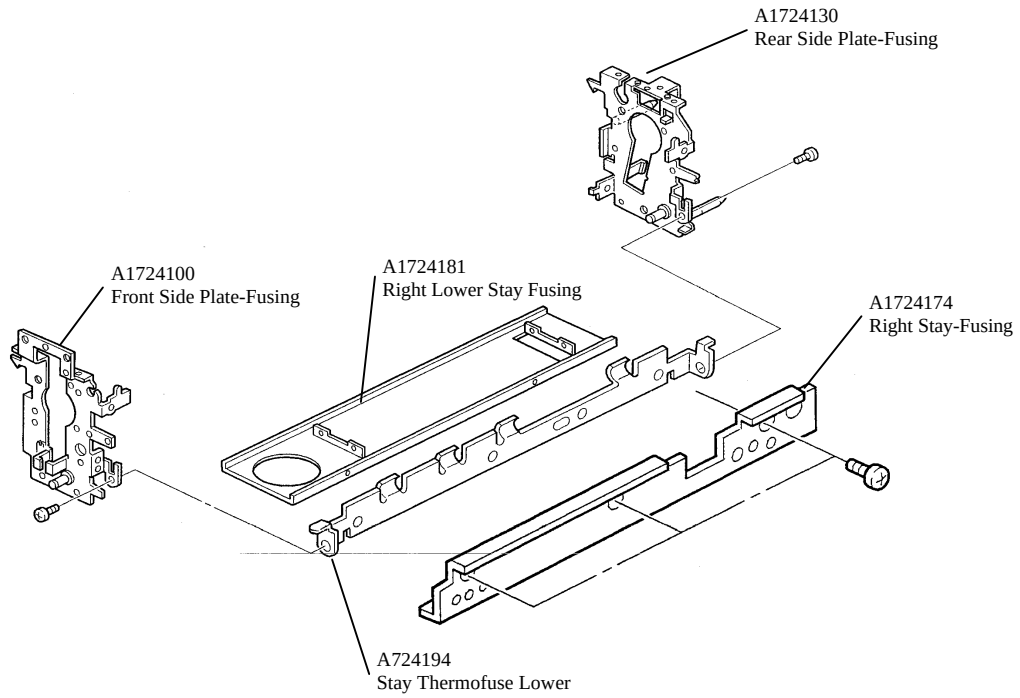

MODEL NAME	V/ Hz	DESTINATION	CODE	SERIAL NUMBER
Nashuatec C606e Gestetner 2606e	120V/ 60Hz	USA, Canada	A172 - 10	AB67020001
Savin SDC206E	120V/ 60Hz	USA, Canada	A172 - 15	5A86110001
Aficio Color 5206	120V/ 60Hz	USA, Canada	A172 - 17	A71216110001
Nashuatec C606e Gestetner 2606e Rex Rotary CC8606E	220- 240V/ 50Hz	Europe, etc.	A172 - 22	AB76110001
Infotec 7316E	220- 240V/ 50Hz	Europe, etc.	A172 - 26	3J81160001
Aficio Color 5206	220- 240V/ 50Hz	Europe, etc.	A172 - 27	A7126110046
Aficio Color 5206	220- 240V/ 50Hz, 60Hz	Asia, Middle East	A172 - 29	A7126110091
Lanier 5606 DC	120V60Hz	USA	A172 - 55	from first production
Sharp AR-C862	120V60Hz	USA	A172 - 57	from first production
Sharp AR-C862	120V60Hz	Europe	A172 - 67	from first production
Nashuatec C606 Gestetner 2606	115V/ 60Hz	USA, Canada	A199 - 10	AB4701XXXX
Savin SDC206	120V/ 60Hz	USA, Canada	A199 - 15	5A96110001
Aficio Color 5106	120V/ 60Hz	USA, Canada	A199 - 17	A7136110001
Nashuatec C606 Gestetner 2606 Rex Rotary CC8606	220- 240V/ 50Hz	Europe, etc.	A199 - 22	AB56110001
Infotec 7316	220- 240V/ 50Hz	Europe etc.	A199 - 26	3J771160001
Aficio Color 5106	220- 240V/ 50Hz	Europe etc.	A199 - 27	A7136110041
Aficio Color 5106	220- 240V/ 50Hz, 60Hz	Asia, Middle East	A199 - 29	A713701XXXX
Lanier 5606 DC	120V60Hz	USA	A199 - 55	from first production
Sharp AR-C861	120V60Hz	USA	A199 - 57	from first production
Sharp AR-C861	220- 240V/ 50Hz	Europe	A199 - 67	from first production

RICOH **M**odification **B**ulletin

Model: Lily	Date: 31-Mar-97	No: 6
Modified Article: Hot Roller, Pressure Roller, and others	Prepared by: N.Kaiya	
From: QAC 1st Field Information Dept.	Checked by: T. Inoue T. Inoue	

Reason for Modification:

☐ Parts catalog correction ☐ Vendor change ☐ To meet standards ( )
☐ To facilitate assembly ☐ To improve reliability
☐ Part standardization ☒ Other

Old part number	New part number	Description	Qty	Int	Destination	Page	Index
AB013818		Gear 61Z	1-	x/	All		
	AB014067	Gear 62z	-1	/x	All	85	25
	AB014063	Hot Roller Gear - 60z	0-1		All	85	32
	AB014064	Pressure Roller Gear - 60Z	0-1		* All	85	33
AE010012	AE010018	Hot Roller	1-1	x/o	All	85	8
AE020056	AE020076	Pressure Roller	1-1	x/o	All	85	9
	03140060B	Philips Pan Head Screw M4x6	n-n-1		All	85	100
	09514005W	Philips Screw with Flat Washer M4x5	0-2		All	85	107
AE042021		Cleaning Roller	1-0		-22,-26,-27 -29,-67	85	31
AE031020		Bushing-6x12x8	2-0		-22,-26,-27 -29,-67	85	27
A1724172		Front Spring Plate	1-0		-22,-26,-27 -29,-67	85	28
A1724173		Rear Spring Plate	1-0		-22,-26,-27 -29,-67	85	29
A1724174		Right Stay Fusing	1-0		-22,-26,-27 -29,-67	85	26
	AA062298	Spring-Pressure Roller Blade	0-2		-22,-26-27 -29,67	85	36
	AE045025	Pressure Roller Oil Pad	0-1		-22,-26,-27 -29,-67	85	33
	AA143258	Stepped Screw M4x7	0-1		-22,-26,-27 -29,-67	85	37
	AE041003	Pressure Roller Cleaning Blade	0-1		-22,-26,-27 -29,-67	85	34
	A1724192	Cleaning Blade Bracket	0-1		-22,-26,-27 -29,-67	85	35

*X/O as a set

Model: Lily	Date: 31-Mar-97	No: 6

When paper with a high calcium carbonate content is used, calcium carbonate may deposit on the pressure roller surface which may be transferred onto OHP transparencies.

To prevent this problem, a cleaning blade and oil pad are added to the pressure roller in place of the pressure roller cleaning roller.

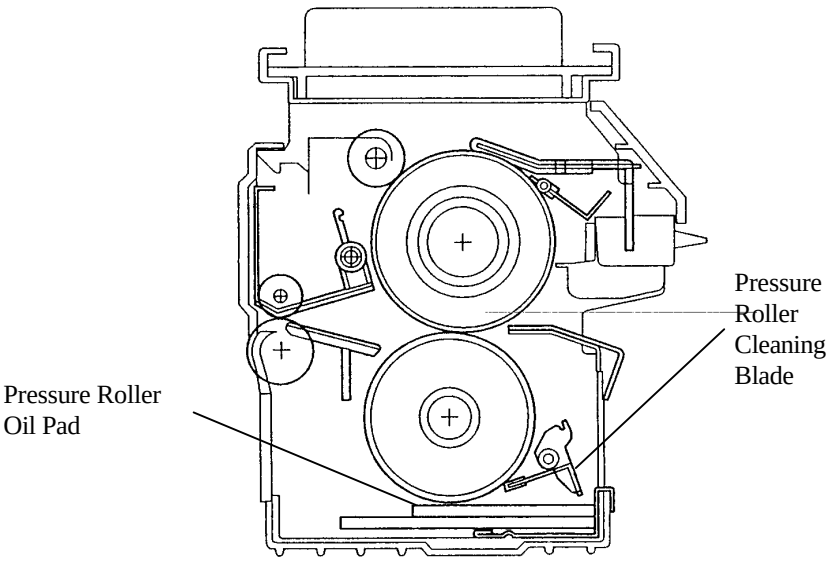

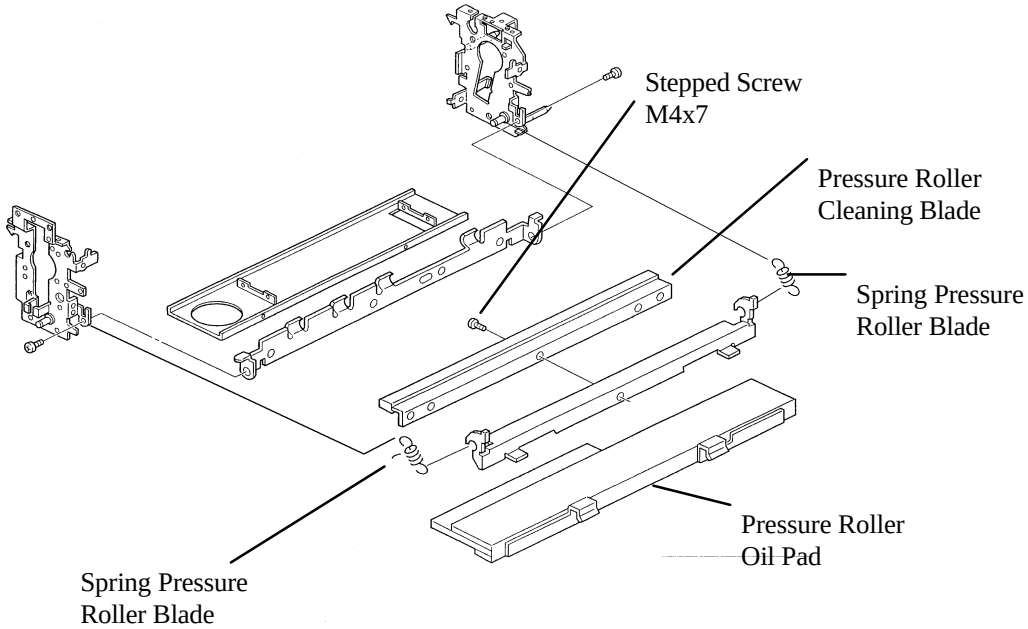

Model: Lily	Date: 31-Mar-97	No: 6

The addition of cleaning blade and oil pad applies excess load to the pressure roller which may result in copy quality problems such as mimizu image. To prevent this problem, gears are added on the front of hot roller and pressure roller which provide drive to the pressure roller.

At the same time, the 61Z Gear has been changed to a 62Z Gear to compensate for the slight increase in the paper speed caused by providing drive to the pressure roller.

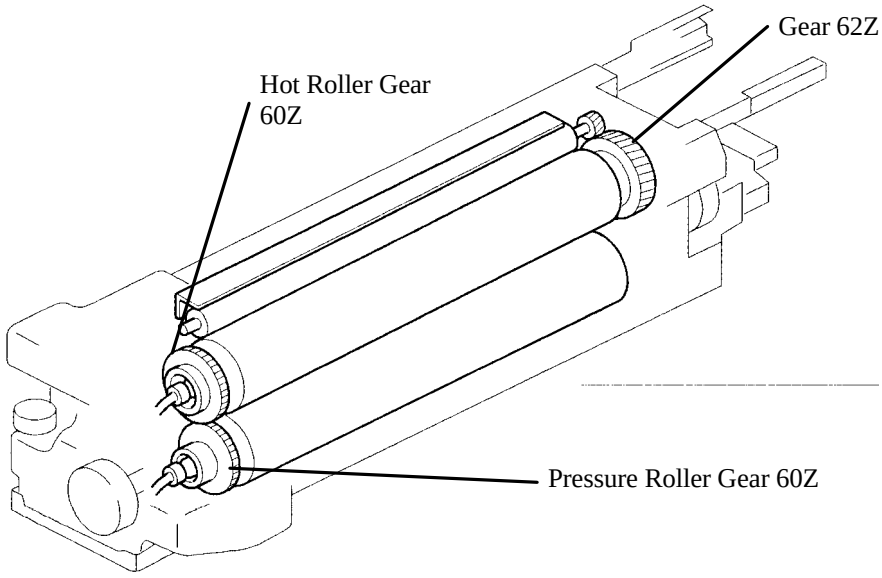

Model: Lily	Date: 31-Mar-97	No: 6

The screw securing the front fusing lamp holder has been changed to a M4 x 5 screw to prevent contact with the hot roller gear. The same screw type has been added to secure the ball bearing at the front of the hot roller. This is necessary to maintain the position of the hot roller gear and to ensure meshing with the pressure roller gear.

Philips Screw with Flat Washer M4 x 5

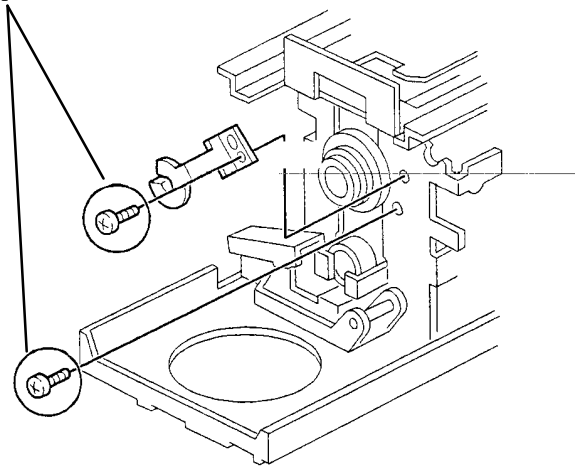

The pressure roller cleaning blade and oil supply pad are applied only to the machines for the European market, since paper types with a high proportion of calcium carbonate are seen mostly in Europe.

The machines for other markets are manufactured with the pressure roller cleaning roller.

The modification to apply drive to the pressure roller has been made to all models to minimize the possibility of copy quality problems such as mimizu image.

MODEL NAME	V/ Hz	DESTINATION	CODE	SERIAL NUMBER
Nashuatec C606e Gestetner 2606e	120V/ 60Hz	USA, Canada	A172 - 10	AB6702001
Savin SDC206E	120V/ 60Hz	USA, Canada	A172 - 15	5A8702001
Aficio Color 5206	120V/ 60Hz	USA, Canada	A172 - 17	A7127020001
Nashuatec C606e Gestetner 2606e Rex Rotary CC8606E	220- 240V/ 50Hz	Europe, etc.	A172 - 22	AB77020001
Infotec 7316E	220- 240V/ 50Hz	Europe, etc.	A172 - 26	3J80270001
Aficio Color 5206	220- 240V/ 50Hz	Europe, etc.	A172 - 27	A7127020214
Aficio Color 5206	220- 240V/ 50Hz, 60Hz	Asia, Middle East	A172 - 29	A7127020350
Lanier 5606 DC	120V60Hz	USA	A172 - 55	L0067020121
Sharp AR-C862	120V60Hz	USA	A172 - 57	S167030001
Sharp AR-C862	120V60Hz	Europe	A172 - 67	S167020001
Nashuatec C606 Gestetner 2606	115V/ 60Hz	USA, Canada	A199 - 10	AB4703xxxx
Savin SDC206	120V/ 60Hz	USA, Canada	A199 - 15	5A97020001
Aficio Color 5106	120V/ 60Hz	USA, Canada	A199 - 17	A7137020001
Nashuatec C606 Gestetner 2606 Rex Rotary CC8606	220- 240V/ 50Hz	Europe, etc.	A199 - 22	AB57020001
Infotec 7316	220- 240V/ 50Hz	Europe etc.	A199 - 26	3J70270001
Aficio Color 5106	220- 240V/ 50Hz	Europe etc.	A199 - 27	A7137020007
Aficio Color 5106	220- 240V/ 50Hz, 60Hz	Asia, Middle East	A199 - 29	A713703xxxx
Lanier 5606 DC	120V60Hz	USA	A199 - 55	L0077020011
Sharp AR-C861	120V60Hz	USA	A199 - 57	S167030046
Sharp AR-C861	220- 240V/ 50Hz	Europe	A199 - 67	S167020023

RICOH **M**odification **B**ulletin

Model: Lily	Date: 15-Apr-97	No: 7
Modified Article: Relay Harness - Brush Motor	Prepared by: N.Kaiya	
From: QAC 1st Field Information Dept.	Checked by: T. Inoue T. Inoue	

Reason for Modification:

- ☐ Parts catalog correction
- ☐ Vendor change
- ☐ To meet standards ( )
- ☐ To facilitate assembly
- ☐ To improve reliability
- ☐ Part standardization
- ☒ Other

Old part number	New part number	Description	Qty	Int	Destination	Page	Index
A1095315	A1725315	Relay Harness - Brush Motor	1-1	X/O		95	22

A plastic covering has been added to the relay harness to protect it from damage.

MODEL NAME	V/ Hz	DESTINATION	CODE	SERIAL NUMBER
Nashuatec C606e Gestetner 2606e	120V/ 60Hz	USA, Canada	A172 - 10	AB67020001
Savin SDC206E	120V/ 60Hz	USA, Canada	A172 - 15	5A86080001
Aficio Color 5206	120V/ 60Hz	USA, Canada	A172 - 17	A7126070029
Nashuatec C606e Gestetner 2606e Rex Rotary CC8606E	220- 240V/ 50Hz	Europe, etc.	A172 - 22	AB76080001
Infotec 7316E	220- 240V/ 50Hz	Europe, etc.	A172 - 26	3J80860001
Aficio Color 5206	220- 240V/ 50Hz	Europe, etc.	A172 - 27	A7126070271
Aficio Color 5206	220- 240V/ 50Hz, 60Hz	Asia, Middle East	A172 - 29	A7126080310
Lanier 5606 DC	120V60Hz	USA	A172 - 55	from first production
Sharp AR-C862	120V60Hz	USA	A172 - 57	from first production
Sharp AR-C862	120V60Hz	Europe	A172 - 67	from first production
Nashuatec C606 Gestetner 2606	115V/ 60Hz	USA, Canada	A199 - 10	AB4608xxxx
Savin SDC206	120V/ 60Hz	USA, Canada	A199 - 15	5A96080001
Aficio Color 5106	120V/ 60Hz	USA, Canada	A199 - 17	A7136080001
Nashuatec C606 Gestetner 2606 Rex Rotary CC8606	220- 240V/ 50Hz	Europe, etc.	A199 - 22	AB56090001
Infotec 7316	220- 240V/ 50Hz	Europe etc.	A199 - 26	3J70860001
Aficio Color 5106	220- 240V/ 50Hz	Europe etc.	A199 - 27	A7136080117
Aficio Color 5106	220- 240V/ 50Hz, 60Hz	Asia, Middle East	A199 - 29	A7136080234
Lanier 5606 DC	120V60Hz	USA	A199 - 55	from first production
from first production	120V60Hz	USA	A199 - 57	from first production
Sharp AR-C861	220- 240V/ 5050Hz	Europe	A199 - 67	from first production

RICOH **M**odification **B**ulletin

Model: Lily	Date: 15-Apr-97	No: 8
Modified Article: Parts Catalog	Prepared by: N.Kaiya	
From: QAC 1st Field Information Dept.	Checked by: T. Inoue *T. Inoue*	

Reason for Modification:

- ☒ Parts catalog correction
- ☐ Vendor change
- ☐ To meet standards ( )
- ☐ To facilitate assembly
- ☐ To improve reliability
- ☐ Part standardization
- ☐ Other

Please add the following parts to your parts catalog.

New part number	Description	Qty	Destination	Page	Index
A1721508	Spacer	1	All	17	38
A1727349	Pressure Plate	2	AII	17	39
A1721133	Shield - Base - Operation Sub -Unit	1	-22,-26,-27,-29	19	30
A1094642	Clutch Bracket - Lubricant Brush	1	All	87	30

3. Operation Panel (A172/A199)

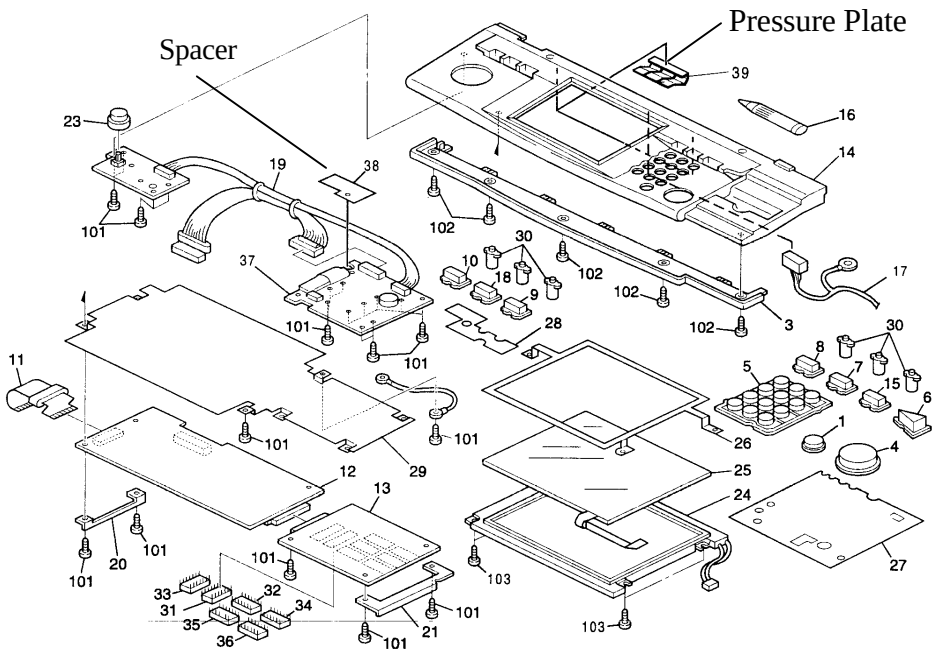

4. Optics Section 1 (A172/A199)

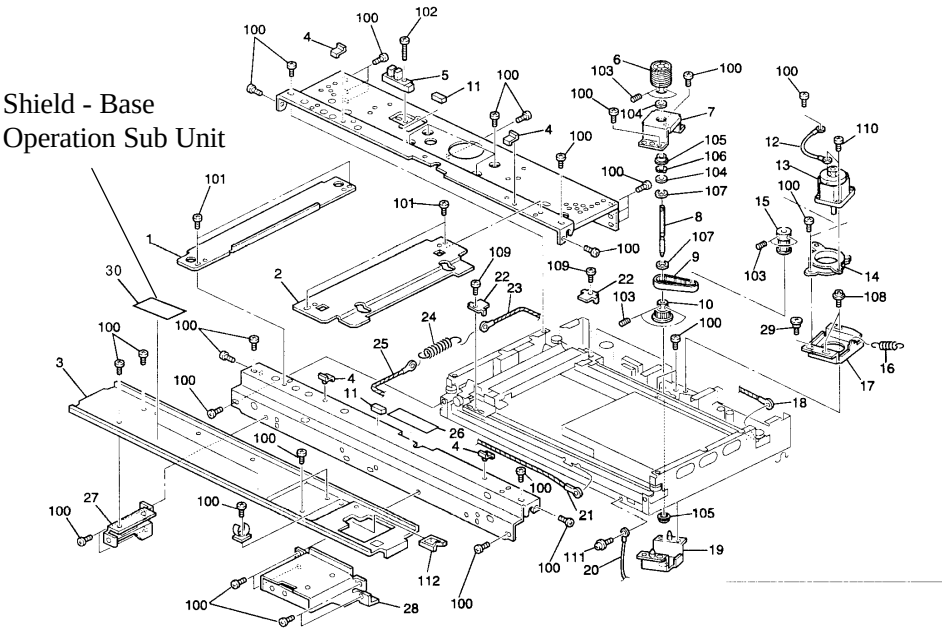

18

38. Drive Section 1(A172/A199)

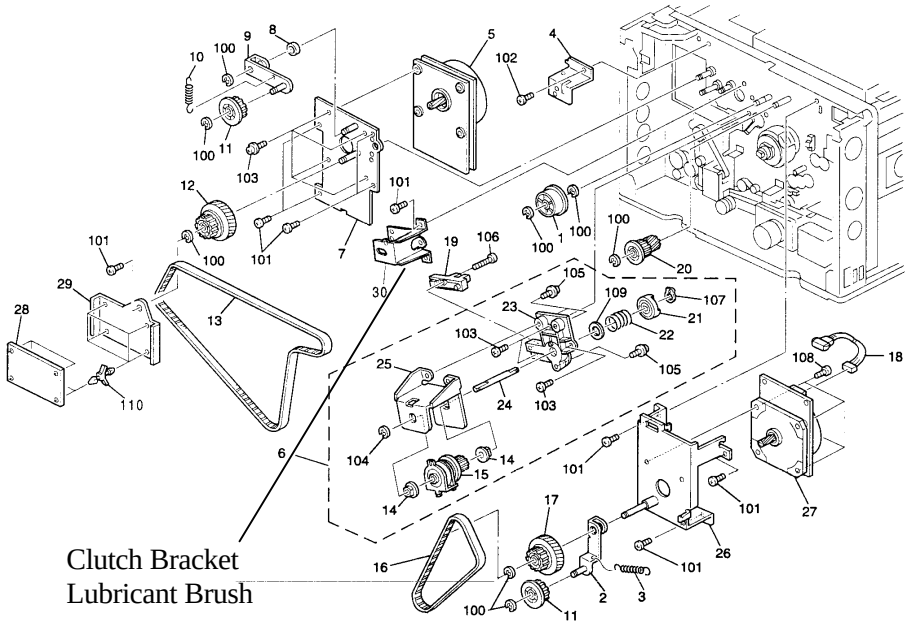

86

RICOH **M**odification **B**ulletin

Model: Lily (European Machines Only)	Date: 15-Apr-97	No: 9
Modified Article: Toner Tank Cover	Prepared by: N.Kaiya	
From: QAC 1st Field Information Dept.	Checked by: T. Inoue	

Reason for Modification:

- ☐ Parts catalog correction
- ☐ Vendor change
- ☐ To meet standards ( )
- ☐ To facilitate assembly
- ☐ To improve reliability
- ☐ Part standardization
- ☒ Other

Old part number	New part number	Description	Qty	Int	Destination	Page	Index
A1723409	A1723408	Toner Tank Cover	1-1	X/O	-22,-26,-27,-67	55	19

To ensure the grounding of the toner tank cover, two copper tapes have been added to the back of the toner tank cover around the screw holes.

MODEL NAME	V/ Hz	DESTINATION	CODE	SERIAL NUMBER
Nashuatec C606e Gestetner 2606e Rex Rotary CC8606E	220-240V/50Hz	Europe,etc	A172-22	AB76100001
Infotec 7316E	220-240V/50Hz	Europe,etc	A172-26	3J81060001
Aficio Color 5206	220-240V/50Hz	Europe,etc	A172-27	A7126090111
Sharp AR - C862	220-240V/50Hz	Europe	A172-67	from first production
Nashuatec C606 Gestetner 2606 Rex Rotary CC8606	220-240V/50Hz	Europe,etc	A199-22	AB56090001
Infotec 7316	220-240V/50Hz	Europe,etc	A199-26	3J71060001
Aficio Color 5106	220-240V/50Hz	Europe,etc	A199-27	A7136100077
Sharp AR - C861	220-240V/50Hz	Europe	A199-67	from first production

RICOH **M**odification **B**ulletin

Model: Lily (European Machines Only)	Date: 15-Apr-97	No: 10
Modified Article: Total Counter Insulating Tape	Prepared by: N.Kaiya	
From: QAC 1st Field Information Dept.	Checked by: T. Inoue T. Inoue	

Reason for Modification:

- ☐ Parts catalog correction
- ☐ Vendor change
- ☐ To meet standards ( )
- ☐ To facilitate assembly
- ☒ To improve reliability
- ☐ Part standardization
- ☐ Other

Old part number	New part number	Description	Qty	Int	Destination	Page	Index
	A1725748	Total Counter Insulating Tape	0-2		-22,-26,-27,-67	103	26

The reset buttons of the total counters have been covered with insulating tape to prevent malfunction which may occur if static electricity is discharged to this part.

MODEL NAME	V/ Hz	DESTINATION	CODE	SERIAL NUMBER
Nashuatec C606e Gestetner 2606e Rex Rotary CC8606E	220-240V/50Hz	Europe,etc	A172-22	AB76100001
Infotec 7316E	220-240V/50Hz	Europe,etc	A172-26	3J81060001
Aficio Color 5206	220-240V/50Hz	Europe,etc	A172-27	A7126100049
Sharp AR - C862	220-240V/50Hz	Europe	A172-67	from first production
Nashuatec C606 Gestetner 2606 Rex Rotary CC8606	220-240V/50Hz	Europe,etc	A199-22	AB56100001
Infotec 7316	220-240V/50Hz	Europe,etc	A199-26	3J71060001
Aficio Color 5106	220-240V/50Hz	Europe,etc	A199-27	A7136100077
Sharp AR - C861	220-240V/50Hz	Europe	A199-67	from first production

RICOH **M**odification **B**ulletin

Model: Lily (-15 only)	Date: 15-Apr-97	No: 11
Modified Article: Decal - Color - Savin	Prepared by: N.Kaiya T. Inoue	
From: QAC 1st Field Information Dept.	Checked by: T. Inoue	

Reason for Modification:

- ☐ Parts catalog correction
- ☐ Vendor change
- ☐ To meet standards ( )
- ☐ To facilitate assembly
- ☐ To improve reliability
- ☐ Part standardization
- ☒ Other

New part number	Description	Qty	Int	Destination	Page	Index
A1721596	Decal - Color - Savin	0-1		-15	127	32

Decal - Color - Savin has been added to the right door of Savin machines.

MODEL NAME	V/ Hz	DESTINATION	CODE	SERIAL NUMBER
Savin SDC206E	120V/60Hz	USA,Canada	A172-15	5A86090001
Savin SDC206	120V/60Hz	USA,Canada	A199-15	5A96100001

Model: Lily	Date: 15-Apr-97	No: 12
Modified Article: Separation Roller Stay, etc	Prepared by: N.Kaiya T. Inoue	
From: QAC 1st Field Information Dept.	Checked by: T. Inoue	

Reason for Modification:

- ☐ Parts catalog correction
- ☐ Vendor change
- ☐ To meet standards ( )
- ☐ To facilitate assembly
- ☐ To improve reliability
- ☒ Part standardization
- ☐ Other

Due to parts standardization, the following parts have been changed.

Since the location of the position sensor bracket on which the separation roller stay is installed has been moved 5mm toward the rear, please replace the 3 parts listed below at the same time. The old parts are not available.

Old part number	New part number	Description	Qty	Int	Destination	Page	Index
A0966303	A1766303	Separation Roller Stay	3-3	X/X		43	20
A0966338	A1766338	Separation Guide	3-3	X/X		43	3
A0966337	A1766337	Paper Feed Guide	3-3	X/X		41	14

The interchangeability is o/o as a set.

Model: Lily	Date: 15-Apr-97	No: 12

MODEL NAME	V/ Hz	DESTINATION	CODE	SERIAL NUMBER
Nashuatec C606e Gestetner 2606e	120V/ 60Hz	USA, Canada	A172 - 10	AB67020001
Savin SDC206E	120V/ 60Hz	USA, Canada	A172 - 15	5A86120001
Aficio Color 5206	120V/ 60Hz	USA, Canada	A172 - 17	A7126120001
Nashuatec C606e Gestetner 2606e Rex Rotary CC8606E	220- 240V/ 50Hz	Europe, etc.	A172 - 22	AB76110031
Infotec 7316E	220- 240V/ 50Hz	Europe, etc.	A172 - 26	3J81160001
Aficio Color 5206	220- 240V/ 50Hz	Europe, etc.	A172 - 27	A7126110061
Aficio Color 5206	220- 240V/ 50Hz, 60Hz	Asia, Middle East	A172 - 29	A7126110091
Lanier 5606 DC	120V60Hz	USA	A172 - 55	from first production
Sharp AR-C862	120V60Hz	USA	A172 - 57	from first production
Sharp AR-C862	120V60Hz	Europe	A172 - 67	from first production
Nashuatec C606 Gestetner 2606	115V/ 60Hz	USA, Canada	A199 - 10	AB4612xxxx
Savin SDC206	120V/ 60Hz	USA, Canada	A199 - 15	5A96120001
Aficio Color 5106	120V/ 60Hz	USA, Canada	A199 - 17	A7137020001
Nashuatec C606 Gestetner 2606 Rex Rotary CC8606	220- 240V/ 50Hz	Europe, etc.	A199 - 22	AB56110001
Infotec 7316	220- 240V/ 50Hz	Europe etc.	A199 - 26	3J71260001
Aficio Color 5106	220- 240V/ 50Hz	Europe etc.	A199 - 27	A7136110041
Aficio Color 5106	220- 240V/ 50Hz, 60Hz	Asia, Middle East	A199 - 29	A713612xxxx
Lanier 5606 DC	120V60Hz	USA	A199 - 55	from first production
Sharp AR-C861	120V60Hz	USA	A199 - 57	from first production
Sharp AR-C861	220- 240V/ 50Hz	Europe	A199 - 67	from first production

RICOH **M**odification **B**ulletin

Model: Lily	Date: 15-Apr-97	No: 13
Modified Article: Pressure Spring	Prepared by: N.Kaiya	
From: QAC 1st Field Information Dept.	Checked by: T. Inoue T. Inoue	

Reason for Modification:

- ☐ Parts catalog correction
- ☐ Vendor change
- ☐ To meet standards ( )
- ☐ To facilitate assembly
- ☐ To improve reliability
- ☐ Part standardization
- ☒ Other

Old part number	New part number	Description	Qty	Int	Destination	Page	Index
AA063355	AA063562	Pressure Spring	2-2	X/O		85	21

The nip band width adjustment standard has been changed from 9.5 ± 0.5 mm to 9.25 ±0.25 mm. This is to minimize the possibility of mimizu image. To facilitate this adjustment, the pressure spring has been changed.

MODEL NAME	V/ Hz	DESTINATION	CODE	SERIAL NUMBER
Nashuatec C606e Gestetner 2606e	120V/ 60Hz	USA, Canada	A172 - 10	AB67020001
Savin SDC206E	120V/ 60Hz	USA, Canada	A172 - 15	5A86110001
Aficio Color 5206	120V/ 60Hz	USA, Canada	A172 - 17	A7126110001
Nashuatec C606e Gestetner 2606e Rex Rotary CC8606E	220- 240V/ 50Hz	Europe, etc.	A172 - 22	AB76110001
Infotec 7316E	220- 240V/ 50Hz	Europe, etc.	A172 - 26	3J81160001
Aficio Color 5206	220- 240V/ 50Hz	Europe, etc.	A172 - 27	A7126110046
Aficio Color 5206	220- 240V/ 50Hz, 60Hz	Asia, Middle East	A172 - 29	A7126110091
Lanier 5606 DC	120V60Hz	USA	A172 - 55	L0066110001
Sharp AR-C862	120V60Hz	USA	A172 - 57	S167030001
Sharp AR-C862	120V60Hz	Europe	A172 - 67	S167020001
Nashuatec C606 Gestetner 2606	115V/ 60Hz	USA, Canada	A199 - 10	AB4612xxxx
Savin SDC206	120V/ 60Hz	USA, Canada	A199 - 15	5A96110001
Aficio Color 5106	120V/ 60Hz	USA, Canada	A199 - 17	A7136110001
Nashuatec C606 Gestetner 2606 Rex Rotary CC8606	220- 240V/ 50Hz	Europe, etc.	A199 - 22	AB56110001
Infotec 7316	220- 240V/ 50Hz	Europe etc.	A199 - 26	3J71160001
Aficio Color 5106	220- 240V/ 50Hz	Europe etc.	A199 - 27	A7136110041
Aficio Color 5106	220- 240V/ 50Hz, 60Hz	Asia, Middle East	A199 - 29	A713612xxxx
Lanier 5606 DC	120V60Hz	USA	A199 - 55	L0077010001
Sharp AR-C861	120V60Hz	USA	A199 - 57	S167030046
Sharp AR-C861	220- 240V/ 50Hz	Europe	A199 - 67	S167020023

RICOH

Modification **B**ulletin

Model: Lily	Date: 15-Apr-97	No: 14
Modified Article: Original Sensor	Prepared by: N.Kaiya	
From: QAC 1st Field Information Dept.	Checked by: T. Inoue T. Inoue	

Reason for Modification:

- ☐ Parts catalog correction
- ☐ To facilitate assembly
- ☒ Part standardization
- ☐ Vendor change
- ☐ To improve reliability
- ☐ Other
- ☐ To meet standards ( )

Old part number	New part number	Description	Qty	Int	Destination	Page	Index
AW010033	AW010047	Original Sensor H = 3 - 50	1-1	O/O		23	6